FUSO

Service Manual

1996 - 2001



FE FG FH FK FM

FE.FG

SERVICE MANUAL

1996 Model

FOREWORD

This Service Manual contains maintenance and repair methods for personnel involved in the maintenance and repair of 1998 model Mitsubishi Fuso Truck FE.FG series.
Read this manual carefully as an aid to providing correct, efficient and fast maintenance.
Please note, however, that due to continuous improvements on the specifications, numbers and description for maintenance might be changed without prior notice.
If you have any question, or encounter a problem, please do not hesitate to contact your nearest Mitsubishi Fuso dealer or distributor.

© Mitsubishi Motors Corporation 1997 May

MITSUBISHI FUSO TRUCK OF AMERICA, Inc.

HOME

GROUP INDEX

HOW TO READ THIS MANUAL

GENERAL 00

MAINTENANCE SCHEDULE 01

REMOVAL AND INSTALLATION OF ENGINE 10

ENGINE 11

LUBRICATION 12

FUEL AND ENGINE CONTROL 13

COOLING 14

INTAKE AND EXHAUST 15

CLUTCH 21

MANUAL TRANSMISSION 22

AUTOMATIC TRANSMISSION 23

TRANSFER 24

PROPELLER SHAFT 25

FRONT AXLE 26

REAR AXLE 27

WHEEL AND TIRE 31

FRONT SUSPENSION 33

REAR SUSPENSION 34

BRAKE 35

PARKING BRAKE 36

STEERING 37

FRAME 41

CAB 42

ELECTRICAL 54

AIR-CONDITIONER 55A

HEATER 55B

BACK HOME

MITSUBISHI FUSO

FE

Service Manual

1996 Group 00 - General

1997 Model Changes
1998 Model Changes
1999 Model Changes
2000 Model Changes
2001 Model Changes

MITSUBISHI FUSO TRUCK OF AMERICA, Inc.

Pub No. TWSE9501-00

MITSUBISHI FUSO

Service Manual

Table of Contents

BACK

HOME

FE/FG 2001

Model Year Changes

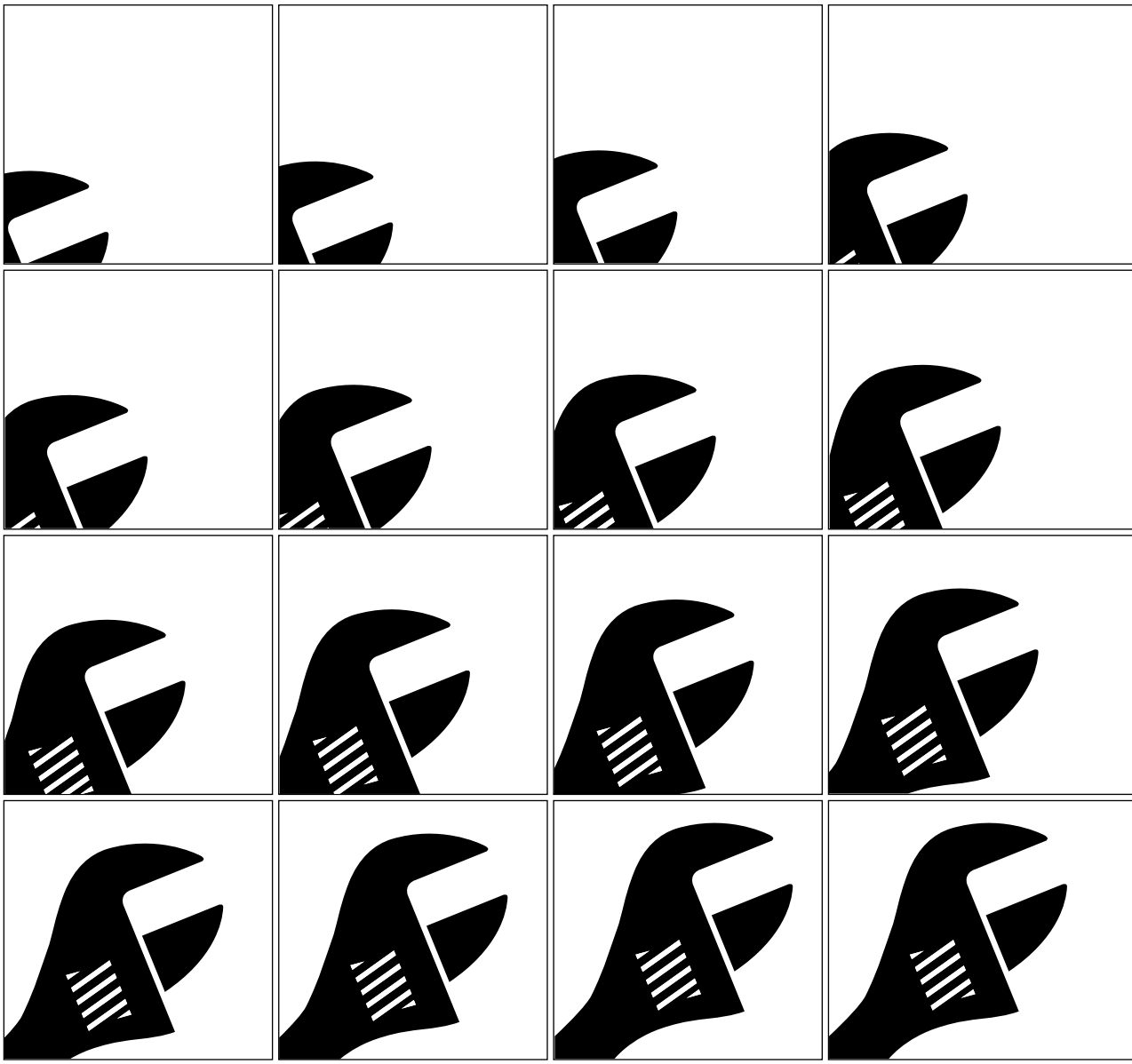

Pub. No. TWSE9501-5

FE/FG
SERVICE MANUAL

FOREWORD

This Service Manual contains maintenance and repair methods for personnel involved in the maintenance and repair of 2001 model Mitsubishi Fuso Truck FE/FG series.
Read this manual carefully as an aid in providing correct, efficient and fast maintenance.
Please note, however, that due to continuous improvements on the specifications, numbers and description for maintenance might be changed without prior notice.
If you have any questions, or encounter a problem, please do not hesitate to contact your nearest Mitsubishi Fuso dealer or distributor.

© Mitsubishi Motors Corporation, May 2000

MITSUBISHI FUSO TRUCK OF AMERICA, Inc.

GROUP INDEX

2001 MODEL CHANGES

GENERAL 00

MAINTENANCE SCHEDULE 01

ENGINE <4D34T3> 11

AUTOMATIC TRANSMISSION 23

TRANSFER <FG> 24

ELECTRICAL 54

2001 MODEL CHANGES

2001 MODEL CHANGES

<table>
<tr><th>Item</th><th>'01 Model ⇦</th><th>'00 Model</th></tr>
<tr><td>Gr 00 General
Power Train Table and Vehicle Identification number have been updated.</td><td>🕮 Gr 00</td><td>—</td></tr>
<tr><td>Gr 01 Maintenance Schedule
The schedule for 4M50T2 engine has been added.</td><td>🕮 Gr 01</td><td>—</td></tr>
<tr><td>Gr 10 REMOVAL & INSTALLATION
• Removal and installation procedures for 4M50T2 established</td><td colspan="2">Removal and Installation of Engine
 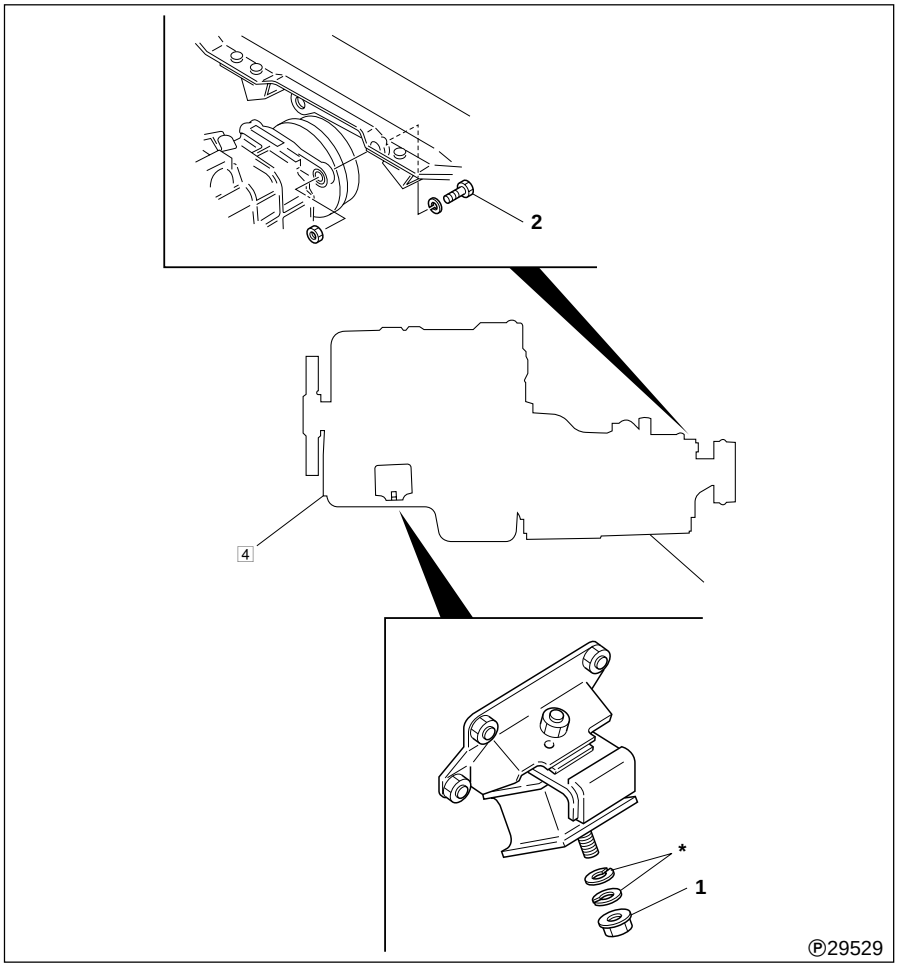

● Removal sequence
1 Nut 3 Transmission assembly 🕮 Gr22 *: Wide cab vehicle only
2 Bolt 4 Engine assembly
WARNING ⚠
When lifting the engine assembly 4, be sure to use a lifting gear or engine hoist capable of lifting an engine of 3.9 to 4.7 kN {880 to 1060 lbs, 400 to 480 kg}.
● Installation sequence
Follow the removal sequence in reverse.
❶ Tightening torque Unit: N·m{lbf.ft, kgf·m}
<table>
<tr><th>Location</th><th>Parts to be tightened</th><th>Tightening torque</th><th>Remarks</th></tr>
<tr><td>1</td><td>Nut (For attaching front mounting)</td><td>69 to 99 {51 to 65, 7 to 9}</td><td>—</td></tr>
<tr><td>2</td><td>Bolt (For attaching rear mounting)</td><td>125 to 175 {94 to 130, 13 to 18}</td><td>—</td></tr>
</table></td></tr>
</table>

Item	’01 Model	⇦	’00 Model
Gr 11 Engine <4D34T3> Flywheel power take-off added	🕮 Gr 11		—
Gr 11A ENGINE <4M50T2> Service procedure added	🗀 Gr 11A ENGINE <4M50T2> Pub. No. TWSE9501-511A		
Gr 12A LUBRICATION <4M50T2> Service procedure added	🗀 Gr 12A LUBRICATION <4M50T2> Pub. No. TWSE9501-512A		

Item	'01 Model	⇦	'00 Model
Gr 13 Fuel and Engine Control <4D34T3> • Part No. and type of Read Only Memory (ROM) pack are different.	MK386562 (MRT-E7)		MK344606 (MRT-E6)

• Newly introduced flywheel PTO-equipped version has the engine control provided with an engine control cable and a lever & bracket assembly.

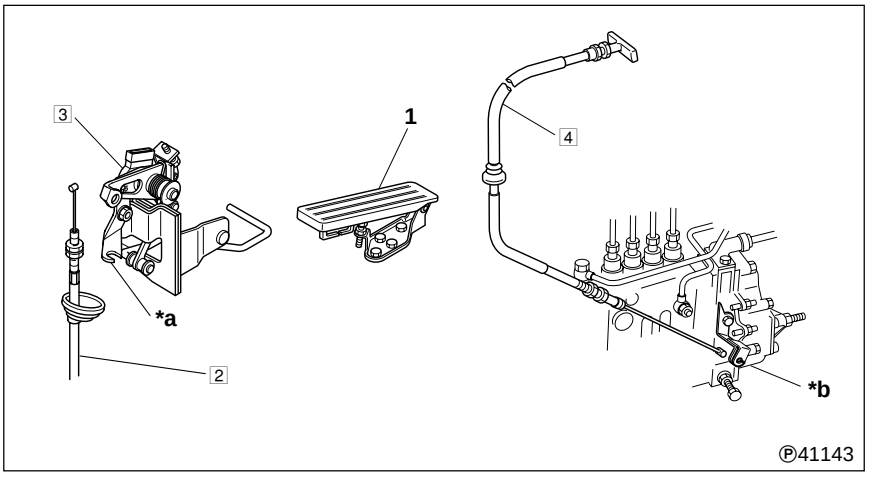

● **Removal sequence**

1 Accelerator pedal assembly 🕮 P13-56
2 Engine control cable
3 Accelerator pedal position sensor assembly
4 Emergency engine stop cable
***a:** Lever and bracket assembly
***b:** Injection pump assembly

● **Installation sequence**

Follow the removal sequence in reverse.

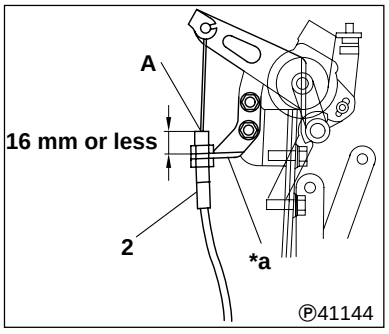

◆ **Service procedure**

2 **Installation of engine control cable**

Adjust the threaded section **A** of the engine control cable **2** to thedimension shown in the illustration and connect the cable to the lever & bracket assembly ***a**.

<table>
<tr><th>Item</th><th>’01 Model ⇦ ’00 Model</th></tr>
<tr><td>Electronic governor control unit additionally provided with torque limiting function</td><td>
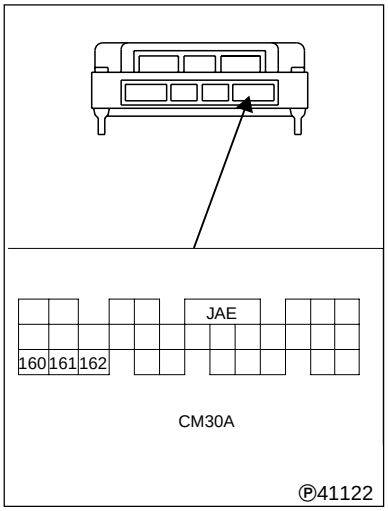

<table>
<tr><th>Connector</th><th>Terminal</th><th>Connected to</th></tr>
<tr><td rowspan="3">CM 30A</td><td>160</td><td>First/reverse check switch</td></tr>
<tr><td>161</td><td>Transfer four-wheel drive switch</td></tr>
<tr><td>162</td><td>Transfer low switch</td></tr>
</table>
</td></tr>
<tr><td>Gr 13A FUEL & ENGINE CONTROL <4M50T2>
Service procedure added</td><td>Gr 13A FUEL&ENGINE CONTROL <4M50T2>
Pub. No. TWSE9501-513A</td></tr>
<tr><td>Gr 13E Electronically Controlled Fuel System <4M50T2>
Service procedure added</td><td>Gr 13E Electronically Controlled Fuel System <4M50T2>
Pub.No. TWSE9501-513E</td></tr>
<tr><td>Gr 14A COOLING <4M50T2>
Service procedure added</td><td>Gr 14A COOLING <4M50T2>
Pub. No. TWSE9501-514A</td></tr>
<tr><td>Gr 15A INTAKE&EXHAUST <4M50T2>
Service procedure added</td><td>Gr 15A INTAKE&EXHAUST <4M50T2>
Pub. No. TWSE9501-515A</td></tr>
</table>

<table>
<tr><th>Item</th><th>'01 Model ⇦ '00 Model</th></tr>
<tr><td>Gr 23 Automatic Transmission
FE640 and FG639 introduced into lineup</td><td>

Specifications

<table>
<tr><th>Item \ Vehicle model</th><th></th><th></th><th>FE639</th><th>FE649</th><th>FE640</th><th>FG639</th></tr>
<tr><td colspan="3">Manufacturer</td><td colspan="4">Aisin Seiki Co., Ltd.</td></tr>
<tr><td colspan="3">Transmission type</td><td colspan="4">M035A4</td></tr>
<tr><td rowspan="2">Torque converter</td><td colspan="2">Type</td><td colspan="4">3-element, 1-stage, 2-phase (with lock-up clutch)</td></tr>
<tr><td colspan="2">Stall torque ratio</td><td colspan="4">1.82</td></tr>
<tr><td rowspan="6">Automatic transmission</td><td colspan="2">Type</td><td colspan="4">Planetary gear type, 4 forward speeds, 1 reverse speed</td></tr>
<tr><td rowspan="4">Gear ratio</td><td>1st</td><td colspan="4">3.018</td></tr>
<tr><td>2nd</td><td colspan="4">1.548</td></tr>
<tr><td>3rd</td><td colspan="4">1.000</td></tr>
<tr><td>4th</td><td colspan="3">0.703</td><td>0.765</td></tr>
<tr><td>Rev.</td><td colspan="4">2.678</td></tr>
<tr><td colspan="3">Range selector pattern</td><td colspan="4">P-R-N-D-2-L (Engine starts in P and N position only)</td></tr>
<tr><td rowspan="3">Automatic transmission fluid</td><td colspan="2">Oil type</td><td colspan="4">DEXRON III type</td></tr>
<tr><td colspan="2">Total oil capacity L {qts}</td><td colspan="4">13 {14}</td></tr>
<tr><td colspan="2">Quality of oil required in automatic transmission fluid change L {qts}</td><td colspan="4">Approximately 4.5 {4.8}</td></tr>
</table>

</td></tr>
<tr><td>FG639 automatic transmission assembly different in configuration</td><td>

Automatic Transmission Assembly

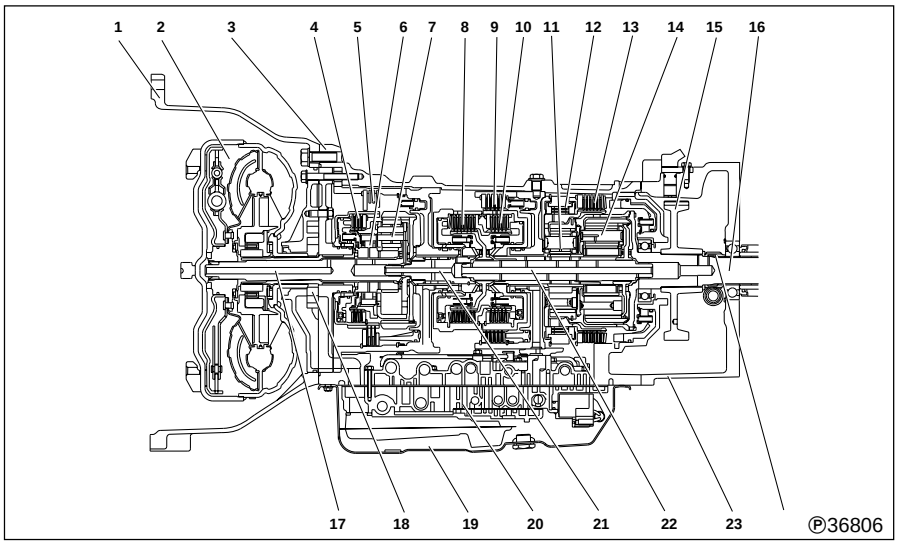

1 Converter housing
2 Torque converter
3 Transmission case
4 Overdrive direct clutch
5 Overdrive brake
6 Overdrive one-way clutch
7 Overdrive planetary gear
8 Front clutch
9 2nd clutch
10 Rear clutch
11 Front planetary gear
12 No. 2 one-way clutch
13 1st and reverse brake
14 Rear planetary gear
15 Parking lock gear
16 Output shaft
17 Overdrive input shaft
18 Oil pump
19 Oil pan
20 Valve body
21 Input shaft
22 Intermediate shaft
23 Transfer case adapter

</td></tr>
<tr><td>STRUCTURE AND OPERATION
Control system
Control block diagram
Chat of control items, inputs and outputs
• Self-diagnosis function
• Vehicle speed sensor
Modified or additional descriptions incorporated in the above items.</td><td>📖 Gr 23</td><td>—</td></tr>
</table>

<table>
<tr><th>Item</th><th>’01 Model ⇦ ’00 Model</th></tr>
<tr><td>ROM pack for FE640 newly included in special tool lineup</td><td>
<table>
<tr><td>Tool name</td><td>Read Only Memory (ROM) pack</td></tr>
<tr><td>Part No.</td><td>MK386562 (MRT-E7)</td></tr>
</table>
—
</td></tr>
<tr><td>As a troubleshooting procedure for FE640, Inspection Using MUT-II and Diagnosis code chart additionally shown</td><td>📖 Gr23
—</td></tr>
<tr><td>Stall speed standard values for FE640 and FG639 established as shown</td><td>Stall speed
<table>
<tr><td>FE640</td><td>2070 ± 150 rpm</td></tr>
<tr><td>FG639</td><td>1890 ± 150 rpm</td></tr>
</table>
—
</td></tr>
<tr><td>As standard values for road tests of FE640 and FG639, vehicle speeds at which shifting or locking up must take place determined as shown</td><td><FE640>
● Shift-point vehicle speeds Unit: km/h {mph}
<table>
<tr><th>Throttle opening</th><th>Shifting</th><th>Power mode</th></tr>
<tr><td rowspan="3">Half throttle</td><td>D1→D2</td><td>7.2 to 9.9 {4.5 to 6.1}</td></tr>
<tr><td>D2→D3</td><td>21.3 to 24.0 {13.3 to 14.9}</td></tr>
<tr><td>D3→D4</td><td>39.6 to 42.3 {24.6 to 26.3}</td></tr>
<tr><td rowspan="3">Full throttle</td><td>D1→D2</td><td>20.5 to 23.2 {12.8 to 14.4}</td></tr>
<tr><td>D2→D3</td><td>44.0 to 46.7 {27.4 to 29.0}</td></tr>
<tr><td>D3→D4</td><td>77.4 to 82.7 {48.1 to 51.4}</td></tr>
<tr><td rowspan="3">Closed throttle</td><td>D1→D2</td><td>5.3 to 8.0 {3.3 to 5.0}</td></tr>
<tr><td>D2→D3</td><td>5.3 to 8.0 {3.3 to 5.0}</td></tr>
<tr><td>D3→D4</td><td>28.8 to 31.5 {17.9 to 19.6}</td></tr>
</table>
● Lock-up vehicle speeds Unit: km/h {mph}
<table>
<tr><th>Throttle opening</th><th>Shifting</th><th>Power mode</th></tr>
<tr><td rowspan="3">Half throttle</td><td>2nd gear ON</td><td>36.0 to 38.7 {22.4 to 24.0}</td></tr>
<tr><td>3rd gear ON</td><td>47.8 to 50.4 {29.7 to 31.3}</td></tr>
<tr><td>4th gear ON</td><td>57.8 to 60.4 {35.9 to 37.6}</td></tr>
<tr><td rowspan="3">Full throttle</td><td>2nd gear ON</td><td>46.7 to 49.4 {29.0 to 30.7}</td></tr>
<tr><td>3rd gear ON</td><td>47.8 to 50.4 {29.7 to 31.3}</td></tr>
<tr><td>4th gear ON</td><td>77.4 to 82.7 {48.1 to 51.4}</td></tr>
<tr><td rowspan="3">Closed throttle</td><td>2nd gear OFF</td><td>36.0 to 38.7 {22.4 to 24.0}</td></tr>
<tr><td>3rd gear OFF</td><td>46.7 to 49.4 {29.0 to 30.7}</td></tr>
<tr><td>4th gear OFF</td><td>48.3 to 51.0 {30.0 to 31.7}</td></tr>
</table>
The above standard values are based on the following conditions.
5.285 differential gear ratio, 0.374 m tire radius (215/85R16)
If the differential gear ratio and/or the tire radius are different from the above, proper standard values must be calculated based on the ratios of the differences and the above figures.</td></tr>
</table>

Item	’01 Model ⇦ ’00 Model

<FG639>

● **Shift-point vehicle speeds** Unit: km/h {mph}

Throttle opening	Shifting	Power mode
Half throttle	D1→D2	9.7 to 12.3 {6.0 to 7.6}
	D2→D3	25.5 to 28.1 {15.9 to 17.5}
	D3→D4	40.1 to 42.6 {24.9 to 26.5}
Full throttle	D1→D2	22.2 to 24.8 {13.8 to 15.4}
	D2→D3	47.5 to 50.0 {29.5 to 31.1}
	D3→D4	80.4 to 85.5 {50.0 to 53.2}
Closed throttle	D1→D2	5.1 to 7.7 {3.2 to 4.8}
	D2→D3	5.1 to 7.7 {3.2 to 4.8}
	D3→D4	27.3 to 29.9 {17.0 to 18.6}

● **Lock-up vehicle speeds** Unit: km/h {mph}

Throttle opening	Shifting	Power mode
Half throttle	2nd gear ON	33.4 to 36.0 {20.8 to 22.4}
	3rd gear ON	49.8 to 52.3 {30.9 to 32.5}
	4th gear ON	58.4 to 60.9 {36.3 to 37.9}
Full throttle	2nd gear ON	45.4 to 48.0 {28.2 to 29.8}
	3rd gear ON	54.9 to 57.4 {34.1 to 35.7}
	4th gear ON	76.6 to 81.7 {47.6 to 50.8}
Closed throttle	2nd gear OFF	34.5 to 37.0 {21.4 to 23.0}
	3rd gear OFF	44.7 to 47.2 {27.8 to 29.4}
	4th gear OFF	44.7 to 47.2 {27.8 to 29.4}

The above standard values are based on the following conditions.
5.714 differential gear ratio, 0.387 m tire radius (7.50R16)
If the differential gear ratio and/or the tire radius are different from the above, proper standard values must be calculated based on the ratios of the differences and the above figures.

<table>
<tr><th>Item</th><th>’01 Model ⇦ ’00 Model</th></tr>
<tr><td>Breather cap on transmission case replaced with new type breather</td><td>
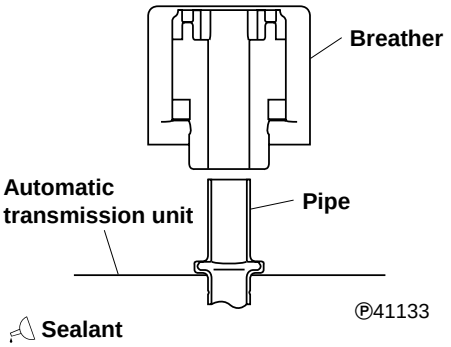

Sealant
<table>
<tr><td>Point of application</td><td>Outer periphery of breather pipe</td></tr>
<tr><td>Sealant</td><td>Cemendyne 540</td></tr>
<tr><td>Quantity</td><td>As required</td></tr>
</table>
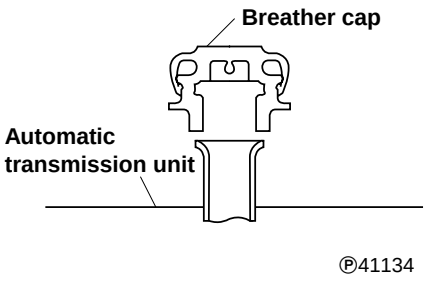

</td></tr>
<tr><td>REPLACEMENT OF AUTOMATIC TRANSMISSION PARTS
Oil seal installation method for FG639 different from that for other model</td><td>
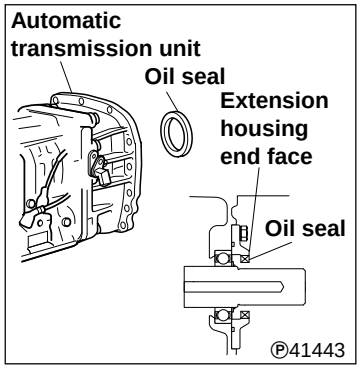

Installation of oil seal
CAUTION ⚠
After the oil seal is removed, clean the surface of the extension housing of automatic transmission unit to which oil seal is mounted.
• Apply grease on the lip section of oil seal.
• Drive the oil seal into the automatic transmission unit until its end face becomes flush with the end face of the extension housing.
CAUTION ⚠
• Be sure to apply the installation force evenly on the entire periphery.
• Do not damage or deform the shape of oil seal.
</td></tr>
<tr><td>Gr. 24 Transfer <FG>
Transfer exclusively combined with manual transmission additionally provided with 1st/reverse check switch and dust plug</td><td>
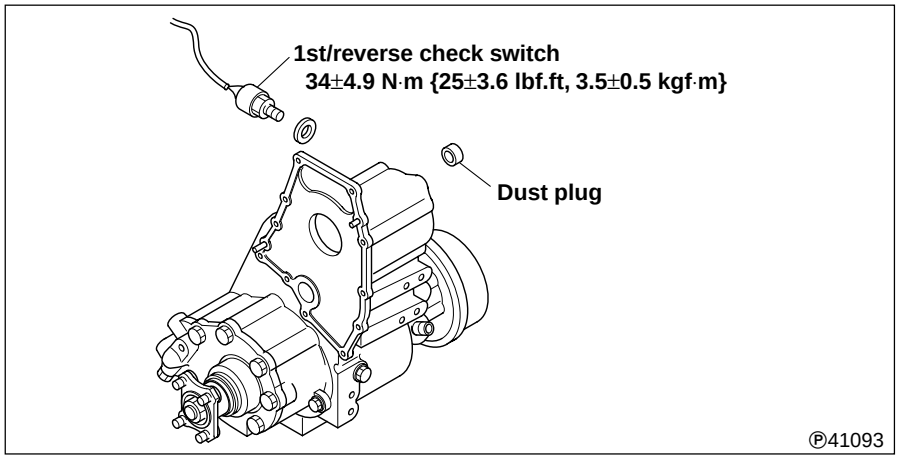

</td></tr>
<tr><td>Transfer for automatic transmission newly introduced</td><td>📖 Gr24 ⇦ —</td></tr>
<tr><td>Gr. 27 Rear axle
Reduction gear ratio for FE640 is as shown</td><td>
<table>
<tr><th colspan="2">Item \ Vehicle model</th><th>Except FE640</th><th>FE640</th></tr>
<tr><td rowspan="4">Reduction</td><td>Model</td><td>D033H</td><td>D033H</td></tr>
<tr><td>Type</td><td>Single-reduction gear</td><td>Single-reduction gear</td></tr>
<tr><td>Tooth shape</td><td>Hypoid gear</td><td>Hypoid gear</td></tr>
<tr><td>Speed reduction ratio</td><td>5.714</td><td>5.285</td></tr>
</table>
</td></tr>
</table>

2001 MODEL CHANGES

Item	'01 Model ⇦ '00 Model
Gr. 54 Electrical 1. POWER CHARGE AND GROUND • Because of introduction of 4M5 engine and mirror heater, some descriptions in (104), (106), (110), (125) and (130) subjected to change.	• Battery cable diameter is different between for 4D3 and 4M5. For 4M5: 85 mm ⇦ For 4D3: 60 mm • (104) FUSE 🕮 P54-7 • (106) The alternator for 4M5 engine is different in pulley shape and B-terminal position from that for 4D3 engine. 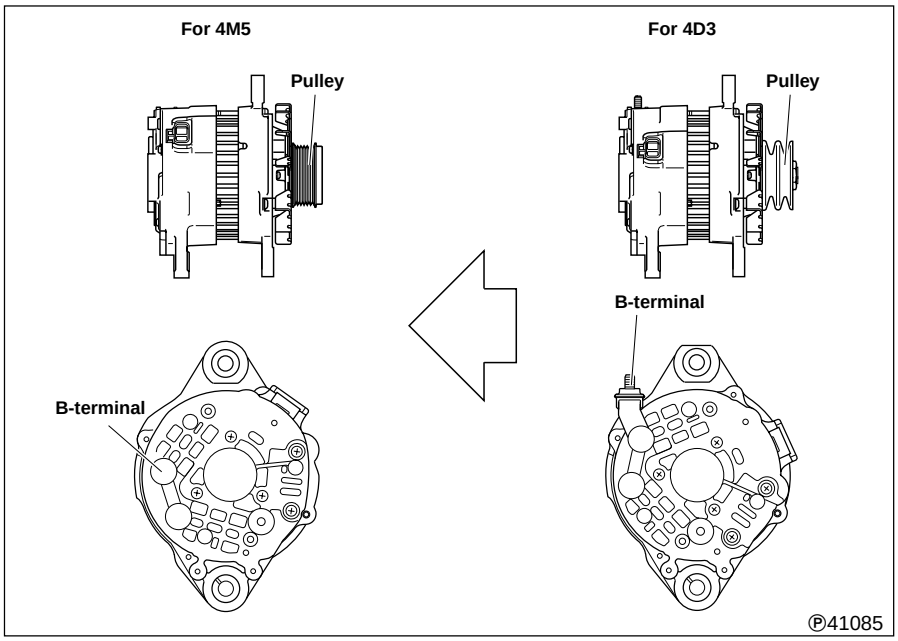 • (110) POWER CIRCUIT 🕮 P54-8 • (125) BATTERY CHARGING CIRCUIT 🕮 P54-10 • (130) GROUND 🕮 P54-12
2. STARTING, PREHEATING AND STOPPING ENGINE • Because of introduction of 4M5 engine, some descriptions in Specifications, Structure and Operation, (201), (210) and (225) subjected to change.	• SPECIFICATIONS <4M5> 🕮 P54-13 • STRUCTURE AND OPERATION <4M5> 🕮 P54-14 • (201) STARTER 🕮 P54-15 • (210) ENGINE STARTING CIRCUIT <4M5 Automatic Transmission> 🕮 P54-28

<table>
<tr><th>Item</th><th>'01 Model ⇦ '00 Model</th></tr>
<tr><td>2. STARTING, PREHEATING AND STOPPING ENGINE</td><td>• (225) ENGINE WARMING CIRCUIT <4M5> 🕮 P54-32</td></tr>
<tr><td>4. METER
• Because of introduction of 4M5 engine, the content of (410) changed.</td><td>• (410) TACHOMETER CIRCUIT <4M5> 🕮 P54-34</td></tr>
<tr><td>6. CAB SIDE ELECTRICAL
• Because of introduction of 4M5 engine and mirror heater and addition of torque limiting function to FG, (601) and (604) subjected to change.
• (629) added.</td><td>• (601) SWITCH 🕮 P54-36
• (604) RELAY AND CONTROL UNIT 🕮 P54-38
• (629) MIRROR HEATER CIRCUIT 🕮 P54-38</td></tr>
<tr><td>7. CHASSIS ELECTRICS
• Because of introduction of 4M5 engine, the content of (710) changed.</td><td>• (701) EXHAUST BRAKE CIRCUIT <4M5 Automatic Transmission> 🕮 P54-40</td></tr>
<tr><td>8. ENGINE AND TRANSMISSION ELECTRICS
• (801) changed because of adoption of 4M5 engine.
• (802) provided with additional description about speed sensor installed on FE640 automatic transmission.</td><td>• (801) ENGINE ELECTRICS <4M5> 🕮 P54-42
• (802) TRANSMISSION ELECTRICS
 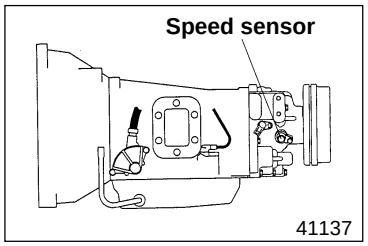
 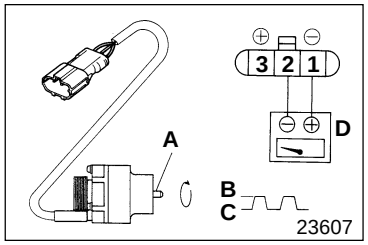
Inspection of speed sensor
• Slowly rotate the speed sensor shaft A while applying a voltage of 12VDC between terminals ① and ③.
• Keeping the above condition, measure the maximum voltage (high pulse voltage B) and the minimum voltage (low pulse voltage C) generating between terminals ① and ②.
D: Tester
• Replace the speed sensor if the measurements deviate from the standard values.
<table><tr><td rowspan="2">Standard value</td><td>Low puls</td><td>0.5V or less</td></tr><tr><td>High puls</td><td>8±1V</td></tr></table></td></tr>
</table>

2001 MODEL CHANGES

<table>
<tr><th>Item</th><th>'01 Model ⇦ '00 Model</th></tr>
<tr><td>8. ENGINE AND TRANSMISSION ELECTRICS
• (802) additionally provided with some descriptions about 1st/reverse check switch installed on manual transmission-equipped FG.</td><td> 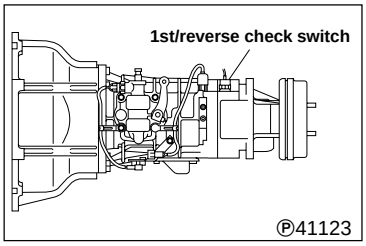

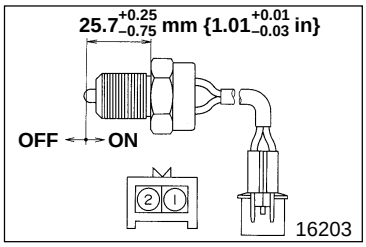

Inspection of 1st/reverse check switch
• Perform the continuity test according to the following table.
<table>
<tr><th></th><th>①</th><th>②</th></tr>
<tr><td>OFF</td><td></td><td></td></tr>
<tr><td>ON</td><td>○——○</td><td></td></tr>
</table>
○——○ There must be continuity between the terminals.
• Replace the switch if any abnormality is found.</td></tr>
<tr><td>• (810) revised because if newly incorporated torque limiting function.</td><td>• (810) FOUR WHEEL DRIVE CIRCUIT 🕮 P54-46</td></tr>
<tr><td>9. OTHERS
• (910) changed because of adoption of 4M5 engine.</td><td>• (910) MULTIPURPOSE TIMING CONTROL UNIT CIRCUIT <4M5> 🕮 P54-48</td></tr>
</table>

GROUP 00 GENERAL

POWER TRAIN TABLE 00-2

VEHICLE IDENTIFICATION NUMBER 00-3

ENGINE NUMBER 00-3

PRECAUTIONS FOR MAINTENANCE OPERATION 00-4

POWER TRAIN TABLE

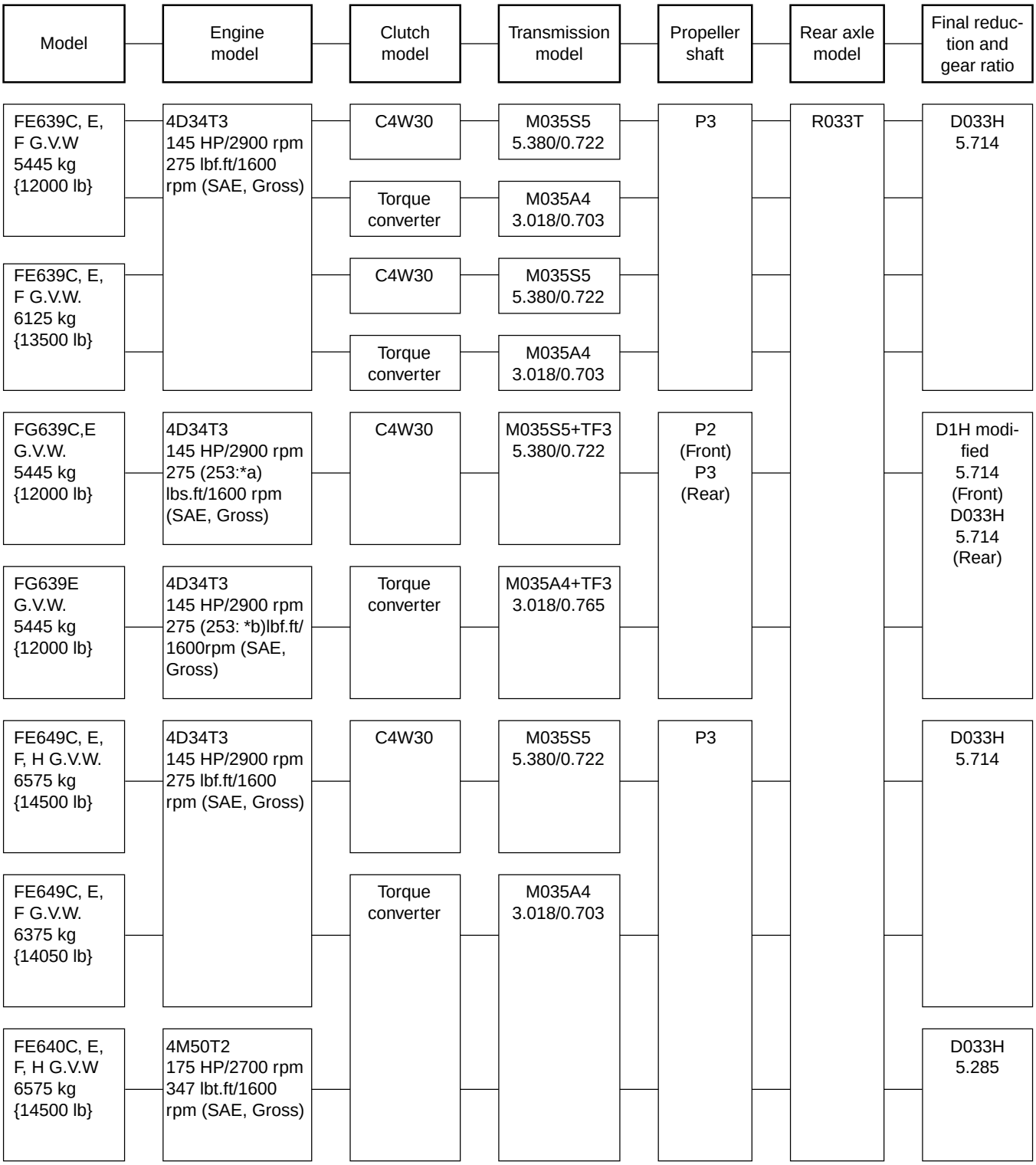

*a: Torque cut when 1st/reverse is selected
*b: Torque cut when 4WD/Low is selected

VEHICLE IDENTIFICATION NUMBER/ENGINE NUMBER 00

VEHICLE IDENTIFICATION NUMBER

J	W	6	A	A	C	1	H	□	1	L	□	□	□	□	□	□
①	②	③	④	⑤	⑥	⑦	⑧	⑨	⑩	⑪	⑫					

① Country	J: Japan
② Make	W: Mitsubishi Fuso
③ Vehicle type	6: Incomplete Vehicle
	7: Truck
④ Gross vehicle weight/Brake system	A: 10001 to 14000 lbs/Hydraulic
	B: 14001 to 16000 lbs/Hydraulic
⑤ Line	A: FE639
	B: FE649
	G: FG639
	H: FE640
⑥ Series (Wheel base)	C: 2.6 to 2.89 m {8.53 to 9.48 ft.}
	E: 3.2 to 3.49 m {10.49 to 11.44 ft}
	F: 3.5 to 3.79 m {11.48 to 12.43 ft}
	H: 4.1 to 4.39 m {13.45 to 14.40 ft}
⑦ Cab chassis type	1: Chassis cab
	3: Mixer
⑧ Engine	H: 3.907 ℓ Diesel turbocharged and charge air cooled
	S: 4.899 ℓ Diesel turbocharged and charge air cooled
⑨ Check digit	
⑩ Model year	1: 2001
⑪ Plant	K: Kawasaki-1
	L: Kawasaki-2
	M: Kawasaki-3
⑫ Plant sequential number	

ENGINE NUMBER

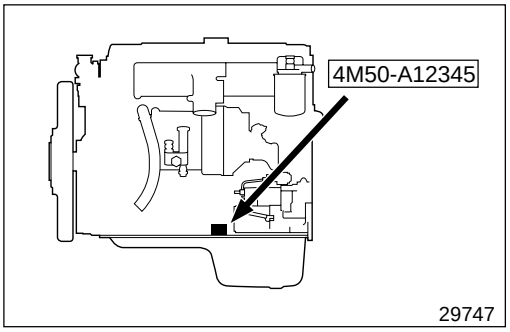

Engine number <4M50T2>

Engine number is stamped on the position as illustrated.

PRECAUTIONS FOR MAINTENANCE OPERATION

DANGER ⚠

This product contains or emits chemicals known to the State of California to cause cancer and birth defects or other reproductive harm.

GROUP 01 MAINTENANCE SCHEDULE

HOW TO READ THE MAINTENANCE SCHEDULE TABLES 01-2

MAINTENANCE SCHEDULE TABLES 01-3

MAINTENANCE OPERATIONS
- Replacement of Oil Filter 01-4
- Replacement of Fuel Filter 01-5
- Bleeding of Air from Fuel Line 01-6
- Adjustment of V-ribbed Belt Tension 01-6
- Battery 01-8
- Fuse 01-12

LUBRICATION 01-13
Engine Oil 01-14

HOW TO READ THE MAINTENANCE SCHEDULE TABLES

Example Table:

Ⓔ: Exhaust emission items
Ⓝ: Noise control items

Inspection and maintenance		Time of inspection and maintenance								Working procedures	Remarks
			Inspection interval								
		New vehicle at 4000 km/ 2500 miles	Every 10000 km/ 6000 miles	Every 20000 km/ 12000 miles	Every 30000 km/ 18000 miles	Every 40000 km/ 24000 miles	Every 50000 km/ 30000 miles	Every 90000 km/ 54000 miles	Every 250000 km/ 150000 miles		
ENGINE											
1	Manifold bolts and nuts torque						×			Check inlet and exhaust manifold bolts and nuts for looseness	Gr 15A
2	ⒺCheck and adjust valve clearance	×					×			Check valve clearance with feeler gauge	Gr 11A
3	ⒺOil filter replacement		Every 10000 km/6000 miles or 12 months							Replace oil filter	Gr 12A
4	ⒺInjection nozzle Ⓝ							×	×	Check and clean injection nozzle	Gr 13A
5	ⒺFuel injection timing							×		Check fuel injection timing	Gr 13A
6	ⒺFuel [illegible]		Every 40000 km/24000 miles or							Clean gauze filter inside connector [illegible] gas oil	Gr 13A
							[illegible]000 miles or			Replace fuel [illegible]	

(1) This column contains the maintenance and inspection items.
(2) The periods between inspection and service and based on the assumption that the vehicle will be driven approximately 60000 kilometers (36000 miles) per year.
Inspection which must be made are indicated by an "×" or by the appropriate period between servicing.
(3) This column provides a simplified explanation of the operational procedures involved for each inspection or maintenance item.
(4) The Gr. No. refers to the "group number" in this vehicle Service Manual. For visual checks and simple inspections, see the sections labelled "Working Procedures".

Ⓔ: Exhaust emission items
Ⓝ: Noise control items

Inspection and maintenance		Time of inspection and maintenance								Working procedures	Remarks
		New vehicle at 4000 km/ 2500 miles	Inspection interval								
			Every 10000 km/ 6000 miles	Every 20000 km/ 12000 miles	Every 30000 km/ 18000 miles	Every 40000 km/ 24000 miles	Every 50000 km/ 30000 miles	Every 90000 km/ 54000 miles	Every 250000 km/ 150000 miles		
ENGINE											
1	Manifold bolts and nuts torque						×			Check inlet and exhaust manifold bolts and nuts for looseness	Gr 15A
2	Ⓔ Check and adjust valve clearance	×					×		×	Check valve clearance with feeler gauge	Gr 11A
3	Ⓔ Oil filter replacement		Every 10000 km/6000 miles or 12 months							Replace oil filter	Gr 12A
4	Ⓔ Injection nozzle Ⓝ							×		Check and clean injection nozzle	Gr 13A
5	Ⓔ Fuel filter replacement		Every 20000 km/12000 miles or 12 months					×		Replace fuel filter	Gr 13A
6	Ⓔ Fuel line		Every 20000 km/12000 miles or 12 months							Inspect fuel tank, cap and lines for damage causing leakage	Gr 13A
7	Ⓔ V-ribbed belt tension Ⓝ and damage		Every 10000 km/6000 miles or 12 months							Inspect V-ribbed belt for cracks, wear and tension	Gr 14A
8	Ⓔ Cooling system			×						Check radiator and radiator cap for sealing performance and mounting condition. Inspect hoses for looseness, deterioration, damage causing leakage. Remove dust and foreign deposits from radiator and intercooler front.	Gr 15A
9	Coolant replacement		Every 24 months							Replace coolant	Gr 15A
10	Ⓔ Turbocharger rotor play								×	Check turbocharger rotor play	Gr 15A
11	Air cleaner element		Every 5000 km/3000 miles							Clean air cleaner element by blowing clean compressed air through it.	Gr 15A
12	Ⓔ Air cleaner element Ⓝ replacement					×				Replace air cleaner element	Gr 15A
13	Ⓔ Exhaust system Ⓝ			×						Inspect exhaust system for damage, corrosion and loose connection causing leakage	Gr 15A

Oil Filter Replacement

Lubricant

Location	Points of application	Specified lubricant	Quantity
2	Oil filter	Engine oil (API CD or higher)	Approx.1 L {1.1 qts}

Special tools

Unit: mm {in.}

Location	Tool name and shape	Part No.	Application
—	Oil Filter Element Socket 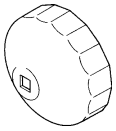 08550	MH061566	Oil filter removal
	Oil Filter Wrench 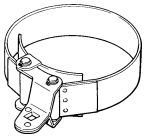 **ϕ107 to 120 {ϕ4.21 to 4.72}** 01503	MH063200	

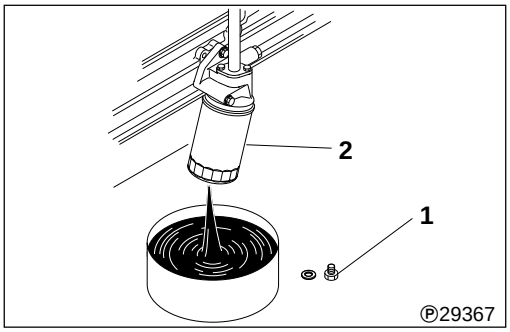

WARNING ⚠

- **Wipe up any spilled engine oil since it may cause a fire.**
- **Do not touch oil when the engine is hot since it can inflict severe burns.**

CAUTION ⚠

When pouring oil into the engine, take care not to spill any on the V-ribbed belt. Contact with oil could make the V-ribbed belt slip, rendering the cooling system less effective.

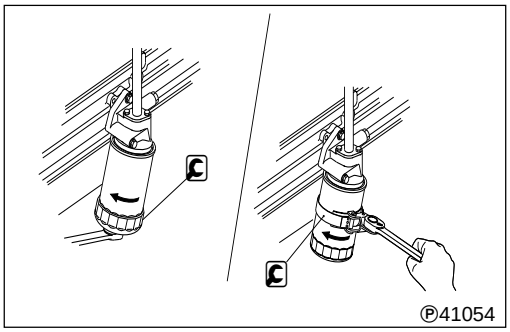

Loosen oil filter drain plug **1** to drain the engine oil from inside the filter **2**.
[Removal]

: Oil Filter Element Socket or Filter Wrench

[Installation]

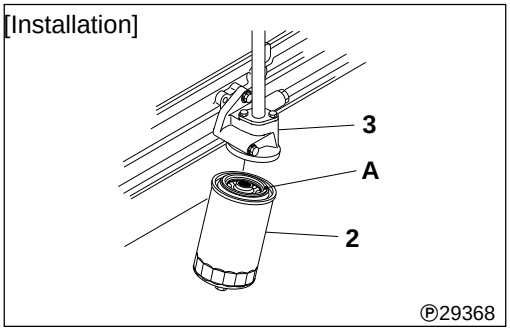

- Clean the surface of oil filter head **3** to which oil filter **2** is fitted.
- Apply a thin coat of engine oil to the gasket A of oil filter **2**.
- Screw oil filter **2** into oil filter head **3** by hand until gasket **A** contacts the oil filter head. Then, tighten oil filter **2** further by giving it a 3/4 turn.
- After installing the oil filter, start the engine and check gasket **A** for oil leakage.
- Check to see if the engine oil level is in the specified range.

Replacing Fuel Filter

Lubricant

Location	Parts to be tightened	Specified lubricant	Quantity
3	Gasket for fuel filter cartridge	Engine oil	As required

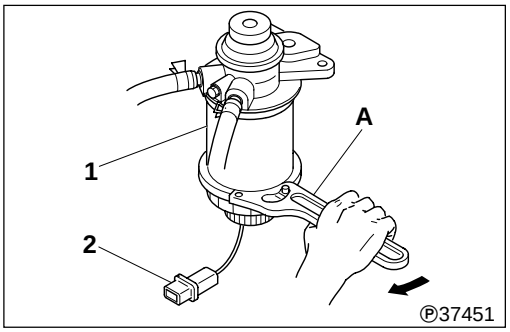

[Removal]

A: Filter Wrench
(Commercially available one: For filter diameter of approx. 90 mm {3.54 in.})

WARNING ⚠

- **Fuel is highly flammable. Keep it away from flames and sources of heat.**
- **To minimize the risk of fire, wipe up any spilled fuel.**

CAUTION ⚠

- **The water level sensor 2 may be reused if it properly functions.**

[Installation]

WARNING ⚠

Use of an unsuitable fuel filter cartridge 1 can lead to fuel leaks and fires. Be sure to use a genuine filter.

CAUTION ⚠

To prevent injection failures, keep dust and dirt out of the fuel filter cartridge 1 and the fuel pipe.

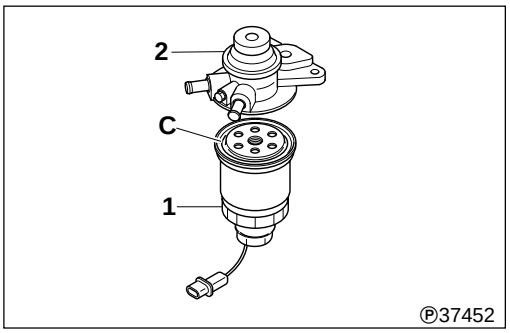

- To fit the fuel filter cartridge **1**, turn it until the gasket **C** touches seal surface of the fuel filter head **2**. Be sure to turn the filter by hand clockwise.
  Then, tighten the filter by 3/4 turn.
- After fitting the filter, start the engine and check that no fuel leakage occurs.
- Bleed all air out of the fuel system. P.01-6

Bleeding Air from Fuel System

❶ Tightening torque

Unit: N·m {lbf.ft, kgf·m}

Location	Parts to be tightened	Tightening torque	Remarks
1	Air vent plug	6±1 {4.3±0.7, 0.6±1}	—

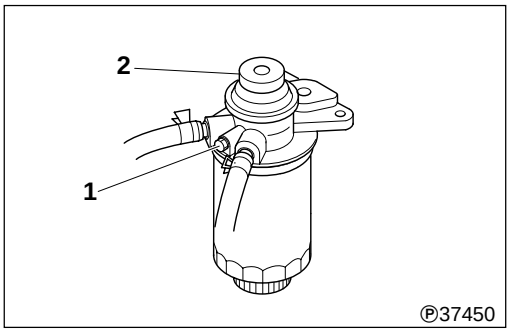

- Loosen the fuel filter air vent plug **1**.
- Operate the priming pump **2** to pump up fuel.
- Continue to pump fuel until no air bubbles are found in the fuel flowing out from the air vent plug **1**.
- After ascertaining that air bubbles have completely disappeared, tighten the air vent plug **1** securely.
- Operate the priming pump **2** further until it feels heavy.
- Wipe up all spilled fuel, then start the engine.
- Check that no fuel leakage occurs.

WARNING ⚠

- **Fuel is highly flammable. Keep it away from flames and sources of heat.**
- **Be sure to wipe up all spilled fuel. Unless it is wiped up, it could catch fire.**

V-ribbed belt tension

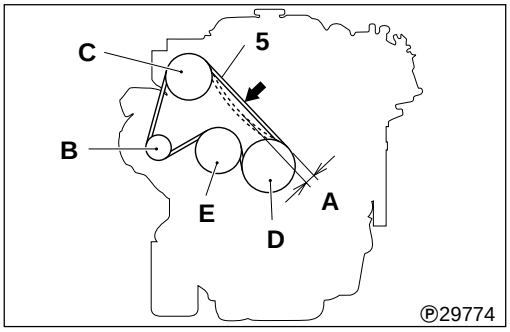

[Inspection]

NOTE

Before checking for tension, crank the engine one turn or more clockwise.

Apply force of approximately 98 N {22.1 lbf, 10 kgt} to the span center of the V-ribbed belt **5**, and measure the extent of belt deflection **A**.

B: Alternator pulley
C: Air conditioner compressor pulley or tension pully
D: Fan pulley
E: Water pump pulley

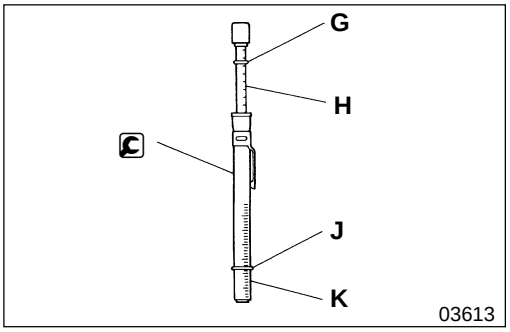

● **Use of belt tension gauge**

- Set the upper O-ring **G** of the Belt Tension Gauge to a push load of 98 N {22 lbf, 10 kgt} on scale **H**.
- Set the lower O-RING **J** of the Belt Tension Gauge to the belt's specified maximum deflection value on scale **K**.

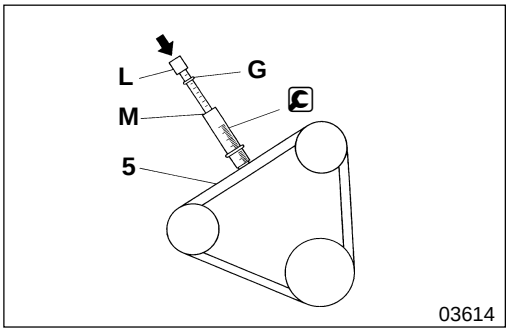

- Apply the Belt Tension Gauge to the center of the V-ribbed belt **5** and push **L** until the upper O-ring **G** reaches the flange **M**.

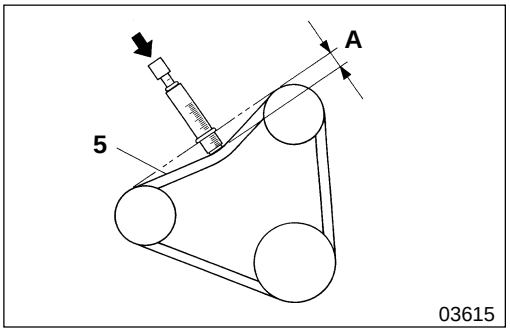

- Measure the deflection **A** of the V-ribbed belt **5**. If the measurement does not comply with the standard value, adjust the tension in accordance with the following procedure.

[Adjustment]

(1) Tension adjustment of V-ribbed belt for water pump

CAUTION ⚠

- **Excessive tension in the V-ribbed belt 5 may damage the belt and related bearings.**
- **Keep the V-ribbed belt 5 free of oil. If the belt becomes oily, it may slip, resulting in overheating of the engine and insufficient charging of the battery.**

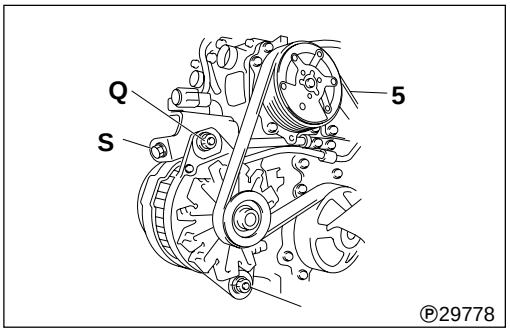

<With air conditioner>

- Loosen the alternator mounting nuts **Q** and **R**, then adjust the tension of the V-ribbed belt **5** using the adjustment bolt **S**.
- When the adjustment is completed, securely tighten the nuts **Q** and **R**.

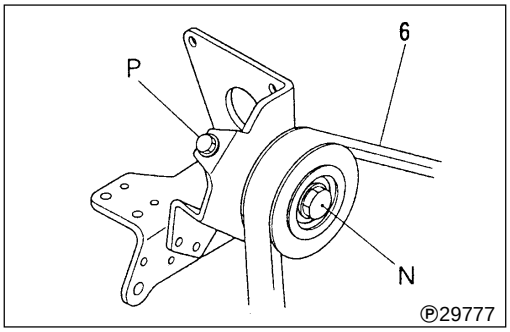

<Without air conditioner>

- Loosen the tension pully mounting sleeve **N** and adjust the tension of the V-ribbed belt **6** using the adjusting belt **P**.
- After the adjustment, tighten the sleeve **N** securely.

Battery

DANGER ⚠

- **Since flammable hydrogen gas is generated by the battery, be sure to obey the following warnings:**
- **Do not short-circuit the ⊕ and ⊖ terminals on the battery.**
- **Keep sparks and lit cigarettes away from the battery.**
- **Do not wear metal objects on your arms and lean over the battery.**
- **Because the battery electrolyte is diluted sulfuric acid and is corrosive, when handling the battery wear safety glasses and rubber gloves to protect the eyes and hands.**
- **Battery posts, terminals and related accessories contain lead and lead compounds. Wash hands after handling.**

WARNING ⚠

To prevent a short-circuit be sure that disconnected the battery cables do not accidentally touch the battery terminals.

CAUTION ⚠

- **Make sure that you disconnect the battery cable ⊖ first when you disconnect the battery cables.**
- **Make sure that all electrical switches of the vehicle are OFF before connecting the battery cables.**
- **Make sure that you connect the battery cables ⊕ before you connect the battery cable ⊖.**

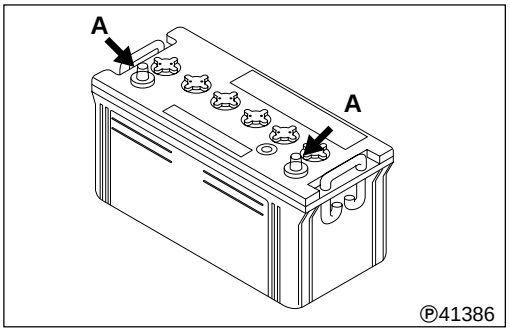

Visual inspection

- If terminal **A** is corroded, scrub off the corrosion from it using a wire brush.
- If cracks or defects are found on battery **7**, replace it because the cracks or defects can cause liquid spills.

CAUTION ⚠

Be sure to apply grease to the ⊕ side of terminal A because it is easily corroded.

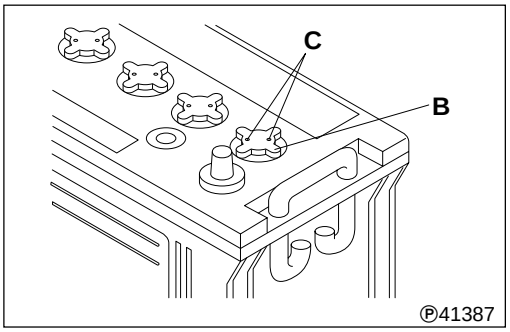

- If the air bleed hole **C** of vent plug **B** is clogged, clean the hole.

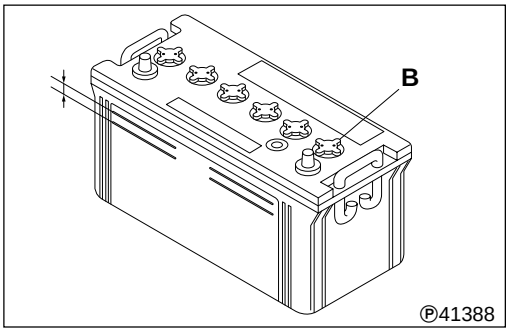

Inspection of fluid level

- Confirm that the level of battery electrolyte is between UPPER and LOWER LEVEL lines.
- If the level is below LOWER LEVEL line, remove vent plug **B** and replenish the distilled water or battery fluid to the UPPER LEVEL.

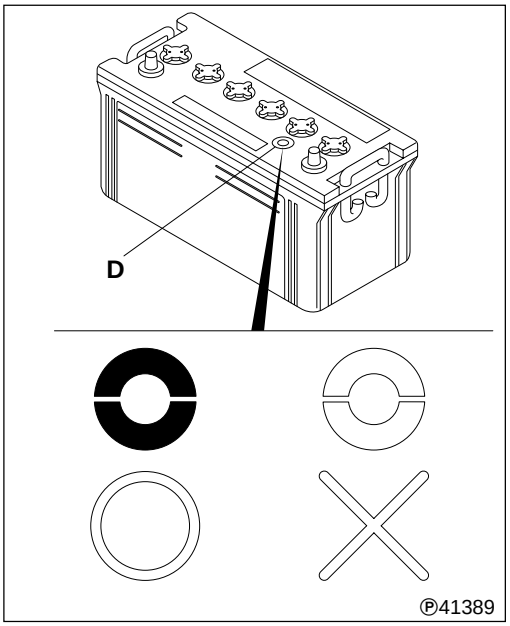

Specific gravity measurement

You can tell the specific gravity of the battery electrolyte by the color shown in indicator **D**.

Blue : Good
White : Charge or replace

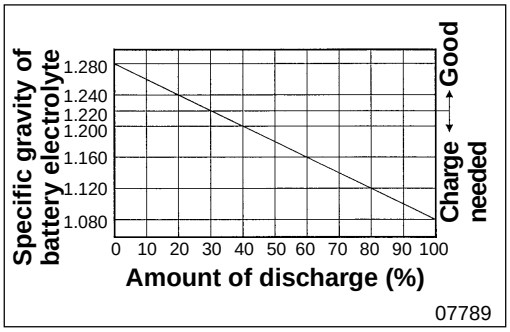

Charging

- Although, as a rule, charging of the battery should be done with the battery removed from the vehicle, if you have to charge the battery while it is on the vehicle, make sure that you stop the engine and disconnect the battery cable ⊖.
- Remove vent plug **B** before charging the battery.
- For the recommended charge time and current, see the following table to avoid overcharging.

	Charge current (A)	Charge time (H)	Upper limit of fluid temperature (°C{°F})
Normal charge	value of 5-hour rating capacity / 10	*Amount of discharge (Ah) / Charge current (A) × 1.2 (to 1.5)	45 {113}
Quick charge	Value of 5-hour rating capacity / 1.5	0.5	55 {131}

* Amount of discharge (Ah) = 5 hour rating capacity (Ah) × Amount of discharge (%) / 100

- Use the graph shown on the left to calculate the amount of discharge (%).
- If electrolyte level is low add distilled water to raise level.
- The specific gravity of fully-charged battery electrolyte is 1.280 with the temperature at 20°C {68°F}.

DANGER ⚠

- **Do not let the battery electrolyte level rise and overflow while charging the battery.**
- **Keep unprotected lights away from the battery while charging it or it might explode.**
- **Be careful not to generate sparks while charging the battery because its dangerous.**
- **After charging the battery, tighten vent plug B, wash away sulfuric acid from the battery using water, and dry the surface.**
- **Be sure to check the electrolyte level before charging the battery. Charging with the electrolyte level below the lower limit (LOWER LEVEL) can cause premature deterioration, heat generation and explosion of the battery.**

MEMO

Fuse

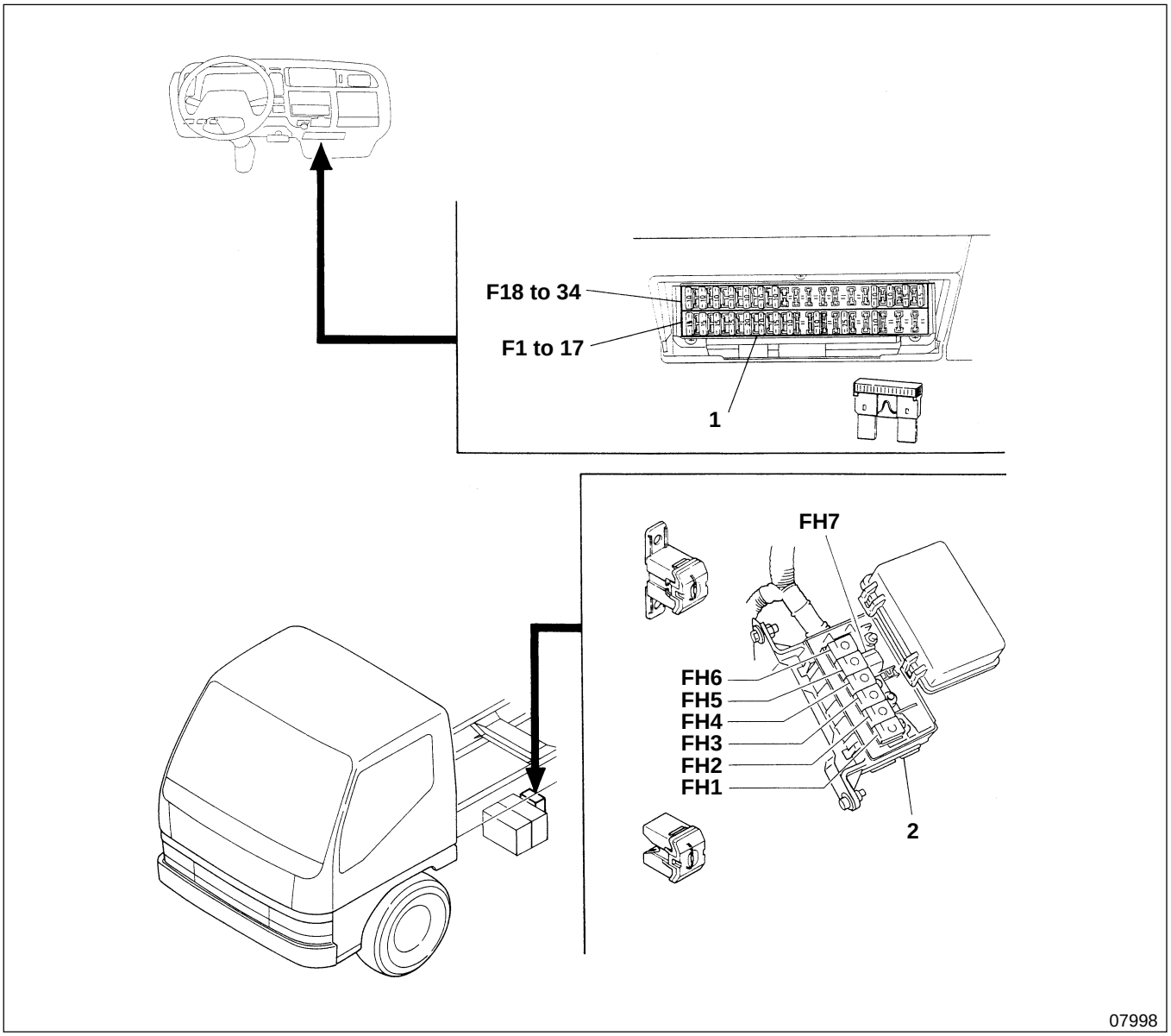

1 Fuse box
2 High-current fuse box

CAUTION ⚠

- **If a fuse blow, make sure you identify and remedy the cause, then replace the fuse.**
- **Make sure that you replace the fuse with one having the same rating.**
- **Make sure that you remove the ⊖ terminal of the battery cable before removing high-current fuses FH1 to 7.**

High-current fuse box

Fuse No.	Main load	Capacity
FH1	Fuse box (F1 to F4)	50A
FH2	Fuse box (F5 to F7)	50A
FH3	ABS hydraulic unit	40A
FH4	ABS hydraulic unit	30A
FH5	Starter switch (Terminal B)	50A
FH6	Fuse box (F32 to F34)	50A
FH7	Alternator	100A

Fuse box

Fuse No.	Main load	Capacity
F1	Headlamp, LH	15A
F2	Headlamp, RH	15A
F3	Stop lamp, horn	15A
F4	Turn signal lamp	15A
F5	⋆Engine control unit	20A
F6	Cab lamp	10A
F7	Reserve power (BATT)	10A
F8	Power window	25A
F9	—	—
F10	Automatic transmission fluid cooler fan relay	15A
F11	Automatic transmission fluid cooler fan relay	20A
F12	—	—
F13	Cigarette lighter	15A
F14	Radio	10A
F15	Reserve power (ACC)	10A
F16	—	—
F17	Mirror heater relay	10A

Fuse No.	Main load	Capacity
F18	Transmission neutral relay <Manual transmission> Inhibitor switch <Automatic transmission>	10A
F19	Backup lamp	10A
F20	Meter cluster, DRL	10A
F21	Wiper	10A
F22	Reserve power (MAIN)	10A
F23	Automatic transmission control unit	10A
F24	Automatic transmission control unit	10A
F25	Engine control (ACT)	10A
F26	—	—
F27	Exhaust brake	10A
F28	Engine control unit	10A
F29	ABS	10A
F30	Mirror heater relay	10A
F31	—	—
F32	⋆Condenser fan	15A
F33	Blower fan	25A
F34	Tail lamp	20A

⋆ : Fuses are provided for these pieces of equipment only where they are installed.

DRL: Daytime Running Lights

: Exhaust emission items

	Items	Time of inspection and maintenance						Lubricant specifications	Remarks
		New vehicle at 4000 km/ 2500 miles	Inspection interval: Every 10000 km/ 6000 miles	Every 20000 km/ 12000 miles	Every 30000 km/ 18000 miles	Every 40000 km/ 24000 miles	Every 5000 km/ 30000 miles		
1	Engine oil replacement	×	×					Engine oil API classification, CD, CD/SF, CE, CE/SF or CF-4 Over 30°C {86°F} SAE 40 40 to –5°C {104 to 23°F} SAE 30 15 to –15°C {59 to 5°F} SAE 20W-20 Over –15°C {5°F} SAE 15W-40 Below 0°C {32°F} SAE 10W-30	Gr 12A

Engine Oil Replacement

❶ Tightening torques

Unit: N·m {lbf·ft, kgf·m}

Location	Parts to be tightened	Tightening torque	Remarks
2	Oil pan drain plug	34.3 to 43.1 {25 to 32, 3.5 to 4.4}	—
3	Oil filter drain plug	9.8±1.96 {7.2±1.4, 1.0±0.2}	—

Lubricant

Location	Points of application	Specified lubricant	Quantity
—	Oil pan	Engine oil (API CD or higher)	Approx.9 L {9.5 qts}
—	Oil filter	Engine oil (API CD or higher)	Approx.1 L {1.1 qts}

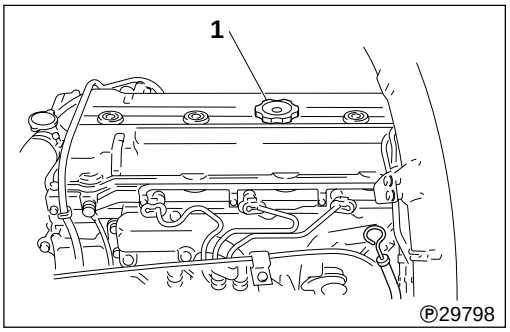

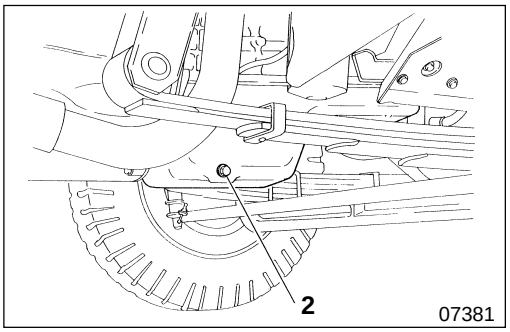

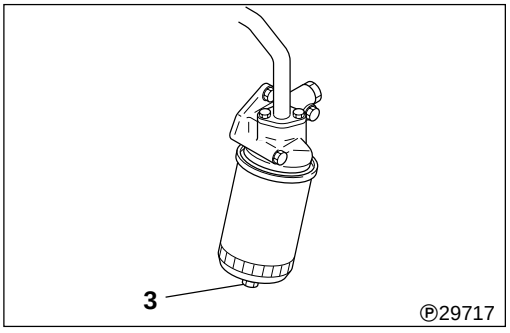

WARNING ⚠

Wipe up any spilled engine oil since it can cause a fire.
Do not touch oil when the engine is not since it can inflict severe burns.

CAUTION ⚠

When pouring oil into the engine, take care not to spill any on the V-ribbed belt. Contact with oil could make the V-ribbed belt slip, rendering the cooling system less effective.

[Draining]

- Warm up the engine, then remove oil filler cap **1**.
- Remove oil pan drain plug **2** and oil filter drain plug **3**. Then, drain the engine oil.

[Filling]

Tighten oil pan drain plug **2** and oil filter drain plug **3** to their specified torques. Then, add new engine oil to the specified level.

GROUP 11 ENGINE
<4D34T3>

FLYWHEEL 11-2

FLYWHEEL POWER TAKE-OFF 11-6

FLYWHEEL

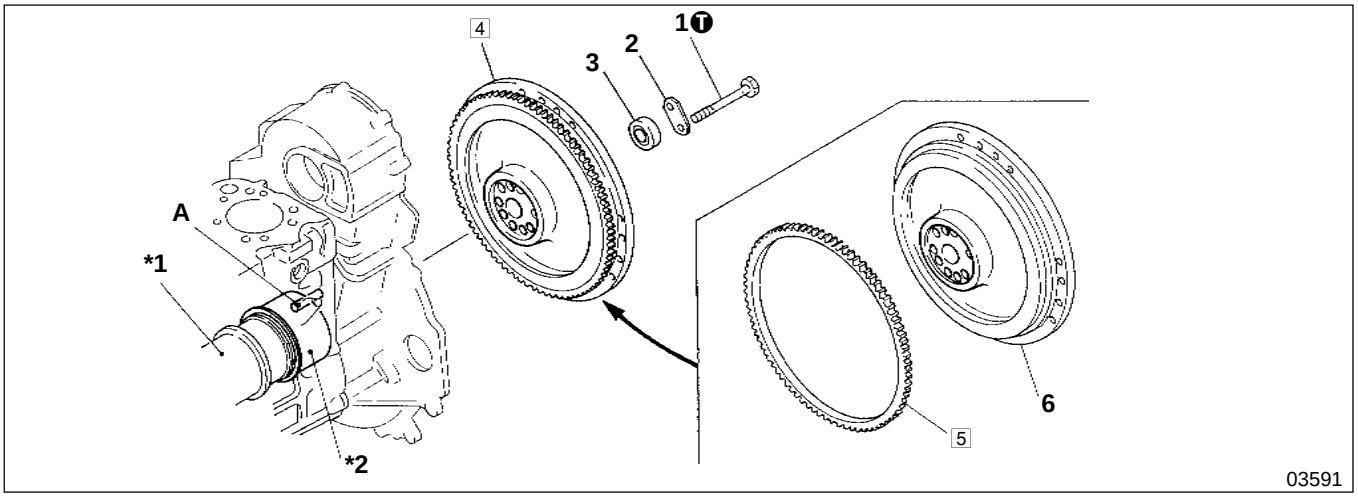

● **Disassembly sequence**

1 Bolt
2 Plate
3 Bearing
4 Flywheel assembly
5 Ring gear
6 Flywheel

1: Crankshaft Gr.11
2: Crankshaft power take-off pulley P.11-6

A: Location Pin

● **Assembly sequence**

Follow the disassembly sequence in reverse.

CAUTION ⚠

After the flywheel assembly 4 is installed, be sure to check the flywheel 6 for runout.

Service standards

Unit: mm (in.)

Location	Maintenance item		Standard value	Limit	Remedy
4	Flywheel assembly	Height of friction surface	25	24	Correct or replace
		Friction surface distortion	0.05 or less	0.2	Correct or replace
		Friction surface runout (when fitted)	—	0.2	Correct or replace

Ⓣ Tightening torques

Unit: N·m {lbf.ft, kgf·m}

Location	Parts to be tightened	Tightening torque	Remarks	
1	Bolt (flywheel assembly installation)	120 {90, 12.5}	M12 bolt	
		175 {130, 18.0}	M14 bolt	

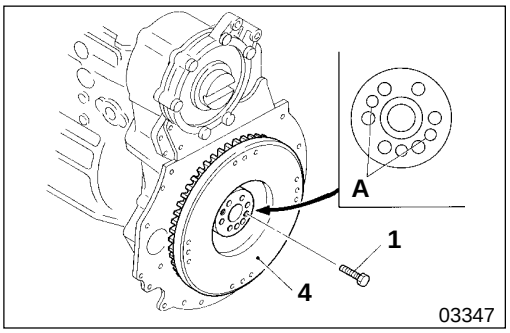

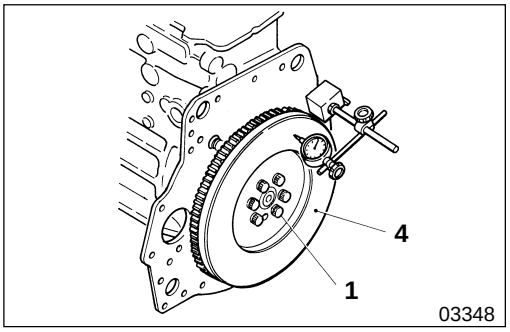

◆ Service procedure

4 Flywheel assembly

[Removal]

- To remove the flywheel assembly **4**, screw the mounting bolts **1** into the removal holes **A**.
- Loosen the bolt of the tensioner pulley assembly to remove the tension from the belt. P.11-8

[Installation]

Adjust the belt tension after installing the flywheel assembly **4**.
P.11-6

[Inspection]

(1) Runout

If runout exceeds the specified limit, check that the bolts **1** are tightened correctly and inspect the surface in contact with the crankshaft ***1**. Then, rectify or replace the flywheel assembly **4** as required.

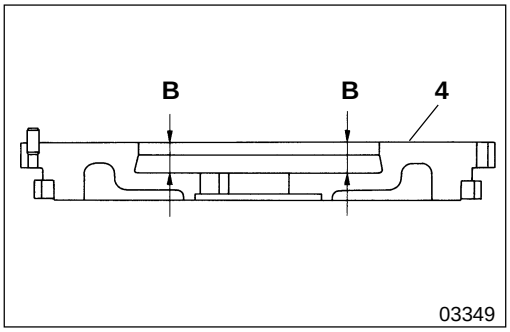

(2) Height of friction surface

If the measurement is below the specified value, rectify or replace the flywheel assembly **4**.

B: Height of friction surface

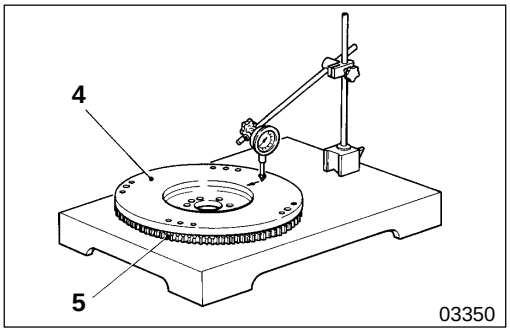

(3) Distortion of friction surface

If distortion exceeds the specified limit, rectify or replace the flywheel assembly **4**.

CAUTION ⚠

If any abnormality is evident on the ring gear 5, replace the ring gear before making inspections.

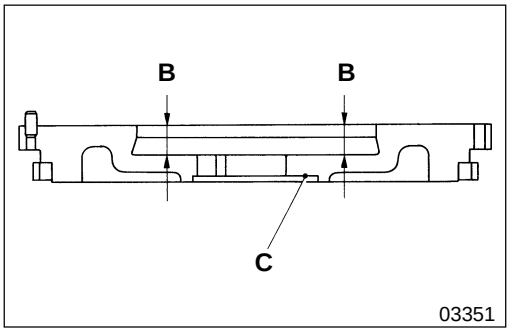

[Rectification]

Grind the friction surface such that its height **B** remains greater than the specified minimum. The friction surface must remain parallel with surface **C** with a tolerance of 0.1 mm {0.0039 in.}.

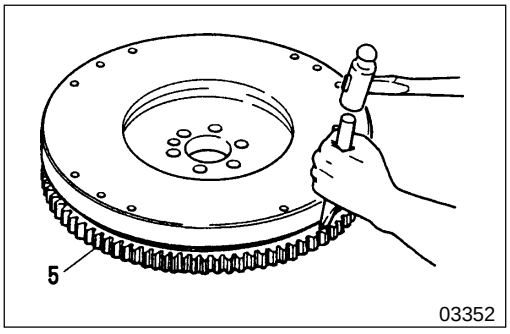

5 Ring gear

[Inspection]

Check the ring gear **5** for damage and abnormal wear, and replace the ring gear if it is faulty.

[Removal]

- Heat the ring gear **5** evenly with an acetylene torch or the like.

WARNING ⚠

Be careful not to get burned.

- Remove the ring gear **5** from the flywheel by tapping around its entire periphery.

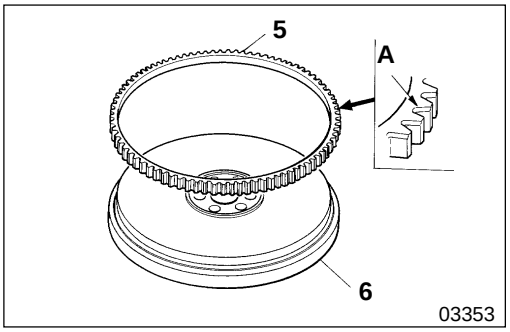

[Installation]

- Using a piston heater or the like, heat the ring gear **5** to approximately 100°C {212°F} for 3 minutes.

WARNING ⚠

Be careful not to get burned.

- Fit the ring gear **5** with the non-chamfered side of its teeth toward the flywheel **6**.

  A: Chamfered side of ring gear

FLYWHEEL POWER TAKE-OFF

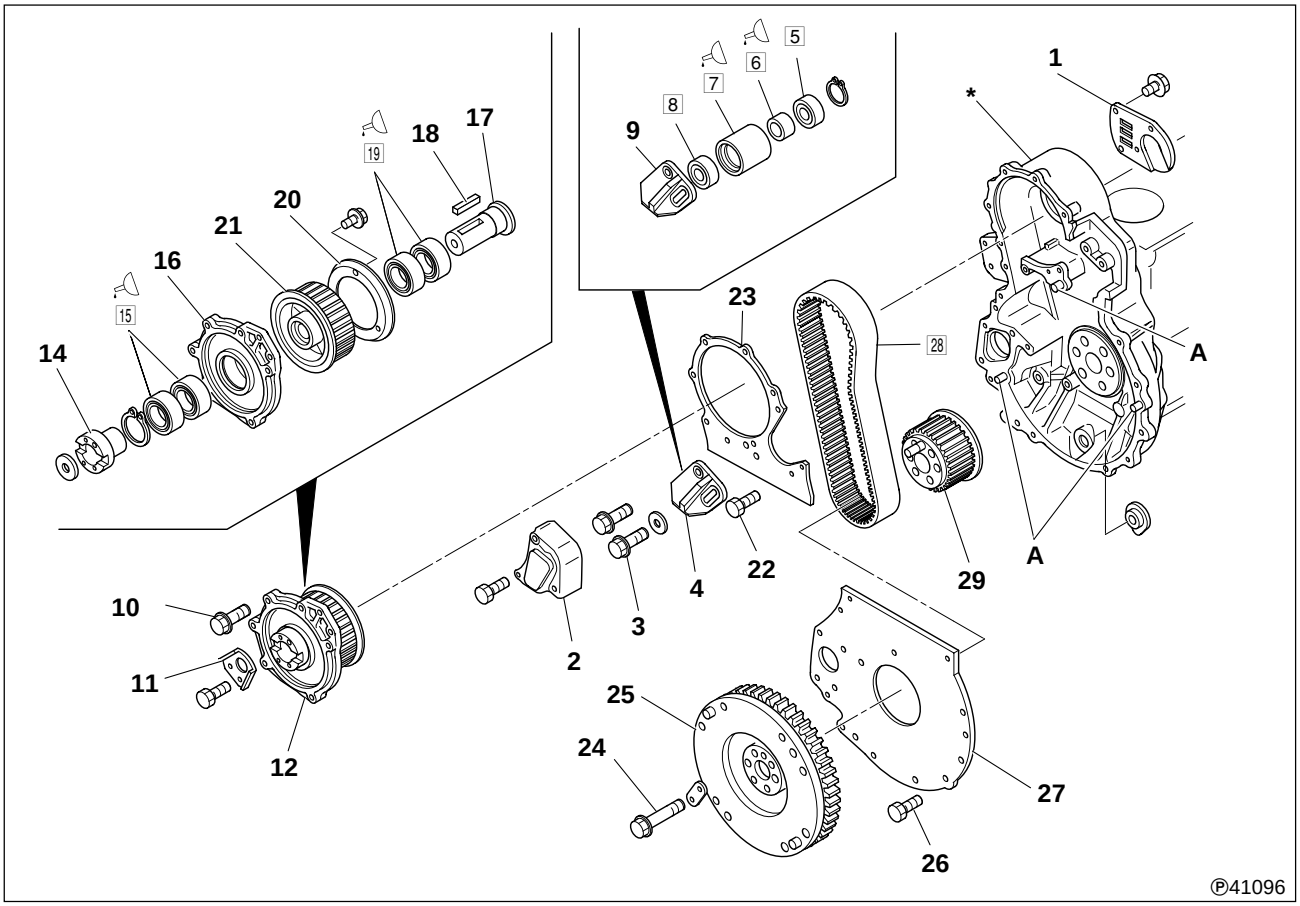

● **Disassembly sequence**

1 Bearing cover
2 Tension pulley cover
3 Bolt
4 Tension pulley assembly
5 Bearing
6 Spacer
7 Tension pulley
8 Bearing
9 Tension lever
10 Bolt
11 Hanger plate
12 Power take-off pulley assembly
13 Washer
14 Power take-off joint
15 Bearing
16 Bearing case
17 Power take-off shaft
18 Key
19 Bearing
20 Pulley flange
21 Power take-off pulley
22 Bolt
23 Cover plate
24 Bolt
25 Flywheel assembly P11-2
26 Bolt
27 Cover plate
28 Belt
29 Crankshaft power take-off pulley

***:** Flywheel housing Gr.11
A: Location pin
X: Non-reusable part

● **Assembly sequence**

Follow the disassembly sequence in reverse.

❶ Tightening torques

Unit: N·m {lbf.ft, kgf·m}

Location	Parts to be tightened	Tightening torque	Remarks
3	Bolt (for mounting tension pulley assembly)	82 {61, 8.4}	
10	Bolt (for mounting power take-off pulley assembly)	44 {33, 4.5}	
22	Bolt (for mounting cover plate)	54 {40, 5.5}	
24	Bolt (for mounting flywheel assembly and power take-off pulley)	175 {130, 18.0}	M14
26	Bolt (for mounting cover plate)	55 {41, 5.6}	

Lubricant and/or sealant

Unit: g {oz}

Location	Points of application	Specified lubricant and/or sealant	Quantity
6, 7	Between spacer and tension pulley	Templex N-3	5 to 8 {0.18 to 0.28}
15	Between bearings	Templex N-3	5 to 8 {0.18 to 0.28}
19	Between bearings	Templex N-3	7 to 10 {0.25 to 0.35}

◆ Service procedure

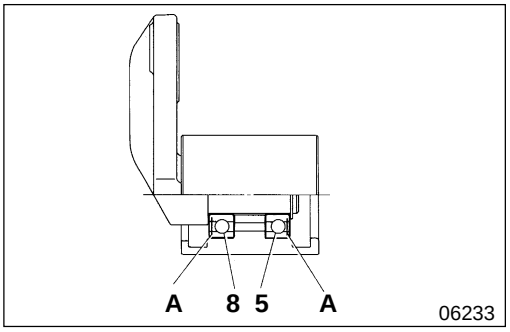

5 8 Installation of bearings

Install the bearings with the sealing portion **A** directed as shown.

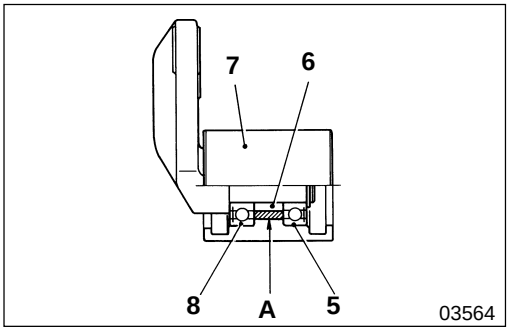

6 7 Packing grease between spacer and tension pulley

Pack a specified amount of grease in the illustrated section **A**.

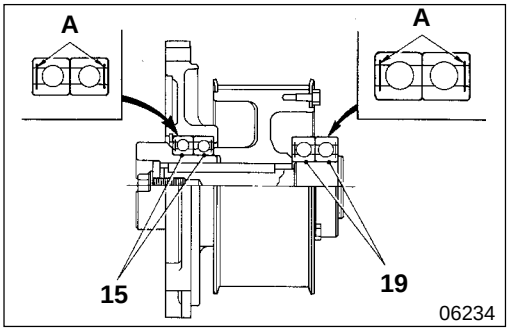

15 19 Bearings

[Installation]

Install the bearings with the sealing section **A** directed as shown.

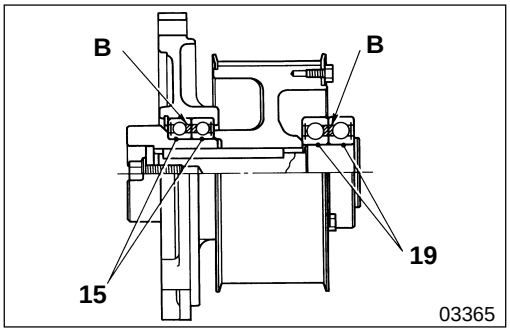

[Grease packing]

Pack a specified amount of grease in the illustrated section **B**.

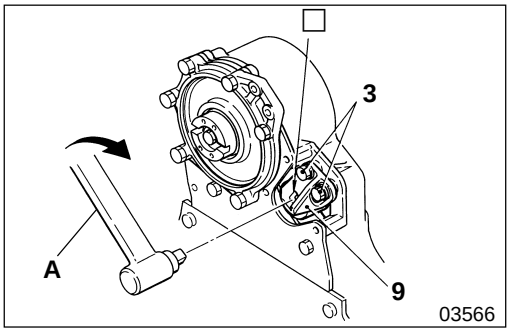

28 **Adjustment of belt tension**

- Loosen the bolt **3** of the tension lever **9**.
- Attach a torque wrench **A** to the □ section of the tension lever **9**.
- Apply a torque of 9.8 N·m {7.2 lbf.ft, 1.0 kgf·m} to the torque wrench **A** in the arrowed direction. Keeping this condition, tighten the bolt **3** to the specified torque.

GROUP 23 AUTOMATIC TRANSMISSION

STRUCTURE AND OPERATION 23-2

TROUBLESHOOTING 23-6

Control Mechanisms

Control system

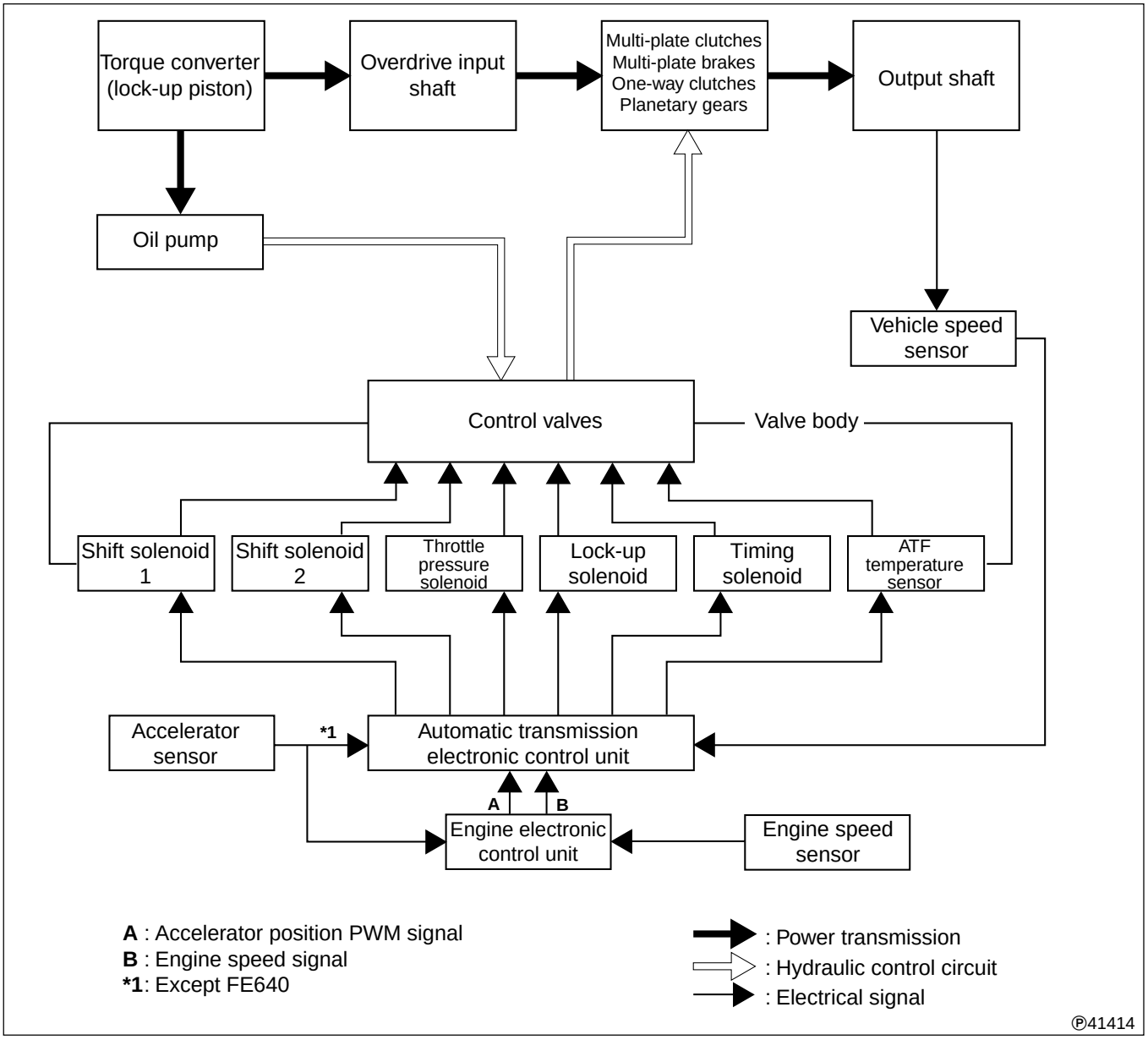

Control block diagram

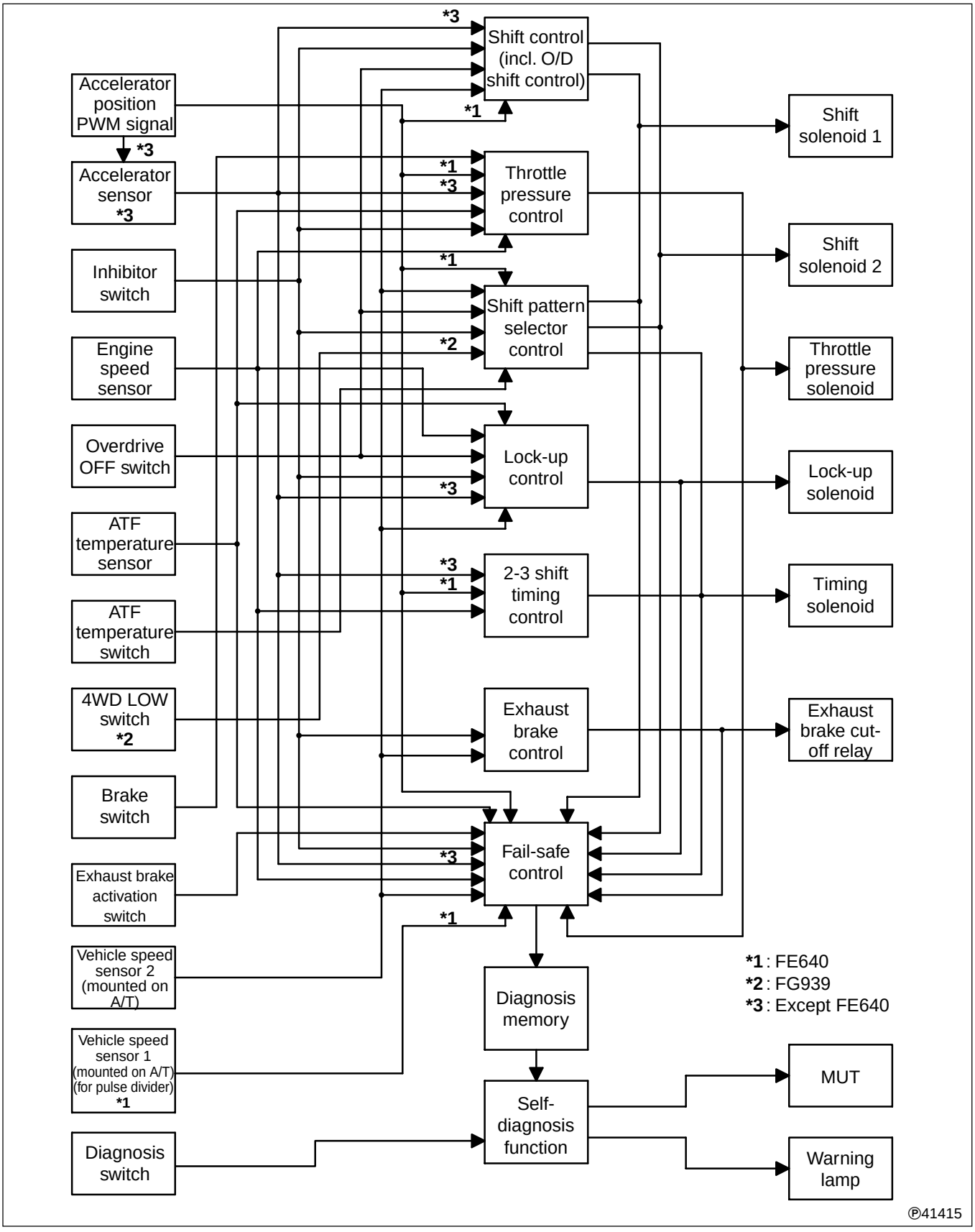

Chart of control items, inputs and outputs

Item			Shift control (incl. overdrive control)	Shift pattern selector control	Throttle pressure control	Lock-up control	2-3 shift control	Exhaust brake control	Fail-safe control	Self-diagnosis control
Input	Vehicle speed sensor 2	Mounted on transmission (output shaft rotation sensor)		×	×	×		×	× Note 1	×
	Vehicle speed sensor 1 *1	Mounted on transmission	× Note 3	× Note 3	× Note 3	× Note 3		× Note 3		
	Throttle position PWM signal		× *1	× *1	× *1	× *1	× *1	× *1	× *3 × Note 1 *1	× *3
	Engine speed sensor				×	×	×		× Note 1	×
	Accelerator sensor *3		×		×	×	×	×	× Note 1	×
	Overdrive OFF switch		×	×		×				
	Inhibitor switch		×	×	×	×		×	× Note 1	×
	Automatic transmission fluid temperature switch			×						
	Automatic transmission fluid temperature sensor				×	×			×	×
	4WD LOW switch			×						
	Brake switch				×					
	Exhaust brake activation signal								× Note 1	×
	Diagnosis switch									× Note 2
Output	Shift solenoid 1		×	×					× Note 1	×
	Shift solenoid 2		×	×					× Note 1	×
	Timing solenoid			×			×		× Note 1	×
	Lock-up solenoid					×			× Note 1	×
	Throttle pressure solenoid				×				× Note 1	×
	Exhaust brake cut-off relay							×	× Note 1	×
	Warning lamp									×

Note 1 : The automatic transmission electronic control unit activates fail-safe functions when there is an abnormality in the input/output signals.
Note 2 : The self-diagnosis function actiates.
Note 3 : Backup for vehicle speed sensor 2 (mounted on transmission)
*1 : FE640
*2 : FG639
*3 : Except FE640

● **Self-diagnosis function <FE640>**

The warning lamp lights when an abnormality occurs during vehicle operation.

- The warning lamp does not light if the abnormality causes minimum effect to vehicle operation.
- The warning lamp lights when the following parts are malfunctioning to indicate the abnormal condition since these malfunctions significantly reduce vehicle performance.
  - Vehicle speed sensor 1
  - Vehicle speed sensors 1 and 2
  - Shift solenoid 1
  - Shift solenoid 2
  - Accelerator sensor
  - Timing solenoid
  - Inhibitor switch
  - Throttle pressure solenoid

CAUTION ⚠

The warning lamp lights only when the malfunction prevents proper vehicle operation.

The indicator lamp provides self-diagnosis information.

- To facilitate the discovery of malfunctions that may not reproduce themselves frequently, the automatic transmission electronic control unit stores in the memory information of malfunctions that occur during vehicle operation.
- An input of a self-diagnosis start signal produces the output of the data from the memory, and causes the automatic transmission warning lamp to flash according to the data.

CAUTION ⚠

The automatic transmission electronic control unit stores information of all malfunctions that occur after the previous self-diagnosis operation.

● **Vehicle speed sensor <FE640>**

The vehicle speed monitoring system is composed of two sensor circuits; vehicle speed sensor 2 (output shaft rotation sensor) and vehicle speed sensor 1. Accordingly, the normal driving mode is not disabled even when one of the vehicle speed sensor circuits is faulty.

● **Diagnosis Code Chart**

Diagnosis code	Problem location	Judgement criterion	Fail-safe measure
1	Normal		
11	Power supply voltage	Power supply voltage remains below 7.5 V for 1 second or longer with range selector in a position other than P or N range.	
12	Vehicle speed sensor 1	• Vehicle speed sensor 1 indicates sudden speed decrease.	• Maintains the gear selected immediately before malfunction detection. • Turns off shift solenoids 1, 2 when engine speed sensor detects a value or less than 1000 rpm.
13	Oil temperature sensor	When oil temperature of more than 135°C {275°F} or lower than –50°C {–58°F} is detected. Note that MUT display is fixed at “40°C {104°F}” after fail-safe judgement result.	Maximum oil temperature
15	Engine speed sensor	Engine speed sensor detects a value of less than 300 rpm when range selector is in a position other than P or N range and when output shaft rotating speed is 1000 rpm or higher.	Prohibits 2-3 shift timing control.
24	Accelerator sensor	When accelerator sensor signal input to engine ECU is faulty.	• Shift-point in set at 0% throttle opening. • Prohibits 2-3 shift timing control. • Executes controls assuming that throttle pressure is at maximum. • Prohibits lock-up control (lock-up solenoid OFF) except during diving at high speeds.
25	Vehicle speed sensor 2	• Vehicle speed sensor 2 indicates sudden speed decrease.	• Maintain the gear selected immediately before malfunction detection. • Turns off shift solenoids 1, 2 when engine speed sensor detects a value or less than 1000 rpm.
31	Shift solenoid 1	• When solenoid output short-circuit occurs while solenoid is receiving current. • When solenoid output disconnection occurs while solenoid is not receiving current.	• Turns off malfunctioning shift solenoid. • Turns off lock-up solenoid and timing solenoid. • Refer to the chart on P23-54 for gear selection.
32	Shift solenoid 2	• When solenoid output short-circuit occurs while solenoid is receiving current. • When solenoid output disconnection occurs while solenoid is not receiving current.	• Turns off malfunctioning shift solenoid. • Turns off lock-up solenoid and timing solenoid. • Refer to the chart on P23-54 for gear selection.
34	Line pressure solenoid	When wire breakage or short-circuit occurs.	Turns off line pressure solenoid.
35	Lock-up solenoid	• When solenoid output short-circuit occurs while solenoid is receiving current. • When solenoid output disconnection occurs while solenoid is not receiving current.	Turns off lock-up solenoid.
43	Inhibitor switch	• No signal	Operates as D range and prohibits shifting to 4th gear.
		• Two or more signals	• Control function activates based on priority order of L > R > 2 > D > N (P). • Refer to pages 23 through 54 for actual vehicle operation conditions.

● Diagnosis Code Chart

Diagnosis code	Problem location	Judgement criterion	Fail-safe measure
50	PTO solenoid	• When solenoid output short-circuit occurs while solenoid is receiving current.	Turns off PTO solenoid.
		• When solenoid output disconnection occurs while solenoid is not receiving current.	
51	Timing solenoid	• When solenoid output short-circuit occurs while solenoid is receiving current.	Truns off timing solenoid.
		• When solenoid output disconnection occurs while solenoid is not receiving current.	
54	Exhaust brake cut-off signal	Exhaust brake activates when exhaust brake cut-off signal is generated.	• Prohibits exhaust brake cut-off control • Allows lock-up only at high cruising speed.

● **Inspection using MUT-II <FE640>**

① The MUT-II indicates diagnosis codes that provide information of malfunctioning items (devices that require inspection).

② The MUT-II indicates sensor signal conditions with numerical values (service data). Comparison of the service data with judgement criteria allows evaluation of the transmission operation. Diagnosis codes and service data codes can be effectively used for troubleshooting.

①		②				
Indicated by MUT-II		Indicated by MUT-II			Inspection procedure	
Diagnosis code	Mulfunctioning item (devices that require inspection)	Service data code	Signal name	Service data	Inspection condition	Judgement criterion
11	POWER VOLTAGE					
12	VEH SPD SNSR 1	12	VEH SPEED 1	□□□.□ MPH	With vehicle standstill	0 MPH
					During driving	To be synchronized with speedometer
13	OIL TEMP SNSR	13	A/T OIL TEMP	□□□.°F	In cold engine	To show same temperature as ambient
					During warming up engine	To show gradually increasing temperature
					With engine stopped after warming up	To show gradually decreasing temperature
15	ENG SPD SNSR	15	ENGINE SPEED	□□□□. rpm	During idling with engine warmed up	650 ± 25 rpm
		19	P POS. SW	ON/OFF	Selector lever in P range	ON
					Selector lever not in P range	OFF
		20	R POS. SW	ON/OFF	Selector lever in R range	ON
					Selector lever not in R range	OFF
		21	N POS. SW	ON/OFF	Selector lever in N range	ON
					Selector lever not in N range	OFF
		22	D POS. SW	ON/OFF	Selector lever in D range	ON
					Selector lever not in D range	OFF
24	ACCEL SNSR	24	ACCEL PERCENT	□□□.%	Accelerator pedal released	0%
					While depressing pedal slowly	Voltage to be increased gradually
					With accelerator pedal fully depressed	100%
25	VEH SPD SNSR 2	25	VEH SPEED 2	□□□.□ MPH	With vehicle standstill	0 MPH
					During driving	To be synchronized with speedometer
		26	2 POS. SW	ON/OFF	Selector lever in 2 range	ON
					Selector lever not in 2 range	OFF
		27	L POS. SW	ON/OFF	Selector lever in L range	ON
					Selector lever not in L range	OFF
		28	OD-OFF SW	ON/OFF	With O/D ON	ON
					With O/D OFF	OFF
		29	POWER S/W	ON/OFF	POWER mode selected	ON
					ECO mode selected	OFF

①		②				
Indicated by MUT-II		Indicated by MUT-II			Inspection procedure	
Diagnosis code	Mulfunctioning item (devices that require inspection)	Service data code	Signal name	Service data	Inspection condition	Judgement criterion
31	SHIFT VALVE 1	31	SHIFT VALVE 1	ON/OFF	During driving in 1st or 2nd speed	ON
					During driving in 3rd or 4th speed	OFF
32	SHIFT VALVE 2	32	SHIFT VALVE 2	ON/OFF	During driving in 2nd or 3rd speed	ON
					During driving in 1st or 4th speed	OFF
34	LINE PRESS. V	34	LINE PRESS	□□□.□ lbf/in^2	While depressing accelerator pedal slowly	Pressure to be increased gradually
35	LOCKUP VALVE	35	LOCKUP VALVE	ON/OFF	During driving with accelerator opening kept constant	To be turned ON when lock-up vehicle speed is reached 🕮 Gr. 23
					Vehicle stopped with selector lever in D range	OFF
		36	OIL TEMP SW	ON/OFF	Oil temperature raised above limit (Warning lamp ON)	ON
					Oil temperature normal (Warning lamp OFF)	OFF
		37	BRAKE SW	ON/OFF	With brake pedal depressed	ON
					With brake pedal released	OFF
		38	EXH. BRAKE SIG	ON/OFF	Exhaust brake in operation during driving	ON
					Exhaust brake not in operation	OFF
		47	ABS SW	ON/OFF	ABS in operation	ON
					ABS not in operation	OFF
		48	M CLEAR SW	OPEN/ CLOSE	With data link connector removed	OPEN
					With data link connector connected	CLOSE
		49	DIAGNOSIS SW	OPEN/ CLOSE	With data link connector removed	OPEN
					With data link connector connected	CLOSE
50	PTO VALVE	50	PTO VALVE	ON/OFF	Power take-off in operation (with accelerator pedal released and selector lever in P range or N range)	ON
					Power take-off not in operation	OFF
51	TIMING VALVE	51	TIMING VALVE	ON/OFF	When 2-3 upshifting is made by releasing acceleration pedal	ON
					When vehicle is stationary	OFF
		53	DIAG LAMP	ON/OFF	System failure (warning lamp ON)	ON
					System in order (warning lamp OFF)	OFF
54	EXB CUT SIG.	54	EXB CUT SIG.	ON/OFF	Exhaust brake in operation	OFF
					When vehicle is stopped through operation of exhaust brake	ON → OFF

①		②				
Indicated by MUT-II		Indicated by MUT-II			Inspection procedure	
Diagnosis code	Mulfunctioning item (devices that require inspection)	Service data code	Signal name	Service data	Inspection condition	Judgement criterion
		55	SELECTOR POS.	□ RANGE	Selector lever moved from P to L range sequentially	Indication to be changed in the order of P → R → N → D → 2 → L.
		56	GEAR POS.	1ST 2ND 3RD 4TH N REV	During driving with accelerator opening kept constant. While accelerating vehicle gradually from 0 mph	See Lock-up Vehicle Speeds table for road test. (1st → 2nd → 3rd → 4th) 🕮Gr. 23
					N range	N
					R range	REV
		59	PTO SW	ON/OFF	Power take-off switch ON (P range, N range)	ON
					Power take-off switch OFF	OFF

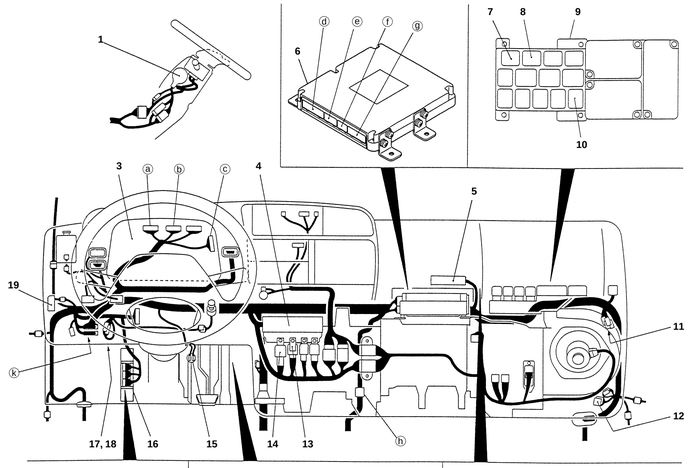

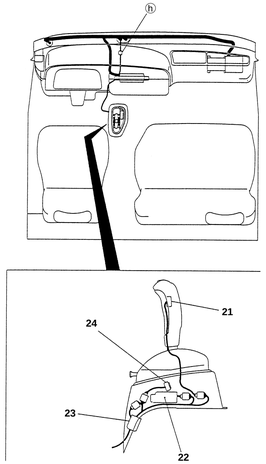

41274

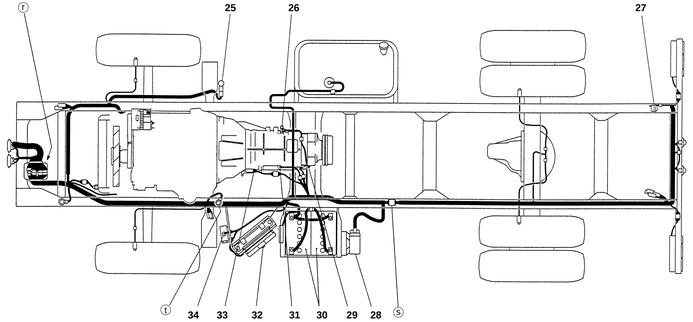

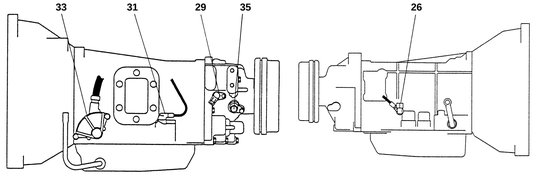

<Left side of transmission>

<Right side of transmission>

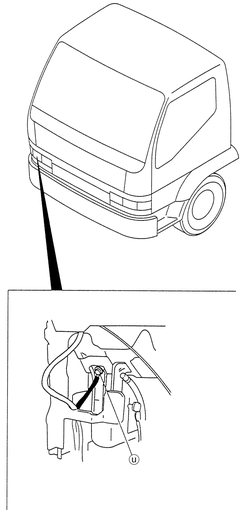

41274

1 Starter switch (key inter lock solenoid installed inside)
2
3 Meter cluster
4 Fuse box
5 Puls divider
6 Engine control unit
7 Exhaust brake cut relay <ABS>
8 Exhaust brake cut relay <A/T>
9 Relay box
10 Backup lamp relay
11 Diode
12 MUT-II connector
13 Automatic transmission fluid cooler fan relay
14 Neutral start relay
15 Stop lamp switch
16 Automatic transmission electronic control unit
17 Diagnosis switch
18 Memory clear relay
19 Key interlock electronic control unit
20 Accelerator sensor
21 Overdrive switch
22 Shift lock actuator
23 Automatic transmission reverse buzzer
24 P-range switch
25 Exhaust brake 3-way magnetic valve
26 Automatic transmission fluid thermo switch
27 Back buzzer
28 High current fuse box
29 Vehicle speed sensor
30 Battery
31 Terminal to solenoid and temperature sensor
32 Automatic transmission fluid cooler fan motor
33 Inhibitor switch
34 Automatic transmission fluid cooler fan thermo switch
35 Vehicle speed sensor

*: Wiper motor
ABS: Anti-lock brake system
A/T: Automatic transmission

ELECTRICAL WIRING DIAGRAM

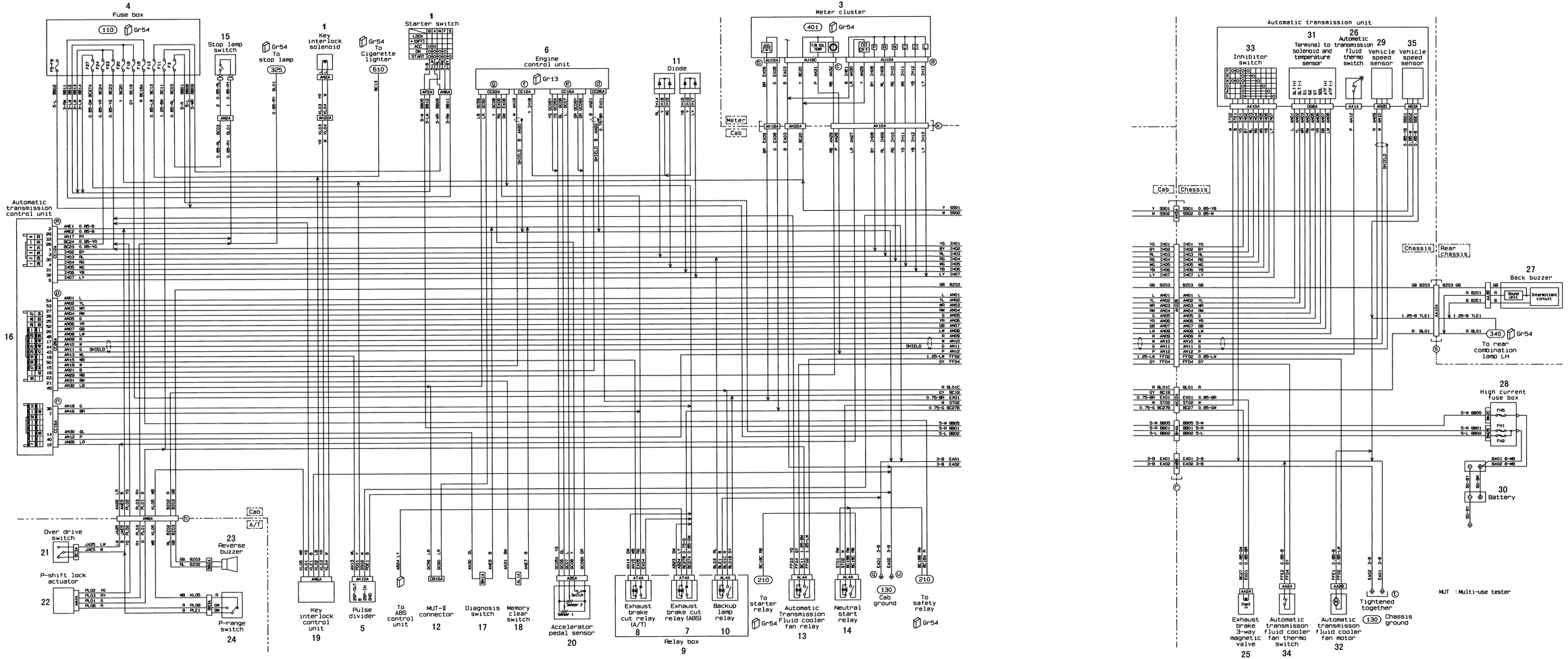

23-13

GROUP 24 TRANSFER <FG>

STRUCTURE AND OPERATION 24-2

REMOVAL AND INSTALLATION OF TRANSFER ASSEMBLY 24-4

FRONT DRIVE 24-8

IDLER GEAR AND REAR DRIVE 24-14

Transfer Body

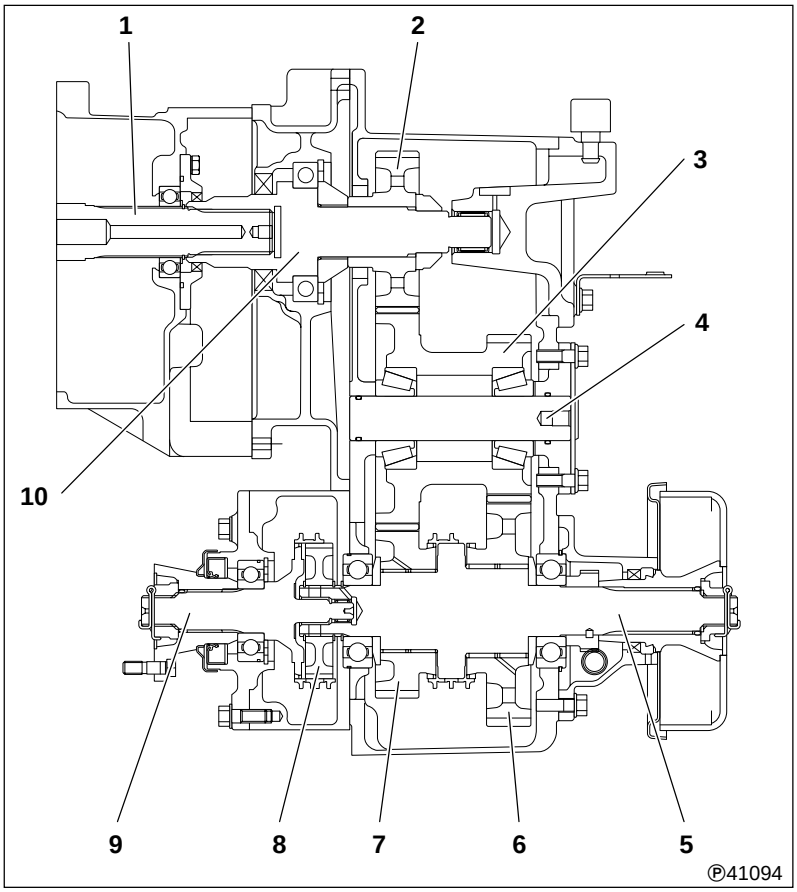

1 Transmission main shaft
2 Drive shaft gear
3 Transfer idler gear
4 Transfer idler shaft
5 Output shaft
6 Output shaft LOW gear
7 Output shaft HIGH gear
8 Front drive hub and sleeve
9 Front drive shaft
10 Transfer drive shaft

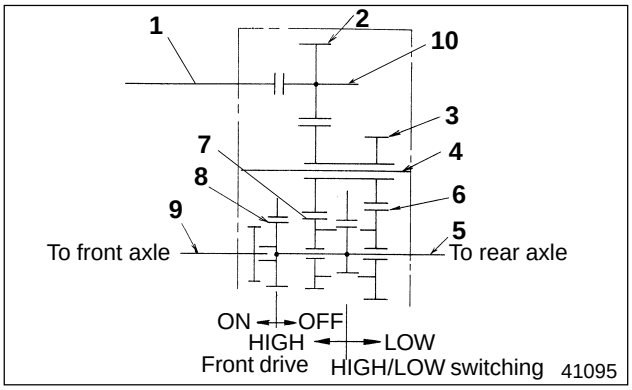

The transfer functions as both the distributer for four-wheel drive and as the sub-transmission with a reduction device.
This transfer is a three-shaft constant-mesh type.
HIGH/LOW changeover and front drive ON/OFF are controlled by a transfer control lever in the cab.

MEMO

REMOVAL AND INSTALLATION OF TRANSFER ASSEMBLY

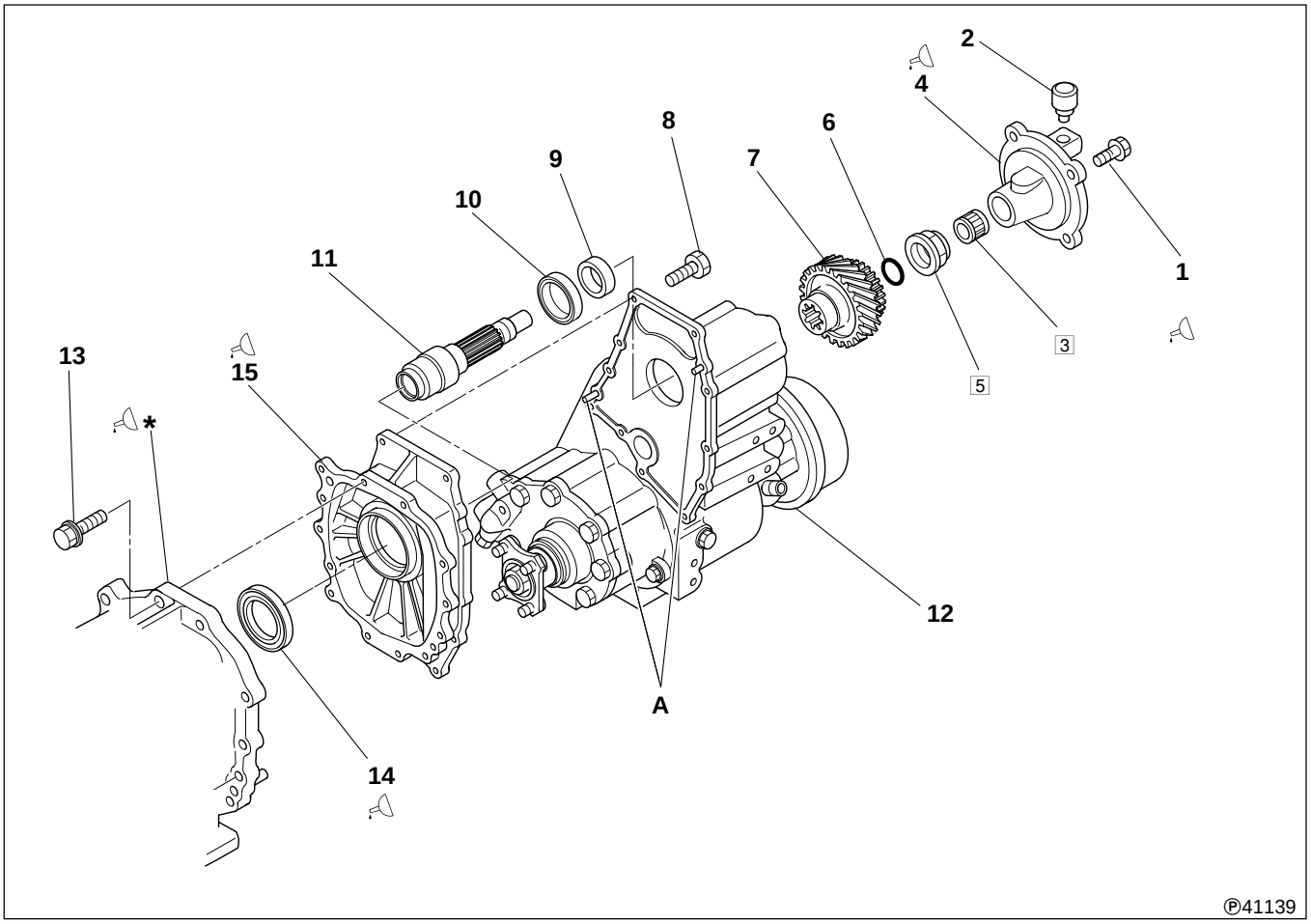

● **Disassembly sequence**

1 Bolt
2 Air breather
3 Needle bearing
4 Transfer input rear cover
5 Lock nut
6 O-ring
7 Drive shaft gear
8 Bolt
9 Spacer
10 Bearing
11 Transfer drive shaft
12 Transfer assembly
13 Bolt
14 Oil seal
15 Transfer front case

A: Positioning pin
***:** Transmission Assembly
X: Non-reusable parts

NOTE

- **For removal from vehicle, see Gr 10.**
- **Check backlash of drive shaft gear 7 before disassembly.**
- **Do not remove needle bearing 3 from transfer input rear cover 4 unless it is faulty.**

● **Assembly sequence**

Follow the disassembly sequence in reverse.

NOTE

Check backlash when assembling parts.

Service standards

Unit: mm {in.}

Location	Maintenance item	Standard value	Limit	Remedy
7, 12	Drive shaft gear and transfer idler gear backlash	0.08 to 0.22 {0.0031 to 0.0087}	0.50 {0.020}	—

Tightening torque

Unit: N·m {lbf.ft, kgf·m}

Location	Parts to be tightened	Tightening torque	Remarks
1	Bolt (Transfer input rear cover mounting)	44 {33, 4.5}	—
5	Lock nut tightening torque	490±49 {360±36, 50±5}	—
8	Bolt (Transfer assembly mounting)	44 {33, 4.5}	—
13	Bolt (Transfer front case mounting)	44 {33, 4.5}	—

Lubricant and/or sealant

Location	Points of application	Specified lubricant and/or sealant	Quantity
*	Mounting surface of transfer front case transmission assembly	THREEBOND 1215	As required
1	Thread area of piece bolt	THREEBOND 1104J	As required
4	Mounting surface of transfer assembly transfer input rear cover	THREEBOND 1215	As required
14	Lip area of oil seal and transfer assembly	Wheel bearing grease [NLG1 No.2 (Li soap)]	As required
15	Mounting surface of transfer assembly transfer front case	THREEBOND 1215	As required

Special tools

Unit: mm {in.}

Location	Tool name and shape	Part No.	Application
3	Needle roller bearing installer 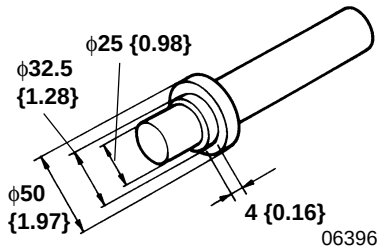	MH061929	Installation of input rear cover needle bearing
5	Socket wrench 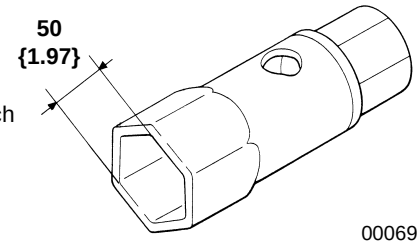	44490-44101	Removal and installation of transmission main shaft lock nut

◆ Service procedure

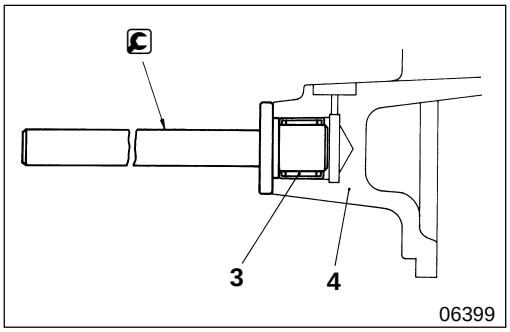

3 **Installation of needle bearing**

: Needle roller bearing installer

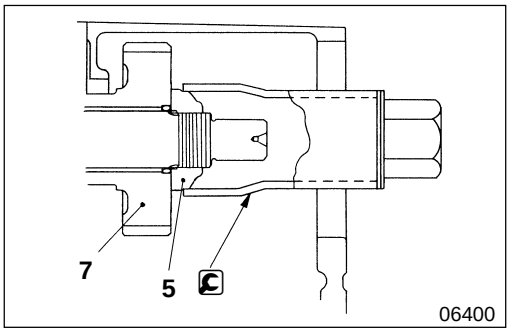

5 **Removal and installation of lock nut**

: Socket wrench

MEMO

FRONT DRIVE

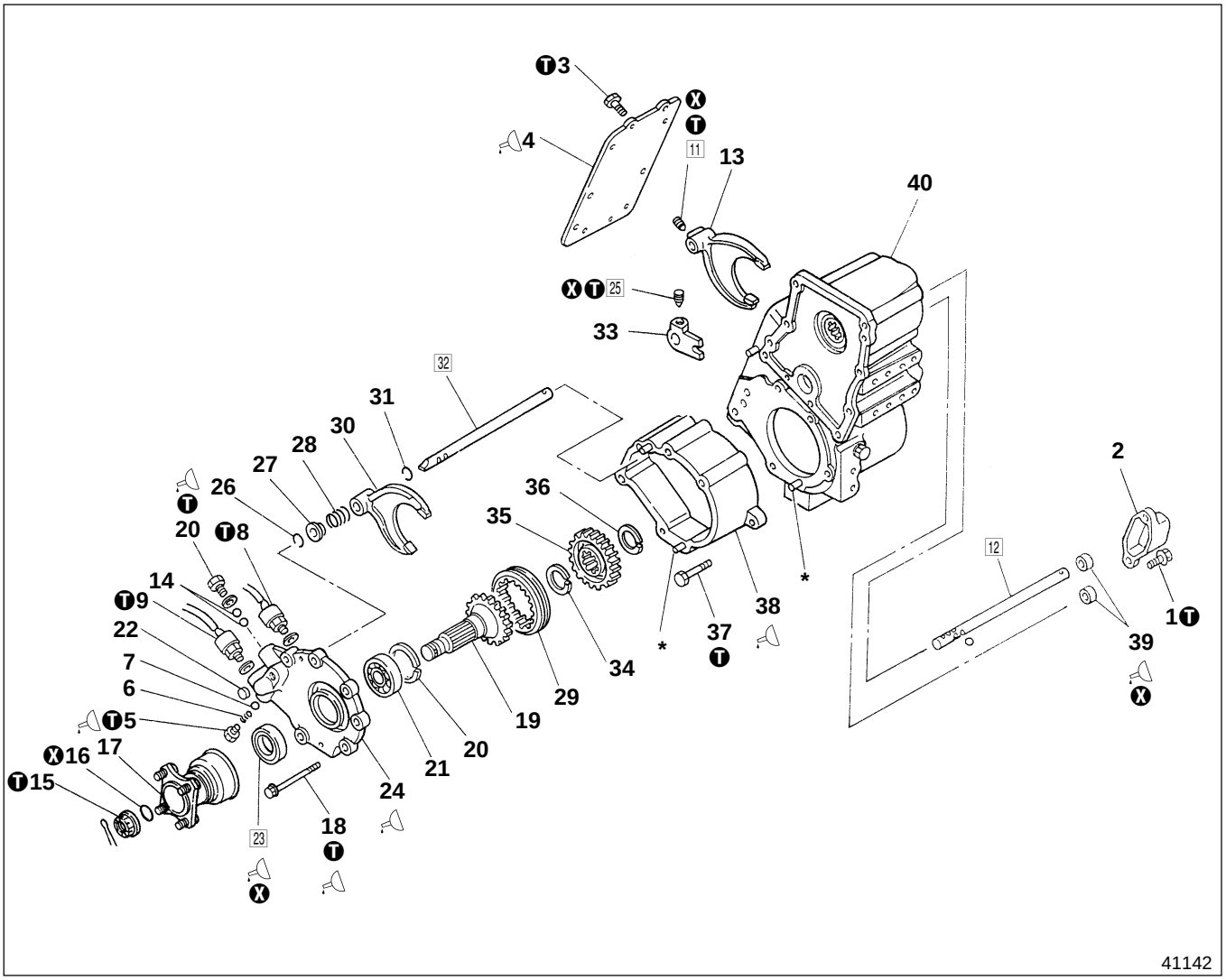

● **Disassembly sequence**

1 Bolt
2 Shift rail cover
3 Bolt
4 Transfer case side cover
5 Screw plug
6 Poppet spring
7 Steel ball
8 Transfer LOW switch Gr 54
9 Transfer four-wheel drive switch Gr 54
10 Screw plug
11 Set bolt
12 HIGH/LOW shift rail
13 HIGH/LOW shift fork
14 Interlock ball
15 Lock nut
16 O-ring
17 Companion flange
18 Bolt
19 Front drive shaft
20 Snap ring
21 Bearing
22 Dust cap
23 Oil seal
24 Front drive case cover
25 Set bolt
26 Snap ring
27 Retainer
28 Spring
29 Synchronizer sleeve
30 Front drive shift fork
31 Snap ring
32 Front drive shift rail
33 Shift rail stopper
34 Snap ring
35 Front drive hub
36 Snap ring
37 Bolt
38 Front drive case
39 Oil seal
40 Transfer assembly

***:** Dowel pin
X: Non-reusable parts

NOTE

HIGH and LOW shift rail 12 cannot be disassembled unless front drive shift rail 32 is set to front drive ON.

● **Assembly sequence**

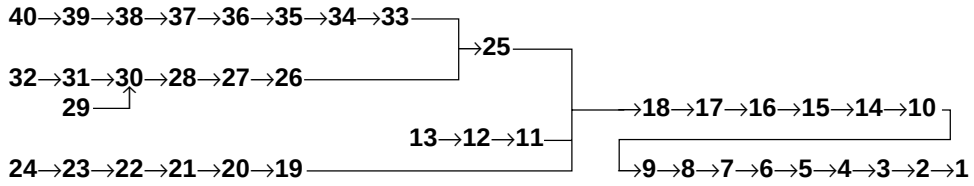

Service standards

Unit: mm {in.}

Location	Maintenance item	Standard value (Basic diameter in [ ])	Limit	Remedy
6	Poppet spring free length	24.85 {0.98}	24.00 {0.94}	Replace
12	Deflection of HIGH/LOW shift rail	0.02 {0.00079} or less	0.03 {0.0012}	Correct or replace
12, 40	Clearance between HIGH/LOW shift rail and transfer assembly rail hole	[16 {0.63}] 0.05 to 0.09 {0.0020 to 0.0035}	0.2 {0.0079}	Replace faulty parts
13	Tilt of claw against HIGH/LOW shift fork hole	0.1 {0.0039} or less	0.2 {0.0079}	Replace
13, 29	Clearance between HIGH/LOW shift fork and synchronizer sleeve	0.3 to 0.5 {0.012 to 0.020}	1.0 {0.039}	Replace faulty parts
29, 30	Clearance between front drive shift fork and synchronizer sleeve	0.3 to 0.5 {0.012 to 0.020}	1.0 {0.039}	Replace faulty parts
30	Tilt of claw against front drive shift fork hole	0.1 {0.0039} or less	0.2 {0.0079}	Replace faulty parts
32	Front drive shift rail deflection	0.02 {0.00079} or less	0.03 {0.0012}	Correct or replace
32, 40	Clearance between front drive shift rail and transfer assembly rail hole	[16 {0.63}] 0.05 to 0.09 {0.0020 to 0.0035}	0.2 {0.0079}	Replace faulty parts

❶ Tightening torque

Unit: N·m {lbf.ft, kgf·m}

Location	Parts to be tightened	Tightening torque	Remarks
1	Bolt (Shift rail cover mounting)	44 {33, 4.5}	—
3	Bolt (Transfer case side cover mounting)	24 {17, 2.4}	—
5	Screw plug tightening	39 {29, 4}	—
8	Transfer LOW switch tightening	34±4.9 {25±3.6, 3.5±0.5}	—
9	Transfer four-wheel drive switch tightening	34±4.9 {25±3.6, 3.5±0.5}	—
10	Screw plug tightening	39 {29, 4}	—
11	Set bolt (Shift fork mounting)	29 {22, 3}	Caulk at three points after tightening
15	Lock nut tightening	295±49 {215±36, 30±5}	—
18	Bolt (Front drive case cover mounting)	44 {33, 4.5}	—
37	Bolt (Front drive case mounting)	44 {33, 4.5}	—

Lubricant and/or sealant

Location	Points of application	Specified lubricant and/or sealant	Quantity
4	Mounting surface of transfer assembly transfer case side cover	THREEBOND 1215	As required
5	Thread area of screw plug	THREEBOND 1215	As required
10	Thread area of screw plug	THREEBOND 1215	As required
18	Thread area of pierce bolt	THREEBOND 1104J	As required
23	Pack between lips of oil seal	Wheel bearing grease (NLGI No. 2 (Li soap)	As required
24	Mounting surface of front drive case front drive case cover	THREEBOND 1215	As required
38	Mounting surface of transfer assembly front drive case	THREEBOND 1215	As required
39	Lip area of oil seal	Wheel bearing grease (NLGI No. 2 (Li soap)	As required

Special tools

Unit: mm {in.}

Location	Tool name and shape	Part No.	Application
20, 26, 34	Snap ring expander 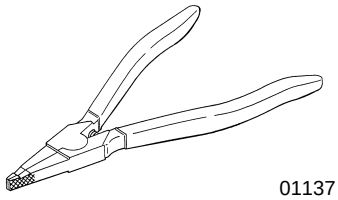 01137	MH061268	Removal and installation of snap ring
23	Bearing installer 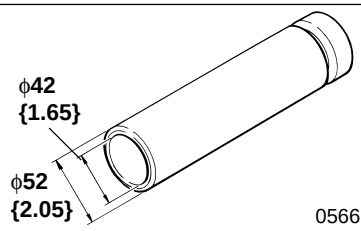 05661	MB999104	Installation of front drive case cover oil seal
	Differential bearing inner race installer adapter 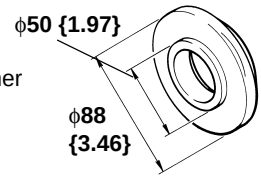 05667	MB999105	
39	Oil seal installer 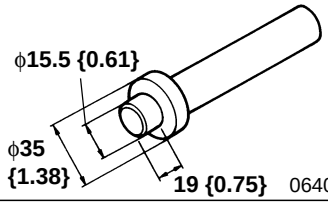 06404	MH061923	Installation of shift rail oil seal

◆ Service procedure

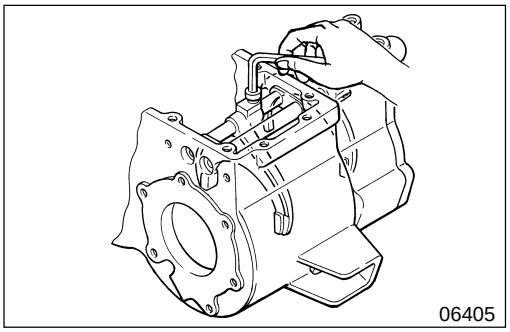

11 25 Removal and installation of set bolt

Tighten shift fork mounting set bolt **11**, **25** at specified torque, and stake the thread area at three points using at punch.

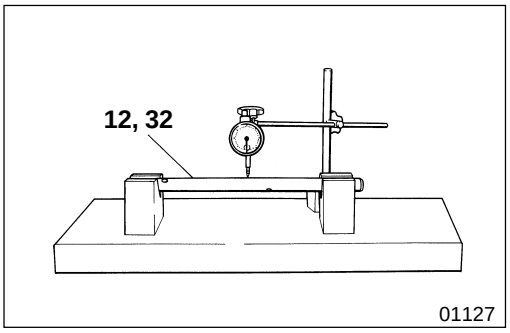

12 32 Inspection of shift rail

If the measured value is higher than the limit, correct or replace shift rails **12**, **32**.

NOTE

To measure the deflection of shift rails 12, 32, turn them one full revolution and read the dial gauge indicator. The deflection is one half of the indicated value.

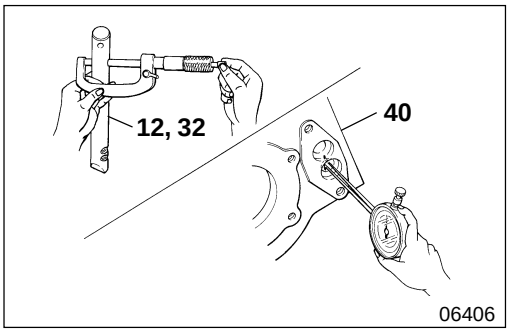

12 32 40 Clearance between shift rail and transfer assembly rail hole

Measure the outer diameter of shift rail **12**, **32** and the inner diameter of transfer assembly hole **40**. If the clearance is higher than the limit, replace faulty parts.

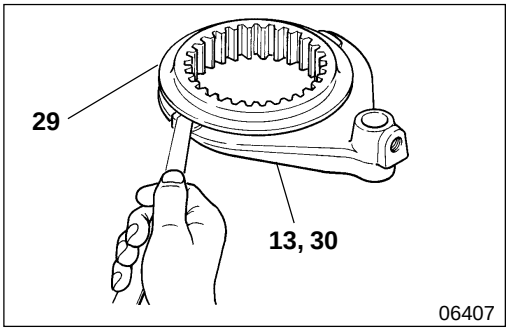

13 29 30 Clearance between shift fork and synchronizer sleeve

If the measured value is higher than the limit, replace faulty parts.

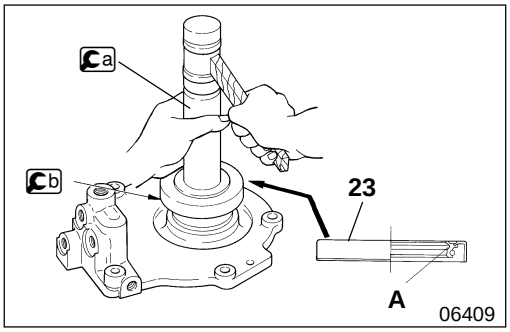

23 **Installation of oil seal**

Apply grease to lip area **A** of oil seal **23**, and press-fit it.

a : Bearing installer
b : Differential bearing inner race installer adapter

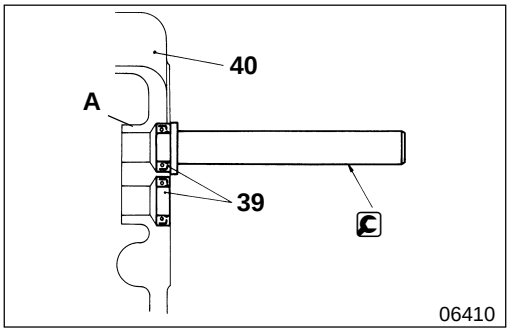

39 **Installation of oil seal**

Apply grease to lip area **A** of oil seal **39** and press-fit it into transfer assembly **40**.

: Oil seal installer

MEMO

IDLER GEAR AND REAR DRIVE

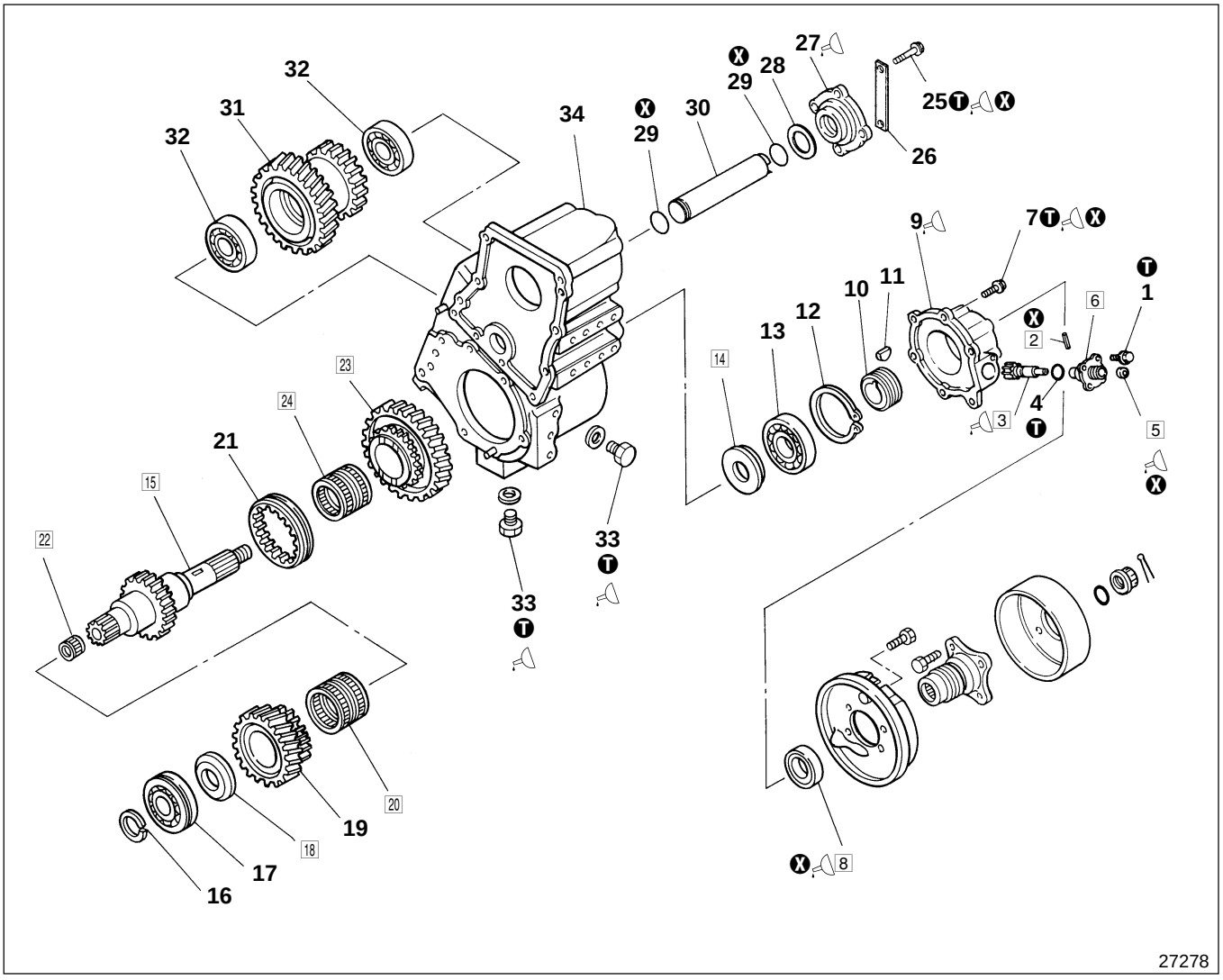

● **Disassembly sequence**

1 Bolt
2 Spring pin
3 Speedometer gear
4 O-ring
5 Oil seal
6 Speedometer gear bushing
7 Bolt
8 Oil seal
9 Output rear cover
10 Speedometer worm
11 Key
12 Snap ring
13 Bearing
14 Thrust washer
15 Rear drive shaft
16 Snap ring
17 Bearing
18 Thrust washer
19 Rear drive shaft HIGH gear
20 Needle bearing
21 Synchronizer sleeve
22 Needle bearing
23 Rear drive shaft LOW gear
24 Needle bearing
25 Bolt
26 Plate
27 Idler rear cover
28 Shim
29 O-ring
30 Transfer idler shaft
31 Transfer idler gear
32 Bearing
33 Drain plug, inspection plug
34 Transfer case

Ⓧ: Non-reusable parts

NOTE

- **Check backlash and end play of gears before disassembly.**
- **Do not remove needle bearing 22 from rear drive shaft 15 unless it is faulty.**

● **Assembly sequence**

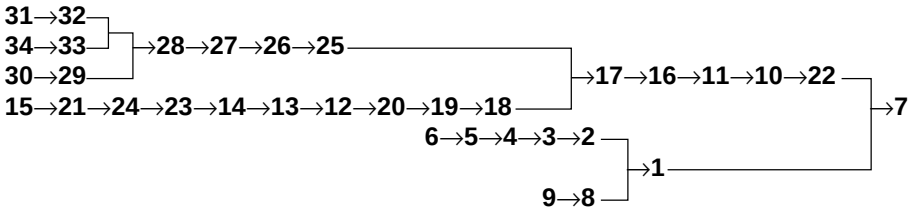

NOTE

- **Check backlash and end play when assembling parts.**
- **Check friction and rotation movements when assembling rotating parts.**

Service standards

Unit: mm {in.}

Location	Maintenance item	Standard value (Basic diameter in [ ])	Limit	Remedy
—	Starting torque of transfer idler gear	0 to 2 {0 to 1.45, 0 to 0.2}	—	Adjust shim
3, 6	Clearance between speedometer gear and speedometer gear bushing	[12] 0.04 to 0.09 {[0.47] 0.0016 to 0.0035}	0.15 {0.0059}	Replace
15, 19, 20	Play of rear drive shaft HIGH gear in diameter direction after assembly	0.02 to 0.06 {0.00079 to 0.0024}	0.12 {0.0047}	Replace faulty parts
15, 23, 24	Play of rear drive shaft LOW gear in diameter direction after assembly	0.02 to 0.06 {0.00079 to 0.0024}	0.12 {0.0047}	Replace faulty parts
19	End play of rear drive shaft HIGH gear	0.25 to 0.40 {0.0098 to 0.0016}	0.60 {0.024}	Replace thrust washer or gear
19, 31	Backlash between rear drive shaft HIGH gear and transfer idler gear	0.08 to 0.22 {0.0031 to 0.0087}	0.50 {0.030}	Replace
21	Clearance between synchronizer sleeve groove and HIGH/LOW shift fork	0.3 to 0.5 {0.012 to 0.020}	1.0 {0.039}	Replace faulty parts
23	End play of rear drive shaft LOW gear	0.25 to 0.40 {0.0098 to 0.016}	0.60 {0.024}	Replace thrust washer or gear
23, 31	Backlash between rear drive shaft LOW gear and transfer idler gear	0.08 to 0.24 {0.0031 to 0.0094}	0.50 {0.020}	Replace

❶ Tightening torque

Unit: N·m {lbf.ft, kgf·m}

Location	Parts to be tightened	Tightening torque	Remarks
1	Bolt (Speedometer gear bushing mounting)	24 {17, 2.4}	—
7	Bolt (Output rear cover mounting)	44 {33, 4.5}	—
25	Bolt (Plate and idler rear cover mounting)	44 {33, 4.5}	—
33	Drain plug and inspection plug tightening	69±15 {51±11, 7.0±1.5}	—

Lubricant and/or sealant

Location	Points of application	Specified lubricant and/or sealant	Quantity
3	Friction surfaces between speedometer gear and speedometer gear bushing	Molybdenum disulfide grease	As required
5	Lip area of oil seal	Wheel bearing grease [NLGI No.2 (Li soap)]	As required
7	Thread area of bolt	THREEBOND 1104J	As required
8	Pack between lips of oil seal	Wheel bearing grease [NLGI No.2 (Li soap)]	As required
9	Mounting surface of transfer case output rear cover	THREEBOND 1215	As required
25	Thread area of bolt	THREEBOND 1104J	As required
27	Mounting surface of transfer case idler rear cover	THREEBOND 1215	As required
33	Thread area of drain plug and inspection plug	THREEBOND 1105D	As required

Special tools

Unit: mm {in.}

Location	Tool name and shape	Part No.	Application
8	Oil seal installer 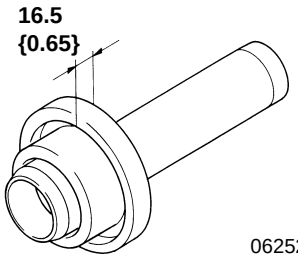 06252	MH062691	Installation of output rear cover oil seal
12	Snap ring expander 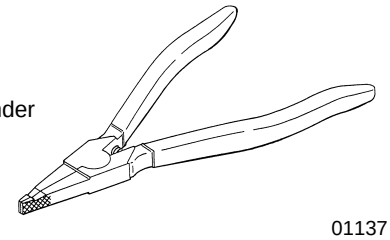 01137	MH061268	Removal and installation of snap rings
22	Needle roller bearing installer 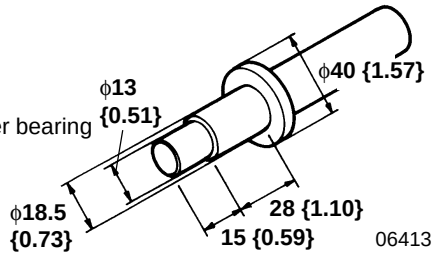 06413	MH061927	Installation of rear drive shaft needle bearing

◆ Service procedure

Inspection before service

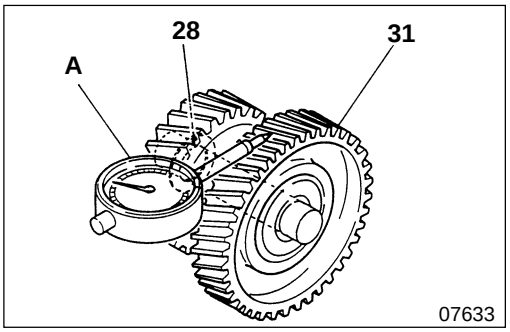

● **Starting torque of transfer idler gear**

- Disassemble parts, and measure the torque with push gauge **A** leaving only transfer idler gear **31** in transfer case.
  If the value deviates from the standard value, adjust it using shim **28**.
- On assembly, also check that starting torque is within the standard value range using the same method.
- Shim **28** is available in four thickness: 0.01 mm {0.00039 in.}, 0.02 mm {0.00079 in.}, 0.03 mm {0.0012 in.}, 0.06 mm {0.0024 in.}.

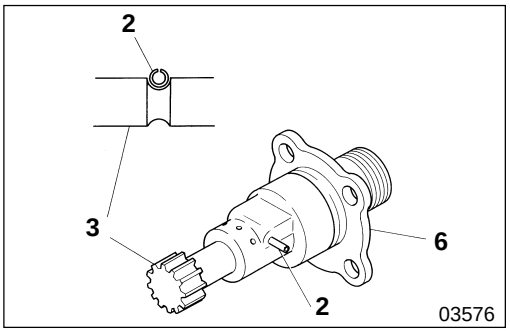

2 **Driving-in spring pin**

Drive spring pin **2** into speedometer gear bushing **6** with the opening in the opposite direction to speedometer gear **3**.

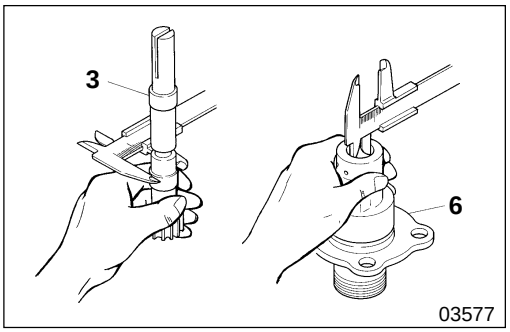

3 6 **Clearance between speedometer gear and speedometer gear bushing**

If the clearance is higher than the limit, replace the faulty parts.

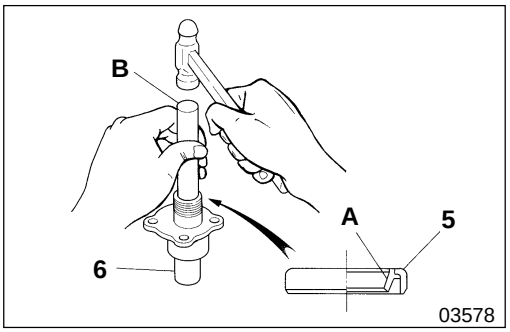

5 **Installation of oil seal**

Apply grease to lip area **A** of the inner rim of the oil seal, and press-fit oil seal evenly into speedometer gear bushing **6** in the direction as illustrated using bar **B** (approximately ϕ15 mm {0.59 in.}).

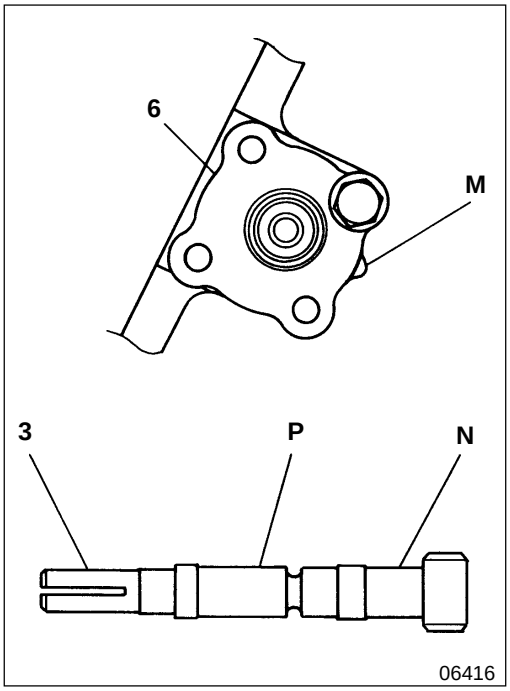

6 Installation of speedometer gear bushing

Due to its eccentric center arrangement, speedometer gear bushing **6** allows replacement of speedometer gear **3** with gears having a different number of teeth by changing only the installation direction, the worm gear does not have to be changed.
When installing the bushing, align the stamped number, identical to the number of speedometer gear teeth, with alignment mark **M** of output rear cover **9**.
The number of speedometer gear teeth can be identified by the identification marks stamped on **N** or **P**.

Identification mark and number of speedometer gear teeth

Identification mark	A	B	C	D	L	E	F	G	H	I	J	K
Number of teeth	15	16	17	18	19	20	21	22	23	24	25	26
Gear ratio	3.0	3.2	3.4	3.6	3.8	4.0	4.2	4.4	4.6	4.8	5.0	5.2

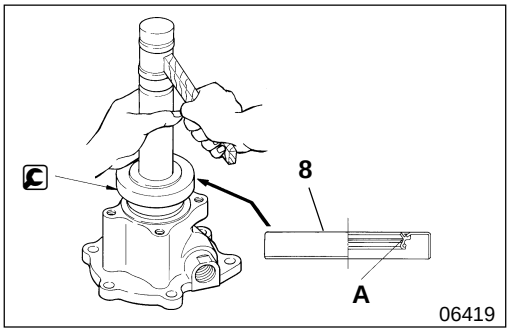

8 Installation of oil seal

Apply grease to lip area **A** of oil seal **8** and press-fit into output rear cover **9**.

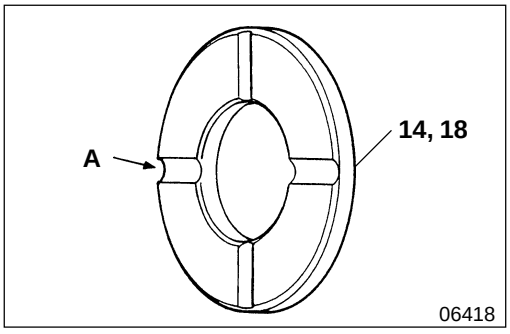

14 18 Installation of thrust washer

Install thrust washer **14**, **18** with oil groove **A** facing gear side.

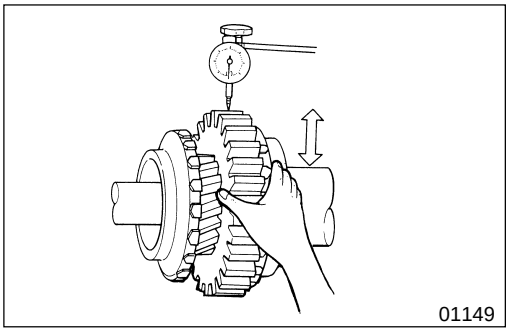

15 18 20 23 24 **Play of rear drive shaft gear in diameter direction after assembly**

If the measured value is higher than the limit, replace faulty parts.

NOTE

When replacing needle bearing 20, 24, use bearings from the same color package.

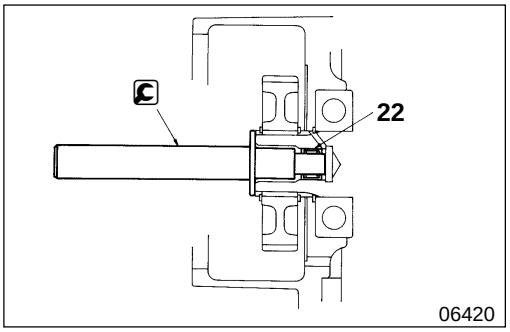

22 **Installation of needle bearing**

: Needle roller bearing installer

GROUP 54 ELECTRICAL

1 POWER, CHARGE AND GROUND

SPECIFICATIONS 4

STRUCTURE AND OPERATION 4

TROUBLESHOOTING 1

100 INSPECTION AND ADJUSTMENT MOUNTED IN VEHICLE
- Inspection of Alternator 2
- Inspection of Regulator 2

101 BATTERY 54-4

104 FUSE 54-7

106 ALTERNATOR 4

110 POWER CIRCUIT 54-8

115 RESERVE POWER CIRCUIT 1

125 BATTERY CHARGING CIRCUIT 54-10

130 GROUND 54-12

2 STARTING, PREHEATING, AND STOPPING ENGINE

SPECIFICATIONS
<4D3> 1
<4M5> 54-13

STRUCTURE AND OPERATION
<4D3> 1
<4M5> 54-14

TROUBLESHOOTING 1

200 INSPECTION AND ADJUSTMENT MOUNTED IN VEHICLE
Inspection of Engine Preheating System 1

201 STARTER
<4D3> 1
<4M5> 54-15

210 ENGINE STARTING CIRCUIT
<4D3 Manual Transmission> 4
<4D3 Automatic Transmission> 4
<4M5 Automatic Transmission> 54-28

220 ENGINE PREHEATING CIRCUIT 1

225 ENGINE WARMING UP CIRCUIT
<4D3> 3
<4M5> 54-32

3 LIGHTING

SPECIFICATIONS 1

STRUCTURE AND OPERATION 1

TROUBLESHOOTING 1

300 INSPECTION AND ADJUSTMENT MOUNTED IN VEHICLE
Headlamp Aiming 1

310 HEADLAMP CIRCUIT 1

313 DAYTIME RUNNING LIGHT CIRCUIT .. 4

320 TAIL LAMP, CLEARANCE LAMP AND LICENSE PLATE LAMP CIRCUITS 1

325 STOP LAMP CIRCUIT 1

330 TURN SIGNAL LAMP AND HAZARD LAMP CIRCUITS 1

340 BACKUP LAMP CIRCUIT
<Manual Transmission> 1
<Automatic Transmission> 3

345 CAB LAMP CIRCUIT 1

348 ILLUMINATION LAMP CIRCUIT 1

349 MARKER LAMP AND IDENTIFICATION LAMP CIRCUITS 1

352 VAN BODY DOME LIGHT CIRCUIT 1

4 METER

SPECIFICATIONS 1

TROUBLESHOOTING 1

401 METER CLUSTER 4

410 TACHOMETER CIRCUIT
<4D3> 1
<4M5> 54-34

420 FUEL GAUGE CIRCUIT 1

425 WATER TEMPERATURE GAUGE CIRCUIT 1

5 INDICATOR AND WARNING

TROUBLESHOOTING 1

500 INSPECTION AND ADJUSTMENT MOUNTED IN VEHICLE
• Inspection of Brake Fluid Level Switch 1

510 PARKING BRAKE INDICATOR CIRCUIT BRAKE 1

515 BRAKE WARNING CIRCUIT LOW VACUUM BRAKE 1

535 ENGINE OIL LEVEL AND OIL PRESSURE CIRCUIT 1

537 OVERHEATING WARNING CIRCUIT ... 1

540 BRAKE PAD WARNING CIRCUIT DISK BRAKE 1

550 CAB TILT WARNING CIRCUIT 1

6 CAB SIDE ELECTRICAL

SPECIFICATIONS 1

TROUBLESHOOTING 1

601 SWITCH 1

604 RELAY AND CONTROL UNIT 54-36

606 WARNING BUZZER 1

610 CIGARETTE LIGHTER CIRCUIT 1

612 AUDIO CIRCUI 1

614 WIPER AND WASHER CIRCUIT 1

616 HORN CIRCUIT 1

618 HEATER CIRCUIT 1

622 POWER WINDOW AND AUTO DOOR LOCK CIRCUIT 4

629 MIRROR HEATER CIRCUIT 54-38

7 CHASSIS ELECTRICS

701 MAGNETIC VALVE 1

710 EXHAUST BRAKE CIRCUIT
<4D3 Manual Transmission> 4
<4D3 Automatic Transmission> 4
<4M5 Automatic Transmission> 54-40

8 ENGINE AND TRANSMISSION ELECTRICS

801 ENGINE ELECTRICS
<4D3> 1
<4M5> 54-42

802 TRANSMISSION ELECTRICS 1

810 FOUR-WHEEL DRIVE CIRCUIT<FG> 54-46

9 OTHERS

STRUCTURE AND OPERATION 1

910 MULTIPURPOSE TIMING CONTROL UNIT CIRCUIT
<4D3> 1
<4M5> 54-48

1: '96 Model Gr 54 (Pub No. TWSE9501-54)
2: '98 Model Gr 54 (Pub No. TWSE9501-254)
3: '99 Model Gr 54 (Pub No. TWSE5901-3)
4: '00 Model Gr 54 (Pub No. TWSE9501-4)

101 BATTERY

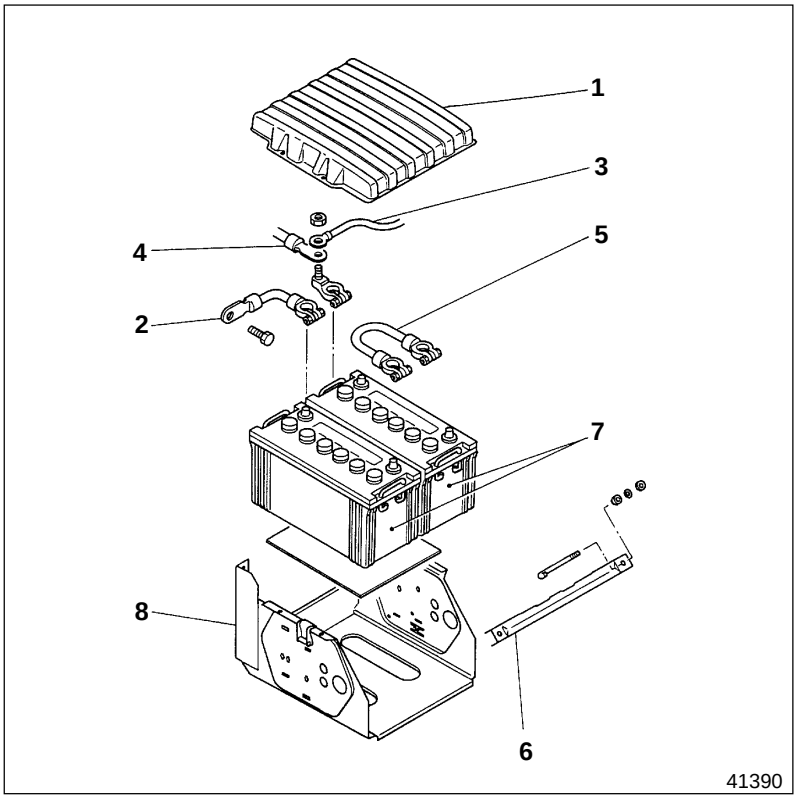

● **Removal sequence**

1 Battery cover
2 Battery cable ⊖
3 Harness
4 Battery cable ⊕
5 Battery cable
6 Angle frame
7 Battery
8 Battery box

● **Installation sequence**

Follow the removal sequence in reverse.

DANGER ⚠

- **Because flammable hydrogen gas is generated from battery 7, be sure to obey the following.**
  - **Never attempt to short-circuit the positive and negative terminals of battery 7, and generate sparks, or smoke a cigarette near it.**
  - **Do not wear metal objects on your arms or do not lean over battery 7.**
- **Sulfuric acid of the electrolyte is very corrosive. Whenever handling battery 7, wear safety goggles and rubber gloves to protect your eyes and hands.**
- **Battery posts, terminals and related accessories contain lead and lead compounds. Wash hands after handling.**

WARNING ⚠

When you disconnect battery cables 2 to 4, disconnect battery cable ⊖ 2 first.

CAUTION ⚠

- **Make sure that all electrical switches of the vehicle are off before connecting battery cables 2 and 4.**
- **Be sure to connect battery cable ⊕ 4 first before you connect battery cable ⊖ 2.**
- **To prevent a short-circuit, take care that disconnected battery cables 2 and 4 may not accidentally touch the battery terminals.**

Service standards

Location	Inspection item	Standard value	Limit	Remedy
7	Specific gravity of battery electrolyte (20°C {68°F})	1.220 to 1.290	—	Charge or replace

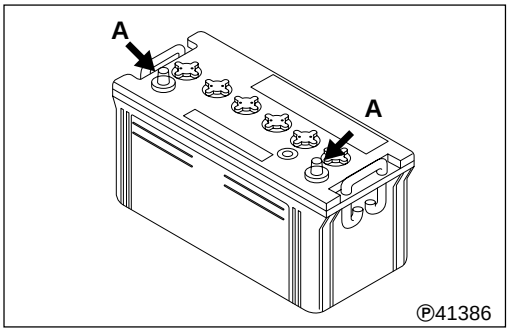

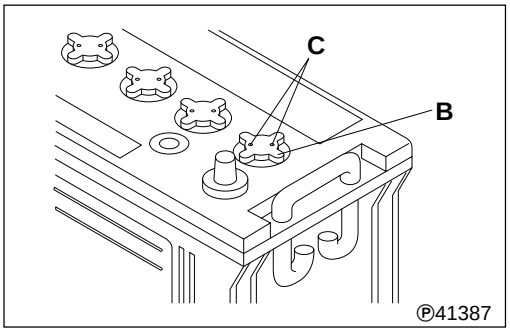

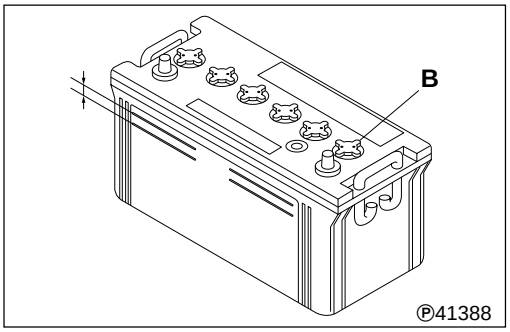

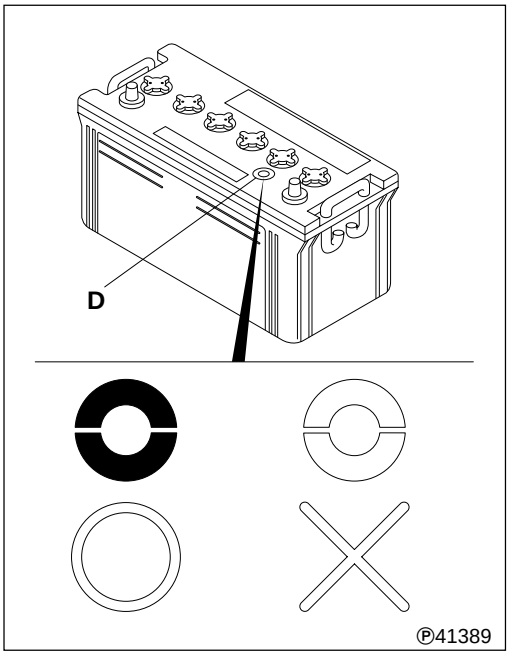

◆ Service procedure

7 Inspection of battery

(1) Visual inspection

- If terminal **A** is corroded, scrub off the corrosion from it using a wire brush.
- If cracks or defects are found on battery **7**, replace it because the cracks or defects can cause liquid spills.

CAUTION ⚠

Be sure to apply grease to the ⊕ side of terminal A because it is easily corroded.

- If the air bleed hole **C** of vent plug **B** is clogged, clean the hole.

(2) Inspection of fluid level

- Confirm that the level of battery electrolyte is between UPPER and LOWER LEVEL lines.
- If the level is below LOWER LEVEL line, remove vent plug **B** and replenish the distilled water or battery fluid to the UPPER LEVEL.

(3) Specific gravity measurement

You can tell the specific gravity of the battery electrolyte by the color shown in indicator **D**.

Blue :Good
White :Charge or replace

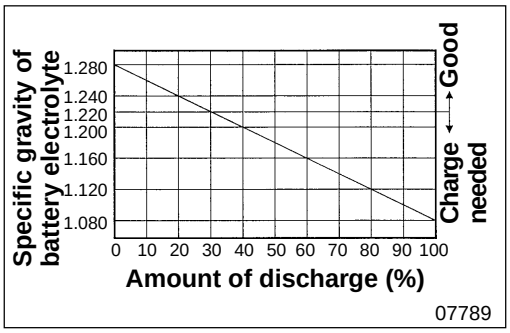

(4) Charging

- Battery **7** must be, as a rule, charged in the off-vehicle condition. If it is charged on vehicle, however, be sure to remove the grounding cable before starting the procedure.
- The battery must be charged with its all of vent plugs removed.
- For the recommended charge time and current, see the following table to avoid overcharging.

	Charge current (A)	Charge time (H)	Upper limit of fluid temperature (°C {°F})
Normal charge	Value of 5-hour rating capacity/10	{*Amount of discharge (Ah)/Charge current (A)} × 1.2 (to 1.5)	45 {113}
Quick charge	Value of 5-hour rating capacity/1.5	0.5	55 {131}

* Amount of discharge (Ah) = 5-hour rating capacity (Ah) × [Amount of discharge (%)] / 100

- Use the graph shown left to calculate the amount of discharge (%).
- For the battery electrolyte, use diluted sulfuric acid, made up of sulfuric acid and refined or distilled water.
- The specific gravity of fully-charged battery electrolyte is 1.280 at the liquid temperature of 20°C {68°F}.

DANGER ⚠

- **Do not let the battery electrolyte level rise and overflow while charging the battery.**
- **Keep open flame away from the battery while charging it or it might explode.**
- **Be careful not to generate sparks while charging the battery because it is dangerous.**
- **After charging the battery, tighten the vent plugs, wash away sulfuric acid from the battery using water, and dry the surface.**
- **Be sure to check the electrolyte level before charging the battery. Charging with the electrolyte level below the lower limit (LOWER LEVEL) can cause premature deterioration, heat generation and explosion of the battery.**

8 Inspection of battery box

- If battery box **8** is corroded, scrub off the corrosion from it using a wire brush and apply acid resistant coating.
- If the battery box **8** is corroded excessively, deformed or cracked, replace it with new one.

High-current fuse box

Fuse No.	Main load	Capacity
FH1	Fuse box (F1 to F4)	50A
FH2	Fuse box (F5 to F7)	50A
FH3	ABS hydraulic unit	40A
FH4	ABS hydraulic unit	30A
FH5	Starter switch (Terminal B)	50A
FH6	Fuse box (F32 to F34)	50A
FH7	Alternator	100A
FH8	Alternator	100A

Fuse box

Fuse No.	Main load	Capacity
F1	Headlamp, LH	15A
F2	Headlamp, RH	15A
F3	Stop lamp, horn	15A
F4	Turn signal lamp	15A
F5	⋆Engine control ECU	⋆20A
F6	Cab lamp	10A
F7	Reserve power (BATT)	10A
F8	Power window	25A
F9	—	—
F10	⋆Automatic transmission fluid cooler fan relay	15A
F11	⋆Automatic transmission fluid cooler fan relay	⋆20A
F12	—	—
F13	Cigarette lighter	15A
F14	Radio	10A
F15	Reserve power (ACC)	10A
F16	—	—
F17	⋆Mirror heater relay	⋆10A

Fuse No.	Main load	Capacity
F18	Transmission neutral relay <Manual transmission> Inhibitor switch <Automatic transmission>	10A
F19	Backup lamp	10A
F20	Meter cluster, DRL	10A
F21	Wiper	10A
F22	Reserve power (MAIN)	10A
F23	Automatic transmission control unit	⋆10A
F24	⋆Automatic transmission control unit	⋆10A
F25	Engine control (ACT)	10A
F26	—	—
F27	Exhaust brake	10A
F28	Engine control ECU	10A
F29	ABS	10A
F30	⋆Mirror heater relay	⋆10A
F31	—	—
F32	*Condenser fan	15A
F33	Blower fan	25A
F34	Tail lamp	20A

* : Fuses are provided for these pieces of equipment only where they are installed.

★ marks indicate changed parts or added parts.
DRL : Daytime Running Lights

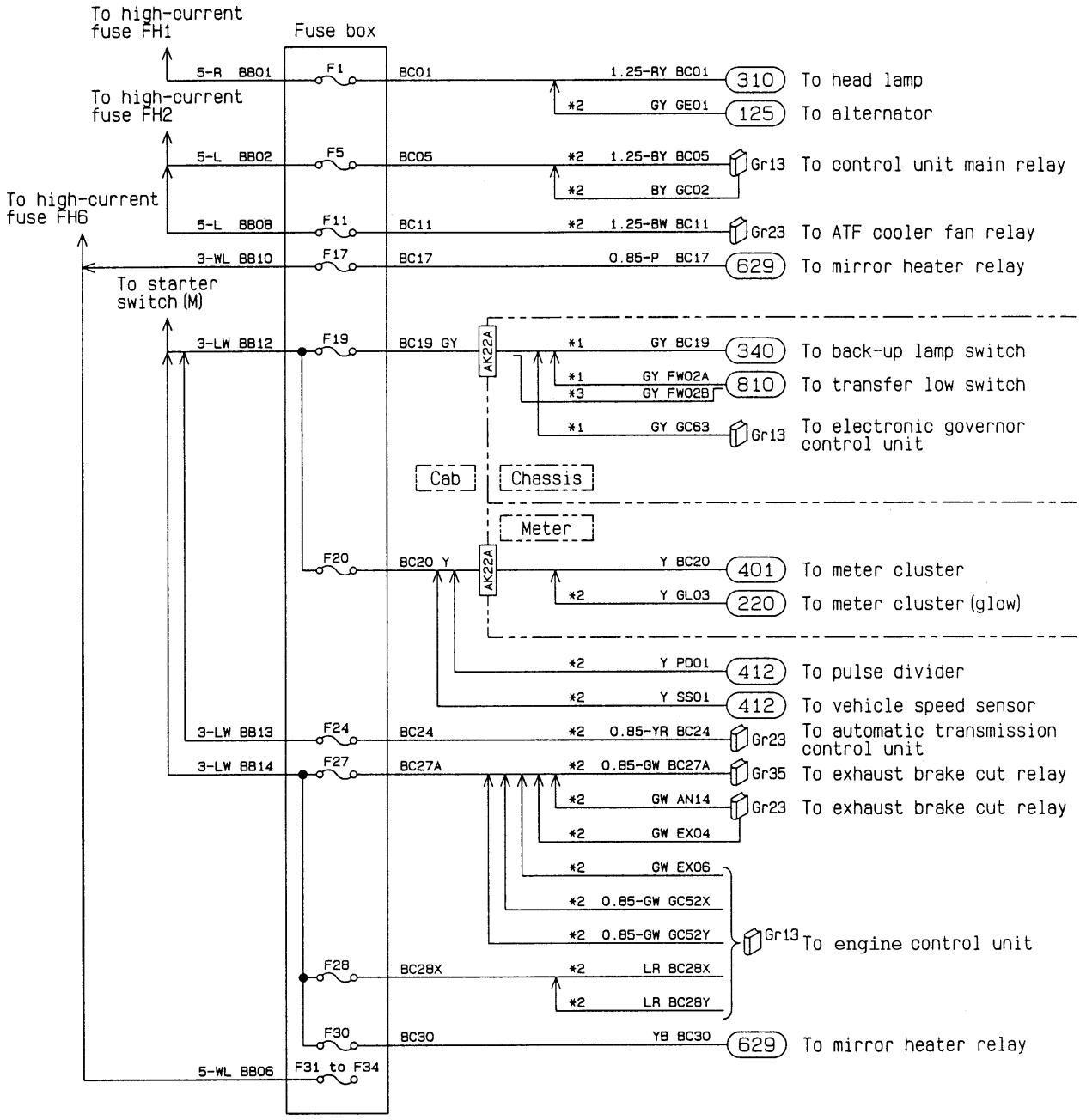

*1: 4D3 <M/T>
*2: 4M5
*3: 4D3 <A/T>

41164

MEMO

125 BATTERY CHARGING CIRCUIT

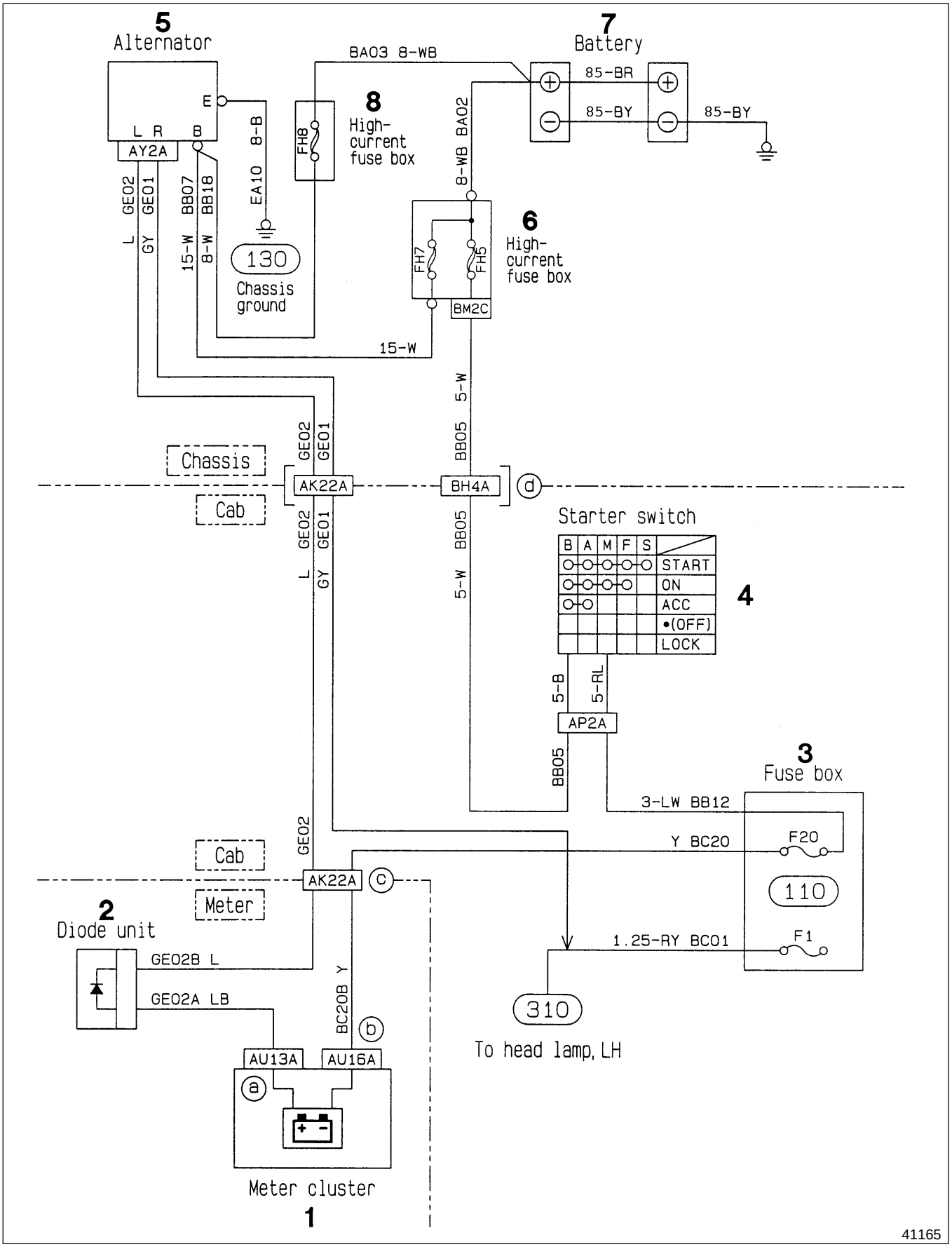

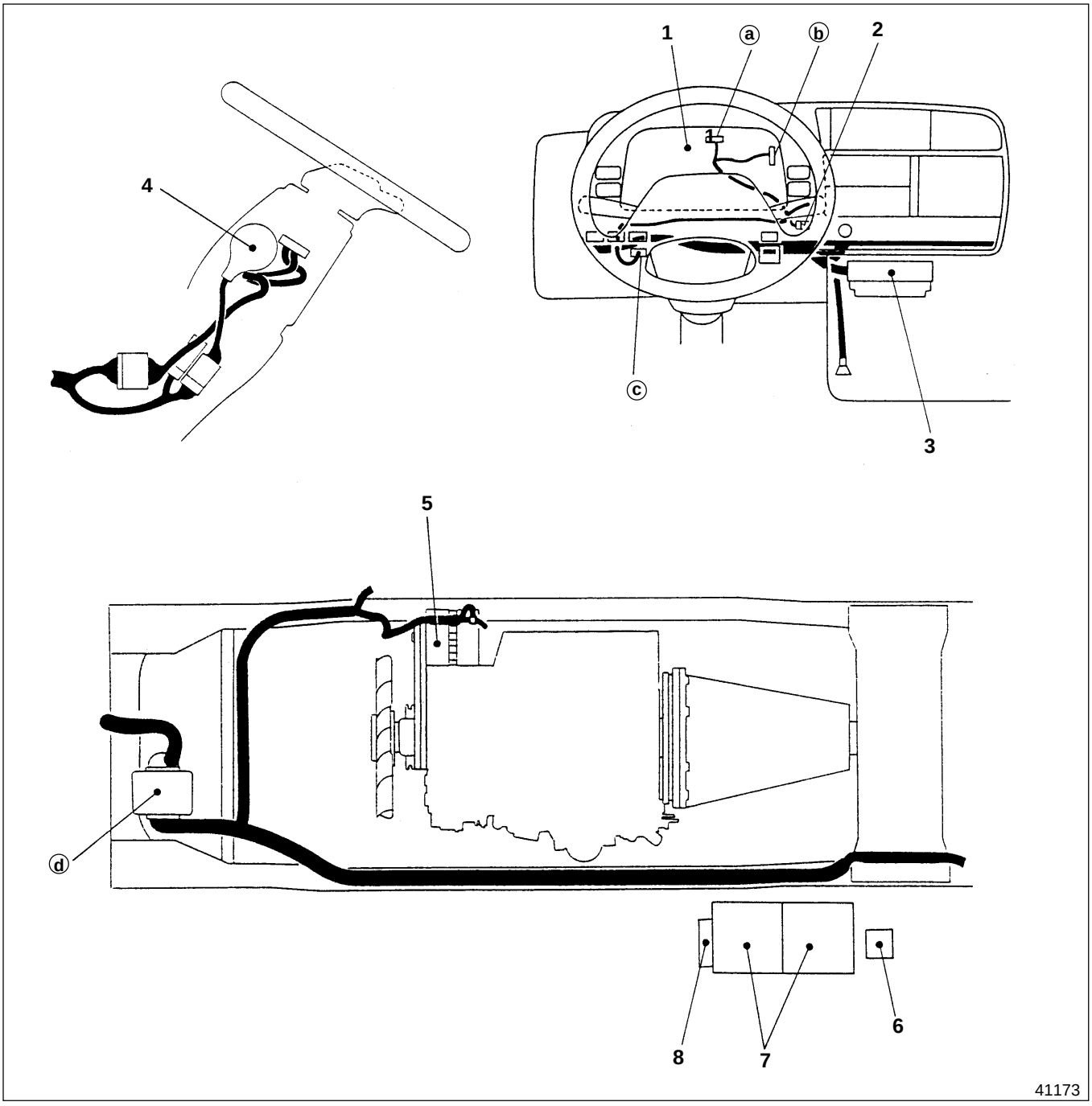

1 Meter cluster 4 401
2 Diode unit
3 Fuse box 104
4 Starter switch 1 210
5 Alternator 4 106
6 High-current fuse box 104
7 Battery 1 101
8 High-current fuse box 104

1 : '96 Model Gr54 (Pub No. TWSE 9501-54)
4 : '00 Model Gr54 (Pub No. TWSE 9501-4)

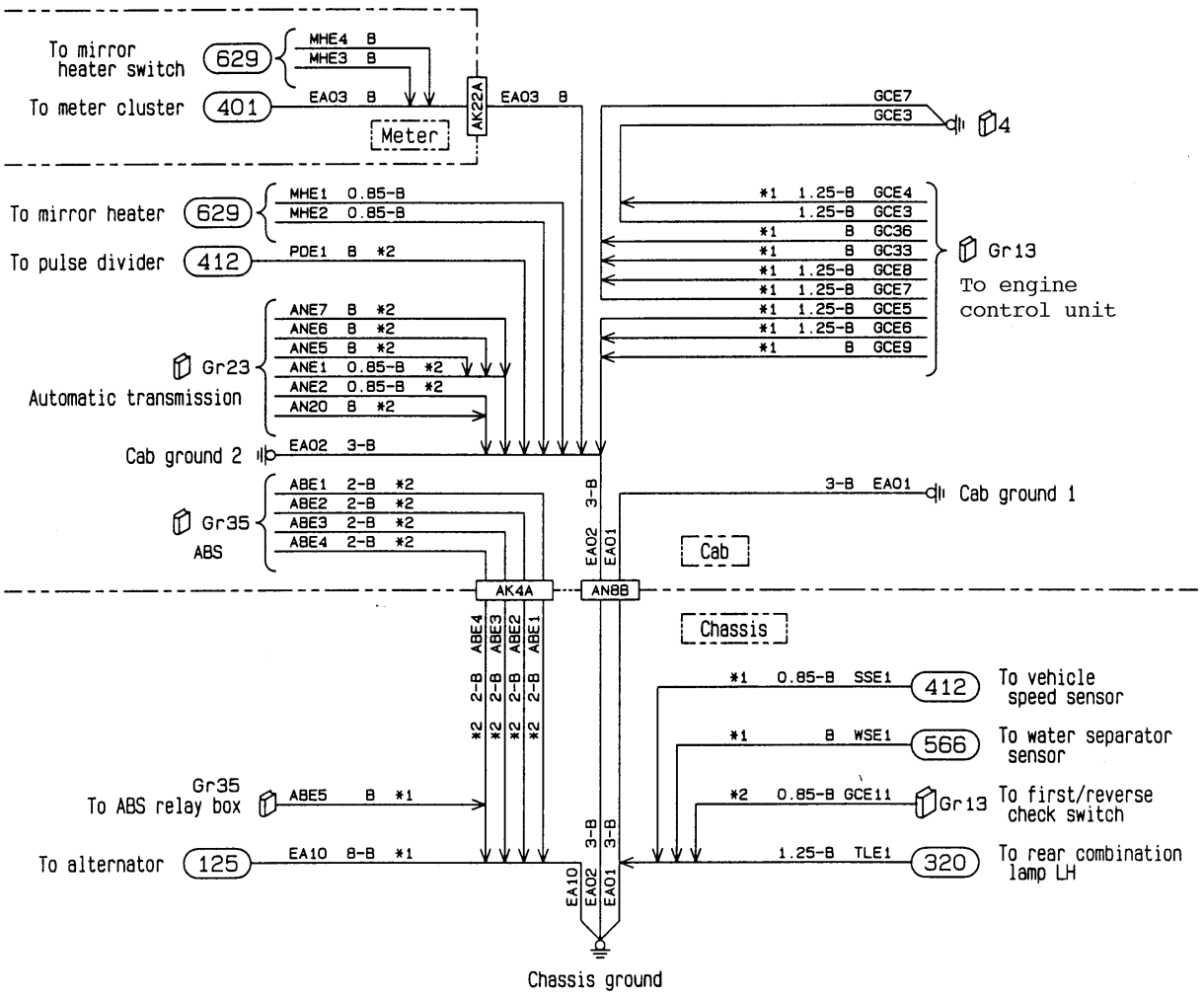

*1: 4M5
*2: 4D3
ABS: Anti-lock brake system
4: '00 Model Gr54 (Pub No. TWSE 9501-4)

41166

Item		Specifications
Starter	Manufacturer	MITSUBISHI ELECTRIC
	Model	M8T55371
	Output V-kw	12-3
	Reduction gear mechanism	Planetary gears
	Magnetic switch operating voltage V	8 or less
Starter relay	Model	U1T11672
	Excitation current V-A	12-4
	Closing voltage V	8 or less
	Operating voltage V	3.5 or less
	Allowable cutoff current A	200
Glow relay	Model	U1T11473
	Excitation current V-A	12-4
	Closing voltage V	8 or less
	Opening voltage V	3.5 or less
	Allowable cutoff current A	60
Glow plug	Model	Sheathed type
	Voltage - Current V-A	11-8.5

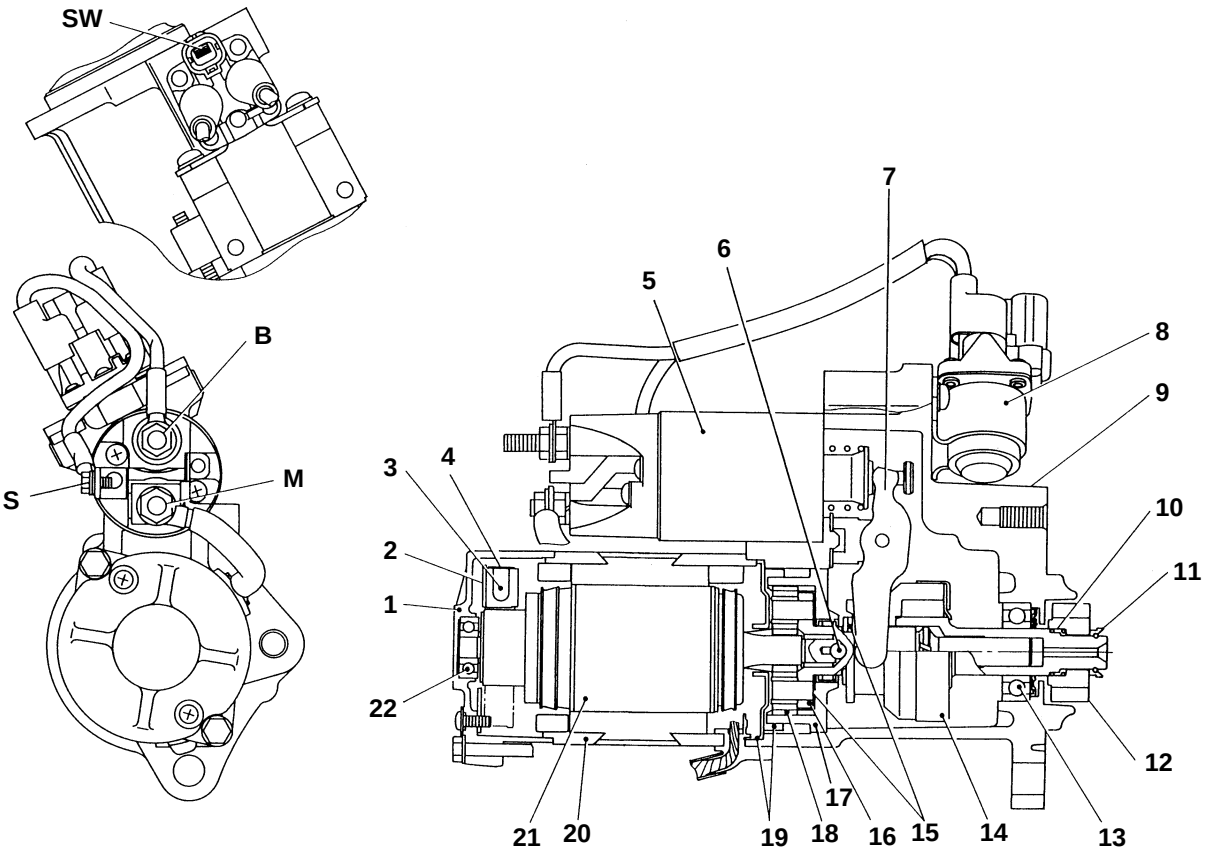

1 Rear bracket
2 Brush holder
3 Brush
4 Brush spring
5 Magnetic switch
6 Ball
7 Lever
8 Starter relay
9 Front bracket
10 Spring
11 Pinion stopper
12 Pinion
13 Front bearing
14 Overrunning clutch
15 E-ring
16 Gear shaft assembly
17 Internal gear assembly
18 Planetary gear
19 Rubber packing
20 York assembly
21 Armature assembly
22 Rear bearing

B: Terminal B
M: Terminal M
S: Terminal S
SW: Terminal switch

This starter uses planetary gears **18** as its reduction gearing mechanism.

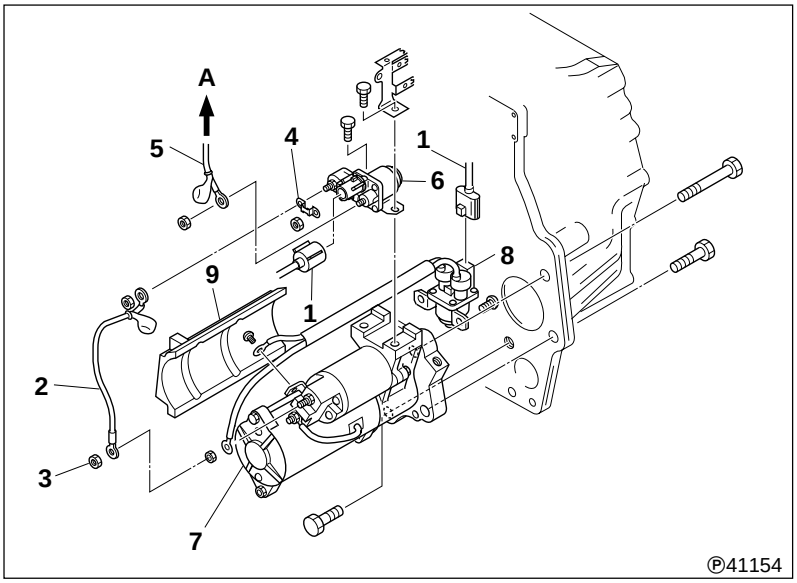

● **Removal sequence**

1 Chassis harness
2 Starter cable
3 Nut (connected to terminal **B**)
4 Fuse
5 Glow cable
6 Glow relay
7 Starter
8 Starter relay

WARNING ⚠

Before removing the starter 7 and/or starter relay 8, disconnect the battery ⊖ terminal and insulate it with tape. It is dangerous to leave the battery ⊖ terminal connected since the battery voltage is always pressent at each terminal B.

● **Installation sequence**

Follow the removal sequence in reverse.

201 STARTER <4M5>

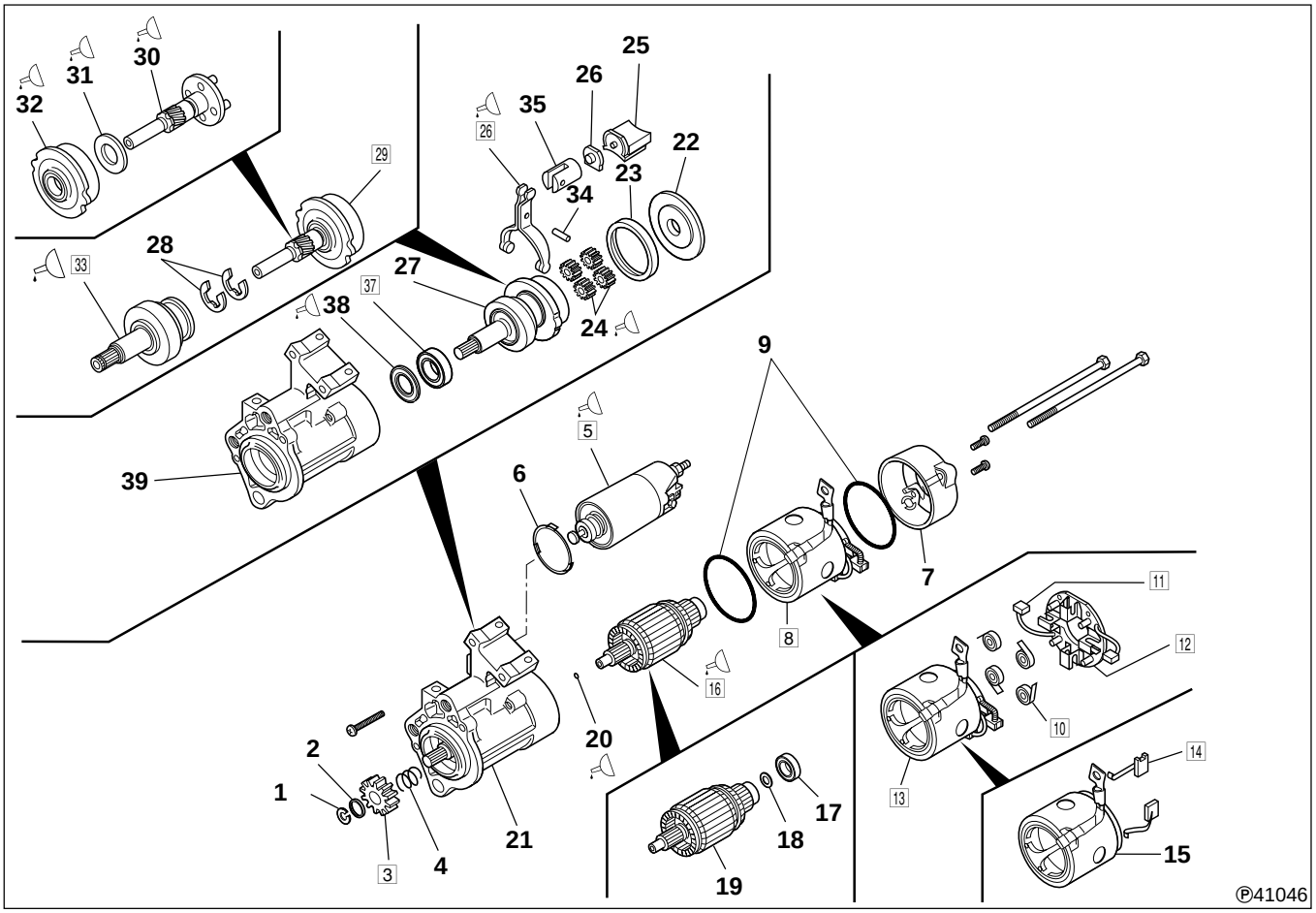

● **Disassembly sequence**

1 Stopper ring
2 Pinion stopper
3 Pinion
4 Spring
5 Magnetic switch
6 Shim
7 Rear bracket
8 York and brush holder assembly
9 Rubber packing
10 Brush spring
11 Brush ⊖
12 Brush holder assembly
13 York assembly
14 Brush ⊕
15 York
16 Armature assembly
17 Rear bearing
18 Washer
19 Armature assembly
20 Ball
21 Front bracket assembly
22 Cover
23 Rubber packing
24 Planetary gear
25 Rubber packing
26 Plate
27 Gear shaft and overrunning clutch assembly
28 E-ring
29 Gear shaft and internal gear assembly
30 Gear shaft assembly
31 Washer
32 Internal gear
33 Overrunning clutch
34 Pin
35 Holder
36 Lever
37 Front bearing
38 Oil seal
39 Front bracket

Ⓧ Non-reusable parts

CAUTION ⚠

- **When removing yoke and brush holder assembly 8, make sure you first pull out brushes 11, 14 from brush holder assembly 12 to avoid damaging the commutator of armature 19.**
- **Do not remove bearings 17, 37 unless they are faulty.**
- **Make sure you do not drop armature assembly 16 when you remove yoke and brush holder assembly 8 from front bracket assembly 21.**
- **Be careful not to lose ball 20, since it might come out together with armature assembly 16 when you remove it.**

NOTE

- **You do not have to remove pinion 3 when you disassemble or inspect only the motor assembly, for example: when inspection of the brush assembly is required.**
- **Except for the above, make sure you remove pinion 3 before disassembling any parts.**

● **Assembly sequence**

Follow the disassembly sequence in reverse.

NOTE

Whenever magnetic switch 5 has been replaced, be sure to adjust the pinion gap.

● **Inspection after assembly**

P54-18

Service standards

Unit : mm {in}

Location	Maintenance item		Standard value	Limit	Remedy
—	Pinion gap		0.5 to 2.0 {0.02 to 0.079}	—	Adjust
—	No-load characteristic (11 V when current flowing)	Current	180 A or less	—	Inspect
		Revolutions per minute	3800 rpm or more	—	
10	Pressure of brush spring		29 to 39 N {6.6 to 8.8 lbf, 2 to 4 kgf}	13.7 N {3.1 lbf, 1.4 kgf}	Replace
11, 14	Length of brush		18 {0.71}	11 {0.43}	Replace
16	Armature assembly	Outer diameter of commutator	32 {1.26}	31.4 {0.24}	Replace
		Deflection of commutator periphery	—	0.05 {0.002} or more	Replace
		Insulator depth between segments	—	0.2 {0.0079} or less	Correct or replace

Lubricant

Location	Points of application	Kinds	Quantity
5	Contact surface between lever and magnetic switch	Multipurpose grease [NLGI No.2 Li soap]	As required
16	Teeth of armature assembly gear	MOLYKOTE ® AG650	As required
20	Ball	MOLYKOTE ® AG 650	As required
24, 32	Teeth of planetary gear and internal gear	MOLYKOTE ® AG650	As required
30, 33	Friction surfaces of gear shaft and overrunning clutch	Multipurpose grease [NLGI No.2 Li soap]	As required
31	Washer	MOLYKOTE ® AG650	As required
33	Splin of overrunning clutch	Multipurpose grease [NLGI No.2 Li soap]	As required
36	Friction surfaces of lever and overrunning clutch	Multipurpose grease [NLGI No.2 Li soap]	As required
38	Oil seal	Multipurpose grease [NLGI No.2 Li soap]	As required

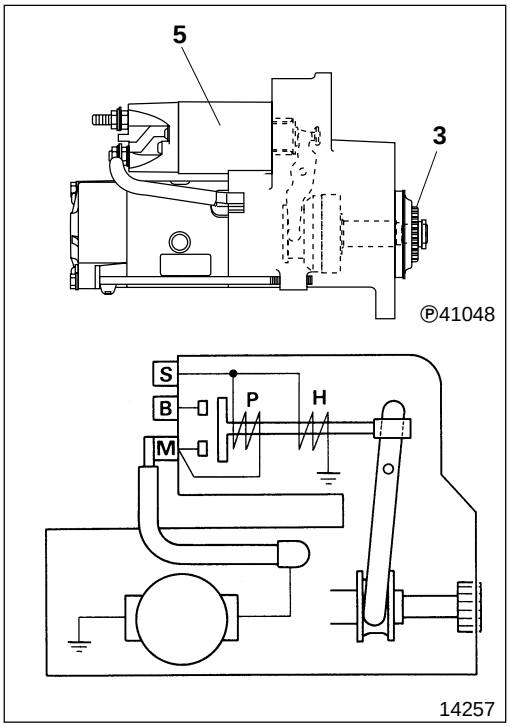

◆ Service procedure

● **Inspection after assembly**

Inspection after assembly the starter should be carried out with current fed to the starter.

WARNING ⚠

- **Do not touch pinion 3 because it jumps out and turns when current is fed to the starter.**
- **Take care not to burn your hand, magnetic switch 5 might be hot after inspection.**

CAUTION ⚠

- **The current feeding time to the starter should be within 10 seconds at pull-in coil P side and within 30 seconds at holding coil H side. If the current feeding time exceeds these limits the coil might burn due to overheating.**
- **When current is flowing into the starter, a current of over 100 amperes is fed. When inspecting, use thick cable, such as a booster cable, and make secure connections.**

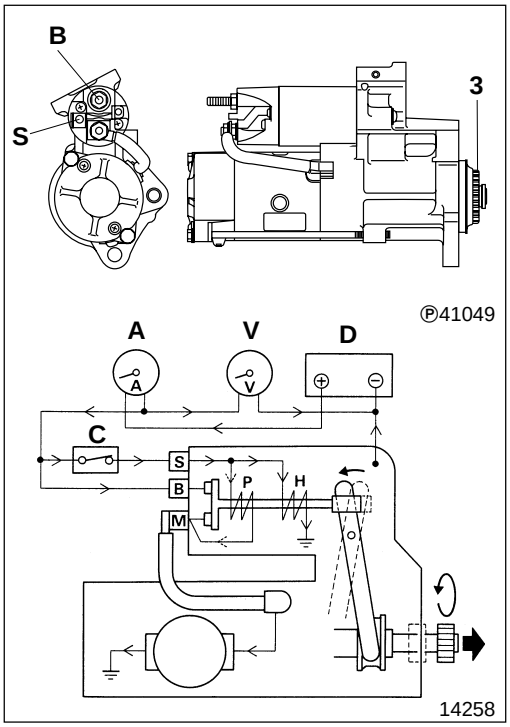

(1) Performance test

- Connect the starter as illustrated.
  - **A:** Ammeter
  - **B:** Terminal B of starter
  - **C:** Switch
  - **D:** DC power supply (12 volts)
  - **S:** Terminal S of starter
  - **V:** Voltmeter
- Set the voltage to 11 volts DC.

CAUTION ⚠

Up to12 volts can be loaded.

- The following work should be done with current fed to the starter. You must complete the full procedure of measuring the intensity of the current and the number of revolutions within 30 seconds.
  - Turn switch **C** ON and feed current into the starter. In this state, pinion **3** jumps out and rotates.

CAUTION ⚠

When switch C is turned ON, current is fed both to pull-in coil P and holding coil H. When a large amount of current is fed into terminal M from DC power supply D, via terminal B of the starter, the current stops flowing into the pull-in coil but continues to flow into the holding coil.

To avoid burning the holding coil, be sure to carry out the performance test within 30 seconds.

  - Measure the intensity of the current and the number of revolutions of the starter. Train a strobe light on pinion **3** to measure the revolutions.
  - Turn switch **C** OFF to stop current to the starter.
- If the measured value deviates from the standard value, disassemble the starter again and inspect it.

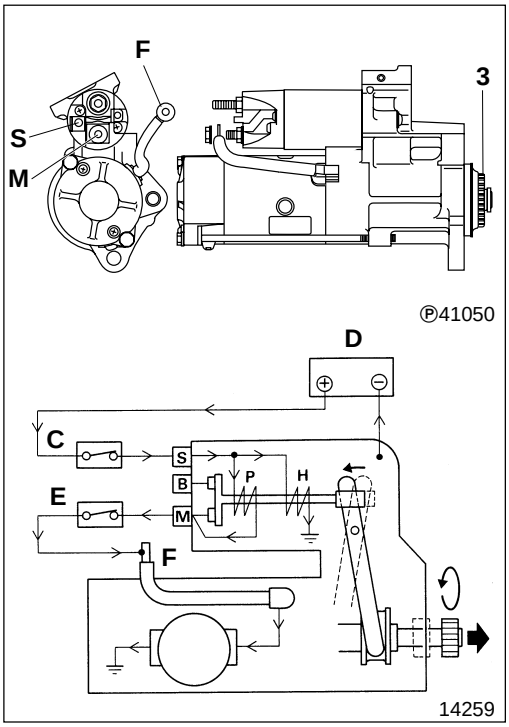

(2) Pinion gap

[Inspection]

- Connect the starter as illustrated.

C: Switch	**F:** Cable
D: 12 volts DC	**M:** Terminal M of starter
E: Switch	**S:** Terminal S of starter

- The following work should be done with current fed to the starter. You must complete the full procedure for measuring the pinion gap within 30 seconds.
  - Turn switches **C** and **E** ON and feed current to the starter. In this state, pinion **3** jumps out and rotates.

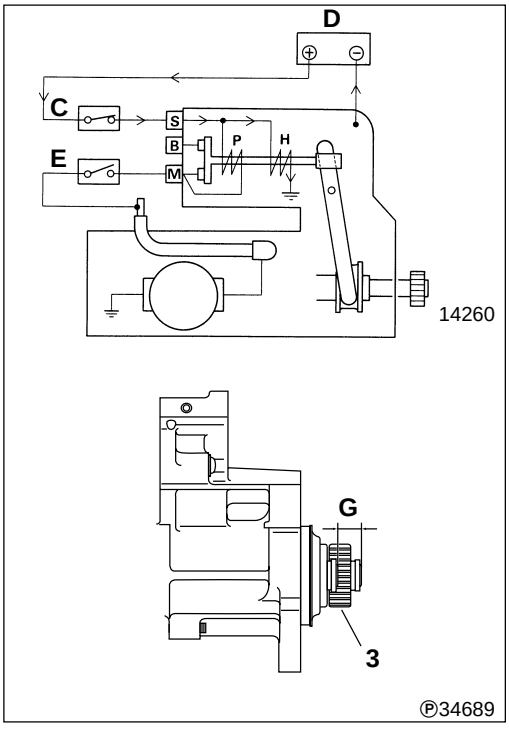

  - Within five seconds of pinion **3** rotating, turn switch **E** OFF to stop rotation of the pinion.

CAUTION ⚠

When switches C and E are turned ON, current is fed both to pull-in coil P and holding coil H. The circuit is wired in such a way that the voltage is not applied to terminal B of the starter, so the current continues to flow into the pull-in coil while pinion 3 rotates. To avoid burning the pull-in coil, be sure to turn switch E OFF within five seconds of the pinion rotating.

  - Push the tip of overrunning clutch **33** lightly and measure pinion gap **G** in the axial direction.
  - Turn switch **C** OFF to stop current to the starter.
- If the measured value deviates from the standard value, replace the lever **36**.

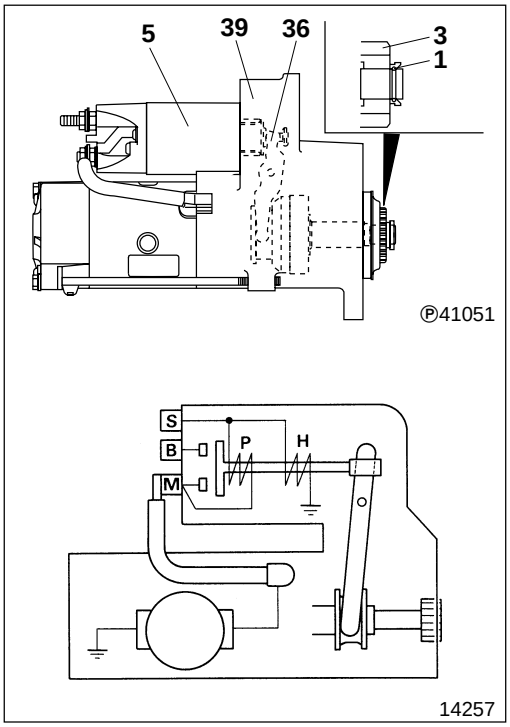

3 **Pinion**

[Removal]

Feed current to the starter and protrude pinion **3** to remove the pinion.

WARNING ⚠

- **Do not touch pinion 3 because it jumps out and turns when current is fed to the starter.**
- **The care not to burn your hand, magnetic switch 5 might be hot after inspection.**

CAUTION ⚠

- **The current feeding time to the starter should be within 10 seconds at pull-in coil P side and within 30 seconds at holding coil H side. If the current feeding time exceeds these limits, the coil might burn due to overheating.**
- **Before making pinion 3 jump out, be sure to feed current to the starter to obtain the correct state. If current is not fed to the starter and lever 36 is pulled to protrude the pinion, front bracket 39 or the lever might be damaged due to the shock produced on removal of stopper ring 1.**
- **The current, when fed to the starter, is over 100 amperes. When inspecting, use thick cable, such as a booster cable, and make secure connections.**

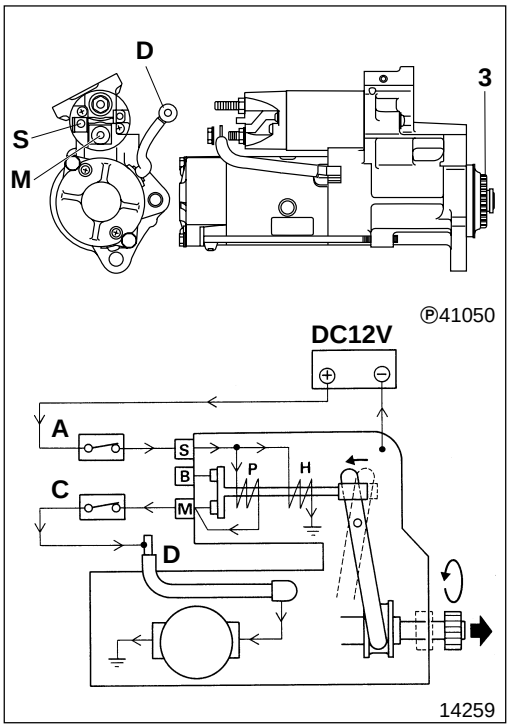

- Connect the starter as illustrated.
  - **A:** Switch
  - **C:** Switch
  - **D:** Cable
  - **M:** Terminal M of starter
  - **S:** Terminal S of starter

- The following work should be done while current is flowing into the starter. You must complete the full procedure for removing pinion **3** within 30 seconds.
  - Turn switches **A** and **C** ON and feed current to the starter. In this state, pinion **3** jumps out and rotates.

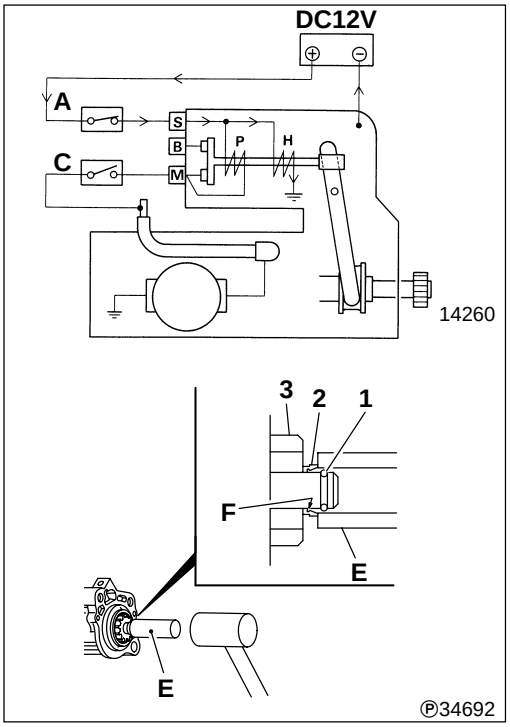

- Within 5 seconds of pinion **3** rotating, turn switch **C** OFF to stop rotation of the pinion.

CAUTION ⚠

When switches A and C are turned ON, current is fed both to pull-in coil P and holding coil H. The circuit is wired in such a way that the voltage is not applied to terminal B of the starter, so the current continues to flow into pull-in the coil while pinion 3 rotates. To avoid burning the pull-in coil, be sure to turn switch C OFF within five seconds after the pinion rotates.

- Apply pipe-shaped tool **E** onto pinion stopper **2**.
- Hit tool **E** lightly using a mallet to remove stopper ring **1** from ring groove **F** of pinion stopper **2**.
- Remove stopper ring **1** and pinion **3**.
- Turn switch **A** OFF to stop current to the starter.

NOTE

When the current to the starter is stopped, stopper ring 1 might fall back into ring groove F of pinion stopper 2 because pinion 3 is pushed inside.
If this occurs, feed current to the starter again and carry out the work.

[Installation]

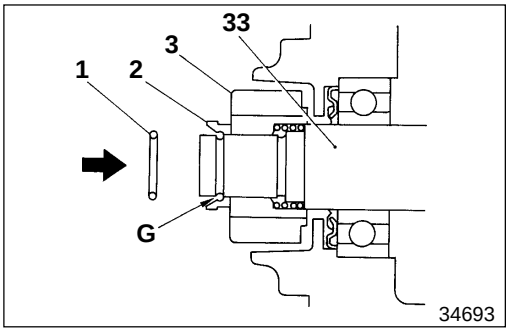

When installing pinion **3**, it is not necessary to feed current to the starter.

- Install pinion stopper **2** and pinion **3** onto overrunning clutch **33** in the direction as illustrated.
- Fit stopper ring **1** into ring groove **G** of overrunning clutch **33**.

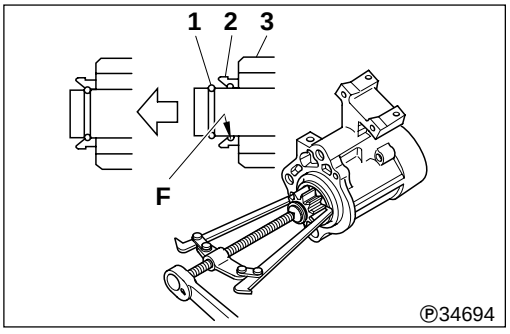

- Pull pinion **3** firmly and set stopper ring **1** on groove **F** of pinion stopper **2**.

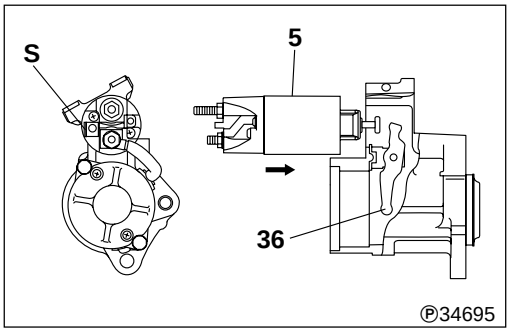

5 **Magnetic switch**

[Installation]

Install magnetic switch **5** to lever **36**, with terminal **S** facing the direction as illustrated.

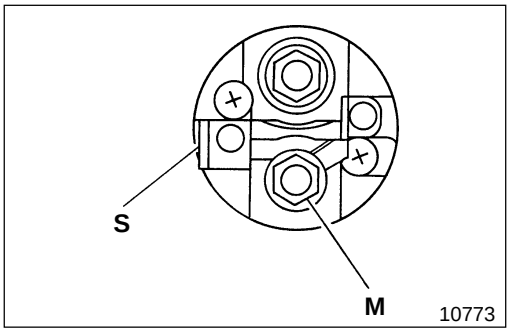

[Inspection]

(1) Testing for coil discontinuity

- Make sure that there is continuity between terminal **S** and **M**.
- If there is no continuity, replace magnetic switch **5**.

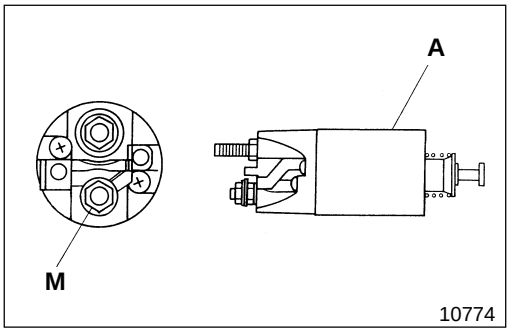

- Make sure that there is continuity between terminal **M** and body **A** of magnetic switch **5**.
- If there is no continuity, replace magnetic switch **5**.

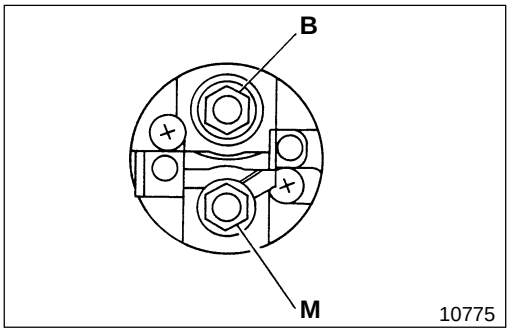

(2) Inspection of welded connections

- Make sure that there is no continuity between terminals **B** and **M**.
- If there is continuity, replace magnetic switch **5**.

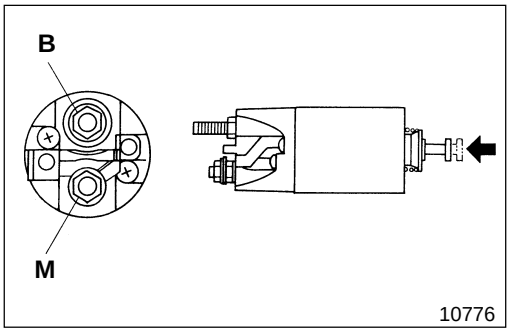

(3) Inspection of connections

- Push the tip of magnetic switch **5** to close the internal connection.
- Make sure that there is continuity between terminals **B** and **M**.
- If there is no continuity, replace magnetic switch **5**.

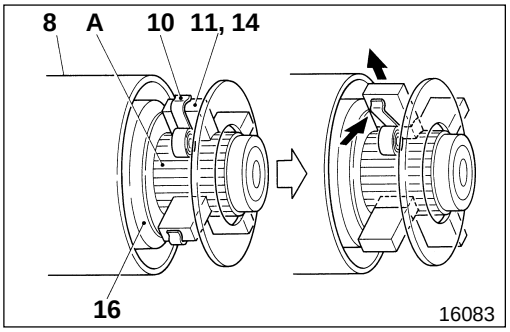

8 Removal and installation of yoke and brush holder assembly

Use the following method to remove the yoke and brush holder assembly **8** in order to prevent the commutator **A** of the armature assembly **16** from being damaged by the brushes **11** and **14**.

- Lift the brushes **11** and **14** away from the commutator **A** and hold them lifted by applying the brush springs **10** against the sides of the brush springs.

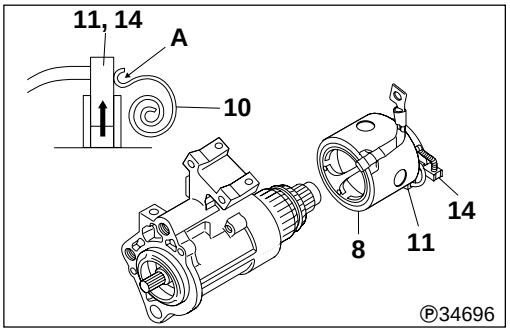

- Pull part **A** of each brush spring **10** and pull up the brushes **11** and **14**.
- Hold the brushes **11** and **14** in position with the brush springs **10** as illustrated.
- Remove the yoke and brush holder assembly **8**.

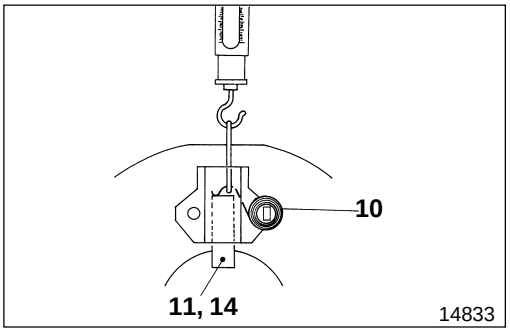

10 Inspection of brush springs

- Using new brushes **11** and **14**, measure the load required to separate each brush spring **10** from its brush.
- If either measurement is lower than the specified limit, replace the brush springs **10**.

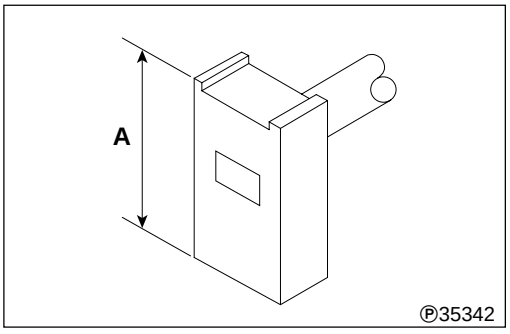

11 14 Inspection of brush

(1) Length of brush

If the measured value is lower than the limit, replace brushes **11** and **14**.

A: Length of brush

NOTE

To replace brush ⊖ 11, replace entire brush holder assembly 12.

(2) Contact surface with commutator

If the surface where the brushes contact the commutator is rough or is worn unevenly, polish the surface with emery paper (300 to 500 grit).

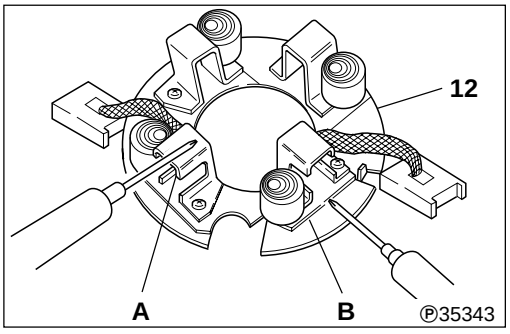

12 Inspection of brush holder assembly

- Make sure that there is no continuity between the ⊕ side of the brush holder and the ⊖ side of the holder plate.
- If there is continuity, they are grounded. Replace brush holder assembly **12**.

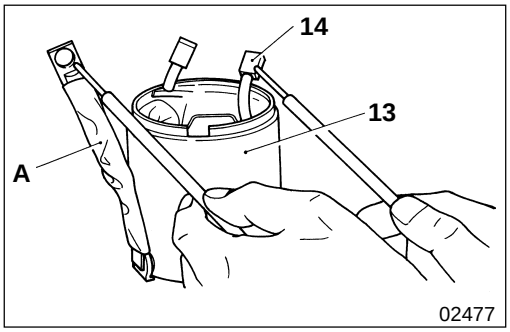

13 **Inspection of yoke assembly**

(1) Testing for coil disconnection

- Make sure that there is continuity between cable **A** and brush ⊕ **14**.
- If there is no continuity, they are disconnected. Replace brush ⊕ **14** or yoke assembly **13**.

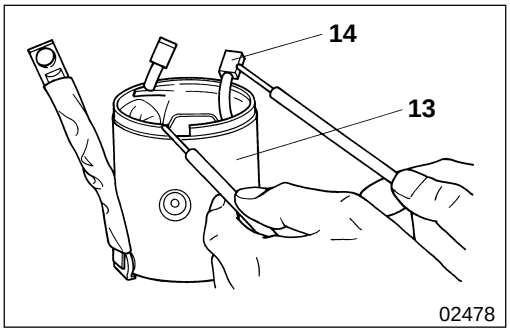

(2) Testing for coil grounding

- Make sure that there is no continuity between yoke assembly **13** and brush ⊕ **14**.
- If there is continuity, they are short-circuited. Inspect the insulated point. If it is hard to repair, replace brush ⊕ **14** or yoke assembly **13**.

CAUTION ⚠

The coil may be grounded to the yoke assembly 13 due to the accumulation of worn-off metal particles from the brushes and/or armature.

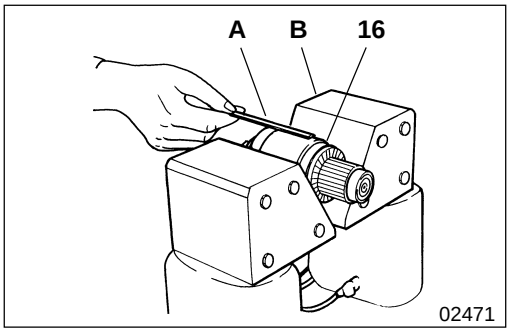

16 **Inspection of armature assembly**

(1) Testing for coil short-circuit

- Place iron rob **B** parallel to armature assembly **16**.

  A: Armature tester
- Rotate armature assembly **16** slowly.
- If iron rob **B** is pulled or shakes, it indicates that armature assembly **16** is short-circuited, so replace it.

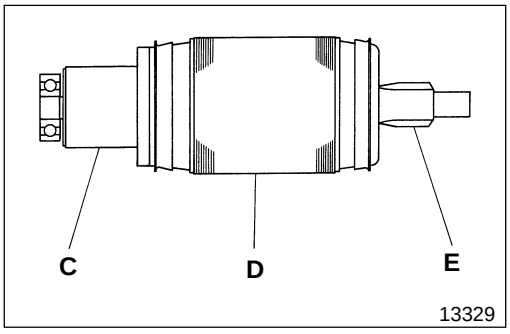

(2) Testing for coil grounding

- Make sure that there is no continuity between commutator **C** and core **D** (or shaft **E**).
- If there is continuity between them, they are short-circuited. Replace armature assembly **16**.

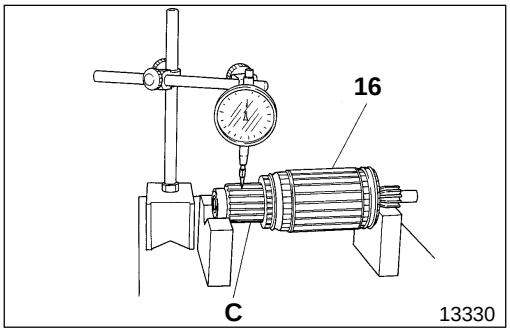

(3) Deflection of commutator

If the measured value is higher than the limit, adjust the outer diameter of commutator **C** within the limit.

(4) Rough commutator surface

- If the surface is rough or has stepped wear, polish the surface with emery paper (300 to 500 grit).
- After polishing, check deflection of comutator **C**.

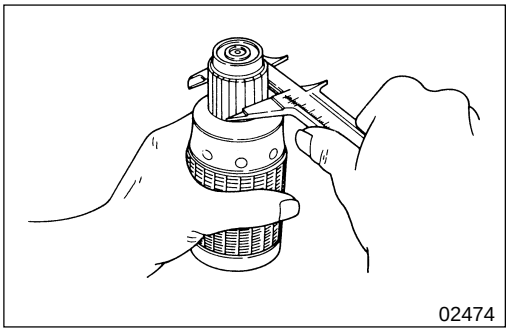

(5) Outer diameter of commutator

If the measured value is higher than the limit, replace armature assembly **16**.

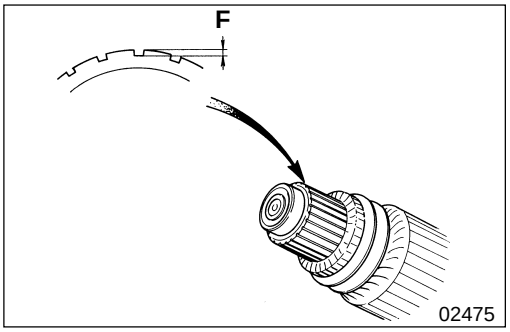

(6) Insulator depth between segments

- If the measured value is lower than the limit, correct of replace armature assembly **16**.

  F: Insulator depth

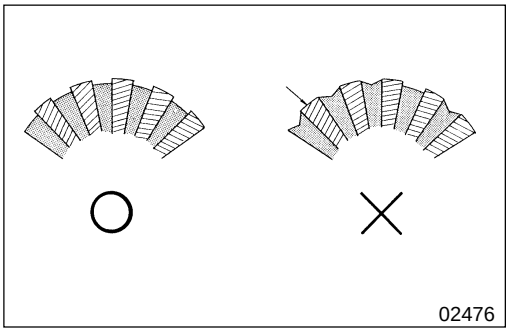

- If the insulator is worn as illustrated, replace armature assembly **16**.

  ○ : Good
  × : Faulty

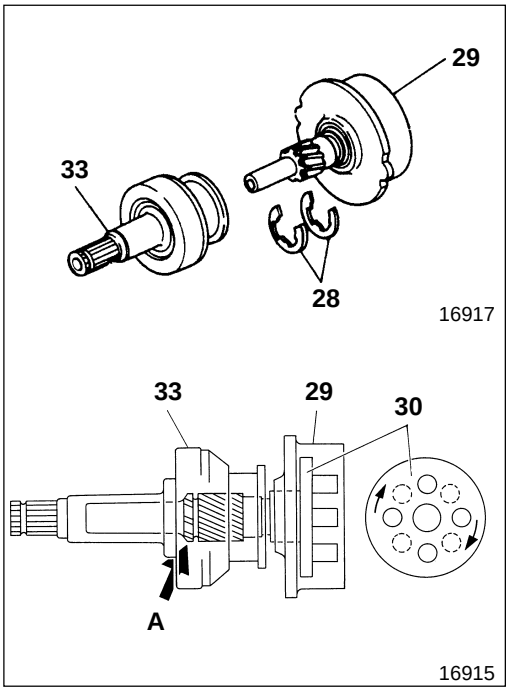

29 Removal of gear shaft and internal gear assembly

Remove the E-rings **28** and then the gear shaft and internal gear assembly **29** from the overrunning clutch **33**.
Proceed as follows if the assembly **29** cannot be removed due to interference of the splined section **A** of gear shaft **30** with internal parts of the overrunning clutch **33**.

- Press the gear shaft **30** against the overrunning clutch **33**.
- Turn the gear shaft **30** approx. 1/8 of a turn to change the position of splined section **A**.

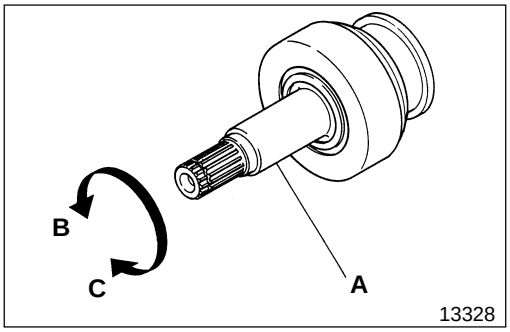

33 **Installation of overrunning clutch**

Carry out the following inspection. If any fault is found, replace overrunning clutch **33**.

- Make sure that shaft **A** turns smoothly when turned in direction **B**.
- Make sure that shaft **A** locks when turned in direction **C**.

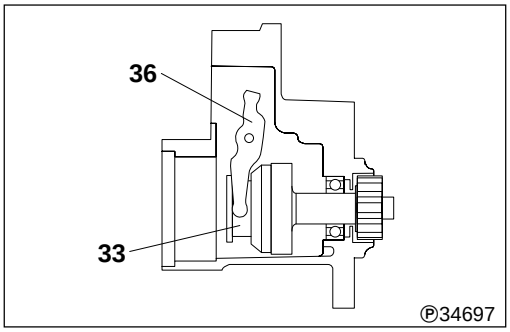

36 **Installation of lever**

Install lever **36** onto overrunning clutch **33** in the direction as illustrated.

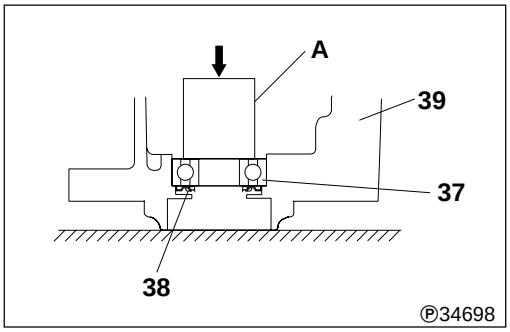

37 **Installation of front bearing**

- Install oil seal **38** before press-fitting front bearing **37**.
- Press-fit front bearing **37** into front bracket **39** using pipe-shaped tool **A**.

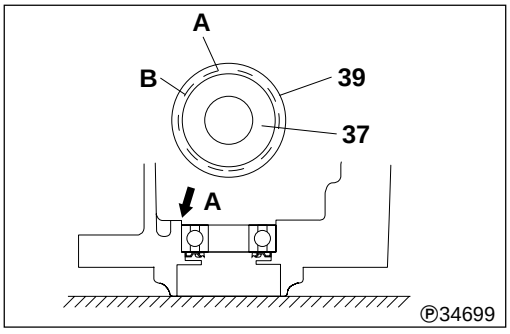

- Re-caulk front bracket **39**.

NOTE

Do not re-caulk previously caulked points B.

A : Caulking points (4 points)

MEMO

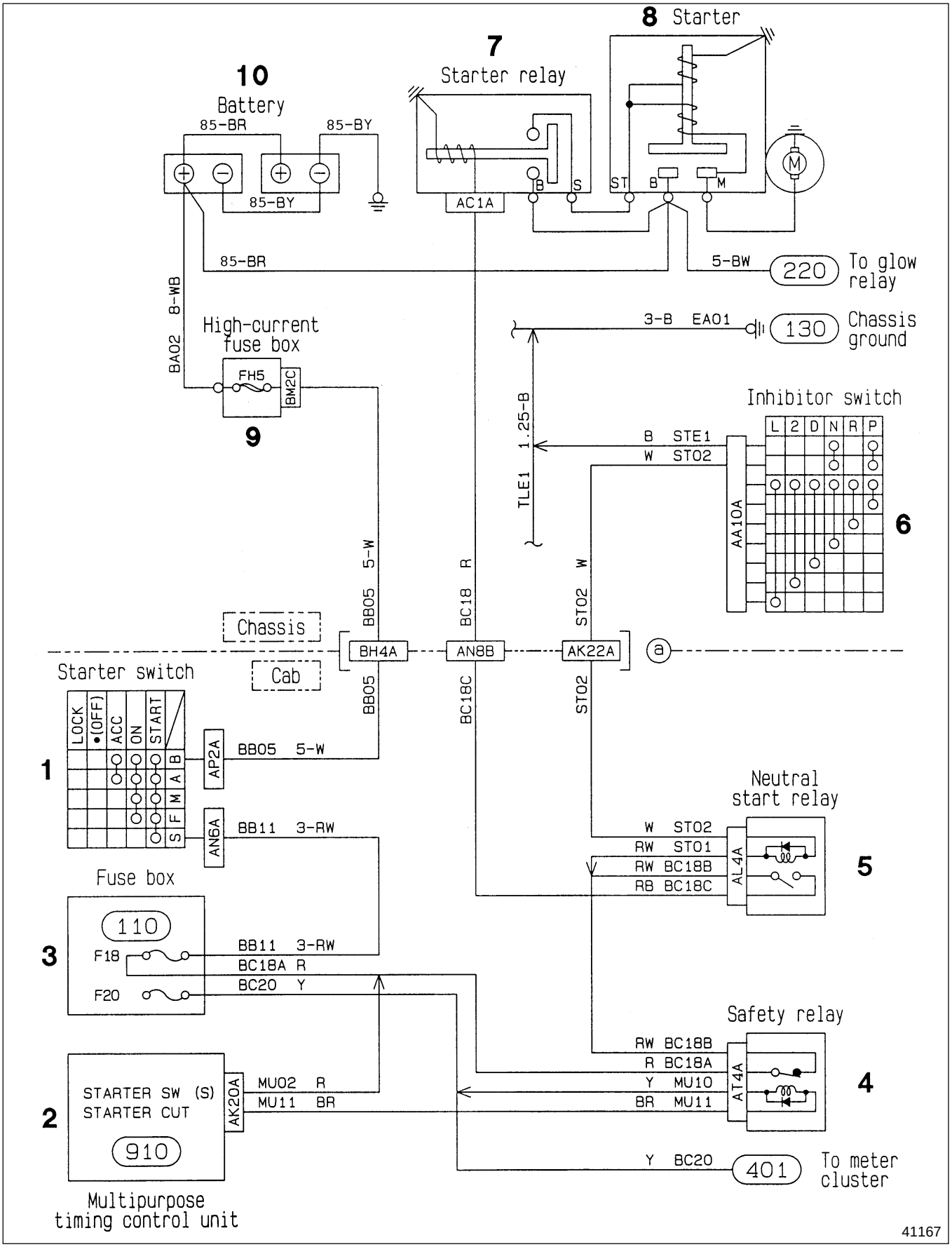
8 Starter
7
Starter relay
10
Battery
85-BR
85-BY
85-BY
AC1A
B
S
ST
B
M
85-BR
5-BW
220
To glow relay
8-WB
BA02
High-current fuse box
FH5
BM2C
9
3-B EA01
130
Chassis ground
Inhibitor switch
L 2 D N R P
B STE1
W STO2
TLE1 1.25-B
AA10A
6
BB05 5-W
BC18 R
ST02 W
Chassis
Cab
BH4A
AN8B
AK22A
a
Starter switch
LOCK
(OFF)
ACC
ON
START
B A M F S
1
AP2A
BB05 5-W
AN6A
BB11 3-RW
BB05
BC18C
ST02
Neutral start relay
W ST02
RW ST01
RW BC18B
RB BC18C
AL4A
5
Fuse box
110
3
F18
F20
BB11 3-RW
BC18A R
BC20 Y
Safety relay
RW BC18B
R BC18A
Y MU10
BR MU11
AT4A
4
STARTER SW (S)
STARTER CUT
910
2
AK20A
MU02 R
MU11 BR
Y BC20
401
To meter cluster
Multipurpose timing control unit
41167

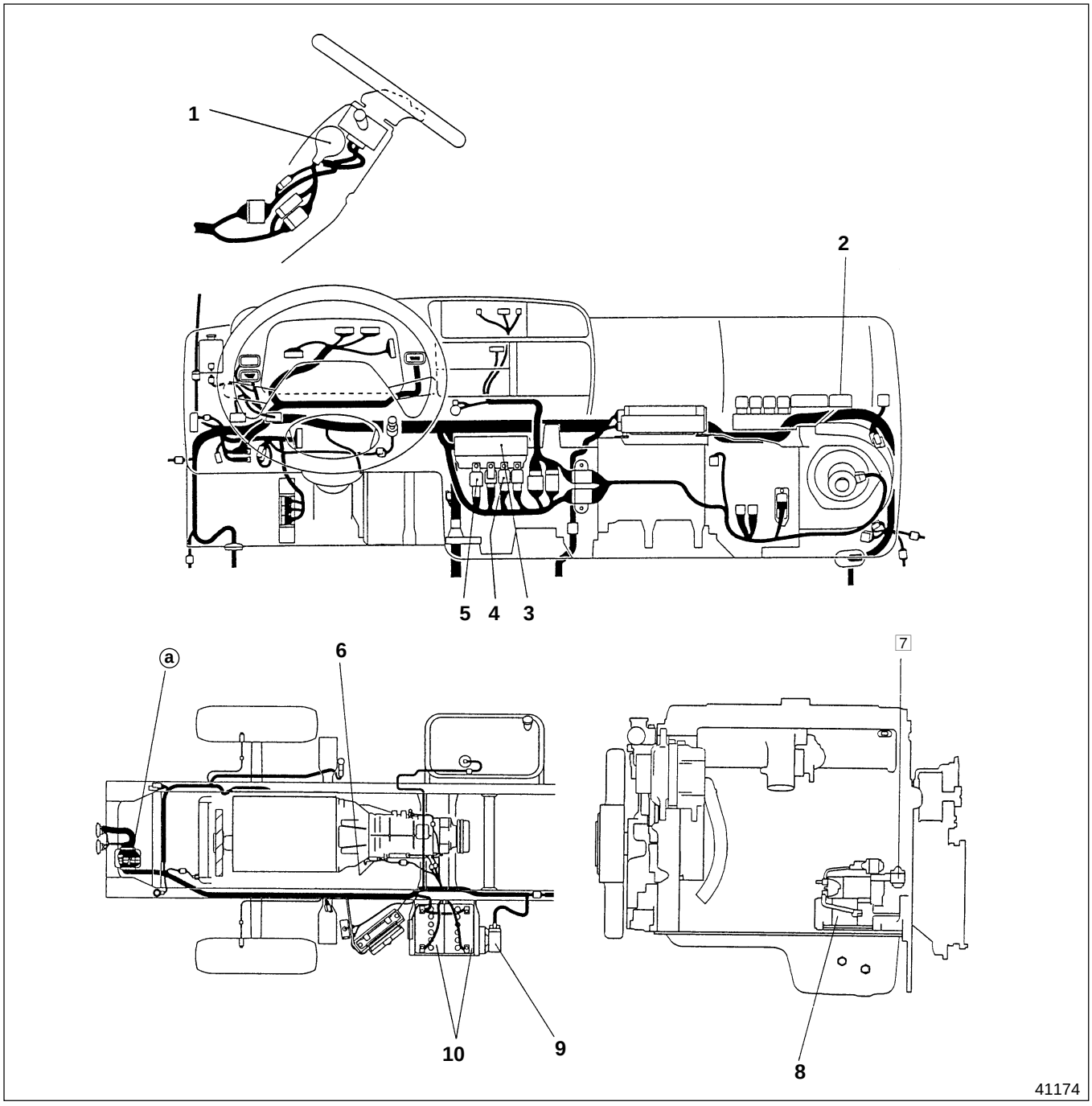

1 Starter switch 1 (201)
2 Multipurpose timing control unit 1 (910)
3 Fuse box (104)
4 Safty relay 3 (604)
5 Neutral start relay 3 (604)
6 Inhibitor switch Gr23
7 Starter relay
8 Starter (201)
9 High current fuse box (104)
10 Battery 1 (101)

1: '96 Model Gr54 (Pub No. TWSE9501-54)
3: '99 Model Gr54 (Pub No. TWSE9501-3)

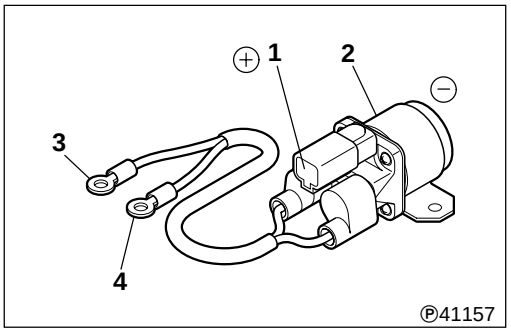

◆ Service procedure

7 **Inspection of starter relay**

- Follow the table below to inspect continuity:

	③	④	①	②
No current			○——○	
Current	○——○		⊕——⊖	

○——○ : There is continuity between terminals ○ and ○.
⊕——⊖ : Indicates that 12 volts DC is applied to the line between the terminals.

- If any fault is found, replace relay **7**.

MEMO

225 ENGINE WARMING UP CIRCUIT <4M5>

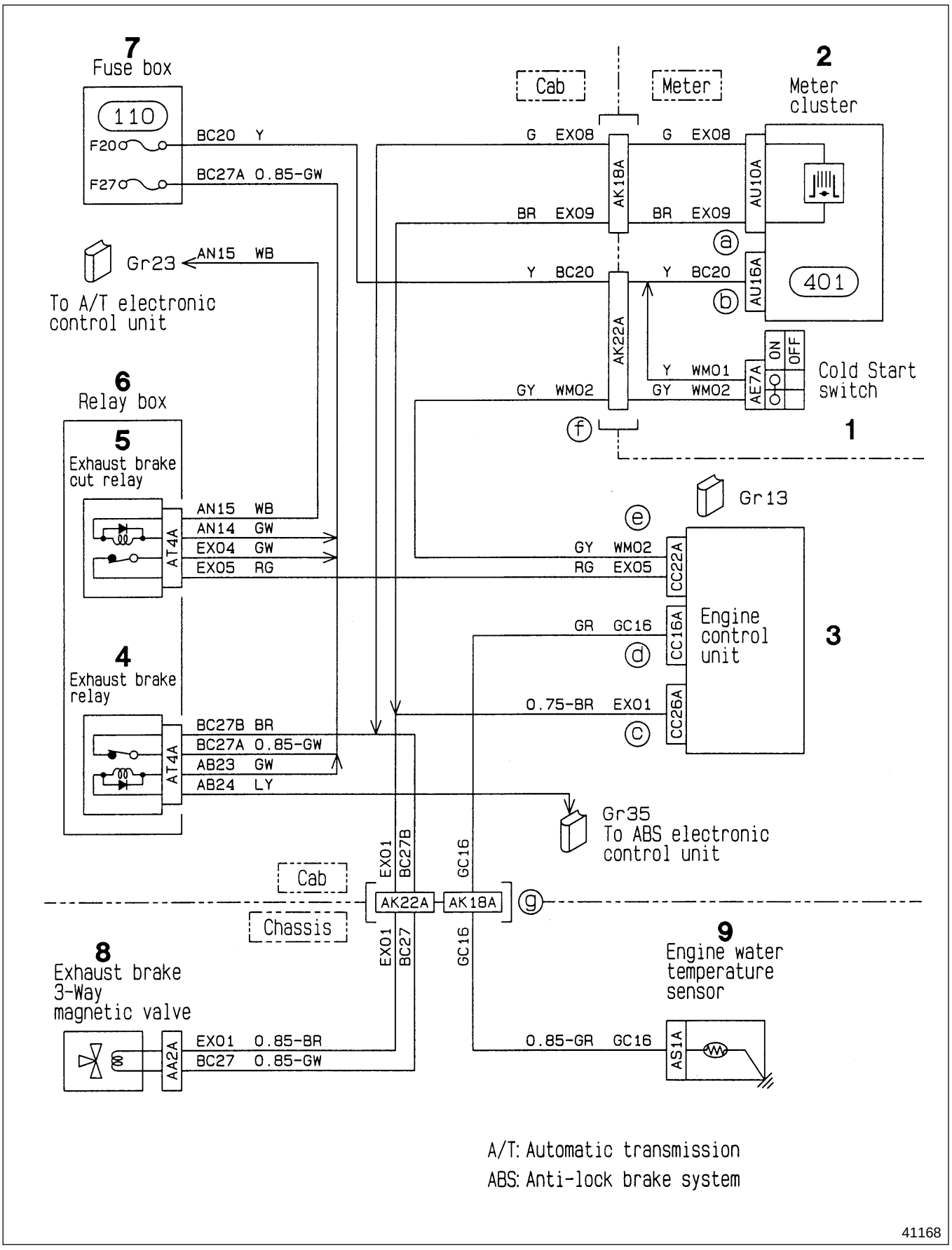

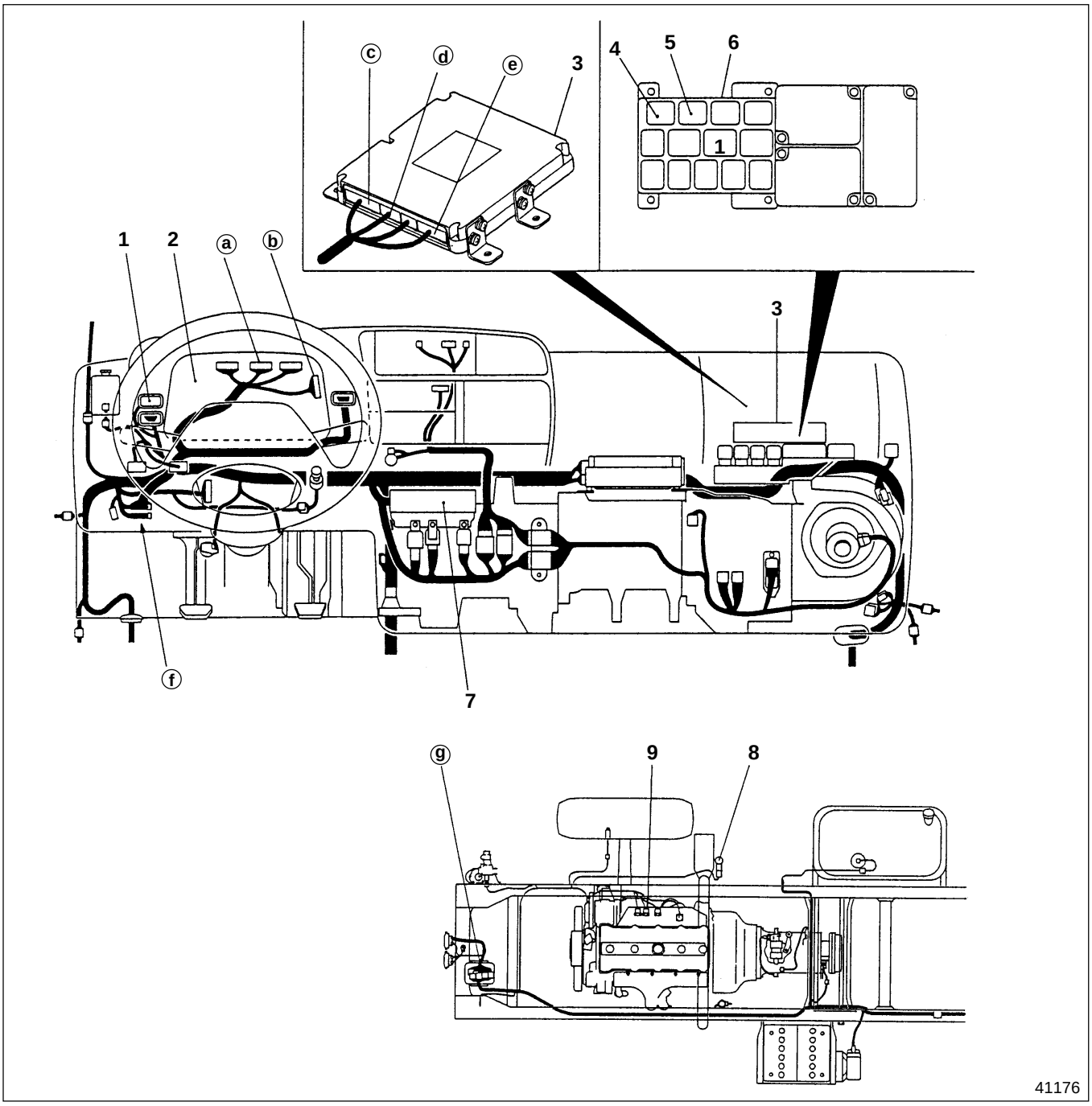

1 Cold start switch 1 (601)
2 Meter cluster 4 (401)
3 Engine control unit Gr13
4 Exhaust brake relay 3 (604)
5 Exhaust brake cut relay 1 (604)
6 Relay box (604)
7 Fuse box (104)
8 Exhaust brake 3-way magnetic valve 1 (701)
9 Engine water temperature sensor Gr13

1 : '96 Model Gr54 (Pub No. TWSE9501-54)
3 : '99 Model Gr54 (Pub No. TWSE9501-3)
4 : '00 Model Gr54 (Pub No. TWSE9501-4)

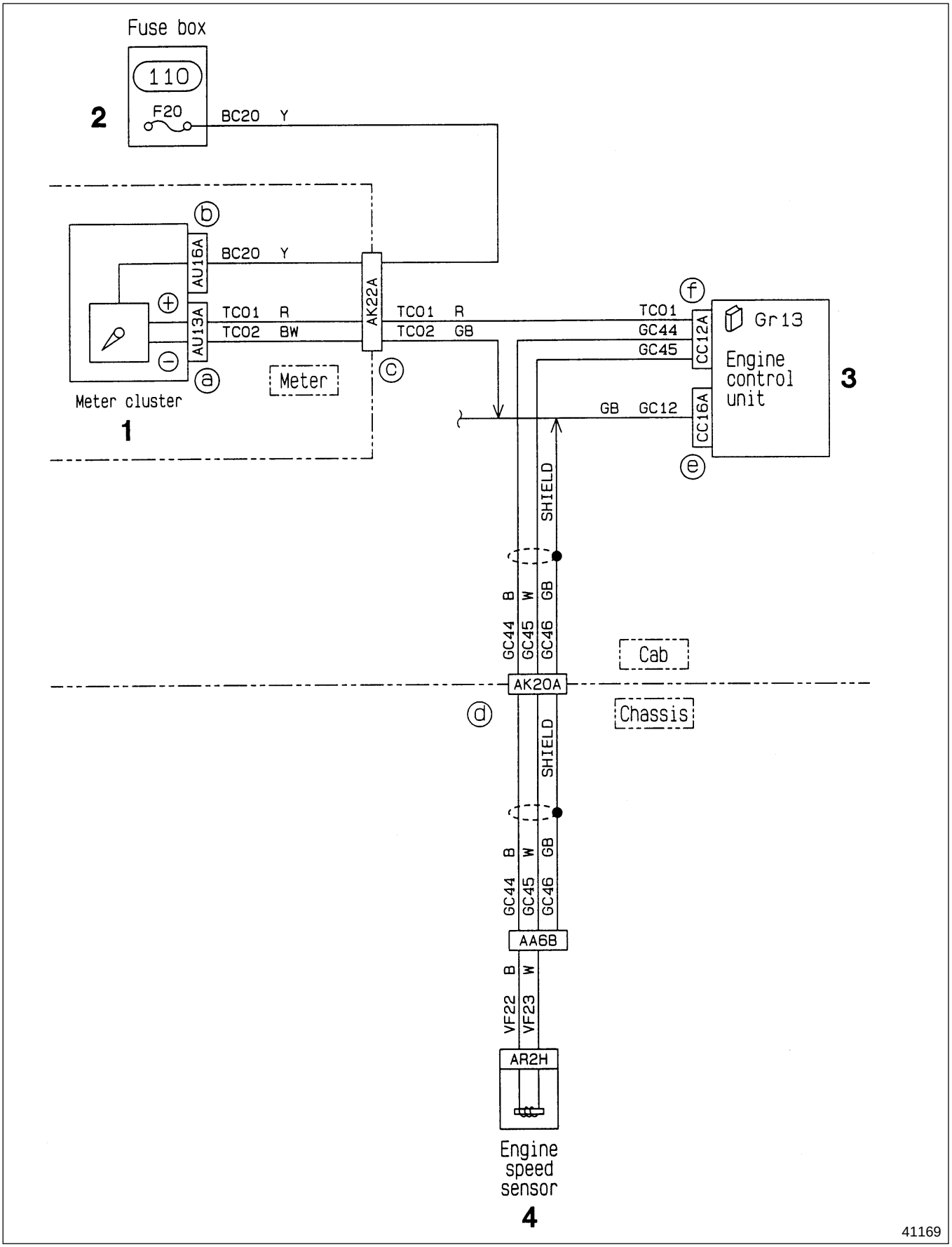
Fuse box
110
F20
2
BC20 Y
b
AU16A
BC20 Y
AK22A
TCO1 R
TCO2 BW
AU13A
TCO1 R
TCO2 GB
a
Meter
c
Meter cluster
1
f
TCO1
GC44
GC45
CC12A
Gr13
Engine control unit
3
GB GC12
CC16A
e
SHIELD
B
W
GB
GC44
GC45
GC46
Cab
AK20A
d
Chassis
SHIELD
B
W
GB
GC44
GC45
GC46
AA6B
B
W
VF22
VF23
AR2H
Engine speed sensor
4
41169

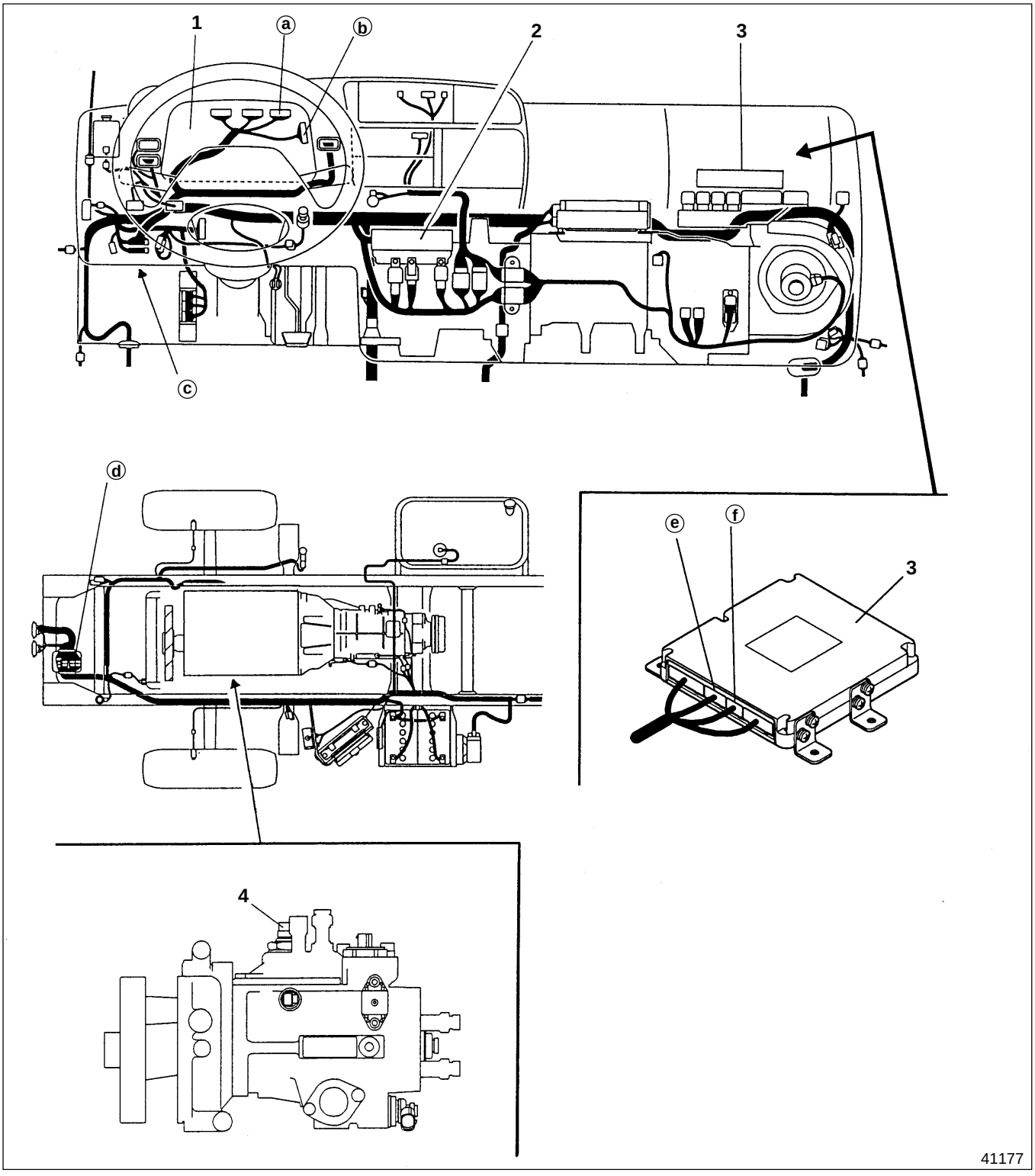

1 Meter cluster 4 (401)
2 Fuse box (104)
3 Engine control unit Gr13
4 Engine speed sensor (801)

4 : '00 Model Gr54 (Pub No. TWSE9501-4)

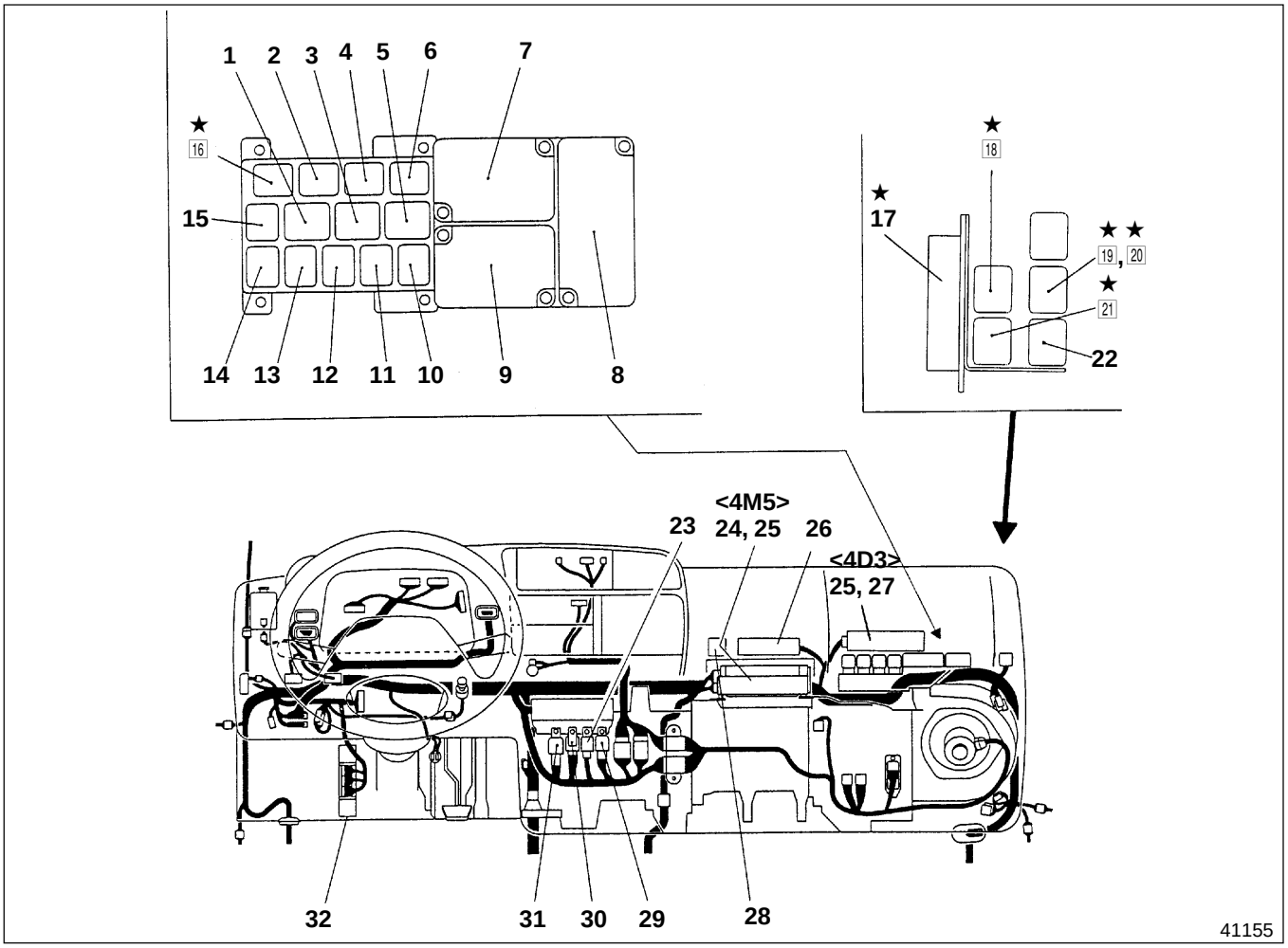

1 Wiper relay (LOW)
2 Transmission neutral relay <M/T>
Exhaust brake cut relay <A/T>
3 Wiper relay (HIGH)
4 Overheating relay
5 Engine oil level relay
6 Pre-stroke cut relay
7 Flasher unit
8 Multipurpose timing control unit
9 Lighting and alarm control unit
10 Backup lamp relay <A/T>
11 Exhaust brake relay
12 Tail lamp relay
13 Head lamp relay (HIGH)
14 Head lamp relay (LOW)
15 Blower fan relay
★16 Exhaust brake cut relay <ABS>
★17 Drive unit <4M5> Gr13
★18 Drive unit relay
★19 Electronic control unit main relay <4M5>
★20 Transfer low relay <FG>
★21 Mirror heater relay
22 Turn signal relay
23 Safety relay
24 Electronic governor control unit <4D3> Gr13
25 ABS control unit Gr35
26 Puls divider
★27 Engine control unit <4M5> Gr13
28 Daytime running light control unit
29 Van body dome light relay
30 Automatic transmission fluid cooler fan relay <A/T>
31 Neutral relay
32 Automatic transmission control unit G23

M/T: Manual transmission
A/T: Automatic transmission
ABS: Anti-lock brake system

★ marks indicate changed parts.
Regarding the inspection procedures for parts for which instructions are not given in this manual, refer to the ’99 Model, Gr54 manual (Pub. No. TWSE9501-3).

◆ Service procedure

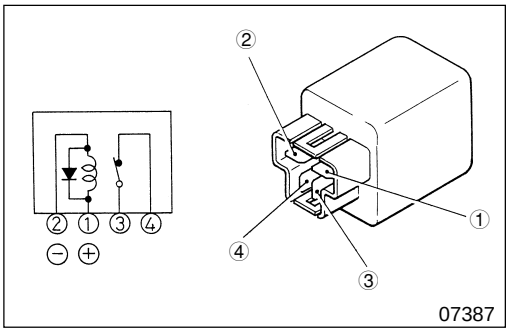

16 Inspection of relay (Close type 4-pin)

- Follow the table below to inspect continuity:

	①	②	③	④
No current	○——○			○——○
Current	⊕——⊖		◌------◌	

○——○ : There is continuity between terminals ○ and ○.
⊕——⊖ : Indicates that 12 volts DC is applied to the line between the terminals.
◌------◌ : Indicates that the continuity between the terminals is lost.

- If any fault is found, replace the relay.

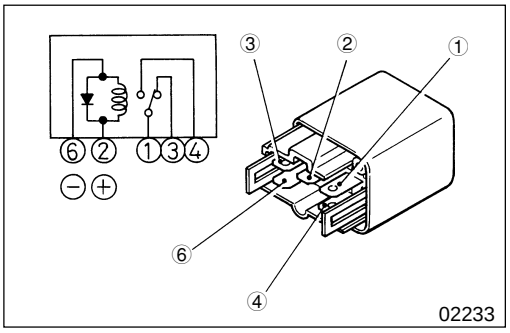

18 Inspection of relay (Open type 5-pin)

- Follow the table below to inspect continuity

	①	②	③	④	⑥
No current	○——○				○——○
Current	○——○	⊕——⊖		○——○	

○——○ : There is continuity between terminals ○ and ○.
⊕——⊖ : Indicates that 12 volts DC is applied to the line between the terminals.

- If any fault is found, replace the relay.

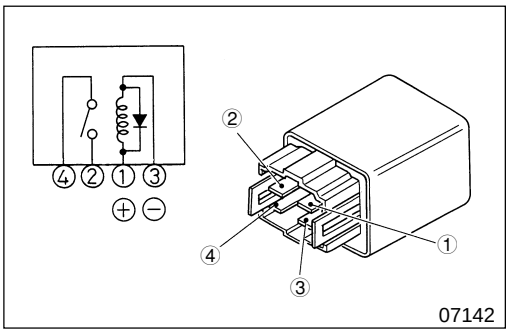

19 20 21 Inspection of relay (Open type 4-pin)

- Follow the table below to inspect continuity:

	①	②	③	④
No current	○——○			○——○
Current	⊕——⊖			

○——○ : There is continuity between terminals ○ and ○.
⊕——⊖ : Indicates that 12 volts DC is applied to the line between the terminals.

- If any fault is found, replace the relay.

629 MIRROR HEATER CIRCUIT

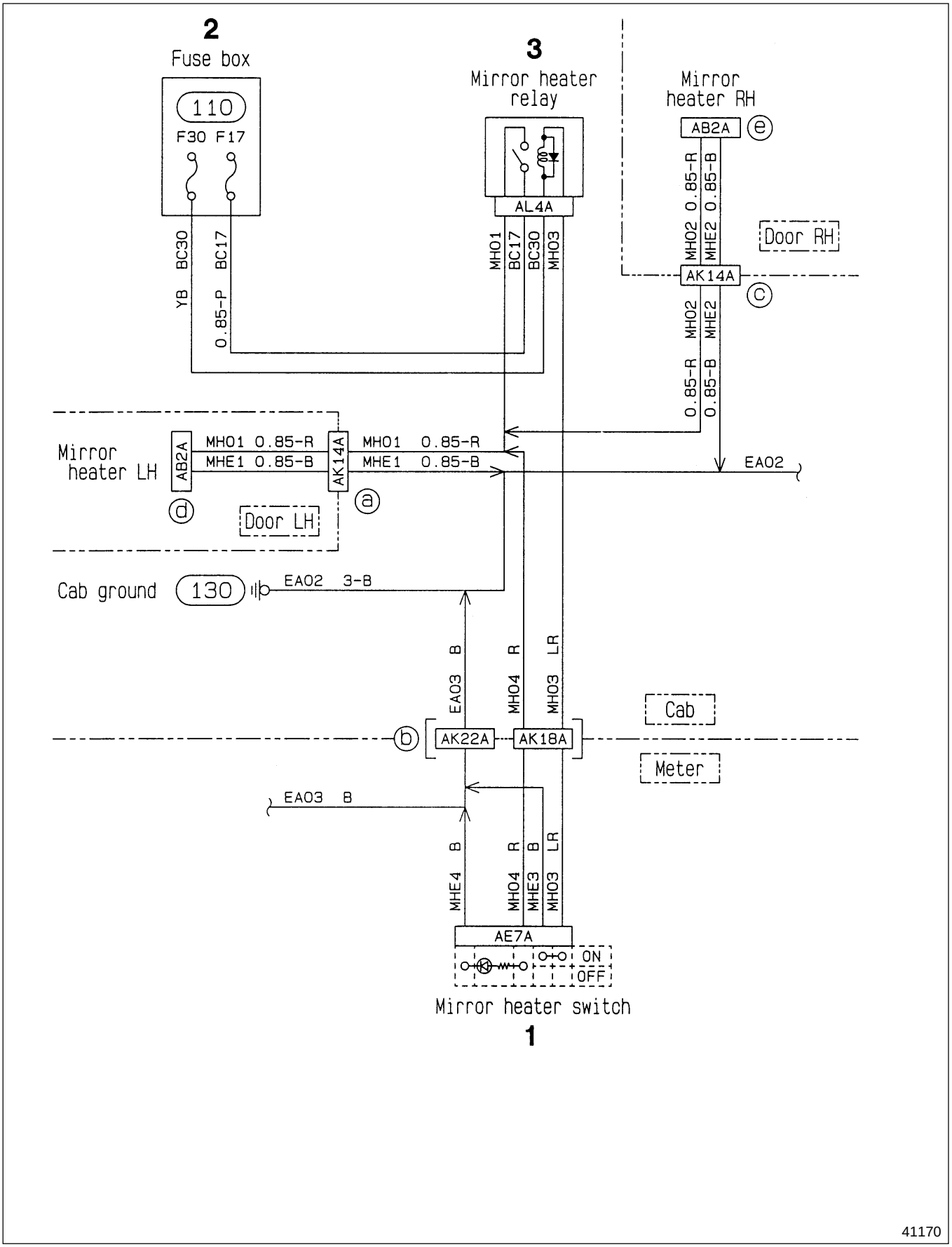

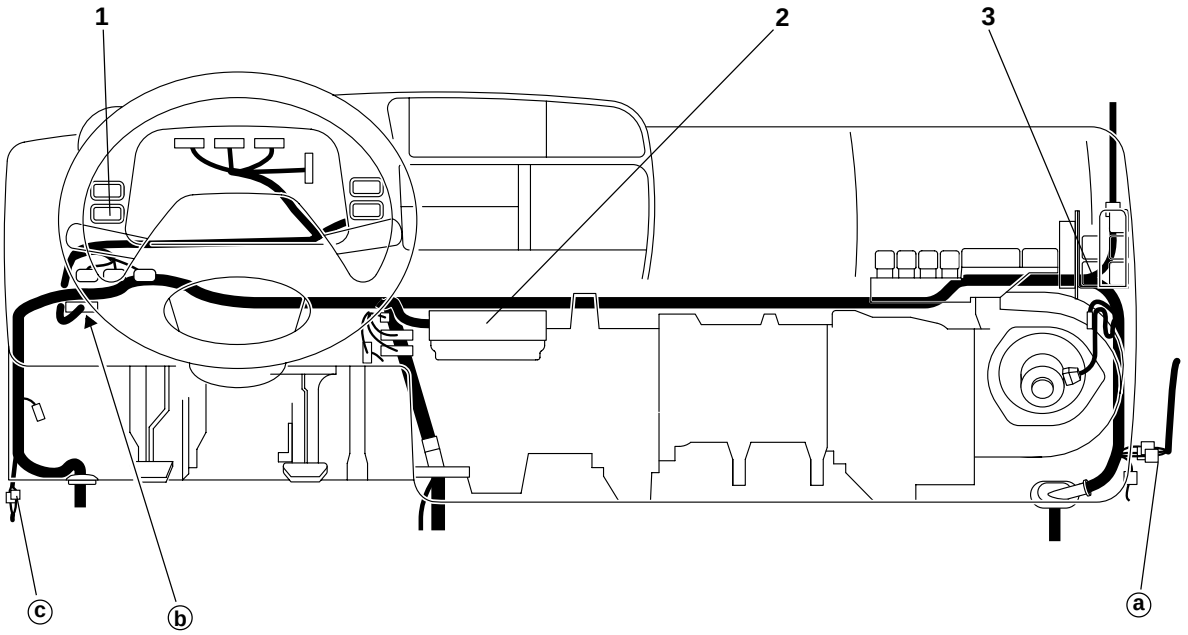

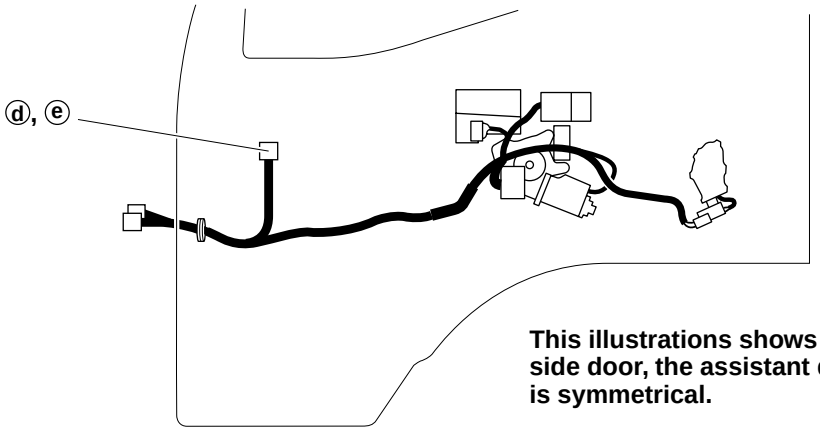

This illustrations shows the driver's seat side door, the assistant driver's side door is symmetrical.

P41124

1 Mirror heater switch
2 Fuse box 🕮 (104)
3 Mirror heater relay 🕮 (604)

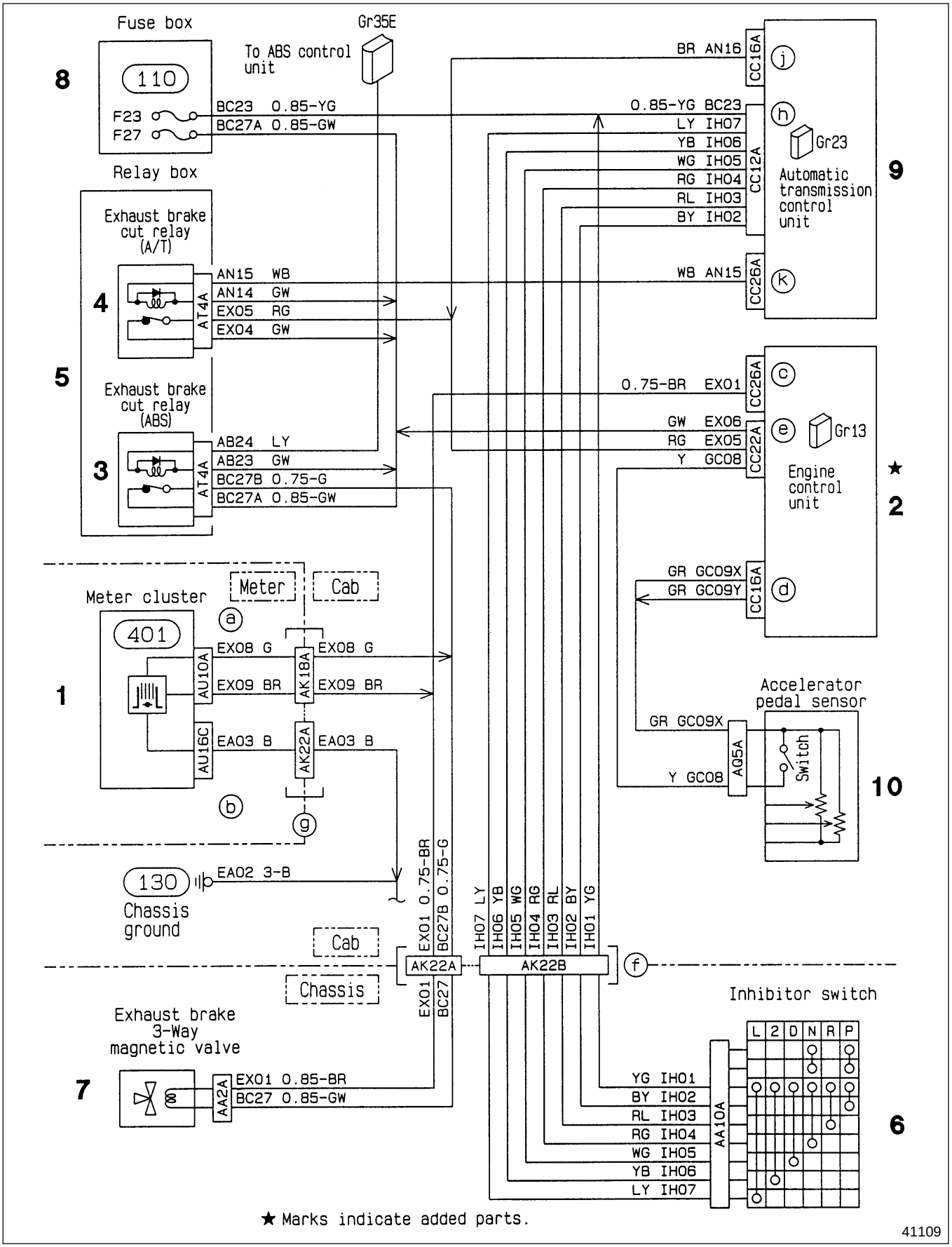
Fuse box
Gr35E
To ABS control unit
8
110
F23
F27
BC23 0.85-YG
BC27A 0.85-GW
Relay box
Exhaust brake cut relay (A/T)
4
AT4A
AN15 WB
AN14 GW
EX05 RG
EX04 GW
5
Exhaust brake cut relay (ABS)
3
AT4A
AB24 LY
AB23 GW
BC27B 0.75-G
BC27A 0.85-GW
BR AN16
CC16A
j
0.85-YG BC23
LY IH07
YB IH06
WG IH05
RG IH04
RL IH03
BY IH02
CC12A
h
Gr23
Automatic transmission control unit
9
WB AN15
CC26A
k
0.75-BR EX01
CC26A
c
GW EX06
RG EX05
Y GC08
CC22A
e
Gr13
Engine control unit
★
2
GR GC09X
GR GC09Y
CC16A
d
Meter cluster
Meter
Cab
401
a
EX08 G
EX09 BR
AU10A
AK18A
EX08 G
EX09 BR
1
AU16C
EA03 B
AK22A
EA03 B
b
g
130
EA02 3-B
Chassis ground
Accelerator pedal sensor
GR GC09X
Y GC08
AQ5A
Switch
10
Cab
Chassis
EX01 0.75-BR
BC27B 0.75-G
IH07 LY
IH06 YB
IH05 WG
IH04 RG
IH03 RL
IH02 BY
IH01 YG
AK22A
AK22B
f
EX01
BC27
Inhibitor switch
Exhaust brake 3-Way magnetic valve
7
AA2A
EX01 0.85-BR
BC27 0.85-GW
L 2 D N R P
YG IH01
BY IH02
RL IH03
RG IH04
WG IH05
YB IH06
LY IH07
AA10A
6
★ Marks indicate added parts.
41109

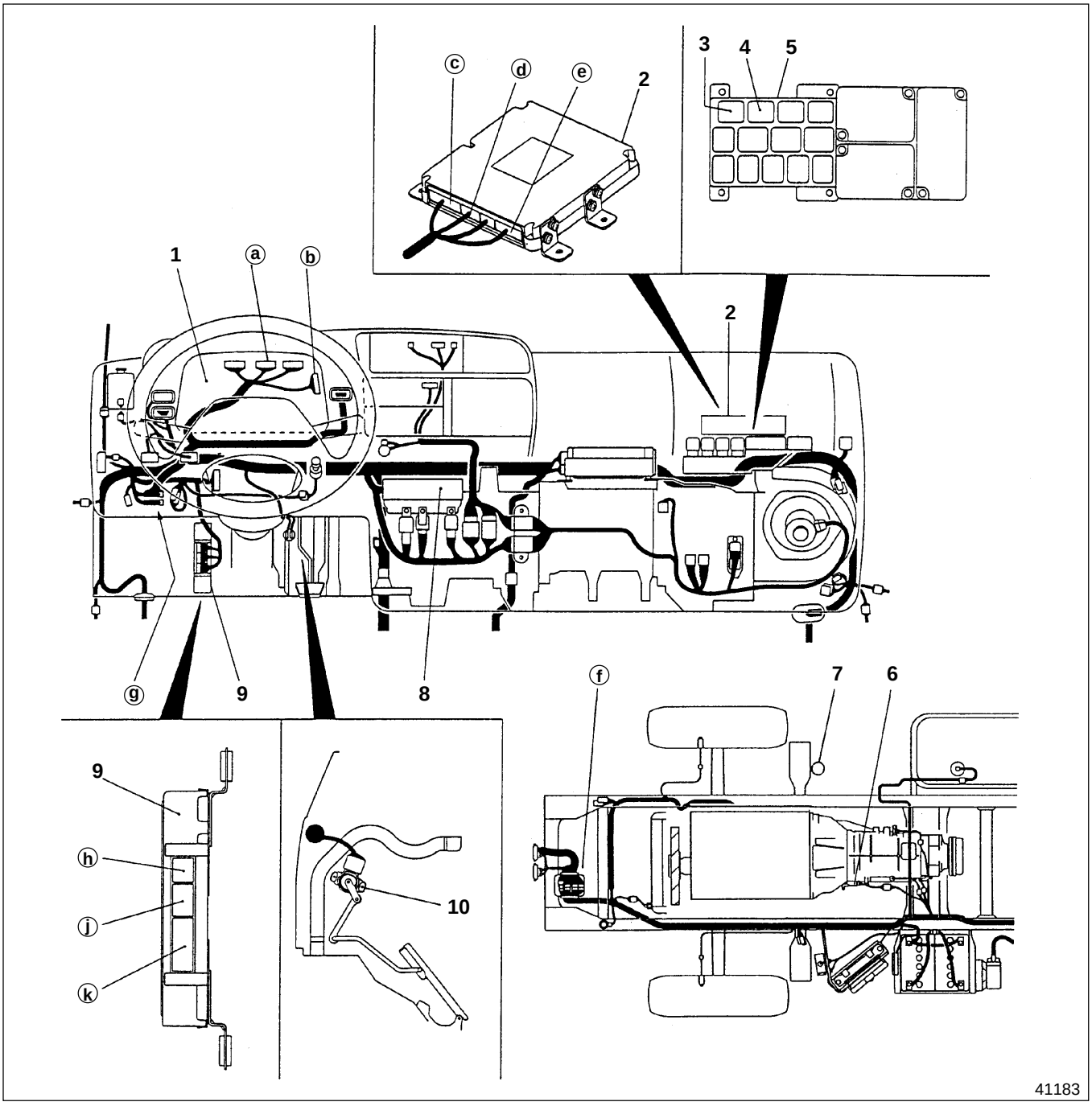

1 Meter cluster 4 (401)
2 Engine control unit Gr13
3 Exhaust brake cut relay <ABS> (604)
4 Exhaust brake cut relay <A/T> (604)
5 Relay box (604)
6 Inhibitor switch Gr23
7 Exhaust brake 3-way magnetic valve 1 (701)
8 Fuse box (104)
9 Automatic transmission control unit Gr23
10 Accelerator pedal sensor Gr13

1: '96 Model Gr54 (Pub No. TWSE9501-54)
4: '00 Model Gr54 (Pub No. TWSE9501-4)

A/T: Automatic transmission

Installation position

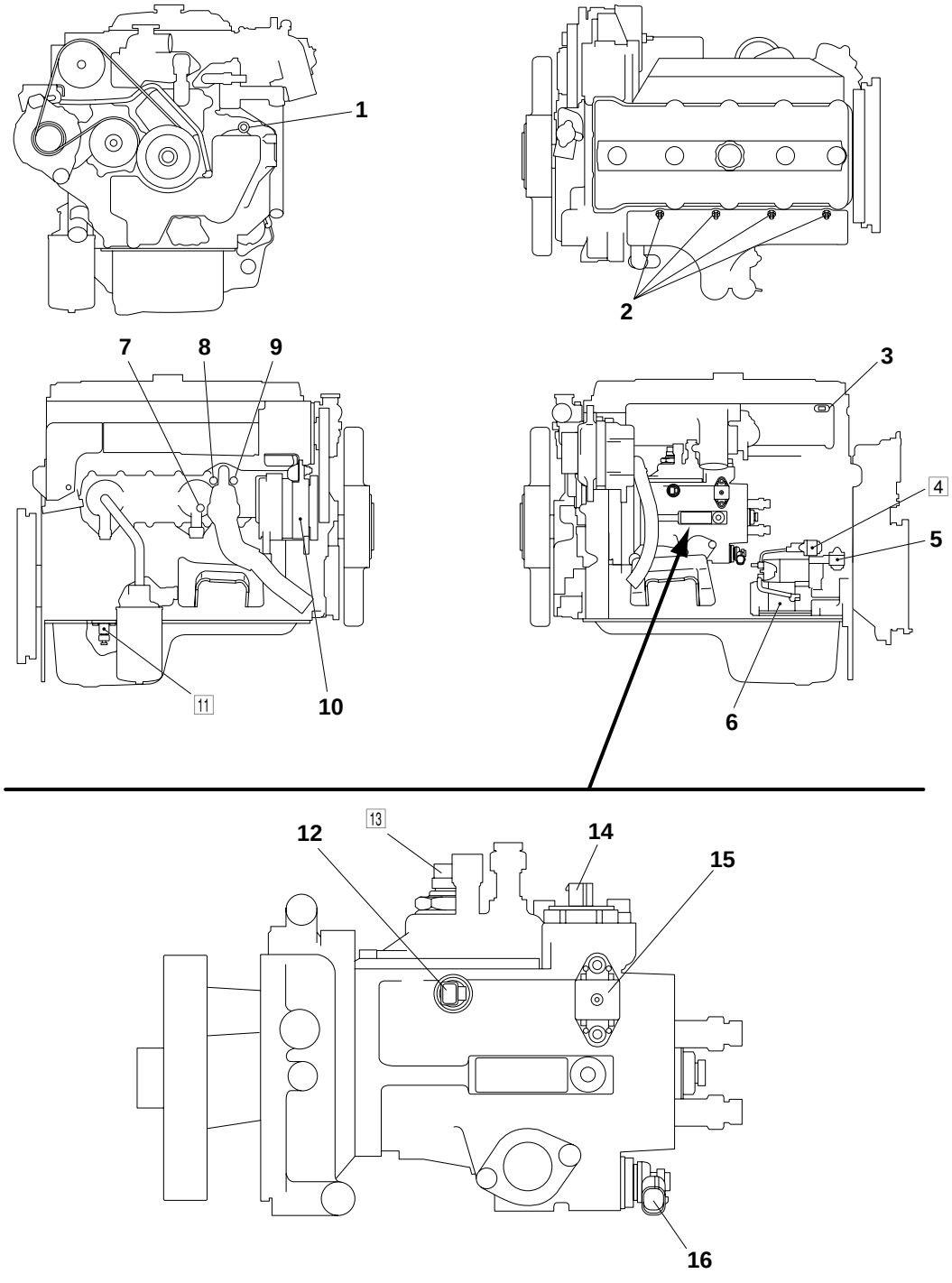

Ⓟ41180

1 Top dead center speed sensor Gr13
2 Glow plug 1 220
3 Boost pressure sensor Gr13
4 Glow relay
5 Starter relay 210
6 Starter 201
7 Engine oil pressure switch 1
8 Water temperature sensor (Connects to water temperature gauge and multipurpose timing control unit) 1 425
9 Water temperature sensor (Connects to engine control unit) Gr13
10 Alternator 4 106
11 Engine oil level sensor
12 Fuel temperature sensor Gr13
13 Engine speed sensor Gr13
14 Spil valve Gr13
15 Fuel injection rate adjustment read only memory Gr13
16 Timer control valve Gr13

1: '96 Model Gr54 (Pub No. TWSE9501-54)
4: '00 Model Gr54 (Pub No. TWSE9501-4)

Service standard

Location	Maintenance item		Standard value	Limit	Remedy
13	Resistance of engine speed sensor 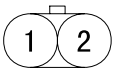 41181	①–②	230 ± 25 Ω	—	Replace

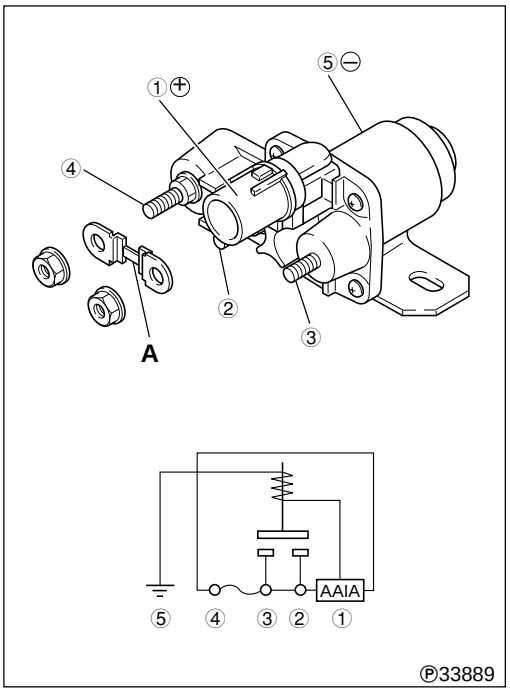

◆ Service procedure

4 Inspection of glow relay

(1) Inspection of fuse

If any fault is found, replace fuse **A** (127 amperes).

(2) Inspection of body

- Follow the table below to inspect continuity:

	④	②	③	①	⑤
No current	○——○				
Current	○——○——○			⊕——⊖	

○——○ : There is continuity between terminals ○ and ○.
⊕——⊖ : Indicates that 12 volts DC is applied to the line between the terminals.
A: Fuse (127 amperes)

- If any fault is found, replace glow relay **4**.

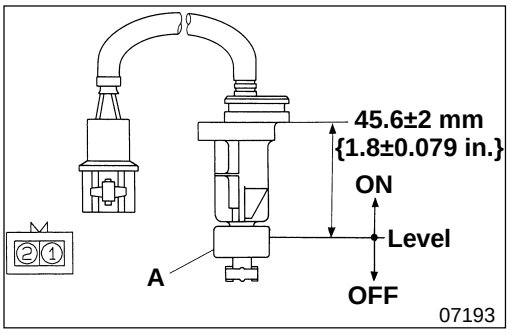

11 Inspection of engine oil level sensor

- Follow the table below to inspect continuity:

	①	②
ON	○——○	
OFF		

○——○ : There is continuity between terminals ○ and ○.

- If any fault is found, replace engine oil level sensor **11**. Gr12
A: Float

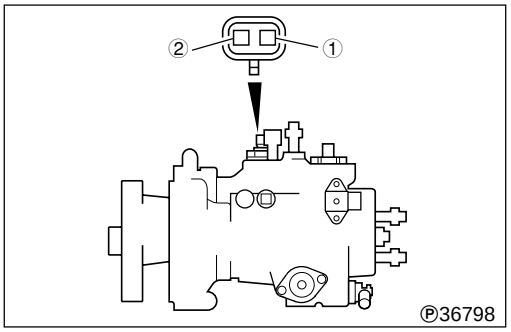

13 **Inspection of engine speed sensor**

- Measure the resistance between terminals ① and ②.
- If the measured value deviates from the standard value, replace engine speed sensor **13**. Gr13.

MEMO

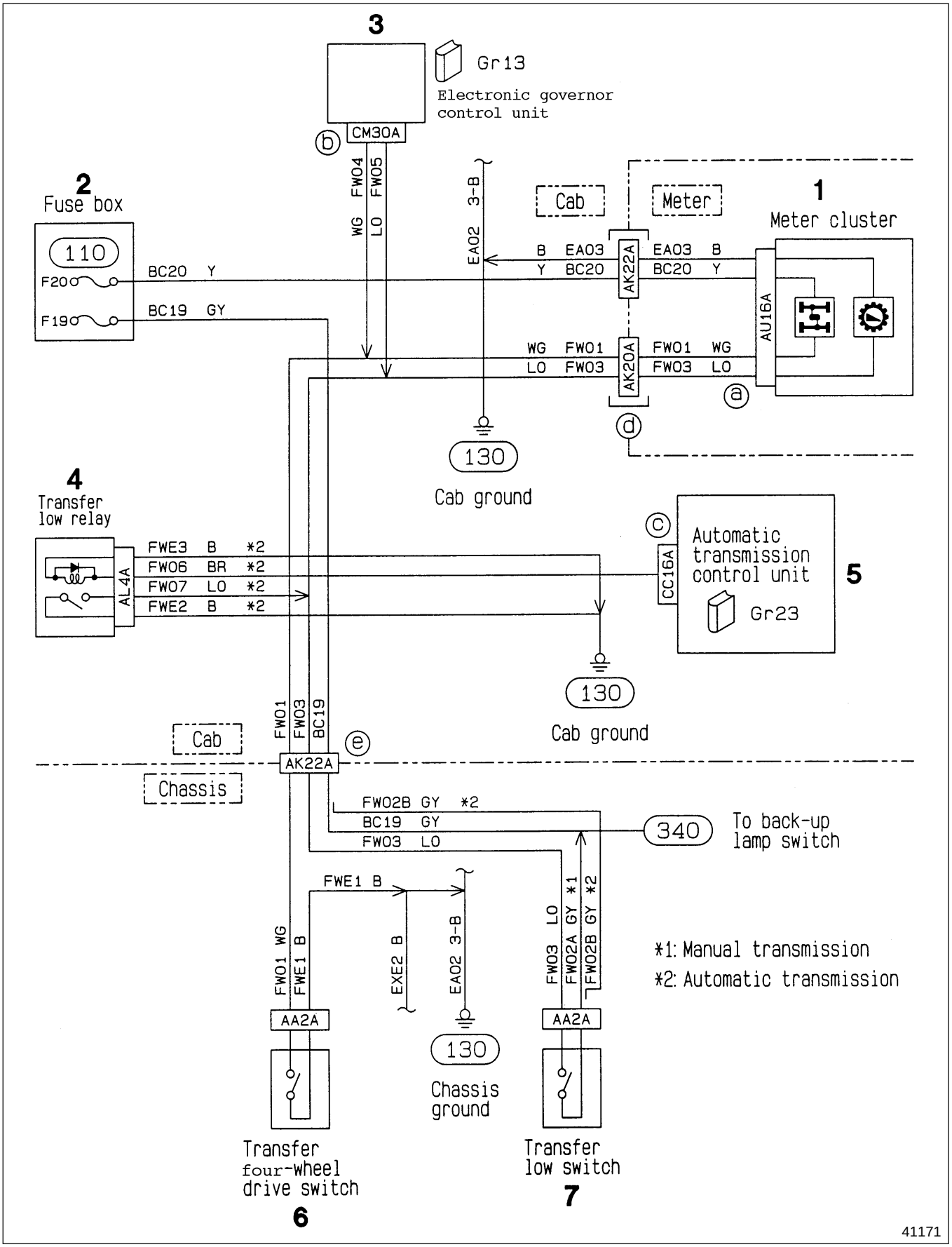
3
Gr13
Electronic governor control unit
CM30A
b
FWO4
FWO5
WG
LO
EA02
3-B
Cab
Meter
1
Meter cluster
2
Fuse box
110
F20
F19
BC20 Y
BC19 GY
B EA03
Y BC20
AK22A
EA03 B
BC20 Y
AU16A
WG FWO1
LO FWO3
AK20A
FWO1 WG
FWO3 LO
a
d
130
Cab ground
4
Transfer low relay
AL4A
FWE3 B *2
FWO6 BR *2
FWO7 LO *2
FWE2 B *2
c
CC16A
Automatic transmission control unit
5
Gr23
130
Cab ground
FWO1
FWO3
BC19
e
Cab
Chassis
AK22A
FWO2B GY *2
BC19 GY
FWO3 LO
340
To back-up lamp switch
FWE1 B
FWO1 WG
FWE1 B
EXE2 B
EA02 3-B
FWO3 LO
FWO2A GY *1
FWO2B GY *2
AA2A
AA2A
130
Chassis ground
*1: Manual transmission
*2: Automatic transmission
Transfer four-wheel drive switch
6
Transfer low switch
7
41171

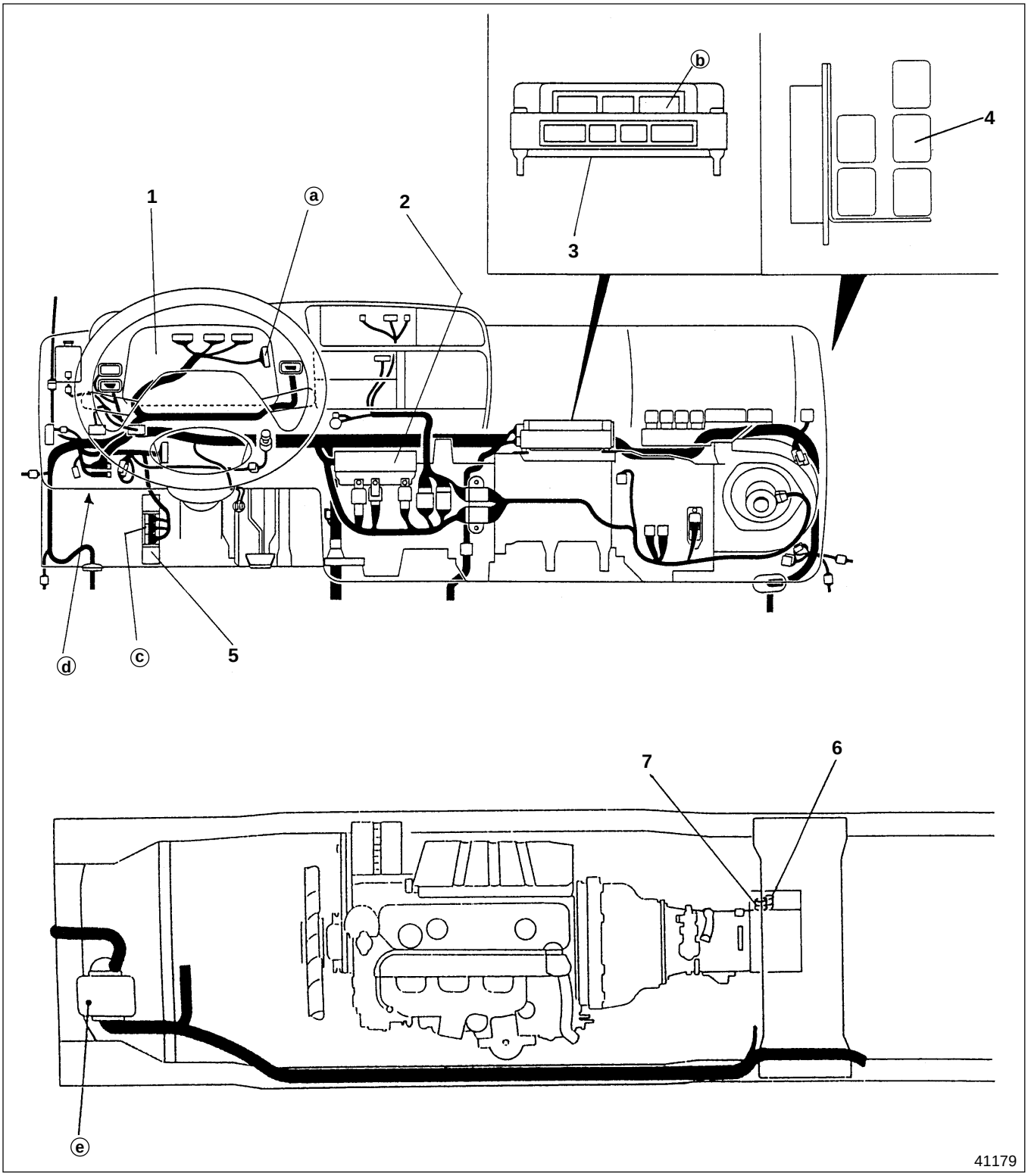

1 Meter cluster 4 (401)
2 Fuse box (104)
3 Electronic governor control unit Gr13
4 Transfer low relay (604)
5 Automatic transmission control unit Gr23
6 Transfer four wheel drive switch 2 (803)
7 Transfer low switch 2 (803)

2: '98 Model Gr54 (Pub No. TWSE 9501-254)
4: '00 Model Gr54 (Pub No. TWSE 9501-4)

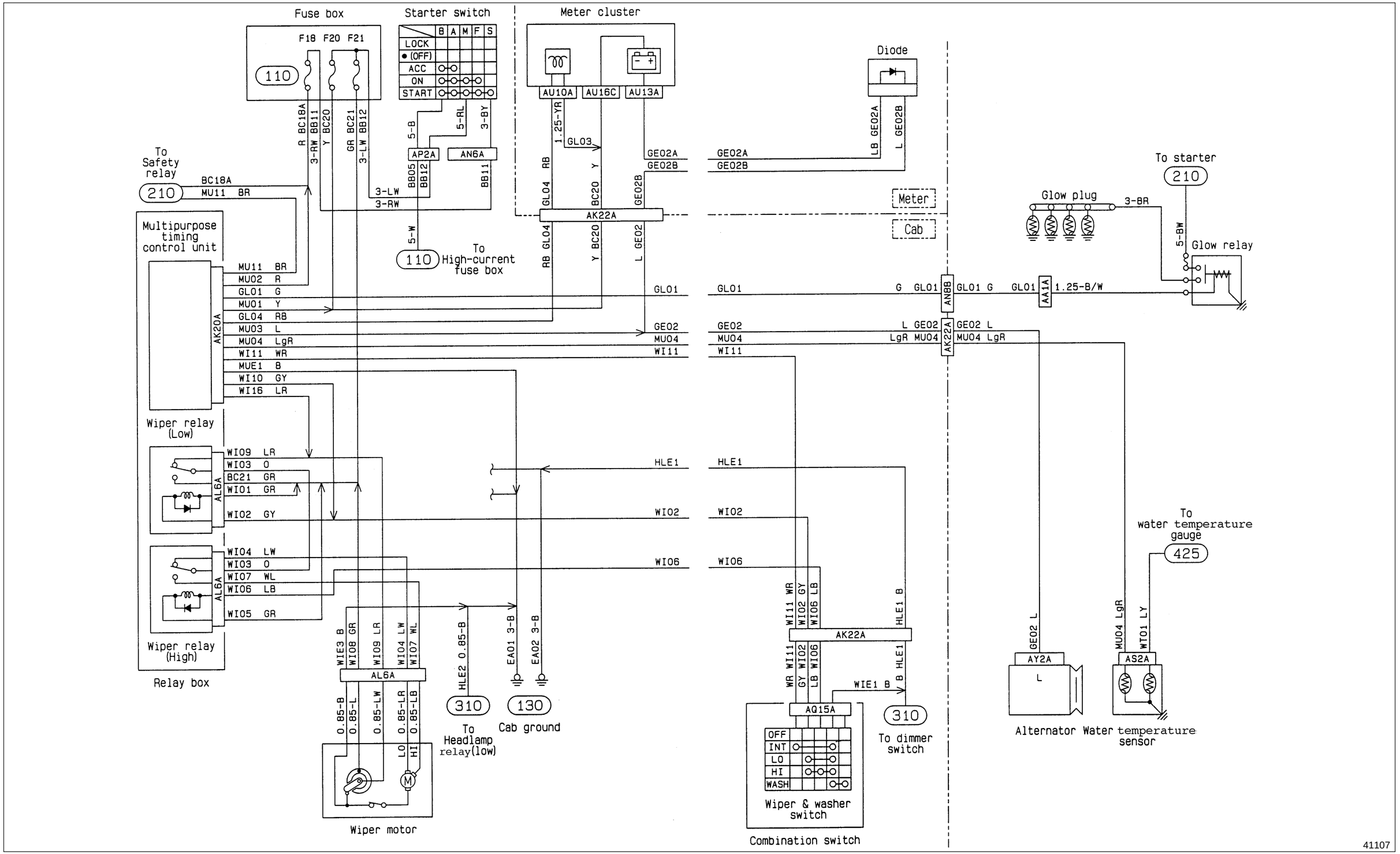
Fuse box
F18 F20 F21
110
Starter switch
B A M F S
LOCK
(OFF)
ACC
ON
START
Meter cluster
AU10A AU16C AU13A
Diode
LB GE02A
L GE02B
GE02A
GE02B
Meter
Cab
To starter
210
Glow plug
3-BR
5-BW
Glow relay
GLO1
G GLO1
GLO1 G
GLO1
1.25-B/W
AN8B
AA1A
GE02
L GE02
GE02 L
MU04
LgR MU04
MU04 LgR
AK22A
WI11
To Safety relay
210
BC18A
MU11 BR
R BC18A
3-RW BB11
Y BC20
GR BC21
3-LW BB12
5-B
5-RL
3-BY
AP2A
AN6A
BB05
BB12
BB11
3-LW
3-RW
5-W
110
To High-current fuse box
1.25-YR
GLO3
RB GLO4
Y BC20
L GE02
AK22A
Multipurpose timing control unit
AK20A
MU11 BR
MU02 R
GLO1 G
MU01 Y
GL04 RB
MU03 L
MU04 LgR
WI11 WR
MUE1 B
WI10 GY
WI16 LR
Wiper relay (Low)
AL6A
WI09 LR
WI03 O
BC21 GR
WI01 GR
WI02 GY
Wiper relay (High)
WI04 LW
WI03 O
WI07 WL
WI06 LB
WI05 GR
Relay box
HLE1
WI02
WI06
WIE3 B
WI08 GR
WI09 LR
WI04 LW
WI07 WL
AL6A
0.85-B
0.85-L
0.85-LW
0.85-LR
0.85-LB
LO
HI
Wiper motor
HLE2 0.85-B
310
To Headlamp relay(low)
EA01 3-B
EA02 3-B
130
Cab ground
WI11 WR
WI02 GY
WI06 LB
HLE1 B
AK22A
WR WI11
GY WI02
LB WI06
B HLE1
WIE1 B
AQ15A
OFF
INT
LO
HI
WASH
Wiper & washer switch
310
To dimmer switch
Combination switch
To water temperature gauge
425
GE02 L
MU04 LgR
WT01 LY
AY2A
L
AS2A
Alternator
Water temperature sensor
41107

MITSUBISHI FUSO

Service Manual

Table of Contents

BACK

HOME

FE/FG 2000
Model Year Changes

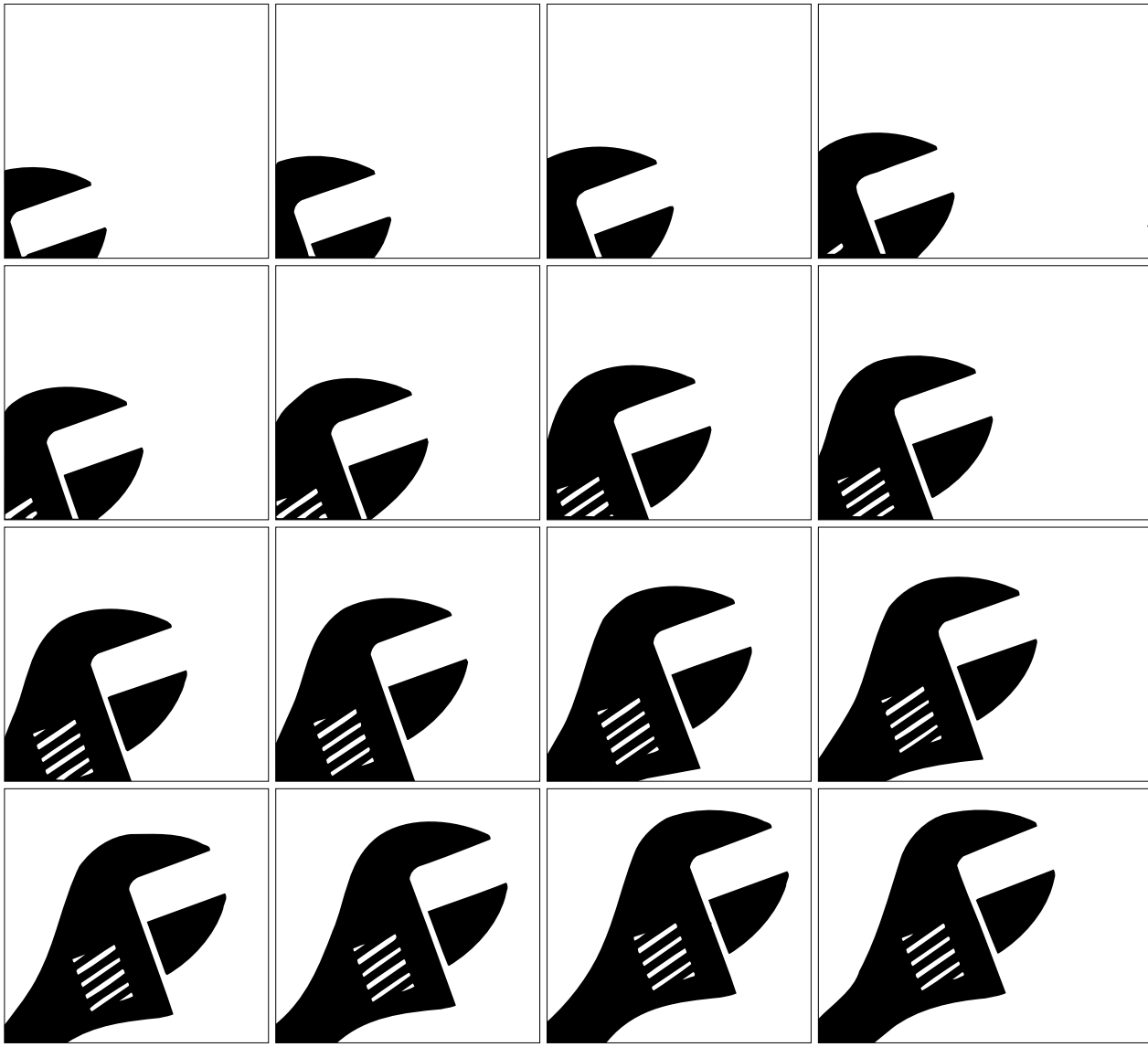

Pub. No. TWSE9501-4

FE/FG

SERVICE MANUAL

FOREWORD

This Service Manual contains maintenance and repair methods for personnel involved in the maintenance and repair of 2000 model Mitsubishi Fuso Truck FE.FG series.
Read this manual carefully as an aid to providing correct, efficient and fast maintenance.
Please note, however, that due to continuous improvements on the specifications, numbers and description for maintenance might be changed without prior notice.
If you have any question, or encounter a problem, please do not hesitate to contact your nearest Mitsubishi Fuso dealer or distributor.

© Mitsubishi Motors Corporation, May 1999

MITSUBISHI FUSO TRUCK OF AMERICA, Inc.

GROUP INDEX

2000 MODEL CHANGES

GENERAL 00

FRONT AXLE < FG > 26B

CAB 42

ELECTRICAL 54

2000 MODEL CHANGES

2000 MODEL CHANGES

Item	’00 Model	⇦	’99 Model
Gr 00 General • Engine output of FE639 series has been increased to 145 HP/2900 rpm and 275 lbf.ft/1600 rpm (SAE, gross). • Maximum GVW of FE639□4 series has been increased to 12,000 lb. • The vehicle identification number has changed.	🕮 Gr 00		—

Gr 01 Maintenance Schedule

• Error in working procedures in Maintenance Schedule table has been corrected. (Applicable to ’96 and later models)

Inspection and maintenance		Time of inspection and maintenance: Inspection interval: New vehicle at 4000 km/2500 miles	Every 10000 km/6000 miles	Every 20000 km/12000 miles	Every 30000 km/18000 miles	Every 40000 km/24000 miles	Every 50000 km/30000 miles	Every 90000 km/54000 miles	Every 250000 km/150000 miles	Working procedures	Remarks
POWER TRAIN (Correct)											
16	Clutch pedal and clutch disc wear		×							Check pedal for free play.	Gr 21
17	Propeller shaft flange torque and universal joint looseness		×							Check flange yoke bolts for looseness and universal joint for play.	Gr 25
POWER TRAIN (Incorrect)											
16	Clutch pedal and clutch disc wear		×							Check pedal for free play. Check clutch disc wear through inspection hole.	Gr 21
17	Propeller shaft flange torque and universal joint looseness		×							Check flange yoke bolts for looseness and universal joint for play. Carry out the first inspection for new vehicles at 10000 km or 6000 miles.	Gr 25

Item	’00 Model ⇦	’99 Model
Gr 13 Fuel and engine control • Components of throttle position sensor assembly has been changed.	**< ’00 Model >** 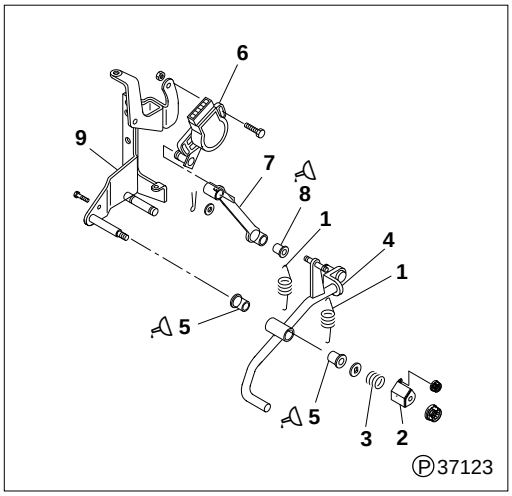 ● **Removal sequence** **1** Return spring **2** Shaft cover **3** Spring **4** Accelerator control arm **5** Bushing **6** Throttle position sensor **7** Accelerator control extension **8** Bushing **9** Bracket ● **Installation sequence** Follow the removal sequence in reverse. **Lubricant** Location | Points of application | Specified lubricant | Quantity **5, 8** | Slide-contacting surfaces of bushing and support assembly | Chassis grease [NLGI No.1 (Ca soap)] | As required **< ’99 Model >** 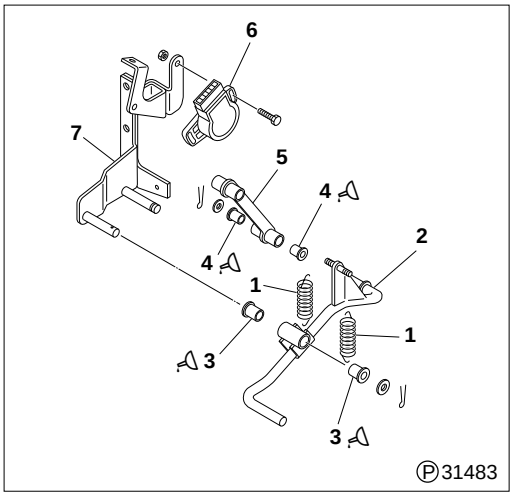 ● **Removal sequence** **1** Return spring **2** Accelerator control arm **3** Bushing **4** Bushing **5** Accelerator control extension **6** Throttle position sensor **7** Bracket ● **Installation sequence** Follow the removal sequence in reverse. **Lubricant** Location | Points of application | Specified lubricant | Quantity **3, 4** | Slide-contacting surfaces of bushing and support assembly | Chassis grease [NLGI No.1 (Ca soap)] | As required
• Part No. and type of ROM pack are different.	MK 344606 (MRT-E6)	MK 327927 (MRT-E4)

2000 MODEL CHANGES

Item	’00 Model ⇦ ’99 Model

Gr 22 Manual Transmission

- Material of transmission case and clutch housing has been changed from iron to aluminum.
- Tightening torque has been changed for some bolts.
- Reverse idler gear cover gasket is no longer used, and sealant is used instead.
- Oil quantity and mass have been changed.

< ’00 Model >

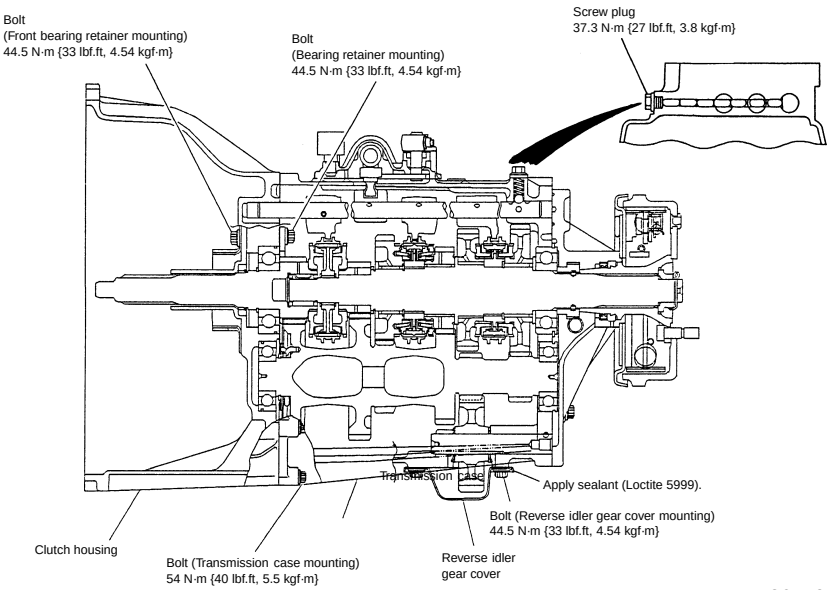

36552

Item			Specifications
Oil	Quantity	L {qts}	Approximately 3.7 {3.9} < FE >, Approximately 3.7 {3.9} < FG >
Weight		kg {lb}	Approximately 83 {183}

< ’99 Model >

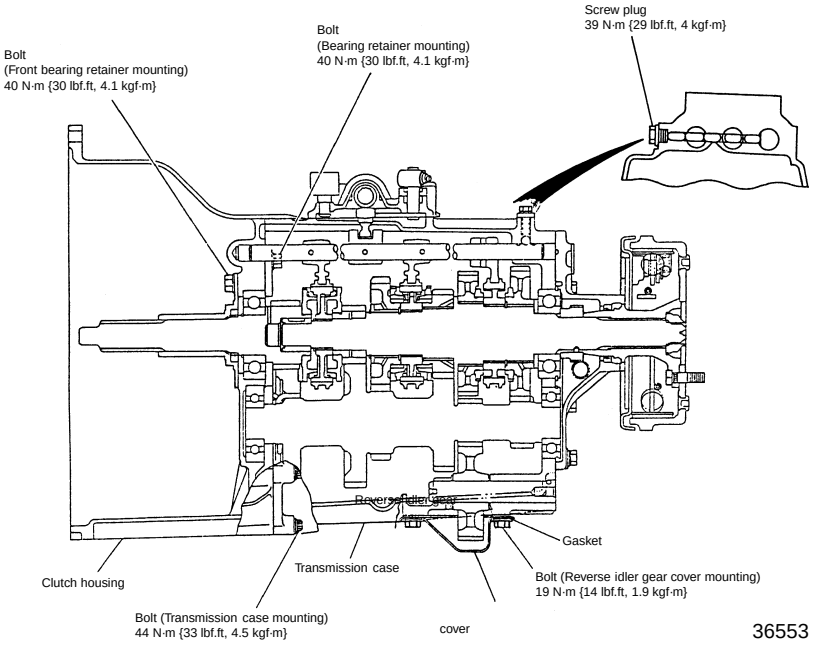

36553

Item			Specifications
Oil	Quantity	L {qts}	Approximately 3.1 {3.3} < FE >, Approximately 3.4 {3.6} < FG >
Weight		kg {lb}	Approximately 100 {220}

Item	’00 Model ⇦ ’99 Model
Gr 23 Automatic Transmission • Power mode switch is no longer provided.	**Without power mode switch** / **With power mode switch** 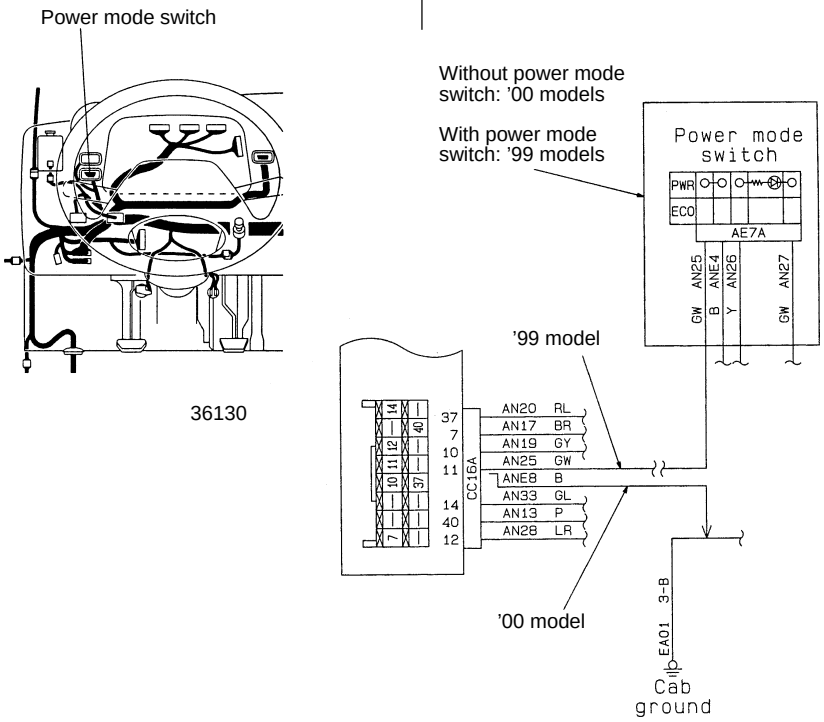 36130 36131
Gr 26B Front Axle < FG > • Hubs are free-wheel hubs. (Applicable to ’98 models)	🕮 Gr 26B Front Axle < FG >

Gr 31 Wheel and Tire
• Tire size for FE639□4 series has been changed.

Item / Model	Tire size	Air pressure kPa {Psi, kgf/cm²}		Application wheel
		Front	Rear	
’00 model	215/85R16(E)	550 {80, 5.50}	550 {80, 5.50}	16×6K-127-9 (Wheel with 5 studs)
’99 model	215/85R16(D)	450 {65, 4.50}	450 {65, 4.50}	16×6K-127-9 (Wheel with 5 studs)

Gr 35 Brake System
• Disc brakes are installed on all wheels in FE639□6 series.

Item		Model ’00 model
Front	Brake type	Disc brake (Full floating type)
	Cylinder inner diameter of caliper mm {in.}	ø51.1 {2.01}
	Disc rotor outer diameter×Thickness mm {in.}	ø293×40 {11.5×1.57}
	Brake pad thickness mm {in.}	14 {0.55}
Rear	Brake type	Disc brake (Full floating type)
	Cylinder inner diameter of caliper mm {in.}	ø51.1 {2.01}
	Disc rotor outer diameter×Thickness mm {in.}	ø293×40 {11.5×1.57}
	Brake pad thickness mm {in.}	14 {0.55}

Item		Model ’99 model
Front	Brake type	Disc brake (Full floating type)
	Cylinder inner diameter of caliper mm {in.}	ø51.1 {2.01}
	Disc rotor outer diameter×Thickness mm {in.}	ø288×24 {11.3×0.94}
	Brake pad thickness mm {in.}	12 {0.47}
Rear	Brake type	Drum brake (Dual 2-leading type)
	Inner diameter of wheel cylinder mm {in.}	ø28.57 {1.12}
	Inner diameter of brake drum mm {in.}	ø320 {12.6}
	Brake lining width×Thickness mm {in.}	75×9.3 {2.95×0.37}

Item	'00 Model ⇦ '99 Model	
Gr 35 Brake System • Load sensing valve and bypass valve are no longer installed due to addition of anti-lock brake system (ABS).	Without load sensing valve and bypass valve	With load sensing valve and bypass valve
• Procedures for bleeding brake system are added because of anti-lock brake system (ABS).	[Procedure for bleeding hydraulic unit] • Ordinary bleeding procedure is used for the primary side (non ABS-hydraulic system). However, when the solenoid valve of the hydraulic unit operates (ABS operation) with air mixed in the primary side, air enters the secondary side (hydraulic system). Therefore, be sure to bleed air from the secondary side using the MUT-II by following the procedures described below. • Regarding the use of the MUT-II, refer to 🗀 Gr 35A. < Bleeding front brakes > • Bleed the primary side of the front brake system. (Ordinary bleeding procedure) • Depress the brake pedal, and select the actuator drive mode, "FL ABS MV ON," on the MUT-II to force-drive the brake. • Open bleeder, bleed air from the wheel cylinder of the front left wheel brake system. • Repeat the above two steps until air is completely removed. • Depress the brake pedal, and select the actuator drive mode, "FR ABS MV ON," on the MUT-II to force-drive the brake. • Bleed air from the secondary side of the front right wheel brake system. • Repeat the above two steps until air is completely removed. < Bleeding rear brakes > • Bleed the primary side of the rear brake system. (Ordinary bleeding procedure) • Depress the brake pedal, and select the actuator drive mode, "RL ABS MV ON," on the MUT-II to force-drive the brake. • Bleed air from the secondary side of the rear left wheel brake system. • Repeat the above two steps until air is completely removed. • Depress the brake pedal, and select the actuator drive mode, "RR ABS MV ON," on the MUT-II to force-drive the brake. • Bleed air from the secondary side of the rear right wheel brake system. • Repeat the above two steps until air is completely removed.	
Gr 35A Anti-lock Brake System • Anti-lock brake system (ABS) is added.	🗀 Gr 35A Anti-lock brake system (ABS) '00 Minor Change (Pub. No. TWSE9501-435A)	—
Gr 42 Cab • Power window system is equipped with central door lock switch.	🕮 Gr 42 Cab	—

Item	’00 Model	⇦	’99 Model
Gr 54 Electrical **1 POWER, CHARGE AND GROUND** • High current fuse box (FH3 and FH4) for ABS hydraulic unit is added.	FH3 (40A ABS hydraulic unit) 🕮 P54-4 FH4 (30A ABS hydraulic unit) 🕮 P54-4		
• Capacities of fuses listed on the right and main load specifications have changed.	F8 Power window 25A F20 Meter cluster, DRL 10A F29 ABS 10A F34 Tail lamp 20A		F8 — F20 Meter cluster 10A F29 — F34 Tail lamp 15A
• Alternator capacity has been increased.	100-A alternator (106) ALTERNATOR 🕮 P54-6		80-A alternator
• Chassis grounding position has been changed.	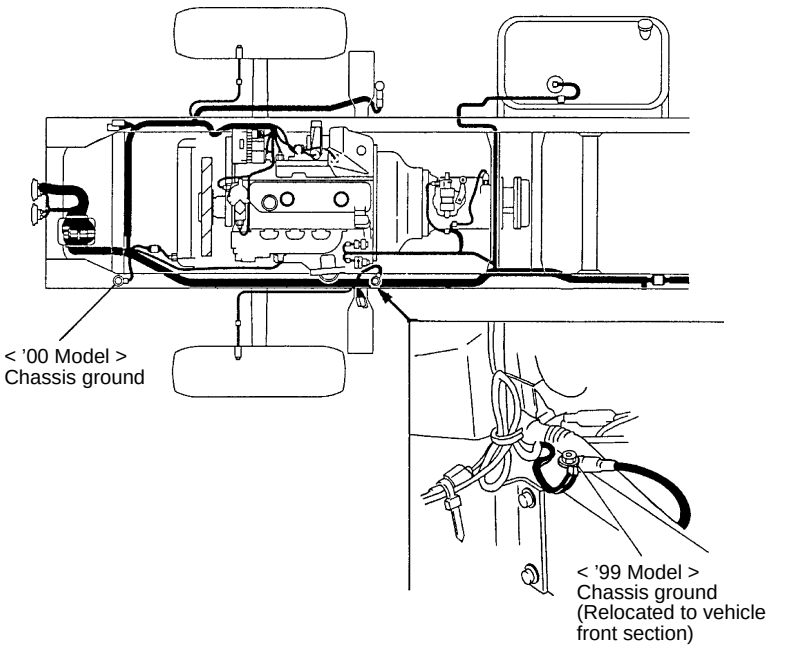 36546 **Chassis ground (New)** Circuit No. / Wire diameter - wire color EA01 — 3 - B EA02 — 3 - B FEE1 — B GEE1 — 8 - B		

2000 MODEL CHANGES

Item	'00 Model ⇦ '99 Model
2 **STARTING, PREHEATING AND STOPPING ENGINE** • Overrun prevention circuit has been added to engine starting circuit.Ⓐ	(210) ENGINE STARTING CIRCUIT 🕮 P54-14
3 **LIGHTING** • Daytime running light system is added.	(313) DAYTIME RUNNING LIGHT CIRCUIT 🕮 P54-18
4 **METER** Meter cluster has been changed, including addition of indicator.	(401) METER CLUSTER 🕮 P54-22
6 **CAB SIDE ELECTRICAL** Power window and auto door lock circuit is added.	(622) POWER WINDOW AND AUTO DOOR LOCK CIRCUIT 🕮 P54-24
7 **CHASSIS SIDE ELECTRICS** Exhaust brake circuitry has been changed due to addition of anti-lock brake system (ABS).	(710) EXHAUST BRAKE CIRCUIT 🕮 P54-28
9 **OTHERS** Circuitry of multipurpose timing control unit has been changed due to addition of starter overrun prevention circuit.	(210) ENGINE STARTING CIRCUIT 🕮 P54-14

Ⓐ

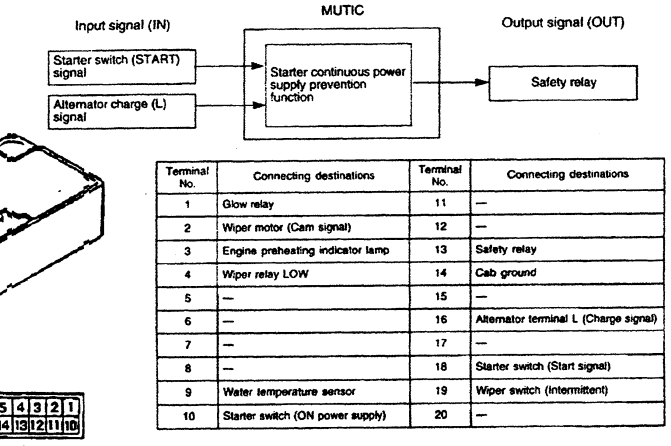

Terminal No.	Connecting destinations	Terminal No.	Connecting destinations
1	Glow relay	11	—
2	Wiper motor (Cam signal)	12	—
3	Engine preheating indicator lamp	13	Safety relay
4	Wiper relay LOW	14	Cab ground
5	—	15	—
6	—	16	Alternator terminal L (Charge signal)
7	—	17	—
8	—	18	Starter switch (Start signal)
9	Water temperature sensor	19	Wiper switch (Intermittent)
10	Starter switch (ON power supply)	20	—

Starter Continuous Power Supply Prevention Function

- This function is for preventing the starter from overrunning.
- After starting the engine, when the starter rotates for a determined period of time or longer, the MUTIC interprets that the starter is in a continuous power supply condition. This will shut off the current to the starter and to the starter relay in order to prevent the starter from being seized. After starting the engine, alternator (L terminal) signal B causes the safety relay to operate (contacts to be opened) after lapse of a determined period of time.

Operation mode

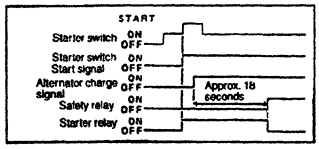

GROUP 00 GENERAL

POWER TRAIN TABLE 00-2

VEHICLE IDENTIFICATION NUMBER 00-2

POWER TRAIN TABLE/VEHICLE IDENTIFICATION NUMBER

POWER TRAIN TABLE

Model	Engine model	Clutch model	Transmission model	Propeller shaft	Rear axle model	Final reduction and gear ratio
FE639C, E, F G.V.W. 5445 kg {12000 lb}	4D34T3 145 HP/2900 rpm 275 lbf.ft/1600 rpm (SAE, Gross)	C4W30	M035S5 5.380/0.722	P3	R033T	D033H 5.714
		Torque converter	M035A4 3.018/0.703			
FE639C, E, F G.V.W. 6125 kg {13500 lb}		C4W30	M035S5 5.380/0.722			
		Torque converter	M035A4 3.018/0.703			
FG639C, E G.V.W. 5445 kg {12000 lb}	4D34T3 135 HP/2900 rpm 253 lbf.ft/1600 rpm (SAE, Gross)	C4W30	M035S5+TF3 5.380/0.722	P2 (Front) P3 (Rear)		D1H modified 5.714 (Front) D033H 5.714 (Rear)
FE649C, E, F G.V.W. 6575 kg {14500 lb}	4D34T3 145 HP/2900 rpm 275 lbf.ft/1600 rpm (SAE, Gross)	C4W30	M035S5 5.380/0.722	P3		D033H 5.714
		Torque converter	M035A4 3.018/0.703			

VEHICLE IDENTIFICATION NUMBER

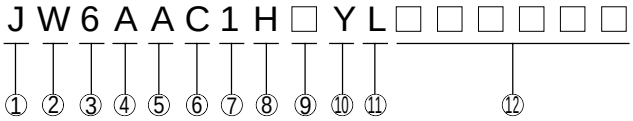

①	Country	J :	Japan
②	Make	W :	Mitsubishi Fuso
③	Vehicle type	6 :	Incomplete Vehicle
④	Gross vehicle weight/Brake system	A :	10001 to 14000 lbs/Hydraulic
		B :	14001 to 16000 lbs/Hydraulic
⑤	Line	A :	FE639
		B :	FE649
		G :	FG639
⑥	Series (Wheelbase)	C :	2.6 to 2.89 m {8.53 to 9.48 ft.}
		E :	3.2 to 3.49 m {10.49 to 11.44 ft}
		F :	3.5 to 3.79 m {11.48 to 12.43 ft}
⑦	Cab chassis type	1 :	Chassis cab
⑧	Engine	H :	3.907ℓ CID Diesel turbocharged and charge air cooled
⑨	Check digit		
⑩	Model year	Y :	2000
⑪	Plant	K :	Kawasaki-1
		L :	Kawasaki-2
		M :	Kawasaki-3
		N :	Nakatsu
⑫	Plant sequential number		

GROUP 26B FRONT AXLE < FG >

STRUCTURE AND OPERATION 26B- 2

ON-VEHICLE INSPECTION AND ADJUSTMENT
- Adjustment of Wheel Alignment 26B- 4

WHEEL HUB AND BRAKE DRUM 26B- 8

Wheel Hub and Brake Drum

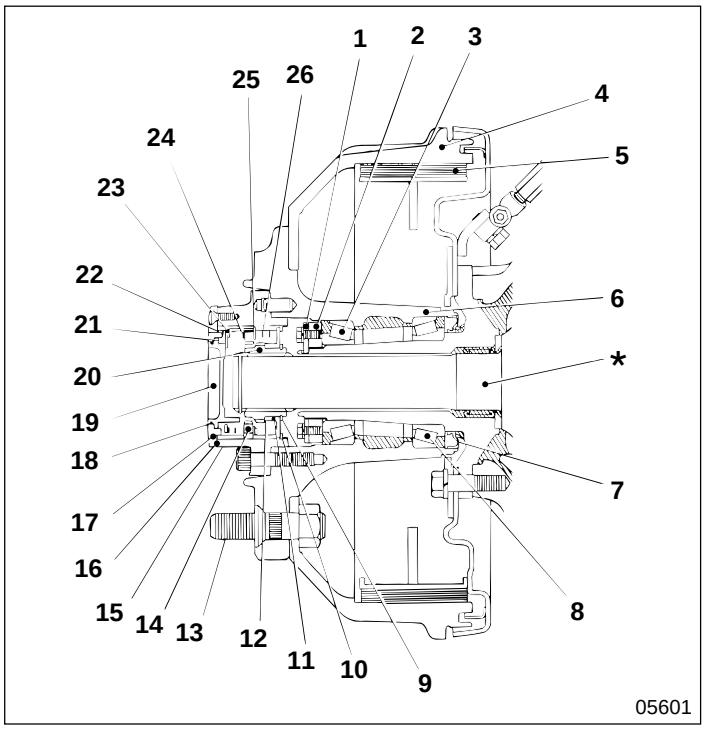

1 Lock washer
2 Lock nut
3 Outer bearing
4 Brake drum
5 Brake shoe assembly
6 Wheel hub
7 Oil seal
8 Inner bearing
9 Snap ring
10 Snap ring
11 Center ring plate
12 Thrust washer
13 Hub bolt
14 Driven gear
15 Housing
16 Gasket
17 Cover
18 O-ring
19 Knob
20 Drive gear
21 Snap ring
22 Snap ring
23 Retainer
24 Shift spring
25 Retainer washer
26 Return spring
***** : Drive shaft

Free-wheel Hub

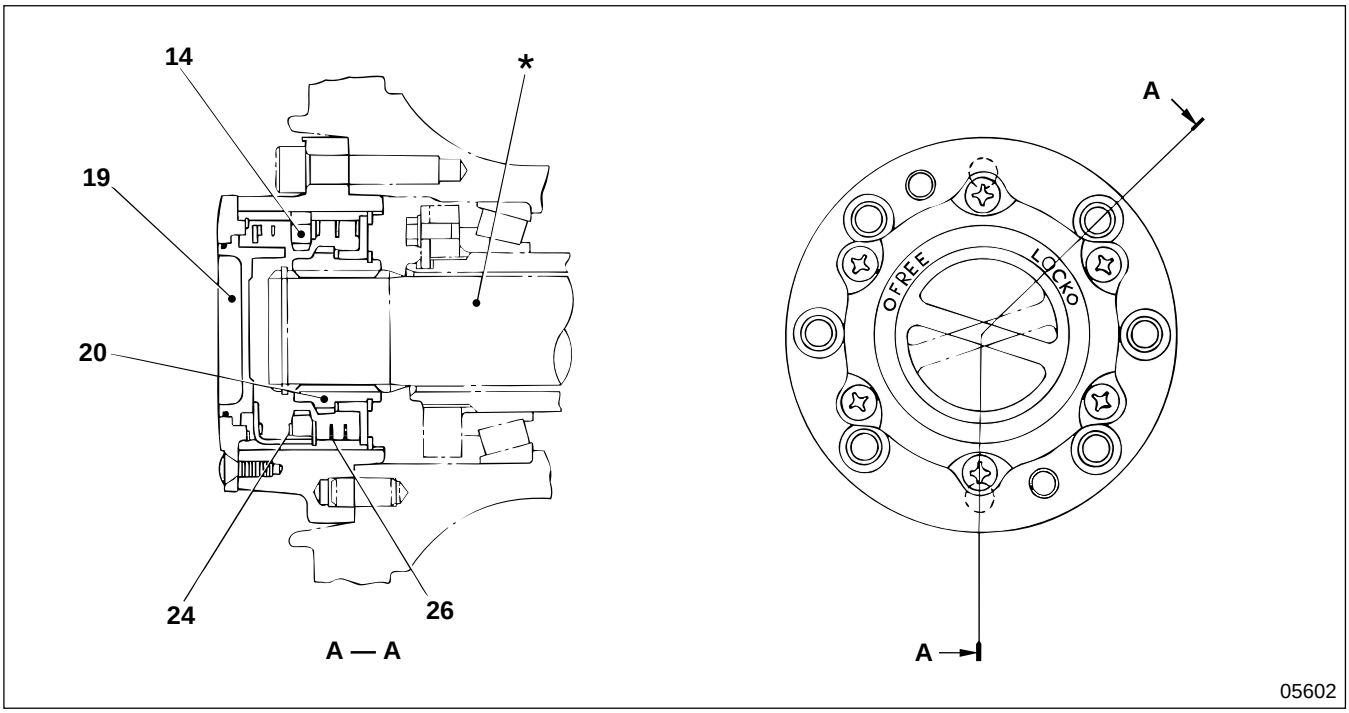

- In the case of a four-wheel drive vehicle, even when it is running in rear-wheel drive only, the drive shaft *, differential, propeller shaft, and driving parts of the transfer front drive shaft continue to run due to transmission of rotation from the wheels. This subjects the vehicle drive to a load, and it causes loss of driving power.
  Now, with a free-wheel hub, transmission of rotation from the front wheels to the drive shaft * is cut, reducing driving loss when running in rear-wheel drive only. This improves fuel efficiency and reduces vibration and noise.
- With a free-wheel hub, FREE (cutting of driving power) ↔ LOCK (transmission of driving power) is made easily by manual operation.

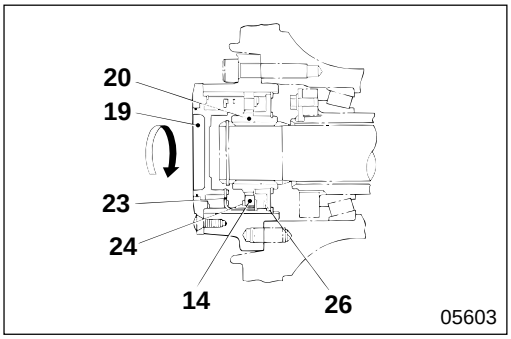

Operating mechanism

● **From FREE to LOCK**

When knob **19** is turned to LOCK, retainer **23** shifts to the inside along with the shape of the knob, pressing return spring **26**. At this instance, driven gear **14**, being pressed by shift spring **24**, engages with drive gear **20** at the spline, and transmits the driving power.

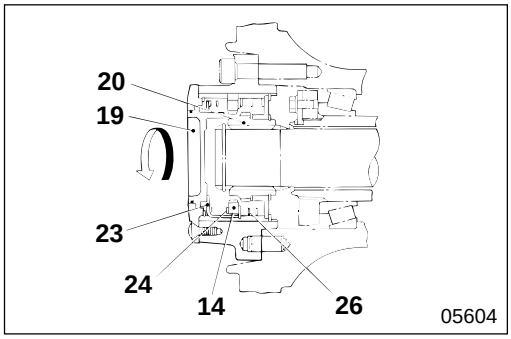

● **From LOCK to FREE**

When knob **19** is turned to FREE, the action is the reverse of FREE to LOCK, and the driving power is disengaged.

ON-VEHICLE INSPECTION AND ADJUSTMENT

Adjustment of Wheel Alignment

Service standards

Unit : mm {in.}

Location	Maintenance item		Standard value	Limit	Remedy
—	Wheel alignment	Toe-in (with tires on the ground)	0 to 6 {0 to 0.24}	—	—
		Camber	1°00'±30'	—	—
		Caster	0°30'±1°00'	—	—
		Kingpin inclination angle	9°30'	9°30'±30'	—

Tightening torque

Unit : N·m {lbf.ft, kgf·m}

Location	Parts to be tightened	Tightening torque	Remarks
1	Clamp bolt (Tie rod end clamp fastening)	25±5 {18±3.6, 2.5±0.5}	—

Special tools

Unit : mm {in.}

Location	Tool name and shape	Part No.	Application
—	Alignment gauge adapter 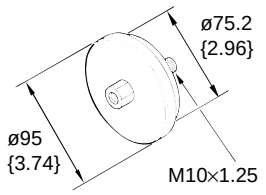	MH061994	Measurement of camber and caster angles, and kingpin inclination angle: with free-wheel hub only

NOTE

- **Measure the wheel alignment when the vehicle is empty and level.**
- **Be sure that each part of the front axle has been serviced perfectly before adjusting the wheel alignment.**

Before adjusting the wheel alignment, check for the following faults :

- Play in front wheel hub
- Play or looseness in kingpin
- Play or looseness in the joint between the tie rod and the knuckle arm
- Looseness of any fasteners
- Fatigued or damaged leaf springs
- Incorrect tire pressure
- Incorrect steering gear backlash

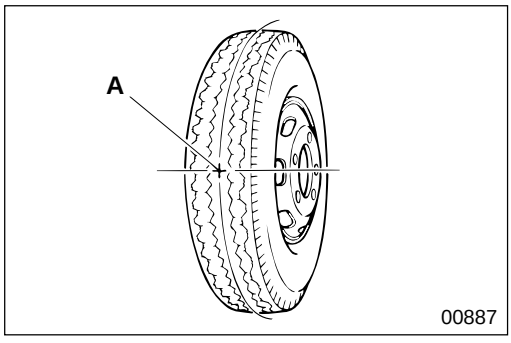

(1) Measurement and adjustment of toe-in

- Point the front wheels exactly forward.
- Put mark **A** on the left and right front tires at the height of front wheel axis and in the middle of the tire width.

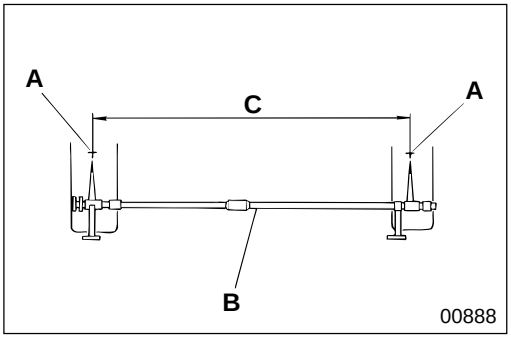

- Align the two points of toe-in gauge **B** to the respective marks **A** on the front tires. Measure the distance **C** between the marks at the front of the vehicle.

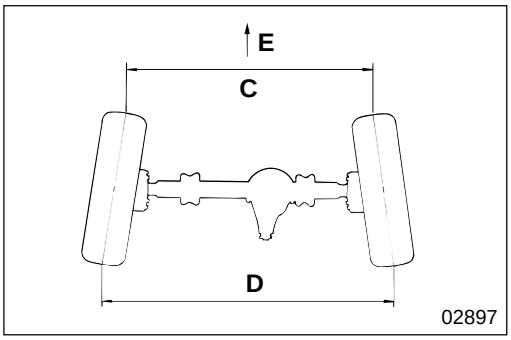

- Rotate the tires 180° and measure the distance **D** between the marks at the rear of the vehicle with the tires on the ground.
- Check if the difference between distances **C** and **D** is within the standard value.

E : Front of the vehicle

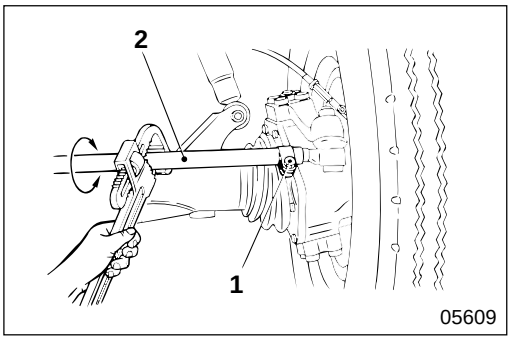

- If the measured value deviates from the standard value, with the tires pointed forward, loosen left and right clamp bolts **1** and adjust the toe-in to the standard value by turning tie rod **2** with a pipe wrench.

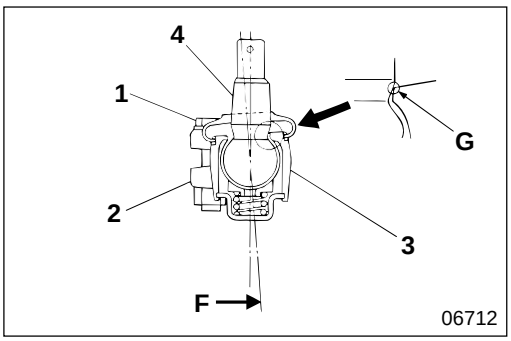

- Move the vehicle forward and turn tie rod **2** towards the front, with the tires pointed forward (**F** as illustated). Make sure when adjusting toe-in to the standard value, that both left and right tie rod ends **3** are in contact with ball stud **4** (**G** as illustrated) at the same time.
  After adjustment, tighten clamp bolt **1** to secure the tie rod.
- In order to keep the end of clamp bolts **1** away from the vehicle, mount tie rod **2** so that clamp center **H** is placed in the range as illustrated.

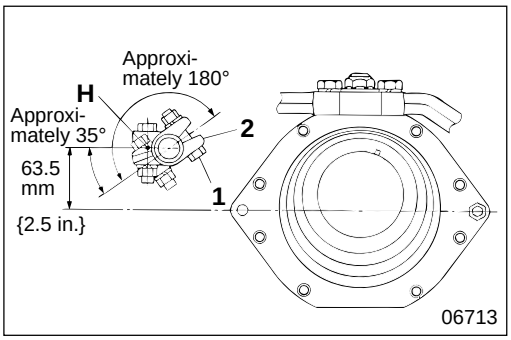

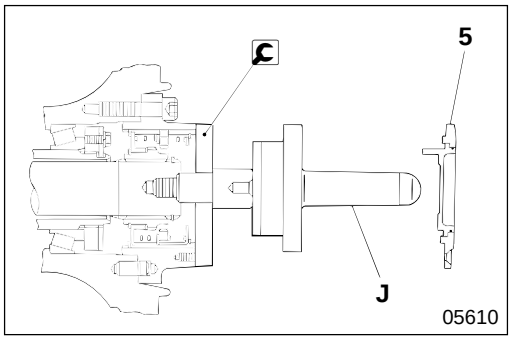

(2) Measurement of camber

- Point the front wheels exactly forward.
- Remove cover assembly **5** and attach 🔧 alignment gauge adapter. Then, attach camber/caster kingpin gauge **J**.

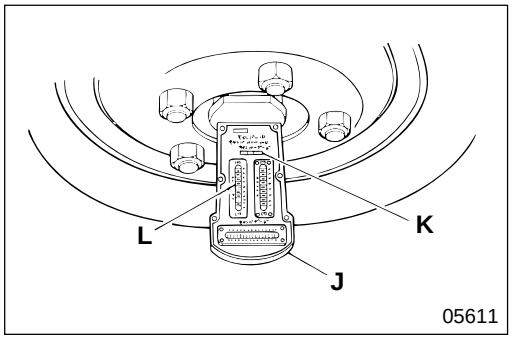

- While keeping the bubble in level **K** centered, measure the camber angle by reading the scale mark at the center of the bubble on camber scale **L**. Follow this procedure to measure the camber angles on the left and right sides.

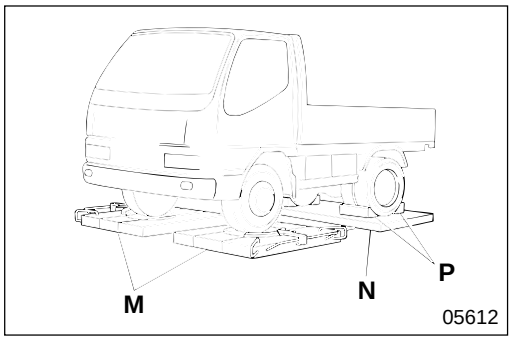

(3) Measurement of caster and kingpin inclination angle

- Align turning radius gauges **M**. Prepare a platform **N** having the same height as the turning radius gauges and place the platform under the rear wheels so that the vehicle is kept level.
- Keep turning radius gauges **M** locked.
- Jack up the vehicle and set the left and right front wheels so that the ground contact area of both front tires and the turntables of turning radius gauges **M** meet at their respective centers.

WARNING⚠

- **After jacking up the vehicle, chock the rear wheels securely with chocks P.**
- **Do not remove chocks P until the entire operation is completed.**

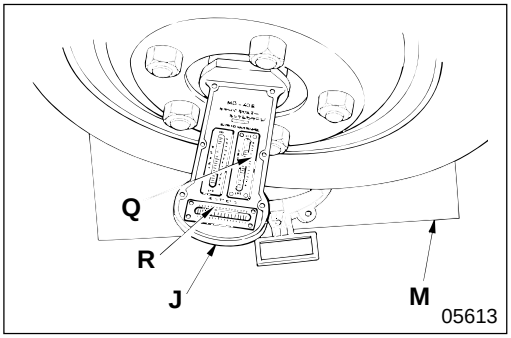

- Unlock turning radius gauges **M**, and set the scale at 0°.
- As in measuring camber explained previously, attach camber/caster kingpin gauge **J** tightly to the front wheel hub and keep the bubble centered.
- Apply the brake to the front wheels and turn the steering wheel slowly from the 0° point on the scale of turning radius gauges **M**, until direction changes 20° to the left for the left front wheel and 20° to the right for the right front wheel.

NOTE

It is not possible to obtain an exact reading of camber unless the brake is applied to the front wheels because the tires might rotate slightly.

- At the 20° point, align the bubbles in caster scale **Q** and kingpin scale **R** to 0° by turning the adjuster.

NOTE

Kingpin scale R has scales for left and right; use the left scale when adjusting the left wheel, and the right scale when adjusting the right wheel.

- Turn the steering wheel slowly until the left front wheel changes its direction 20° to the right, or until the right front wheel changes its direction 20° to the left, past the 0° point of turning radius gauge **M** scale. At this point read the scale marks at the center of the bubbles on caster scale **Q** and kingpin scale **R**. The scale marks indicate the caster and kingpin inclination angles.

WHEEL HUB AND BRAKE DRUM

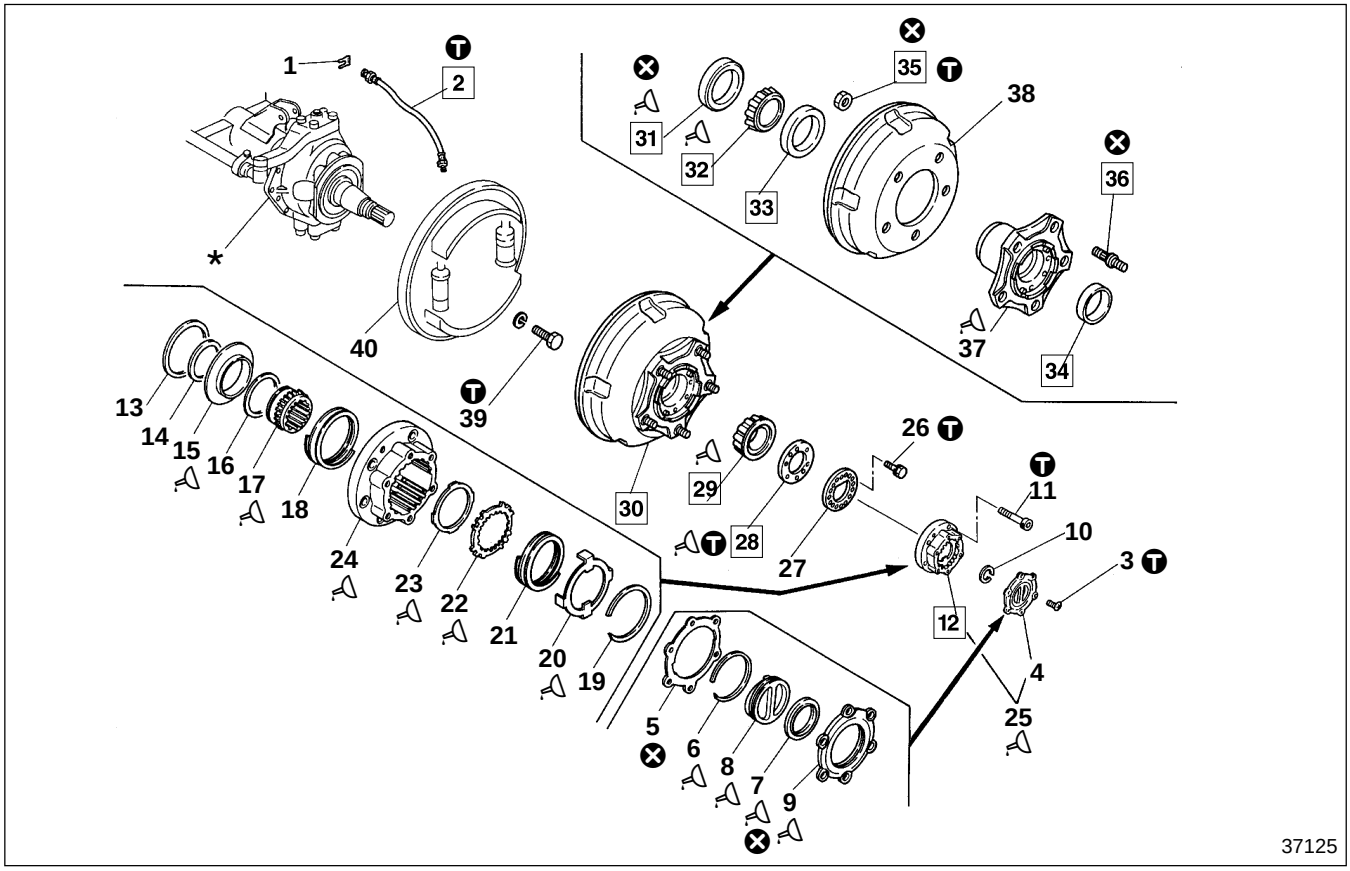

● **Disassembly sequence**

1 Clip
2 Brake hose
3 Screw
4 Cover assembly
5 Gasket
6 Snap ring
7 O-ring
8 Knob
9 Cover
10 Snap ring
11 Bolt
12 Housing assembly
13 Snap ring
14 Snap ring
15 Center ring plate
16 Thrust washer
17 Drive gear
18 Return spring
19 Snap ring
20 Retainer
21 Shift spring
22 Driven gear
23 Retainer washer
24 Housing
25 Free-wheel hub assembly
26 Bolt
27 Lock washer
28 Lock nut
29 Outer bearing race
30 Wheel hub and brake drum assembly
31 Oil seal
32 Inner bearing race
33 Inner bearing
34 Outer bearing
35 Nut
36 Hub bolt
37 Wheel hub
38 Brake drum
39 Bolt
40 Brake assembly Gr 35

***** : Knuckle and drive shaft Gr 26B
⊗ : Non-reusable parts

CAUTION⚠

Be sure to protect brake hose 2 from dust by fitting plugs after removal.

NOTE

Do not disassemble wheel hub 37 and brake drum 38 except for replacement.

● **Assembly sequence**

*→40→39→30→29→28→27→26→12→11→10→4→3→2→1

4 : 9→8→7→6→5

12 : 24→23→22→21→20→19→18→17→16→15→14→13

25 : Free-wheel hub assembly

30 : 38→37→36→35→34→33→32→31

WARNING⚠

You must bleed air from the brake system after installing the brake hose, failure to do so would cause the brake to malfunction. Gr 35

CAUTION⚠

Be careful not to damage oil seal 31, press-fitted into the top of wheel hub 37, when installing wheel hub and brake drum assembly 30 into the knuckle and drive shaft.

Service standards

Location	Maintenance item	Standard value	Limit	Remedy
29, 32, 33, 34	Starting torque of wheel hub bearing	3±1 N·m {2.2±0.7 lbf.ft, 0.3±0.1 kgf·m}	—	Tangential force at hub bolt 18 to 34 N {4.0 to 7.7 lbf., 1.8 to 3.5 kgf}

Tightening torque

Unit : N·m {lbf.ft, kgf·m}

Location	Parts to be tightened		Tightening torque	Remarks
2	Brake hose tightening		13 to 17 {9.4 to 12, 1.3 to 1.7}	—
3	Screw (Cover assembly mounting)		5±1 {3.6±0.7, 0.5±0.1}	—
11	Bolt (Housing assembly mounting)		68.6±4.9 {51±3.6, 7±0.5}	—
26	Bolt (Lock washer mounting)		9±2 {6.5±1.4, 0.9±0.2}	—
28	Lock nut (Wheel hub bearing mounting : wheel hub bearing pre-pressure adjusting)	Primary tightening	113±15 {83±11, 11.5±1.5}	—
		After primary tightening, carry-out secondary tightening	25±5 {18±3.6, 2.5±0.5}	—
35	Nut (Wheel hub and brake drum mounting)		343±39 {253±29, 35±4}	—
39	Bolt (Brake assembly mounting)		123±5 {90±3.6, 12.5±0.5}	—

WHEEL HUB AND BRAKE DRUM

Lubricant and/or sealant

Location	Points of application	Specified lubricant and/or sealant	Quantity
6	Contact surfaces of snap ring and knob	Wheel bearing grease [NLGI No.2 (Li soap)]	As required
7	O-ring	Wheel bearing grease [NLGI No.2 (Li soap)]	As required
8	Contact surfaces of knob and retainer	Wheel bearing grease [NLGI No.2 (Li soap)]	As required
9	Contact surfaces of knob and cover	Wheel bearing grease [NLGI No.2 (Li soap)]	As required
15	Drive gear joint surface of center ring plate	Wheel bearing grease [NLGI No.2 (Li soap)]	3 to 5 g {0.11 to 0.18 oz}
17, 22	Contact surfaces of drive gear and driven gear	Wheel bearing grease [NLGI No.2 (Li soap)]	As required
20	Retainer	Wheel bearing grease [NLGI No.2 (Li soap)]	As required
23	Retainer washer	Wheel bearing grease [NLGI No.2 (Li soap)]	As required
24	Inner surface of housing	Wheel bearing grease [NLGI No.2 (Li soap)]	As required
25	Contact surfaces of free-wheel hub assembly and wheel hub	THREEBOND 1104	As required
29	Thread area of lock nut	Wheel bearing grease [NLGI No.2 (Li soap)]	As required
29, 32	Pack the space between rollers of outer and inner bearing inner races	Wheel bearing grease [NLGI No.2 (Li soap)]	As required
31	Lip area of oil seal	Wheel bearing grease [NLGI No.2 (Li soap)]	As required
37	Pack interior space of wheel hub	Wheel bearing grease [NLGI No.2 (Li soap)]	65±10 g {2.3±0.3oz}

Special tools

Unit : mm {in.}

Location	Tool name and shape	Part No.	Application
5	Lock nut adjustment tool 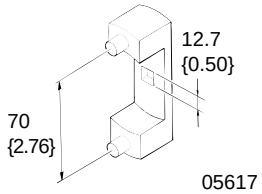	MB999151	Removal and installation of lock nut
7	Hub puller A : Hub puller body B : Attachment C : Bolt 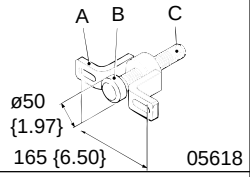	MB999070 A : MB999071 B : MB999072 C : MB999073	Removal of wheel hub and brake drum assembly
8, 10, 11	Bearing installer 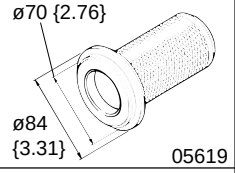	MB999097 (T90ST30)	Press-fitting of oil seal (Use in combination with *1) Press-fitting of inner bearing outer race (Use in combination with *2) Press-fitting of outer bearing outer race (Use in combination with *3)
8	*1 Oil seal installer 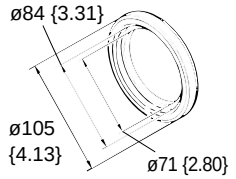	MB999153	Press-fitting of oil seal (Use in combination)

Unit : mm {in.}

Location	Tool name and shape	Part No.	Application
10	*2 Bearing installer 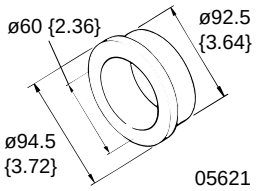	MB999069	Press-fitting of inner bearing outer race (Use in combination)
11	*3 Bearing installer 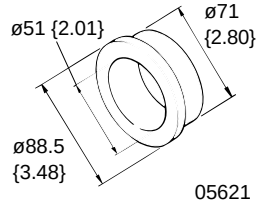	MB999099 (T90ST26)	Press-fitting of outer bearing outer race (Use in combination)

◆ Service procedure

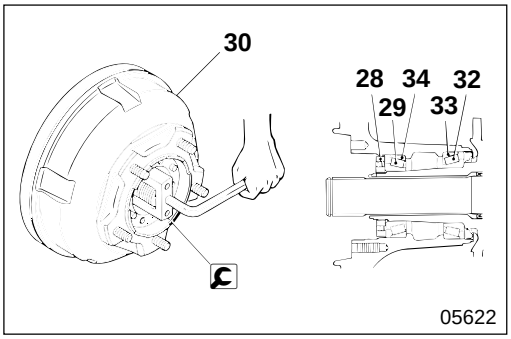

● Starting torque of wheel hub bearing

[Adjustment]

- Tighten lock nut **28** at specified torque (primary tightening) while turning wheel hub and brake drum assembly **30**, then slacken off.
- Turn wheel hub and brake drum assembly **30** several times to smooth operation of outer bearings **29**, **34**, and inner bearings **32**, **33** and retighten lock nut **28** at specified torque (secondary tightening).
- After adjustment, make sure that there is no play in the axial direction.

: Lock nut adjustment tool

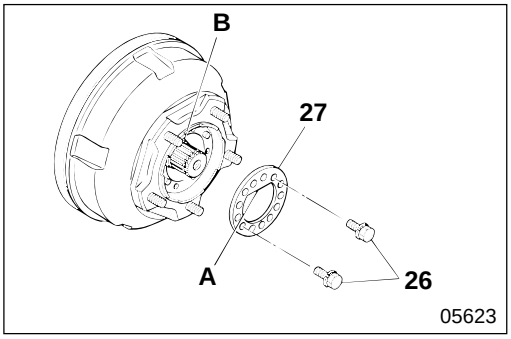

- Insert lock washer **27** so that flat area **A** fits onto notch **B** of the knuckle spindle. Mount two bolts **26** (diagonally opposite each other) to lock nut **28**, and tighten them at specified torque.
- If lock nut **28** and the hole of lock washer **27** do not align, slacken off the lock nut slightly.

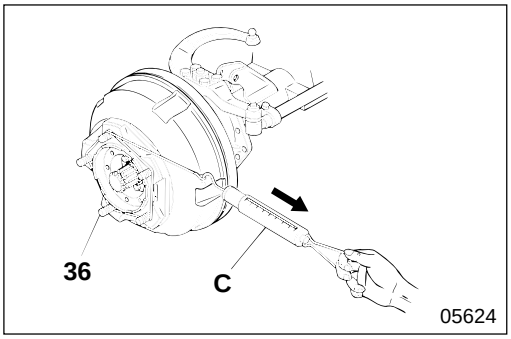

[Measurement]

- Fasten spring balance **C** to hub bolt **36** and measure the tangential force.
- If the measured tangential force is the standard value, the starting torque conforms to the standard value.
- If the measured value deviates from the standard value, adjust the starting torque of the wheel hub bearing according to the procedure described above.

  If any fault is found after adjustment, replace outer bearings **29**, **34**, or inner bearings **32**, **33**.

NOTE

- **Make sure that there is no drag in the brake lining and brake drum 38 before you measure the tangential force.**
- **Make sure that you install oil seal 31.**
- **Do not install free-wheel hub assembly 25.**

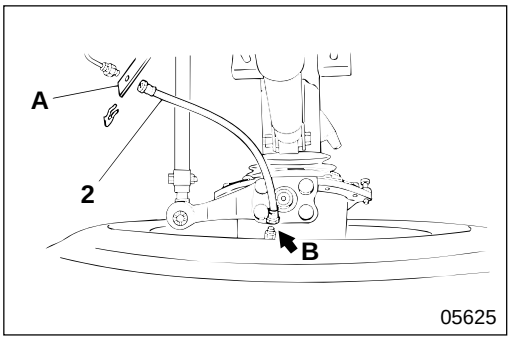

2 **Removal and installation of brake hose**

First remove brake hose **2** from bracket **A** (on the frame), then remove the brake hose from wheel brake **B**. For installation, follow this procedure in reverse.

CAUTION

Make sure that brake hose 2 is not twisted when you install it.

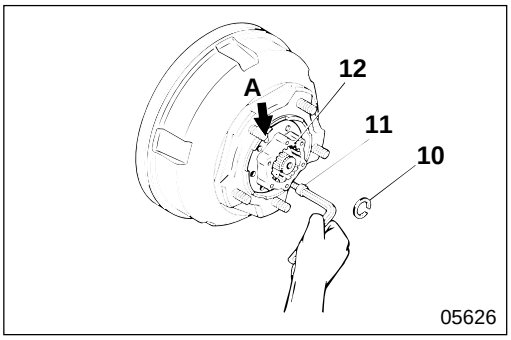

16 **Removal of housing assembly**

Remove snap ring **10**, and insert bolts **11** (to the same depth) into two tapped holes **A** provided for disassembly. Then, remove housing assembly **12**.

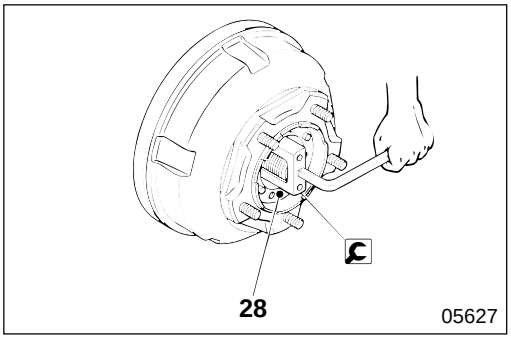

32 **Removal and installation of lock nut**

When mounting lock nut **28** see P26B-11 : adjustment procedure for starting torque of the wheel hub bearing.

: Lock nut adjustment tool

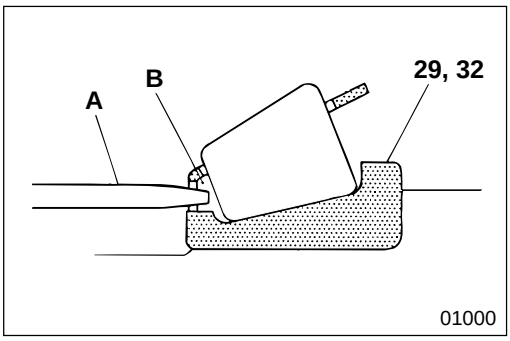

29 **32** **Packing grease in outer bearing race and inner bearing race**

A : Grease pump nozzle
B : Between roller

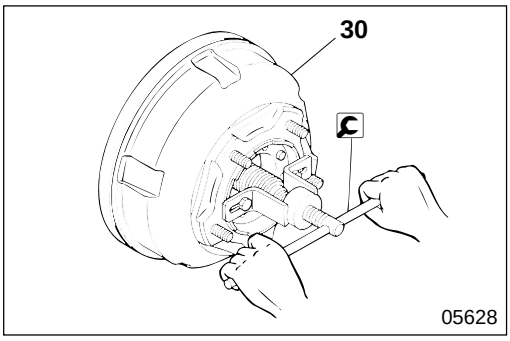

30 **Wheel hub and brake drum assembly**

[Removal]

: Hub puller

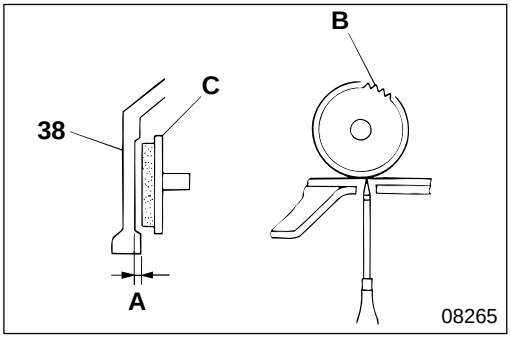

- If wheel hub and brake drum assembly **30** cannot be removed because of stepped wear **A** in brake drum **38**, remove the backing plate cover. Turn adjuster **B** in the opposite direction to the arrow on the backing plate to increase the clearance between the brake drum and brake shoe assembly **C**. Then, remove the wheel hub and brake drum assembly.
- Correct brake drum **38** if any fault is found. Gr 35

[Installation]
After installing wheel hub and brake drum assembly **30**, adjust the clearance between brake drum **38** and brake shoe assembly **C**. Gr 35

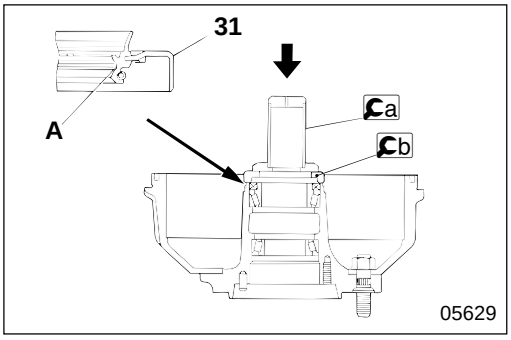

31 Installation of oil seal

Apply grease to lip area **A** of oil seal **31** and press-fit it.
Ca : Bearing installer
Cb : Oil seal installer

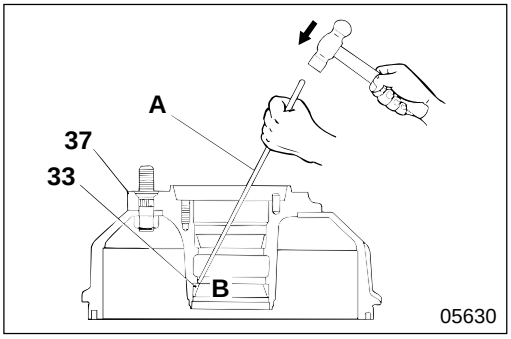

33 Inner bearing outer race

[Removal]
Drive out inner bearing race **33** evenly from three indented parts **B** in wheel hub **37**.
A : Pin-punch

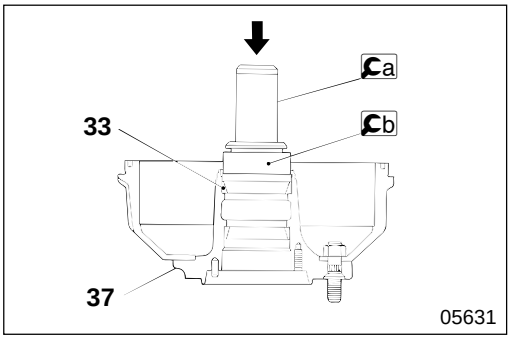

[Press-fitting]
Ca : Bearing installer
Cb : Bearing installer

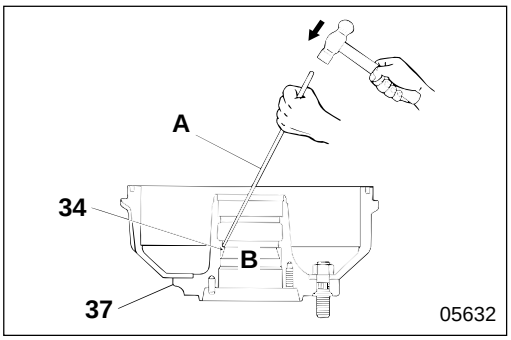

34 Outer bearing race

[Removal]
Drive out outer bearing race **34** evenly from three indented parts **B** in wheel hub **37**.
A : Pin-punch

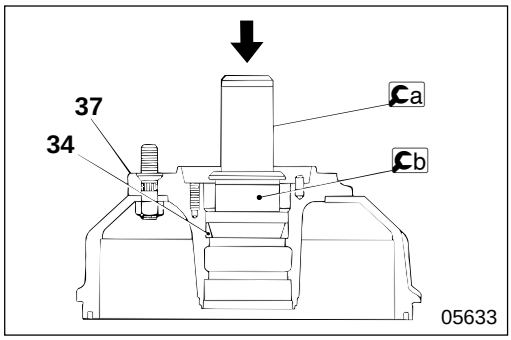

[Press-fitting]
a : Bearing installer
b : Bearing installer

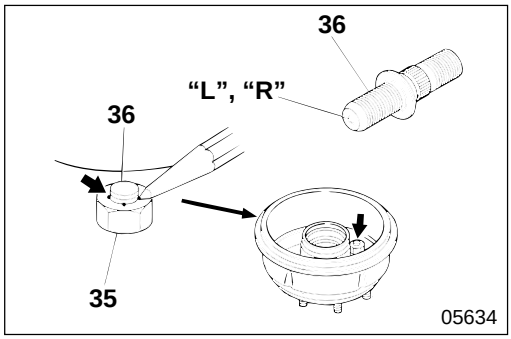

35 **36** **Installation of nut and hub bolt**

- Hub bolt **36** is marked with **"L"** (left) or **"R"** (right) to indicate the side it is to be mounted on. Check this symbol before mounting the bolt.
- Screw nut **35** onto hub bolt **36** and tighten at specified torque. Then, stake the hub nut to keep it from turning.

GROUP 42 CAB

STRUCTURE AND OPERATION ..... 42 - 2

TROUBLESHOOTING ..... 42 - 4

DOOR ..... 42 - 6

Door Locking System

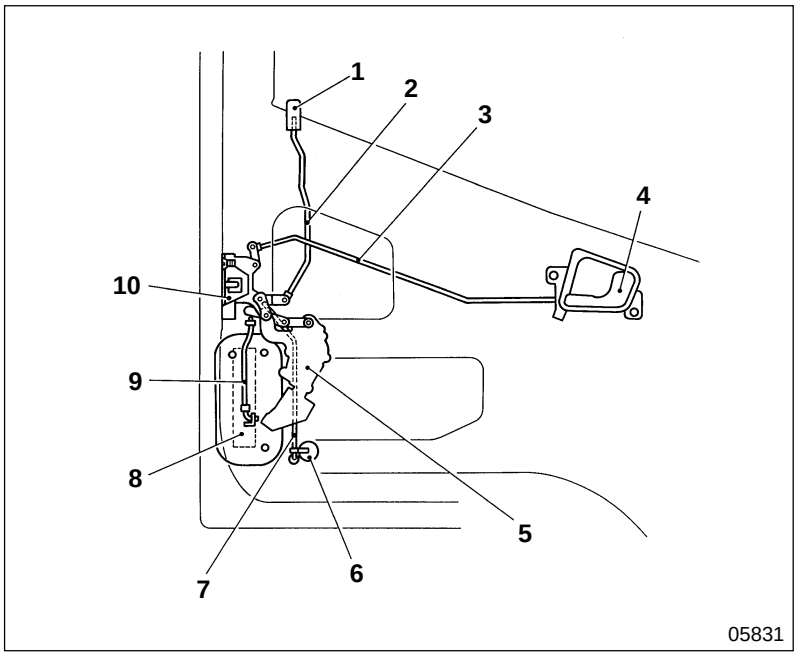

1 Door lock knob
2 Door lock rod
3 Door opening rod
4 Inside handle
5 Door lock actuator
6 Door lock cylinder
7 Door lock cylinder rod
8 Outside handle
9 Door opening rod
10 Door lock latch

Auto Door Lock Electric Circuit

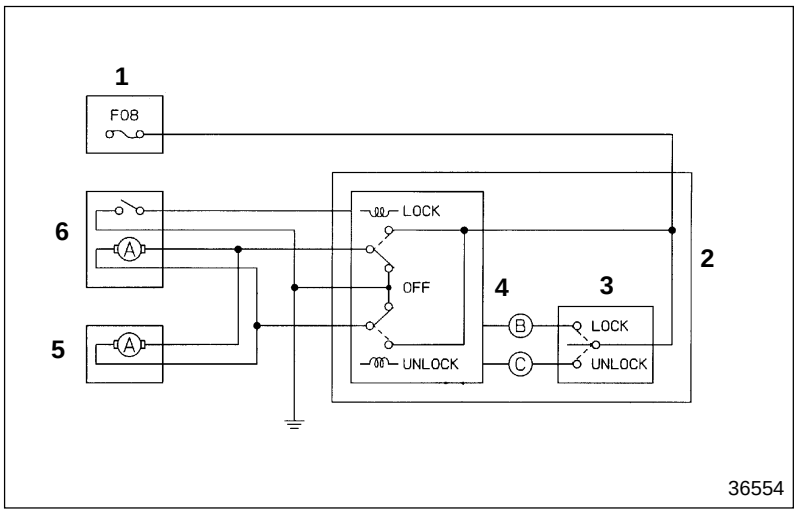

1 Fuse box
2 Driver's side power window switch
3 Auto door lock switch
4 Door lock relay
5 Passenger's side door lock actuator
6 Driver's side door lock actuator

A : Actuator

Ⓑ : Lock signal
Ⓒ : Unlock signal

From the driver's side, the doors can be locked and unlocked by auto door lock switch **3** as well as by door lock actuator **6**.

Door Glass Opening System

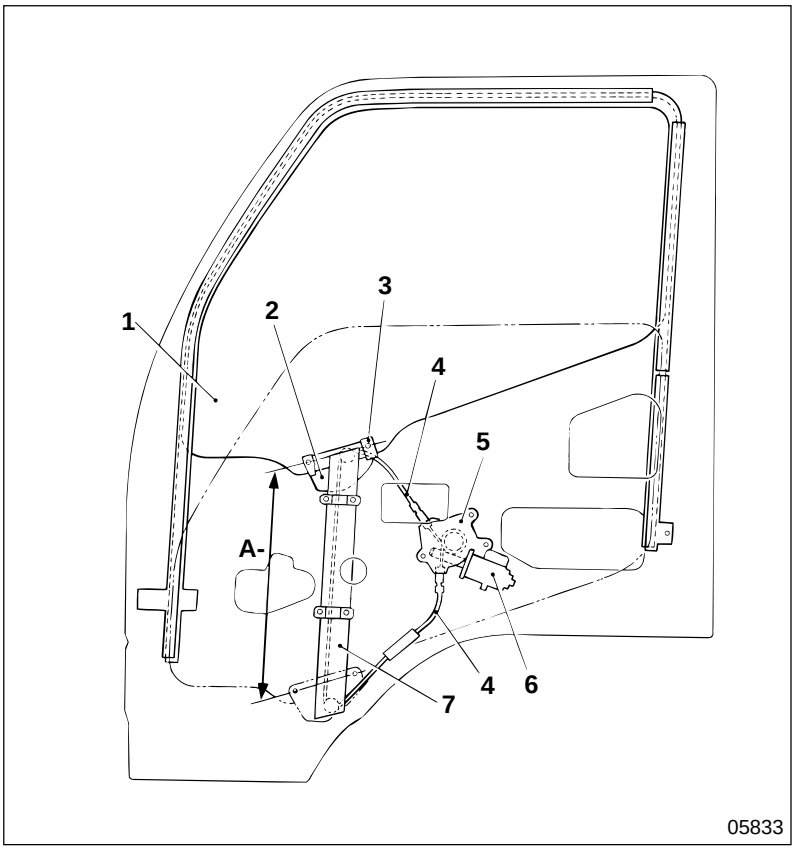

1 Door glass
2 Carrier plate
3 Glass holder
4 Cable
5 Regulator
6 Power window motor
7 Rail

A : Carrier plate moving range

- Both ends of cable **4** are secured to carrier plate **2**, and regulator **5** is installed to the wire at a midpoint.
- Regulator **5** rotates, thus winding cable **4** and moving carrier plate **2** in a vertical direction to raise or lower door glass **1**.

Power Window Electric Circuit

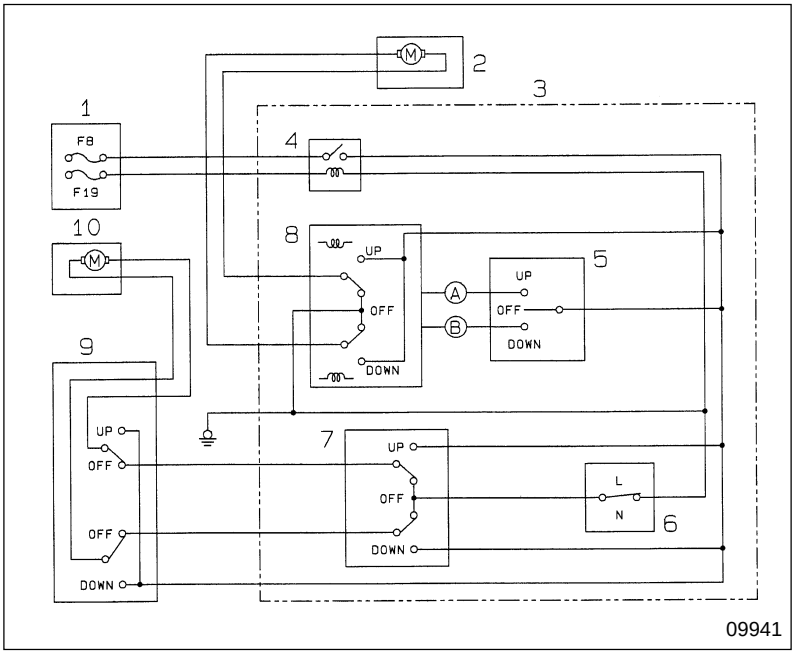

1 Fuse box
2 Driver's side power window motor
3 Driver's side power window switch assembly
4 Relay
5 Driver's side power window switch
6 Power window lock switch
7 Driver's side power window switch (for opening and closing assistant driver's side door glass)
8 Power window relay
9 Passenger's side power window switch
10 Passenger's side power window motor

M : Motor

Ⓐ : UP signal
Ⓑ : DOWN signal

- Power window switch assembly **3** on the driver's side is integrated with power window switches **5**, **7** and power window lock switch **6**.
- When power window lock switch **6** is set to the LOCK position, the door glass on the passenger's side cannot be operated by power window switches **7**, **9**.

TROUBLESHOOTING

Door Lock

Symptoms / Possible causes	Door latch does not engage, and door does not close	Door does not lock when door lock knob is pressed	Door does not lock when key is turned	Remote door lock does not operate	Door does not open when outside door handle is operated	Door does not open when inside door handle is operated	Inside door handle does not return properly to original position	There is interference between door and cab	Remarks
Door installation faulty	○							○	
Striker installation faulty	○								
Faulty door locking mechanism of door latch	○	○	○		○	○			
Door latch rod deformed		○				○			
Door latch rod disconnected		○	○			○			
Door latch rod interference							○		
Door lock cylinder deformed			○						
Faulty auto door lock switch in power window & door lock switch				○					🕮 Gr 54
Door lock actuator faulty				○					
Fuse or high-current fuse blown				○					
Open circuit or faulty connection of wire				○					
Left-side outside door handle faulty					○				
Inside door handle installation faulty						○			
Spring fatigue in inside door handle							○		

Power Window

Symptoms / Possible causes	Door window glass drops on its own while cruising	Abnormal noise from power window regulator while cruising	Power window does not operate	Power window does not stop	Abnormal noise while power window operating	After the starter switch has been turned OFF the window does not operate within 30 seconds of the power window switch being operated	After the starter switch has been turned OFF and although the doors have been opened within 30 seconds, the window does not operate within 30 seconds of the power window switch being operated	Remarks
Power window switch faulty			○	○		○	○	
Power window regulator faulty	○		○	○	○			
Power window regulator mounting faulty					○			🕮 Gr 54
Fuse and high-current fuse burnt-out			○					
Wiring broken or connection faulty			○					
Power window glass and door belt line molding rattling		○						

DOOR

Door Assembly

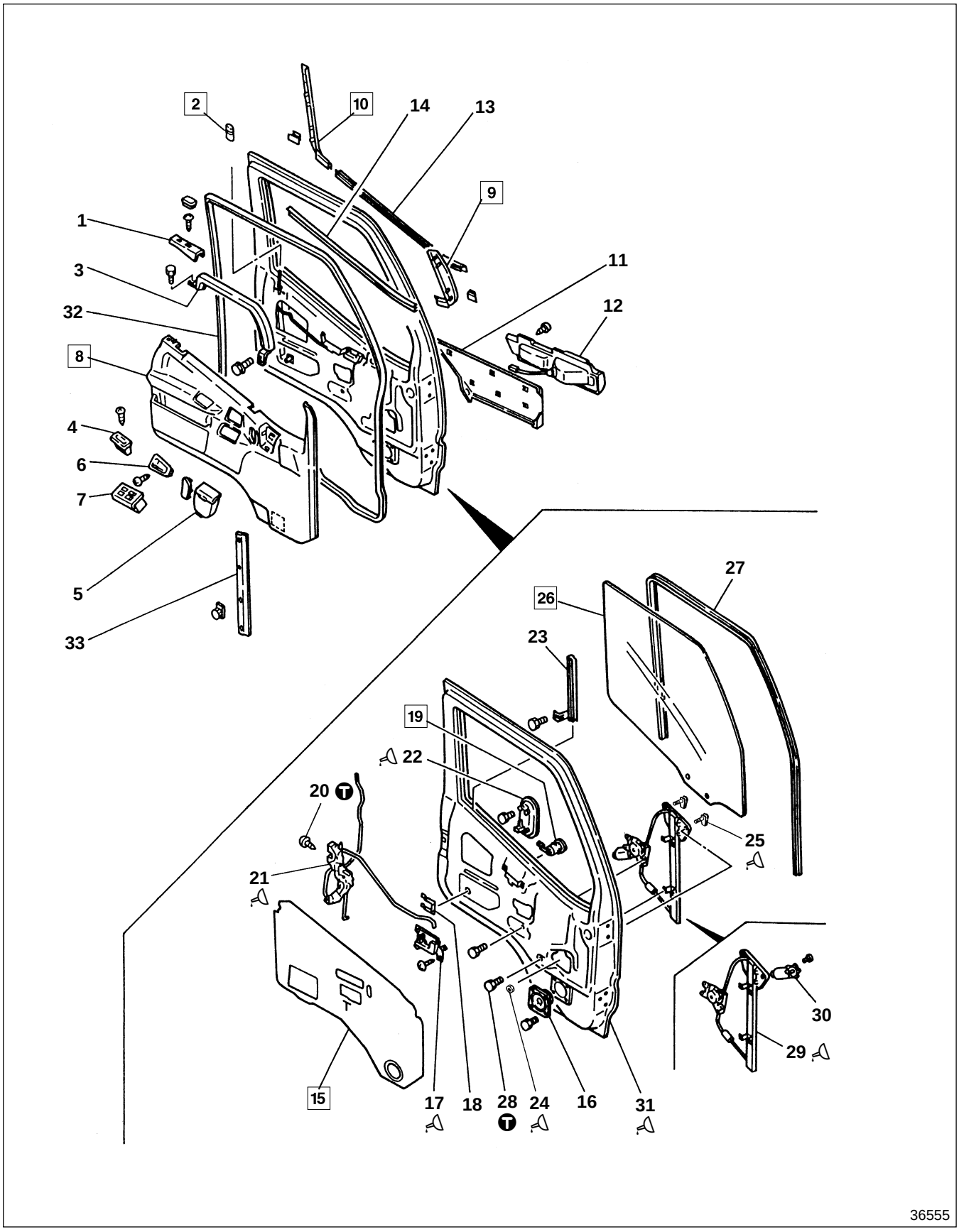

● **Disassembly sequence**

1 Cover
2 Door lock knob
3 Guard bar
4 Pull handle cover
5 Ashtray
6 Inside handle cover
7 Power window switch 🕮 Gr 54
8 Door trim
9 Front garnish
10 Rear garnish
11 Outer garnish
12 Side combination lamp 🕮 Gr 54
13 Outer weather strip
14 Inner weather strip
15 Waterproof cover
16 Speaker
17 Inside handle
18 Clip
19 Door lock cylinder
20 Screw
21 Door lock actuator 🕮 Gr 54
22 Outside handle
23 Lower sash
24 Nut
25 Glass holder
26 Door glass
27 Run channel
28 Bolt
29 Regulator & rail assembly
30 Power window motor 🕮 Gr 54
31 Door panel
32 Weather strip
33 Weather strip

● **Reassembly sequence**

Follow the disassembly sequence in reverse.

Ⓣ Tightening torque

Unit : N·m {lbf.ft, kgf·m}

Location	Parts to be tightened	Tightening torque	Remarks
20	Screw (Door lock actuator mounting)	4 to 6 {2.9 to 4.3, 0.4 to 0.6}	—
28	Bolt (Regulator & rail assembly mounting)	6.9 to 10.8 {5.1 to 8.0, 0.7 to 1.1}	—

Lubricant and/or sealant

Location	Points of application	Specified lubricant and/or sealant	Quantity
17	Rotating surface of inside handle	Multipurpose grease [NGLI No.2 (Li soap)]	As required
21	Sliding surface of door lock actuator	Multipurpose grease [NGLI No.2 (Li soap)]	As required
22	Sliding surface of outside handle	Multipurpose grease [NGLI No.2 (Li soap)]	As required
24	Threads of nut	Loctite (Japan) Drylock No. 203	As required
25	Threads of glass holder bolt	Loctite (Japan) Drylock No. 203	As required
29	Sliding surfaces of regulator & rail assembly	Dynamic GB	As required
31	Waterproof cover installation surface of door panel	Butyl tape	As required

◆ Service procedure

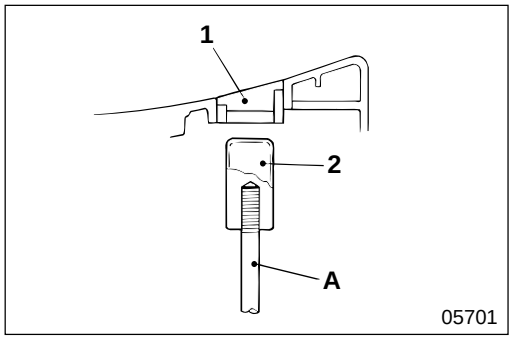

2 **Installation of door lock knob**

- Install door lock knob **2** to door lock rod A of door lock actuator **21**, and turn the knob fully in clockwise direction.
- Back off door lock knob **2** by turning it 1 or 2 turns in counterclockwise direction.
- Position cover **1** to prevent door lock knob **2** from turning.

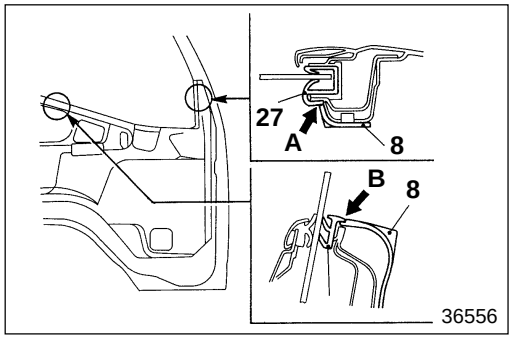

8 **Installation of door trim**

- On the front pillar section, install door trim **8** by pressing it to lip section **A** of run channel **27**.
- On the belt line section, install door trim **8** by pressing it to lip section **B** of inner weatherstrip **14**.

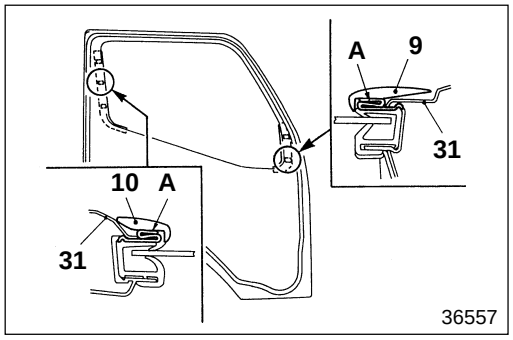

9 **10** **Installation of front and rear garnishes**

- Install clips **A** to door panel **31** prior to the installation of the garnishes.
- Install front garnish **9** and rear garnish **10** to clips **A**.

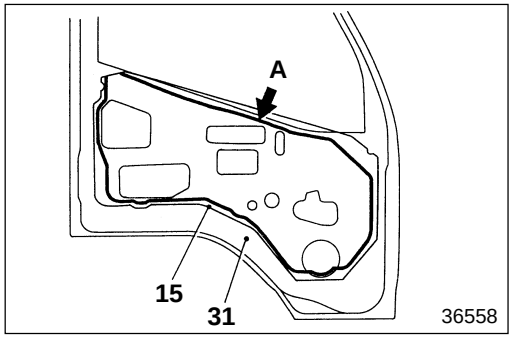

15 **Installation of waterproof cover**

- Apply butyl tape **A** to door panel **31**, as indicated in the illustration.
- Install waterproof cover **15** by pasting onto butyl tape **A**.

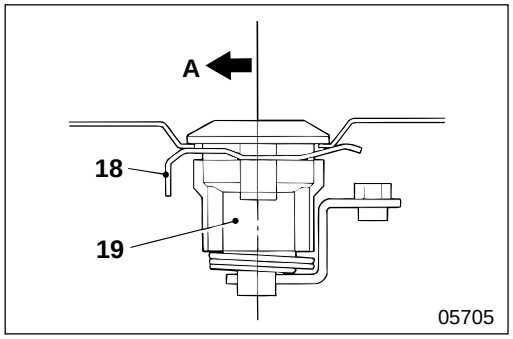

19 **Installation of door lock cylinder**

Install door lock cylinder **19** to clip **18** in the direction indicated in the illustration.

A : Vehicle front side

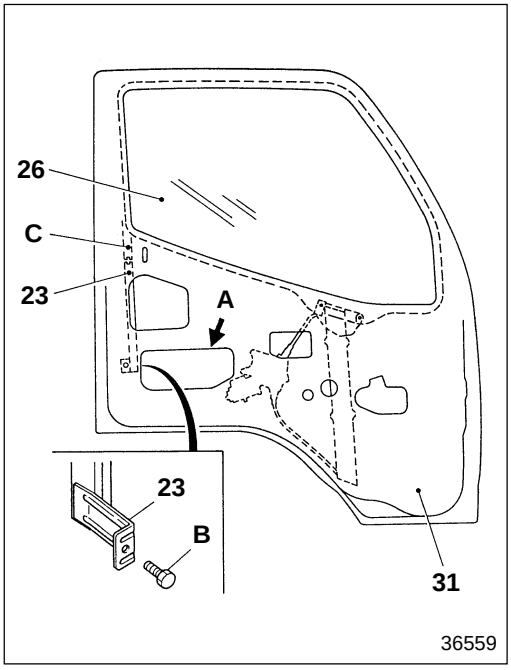

26 **Removal and installation of door glass**

Remove all parts supporting door glass **26**, then remove the door glass through the open space in the door.

- Pull door glass **26** all the way to the top.
- Remove bolt **B** through hole **A** in door panel **31**, and remove lower sash **23**.
  Note that the lower sash is inserted in upper sash **C**.

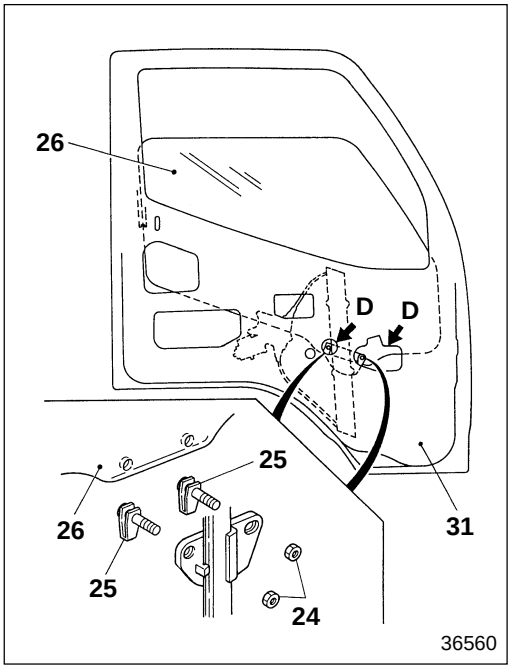

- Lower door glass **26** until nut **24** becomes visible through hole **D** in door panel **31**.
- Support door glass **26** by hand, then remove glass holder **25**.
- Remove door glass **26** through the open space in the door.
- To install door glass **26**, follow the removal procedure in reverse.

M E M O

GROUP 54 ELECTRICAL

1 POWER, CHARGE AND GROUND

SPECIFICATIONS 54-3

STRUCTURE AND OPERATION 54-3

TROUBLESHOOTING 1

100 INSPECTION AND ADJUSTMENT MOUNTED IN VEHICLE
- Inspection of Alternator 2
- Inspection of Regulator 2

101 BATTERY 1

104 FUSE 54-4

106 ALTERNATOR 54-6

110 POWER CIRCUIT 54-12

115 RESERVE POWER CIRCUIT 1

125 BATTERY CHARGING CIRCUIT 3

130 GROUND 1

2 STARTING, PREHEATING, AND STOPPING ENGINE

SPECIFICATIONS 1

STRUCTURE AND OPERATION 1

TROUBLESHOOTING 1

200 INSPECTION AND ADJUSTMENT MOUNTED IN VEHICLE
Inspection of Engine Preheating System 1

201 STARTER 1

210 ENGINE STARTING CIRCUIT
< Manual Transmission > 54-14
< Automatic Transmission > 54-16

220 ENGINE PREHEATING CIRCUIT 1

225 ENGINE WARMING UP CIRCUIT 3

3 LIGHTING

SPECIFICATIONS 1

STRUCTURE AND OPERATION 1

TROUBLESHOOTING 1

300 INSPECTION AND ADJUSTMENT MOUNTED IN VEHICLE
Headlamp Aiming 1

310 HEADLAMP CIRCUIT 1

313 DAYTIME RUNNING LIGHT CIRCUIT 54-18

320 TAIL LAMP, CLEARANCE LAMP AND LICENSE PLATE LAMP CIRCUITS 1

325 STOP LAMP CIRCUIT 1

330 TURN SIGNAL LAMP AND HAZARD LAMP CIRCUITS 1

340 BACKUP LAMP CIRCUIT
< Manual Transmission > 1
< Automatic Transmission > 3

345 CAB LAMP CIRCUIT 1

348 ILLUMINATION LAMP CIRCUIT 1

349 MARKER LAMP AND IDENTIFICATION LAMP CIRCUITS 1

352 VAN BODY DOME LIGHT CIRCUIT 1

4 METER

SPECIFICATIONS 1

TROUBLESHOOTING 1

401 METER CLUSTER 54-22

410 TACHOMETER CIRCUIT 1

420 FUEL GAUGE CIRCUIT 1

425 WATER TEMPERATURE GAUGE CIRCUIT 1

⑤ INDICATOR AND WARNING

TROUBLESHOOTING 1

500 INSPECTION AND ADJUSTMENT MOUNTED IN VEHICLE
- Inspection of Brake Fluid Level Switch 1

510 PARKING BRAKE INDICATOR CIRCUIT [BRAKE] 1

515 BRAKE WARNING CIRCUIT [LOW VACUUM] [BRAKE] 1

535 ENGINE OIL LEVEL AND OIL PRESSURE CIRCUIT 1

537 OVERHEATING WARNING CIRCUIT 1

540 BRAKE PAD WARNING CIRCUIT [DISK BRAKE] 1

550 CAB TILT WARNING CIRCUIT 1

⑥ CAB SIDE ELECTRICAL

SPECIFICATIONS 1

TROUBLESHOOTING 1

601 SWITCH 1

604 RELAY AND CONTROL UNIT 3

606 WARNING BUZZER 1

610 CIGARETTE LIGHTER CIRCUIT 1

612 AUDIO CIRCUIT 1

614 WIPER AND WASHER CIRCUIT 1

616 HORN CIRCUIT 1

618 HEATER CIRCUIT 1

622 POWER WINDOW AND AUTO DOOR LOCK CIRCUIT 54-24

1 : '96 Model Gr 54 (Pub No. TWSE9501-54)
2 : '98 Model Gr 54 (Pub No. TWSE9501-254)
3 : '99 Model Gr 54 (Pub No. TWSE9501-3)

⑦ CHASSIS ELECTRICS

701 MAGNETIC VALVE 1

710 EXHAUST BRAKE CIRCUIT
< Manual Transmission > 54-28
< Automatic Transmission > 54-30

⑧ ENGINE AND TRANSMISSION ELECTRICS

801 ENGINE ELECTRICS 1

802 TRANSMISSION ELECTRICS 1

810 FOUR-WHEEL DRIVE CIRCUIT 2

⑨ OTHERS

STRUCTURE AND OPERATION 1

910 MULTIPURPOSE TIMING CONTROL UNIT CIRCUIT 1

This chapter contains information on the alternator. Items not covered in this chapter are the same as those of '99 model.

SPECIFICATIONS

Item			Specifications
Alternator	Manufacturer		MITSUBISHI ELECTRIC
	Type		Alternator with built-in regulator (without brush external fan)
	Model		A4TU0488
	Output	V-A	12-100

STRUCTURE AND OPERATION

Alternator

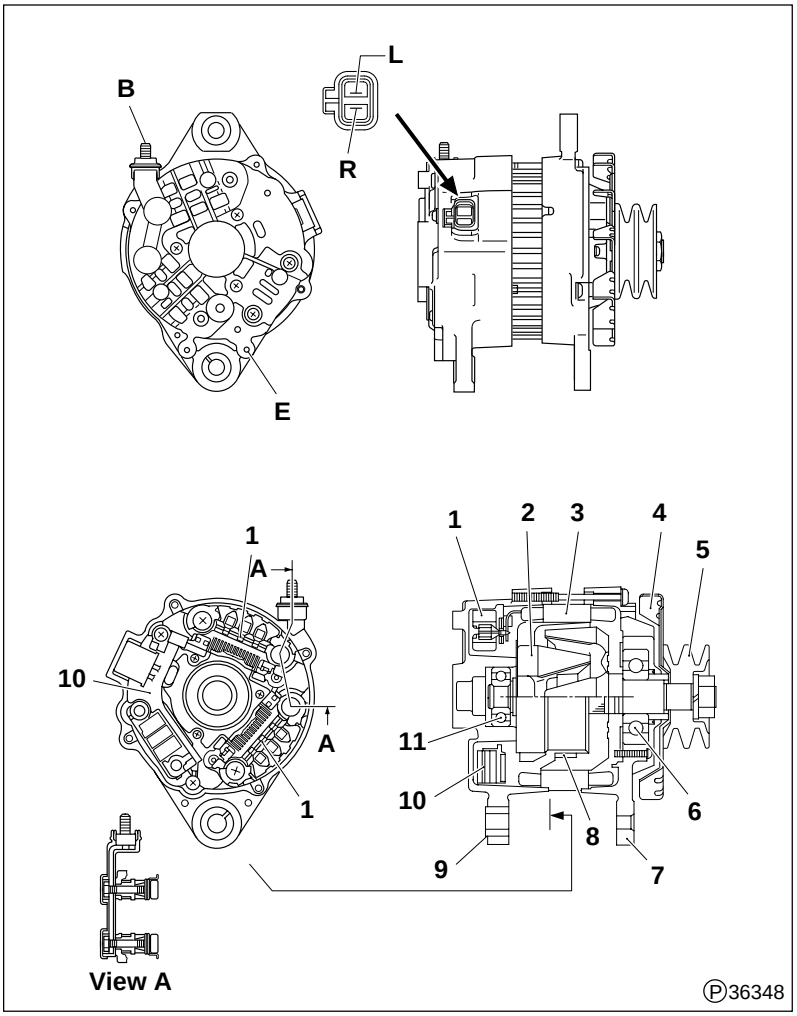

1 Rectifier
2 Rotor assembly
3 Stator assembly
4 Fan
5 Pulley
6 Front bearing
7 Front bracket
8 Field coil
9 Rear bracket
10 Regulator
11 Rear bearing

B : Terminal B
E : Terminal E
L : Terminal L
R : Terminal R

High-current fuse box

Fuse No.	Main load	Capacity
FH1	Fuse box (F1 to F4)	50 A
FH2	Fuse box (F5 to F7)	50 A
FH3	★ ABS hydraulic unit	★ 40 A
FH4	★ ABS hydraulic unit	★ 30 A
FH5	Starter switch (Terminal B)	50 A
FH6	Fuse box (F32 to F34)	50 A
FH7	Alternator	100 A

Fuse box

Fuse No.	Main load	Capacity
F1	Headlamp, LH	15 A
F2	Headlamp, RH	15 A
F3	Stop lamp, horn	15 A
F4	Turn signal lamp, pre-stroke control unit (Memory clear switch)	15 A
F5	—	—
F6	Cab lamp	10 A
F7	Reserve power (BATT)	10 A
F8	★ Power window	★ 25 A
F9	—	—
F10	Automatic transmission control unit (Memory clear switch)	15 A
F11	—	—
F12	—	—
F13	Cigarette lighter	15 A
F14	Radio	10 A
F15	Reserve power (ACC)	10 A
F16	—	—
F17	—	—

Fuse No.	Main load	Capacity
F18	Transmission neutral relay < Manual transmission > Inhibitor switch < Automatic transmission >	10 A
F19	Backup lamp	10 A
F20	Meter cluster, ★ DRL	10 A
F21	Wiper	10 A
F22	Reserve power (MAIN)	10 A
F23	Automatic transmission control unit	15 A
F24	—	—
F25	Engine control (ACT)	10 A
F26	—	—
F27	Exhaust brake	10 A
F28	Engine control ECU	10 A
F29	★ ABS	★ 10 A
F30	—	—
F31	—	—
F32	* Condenser fan	15 A
F33	Blower fan	25 A
F34	Tail lamp	★ 20 A

* : Fuses are provided for these pieces of equipment only where they are installed.

★ marks indicate changed parts or added parts.
DRL : Daytime Running Lights

M E M O

106 ALTERNATOR

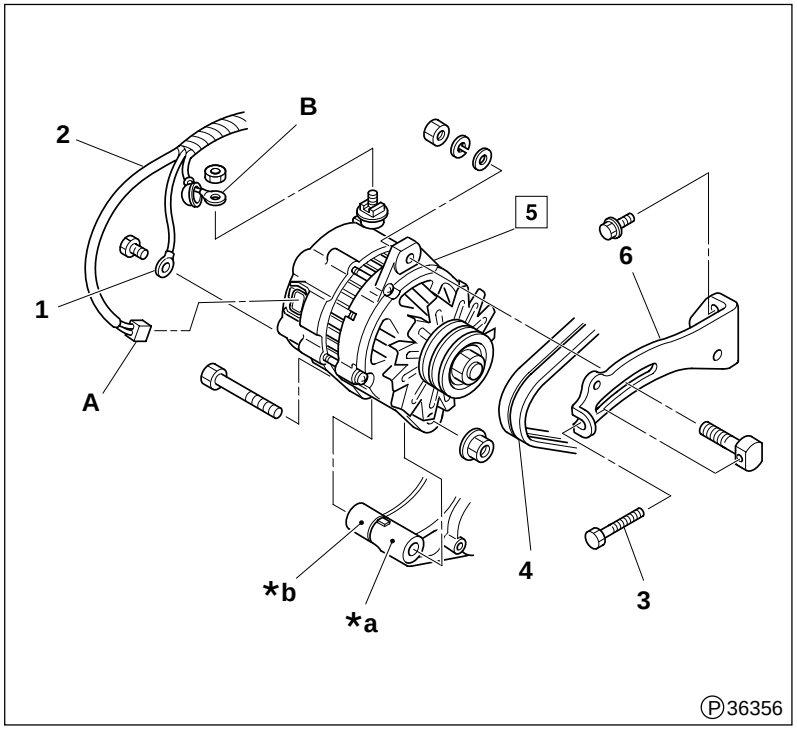

● **Removal sequence**

1 Ground cable
2 Chassis harness
3 Adjusting bolt
4 V-belts
5 Alternator 🕮 P54-8
6 Adjusting plate

***a**: Timing gear case and front plate
Gr 11
***b**: Power steering oil pump
A : To terminals L and R
B : To terminal B
C : Connected to crankcase
E : To terminal E

WARNING ⚠

- **Terminal B is always loaded with voltage from the battery, supplied via chassis harness 5. Therefore when you remove the harness from terminal B, make sure that tools do not touch any adjacent parts because this would cause a short-circuit.**
- **Make sure that you disconnect terminal ⊖ of the battery before removing the harness and insulate the terminal with tape.**

● **Installation sequence**

Follow the removal sequence in reverse.

● **Adjustment after installation**

Adjustment of V-belt **4** tension Gr 14

Service standards

Location	Maintenance item		Standard value	Limit	Remedy
5	Output current (* When engine is hot and 13.5 V is loaded)	At 1500 rpm	53 A or more	—	Inspect
		At 2500 rpm	84 A or more	—	
		At 5000 rpm	102 A or more	—	
	Adjustment voltage of regulator (At 5000 rpm, 5 A is loaded)		14.7±0.3 V	—	Replace

* : The value of the ambient temperature is measured after running the alternator drive motor at maximum power (5000 rpm) for 30 minutes.

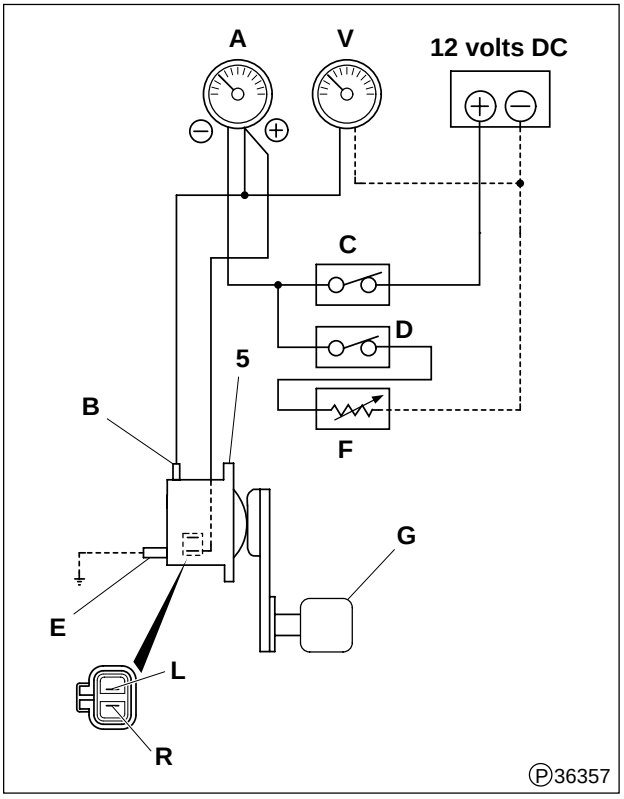

5 Inspection of alternator

(1) Inspection of alternator performance (bench test)

- Connect each unit to alternators **5** as illustrated.

CAUTION⚠

Use sufficiently thick wires for the wiring and make sure all connecting parts are securely connected.

A : Ammeter
B : Terminal B on alternator
C : Switch
D : Switch
E : Terminal E on alternator
F : Load resistance (variable resistance)
G : Alternator drive motor
L : Terminal L on alternator
R : Terminal R on alternator
V : Voltmeter

- Maximize load resistance **F** (load current hardly flows).
- Turn switches **C**, **D** ON.
  With the alternator **5** rotating at 5000 rpm, adjust load resistance **F** to the current specified in the Service Standards table. Then, operate the alternator for 30 minutes.
  Specified output of the alternator : Approx. 100 A
- Increase the rotation of alternator **5** gradually and measure current at specified rpm.
- If the measured value deviates from the standard value, disassemble and inspect alternator **5**. 🕮 P54-8

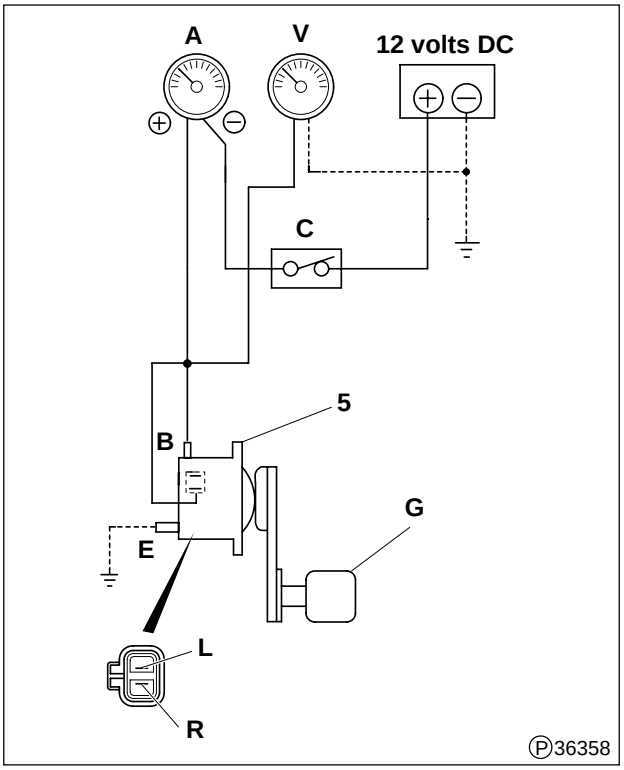

(2) Inspection of regulator (bench test)

- Connect each unit to the alternators as illustrated.
  A : Ammeter
  B : Terminal B on alternator
  C : Switch
  E : Terminal E on alternator
  G : Alternator drive motor
  L : Terminal L on alternator
  R : Terminal R on alternator
  V : Voltmeter
- Turn switch **C** ON.
- Run alternator **5** at low speed.
- Measure the voltage (adjustment voltage) when alternator **5** has reached a speed of 5000 rpm. Make sure at such time that the value of the current is five amperes or less.
- If the measured value deviates from the standard value, perform either of the following.
  - If the measured value is higher than the standard value : Replace the regulator
  - If the measured value is lower than the standard value : Before replacing the regulator check the alternator area.

Alternator

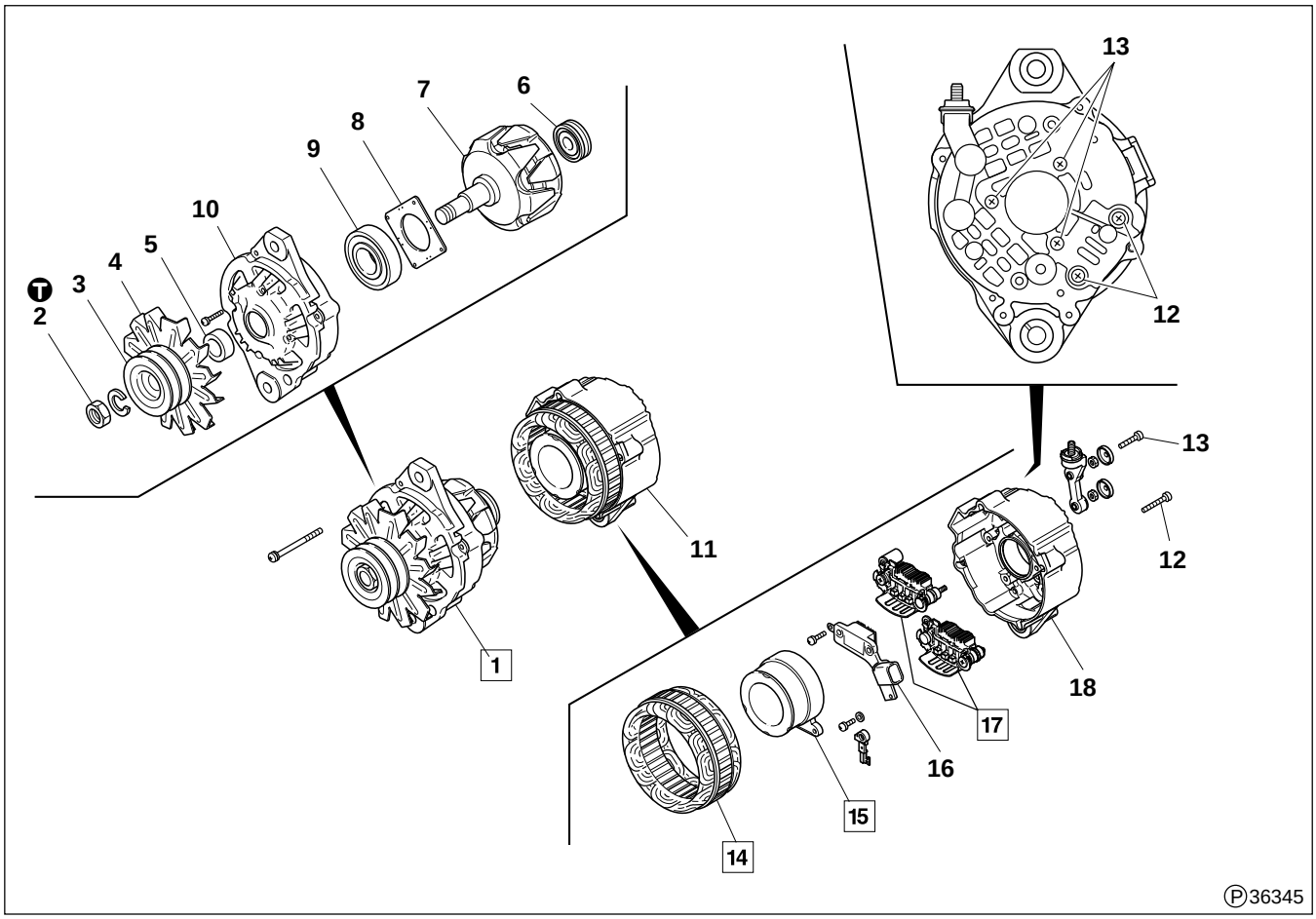

● **Disassembly sequence**

1 Rotor and front bracket assembly
2 Nut
3 Pulley
4 Fan
5 Spacer
6 Rear bearing
7 Rotor assembly
8 Cover
9 Front bearing
10 Front bracket
11 Stator and rear bracket assembly
12 Screw
13 Screw
14 Field coil
15 Stator assembly
16 Regulator
17 Rectifier
18 Rear bracket

⊗ : Non-reusable parts

CAUTION⚠

When removing field coil 15, support the field coil by hand or with a stand to prevent it from falling due to its own weight.

NOTE

Do not remove parts 6, 9, 14 unless they are faulty.

● **Assembly sequence**

Follow the disassembly sequence in reverse.

Service standards

Location	Maintenance item	Standard value	Limit	Remedy
15	Field coil resistance (20°C {68°F})	2.0 to 2.4 Ω	—	Replace

Ⓣ Tightening torque

Unit : N·m {lbf.ft, kgf·m}

Location	Parts to be tightened	Tightening torque	Remarks
2	Nut (Pulley mounting)	132 to 162 {98 to 120, 13.5 to 16.5}	—

◆ Service procedure

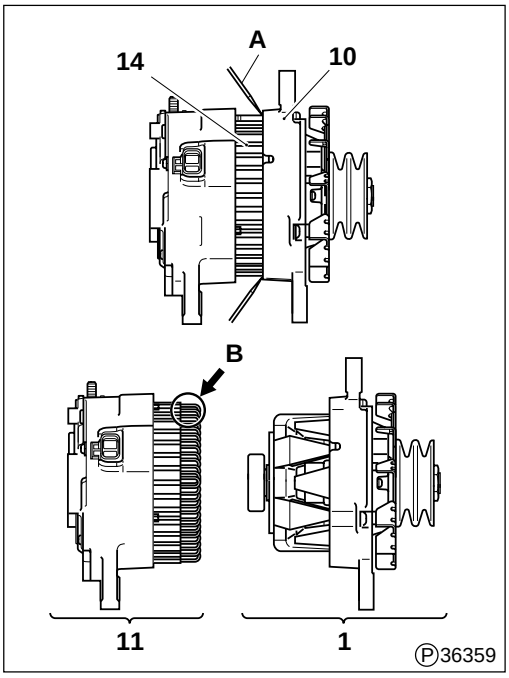

1 Rotor and front bracket assembly

[Removal]

- Insert screwdriver **A** between front bracket **10** and stator assembly **14**.
- Use screwdriver **A** to pry rotor and front bracket assembly **3** away from stator and rear bracket assembly **11**.

CAUTION ⚠

Be careful not to insert the screwdriver too deep or it will damage coil B of stator assembly 14 and might cause a short-circuit.

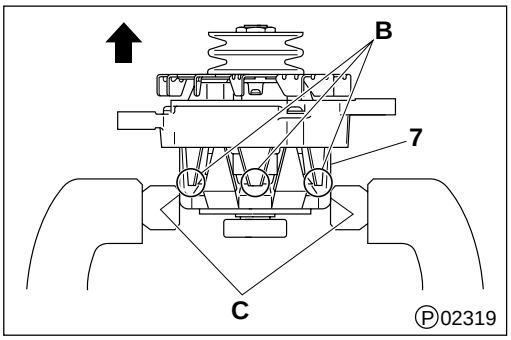

[Disassembly]

CAUTION ⚠

Make sure, when you hold rotor assembly 7 in a vise, to grip root C of the core claws. Gripping claws D can damage them.

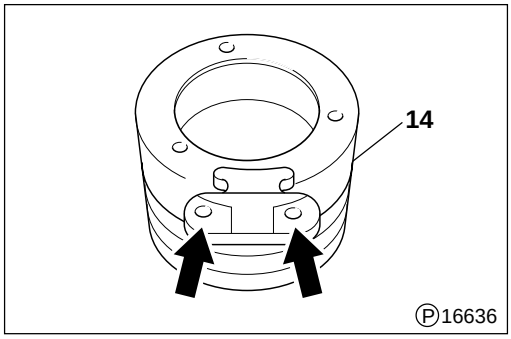

15 Inspection of stator

- Measure the resistance between the terminals of stator **15**.
- If the measured value deviates from the standard value, replace stator **15**.

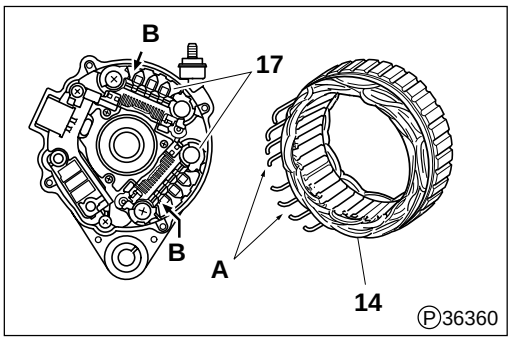

14 Field coil assembly

[Removal and installation]

- Disconnect lead **A** of field coil assembly **14** from rectifier **17**. The lead is soldered to diode **B** of rectifier **17** at eight points. (Each of the two rectifiers has 4 soldered sections.)

CAUTION ⚠

Make sure that you desolder within five seconds because the diode is heat sensitive.

- To install, follow the removal sequence in reverse.

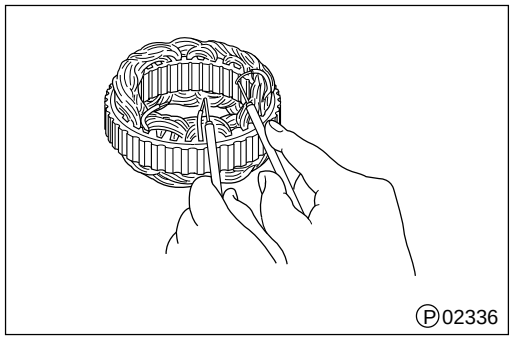

[Inspection]

(1) Continuity of each lead wire

- Check electrical conductivity between individual lead wires of the four wires soldered to each rectifier.
- If there is no continuity, the lead wire is broken. Replace field coil assembly **14**.

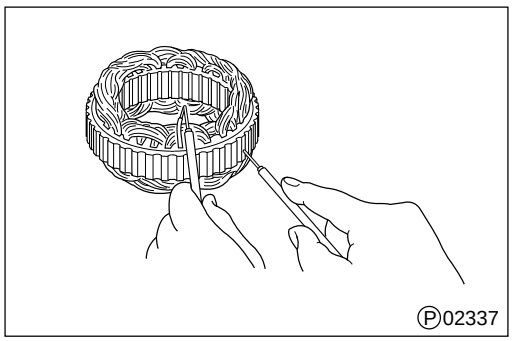

(2) Continuity between lead wires and the core

- Make sure that there is no continuity between all lead wires and the core.
- If there is continuity, replace field coil assembly **14**, since it might be short-circuited.

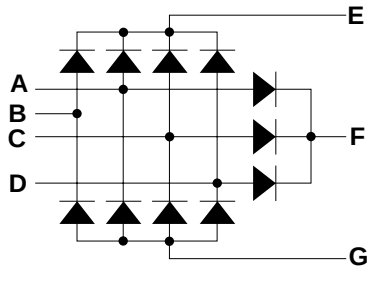

Ⓟ15270

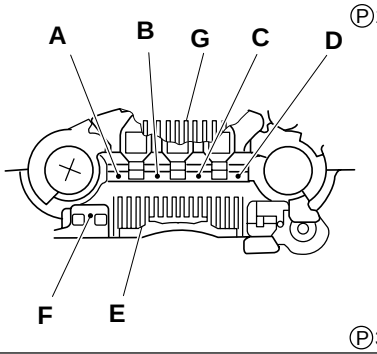

Ⓟ36361

17 Inspection of rectifier

- Inspect whether the diode inside rectifier **17** functions properly, and if any fault is found, replace the rectifier.
  Infinite resistance in both.....Open circuit
  Near-zero Ω resistance in both.....Short circuit
  A, B, C, D : Lead connecting area of stator coil
  E, G : Heat sink area
  F : Regulator connecting area
- Inspect the rectifier twice, before and after the ⊕ side and ⊖ side of the tester have been changed over.

CAUTION⚠

When inspecting using a tester, the current becomes weaker than the usual current flowing through rectifier 17. Therefore, an incomplete resistance value might be indicated.
Also, this tendency increases as the range of the tester gets smaller. Therefore, use as large range as possible.

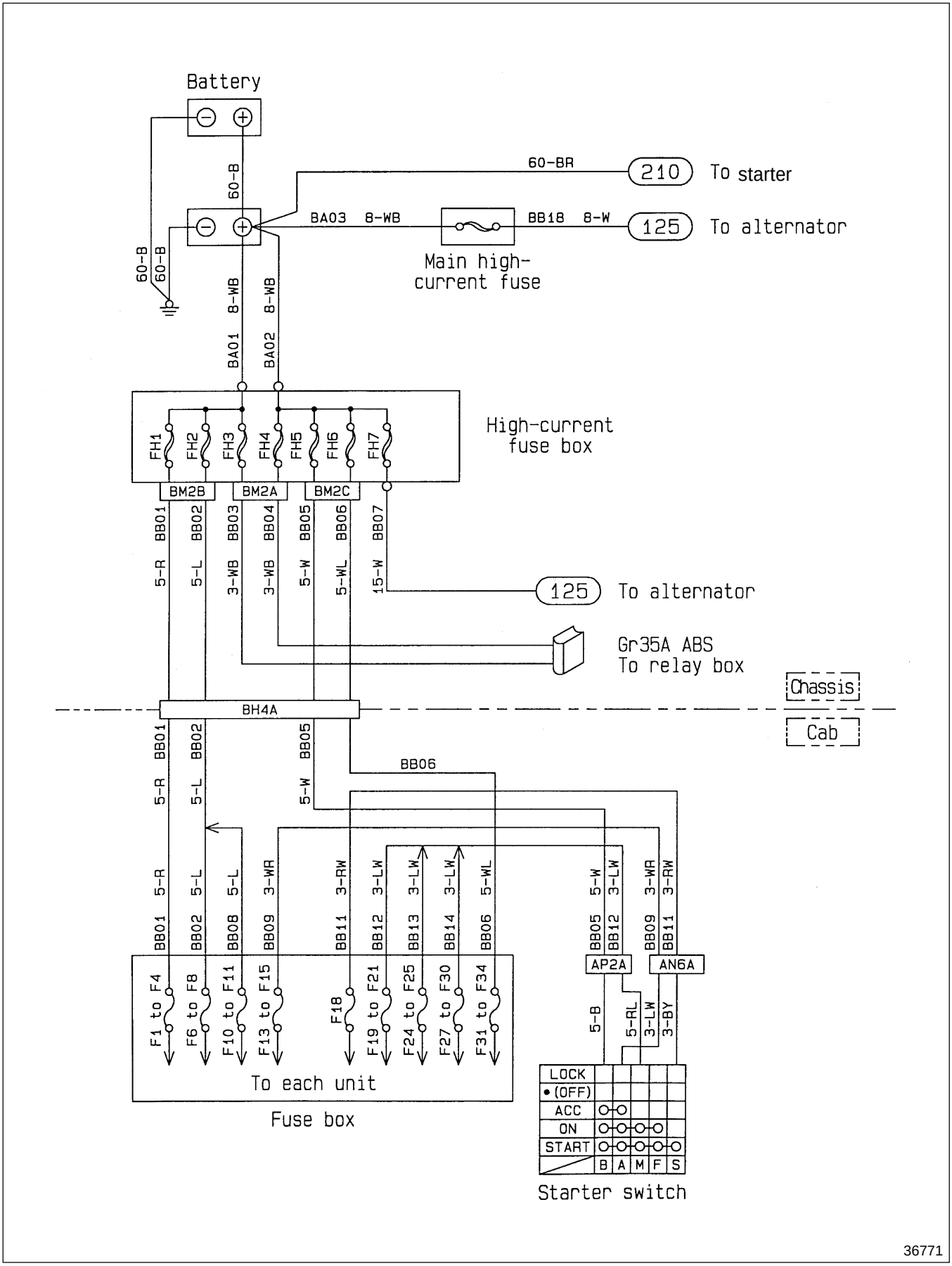
Battery
60-B
60-B
60-B
60-BR
210
To starter
BA03 8-WB
BB18 8-W
125
To alternator
Main high-current fuse
BA01 8-WB
BA02 8-WB
FH1
FH2
FH3
FH4
FH5
FH6
FH7
High-current fuse box
BM2B
BM2A
BM2C
BB01 5-R
BB02 5-L
BB03 3-WB
BB04 3-WB
BB05 5-W
BB06 5-WL
BB07 15-W
125
To alternator
Gr35A ABS
To relay box
Chassis
Cab
BH4A
BB01 5-R
BB02 5-L
BB05 5-W
BB06
BB01 5-R
BB02 5-L
BB08 5-L
BB09 3-WR
BB11 3-RW
BB12 3-LW
BB13 3-LW
BB14 3-LW
BB06 5-WL
BB05 5-W
BB12 3-LW
BB09 3-WR
BB11 3-RW
AP2A
AN6A
F1 to F4
F6 to F8
F10 to F11
F13 to F15
F18
F19 to F21
F24 to F25
F27 to F30
F31 to F34
To each unit
Fuse box
5-B
5-RL
3-LW
3-BY
LOCK
• (OFF)
ACC
ON
START
B A M F S
Starter switch
36771

M E M O

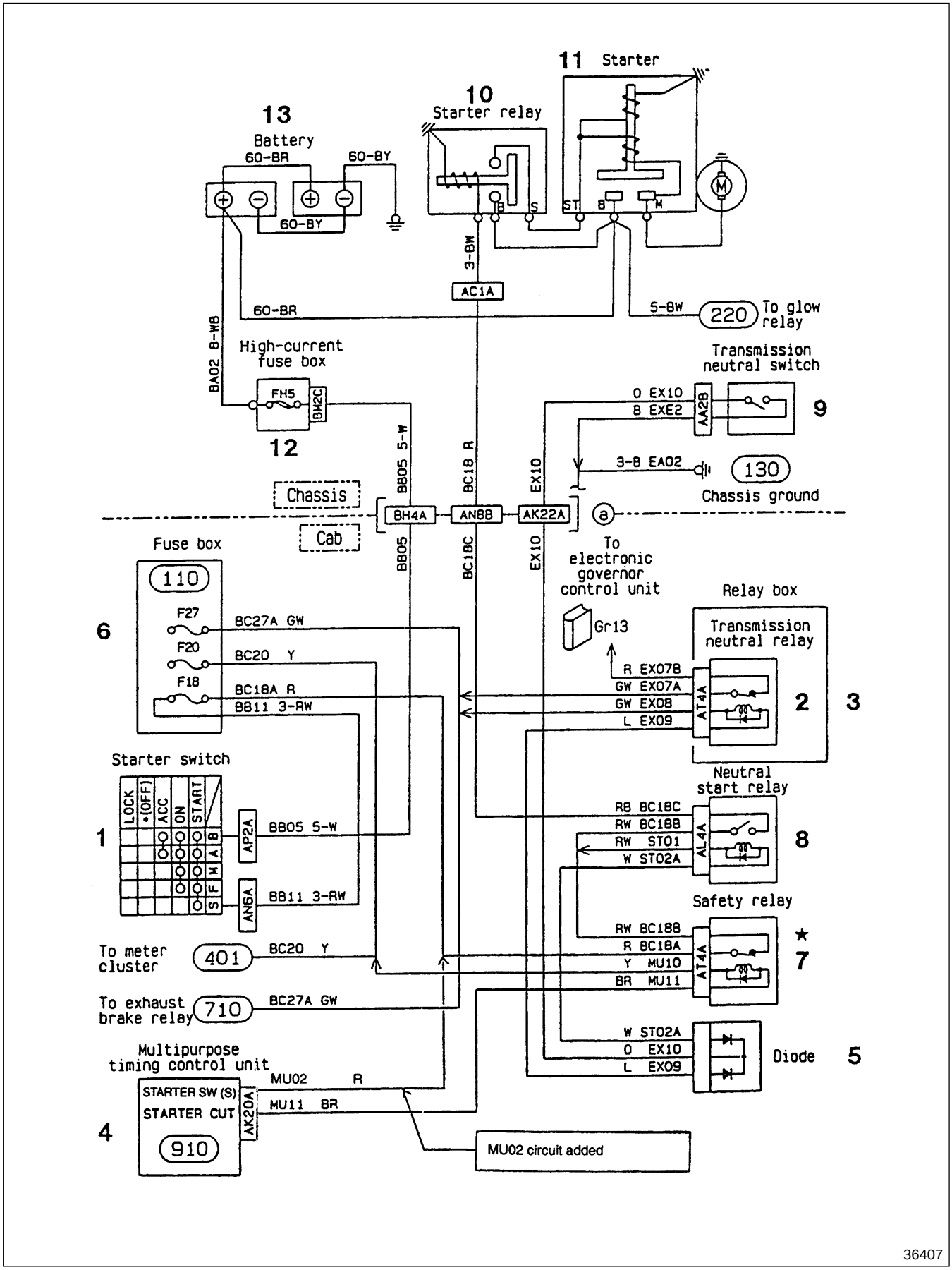
11 Starter
10 Starter relay
13 Battery
60-8R
60-8Y
60-8Y
3-8W
AC1A
60-8R
5-8W
220
To glow relay
8A02 8-W8
High-current fuse box
FH5
BW2C
12
Transmission neutral switch
O EX10
B EXE2
AA2B
9
3-8 EA02
130
Chassis ground
BB05 5-W
BC18 R
EX10
Chassis
Cab
BH4A
AN88
AK22A
a
BB05
BC18C
EX10
To electronic governor control unit
Gr13
Fuse box
110
Relay box
Transmission neutral relay
6
F27
BC27A GW
F20
BC20 Y
F18
BC18A R
BB11 3-RW
R EX07B
GW EX07A
GW EX08
L EX09
AT4A
2
3
Starter switch
LOCK
(OFF)
ACC
ON
START
B
A
M
F
S
1
AP2A
BB05 5-W
AN6A
BB11 3-RW
Neutral start relay
RB BC18C
RW BC18B
RW ST01
W ST02A
AL4A
8
Safety relay
RW BC18B
R BC18A
Y MU10
BR MU11
AT4A
★
7
To meter cluster
401
BC20 Y
To exhaust brake relay
710
BC27A GW
W ST02A
O EX10
L EX09
Diode
5
Multipurpose timing control unit
STARTER SW (S)
STARTER CUT
910
AK20A
MU02 R
MU11 BR
4
MU02 circuit added

36407

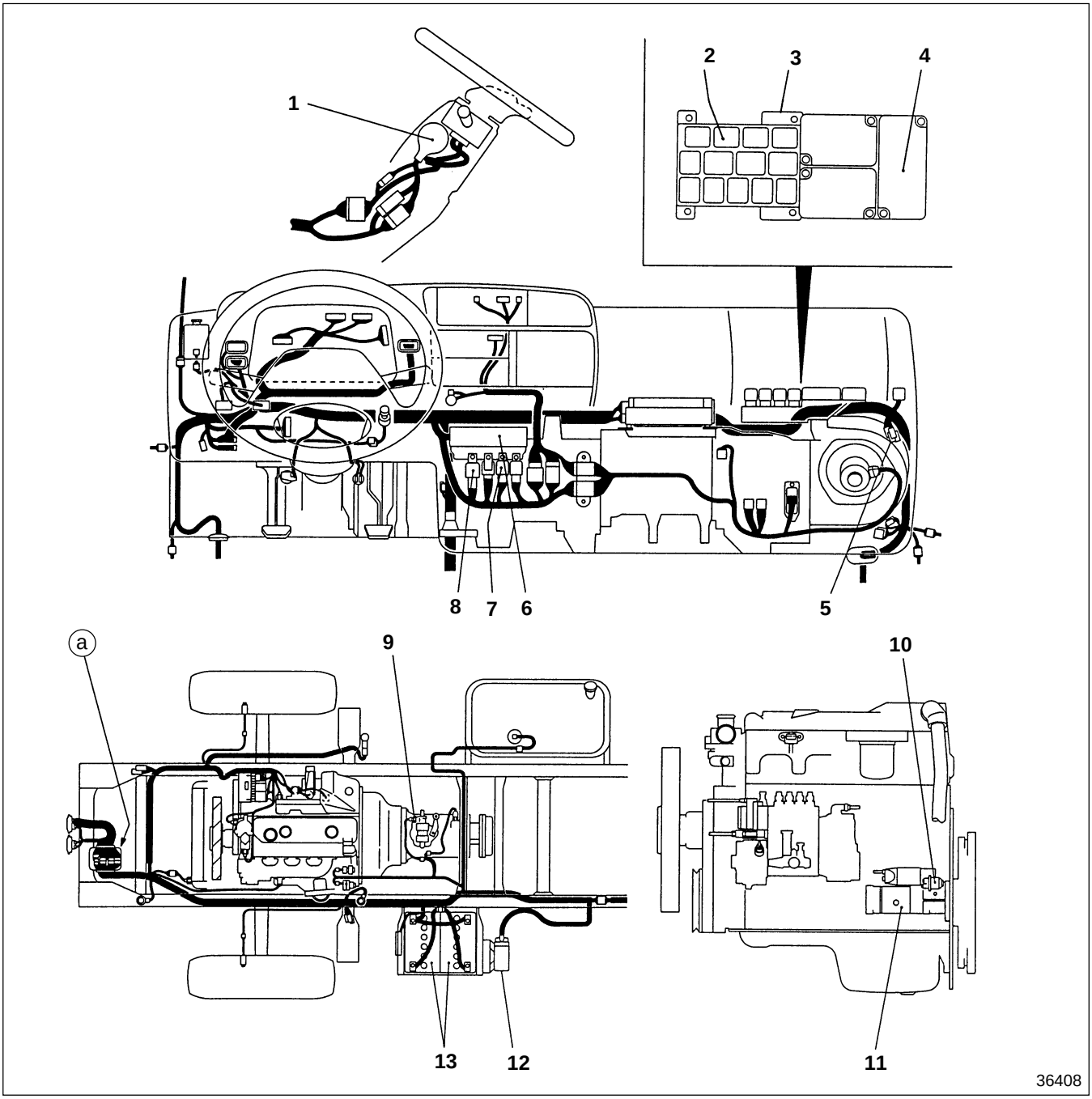

1 Starter switch 1 (210)
2 Transmission neutral relay 1 (604)
3 Relay box 3 (604)
4 Multipurpose timing control unit 1 (910)
5 Diode
6 Fuse box (104)
7 Safety relay 3 (604)
8 Neutral start relay 1 (604)
9 Transmission neutral switch 1 (802)
10 Starter relay 1 (210)
11 Starter 1 (210)
12 High-current fuse box (104)
13 Battery 1 (101)

1 : '96 Model Gr 54 (Pub No. TWSE9501-54)
3 : '99 Model Gr 54 (Pub No. TWSE9501-3)

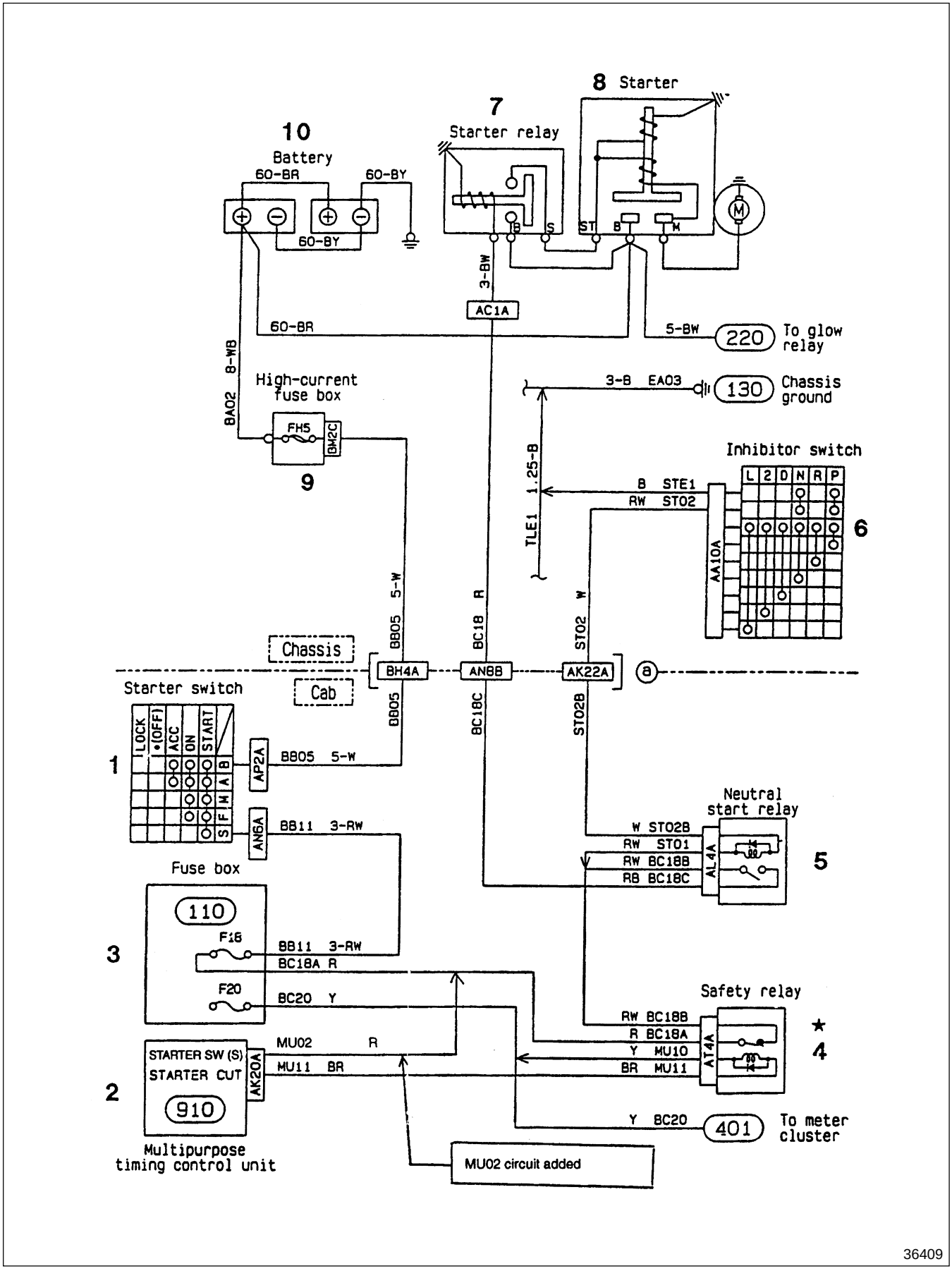
8 Starter
7
Starter relay
10
Battery
60-BR
60-BY
60-BY
3-BW
AC1A
60-BR
5-BW
220
To glow relay
8-WB
BA02
High-current fuse box
FH5
BM2C
9
3-B EA03
130
Chassis ground
Inhibitor switch
L 2 D N R P
B STE1
RW ST02
1.25-B
TLE1
AA10A
6
Chassis
Cab
BB05 5-W
BC18 R
ST02 W
BH4A
AN88
AK22A
a
Starter switch
LOCK
•(OFF)
ACC
ON
START
B A H F S
1
AP2A
BB05 5-W
AN6A
BB11 3-RW
BB05
BC18C
ST02B
Neutral start relay
W ST02B
RW ST01
RW BC18B
RB BC18C
AL4A
5
Fuse box
110
3
F16
BB11 3-RW
BC18A R
F20
BC20 Y
Safety relay
RW BC18B
R BC18A
Y MU10
BR MU11
AT4A
★
4
STARTER SW (S)
STARTER CUT
910
AK20A
2
MU02 R
MU11 BR
Y BC20
401
To meter cluster
Multipurpose timing control unit
MU02 circuit added
36409

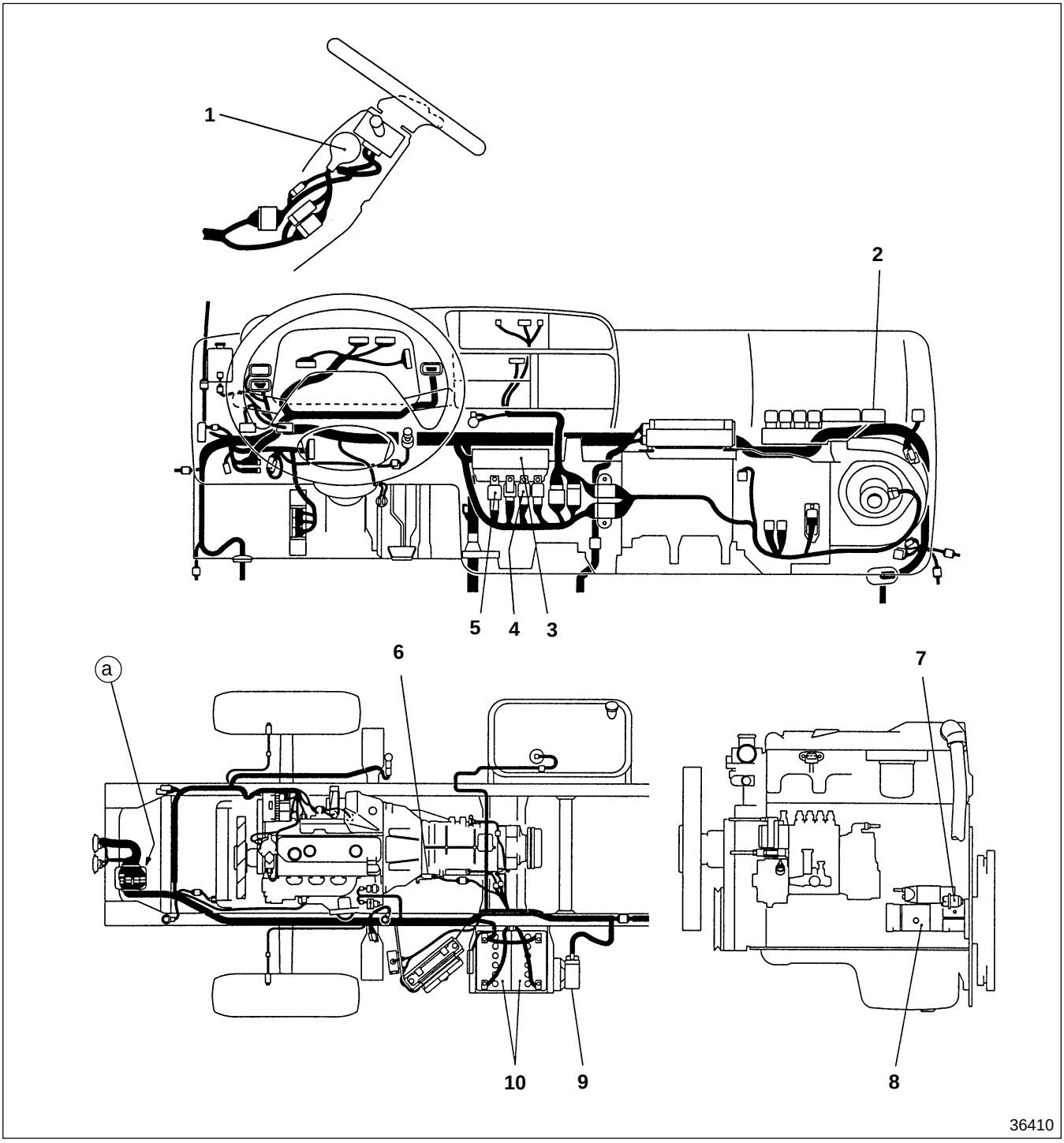

1 Starter switch 1 (210)
2 Multipurpose timing control unit 1 (910)
3 Fuse box 1 (104)
4 Safety relay 3 (604)
5 Neutral start relay 3 (604)
6 Inhibitor switch Gr 23
7 Starter relay 1 (210)
8 Starter 1 (201)
9 High-current fuse box (104)
10 Battery 1 (101)

1 : '96 Model Gr 54 (Pub No. TWSE9501-54)
3 : '99 Model Gr 54 (Pub No. TWSE9501-3)

313 DAYTIME RUNNING LIGHT CIRCUIT

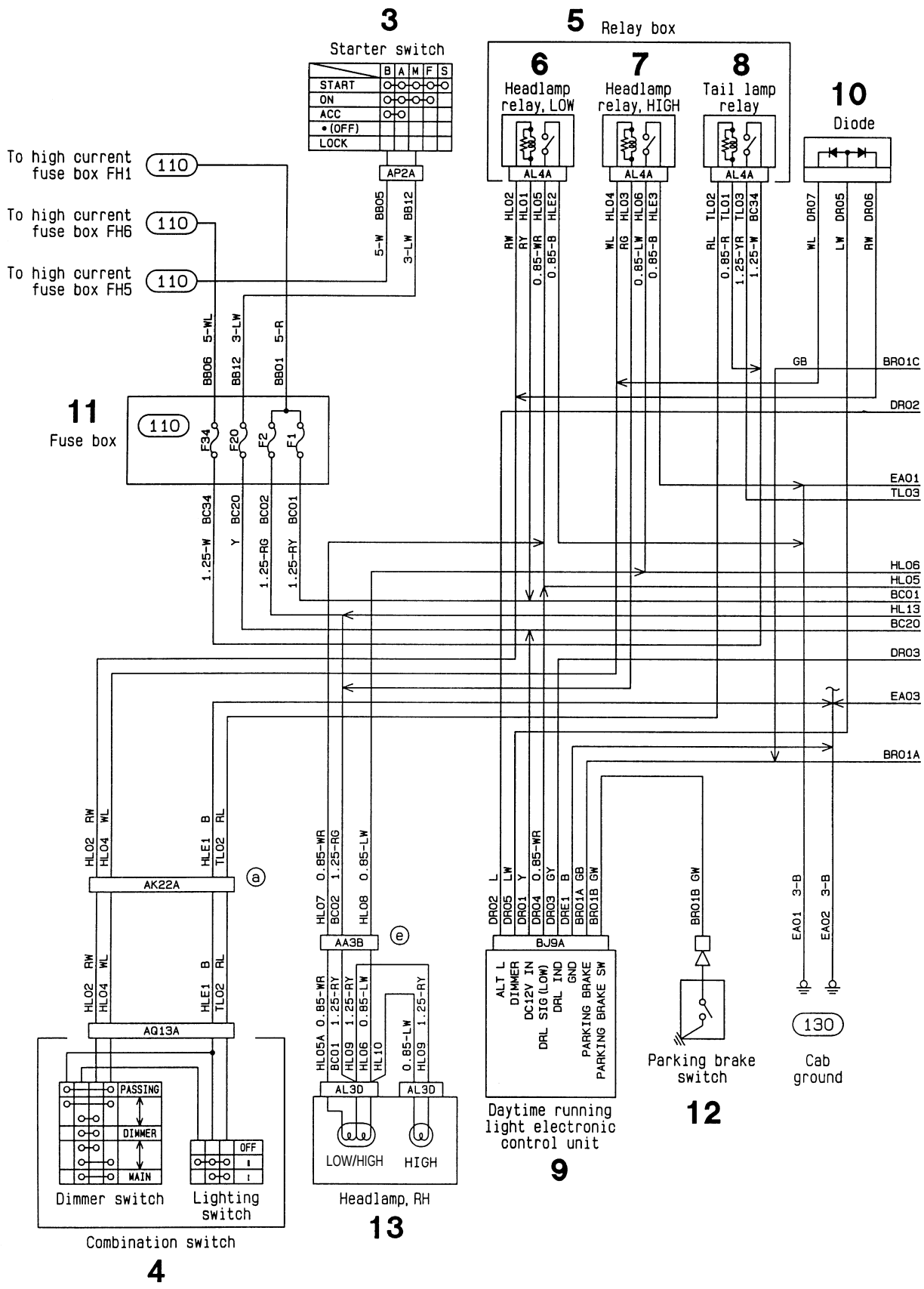

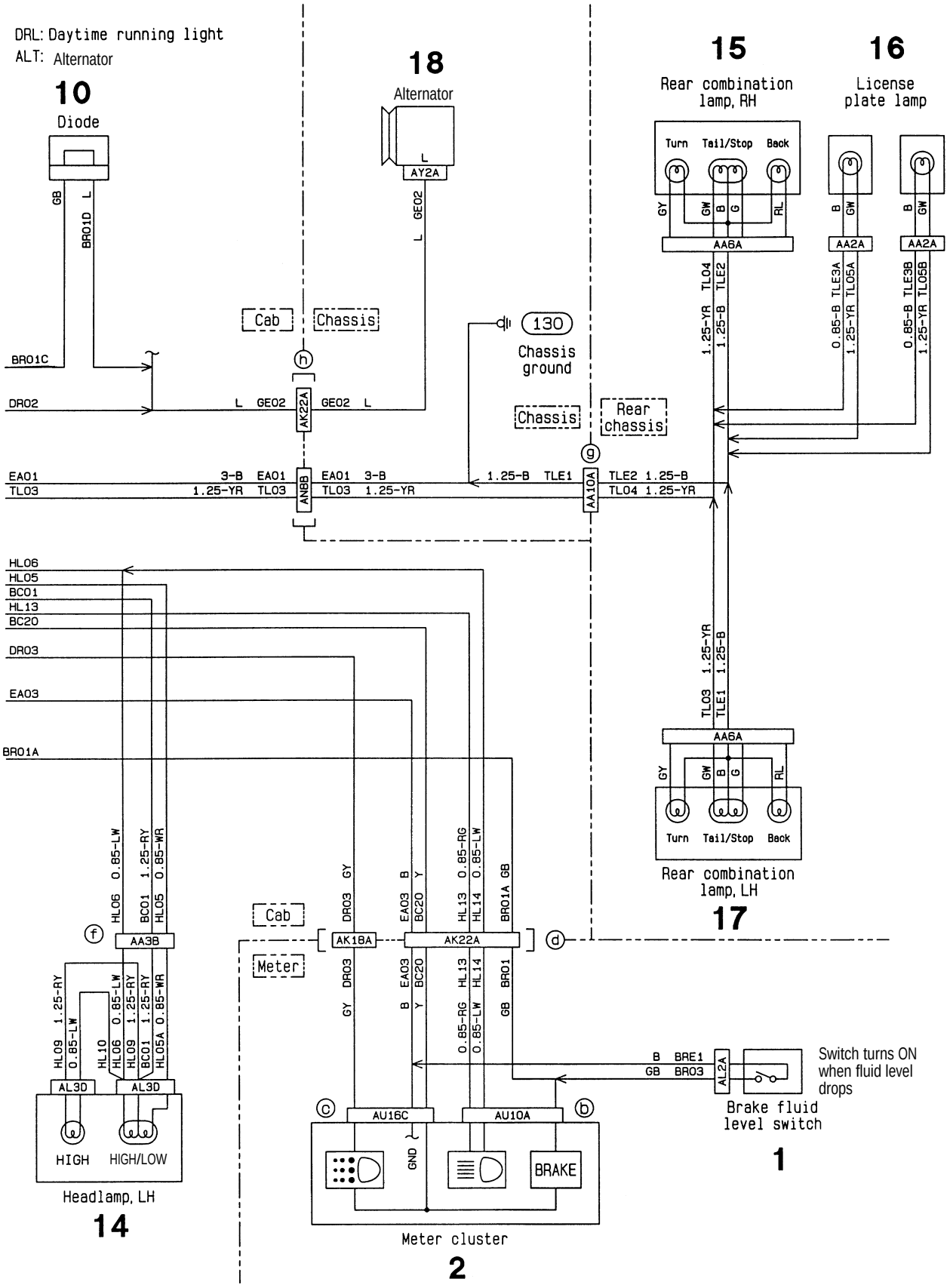
DRL: Daytime running light
ALT: Alternator
10
Diode
18
Alternator
15
Rear combination lamp, RH
16
License plate lamp
Turn
Tail/Stop
Back
Cab
Chassis
130
Chassis ground
Rear chassis
Rear combination lamp, LH
17
Meter
Switch turns ON when fluid level drops
Brake fluid level switch
1
Headlamp, LH
14
Meter cluster
2
HIGH
HIGH/LOW
BRAKE
GND

36411

313 DAYTIME RUNNING LIGHT CIRCUIT

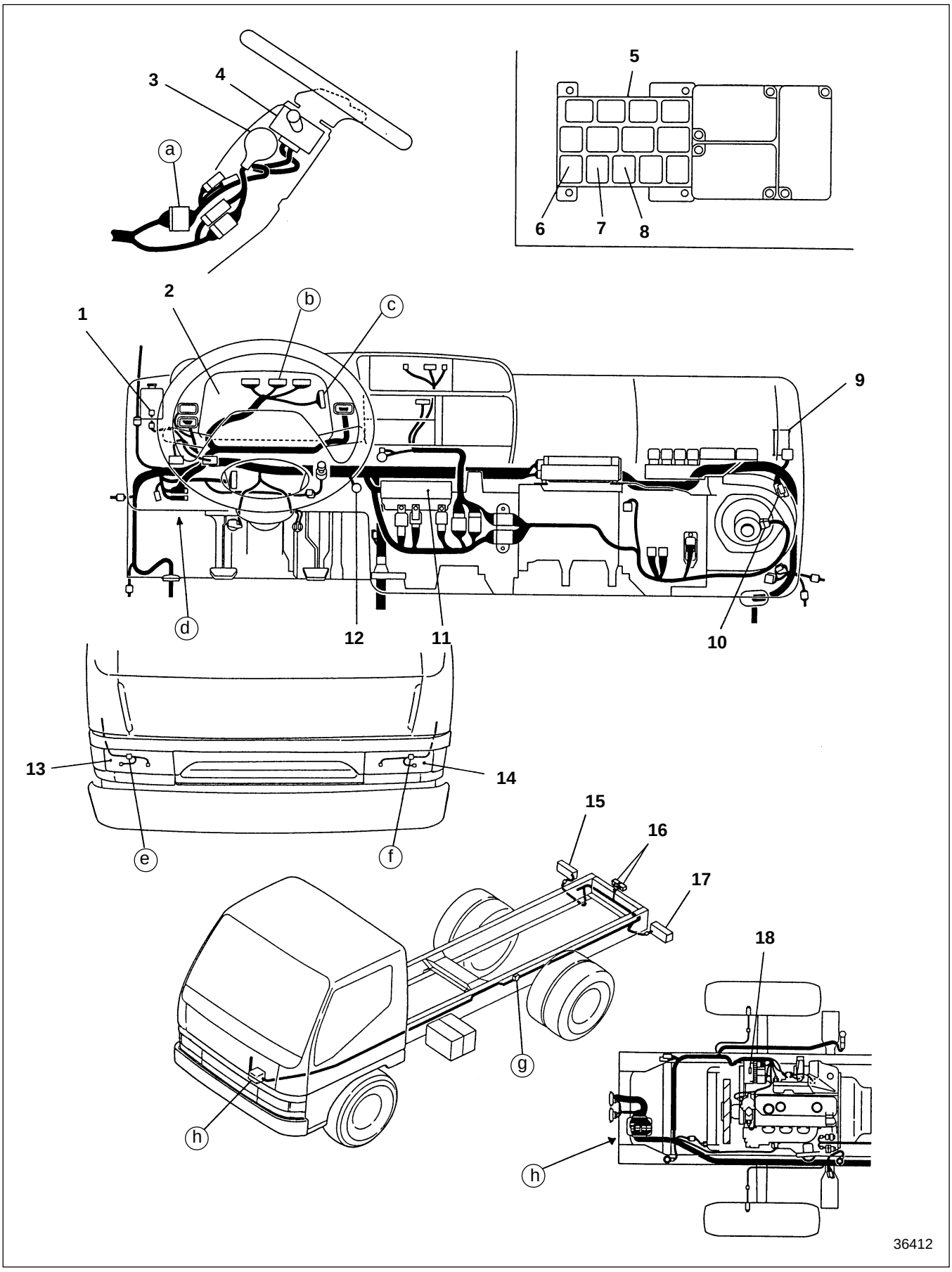

1 Brake fluid level switch 1 (515)
2 Meter cluster (401)
3 Starter switch 1 (210)
4 Combination switch 1 (601)
5 Relay box 3 (604)
6 Headlamp relay, LOW 3 (604)
7 Headlamp relay, HIGH 3 (604)
8 Tail lamp relay 3 (604)
9 Daytime running light control unit
10 Diode
11 Fuse box (104)
12 Parking brake switch 1 (510)
13 Headlamp, RH
14 Headlamp, LH
15 Rear combination lamp, RH
16 License plate lamp
17 Rear combination lamp, LH
18 Alternator (106)

1 : '96 Model Gr 54 (Pub No. TWSE9501-54)
3 : '99 Model Gr 54 (Pub No. TWSE9501-3)

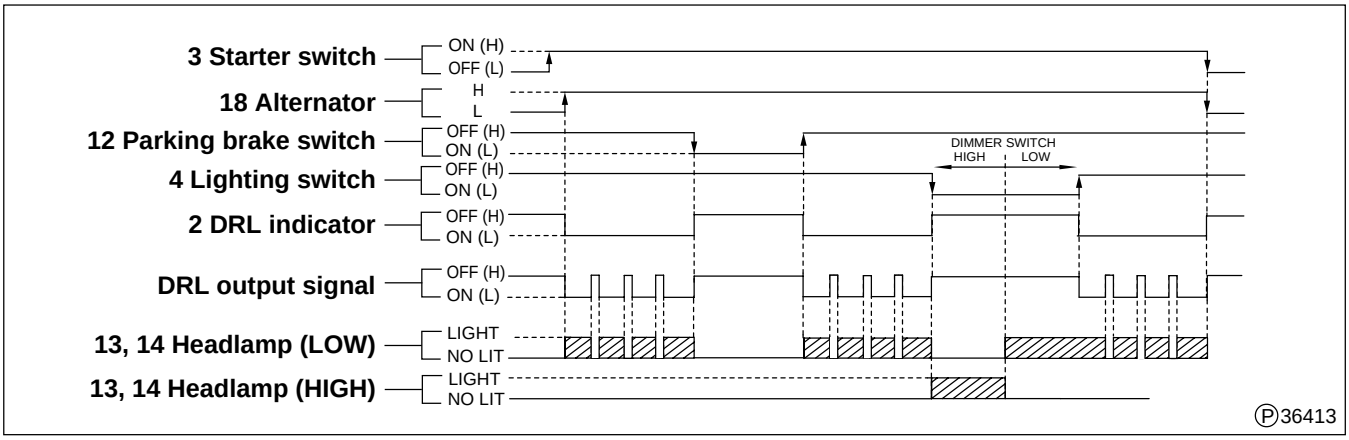

[Outline]
The daytime running light system (DRL) turns on head lamps **13**, **14** in low beam as soon as the engine starts even if the light switch is in the OFF position.
Headlamps **13**, **14** repeat On/Off operations at 120 Hz according to the above timing chart. Because of the cyclic On/Off operations, the headlamps are dimmer than when the headlamp switch is ON.
Explanation of timing chart
- After the engine starts, when alternator **18** begins generating electricity with starter switch **3** in the ON position, headlamps **13**, **14** light.
- When parking brake switch **12** is ON, the DRL turns off to switch off the headlamps.

Meter Cluster Internal Circuit

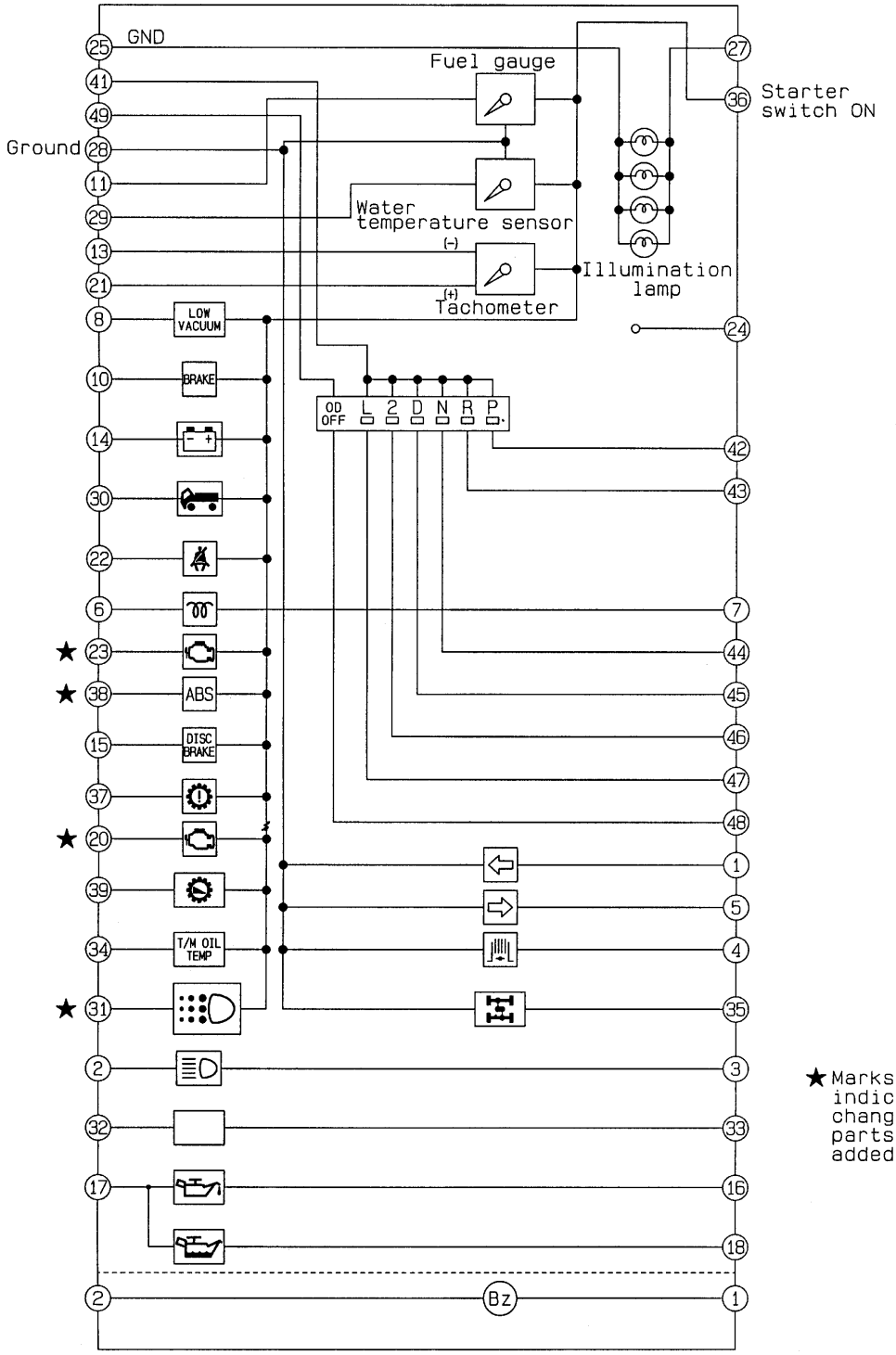

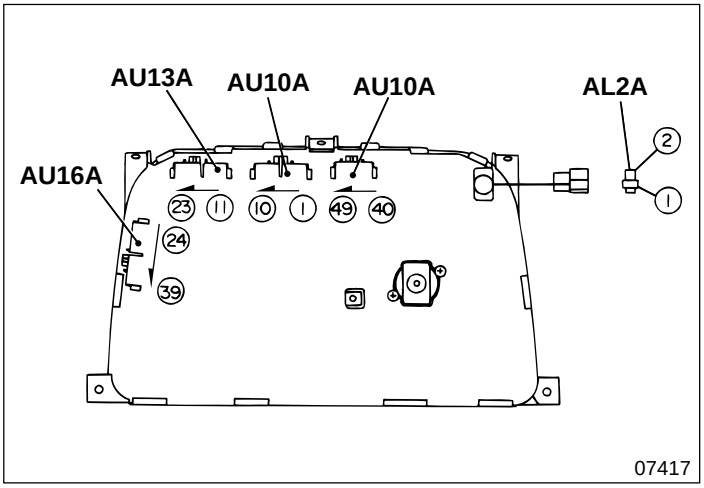

Terminal No.	AU10A
1	Turn, LH ⊕
2	Beam ⊖
3	Beam ⊕
4	Exhaust brake ⊕
5	Turn, RH ⊕
6	Glow ⊖
7	Glow ⊕
8	Vacuum ⊖
9	—
10	Brake ⊖

Terminal No.	AU10A
40	—
41	A/T shift ⊖
42	A/T shift (P) ⊕
43	A/T shift (R) ⊕
44	A/T shift (N) ⊕
45	A/T shift (D) ⊕
46	A/T shift (2) ⊕
47	A/T shift (L) ⊕
48	A/T overdrive OFF ⊕
49	A/T overdrive OFF ⊖

Terminal No.	AL2A
1	Buzzer ⊕
2	Buzzer ⊖

A/T : Automatic transmission

Terminal No.	AU13A
11	Fuel gauge ⊖
12	—
13	Tachometer ⊖
14	Charge ⊖
15	Disc brake ⊖
16	Engine oil ⊕
17	Engine oil ⊖
18	Engine oil ⊕
19	—
20	Pre-stroke control ⊖
21	Tachometer ⊕
22	—
23	Electronic control governor

ABS : Anti-lock Brake System
DRL : Daytime Running Light
★ marks indicate added parts.

Terminal No.	AU16A
24	Tachograph ⊕ < optional >
25	Illumination ⊖
26	—
27	Illumination ⊕
28	Ground
29	Water temperature gauge ⊖
30	Cab tilt ⊖
31	★ DRL
32	—
33	—
34	A/T fluid temperature ⊖
35	4WD
36	Starter switch terminal M
37	A/T warning ⊖
38	★ ABS
39	—

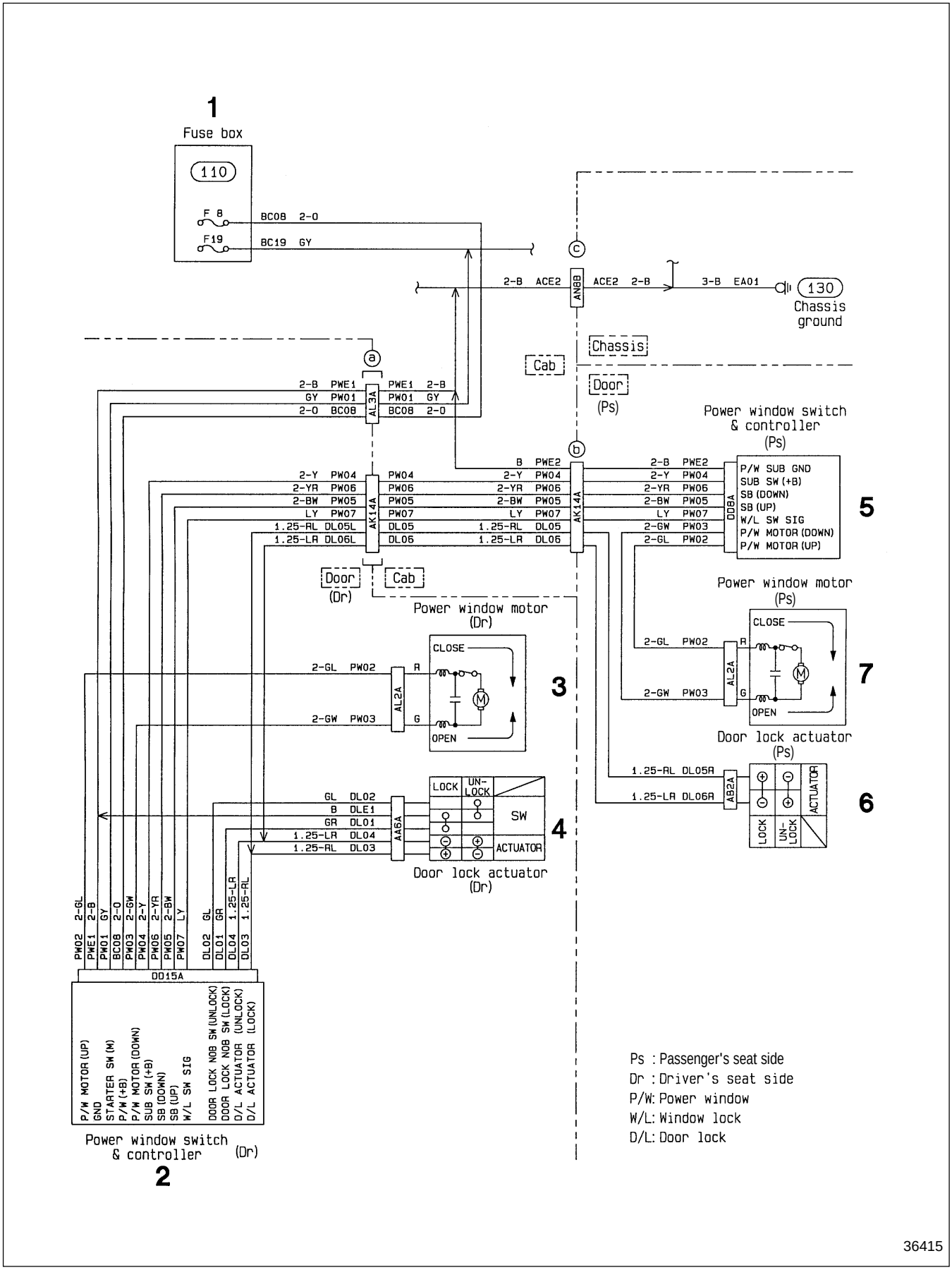
1
Fuse box
110
F 8
F19
BC08 2-O
BC19 GY
2-B ACE2
AN8B
ACE2 2-B
3-B EA01
130
Chassis ground
Chassis
Cab
Door
(Ps)
Power window switch & controller (Ps)
5
P/W SUB GND
SUB SW (+B)
SB (DOWN)
SB (UP)
W/L SW SIG
P/W MOTOR (DOWN)
P/W MOTOR (UP)
DD8A
AL3A
AK14A
Door
(Dr)
Cab
Power window motor (Dr)
3
CLOSE
OPEN
AL2A
Power window motor (Ps)
7
Door lock actuator (Ps)
6
AB2A
LOCK
UN-LOCK
ACTUATOR
SW
4
AA6A
Door lock actuator (Dr)
DD15A
P/W MOTOR (UP)
GND
STARTER SW (M)
P/W (+B)
P/W MOTOR (DOWN)
SUB SW (+B)
SB (DOWN)
SB (UP)
W/L SW SIG
DOOR LOCK NOB SW (UNLOCK)
DOOR LOCK NOB SW (LOCK)
D/L ACTUATOR (UNLOCK)
D/L ACTUATOR (LOCK)
Power window switch & controller (Dr)
2
Ps : Passenger's seat side
Dr : Driver's seat side
P/W: Power window
W/L: Window lock
D/L: Door lock
36415

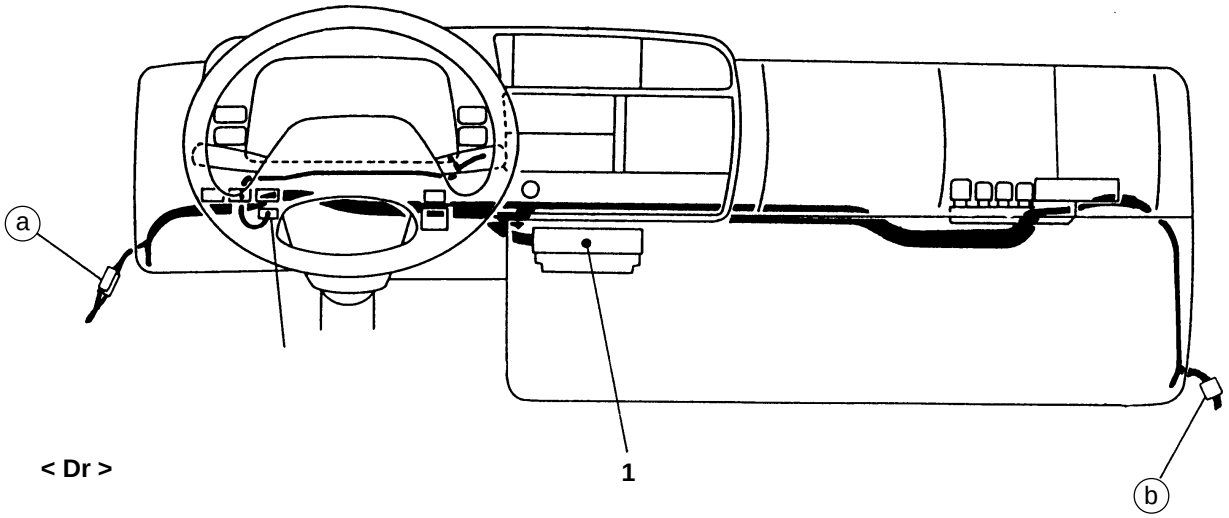

< Dr >

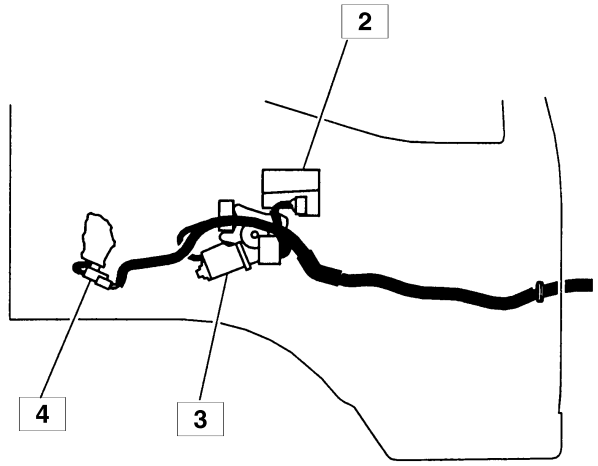

< As >

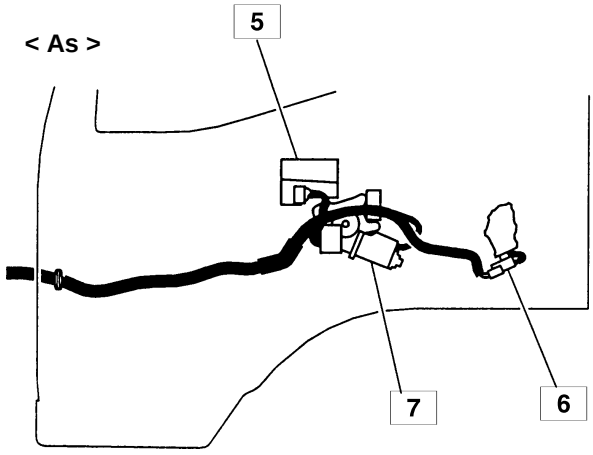

1 Fuse box 104
2 Power window switch & controller (Dr)
3 Power window motor (Dr)
4 Door lock actuator (Dr)
5 Power window switch & controller (Ps)
6 Door lock actuator (Ps)
7 Power window motor (Ps)

Ps : Passenger's seat side
Dr : Driver's seat side

36416

◆ Service procedure

2 **5** **Inspection of power window switch & controller**

- Since the units alone cannot be readily checked in the off-vehicle state, check the harness, switch and other related parts in each system.
- If any fault is not found in the related parts, and the problem still remains in the system, replace the control unit or other units.

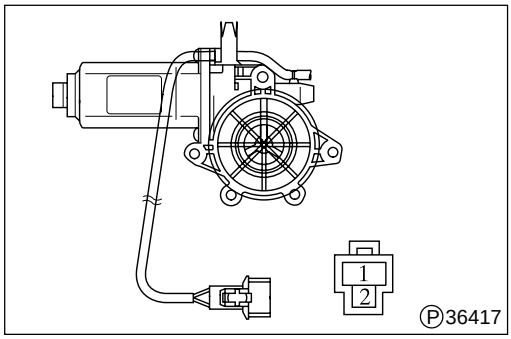

3 **7** **Inspection of power window motors**

- Follow the table below to check for operation.

	①	②
UP (Close)	⊕	⊖
Down (Open)	⊖	⊕

⊕—⊖ : Indicates the terminals where 12 volts DC is to be applied.

- If any fault is found, replace power window motors **3**, **7**. 🕮 Gr42

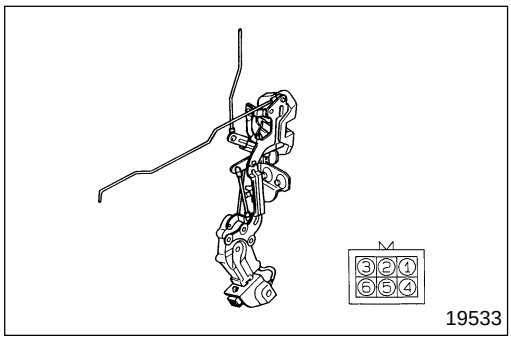

4 **Inspection of door lock actuator (driver's seat side)**

- Follow the table below to check for continuity and operation.

	①	②	③	④	⑤
LOCK		○—○		⊖	⊕
UNLOCK	○—○			⊕	⊖

○—○ : There is continuity between terminals.
⊕—⊖ : Indicates the terminals where 12 volts DC is to be applied

- If any fault is found, replace door lock actuator (driver's seat side) **4**. 🕮 Gr42

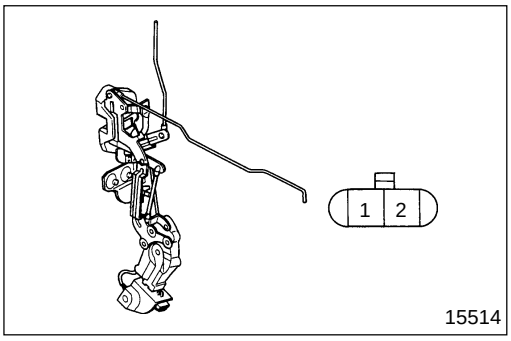

6 **Inspection of door lock actuator (passenger's seat side)**

- Follow the table below to check for operation.

	①	②
LOCK	⊖	⊕
UNLOCK	⊕	⊖

⊕—⊖ : Indicates the terminals where 12 volts DC is to be applied.

- If any fault is found, replace door lock actuator (passenger's seat side) **6**. 🕮 Gr42

M E M O

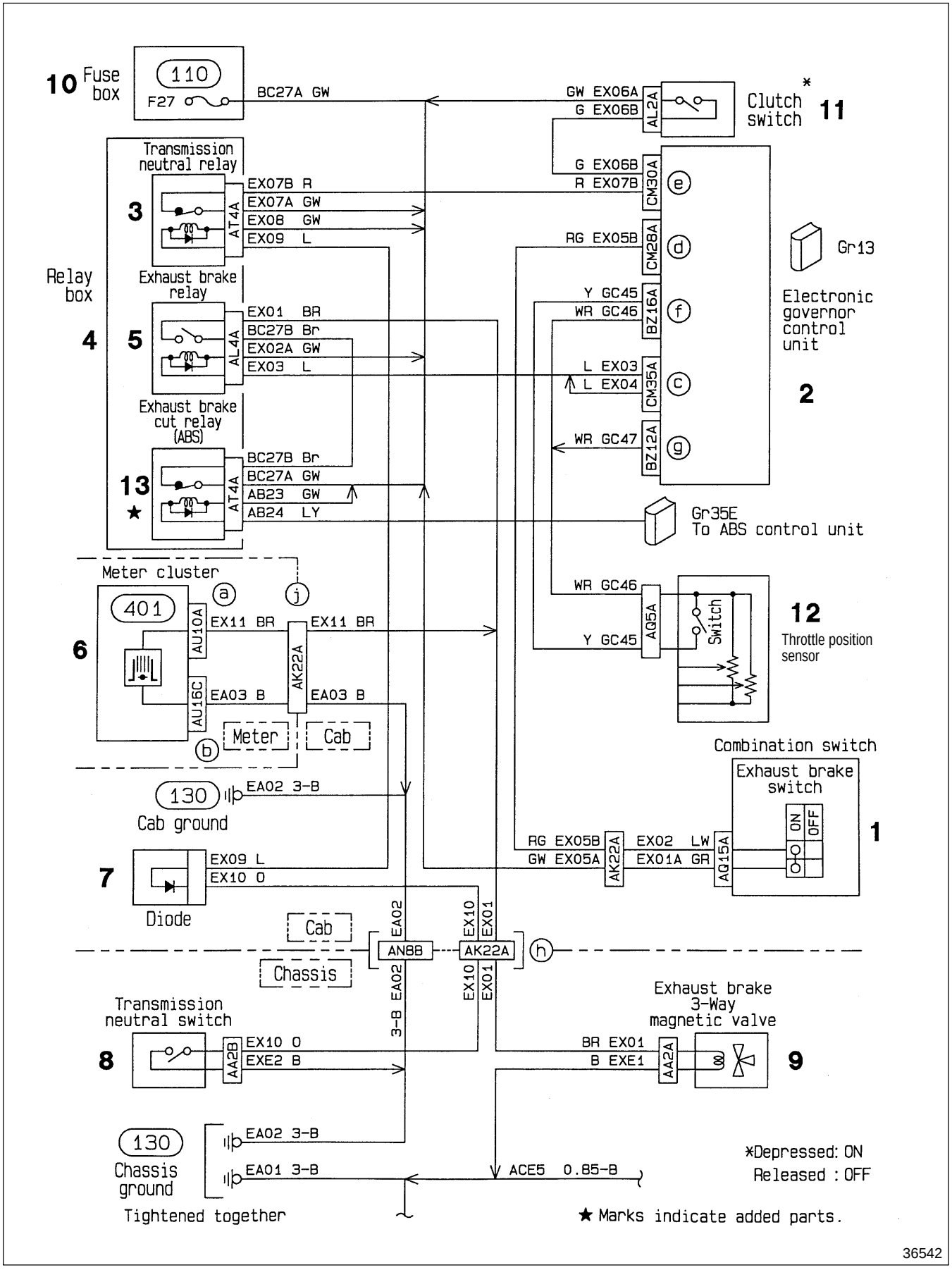
10 Fuse box
110
F27
BC27A GW
Transmission neutral relay
3
AT4A
EX07B R
EX07A GW
EX08 GW
EX09 L
Relay box
Exhaust brake relay
4
5
AL4A
EX01 BR
BC27B Br
EX02A GW
EX03 L
Exhaust brake cut relay (ABS)
13
★
AT4A
BC27B Br
BC27A GW
AB23 GW
AB24 LY
Meter cluster
401
AU10A
AU16C
EX11 BR
EX11 BR
EA03 B
EA03 B
AK22A
Meter
Cab
6
130
Cab ground
EA02 3-B
7
Diode
EX09 L
EX10 O
Cab
Chassis
EA02
EX10
EX01
AN8B
AK22A
3-B EA02
EX10
EX01
Transmission neutral switch
8
AA2B
EX10 O
EXE2 B
130
Chassis ground
EA02 3-B
EA01 3-B
Tightened together
ACE5 0.85-B
Exhaust brake 3-Way magnetic valve
9
AA2A
BR EX01
B EXE1
GW EX06A
G EX06B
AL2A
Clutch switch
*
11
G EX06B
R EX07B
CM30A
e
RG EX05B
CM28A
d
Y GC45
WR GC46
BZ16A
f
L EX03
L EX04
CM35A
c
WR GC47
BZ12A
g
Gr13
Electronic governor control unit
2
Gr35E
To ABS control unit
WR GC46
Y GC45
AQ5A
Switch
12
Throttle position sensor
Combination switch
Exhaust brake switch
ON
OFF
1
RG EX05B
GW EX05A
AK22A
EX02 LW
EX01A GR
AQ15A
*Depressed: ON
Released : OFF
★ Marks indicate added parts.
36542

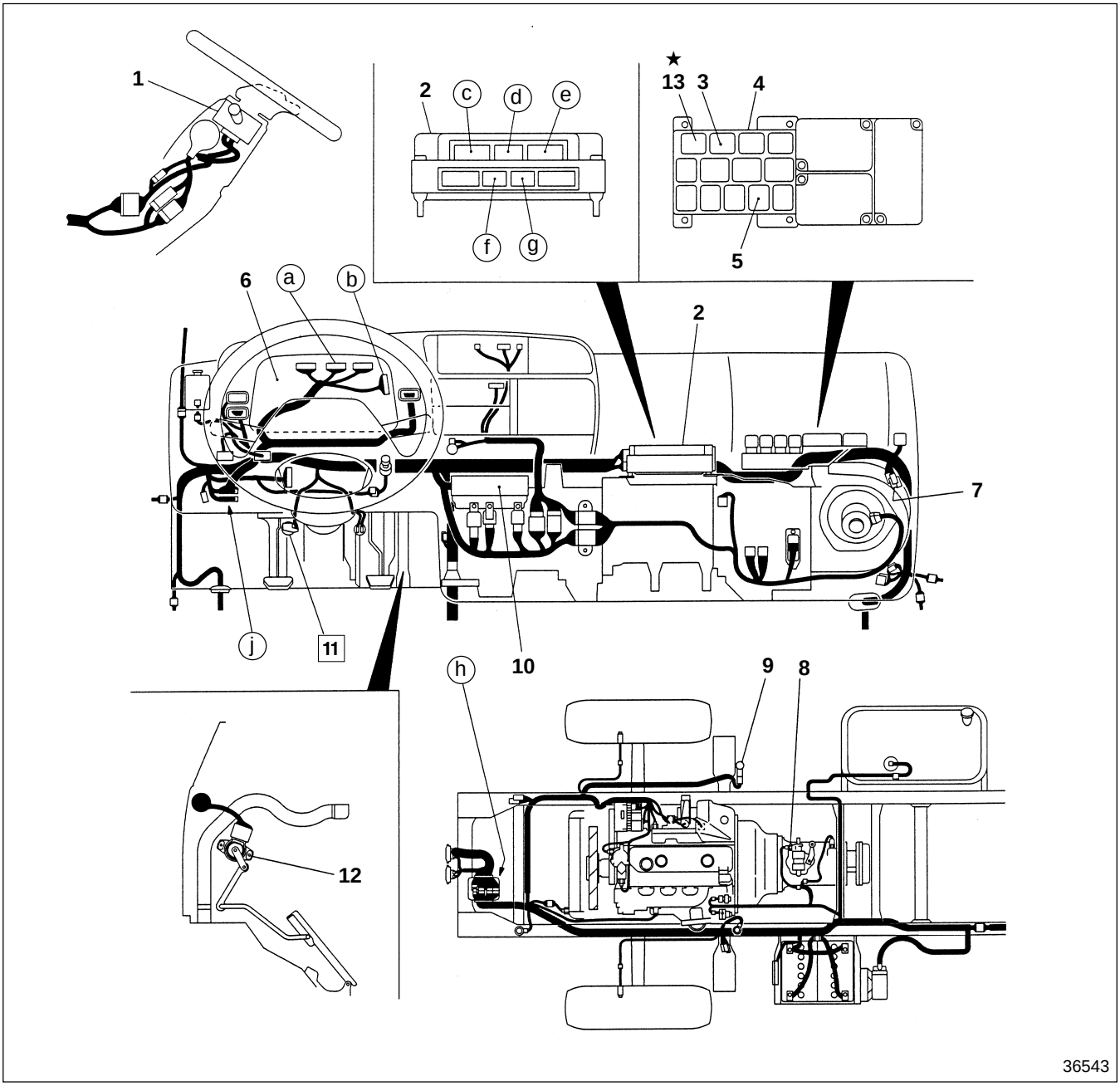

1 Combination switch 1 601
2 Electronic governor control unit Gr 13
3 Transmission neutral relay 1 604
4 Relay box 3 604
5 Exhaust brake relay 604
6 Meter cluster 401
7 Diode
8 Transmission neutral switch 1 802
9 Exhaust brake 3-way magnetic valve 1 701
10 Fuse box 104
11 Clutch switch 3 710
12 Throttle position sensor Gr 13
13 Exhaust brake cut relay (ABS) 3 604

1 : '96 Model Gr 54 (Pub No. TWSE9501-54)
3 : '99 Model Gr 54 (Pub No. TWSE9501-3)
★ marks indicate added parts.

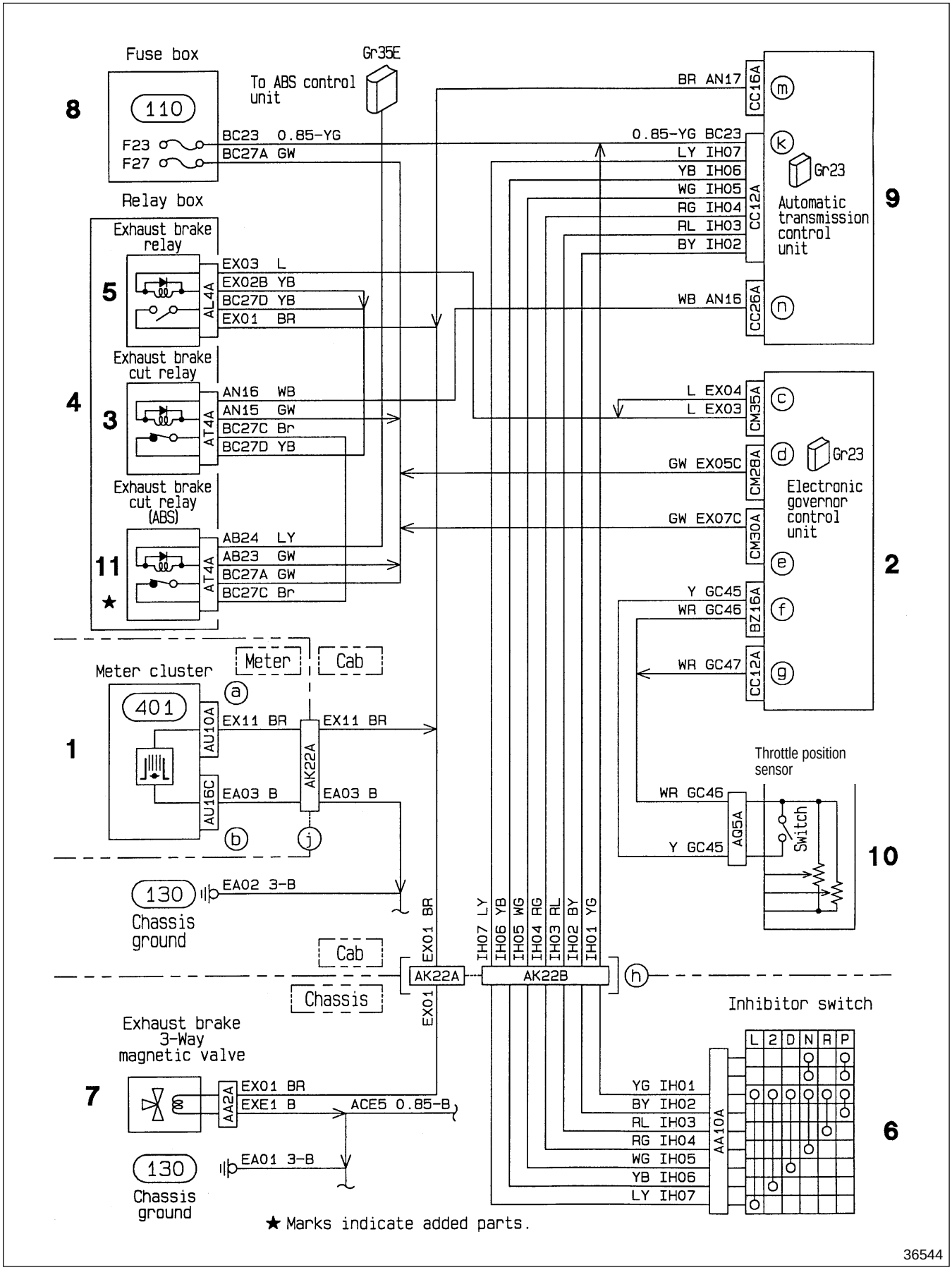
Fuse box
110
F23
F27
BC23 0.85-YG
BC27A GW
Gr35E
To ABS control unit
Relay box
Exhaust brake relay
AL4A
EX03 L
EX02B YB
BC27D YB
EX01 BR
Exhaust brake cut relay
AT4A
AN16 WB
AN15 GW
BC27C Br
BC27D YB
Exhaust brake cut relay (ABS)
AT4A
AB24 LY
AB23 GW
BC27A GW
BC27C Br
★
BR AN17
CC16A
0.85-YG BC23
LY IH07
YB IH06
WG IH05
RG IH04
RL IH03
BY IH02
CC12A
Gr23
Automatic transmission control unit
WB AN16
CC26A
L EX04
L EX03
CM35A
GW EX05C
CM28A
Gr23
Electronic governor control unit
GW EX07C
CM30A
Y GC45
WR GC45
BZ16A
WR GC47
CC12A
Meter cluster
Meter
Cab
401
AU10A
EX11 BR
EX11 BR
AK22A
AU16C
EA03 B
EA03 B
Throttle position sensor
WR GC46
Y GC45
AQ5A
Switch
130
EA02 3-B
Chassis ground
EX01 BR
IH07 LY
IH06 YB
IH05 WG
IH04 RG
IH03 RL
IH02 BY
IH01 YG
Cab
Chassis
AK22A
AK22B
EX01
Inhibitor switch
L 2 D N R P
Exhaust brake 3-Way magnetic valve
AA2A
EX01 BR
EXE1 B
ACE5 0.85-B
130
EA01 3-B
Chassis ground
YG IH01
BY IH02
RL IH03
RG IH04
WG IH05
YB IH06
LY IH07
AA10A
★ Marks indicate added parts.
36544

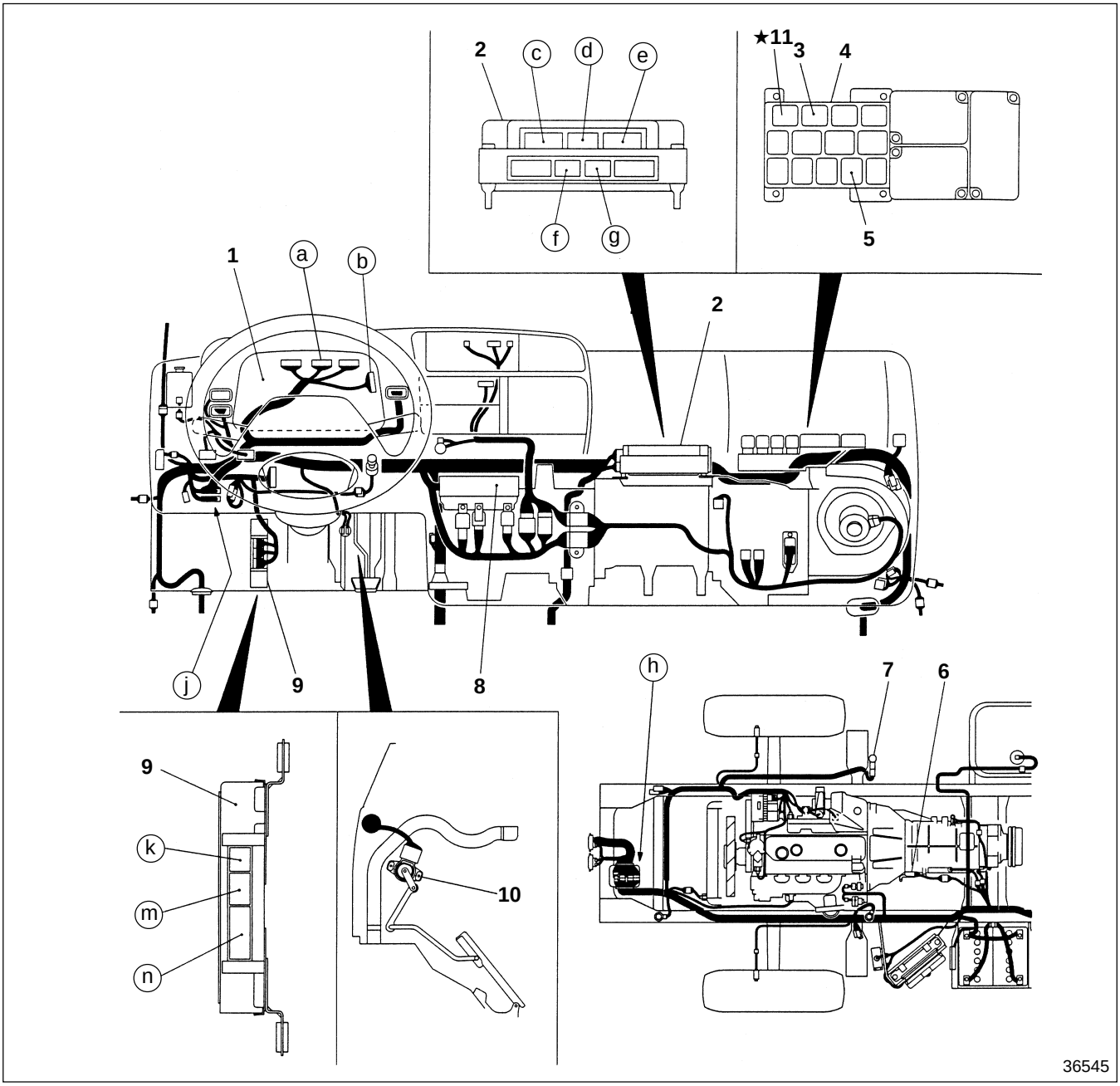

1 Meter cluster 401
2 Electronic governor unit Gr 13
3 Exhaust brake cut relay 3 604
4 Relay box 3 604
5 Exhaust brake relay 604
6 Inhibitor switch Gr 23
7 Exhaust brake 3-way magnetic valve 1 701
8 Fuse box 104
9 Automatic transmission control unit Gr 23
10 Throttle position sensor Gr 13
11 Exhaust brake cut relay (ABS) 3 604

1 : '96 Model Gr 54 (Pub No. TWSE9501-54)
3 : '99 Model Gr 54 (Pub No. TWSE9501-3)
★ marks indicate added parts.

MITSUBISHI MOTORS

Service Manual

Table of Contents

BACK

HOME

FE.FG 1999

Model Changes

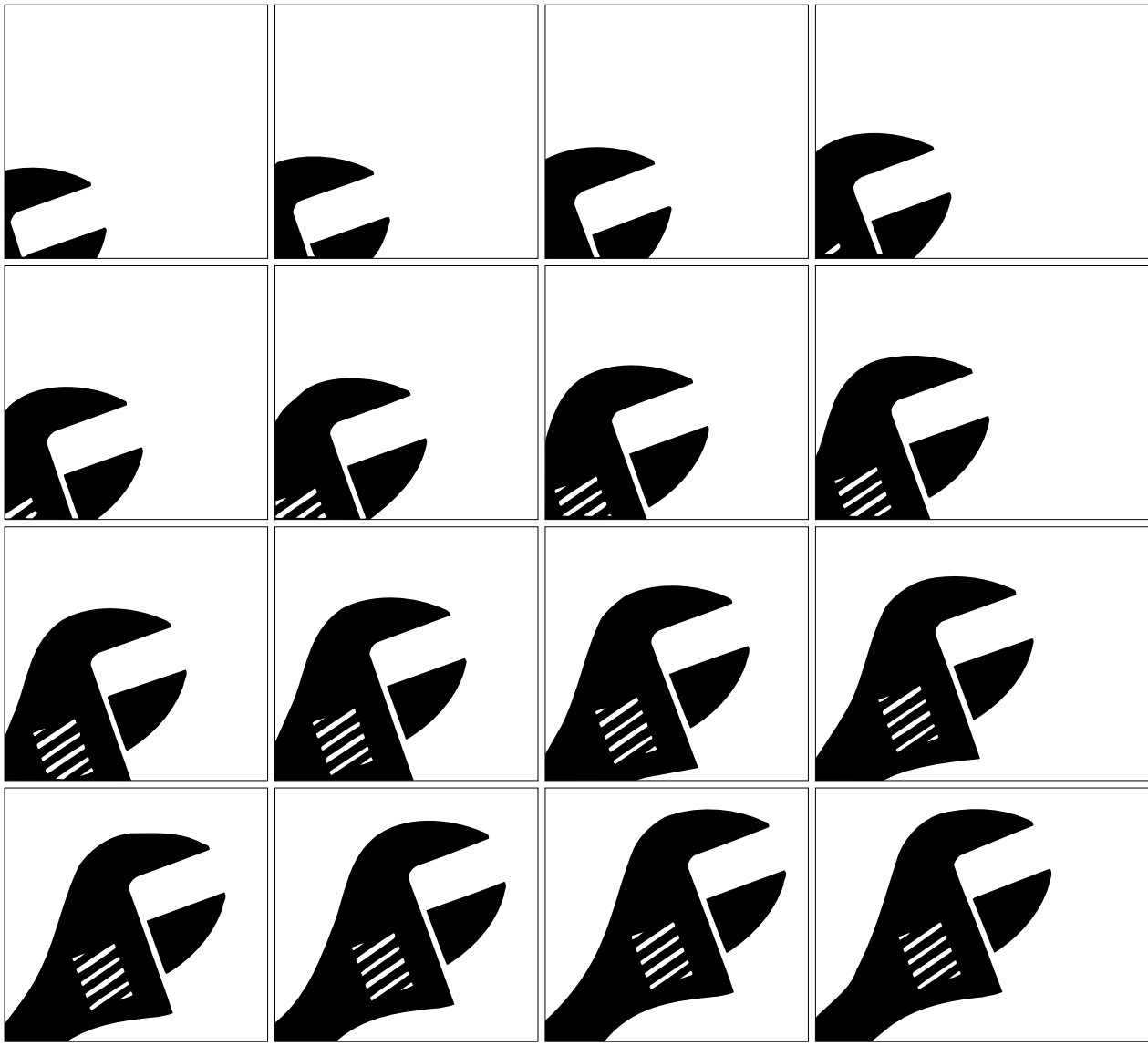

Pub. No. TWSE9501-3

FE.FG

SERVICE MANUAL

FOREWORD

This Service Manual contains maintenance and repair methods for personnel involved in the maintenance and repair of 1999 model Mitsubishi Fuso Truck FE.FG series.
Read this manual carefully as an aid to providing correct, efficient and fast maintenance.
Please note, however, that due to continuous improvements on the specifications, numbers and description for maintenance might be changed without prior notice.
If you have any question, or encounter a problem, please do not hesitate to contact your nearest Mitsubishi Fuso dealer or distributor.

© Mitsubishi Motors Corporation, March 1998

MITSUBISHI FUSO TRUCK OF AMERICA, Inc.

GROUP INDEX

1999 MODEL CHANGES

GENERAL 00

STEERING 37

ELECTRICAL 54

1999 MODEL CHANGES

1999 MODEL CHANGES

Item	'99 Model	⇦	'98 Model
Gr 00 General • Automatic transmission has changed. • Maximum GVW has changed. • The vehicle identification number has changed. • Connectors are added.	🕮 Gr 00		—
Gr 11 Engine • Configuration of piston's combustion chamber is different.	Combustion chamber 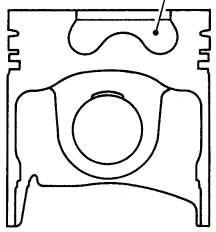 30330		Combustion chamber 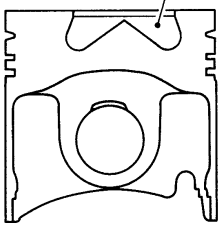 30331
Gr 13 Fuel and engine control • Injection pump system has changed to electronic control system.	Electronic governor and pre-stroke control injection pump system Gr 13 Fuel and engine control '99 Minor change (Pub. No. TWSE9501-313)		Mechanical governor and pre-stroke control injection pump system
• Governor has changed from mechanical type to electronic type.	Electronic governor 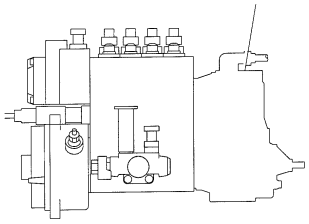 Ⓟ31496 Governor type: RED-III Electronic control governor Gr 13 Fuel and engine control '99 Minor change (Pub. No. TWSE9501-313)		Mechanical governor 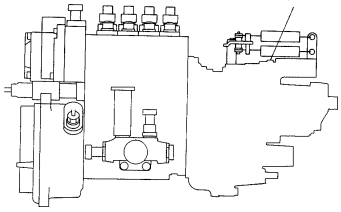 31497 RLD-J all-speed mechanical governor with boost compensator
• Fuel injection timing is different.	3°±0.5°BTDC		7°±0.5°BTDC

Item	’99 Model ⇦ ’98 Model
• Engine control system changed due to the use of electronic governor. Gr 13 Fuel and engine control ’99 Minor change (Pub. No. TWSE9501-313)	< ’99 Model > 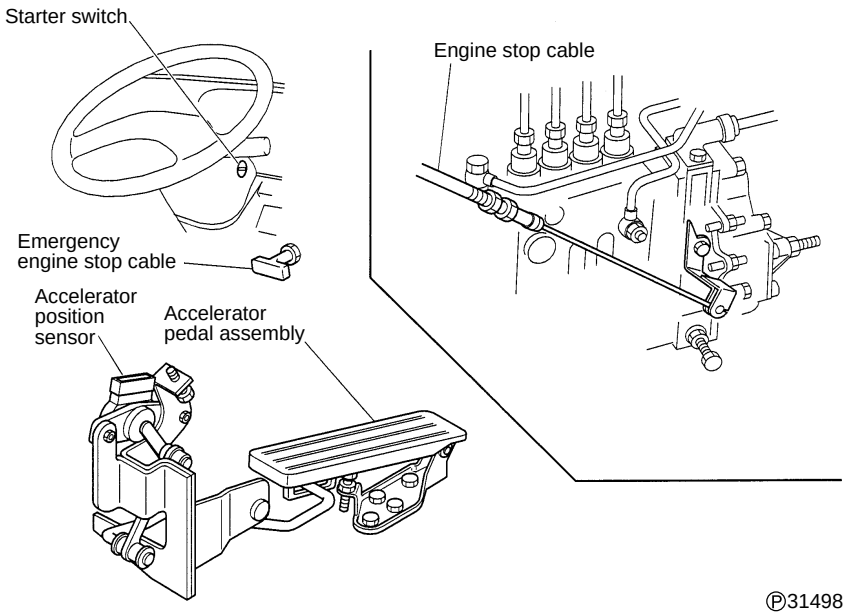 Ⓟ31498 < ’98 Model > 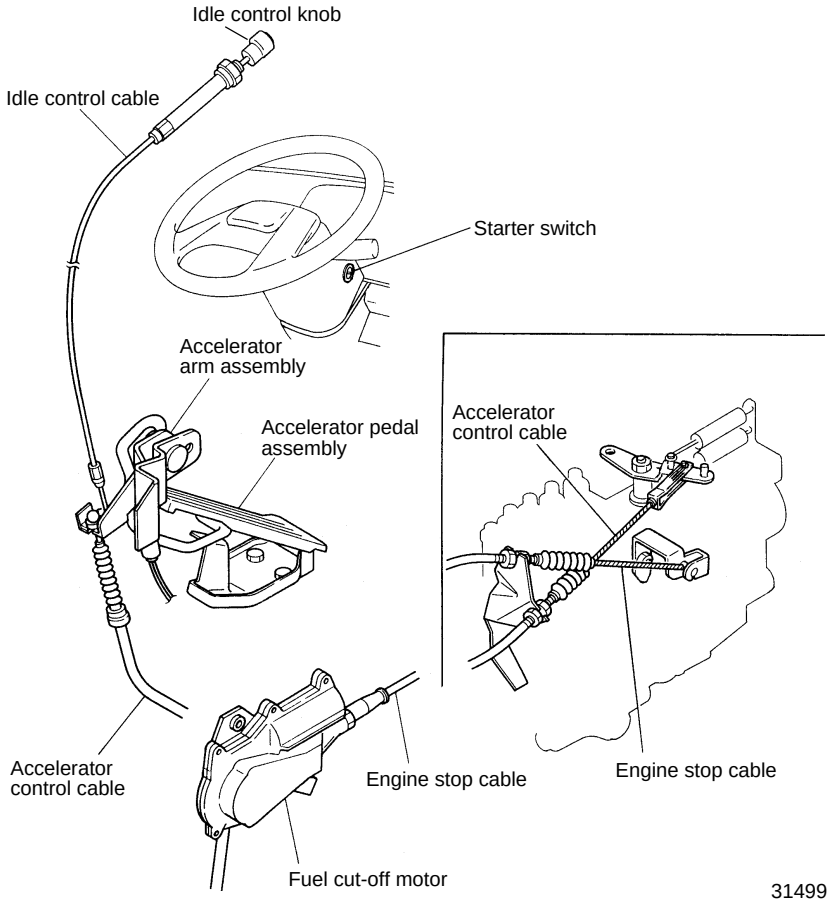 31499

Item	'99 Model ⇦ '98 Model
Gr 14 Cooling • Shapes of thermostat cover and thermostat case are different.	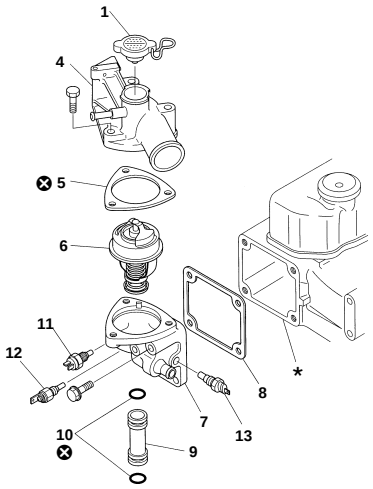 Ⓟ30332 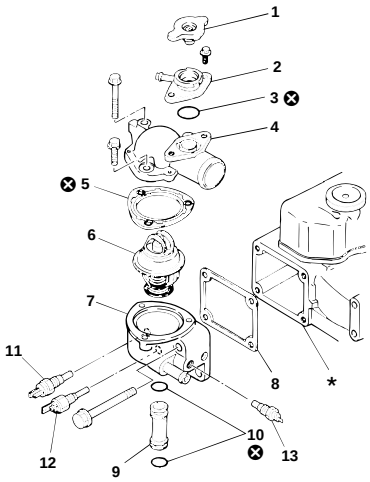 10846 ● **Disassembly sequence** **1** Pressure cap **2** Water filter **3** O-ring **4** Thermostat cover **5** Thermostat cover gasket **6** Thermostat **7** Thermostat case **8** Thermostat case gasket **9** Bypass pipe **10** O-ring **11** Water temperature sensor (Water temperature gauge and multipurpose timing control unit) Gr 54 **12** Overheating switch Gr 54 **13** Water temperature sensor (Pre-stroke control type injection pump) Gr 54 ★ : Cylinder head ⊗ : Non-reusable parts ● **Assembly sequence** Follow the disassembly sequence in reverse. **CAUTION⚠** **Be sure to apply soapy water to O-ring 3, 10 for easier fitting. Never use engine oil because it will cause the O-ring to swell.**
Gr 15 Intake and Exhaust • Boost compensator hose was replaced by boost pressure sensor hose due to the installation of boost pressure sensor.	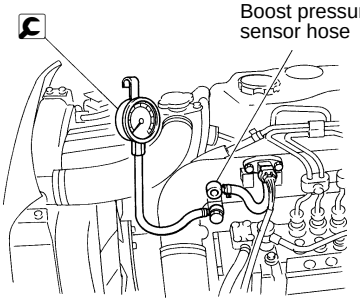 Boost pressure sensor hose 30333 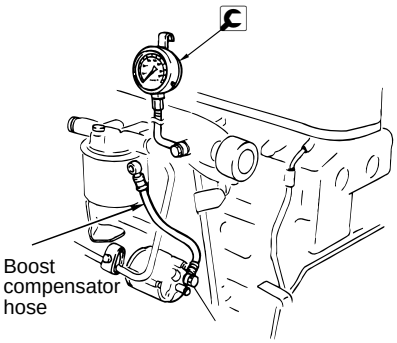 Boost compensator hose 11383

Item	’99 Model ⇦	’98 Model

Gr 23 Automatic Transmission

- Automatic transmission changed from M030A4 to M035A4.

Transmission model			M035A4	M030A4	
Manufacturer			AISIN	JATCO	
Torque converter	Type		Symmetrical 3-element, 1-stage, 2-phase type		
	Stall torque ratio		1.82	2.0	
	Lock-up mechanism		Equipped	Equipped	
Automatic transmission	Type		Planetary gear type, 4 forward speeds, 1 reverse speed		
	Gear ratio			FE639	FE649
		1st	3.018	3.028	2.784
		2nd	1.548	1.570	1.544
		3rd	1.000	1.000	1.000
		4th	0.703	0.724	0.694
		Reverse	2.678	2.625	2.275
Control system			Electronic control hydraulic system		

Gr 23 Automatic transmission
’99 Minor change
(Pub. No. TWSE9501-323)

Gr 37 Steering

- Steering wheel is different.

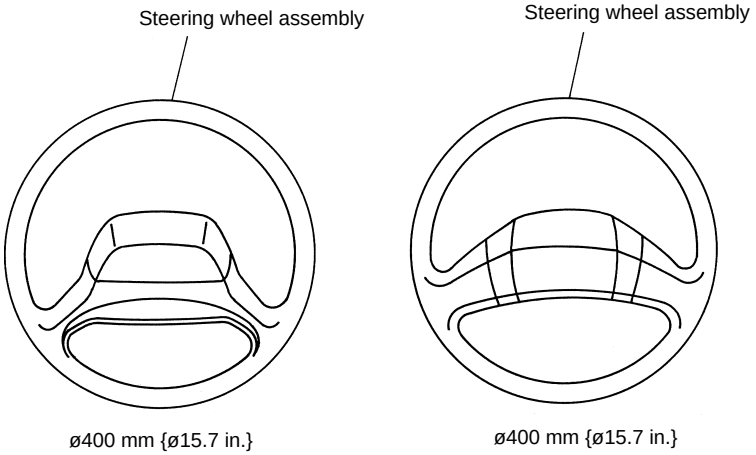

30368

- Steering system is different.

Gr 37 Steering | —

Gr 42 Cab

- Side door beams are added.

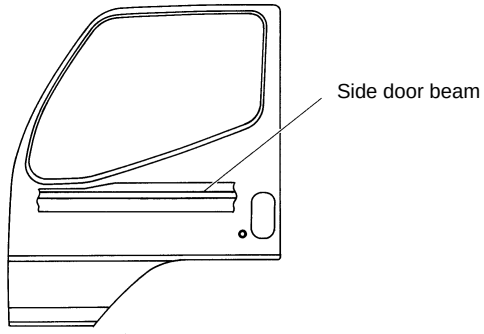

30546

1999 MODEL CHANGES

Item	'99 Model ⇦ '98 Model
Gr 54 Electrical • Diode layout and mounting position changed as shown on the right.	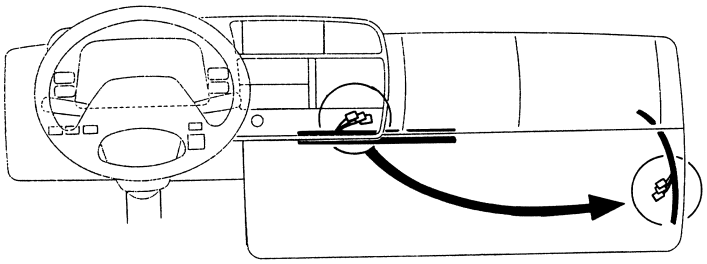 30860 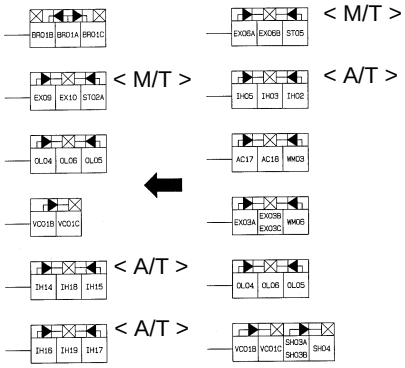 M/T : Manual transmission A/T : Automatic transmission 30823
1 **POWER, CHARGING AND GROUND** • Battery has changed.	115E41R / 95E41R
• Battery box shape is different.	< '98 Model > 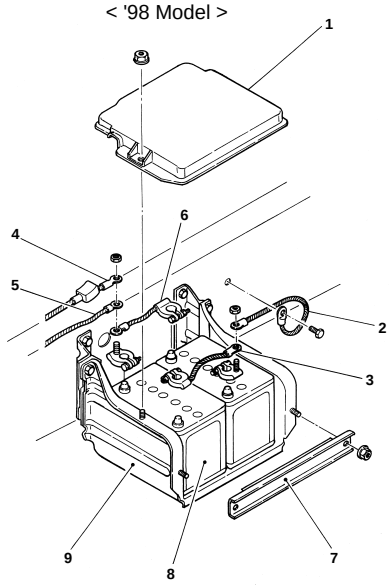 10908 ● **Removal sequence** **1** Battery cover **2** Ground cable **3** Battery cable (–) **4** Starter cable **5** Chassis harness **6** Battery cable (+) **7** Battery side cover **8** Battery **9** Battery box ● **Installation sequence** Follow the removal sequence in reverse.

Item	’99 Model	⇦	’98 Model
• Battery box shape is different.	< '99 Model > 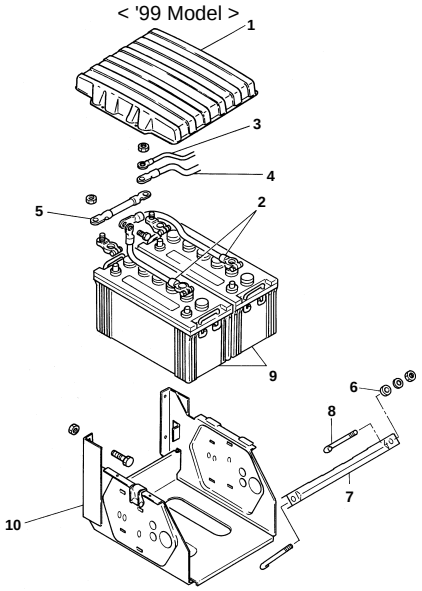 30310 ● **Removal sequence** **1** Battery cover **2** Battery cable (–) **3** Harness (Main high-current fuse) **4** Starter cable **5** Battery cable (+) **6** Rubber **7** Angle frame **8** Set bolt **9** Battery **10** Battery box ● **Installation sequence** Follow the removal sequence in reverse.		
• Capacities of high-current fuses are different.	FH7 (80A Alternator) 80A FH7 (100A Alternator) 100A		FH7 (80A Alternator) 100A FH7 (100A Alternator) 100A
• High-current fuse box (FH8) for alternator is added.	FH8 (80A Alternator) 80A FH8 (100A Alternator) 100A (125) BATTERY CHARGING CIRCUIT 🕮 P54-4		
• Capacities of fuses listed on the right and main load specifications have changed.	F4 Turn signal lamps 15A Discontinued Discontinued F18 Transmission neutral relay < Manual transmission > 10A Inhibitor switch < Automatic transmission > 10A F23 Automatic transmission control unit 15A F25 Pre-stroke cut-off relay 10A F28 Electronic governor control unit 5A		F4 Turn signal lamps, pre-stroke control unit 15A F5 Fuel cut-off motor 10A F17 Fuel cut-off relay 10A F18 Transmission neutral switch < Manual transmission > 10A Inhibitor switch < Automatic transmission > 10A F23 Automatic transmission control unit 10A F25 Pre-stroke cut-off relay 15A —
2 ENGINE STARTING, PREHEATING AND STOPPING • (215) Engine stopping circuit was discontinued due to the use of electronic governor. (Fuel cut-off relay and fuel cut-off motor were also discontinued.)	Electronic control engine stopping device Gr 13 Fuel and engine control		Electric and wire-operated engine stopping device 🕮(215) Engine stopping circuit
• Circuit indicated on the right changed due to the use of neutral start relay.	(210) ENGINE STARTING CIRCUIT 🕮 P54-6, 8		

<table>
<tr><th>Item</th><th>’99 Model ⇦ ’98 Model</th></tr>
<tr><td>• (212) Sub-starter circuit was discontinued.</td><td>—</td></tr>
<tr><td>• Circuit indicated on the right changed due to the use of electronic governor.</td><td>(225) ENGINE WARMING UP CIRCUIT 🕮 P54-10</td></tr>
<tr><td>3 LIGHTING
• Circuit indicated on the right changed due to the use of backup lamp relay.</td><td>(340) BACKUP LAMP CIRCUIT <AUTOMATIC TRANSMISSION > 🕮 P54-12</td></tr>
<tr><td>4 METER
• Warning indicator lamp is added due to the use of electronic governor.</td><td>(Orange) Electronic governor warning lamp
(Red) Pre-stroke warning lamp
< Internal circuit of meter cluster >
 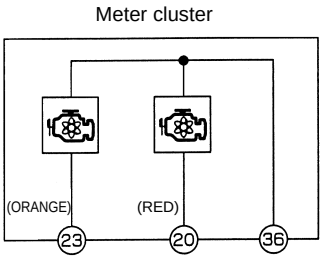

< Back side of meter cluster >
 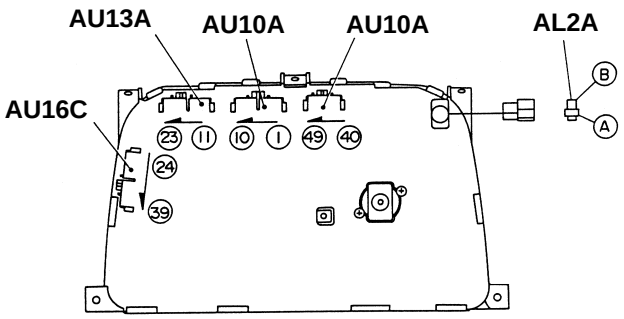

30849
<table>
<tr><th>Connector No.</th><th>Terminal No.</th><th></th></tr>
<tr><td>AU13A</td><td>20</td><td>Electronic governor control unit</td></tr>
<tr><td></td><td>23</td><td>Electronic governor control unit</td></tr>
<tr><td>AU16C</td><td>36</td><td>Starter switch terminal (M)</td></tr>
</table></td></tr>
<tr><td>6 RELAY AND CONTROL UNIT
• Relays listed on the right are added. Refer to 🕮 P54-14 for service procedure.</td><td>Transmission neutral relay < Manual transmission >
Exhaust brake cut relay < Automatic transmission >
Backup lamp relay < Automatic transmission >
Exhaust brake relay
Neutral start relay</td></tr>
<tr><td>7 CHASSIS SIDE ELECTRICAL
• Circuit indicated on the right changed due to the use of electronic governor.</td><td>(710) EXHAUST BRAKE CIRCUIT 🕮 P54-16, 20</td></tr>
</table>

GROUP 00 GENERAL

POWER TRAIN TABLE 00-2

VEHICLE IDENTIFICATION NUMBER 00-2

CONNECTOR CONFIGURATION CHART 00-3

POWER TRAIN TABLE/VEHICLE IDENTIFICATION NUMBER

POWER TRAIN TABLE

Model	Engine model	Clutch model	Transmission model	Propeller shaft	Rear axle model	Final reduction and gear ratio
FE639C, E, F G.V.W. 5262 kg {11600 lb}	4D34T3 135 HP/2900 rpm 253 lbf.ft/1600 rpm (SAE, Gross)	C4W30	M035S5 5.380/0.722	P3	R033T	D033H 5.714
		Torque converter	M035A4 3.018/0.703			
FE639C, E, F G.V.W. 6123 kg {13500 lb}		C4W30	M035S5 5.380/0.722			
		Torque converter	M035A4 3.018/0.703			
FG639C, E G.V.W. 5443 kg {12000 lb}		C4W30	M035S5+TF3 5.380/0.722	P2 (Front) P3 (Rear)		D1H modified 5.714 (Front) D033H 5.714 (Rear)
FE649C, E, F G.V.W. 6575 kg {14500 lb}	4D34T3 145 HP/2900 rpm 275 lbf.ft/1600 rpm (SAE, Gross)	C4W30	M035S5 5.380/0.722	P3		D033H 5.714
		Torque converter	M035A4 3.018/0.703			

VEHICLE IDENTIFICATION NUMBER

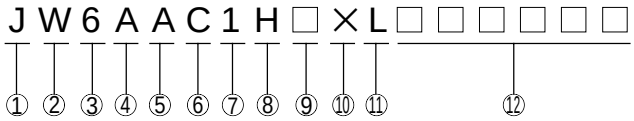

①	Country	J :	Japan
②	Make	W :	Mitsubishi Fuso
③	Vehicle type	6 :	Incomplete Vehicle
④	Gross vehicle weight/Brake system	A :	10001 to 14000 lbs/Hydraulic
		B :	14001 to 16000 lbs/Hydraulic
⑤	Line	A :	FE639
		B :	FE649 FG639
⑥	Series (Wheelbase)	C :	2.6 to 2.89 m {108.3 to 109.4 in}
		E :	3.2 to 3.49 m {131.9 to 133.1 in}
		F :	3.5 to 3.79 m {148.0 in}
⑦	Cab chassis type	1 :	Chassis cab
⑧	Engine	H :	238 CID Diesel turbocharged and charge air cooled
⑨	Check digit		
⑩	Model year	X :	1999
⑪	Plant	K :	Kawasaki-1
		L :	Kawasaki-2
		M :	Kawasaki-3
		N :	Nakatsu
⑫	Plant sequential number		

CONNECTOR CONFIGURATION CHART

Connector is added due to the use of electronic governor.

Type (numeral indicates number of terminal)		Female-Male	
AQ	AQ5A	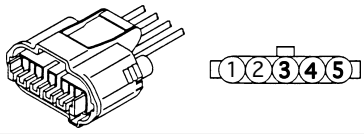	
BN	BN14	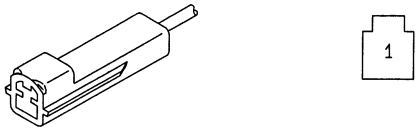	
BZ	BZ12A		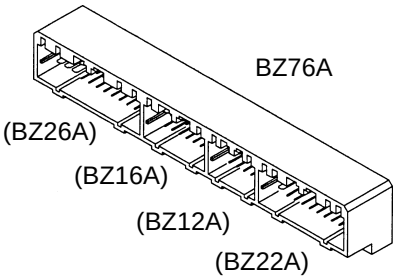
	BZ16A	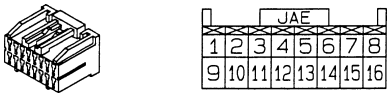	
	BZ22A	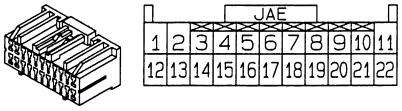	
	BZ26A	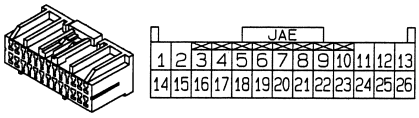	
CB	CB16A	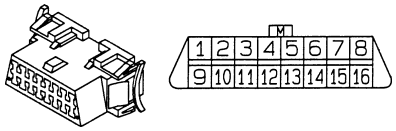	
CH	CH3A	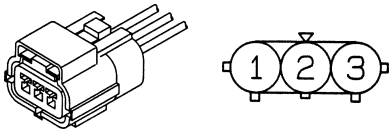	
CM	CM28A	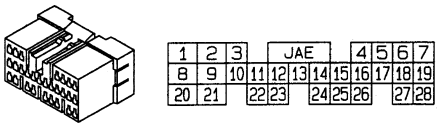	
	CM30A	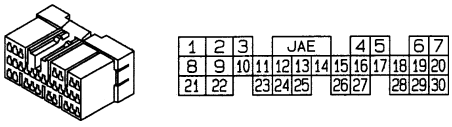	
	CM35A	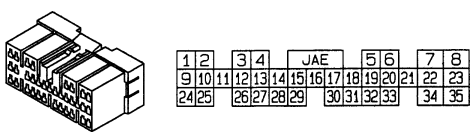	

GROUP 37 STEERING

STEERING SYSTEM 37- 2

STEERING SYSTEM

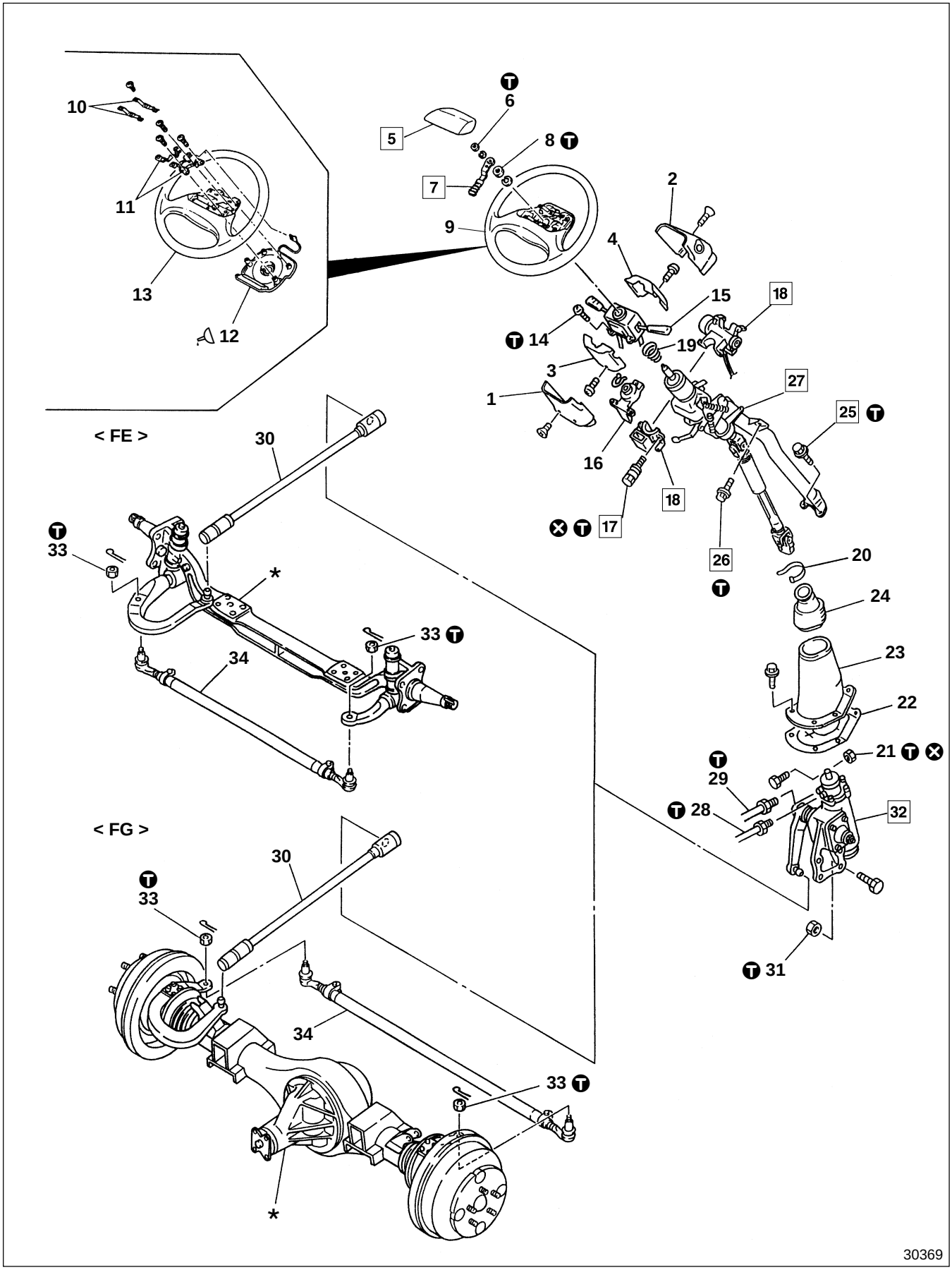

● **Removal sequence**

1 Column cover outer lower
2 Column cover outer upper
3 Column cover inner lower
4 Column cover inner upper
5 Horn pad
6 Nut
7 Telescopic lever
8 Nut
9 Steering wheel assembly
10 Horn spring
11 Contact plate
12 Cover assembly
13 Steering wheel
14 Screw
15 Combination switch Gr 54
16 Bracket
17 Head cutting bolt
18 Starter switch Gr 54
19 Spring
20 Band
21 Nut
22 Dust cover
23 Dust cover
24 Dust cover
25 Bolt
26 Bolt
27 Steering column subassembly Gr 37
28 Pressure tube Gr 37
29 Return tube Gr 37
30 Drag link Gr 37
31 Nut
32 Power steering booster Gr 37
33 Nut
34 Tie rod assembly Gr 37

***** : Front axle assembly
< FE > Gr 26
< FG > Gr 26B

⊗ : Non-reusable parts

CAUTION⚠

When disconnecting pressure tube 28 and return tube 29, cover the ports to keep them free from dust and other foreign particles.

● **Installation sequence**

Follow the removal sequence in reverse.

Ⓣ Tightening torque

Unit : N·m {lbf.ft, kgf·m}

Location	Parts to be tightened	Tightening torque	Remarks
6	Nut (Telescopic lever mounting)	8.8 to 9.8 {6.5 to 7.2, 0.9 to 1.0}	—
8	Nut (Steering wheel assembly mounting)	39 to 49 {29 to 36, 4 to 5}	—
14	Screw (Combination switch mounting)	2.5±0.5 {1.8±0.4, 0.25±0.05}	—
17	Head cutting bolt (Starter switch mounting)	14.2±1.5 {10±1.1, 1.45±0.15}	—
21	Nut (Steering column subassembly and power steering booster mounting)	53 to 65 {39 to 48, 5.4 to 6.6}	—
25	Bolt (Steering column at floor side mounting)	17 to 26 {12 to 19, 1.7 to 2.6}	—
26	Bolt (Steering column subassembly to instrument panel side mounting)	17 to 26 {12 to 19, 1.7 to 2.6}	—
28	Pressure tube	29 to 39 {22 to 29, 3 to 4}	—
29	Return tube	39 to 49 {29 to 36, 4 to 5}	—
31	Nut (Power steering booster mounting)	83.5 to 108 {61 to 80, 8.5 to 11.0}	—
33	Nut (Tie rod assembly mounting)	93±25 {69±18, 9.5±2.5}	—

Lubricant

Location	Points of application	Specified lubricant	Quantity
12	Contact area between combination switch of cover assembly and horn contact	Wheel bearing grease [NLGI No.2 (Li soap)]	As required

◆ Service procedure

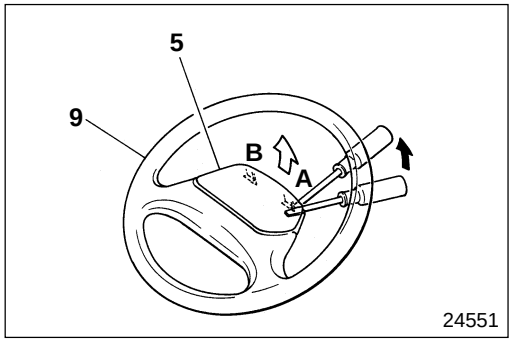

5 Removal of horn pad

- Insert a flat-tip screwdriver into the space between steering wheel assembly **9** and shoulder sections **A**, **B** of horn pad **5**, and disengage the latch by prying open the horn pad with the screwdriver until a clicking sound is produced.
- Insert fingers into the space behind lifted horn pad **5** and remove the horn pad.

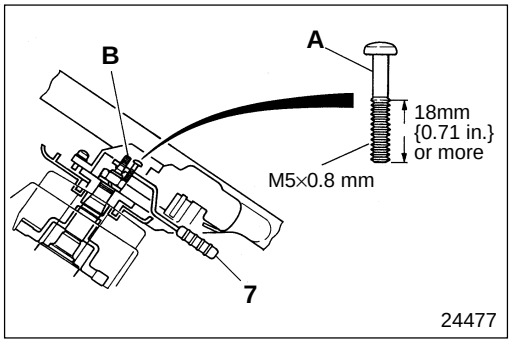

7 Telescopic lever

[Removal]
Secure screw **A** (M5×0.8 mm) in tapped hole in telescopic lever **7** and remove telescopic lever from telescopic shaft **B**.

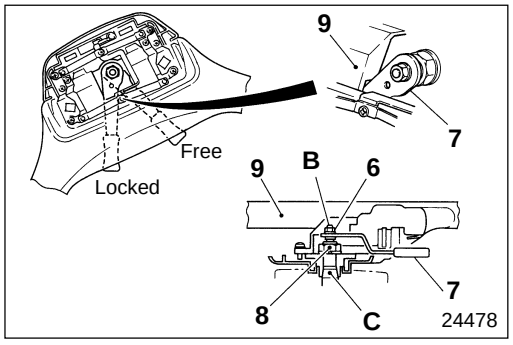

[Installation]
Make adjustment so that telescopic lever **7** positioned at the designated location applies the specified torque on telescopic shaft **B**.

CAUTION
Be careful not to damage the threads on the tip of telescopic shaft B.

C : Telescopic shaft assembly

Start procedure

Install steering wheel assembly **9**. Using a long socket wrench, tighten nut **8** at specified torque 39 to 49 N·m {29 to 36 lbf.ft, 4 to 5 kgf·m}

Looseness found

Rotate telescopic shaft **B** counterclockwise with your fingers and check for looseness

No looseness

Using a flat-blade screwdriver turn telescopic shaft **B** clockwise and drive it in until it hits lightly with a "clunk", but do not turn it any further

CAUTION⚠

Be careful not to over tighten or you will crush the end of the telescopic shaft, requiring replacement of telescopic shaft assembly C

Install telescopic lever **7** at a location that allows easy tightening, then tighten nut **6** until the telescopic lever will not slip

Tighten telescopic shaft **B** at operating torque 6.9 to 7.8 N·m {5.1 to 5.8 lbf.ft, 0.7 to 0.8 kgf·m}. (Tighten telescopic bar **7** at torque 69 to 78 N {15 to 18 lbf, 7 to 8 kgf} at 100 mm {3.94 in.} from the center of steering wheel assembly **9**)

To maintain lock, hold telescopic lever **7** clockwise, then loosen and remove lock nut **6**

Remove telescopic lever **7**

NOTE

Remove telescopic lever 7 following the description under [Removal], taking care not to loosen telescopic shaft B.

Set telescopic lever **7** to specified lock position (within 10° before the position at which telescopic lever contacts steering wheel assembly **9**).

Tighten nut **6** at specified torque 8.8 to 9.8 N·m {6.5 to 7.2 lbf.ft, 0.9 to 1.0 kgf·m}

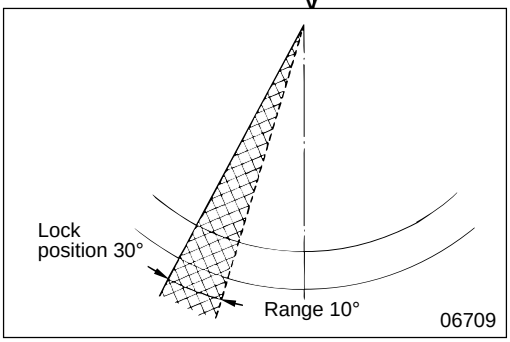

When telescopic lever **7** is released, and telescopic shaft **B** is retightened at operating torque 6.9 to 7.8 N·m {5.1 to 5.8 lbf.ft, 0.7 to 0.8 kgf·m}, the telescopic lever should lock in the 10° range this side of specified lock position 30°

Out of the range

Within the range

Jiggle steering wheel assembly **9** up and down and check for looseness

Looseness found

No looseness

Remove nut **6**

Procedure is completed

Remove telescopic lever **7**

CAUTION⚠

Be sure not to operate telescopic shaft B while steering wheel assembly 9 is removed.

NOTE

Be sure to assemble telescopic lever 7 only after steering wheel assembly 9 has been installed.

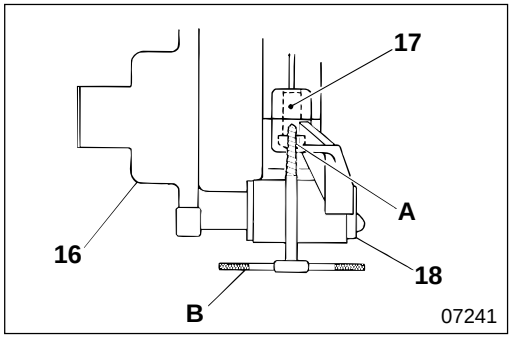

17 **18** **Head cutting bolt, starter switch**

[Removal]

- After removing bracket **16**, drill a ø5.5 to 6.0 mm {0.22 to 0.24 in.} hole 10 to 15 mm {0.39 to 0.59 in.} deep on cutting face **A** of head cutting bolt **17** for mounting starter switch **18**.
- Screw in screw extractor **B** counterclockwise, then pull out head cutting bolt **17**.

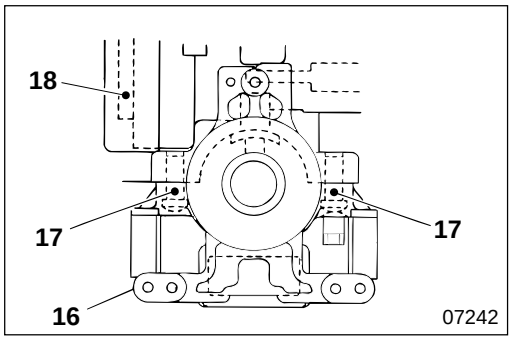

[Installation]

- With new head cutting bolt **17**, tighten starter switch **18** at specified torque to cut the head off the bolt.
- After installing bracket **16**, verify operation of the steering lock function of starter switch **18**.

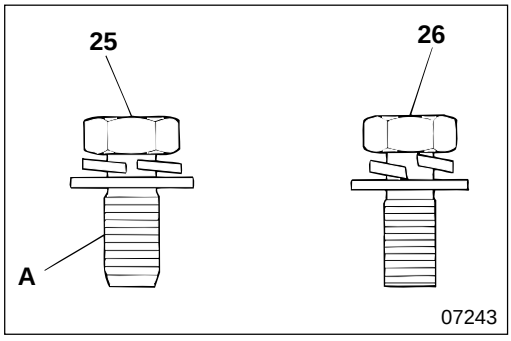

25 **26** **Installation of bolt**

Bolts **25** and **26**, differ in shape. Do not mix them up when installing.

NOTE

Thread area A of bolt 25 is elliptical to facilitate grounding of the horn circuit.

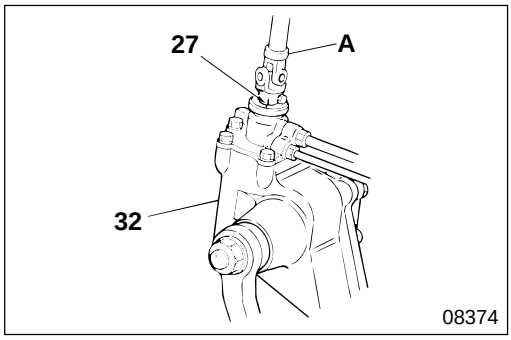

27 **32** **Removal and installation of steering column subassembly and power steering booster**

Before removing steering column subassembly **27**, power streering booster **32**, be sure to make alignment mark **A**.

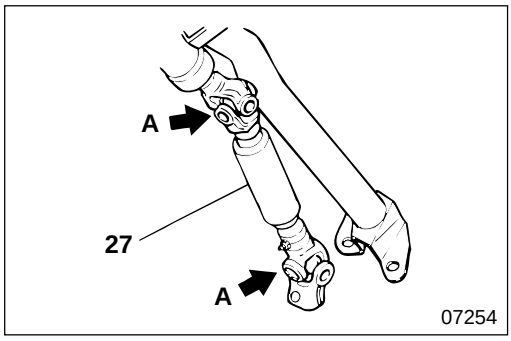

27 **Steering column subassembly**

When the spline of steering column subassembly **27** is disconnected, align the yokes to the same direction **A**.

M E M O

GROUP 54 ELECTRICAL

1 POWER, CHARGE AND GROUND

SPECIFICATIONS 1

STRUCTURE AND OPERATION 1

TROUBLESHOOTING 1

100 INSPECTION AND ADJUSTMENT MOUNTED IN VEHICLE
- Inspection of Alternator 2
- Inspection of Regulator 2

101 BATTERY 1

104 FUSE 1

106 ALTERNATOR 2

110 POWER CIRCUIT 1

115 RESERVE POWER CIRCUIT 1

125 BATTERY CHARGING CIRCUIT 54-4

130 GROUND 1

2 STARTING, PREHEATING, AND STOPPING ENGINE

SPECIFICATIONS 1

STRUCTURE AND OPERATION 1

TROUBLESHOOTING 1

200 INSPECTION AND ADJUSTMENT MOUNTED IN VEHICLE
Inspection of Engine Preheating System 1

201 STARTER 1

210 ENGINE STARTING CIRCUIT
< Manual Transmission > 54-6
< Automatic Transmission > 54-8

220 ENGINE PREHEATING CIRCUIT 1

225 ENGINE WARMING UP CIRCUIT 54-10

3 LIGHTING

SPECIFICATIONS 1

STRUCTURE AND OPERATION 1

TROUBLESHOOTING 1

300 INSPECTION AND ADJUSTMENT MOUNTED IN VEHICLE
Headlamp Aiming 1

310 HEADLAMP CIRCUIT 1

320 TAIL LAMP, CLEARANCE LAMP AND LICENSE PLATE LAMP CIRCUITS 1

325 STOP LAMP CIRCUIT 1

330 TURN SIGNAL LAMP AND HAZARD LAMP CIRCUITS 1

340 BACKUP LAMP CIRCUIT
< Manual Transmission > 1
< Automatic Transmission > 54-12

345 CAB LAMP CIRCUIT 1

348 ILLUMINATION LAMP CIRCUIT 1

349 MARKER LAMP AND IDENTIFICATION LAMP CIRCUITS 1

352 VAN BODY DOME LIGHT CIRCUIT 1

4 METER

SPECIFICATIONS 1

TROUBLESHOOTING 1

401 METER CLUSTER 1

410 TACHOMETER CIRCUIT 1

420 FUEL GAUGE CIRCUIT 1

425 WATER TEMPERATURE GAUGE CIRCUIT 1

5 INDICATOR AND WARNING

TROUBLESHOOTING 1

500 INSPECTION AND ADJUSTMENT MOUNTED IN VEHICLE
- Inspection of Brake Fluid Level Switch 1

510 PARKING BRAKE INDICATOR CIRCUIT [BRAKE] 1

515 BRAKE WARNING CIRCUIT [LOW VACUUM] [BRAKE] 1

535 ENGINE OIL LEVEL AND OIL PRESSURE CIRCUIT 1

537 OVERHEATING WARNING CIRCUIT 1

540 BRAKE PAD WARNING CIRCUIT [DISK BRAKE] 1

550 CAB TILT WARNING CIRCUIT 1

6 CAB SIDE ELECTRICAL

SPECIFICATIONS 1

TROUBLESHOOTING 1

601 SWITCH 1

604 RELAY AND CONTROL UNIT 54-14

606 WARNING BUZZER 1

610 CIGARETTE LIGHTER CIRCUIT 1

612 AUDIO CIRCUIT 1

614 WIPER AND WASHER CIRCUIT 1

616 HORN CIRCUIT 1

618 HEATER CIRCUIT 1

7 CHASSIS ELECTRICS

701 MAGNETIC VALVE 1

710 EXHAUST BRAKE CIRCUIT
< Manual Transmission > 54-16
< Automatic Transmission > 54-20

8 ENGINE AND TRANSMISSION ELECTRICS

801 ENGINE ELECTRICS 1

802 TRANSMISSION ELECTRICS 1

810 FOUR-WHEEL DRIVE CIRCUIT 2

9 OTHERS

STRUCTURE AND OPERATION 1

910 MULTIPURPOSE TIMING CONTROL UNIT CIRCUIT 1

1 : '96 Model Gr 54 (Pub No. TWSE9501-54)
2 : '98 Model Gr 54 (Pub No. TWSE9501-254)

125 BATTERY CHARGING CIRCUIT

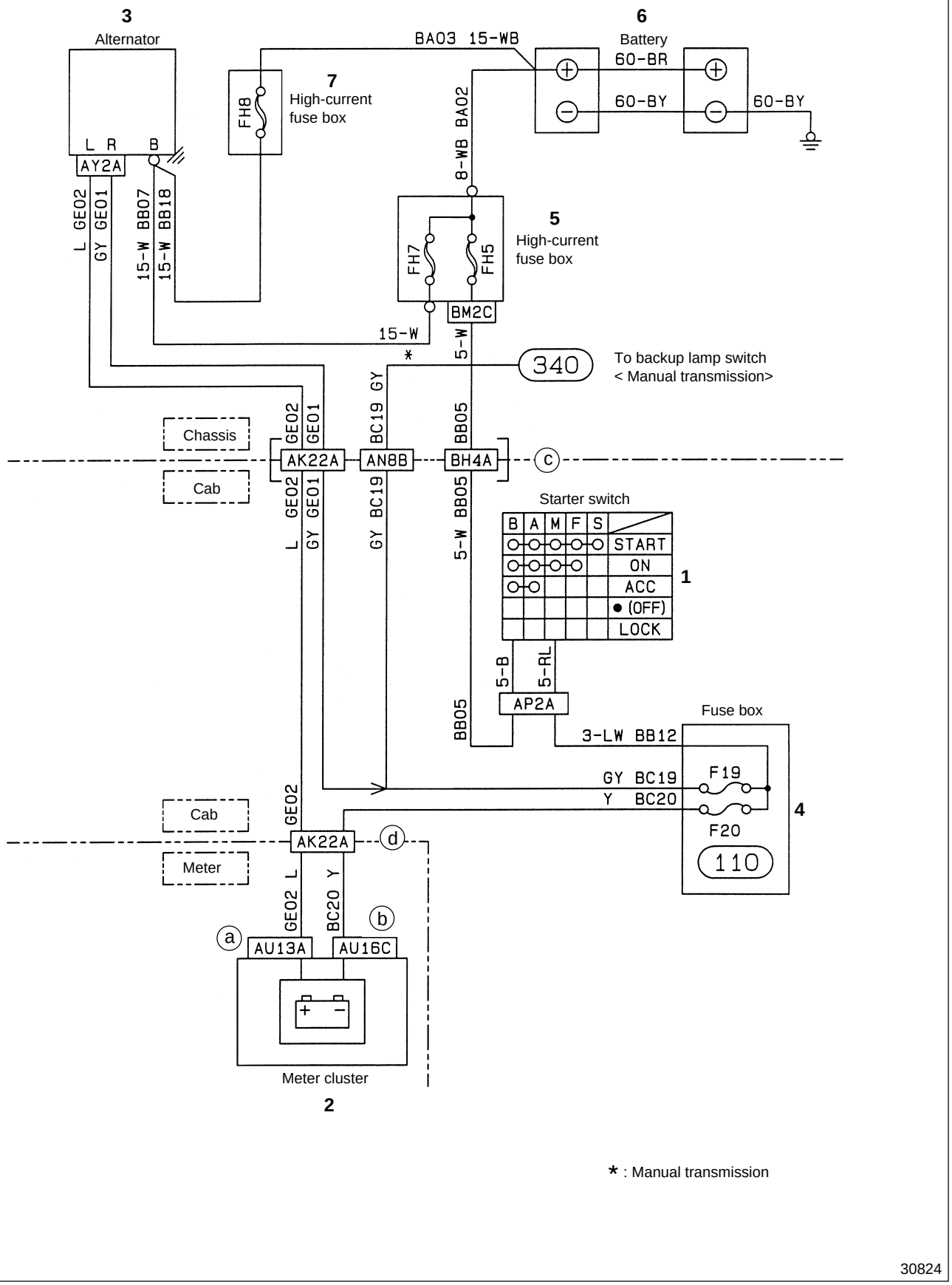

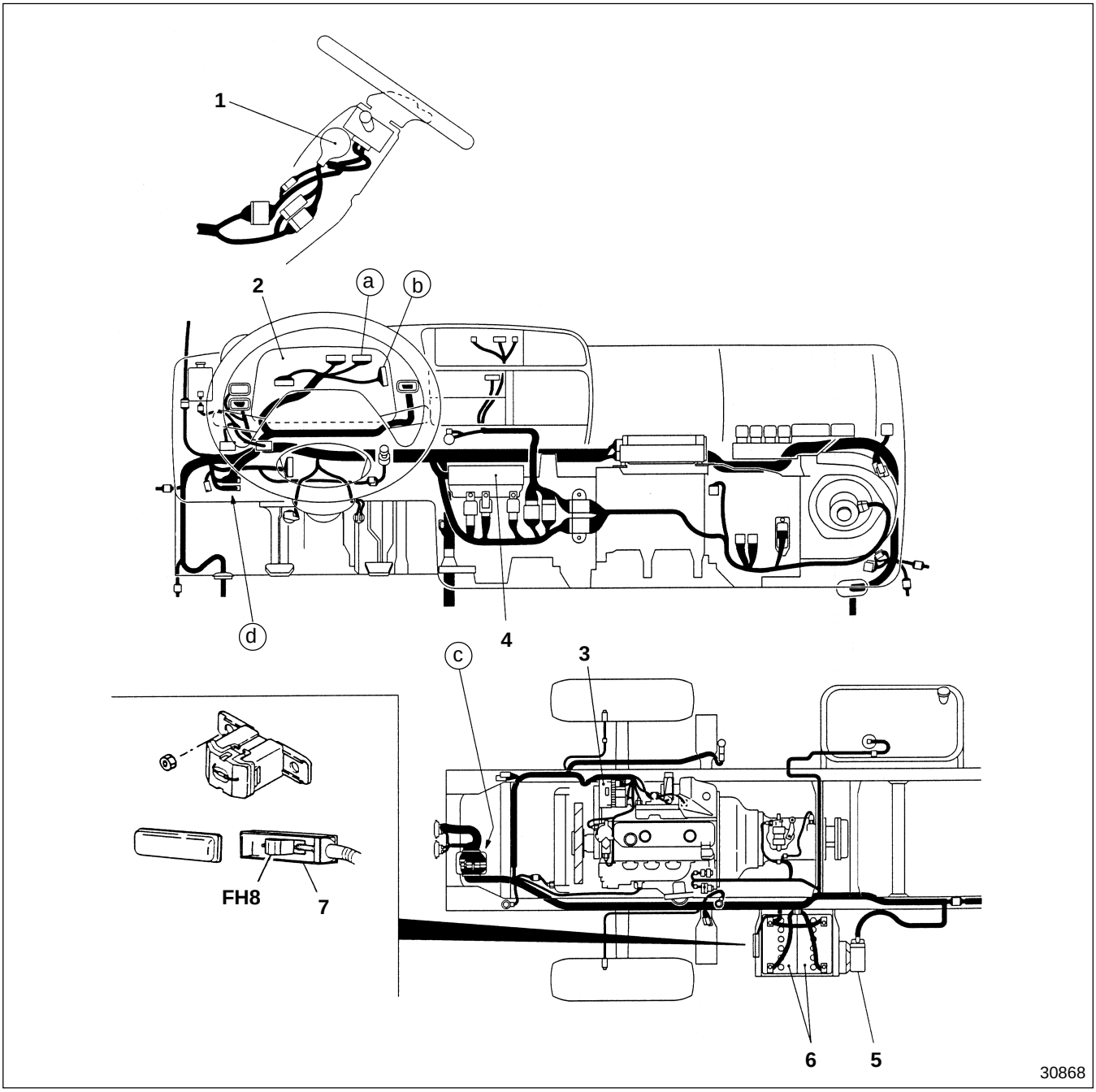

1 Starter switch 1 (210)
2 Meter cluster 1 (401)
3 Alternator 2 (106)
4 Fuse box 1 (104)
5 High-current fuse box 1 (104)
6 Battery 1 (101)
7 High-current fuse box

1 : '96 Model Gr 54 (Pub No. TWSE9501-54)
2 : '98 Model Gr 54 (Pub No. TWSE9501-254)

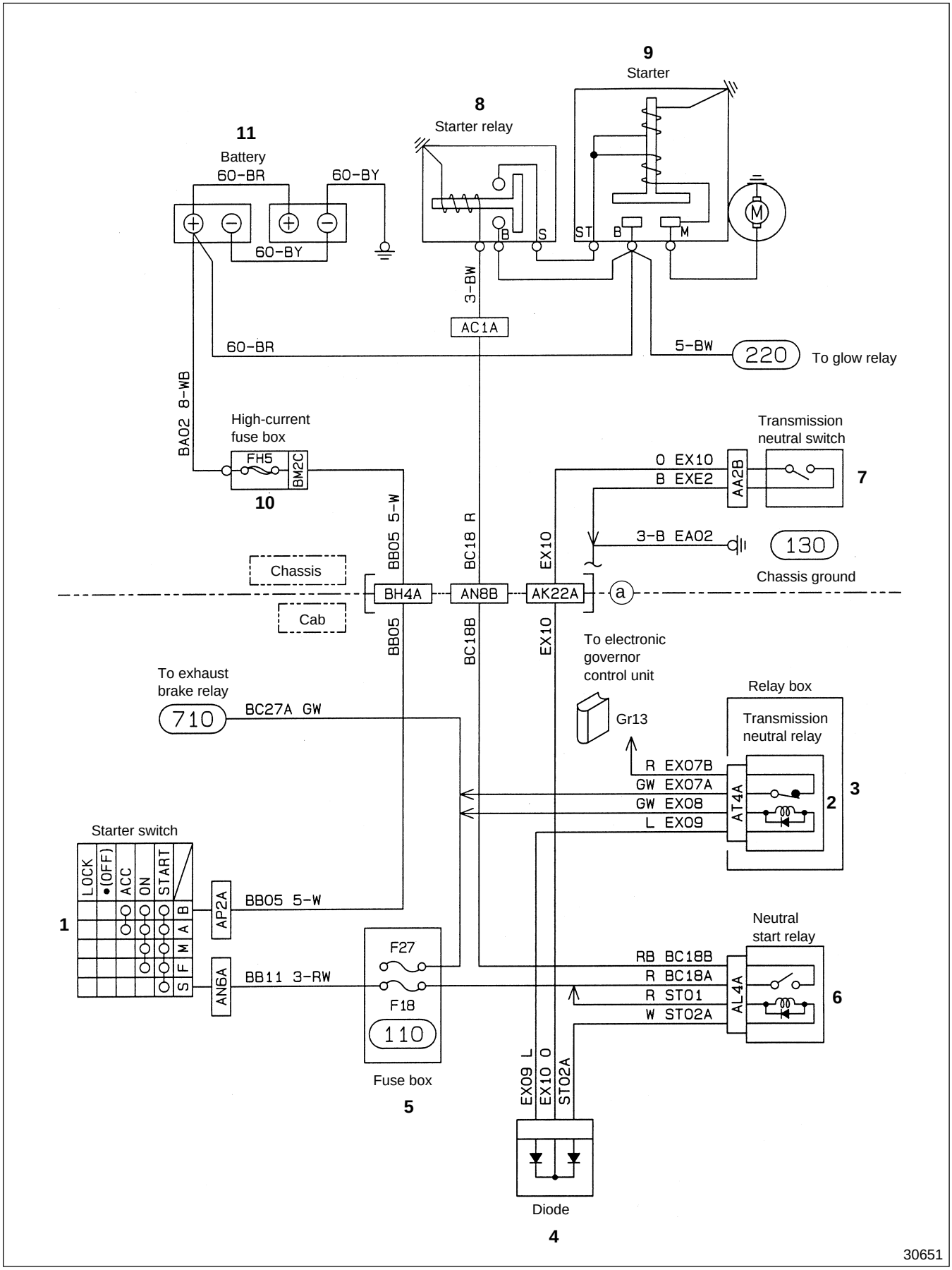
9
Starter
8
Starter relay
11
Battery
60-BR
60-BY
60-BY
B
S
ST
B
M
3-BW
AC1A
60-BR
5-BW
220
To glow relay
BA02 8-WB
High-current
fuse box
FH5
BM2C
10
BB05 5-W
BC18 R
EX10
Transmission
neutral switch
O EX10
B EXE2
AA2B
7
3-B EA02
130
Chassis ground
Chassis
Cab
BH4A
AN8B
AK22A
a
BB05
BC18B
EX10
To electronic
governor
control unit
Gr13
To exhaust
brake relay
710
BC27A GW
Relay box
Transmission
neutral relay
R EX07B
GW EX07A
GW EX08
L EX09
AT4A
2
3
Starter switch
LOCK
(OFF)
ACC
ON
START
S
F
M
A
B
1
AP2A
BB05 5-W
AN6A
BB11 3-RW
F27
F18
110
Fuse box
5
Neutral
start relay
RB BC18B
R BC18A
R ST01
W ST02A
AL4A
6
EX09 L
EX10 O
ST02A
Diode
4
30651

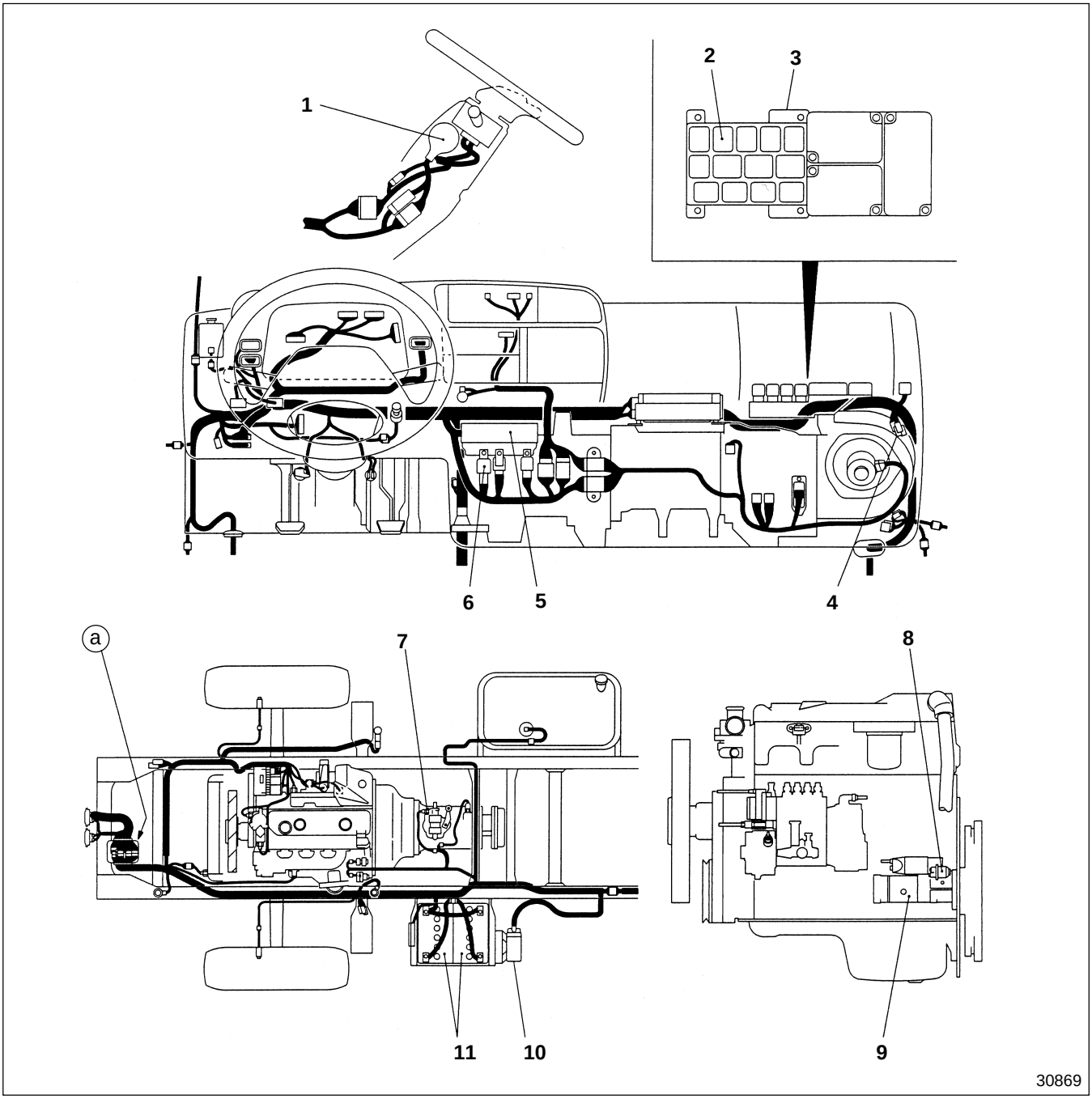

1 Starter switch 210
2 Transmission neutral relay 604
3 Relay box
4 Diode
5 Fuse box 104
6 Neutral start relay 604
7 Transmission neutral switch 802
8 Starter relay 210
9 Starter 210
10 High-current fuse box 104
11 Battery 101

: '96 Model Gr 54 (Pub No. TWSE9501-54)

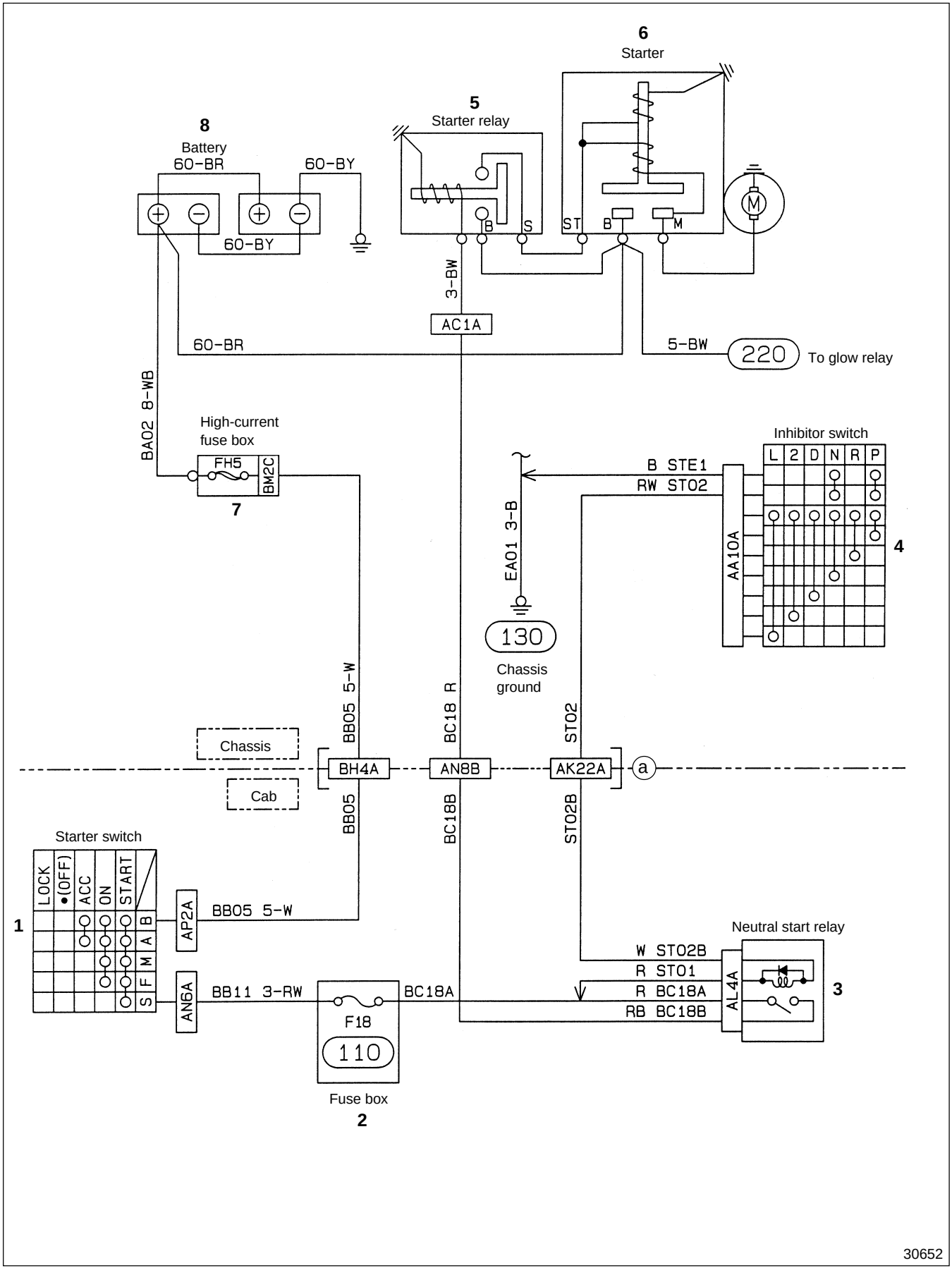
6
Starter
5
Starter relay
8
Battery
60-BR
60-BY
60-BY
60-BY
B
S
ST
B
M
3-BW
AC1A
60-BR
5-BW
220
To glow relay
BA02 8-WB
High-current
fuse box
FH5
BM2C
7
Inhibitor switch
L 2 D N R P
B STE1
RW ST02
AA10A
4
EA01 3-B
130
Chassis
ground
BB05 5-W
BC18 R
ST02
Chassis
Cab
BH4A
AN8B
AK22A
a
BB05
BC18B
ST02B
Starter switch
LOCK
(OFF)
ACC
ON
START
B
A
M
F
S
1
AP2A
BB05 5-W
AN6A
BB11 3-RW
F18
110
Fuse box
2
BC18A
Neutral start relay
W ST02B
R ST01
R BC18A
RB BC18B
AL4A
3
30652

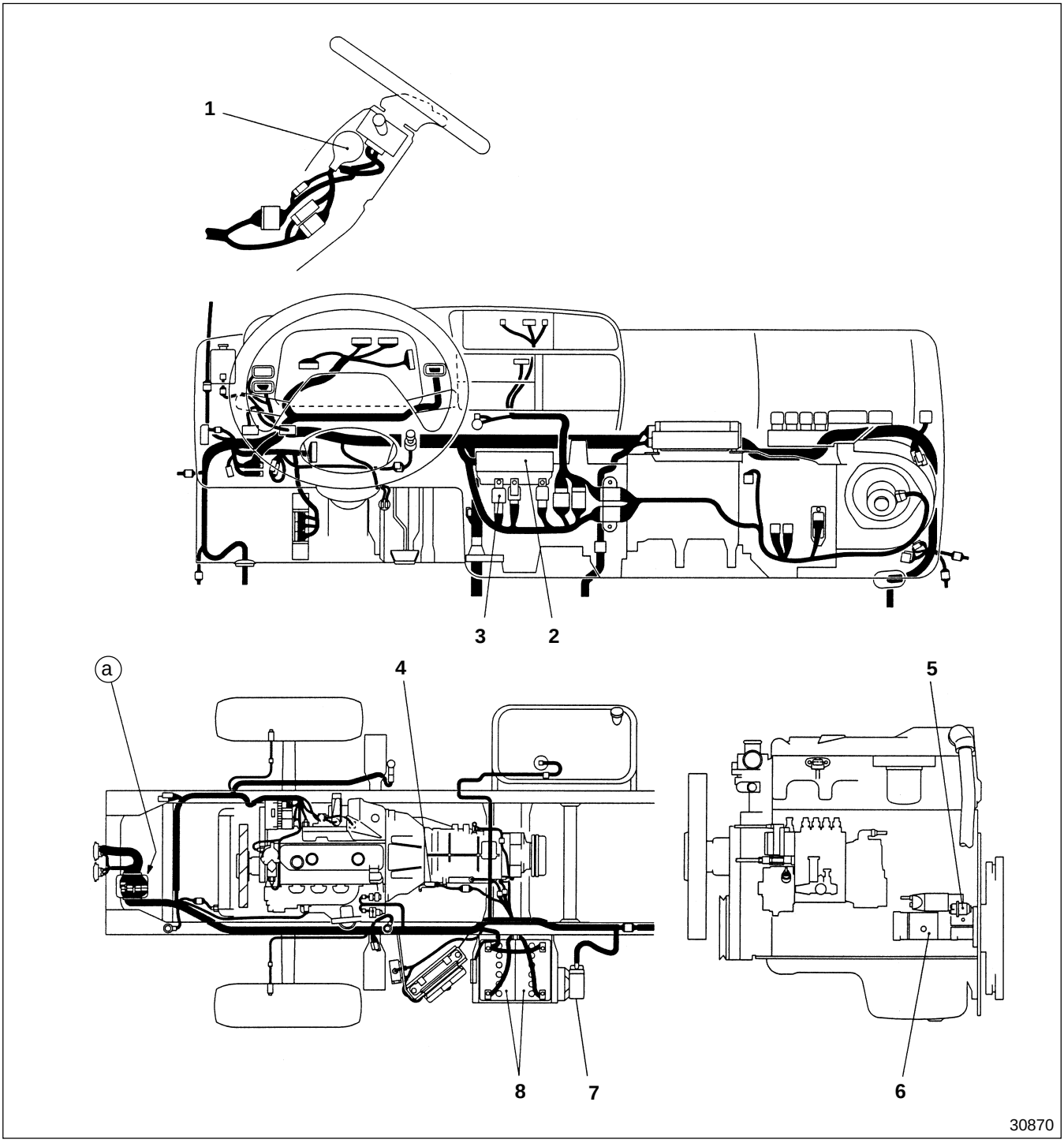

1 Starter switch 1 (210)
2 Fuse box 1 (104)
3 Neutral start relay (604)
4 Inhibitor switch Gr 23
5 Starter relay 1 (210)
6 Starter (210)
7 High-current fuse box (104)
8 Battery (101)

1 : '96 Model Gr 54 (Pub No. TWSE9501-54)

225 ENGINE WARMING UP CIRCUIT

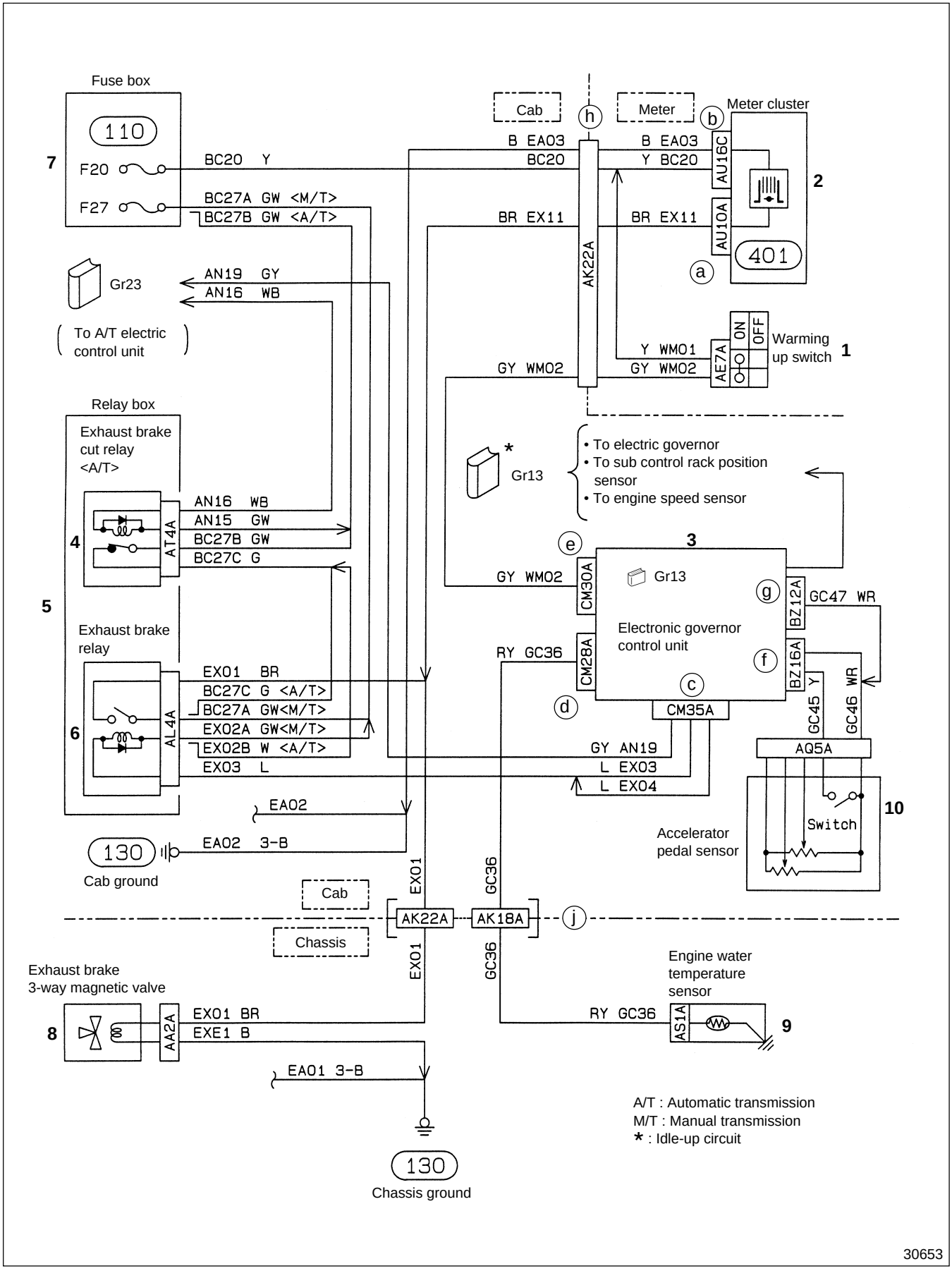

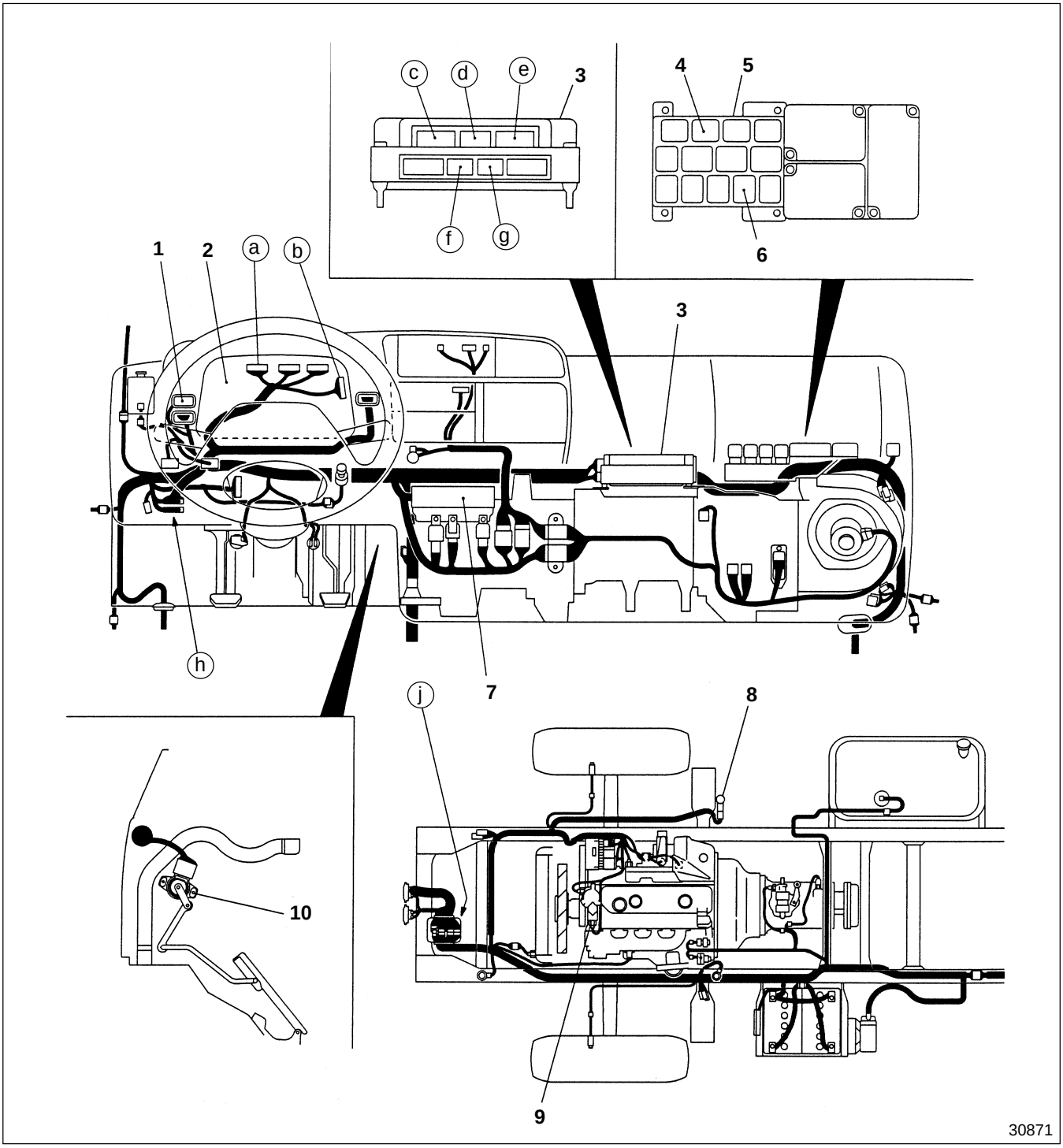

1 Warming up switch 1 (601)
2 Meter cluster 1 (401)
3 Electronic governor control unit Gr 13
4 Exhaust brake cut relay <A/T> (604)
5 Relay box
6 Exhaust brake relay (604)
7 Fuse box 1 (104)
8 Exhaust brake 3-way magnetic valve 1 (701)
9 Engine water temperature sensor Gr 13
10 Accelerator pedal sensor Gr 13

A/T : Automatic transmission
: '96 Model Gr 54 (Pub No. TWSE9501-54)

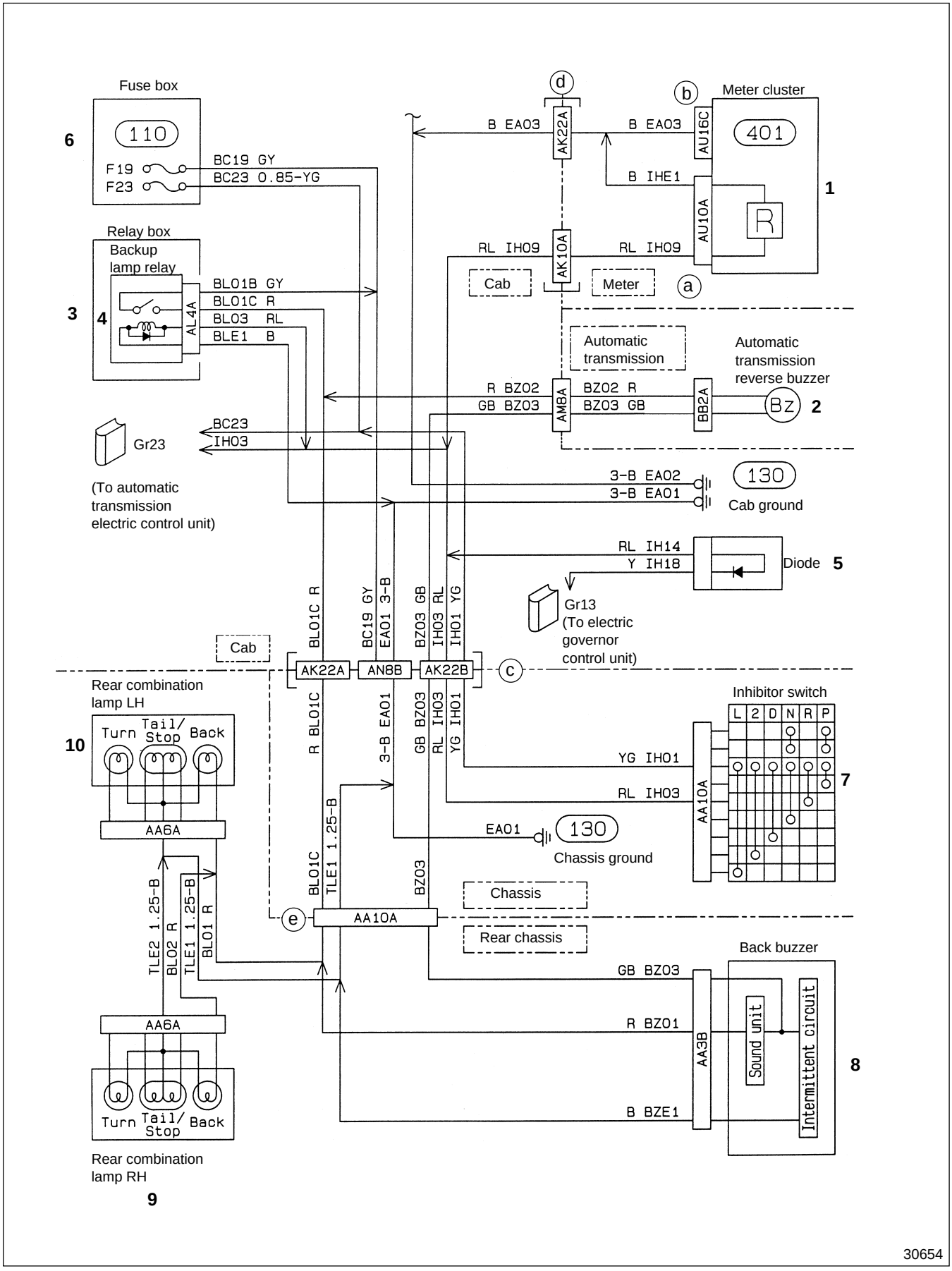
Fuse box
110
F19
F23
BC19 GY
BC23 0.85-YG
Relay box
Backup lamp relay
AL4A
BLO1B GY
BLO1C R
BLO3 RL
BLE1 B
Gr23
BC23
IH03
(To automatic transmission electric control unit)
d
b
Meter cluster
401
B EA03
AK22A
B EA03
AU16C
B IHE1
AU10A
R
RL IH09
AK10A
RL IH09
Cab
Meter
a
Automatic transmission
Automatic transmission reverse buzzer
R BZ02
GB BZ03
AM8A
BZ02 R
BZ03 GB
BB2A
Bz
3-B EA02
3-B EA01
130
Cab ground
RL IH14
Y IH18
Diode
Gr13
(To electric governor control unit)
Cab
AK22A
AN8B
AK22B
c
Rear combination lamp LH
Tail/ Stop
Turn
Back
AA6A
Inhibitor switch
L 2 D N R P
YG IH01
RL IH03
AA10A
EA01
130
Chassis ground
Chassis
e
AA10A
Rear chassis
Back buzzer
GB BZ03
R BZ01
B BZE1
AA3B
Sound unit
Intermittent circuit
TLE2 1.25-B
BL02 R
TLE1 1.25-B
BL01 R
BL01C
TLE1 1.25-B
R BL01C
3-B EA01
GB BZ03
RL IH03
YG IH01
BZ03
BC19 GY
EA01 3-B
BZ03 GB
IH03 RL
IH01 YG
Rear combination lamp RH
1
2
3
4
5
6
7
8
9
10
30654

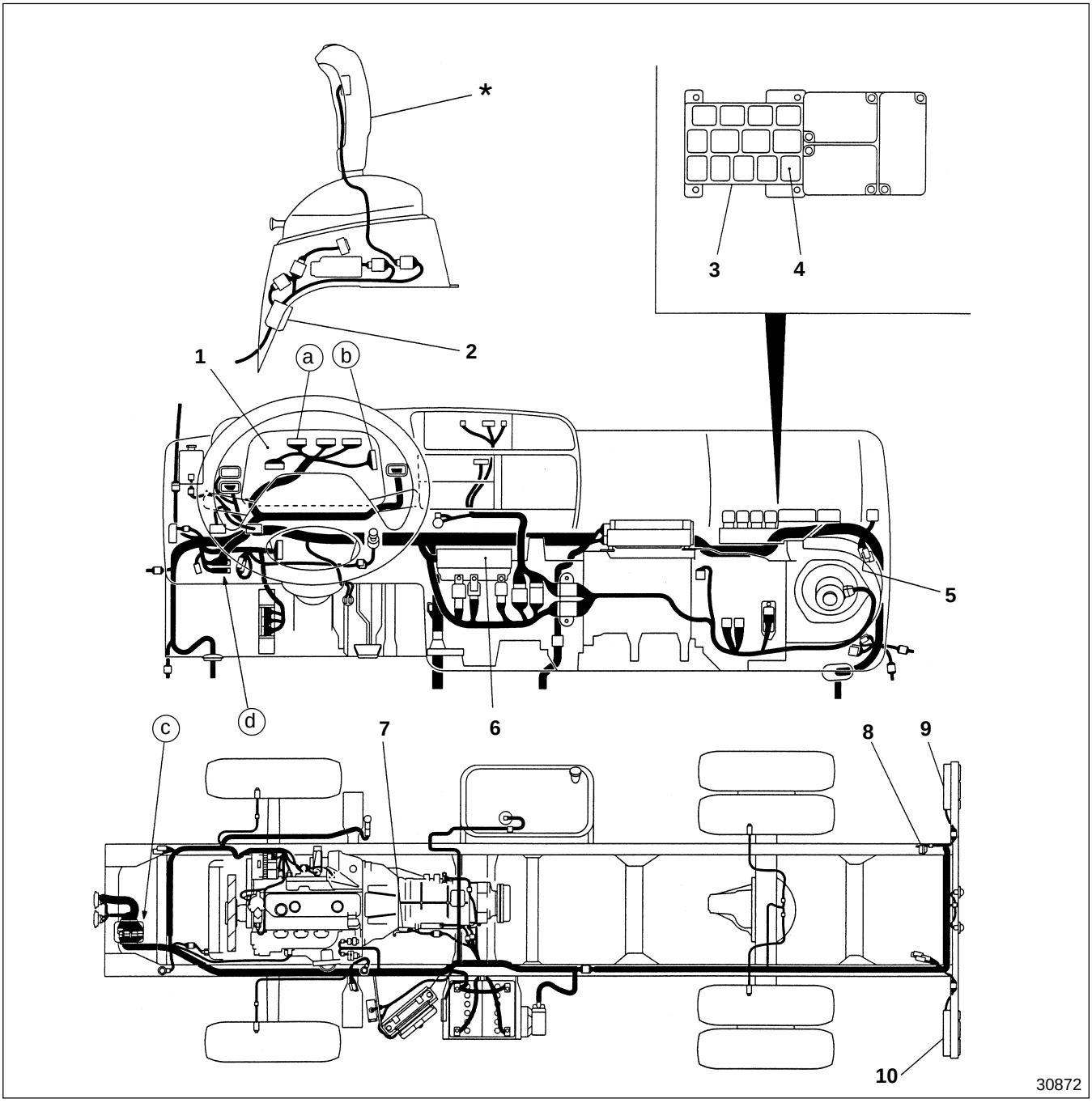

1 Meter cluster 1 (401)
2 Automatic transmission reverse buzzer 1 (606)
3 Relay box (604)
4 Backup lamp relay
5 Diode
6 Fuse box 1 (104)
7 Inhibitor switch Gr 23
8 Back up alarm 1 (340)
9 Rear combination lamp RH
10 Rear combination lamp LH

*: Range selector lever Gr 23

: '96 Model Gr 54 (Pub No. TWSE9501-54)

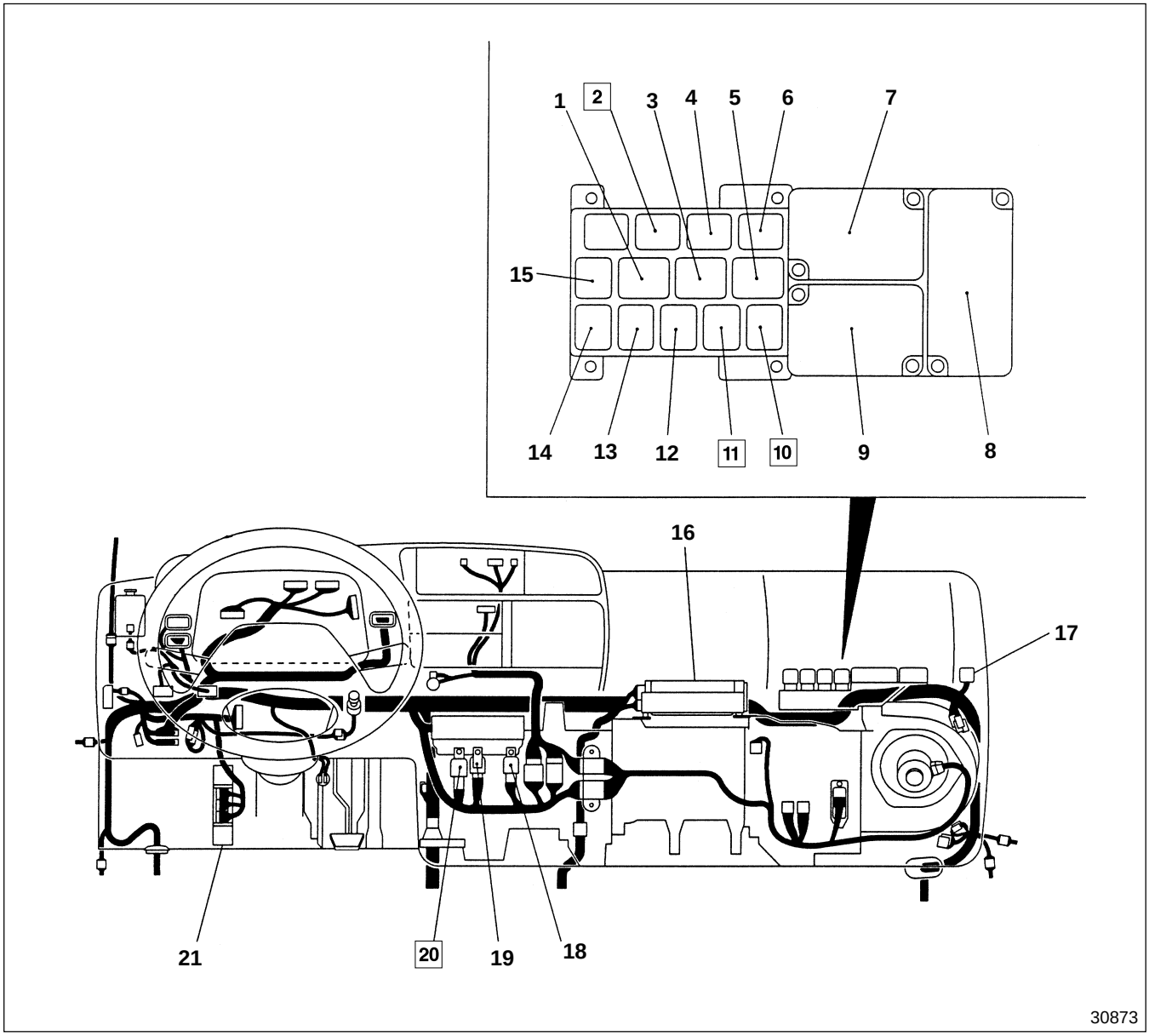

1 Wiper relay (LOW)
★2 Transmission neutral relay < M/T >
Exhaust brake cut relay < A/T >
3 Wiper relay (HIGH)
4 Overheating relay
5 Engine oil level relay
6 Pre-stroke cut relay
7 Flasher unit
8 Multipurpose timing control unit
9 Lighting and alarm control unit
★10 Backup lamp relay < A/T >
★11 Exhaust brake relay
12 Tail lamp relay
13 Head lamp relay (HIGH)
14 Head lamp relay (LOW)
15 Blower fan relay
16 Electronic governor control unit Gr 13
17 Turn signal lamp relay
18 Van body dome light relay
19 Automatic transmission fluid cooler fan relay <A/T >
★20 Neutral start relay
21 Automatic transmission control unit Gr 23

M/T : Manual transmission
A/T : Automatic transmission

★ marks indicate changed parts.
Regarding the inspection procedures for parts for which instructions are not given in this manual, refer to the '96 Model, Gr 54 manual (Pub. No. TWSE9501-54).

◆ Service procedure

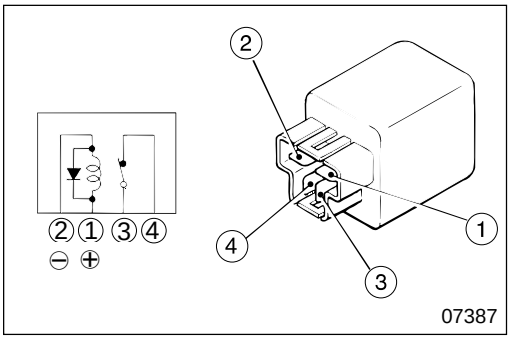

2 **Inspection of relay (Close type 4-pin)**

- Follow the table below to check for continuity and operation.

	①	②	③	④
No current	○—○		○—○	
Current	⊕—⊖		◌----◌	

○—○ : There is continuity between terminals ○ and ○.
⊕—⊖ : Indicates that 12 volts DC is applied to the line between the terminals.
◌----◌ : Indicates that the continuity between the terminals is lost.

- If any fault is found, replace the relay.

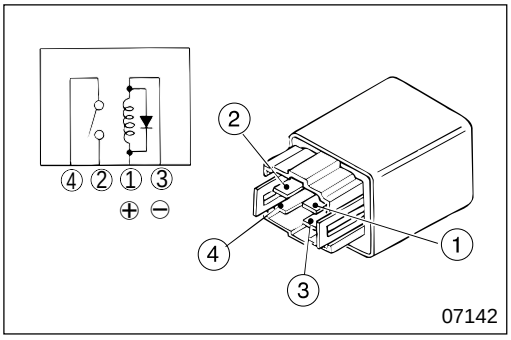

10 **11** **20** **Inspection of relay (Open type 4-pin)**

- Follow the table below to check for continuity and operation.

	①	②	③	④
No current	○—○			
Current	⊕—⊖	○—○		

○—○ : There is continuity between terminals ○ and ○.
⊕—⊖ : Indicates that 12 volts DC is applied to the line between the terminals.

- If any fault is found, replace the relay.

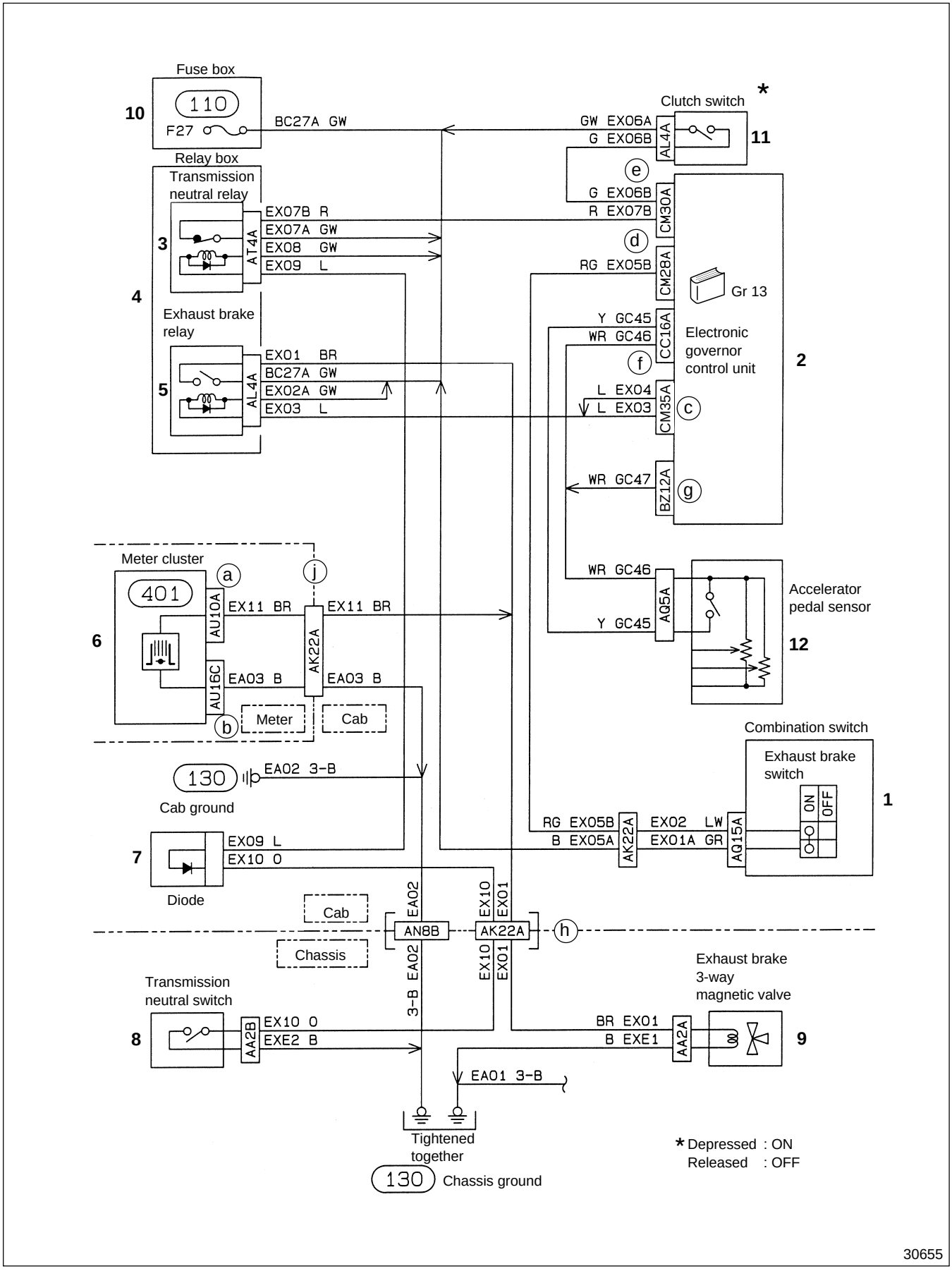
Fuse box
110
F27
10
BC27A GW
Relay box
Transmission neutral relay
AT4A
EX07B R
EX07A GW
EX08 GW
EX09 L
3
4
Exhaust brake relay
AL4A
EX01 BR
BC27A GW
EX02A GW
EX03 L
5
Clutch switch
*
GW EX06A
G EX06B
AL4A
11
e
G EX06B
R EX07B
CM30A
d
RG EX05B
CM28A
Gr 13
Y GC45
WR GC46
CC16A
Electronic governor control unit
2
f
L EX04
L EX03
CM35A
c
WR GC47
BZ12A
g
Meter cluster
401
a
j
AU10A
EX11 BR
EX11 BR
AK22A
AU16C
EA03 B
EA03 B
6
b
Meter
Cab
WR GC46
Y GC45
AQ5A
Accelerator pedal sensor
12
Combination switch
Exhaust brake switch
ON
OFF
1
RG EX05B
B EX05A
AK22A
EX02 LW
EX01A GR
AQ15A
130
EA02 3-B
Cab ground
7
EX09 L
EX10 0
Diode
Cab
Chassis
EA02
EX10
EX01
AN8B
AK22A
h
3-B EA02
EX10
EX01
Transmission neutral switch
8
AA2B
EX10 0
EXE2 B
BR EX01
B EXE1
AA2A
9
Exhaust brake 3-way magnetic valve
EA01 3-B
Tightened together
130
Chassis ground
* Depressed : ON
Released : OFF
30655

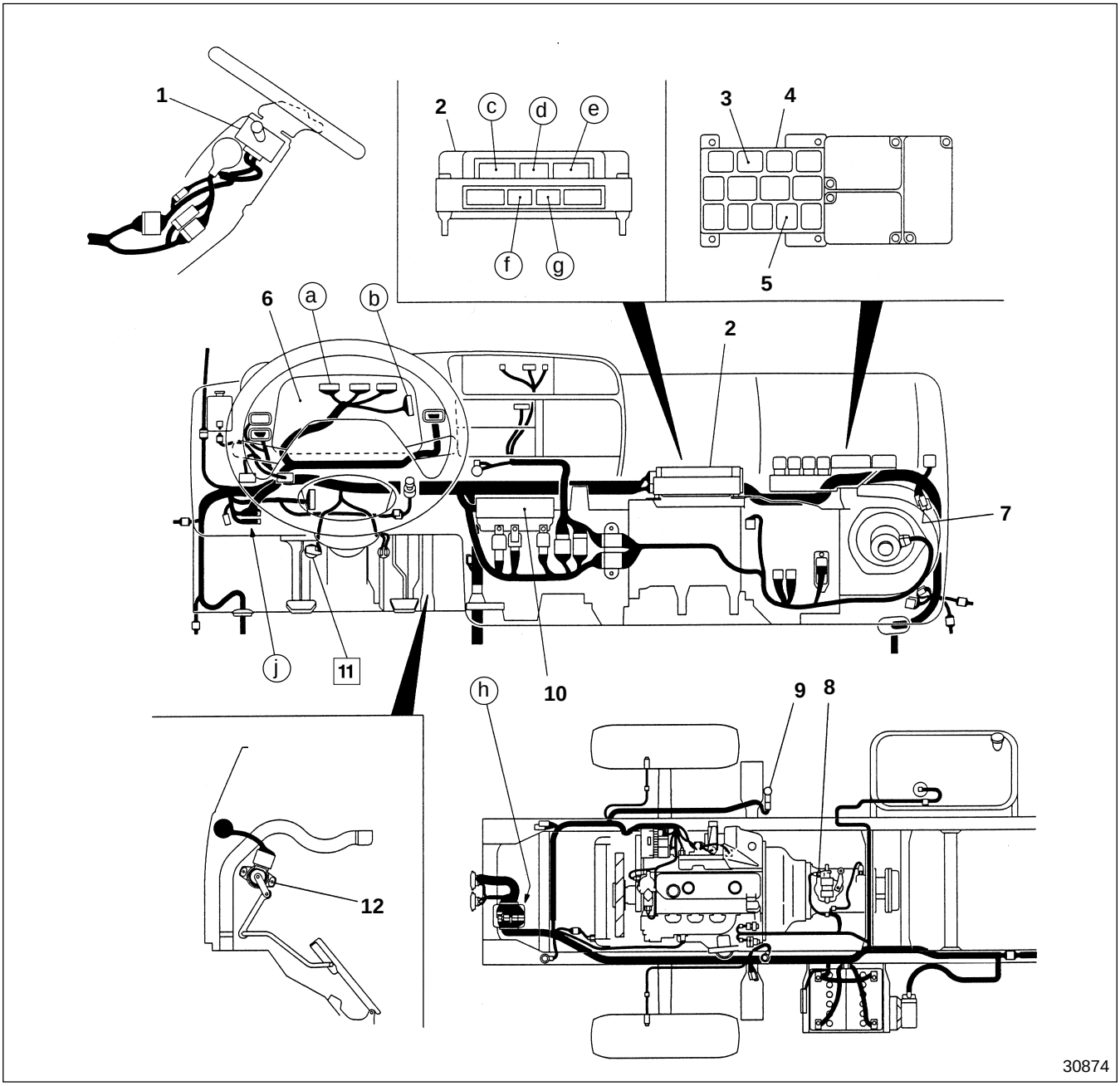

1 Combination switch 1 601
2 Electronic governor control unit Gr 13
3 Transmission neutral relay 1 604
4 Relay box
5 Exhaust brake relay 604
6 Meter cluster 1 401
7 Diode
8 Transmission neutral switch 1 802
9 Exhaust brake 3-way magnetic valve 1 701
10 Fuse box 1 104
11 Clutch switch
12 Accelerator pedal sensor Gr 13

1 : '96 Model Gr 54 (Pub No. TWSE9501-54)

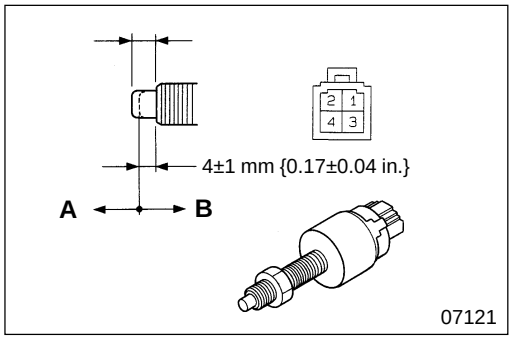

◆ Service procedure

11 **Inspection of clutch switch**

- Follow the table below to inspect continuity:

	①	②	③	④
A	○			○
B		○	○	

○—○ : There is continuity between terminals ○ and ○.

- If any fault is found, replace clutch switch **11**.

M E M O

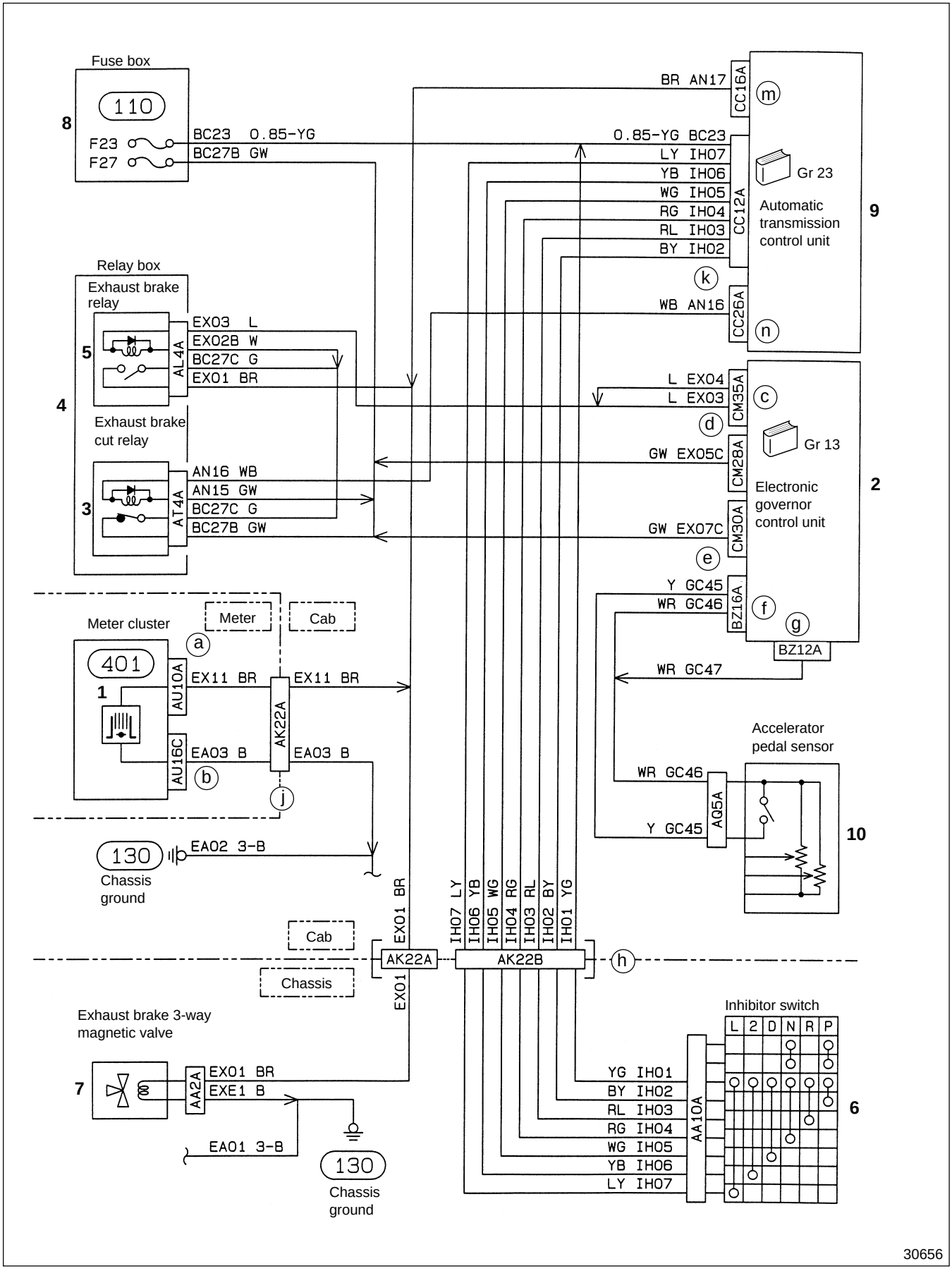
Fuse box
110
F23
F27
BC23 0.85-YG
BC27B GW
BR AN17
CC16A
m
0.85-YG BC23
LY IH07
YB IH06
WG IH05
RG IH04
RL IH03
BY IH02
CC12A
Gr 23
Automatic transmission control unit
9
k
WB AN16
CC26A
n
Relay box
Exhaust brake relay
EX03 L
EX02B W
BC27C G
EX01 BR
AL4A
5
4
Exhaust brake cut relay
AN16 WB
AN15 GW
BC27C G
BC27B GW
AT4A
3
L EX04
L EX03
CM35A
c
d
Gr 13
GW EX05C
CM28A
Electronic governor control unit
2
GW EX07C
CM30A
e
Y GC45
WR GC46
BZ16A
f
g
BZ12A
WR GC47
Meter cluster
Meter
Cab
a
401
1
AU10A
EX11 BR
EX11 BR
AK22A
AU16C
EA03 B
EA03 B
b
j
Accelerator pedal sensor
WR GC46
Y GC45
AQ5A
10
130
EA02 3-B
Chassis ground
EX01 BR
IH07 LY
IH06 YB
IH05 WG
IH04 RG
IH03 RL
IH02 BY
IH01 YG
Cab
Chassis
AK22A
AK22B
h
EX01
Exhaust brake 3-way magnetic valve
7
AA2A
EX01 BR
EXE1 B
EA01 3-B
130
Chassis ground
Inhibitor switch
L 2 D N R P
YG IH01
BY IH02
RL IH03
RG IH04
WG IH05
YB IH06
LY IH07
AA10A
6
30656

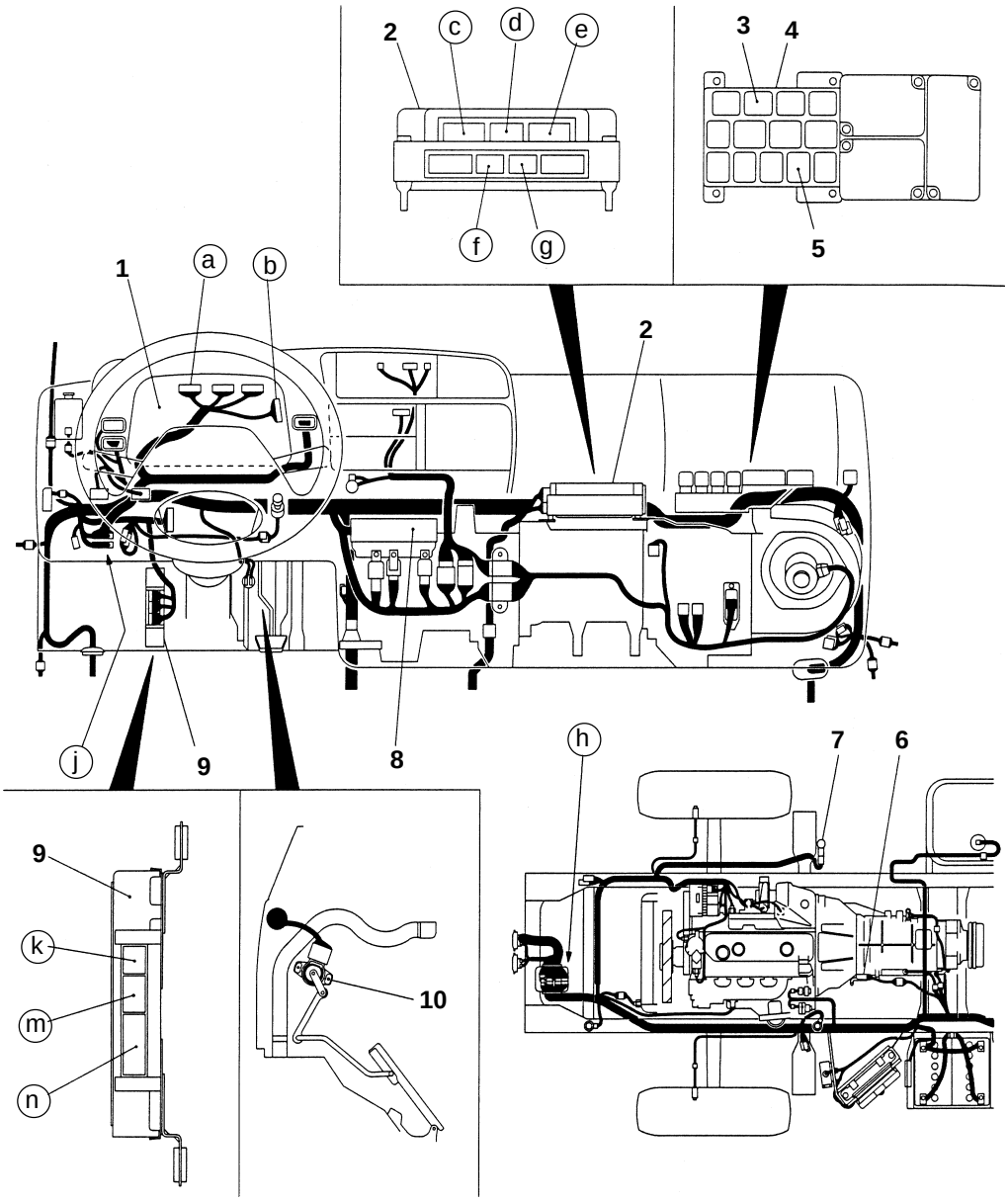

1 Meter cluster 1 (401)
2 Electronic governor unit Gr 13
3 Exhaust brake cut relay 1 (604)
4 Relay box
5 Exhaust brake relay (604)
6 Inhibitor switch Gr 23
7 Exhaust brake 3-way magnetic valve 1 (701)
8 Fuse box 1 (104)
9 Automatic transmission control unit Gr 23
10 Accelerator pedal sensor Gr 13

ELECTRIC CIRCUIT

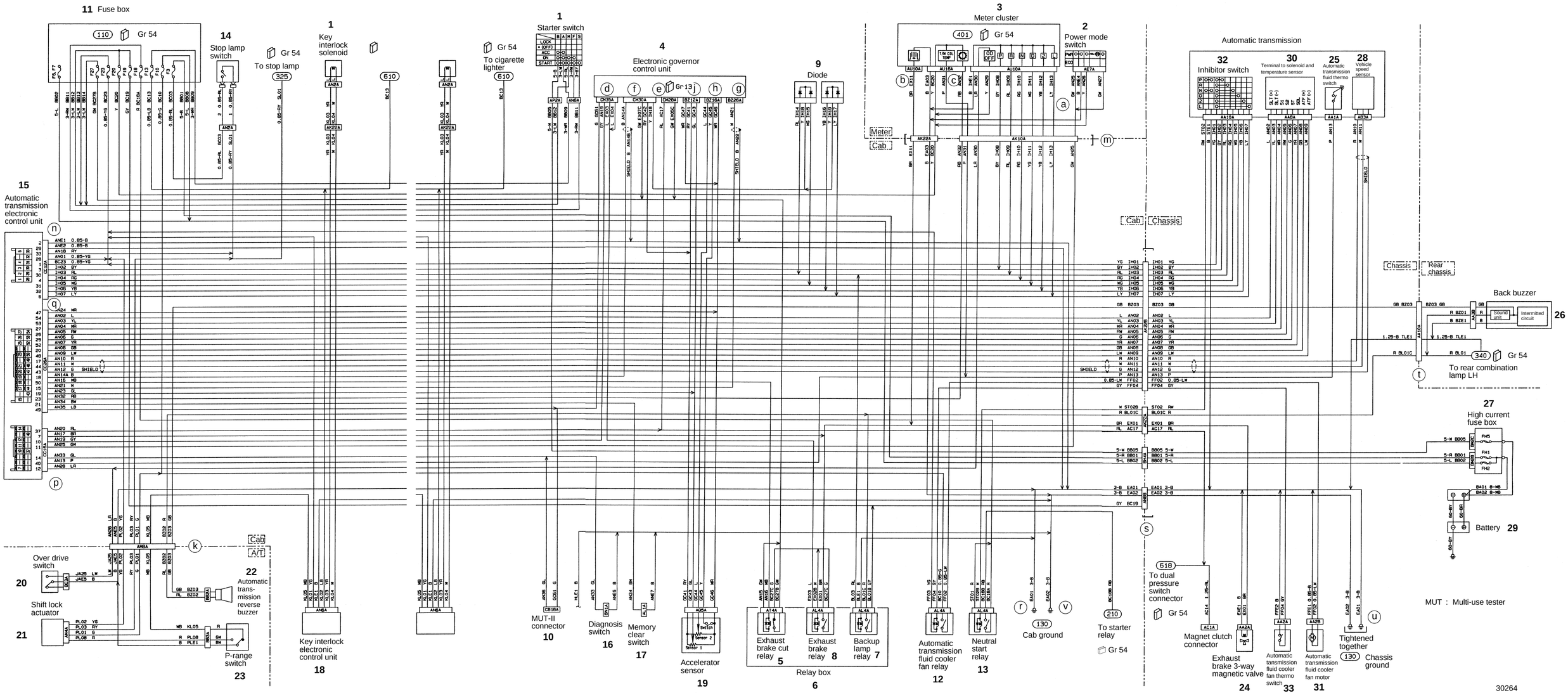

PART INSTALLATION LOCATIONS

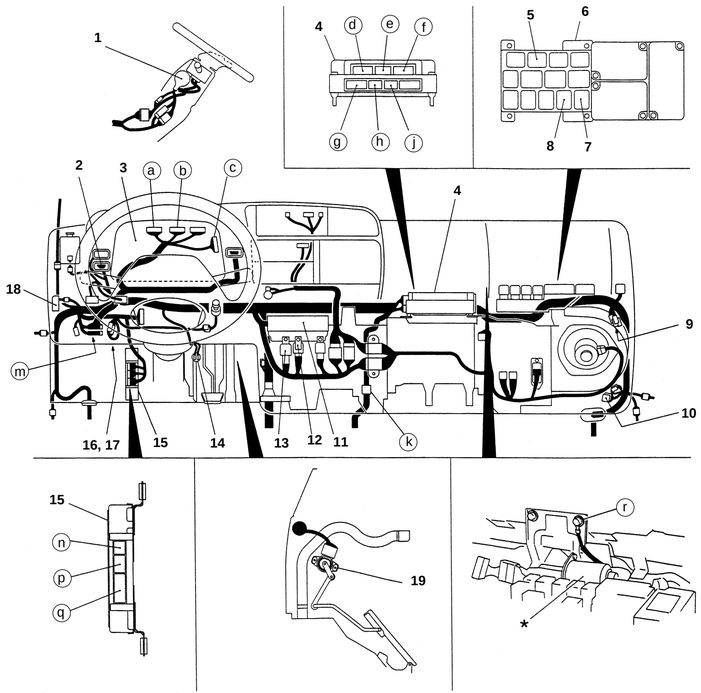

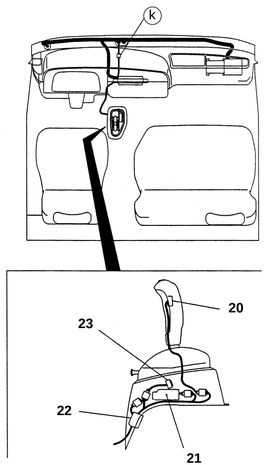

30981

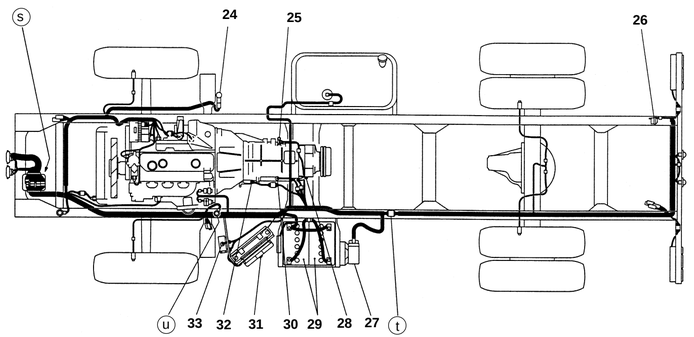

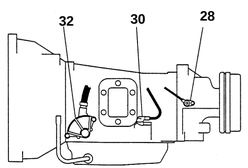

< Left side of transmission >

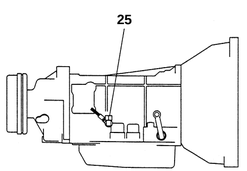

< Right side of transmission >

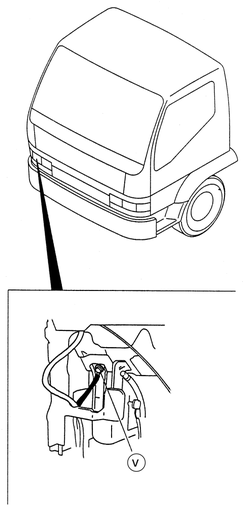

30982

1 Starter switch (Key inter lock solenoid installed inside)
2 Power mode switch
3 Meter cluster
4 Electronic governor control unit
5 Exhaust brake cut relay
6 Relay box
7 Backup lamp relay
8 Exhaust brake relay
9 Diode
10 MUT-II connector
11 Fuse box
12 Automatic transmisson fluid cooler fan relay
13 Neutral start relay
14 Stop lamp switch
15 Automatic transmission electronic control unit
16 Diagnosis switch
17 Memory clear switch
18 Key interlock electronic control unit
19 Accelerator sensor
20 Overdrive switch
21 Shift lock actuator
22 Automatic transmisson reverse buzzer
23 P-range switch
24 Exhaust brake 3-way magnetic valve
25 Automatic transmisson fluid thermo switch
26 Back buzzer
27 High current fuse box
28 Vehicle speed sensor
29 Battery
30 Terminal to solenoid and temperature sensor
31 Automatic transmisson fluid cooler fan motor
32 Inhibitor switch
33 Automatic transmisson fluid cooler fan thermo switch

* : Wiper motor

MITSUBISHI MOTORS

Service Manual

Table of Contents

BACK

HOME

MODEL CHANGES

FE.FG 1998

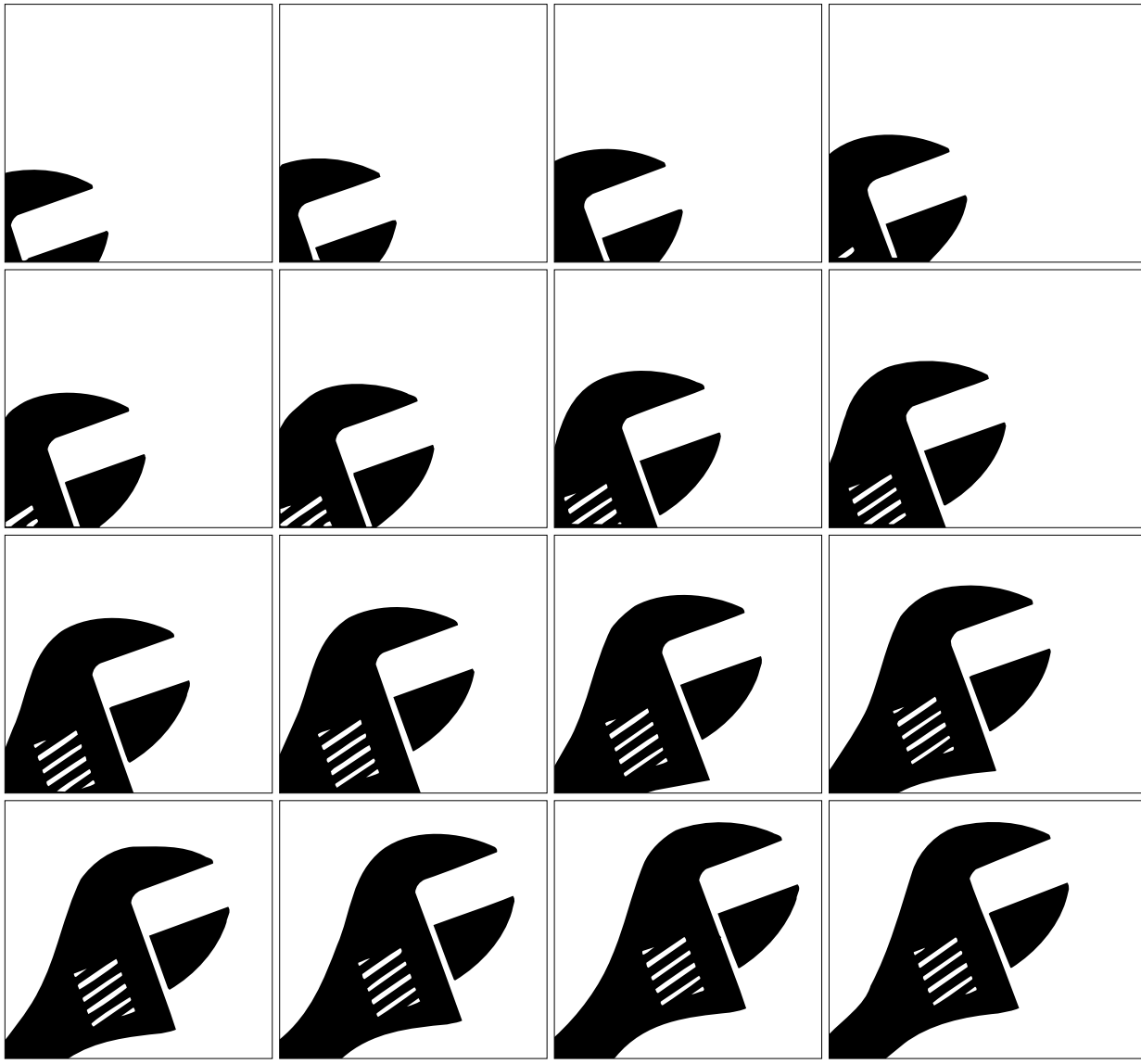

Pub. No. TWSE9501-2

1998 Model Changes

Power Train Table

Vehicle Identification Number

Structure and Operation

Multiplate Limited Slip Differential Assembly <D033H>

FE.FG

SERVICE MANUAL

FOREWORD

This Service Manual contains maintenance and repair methods for personnel involved in the maintenance and repair of 1998 model Mitsubishi Fuso Truck FE.FG series.
Read this manual carefully as an aid to providing correct, efficient and fast maintenance.
Please note, however, that due to continuous improvements on the specifications, numbers and description for maintenance might be changed without prior notice.
If you have any question, or encounter a problem, please do not hesitate to contact your nearest Mitsubishi Fuso dealer or distributor.

© Mitsubishi Motors Corporation 1997 May

MITSUBISHI FUSO TRUCK OF AMERICA, Inc.

1998 MODEL CHANGES

Item	’98 Model ⇦	’97 Model
Gr 00 General • Modified vehicle identification number.	See page 10 in this manual	—
Gr 01 Maintenance Schedule • Added for FG	Gr 01 Maintenance Schedule ’98 Minor Change (Pub. No. TWSE9501-201)	—
Gr 10 Removal and Installation of Engine • Added for FG	Gr 10 Removal and Installation of engine ’98 Minor Change (Pub. No. TWSE9501-210)	—
• Mount rubber for FE is changed	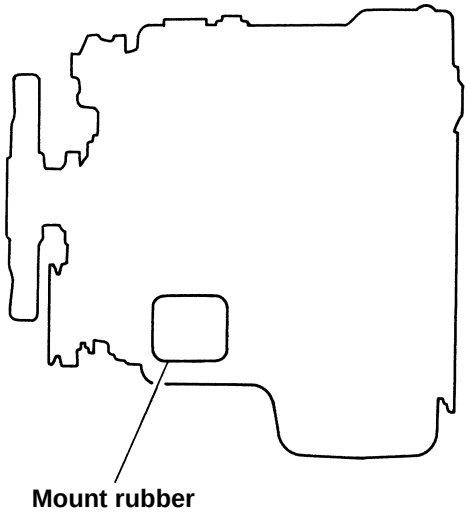 **Mount rubber** 28024 **< Liquid type >** 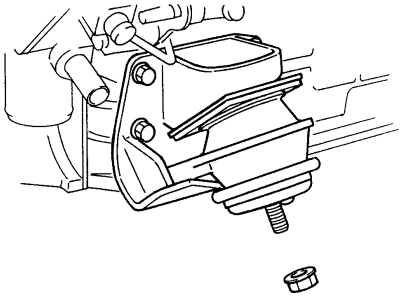 28151	**< Solid type >** 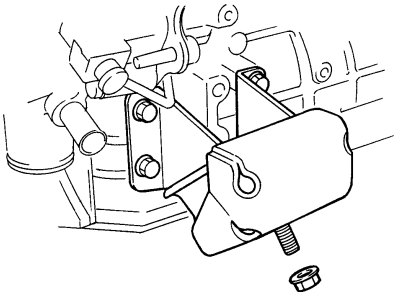 28152

Item	’98 Model	⇦	’97 Model

Gr 13 Fuel and engine control

- Water separator has been changed from dual type to single type.

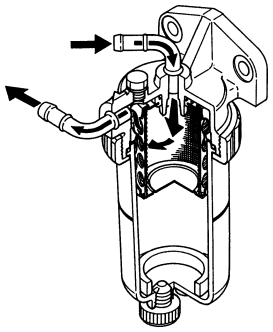

27687

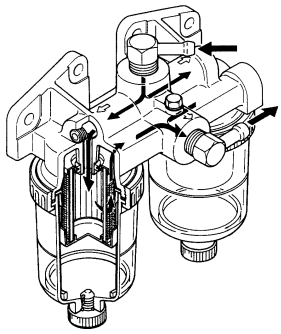

27242

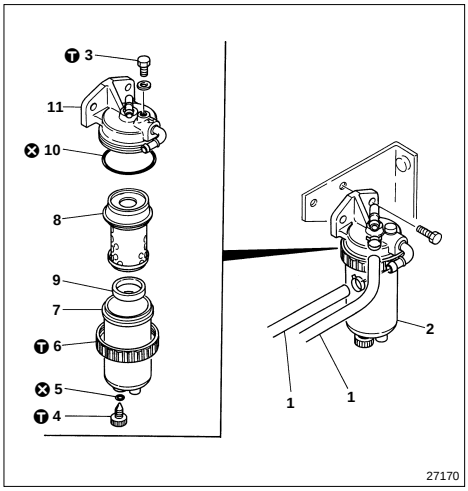

27170

● **Disassembly sequence**

1 Fuel feed hose
2 Water separator assembly
3 Air vent plug
4 Drain plug
5 O-ring
6 Ring nut
7 Case
8 Screen assembly
9 Water level ring
10 O-ring
11 Head

⊗ : Non-reusable parts

WARNING ⚠

- **Fuel ignites easily. Do not get it near flame or heat.**
- **Wipe up any spilled gas oil because it can cause a fire.**

● **Assembly sequence**

Follow the disassembly sequence in reverse.

Ⓣ Tightening torque Unit : N·m {lbf.ft, kgf·m}

Location	Parts to be tightened	Tightening torque	Remarks
3	Air vent plug	8 to 12 {5.8 to 8.7, 0.8 to 1.2}	—
4	Drain plug	3 to 4 {2.2 to 2.9, 0.3 to 0.4}	—
6	Ring nut	23 to 27 {17 to 20, 2.3 to 2.8}	—

Item	’98 Model ⇦ ’97 Model

Gr 15 Intake and exhaust

- FG exhaust pipe and muffler have been added as illustrated.

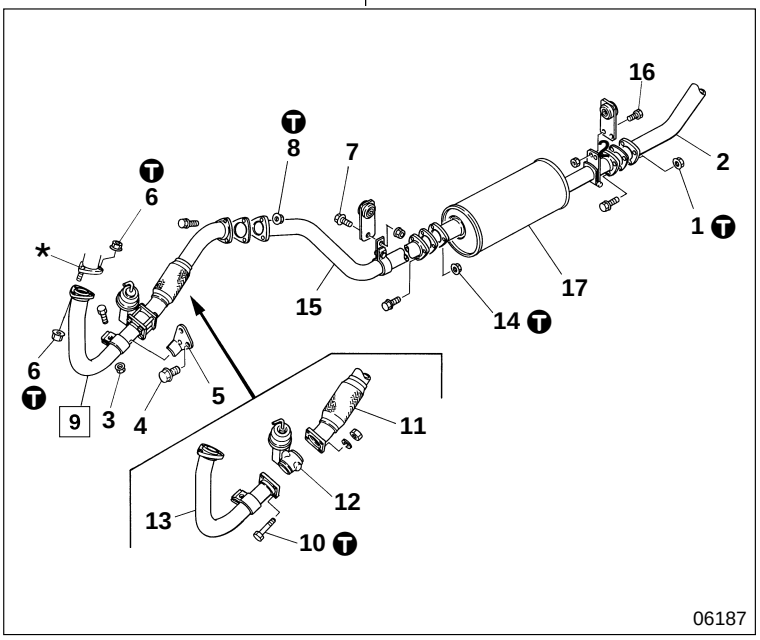

● **Disassembly sequence**

1 Nut
2 Tail pipe
3 Nut
4 Bolt
5 Exhaust pipe bracket
6 Nut
7 Bolt
8 Nut < FG639E >
9 Front pipe assembly
10 Bolt
11 Front pipe
12 Exhaust brake unit
Gr 35
13 Front pipe
14 Nut
15 Center pipe
16 Bolt
17 Muffler

***** : Exhaust manifold

● **Assembly sequence**

Follow the disassembly sequence in reverse.

Ⓣ Tightening torque Unit : N·m {lbf.ft, kgf·m}

Location	Parts to be tightened	Tightening torque	Remarks
1	Nut (Tail pipe mounting)	26 to 33 {20 to 25, 2.7 to 3.4}	—
6	Nut (Front pipe assembly mounting)	20 to 25 {14 to 18, 2.0 to 2.5}	—
8	Nut (Center pipe mounting)	26 to 33 {20 to 25, 2.7 to 3.4}	—
10	Nut (Exhaust brake unit mounting) < with exhaust brake >	27 {20, 2.75}	—
14	Nut (Muffer mounting)	26 to 33 {20 to 34, 2.7 to 3.4}	—

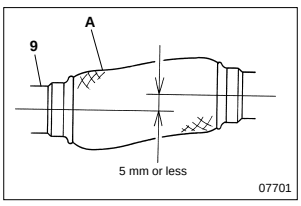

◆ **Service procedure**

9 **Installation of front pipe assembly**

Install front pipe assembly **9** so that the offset tolerance in the vertical and horizontal sections between the front and back of bellows **A** conforms to the standard value.

CAUTION ⚠

Be sure when installing bellows A of front pipe assembly 9 that the bellows are not forcibly bent and that the bellows do not pull on themselves. This is because they are designed to reduce the external noise of the vehicle and are not designed to absorb dimensional tolerances in the installation of pipes.

Item	’98 Model ⇦ ’97 Model

Gr 22 Manual Transmission

- Oil capacity has been increased as illustrated.
  (Applies to ’96 model and later)

SPECIFICATIONS

Item		Specifications
Mode of control		Floor shift remote control
Transmission model		M035S5
Gear ratio	1st	5.380
	2nd	3.028
	3rd	1.700
	4th	1.000
	5th	0.722
	Reverse	5.380
Oil	Gear Oil	General : API GL-3 SAE 80 Warm region : API GL-3 SAE 90 Tropical region : API GL-4 SAE 90
	Engine Oil	Long period of high-speed driving : API CC SAE 30 or SAE 40
	Quantity L{qts}	Approximately 3.1 {3.3} < FE >, Approximately 3.4 {3.6} < FG >
Mass kg {lb}		Approximately 100 {220}

- Number of interlock pins for FE and FG differs.

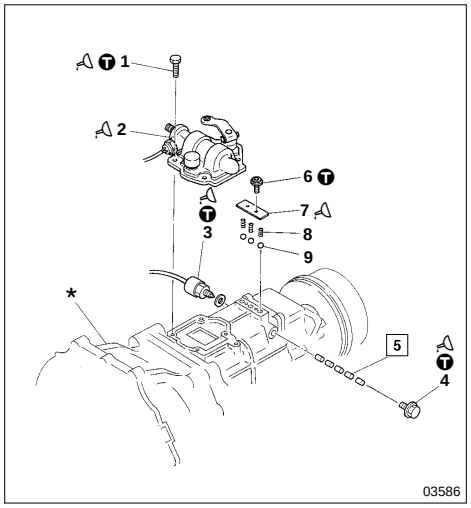

● **Disassembly sequence**

1 Bolt
2 Gear shifter upper assembly
3 Backup lamp switch
4 Screw plug
5 Interlock pins (×5) < FE >
Interlock pins (×7) < FG >
6 Screws (×2)
7 Poppet spring plate
8 Poppet springs (×3)
9 Steel balls (×3)

***** : Transmission body

● **Assembly sequence**

Follow the disassembly sequence in reverse.

5 Interlock pins (×5) < FE >
Interlock pins (×7) < FG >

5 Interlock pins (×5)

Gr 23 Automatic Transmission

- FE automatic transmission
  Air bleeder is changed.

< Labyrinth cap type air bleeder >

Air bleeder

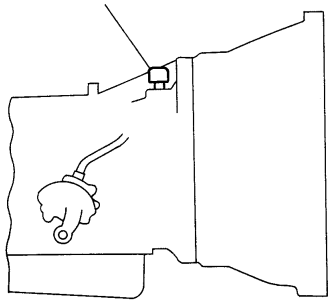

< Vinyl tube type air bleeder >

Vinyl tube

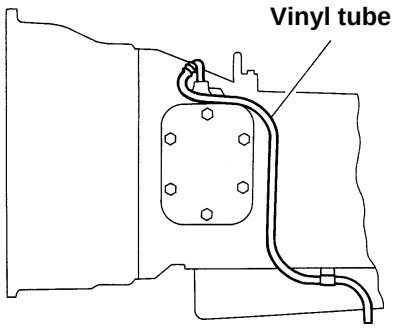

27954

1998 MODEL CHANGES

<table>
<tr><th>Item</th><th>’98 Model ⇦</th><th>’97 Model</th></tr>
<tr><td>Gr 24 Transfer
• FG transfer has been added. (New settings)</td><td>Gr 24 Transfer
’98 Minor Change
(Pub. No. TWSE9501-224)</td><td>—</td></tr>
<tr><td>Gr 25 Propeller Shaft
• FG P2 Propeller shaft has been added between the front axle and the transfer. (New settings)</td><td>Gr 25 Propeller Shaft
’98 Minor Change
(Pub. No. TWSE9501-225)</td><td>—</td></tr>
<tr><td>Gr 26B Front Axle
• FG front axle has been added. (New settings.)</td><td>Gr 26B Front Axle
’98 Minor Change
(Pub. No. TWSE9501-226B)</td><td>—</td></tr>
<tr><td>Gr 27 Rear Axle
• FG limited slip differential gear oil has been added.</td><td colspan="2"><table>
<tr><th colspan="2">Item</th><th>Specifications</th></tr>
<tr><td rowspan="2">Gear oil</td><td>Grade</td><td>Limited slip differential oil
API GL-5 SAE90</td></tr>
<tr><td>Quantity L {qts.}</td><td>4.5 {4.8}</td></tr>
</table></td></tr>
<tr><td>• FG limited slip differential has been added. (New settings : optional)</td><td>See page 12 to 19 in this manual.</td><td>—</td></tr>
<tr><td>Gr 31 Wheel and Tire
• FG tire size has been added.</td><td colspan="2"><table>
<tr><th rowspan="2">Tire size</th><th colspan="2">Air pressure kPa {Psi, kgf/cm²}</th><th rowspan="2">Application wheel</th></tr>
<tr><th>Front</th><th>Rear</th></tr>
<tr><td>7.50R16(E)</td><td>550 {80, 5.50}</td><td>550 {80, 5.50}</td><td>16×6K-127-9
(wheel with 5 studs)</td></tr>
</table></td></tr>
<tr><td>Gr 33 Front Suspension
• Added for FG</td><td>Gr 33 Front Suspension
’98 Minor Change
(Pub. No. TWSE9501-233)</td><td>—</td></tr>
<tr><td>Gr 34 Rear Suspension
• Added for FG</td><td>Gr 34 Rear Suspension
’98 Minor Change
(Pub. No. TWSE9501-234)</td><td>—</td></tr>
<tr><td>Gr 35 Brake
• Added for FG</td><td>Gr 35 Brake
’98 Minor Change
(Pub. No. TWSE9501-235)</td><td>—</td></tr>
<tr><td>Gr 37 Steering
• FE power steering booster has been modified.
• Added for FG.</td><td>Gr 37 Steering
’98 Minor Change
(Pub. No. TWSE9501-237)</td><td>—</td></tr>
</table>

Item	’98 Model	⇦	’97 Model
Gr 42 Cab • Door window regulator has been modified.	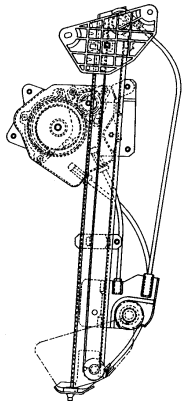		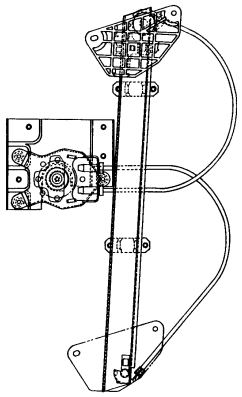 27014
• Door trim has changed. • Door ash tray is eliminated.	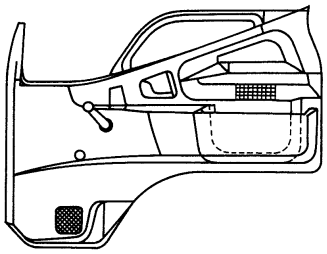		**Door ash tray** 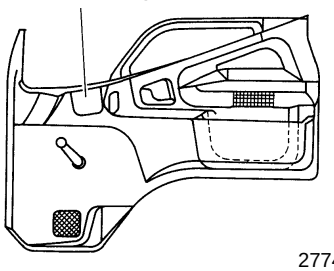 27743

Item	’98 Model ⇦ ’97 Model

- Cab mounting front rubber and rear rubber are changed.

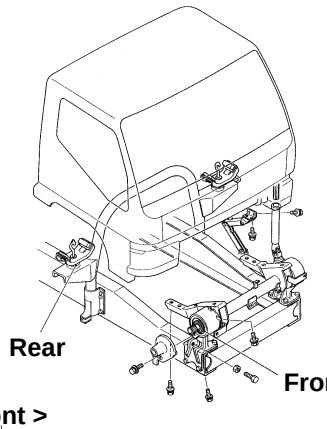

28017

< Front >

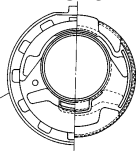

28018

< Front >

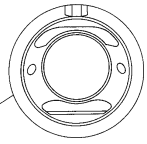

28019

< Rear >

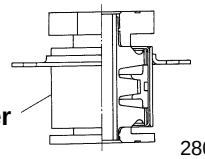

28020

< Rear >

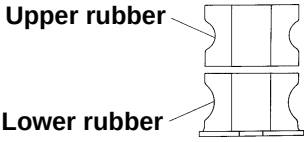

28021

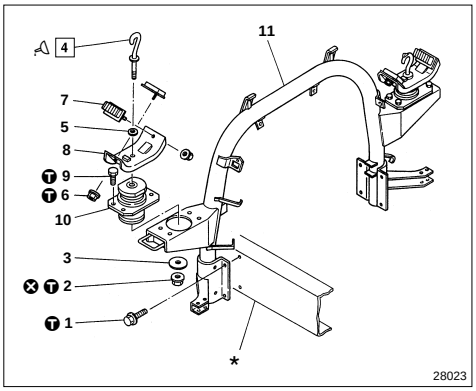

28023

● **Disassembly sequence**

1 Bolt
2 Nut
3 Plate
4 Anchor hook
5 Spacer
6 Nut
7 Side rubber
8 Cab hold bracket
9 Bolt
10 Rear rubber assembly
11 Rear mounting post

⊗ : Non-reusable parts
* : Frame

● **Assembly sequence**

Follow the disassembly sequence in reverse.

T Tightening torque Unit : N·m {lbf.ft, kgf·m}

Location	Parts to be tightened	Tightening torque	Remarks
1	Bolt (Rear mounting post mounting)	78 to 105 {58 to 80, 8 to 11}	—
2	Nut (Anchor hook mounting)	83 to 98 {61 to 72, 8.5 to 10.0}	—
6	Nut (Side rubber mounting)	10 to 15 {7.2 to 11.0, 1.0 to 1.5}	—
9	Bolt (Rear rubber assembly mounting)	16 to 20 {12 to 14, 1.6 to 2.0}	—

Lubricant

Location	Points of application	Specified lubricant	Quantity
4	Upper side of anchor hook (contact area between lock handle and stopper)	Chassis grease [NLGI No. 1 (Ca Soap)]	—

◆ **Service procedure**

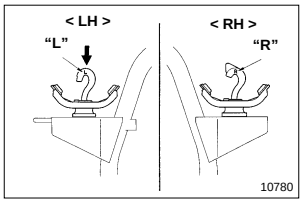

10780

4 **Installation of anchor hook**

Install anchor hook **4** so that open side of the hook comes to left side of the vehicle while aligning the identification marks “**L**” and “**R**”.
Also always make sure to apply grease on upper part of the left anchor hook (▼ part).

Item	’98 Model ⇦	’97 Model
Gr 54 Electrical • The location of the cab harness diode has been moved from the right to the center.	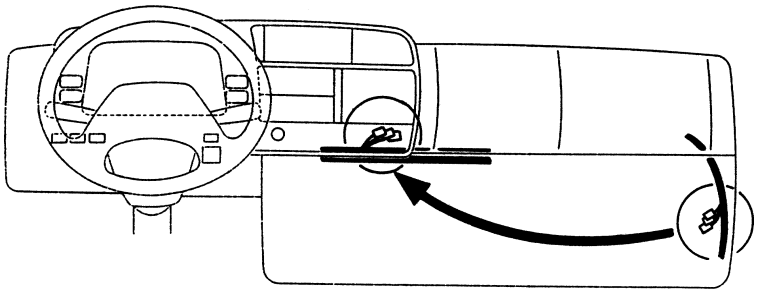 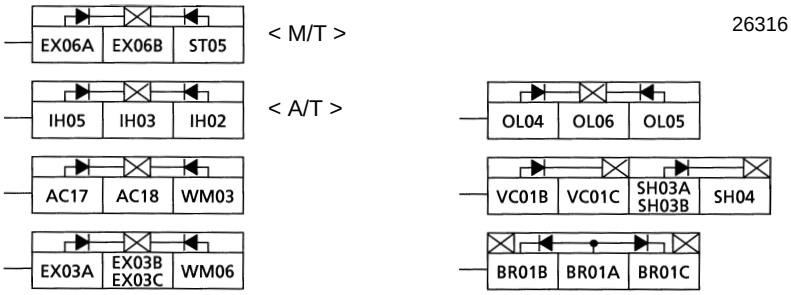 M/T : Manual transmission A/T : Automatic transmission 26316 27584	
• FG alternator high-current fuse is installed to the side of battery box.	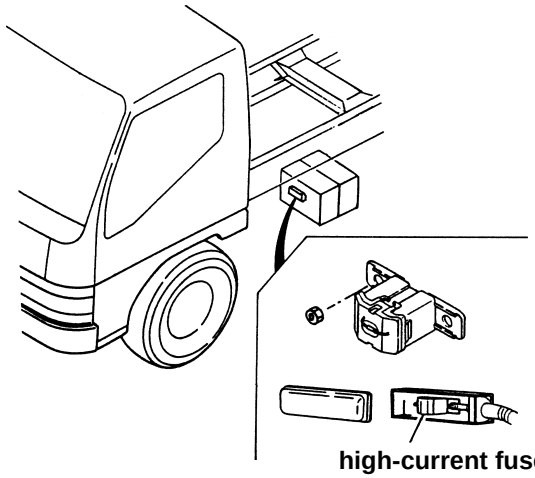 28108	
• FG alternator has been added. • FG meter cluster has been added. • FG four-wheel drive circuit has been added.	Gr 54 Electrical ’98 Minor Change (Pub. No. TWSE9501-254)	— — —
• Only electrical horn specifications have been modified. Service procedure is same.	Rated current 3.0±0.5 A Sound pressure (at 2 m {6.6 ft.}) 110±5 dB	Rated current $3.0\ ^{+0.5}_{-1.0}$ A Sound pressure (at 2 m {6.6 ft.}) 110±5 dB
• FG brake fluid level switch check is same as FE639.	Warning lamp lighting position for brake fluid level switch 41.0±3 mm {1.61±0.12 in.}	—

POWER TRAIN TABLE/VEHICLE IDENTIFICATION NUMBER

POWER TRAIN TABLE

Model	Engine model	Clutch model	Transmission model	Propeller shaft	Rear axle model	Final reduction and gear ratio
FG639C, E G.V.W. 5000 kg {11000 lb}	4D34T3 135 HP/3000 rpm 253 lbf.ft/1800 rpm (SAE, Gross)	C4W30	M035S5 5.380/0.722	P2 (Front) P3 (Rear)	R033T	D1H modified 5.714 (Front) D033H 5.714 (Rear)

('96 model)→ *00-3*

VEHICLE IDENTIFICATION NUMBER

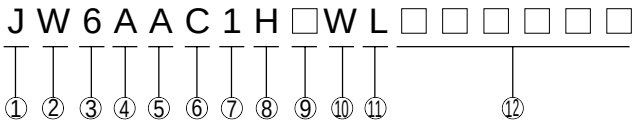

①	Country	J :	Japan
②	Make	W :	Mitsubishi Fuso
③	Vehicle type	6 :	Incomplete Vehicle
④	Gross vehicle weight/Brake system	A :	4536 to 6350 kg {10001 to 14000 lbs}/Hydraulic
		B :	6351 to 7258 kg {14001 to 16000 lbs}/Hydraulic
⑤	Line	A :	FE639
		B :	FE649
			FG639
⑥	Series (Wheelbase)	C :	2.6 to 2.9 m {102.4 to 114.2 in.}
		E :	3.2 to 3.5 m {126.0 to 137.8 in.}
		F :	3.5 to 3.8 m {137.8 to 149.6 in.}
⑦	Cab chassis type	1 :	Chassis cab
⑧	Engine	H :	238 CID Diesel turbocharged and charge air cooled
⑨	Check digit		
⑩	Model year	W :	1998
⑪	Plant	L :	Kawasaki-2
⑫	Plant sequential number	N :	Nakatsu

('96 model)→ *00-4*

M E M O

MULTIPLE LIMITED SLIP DIFFERENTIAL ASSEMBLY < D033H >

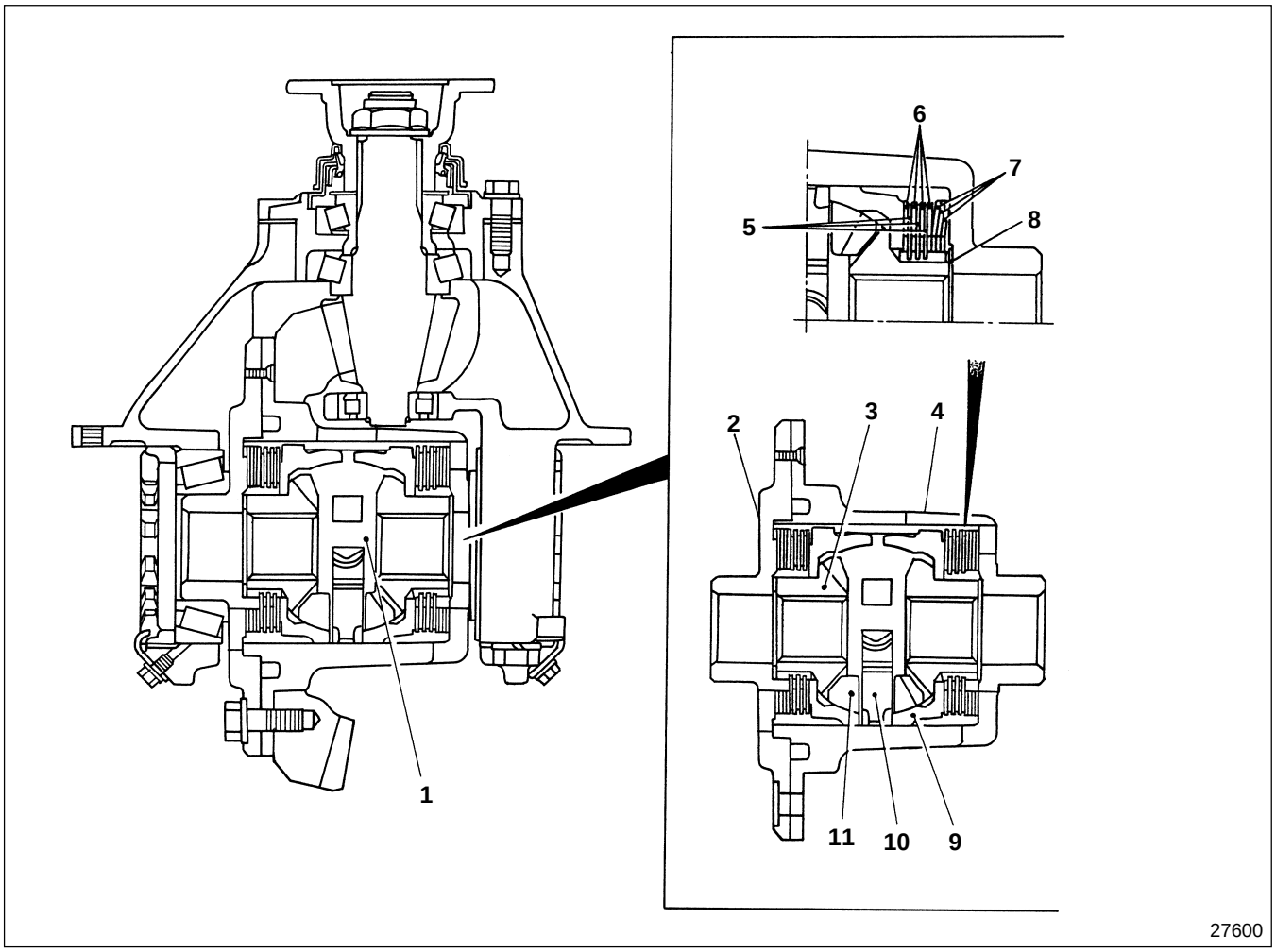

1 Limited slip differential assembly
2 Differential case, LH
3 Side gear
4 Differential case, RH
5 Friction disc
6 Friction plate
7 Spring plate
8 Thrust washer
9 Pressure ring
10 Pinion shaft
11 Differential pinion

Friction disc **5** and friction plate **6** engage side gear **3** and differential case RH **4**, respectively. These parts are pressed against pressure ring **9** by spring plate **7**. The pressure ring mates with the groove in the differential case RH and always turns at the same speed.

Operation mechanism

When the wheel of one side starts spinning, a rotational difference between side gear **3** and differential cases, LH **2** and RH **4** occurs. Then, friction disc **5** and friction plate **6** start rotating with a relative difference in revolution speed. This causes friction torque between the disc and plate.

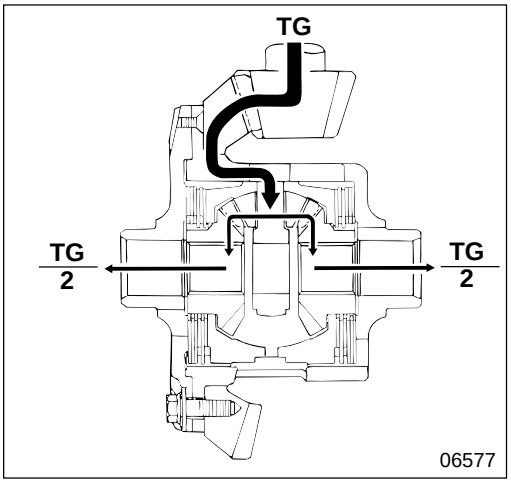

● **Operation in straight movement**

In the case of straight movement, as the revolution speed of the left axle shaft and that of the right axle shaft are equal, no friction torque occurs.

TG : Torque input

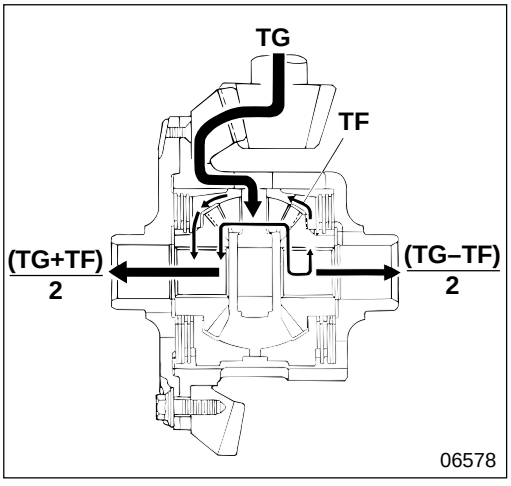

● **Operation when there is a difference in revolution speed between left and right wheel**

When a difference in the resistance the wheels receive from the road surface occurs, such as when the wheel of one side encounters mud, the differential function comes into play, transmitting friction torque **TF**. This exertion of friction torque reduces the revolution speed causing the high-revolution speed axle to reduce its speed and the low-revolution speed axle to increase its speed.

Therefore, when the wheel of one side starts spinning, when caught in mud for example, a big difference in revolution speed occurs, causing a large amount of friction torque to come into action. The differential functions in such a manner that a smaller ratio of the torque is transmitted to the axle of the wheel which is spinning while the axle of the wheel on the other side receives a greater ratio of the torque. This makes it easier for the vehicle to get out of the mud.

$\frac{(TG-TF)}{2}$ High rotation side (spin side)

$\frac{(TG+TF)}{2}$ Low rotation side

MULTIPLATE LIMITED SLIP DIFFERENTIAL ASSEMBLY < D033H >

DISASSEMBLY AND ASSEMBLY

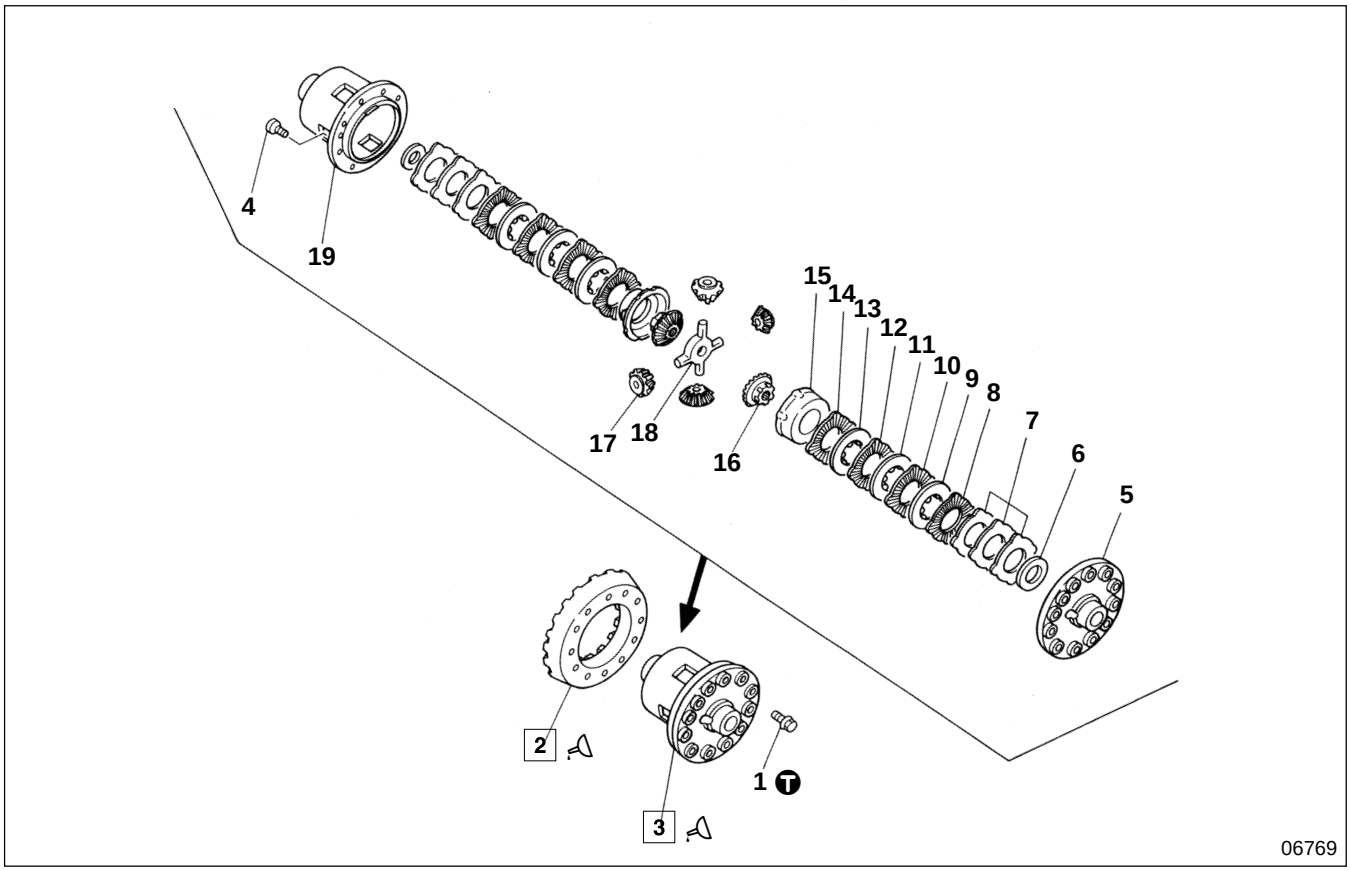

● **Disassembly sequence**

1 Bolt
2 Final drive gear
3 Multiplate limited slip differential assembly
4 Screw
5 Differential case, LH
6 Thrust washer
7 Spring plate
8 Friction plate
9 Friction disc
10 Friction plate
11 Friction disc
12 Friction plate
13 Friction disc
14 Friction plate
15 Pressure ring
16 Side gear
17 Differential pinion
18 Pinion shaft
19 Differential case, RH

NOTE

Clean the disassembled parts using washing oil and dry by blowing with compressed air.

● **Assembly sequence**

19→6→7→8→9→10→11→12→13→14→15→16→5→4→3→2→1
17→18

NOTE

Apply the specified type of gear oil to each part before assembly, paying particular attention to contact and sliding surfaces.

Service standards

Unit : mm {in.}

Location	Maintenance item		Standard value	Limit	Remedy
3	Rotation torque of multiplate limited slip differential assembly	When putting in a new clutch plate	200 to 295 N·m {150 to 215 lbf.ft, 20.5 to 30 kgf·m}	—	Inspect internal parts and replace faulty parts
		When putting in a used clutch plate	115 to 295 N·m {87 to 215 lbf.ft, 12 to 30 kgf·m}	—	
6, **15 to 18**	Variation of tolerance in vertical direction from back face of pressure ring to end face of thrust washer		0 to 0.05 {0 to 0.0020}	—	Adjust (Replace the thrust washer)
8 to 14	Deformed friction disc and friction plate		—	0.08 {0.0031}	Replace
	Wear of friction disc and friction plate		—	0.1 {0.0039}	Replace
	Difference in thickness between the left and right combinations of friction disc and friction plate		—	0 to 0.05 {0 to 0.0020}	Adjust Change the combination)
—	Side gear clearance in axial direction		0.05 to 0.20 {0.0020 to 0.0079}	—	Adjust (Replace the thrust washer)
—	Differential case clearance in axial direction		0.05 to 0.20 {0.0020 to 0.0079}	—	Adjust (Replace the thrust washer)

Tightening torque

Unit : N·m {lbf.ft, kgf·m}

Location	Location tightened	Tightening torque	Remarks
1	Bolt (Final drive gear and differential case, LH mounting)	165 to 225 {120 to 165, 17 to 23}	—

Lubricant and/or sealant

Location	Points of application	Specified lubricant and/or sealant	Quantity
2	Thread area of final drive gear	LOCTITE271	As required
3	Components of multiplate slip differential assembly	Limited slip differential oil API GL-5 SAE90	As required

Special tools

Unit : mm {in.}

Location	Tool name and shape	Part No.	Application
3	Side gear holding tool set **A** : Gauge case **B** : Side gear holding base **C** : Side gear holding tool (outer diameter : 42) **D** : Side gear holding tool **E** : Side gear holding tool 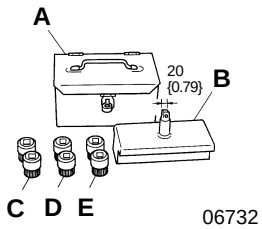	MB999140 **A**: MB990551 **B**: MB999141 **C**: MB999142 (D033H) **D**: MH063422 **E**: MH063423	Measurement of multiplate slip differential assembly clutch plate rotation torque

◆ Service procedure

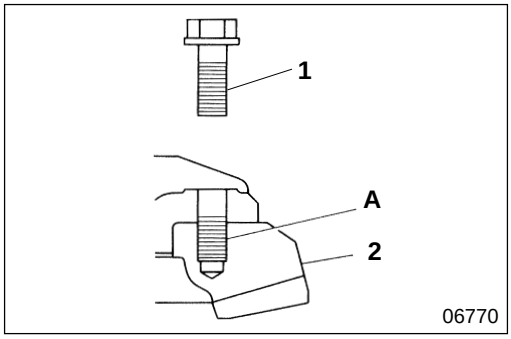

2 Final drive gear

Apply LOCKTITE to thread area **A** of all the bolt holes of final drive gear **2**.

CAUTION⚠

- **Be sure to let bolts 1 harden for at least an hour, after installation, before driving.**
- **Furthermore, be sure to let bolts 1 harden for at least four hours before running at full torque.**

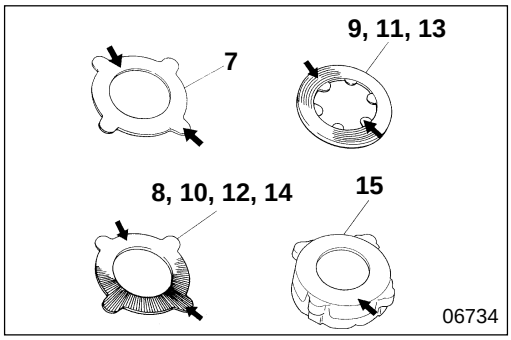

3 Multiplate limited slip differential assembly

[Inspection of contact and sliding surfaces]

- Inspect spring plates **7**, friction plates **8**, **10**, **12**, **14** and friction discs **9**, **11**, **13** and replace if the friction surface or sliding surface shows extreme wear or heat discoloration.

NOTE

The hardened area on the inner periphery of the friction surfaces of plates and discs 7 to 14 is due to the force exerted by the springs and should not be mistaken for abnormal wear.

- Replace spring plates, friction discs and friction plates **7** to **14** if their protruding areas have cracks or are damaged.
- If there are nicks or marred areas on the friction and sliding surfaces of pressure rings **15** and friction plates **14** remove using an oil stone, then fit and correct on the base using compound.

NOTE

The hardened area on the inner periphery of the friction surfaces of plates and discs 7 to 14 is due to the force exerted by springs and should not be mistaken for abnormal wear.

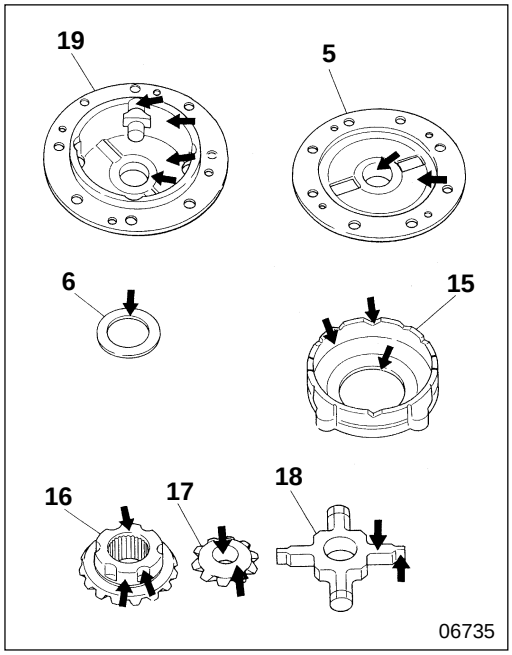

- Inspect the contact and sliding parts (⬅) of differential case LH **5**, thrust washer **6**, pressure ring **15**, side gear **16**, differential pinion **17**, pinion shaft **18**, and differential case RH **19**. If there are nicks or marred areas remove using an oil stone.

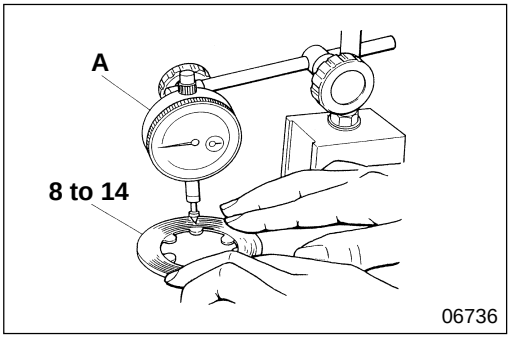

[Inspection for deformation]
Check friction plates **8**, **10**, **12**, **14** and friction discs **9**, **11**, **13** for deformation by mounting dial gauge **A** on a base and rotating the plate or disc and measuring its flatness.

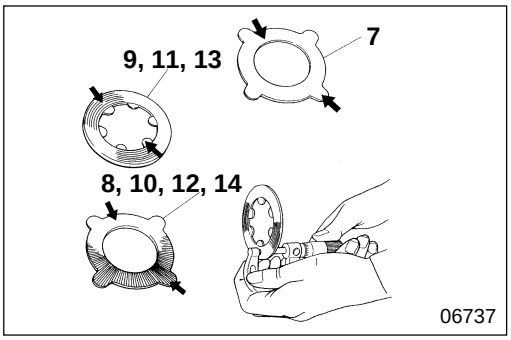

[Measurement of thickness]
Measure the thickness of the friction surfaces and the protruding parts (⬅) of spring plates **7**, friction plates **8**, **10**, **12**, **14** and friction discs **9**, **11**, **13**. If the measured values deviate from the limit, replace the faulty parts.

NOTE

Measure several locations on each part.

[Work before assembly]
In order to adjust the tolerance in the axial direction when the internal parts of differential cases LH **5** and RH **19** are inserted (clutch plates **7** to **14** friction force) and the tolerance in the axial direction of side gear **16** follow the procedure below.

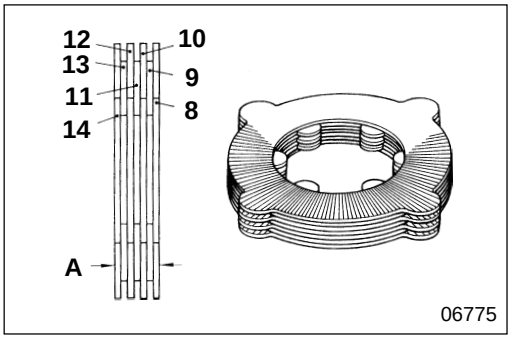

- Put friction plates **8**, **10**, **12**, **14** and friction discs **9**, **11**, **13** one on top of the other as illustrated. Using a micrometer measure thickness **A**, and by selecting the right combination of plates and discs for each set, make sure the difference in thickness between the left and right sets conforms to the standard value.

NOTE

When using new parts, keep in mind that friction plates 8, 10, 12, 14 come in one size, 2.0 mm {0.0079 in.} and friction discs 9, 11, 13 in three sizes, 1.9 mm {0.075 in.}, 2.0 mm {0.079 in.} and 2.1 mm {0.083 in.}.

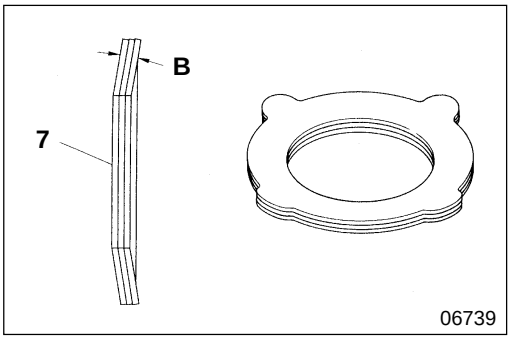

- Put spring plates **7** one on top of the other as illustrated. Using a micrometer measure thickness **B** and by selecting the right combination of plates for each set, make sure the difference in thickness between the left and right sets is minimal.

NOTE

When replacing spring plates 7 with new ones, the plate thickness is 2.0 mm {0.079 in.}.

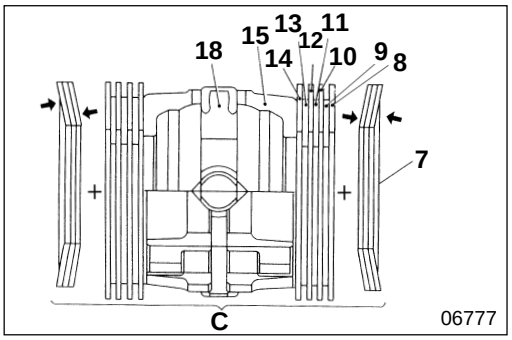

- Assemble pressure rings **15**, pinion shaft **18**, the friction discs, the friction plates and spring plates **7** to **14** and measure total width **C** using a micrometer.

NOTE

When measuring, press down both ends of pressure ring 15 to make sure its V-shaped groove is properly mated with pinion shaft 18.

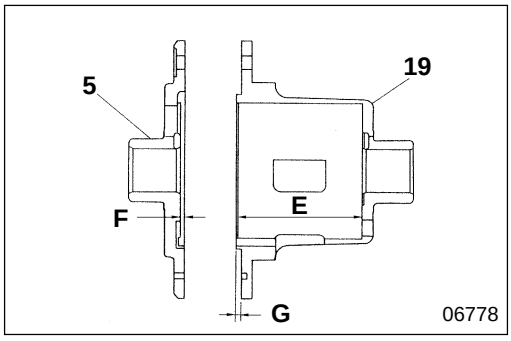

- Calculate dimension **D** between the surfaces of differential cases LH **5** and RH **19** which come in contact with spring plate **7** when the two cases are assembled.
  D = E + F – G
- If the above mentioned total width **C** and clearance **(D – C)** between differential cases LH **5** and RH **19** deviate from the standard value, adjust by changing friction discs **9**, **11**, **13**.

NOTE

When using new friction discs 9, 11, 13, keep in mind that there are three different sizes, 1.9 mm {0.075 in.}, 2.0 mm {0.079 in.} and 2.1 mm {0.083 in.}.

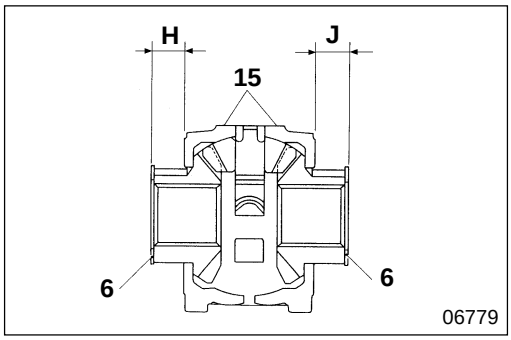

- Install thrust washers **6** as illustrated. Make sure the difference between dimensions **H** and **J** from the back face of pressure ring **15** to the end face of thrust washer on either side conforms to the standard value.

NOTE

When measuring press down both ends of pressure ring 15 to make sure its V-shaped groove is in full contact with pinion shaft 18.

- If the variation of tolerance deviates from the standard value, adjust by changing thrust washers **6**.

NOTE

When using new thrust washers 6 keep in mind that there are three different sizes, 1.50 mm {0.059 in.}, 1.60 mm {0.063 in.} and 1.70 mm {0.067 in.}.

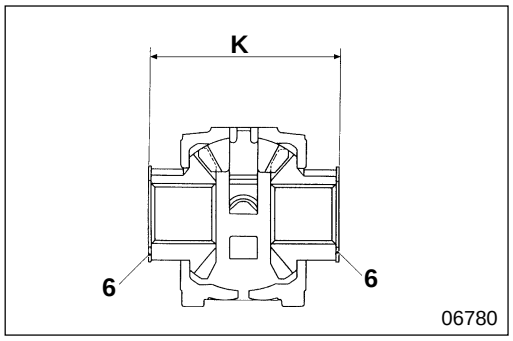

- Measure total width **K**.

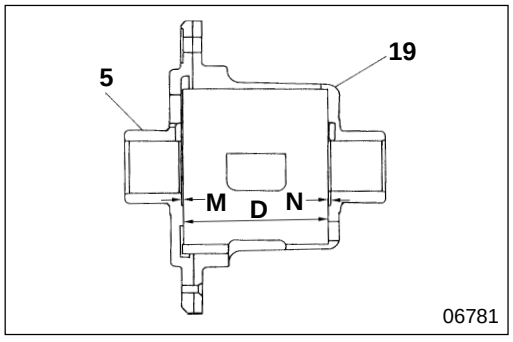

- Calculate dimension **L** between the surfaces of differential cases LH **5** and RH **19** that come in contact with thrust washers **6** when the two cases are assembled.
  L = D + M + N

NOTE

Dimension D is the dimension between the surfaces of differential cases LH 5 and RH 19 that come in contact with spring plate 7 when the two cases are assembled and was calculated above.

- Make sure that side gear **16** clearance in the axial direction **(L – K)** conforms to the standard value. If the measured value deviates from the standard value, adjust by replacing thrust washers **6**.

NOTE

- **Select thrust washers 6 so that the difference in dimension between the left and right sides from the back face of pressure ring 15 to the end face of thrust washers conforms to the standard value.**
- **When using new thrust washers keep in mind that there are three sizes, 1.50 mm {0.059 in.}, 1.60 mm {0.063 in.} and 1.70 mm {0.067 in.}.**

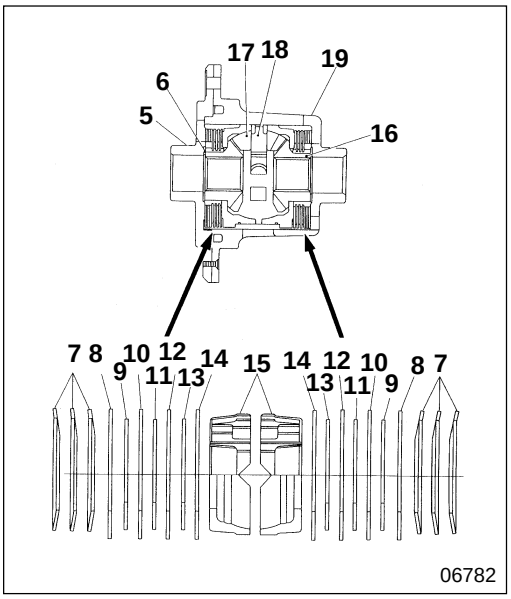

[Assembly]

Assemble the different parts in differential case RH **19** in the direction as illustrated.

CAUTION

- **Make sure that friction plates 8, 10, 12, 14 and friction discs 9, 11, 13 are installed in the correct order and that spring plate 7 is assembled in the correct direction.**
- **Apply the specified gear oil to each of the parts before assembly. Special attention should be given to applying oil to the contact and sliding surfaces.**

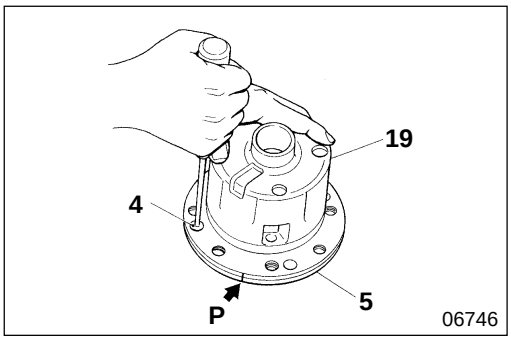

[Tightening of screws]

Align alignment marks **P** (identical Arabian numerals) on differential cases LH **5** and RH **19** and gradually tighten screws **4** evenly in diagonal order.

CAUTION

If differential cases LH 5 and RH 19 are not joined firmly even when screws 4 have been tightened, it may be because thrust washers 6 or spring plates 7 are not properly assembled and they should be reassembled.

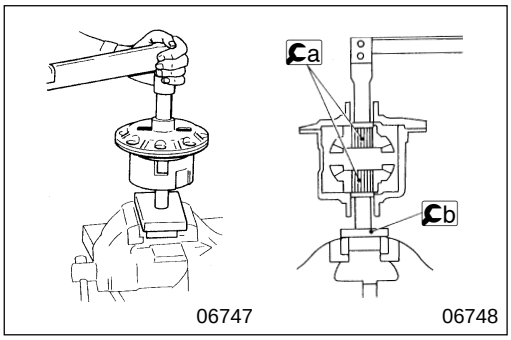

[Measurement of rotational torque]

In order to verify the friction force of clutch plates **7** to **14** after assembly, use a side gear holding tool and b side gear holding base to measure the rotation torque and make sure it conforms to the standard value.

NOTE

When measuring the rotation torque, rotate the gear and measure after the rotation has reached a sufficiently steady pace.

MITSUBISHI MOTORS

Service Manual

Table of Contents

BACK

HOME

MODEL CHANGES

FE 1997

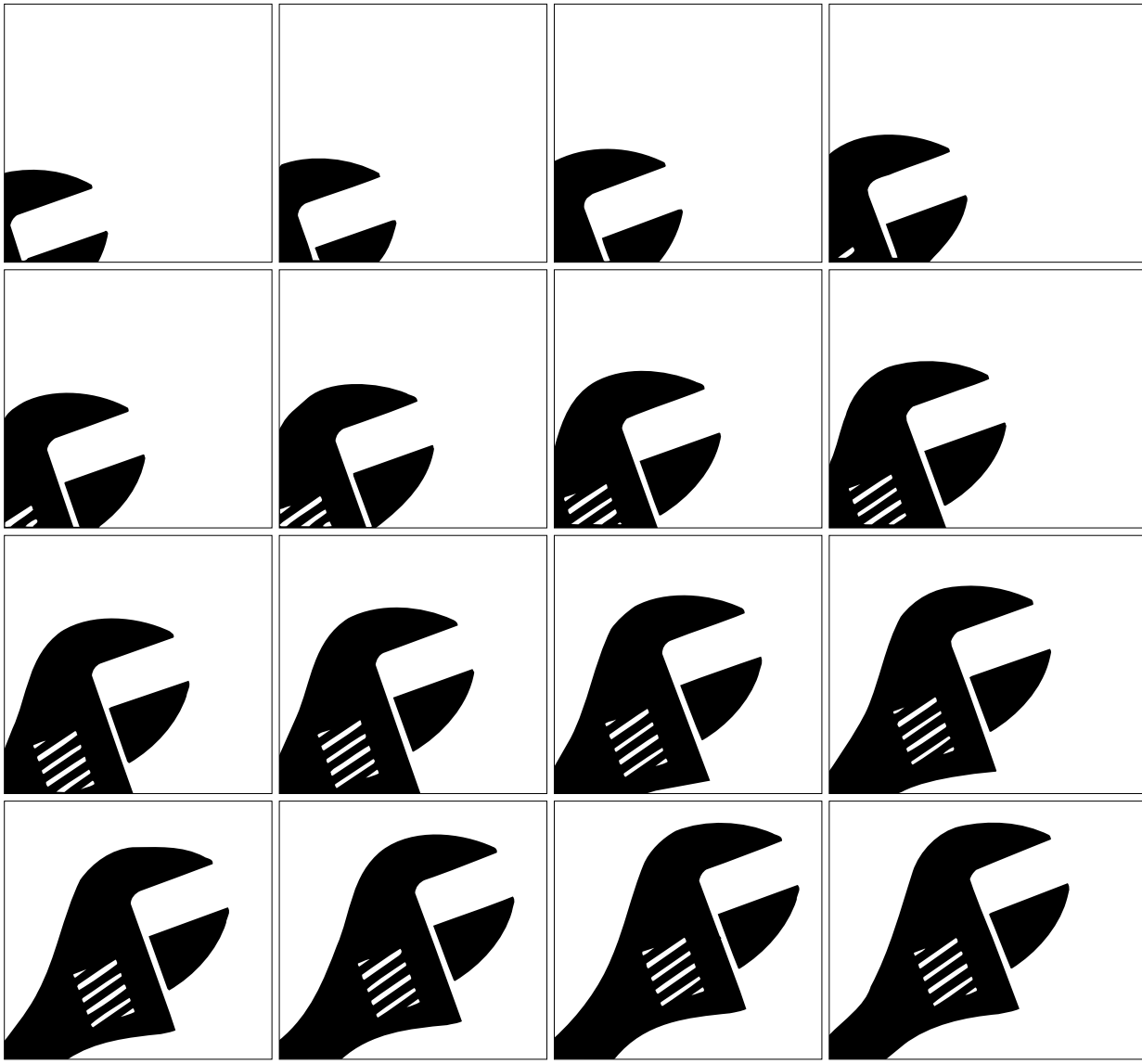

Pub. No. TWSE9501-1

FE

SERVICE MANUAL

FOREWORD

1997 Model Changes

212 Sub-Starter Circuit
<Manual Transmission>
<Automatic Transmission>

This Service Manual contains maintenance and repair methods for personnel involved in the maintenance and repair of 1997 model Mitsubishi Fuso Truck FE series.
Read this manual carefully as an aid to providing correct, efficient and fast maintenance.
Please note, however, that due to continuous improvements on the specifications, numbers and description for maintenance might be changed without prior notice.
If you have any question, or encounter a problem, please do not hesitate to contact your nearest Mitsubishi Fuso dealer or distributor.

© Mitsubishi Motors Corporation 1996 July

MITSUBISHI FUSO TRUCK OF AMERICA, Inc.

1997 MODEL CHANGES

Item	'97 Model	⇦	'96 Model
Gr 13 Fuel and engine control • Seals have been added to injection pumps to fit within the legal restriction. **CAUTION⚠** **Injection pumps should not be adjusted by anyone other than the specified ZEXEL service stations.**	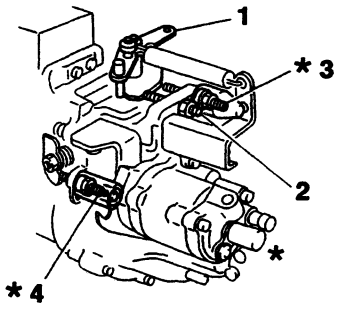 *** : Sealed part** 20777		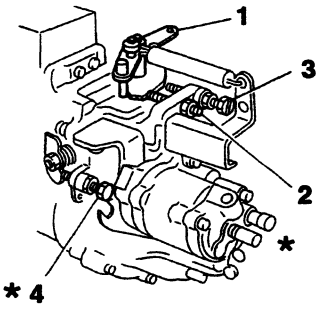 *** : Sealed part** 13777
Gr 54 Electrical • The sub-starter switch and the sub-starter relay have been eliminated.	See pages 3 to 6 in this manual		—

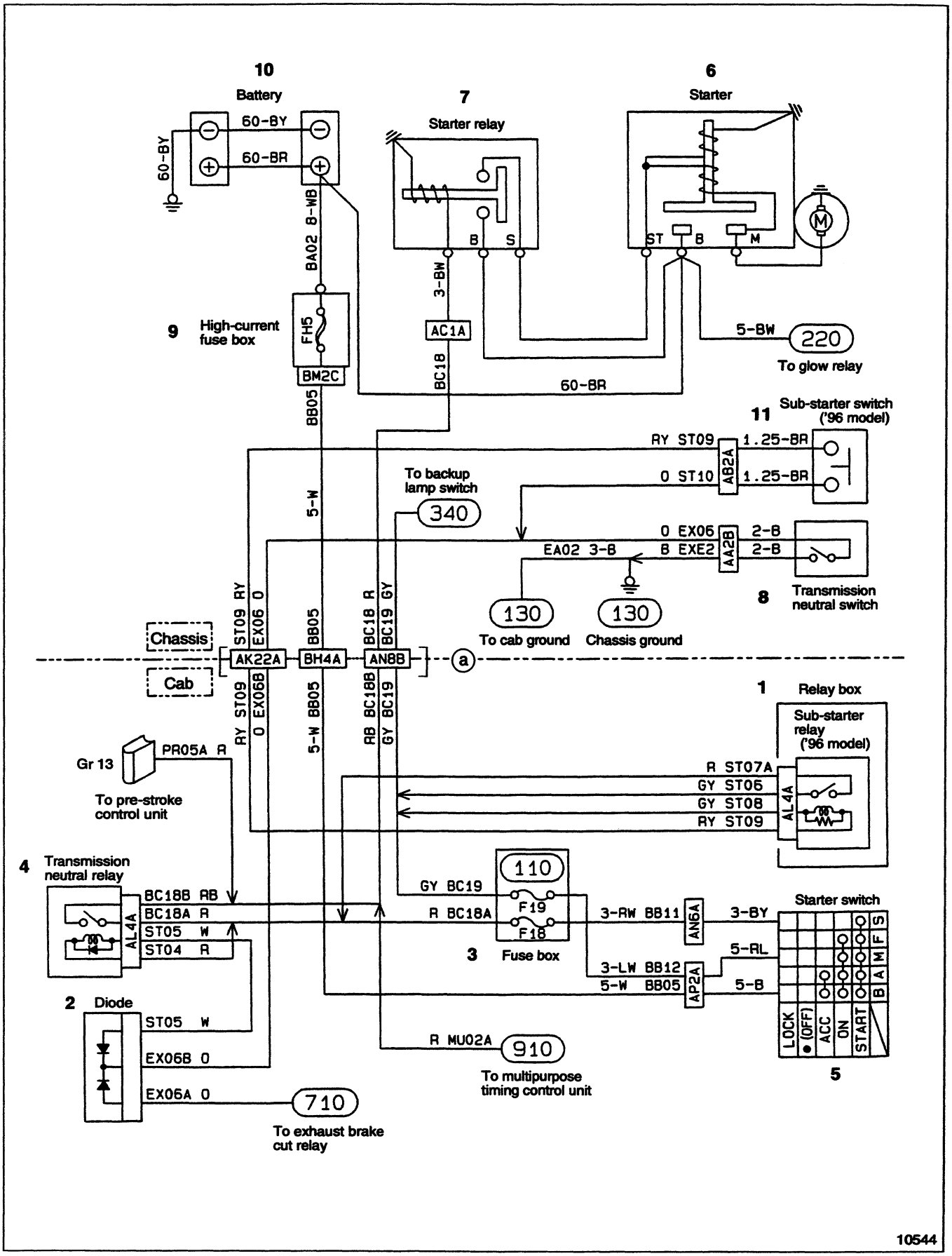
10
Battery
60-BY
60-BR
60-BY
BA02 8-WB
7
Starter relay
B
S
3-BW
6
Starter
ST
B
M
9
High-current fuse box
FH5
BM2C
BB05
AC1A
BC18
5-BW
220
To glow relay
60-BR
11
Sub-starter switch ('96 model)
RY ST09
1.25-BR
AB2A
O ST10
1.25-BR
To backup lamp switch
340
5-W
O EX06
2-B
EA02 3-B
B EXE2
2-B
AA2B
8
Transmission neutral switch
130
To cab ground
130
Chassis ground
ST09 RY
EX06 O
BB05
BC18 R
BC19 GY
Chassis
Cab
AK22A
BH4A
AN8B
a
1
Relay box
Sub-starter relay ('96 model)
Gr 13
PR05A R
To pre-stroke control unit
RY ST09
O EX06B
5-W BB05
RB BC18B
GY BC19
R ST07A
GY ST06
GY ST08
RY ST09
AL4A
4
Transmission neutral relay
BC18B RB
BC18A R
ST05 W
ST04 R
AL4A
GY BC19
R BC18A
110
F19
F18
3
Fuse box
3-RW BB11
AN6A
3-BY
5-RL
3-LW BB12
5-W BB05
AP2A
5-B
Starter switch
LOCK
(OFF)
ACC
ON
START
B A M F S
5
2
Diode
ST05 W
EX06B O
EX06A O
R MU02A
910
To multipurpose timing control unit
710
To exhaust brake cut relay
10544

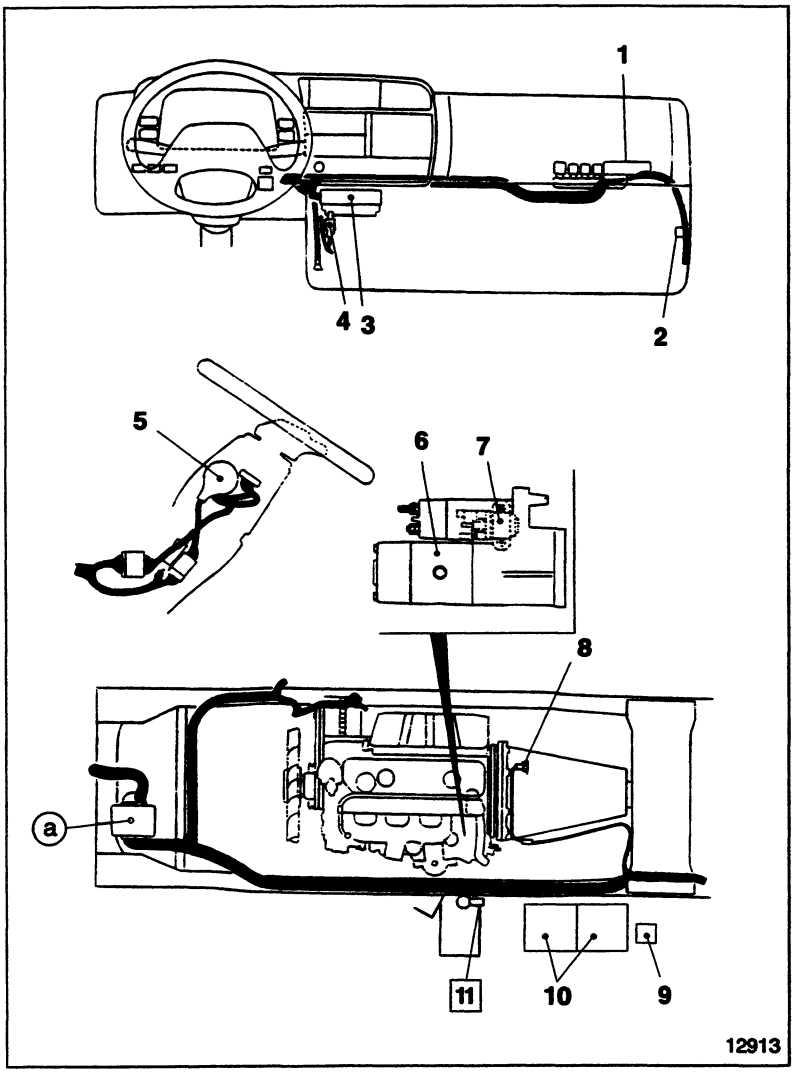

1 Relay box 📖 (604)
2 Diode
3 Fuse box 📖 (104)
4 Transmission neutral relay 📖 (604)
5 Starter switch 📖 (210)
6 Starter 📖 (201)
7 Starter relay
8 Transmission neutral switch 📖 (802)
9 High-current fuse box 📖 (104)
10 Battery 📖 (101)
11 Sub-starter switch ('96 model)

('96 model) → *54-2-35*

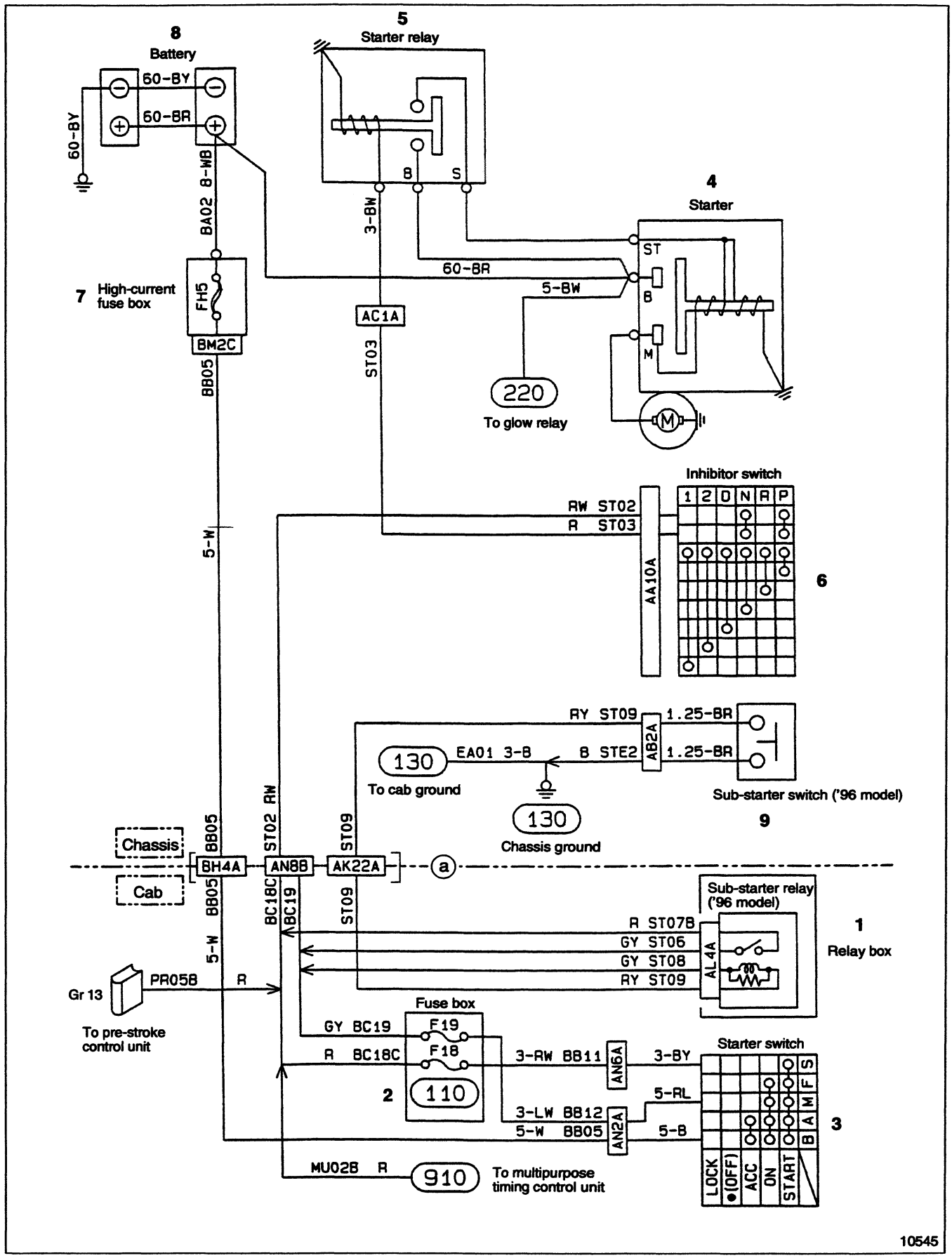
8
Battery
60-BY
60-BR
60-BY
8-WB
BA02
7
High-current fuse box
FH5
BM2C
BB05
5
Starter relay
B
S
3-BW
AC1A
ST03
4
Starter
ST
B
M
60-BR
5-BW
220
To glow relay
Inhibitor switch
1 2 D N R P
RW ST02
R ST03
AA10A
6
5-W
RY ST09
1.25-BR
AB2A
130
EA01 3-B
B STE2
1.25-BR
To cab ground
Sub-starter switch ('96 model)
9
130
Chassis ground
Chassis
Cab
BB05
ST02 RW
ST09
BH4A
AN8B
AK22A
a
BC18C
BC19
Sub-starter relay ('96 model)
R ST07B
GY ST06
GY ST08
RY ST09
AL4A
1
Relay box
Gr 13
PR05B
R
To pre-stroke control unit
Fuse box
GY BC19
F19
R BC18C
F18
2
110
3-RW BB11
AN6A
3-BY
5-RL
3-LW BB12
5-W BB05
AN2A
5-B
Starter switch
S
F
M
A
B
3
LOCK
(OFF)
ACC
ON
START
MU02B R
910
To multipurpose timing control unit
10545

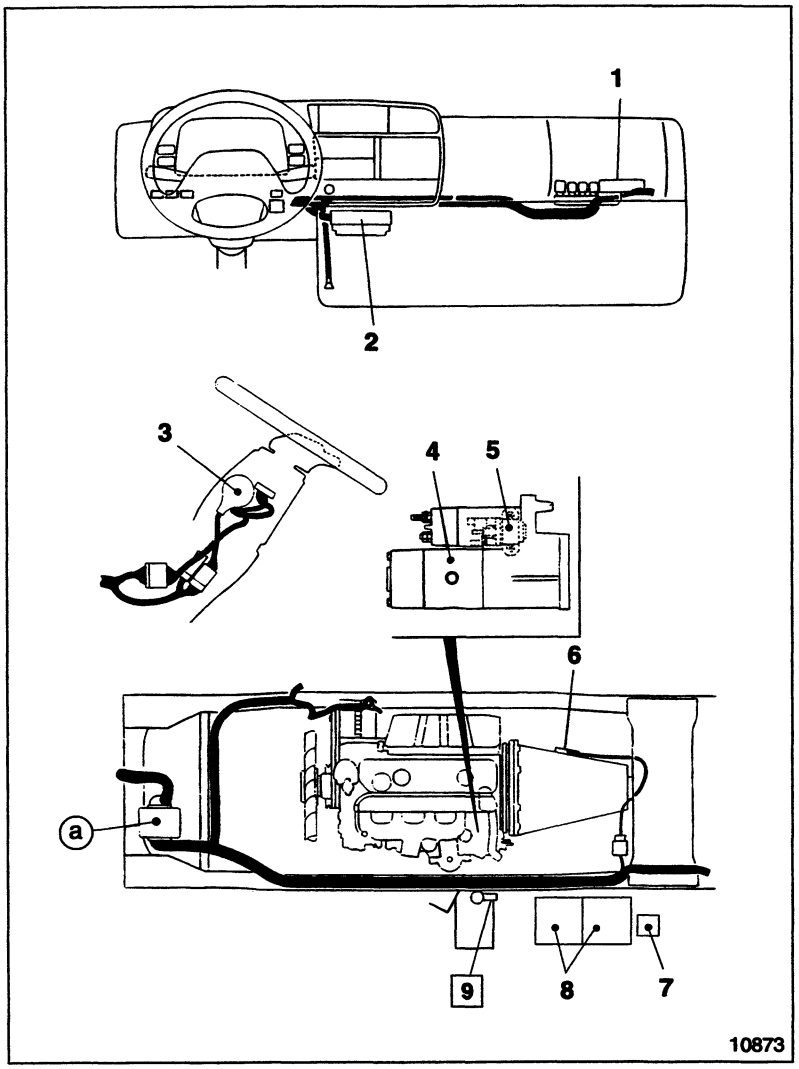

1 Relay box 📖 (604)
2 Fuse box 📖 (104)
3 Starter switch 📖 (210)
4 Starter 📖 (201)
5 Starter relay 📖 (210)
6 Inhibitor switch Gr 23
7 High-current fuse box 📖 (104)
8 Battery 📖 (101)
9 Sub-starter switch ('96 model)

('96 model) → *54-2-37*

MITSUBISHI
FUSO

FE

Service Manual

Group 00
General

Table of Contents

BACK

HOME

MITSUBISHI FUSO TRUCK OF AMERICA, Inc.

Pub No. TWSE9501-00

GROUP 00 GENERAL

MODEL CODING SYSTEM 2
POWER TRAIN TABLE 3
CHASSIS NUMBER AND ENGINE NUMBER 3
POWER TRAIN LABEL 4
VEHICLE IDENTIFICATION NUMBER 4
PRECAUTIONS FOR MAINTENANCE OPERATION 6
TABLE OF STANDARD TIGHTENING TORQUES 18
CONNECTOR CONFIGURATION CHART 22

MODEL CODING SYSTEM

Equipment Model Code

Equipment name	Model description	Code description
Enigine	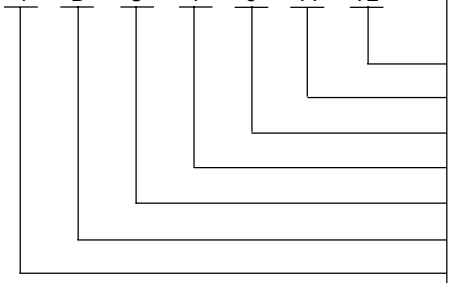	With turbocharger Stands for automobile } These are omitted in the Remodeling sequence } Service Manual Version number Series number Stands for diesel engine No. of cylinders (4 : Four cylinders)
Clutch	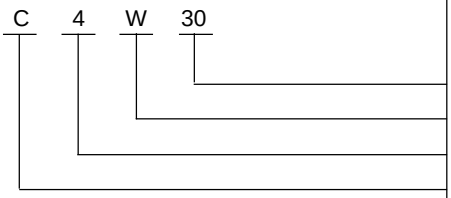	Disc outer diameter Facing material (W : Woven) Loading capacity of major type (tonnage) Stands for clutch
Transmission	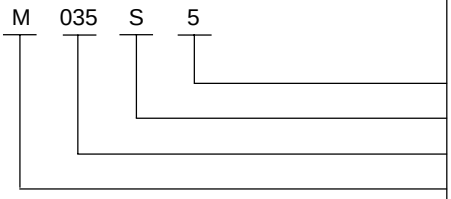	No. of forward speeds Meshing (S : Synchromesh A : Automatic) Loading capacity of major type (tonnage) Stands for transmission
Propeller shaft	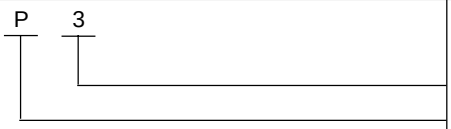	Loading capacity of major type (tonnage) Stands for propeller shaft
Reduction and differential	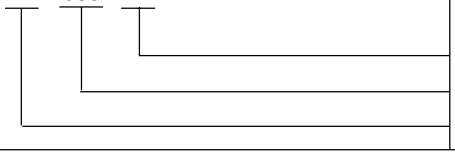	Teeth shape (H : hypoid gear) Loading capacity of major type (tonnage) Stands for reduction and differential

POWER TRAIN TABLE

Model	Engine model	Clutch model	Transmission model	Propeller shaft	Rear axle model	Final reduction and gear ratio
FE639C, E, F G.V.W. 5260 kg {11600 lb}	4D34T3 135 HP/3000 rpm 253 lbf.ft/1800 rpm (SAE, Gross)	C4W30	M035S5 5.380/0.722	P3	R033T	D033H 5.714
		Torque converter	M030A4 3.028/0.724			
FE639C, E, F G.V.W. 6120 kg {13500 lb}		C4W30	M035S5 5.380/0.722			
		Torque converter	M030A4 3.028/0.724			
FE649C, E, F G.V.W. 6580 kg {14500 lb}	4D34T3 145 HP/2900 rpm 275 lbf.ft/1600 rpm (SAE, Gross)	C4W30	M035S5 5.380/0.722			
		Torque converter	M030A4 2.784/0.694			

CHASSIS NUMBER AND ENGINE NUMBER

The serial numbers for chassis and engines are assigned to the respective vehicles and engines in manufacturing sequence: every vehicle and engine has its own numbers. These numbers are required for registration and incidental inspection of the vehicle. Please do not fail to mention these numbers to the dealers when ordering spare parts.

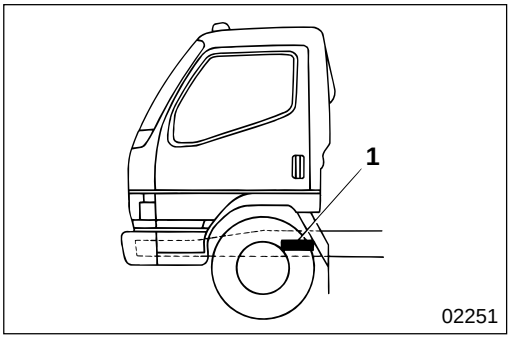

Chassis number

Chassis number 1 is punch-marked on the frame by the left-side front wheel.

Example : FE639C–□□□□□□

Vehicle model

Chassis number

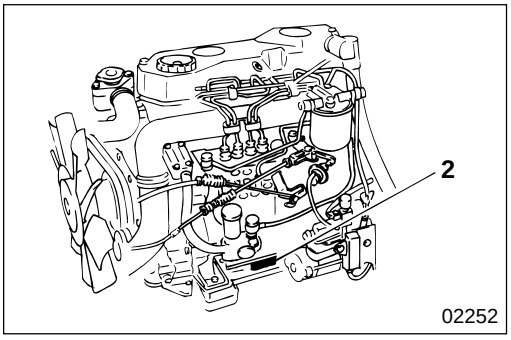

Engine number

Engine number 2 is punch-marked on the left of the crankcase.

Example : 4D34–□□□□□□

Engine number

Engine model

POWER TRAIN LABEL/VEHICLE IDENTIFICATION NUMBER

POWER TRAIN LABEL

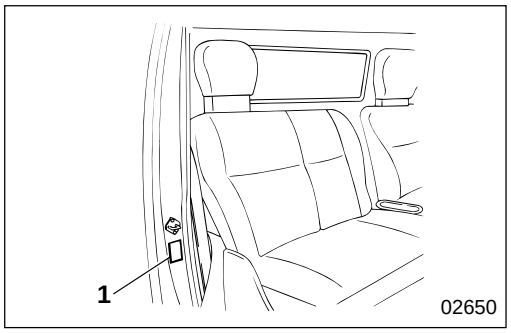

Power train label **1** located in the position illustrated indicates the vehicle model, chassis number and information relevant to the vehicle's power transmission components.

VEHICLE IDENTIFICATION NUMBER

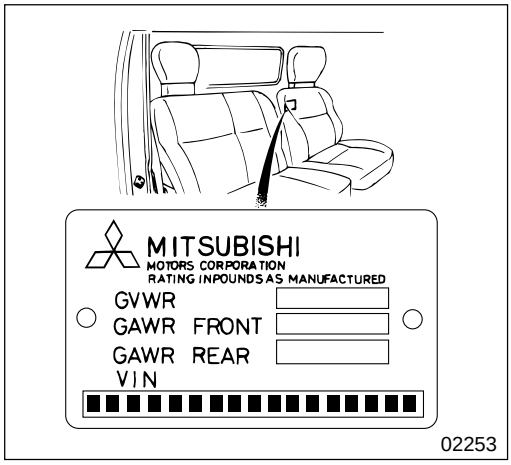

The vehicle identification number is punch-marked on the plate, which is attached in the position as illustrated.
The vehicle identification number consists of a 17-digit set of alphanumeric characters. Each digit represents the following specifications.

J W 6 A A C 1 H □ T L □ □ □ □ □ □

① ② ③ ④ ⑤ ⑥ ⑦ ⑧ ⑨ ⑩ ⑪ ⑫

①	Country	J :	Japan
②	Make	W :	Mitsubishi Fuso
③	Vehicle type	6 :	Incomplete Vehicle
④	Gross vehicle weight/Brake system	A :	4536 to 6350 kg {10001 to 14000 lbs}/Hydraulic
		B :	6351 to 7258 kg {14001 to 16000 lbs}/Hydraulic
⑤	Line	A :	FE639
		B :	FE649
⑥	Series (Wheelbase)	C :	2.6 to 2.9 m {8.6 to 9.5 ft.}
		E :	3.2 to 3.5 m {10.5 to 11.5 ft.}
		F :	3.5 to 3.8 m {11.5 to 12.5 ft.}
⑦	Cab chassis type	1 :	Chassis cab
⑧	Engine	H :	238 CID Diesel turbocharged and charge air cooled
⑨	Check digit		
⑩	Model year	T :	1996
⑪	Plant	L :	Kawasaki-2
⑫	Plant sequential number		

M E M O

PRECAUTIONS FOR MAINTENANCE OPERATION

In order to determine the condition of the vehicle adequately, attend the vehicle beforehand to find and keep record of the accumulated mileage, operating condition, what the customer's demand is, and other information that may be necessary. Prepare the steps to be taken and perform efficient and wasteless maintenance procedure.

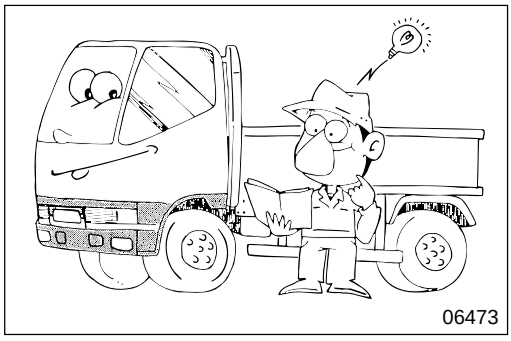
06473

Determine where the fault exists and check for the cause to see whether removal or disassembly of the part is necessary. Then follow the procedure specified by this manual.

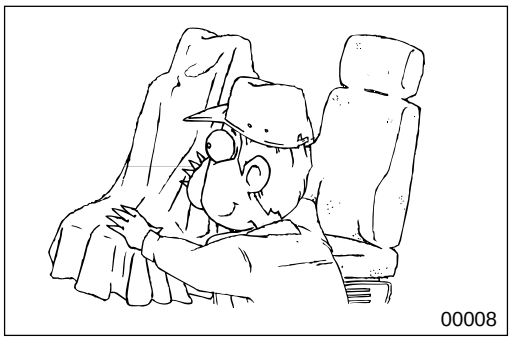
00008

Perform maintenance work at a level area.
Prepare the following.
- To prevent the seats, upholstery, floor and bodywork from being spoiled or scratched, cover with workshop sheet cover(s).

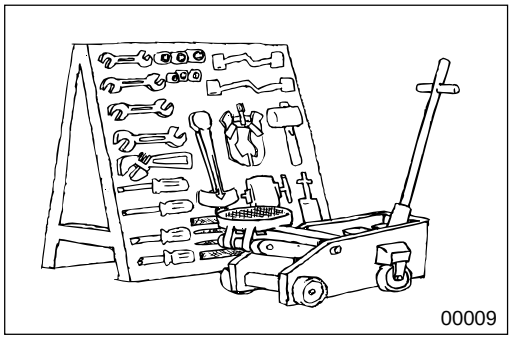
00009

- Prepare general and special tools necessary for the maintenance work.

WARNING⚠

Do not attempt to use tools other than special tools where use of special tools is specified in this manual. This will avoid injury or damage.

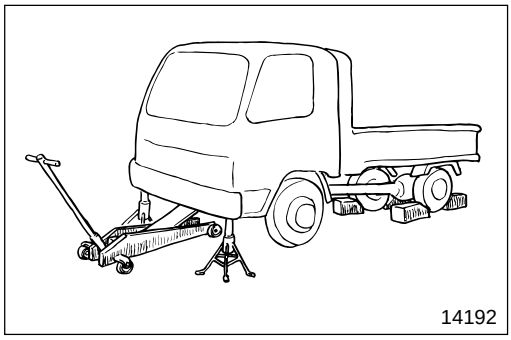
14192

When jacking up the vehicle to work under the vehicle, carry out the following preparatory work:
- Chock the wheels on both sides.
- Jack up the vehicle using a garage jack.
- Support the frame on rigid racks.

WARNING⚠

- **Chock the wheels securely so the vehicle does not move.**
- **Do not remove the chocks until the entire operation is completed.**
- **Supporting a vehicle on a garage jack only is extremely dangerous, so always support the frame on rigid racks.**
- **Leave the garage jack and rigid racks in place until the entire operation is completed. Never remove them during the operation.**

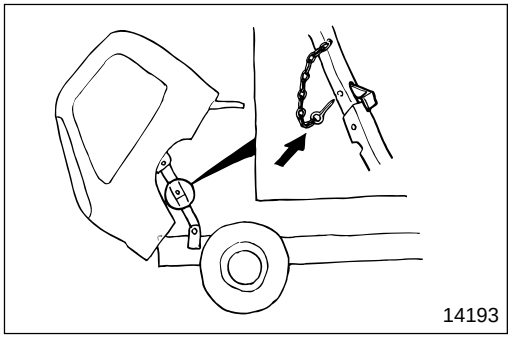

When tilting the cab, be sure to insert the safety pin into the cab stay so that the cab stay remains locked and is not released when the cab is tilted.

Pay special attention to safety when removing or installing heavy items such as engines, transmissions and axles.

When lifting up heavy items using cables, pay special attention to the following points:

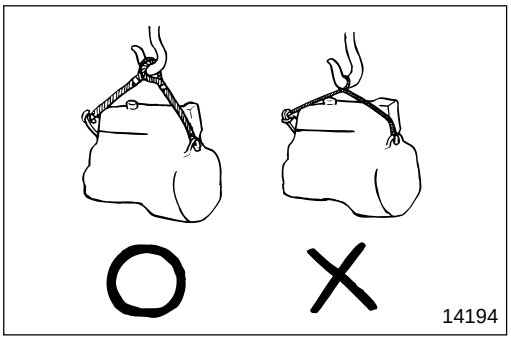

- Check the mass of the item to be lifted and use a cable capable of lifting that mass.

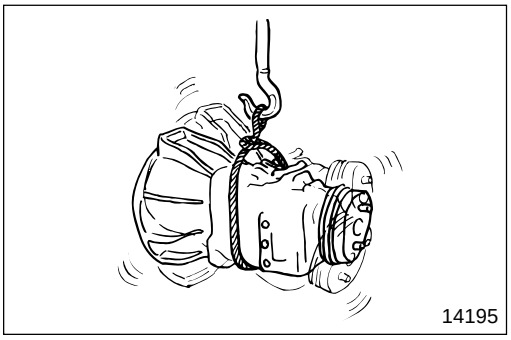

- If you do not have the specified lifting hanger, secure the item using cable taking the point-of-balance of the item into consideration.

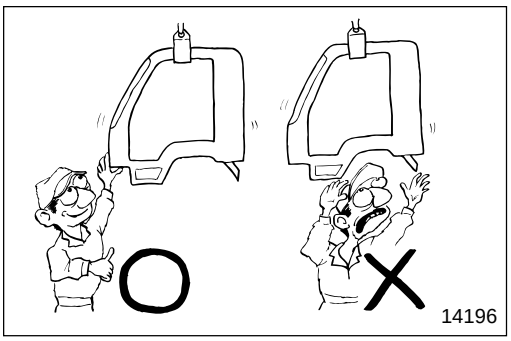

- You must work in a position where you will not be injured even if the cable comes undone and the lifted item falls.

PRECAUTIONS FOR MAINTENANCE OPERATION

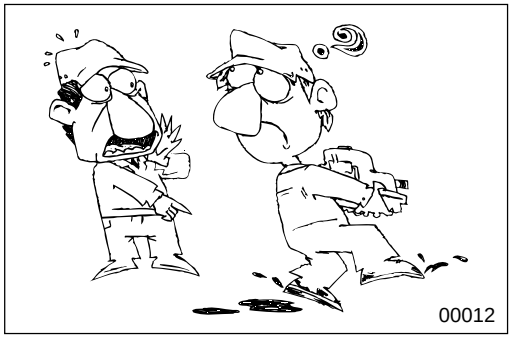

Be particularly careful not to work in shoes that have oily soles and are slippery. When working as a team of two or more, arrange signals in advance and keep confirming safety. Be careful not to accidentally bump switches or levers.

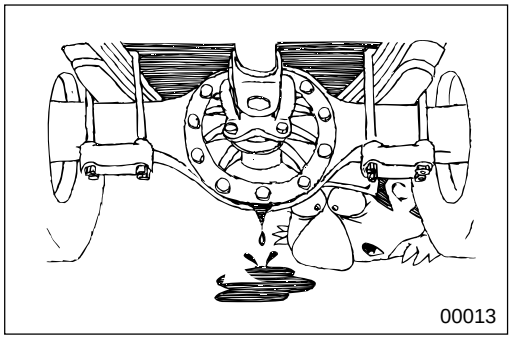

Check for oil leakage before cleaning the area having the fault otherwise you might miss detecting the leakage.

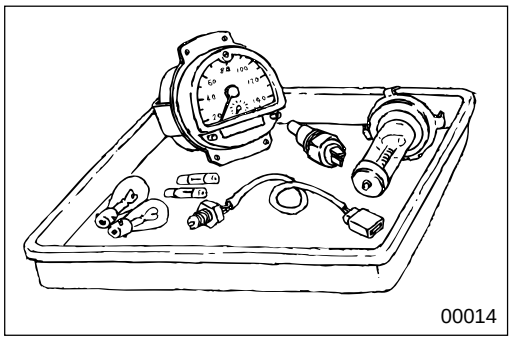

Prepare replacement part(s) beforehand.

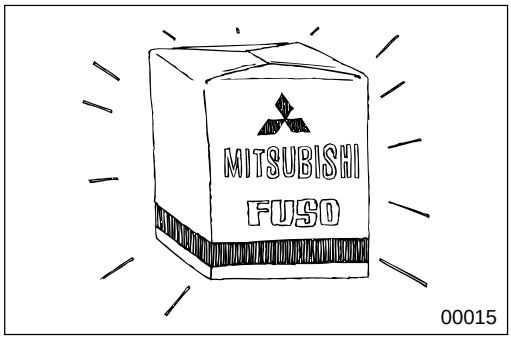

Replace oil seals, packing, O-rings and other rubber parts; gaskets and split pins with new parts whenever any of them has been removed. Use only genuine MITSUBISHI replacement parts.

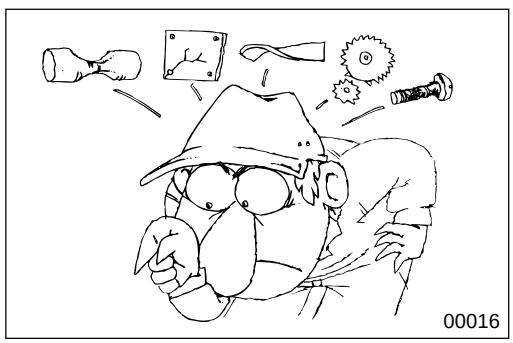

On disassembly, visually inspect all parts for wear and tear, cracks, damage, deformation, degradation, rust, corrosion, smoothness in rotation, fatigue, clogging and any other possible defect.

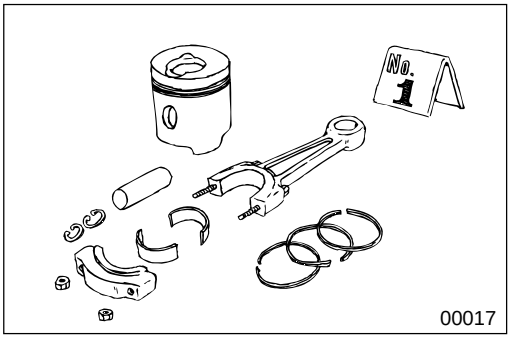

00017

Put alignment marks on part combinations before disassembly and arrange the disassembled parts neatly. This will help avoid mismating of the parts later.
Put the alignment marks, punch marks, etc. where performance and appearance will not be affected.
Cover the area left open after removal of parts to keep it free from dust.

CAUTION⚠

- **Take care to avoid mixing up numerous parts, similar parts, left and right, etc.**
- **Keep new parts for replacement and original (removed) parts separate.**

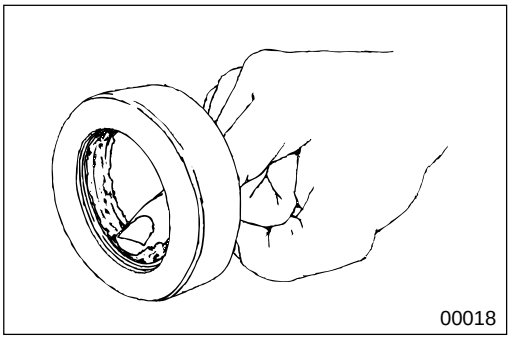
00018

Apply the specified oil or grease to U-packings, oil seals, dust seals and bearings during assembly.
Use only the specified oil, grease, etc. for lubricant, remove the excess immediately after application with a piece of waste, etc.

CAUTION⚠

When the specified lubricant, fluid and sealant is not available, you may use an equivalent.

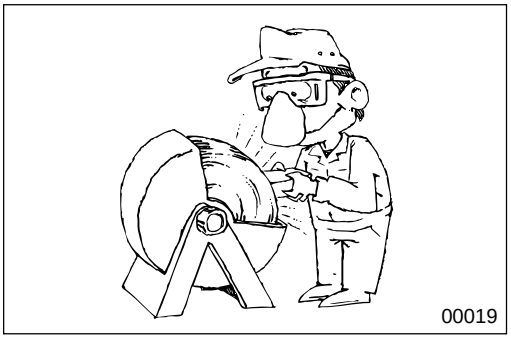
00019

Wear goggles when using a grinder or welder. Pay full attention to safety by wearing gloves when necessary. Watch out for sharp edges, etc. that might injure your hands or fingers.

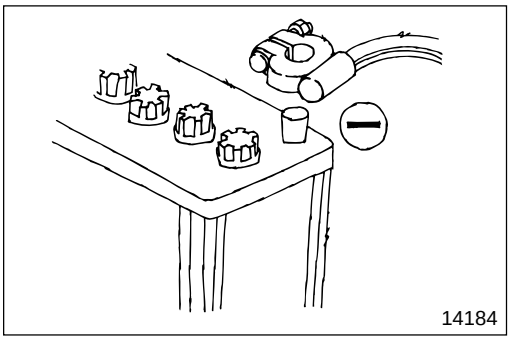
14184

Before carrying out maintenance work on the electric system, disconnect the negative terminals of the batteries to prevent them from short-circuiting and burning-out.

CAUTION⚠

Be sure to turn starter and lighting switches, etc. off before disconnecting or connecting battery terminals, because the semiconductors can be damaged.

PRECAUTIONS FOR MAINTENANCE OPERATION

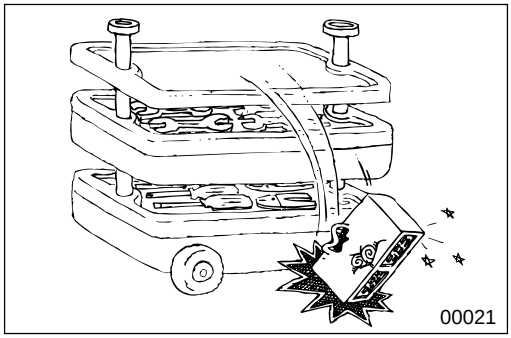

Take care when handling sensors, relays, etc. which are vulnerable to shock and heat. Do not attempt to remove the cover from, or apply paint to, the electronic control unit.

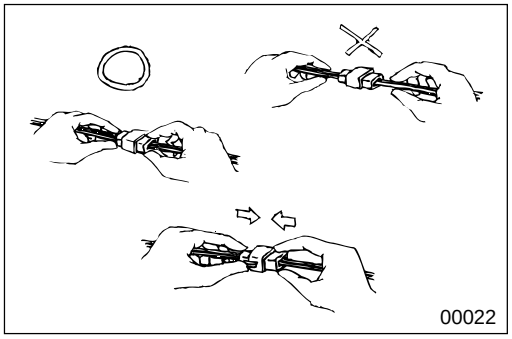

Pull the connector, and not the harness lead, to separate connectors. To separate a lock-type connector, first push toward arrow mark. To reconnect a lock-type connector, press the separated parts until they click together.

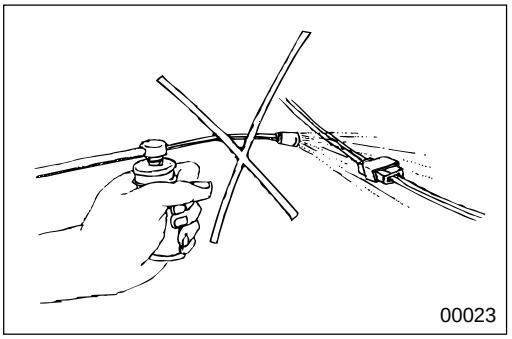

When washing the vehicle, cover the electric system parts and instruments with waterproof material beforehand (Cover with vinyl sheet or the like). Keep water away from harness wire connectors and sensors. If any of them should get wet, wipe them off immediately.

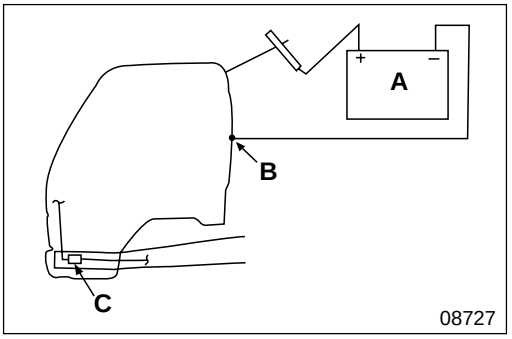

When using an electric welder, such electronic parts that are directly connected to the batteries might be damaged due to the flow of current from the welder that flows through the negative circuit. Parts that have switches might be subject to the same danger if the switches are left on. Therefore, do not fail to observe the following.

A : Welder

B : Connect the negative terminal of the welder as near as possible to the area that is to be welded.

C : Disconnect the negative cable at the cab.

Gr 54 130

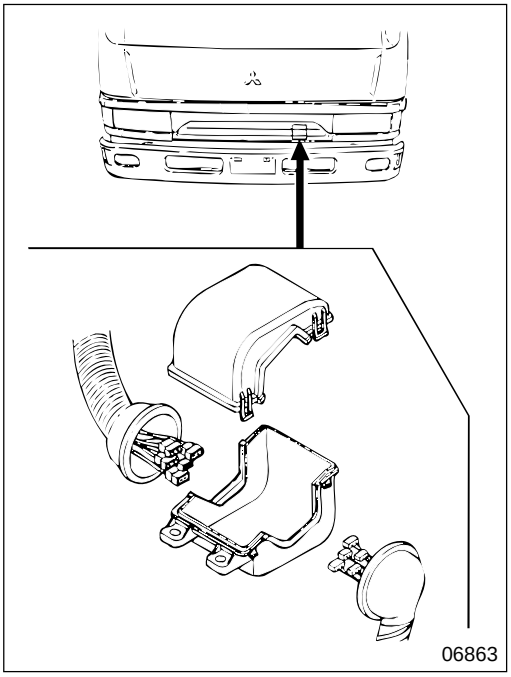

- Disconnect the negative terminals of batteries.
- Disconnect connections between the cab harness wires and the chassis harness wires.

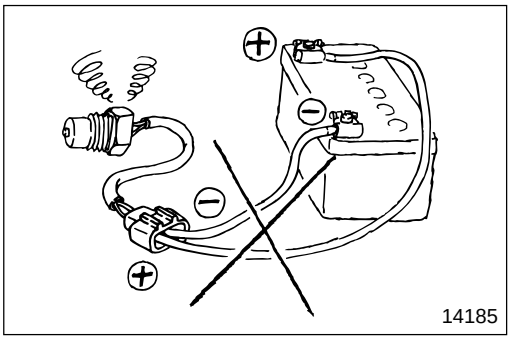

To apply voltage for testing, check that the positive and negative cables are connected properly, then increase voltage gradually from 0 volt. Do not apply voltage higher than the specified value.
In particular, pay close attention to the electronic control unit and sensors, since they are not always fed the battery voltage.

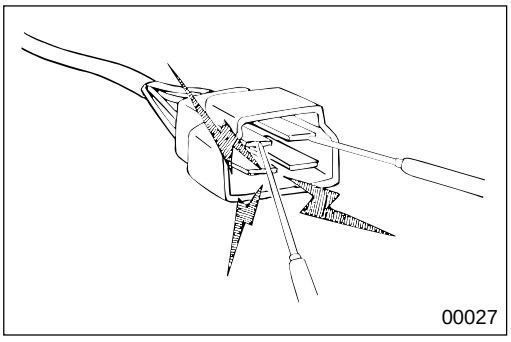

When using testers or the like for continuity tests, be careful not to allow test probes to touch the wrong terminals.

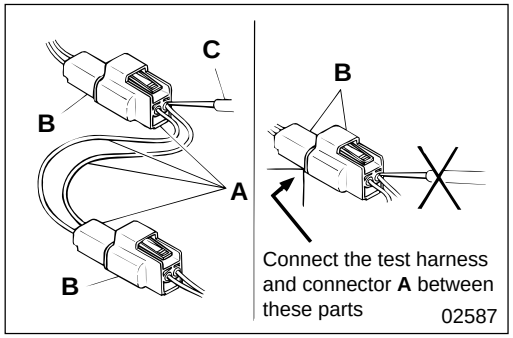

Measurement procedures using connectors

- **Test with connectors engaged (continuity through circuit obtained)**

  < Waterproof connector >

  Prepare a test harness and connectors **A**, then connect if between the two parts of harness **B** that is to be tested. Check the circuit by touching test probe **C** to the test connector.

  Never insert the test probe from the harness side of the waterproof connection, or waterproof performance might be diminished causing corrosion of the connector.

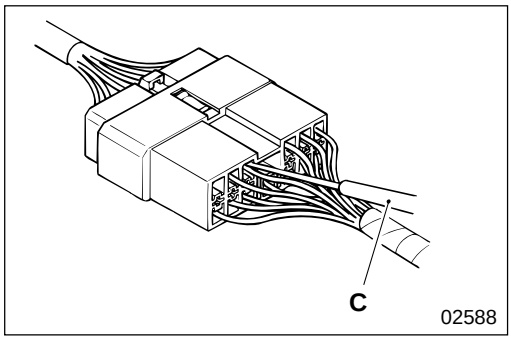

< Non-waterproof connector >

Insert test probe **C** from the harness side of the connector. Where control units, etc. have connectors that are too small to accept the test probe, do not force the test probe into them.

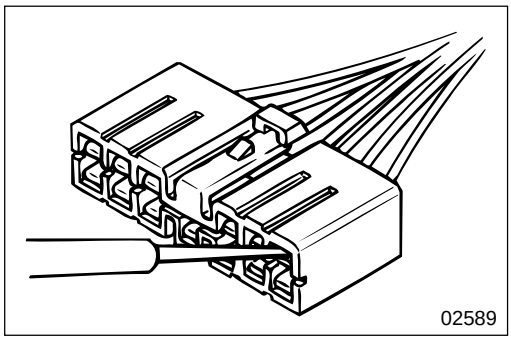

- **Test with connectors disengaged**

  Using female pins

  Insert a test probe into a terminal. However, do not force the probe into the terminal, or it will cause a poor contact.

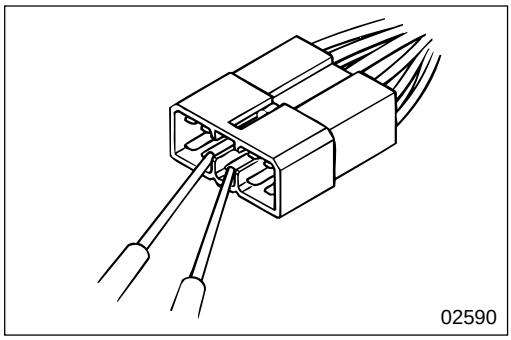

Using male pins

Touch the pins directly using test probes.

CAUTION ⚠

Be sure that you do not short circuit the connector pins when you use the test probe because this could damage the internal circuit of the electronic control unit.

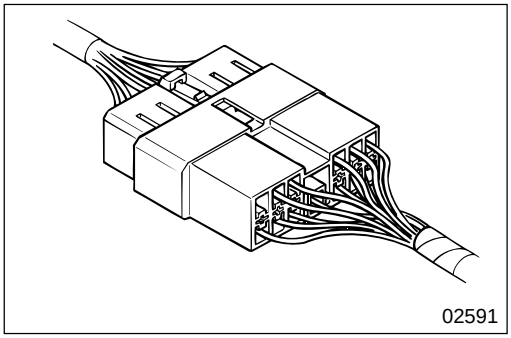

Connector inspection procedures

- **Visual inspection**

  Check for loose connection and poor engagement.

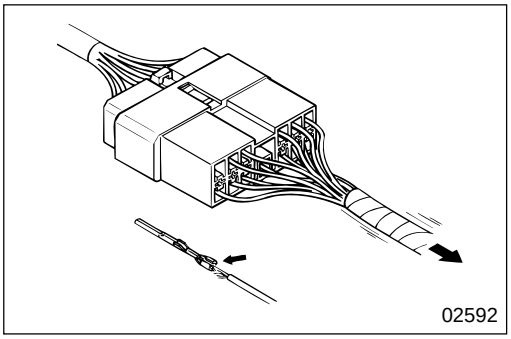

Check if harnesses are broken by pulling gently around the terminals.

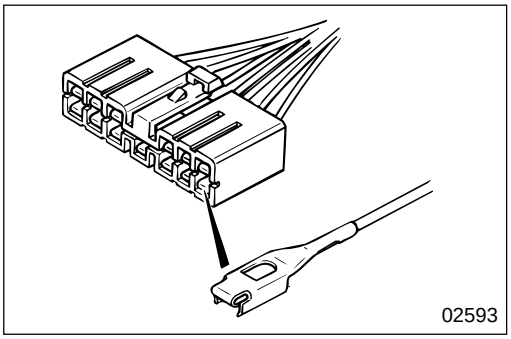

Check for a decrease in contact pressure between the male and female terminals.

Check for poor contact caused by connector pins having fallen out, rusted terminals or foreign particles.

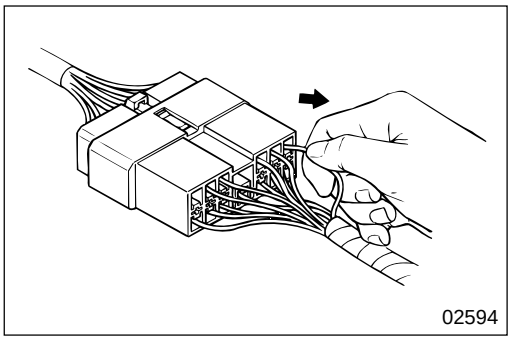

- **Connector pin fall out inspection**

  Damaged connector pin stoppers can cause poor engagement of the terminals (male and female pins) even if the connector body is secured, and might cause some pins to fall out. Check if the pins have fallen out from the connector by pulling each harness gently.

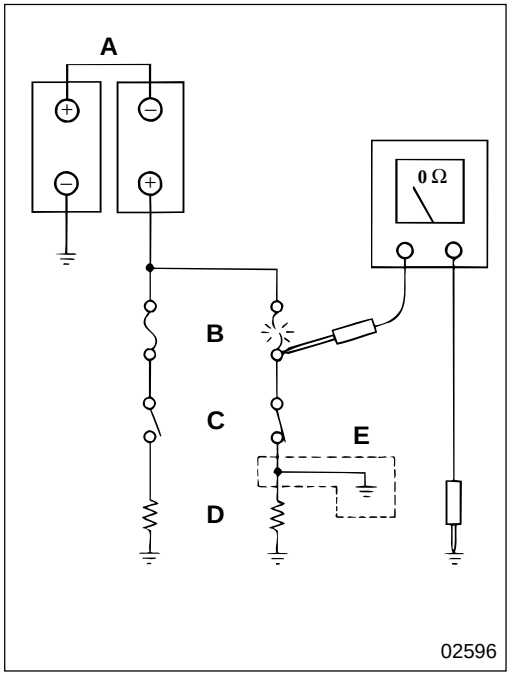

Inspection procedures for blown fuses

Remove fuse **B** and measure resistance between the loaded side of the fuse and ground.
Turn on all circuit switches (connected to the fuse). If the resistance value reading is approximately 0 Ω, a short has occurred between the switch and the loaded point. A value of other than zero may indicate that the fuse was blown by a temporary short but the short is no longer present.

The major causes of a short circuit are as follows:
- Harness stuck onto the vehicle body.
- Harness sheath damaged by friction or heat.
- Water in connectors or circuits.
- Mistakes (accidental short circuits)

A : Battery
B : Fuse
C : Loaded switch
D : Load
E : Short circuit

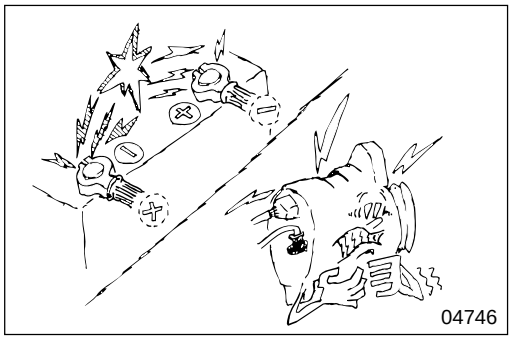

Precautions for handling alternator

When servicing the alternator, pay attention to the following :
- Do not connect the alternator with battery polarities reversed.
  If the alternator is connected with reversed polarities, a large current flow from the battery to the alternator occurs, and the diode or regulator might be damaged.

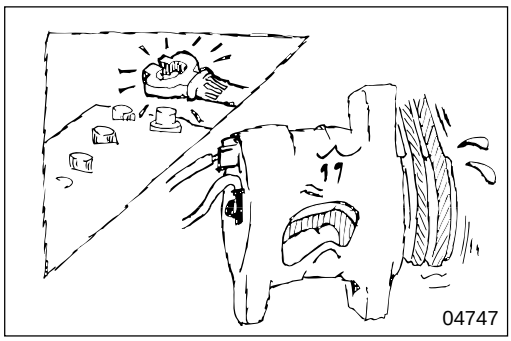

- While the engine is running, do not remove the battery terminals. If the battery terminals are removed at that time, a surge voltage is generated and the diode or regulator might be weakened.

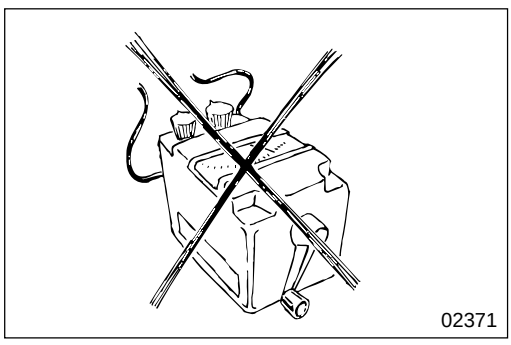

- Do not use a high-voltage tester such as a megger for inspection.
  If a high-voltage tester is used, the diode or regulator might be destroyed.

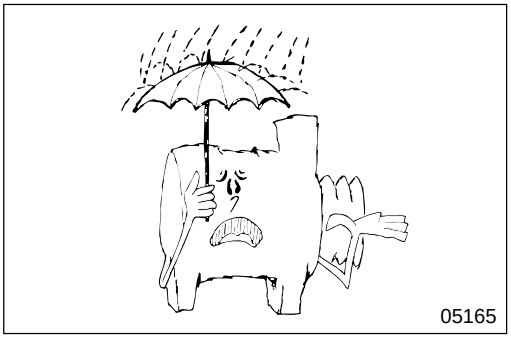

- Do not splash water over the alternator.
  If water is directly splashed over the alternator, individual components will be short-circuited and might be destroyed.

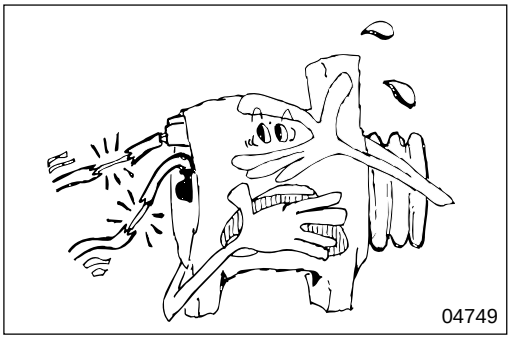

- Do not short-circuit terminal B and terminal L while running the alternator.
  If the terminals are short-circuited while the alternator is running, the diode trio might be destroyed.

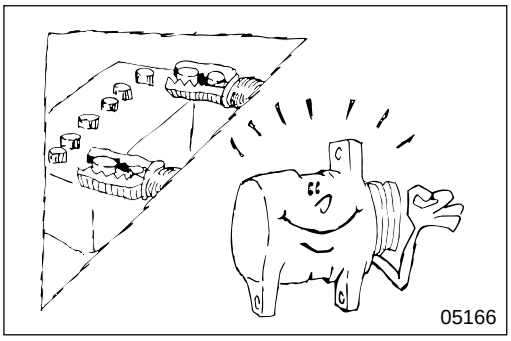

- Disconnect the battery terminals before quick-charging the battery. Quick-charging without disconnecting the battery terminals might damage the diode or regulator.

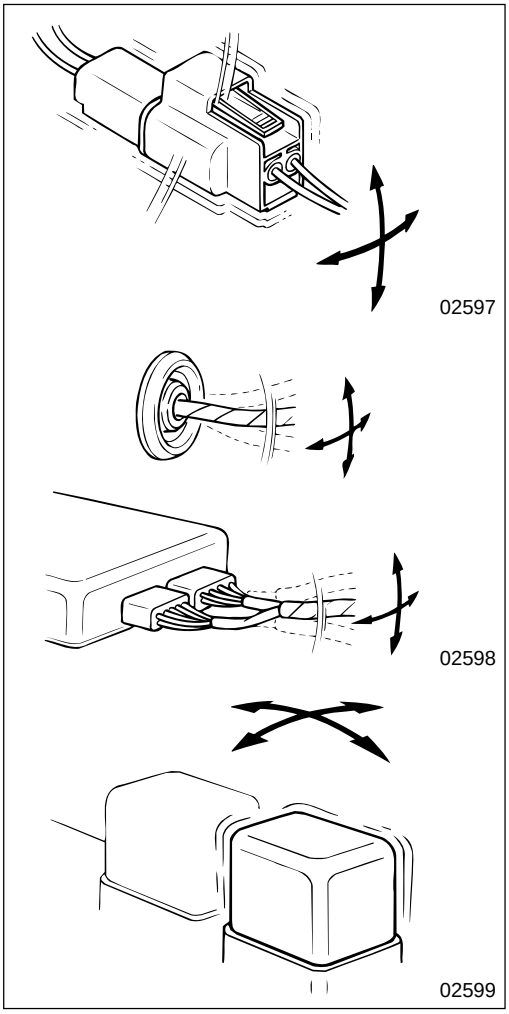

Measures for temporary faults

Temporary faults often occur under certain conditions. So identifying those conditions helps to find possible causes. To find the conditions under which temporary faults occurred, you need to reproduce the faults after interviewing customers in detail about actual driving conditions, weather, frequency of occurence and fault phenomena.
Then determine if the faults were caused by vibration, temperature or other possible elements depending on the actual conditions identified. If vibration is suspected as a possible cause, inspect individual connectors as follows to check if the fault will occur:

- Shake the connector gently in all four directions of the arrows as illustrated.
- Shake the wiring harness gently in all four directions of the arrows as illustrated.
- Wiggle each sensor or piece of equipment by hand.
- Gently shake the wiring harnesses near movable parts such as suspensions.

The inspection subjects include possible causes related to the diagnosis code outputs and faults, as well as the connectors and other parts in the inspection procedure.

M E M O

TABLE OF STANDARD TIGHTENING TORQUES

- Use specified bolts and nuts and tighten them at specified torques according to the following table, unless otherwise specified.
- Threads and contact seats shall be dry.
- Where there is a difference in strength classification between the nut and bolt (or stud bolt), the torque specified for the bolt shall apply.

Hex-head Bolt and Stud Bolt

Unit : N·m {lbf.ft, kgf·m}

Strength classification	4 T		7 T		8 T	
Repre-sentation / Diameter symbol	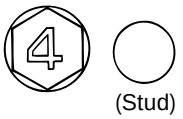 (Stud)		 (Stud)		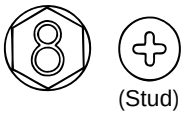 (Stud)	
M 5	2 to 3 {1.4 to 2.2, 0.2 to 0.3}	—	4 to 6 {2.9 to 4.3, 0.4 to 0.6}	—	5 to 7 {3.6 to 5.1, 0.5 to 0.7}	—
M 6	4 to 6 {2.9 to 4.3, 0.4 to 0.6}	—	7 to 11 {5.1 to 8.0, 0.7 to 1.1}	—	8 to 12 {5.8 to 8.7, 0.8 to 1.2}	—
M 8	9 to 14 {6.5 to 10, 0.9 to 1.4}	—	17 to 26 {12 to 19, 1.7 to 2.6}	—	20 to 29 {14 to 22, 2.0 to 3.0}	—
M 10	19 to 28 {14 to 20, 1.9 to 2.8}	18 to 26 {13 to 20, 1.8 to 2.7}	36 to 52 {25 to 40, 3.5 to 5.5}	33 to 49 {25 to 36, 3.5 to 5.0}	45 to 60 {33 to 43, 4.5 to 6.0}	41 to 59 {31 to 50, 4.3 to 6.9}
M 12	35 to 50 {25 to 36, 3.4 to 5.0}	31 to 46 {22 to 34, 3.1 to 4.7}	70 to 95 {51 to 69, 7.0 to 9.5}	65 to 85 {47 to 61, 6.5 to 8.5}	85 to 110 {61 to 80, 8.5 to 11}	75 to 100 {54 to 72, 7.5 to 10}
M 14	60 to 85 {43 to 61, 6.0 to 8.5}	55 to 75 {40 to 54, 5.5 to 7.5}	120 to 160 {87 to 115, 12 to 16}	110 to 140 {80 to 100, 11 to 14}	130 to 180 {94 to 130, 13 to 18}	120 to 160 {87 to 120, 12 to 17}
M 16	90 to 130 {69 to 94, 9.5 to 13}	90 to 120 {65 to 87, 9.0 to 12}	180 to 240 {130 to 175, 18 to 24}	160 to 220 {115 to 160, 16 to 22}	200 to 270 {145 to 195, 20 to 27}	190 to 260 {135 to 190, 19 to 26}
M 18	140 to 190 {100 to 135, 14 to 19}	120 to 160 {87 to 115, 12 to 16}	260 to 340 {180 to 255, 25 to 35}	220 to 290 {160 to 215, 22 to 30}	290 to 390 {215 to 290, 30 to 40}	260 to 340 {190 to 255, 26 to 35}
M 20	190 to 260 {135 to 190, 19 to 26}	170 to 230 {120 to 165, 17 to 23}	350 to 470 {260 to 345, 36 to 48}	320 to 420 {230 to 310, 32 to 43}	410 to 550 {295 to 405, 41 to 56}	370 to 490 {265 to 360, 37 to 50}
M 22	260 to 340 {190 to 255, 26 to 35}	230 to 300 {165 to 225, 23 to 31}	470 to 640 {345 to 470, 48 to 65}	430 to 570 {310 to 420, 43 to 58}	550 to 740 {405 to 540, 56 to 75}	490 to 670 {360 to 490, 50 to 68}
M 24	340 to 450 {255 to 330, 34 to 46}	290 to 390 {210 to 290, 29 to 40}	630 to 840 {455 to 620, 63 to 86}	540 to 730 {395 to 535, 55 to 74}	730 to 980 {535 to 725, 74 to 100}	630 to 840 {460 to 620, 64 to 86}

Hex-head Flange Bolt

Unit : N·m {lbf.ft, kgf·m}

Strength classification	4 T		7 T		8 T	
Repre-sentation / Diameter symbol						
M 6	4 to 6 {2.9 to 4.3, 0.4 to 0.6}	—	8 to 12 {5.8 to 8.7, 0.8 to 1.2}	—	9 to 14 {6.5 to 10, 0.9 to 1.4}	—
M 8	10 to 15 {7.0 to 11, 1.0 to 1.5}	—	19 to 28 {14 to 20, 1.9 to 2.8}	—	22 to 32 {16 to 24, 2.2 to 3.3}	—
M 10	21 to 30 {15 to 22, 2.1 to 3.1}	20 to 28 {14 to 21, 1.9 to 2.9}	39 to 58 {28 to 43, 3.9 to 6.0}	37 to 53 {26 to 39, 3.6 to 5.4}	50 to 65 {36 to 47, 5.0 to 6.5}	45 to 65 {33 to 47, 4.5 to 6.5}
M 12	38 to 54 {27 to 40. 3.8 to 5.5}	35 to 51 {25 to 38, 3.4 to 5.2}	80 to 110 {58 to 80, 8.0 to 11}	70 to 95 {51 to 69, 7.0 to 9.5}	90 to 120 {65 to 87, 9.0 to 12}	85 to 110 {61 to 80, 8.5 to 11}

Hex-head Nut

Unit : N·m {lbf.ft, kgf·m}

Strength classification	4 T		6 T	
Representation / Diameter symbol			   	
	Standard screw	Coarse screw	Standard screw	Coarse screw
M 5	2 to 3 {1.4 to 2.2, 0.2 to 0.3}	—	4 to 6 {2.9 to 4.3, 0.4 to 0.6}	—
M 6	4 to 6 {2.9 to 4.3, 0.4 to 0.6}	—	7 to 11 {5.1 to 8.0, 0.7 to 1.1}	—
M 8	9 to 14 {6.5 to 10, 0.9 to 1.4}	—	17 to 26 {12 to 19, 1.7 to 2.6}	—
M 10	19 to 28 {14 to 20, 1.9 to 2.8}	18 to 26 {13 to 20, 1.8 to 2.7}	36 to 52 {25 to 40, 3.5 to 5.5}	33 to 49 {25 to 36, 3.5 to 5.0}
M 12	35 to 50 {25 to 36, 3.4 to 5.0}	31 to 46 {22 to 34, 3.1 to 4.7}	70 to 95 {51 to 69, 7.0 to 9.5}	65 to 85 {47 to 61, 6.5 to 8.5}
M 14	60 to 85 {43 to 61, 6.0 to 8.5}	55 to 75 {40 to 54, 5.5 to 7.5}	120 to 160 {87 to 115, 12 to 16}	110 to 140 {80 to 100, 11 to 14}
M 16	90 to 130 {69 to 94, 9.5 to 13}	90 to 120 {65 to 87, 9.0 to 12}	180 to 240 {130 to 175, 18 to 24}	160 to 220 {115 to 160, 16 to 22}
M 18	140 to 190 {100 to 135, 14 to 19}	120 to 160 {87 to 115, 12 to 16}	260 to 340 {180 to 255, 25 to 35}	220 to 290 {160 to 215, 22 to 30}
M 20	190 to 260 {135 to 190, 19 to 26}	170 to 230 {120 to 165, 17 to 23}	350 to 470 {260 to 345, 36 to 48}	320 to 420 {230 to 310, 32 to 43}
M 22	260 to 340 {190 to 255, 26 to 35}	230 to 300 {165 to 225, 23 to 31}	470 to 640 {345 to 470, 48 to 65}	430 to 570 {310 to 420, 43 to 58}
M 24	340 to 450 {255 to 330, 34 to 46}	290 to 390 {210 to 290, 29 to 40}	630 to 840 {455 to 620, 63 to 86}	540 to 730 {395 to 535, 55 to 74}

Hex-head Flange Nut

Unit : N·m {lbf.ft, kgf·m}

Strength classification	tion	
4 T / Representation	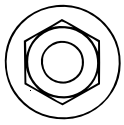	
	Standard screw	Coarse screw
M 6	4 to 6 {2.9 to 4.3, 0.4 to 0.6}	—
M 8	10 to 15 {7.0 to 11, 1.0 to 1.5}	—
M 10	21 to 30 {15 to 22, 2.1 to 3.1}	20 to 28 {14 to 21, 1.9 to 2.9}
M 12	38 to 54 {27 to 40, 3.8 to 5.5}	35 to 51 {25 to 38, 3.4 to 5.2}

TABLE OF STANDARD TIGHTENING TORQUES

Tightening torque for flair nut for general purpose

Unit : N·m {lbf.ft, kgf·m}

Pipe diameter	ø4.76 mm {0.19 in.}	ø6.35 mm {0.25 in.}	ø8 mm {0.31 in.}	ø10 mm {0.39 in.}	ø12 mm {0.47 in.}	ø15 mm {0.59 in.}
Tightening torque	17 {12, 1.7}	25 {19, 2.6}	39 {29, 4.0}	59 {43, 6.0}	88 {65, 9.0}	98 {72, 10.0}

Tightening torque for air piping nylon tube for general purpose {DIN type}

Unit : N·m {lbf.ft, kgf·m}

Standard diameter	6×1 mm {0.24×0.039 in.}	10×1.25 mm {0.39×0.049 in.}	12×1.5 mm {0.47×0.059 in.}	15×1.5 mm {0.59×0.059 in.}
Tightening torque	$20^{+5.9}_{-0}$ {$14^{+4.3}_{-0}$, $2.0^{+0.6}_{-0}$}	$29^{+9.8}_{-0}$ {$22^{+7.2}_{-0}$, $3.0^{+1.0}_{-0}$}	$49^{+9.8}_{-0}$ {$36^{+7.2}_{-0}$, $5.0^{+1.0}_{-0}$}	$54^{+4.9}_{-0}$ {$40^{+7.2}_{-0}$, $5.5^{+1.0}_{-0}$}

Tightening torque for air piping nylon tube for general purpose {SAE type}

Unit : N·m {lbf.ft, kgf·m}

Standard diameter	1/4 in.	3/8 in.	1/2 in.	5/8 in.
Tightening torque	$13^{+3.9}_{-0}$ {$9.4^{+2.9}_{-0}$, $1.3^{+0.4}_{-0}$}	$29^{+4.9}_{-0}$ {$22^{+3.6}_{-0}$, $3.0^{+0.5}_{-0}$}	$49^{+4.9}_{-0}$ {$36^{+3.6}_{-0}$, $5.0^{+0.5}_{-0}$}	$64^{+4.9}_{-0}$ {$47^{+3.6}_{-0}$, $6.5^{+0.5}_{-0}$}

M E M O

CONNECTOR CONFIGURATION CHART

Model (Number shows number of pins)		Connection
AA	AA 1 A	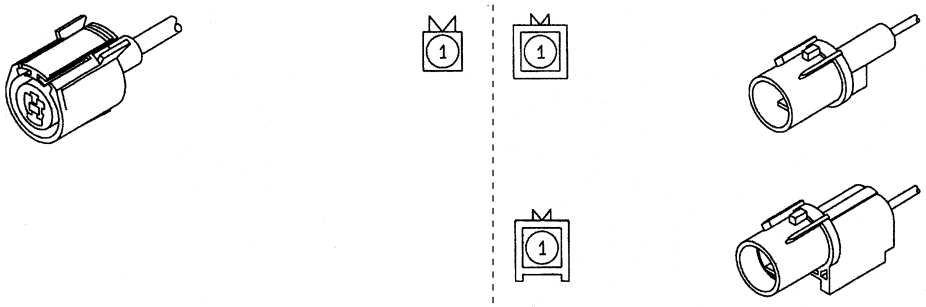
	AA 2 A	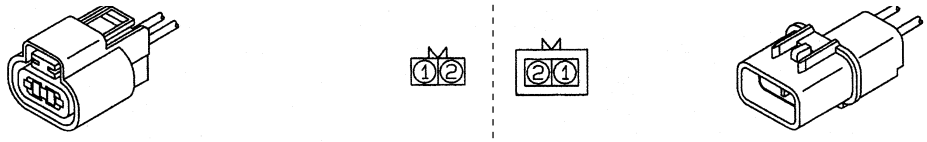
	AA 2 B	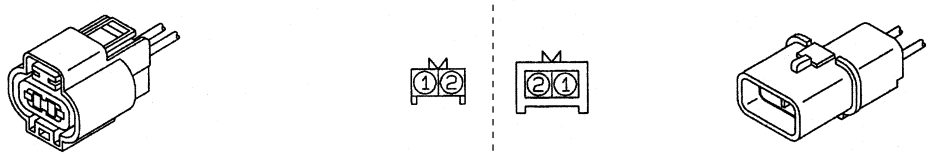
	AA 3 A	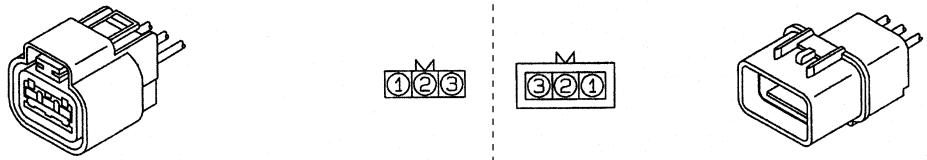
	AA 3 B	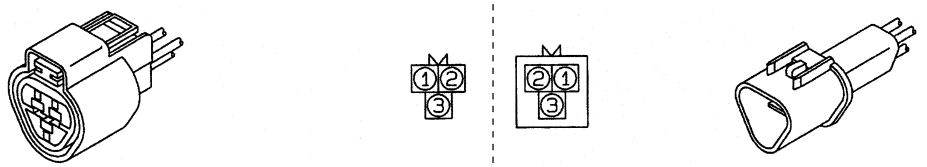
	AA 4 A	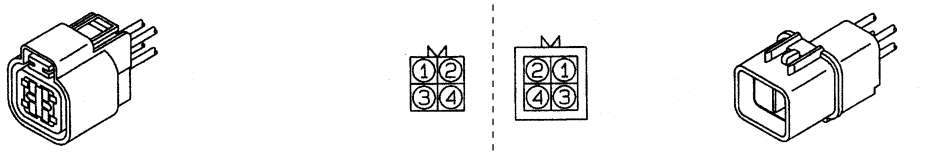
	AA 4 B	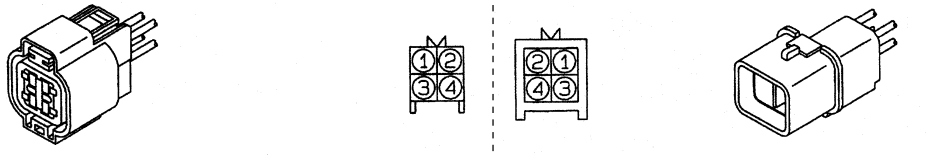
	AA 6 A	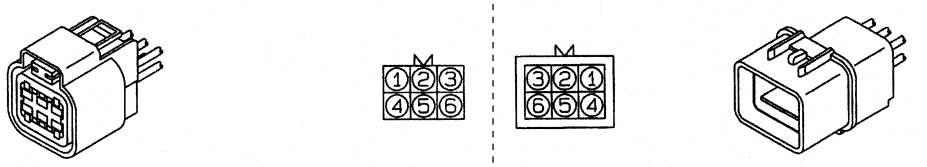

Model (Number shows number of pins)		Connection			
AA	AA 6 B	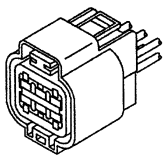		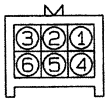	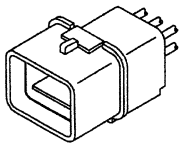
	AA 8 A	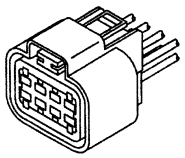	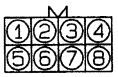	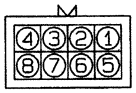	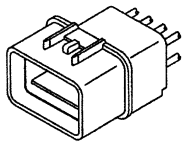
	AA10A	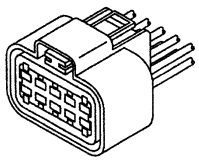	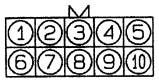	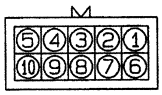	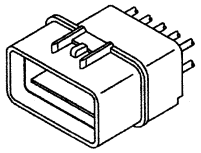
	AA12A	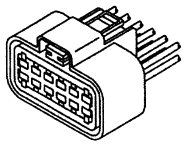	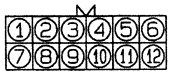	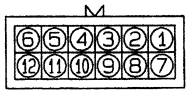	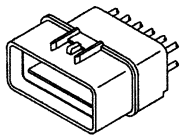
AB	AB 1 A	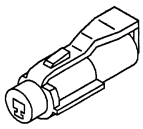			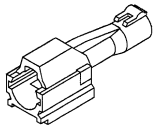
	AB 2 A	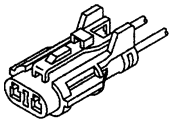	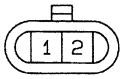	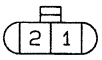	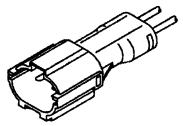
	AB 3 A	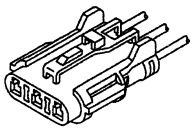	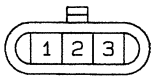	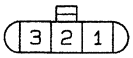	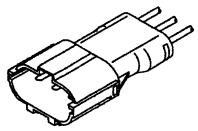
	AB 4 A	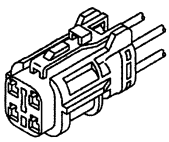	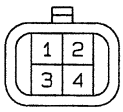	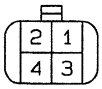	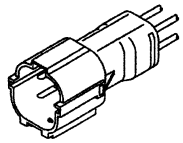
	AB 6 A	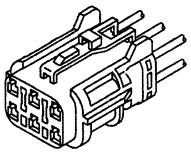	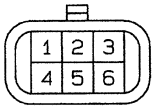	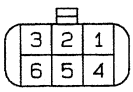	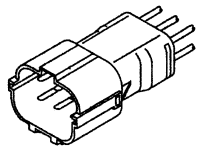

CONNECTOR CONFIGURATION CHART

Model (Number shows number of pins)		Connection			
AC	AC 1 A	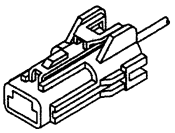			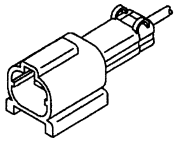
	AC 2 A	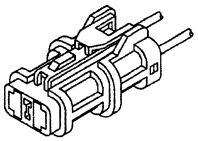			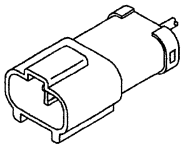
	AC 3 A	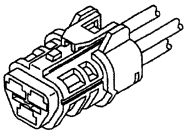		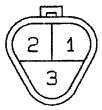	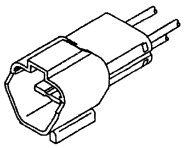
	AC 4 A	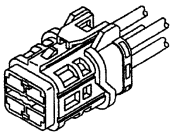	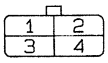	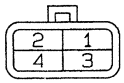	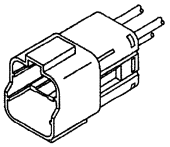
AD	AD 1 A	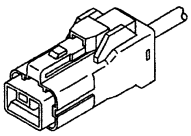			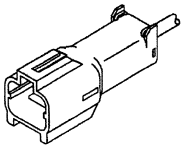
	AD 2 A	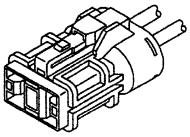	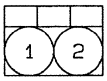	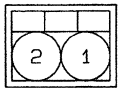	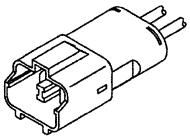
AE	AE 2 A	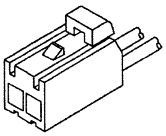			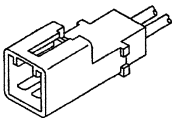
	AE 3 A	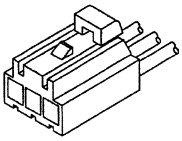	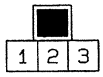	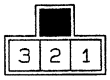	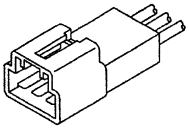
	AE 5 A	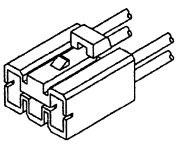	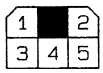	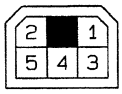	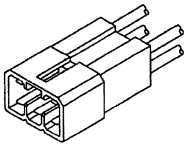

Model (Number shows number of pins)		Connection
AE	AE 7 A	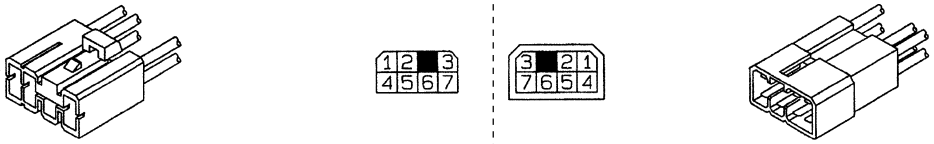
	AE 9 A	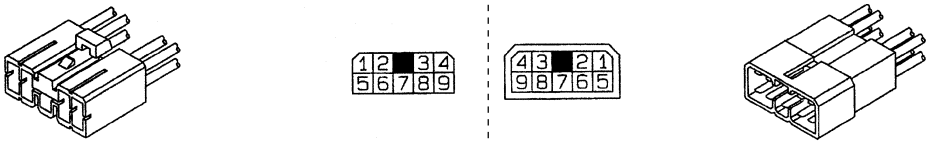
	AE11A	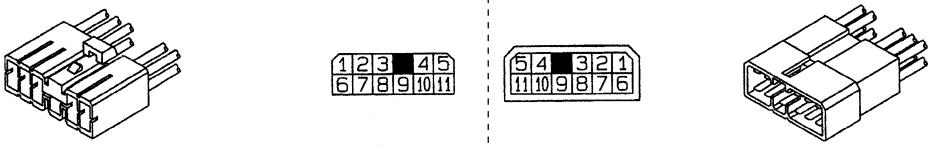
	AE13A	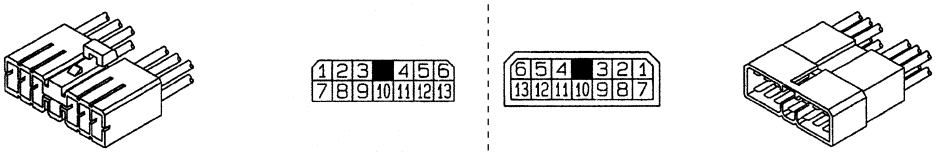
	AE15A	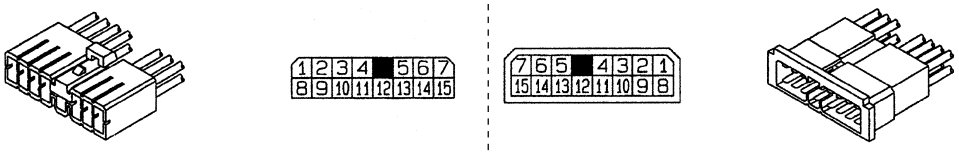
	AE16A (White, Gray, Black)	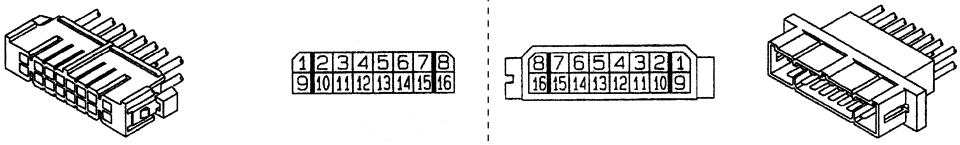
	AE16B (Green)	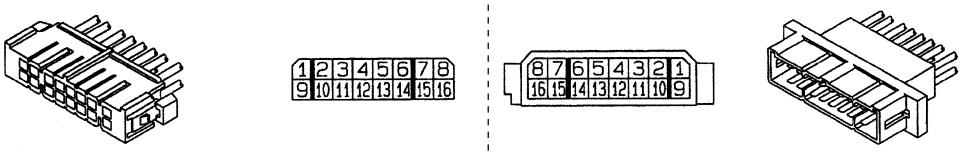
	AE16C (Blue)	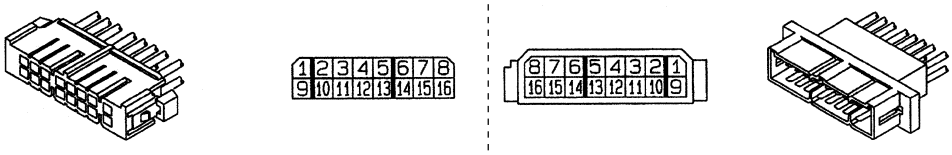
	AE17A	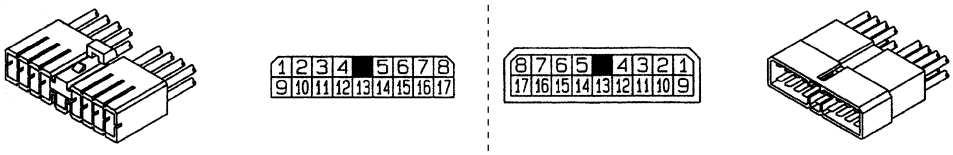

CONNECTOR CONFIGURATION CHART

Model (Number shows number of pins)		Connection
AG	AG16A	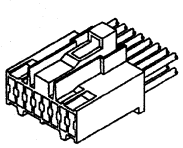 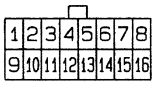
	AG20A	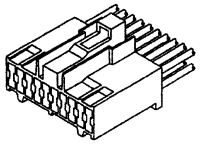 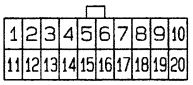
AH	AH10A	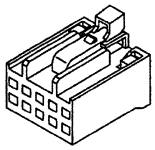 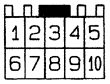 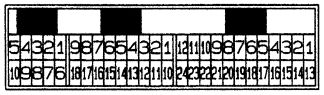 AH10A (AH18A) (AH24A) 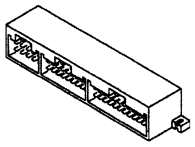
	AH12A	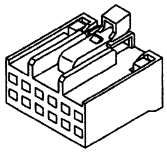 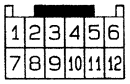 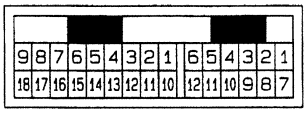 (AH18A) AH12A 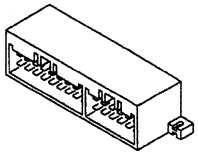
	AH18A	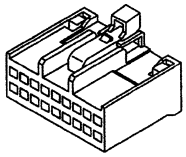 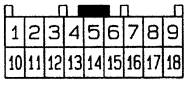 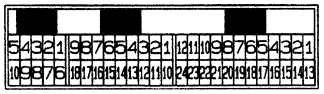 (AH10A) AH18A AH24A 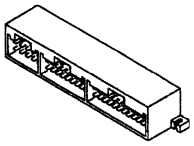

Model (Number shows number of pins)		Connection
AH	AH18B	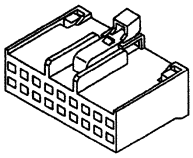 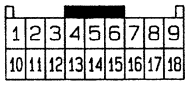 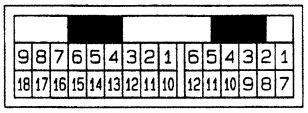 AH18A (AH12A) 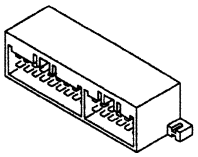
	AH22A	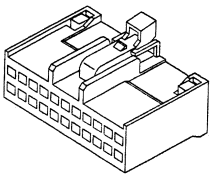 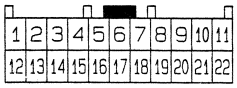 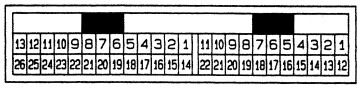 (AH26A) AH22 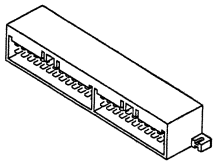
	AH24A	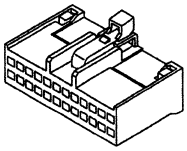 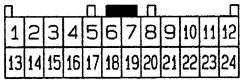 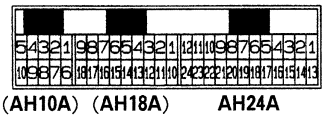 (AH10A) (AH18A) AH24A 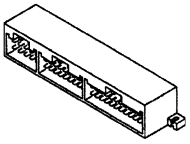
	AH26A	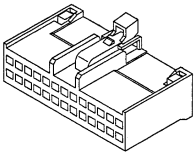 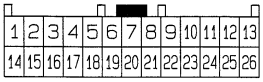 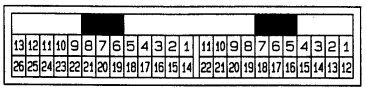 AH26A (AH22) 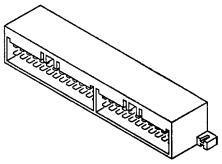

CONNECTOR CONFIGURATION CHART

Model (Number shows number of pins)		Connection
AJ	AJ 2 A	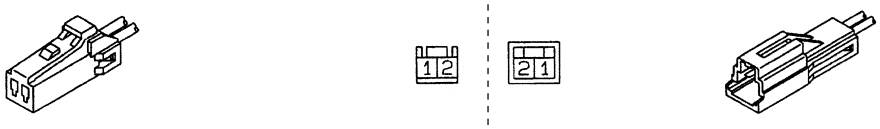
	AJ 4 A	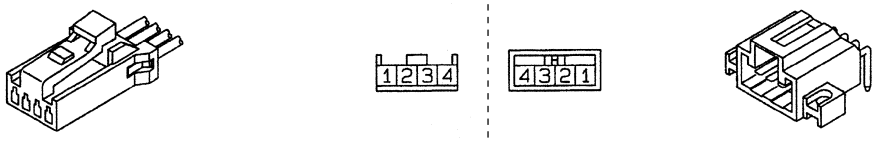
	AJ 8 A	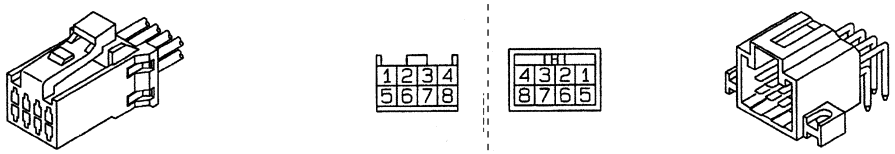
	AJ10A	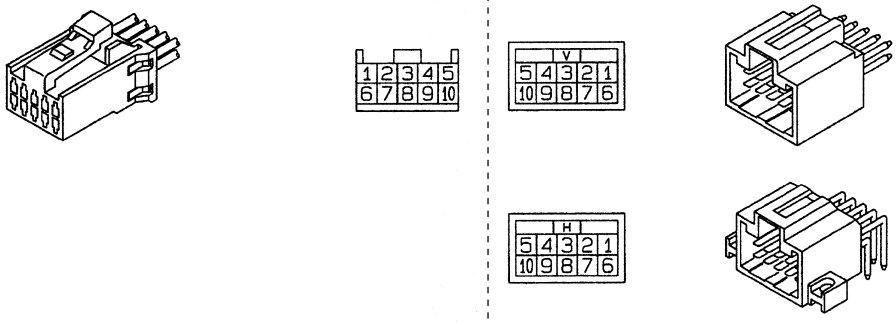
	AJ12A	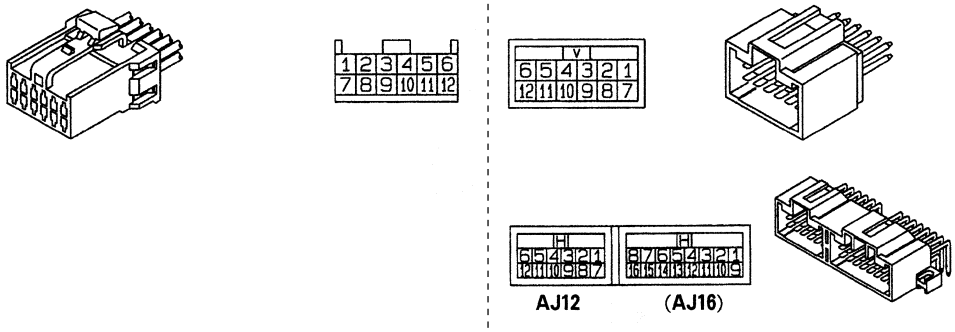

Model (Number shows number of pins)		Connection
AJ	AJ16A	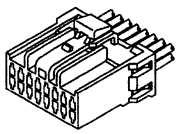 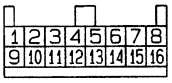 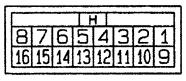 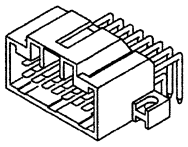 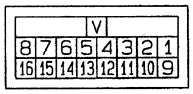 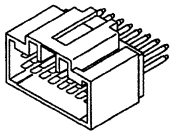 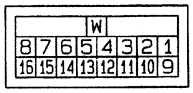 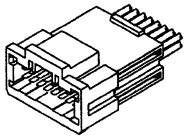 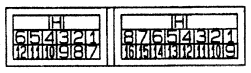 (AJ12A) AJ16A 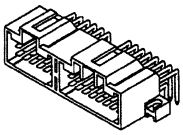 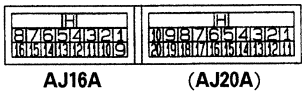 AJ16A (AJ20A) 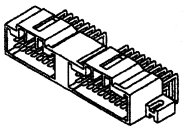

CONNECTOR CONFIGURATION CHART

Model (Number shows number of pins)		Connection
AJ	AJ20A	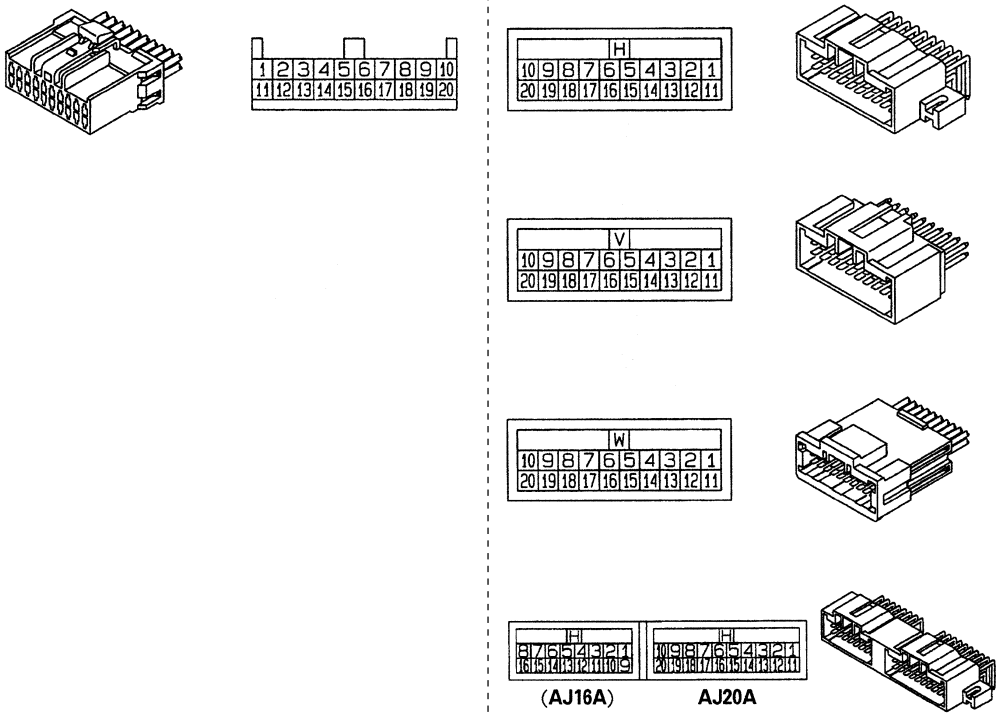
AK	AK 2 A	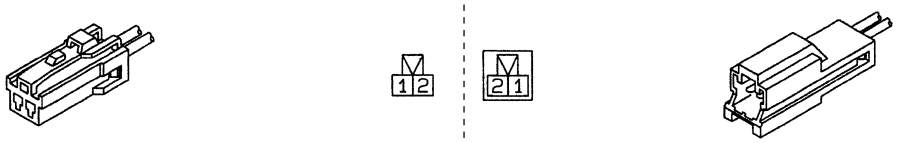
	AK 3 A	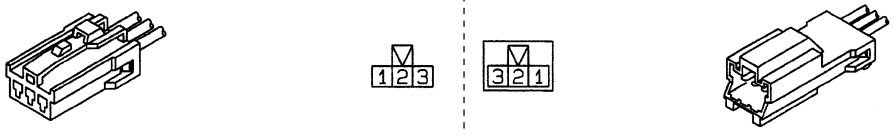
	AK 4 A	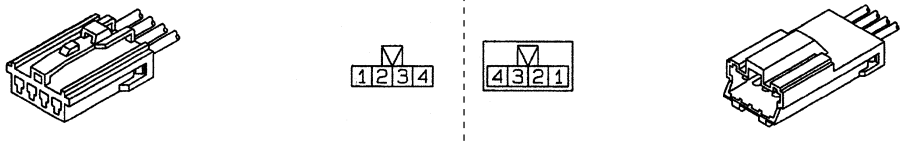
	AK 6 A	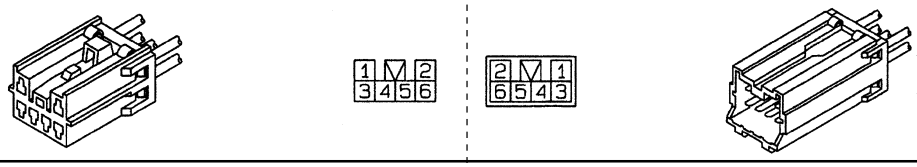

Model (Number shows number of pins)		Connection
AK	AK 8 A	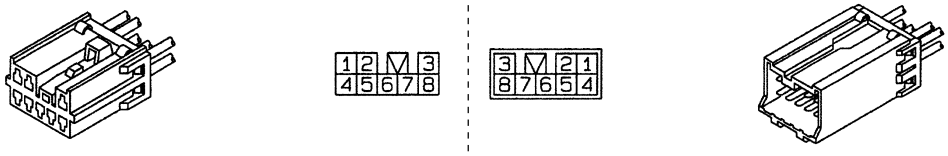
	AK10A	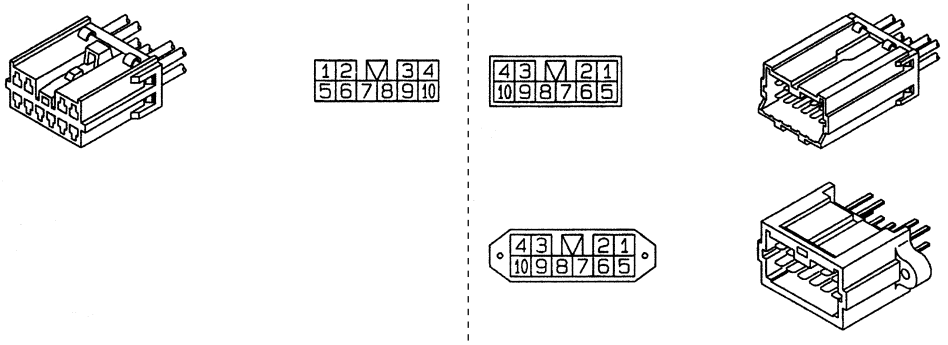
	AK14A	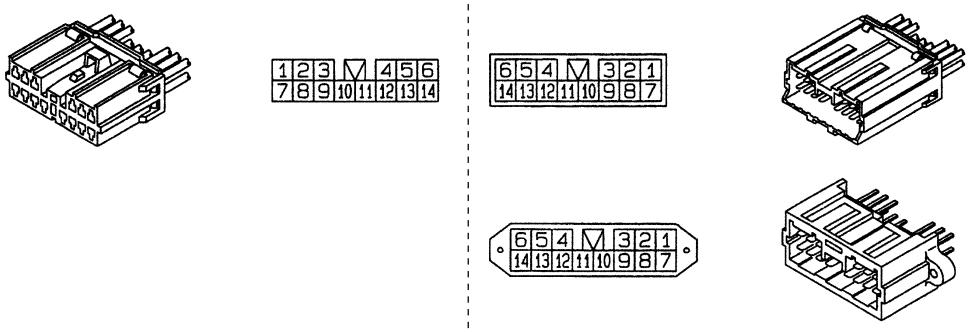
	AK18A	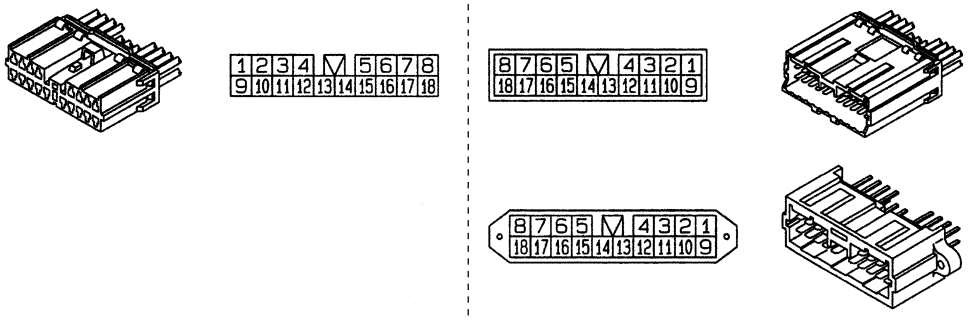
	AK20A	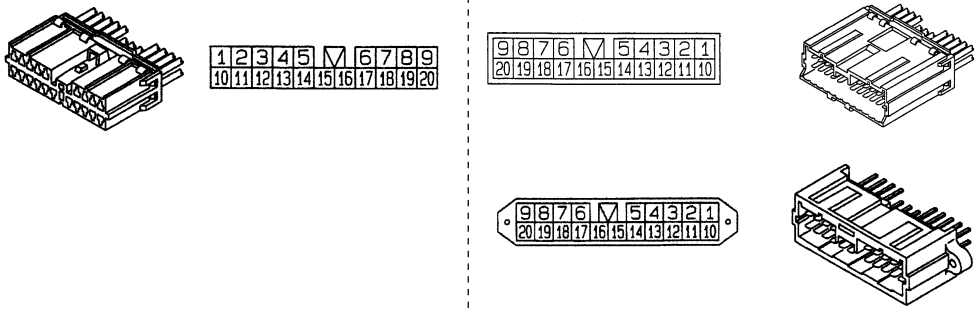

CONNECTOR CONFIGURATION CHART

Model (Number shows number of pins)		Connection
AK	AK20B	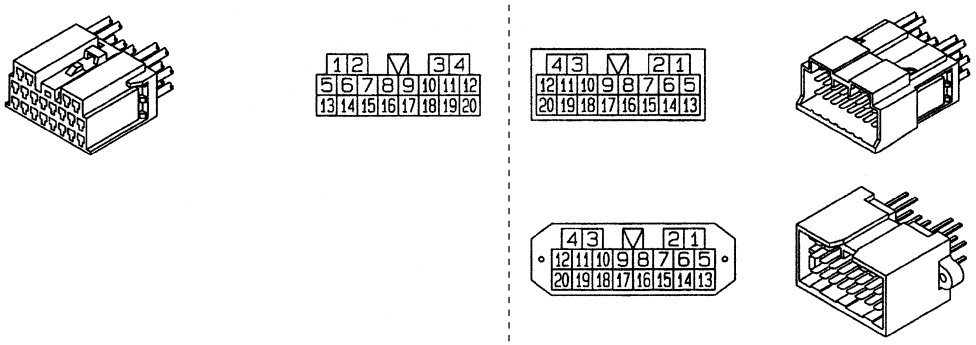
	AK22A	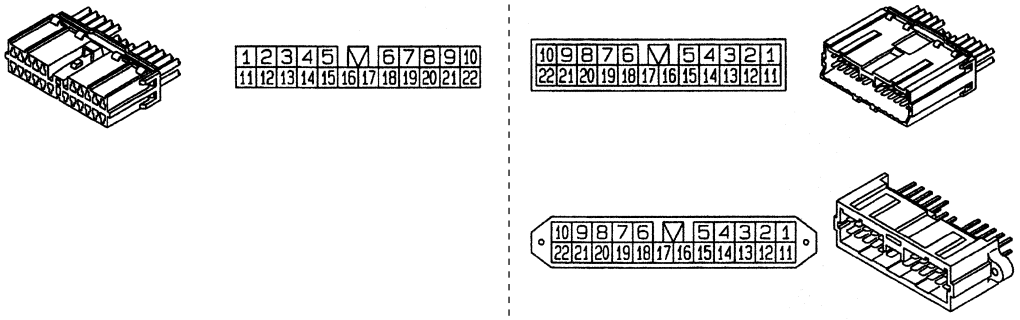
	AK22B	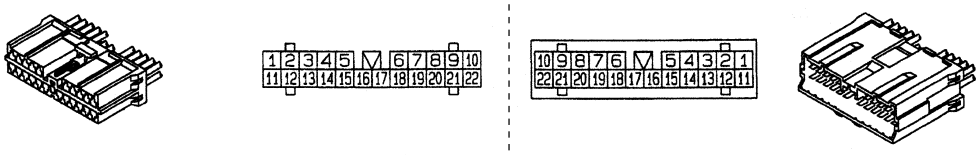
AL	AL 1 A	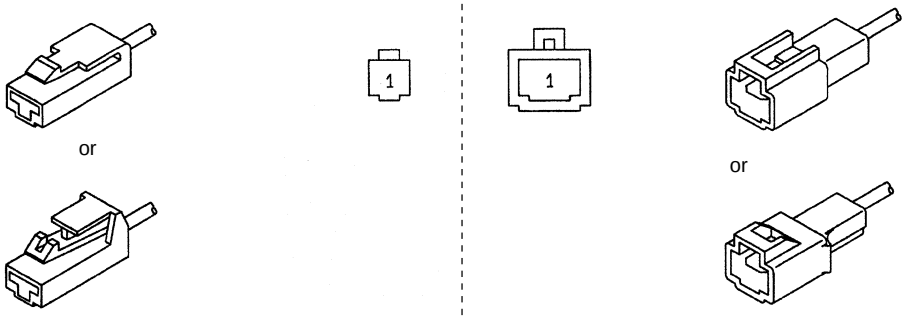
	AL 2 A	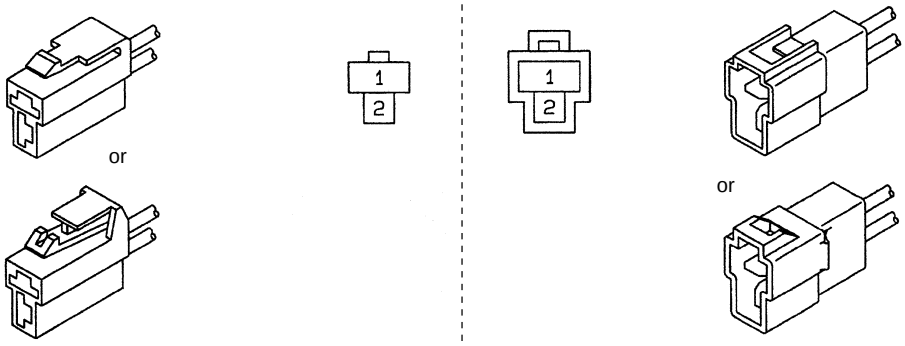

Model (Number shows number of pins)		Connection
AL	AL 2 B	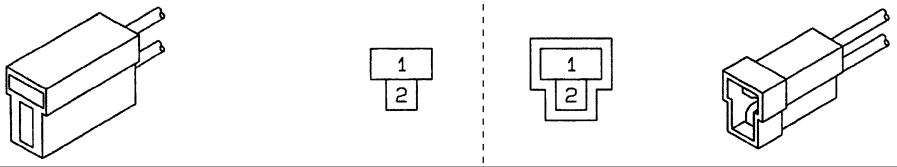
	AL 3 A	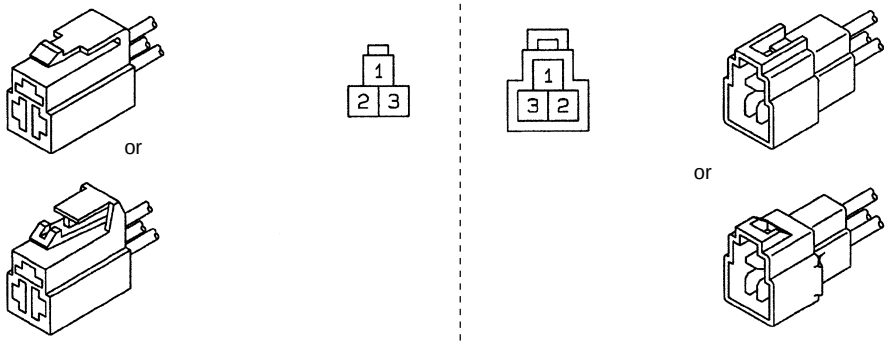
	AL 3 B	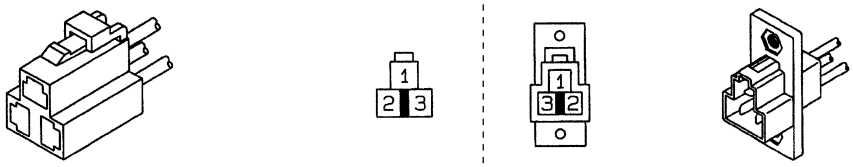
	AL 3 C	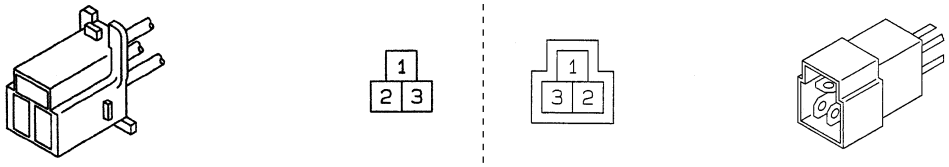
	AL 3 D	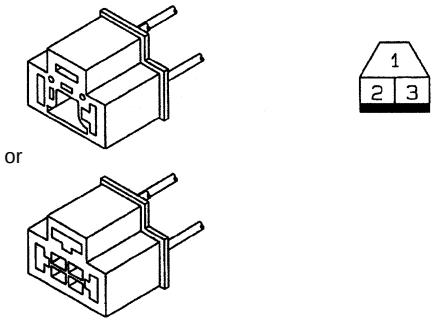
	AL 3 E	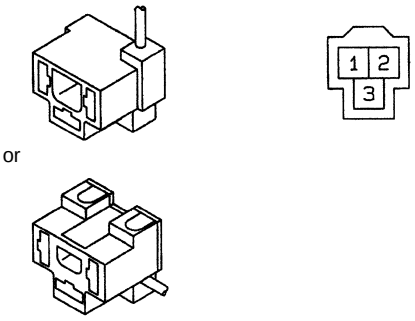

CONNECTOR CONFIGURATION CHART

Model (Number shows number of pins)		Connection
AL	AL 4 A	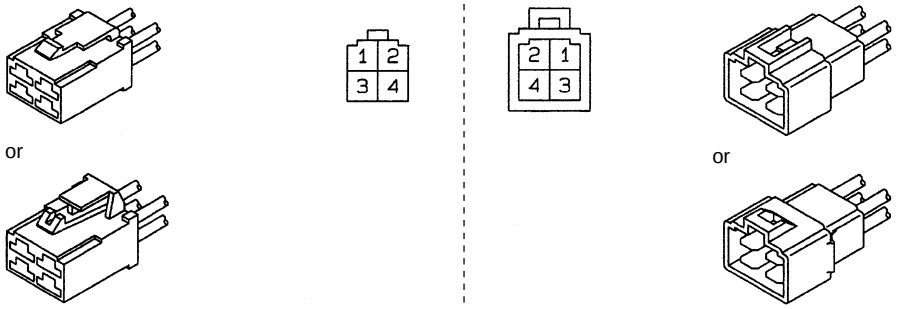
	AL 4 B	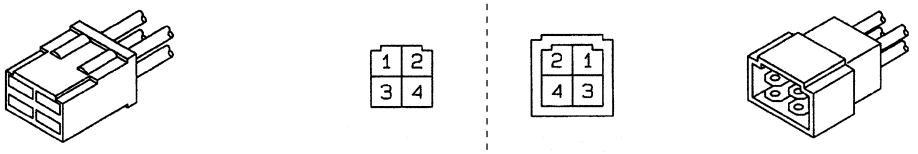
	AL 6 A	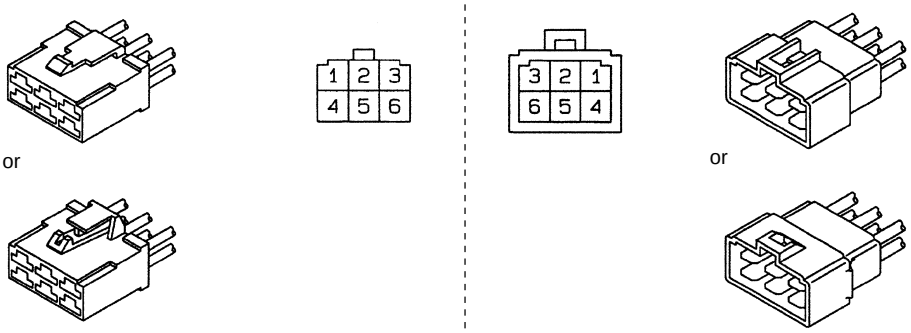
	AL 6 B	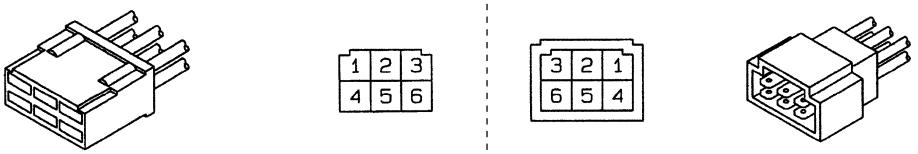
	AL 8 A	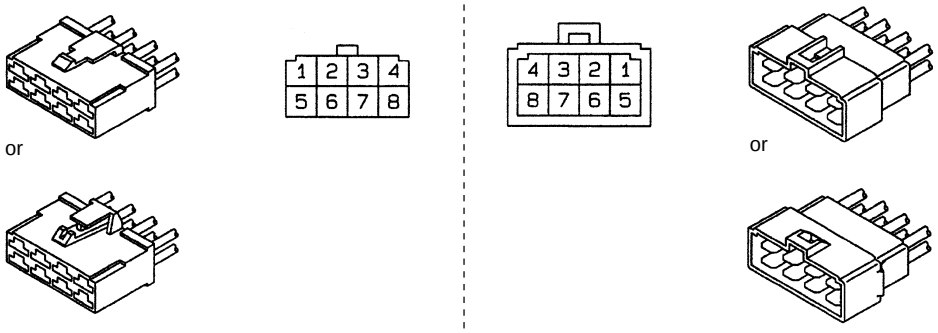
	AL 8 B	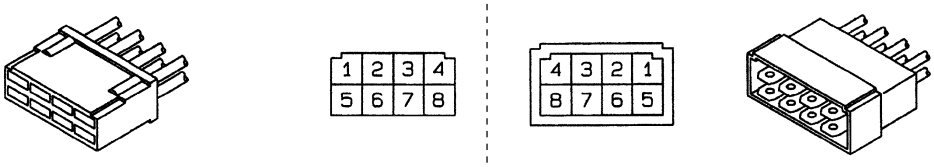

Model (Number shows number of pins)		Connection			
AM	AM 2 A	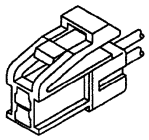			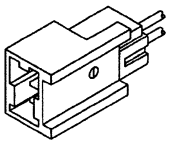
	AM 2 B	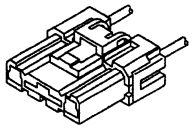			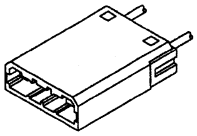
	AM 2 C	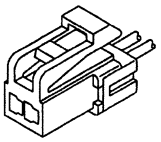			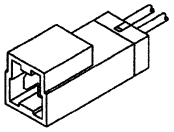
	AM 4 A	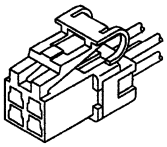			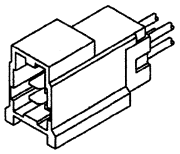
	AM 4 B	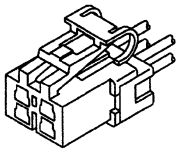			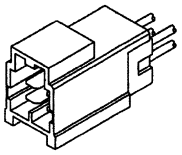
	AM 6 A	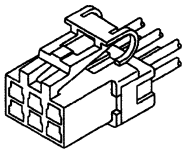		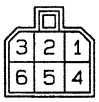	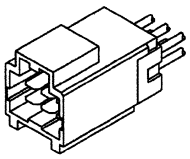
	AM 6 B	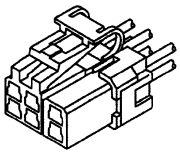			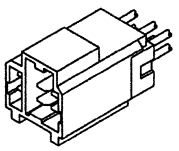
	AM 8 A	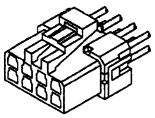	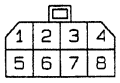	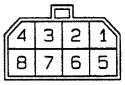	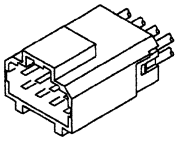
	AM 8 B	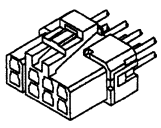	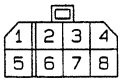	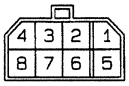	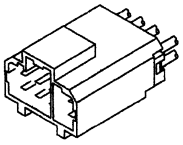

CONNECTOR CONFIGURATION CHART

Model (Number shows number of pins)		Connection			
AM	AM10A	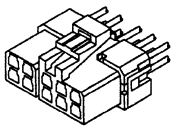	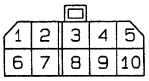	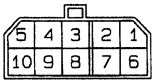	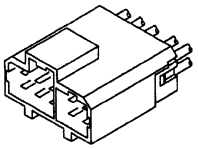
AN	AN 1 A	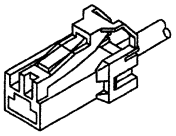			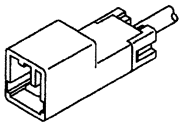
	AN 2 A	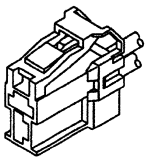			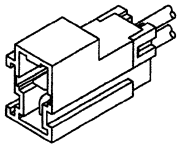
	AN 3 A	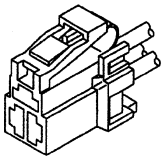	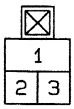	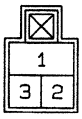	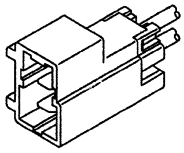
	AN 4 A	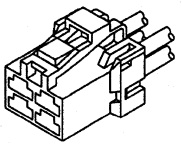	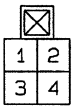	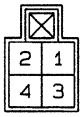	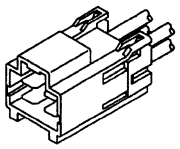
	AN 4 B	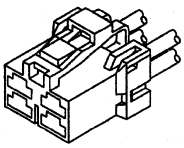	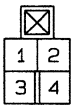	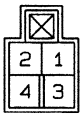	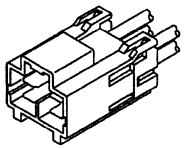
	AN 6 A	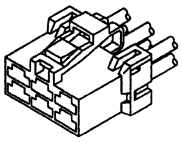	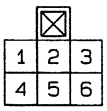	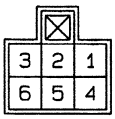	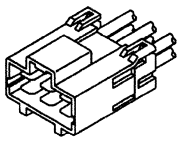
	AN 6 B	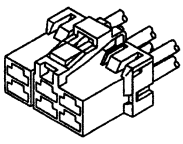	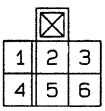	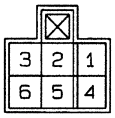	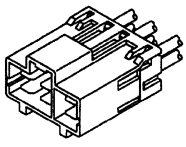
	AN 8 A	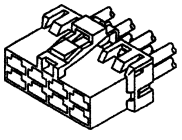	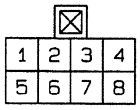	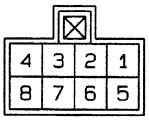	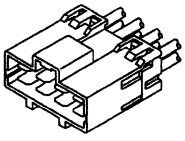

Model (Number shows number of pins)		Connection			
AN	AN 8 B	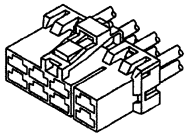	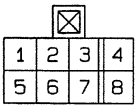	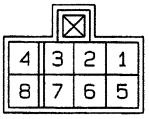	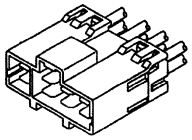
AP	AP 1 A	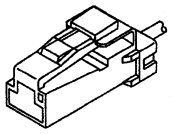	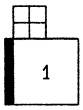	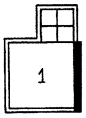	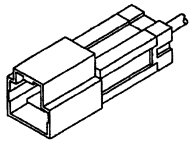
	AP 1 B	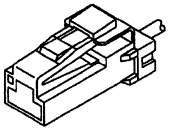	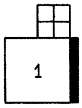	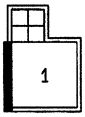	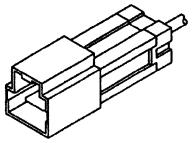
	AP 2 A	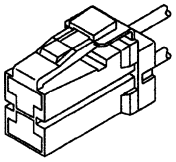	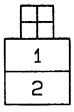	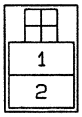	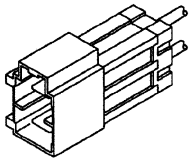
	AP 2 B	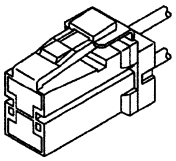	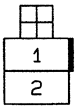	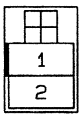	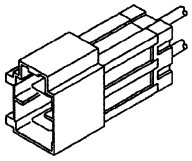
	AP 2 C	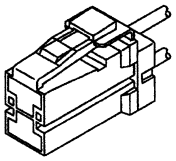	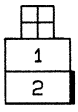	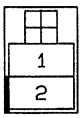	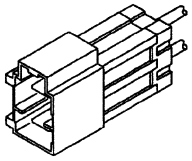
AQ	AQ 3 A	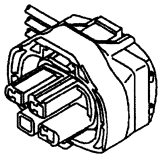			
	AQ 3 B	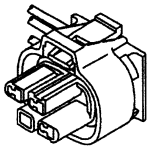			
	AQ13A	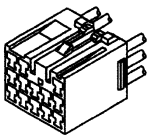	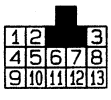	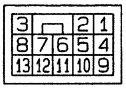	

CONNECTOR CONFIGURATION CHART

Model (Number shows number of pins)		Connection
AQ	AQ15A	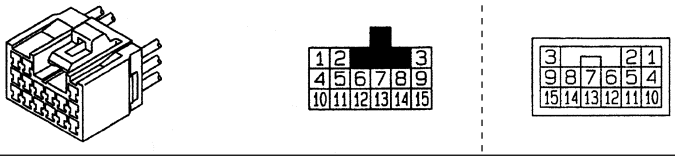
	AQ20A	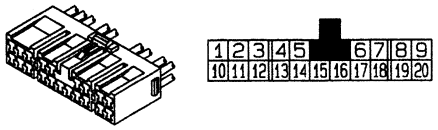
AR	AR 2 A	
	AR 2 B	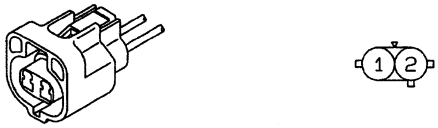
	AR 2 C	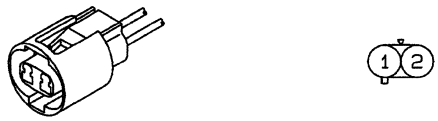
	AR 2 D	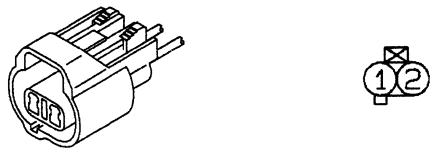
	AR 2 E	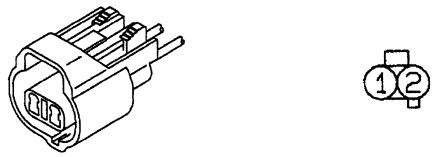
	AR 2 F	

Model (Number shows number of pins)		Connection
AR	AR 3 A	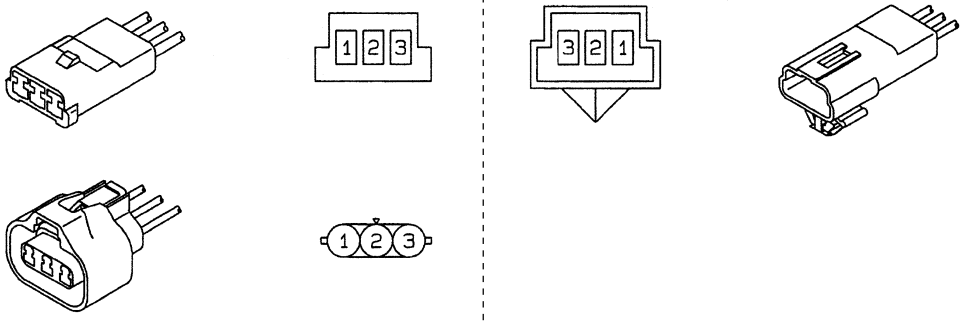
AS	AS 1 A	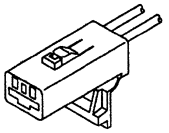
	AS 2 A	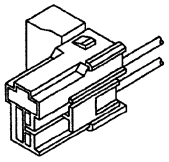
	AS 2 B	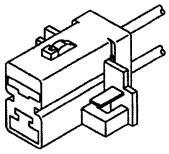
AT	AT 4 A	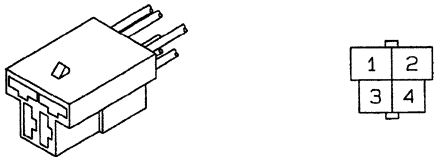
AU	AU 6 A	
	AU 8 A	
	AU10A	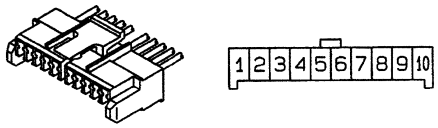

CONNECTOR CONFIGURATION CHART

Model (Number shows number of pins)		Connection
AU	AU12A	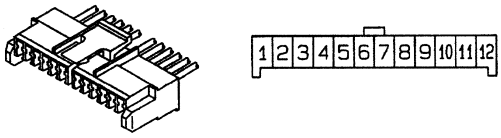
	AU13A	
	AU16A	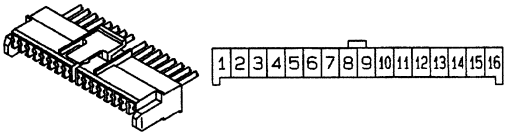
AV	AV 1 A	
	AV 2 A	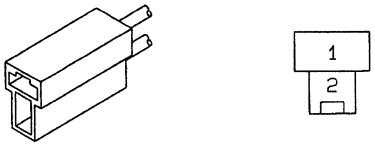
AW	AW 1 A	
	AW 1 B	
	AW 2 A	
AX	AX 4 A	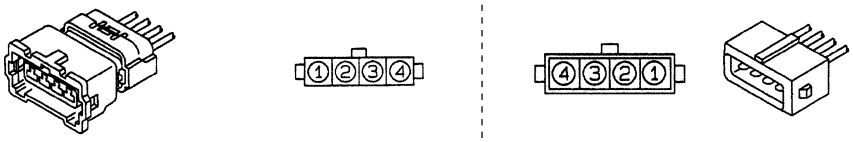

Model (Number shows number of pins)		Connection			
AY	AY 2 A	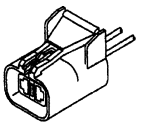			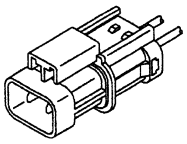
AZ	AZ 2 A	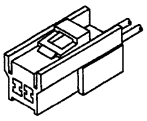			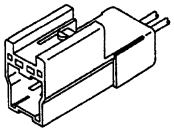
BA	BA 3 A	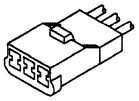	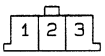	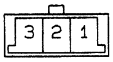	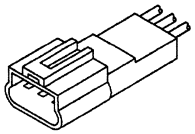
BB	BB 2 A	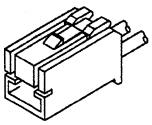			
	BB 3 A	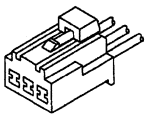	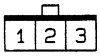	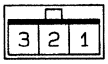	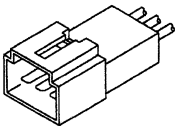
BC	BC 3 A	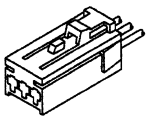	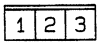	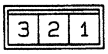	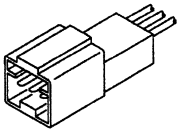
BD	BD 8 A	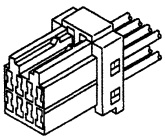	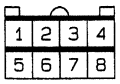	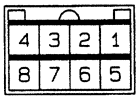	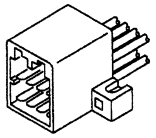
BE	BE 6 A				
BF	BF12A	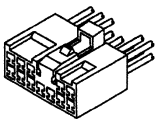	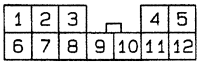	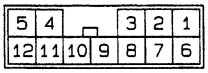	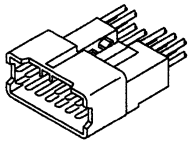

CONNECTOR CONFIGURATION CHART

Model (Number shows number of pins)		Connection				
BG	BG16A	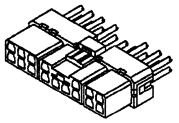	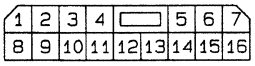	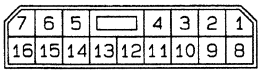	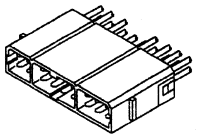	
BH	BH 4 A	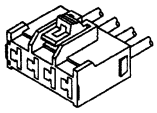	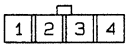	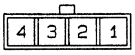	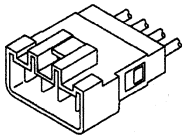	
BJ	BJ 9 A	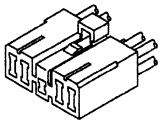	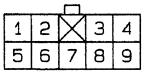	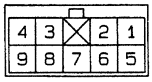	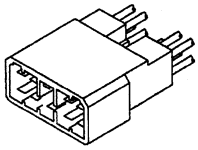	
BL	BL 2 A	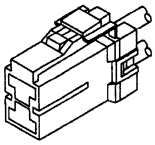			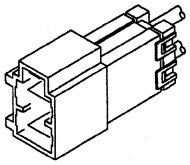	
BM	BM 2 A	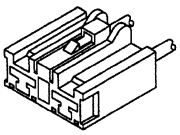				
	BM 2 B	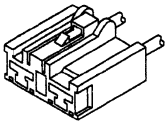				
	BM 2 C	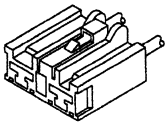				
BN	BN 1 A	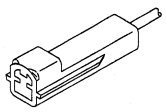			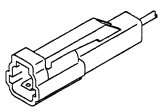	

MITSUBISHI FUSO

FE

Service Manual

Group 01 - Maintenance Schedule

Group 01 - 1998 Minor Changes

BACK HOME

MITSUBISHI FUSO TRUCK OF AMERICA, Inc.

Pub No. TWSE9501-00

MITSUBISHI
FUSO

FE.FG

Service Manual

Group 01
Maintenance Schedule

'98 Minor Change

Table of Contents

MITSUBISHI FUSO TRUCK OF AMERICA, Inc.

BACK HOME

Pub No. TWSE9501-201

MAINTENANCE SCHEDULE

HOW TO READ THE MAINTENANCE SCHEDULE TABLES 01- 2

MAINTENANCE SCHEDULE TABLES 01- 3

MAINTENANCE OPERATIONS 01- 5
- Replacement of Oil Filter 01- 5
- Replacement of Fuel Filter 01- 6
- Draining of Water Separator Condensation 01- 7
- Cleaning of Fuel Feed Pump Gauze Filter 01- 7
- Bleeding of Air from Fuel Line 01- 8
- Adjustment of V-Belt Tension 01- 9
- Cleaning and Replacement of Air Cleaner Element 01- 11
- Inspection of Clutch Pedal Free Play 01- 12
- Tire 01- 13
- Inspection of Brake Lining Thickness < Drum Brake Only > 01- 18
- Battery 01- 18
- Fuse 01- 21

LUBRICATION 01- 24
- Engine Oil 01- 26
- Manual Transmission Gear Oil 01- 28
- Automatic Transmission Fluid 01- 30
- Transfer Gear Oil < FG Model Only > 01- 32
- Front Axle Gear Oil < FG Model Only > and Rear Axle Gear Oil 01- 33
- Power Steering Fluid 01- 34
- Brake Fluid 01- 36
- Greasing Various Areas of Chassis 01- 40

HOW TO READ THE MAINTENANCE SCHEDULE TABLES

Example Table :

Ⓔ : Exhaust emission items
Ⓝ : Noise control items

	Inspection and maintenance (1)	Time of inspection and maintenance (2)								Working procedures (3)	Remarks (4)
			Inspection interval								
		New vehicle at 4000 km/ 2500 miles	Every 10000 km/ 6000 miles	Every 20000 km/ 12000 miles	Every 30000 km/ 18000 miles	Every 40000 km/ 24000 miles	Every 50000 km/ 30000 miles	Every 90000 km/ 54000 miles	Every 250000 km/ 150000 miles		
ENGINE											
1	Manifold bolts torque	×					×			Check inlet and exhaust manifold nuts for looseness	Gr 15
2	Ⓔ Check and adjust valve clearance	×					×			Check valve clearance with feeler gauge	Gr 11
3	Ⓔ Oil filter replacement	×	Every 10000 km/6000 miles or 12 months							Replace oil filter	Gr 12
4	Ⓔ Injection nozzle Ⓝ							×	×	Check and clean injection nozzle	Gr 13
5	Ⓔ Fuel Injection timing Ⓝ							×		Check fuel injection timing	Gr 13
6	Ⓔ		Every 40000 km/24000 miles or 24 months							Clean gauze filter inside co	
						km/12000 miles or 12 months				Rep	

(1) This column contains the maintenance and inspection items.
(2) The periods between inspection and service are based on the assumption that the vehicle will be driven approximately 60000 kilometers (36000 miles) per year.
Inspections which must be made are indicated by an "×" or by the appropriate period between servicing.
(3) This column provides a simplified explanation of the operational procedures involved for each inspection or maintenance item.
(4) The Gr. No. refers to the "group number" in this vehicle Service Manual. For visual checks and simple inspections, see the sections labelled "Working Procedures".

Ⓔ : Exhaust emission items
Ⓝ : Noise control items

	Inspection and maintenance	Time of inspection and maintenance: Inspection interval: New vehicle at 4000 km/2500 miles	Every 10000 km/6000 miles	Every 20000 km/12000 miles	Every 30000 km/18000 miles	Every 40000 km/24000 miles	Every 50000 km/30000 miles	Every 90000 km/54000 miles	Every 250000 km/150000 miles	Working procedures	Remarks
ENGINE											
1	Manifold bolts and nuts torque						×			Check inlet and exhaust manifold bolts and nuts for looseness	Gr 15
2	Ⓔ Check and adjust valve clearance	×					×			Check valve clearance with feeler gauge	Gr 11
3	Ⓔ Oil filter replacement		Every 10000 km/6000 miles or 12 months							Replace oil filter	Gr 12
4	Ⓔ Injection nozzle Ⓝ							×	×	Check and clean injection nozzle	Gr 13
5	Ⓔ Fuel Injection timing Ⓝ							×		Check fuel injection timing	Gr 13
6	Ⓔ Fuel feed pump filter		Every 40000 km/24000 miles or 24 months							Clean gauze filter inside connector with gas oil	
7	Ⓔ Fuel filter replacement		Every 20000 km/12000 miles or 12 months							Replace fuel filter	Gr 13
8	Ⓔ Fuel line		Every 20000 km/12000 miles or 12 months							Inspect fuel tank, cap and lines for damage causing leakage	
9	Ⓔ V-belts tension and Ⓝ damage		Every 10000 km/6000 miles or 12 months							Inspect V-belts for cracks, wear and tension	Gr 14
10	Ⓔ Cooling system			×						Check radiator and radiator cap for sealing performance and mounting condition. Inspect hoses for looseness, deterioration, damage causing leakage. Remove dust and foreign deposits from radiator and intercooler front	Gr 14
11	Coolant replacement		Every 24 months							Replace coolant	Gr 14
12	Ⓔ Turbocharger rotor play								×	Check turbocharger rotor play	Gr 15
13	Air cleaner element		Every 5000 km/3000 miles							Clean air cleaner element by blowing clean compressed air through it	Gr 15
14	Ⓔ Air cleaner element Ⓝ replacement					×				Replace air cleaner element	Gr 15
15	Ⓔ Exhaust system Ⓝ			×						Inspect exhaust system for damage, corrosion and loose connection causing leakage	Gr 15
POWER TRAIN											
16	Clutch pedal and clutch disc wear		×							Check pedal for free play. Check clutch disc wear through inspection hole	Gr 21
17	Propeller shaft flange torque and universal joint looseness		×							Check flange yoke bolts for looseness and universal joint for play. Carry out the first inspection for new vehicles at 10000 km or 6000 miles	Gr 25
18	Propeller shaft center bearing						×			Check center bearing if traces of grease flowing out are evident. Check center bearing for wear, damage and play	Gr 25

Check center bearing for traces of grease flow.

MAINTENANCE SCHEDULE TABLES

Ⓔ : Exhaust emission items
Ⓝ : Noise control items

Inspection and maintenance		Time of inspection and maintenance								Working procedures	Remarks
			Inspection interval								
		New vehicle at 4000 km/ 2500 miles	Every 10000 km/ 6000 miles	Every 20000 km/ 12000 miles	Every 30000 km/ 18000 miles	Every 40000 km/ 24000 miles	Every 50000 km/ 30000 miles	Every 90000 km/ 54000 miles	Every 250000 km/ 150000 miles		
FRONT AND REAR AXLE											
19	Wheel hub bearing				×					Check wheel hub bearing for play	Gr 26, 26B, 27
20	Wheel hub bearing hub seals replacement				×					Replace wheel hub bearing hub seals	Gr 26, 26B, 27
21	Wheel and tire		×							Check disc wheel for corrosion, deformation and cracks. Measure inflation pressure with tire gauge. Check tire tread and side wall for cracks and damage. Measure tire tread groove depth to make sure it is deep enough. Check tire tread for uneven wear, stepped wear and other abnormal wear. Rotate tires if there is a difference in the amount of wear of each tire	Gr 31
22	Retightening wheel nuts	×	×							Check wheel nuts for looseness. Check at the first 50 to 100 km/30 to 60 miles after changing a wheel	Gr 31
SUSPENSION SYSTEM											
23	Retightening U-bolts	×		×						Check U-bolt nuts for looseness. Check at the first 1000 km/600 miles after removing and retightening U-bolt nuts	Gr 33, 34
BRAKING SYSTEM											
24	Disc brake pad and disc		×							Check disc brake pad and disc for damage and wear	Gr 35
25	Brake lining		×							Check lining for wear through inspection hole	Gr 35
26	Brake drum				×					Disassemble and check drum for wear, cracks and damage	Gr 35
27	Looseness, play and damage of brake system parts		×							Inspect brake lines and hoses for looseness, play and damage. Inspect wheel cylinder and brake master cylinder for looseness, play and damage	Gr 35
STEERING SYSTEM											
28	Steering system		×							Check steering system for looseness, steering wheel play and operating condition. Inspect for fluid leakage, booster and oil pump function	Gr 37

This section explains simple maintenance procedures. See the relevant Group in this manual for further details.

Replacement of Oil Filter

Lubricant

Location	Points of application	Specified lubricant	Quantity
2	Inside oil filter	Engine oil	Approximately 1 L {1.1 qts}
	Gasket area of oil filter with thin application	Engine oil	As required

Special tools

Unit : mm {in.}

Location	Tool name and shape	Part No.	Application
2	Oil filter wrench 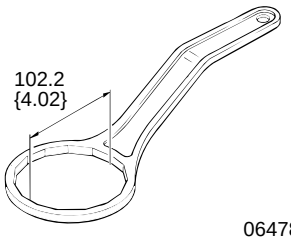 06478	MH061587	Removal of oil filter

WARNING

- **Wipe up any engine oil that has been spilled because it can cause a fire.**
- **Do not touch the engine while it is hot because it will burn you.**

CAUTION

- **Take care not to spill engine oil on the V-belts, because this would cause them to slip, reducing service life.**

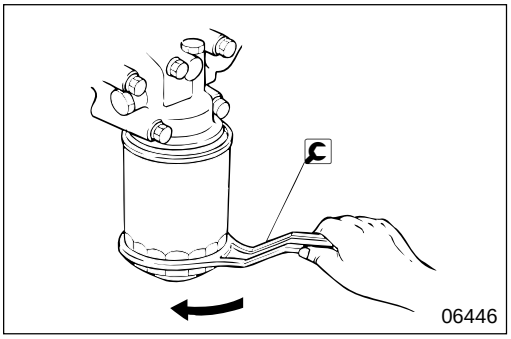

[Removal]

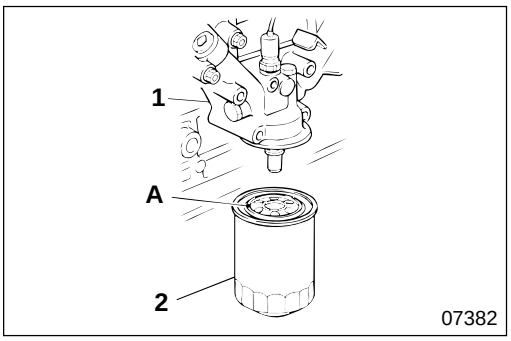

[Installation]

- Clean the surface of oil cooler body **1** that makes contact with oil filter **2**.
- Apply engine oil thinly and evenly to gasket area **A** of oil filter **2**.
- Screw oil filter **2** into oil cooler body **1** until gasket area **A** sits on the body. From this position, tighten further by rotating by three quarters of a turn.
- After installation, run the engine and check that there is no oil leakage from gasket area **A**.
- Check the oil level and if it is low, top it up.

Replacement of Fuel Filter

Lubricant

Location	Points of application	Specified lubricant	Quantity
2	Gasket contact surfaces of fuel filter and fuel filter head	Engine oil	As required

Special tools

Unit : mm {in.}

Location	Tool name and shape	Part No.	Application
2	Filter wrench 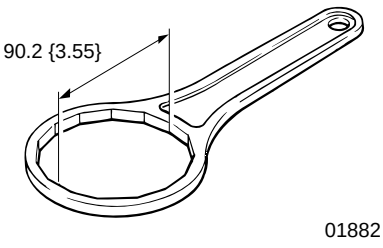 01882	MH061509	Removal of fuel filter

WARNING

- **Fuel ignites easily. Do not get it near flame or heat.**
- **Wipe up any diesel fuel that has been spilled because it can cause a fire.**
- **Do not use an unsuitable filter because it can cause a fire.**

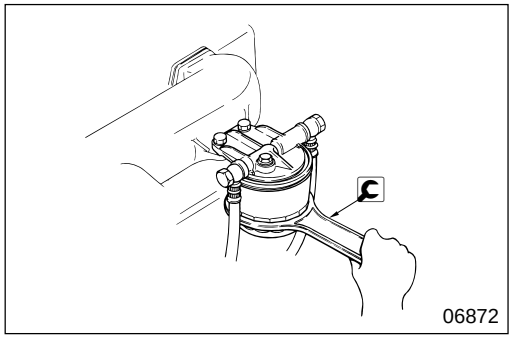

[Removal]

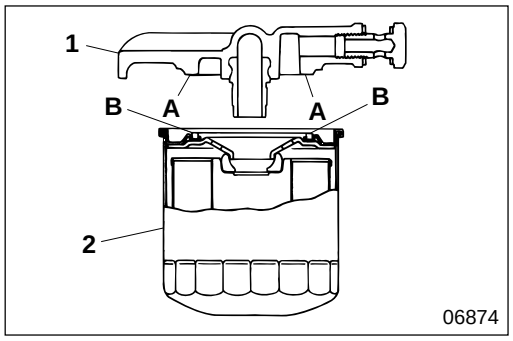

[Installation]

- Install by tightening three quarters to one full turn after contact surface **A** of fuel filter head **1** makes contact with gasket **B** of fuel filter **2**. Be sure to tighten by hand.
- After installation, run the engine and check for fuel leakage.

Draining of Water Separator Condensation

Tightening torque

Unit : N·m {lbf.ft, kgf·m}

Location	Parts to be tightened	Tightening torque	Remarks
2	Drain plug	3 to 4 {2.2 to 2.9, 0.3 to 0.4}	—

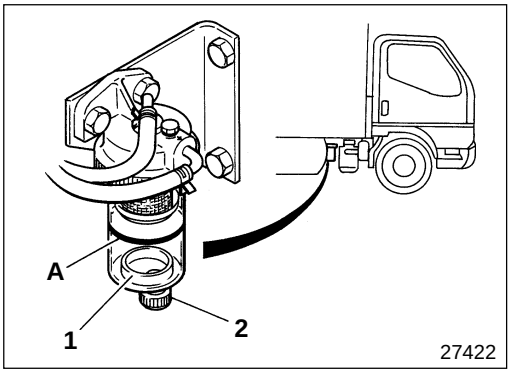

Visually inspect the water separator before driving.
When level ring **1** reaches red line **A**, drain the condensation as follows:

- Loosen drain plug **2** and drain out the condensation.
- When level ring **1** has dropped to the bottom, tighten drain plug **2**.
- Carefully wipe the water separator and the surrounding area.
- Check for fuel leakage.

Cleaning of Fuel Feed Pump Gauze Filter

Tightening torque

Unit : N·m {lbf.ft, kgf·m}

Location	Parts to be tightened	Tightening torque	Remarks
2	Eye bolt	25 to 29 {18 to 22, 2.5 to 3}	—

WARNING

- **Fuel ignites easily. Do not get it near flame or heat.**
- **Wipe up any diesel fuel that has been spilled because it can cause a fire.**

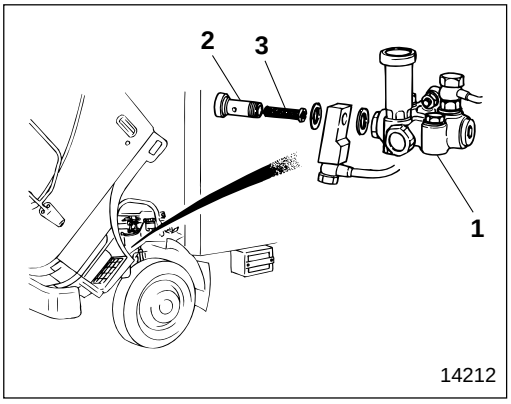

- Remove eye bolt **2** on the inlet side of fuel feed pump **1**.
- Remove gauze filter **3** from eye bolt **2**.
- Clean gauze filter **3** with diesel fuel .
- Follow the removal sequence in reverse and reinstall gauze filter **3**. Install eye bolt **2** in the fuel feed pump.
- Bleed the air from the fuel line.
- Start the engine and check for fuel leakage.

Bleeding of Air from Fuel Line

Ⓣ Tightening torque

Unit : N·m {lbf.ft, kgf·m}

Location	Parts to be tightened	Tightening torque	Remarks
2	Air vent plug	7.8 to 12 {5.8 to 8.7, 0.8 to 1.2}	—

WARNING ⚠

- **Fuel ignites easily. Do not get it near flame or heat.**
- **Wipe up any diesel fuel that has been spilled because it can cause a fire.**

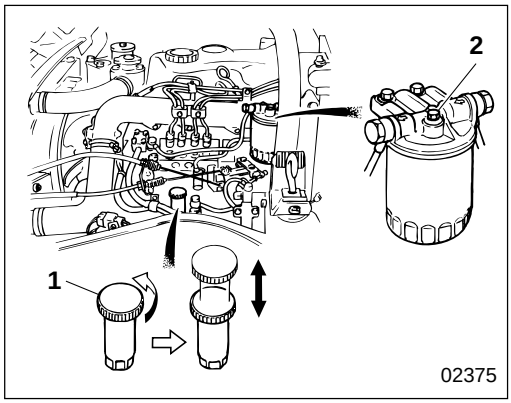

- Turn the top of priming pump **1** of the injection pump counterclockwise and pull it up so the top protrudes.
- Loosen air vent plug **2** of the fuel filter and move the top part of priming pump **1** up and down.
- Move priming pump **1** up and down repeatedly until air bubbles are no longer present in the fuel drained from air vent plug **2**.
- When the fuel being drained is free of air bubbles, tighten air vent plug **2**.
- After moving priming pump **1** up and down another five or six times, push the top down and turn clockwise to drive it in fully.
- After bleeding the air, carefully wipe up spilled fuel and start the engine.
- Check for fuel leakage.

Adjustment of V-Belt Tension

Newly installed V-belts can stretch during their initial running-in period. To prevent this from becoming a problem, run the engine for several minutes after installing the V-belt, then readjust. Perform this cycle several times.

WARNING⚠

You must take special precautions to prevent the engine from rotating while a V-belt is being inspected or adjusted.

CAUTION⚠

- **Make sure that you turn off the engine before attempting to inspect or adjust the V-belts.**
- **Make sure that you fasten all bolts and nuts securely after adjusting the V-belts. Remember that too much tension can damage the V-belts and bearings.**
- **Do not grease V-belts. This causes them to slip, which reduce service life.**

Service standards

Unit : mm {in.}

Location	Maintenance item		Standard value	Limit	Remedy
1, 2	V-belt tension (Each one)	Fan	12 to 16 {0.47 to 0.63}	—	Adjust
		Air-conditioner	16 to 20 {0.63 to 0.79}		

Special tools

Location	Tool name and shape	Part No.	Application
1, 2	Belt tension gauge  03612	MH062345	Measurement of tension of V-belt

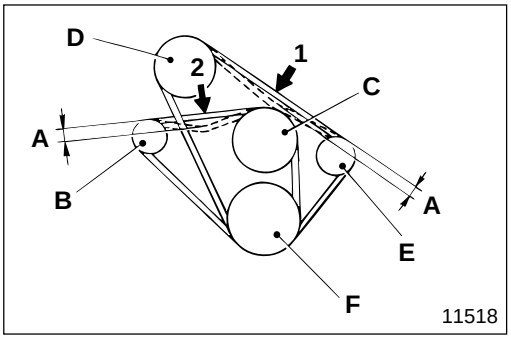

[Inspection]

Measure the extent of flex **A** when the center of V-belts **1**, **2** as illustrated is depressed with a force of 98 N {22 lbf, 10 kgf}.

- **B** : Alternator pulley
- **C** : Water pump pulley
- **D** : Cooler compressor pulley (Air-conditioner)
- **E** : Tension pulley
- **F** : Crankshaft pulley

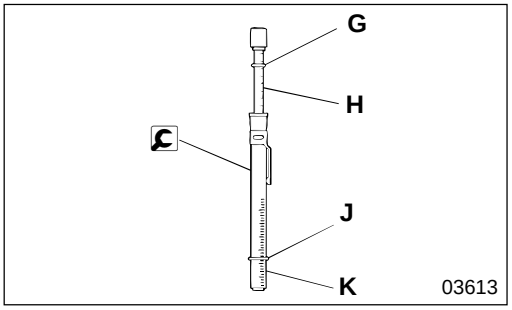

Use of special tool belt tension gauge

- Set upper O-ring **G** of belt tension gauge to 98 N {22 lbf, 10 kgf} (push load) on graduation **H**.
- Set lower O-ring **J** of belt tension gauge to graduation **K** (maximum flex of belt).

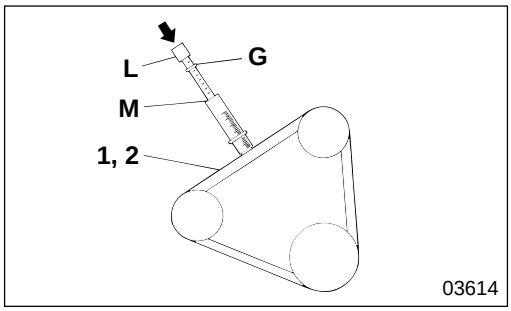

- Place belt tension gauge at the center of V-belts **1**, **2** perpendicularly as illustrated and push top **L** all the way down until upper O-ring **G** hits upper edge **M**.

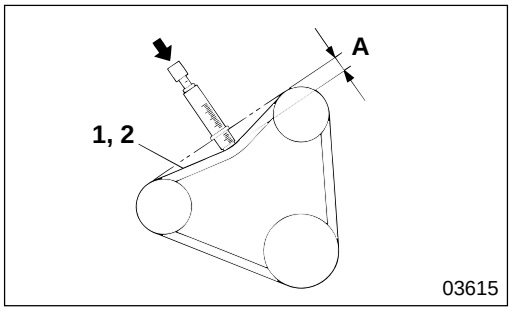

- Measure the extent of flex **A** of V-belts **1**, **2** at this point, and if the measured value deviates from the standard value, adjust as follows:

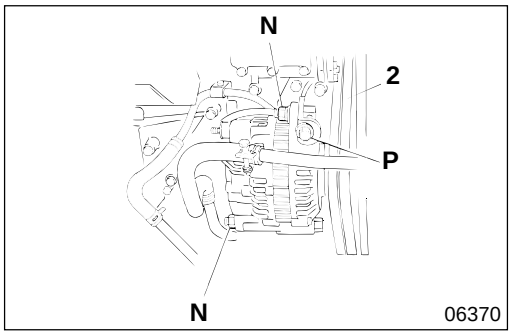

[Adjustment]

(1) Adjustment of tension of V-belt for fan

- Loosen alternator mounting bolts **N** (two points), and adjust the tension of V-belts **2** by moving adjusting bolt **P**.
- After adjustment, tighten bolts **N**, **P** securely.

CAUTION

- **Bear in mind that excessive tension of V-belts 2 might damage the belts and bearings that engage with the V-belts.**
- **Be sure to replace V-belts 2 as a set to maintain even tension between them.**
- **Be careful not to let oil stick to V-belts 2. If oil gets onto the belts, it causes slipping, resulting in overheating and insufficient battery charging.**

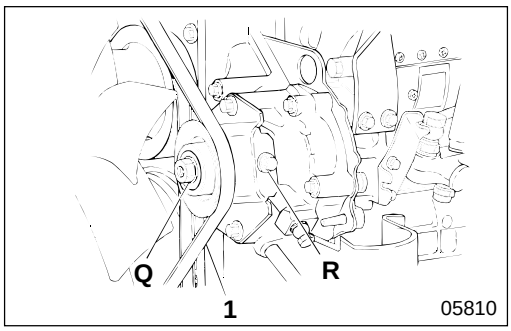

(2) Adjustment of tension of V-belt for air-conditioner

- Loosen tension pulley mounting nut **Q**, and adjust the tension of V-belt **1** moving adjusting bolt **R**.
- After adjustment, tighten mounting nut **Q** securely.

CAUTION

- **Bear in mind that excessive tension of V-belt 1 might damage the belt and bearings that engage with the V-belt.**
- **Be careful not to let oil stick to V-belt 1. If oil gets onto the belt, it causes slipping, resulting in poor performance of the air conditioner.**

Cleaning and Replacement of Air Cleaner Element

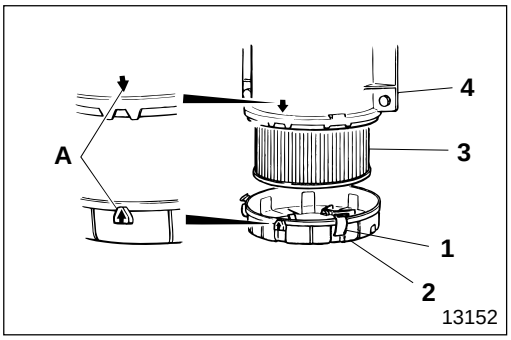

[Removal]
- Unfasten clamp **1** and remove air cleaner cap **2**.
- Remove air cleaner element **3**.

[Installation]
- Install by aligning alignment marks **A** of air cleaner cap case **4** and air cleaner cap **2**.

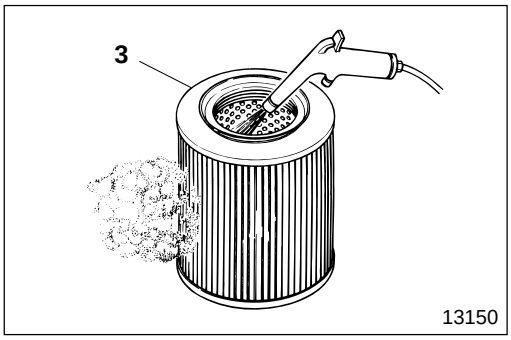

[Cleaning]
- Blow compressed air of 685 kPa {100 lbf/in^2, 7 kgf/cm^2} or less through air cleaner element **3** from the inside.
- When using compressed air, move the blower's nozzle up and down along the pleats of air cleaner element **3** evenly.

CAUTION⚠
- **Do not tap or hit air cleaner element 3 to remove dust.**
- **Do not blow compressed air through air cleaner element 3 from the outside.**

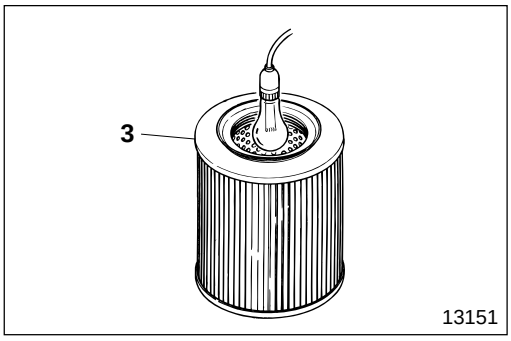

[Inspection]
- Illuminate the inside of air cleaner element **3**.
- If parts of the filter paper are torn or thin, or if the packing of the upper surface of air cleaner element **3** is damaged, replace the air cleaner element.

NOTE

If the dust on air cleaner element 3 is wet due to oil smoke or soot, replace the air cleaner regardless of the scheduled replacement interval.

Inspection of Clutch Pedal Free Play

Service standards

Unit : mm {in.}

Location	Maintenance item	Standard value	Limit	Remedy
1	Clutch pedal free play	36 to 53 {1.42 to 2.09}	—	Adjust or replace

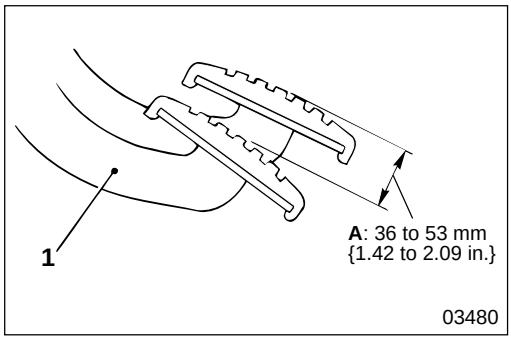

[Confirmation]
Push clutch pedal **1** with your hand and measure the amount of movement **A** (free play) until you meet resistance. If the measured value does not conform to the standard value, adjust stroke of clutch power cylinder push rod or replace the clutch disc.

[Clutch operation]

- Check for unusual noises when clutch pedal **1** is pressed while the engine is idling, and also for abnormally heavy clutch operation. Also check to be certain that it is not difficult to shift the vehicle into first and reverse gears.
- Gradually release clutch pedal **1** to set the vehicle in motion.
  Check to be sure there is no slippage, and that the clutch engages smoothly.

Tire

Service standards

Unit : mm {in.}

Location	Maintenance item	Standard value	Limit	Remedy
1	Depth of tire tread grooves	—	1.6 {0.063}	Replace

Tightening torque

Unit : N·m {lbf.ft, kgf·m}

Location	Parts to be tightened	Tightening torque	Remarks
2	Wheel nut	490±49 {360±36, 50±5}	—

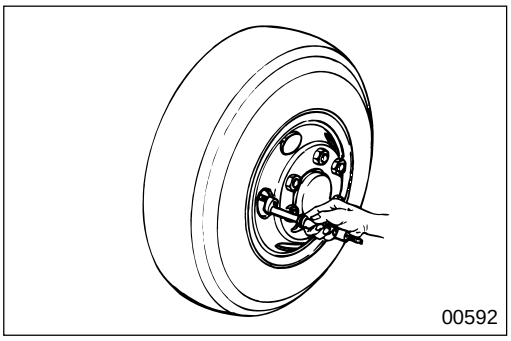
00592

Air pressure

Tire air pressure should be checked before the vehicle is driven, while the tires are still cool.

Item / Vehicle model	Tire size	Air pressure kPa {Psi, kgf/cm²}	
		Front	Rear
FE639 (GVWR : 11600 lb, 5260 kg)	215/85R16(D)	450 {65, 4.50}	450 {65, 4.50}
FE639 (GVWR : 13500 lb, 6120 kg)	215/85R16(E)	550 {80, 5.50}	550 {80, 5.50}
FE649 (GVWR : 14500 lb, 6580 kg)	215/85R16(E)	550 {80, 5.50}	550 {80, 5.50}
FG639 (GVWR : 11000 lb, 5000 kg)	7.50R16(E)	550 {80, 5.50}	550 {80, 5.50}

GVWR : Gross vehicle weight rating

CAUTION

- **Make certain that there is no difference in the air pressure between the inner and outer rear tires.**
- **Make certain you use valve caps on the air valves.**
- **It is not necessary to increase the air pressure for high-speed driving.**

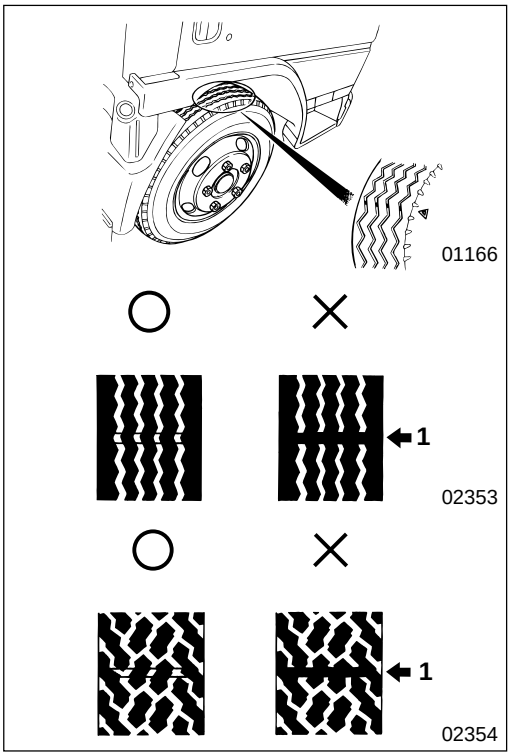

01166
02353
02354

Checking tread depth

- Check all around the tire treads to make sure that the depth of the tread grooves is above the wear limit.
- If the tread grooves are not deep enough, slip sign **A** appears at the position of the △ mark, where the tread groove has worn away.

WARNING

If the depth of the tread grooves is not adequate, the tires will slip on wet roads and present a hazard. Such tires are also extremely dangerous because they are more susceptible to hydroplaning when the vehicle is running at high speeds in the rain. Such tires must be replaced with new ones as soon as possible.

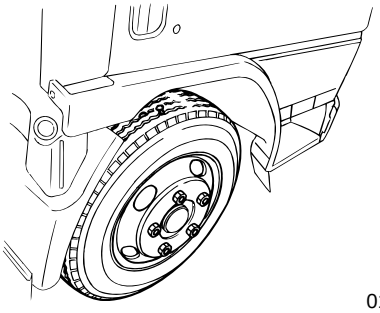
01170

Checking for cracks, damage, and objects embedded in the treads

- Check the tire treads and walls for cracks and damage.
- Check tire treads for uneven wear or other abnormal wear.
- Check if metal objects or nails have penetrated the tires.
- Check for stones embedded between double tires.

WARNING

Badly damaged or worn tires are extremely dangerous, because they can be punctured more easily when the vehicle is running, they must be replaced with new ones as soon as possible.

Removing tires

- Jacking up point
  - For FE front wheels : Point **A** under the leaf spring in front of the front axle
  - For FG front wheels : Point **A** under the front axle housing
  - For rear wheels : Point **B** under the rear axle housing

< FE Front wheel >

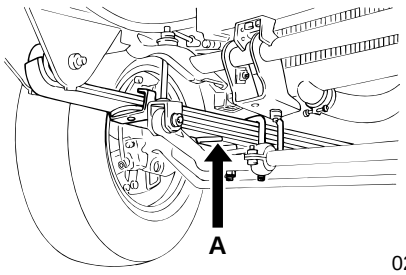

02355

< FG Front wheel >

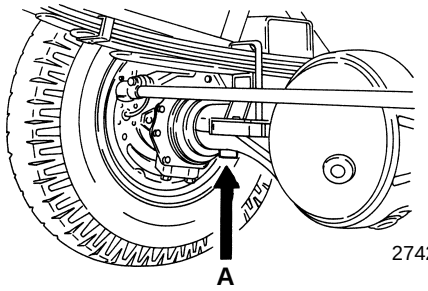

27423

< Rear wheel >

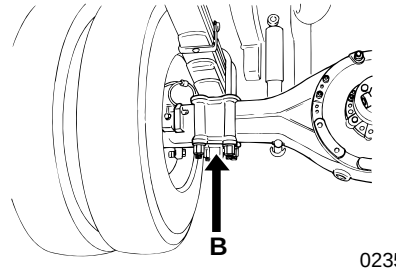

02356

WARNING

- **The jack should be placed on flat, solid ground, and should not be used to raise the vehicle higher than necessary.**
- **Do not use the jack at vehicle locations other than those illustrated.**
- **Keep in mind the danger of a slipping jack. Never crawl under the vehicle while the jack is in use or rock the vehicle. Also, do not start the engine while the vehicle is jacked up.**
- **To increase safety, use rigid racks for the vehicle when it is necessary to leave it jacked up for long periods.**
- **Chock both the tire to be removed and the tire diagonally opposite to it so that they will not rotate when you are removing the tire.**

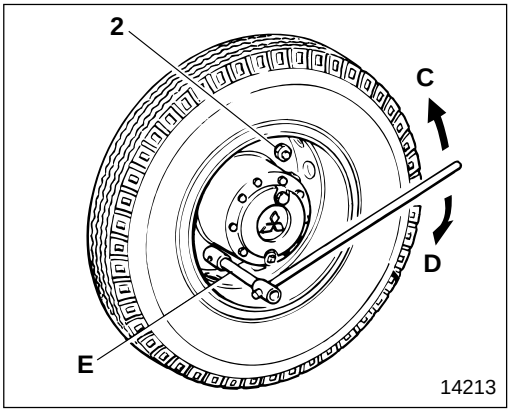

- Loosen wheel nuts **2** slightly. The wheel nuts for right tires **C** have right-hand threads "**R**", and the wheel nuts for left tires **D** have left-hand threads "**L**".

WARNING

Make certain that wheel nut wrench E is fully engaged, all the way to the back of nuts 2. If it is not, it could slip.

CAUTION

Only loosen wheel nuts 2 slightly. Do not remove them.

- Jack up the vehicle carefully, until the tire is slightly off the ground. Remove wheel nuts **2**, then remove the tire.
- When working on the double tires at the rear of the vehicle, first remove the outside tire, then lower the vehicle and loosen the nuts on the inside tire. After doing this, jack the vehicle back up and remove the tire.

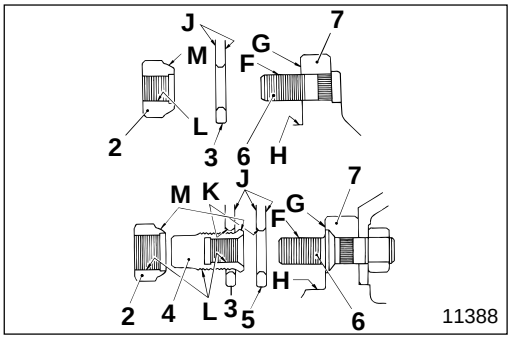

Mounting tires

To prevent wheel nuts **2**, **4** and hub bolt **6** from becoming loose and to prevent mounted parts (tire assemblies **3**, **5** and hub **7**) from being damaged, remove rust, dust, additional coatings of paint, and foreign particles from the following areas:

F : Hub bolt thread area
G : Wheel mounting surface of hub
H : Wheel alignment area of hub
J : Disc wheel mating surface
K : Disc wheel nut mounting surface
L : Wheel nut thread area
M : Wheel nut spherical area

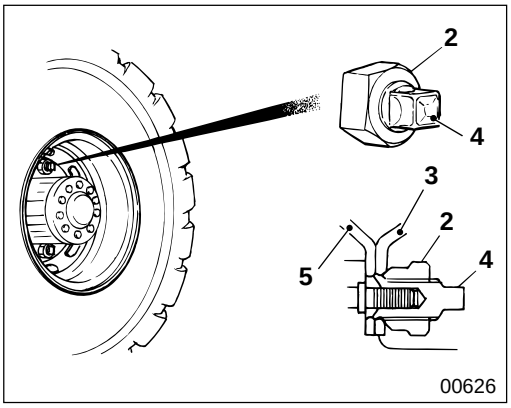

- Put on the double rear tires as follows:
  - After mounting inner tire **5** and fully tightening inner wheel nuts **4**, jack the vehicle up and mount on outer tire **3**, then tighten outer wheel nuts **2**.
  - Even if only outside tire **3** is to be changed, do not mount it until inner wheel nuts **4** have been fastened at the specified torque.
  - Slide the air valves on the inside and outside tires down when mounting the tires.

WARNING

If the threads are scored, or the disc wheel is deformed or cracked, change bolts 6, nuts 2, 4 and disc. Driving the truck before correcting such problems can cause the tire in question to come loose, which could be the source of major accidents.

CAUTION

Check hub bolt 6 threads carefully for scratches before putting the tire on.

- Place the tapered end of wheel nuts **2**, **4** towards the disc wheel and fasten temporarily. Center so that there is no eccentricity between bolts **6** and the disc wheel bolt holes.
- Lower the vehicle.

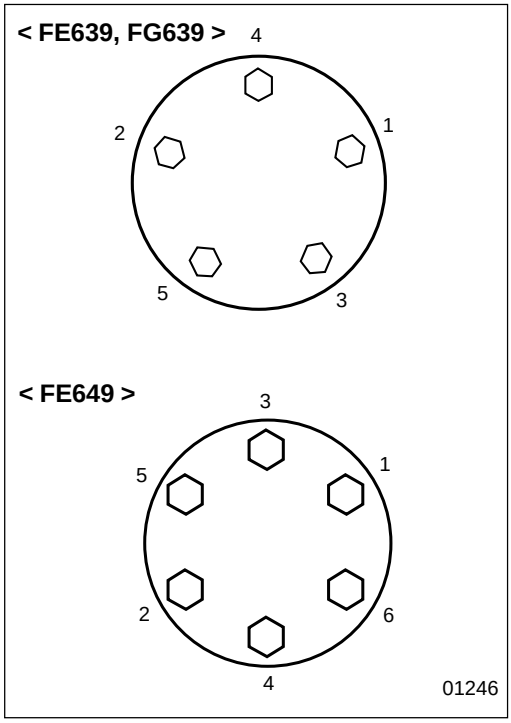

- Tighten the nuts in the order as illustrated, tightening each nut two or three times. To finish, tighten each nut at the specified torque.

WARNING

- **Always use the specified torque when tightening the wheel nuts. If the wheel nuts are not tightened properly, the wheels could come loose while the vehicle is being driven, which could result in life threatening accidents or the truck being disabled.**
- **Do not coat the threads with grease when tightening the nuts. This could result in over-tightening force, which could be dangerous.**

CAUTION

Over-tightening the wheel nuts can damage them.

Checking the wheel nuts for looseness

The wheel nuts should be checked for looseness every 10000 km (6000 miles). All nuts should be tightened at the specified torque.

- Check the double rear tires for looseness as follows:

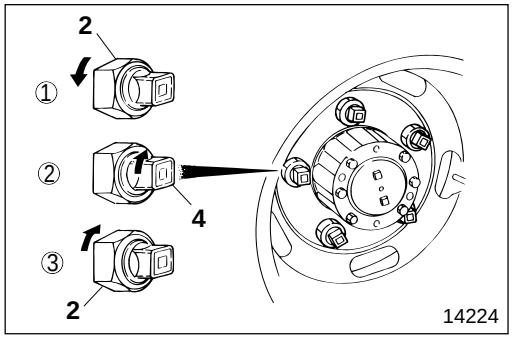

① Loosen outer wheel nuts **2**.
② Tighten inner wheel nuts **4** at specified torque.
③ Tighten outer wheel nuts **2** at specified torque.

CAUTION

If outer wheel nuts 2 are tightened without first being loosened, it might not be possible to tighten them at the specified torque.

Tire rotation

Tires wear differently, according to the location where they are mounted. To make this wear uniform and prolong the life of your tires, they should be rotated every 10000 km (6000 miles) in the rotation order shown below:

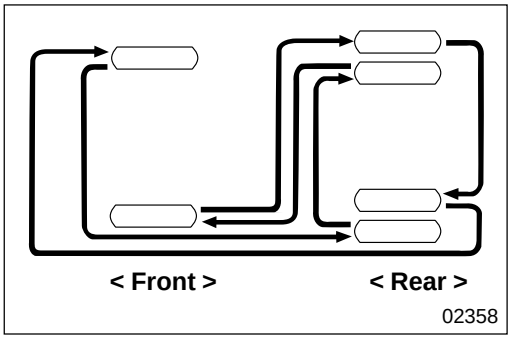

- When the tread patterns for all tires are identical:

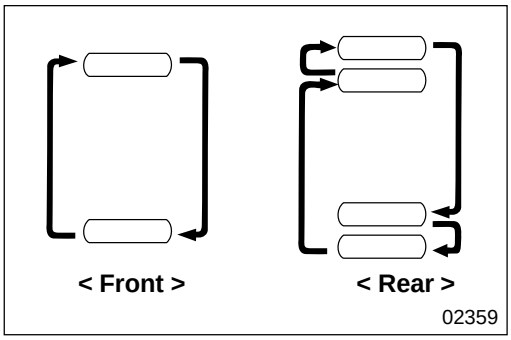

- When the tread patterns are different for the front and rear tires:

CAUTION⚠

- **Always adjust air pressure after running-in new tires.**
- **When using tires of different tread patterns, use rib-type patterns for the front tires and traction type patterns for the rear tires.**
- **Avoid using both radial and biased tires on the same vehicle.**

Inspection of Brake Lining Thickness < Drum Brake Only >

Service standards

Unit : mm {in.}

Location	Maintenance item	Standard value	Limit	Remedy
2	Thickness of brake lining	—	4 {0.16} (Side shoulder means wear limit)	Replace

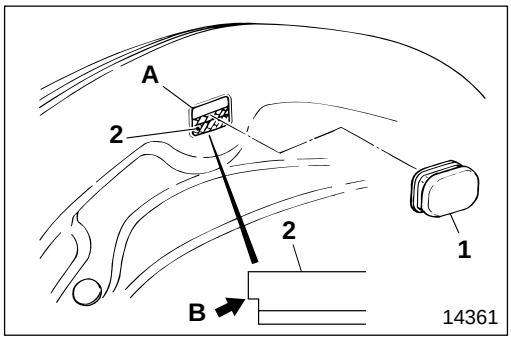

NOTE

Be sure to inspect at two points for each wheel per side.

- Remove cover **1** from the packing plate.
- Inspect through check hole **A** whether brake lining **2** is worn to the point of side shoulder **B** of the brake lining (the limit).
- If the measured value is lower than the limit, replace brake lining **2** on the same axle as a unit.
- After inspection, be sure to reinstall cover **1**.

Battery

DANGER⚠

- **Since flammable hydrogen gas is generated by the battery, be sure to obey the following warnings :**
  - **Do not short-circuit the ⊕ and ⊖ terminals on the battery.**
  - **Keep sparks and lit cigarettes away from the battery.**
  - **Do not wear metal objects on your arms and lean over the battery.**
- **Because the battery electrolyte is diluted sulfuric acid and is corrosive, when handling the battery wear safety glasses and rubber gloves to protect the eyes and hands.**

WARNING⚠

To prevent a short-circuit be sure that disconnected the battery cables do not accidentally touch the battery terminals.

CAUTION⚠

- **Make sure that you disconnect the battery cable ⊖ first when you disconnect the battery cables.**
- **Make sure that all electrical switches of the vehicle are OFF before connecting the battery cables.**
- **Make sure that you connect the battery cable ⊕ before you connect the battery cable ⊖.**

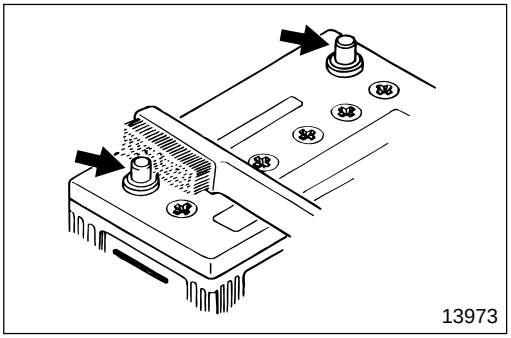

Visual inspection

- If terminal **A** is corroded, scrub off the corrosion from it using a wire brush.
- If cracks or defects are found on the battery, replace it since the cracks or defects can cause liquid spills.

CAUTION⚠

Make sure you grease the ⊕ side of terminal A because it is easily corroded.

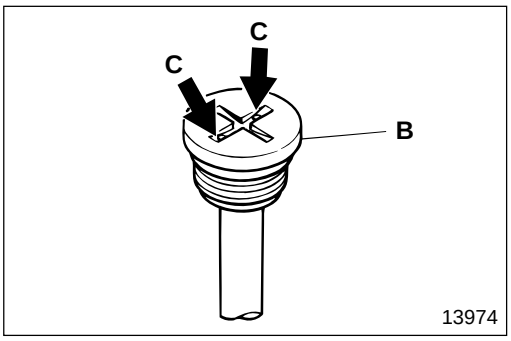

- If bleed hole **C** of vent plug **B** is clogged, clean the hole.

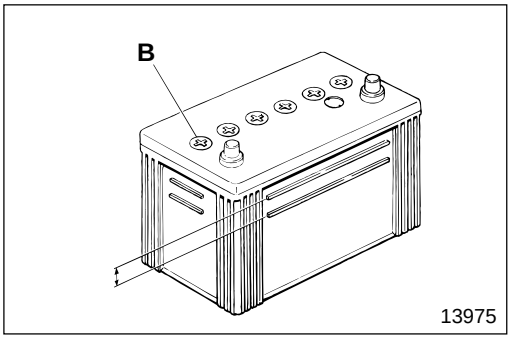

Inspection of fluid level

- Make sure that the battery electrolyte level is between UPPER and LOWER.
- If the level is below LOWER, remove vent plug **B** and fill the battery with distilled water or battery replenisher to UPPER.

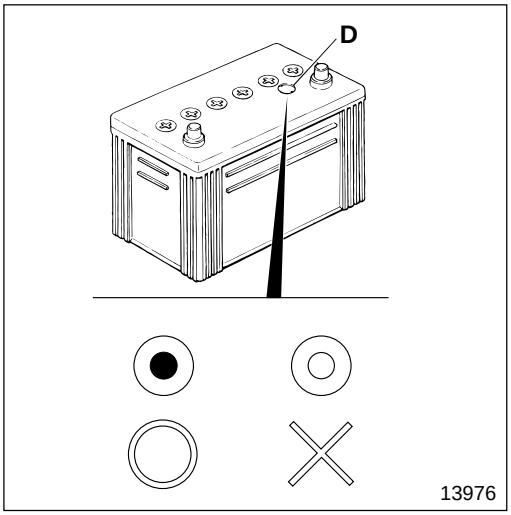

Measurement of specific gravity

You can tell the specific gravity of the battery electrolyte by the color shown in indicator **D**.

Blue : Good
White : Charge or replace

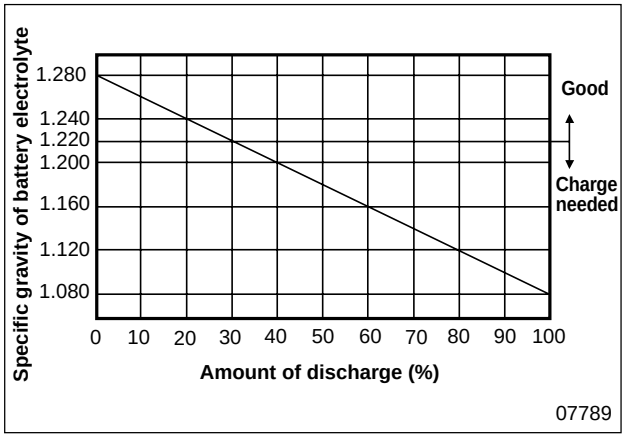

Charging

- Although, as a rule, charging of the battery should be done with the battery removed from the vehicle, if you have to charge the battery while it is on the vehicle, make sure that you stop the engine and disconnect the battery cable ⊖.
- Remove vent plug **B** before charging the battery.
- For the recommended charge time and current, see the following table to avoid overcharging.

	Charge current (A)	Charge time (H)	Upper limit of fluid temperature (°C {°F})
Normal charge	Value of 5-hour rating capacity / 10	*Amount of discharge (Ah) / Charge current (A) ×1.2(to 1.5)	45 {113}
Quick charge	Value of 5-hour rating capacity / 1.5	0.5	55 {131}

* Amount of discharge (Ah)=5-hour rating capacity (Ah)× Amount of discharge (%) / 100

- Use the graph shown on the left to calculate the amount of discharge (%).
- If electrolyte level is low add distilled water to raise level.
- The specific gravity of fully-charged battery electrolyte is 1.280 with the temperature at 20°C {68°F}.

DANGER

- **Do not let the battery electrolyte level rise and overflow while charging the battery.**
- **Keep unprotected lights away from the battery while charging it or it might explode.**
- **Be careful not to generate sparks while charging the battery because its dangerous.**
- **After charging the battery, tighten vent plug B, wash away sulfuric acid from the battery using water, and dry the surface.**

Fuse

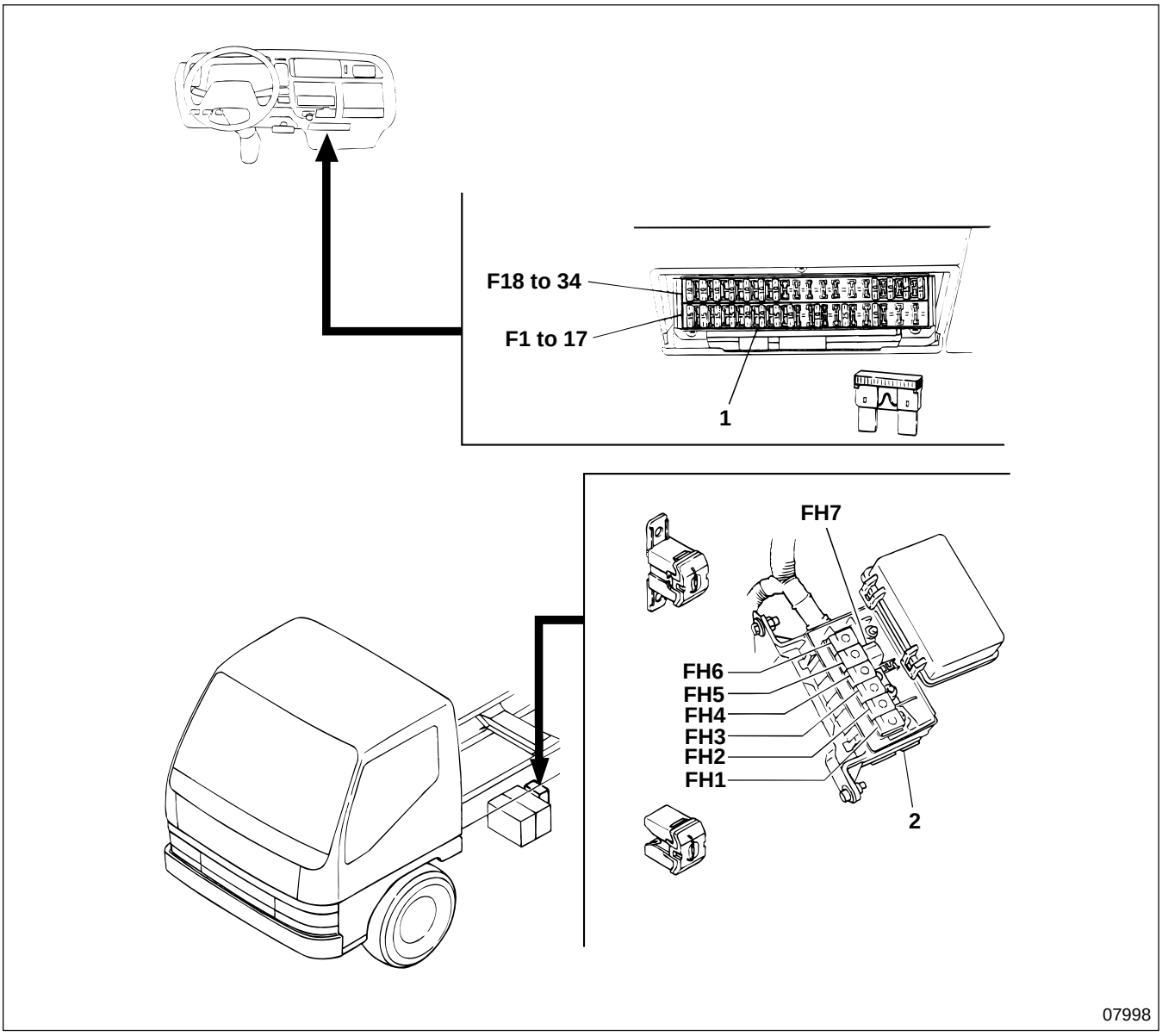

1 Fuse box
2 High-current fuse box

CAUTION ⚠

- **If a fuse blows, make sure you identify and remedy the cause, then replace the fuse.**
- **Make sure that you replace the fuse with one having the same rating.**
- **Make sure that you remove the ⊖ terminal of the battery cable before removing high-current fuses FH1 to 7.**

High-current fuse box

Fuse No.	Main load	Capacity
FH1	Fuse box (F1 to F4)	50 A
FH2	Fuse box (F5 to F8)	50 A
FH3	—	—
FH4	—	—
FH5	Starter switch (Terminal B)	50 A
FH6	Fuse box (F31 to F34)	50 A
FH7	Alternator	100 A

Fuse box

Fuse No.	Main load	Capacity
F1	Headlamp, LH	15 A
F2	Headlamp, RH	15 A
F3	Stop lamp, horn	15 A
F4	Turn signal lamp, pre-stroke control unit (Memory clear switch)	15 A
F5	Fuel-cut motor	10 A
F6	Cab lamp	10 A
F7	Reserve power (BATT)	10 A
F8	—	—
F9	—	—
F10	Automatic transmission control unit (Memory clear switch)	15 A
F11	—	—
F12	—	—
F13	* Cigarette lighter	15 A
F14	Radio	10 A
F15	Reserve power (ACC)	10 A
F16	—	—
F17	Fuel-cut relay	10 A

Fuse No.	Main load	Capacity
F18	Transmission neutral relay < Manual transmission > Inhibitor switch < Automatic transmission >	10 A
F19	Backup lamp	10 A
F20	Meter cluster	10 A
F21	Wiper	10 A
F22	Reserve power (MAIN)	10 A
F23	Automatic transmission control unit	10 A
F24	Automatic transmission control unit	10 A
F25	Pre-stroke cut relay	20 A
F26	—	—
F27	Exhaust brake	10 A
F28	—	—
F29	—	—
F30	* Air-conditioner control	10 A
F31	* Air-conditioner compressor	10 A
F32	* Condenser fan	15 A
F33	Blower fan	25 A
F34	Tail lamp	15 A

* : Fuses are provided for these pieces of equipment only where they are installed.

NOTE

Fuses F4, F10 are also parts of the electric power circuit used to memorize the diagnostic codes that are transmitted if the electrical controlling system (Pre-stroke control injection pump, automatic transmission) malfunctions.

M E M O

Ⓔ : Exhaust emission items

	Items	Time of inspection and maintenance						Lubricant specifications	Remarks
			Inspection interval						
		New vehicle at 4000 km/ 2500 miles	Every 10000 km/ 6000 miles	Every 20000 km/ 12000 miles	Every 30000 km/ 18000 miles	Every 40000 km/ 24000 miles	Every 50000 km/ 30000 miles		
1	Ⓔ Engine oil replacement	×	×					Engine oil API classification, CD, CD/SF, CE, CE/SF or CF-4 Over 30°C {86°F} SAE 40 40 to –5°C {104 to 23°F} SAE 30 15 to –15°C {59 to 5°F) SAE 20W-20 Over –15°C {5°F} SAE 15W-40 Below 0°C {32°F} SAE 10W-30	Gr 12
2	Manual transmission oil level		×					Gear oil API classification GL-3 SAE 80 (General) GL-3 SAE 90 (Warm region) GL-4 SAE 90 (Tropical region) Engine oil Long period of high-speed driving API classification CC SAE 30 or SAE 40	Gr 22
	Manual transmission oil replacement	×			×				
3	Automatic transmission fluid level		×					Automatic transmission fluid (DEXRON II type) Carry out the first inspection for new vehicles at 10000 km/6000 miles	Gr 23
	Automatic transmission fluid replacement					×			
4	Transfer gear oil level < FG Model only >		×					Gear oil API classification GL-3 SAE 80 (General) GL-3 SAE 90 (Warm region) GL-4 SAE 90 (Tropical region) Engine oil Long period of high-speed driving API classification CC SAE 30 or SAE 40	Gr 24
	Transfer gear oil replacement < FG Model only >	×			×				
5	Rear axle housing gear oil level		×					Gear oil API classification GL-5 Below 40°C {104°F} SAE 90 Over 40°C {104°F} SAE 140 Use SAE 140 when operating vehicle at high load, such as continuous ascent on slopes and when the outside temperature is 10°C {50°F} or more < Limited slip differential only > Limited slip differential oil API classification GL-5 SAE 90	Gr 27
	Rear axle housing gear oil replacement	×			×				
6	Front axle housing gear oil level < FG Model only >		×					Gear oil API classification GL-5 Below 40°C {104°F} SAE 90 Over 40°C {104°F} SAE 140 Use SAE 140 when operating vehicle at high load, such as continuous ascent on slopes and when the outside temperature is 10°C {50°F} or more	Gr 26B
	Front axle housing gear oil replacement < FG Model only >	×			×				
7	Hub bearing grease and oil seal replacement				×			Wheel bearing grease [NLGI No.2 (Li soap)]	Gr 26, 26B 27
8	Front axle birfield joint grease replacement < FG Model only >				×			Wheel bearing grease [NLGI No.2 (Li soap)]	Gr 26B
9	Front axle kingpin bearing grease replacement < FG Model only >				×			Wheel bearing grease [NLGI No.2 (Li soap)]	Gr 26B

Ⓔ : Exhaust emission items

	Items		Time of inspection and maintenance						Lubricant specifications	Remarks
				Inspection interval						
			New vehicle at 4000 km/ 2500 miles	Every 10000 km/ 6000 miles	Every 20000 km/ 12000 miles	Every 30000 km/ 18000 miles	Every 40000 km/ 24000 miles	Every 50000 km/ 30000 miles		
10	Front axle steering knuckle grease replacement < FG Model only >					×			Wheel bearing grease [NLGI No.2 (Li soap)]	Gr 26B
11	Brake fluid replacement							×	Brake fluid (SAE J1703f or FMVSS No. 116 DOT3)	Gr 35
12	Power steering fluid level			×					Automatic transmission fluid (DEXRON or DEXRON II type)	Gr 37
	Power steering fluid replacement							×		
13	Lubrication of propeller shaft	Center bearing						×	Bearing grease [NLGI No.3 (Li soap)]	Gr 25
		Universal joint, slip joint Double cardin joint < FG Model only >		×					Wheel bearing grease [NLGI No.2 (Li soap)]	Gr 25
14	Lubrication of rear suspension spring pin			×					Chassis grease [NLGI No.1 (Ca soap)]	Gr 34
15	Lubrication of kingpins			×					Chassis grease [NLGI No.1 (Ca soap)]	Gr 26
16	Lubrication of steering linkage ball joint			×					Chassis grease [NLGI No.1 (Ca soap)]	Gr 37
17	Lubrication of door hinge			×					Chassis grease [NLGI No.1 (Ca soap)]	Gr 42

LUBRICATION

Engine Oil

Ⓣ Tightening torque

Unit : N·m {lbf.ft, kgf·m}

Location	Parts to be tightened	Tightening torque	Remarks
4	Oil pan drain plug	34 to 39 {25 to 29, 3.5 to 4.0}	—

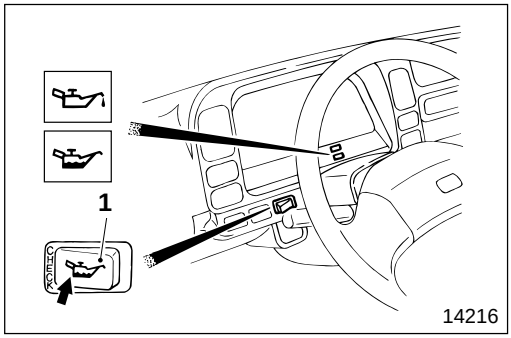

[Inspection]
There are two methods for inspecting the engine oil level; using oil level check switch **1**, and using dipstick **2**. Inspection using the oil level check switch is a simple inspection method. For a more accurate inspection use the dipstick.

- Inspection using oil level check switch **1** (simple inspection)
  - Press oil level check switch **1** before starting the engine. Check the oil level using the illuminated lamp.
    lamp (green) : Correct oil level
    lamp (red) : Low oil level
  - If the level is low, fill to correct level.

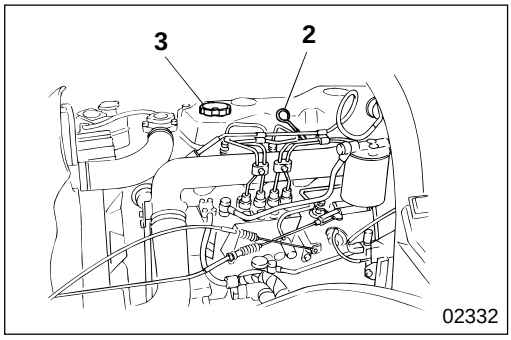

- Inspection using dipstick **2**
  - Tilt the cab.
  - Pull out dipstick **2**, wipe off the oil with a cloth.
  - Reinsert dipstick **2**, then pull it out carefully.
  - Oil level is correct if there is oil sticking to the dipstick between the two notches.
  - If the level is low, fill to correct level.

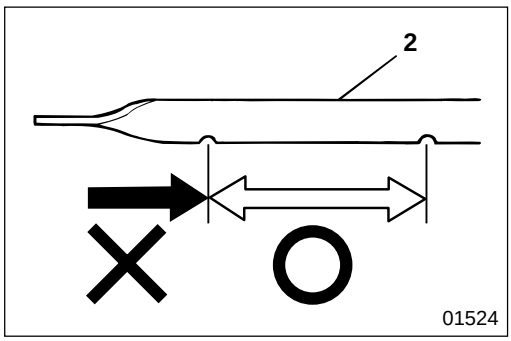

[Replenishment]
- Clean the area surrounding oil filler cap **3** and prevent dust from entering through the filler.
- Remove oil filler cap **3** and top up with engine oil.
- Wait five minutes before checking the oil level.
- Replace filler cap **3**.

WARNING
- **Wipe up any engine oil that has been spilled because it can cause a fire.**
- **Do not touch the engine while it is hot as it will burn you.**

CAUTION

Take care not to spill engine oil on the V-belts, because this would cause them to slip, reducing service life.

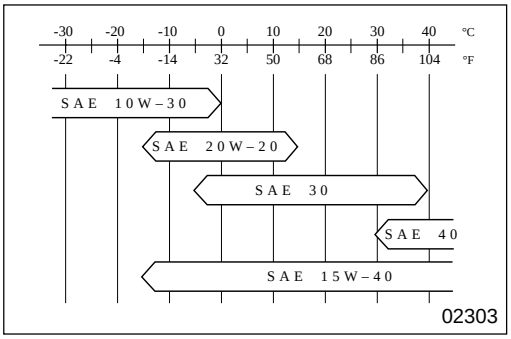

[Replacement]
Since engine oil greatly influences the performance, the life expectancy, and the ability to start the engine, use only oil of the specified grade and viscosity.
The chart illustrates the relationship between oil viscosity and the ambient air temperature.

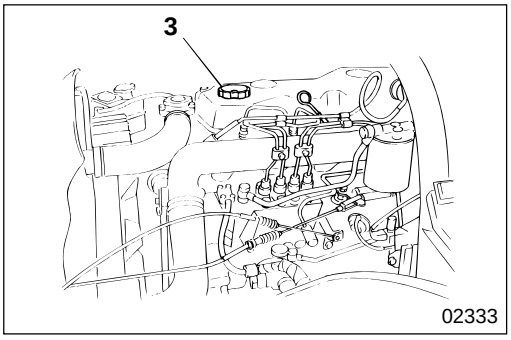

- Clean the area surrounding oil filler cap **3** and prevent dust from entering through the filler.
- Remove oil filler cap **3**.
- Remove oil pan drain plug **4**, and drain the oil. At the same time replace the oil filter.
- After reinstalling drain plug **4**, slowly add engine oil through the oil filler.
- Using the dipstick, check the oil level after more than five minutes have passed.
- Start the engine and let it idle. When the oil has reached all parts, stop the engine. Let 30 minutes pass before checking the oil level again.

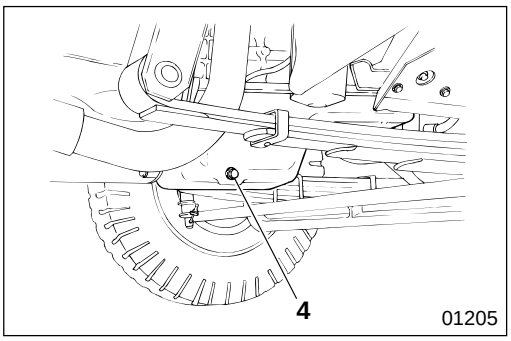

Manual Transmission Gear Oil

Tightening torque

Unit : N·m {lbf.ft, kgf·m}

Location	Parts to be tightened	Tightening torque	Remarks
1	Inspection plug	69±15 {51±11, 7±1.5}	—
2	Drain plug	69±15 {51±11, 7±1.5}	—

Sealant

Location	Points of application	Specified sealant	Quantity
1	Thread area of inspection plug	THREEBOND 1105D	As required
2	Thread area of drain plug	THREEBOND 1105D	As required

WARNING

The engine is hot immediately after the vehicle has stopped, so take care not to burn yourself.

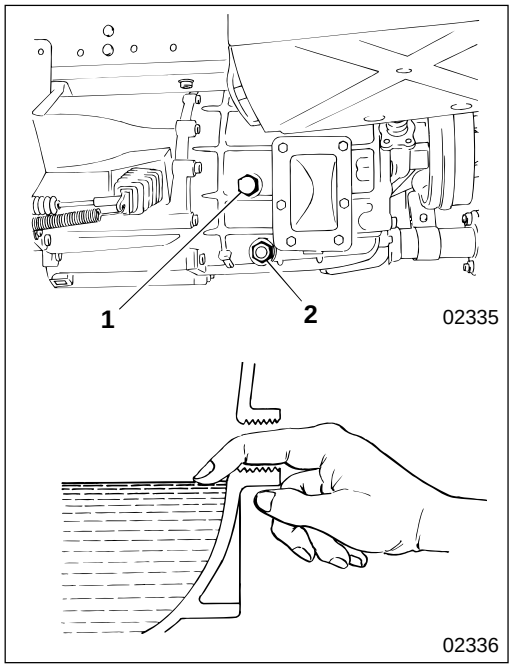

[Inspection and replenishment]

- Remove inspection plug **1** and check whether the oil level is up to the edge of the entrance.
- If the level is low, add oil through the inspection plug hole until the level comes up to the edge of the entrance.

[Replacement]

- Drain the oil after removing inspection plug **1** and drain plug **2**.
- Remove any metal particles sticking to the magnetic part of drain plug **2** before reinstalling the plug.
- Add oil through the inspection plug hole until the level comes up to the edge of the entrance.
- Insert inspection plug **1**.

M E M O

Automatic Transmission Fluid

Tightening torque

Unit : N·m {lbf.ft, kgf·m}

Location	Parts to be tightened	Tightening torque	Remarks
3	Drain plug	29 to 39 {22 to 29, 3 to 4}	—

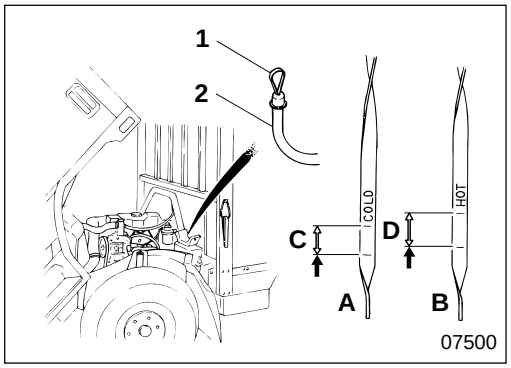

[Inspection and replenishment]

- Park the vehicle on level ground, make sure that the parking brake is fully activated and chock the wheels to keep them from rolling.
- Start the engine and let it idle. To fill the hydraulic circuit with automatic transmission fluid, slowly shift the range selector lever once through the P to L ranges and finally shift into the N range.
- While the engine is still idling, pull out dipstick **1** and wipe off the fluid sticking to it. Reinsert the dipstick, then pull it out again and check the fluid level.
- If the fluid level is inspected right after the engine is started and the fluid temperature is still low (40±15°C {104±27°F}) the level should be within area **C** marked COLD on dipstick **1** as illustrated in **A**.
- If the fluid level is inspected after the vehicle has been driven and the fluid temperature is high (65±15°C {149±27°F}) the level should be within area **D** marked HOT on dipstick **1** as illustrated in **B**.

WARNING⚠

Take care during the inspection because the engine will be running. Take sufficient care to avoid burns or injuries resulting from contact with moving parts.

CAUTION⚠

Be sure to wipe off the dust from the safety cap and the upper part of filler tube 2 before you pull out dipstick 1.

NOTE

- **Make sure the vehicle is parked on level ground when you are checking the fluid level.**
- **Make sure the range selector lever is in the N range and the engine is idling when you are checking the fluid level. When the engine is at standstill, the fluid level appears higher than it actually is.**
- **To ensure the fluid is correct, reinspect the fluid level after an actual drive.**

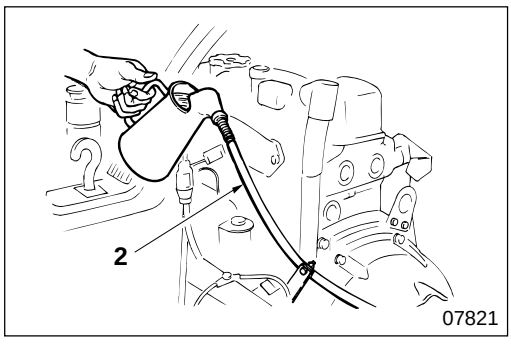

- If the fluid level is low, top it up to the specified level by supplying automatic transmission fluid (DEXRON II type) through filler tube **2**.

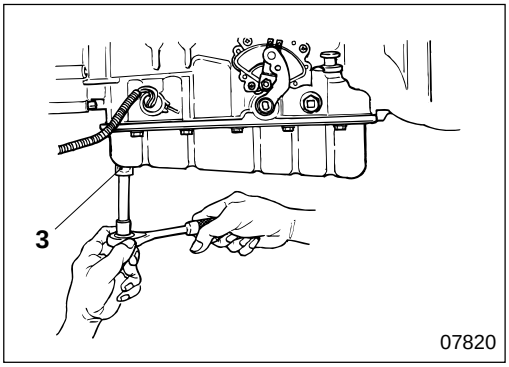

[Replacement]

- Place a container under the oil pan, remove drain plug **3** in the front of the oil pan and drain the fluid.

WARNING

Take care because the automatic transmission fluid temperature immediately after the engine has stopped is very high. To avoid scalds, wait until a safe temperature has been reached before draining the fluid.

NOTE

- **The fluid will drain faster if the engine is first run to raise the fluid temperature.**
- **The fluid cannot be drained from the hydraulic circuit, the torque converter or the oil cooler.**

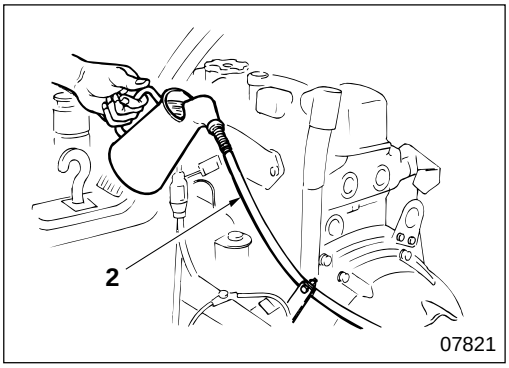

- Reinstall the gasket, and oil pan drain plug **3**.
- Add automatic transmission fluid (DEXRON II type) through filler tube **2**.

CAUTION

Make sure that dirt and foreign particles do not become mixed in with the fluid when it is added.

- Shift the range selector lever into the N range, start the engine and let it idle for at least two minutes.
- After shifting the lever through all ranges once, shift it back into N.

CAUTION

To prevent burning out the interior of the automatic transmission assembly, make sure that the engine is not allowed to race when you do the above.

- Supply the fluid until the fluid level is at the lower limit of the specified area on dipstick **1**. Next, check the fluid level to make sure it is within the specified limit.

NOTE

- **Determining the fluid level immediately after supplying the fluid might be difficult due to the fluid stuck in the inside of the filler tube. Therefore, check the fluid level a few times between intervals.**
- **If the fluid is overfilled, it will overflow and can be mistaken for leakage.**
- **Let the engine idle and, while paying attention to the fluid level, pour in the fluid slowly.**

Transfer Gear Oil < FG Model only >

Tightening torque

Unit : N·m {lbf.ft, kgf·m}

Location	Parts to be tightened	Tightening torque	Remarks
1	Inspection plug	69±15 {51±11, 7±1.5}	—
2	Drain plug	69±15 {51±11, 7±1.5}	—

Sealant

Location	Points of application	Specified sealant	Quantity
1	Thread area of inspection plug	THREEBOND 1105D	As required
2	Thread area of drain plug	THREEBOND 1105D	As required

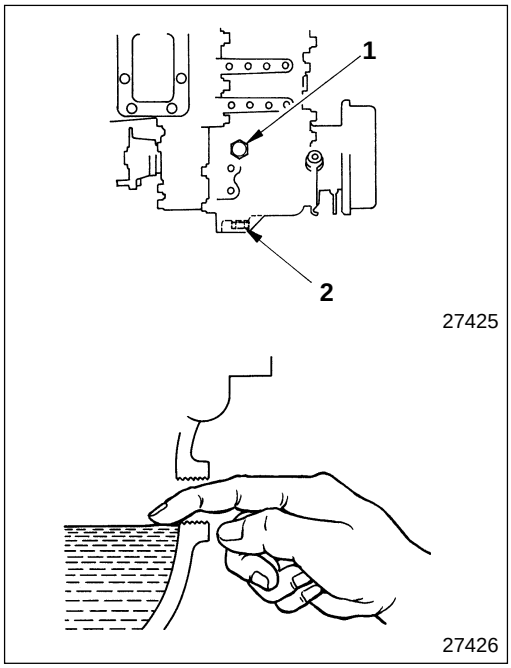

[Inspection and replenishment]

WARNING

The oil temperature is high immediately after the vehicle has stopped, so take care not to scald yourself.

- Remove inspection plug **1**, check the oil level and make sure it is up to the edge of the entrance.
- If the oil level is low, add oil through the inspection plug hole until the level comes up to the edge of the entrance.
- Insert inspection plug **1**.

[Replacement]

- Drain the oil after removing inspection plug **1** and drain plug **2**.
- Remove any metal particles sticking to the magnetic part of drain plug **2** before reinstalling the plug.
- Supply oil through the inspection plug hole until the level comes up to the edge of the entrance.
- Reinstall inspection plug **1**.

Front Axle Gear Oil < FG Model only > and Rear Axle Gear Oil

Tightening torque

Unit : N·m {lbf.ft, kgf·m}

Location	Parts to be tightened	Tightening torque	Remarks
1	Inspection plug	98 to 115 {72 to 87, 10 to 12}	—
2	Drain plug	98 to 115 {72 to 87, 10 to 12}	—

< FG : Front axle>

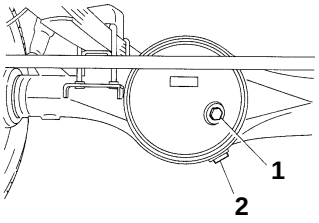

< Rear axle >

27424

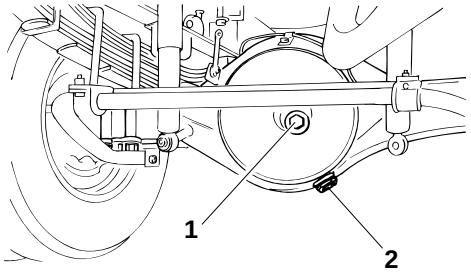

02339

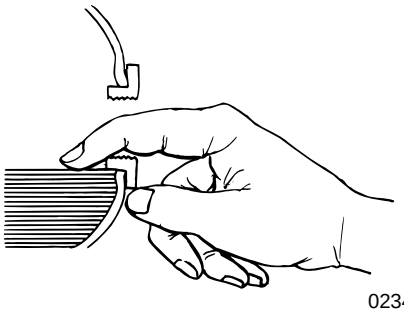

02340

[Inspection and replenishment]

WARNING

The oil temperature is high immediately after the vehicle has stopped, so take care not to scald yourself.

- Remove inspection plug **1**, check the oil level and make sure it is up to the edge of the entrance.
- If the oil level is low, add oil through the inspection plug hole until the level comes up to the edge of the entrance.
- Insert inspection plug **1**.

[Replacement]

- Drain the oil after removing inspection plug **1** and drain plug **2**.
- Remove any metal particles sticking to the magnetic part of drain plug **2** before reinstalling the plug.
- Supply oil through the inspection plug hole until the level comes up to the edge of the entrance.
- Reinstall inspection plug **1**.

LUBRICATION

Power Steering Fluid

Tightening torque

Unit : N·m {lbf.ft, kgf·m}

Location	Parts to be tightened	Tightening torque	Remarks
4	Pressure tube	29 to 39 {22 to 29, 3 to 4}	—
5	Return tube	39 to 49 {29 to 36, 4 to 5}	—

Fluid

Location	Points of application	Specified fluid	Quantity
1	Power steering oil tank	Automatic transmission fluid (DEXRON or DEXRON II type)	Between MIN and MAX on filler cap dipstick

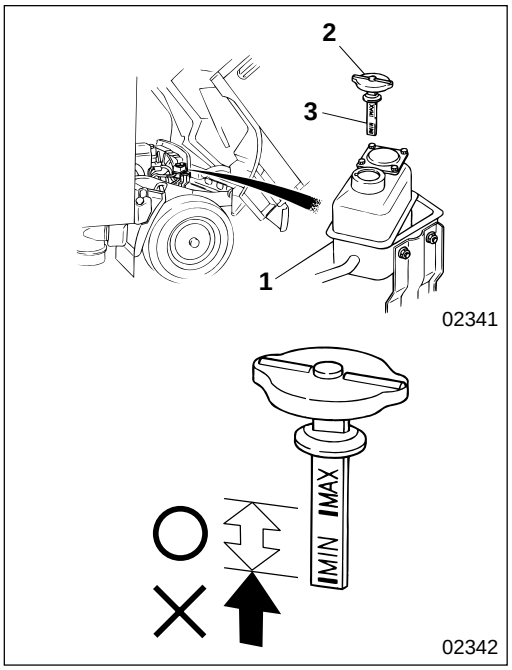

[Inspection and replenishment]

- Straighten the front wheels and stop the engine.
- Tilt the cab.
- Remove filler cap **2** of power steering oil tank **1** by turning the filler cap counterclockwise.
- Wipe off the fluid sticking to dipstick **3** on filler cap **2**. Replace the filler cap.

NOTE

Check the fluid level without screwing on filler cap 2.

- Carefully lift up filler cap **2** and check the fluid sticking to dipstick **3** to make sure that the fluid is at a point between the “MAX” and “MIN” levels. If the fluid position does not reach the “MIN” level, add fluid.
- After inspection install filler cap **2** by turning it clockwise.

WARNING⚠

Close filler cap 2 firmly; otherwise the fluid may leak and could catch fire. Also wipe up spilled fluid.

CAUTION⚠

If the fluid level is far below the recommended range, the fluid may be leaking.

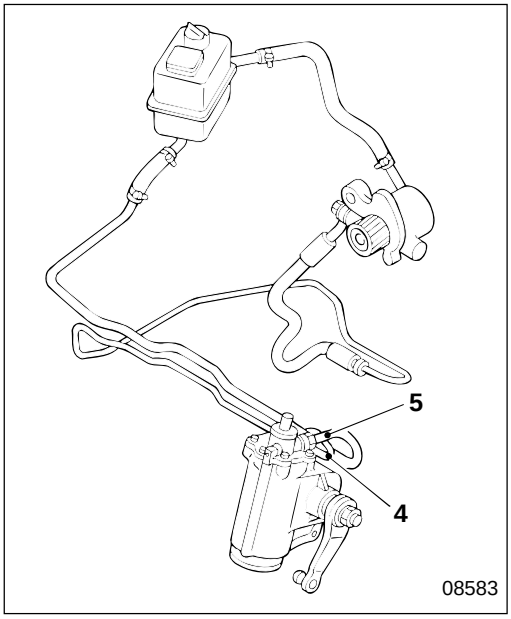

[Replacement]

- Drainage
  - Jack up the front wheels.
  - Release pressure tube **4** and return tube **5** connected to the power steering booster.
  - Turn the steering wheel fully left and right repeatedly, and drain the fluid from the power steering booster.
  - After draining the fluid, tighten pressure tube **4** and return tube **5** at specified torque.

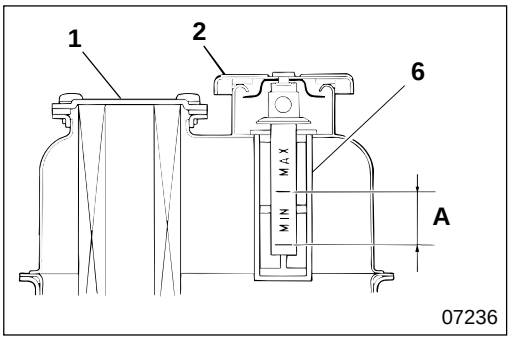

[Fluid supply]

- Pour fluid into power steering oil tank **1** up to the inner port of strainer **6**.
- With the engine stopped, jack up the front wheels and turn the steering wheel fully left and right repeatedly. When the fluid level has dropped, add fluid to maintain the fluid level within range **A**.

NOTE

Check the fluid level without screwing on filler cap 2.

- Start the engine and letting it idle, turn the steering wheel fully left and right repeatedly. When the fluid level has dropped, add fluid to maintain the fluid level within range **A**. Repeat these steps until the fluid level does not drop.
- If there is an abnormal noise, air is still in the system. Turn the steering wheel several times to raise the fluid temperature to approximately 60 to 80°C {140 to 176°F}, then stop the engine and wait for approximately five minutes.
- Lower the front wheels and turn the steering wheel several times. If there is no noise, bleeding is completed.
- When bleeding is finished, check fluid level of power steering oil tank **1**, and pipe and hose connections for fluid leakage.

LUBRICATION

Brake Fluid

Tightening torque

Unit : N·m {lbf.ft, kgf·m}

Location	Parts to be tightened		Tightening torque	Remarks
1	Air bleeder	Front disc brake < FE >	6.9 to 8.8 {5.1 to 6.5, 0.7 to 0.9}	—
		Front wheel cylinder < FG >	6.9 to 8.8 {5.1 to 6.5, 0.7 to 0.9}	—
		Rear wheel cylinder < FE639, FG639 >	6.9 to 8.8 {5.1 to 6.5, 0.7 to 0.9}	—
		Rear disc brake < FE649 >	6.9 to 8.8 {5.1 to 6.5, 0.7 to 0.9}	—
		Bypass valve	8.8 to 13 {6.5 to 9.4, 0.9 to 1.3}	—

Fluid

Location	Points of application	Specified fluid	Quantity
—	Fluid tank	Brake fluid (SAE J1703f or FMVSS No.116 DOT3)	As required

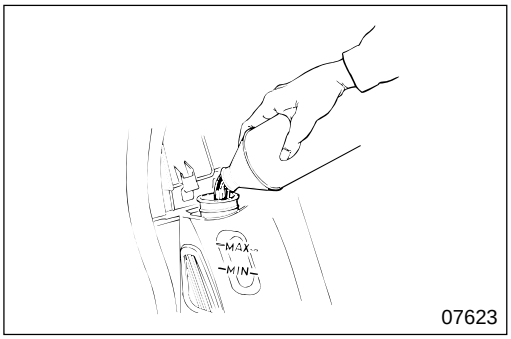

07623

WARNING

- **The clutch fluid system and the brake fluid system use the fluid tank in common. Therefore, replacement and air bleeding of the clutch fluid must be carried out simultaneously with that of the brake fluid. Gr 21**
- **You must use new brake fluid (SAE J1703f or FMVSS No. 116 DOT3). Do not add different quality fluid or mineral oil (gas oil, engine oil, gear oil, automatic transmission fluid, etc.) to the clutch system, because this will cause the rubber parts of the clutch system and brake system to swell, resulting in faulty clutch operation, as well as ineffective braking and brake dragging.**
- **Do not allow foreign particles or water to become mixed into the brake fluid when refilling, because this will result in ineffective clutch and brake operations.**
- **If you use a container for adding brake fluid, keep it solely for that purpose.**

CAUTION

- **Be careful not to splash brake fluid on related parts as this could damage the paintwork.**
- **Be sure to wipe off brake fluid immediately if you splash it on the paintwork.**

NOTE

Supply brake fluid to maintain the “MAX” level of the fluid tank always.

[Inspection and replenishment]
Inspect the level of the brake fluid in the fluid tank. It should be between the “MAX” and “MIN” levels. If it is below the “MIN” level, lift up the lid and remove the cap from the fluid tank, then add specified brake fluid until the level reaches the “MAX” level. Do not fill above the “MAX” level.

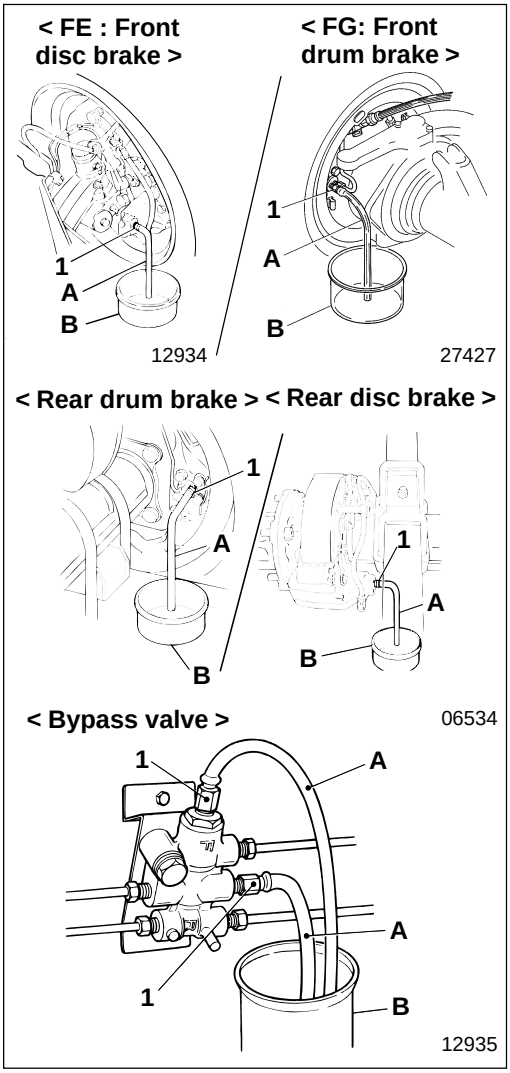

[Replacement]

- Start the engine and let it idle until you complete brake fluid replacement.
- Attach vinyl pipe **A** to the front disc brake < FE >, the front drum brake < FG >, the rear drum brake < FE639, FG639 >, the rear disc brake < FE649 > and the bypass valve.
- Place the free end of vinyl pipe **A** into container **B**.

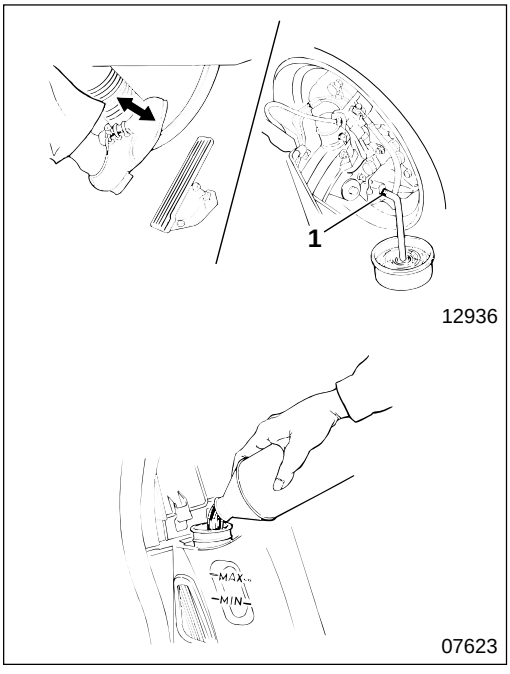

- Loosen air bleeders **1** and depress the brake pedal several times to drain brake fluid completely.
- Maintaining a supply of new brake fluid up to the “MAX” level of the fluid tank, depress the brake pedal repeatedly until the old brake fluid of the brake system is replaced with new fluid. After you complete the work, tighten each air bleeder **1** at specified torque.

NOTE

You can tell when the brake fluid has been completely replaced because the fluid coming out will be a different color.

- Carry out air bleeding of the brake system.

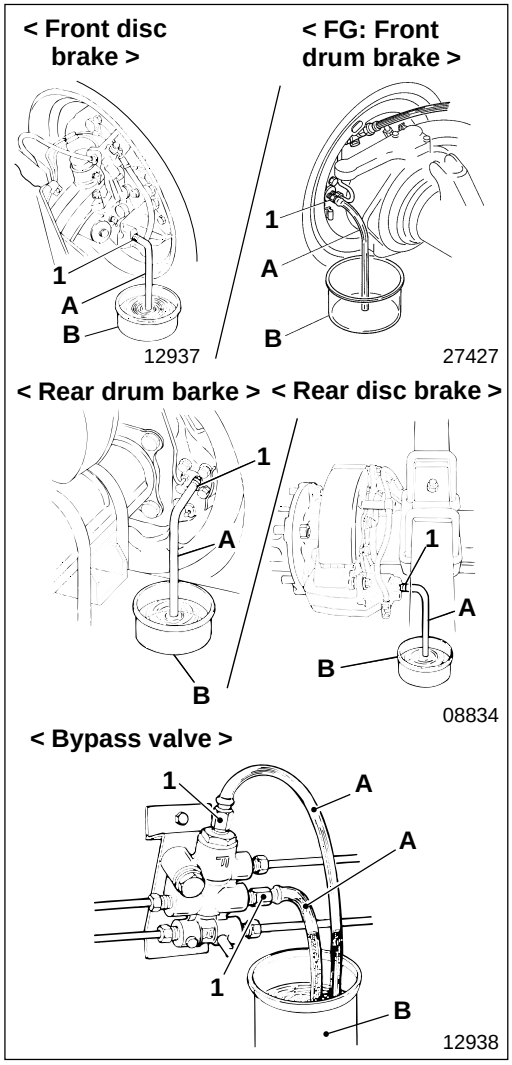

[Air bleeding]

- Start the engine and let it idle until you complete air bleeding of the brake system.
- Attach vinyl pipe **A** to the front disc brake < FE >, the front drum brake < FG >, the rear drum brake < FE639, FG639 >, the rear disc brake < FE649 > and the bypass valve.
- Place the free end of vinyl pipe **A** into container **B**, then bleed air from the brake system as follows:

< Front brake system >

FG639	FE639, FE649
Drum brake, RH	Disc brake, RH
↓	↓
Drum brake, LH	Disc brake, LH

< Rear brake system >

FE639, FG639	FE649
Drum brake, RH	Disc brake, RH
↓	↓
Drum brake, LH	Disc brake, LH

< Bypass valve system >

Bypass valve

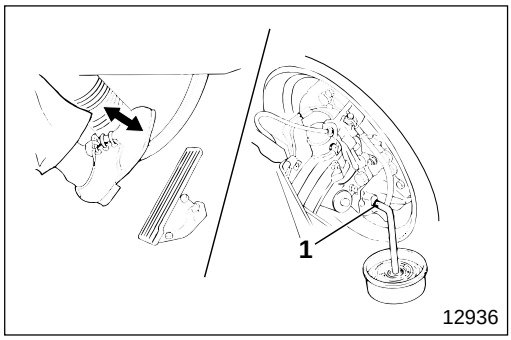

- Depress the brake pedal slowly several times, and with the brake pedal depressed, loosen air bleeder **1** to discharge air together with the brake fluid. After closing the air bleeder, release the brake pedal.
- Repeat the above operation until air bubbles are no longer present in the brake fluid discharged from air bleeder **1**.
- When the discharged fluid is free of air bubbles, tighten air bleeder **1** at specified torque.
- Make sure that the brake fluid level is at the “MAX” level of the brake fluid tank, and depress the brake pedal several times to ensure that the brake fluid does not leak from anywhere. Then, conduct a brake test.

M E M O

LUBRICATION

Greasing Various Areas of Chassis

Carefully clean away all dust and dirt from the grease nipples, and use the specified type of grease. The areas to be greased are shown in the following illustration.

< FE >

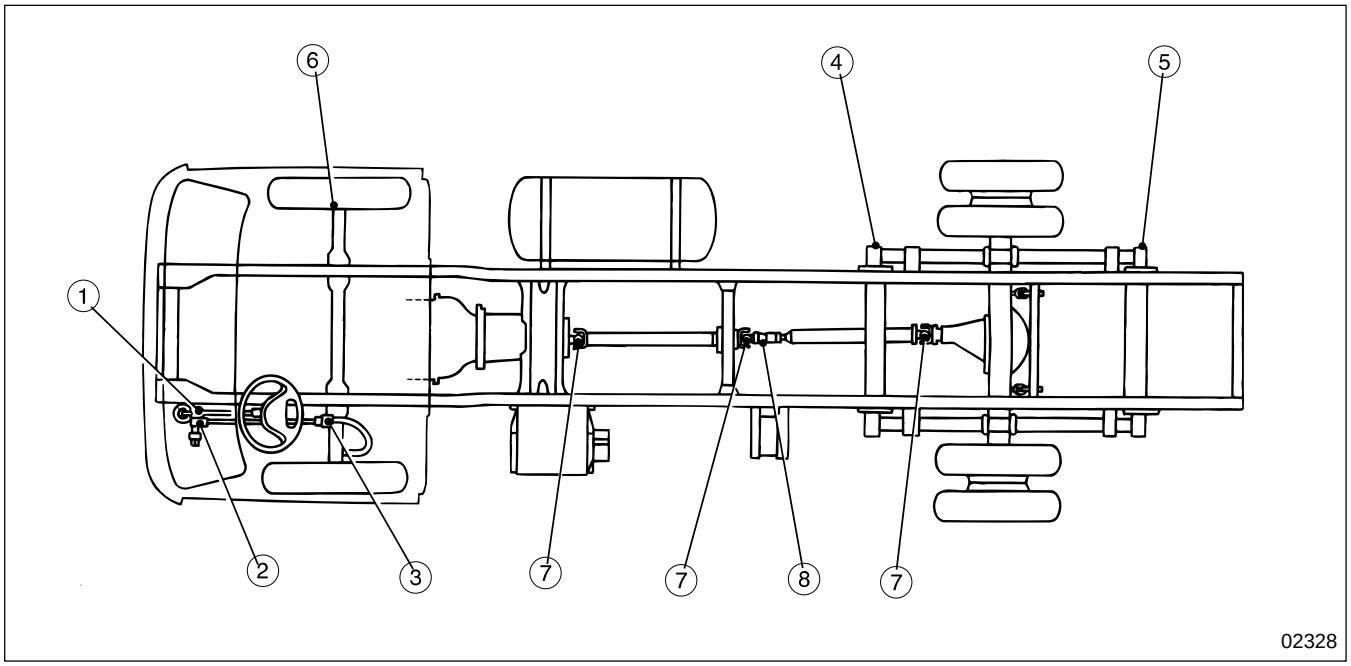

① 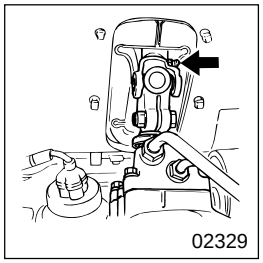

② 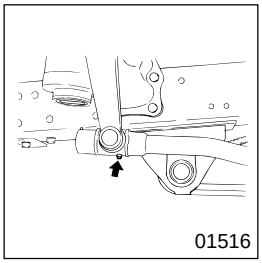

③ 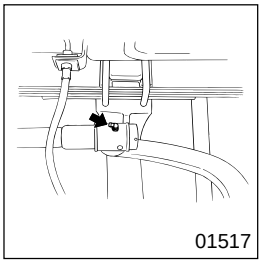

④ 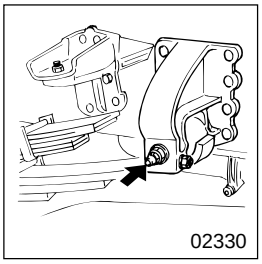

⑤ 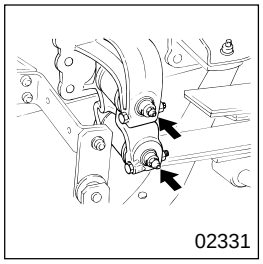

⑥ 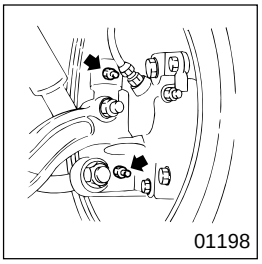

⑦ 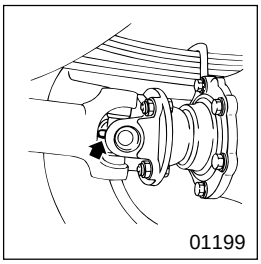

⑧ 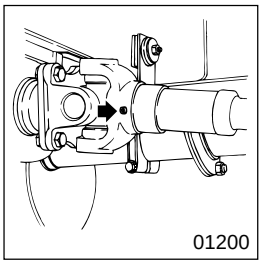

① Steering shaft
② Drag link front
③ Drag link rear
④ Rear spring pin front (left and right, 2 points)
⑤ Rear spring pin rear (left and right, 4 points)
⑥ Kingpin bearing (left and right, 4 points)
⑦ Propeller shaft universal joint's-all
⑧ Propeller shaft slip joint

< FG >

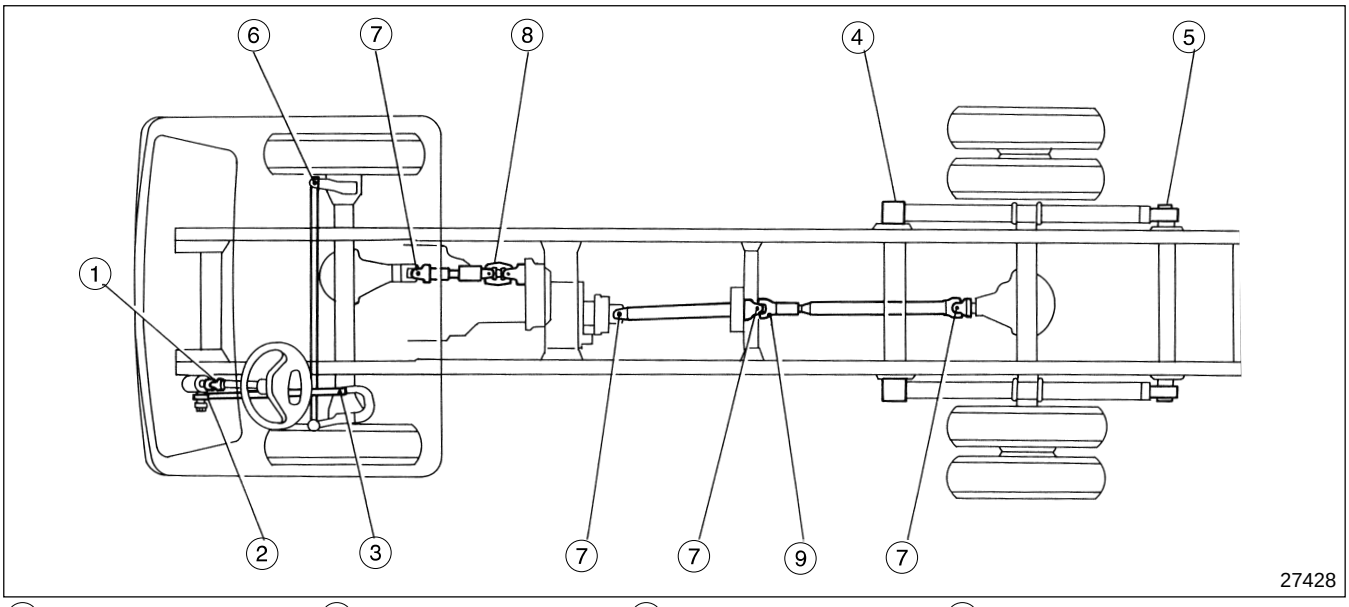

① 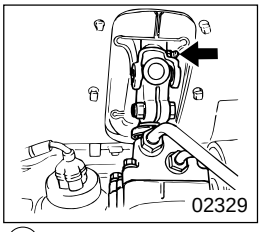

② 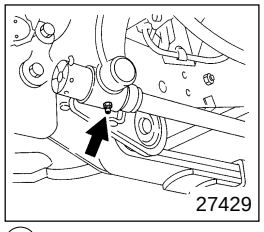

③ 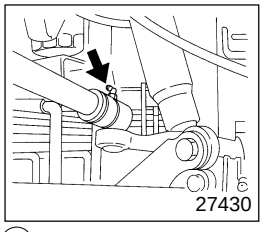

④ 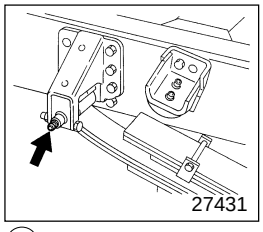

⑤ 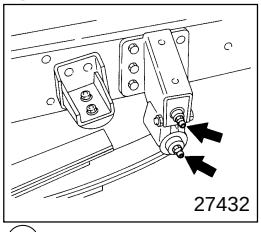

⑥ 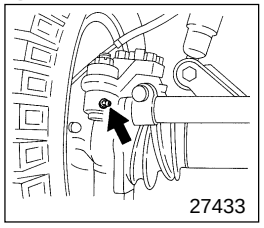

⑦ 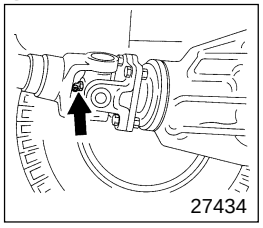

⑧ 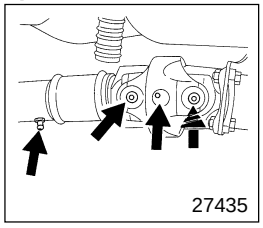

⑨ 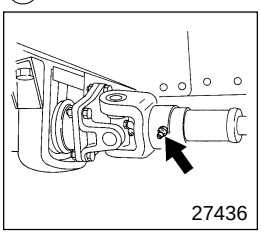

① Steering shaft
② Drag link front
③ Drag link rear
④ Rear spring pin front (left and right, 2 points)
⑤ Rear spring pin rear (left and right, 4 points)
⑥ Tie rod end
⑦ Propeller shaft universal joint's-all
⑧ Double cardin joint, propeller shaft slip joint, propeller shaft universal joint
⑨ Propeller shaft slip joint

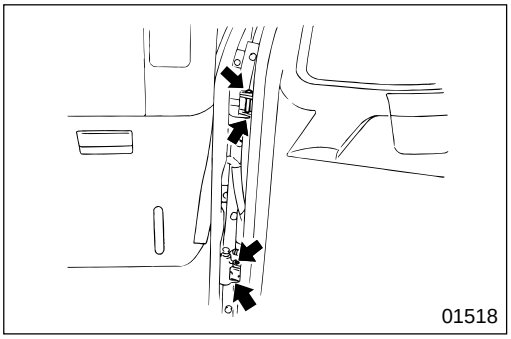

● **Door hinge**

MITSUBISHI
FUSO

FE

Service Manual

Group 01
Maintenance Schedule

Table of Contents

BACK

HOME

MITSUBISHI FUSO TRUCK OF AMERICA, Inc.

Pub No. TWSE9501-01

MAINTENANCE SCHEDULE

HOW TO READ THE MAINTENANCE SCHEDULE TABLES 2

MAINTENANCE SCHEDULE TABLES 3

MAINTENANCE OPERATIONS 5
- Replacement of Oil Filter 5
- Replacement of Fuel Filter 6
- Draining of Water Separator Condensation 7
- Cleaning of Fuel Feed Pump Gauze Filter 7
- Bleeding of Air from Fuel Line 8
- Adjustment of V-Belt Tension 9
- Cleaning and Replacement of Air Cleaner Element 11
- Inspection of Clutch Pedal Free Play 12
- Tire 13
- Inspection of Brake Lining Thickness < Rear Drum Brake > 18
- Battery 18
- Fuse 21

LUBRICATION 24
- Engine Oil 25
- Manual Transmission Gear Oil 27
- Automatic Transmission Fluid 28
- Rear Axle Gear Oil 30
- Power Steering Fluid 31
- Brake Fluid 33
- Greasing Various Areas of Chassis 36

HOW TO READ THE MAINTENANCE SCHEDULE TABLES

Example Table :

Ⓔ : Exhaust emission items
Ⓝ : Noise control items

	Inspection and maintenance (1)	Time of inspection and maintenance (2)								Working procedures (3)	Remarks (4)
			Inspection interval								
		New vehicle at 4000 km/ 2500 miles	Every 10000 km/ 6000 miles	Every 20000 km/ 12000 miles	Every 30000 km/ 18000 miles	Every 40000 km/ 24000 miles	Every 50000 km/ 30000 miles	Every 90000 km/ 54000 miles	Every 250000 km/ 150000 miles		
ENGINE											
1	Manifold bolts torque	×					×			Check inlet and exhaust manifold nuts for looseness	Gr 15
2	Ⓔ Check and adjust valve clearance	×					×			Check valve clearance with feeler gauge	Gr 11
3	Ⓔ Oil filter replacement	×	Every 10000 km/6000 miles or 12 months							Replace oil filter	Gr 12
4	Ⓔ Injection nozzle Ⓝ							×	×	Check and clean injection nozzle	Gr 13
5	Ⓔ Fuel Injection timing Ⓝ							×		Check fuel injection timing	Gr 13
6	Ⓔ		Every 40000 km/24000 miles or 24 months							Clean gauze filter inside co	
			km/12000 miles or 12 months							Repl	

(1) This column contains the maintenance and inspection items.
(2) The periods between inspection and service are based on the assumption that the vehicle will be driven approximately 60000 kilometers (36000 miles) per year.
Inspections which must be made are indicated by an "×" or by the appropriate period between servicing.
(3) This column provides a simplified explanation of the operational procedures involved for each inspection or maintenance item.
(4) The Gr. No. refers to the "group number" in this vehicle Service Manual. For visual checks and simple inspections, see the sections labelled "Working Procedures".

Ⓔ : Exhaust emission items
Ⓝ : Noise control items

	Inspection and maintenance	Time of inspection and maintenance: New vehicle at 4000 km/2500 miles	Inspection interval: Every 10000 km/6000 miles	Every 20000 km/12000 miles	Every 30000 km/18000 miles	Every 40000 km/24000 miles	Every 50000 km/30000 miles	Every 90000 km/54000 miles	Every 250000 km/150000 miles	Working procedures	Remarks
ENGINE											
1	Manifold bolts torque						×			Check inlet and exhaust manifold nuts for looseness	Gr 15
2	Ⓔ Check and adjust valve clearance	×					×			Check valve clearance with feeler gauge	Gr 11
3	Ⓔ Oil filter replacement		Every 10000 km/6000 miles or 12 months							Replace oil filter	Gr 12
4	Ⓔ Injection nozzle Ⓝ							×	×	Check and clean injection nozzle	Gr 13
5	Ⓔ Fuel Injection timing Ⓝ							×		Check fuel injection timing	Gr 13
6	Ⓔ Fuel feed pump filter		Every 40000 km/24000 miles or 24 months							Clean gauze filter inside connector with gas oil	
7	Ⓔ Fuel filter replacement		Every 20000 km/12000 miles or 12 months							Replace fuel filter	Gr 13
8	Ⓔ Fuel line		Every 20000 km/12000 miles or 12 months							Inspect fuel tank, cap and lines for damage causing leakage	
9	Ⓔ V-belts tension and Ⓝ damage		Every 10000 km/6000 miles or 12 months							Inspect V-belts for cracks, wear and tension	Gr 14
10	Ⓔ Cooling system			×						Check radiator and radiator cap for sealing performance and mounting condition. Inspect hoses for looseness, deterioration, damage causing leakage. Remove dust and foreign deposits from radiator and intercooler front	Gr 14
11	Coolant replacement		Every 24 months							Replace coolant	Gr 14
12	Ⓔ Turbocharger rotor play								×	Check turbocharger rotor play	Gr 15
13	Air cleaner element		×							Clean air cleaner element by blowing clean compressed air through it	Gr 15
14	Ⓔ Air cleaner element Ⓝ replacement					×				Replace air cleaner element	Gr 15
15	Ⓔ Exhaust system Ⓝ			×						Inspect exhaust system for damage, corrosion and loose connection causing leakage	Gr 15
POWER TRAIN											
16	Clutch pedal and clutch disc wear		×							Check pedal for free play. Check clutch disc wear through inspection hole	Gr 21
17	Propeller shaft flange torque and universal joint looseness		×							Check flange yoke bolts for looseness and universal joint for play. Carry out the first inspection for new vehicles at 10000 km or 6000 miles	Gr 25
18	Propeller shaft center bearing						×			Check center bearing if traces of grease flowing out are evident. Check center bearing for wear, damage and play	Gr 25

Check center bearing for traces of grease flow.

MAINTENANCE SCHEDULE TABLES

Ⓔ : Exhaust emission items
Ⓝ : Noise control items

Inspection and maintenance		Time of inspection and maintenance								Working procedures	Remarks
		New vehicle at 4000 km/ 2500 miles	Inspection interval: Every 10000 km/ 6000 miles	Every 20000 km/ 12000 miles	Every 30000 km/ 18000 miles	Every 40000 km/ 24000 miles	Every 50000 km/ 30000 miles	Every 90000 km/ 54000 miles	Every 250000 km/ 150000 miles		
FRONT AND REAR AXLE											
19	Wheel hub bearing				×					Check wheel hub bearing for play	Gr 26, 27
20	Wheel hub bearing hub seals replacement				×					Replace wheel hub bearing hub seals	Gr 26, 27
21	Wheel and tire		×							Check disc wheel for corrosion, deformation and cracks. Measure inflation pressure with tire gauge. Check tire tread and side wall for cracks and damage. Measure tire tread groove depth to make sure it is deep enough. Check tire tread for uneven wear, stepped wear and other abnormal wear. Rotate tires if there is a difference in the amount of wear of each tire	Gr 31
22	Retightening wheel nuts	×	×							Check wheel nuts for looseness. Check at the first 1000 km/600 miles after changing a wheel	Gr 31
SUSPENSION SYSTEM											
23	Retightening U-bolts	×		×						Check U-bolt nuts for looseness. Check at the first 1000 km/600 miles after removing and retightening U-bolt nuts	Gr 33, 34
BRAKING SYSTEM											
24	Disc brake pad and disc		×							Check disc brake pad and disc for damage and wear	Gr 35
25	Brake lining		×							Check lining for wear through inspection hole	Gr 35
26	Brake drum				×					Disassemble and check drum for wear, cracks and damage	Gr 35
27	Looseness, play and damage of brake system parts		×							Inspect brake lines and hoses for looseness, play and damage. Inspect wheel cylinder and brake master cylinder for looseness, play and damage	Gr 35
STEERING SYSTEM											
28	Steering system		×							Check steering system for looseness, steering wheel play and operating condition. Inspect for fluid leakage, booster and oil pump function	Gr 37

This section explains simple maintenance procedures. See the relevant Group in this manual for further details.

Replacement of Oil Filter

Lubricant

Location	Points of application	Kinds	Quantity
2	Inside oil filter	Engine oil	Approximately 1 L {1.1 qts}
	Gasket area of oil filter with thin application	Engine oil	As required

Special tools

Unit : mm {in.}

Location	Tool name and shape	Part No.	Application
2	Oil filter wrench 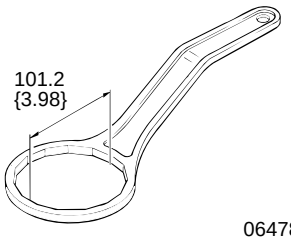 06478	MH061587	Removal of oil filter

WARNING

- **Wipe up any engine oil that has been spilled because it can cause a fire.**
- **Do not touch the engine while it is hot because it will burn you.**

CAUTION

- **Take care not to spill engine oil on the V-belts, because this would cause them to slip, reducing service life.**

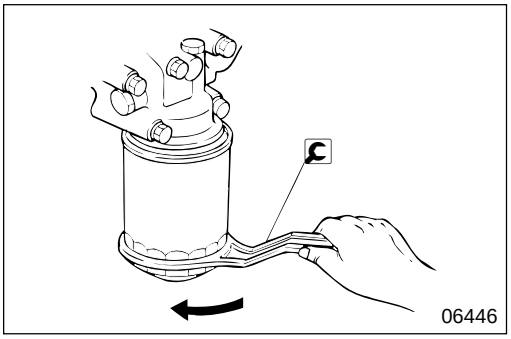

[Removal]

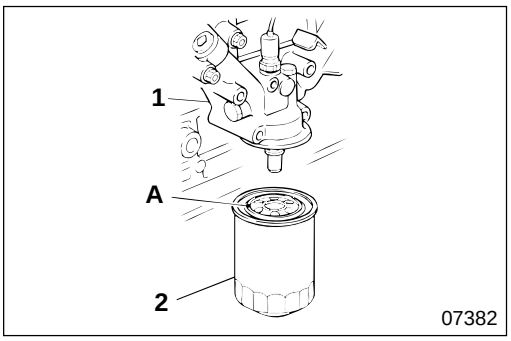

[Installation]

- Clean the surface of oil cooler body **1** that makes contact with oil filter **2**.
- Apply engine oil thinly and evenly to gasket area **A** of oil filter **2**.
- Screw oil filter **2** into oil cooler body **1** until gasket area **A** sits on the body. From this position, tighten further by rotating by three quarters of a turn.
- After installation, run the engine and check that there is no oil leakage from gasket area **A**.
- Check the oil level and if it is low, top it up.

Replacement of Fuel Filter

Lubricant

Location	Points of application	Kinds	Quantity
2	Gasket contact surfaces of fuel filter and fuel filter head	Engine oil	As required

Special tools

Unit : mm {in.}

Location	Tool name and shape	Part No.	Application
2	Filter wrench 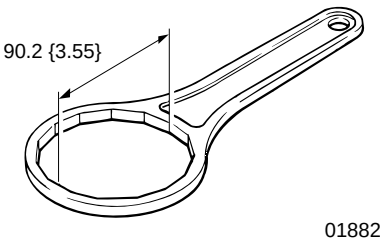 01882	MH061509	Removal of fuel filter

WARNING

- **Fuel ignites easily. Do not get it near flame or heat.**
- **Wipe up any gas oil that has been spilled because it can cause a fire.**
- **Do not use an unsuitable filter because it can cause a fire.**

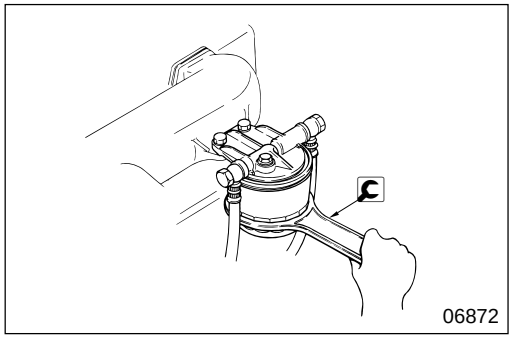
06872

[Removal]

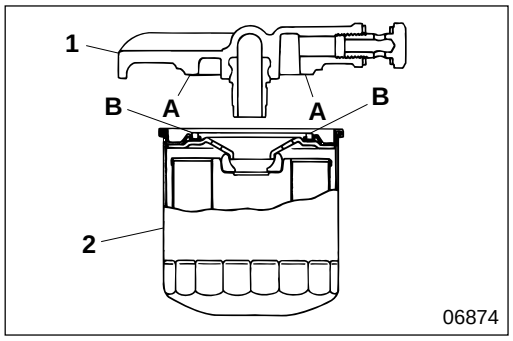

06874

[Installation]

- Install by tightening three quarters to one full turn after contact surface **A** of fuel filter head **1** makes contact with gasket **B** of fuel filter **2**. Be sure to tighten by hand.
- After installation, run the engine and check for fuel leakage.

Draining of Water Separator Condensation

Tightening torque

Unit : N·m {lbf.ft, kgf·m}

Location	Parts to be tightened	Tightening torque	Remarks
2	Drain plug	2.9 to 3.9 {2.2 to 2.9, 0.3 to 0.4}	—

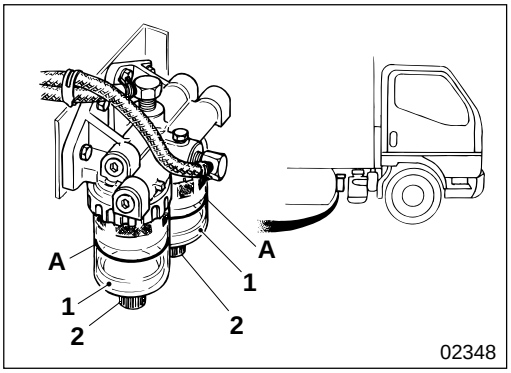

Visually inspect the water separator before driving.
When float **1** reaches red line **A**, drain the condensation as follows:

- Loosen drain plug **2** and drain out the condensation.
- When float **1** has dropped to the bottom, tighten drain plug **2**.
- Carefully wipe the water separator and the surrounding area.
- Check for fuel leakage.

Cleaning of Fuel Feed Pump Gauze Filter

Tightening torque

Unit : N·m {lbf.ft, kgf·m}

Location	Parts to be tightened	Tightening torque	Remarks
2	Eye bolt	25 to 29 {18 to 22, 2.5 to 3}	—

WARNING ⚠

- **Fuel ignites easily. Do not get it near flame or heat.**
- **Wipe up any gas oil that has been spilled because it can cause a fire.**

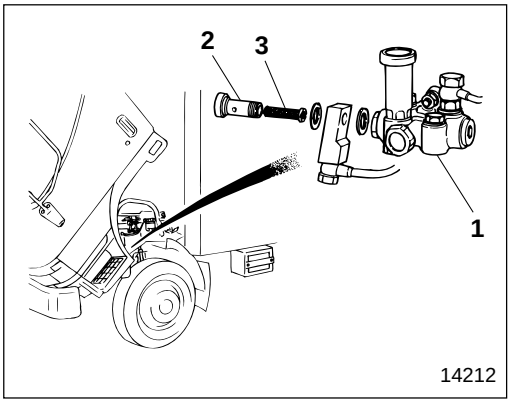

- Remove eye bolt **2** on the inlet side of fuel feed pump **1**.
- Remove gauze filter **3** from eye bolt **2**.
- Clean gauze filter **3** with gas oil.
- Follow the removal sequence in reverse and reinstall gauze filter **3**. Install eye bolt **2** in the fuel feed pump.
- Bleed the air from the fuel line.
- Start the engine and check for fuel leakage.

Bleeding of Air from Fuel Line

Ⓣ Tightening torque

Unit : N·m {lbf.ft, kgf·m}

Location	Parts to be tightened	Tightening torque	Remarks
2	Air vent plug	7.8 to 12 {5.8 to 8.7, 0.8 to 1.2}	—

WARNING ⚠

- **Fuel ignites easily. Do not get it near flame or heat.**
- **Wipe up any gas oil that has been spilled because it can cause a fire.**

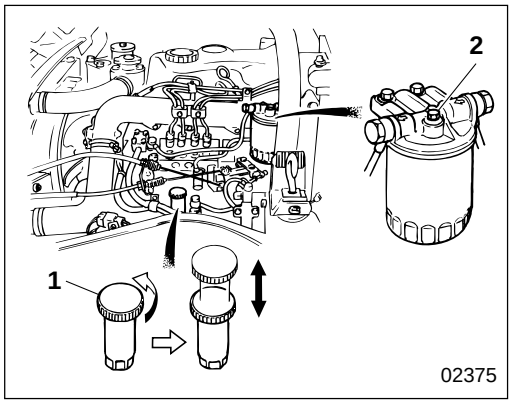

- Turn the top of priming pump **1** of the injection pump counterclockwise and pull it up so the top protrudes.
- Loosen air vent plug **2** of the fuel filter and move the top part of priming pump **1** up and down.
- Move priming pump **1** up and down repeatedly until air bubbles are no longer present in the fuel drained from air vent plug **2**.
- When the fuel being drained is free of air bubbles, tighten air vent plug **2**.
- After moving priming pump **1** up and down another five or six times, push the top down and turn clockwise to drive it in fully.
- After bleeding the air, carefully wipe up spilled fuel and start the engine.
- Check for fuel leakage.

Adjustment of V-Belt Tension

Newly installed V-belts can stretch during their initial running-in period. To prevent this from becoming a problem, run the engine for several minutes after installing the V-belt, then readjust. Perform this cycle several times.

WARNING⚠

You must take special precautions to prevent the engine from rotating while a V-belt is being inspected or adjusted.

CAUTION⚠

- **Make sure that you turn off the engine before attempting to inspect or adjust the V-belts.**
- **Make sure that you fasten all bolts and nuts securely after adjusting the V-belts. Remember that too much tension can damage the V-belts and bearings.**
- **Do not grease V-belts. This causes them to slip, which reduce service life.**

Service standards

Unit : mm {in.}

Location	Maintenance item		Standard value	Limit	Remedy
1, 2	V-belt tension (Each one)	Fan	12 to 16 {0.47 to 0.63}	—	Adjust
		Air-conditioner	16 to 20 {0.63 to 0.79}		

Special tools

Location	Tool name and shape	Part No.	Application
1, 2	Belt tension gauge  03612	MH062345	Measurement of tension of V-belt

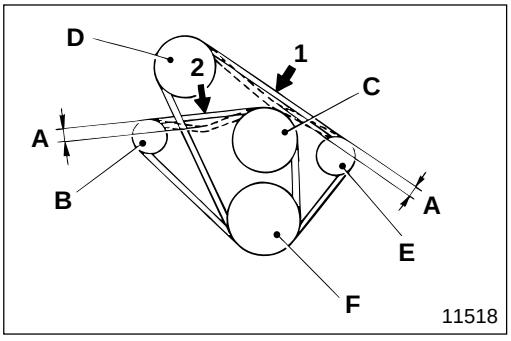

[Inspection]

Measure the extent of flex **A** when the center of V-belts **1**, **2** as illustrated is depressed with a force of 98 N·m {72 lbf.ft, 10 kgf·m}.

- **B** : Alternator pulley
- **C** : Water pump pulley
- **D** : Cooler compressor pulley (Air-conditioner)
- **E** : Tension pulley
- **F** : Crankshaft pulley

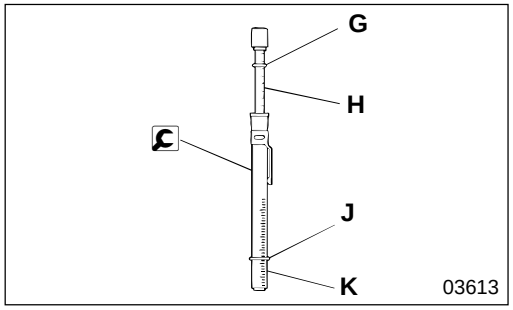

Use of special tool belt tension gauge

- Set upper O-ring **G** of belt tension gauge to 98 N·m {72 lbf.ft, 10 kgf·m} (push load) on graduation **H**.
- Set lower O-ring **J** of belt tension gauge to graduation **K** (maximum flex of belt).

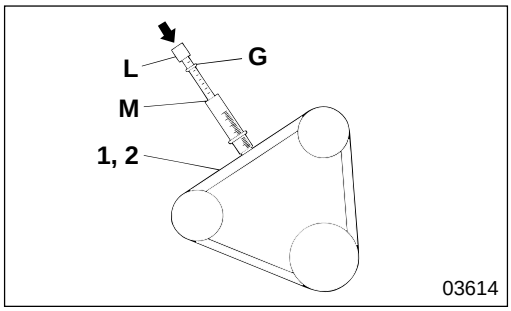

- Place belt tension gauge at the center of V-belts **1**, **2** perpendicularly as illustrated and push top **L** all the way down until upper O-ring **G** hits upper edge **M**.

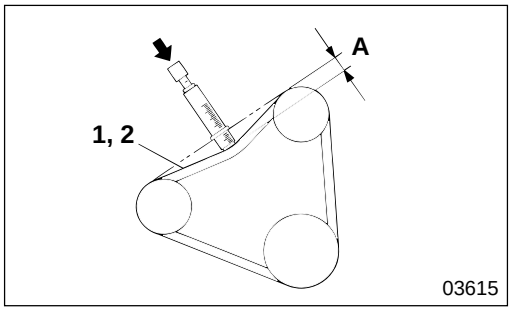

- Measure the extent of flex **A** of V-belts **1**, **2** at this point, and if the measured value deviates from the standard value, adjust as follows:

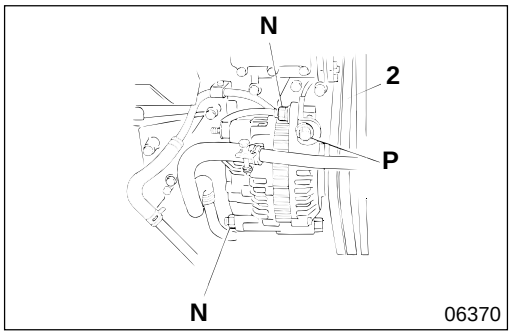

[Adjustment]

(1) Adjustment of tension of V-belt for fan

- Loosen alternator mounting bolts **N** (two points), and adjust the tension of V-belts **2** by moving adjusting bolt **P**.
- After adjustment, tighten bolts **N**, **P** securely.

CAUTION

- **Bear in mind that excessive tension of V-belts 2 might damage the belts and bearings that engage with the V-belts.**
- **Be sure to replace V-belts 2 as a set to maintain even tension between them.**
- **Be careful not to let oil stick to V-belts 2. If oil gets onto the belts, it causes slipping, resulting in overheating and insufficient battery charging.**

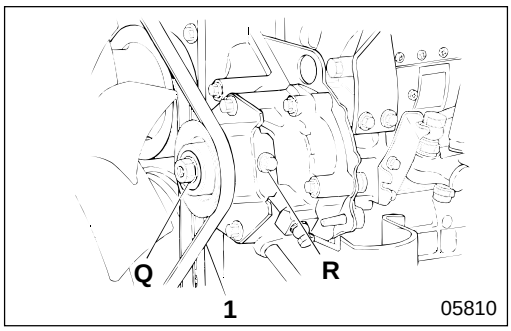

(2) Adjustment of tension of V-belt for air-conditioner

- Loosen tension pulley mounting nut **Q**, and adjust the tension of V-belt **1** moving adjusting bolt **R**.
- After adjustment, tighten mounting nut **Q** securely.

CAUTION

- **Bear in mind that excessive tension of V-belt 1 might damage the belt and bearings that engage with the V-belt.**
- **Be careful not to let oil stick to V-belt 1. If oil gets onto the belt, it causes slipping, resulting in poor performance of the air conditioner.**

Cleaning and Replacement of Air Cleaner Element

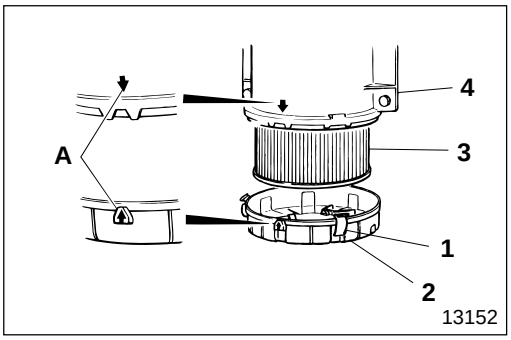

[Removal]
- Unfasten clamp **1** and remove air cleaner cap **2**.
- Remove air cleaner element **3**.

[Installation]
- Install by aligning alignment marks **A** of air cleaner cap case **4** and air cleaner cap **2**.

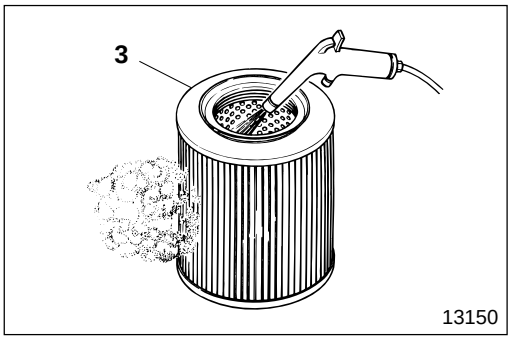

[Cleaning]
- Blow compressed air of 685 kPa {100 lbf/in^2, 7 kgf/cm^2} or less through air cleaner element **3** from the inside.
- When using compressed air, move the blower's nozzle up and down along the pleats of air cleaner element **3** evenly.

CAUTION⚠
- **Do not tap or hit air cleaner element 3 to remove dust.**
- **Do not blow compressed air through air cleaner element 3 from the outside.**

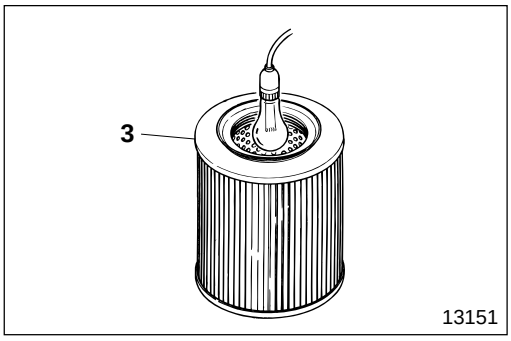

[Inspection]
- Illuminate the inside of air cleaner element **3**.
- If parts of the filter paper are torn or thin, or if the packing of the upper surface of air cleaner element **3** is damaged, replace the air cleaner element.

NOTE

If the dust on air cleaner element 3 is wet due to oil smoke or soot, replace the air cleaner regardless of the scheduled replacement interval.

Inspection of Clutch Pedal Free Play

Service standards

Unit : mm {in.}

Location	Maintenance item	Standard value	Limit	Remedy
1	Clutch pedal free play	36 to 53 {1.42 to 2.09}	—	Adjust or replace

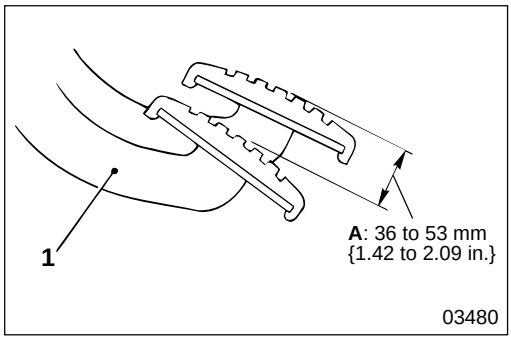

[Confirmation]
Push clutch pedal **1** with your hand and measure the amount of movement **A** (free play) until you meet resistance. If the measured value does not conform to the standard value, adjust by stroke of clutch power cylinder push rod or replace the clutch disc.

[Clutch operation]

- Check for unusual noises when clutch pedal **1** is pressed while the engine is idling, and also for abnormally heavy clutch operation. Also check to be certain that it is not difficult to shift the vehicle into first and reverse gears.
- Gradually release clutch pedal **1** to set the vehicle in motion.
  Check to be sure there is no slippage, and that the clutch engages smoothly.

Tire

Service standards

Unit : mm {in.}

Location	Maintenance item	Standard value	Limit	Remedy
1	Depth of tire tread grooves	—	1.6 {0.063}	Replace

Tightening torque

Unit : N·m {lbf.ft, kgf·m}

Location	Parts to be tightened	Tightening torque	Remarks
2	Wheel nut	490±49 {360±36, 50±5}	—

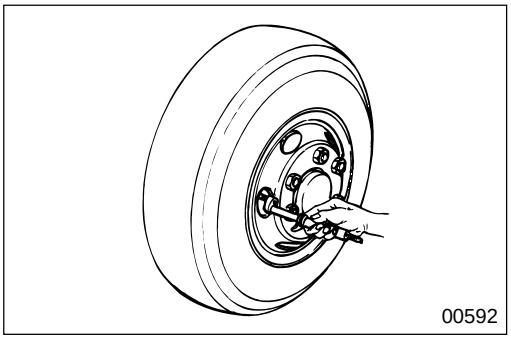
00592

Air pressure

Tire air pressure should be checked before the vehicle is driven, while the tires are still cool.

Item / Vehicle model	Tire size	Air pressure kPa {Psi, kgf/cm²}	
		Front	Rear
FE639 (GVWR : 11600 lb, 5260 kg)	215/85R16(D)	450 {65, 4.50}	450 {65, 4.50}
FE639 (GVWR : 13500 lb, 6120 kg)	215/85R16(E)	550 {80, 5.50}	550 {80, 5.50}
FE649 (GVWR : 14500 lb, 6580 kg)	215/85R16(E)	550 {80, 5.50}	550 {80, 5.50}

GVWR : Gross vehicle weight rating

CAUTION⚠

- **Make certain that there is no difference in the air pressure between the inner and outer rear tires.**
- **Make certain you use valve caps on the air valves.**
- **It is not necessary to increase the air pressure for high-speed driving.**

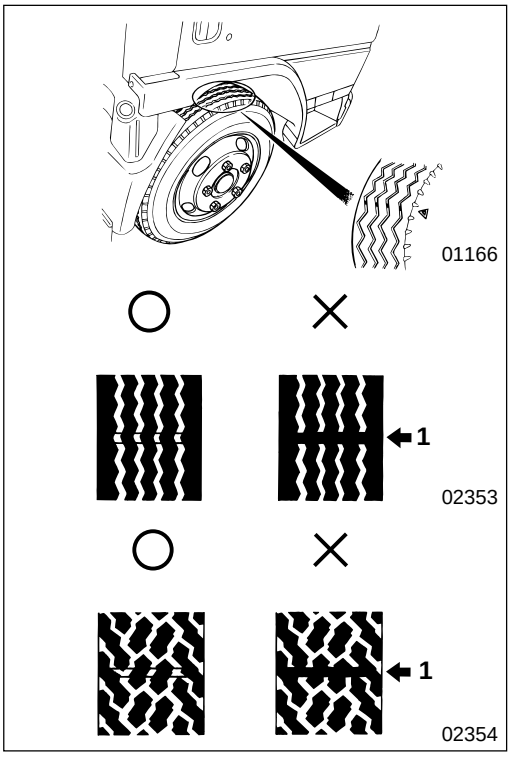

Checking tread depth

- Check all around the tire treads to make sure that the depth of the tread grooves is above the wear limit.
- If the tread grooves are not deep enough, slip sign **A** appears at the position of the ⚠ mark, where the tread groove has worn away.

WARNING⚠

If the depth of the tread grooves is not adequate, the tires will slip on wet roads and present a hazard. Such tires are also extremely dangerous because they are more susceptible to hydroplaning when the vehicle is running at high speeds in the rain. Such tires must be replaced with new ones as soon as possible.

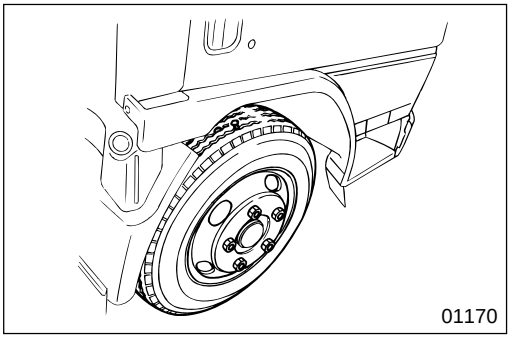
01170

Checking for cracks, damage, and objects embedded in the treads

- Check the tire treads and walls for cracks and damage.
- Check tire treads for uneven wear or other abnormal wear.
- Check if metal objects or nails have penetrated the tires.
- Check for stones embedded between double tires.

WARNING

Badly damaged or worn tires are extremely dangerous, because they can be punctured more easily when the vehicle is running, they must be replaced with new ones as soon as possible.

Removing tires

- Jacking up point
  - For front wheels : Point **A** under the leaf spring in front of the front axle
  - For rear wheels : Point **B** under the rear axle housing

< Front wheel >

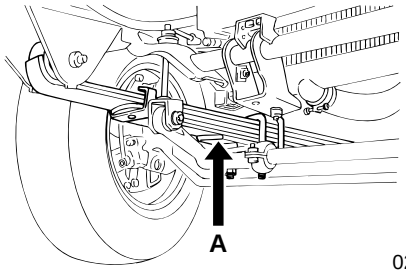

02355

< Rear wheel >

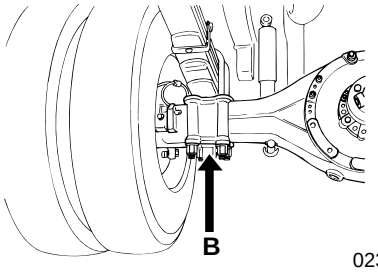

02356

WARNING

- **The jack should be placed on flat, solid ground, and should not be used to raise the vehicle higher than necessary.**
- **Do not use the jack at vehicle locations other than those illustrated.**
- **Keep in mind the danger of a slipping jack. Never crawl under the vehicle while the jack is in use or rock the vehicle. Also, do not start the engine while the vehicle is jacked up.**
- **To increase safety, use supports for the vehicle when it is necessary to leave it jacked up for long periods.**
- **Chock both the tire to be removed and the tire diagonally opposite to it so that they will not rotate when you are removing the tire.**

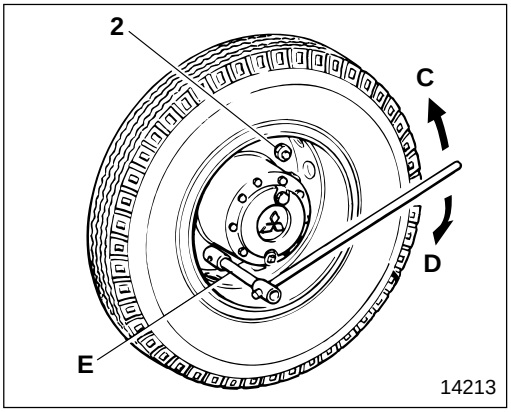

- Loosen wheel nuts **2** slightly. The wheel nuts for right tires **C** have right-hand threads "**R**", and the wheel nuts for left tires **D** have left-hand threads "**L**".

WARNING

Make certain that wheel nut wrench E is fully engaged, all the way to the back of nuts 2. If it is not, it could slip.

CAUTION

Only loosen wheel nuts 2 slightly. Do not remove them.

- Jack up the vehicle carefully, until the tire is slightly off the ground. Remove wheel nuts **2**, then remove the tire.
- When working on the double tires at the rear of the vehicle, first remove the outside tire, then lower the vehicle and loosen the nuts on the inside tire. After doing this, jack the vehicle back up and remove the tire.

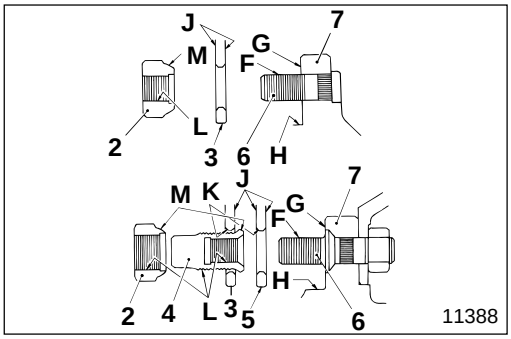

Mounting tires

To prevent wheel nuts **2**, **4** and hub bolt **6** from becoming loose and to prevent mounted parts (tire assemblies **3**, **5** and hub **7**) from being damaged, remove rust, dust, additional coatings of paint, and foreign particles from the following areas:

F : Hub bolt thread area
G : Wheel mounting surface of hub
H : Wheel alignment area of hub
J : Disc wheel mating surface
K : Disc wheel nut mounting surface
L : Wheel nut thread area
M : Wheel nut spherical area

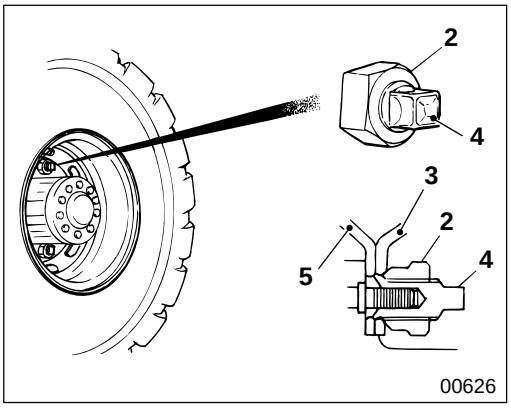

- Put on the double rear tires as follows:
  - After mounting inner tire **5** and fully tightening inner wheel nuts **4**, jack the vehicle up and mount on outer tire **3**, then tighten outer wheel nuts **2**.
  - Even if only outside tire **3** is to be changed, do not mount it until inner wheel nuts **4** have been fastened at the specified torque.
  - Slide the air valves on the inside and outside tires down when mounting the tires.

WARNING

If the threads are scored, or the disc wheel is deformed or cracked, change bolts 6, nuts 2, 4 and disc. Driving the truck before correcting such problems can cause the tire in question to come loose, which could be the source of major accidents.

CAUTION

Check hub bolt 6 threads carefully for scratches before putting the tire on.

- Place the tapered end of wheel nuts **2**, **4** towards the disc wheel and fasten temporarily. Center so that there is no eccentricity between bolts **6** and the disc wheel bolt holes.
- Lower the vehicle.

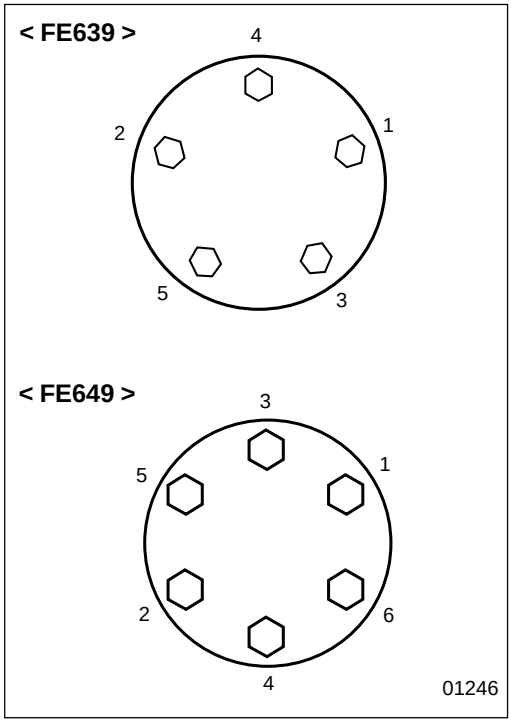

- Tighten the nuts in the order as illustrated, tightening each nut two or three times. To finish, tighten each nut at the specified torque.

WARNING

- **Always use the specified torque when tightening the wheel nuts. If the wheel nuts are not tightened properly, the wheels could come loose while the vehicle is being driven, which could result in life threatening accidents or the truck being disabled.**
- **Do not coat the threads with grease when tightening the nuts. This could result in over-tightening force, which could be dangerous.**

CAUTION

Over-tightening the wheel nuts can damage them.

Checking the wheel nuts for looseness

The wheel nuts should be checked for looseness every 10000 km (6000 miles). All nuts should be tightened at the specified torque.

- Check the double rear tires for looseness as follows:

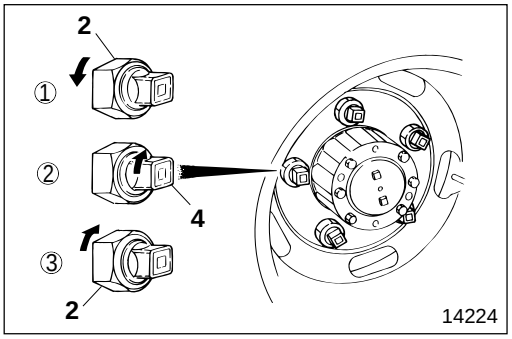

① Loosen outer wheel nuts **2**.
② Tighten inner wheel nuts **4** at specified torque.
③ Tighten outer wheel nuts **2** at specified torque.

CAUTION

If outer wheel nuts 2 are tightened without first being loosened, it might not be possible to tighten them at the specified torque.

Tire rotation

Tires wear differently, according to the location where they are mounted. To make this wear uniform and prolong the life of your tires, they should be rotated every 10000 km (6000 miles) in the rotation order shown below:

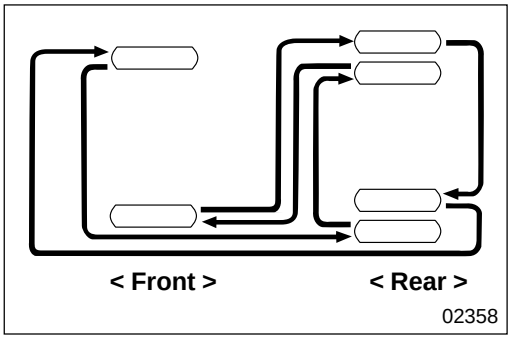

- When the tread patterns for all tires are identical:

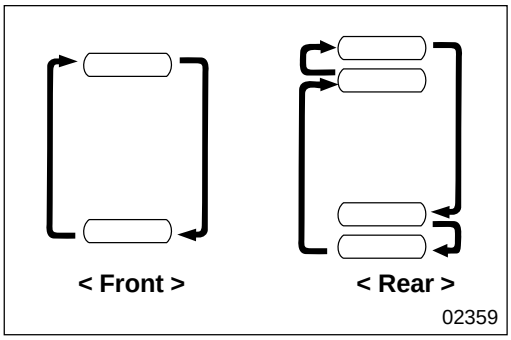

- When the tread patterns are different for the front and rear tires:

CAUTION⚠

- **Always adjust air pressure after running-in new tires.**
- **When using tires of different tread patterns, use rib-type patterns for the front tires and traction type patterns for the rear tires.**
- **Avoid using both radial and biased tires on the same vehicle.**

Inspection of Brake Lining Thickness < Rear Drum Brake >

Service standards

Unit : mm {in.}

Location	Maintenance item	Standard value	Limit	Remedy
2	Thickness of brake lining	—	4 {0.16} (Side shoulder means wear limit)	Replace

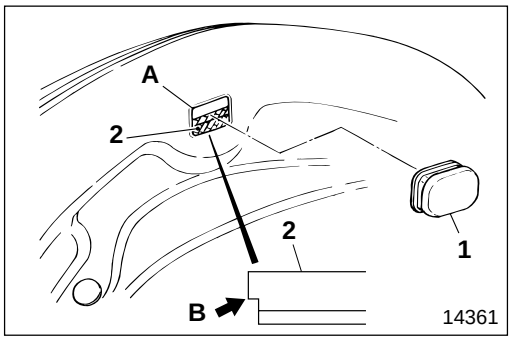

NOTE

Be sure to inspect at two points for each wheel per side.

- Remove cover **1** from the packing plate.
- Inspect through check hole **A** whether brake lining **2** is worn to the point of side shoulder **B** of the brake lining (the limit).
- If the measured value is lower than the limit, replace brake lining **2** on the same axle as a unit.
- After inspection, be sure to reinstall cover **1**.

Battery

DANGER⚠

- **Since flammable hydrogen gas is generated by the battery, be sure to obey the following warnings :**
  - **Do not short-circuit the ⊕ and ⊖ terminals on the battery.**
  - **Keep sparks and lit cigarettes away from the battery.**
  - **Do not wear metal objects on your arms and lean over the battery.**
- **Because the battery electrolyte is diluted sulfuric acid and is corrosive, when handling the battery wear safety glasses and rubber gloves to protect the eyes and hands.**

WARNING⚠

To prevent a short-circuit be sure that disconnected the battery cables do not accidentally touch the battery terminals.

CAUTION⚠

- **Make sure that you disconnect the battery cable ⊖ first when you disconnect the battery cables.**
- **Make sure that all electrical switches of the vehicle are OFF before connecting the battery cables.**
- **Make sure that you connect the battery cable ⊕ before you connect the battery cable ⊖.**

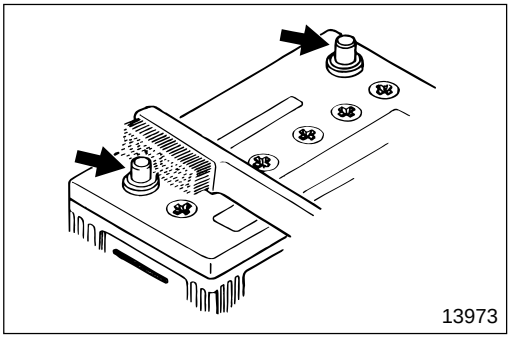

Visual inspection

- If terminal **A** is corroded, scrub off the corrosion from it using a wire brush.
- If cracks or defects are found on the battery , replace it since the cracks or defects can cause liquid spills.

CAUTION⚠

Make sure you grease the ⊕ side of terminal A because it is easily corroded.

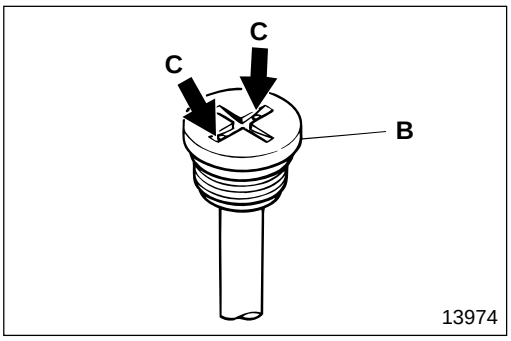

- If bleed hole **C** of vent plug **B** is clogged, clean the hole.

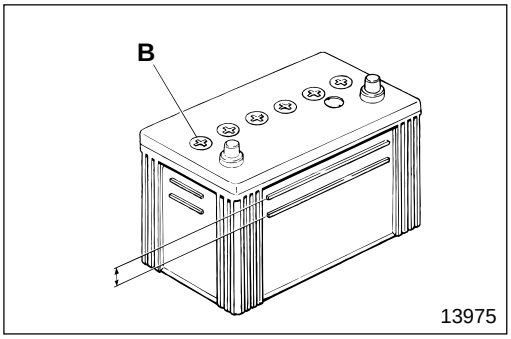

Inspection of fluid level

- Make sure that the battery electrolyte level is between UPPER and LOWER.
- If the level is below LOWER, remove vent plug **B** and fill the battery with distilled water or battery replenisher to UPPER.

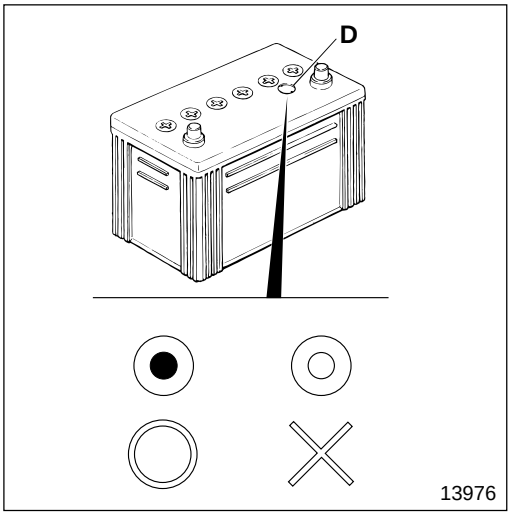

Measurement of specific gravity

You can tell the specific gravity of the battery electrolyte by the color shown in indicator **D**.

Blue : Good
White : Charge or replace

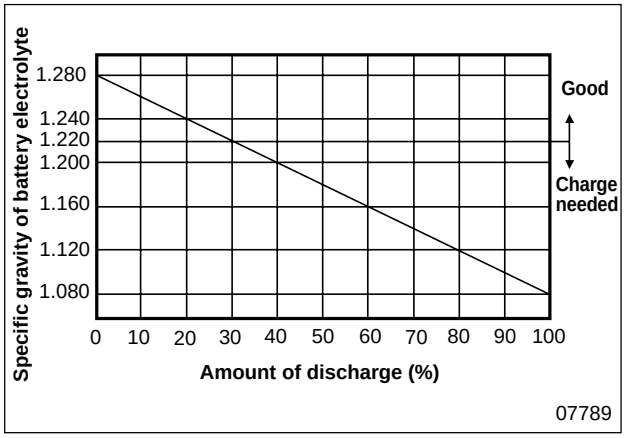

Charging

- Although, as a rule, charging of the battery should be done with the battery removed from the vehicle, if you have to charge the battery while it is on the vehicle, make sure that you stop the engine and disconnect the battery cable ⊖.
- Remove vent plug **B** before charging the battery.
- For the recommended charge time and current, see the following table to avoid overcharging.

	Charge current (A)	Charge time (H)	Upper limit of fluid temperature (°C {°F})
Normal charge	Value of 5-hour rating capacity / 10 {113}	*Amount of discharge (Ah) / Charge current (A) ×1.2(to 1.5)	45
Quick charge	Value of 5-hour rating capacity / 1.5 {131}	0.5	55

* Amount of discharge (Ah)=5-hour rating capacity (Ah)× Amount of discharge (%) / 100

- Use the graph shown on the left to calculate the amount of discharge (%).
- Use diluted sulfuric acid, made up of sulfuric acid and refined or distilled water, as the battery electrolyte.
- The specific gravity of fully-charged battery electrolyte is 1.280 with the temperature at 20°C {68°F}.

DANGER⚠

- **Do not let the battery electrolyte level rise and overflow while charging the battery.**
- **Keep naked lights away from the battery while charging it or it might explode.**
- **Be careful not to generate sparks while charging the battery because its dangerous.**
- **After charging the battery, tighten vent plug B, wash away sulfuric acid from the battery using water, and dry the surface.**

Fuse

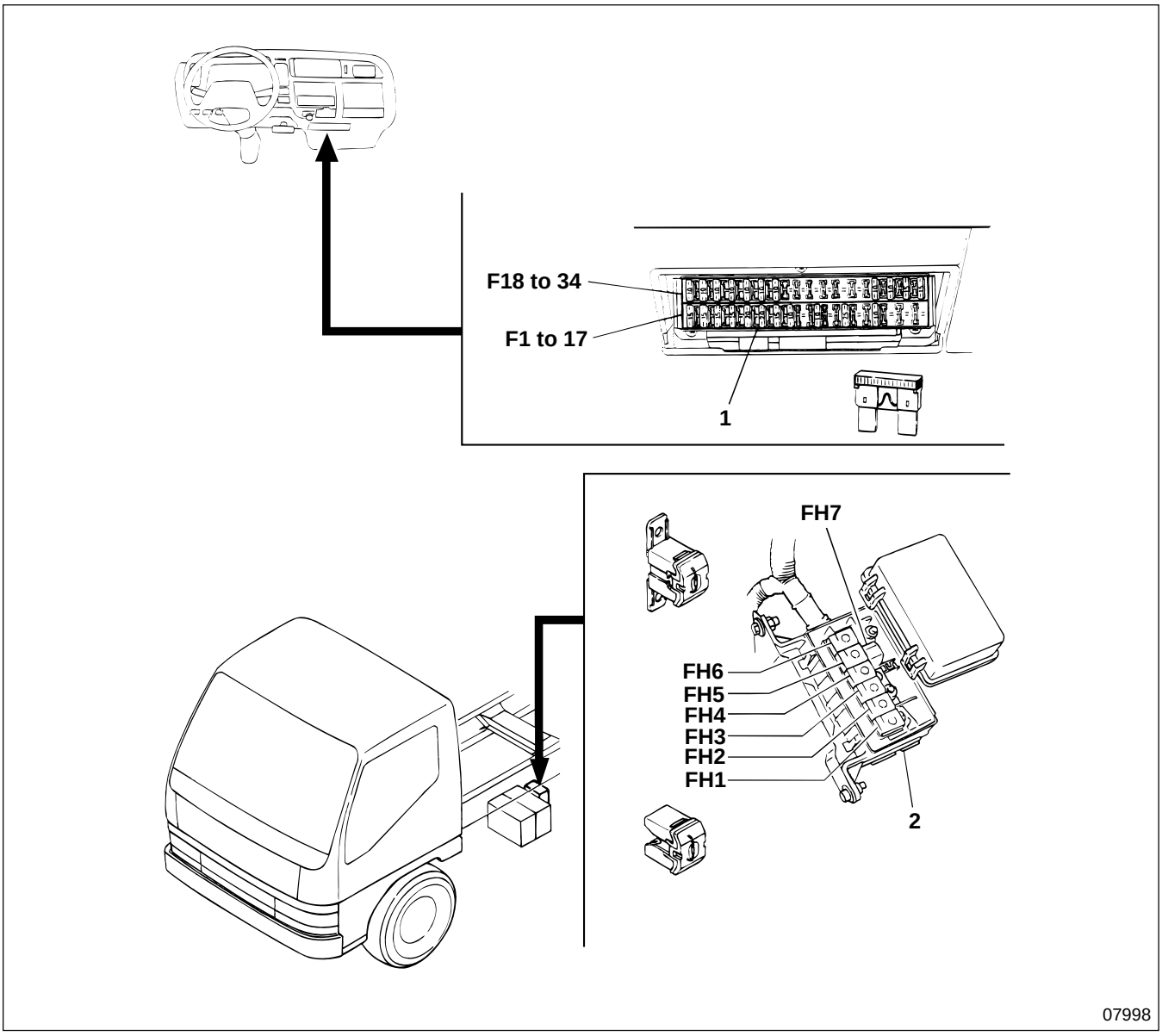

1 Fuse box
2 High-current fuse box

CAUTION ⚠

- **If a fuse blows, make sure you identify and remedy the cause, then replace the fuse.**
- **Make sure that you replace the fuse with one having the same rating.**
- **Make sure that you remove the ⊖ terminal of the battery cable before removing high-current fuses FH1 to 7.**

High-current fuse box

Fuse No.	Main load	Capacity
FH1	Fuse box (F1 to F4)	50 A
FH2	Fuse box (F5 to F8)	50 A
FH3	—	—
FH4	—	—
FH5	Starter switch (Terminal B)	50 A
FH6	Fuse box (F31 to F34)	50 A
FH7	Alternator	100 A

Fuse box

Fuse No.	Main load	Capacity
F1	Headlamp, LH	15 A
F2	Headlamp, RH	15 A
F3	Stop lamp, horn	15 A
F4	Turn signal lamp, pre-stroke control unit (Memory clear switch)	15 A
F5	Fuel-cut motor	10 A
F6	Cab lamp	10 A
F7	Reserve power (BATT)	10 A
F8	—	—
F9	—	—
F10	Automatic transmission control unit (Memory clear switch)	15 A
F11	—	—
F12	—	—
F13	* Cigarette lighter	15 A
F14	Radio	10 A
F15	Reserve power (ACC)	10 A
F16	—	—
F17	Fuel-cut relay	10 A

Fuse No.	Main load	Capacity
F18	Transmission neutral relay < Manual transmission > Inhibitor switch < Automatic transmission >	10 A
F19	Backup lamp	10 A
F20	Meter cluster	10 A
F21	Wiper	10 A
F22	Reserve power (MAIN)	10 A
F23	Automatic transmission control unit	10 A
F24	Automatic transmission control unit	10 A
F25	Pre-stroke cut relay	20 A
F26	—	—
F27	Exhaust brake	10 A
F28	—	—
F29	—	—
F30	* Air-conditioner control	10 A
F31	* Air-conditioner compressor	10 A
F32	* Condenser fan	15 A
F33	Blower fan	25 A
F34	Tail lamp	15 A

* : Fuses are provided for these pieces of equipment only where they are installed.

NOTE

Fuses F4, F10 are also parts of the electric power circuit used to memorize the diagnostic codes that are transmitted if the electrical controlling system (Pre-stroke control injection pump, automatic transmission) malfunctions.

M E M O

LUBRICATION

Ⓔ : Exhaust emission items

	Items	Time of inspection and maintenance						Lubricant specifications	Remarks
			Inspection interval						
		New vehicle at 4000 km/ 2500 miles	Every 10000 km/ 6000 miles	Every 20000 km/ 12000 miles	Every 30000 km/ 18000 miles	Every 40000 km/ 24000 miles	Every 50000 km/ 30000 miles		
1	Ⓔ Engine oil replacement	×	×					Engine oil API classification, CD, CD/SF, CE, CE/SF or CF-4 Over 30°C {86°F} SAE 40 40 to –5°C {104 to 23°F} SAE 30 15 to –15°C {59 to 5°F) SAE 20W-20 Over –15°C {5°F} SAE 15W-40 Below 0°C {32°F} SAE 10W-30	Gr 12
2	Manual transmission oil level		×					Gear oil API classification GL-3 SAE 80 (General) GL-3 SAE 90 (Warm region) GL-4 SAE 90 (Tropical region)	Gr 22
	Manual transmission oil replacement	×			×				
3	Automatic transmission fluid level		×					Automatic transmission fluid (DEXRON II type) Carry out the first inspection for new vehicles at 10000 km/6000 miles	Gr 23
	Automatic transmission fluid replacement					×			
4	Rear axle housing gear oil level		×					Gear oil API classification GL-5 Below 40°C {104°F} SAE 90 Over 40°C {104°F} SAE 140 Use SAE 140 when operating vehicle at high load, such as continuous ascent on slopes and when the outside temperature is 10°C {50°F} or more	Gr 27
	Rear axle housing gear oil replacement	×			×				
5	Hub bearing grease and oil seal replacement				×			Wheel bearing grease [NLGI No.2 (Li soap)]	Gr 26, 27
6	Brake fluid replacement						×	Brake fluid (SAE J1703f or FMVSS No. 116 DOT3)	Gr 35
7	Power steering fluid level		×					Automatic transmission fluid (DEXRON or DEXRON II type)	Gr 37
	Power steering fluid replacement						×		
8	Lubrication of propeller shaft: Center bearing						×	Bearing grease [NLGI No.3 (Li soap)]	Gr 25
	Lubrication of propeller shaft: Universal joint, slip joint		×					Wheel bearing grease [NLGI No.2 (Li soap)]	Gr 25
9	Lubrication of rear suspension spring pin		×					Chassis grease [NLGI No.1 (Ca soap)]	Gr 34
10	Lubrication of kingpins		×					Chassis grease [NLGI No.1 (Ca soap)]	Gr 26
11	Lubrication of steering linkage ball joint		×					Chassis grease [NLGI No.1 (Ca soap)]	Gr 37
12	Lubrication of door hinge		×					Chassis grease [NLGI No.1 (Ca soap)]	Gr 42

Engine Oil

Tightening torque

Unit : N·m {lbf.ft, kgf·m}

Location	Parts to be tightened	Tightening torque	Remarks
4	Oil pan drain plug	34 to 39 {25 to 29, 3.5 to 4.0}	—

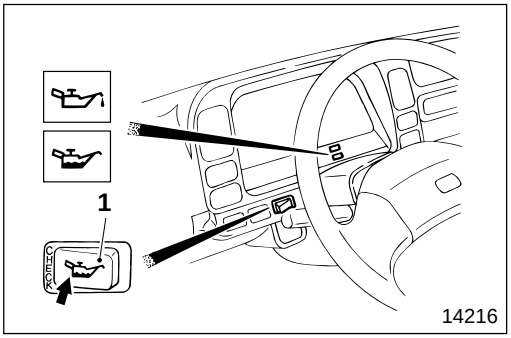

[Inspection]
There are two methods for inspecting the engine oil level; using oil level check switch **1**, and using dipstick **2**. Inspection using the oil level check switch is a simple inspection method. For a more accurate inspection use the dipstick.

- Inspection using oil level check switch **1** (simple inspection)
  - Press oil level check switch **1** before starting the engine. Check the oil level using the illuminated lamp.
    lamp (green) : Correct oil level
    lamp (red) : Low oil level
  - If the level is low, top it up.

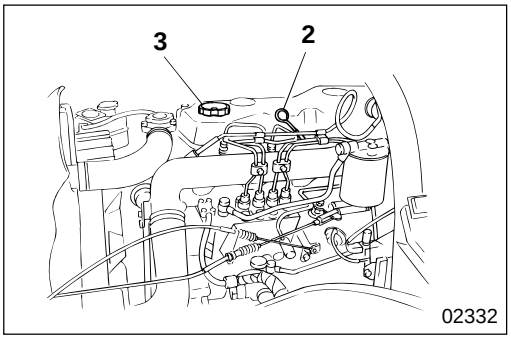

- Inspection using dipstick **2**
  - Tilt the cab.
  - Pull out dipstick **2**, wipe off the oil with a cloth.
  - Reinsert dipstick **2**, then pull it out carefully.
  - Oil level is correct if there is oil sticking to the dipstick between the two notches.
  - If the level is low, top it up.

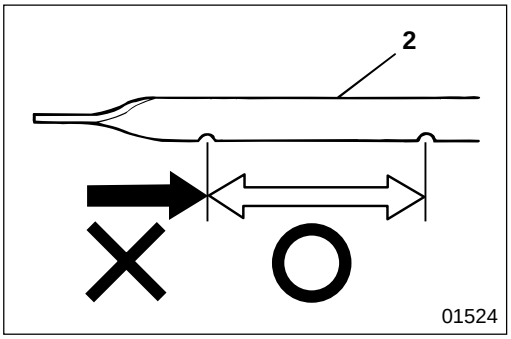

[Replenishment]
- Clean the area surrounding oil filler cap **3** and prevent dust from entering through the filler.
- Remove oil filler cap **3** and top up with engine oil.
- Wait five minutes before checking the oil level.
- Replace filler cap **3**.

WARNING⚠
- **Wipe up any engine oil that has been spilled because it can cause a fire.**
- **Do not touch the engine while it is hot as it will burn you.**

CAUTION⚠

Take care not to spill engine oil on the V-belts, because this would cause them to slip, reducing service life.

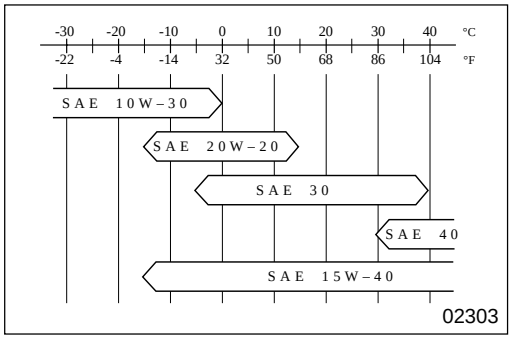

[Replacement]
Since engine oil greatly influences the performance, the life expectancy, and the ability to start the engine, use only oil of the specified grade and viscosity.
The chart illustrates the relationship between oil viscosity and the ambient air temperature.

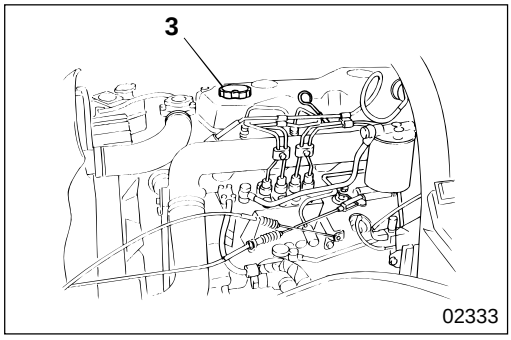

- Clean the area surrounding oil filler cap **2** and prevent dust from entering through the filler.
- Remove oil filler cap **2**.
- Remove oil pan drain plug **4**, and drain the oil. At the same time replace the oil filter.
- After reinstalling drain plug **4**, slowly add engine oil through the oil filler.
- Using the dipstick, check the oil level after more than five minutes have passed.
- Start the engine and let it idle. When the oil has reached all parts, stop the engine. Let 30 minutes pass before checking the oil level again.

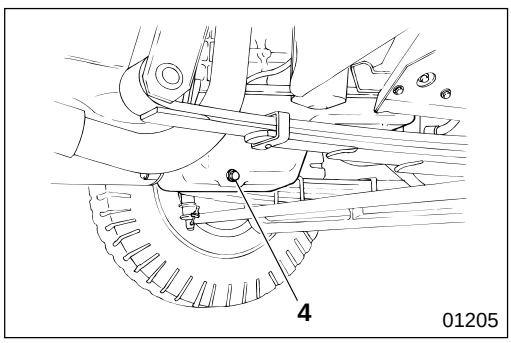

Manual Transmission Gear Oil

Tightening torque

Unit : N·m {lbf.ft, kgf·m}

Location	Parts to be tightened	Tightening torque	Remarks
1	Inspection plug	69±15 {51±11, 7±1.5}	—
2	Drain plug	69±15 {51±11, 7±1.5}	—

Sealant

Location	Points of application	Kinds	Quantity
1	Thread area of inspection plug	THREEBOND 1105D	As required
2	Thread area of drain plug	THREEBOND 1105D	As required

WARNING

The engine is hot immediately after the vehicle has stopped, so take care not to burn yourself.

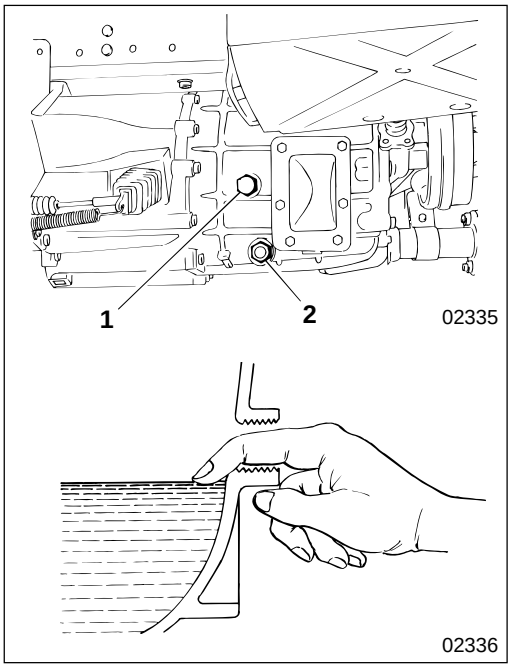

[Inspection and replenishment]

- Remove inspection plug **1** and check whether the oil level is up to the edge of the entrance.
- If the level is low, add oil through the inspection plug hole until the level comes up to the edge of the entrance.

[Replacement]

- Drain the oil after removing inspection plug **1** and drain plug **2**.
- Remove any metal particles sticking to the magnetic part of drain plug **2** before reinstalling the plug.
- Add oil through the inspection plug hole until the level comes up to the edge of the entrance.
- Insert inspection plug **1**

Automatic Transmission Fluid

Tightening torque

Unit : N·m {lbf.ft, kgf·m}

Location	Parts to be tightened	Tightening torque	Remarks
3	Drain plug	29 to 39 {22 to 29, 3 to 4}	—

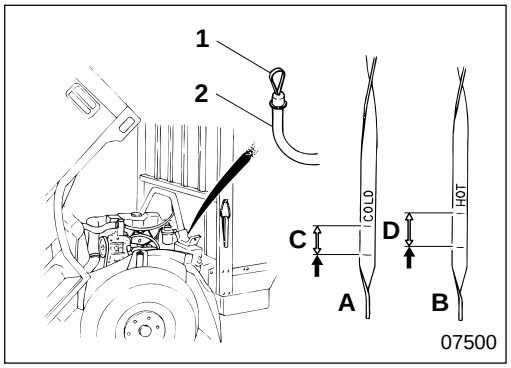

[Inspection and replenishment]

- Park the vehicle on level ground, make sure that the parking brake is fully activated and chock the wheels to keep them from rolling.
- Start the engine and let it idle. To fill the hydraulic circuit with automatic transmission fluid, slowly shift the range selector lever once through the P to L ranges and finally shift into the N range.
- While the engine is still idling, pull out dipstick **1** and wipe off the fluid sticking to it. Reinsert the dipstick, then pull it out again and check the fluid level.
- If the fluid level is inspected right after the engine is started and the fluid temperature is still low (40±15°C {104±27°F}) the level should be within area **C** marked COLD on dipstick **1** as illustrated in **A**.
- If the fluid level is inspected after the vehicle has been driven and the fluid temperature is high (65±15°C {149±27°F}) the level should be within area **D** marked HOT on dipstick **1** as illustrated in **B**.

WARNING⚠

Take care during the inspection because the engine will be running. Take sufficient care to avoid burns or injuries resulting from contact with moving parts.

CAUTION⚠

Be sure to wipe off the dust from the safety cap and the upper part of filler tube 2 before you pull out dipstick 1.

NOTE

- **Make sure the vehicle is parked on level ground when you are checking the fluid level.**
- **Make sure the range selector lever is in the N range and the engine is idling when you are checking the fluid level. When the engine is at standstill, the fluid level appears higher than it actually is.**
- **To ensure the fluid is correct, reinspect the fluid level after an actual drive.**

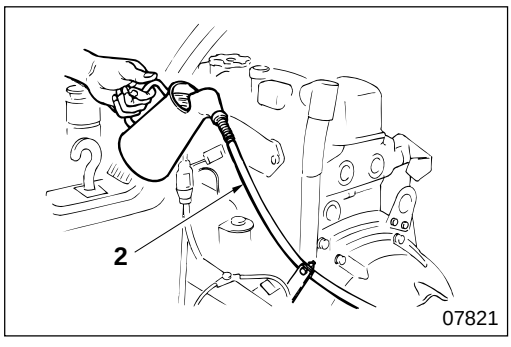

- If the fluid level is low, top it up to the specified level by supplying automatic transmission fluid (DEXRON II type) through filler tube **2**.

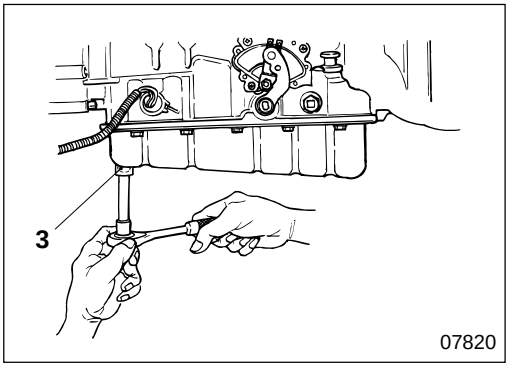

[Replacement]

- Place a container under the oil pan, remove drain plug **3** in the front of the oil pan and drain the fluid.

WARNING

Take care because the automatic transmission fluid temperature immediately after the engine has stopped is very high. To avoid scalds, wait until a safe temperature has been reached before draining the fluid.

NOTE

- **The fluid will drain faster if the engine is first run to raise the fluid temperature.**
- **The fluid cannot be drained from the hydraulic circuit, the torque converter or the oil cooler.**

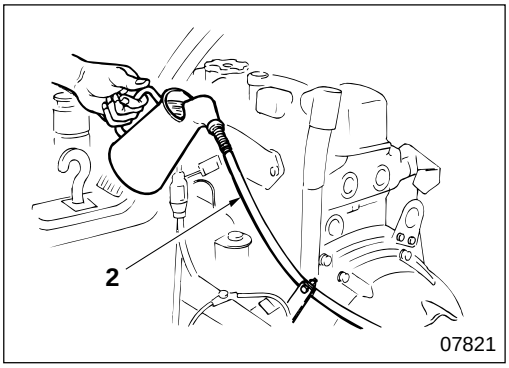

- Reinstall the gasket, and oil pan drain plug **3**.
- Add automatic transmission fluid (DEXRON II type) through filler tube **2**.

CAUTION

Make sure that dirt and foreign particles do not become mixed in with the fluid when it is added.

- Shift the range selector lever into the N range, start the engine and let it idle for at least two minutes.
- After shifting the lever through all ranges once, shift it back into N.

CAUTION

To prevent burning out the interior of the automatic transmission assembly, make sure that the engine is not allowed to race when you do the above.

- Supply the fluid until the fluid level is at the lower limit of the specified area on dipstick **1**. Next, check the fluid level to make sure it is within the specified limit.

NOTE

- **Determining the fluid level immediately after supplying the fluid might be difficult due to the fluid stuck in the inside of the filler tube. Therefore, check the fluid level a few times between intervals.**
- **If the fluid is oversupplied, it will overflow and can be mistaken for leakage.**
- **Let the engine idle and, while paying attention to the fluid level, pour in the fluid slowly.**

LUBRICATION

Rear Axle Gear Oil

Tightening torque

Unit : N·m {lbf.ft, kgf·m}

Location	Parts to be tightened	Tightening torque	Remarks
1	Inspection plug	98 to 115 {72 to 87, 10 to 12}	—
2	Drain plug	98 to 115 {72 to 87, 10 to 12}	—

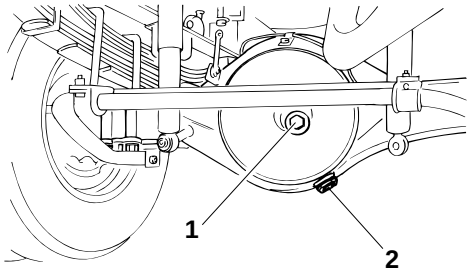

02339

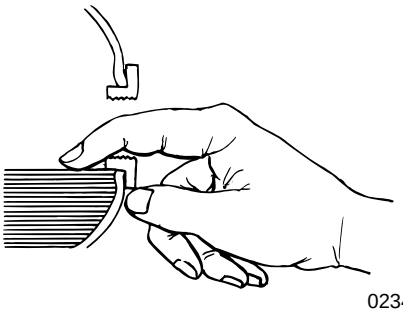

02340

[Inspection and replenishment]

WARNING

The oil temperature is high immediately after the vehicle has stopped, so take care not to scald yourself.

- Remove inspection plug **1**, check the oil level and make sure it is up to the edge of the entrance.
- If the oil level is low, add oil through the inspection plug hole until the level comes up to the edge of the entrance.
- Insert inspection plug **1**.

[Replacement]

- Drain the oil after removing inspection plug **1** and drain plug **2**.
- Remove any metal particles sticking to the magnetic part of drain plug **2** before reinstalling the plug.
- Supply oil through the inspection plug hole until the level comes up to the edge of the entrance.
- Reinstall inspection plug **1**.

Power Steering Fluid

Tightening torque

Unit : N·m {lbf.ft, kgf·m}

Location	Parts to be tightened	Tightening torque	Remarks
4	Pressure tube	29 to 39 {22 to 29, 3 to 4}	—
5	Return tube	39 to 49 {29 to 36, 4 to 5}	—

Fluid

Location	Points of application	Kinds	Quantity
1	Power steering oil tank	Automatic transmission fluid (DEXRON or DEXRON II type)	Between MIN and MAX on filler cap dipstick

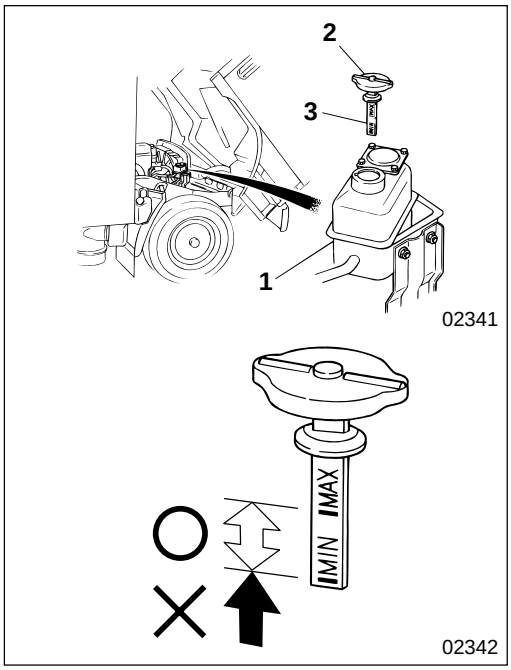

[Inspection and replenishment]

- Straighten the front wheels and stop the engine.
- Tilt the cab.
- Remove filler cap **2** of power steering oil tank **1** by turning the filler cap counterclockwise.
- Wipe off the fluid sticking to dipstick **3** on filler cap **2**. Replace the filler cap.

NOTE

Check the fluid level without screwing on filler cap 2.

- Carefully lift up filler cap **2** and check the fluid sticking to dipstick **3** to make sure that the fluid is at a point between the “MAX” and “MIN” levels. If the fluid position does not reach the “MIN” level, add fluid.
- After inspection install filler cap **2** by turning it clockwise.

WARNING⚠

Close filler cap 2 firmly; otherwise the fluid will leak and could catch fire. Also wipe up spilled fluid.

CAUTION⚠

If the fluid level is far below the recommended range, the fluid may be leaking.

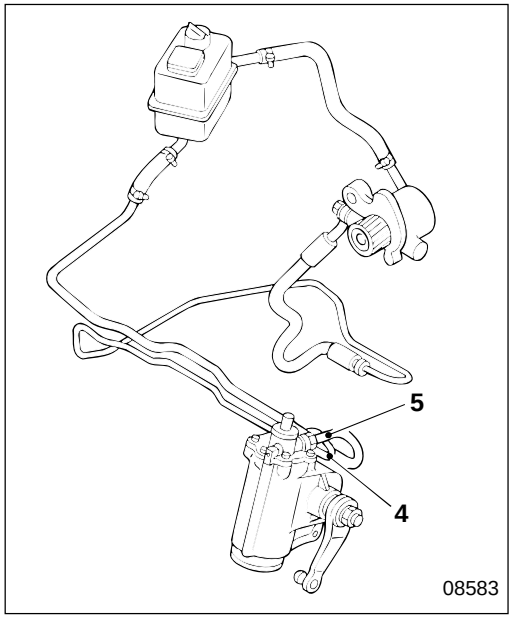

[Replacement]
- Drainage
  - Jack up the front wheels.
  - Release pressure tube **4** and return tube **5** connected to the power steering booster.
  - Turn the steering wheel fully left and right repeatedly, and drain the fluid from the power steering booster.
  - After draining the fluid, tighten pressure tube **4** and return tube **5** at specified torque.

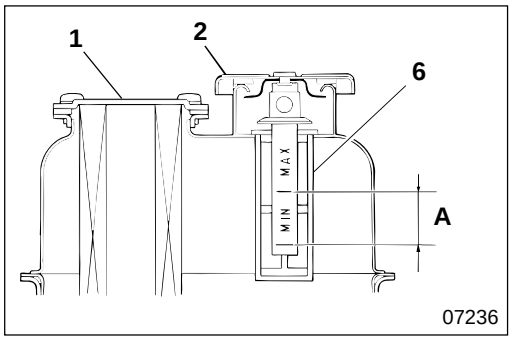

[Fluid supply]
- Pour fluid into power steering oil tank **1** up to the inner port of strainer **6**.
- With the engine stopped, jack up the front wheels and turn the steering wheel fully left and right repeatedly. When the fluid level has dropped, add fluid to maintain the fluid level within range **A**.

NOTE
Check the fluid level without screwing on filler cap 2.

- Start the engine and letting it idle, turn the steering wheel fully left and right repeatedly. When the fluid level has dropped, add fluid to maintain the fluid level within range **A**. Repeat these steps until the fluid level does not drop.
- If there is an abnormal noise, air is still in the system. Turn the steering wheel several times to raise the fluid temperature to approximately 60 to 80°C {140 to 176°F}, then stop the engine and wait for approximately five minutes.
- Lower the front wheels and turn the steering wheel several times. If there is no noise, bleeding is completed.
- When bleeding is finished, check fluid level of power steering oil tank **1**, and pipe and hose connections for fluid leakage.

Brake Fluid

Tightening torque

Unit : N·m {lbf.ft, kgf·m}

Location	Parts to be tightened		Tightening torque	Remarks
1	Air bleeder	Front disc brake	6.9 to 8.8 {5.1 to 6.5, 0.7 to 0.9}	—
		Rear wheel cylinder < FE639 >	6.9 to 8.8 {5.1 to 6.5, 0.7 to 0.9}	—
		Rear disc brake < FE649 >	6.9 to 8.8 {5.1 to 6.5, 0.7 to 0.9}	—
		Bypass valve	8.8 to 13 {6.5 to 9.4, 0.9 to 1.3}	—

Fluid

Location	Points of application	Kinds	Quantity
—	Fluid tank	Brake fluid (SAE J1703f or FMVSS No.116 DOT3)	As required

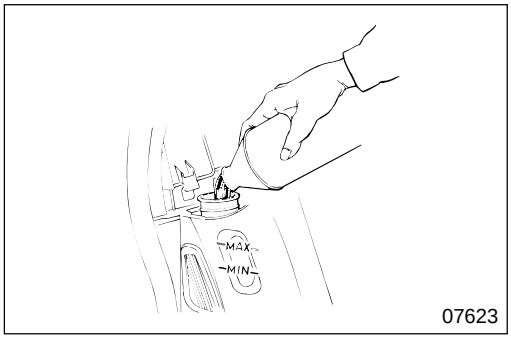

WARNING

- **The clutch fluid system and the brake fluid system use the fluid tank in common. Therefore, replacement and air bleeding of the clutch fluid must be carried out simultaneously with that of the brake fluid. Gr 21**
- **You must use new brake fluid (SAE J1703f or FMVSS No. 116 DOT3). Do not add different quality fluid or mineral oil (gas oil, engine oil, gear oil, automatic transmission fluid, etc.) to the clutch system, because this will cause the rubber parts of the clutch system and brake system to swell, resulting in faulty clutch operation, as well as ineffective braking and brake dragging.**
- **Do not allow foreign particles or water to become mixed into the brake fluid when refilling, because this will result in ineffective clutch and brake operations.**
- **If you use a mug for adding brake fluid, keep it solely for that purpose.**

CAUTION

- **Be careful not to splash brake fluid on related parts as this could damage the paintwork.**
- **Be sure to wipe off brake fluid immediately if you splash it on the paintwork.**

NOTE

Supply brake fluid to maintain the “MAX” level of the fluid tank always.

[Inspection and replenishment]
Inspect the level of the brake fluid in the fluid tank. It should be between the “MAX” and “MIN” levels. If it is below the “MIN” level, lift up the lid and remove the cap from the fluid tank, then add specified brake fluid until the level reaches the “MAX” level. Do not fill above the “MAX” level.

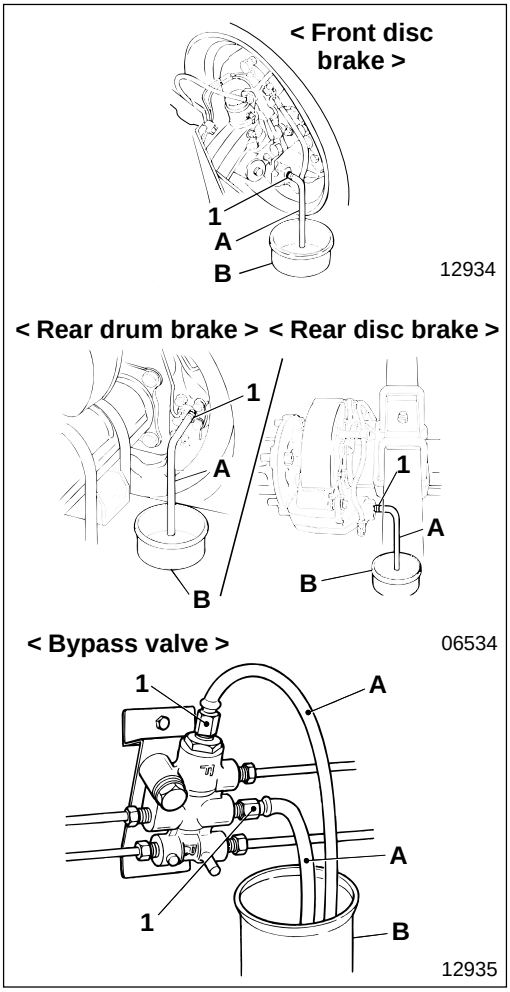

[Replacement]

- Start the engine and let it idle until you complete brake fluid replacement.
- Attach vinyl pipe **A** to the front disc brake, the rear drum brake < FE639 >, the rear disc brake < FE649 > and the bypass valve.
- Place the free end of vinyl pipe **A** into container **B**.

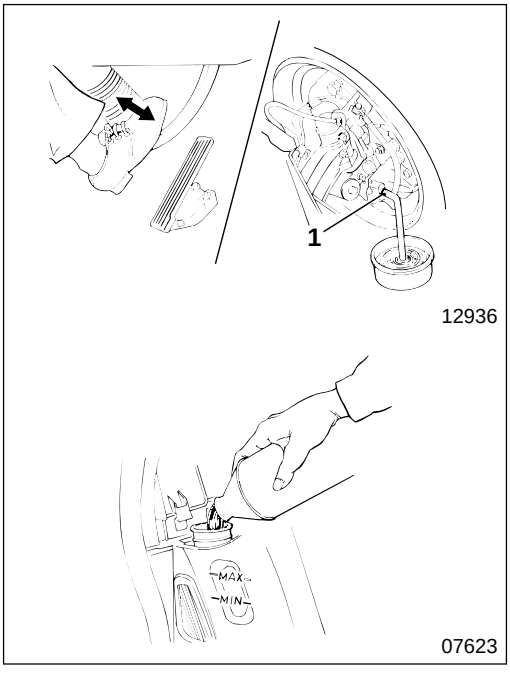

- Loosen air bleeders **1** and depress the brake pedal several times to drain brake fluid completely.
- Maintaining a supply of new brake fluid up to the “MAX” level of the fluid tank, depress the brake pedal repeatedly until the old brake fluid of the brake system is replaced with new fluid. After you complete the work, tighten each air bleeder **1** at specified torque.

NOTE

You can tell when the brake fluid has been completely replaced because the fluid coming out will be a different color.

- Carry out air bleeding of the brake system.

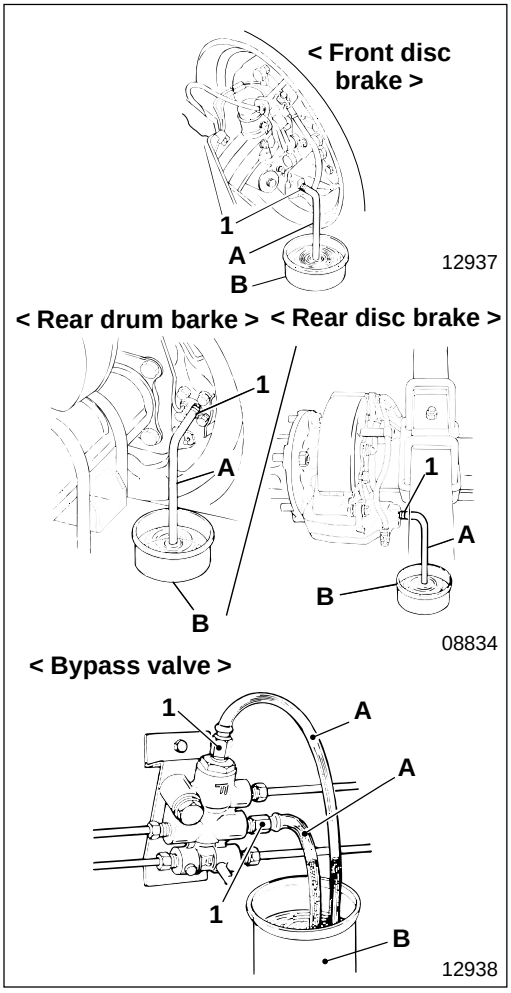

[Air bleeding]

- Start the engine and let it idle until you complete air bleeding of the brake system.
- Attach vinyl pipe **A** to the front disc brake, the rear drum brake < FE639 >, the rear disc brake < FE649 > and the bypass valve.
- Place the free end of vinyl pipe **A** into container **B**, then bleed air from the brake system as follows:

< Front brake system >

Disc brake, RH

↓

Disc brake, LH

< Rear brake system >

FE639	FE649
Drum brake, RH	Disc brake, RH
↓	↓
Drum brake, LH	Disc brake, RH

< Bypass valve system >

Bypass valve

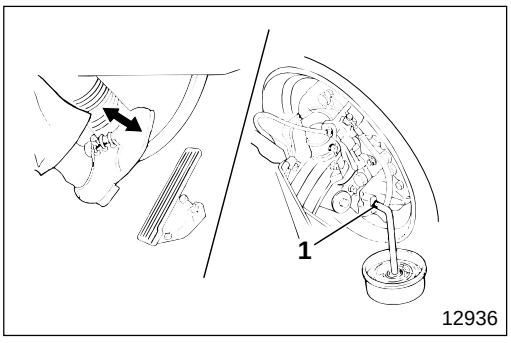

- Depress the brake pedal slowly several times, and with the brake pedal depressed, loosen air bleeder **1** to discharge air together with the brake fluid. After closing the air bleeder, release the brake pedal.
- Repeat the above operation until air bubbles are no longer present in the brake fluid discharged from air bleeder **1**.
- When the discharged fluid is free of air bubbles, tighten air bleeder **1** at specified torque.
- Make sure that the brake fluid level is at the “MAX” level of the brake fluid tank, and depress the brake pedal several times to ensure that the brake fluid does not leak from anywhere. Then, conduct a brake test.

Greasing Various Areas of Chassis

Carefully clean away all dust and dirt from the grease nipples, and use the specified type of grease. The areas to be greased are shown in the following illustration.

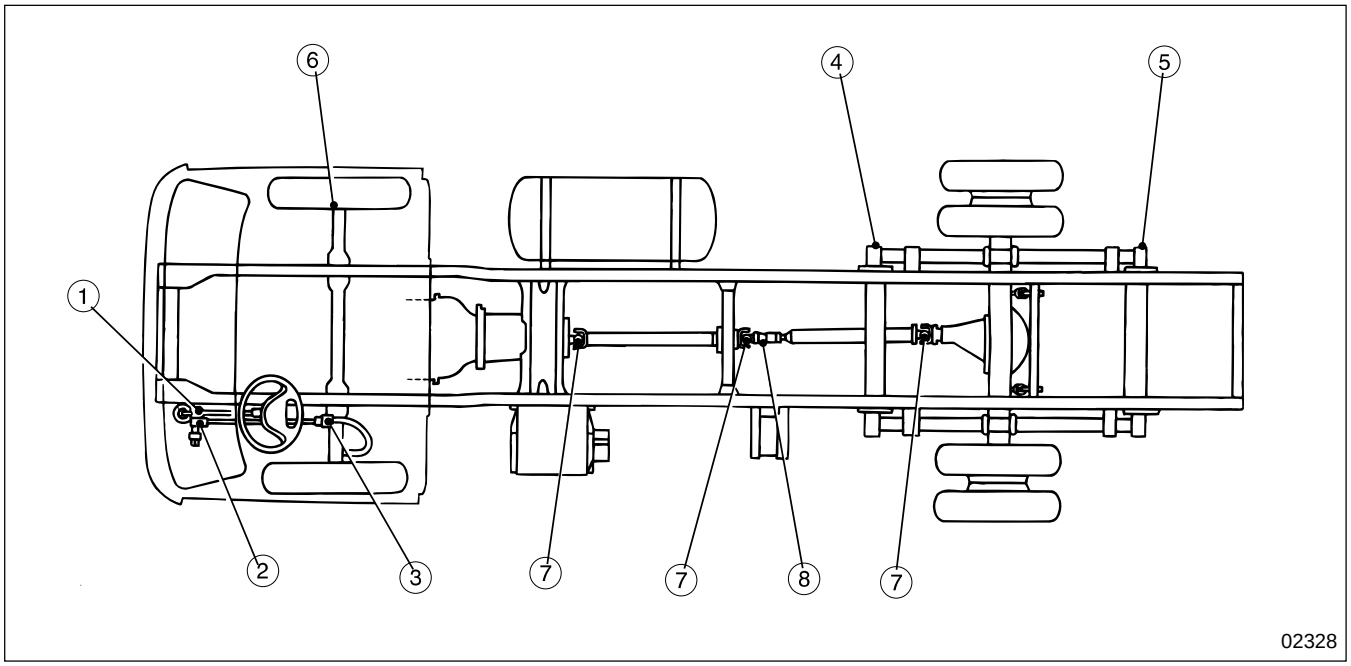

① 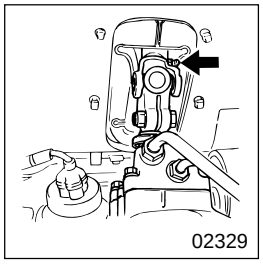
02329

② 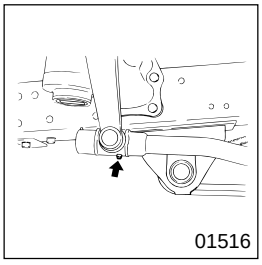
01516

③ 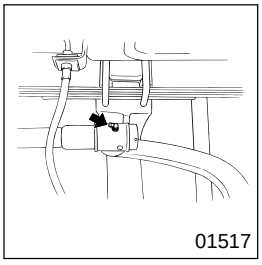
01517

④ 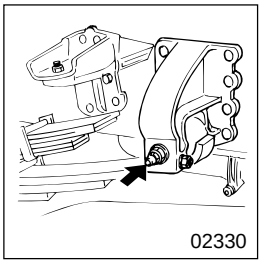
02330

⑤ 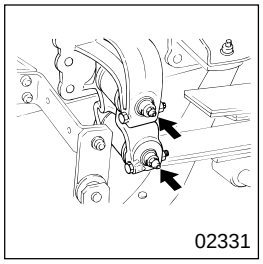
02331

⑥ 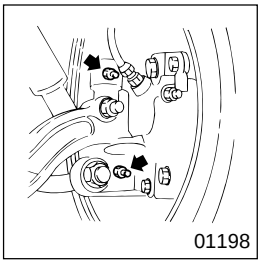
01198

⑦ 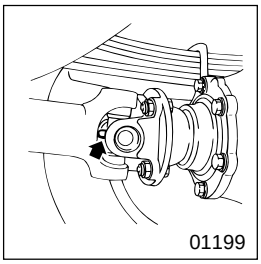
01199

⑧ 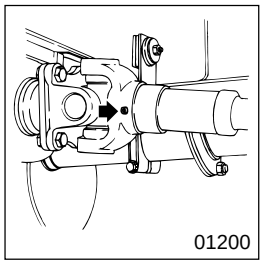
01200

① Steering shaft
② Drag link front
③ Drag link rear
④ Rear spring pin front (left and right, 2 points)
⑤ Rear spring pin rear (left and right, 4 points)
⑥ Kingpin bearing (left and right, 4 points)
⑦ Propeller shaft universal joint
⑧ Propeller shaft slip joint

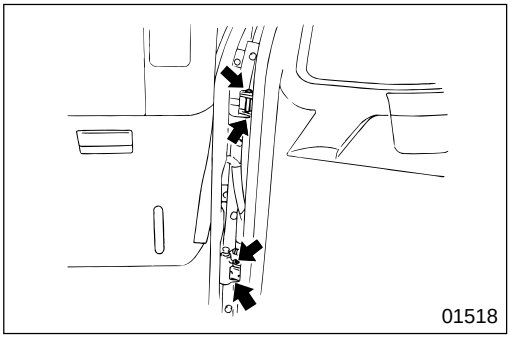

● **Door hinge**

MITSUBISHI FUSO

FE

Service Manual

Group 10 - Engine Removal & Installation

Group 10 - 1998 Minor Changes

BACK HOME

MITSUBISHI FUSO TRUCK OF AMERICA, Inc.

Pub No. TWSE9501-00

MITSUBISHI
FUSO

FE.FG

Service Manual

Group 10
Removal and Installation of Engine

'98 Minor Change

Table of Contents

MITSUBISHI FUSO TRUCK OF AMERICA, Inc.

BACK HOME

Pub No. TWSE9501-210

GROUP 10 REMOVAL AND INSTALLATION OF ENGINE

REMOVAL AND INSTALLATION OF ENGINE

- Charge and Discharge of Engine Coolant, Removal and Installation of Hoses 10- 2
- Removal and Installation of Transmission Related Parts 10- 4
- Removal and Installation of Engine Related Parts 10- 6
- Removal and Installation of Engine
  - < FE > 10- 8
  - < FG > 10-10

Charge and Discharge of Engine Coolant, Removal and Installation of Hoses

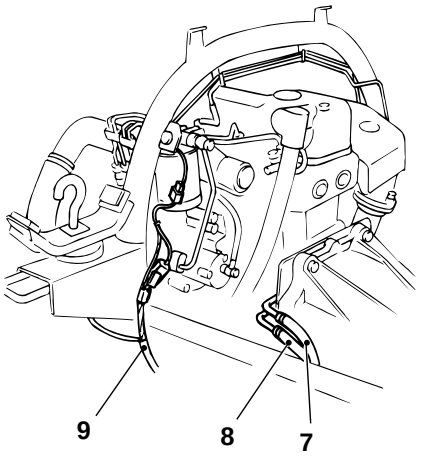

13396

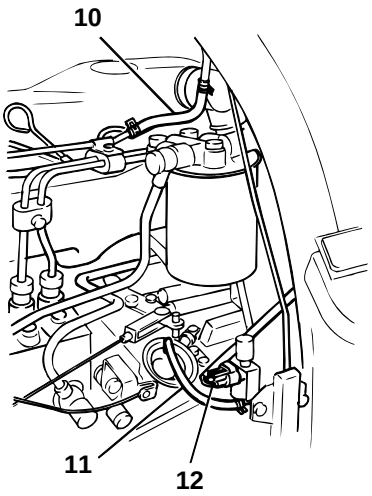

13397

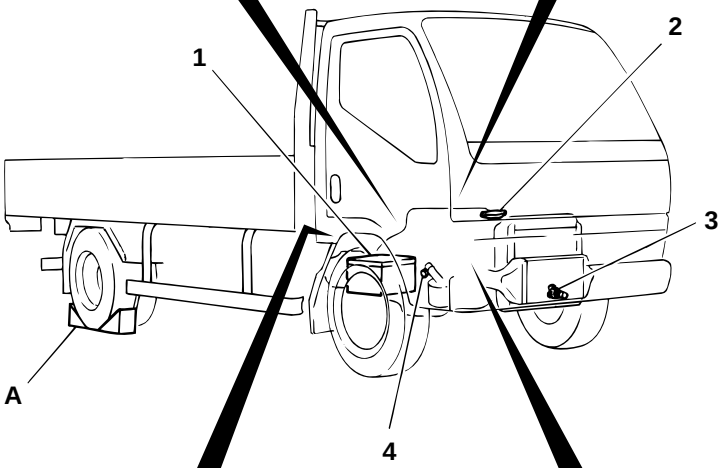

13398

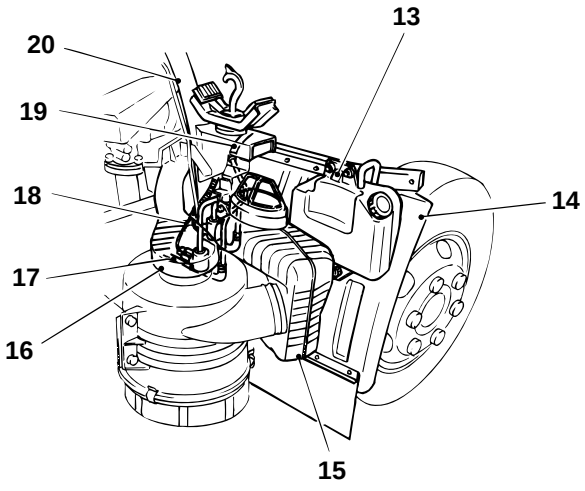

13399

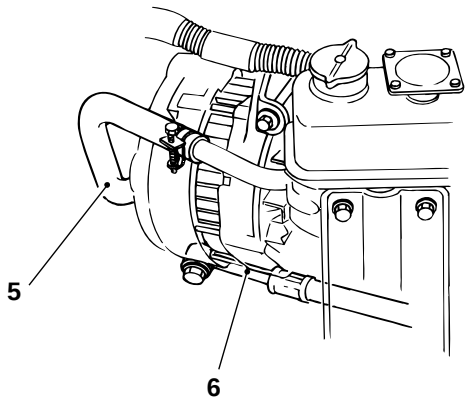

07352

● **Work before removal and after installation**

P10-3

● **Removal sequence**

1 Battery cable ⊖
2 Pressure cap
3 Radiator drain plug Gr 14
4 Crankcase drain plug Gr 14
5 Power steering hose
6 Power steering hose
7 Fuel return hose
8 Fuel feed hose
9 Harness (Chassis harness)
10 Hose (Intake silencer)
11 Hose (Solenoid valve)
12 Harness (Solenoid valve)
13 Reservoir tank
14 Mudguard Gr 42
15 Air box
16 Air duct
17 Hose (3-way magnetic valve)
18 Harness (3-way magnetic valve)
19 Hose (3-way magnetic valve)
20 Cab bridge

A : Wheel chock

WARNING⚠

- **You must insert plugs into fuel return hose 7 and fuel feed hose 8 after you remove them and secure them at a higher level than the fuel tank to prevent fuel from flowing out of them. Otherwise a fire might be caused.**
- **You must make sure that the engine coolant is cold before draining it so as not to scald yourself.**
- **It is dangerous to open pressure cap 2, when the coolant temperature is high, without taking due care because the hot water could spray out. Be sure to cover the pressure cap with a cloth and loosen slowly to bleed the pressure before opening fully.**

● **Installation sequence**

Follow the removal sequence in reverse.

◆ Service procedure

● **Work before removal and after installation**

- Discharge, charge, and air bleeding of engine coolant Gr 14
- Discharge, charge, and air bleeding of oil Gr 37
- Air bleeding of fuel system Gr 13

Removal and Installation of Transmission Related Parts
< Manual transmission >

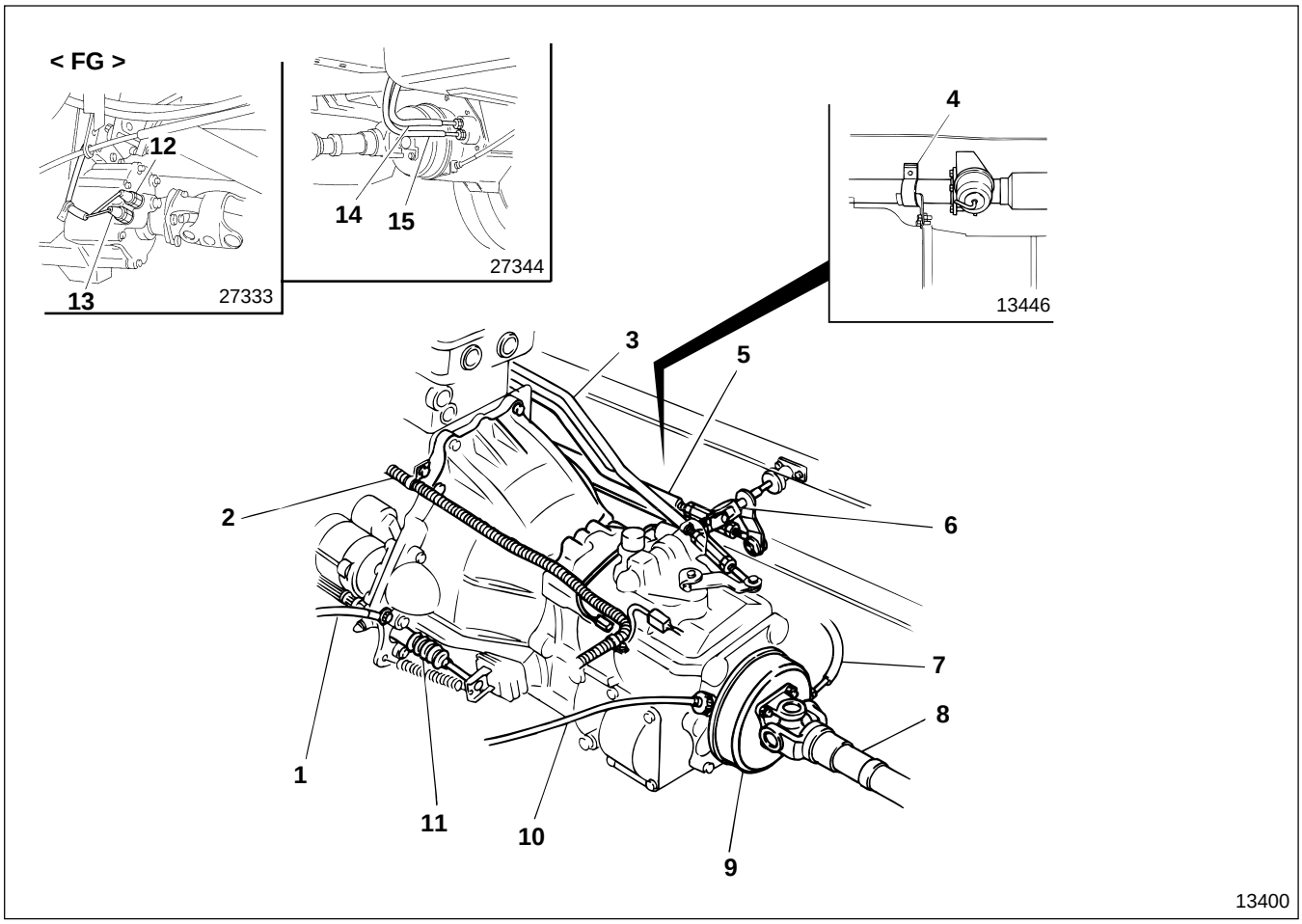

NOTE

- **After removing propeller shaft 8 tie it to the frame temporarily at the height of the installation assembly using a piece of rope.**
- **When removing power cylinder 11 do not remove the clutch hose otherwise air might become mixed with the fluid in the clutch system, preventing smooth operation.**
- **After removing power cylinder 11 tie it to the frame temporarily using a piece of rope.**

● **Removal sequence**

1 Harness (Ground)
2 Harness (Chassis harness)
3 Selector rod Gr 22
4 Front pipe Gr 15
5 Shift rod Gr 22
6 Shift cross shaft Gr 22
7 Parking brake cable Gr 36
8 Propeller shaft Gr 25
9 Brake drum Gr 36
10 Speedometer cable Gr 22
11 Power cylinder Gr 21
12 Transfer LOW switch < FG > Gr 24
13 Transfer four-wheel drive switch < FG > Gr 24
14 HIGH/LOW control cable < FG > Gr 24
15 2H/4H control cable < FG > Gr 24

● **Installation sequence**

Follow the removal sequence in reverse.

< Automatic transmission >

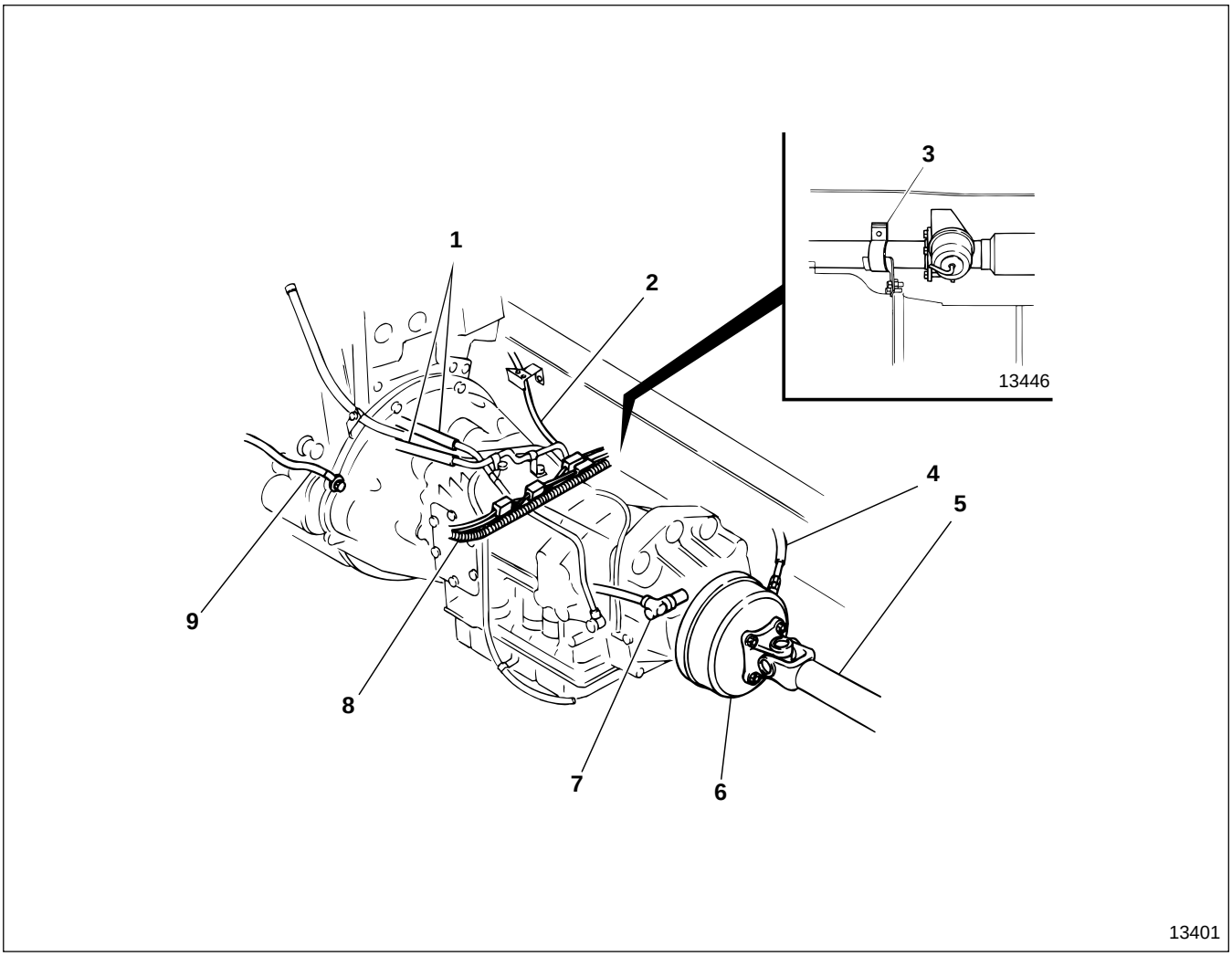

NOTE

- **After removing oil cooler hose 1 tie it up temporarily at a level higher than the upper surface of the oil cooler.**
- **After removing oil cooler hose 1 insert a plug into it, both on the oil cooler and transmission sides, to prevent the automatic transmission fluid from flowing out.**
- **After removing propeller shaft 8 tie it to the frame temporarily at the height of the installation assembly using a piece of rope.**

● **Removal sequence**

1 Oil cooler hose Gr 23
2 Selector cable Gr 23
3 Front pipe Gr 15
4 Parking brake cable Gr 36
5 Propeller shaft Gr 25
6 Brake drum Gr 36
7 Speedometer cable Gr 23
8 Harness (Chassis harness)
9 Harness (Ground)

● **Installation sequence**

Follow the removal sequence in reverse.

REMOVAL AND INSTALLATION OF ENGINE

Removal and Installation of Engine Related Parts

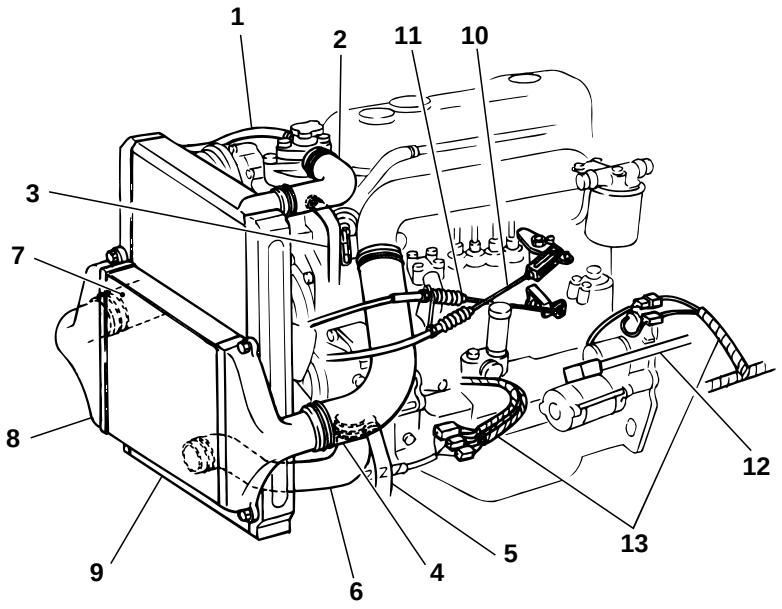

13402

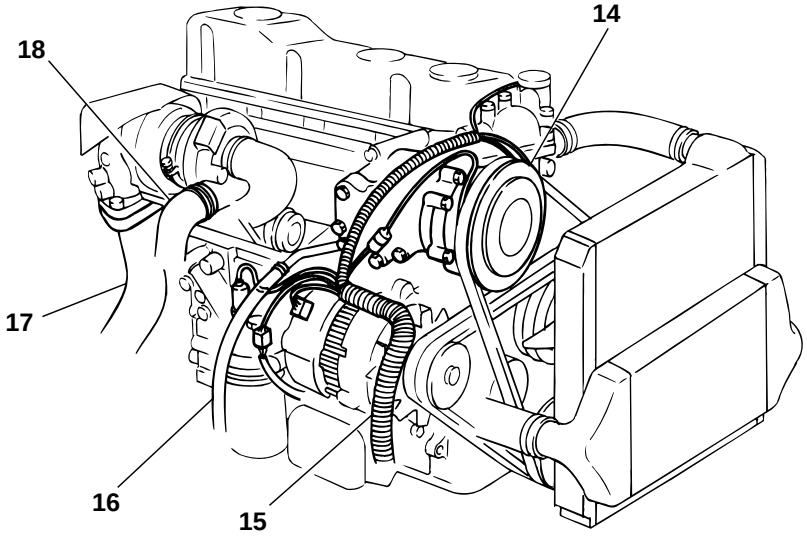

13403

● **Removal sequence**

1 Air hose Gr 14
2 Outlet hose Gr 15
3 Heater hose Gr 55B
4 Air intake hose Gr 15
5 Heater hose Gr 55B
6 Inlet hose Gr 14
7 Air intake hose Gr 15
8 Intercooler Gr 15
9 Radiator Gr 14
10 Accelerator control cable Gr 13
11 Engine stop cable Gr 13
12 Harness (Starter)
13 Harness (Chassis harness)
14 Cooler compressor Gr 55A
15 Harness (Chassis harness)
16 Vacuum hose
17 Front pipe Gr 15
18 Air intake hose Gr 15

NOTE

- **For vehicles fitted with an air-conditioner do not disconnect the hose that goes to the air-conditioner from cooler compressor 14 when you remove it otherwise you will have to recharge the air-conditioner with refrigerant.**
- **After removing cooler compressor 14 tie it to the frame temporarily.**

● **Installation sequence**

Follow the removal sequence in reverse.

REMOVAL AND INSTALLATION OF ENGINE

Removal and Installation of Engine < FE >

< Manual transmission >

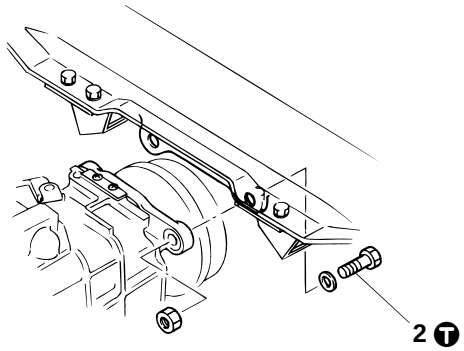

07344

< Automatic transmission >

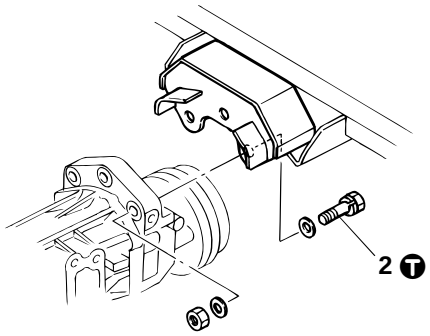

07345

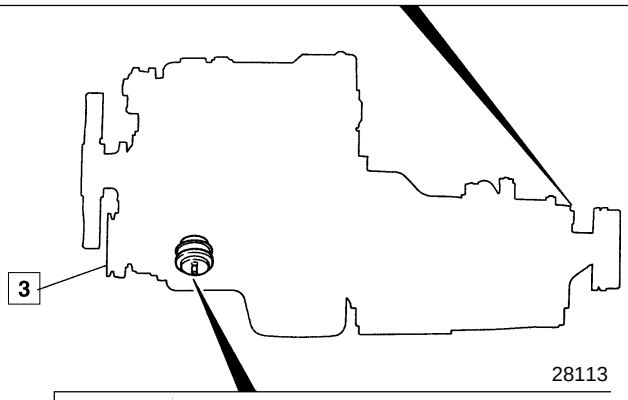

28113

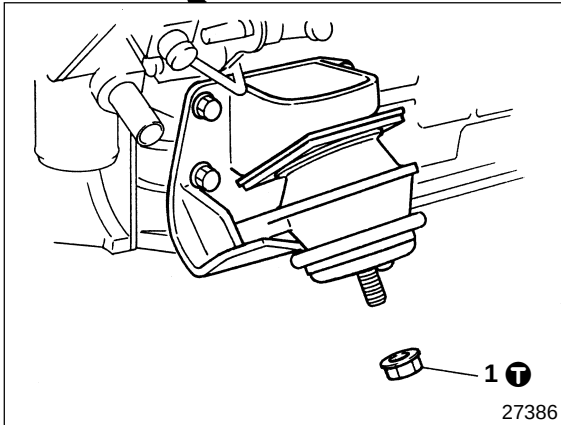

27386

● **Removal sequence**

1 Nut
2 Bolt
3 Engine and transmission assembly

WARNING⚠

When you lift engine and transmission assembly 3 you must use lifting gear that is strong enough to lift the mass of the engine and transmission assembly (480 to 560 kg {1060 to 1230 lb}).

● **Installation sequence**

Follow the removal sequence in reverse.

Tightening torque

Unit : N·m {lbf.ft, kgf·m}

Location	Parts to be tightened		Tightening torque	Remarks
1	Nut (Front mounting installation)		68 to 88 {50 to 65, 6.9 to 9.0}	—
2	Bolt (Rear mounting installation)	Manual transmission	125 to 175 {94 to 130, 13 to 18}	—
		Automatic transmission	83 to 105 {61 to 80, 8.5 to 11.0}	—

◆ Service procedure

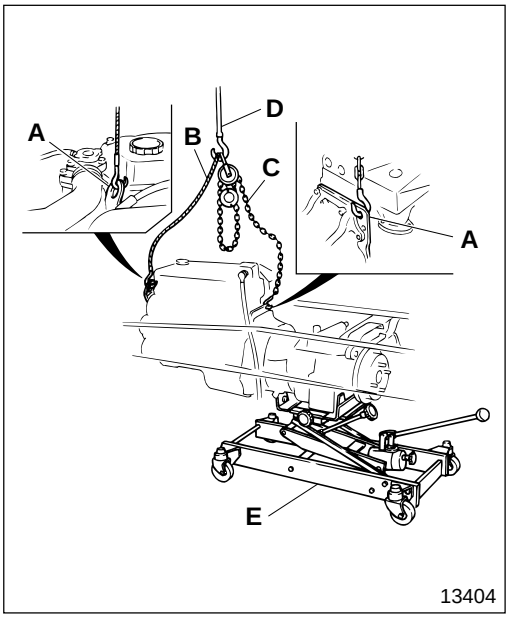

3 Removal of engine and transmission assembly

- Hook cable **B** and chain block **C** to two hangers **A** on the engine and transmission assembly and lift the engine using crane **D** until the lifting gear becomes taut.
- Support the transmission using transmission jack **E**.
- Make sure that wiring and hoses are disconnected.

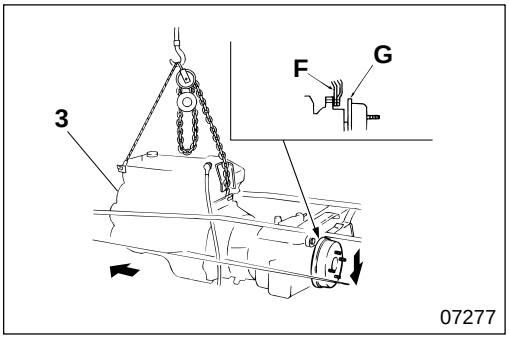

- Lower the transmission carefully so that transmission back plate **G** does not hit engine rear support **F** then move engine and transmission assembly **3** forward.

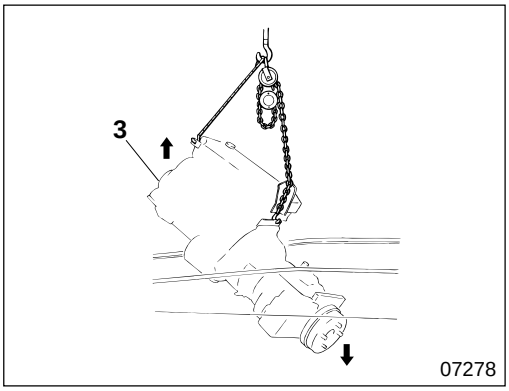

- Lift engine and transmission assembly **3** carefully adjusting the lifting angle. As the transmission appears from the front of the rear body turn the transmission 90° clockwise and place it down on the right side carefully so that it does not hit the frame or cab.

REMOVAL AND INSTALLATION OF ENGINE

Removal and Installation of Engine < FG >

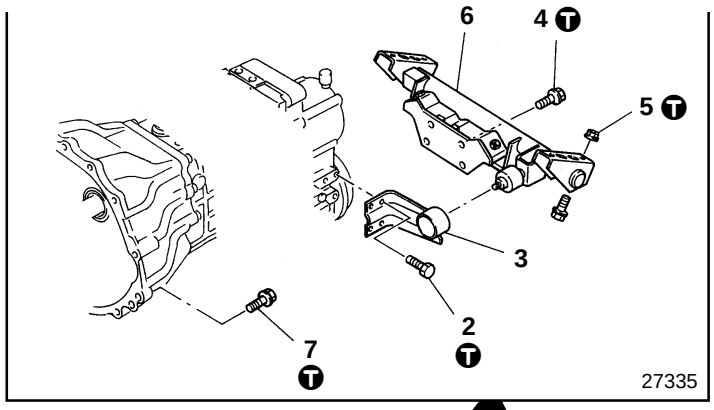

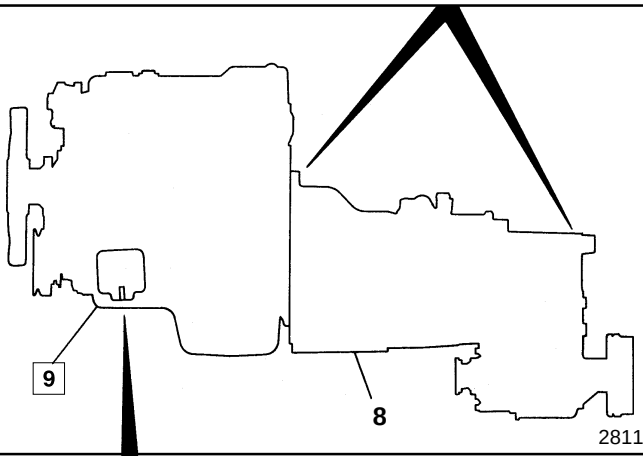

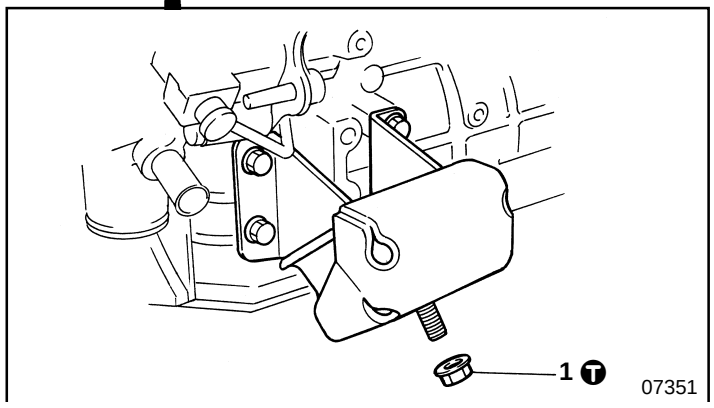

● **Removal sequence**

1 Nut
2 Bolt
3 Roll stopper
4 Bolt
5 Nut
6 Rear engine support bracket
7 Bolt
8 Transmission and transfer assembly Gr 22
9 Engine assembly

WARNING

- **Take care not to allow engine assembly 9 to hit the cab and rear body when lifting the engine.**
- **Be sure to use lifting gear or an engine hoist that is capable of lifting engine assembly 9 weighing 380 kg {840 lb}.**

● **Installation sequence**

Follow the removal sequence in reverse.

Tightening torque

Unit : N·m {lbf.ft, kgf·m}

Location	Parts to be tightened	Tightening torque	Remarks
1	Nut (Front mounting installation)	68 to 88 {50 to 65, 6.9 to 9.0}	—
2	Bolt (Roll stopper bracket mounting)	44 to 64 {33 to 47, 4.5 to 6.5}	—
4	Bolt (Rear mounting installation)	44 to 64 {33 to 47, 4.5 to 6.5}	—
5	Nut (Rear engine support bracket mounting)	98 to 115 {72 to 87, 10 to 12}	—
7	Bolt (Transmission and transfer assembly mounting)	47 {35, 4.8}	M10×1.25
		82 {61, 8.4}	M12×1.75

◆ Service procedure

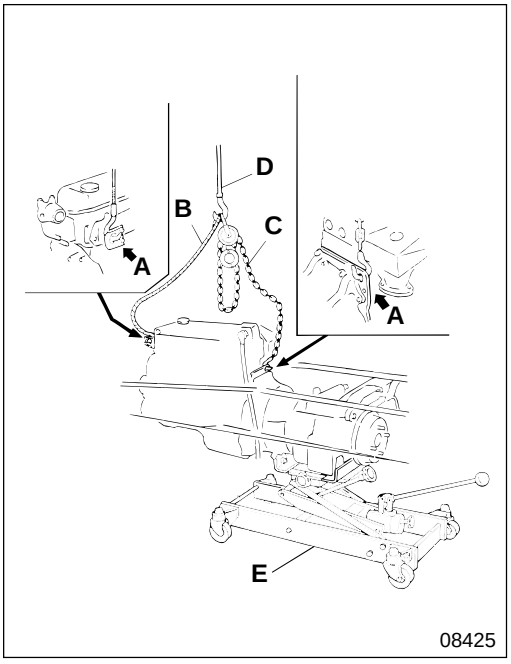

9 **Preparatory operations for removal**

- Hook cable **B** and chain block **C** to two hangers **A** on the engine assembly and lift the engine using crane **D** until the lifting gear become taunt.
- Support the transmission using transmission jack **E**.
- Make sure that the wiring and hoses are disconnected.

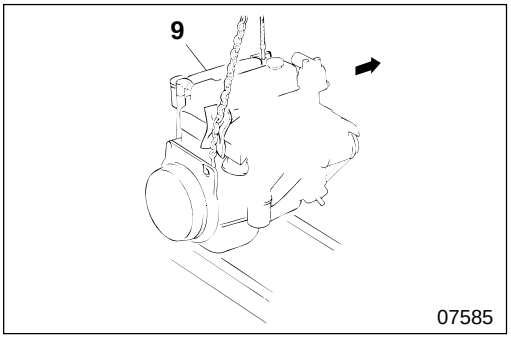

Lift engine assembly **9** carefully and slowly, and turn the engine 90° clockwise when the lower part of engine appears above the frame.

MITSUBISHI
FUSO

FE

Service Manual

Group 10
Removal and Installation of Engine

Table of Contents

BACK HOME

MITSUBISHI FUSO TRUCK OF AMERICA, Inc.

Pub No. TWSE9501-10

GROUP 10 REMOVAL AND INSTALLATION OF ENGINE

REMOVAL AND INSTALLATION OF ENGINE

- Charge and Discharge of Engine Coolant, Removal and Installation of Hoses 2
- Removal and Installation of Transmission Related Parts 4
- Removal and Installation of Engine Related Parts 6
- Removal and Installation of Engine 8

Charge and Discharge of Engine Coolant, Removal and Installation of Hoses

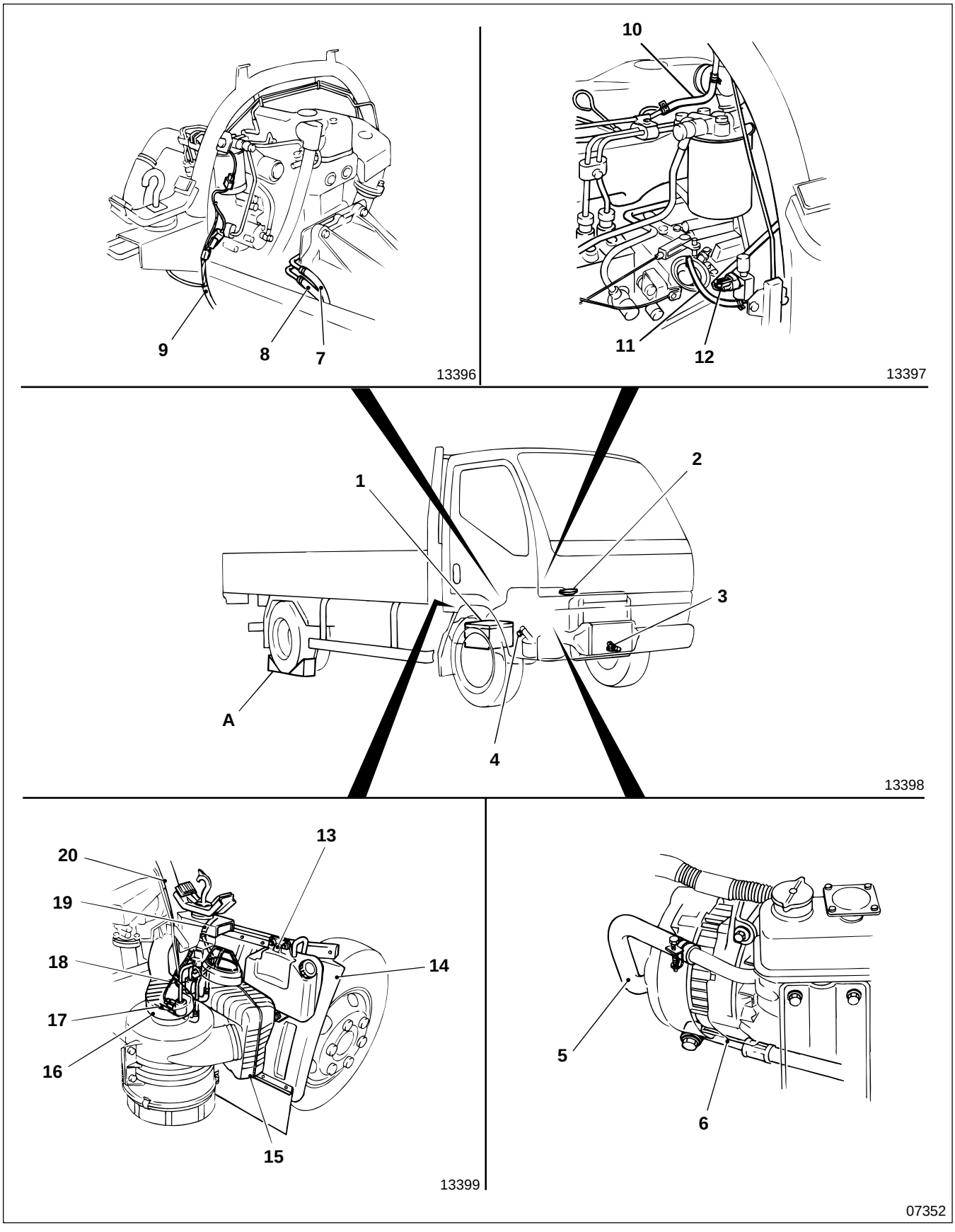

● **Work before removal and after installation**

P10-3

● **Removal sequence**

1 Battery cable ⊖
2 Pressure cap
3 Radiator drain plug Gr 14
4 Crankcase drain plug Gr 14
5 Power steering hose
6 Power steering hose
7 Fuel return hose
8 Fuel feed hose
9 Harness (Chassis harness)
10 Hose (Intake silencer)
11 Hose (Solenoid valve)
12 Harness (Solenoid valve)
13 Reservoir tank
14 Mudguard Gr 42
15 Air box
16 Air duct
17 Hose (3-way magnetic valve)
18 Harness (3-way magnetic valve)
19 Hose (3-way magnetic valve)
20 Cab bridge

A : Wheel chock

WARNING⚠

- **You must insert blanking plugs into fuel return hose 7 and fuel feed hose 8 after you remove them and secure them at a higher level than the fuel tank to prevent fuel from flowing out of them. Otherwise a fire might be caused.**
- **You must make sure that the engine coolant is cold before draining it so as not to scald yourself.**
- **It is dangerous to open pressure cap 2, when the coolant temperature is high, without taking due care because the hot water would spray out. Be sure to cover the pressure cap with a cloth and loosen slowly to bleed the pressure before opening fully.**

● **Installation sequence**

Follow the removal sequence in reverse.

◆ Service procedure

● **Work before removal and after installation**

- Discharge, charge, and air bleeding of engine coolant Gr 14
- Discharge, charge, and air bleeding of oil Gr 37
- Air bleeding of fuel system Gr 13

REMOVAL AND INSTALLATION OF ENGINE

Removal and Installation of Transmission Related Parts
< Manual transmission >

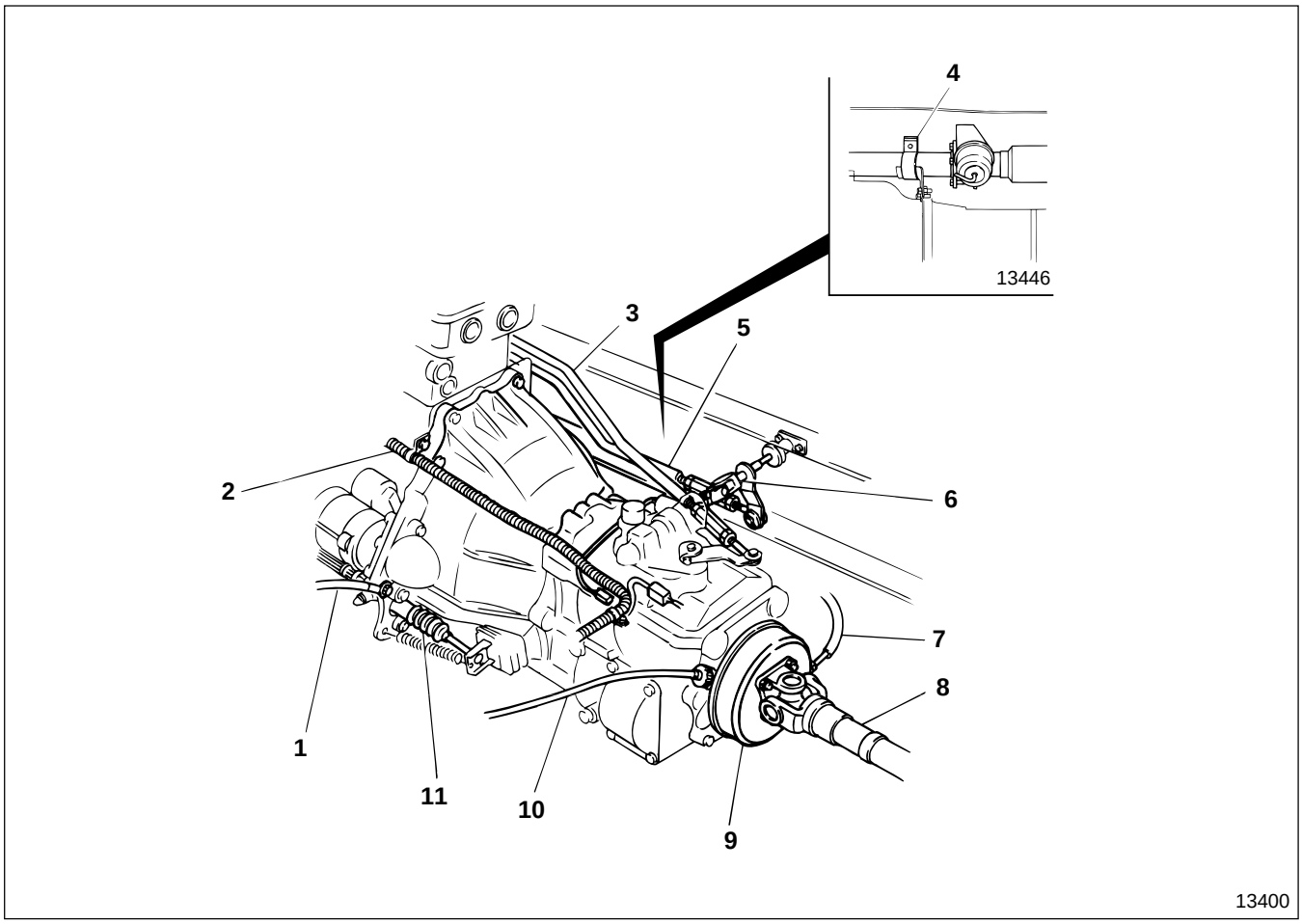

NOTE

- **After removing propeller shaft 8 tie it to the frame temporarily at the height of the installation assembly using a piece of rope.**
- **When removing power cylinder 11 do not remove the clutch hose otherwise air might become mixed up with the fluid in the clutch system, preventing smooth working.**
- **After removing power cylinder 11 tie it to the frame temporarily using a piece of rope.**

● **Removal sequence**

1 Harness (Ground)
2 Harness (Chassis harness)
3 Selector rod Gr 22
4 Front pipe Gr 15
5 Shift rod Gr 22
6 Shift cross shaft Gr 22
7 Parking brake cable Gr 36
8 Propeller shaft Gr 25
9 Brake drum Gr 36
10 Speedometer cable Gr 36
11 Power cylinder Gr 21

● **Installation sequence**

Follow the removal sequence in reverse.

< Automatic transmission >

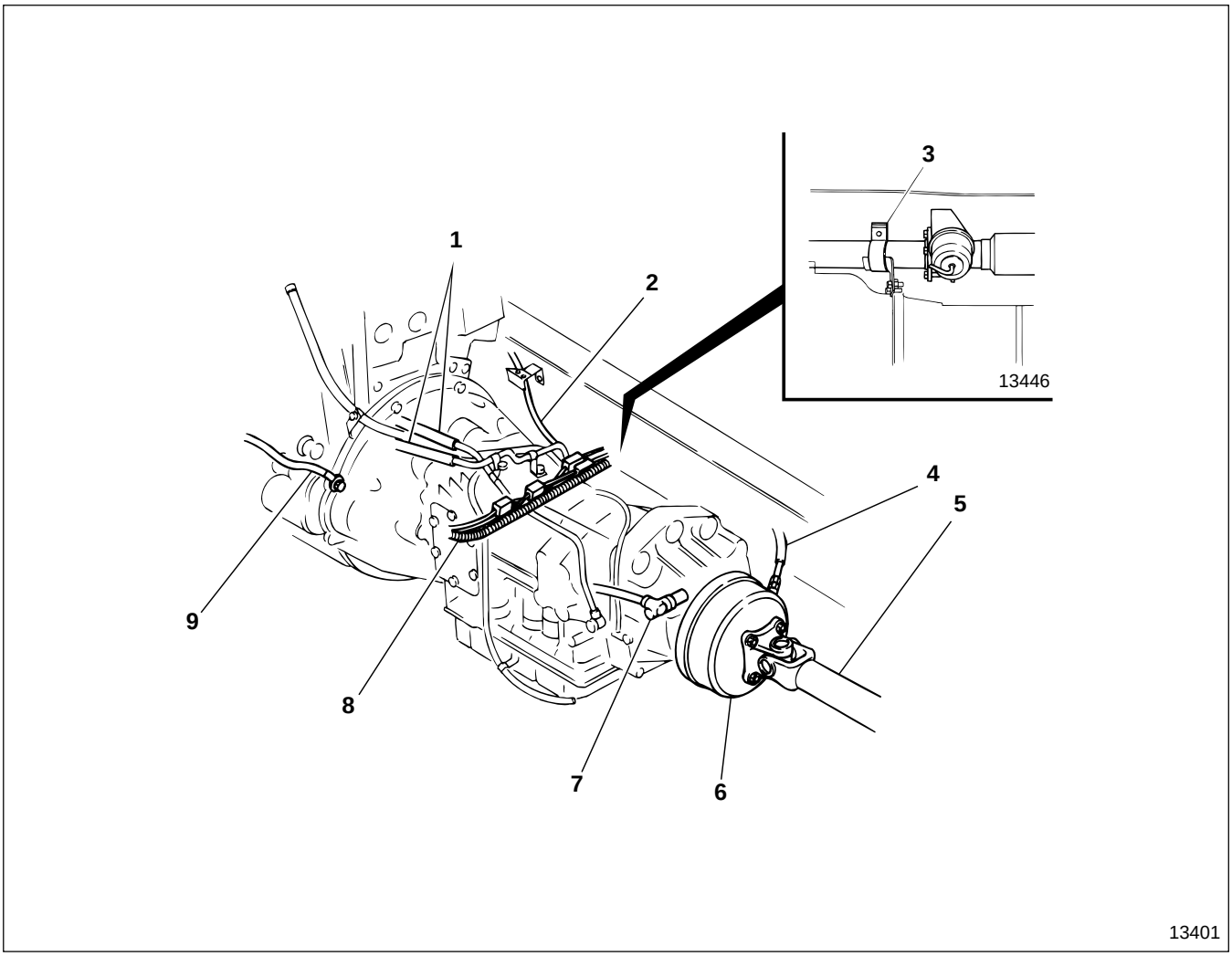

NOTE

- **After removing oil cooler hose 1 tie it up temporarily at a level higher than the upper surface of the oil cooler.**
- **After removing oil cooler hose 1 insert blanking plugs into it, both on the oil cooler and transmission sides, to prevent the automatic transmission fluid from flowing out.**
- **After removing propeller shaft 8 tie it to the frame temporarily at the height of the installation assembly using a piece of rope.**

● **Removal sequence**

1 Oil cooler hose Gr 23
2 Selector cable Gr 23
3 Front pipe Gr 15
4 Parking brake cable Gr 36
5 Propeller shaft Gr 25
6 Brake drum Gr 36
7 Speedometer cable Gr 23
8 Harness (Chassis harness)
9 Harness (Ground)

● **Installation sequence**

Follow the removal sequence in reverse.

REMOVAL AND INSTALLATION OF ENGINE

Removal and Installation of Engine Related Parts

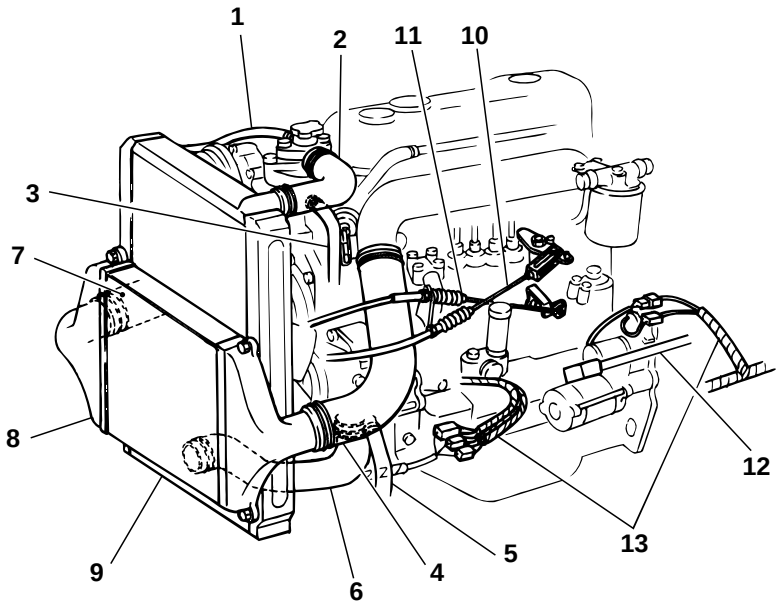

13402

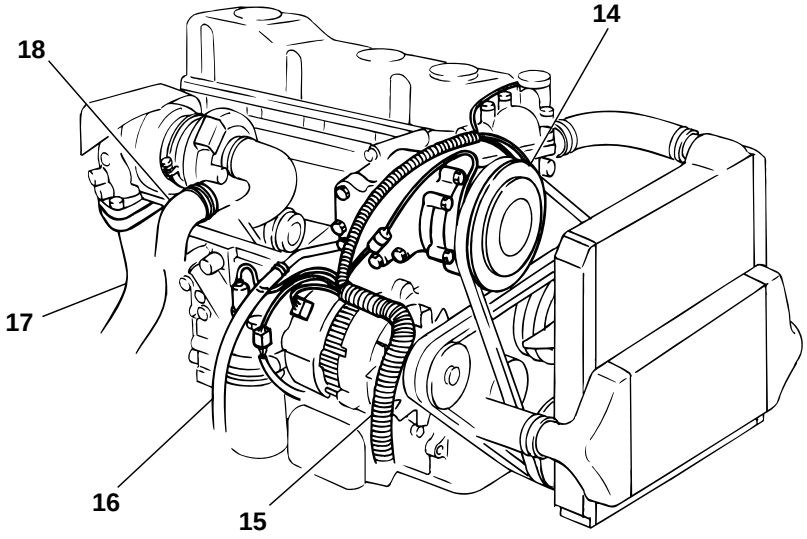

13403

● **Removal sequence**

1 Air hose Gr 14
2 Inlet hose Gr 15
3 Heater hose Gr 55B
4 Air intake hose Gr 15
5 Heater hose Gr 55B
6 Outlet hose Gr 14
7 Air intake hose Gr 15
8 Intercooler Gr 15
9 Radiator Gr 14
10 Accelerator control cable Gr 13
11 Engine stop cable Gr 13
12 Harness (Starter)
13 Harness (Chassis harness)
14 Cooler compressor Gr 55A
15 Harness (Chassis harness)
16 Vacuum hose
17 Front pipe Gr 15
18 Air intake hose Gr 15

NOTE

- **For vehicles fitted with an air-conditioner do not disconnect the hose that goes to the air-conditioner from cooler compressor 14 when you remove it otherwise you will have to recharge the air-conditioner with refrigerant.**
- **After removing cooler compressor 14 tie it to the frame temporarily.**

● **Installation sequence**

Follow the removal sequence in reverse.

REMOVAL AND INSTALLATION OF ENGINE

Removal and Installation of Engine

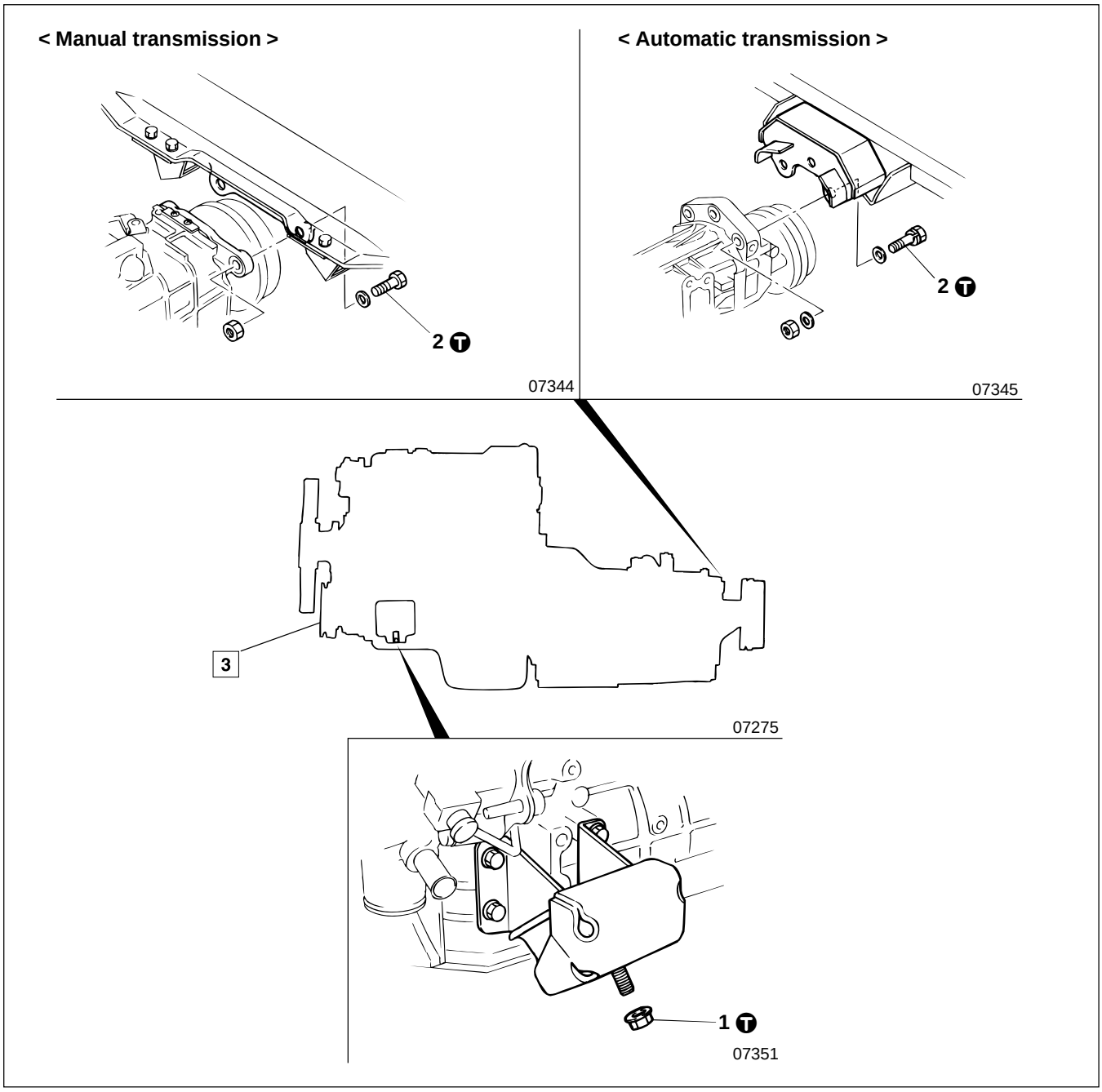

● **Removal sequence**

1 Nut
2 Bolt
3 Engine and transmission assembly

WARNING⚠

When you lift engine and transmission assembly 3 you must use lifting gear that is strong enough to lift the mass of the engine and transmission assembly (400 to 480 kg {880 to 1060 lb}).

● **Installation sequence**

Follow the removal sequence in reverse.

Tightening torque

Unit : N·m {lbf.ft, kgf·m}

Location	Parts to be tightened		Tightening torque	Remarks
1	Nut (Front mounting installation)		69 to 78 {51 to 59, 7 to 8}	—
2	Bolt (Rear mounting installation)	Manual transmission	125 to 175 {94 to 130, 13 to 18}	—
		Automatic transmission	83 to 105 {61 to 80, 8.5 to 11.0}	—

◆ Service procedure

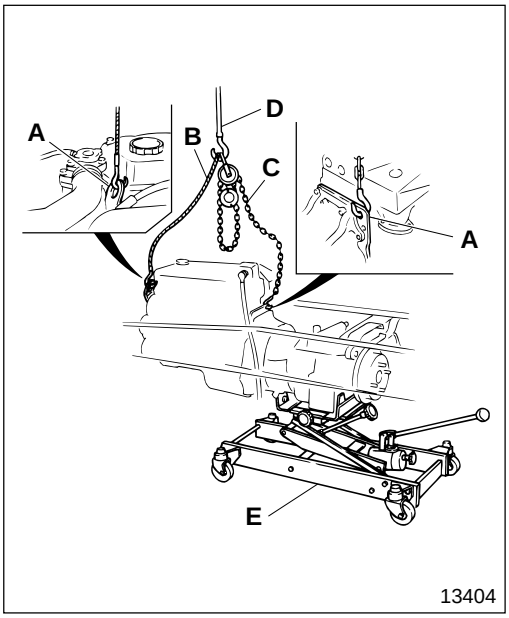

3 Removal of engine and transmission assembly

- Hook cable **B** and chain block **C** to two hangers **A** on the engine and transmission assembly and lift the engine using crane **D** until the lifting gear becomes taut.
- Support the transmission using transmission jack **E**.
- Make sure that wiring and hoses are disconnected.

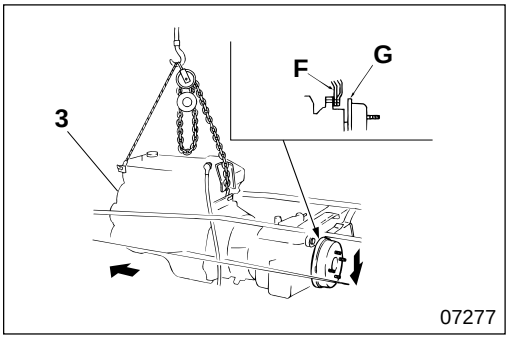

- Lower the transmission carefully so that transmission back plate **G** does not hit engine rear support **F** then move engine and transmission assembly **3** forward.

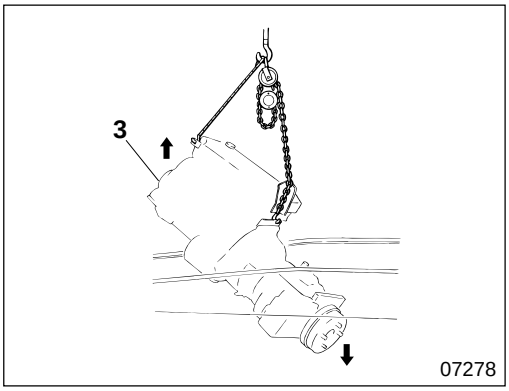

- Lift engine and transmission assembly **3** carefully adjusting the lifting angle. As the transmission appears from the front of the rear body turn the transmission 90° clockwise and place it down on the right side carefully so that it does not hit the frame or cab.

MITSUBISHI FUSO

FE

Service Manual

Group 11 - Engine

Group 11A - Engine
2001 Model Change
<4M50>

BACK HOME

MITSUBISHI FUSO TRUCK OF AMERICA, Inc.

Pub No. TWSE9501-00

MITSUBISHI
FUSO

FE

Service Manual

Group 11A
Engine
<4M50T2>

2001 Model Year Change

Table of Contents

MITSUBISHI FUSO TRUCK OF AMERICA, Inc.

BACK HOME

Pub No. TWSE9501-511A

GROUP 11A ENGINE

SPECIFICATIONS 11A- 2

STRUCTURE AND OPERATION 11A- 4

TROUBLESHOOTING 11A-14

ON-VEHICLE INSPECTION AND ADJUSTMENT 11A-16

ROCKER COVER, ROCKER ASSEMBLIES AND CAMSHAFTS 11A-20

CYLINDER HEAD AND VALVE MECHANISM 11A-34

FRONT CASE 11A-48

TIMING GEARS AND BALANCE SHAFTS 11A-52

PISTONS, CONNECTING RODS AND CYLINDER LINERS 11A-60

FLYWHEEL 11A-72

CRANKSHAFT AND CRANKCASE 11A-76

BALANCE SHAFT BUSHINGS 11A-84

SPECIFICATIONS

Item		Specifications
Engine model		4M50T2
Type		4-cylinder, in-line, water-cooled, 4-cycle diesel
Combustion chamber type		Direct injection
Valve mechanism		Double overhead camshaft
Max. power output	HP/rpm (SAE Gross)	175/2700
Max. torque	lbf.ft/rpm (SAE Gross)	347/1800
Cylinder bore x stroke	mm {in.}	ϕ 114 x 120 {4.49 x 4.72}
Total displacement	ℓ	4.899
Compression ratio		17.5

MEMO

Engine-proper

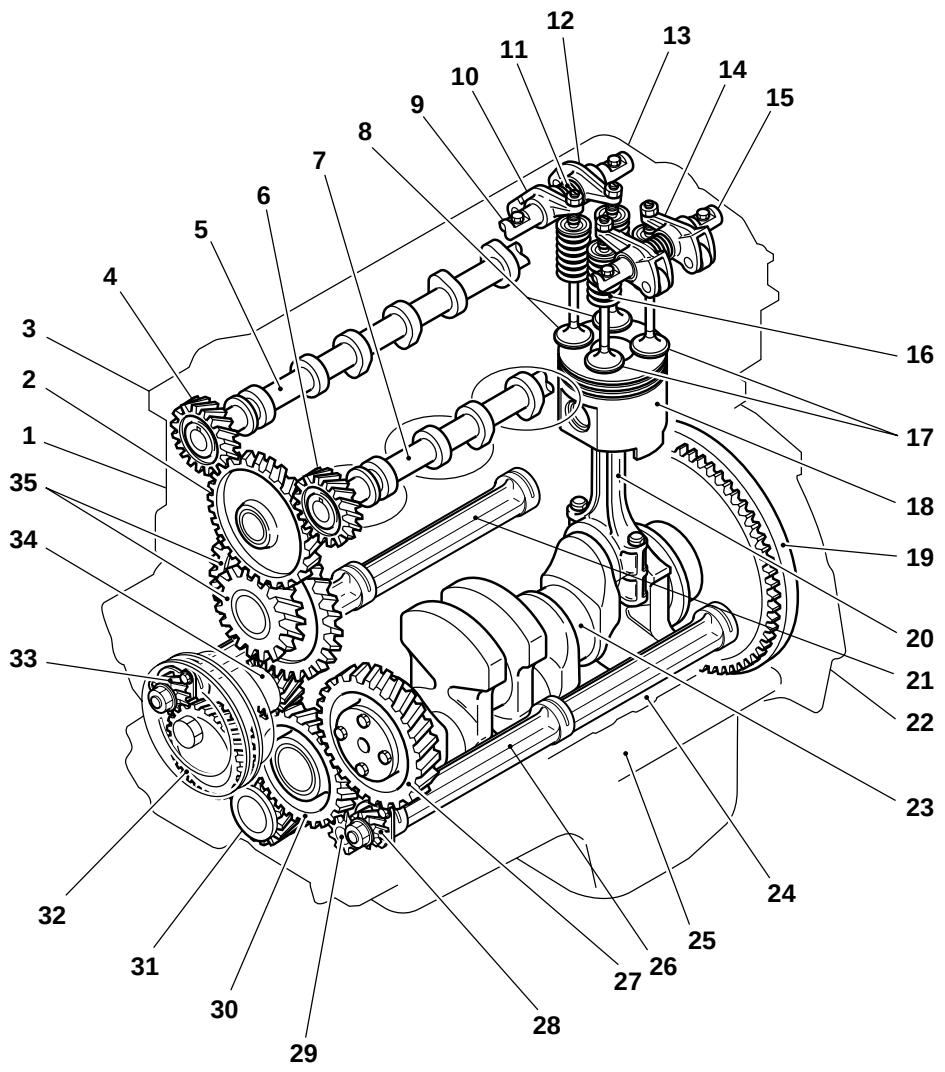

1 Cylinder head
2 Head idler gear
3 Camshaft frame
4 Camshaft gear (Exhaust side)
5 Exhaust camshaft
6 Camshaft gear (Inlet side)
7 Inlet camshaft
8 Exhaust valve
9 Exhaust rocker shaft
10 Short rocker
11 Rocker shaft spring
12 Long rocker
13 Rocker cover
14 Short rocker
15 Inlet rocker shaft
16 Valve spring
17 Inlet valve
18 Piston
19 Flywheel
20 Connecting rod
21 Balance shaft RH
22 Rear plate
23 Crankshaft
24 Upper crankcase
25 Lower crankcase
26 Balance shaft LH
27 Injection pump gear
28 Balance shaft gear LH
29 Vacuum pump gear
30 No. 1 idler gear
31 Crankshaft gear
32 Oil pump gear
33 Balance shaft gear RH
34 Fan shaft assembly
35 Idler gear assembly

The 4M50T2 engine is of the double overhead camshaft (DOHC) type. The valve mechanism and timing gear arrangement is illustrated above.

Cylinder Head, Cylinder Head Gasket, Camshaft and Camshaft Frame

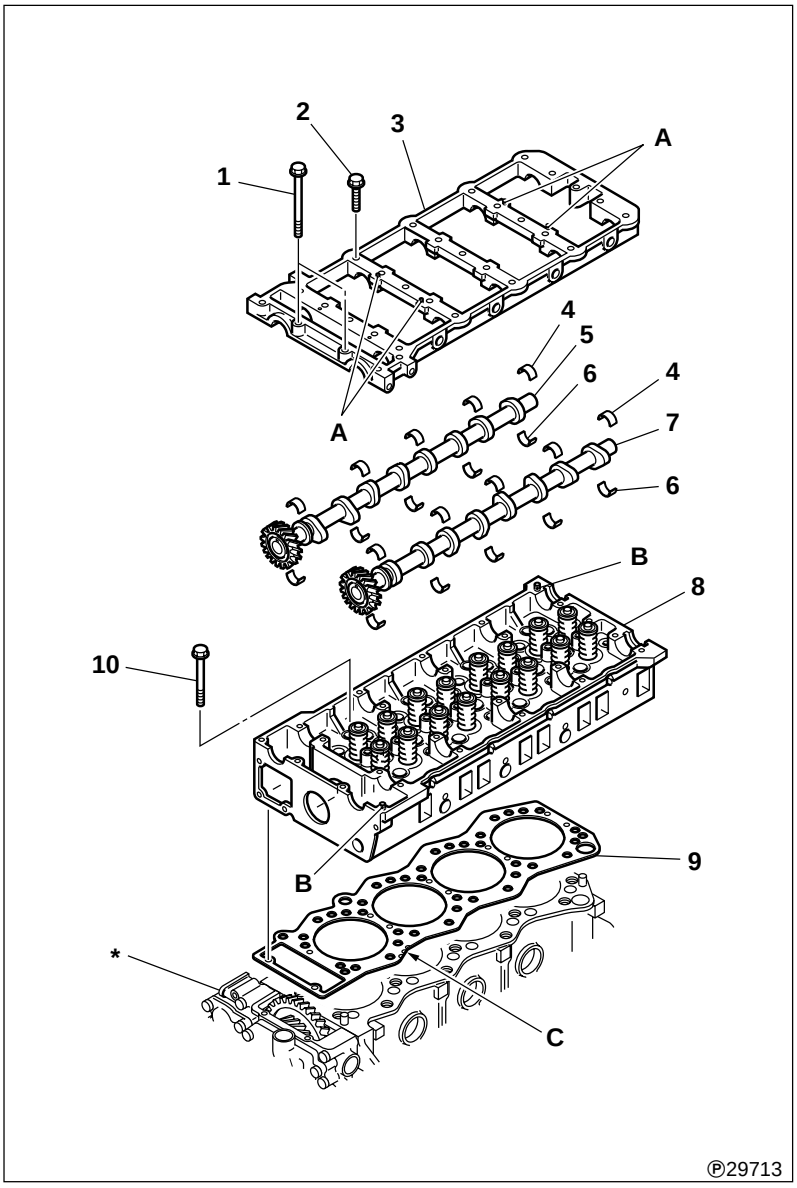

1 Bolt (x 2)
2 Bolt (x 13)
3 Camshaft frame
4 Camshaft bearing (Upper)
5 Exhaust camshaft
6 Camshaft bearing (Lower)
7 Inlet camshaft
8 Cylinder head
9 Cylinder head gasket
10 Cylinder head bolt

A: Locating pin
B: Locating pin
C: Notched portion
***:** Front

- The camshafts **5** and **7** have their journals supported by the cylinder head **8**, and are held down from above by the camshaft frame **3**.
- The camshaft bearings **4** and **6**, both upper and lower, are identical parts. When they are reassembled, however, be sure to reinstall them in their original positions, as they were before disassembly.
- The exhaust camshaft **5** and the inlet camshaft **7** have the same gears but use different cams. Use care not to confuse them at reassembly.
- As for the cylinder head gasket **9**, select and use one of proper thickness suitable for the projection of piston. The thickness of gaskets is identifiable by a difference in the shape of the notched portion **C**.
- The bolts **2** (x 13) are threaded into the cylinder head **8**, whereas the bolts **1** (x 2) are threaded into the front case*.

Valve Mechanism

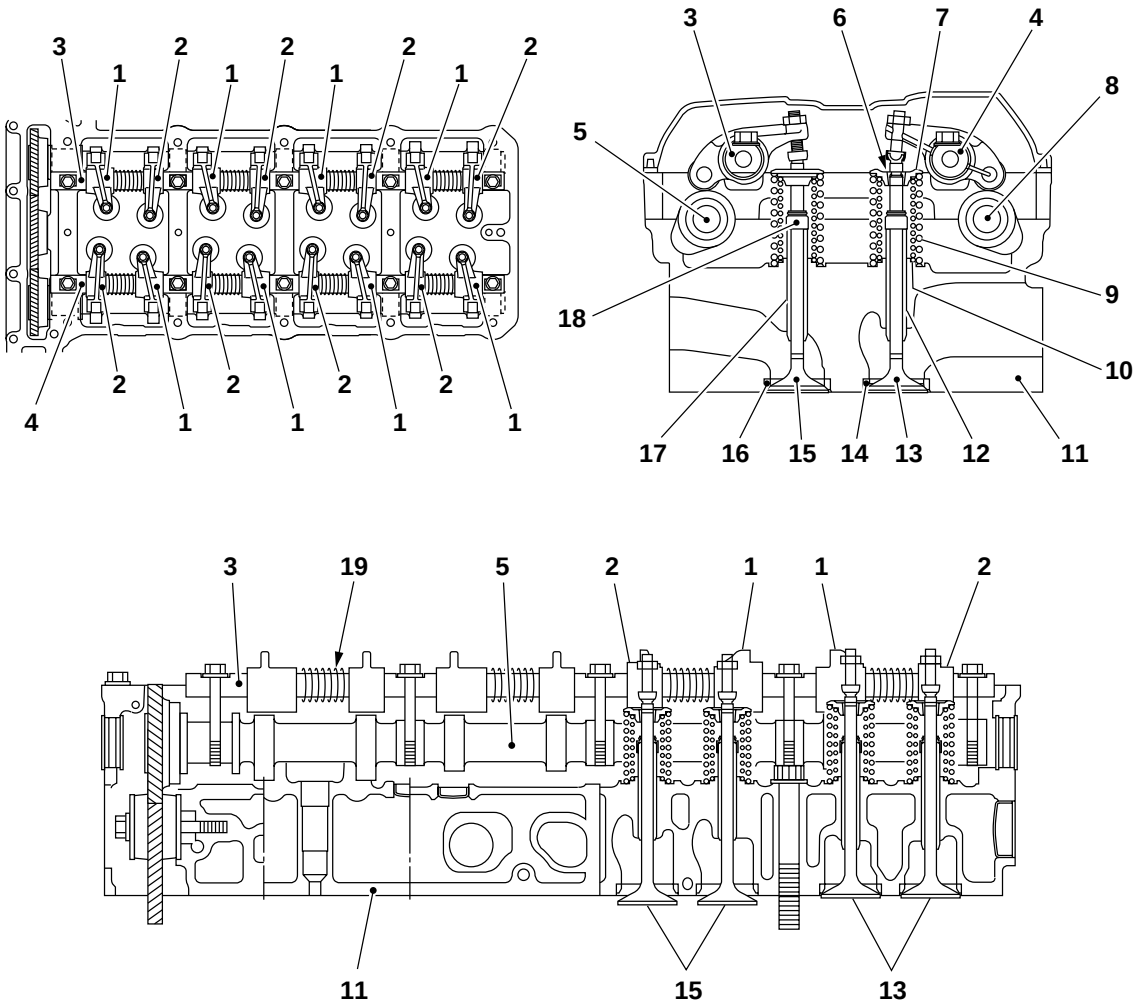

1 Short rocker
2 Long rocker
3 Exhaust rocker shaft
4 Inlet rocker shaft
5 Exhaust camshaft
6 Valve collet
7 Upper retainer
8 Inlet camshaft
9 Outer valve spring
10 Inner valve spring
11 Cylinder head
12 Inlet valve guide
13 Inlet valve
14 Inlet valve seat
15 Exhaust valve
16 Exhaust valve seat
17 Exhaust valve guide
18 Valve stem seal
19 Rocker shaft spring

- The rockers come in two types; short rockers **1** and long rockers **2**, and are mounted in different directions as illustrated.
- The valve springs include the outer springs **9** and inner springs **10**. A pair of outer and inner springs are used for a valve.

Connecting Rods

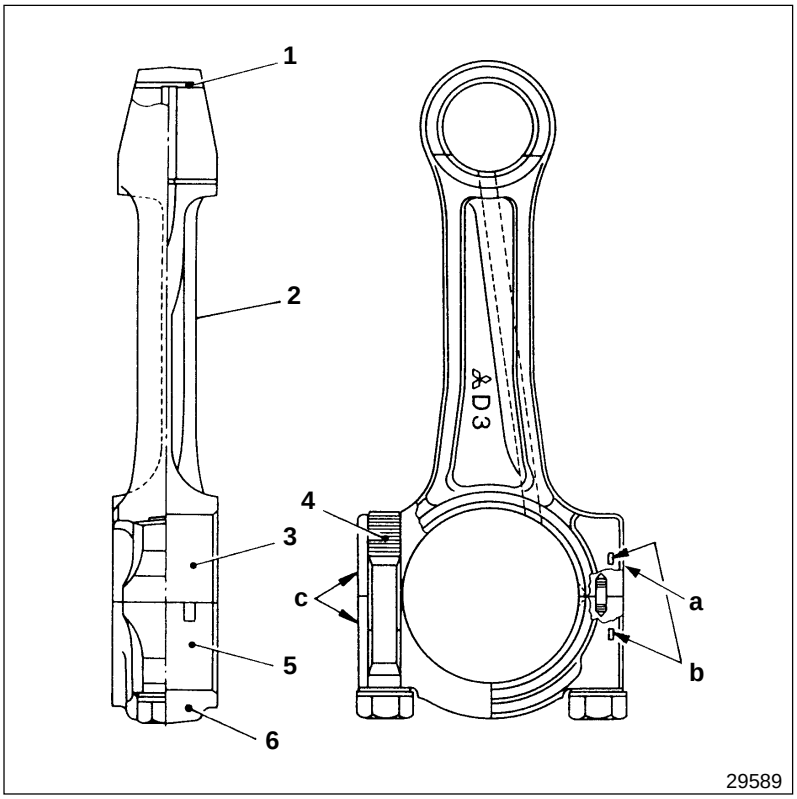

1 Connecting rod bushing
2 Connecting rod
3 Upper connecting rod bearing
4 Connecting rod bolt
5 Lower connecting rod bearing
6 Connecting rod cap

***a:** Weight mark stamp
"A" to "G"
(where "A" indicates the maximum connecting rod weight.)
***b:** Alignment mark
***c:** Alignment mark

Pistons

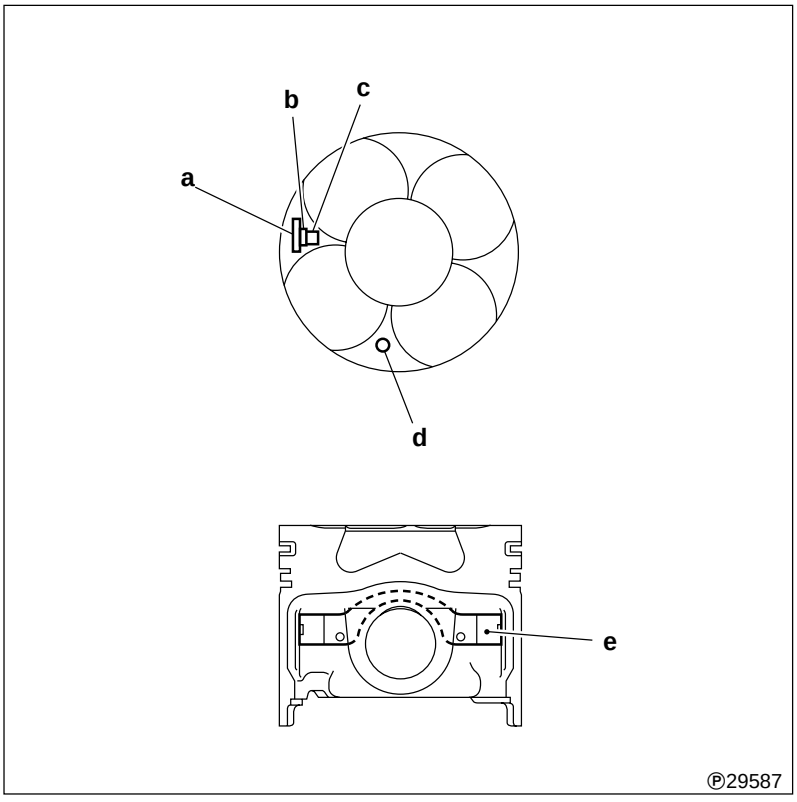

a: Part number
b: Weight mark
c: Size mark
"**A**", "**B**"
Pistons marked "**B**" are larger than those marked "**A**" in the outside diameter.
d: Front mark
Indicated by "○".
e: Strut

- Pistons to be used can be selected by matching the size mark of the piston with that of the cylinder liner. P. 11A-11
- The piston is made of special aluminum alloy. Its total height is relatively low and both end faces of the piston in the direction of the piston pin are concaved for weight reduction.
- The piston is an autothermic piston reinforced with strut **e**.

Timing Gears

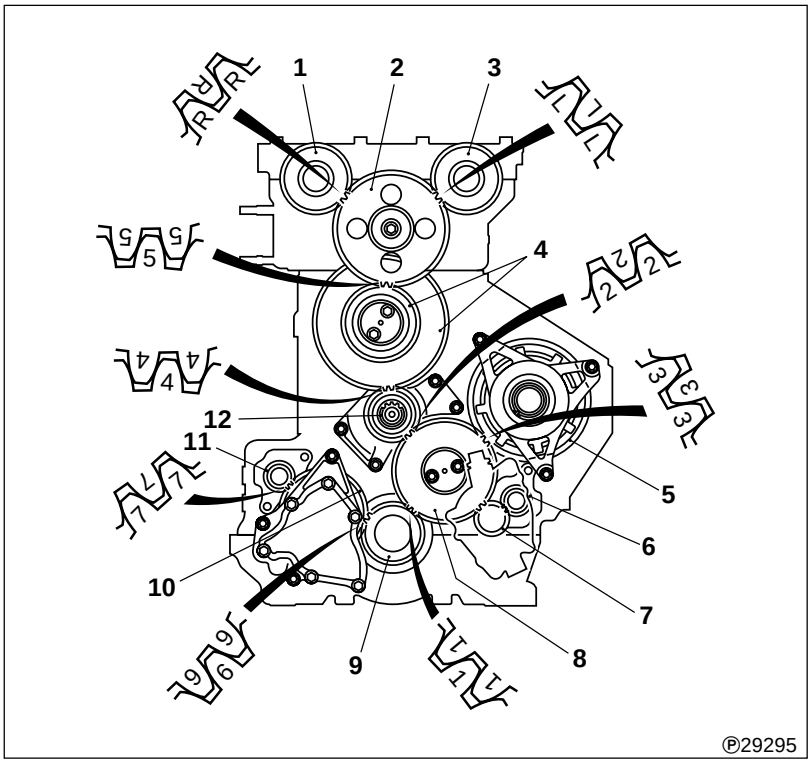

1 Camshaft gear RH (32)
2 Head idler gear (54)
3 Camshaft gear LH (32)
4 Idler gear (63, 36)
5 Injection pump gear (56)
6 Balance shaft gear LH (14)
7 Vacuum pump gear (15)
8 No. 1 idler gear (49)
9 Crankshaft gear (28)
10 Oil pump gear (41)
11 Balance shaft gear RH (14)
12 Fan shaft (25)
Number of teeth shown in parentheses

Each of the timing gears (except the vacuum pump gear) has alignment marks to ensure correct assembly.

Flywheel

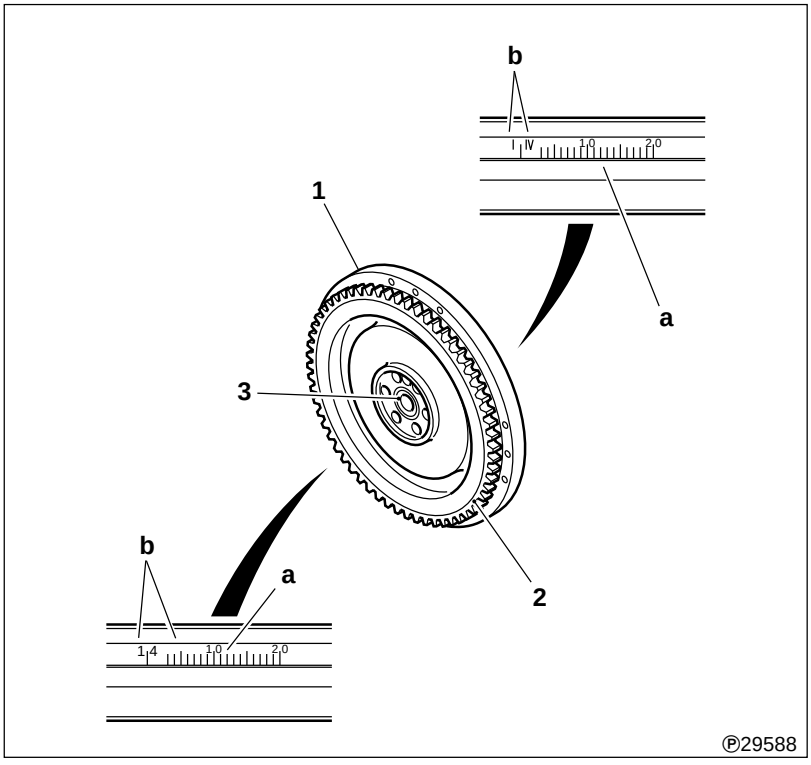

1 Flywheel
2 Ring gear
3 Pilot bearing

a: Angle scale
b: Cylinder No. (“1 4”, “I IV”)

Balance Shaft

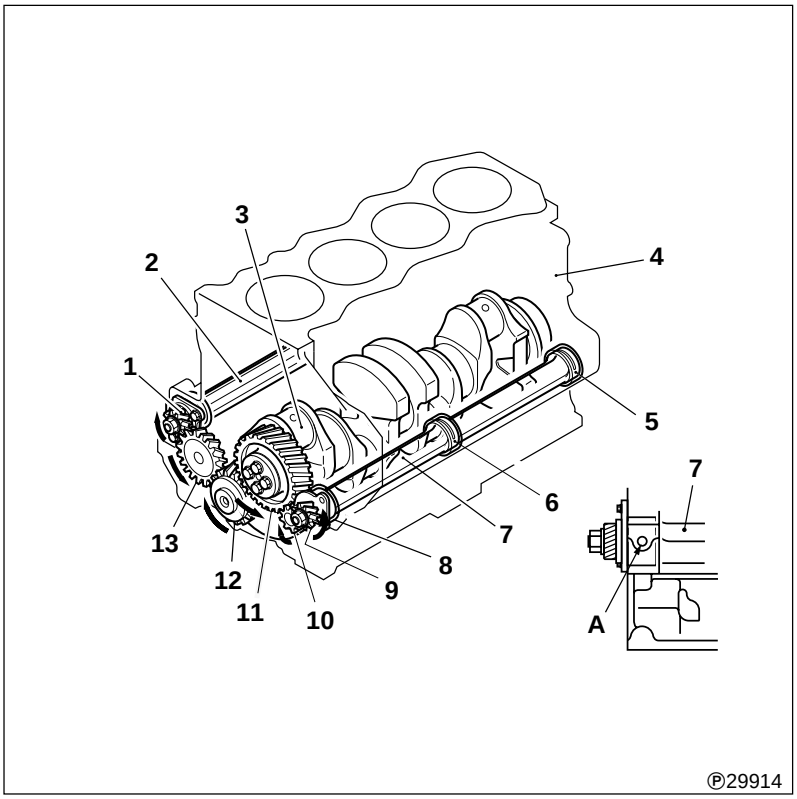

1 Balance shaft gear RH
2 Balance shaft RH
3 Crankshaft
4 Upper crankcase
5 No. 3 balance shaft bushing
6 No. 2 balance shaft bushing
7 Balance shaft LH
8 No. 1 balance shaft bushing
9 Balance shaft gear LH
10 Vacuum pump gear
11 No. 1 idler gear
12 Crankshaft gear
13 Oil pump gear

- The balance shafts RH **2** and LH **7** are mounted in the upper crankcase **4** with the crankshaft **3** sandwiched in between, and serve to reduce the engine vibration caused by rotation of the crankshaft.
- Both balance shafts RH **2** and LH **7** are supported by the three balance shaft bushings **5**, **6** and **8** mounted in upper crankcase **4** and driven by the timing gears (P. 11A-8).
- The balance shaft LH **7** is provided with a positioning hole **A** to ensure correct assembly. P. 11A-59

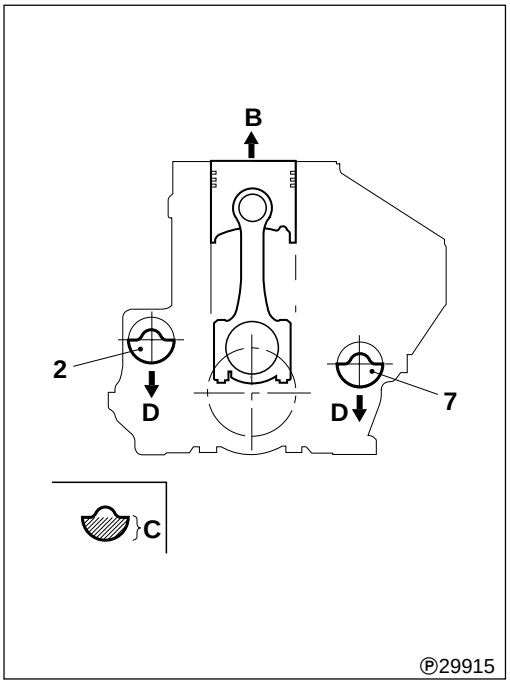

● **Reduction of vertical vibration (Secondary components)**

- The reciprocating motion of the piston produces inertial force **B**, the source of vertical vibration, at the top and bottom dead centers of the piston.
- The balance shafts RH **2** and LH **7** rotate in such a way that at the top and bottom dead centers of the piston, the semi-circular weight portion **C** will always be placed opposite to the piston head in terms of top or bottom position.
- As a result, at the top and bottom dead centers of the piston, both balance shafts RH **2** and LH **7** produce equal centrifugal force **D** to offset inertial force **B** of the piston, thereby reducing vertical vibration.
- In addition, in the medium and high engine speed ranges, the crankshaft rotation moments (secondary components) are also reduced by the balance shafts.

Crankcase and Main Bearings

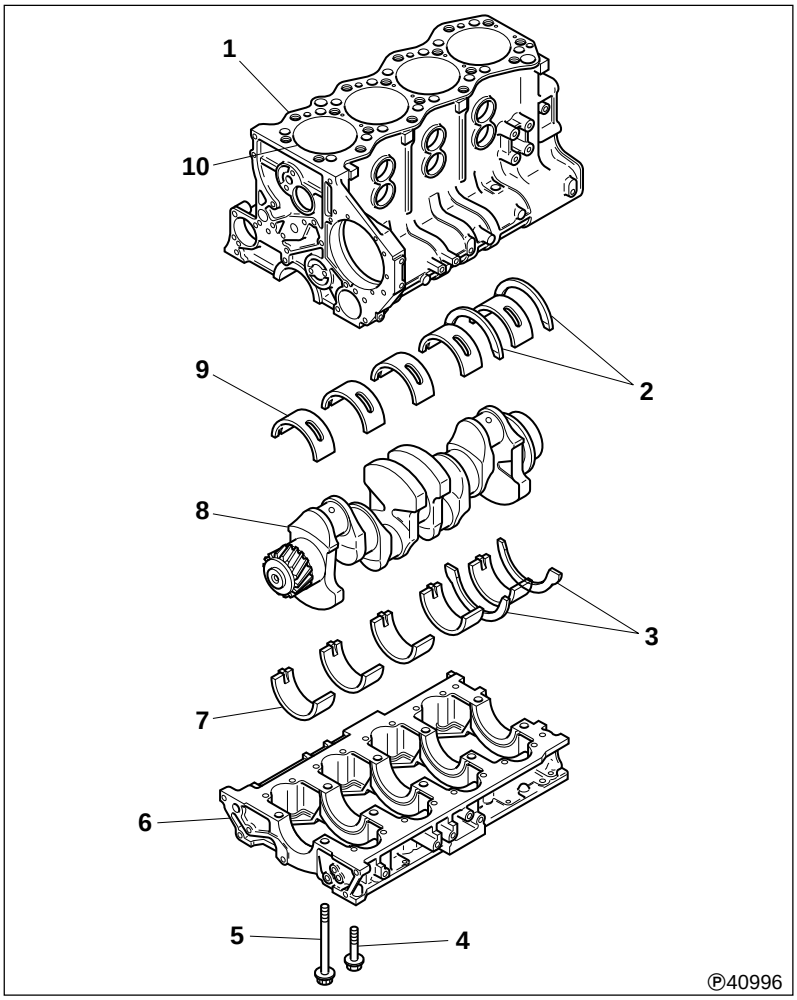

1 Upper crankcase
2 Upper thrust plate
3 Lower thrust plate
4 Bolt
5 Main cap bolt
6 Lower crankcase
7 Lower main bearing
8 Crankshaft
9 Upper main bearing
10 Cylinder liner

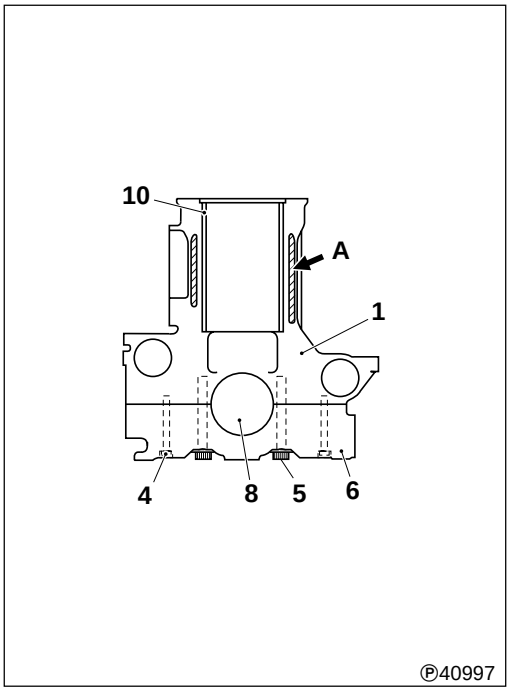

● **Crankcase**

- The crankcase is composed of two parts; upper crankcase **1** and lower crankcase **6**, which are coupled together with crankshaft **8** in between.
- The upper crankcase **1** has four cylinder bores provided into which cylinder liners **10** are fitted.
- Water jacket **A** is provided around the cylinders to cool down the cylinder liners **10**.
- The bolts **4** used to couple the upper crankcase **1** and the lower crankcase **6** and the main cap bolts **5** require the specified procedure to be followed when tightened. 📖 P. 11A-79

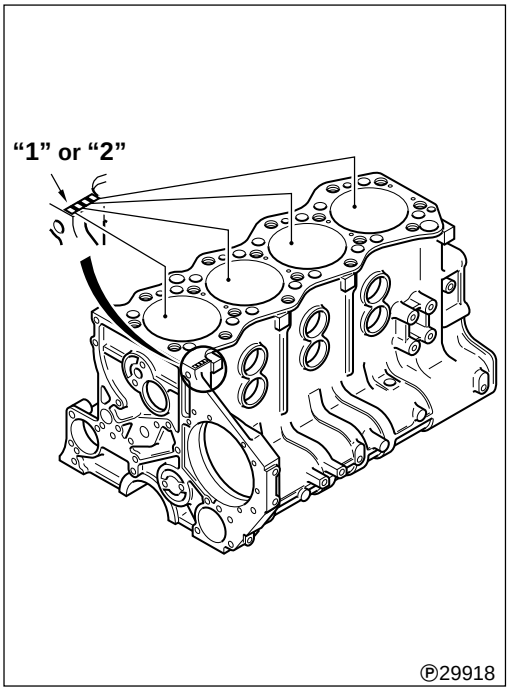

- Size mark "**1**" or "**2**" is stamped on the upper crankcase **1** for selective fitting of pistons in the crankcase.
- The size marks for the four cylinders are collectively stamped at a single location, and indicate the sizes of the respective cylinder liners as illustrated. P. 11A-7

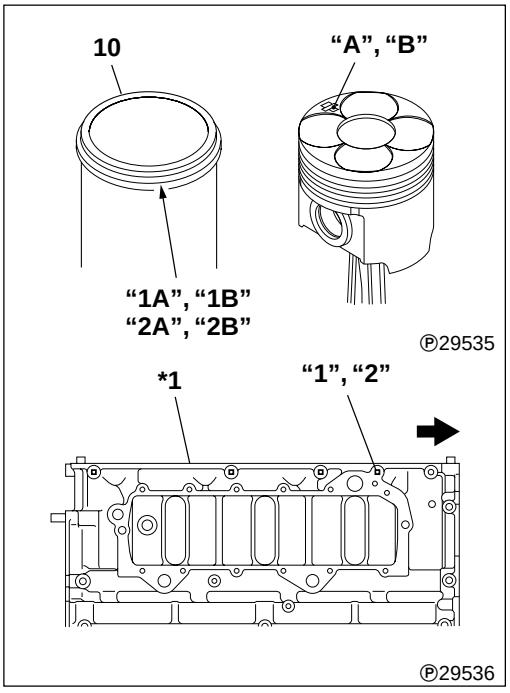

● **Cylinder liner**

- Select a cylinder liner **10** which has the same size mark as those stamped on the upper crankcase ***1*** the piston.
- The size marks on the upper crankcase ***1*** are arranged in the order of No. **1**, **2**, **3** and **4** cylinders starting from the engine front **C**.

Size marks on upper crankcase	Size marks on cylinder liners	Size mark on pistons
"1"	"1A"	"A"
	"1B"	"B"
"2"	"2A"	"A"
	"2B"	"B"

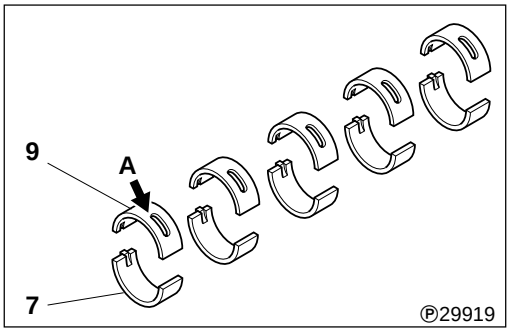

● **Main bearings**

The upper main bearing **9** has an oil hole **A** through which engine oil is supplied to the journal of the crankshaft **8**.

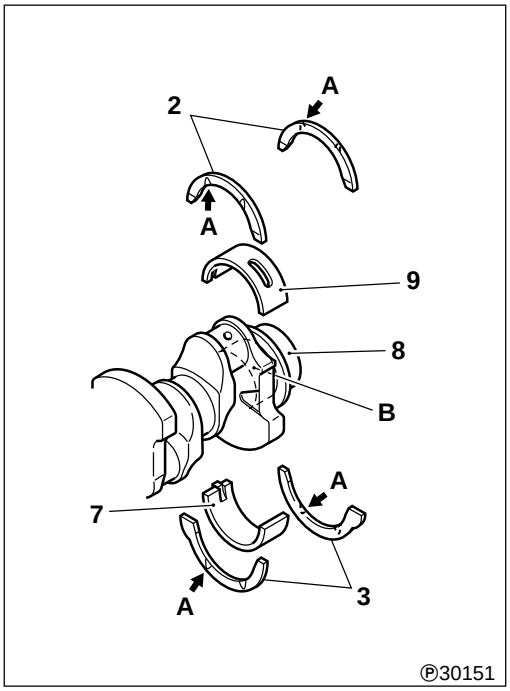

● **Thrust plates**

- The thrust plates include upper thrust plates **2** and lower thrust plates **3**. They are mounted at both ends of the upper main bearing **9** and the lower main bearing **7** at the rearmost portion of the crankshaft **8**.
- The thrust plates to be used should have a proper thickness suitable for the end play of the crankshaft **8**.
  Each thrust plate has an oil groove in two places to assure its smooth sliding on the journal **B** of the crankshaft **8**.

Oil Seals

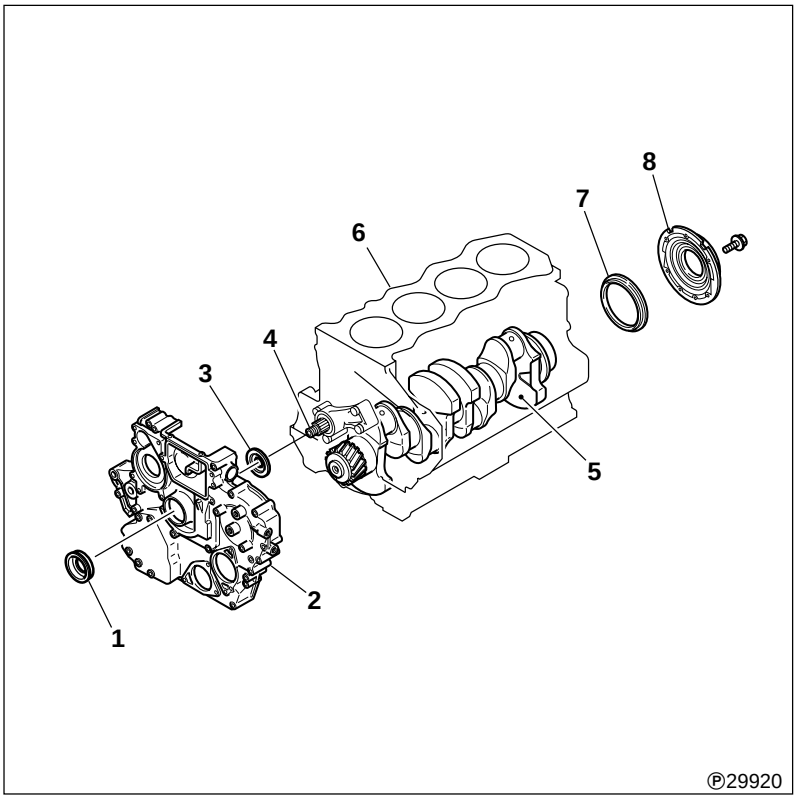

1 Front oil seal
2 Front case
3 Front oil seal slinger
4 Fan shaft
5 Crankshaft
6 Crankcase
7 Rear oil seal slinger
8 Rear oil seal

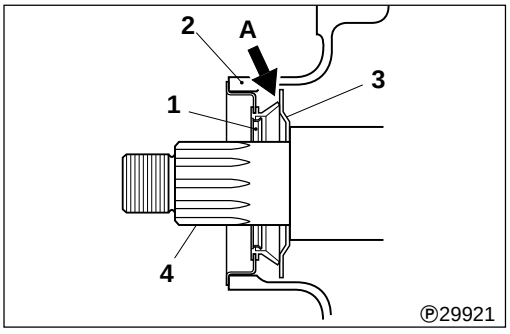

● **Front Oil Seal**

- The front oil seal **1** is mounted on the front case **2**. Its lip **A** is in contact with the front oil seal slinger **3** for sealing.
- The front oil seal slinger **3** is fitted on the fan shaft **4**.

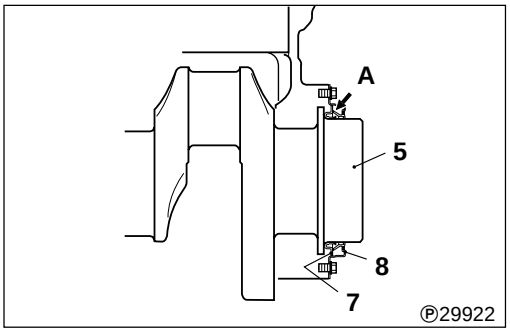

● **Rear Oil Seal**

- The rear oil seal **8** is mounted on the crankcase **6**. Its lip **A** is in contact with the rear oil seal slinger **7** for sealing.
- The rear oil seal slinger **7** is press-fitted on the rear end of the crankshaft **5**.

TROUBLESHOOTING

Possible Causes \ Symptoms		Low power output	Abnormal engine noise	Remarks
Cylinder head and valve mechanism	Incorrect valve clearance	×	×	
	Defective cylinder head gasket	×	×	
	Worn valve and valve seat, and deposited carbon	×	×	
	Weakened valve spring	×	×	
	Defective rocker shaft and bracket		×	
	Poor lubrication of rocker shaft bracket		×	
Timing gears	Incorrect backlash in timing gears		×	
	Poor lubrication of timing gear peripheries and idler shafts		×	
Camshaft	Excessive end play in camshaft		×	
	Worn camshaft		×	
Pistons and connecting rods	Worn/damaged piston ring groove(s)	×	×	
	Worn/damaged piston ring(s)	×	×	
	Worn piston pin and connecting rod small end bushing		×	
Crankshaft	Excessive end play in crankshaft		×	
	Incorrectly fitted fan pulley		×	
	Worn/damaged crankshaft pin and connecting rod bearing		×	
	Worn/damaged crankshaft journal and main bearing		×	
Fuel	Defective bearing in injection pump bearing housing		×	
	Faulty injection nozzle spray condition	×	×	Gr 13
	Incorrect injection timing	×	×	Gr 13
	Air trapped in fuel system	×		Gr 13
Cooling	Defective cooling system	×		Gr 14
	Loose/damaged V belt		×	
Intake and exhaust	Clogged air cleaner	×	×	Gr 15
	Clogged muffler	×	×	
Incorrect oil viscosity		×		
Improper fuel		×		
Incorrectly fitted piping, hose, etc.			×	
Defective/incorrectly fitted auxiliaries like injection pump and alternator			×	

MEMO

ON-VEHICLE INSPECTION AND ADJUSTMENT

Measuring Compression Pressure
Service standards

Location	Maintenance item		Standard value	Limit	Remedy
–	Compression pressure	Each cylinder (at 200 rpm)	2550kPa {370 psi², 26 kgf/cm²}	1960 kPa {285 psi², 20 kgf/cm²}	Inspect
		Cylinder-to-cylinder pressure difference	–	0.4 kPa {57 psi², 4 kgf/cm²}	Inspect

Special tools

Unit: mm {in.}

Location	Tool name and shape	Part No.	Application
–	Compression Gauge Adapter 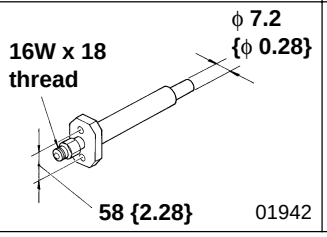	MH063434	Measuring compression pressure

A drop in compression pressure should be used as a guide in determining a time to overhaul the engine.
Measure the compression pressure at regular intervals, and keep track of its transition which will provide a useful tool for troubleshooting. On a new vehicle, or for a while after replacement of parts with new ones, the compression pressure will be somewhat higher, depending on the break-in condition of piston rings, valve seats, etc., but will return to normal as the parts wear down.

- Prior to an inspection, check to ensure that the engine oil, starter and battery are in normal condition.
- Place the vehicle in the following condition.
  - Warm up the engine until the coolant temperature reaches approx. 75 to 85 °C {167 to 185 °F}.
  - Turn off the lights and auxiliaries.
  - Place the transmission in neutral.
  - Place the steering wheel in the straight-ahead position.

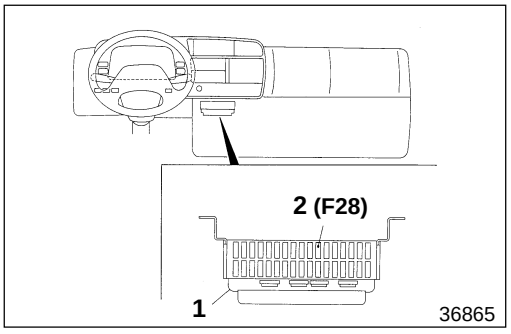

- Remove the fuel cut motor fuse **2** from the fuse box **1** in the cab to make sure that the fuel is not injected when the engine is cranked by the starter.

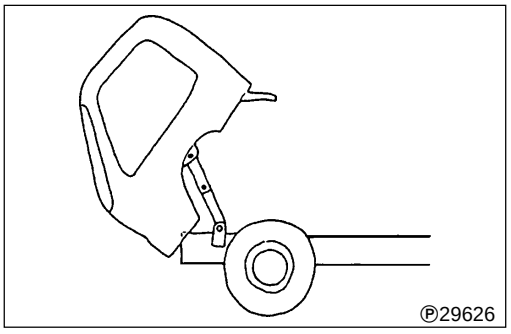

- Tilt the cab.

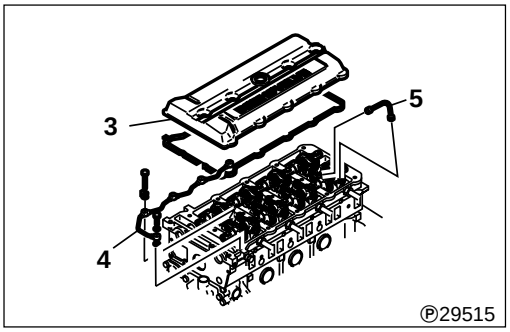

- Remove the rocker cover **3**, fuel leak-off pipe **4** and injection pipe **5**.
  P. 11A-20

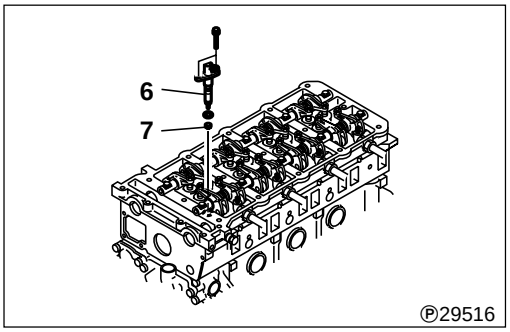

- Remove all injection nozzle assemblies **6** and nozzle gaskets **7**.
  P. 11A-34

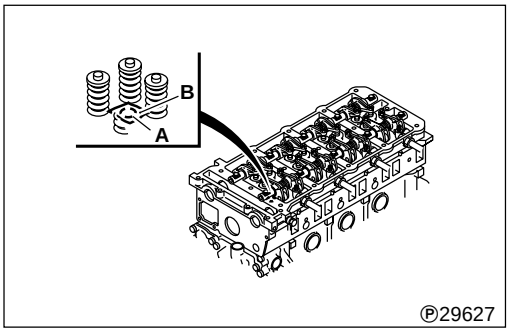

- Cover the injection nozzle mounting holes with pieces of waste cloth **B**. After cranking the engine by the starter, check to ensure that no foreign substances are deposited on the waste cloth.

WARNING ⚠

If there is a crack in any of the cylinders, some of the coolant, engine oil, fuel, etc. will enter the cylinder through the crack. If the engine is cranked in such a condition, these substances heated to high temperatures will blow out from nozzle mounting holes A and can be very dangerous. When the engine is cranked, therefore, stay away from the nozzle mounting holes.

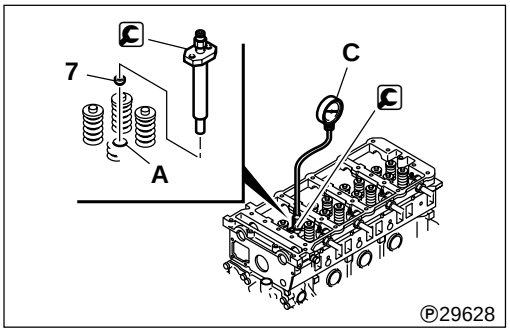

- Fit the nozzle gasket **7** and the C Compression Gauge Adapter onto the injection nozzle mounting hole **A** and mount the compression gauge **C**.
- Crank the engine and measure the compression pressure.
- On all of the cylinders, measure the compression pressure and determine the pressure difference between cylinders.
- If any compression pressure or cylinder-to-cylinder pressure difference is out of the limits, pour in a small amount of engine oil from injection nozzle mounting hole **A** and check by measuring the compression pressure again.
  - If the compression pressure increases:
    Worn/damaged piston rings and cylinder inner surfaces are suspected.
  - If the compression pressure remains unchanged:
    A seized valve, incorrectly seated valve or defective cylinder head gasket is suspected.

ON-VEHICLE INSPECTION AND ADJUSTMENT

Inspecting and Adjusting Valve Clearances

Service standards

Unit: mm {in.}

Location	Maintenance item		Standard value	Limit	Remedy
–	Valve clearance (when cold)	Inlet	0.4 {0.016}	–	Adjust
		Exhaust	0.5 {0.020}	–	Adjust

❶ Tightening torques

Unit: N·m {lbf.ft, kgf·m}

Location	Parts to be tightened	Tightening torque	Remarks
2	Lock nut (adjusting screw tightening)	11.2 {8.25, 1.14}	–

Valve clearances should be checked and adjusted as follows while the engine is cold.

[Inspection]

- Tilt the cab.
- Remove the rocker cover. 📖 P. 11A-20
- To place the piston No. 1 or No. 4 at the top dead center on the compression stroke, crank the engine until the pointer **A** in the clutch housing inspection window is aligned with the mark between "**I** and **IV**" inscribed in the flywheel.

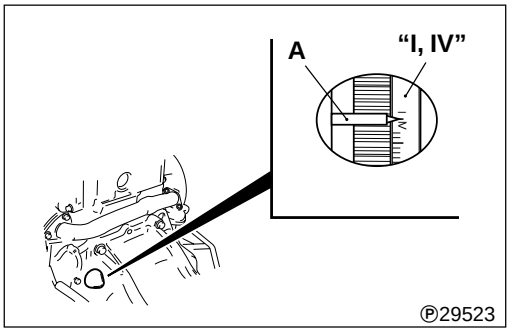

NOTE:

Find the cylinder where the rocker arms for both the inlet and exhaust valves can be pushed down. The piston of the cylinder is at the top dead center (TDC) on the compression stroke.

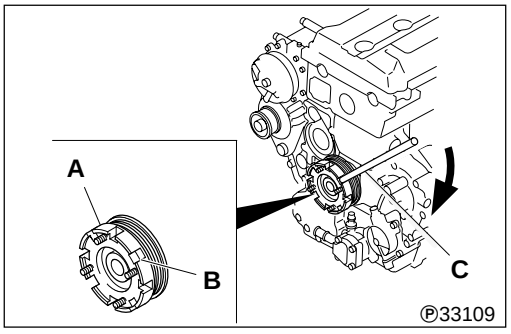

- Use a1/2" drive extension bar **C** (for socket wrench) to crank the engine; insert its end in the groove **B** located on the outer circumference of the fan pulley **A** to turn the crankshaft.

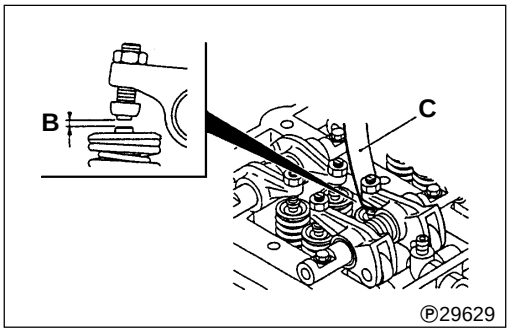

- With the piston No. 1 or No. 4 at the top dead center (TDC) on the compression stroke, measure the valve clearance **B** at the valves marked × in the following table.

Cylinder No.	1		2		3		4	
Valve arrangement	IN	EXH	IN	EXH	IN	EXH	IN	EXH
Piston No. 1 at TDC on compression stroke	×	×	×	–	–	×	–	–
Piston No. 4 at TDC on compression stroke	–	–	–	×	×	–	×	×

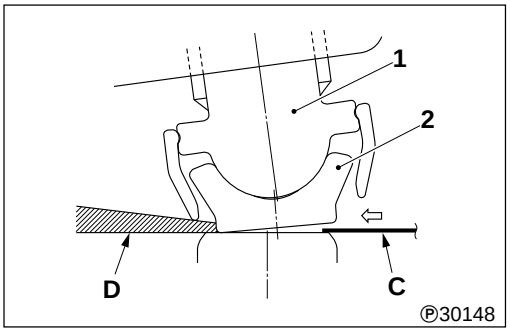

- When measuring the clearances, push the pad **2** of the adjusting screw **1** with the tip of a plain screwdriver **D** or something else from opposite the side where the feeler gauge **C** is to be inserted to open a gap as illustrated, then insert the feeler gauge in the gap.

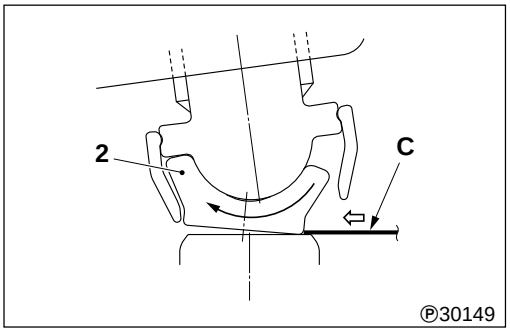

- If an attempt is made to insert a feeler gauge **C** without opening a gap, the pad will be tilted as illustrated, making it impossible to insert the feeler gauge.

NOTE:

- **The feeler gauge C must have a slight drag when taking a measurement.**
- **If the feeler gauge moves without any resistance, the measurement is incorrect (too loose).**

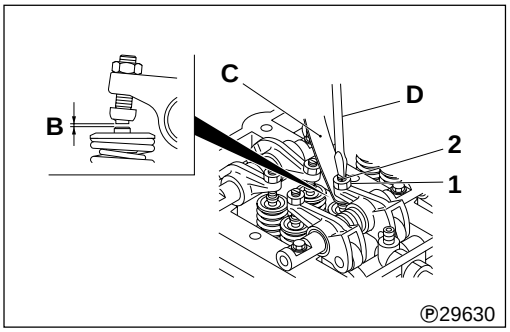

- If the reading is out of specification, adjust by the following procedures.

[Adjustment]

- To adjust the valve clearance **B**, loosen the lock nut **1** and rotate the adjusting screw **2** to adjust the clearance to the extent that the feeler gauge **C** is somewhat hard to move.
- After the adjustment, hold the adjusting screw **2** in position with a screwdriver **D** and tighten the lock nut **1** to the specified torque.
  Thereafter, re-check the valve clearance **B** with the feeler gauge **C**.

ROCKER COVER, ROCKER ASSEMBLIES AND CAMSHAFTS

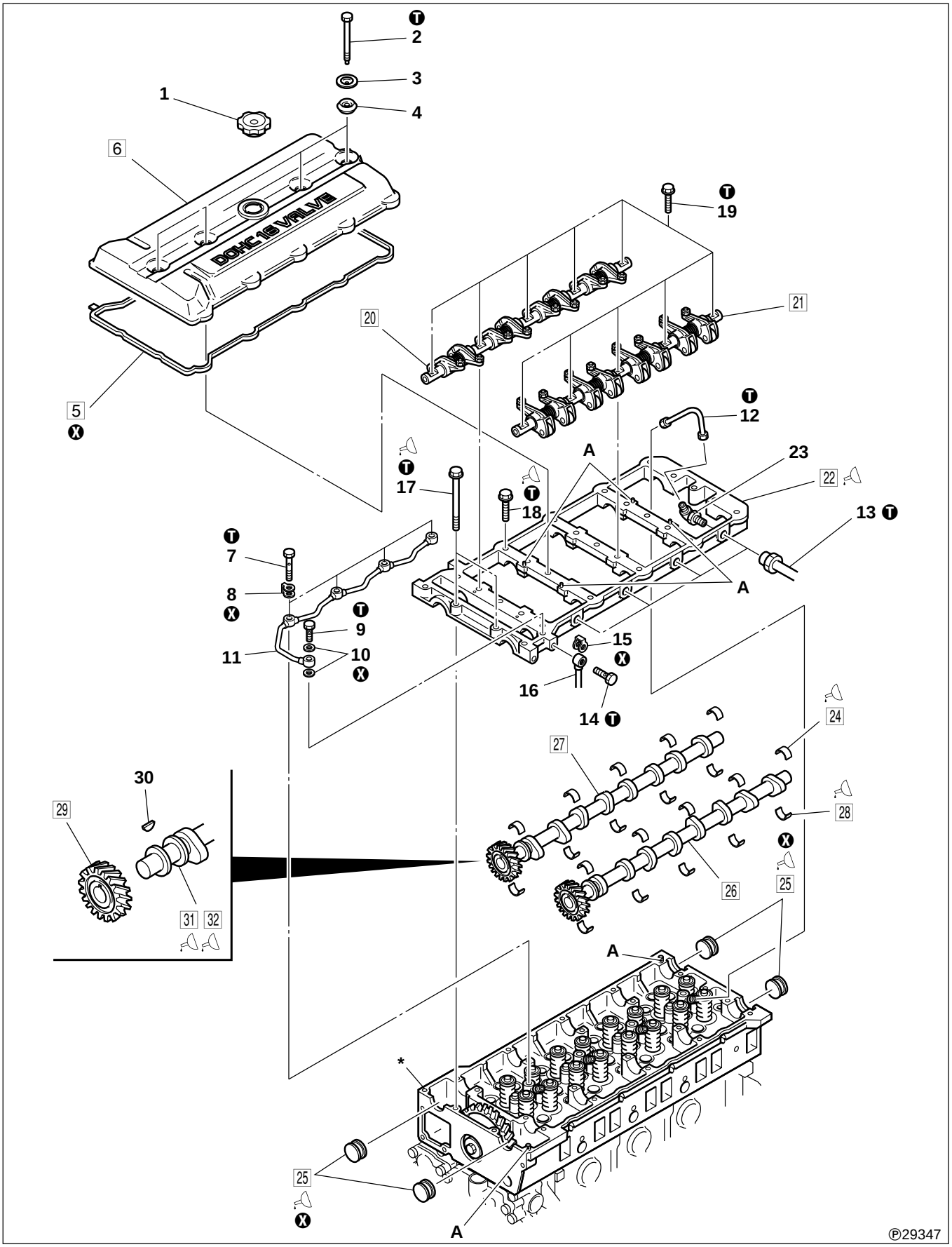

● **Pre-disassembly inspection**

P. 11A-23

● **Pre-disassembly work**

Some work is necessary before disassembly. P. 11A-23

● **Disassembly sequence**

1 Oil filler cap
2 Bolt
3 Plate
4 Rubber grommet
5 Rocker cover gasket
6 Rocker cover
7 Eye bolt
8 Gasket
9 Eye bolt
10 Gasket
11 Fuel leak-off pipe
12 Injection pipe
Group 13A
13 Injection pipe
Group 13A
14 Eye bolt
15 Gasket
16 Fuel return pipe
Group 13A
17 Bolt (x 2)
18 Bolt (x 13)
19 Bolt (x 10)
20 Exhaust rocker shaft assembly
P. 11A-30
21 Inlet rocker shaft assembly
P. 11A-30
22 Camshaft frame
23 Injection pipe connector
24 Camshaft bearing (upper)
25 Packing
26 Inlet camshaft assembly
27 Exhaust camshaft assembly
28 Camshaft bearing (lower)
29 Camshaft gear
30 Key
31 Inlet camshaft
32 Exhaust camshaft

***:** Cylinder head assembly
P. 11A-34
A: Locating pin
: Non-reusable part

NOTE

- **Avoid removing the camshaft gear 29 unless something wrong is evident.**
- **The camshaft frame 22 and the cylinder head assembly * have been machined jointly when manufactured. It is impossible to replace only either of the parts. Be sure not to change the combination.**

● **Assembly sequence**

Follow the disassembly sequence in reverse.

Service standards

Unit: mm {in.}

Location	Maintenance item		Standard value	Limit	Remedy
–	Backlash	Between head idler gear assembly and camshaft gear	0.09 to 0.12 {0.0035 to 0.0047}	0.3 {0.012}	Replace
		Between head idler gear assembly and idler gear assembly	0.11 to 0.14 {0.0043 to 0.0055}	0.3 {0.012}	
	End play	Camshaft assembly	0.10 to 0.20 {0.0039 to 0.0079}	0.3 {0.012}	Check all the parts.
		Head idler gear assembly	0.10 to 0.20 {0.0039 to 0.0079}	0.3 {0.012}	
24, 28	Camshaft bearing free span		–	35.5 {1.39} or more	Replace

ROCKER COVER, ROCKER ASSEMBLIES AND CAMSHAFTS

Service standards

Unit: mm {in.}

Location	Maintenance item			Standard value (Basic diameter in [ ])	Limit	Remedy
26	Inlet camshaft	Cam lift	For long rocker	7.157 {0.281}	7.107 {0.297}	Lobe height: 42.157 {1.66} Base circle diameter: 35 {1.38}
			For short rocker	9.202 {0.36}	9.152 {0.36}	Lobe height: 44.201 {1.74} Base circle diameter: 35 {1.38}
		Bend		0.01 {0.00039}	0.03 {0.0012}	Replace
		Journal oil clearance		0.07 to 0.12 {0.0028 to 0.0047}	0.16 {0.0063}	Replace
27	Exhaust camshaft	Cam lift	For long rocker	7.217 {0.284}	7.167 {0.282}	Lobe height: 42.217 {1.66} Base circle diameter: 35 {1.38}
			For short rocker	9.279 {0.365}	9.229 {0.363}	Lobe height: 44.279 {1.74} Base circle diameter: 35 {1.38}
		Bend		0.01 {0.00039}	0.03 {0.0012}	Replace
		Journal oil clearance		0.07 to 0.12 {0.0028 to 0.0047}	0.16 {0.0063}	Replace
29, 31, 32	Camshaft gear and camshaft interference			[30 {1.18}] 0.007 to 0.041 {0.00028 to 0.00160}	–	Replace

❶ Tightening torques

Unit: N·m {ft.lbs, kgf·m}

Location	Parts to be tightened	Tightening torque	Remarks
2	Bolt (mounting rocker cover)	2.0 {14.0, 0.2}	–
7, 9	Eye bolt (mounting fuel leak-off pipe)	20.6 {15.0, 2.1}	
12, 13	Injection pipe	29.4 {22.0, 3.0}	–
14	Eye bolt (mounting fuel return pipe)	20.6 {15.0, 2.1}	–
17	Bolt (mounting camshaft frame)	23.5 {17.0, 2.4}	Wet
18	Bolt (mounting camshaft frame)	27.5 {20.0, 2.8}	Wet
19	Bolt (mounting rocker shaft assembly)	27.5 {20.0, 2.8}	Wet

Lubricant and sealant

Location	Points of application	Specified lubricant and/or sealant	Quantity
17, 18	Bolt threads and seating surface	Engine oil	As required
22	Surface of camshaft frame which makes contact with cylinder head	THREEBOND 1207C or D	As required
24, 28	Inside surface of camshaft bearing	Engine oil	As required
25	Circumference of packing	THREEBOND 1207C or D	As required
31, 32	Journal and cam portions of camshaft	Engine oil	As required

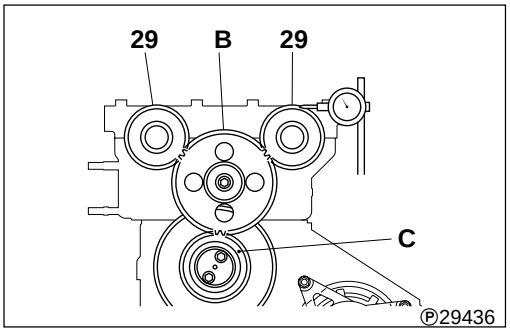

● **Pre-disassembly inspection**

(1) Backlash between head idler gear B and camshaft gear 29 and idler gear assembly C

On a pair of gears, measure backlash at more than three positions. If the reading is more than the limit, replace defective parts.

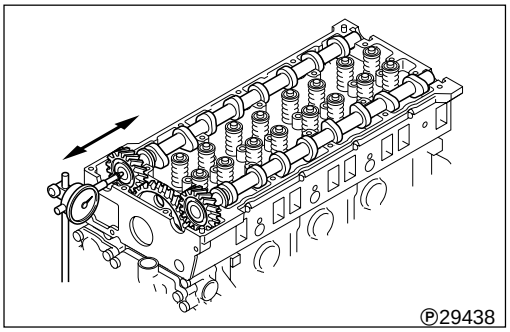

(2) End play of camshaft

If the reading is more than the limit, replace defective parts.

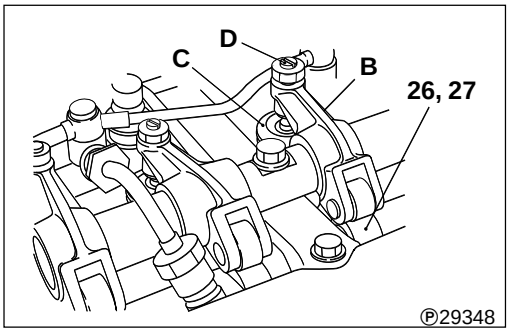

● **Pre-disassembly work**

If the rocker **B** forced up by the camshaft **26** or **27** is pressing the valve spring **C** down, loosen the adjusting screw **D** of the rocker to set the valve spring free.

◆ Service procedure

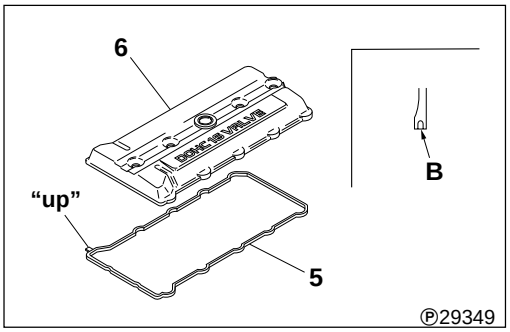

5 6 **Installation of rocker cover and rocker cover gasket**

- Before installing the rocker cover **6**, remove oil and other deposits thoroughly from the gasket groove **B**.
- Face the rocker cover gasket **5** as illustrated when it is installed on the rocker cover **6**.

CAUTION ⚠

Make sure that the rocker cover gasket 5 is not twisted when installed.

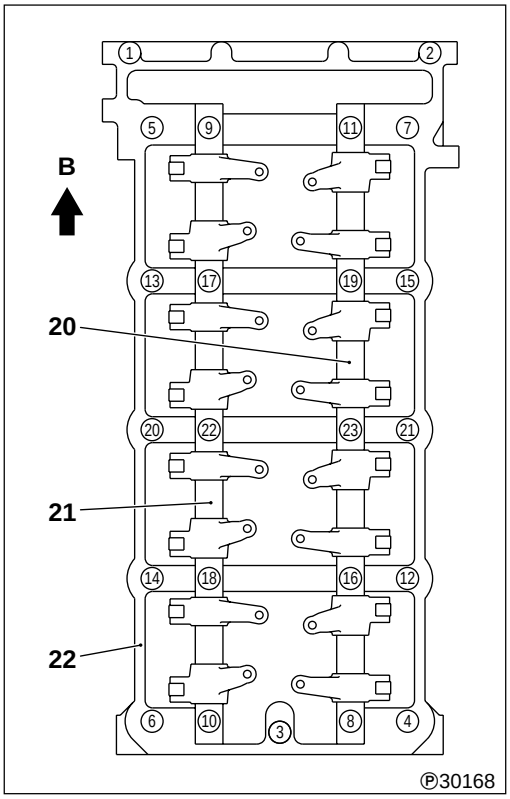

[20] to [22], [25] Rocker shaft assemblies, camshaft frame and packing

[Removal]

Loosen the bolts **18** and **19** (① through ㉓) one after another, a small amount at a time, in the numbered sequence shown in the illustration. Then remove the rocker shaft assemblies **20** and **21** and the camshaft frame **22**.

B: Front of engine

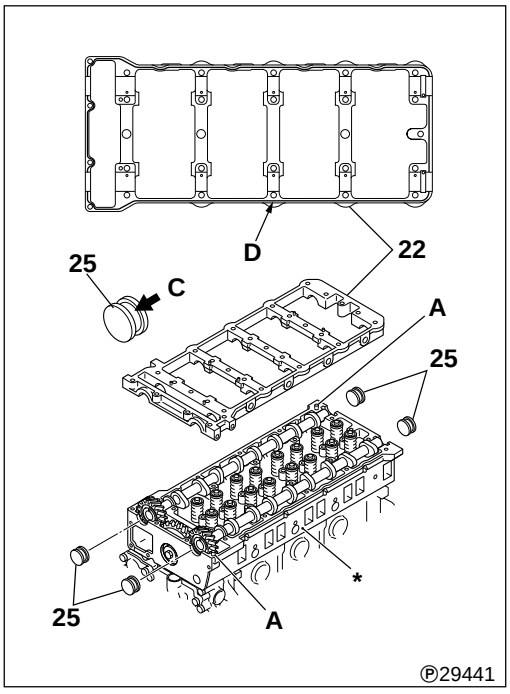

[Installation]

- Apply an even bead of sealant (ϕ 2 ± 1 mm {ϕ 0.079 ± 0.039}) without any break to all around the illustrated portion **C** of the four packings **25**.
- Apply an even bead of sealant (ϕ 1 mm {0.039}) without any break on the circumference **D** of the camshaft frame **22**.
- After the sealant application, install the camshaft frame **22** and the packings **25** on the cylinder head assembly* in less than three minutes.

CAUTION ⚠

- **Check to ensure that the sealant application surfaces C and D are clean and free from any oil or other deposits.**
- **When installing the parts, make sure that the sealant is not forced out of position.**
- **Do not start the engine in less than an hour after installation.**

A: Locating pin

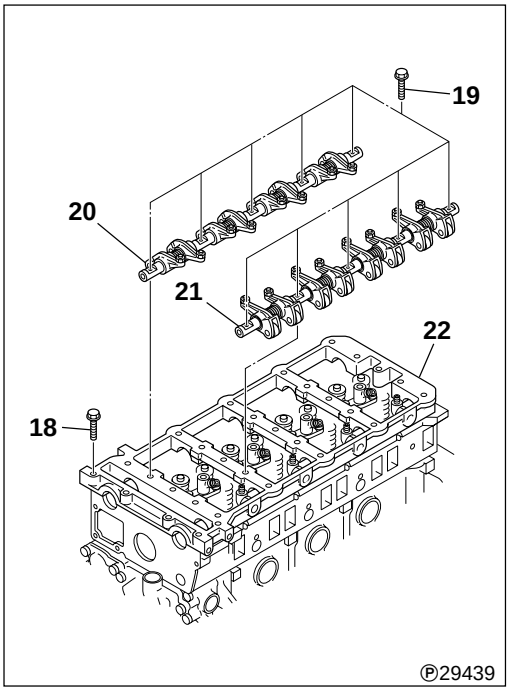

- The bolts **18** (x 13) and **19** (x 10) must be tightened in the following sequence. Therefore, secure the rocker shaft assemblies **20** and **21** together with the camshaft frame **22**.

CAUTION ⚠

When the bolts 18 and 19 were loosened or removed after installation, be sure to re-apply sealant.

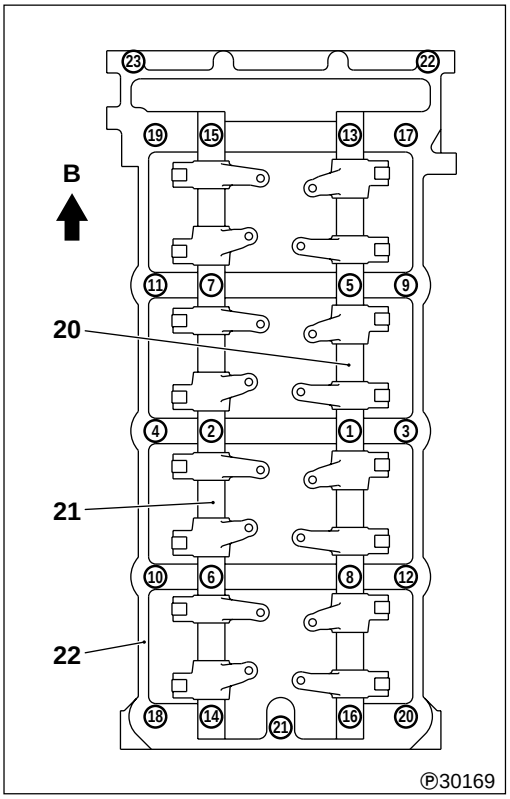

- Tighten the bolts **18** and **19** (① through ㉓) to the specified torque in the numbered sequence shown in the illustration.

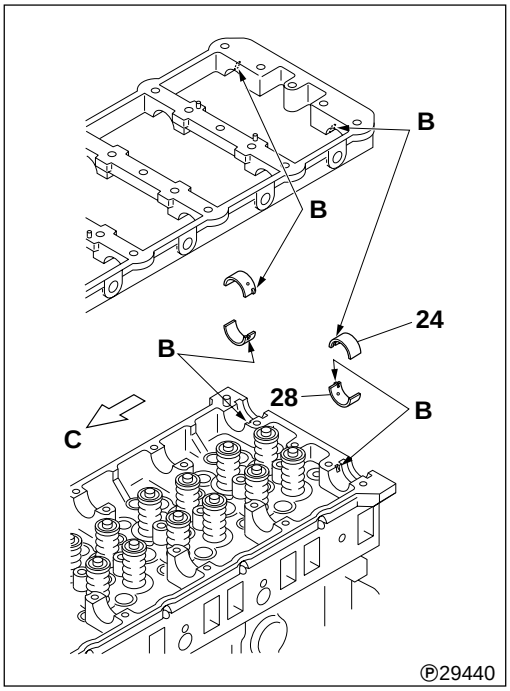

24 28 Installation of camshaft bearings

Be sure to fit the lugs **B** of the camshaft bearings **24** and **28** in the mating notches.

C: Front of engine

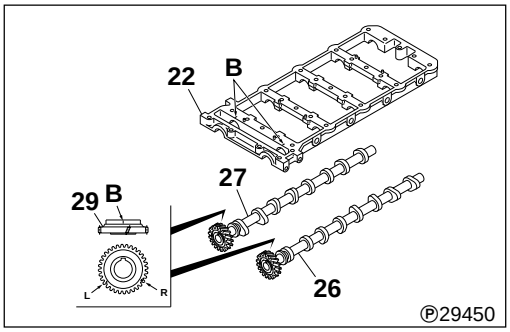

26 27 Installation of camshaft assemblies

- Place the piston of No. 1 cylinder at the top dead center on the compression stroke.
- Install the camshaft assemblies **26** and **27** with the alignment marks **B** on the camshaft gear **29** and on the camshaft frame **22** in alignment.

NOTE:

The alignment marks "L" and "R" on the camshaft gear 29 and those on the head idler gears need not always be in alignment, because the alignment mark of the head idler gears, depending on their mounted condition, does not always match that of the camshaft gear.

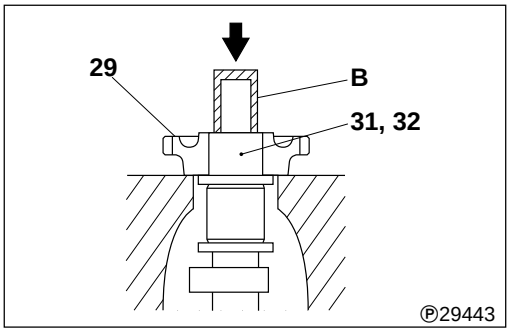

29 Camshaft gear

[Removal]

Remove the camshaft gear **29** by pressing the camshaft end with a press.

B: Removal block

CAUTION ⚠

Never strike the camshaft gear 29 with a hammer to remove it. Be sure to use a press or a similar tool.

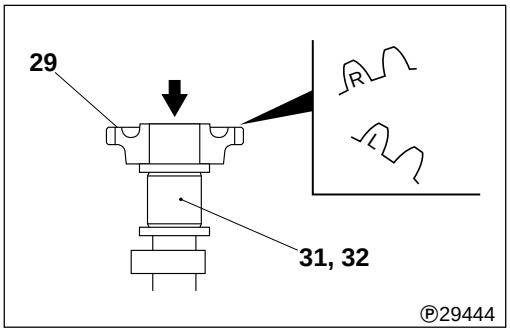

[Installation]

- Heat the camshaft gear **29** to 150 °C {302°F} by a piston heater or a similar tool and install it with the alignment mark "R" or "L" directed as shown.
- Install the camshaft gear **29** such that it is held tightly against the camshaft **31** or **32**.

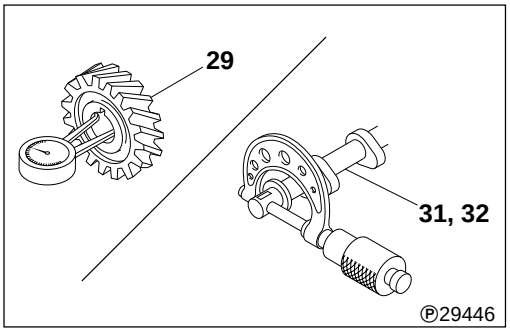

29 31 32 **Camshaft gear and camshaft interference**

If the reading is out of the standard values, replace defective parts.

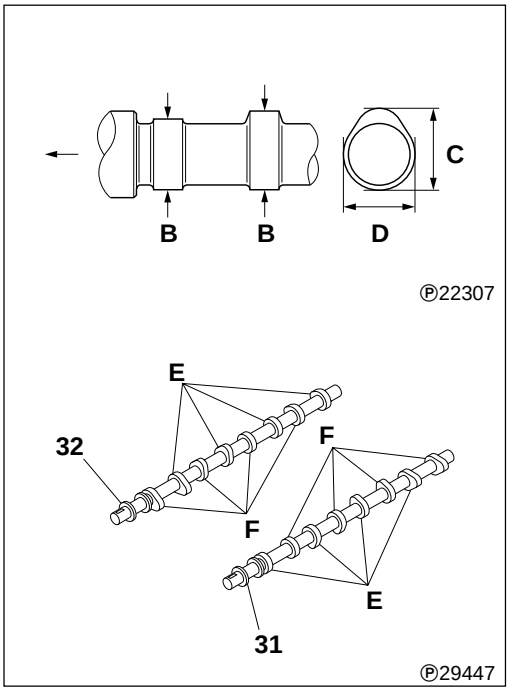

31 32 **Inspection of camshafts**

(1) Cam lift (Difference between lobe height and base circle diameter)

If the reading is less than the limit, replace the camshafts **31** and **32**.

- **B:** Measuring position
- **C:** Cam lobe height
- **D:** Base circle diameter
- **E:** Long rocker side cam
- **F:** Short rocker side cam

NOTE:

The cam dimensions are different between the long rocker side cams E and the short rocker side cams F.

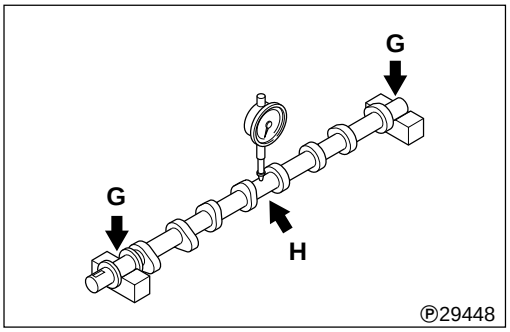

(2) Bend

Measure the bend of the camshafts **31** and **32** at the journal **H** with the journals **G** supported. If the reading is in excess of the limit, replace the camshaft.

NOTE:

The bend of the camshafts 31 and 32 is one half of the reading of the dial indicator taken after turning the camshaft through a rotation.

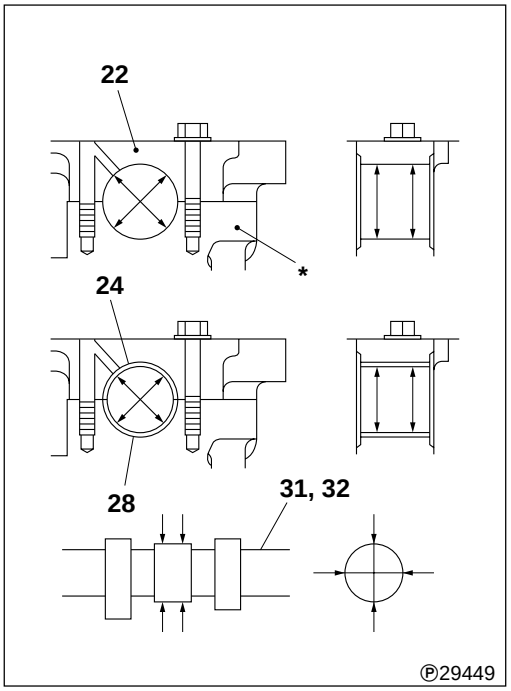

(3) Oil clearance between journals and bearings

Measure the oil clearance. If the reading is in excess of the limit, replace defective parts.

CAUTION ⚠

If a camshaft bearing 24 or 28 is to be replaced, make sure that both upper and lower halves are simultaneously replaced as a pair.

MEMO

ROCKER COVER, ROCKER ASSEMBLIES AND CAMSHAFTS

Rocker Shaft and Rocker Assembly

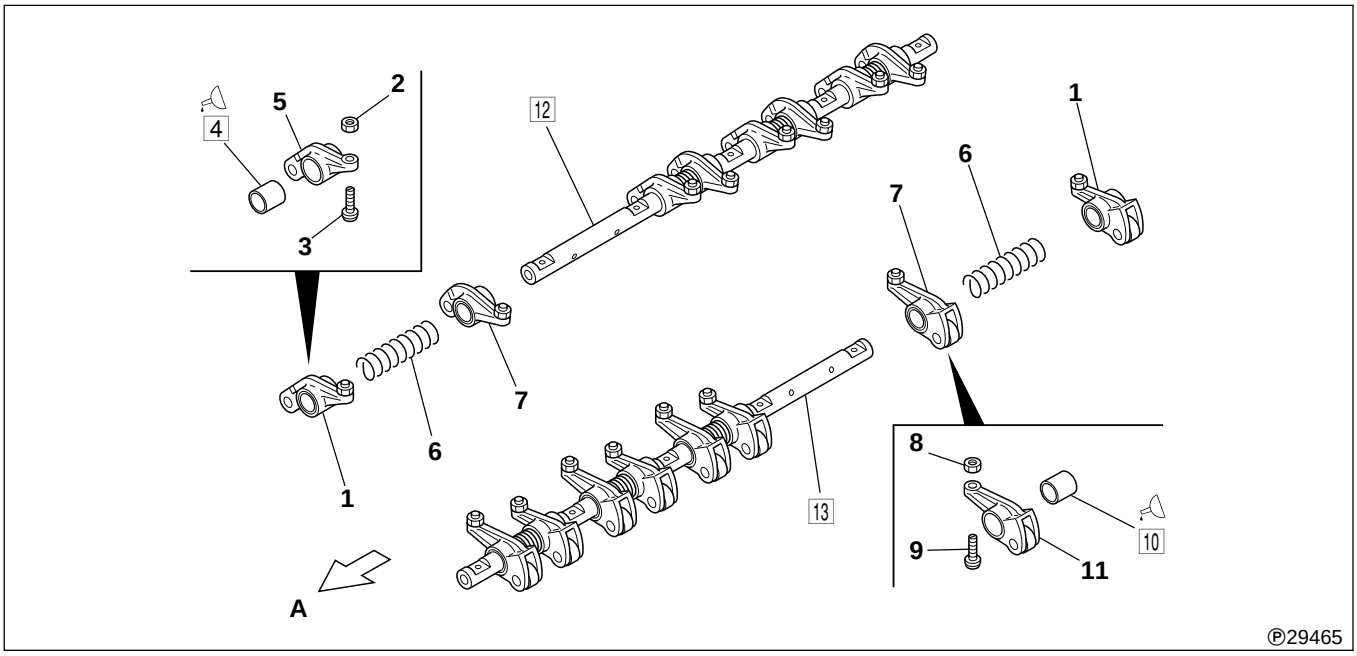

●Disassembly sequence

1 Short rocker assembly
2 Lock nut
3 Adjusting screw
4 Rocker bushing
5 Short rocker
6 Rocker shaft spring
7 Long rocker assembly
8 Lock nut
9 Adjusting screw
10 Rocker bushing
11 Long rocker
12 Exhaust rocker shaft
13 Inlet rocker shaft

A: Front of engine

●Assembly sequence

Follow the disassembly sequence in reverse.

CAUTION ⚠

The rockers come in two types; short rocker assembly 1 and long rocker assembly 7. Note the difference in mounting sequence between the inlet and exhaust rocker shafts.

Service standards

Unit: mm {in.}

Location	Maintenance item	Standard value (Basic diameter in [ ])	Limit	Remedy
1, 7	Radial play of rocker assembly rollers	0.038 to 0.100 {0.0014 to 0.0039}	–	Replace
4, 10, 12, 13	Clearance between rocker bushing and rocker shaft	[22 {0.87}] 0.01 to 0.08 {0.0039 to 0.0031}	0.12 {0.0047}	Replace

❶ Tightening torque

Unit: N·m {ft.lbs, kgf·m}

Location	Parts to be tightened	Tightening torque	Remarks
2, 8	Lock nut (securing adjusting screw)	11.2 {8.24, 1.14}	

Lubricant

Location	Points of application	Specified lubricant	Quantity
4, 10	Inside of rocker bushing	Engine oil	As required

Special tools

Unit: mm

Location	Tool name and shape	Part No.	Application
4, 10	Rocker Bushing Puller 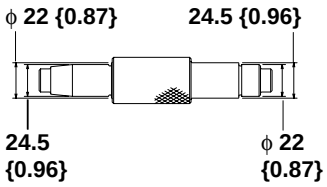	Use Equivalent	Installation and removal of rocker bushing

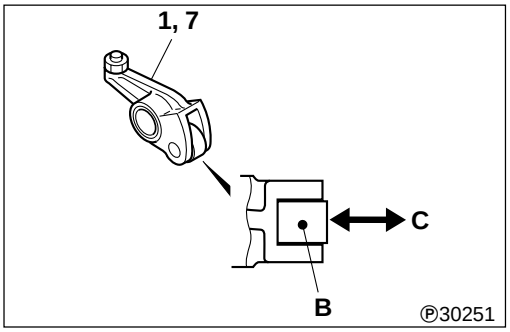

◆ Service procedure

1 7 Inspection of rocker assemblies

If the play **C** of the roller **B** of the rocker assembly **1** or **7** are out of the standard values, replace the assembly.

C: Radial play

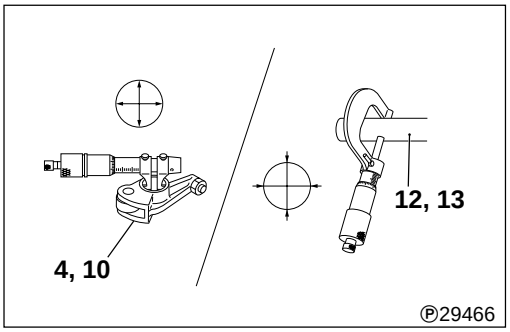

4 10 12 13 Rocker bushing and rocker shaft

[Inspection]

If the clearance is in excess of the limit, replace defective parts.

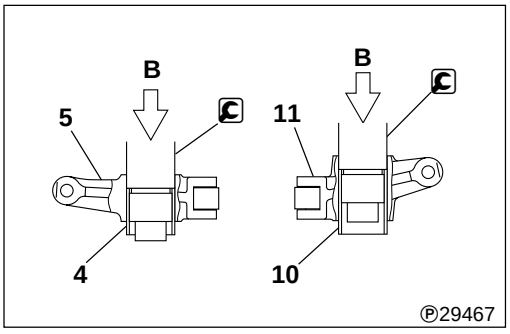

Rocker bushing

[Removal]

: Rocker Bushing Puller
B: Press

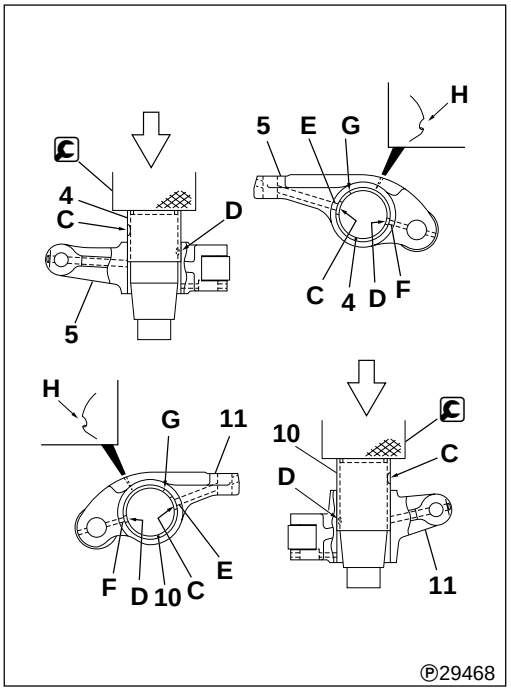

[Installation]

Install the rocker bushings **4** and **10** on the rockers **5** and **11** in the illustrated direction.

- **C:** Rocker Bushing Puller
- **C:** Rocker bushing oil hole
- **D:** Rocker bushing oil hole
- **E:** Rocker oil hole
- **F:** Rocker oil hole
- **G:** Rocker bushing clinch (seam)
- **H:** Rocker bushing notch (rear side)

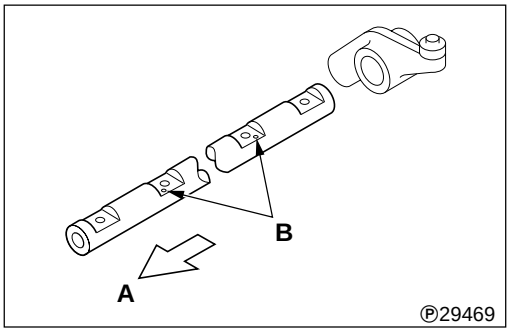

12 **Installation of exhaust rocker shaft**

Install the exhaust rocker shaft **12** in the illustrated direction.

- **A:** Front of engine
- **B:** Camshaft frame locating pin mounting hole

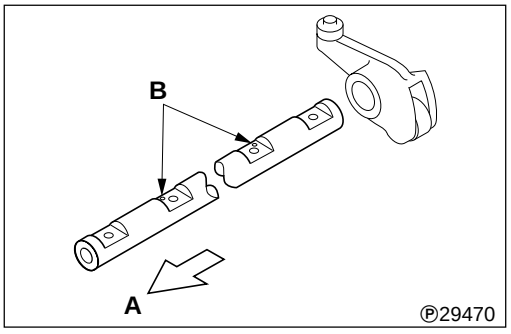

13 **Installation of inlet rocker shaft**

Install the inlet rocker shaft **13** in the illustrated direction.

- **A:** Front of engine
- **B:** Camshaft frame locating pin mounting hole

MEMO

CYLINDER HEAD AND VALVE MECHANISM

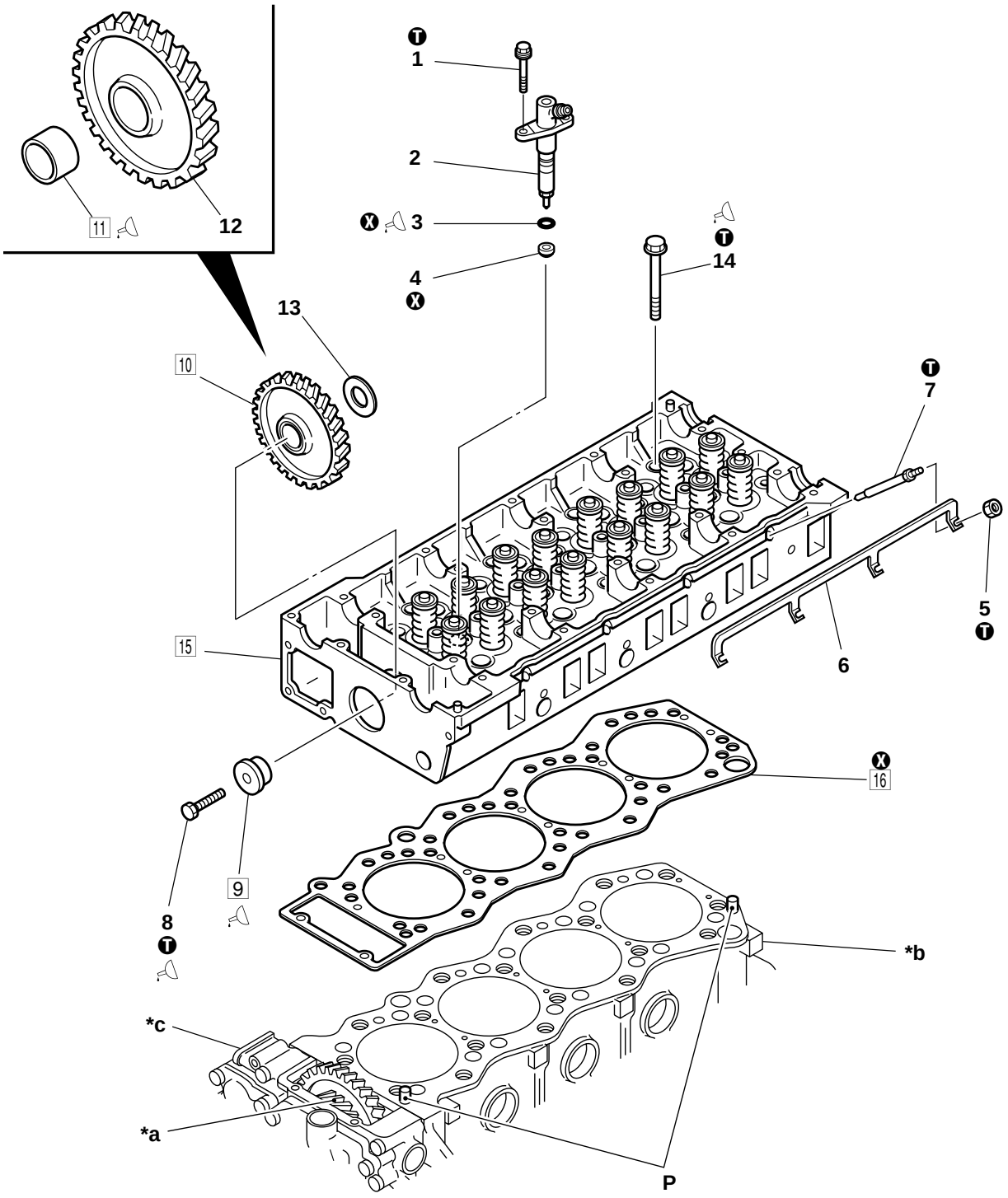

● **Pre-disassembly inspection**

P. 11A-36

● **Disassembly sequence**

1 Bolt
2 Injection nozzle Gr 13A
3 O-ring
4 Nozzle tip gasket
5 Nut
6 Connecting plate
7 Glow plug
8 Bolt
9 Head idler shaft
10 Head idler gear assembly
11 Head idler gear bushing
12 Head idler gear
13 Thrust plate
14 Cylinder head bolt
15 Cylinder head assembly
P. 11A-40
16 Cylinder head gaskect

***a:** Idler gear assembly
P. 11A-52
***b:** Upper crankcase
P. 11A-76
***c:** Front case assembly
P. 11A-48

P: Locating pin
X: Non-reusable part

CAUTION ⚠

The cylinder head bolts 13, 14 utilize the torque-turn tightening method. Any cylinder head bolt that has apparently been tightened three times already must be replaced with a new one. **P. 11A-37**

● **Assembly sequence**

Follow the disassembly sequence in reverse.

Service standards

Unit: mm {in.}

Location	Maintenance item	Standard value (Basic diameter in [ ])	Limit	Remedy
9, 11	Head idler shaft - to - head idler gear bushing clearance	[32 {1.26}] 0.01 to 0.05 {0.00039 to 0.002}	0.1 {0.0039}	Replace

Ⓣ Tightening torques

Unit: N·m {ft.lbs, kgf·m}

Location	Parts to be tightened	Tightening torque	Remarks
1	Bolt (injection nozzle installation)	14.7 {11, 1.5}	–
5	Nut (connection plate installation)	1.0 to 1.5 {0.7 to 1.1, 0.1 to 0.15}	–
7	Glow plug	22.6 {17, 2.3}	–
8	Bolt (Head idler shaft installation)	44.1 {33, 4.5}	Wet
14	Cylinder head bolt	147 {110, 15} + 90°	Wet

Lubricant and/or sealant

Unit: mm {in.}

Location	Points of application	Specified lubricant and/or sealant	Quantity
3	O-ring	Engine oil	As required
8	Thread and bearing surface of bolt	Engine oil	As required
9	Outer surface of head idler shaft	Engine oil	As required
***c**	Upper surface of joint section between front case assembly and crankcase assembly and cylinder head gasket contacting surface	Threebond 1211	As required

Special tools

Unit: mm {in.}

Location	Tool name and shape	Part No.	Application
11	Idler Gear Bushing Puller **ϕ 31** **{ϕ 1.22}** Ⓟ22322	MH061779	Removal and installation of idler gear bushing

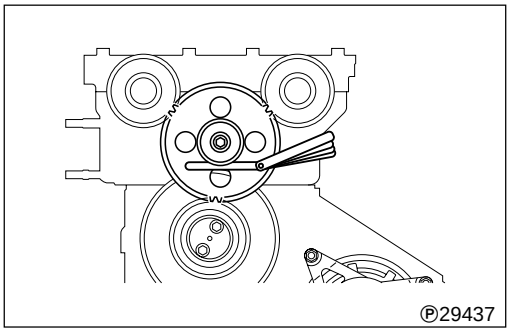

◆ Service procedure

● **Pre-disassembly inspection**

End play of head idler gear assembly

If any measurement exceeds the specified limit, replace the defective part(s).

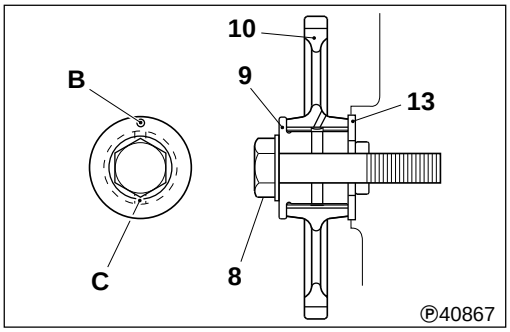

9 **Installing head idler shaft**

Install the head idler shaft **9** as illustrated.

B: Depression
C: Oil hole

CAUTION ⚠

Don't forget to install the thrust plate 13.

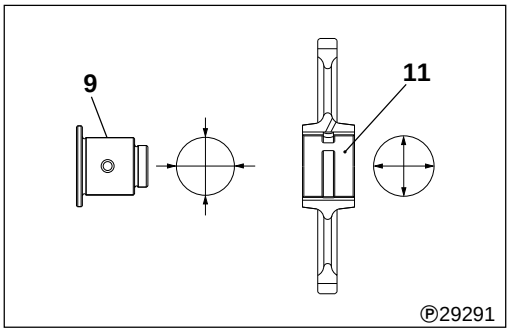

9 11 **Head idler shaft and head idler gear bushing**

[Inspection]

If the clearance exceeds the specified limit, replace the defective part(s).

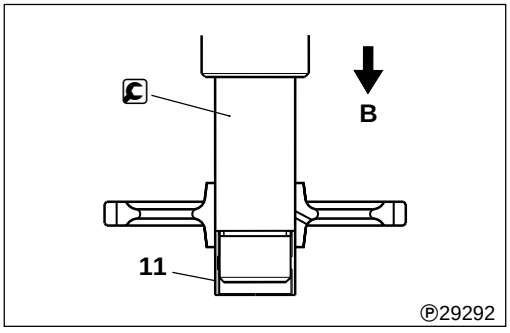

Head idler gear bushing.

[Removal]

B: Press
C: Idler Gear Bush Puller

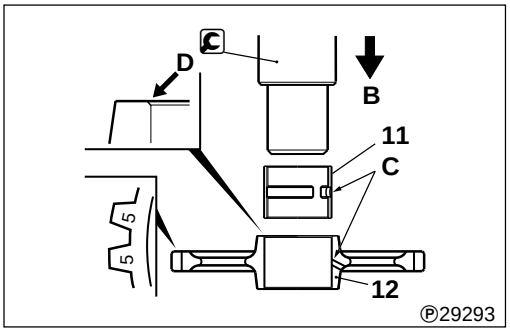

[Installation]

- Fit the idler gear bushing **11** in the head idler gear **12** in the illustrated direction so that the oil holes **C** may be aligned with each other when press-fitted.
- Using the C Idler Gear Bush Puller, press the bushing into the head idler gear **12** until its end face becomes flush with the chamfered end **D** of the gear.

  B: Press
- After press-fitting, measure the clearance again. If the measurement is below the specified limit, ream the head idler gear bushing **11** to the standard value.

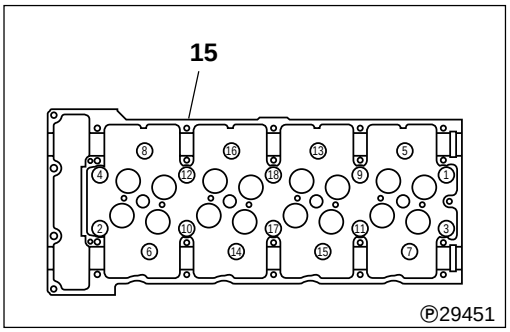

15 Cylinder head assembly

[Removal]

Loosen and remove the cylinder head bolts **14** in the sequence shown (① to ㉓). Each cylinder head bolt should be loosened a little at a time.

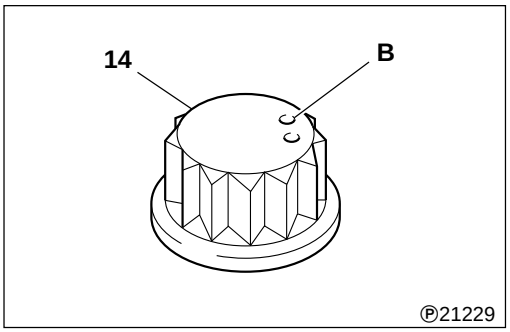

[Fitting]

CAUTION ⚠

- **Before fitting any cylinder head bolt 14, check the punch marks B on its head. Do not use bolt if there are more than two punch marks.**
- **The punch marks indicate the number of times each bolt has been tightened using the torque-turn tightening method. Any bolt that already has three punch marks must be replaced.**

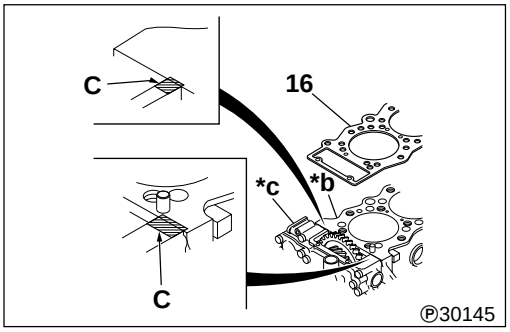

- Select an appropriate cylinder head gasket **16**. P. 11A-38
- Apply a coat of specified sealant to the upper surface **C** of the joint section between the frontcase assembly ***c** and the crankcase assembly ***b**.
- Within 3 minutes after the sealant application, install the cylinder head assembly to the crankcase assembly ***b** together with the cylinder head gasket **16**.

CAUTION ⚠

- **Check to ensure that the sealant application surface C is clean and free of oil and other foreign matter.**
- **During installation of the cylinder head assembly, use care to ensure that the sealant is kept in place.**
- **Do not start the engine for at least 1 hour after the cylinder head assembly is installed.**
- **Whenever the cylinder head bolt 14 is loosened or removed after the cylinder head assembly has been installed, always apply a fresh coat of specified sealant.**

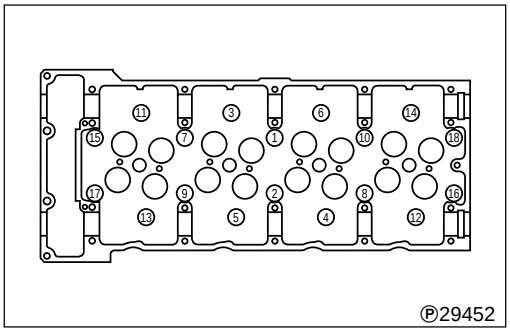

Ⓟ29452

- Tighten the cylinder head bolts **14** (① through ⑱) to a torque of 145 N·m {110 lbf.ft, 15 kgf·m}(wet) in the sequence shown.
  After tightening,give the bolts an additional 90 degree turn in the sequence of the numbers shown.
- After tightening the cylinder head bolts **14** using the torque-turn tightening method, make a punch mark on the head of each one to indicate the times of use.

CAUTION ⚠

Since the cylinder head bolts utilize the torque-turn tightening method, they must not be tightened further after the angular tightening procedure has been performed.

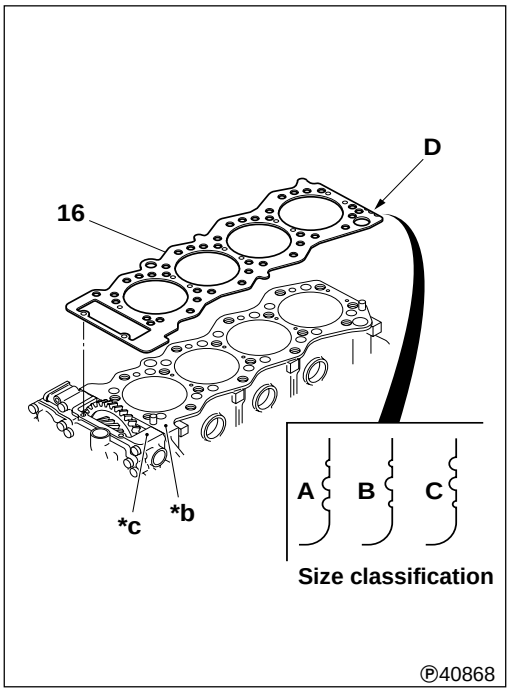

Ⓟ40868

16 **Cylinder head gasket**

[Removal]

CAUTION ⚠

Be careful not to scratch cylinder head assembly 15, the crankcase assembly *b and the front case assembly *c when removing cylinder head gasket 16.

[Installation]

Cylinder head gasket **16** installed must be the one which can accommodate the piston projection. Select such a gasket as follows:

- Measure the piston projection at each cylinder. 🕮 P. 11A-62
- Select a cylinder head gasket **16** appropriate for the piston projection average value from the following table.
- If any of the piston projection measurements is more than 0.05 mm {0.002 in.} larger than the average value, then use the gasket one rank higher than that rank (**A** → **B**, **B** → **C**).

Unit: mm {in.}

Average value of piston projection	Cylinder head gasket	
	Size classification	Thickness when tightening
–0.088 to –0.027 {–0.0034 to 0.0106}	A	0.75 ± 0.03 {0.029 ± 0.0012}
–0.027 to –0.033 {–0.0106 to 0.0129}	B	0.80 ± 0.03 {0.031 ± 0.0012}
–0.035 to –0.094 {–0.0129 to 0.0370}	C	0.85 ± 0.03 {0.033 ± 0.0012}

- The classification (size) of the cylinder head gasket **16** can be known from the shape of the notches **D** cut in the gasket edge.
- Install the cylinder head gasket **16** on the crankcase ***b** in the direction as illustrated.

E: Part number

MEMO

CYLINDER HEAD AND VALVE MECHANISM

Cylinder Head Assembly

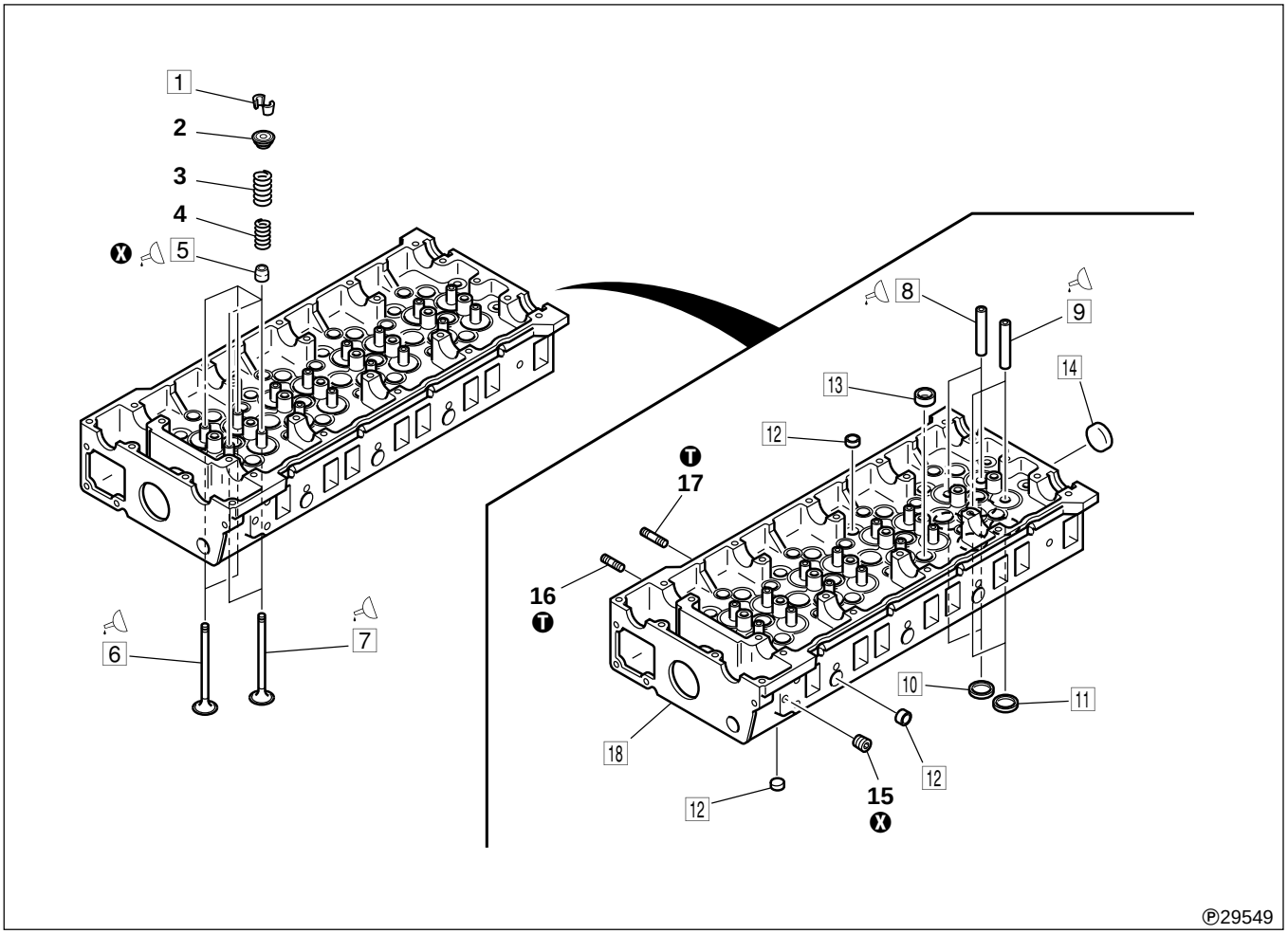

● **Disassembly sequence**

1 Valve collets
2 Upper retainer
3 Outer valve spring
4 Inner valve spring
5 Valve stem seal
6 Exhaust valve
7 Inlet valve
8 Exhaust valve guide
9 Inlet valve guide
10 Exhaust valve seat
11 Inlet valve seat
12 Sealing cup plug (22 mm {ϕ 0.87 in.})
13 Sealing cup plug (30 mm {ϕ 1.18 in.})
14 Sealing cup plug (40 mm {ϕ 1.57 in.})
15 Taper plug
16 Stud (short)
17 Stud (long)
18 Cylinder head

X: Non-reusable part

● **Assembly sequence**

Follow the disassembly sequence in reverse.

CAUTION ⚠

Any valve stem seal 5 removed from an exhaust valve 6 or inlet valve 7 must be replaced.

Service standards

Unit: mm {in.}

Location	Maintenance item		Standard value (Basic diameter in [ ])	Limit	Remedy
3	Outer valve spring	Free length	87.8 {3.45}	–	Replace
		Installed load (at 57 {2.24} installed length)	360N {36.7 kgf}	–	Replace
		Squareness	–	2.5 {0.098}	Replace
4	Inner valve spring	Free length	78.8 {3.10}	–	Replace
		Installed load (at 52.3 {2.05} installed length)	168N {17.1 kgf}	–	Replace
		Squareness	–	2.5 {0.098}	Replace
6	Exhaust valve	Stem outside diameter	$\phi 8\ ^{-0.060}_{-0.075}$ {$\phi 0.31\ ^{-0.0024}_{-0.0029}$}	–	Replace
		Sinkage from cylinder head bottom surface	0.2 ± 0.25 {0.0079 ± 0.00098}	–	Inspect
		Valve margin	1.5 {0.059}	–	Reface or replace
		Seat angle	45°	–	Correct
6, 8	Exhaust valve stem-to-valve guide clearance		[8 {0.31}]0.07 to 0.10 {0.0028 to 0.0039}	0.2 {0.0079}	Replace
7	Inlet valve	Stem outside diameter	$\phi 8\ ^{-0.025}_{-0.040}$ {$\phi 0.31\ ^{-0.00098}_{-0.00160}$}	–	Replace
		Sinkage from cylinder head bottom surface	0.2 ± 0.25 {0.0079 ± 0.00098}	–	Inspect
		Valve margin	1.5 {0.059}	–	Reface or replace
		Seat angle	45°	–	Correct
7, 9	Inlet valve stem-to-valve guide clearance		[8 {0.31}] 0.03 to 0.06 {0.0012 to 0.0024}	0.2 {0.0079}	Replace
10	Exhaust valve seat width		2.5 ± 0.2 {0.098 ± 0.0079}	3.5 {0.13}	Correct or replace
11	Inlet valve seat width		2 ± 0.2 {0.079 ± 0.0079}	2.8 {0.11}	Correct or replace
18	Cylinder head	Bottom surface distortion	0.05 {0.0020} or less	0.2 {0.0079}	Correct or replace
		Height from top to bottom surface	107 ± 0.5 {4.21 ± 0.02}	106.5 {4.19}	Replace

❶ Tightening torque

Unit: N·m {ft.lbs, kgf·m}

Location	Parts to be tightened	Tightening torque	Remarks
15	Taper plug	14 {10, 1.4}	–
16, 17	Stud	20 {14, 2.0}	–

Lubricant and/or sealant

Location	Points of application	Specified lubricant and/or sealant	Quantity
5	Lip of valve stem seal	Engine oil	As required
6,7	Valve stem	Engine oil	As required

CYLINDER HEAD AND VALVE MECHANISM

Special tools

Unit: mm {in.}

Location	Tool name and shape	Part No.	Application
1	A: Valve Lifter B: Valve Lifter Seat 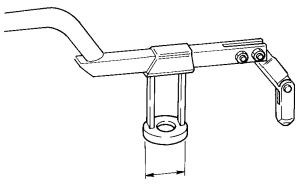 21239	Obtain Locally	Removing and installing valve cotters
	Valve Lifter Hook 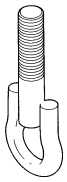 21240	Use Equivalent	
5	Valve Stem Seal Installer 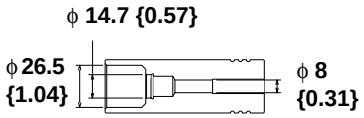 Ⓟ29931	Use Equivalent	Installing valve stem seals
6, 7	Valve Lapper 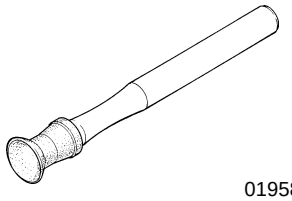 01958	Obtain Locally	Lapping inlet and exhaust valves and valve seats
8, 9	Valve Guide Remover 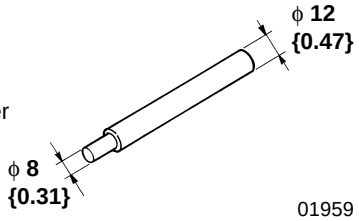 01959	Obtain Locally	Removing valve guides
	Valve Guide Installer 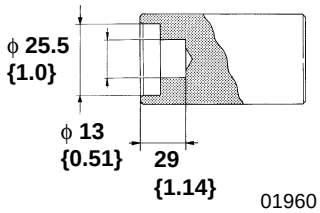 01960	MH063604	Installing valve guides
10, 11	A: Caulking Tool Body B: Caulking Ring 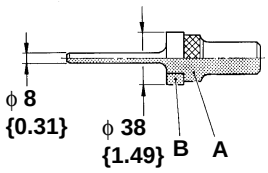 01961	Use Equivalent	Installing inlet and exhaust valve seats

◆ Service procedures

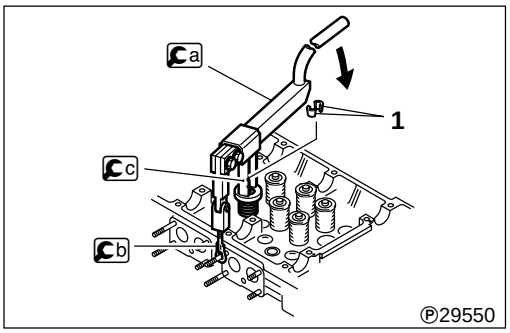

1 Valve cotter

[Removal]

To remove the valve collets **1**, use the a Valve Lifter, b Valve Lifter Hook and c Valve Lifter Seat to evenly compress the valve springs **3**, **4**.

[Installation]

To install valve collets, follow the removal instructions in reverse.

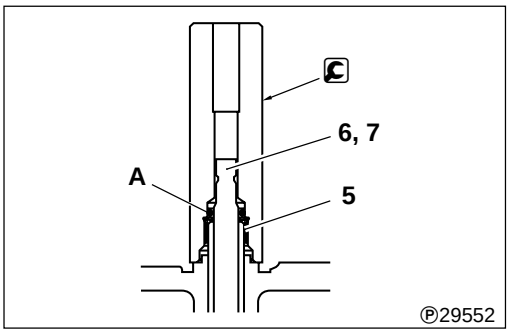

5 Installing valve stem seals

- Apply engine oil to the lip **A** of the valve stem seal **5**.
- Install the valve stem seal **5** using the Valve Stem Seal Installer.
- Strike the Valve Stem Installer until it sits snugly on the cylinder head **18**.

CAUTION ⚠

After installing the valve stem seal 5, check that its spring area is neither deformed nor damaged.

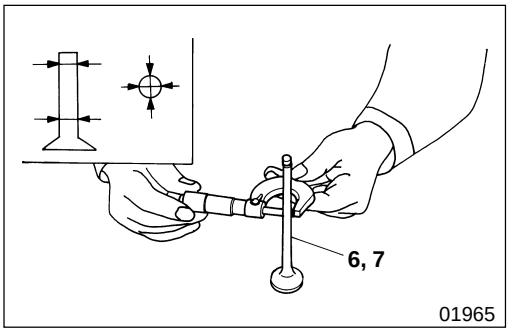

6 7 Inlet and exhaust valves

[Inspection]

(1) Valve stem outside diameter

Replace the valve **6**, **7** if its stem's outside diameter is below specification or severely worn.

CAUTION ⚠

Whenever a valve 6, 7 is replaced, be sure to lap the valve and valve seat 10, 11. P. 11A-45.

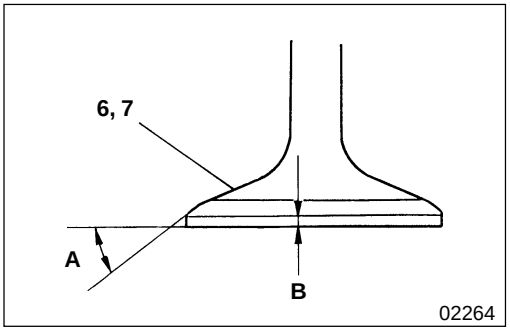

(2) Valve seat angle and valve margin

Reface or replace the valve **6**, **7** if the valve seat angle or valve margin exceeds the specified limits.

A: Valve seat angle
B: Valve margin

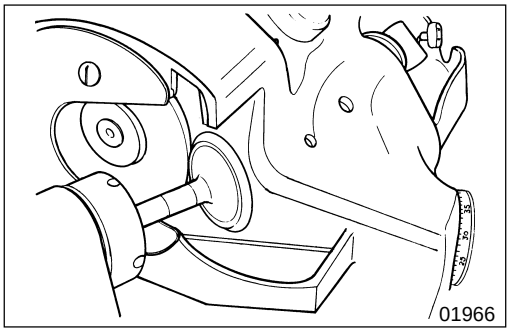

[Rectification]

NOTE:

- **Keep grinding to a minimum.**
- **If the valve margin is below specification after grinding, replace the valve 6, 7.**
- **After grinding, be sure to lap the valve 6, 7 and valve seat 10, 11.** **P. 11A-45**

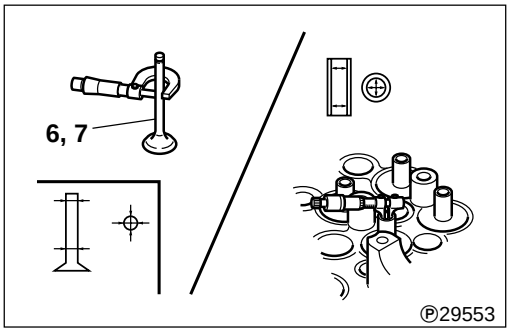

6 to 9 Valve and valve guides

[Inspection]

If any clearance exceeds the specified limit, replace the defective part(s).

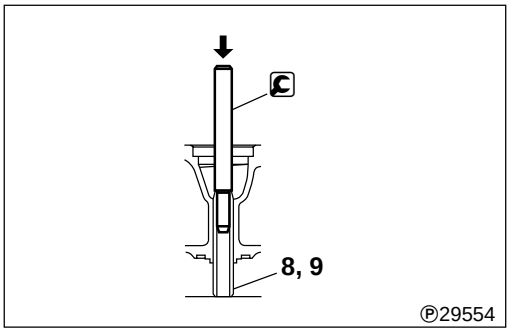

Valve guides

[Removal]

: Valve Guide Puller

[Installation]

Using the Valve Guide Installer, install the valve guide **8**, **9** until the tool sits snugly on the cylinder head **18**.

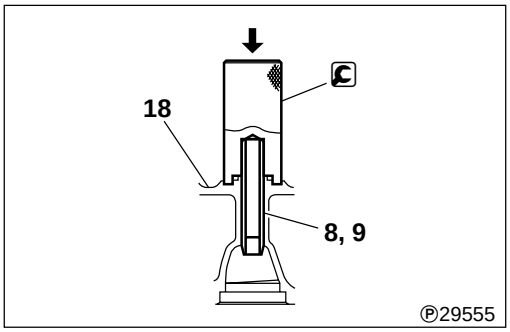

CAUTION

- **The valve guides 8, 9 must be pressed in to the specified depth.Be sure to use the Valve Guide Installer for this operation.**
- **Exhaust valve guides 8 are longer than inlet valve guides 9.Be sure to install the correct type of guide in each location.**

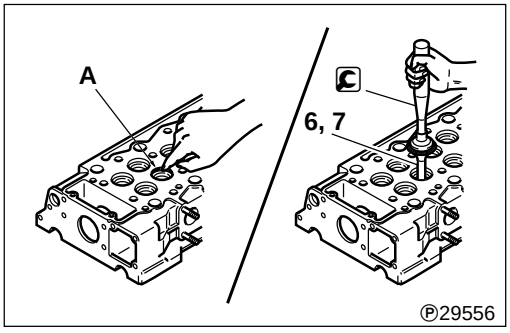

6 7 10 11 Valves and valve seats

[Inspection]

- Apply an even coat of prussian blue to the valve seat **10**, **11** surface **A** that makes contact with the valve **6**, **7**.
- Strike the valve **6**, **7** against the valve seat **10**, **11** once. Do not rotate the valve during this operation.

  : Valve Lapper

NOTE:

Carry out these inspections after inspecting the valves 6, 7 and valve guides 10, 11.

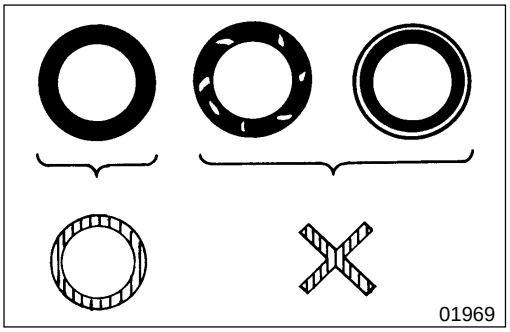

- If the prussian blue deposited on the valve **6**, **7** indicates a poor contact pattern, rectify the contact pattern as follows:

Contact	Corrective action
Minor defect	Lapping
Serious defect	Reface or replace valve and valve seat

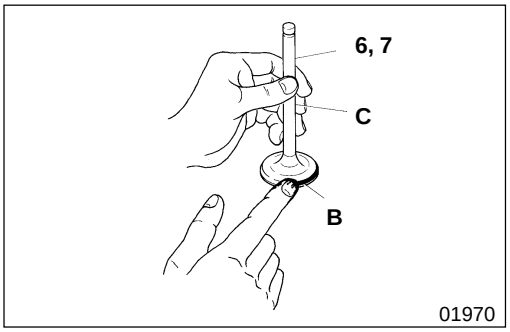

[Refacing]

Lap the valve in accordance with the following procedure:

- Apply a thin, even coat of lapping compound to the surface **B** of the valve **6**, **7** that makes contact with valve seat **10**, **11**.

CAUTION ⚠

- **Ensure that no compound adheres to the stem C of the valve 6, 7.**

NOTE:

- **Start with intermediate-mesh compound (120 to 150 mesh) and finish with fine-mesh compound (200 mesh or more).**
- **The addition of a small amount of engine oil makes lapping compound easier to apply.**

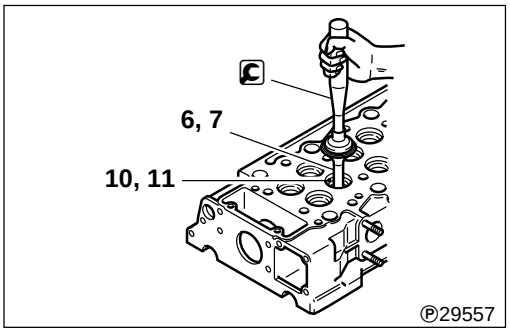

- Strike the valve **6**, **7** against the valve seat **10**, **11** while turning it little by little.

  C: Valve Lapper
- Wash away the compound with cleaning fluid.
- Apply engine oil to the contact surfaces of the valve seat **10**, **11** and rub it in so that the contact surfaces are lubricated and mate together snugly.
- Inspect the contact pattern of the valve **6**, **7** and valve seat **10**, **11** once more.
- If the contact pattern is still defective, replace the valve seat **10**, **11**.

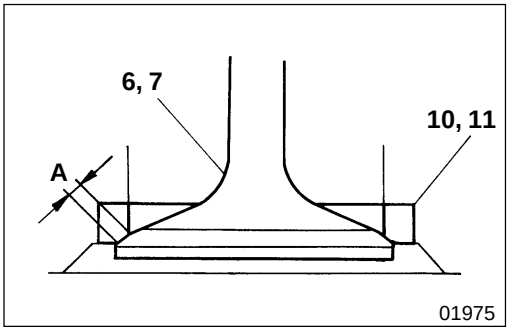

10 11 Valve seats

[Inspection]

(1) Valve seat width

If the measurement exceeds the specified limit, rectify or replace the valve seat **10**, **11**.

A: Valve seat width

NOTE:

Whenever a valve seat 10, 11 is rectified or replaced, be sure to lap the valve seat and valve 6, 7. **P. 11A-45**

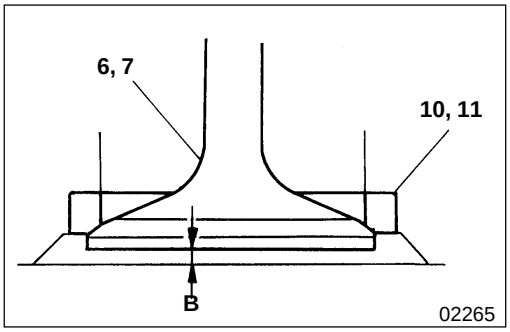

(2) Valve sinkage from cylinder head bottom surface

If any measurement exceeds the specified limit, rectify or replace the defective part(s).

B: Valve sinkage

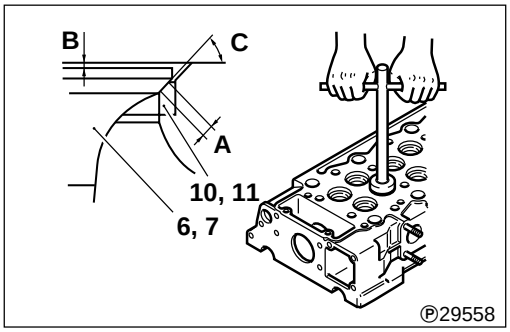

[Rectification]

- Grind the valve seat **10**, **11** using a valve seat cutter or valve seat grinder.
- Use a 15° or 75° cutter to achieve the specified valve seat width **A** of the valve **6**, **7**.
- After grinding, put some sandpaper of around #400 grade between the cutter and valve seat and grind the valve seat lightly.

C: Valve seat angle

CAUTION ⚠

Ensure that grinding does not cause the sinkage B of the valve 6, 7 to exceed the specified limit.

- After rectification, lap the valve **6**, **7** and valve seat **10**, **11**.
🕮 P. 11A-45

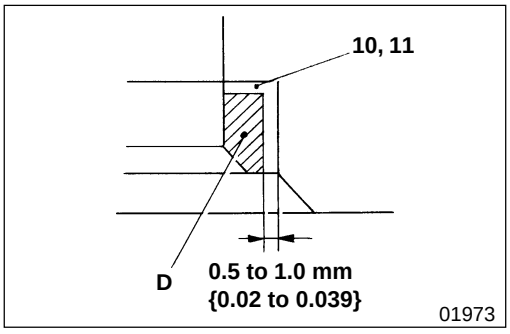

[Removal]

Valve seats **10**, **11** are installed by expansion fitting. To remove a valve seat, grind the inside surface to reduce its thickness, then remove the valve seat at room temperature.

D: Material to be ground

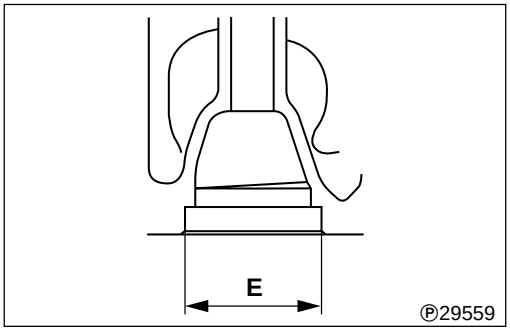

[Installation]

- Check that the valve seat hole diameter **E** in the cylinder head **18** conforms with the value shown below.

Unit: mm {in.}

Size marks on upper crankcase	Size marks on cylinder liners	Size mark on pistons		
"1"	"1A" "1B"	"A"	38	{1.49}
"2"	"2A" "2B"	"B"		

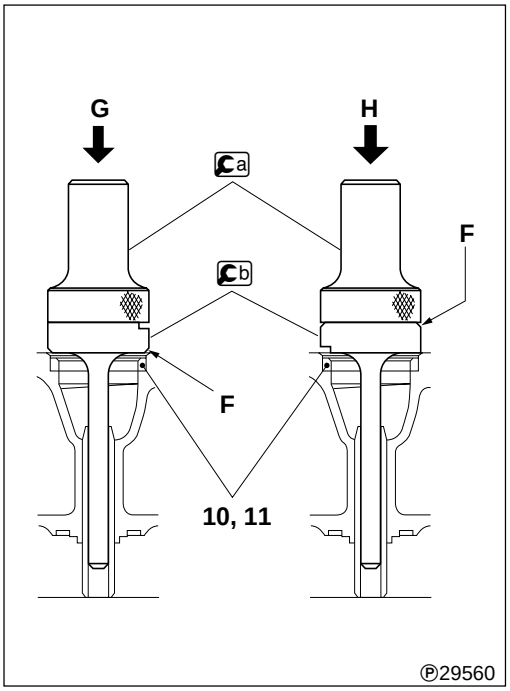

- Cool the valve seat **10**, **11** by immersing it in liquid nitrogen.
- Install the valve seat **10**, **11** in the cylinder head **18** using the a Caulking Tool Body and the b Caulking Ring.

CAUTION ⚠

- **For installation, the chamfered side F of the b Caulking Ring must be against the valve seat 10, 11.**

G: Configuration for installation

- Invert the b Caulking Ring such that its chamfered side **F** is against the a Caulking Tool Body, then caulk the valve seat **10**, **11**.

H: Configuration for caulking

- After installing the valve seat **10**, **11**, lap the valve seat and valve **6**, **7**. P. 11A-45

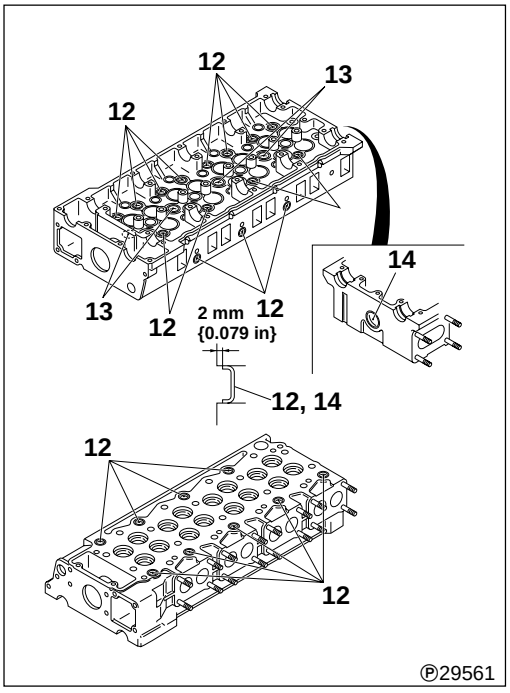

12 to 14 Installing sealing cup plugs

Drive the sealing cups **12** to **14** in the cylinder head **18** until the specified depth is reached.

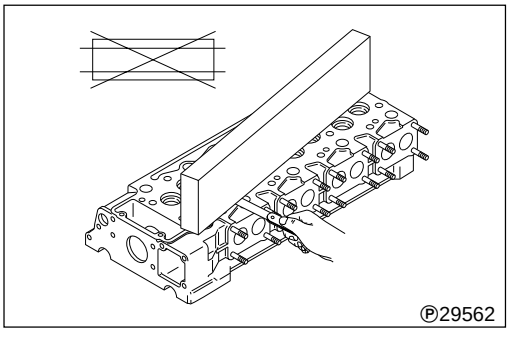

18 Inspecting cylinder head

Measure the extent of distortion in the cylinder head **18** bottom surface. If the degree of distortion exceeds the specified limit, rectify the distortion with a surface grinder.

CAUTION ⚠

Ensure that grinding does not cause the cylinder head 18 top surface-to-bottom surface distance to fall below the specified limit.

FRONT CASE

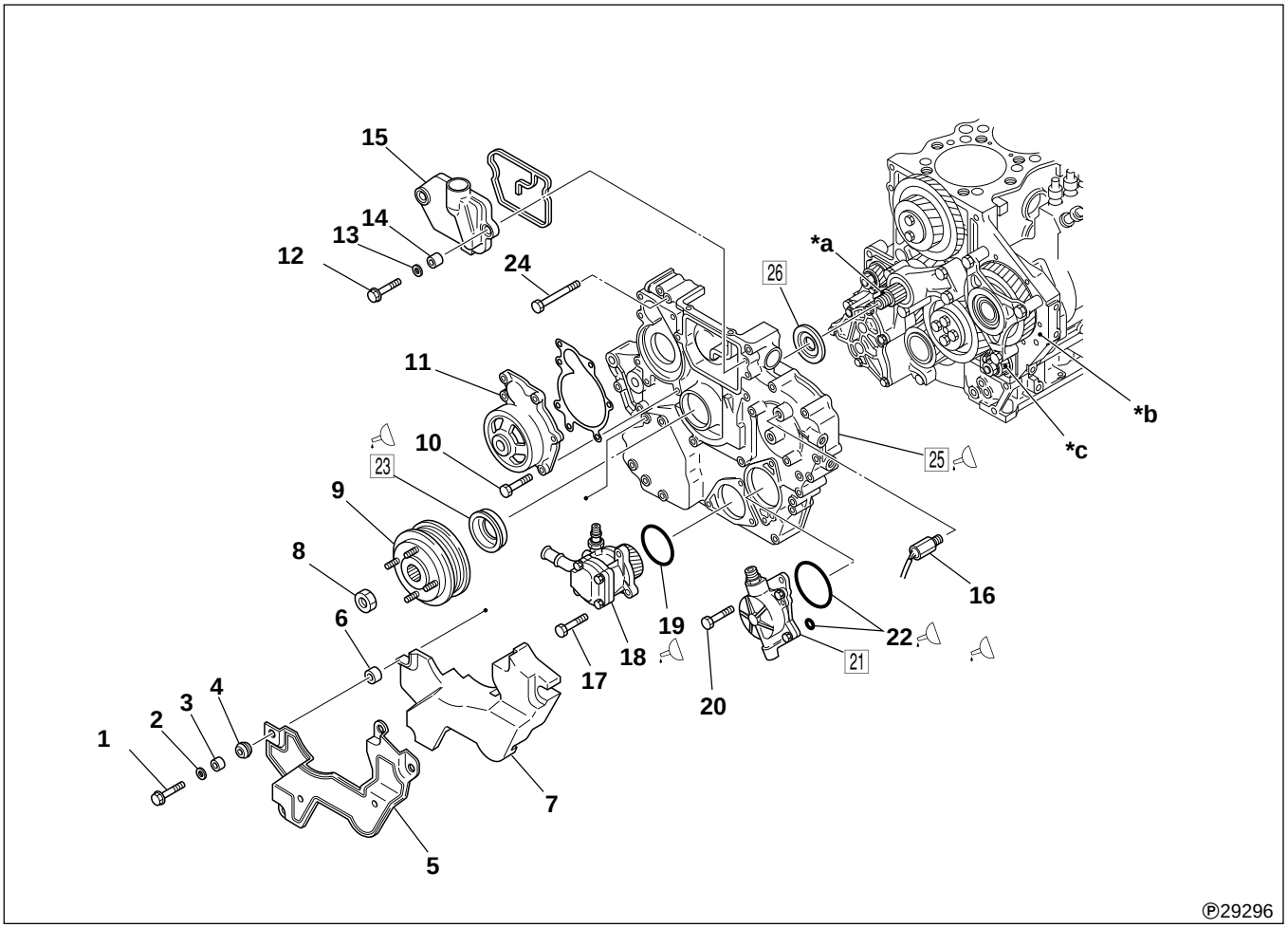

● **Disassembly sequence**

1 Bolt
2 Washer
3 Spacer
4 Insulator
5 Front case cover
6 Spacer
7 Front case rubber insulation
8 Nut
9 Fan pulley
10 Bolt
11 Water pump assembly
Group 14
12 Bolt
13 Washer
14 Rubber
15 Breather cover
16 Engine speed sensor
ELECTRICAL
17 Bolt
18 Power steering oil pump assembly
Group 37
19 O-ring
20 Bolt
21 Vacuum pump assembly
Group 35
22 O-ring
23 Front oil seal
24 Bolt
25 Front case
26 Front oil seal slinger

***a:** Fan shaft assembly
P. 11A-52
***b:** Upper crankcase
P. 11A-76
***c:** Balance shaft assembly LH
P. 11A-52
Ⓧ**:** Non-reusable part

CAUTION ⚠

- **When the vacuum pump assembly 21 is removed, be sure to follow the specified procedure. Blind removal will result in failure of the assembly being positioned with the balance shaft assembly LH *c.**
- **Do not remove the front oil seal 23 unless something wrong is evident.**

● **Assembly sequence**

Follow the disassembly sequence in reverse.

❶ Tightening torques

Unit: N·m {lbf.ft, kgf·m}

Location	Parts to be tightened	Tightening torque	Remarks
1	Bolt (mounting front case cover)	2.9 to 3.9 {2.2 to 2.9, 0.3 to 0.4}	–
8	Nut (mounting fan pulley)	196.1 {145, 20.0}	–
10	Bolt (mounting water pump assembly)	23.5 {17, 2.4}	–
12	Bolt (mounting breather cover)	2.9 {2.2, 0.3}	–
16	Engine speed sensor	29.4 {22, 3.0}	–
17	Bolt (mounting power steering oil pump assembly)	23.5 {17, 2.4}	–
20	Bolt (mounting vacuum pump assembly)	23.5 {17, 2.4}	–
24	Bolt (mounting front case)	23.5 {17, 2.4}	–

Lubricant and sealant

Location	Points of application	Specified lubricant and/or sealant	Quantity
16	Threaded portion of engine speed sensor	THREEBOND 1104J	As required
19, 22	All around O-ring	Engine oil	As required
23	Lip of front oil seal	Engine oil	As required
25	Front case mounting surface	THREEBOND 1207C or D	As required

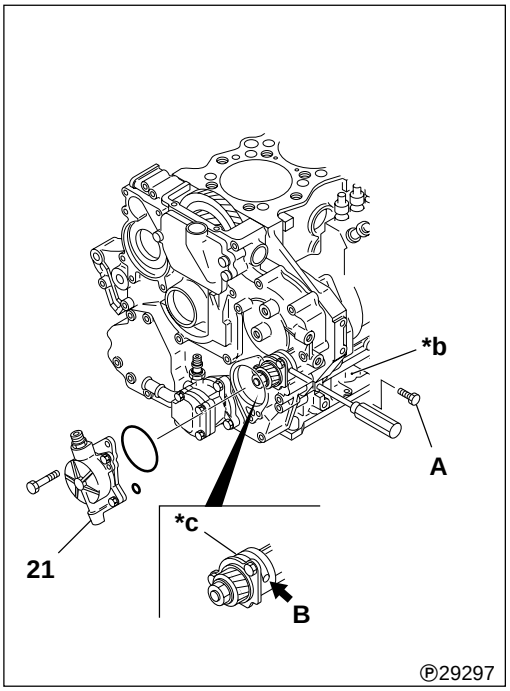

◆ Service procedure

21 Installation of vacuum pump assembly

The vacuum pump assembly **21** serves also to position the balance shaft assembly LH ***c**. For this reason, before the assembly is installed, the balance shaft assembly must be kept in the right position by the following procedure.

- Place the piston of cylinder No. 1 at the top dead center on the compression stroke.
- Remove plug **A** from the upper crankcase ***b**.
- Insert a screwdriver into the hole from which the plug **A** was removed until it slightly touches the balance shaft assembly LH ***c**.

CAUTION ⚠

Be sure not to force the screwdriver in, as there is danger of damage to the No. 1 journal of the balance shaft assembly LH *c.

- Slowly rotate the balance shaft assembly LH ***c** to align the tip of the screwdriver with the shaft support hole **B** in the No. 1 journal of the balance shaft.
- Supporting the balance shaft by inserting the screwdriver in the hole, install the vacuum pump assembly **21**.
- After the installation, remove the screwdriver.

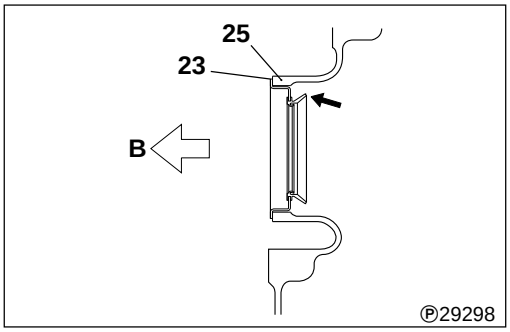

23 Installation of front oil seal

Install the front oil seal **23** on the front case **25** in the illustrated direction after applying engine oil to the lip **A**.

B: Front of vehicle

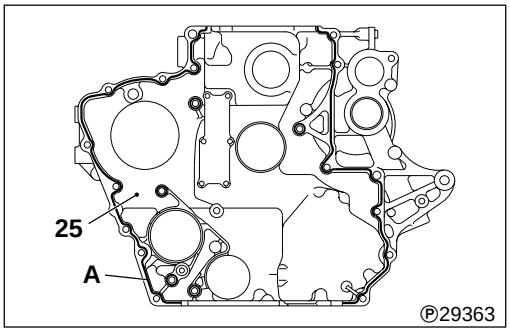

25 Installation of front case

- Apply sealant **A** evenly without any break to the mounting surface of the front case **25** as shown. (Approx. ϕ 1 mm {ϕ 0.0393})
- After application of sealant **A**, install the front case **25** in less than three minutes.

CAUTION ⚠

- **Check to ensure that the sealant application surface is clean and free from any oil and other deposits.**
- **When installing the parts, make sure that the sealant is not forced out of position.**
- **Do not start the engine less than an hour after installation.**
- **If the mounting bolts were loosened or removed after installation of the front case 25, be sure to re-apply sealant A.**

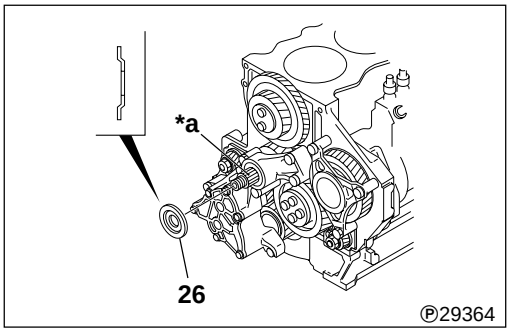

26 Installation of front oil seal slinger

Install the front oil seal slinger **26** on the fan shaft assembly ***a** in the illustrated direction.

MEMO

TIMING GEARS AND BALANCE SHAFTS

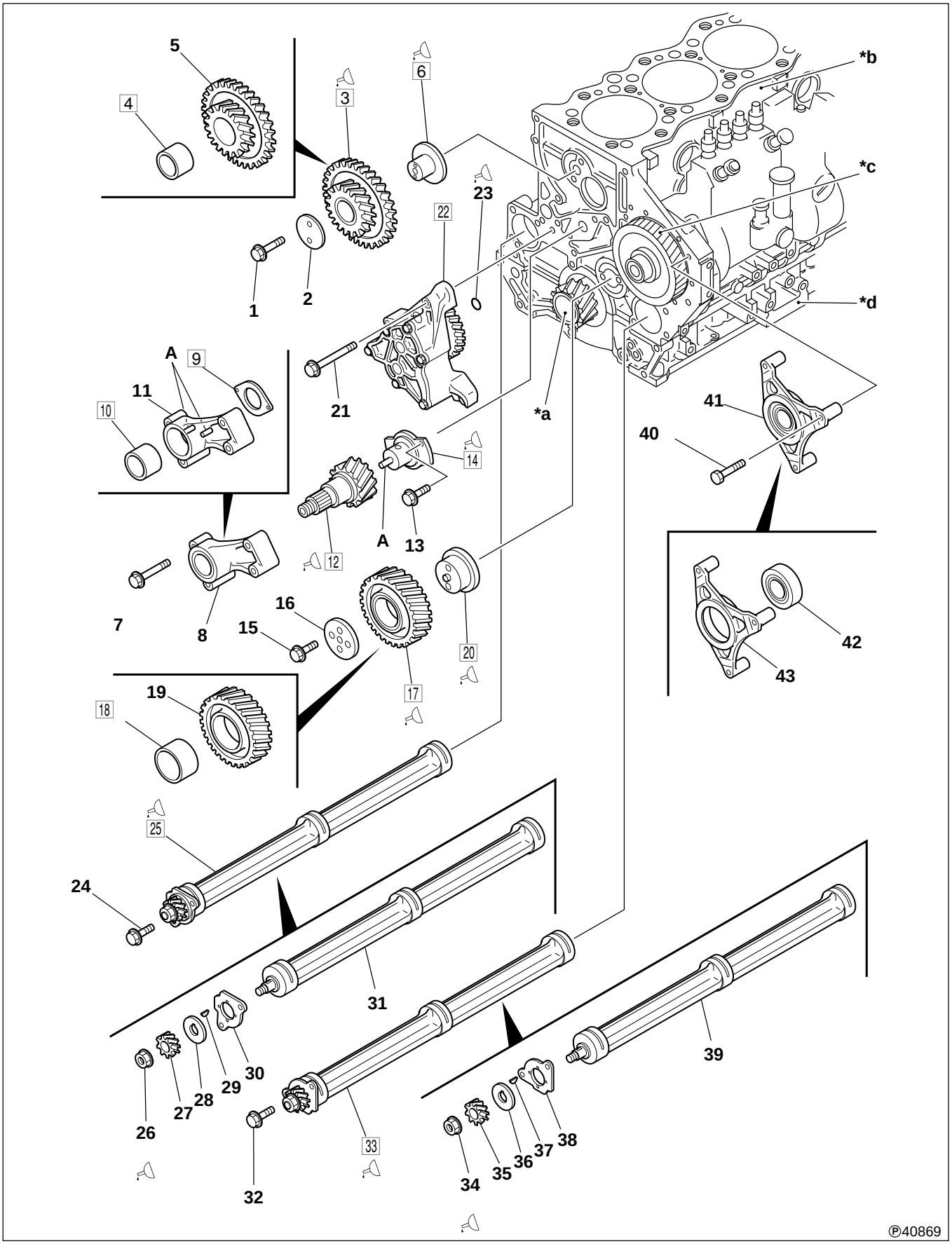

● **Pre-disassembly inspection**

📖 P. 11A-55

● **Disassembly sequence**

1 Bolt
2 Thrust plate
3 Idler gear assembly
4 Idler gear bushing
5 Idler gear
6 Idler shaft
7 Bolt
8 Fan shaft case assembly
9 Thrust plate
10 Fan shaft case bushing
11 Fan shaft case
12 Fan shaft assembly
13 Bolt
14 Fan gear shaft
15 Bolt
16 Thrust plate
17 No. 1 idler gear assembly
18 No. 1 idler gear bushing
19 No. 1 idler gear
20 No. 1 idler shaft
21 Bolt
22 Oil pump assembly
📁 Group 12
23 O-ring
24 Bolt
25 Balance shaft assembly RH
26 Nut
27 Balance shaft gear RH
28 Thrust spacer
29 Key
30 Thrust plate
31 Balance shaft RH
32 Bolt
33 Balance shaft assembly LH
34 Nut
35 Balance shaft gear LH
36 Thrust spacer
37 Key
38 Thrust plate
39 Balance shaft LH
40 Bolt
41 Injection pump bearing housing assembly
42 Bearing
43 Injection pump bearing housing

***a:** Crankshaft gear 📖 P. 11A-76
***b:** Upper crankcase
📖 P. 11A-76
***c:** Injection pump gear
📁 Group 13
***d:** Lower crankcase
📖 P. 11A-76

A: Locating pin
Ⓧ: Non-reusable part

CAUTION ⚠

For details on the balance shaft removal and installation procedures, refer to 📖 P. 11A-84.

● **Assembly sequence**

Follow the disassembly sequence in reverse.

TIMING GEARS AND BALANCE SHAFTS

Service standards

Unit: mm {in.}

Location	Maintenance item		Standard value (Basic diameter in [ ])	Limit	Remedy
–	Backlash between gears	Idler gear assembly and fan shaft assembly	0.09 to 0.13 {0.0035 to 0.0051}	0.3 {0.012}	Replace
		Fan shaft assembly and No. 1 idler gear assembly	0.06 to 0.10 {0.0024 to 0.0039}	0.3 {0.012}	
		No. 1 idler gear assembly and crankshaft gear	0.11 to 0.13 {0.0043 to 0.0051}	0.3 {0.012}	
		No. 1 idler gear assembly and injection pump gear	0.09 to 0.12 {0.0035 to 0.0047}	0.3 {0.012}	
		Crankshaft gear and oil pump gear	0.12 to 0.15 {0.0047 to 0.0059}	0.3 {0.012}	
		Balance shaft gear RH and oil pump gear	0.19 to 0.22 {0.0075 to 0.0087}	0.3 {0.012}	
–	End play of each gear and shaft	Idler gear assembly	0.10 to 0.20 {0.0039 to 0.0079}	0.3 {0.012}	Replace
		Fan shaft assembly	0.07 to 0.19 {0.0028 to 0.0075}	0.3 {0.012}	
		No. 1 idler gear assembly	0.15 to 0.25 {0.0059 to 0.0098}	0.3 {0.012}	
		Balance shaft RH	0.1 to 0.2 {0.0039 to 0.0079]	0.3 {0.012}	
		Balance shaft LH	0.1 to 0.2 {0.0039 to 0.0079}	0.3 {0.012}	
4, 6	Clearance between idler gear bushing and idler shaft		[51 {2.0}] 0.02 to 0.06 {0.00079 to 0.0024}	0.1 {0.0039}	Replace
10, 12	Clearance between fan shaft case bushing and fan shaft assembly		[41 {1.61}] 0.03 to 0.07 {0.0012 to 0.0028}	0.1 {0.0039}	Replace
12, 14	Clearance between fan shaft assembly and fan gear shaft		[36 {1.41}] 0.01 to 0.05 {0.00039 to 0.0020}	0.1 {0.0039}	Replace
18, 20	Clearance between No. 1 idler gear bushing and No. 1 idler shaft		[59 {2.32}] 0.03 to 0.07 {0.0012 to 0.0028}	0.1 {0.0039}	Replace
25	Bend of balance shaft assembly RH		0.025 {0.00098}	0.05 {0.002}	Replace
33	Bend of balance shaft assembly LH		0.025 {0.00098}	0.05 {0.002}	Replace

❶ Tightening torques

Unit: N·m {ft.lbs, kgf·m}

Location	Parts to be tightened	Tightening torque	Remarks
1	Bolt (mounting idler shaft)	23.5 {17, 2.4}	–
7	Bolt (mounting fan shaft case assembly)	23.5 {17, 2.4}	–
13	Bolt (mounting fan gear shaft)	23.5 {17, 2.4}	–
15	Bolt (mounting No. 1 idler shaft)	44.1 {33, 4.5}	–
21	Bolt (mounting oil pump assembly)	27.4 {20, 2.8}	–
24	Bolt (mounting balance shaft assembly RH)	23.5 {17, 2.4}	–
26	Nut (mounting balance shaft gear RH)	96.1 {71, 9.8}	Wet
32	Bolt (mounting balance shaft assembly LH)	23.5 {17, 2.4}	–
34	Nut (mounting balance shaft gear LH)	96.1 {71, 9.8}	Wet
40	Bolt (mounting injection pump bearing housing assembly)	27.4 {20, 2.8}	–

Lubricant

Location	Points of application	Specified lubricant	Quantity
3, 17	Inside surface of bushing of each gear	Engine oil	As required
6, 12, 14, 20	Outside circumference of each shaft	Engine oil	As required
23	All around O-ring	Engine oil	As required
25, 33	Journal portions of balance shaft	Engine oil	As required
26, 34	Threaded portion of nut	Engine oil	As required

Special tools

Unit: mm {in.}

Location	Tool name and shape	Part No.	Application
4	Idler Gear Bushing Puller 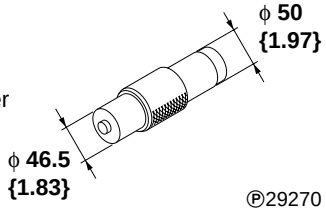	Use Equivalent	Installation and removal of idler gear bushing
10	Idler Gear Bushing Puller 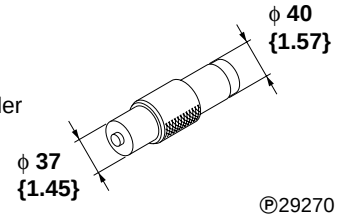	Use Equivalent	Installation and removal of fan shaft case bushing
18	Idler Gear Bushing Puller 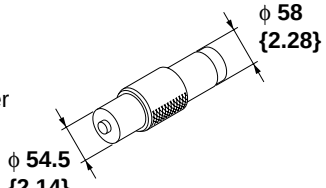	MH062541	Installation and removal of No. 1 idler gear bushing

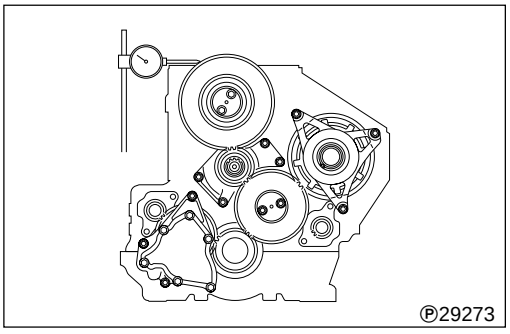

◆ Service procedure

● **Pre-disassembly inspection**

(1) Backlash between gears

On a pair of gears, measure backlash at more than three positions. If the reading is more than the limit, replace defective parts.

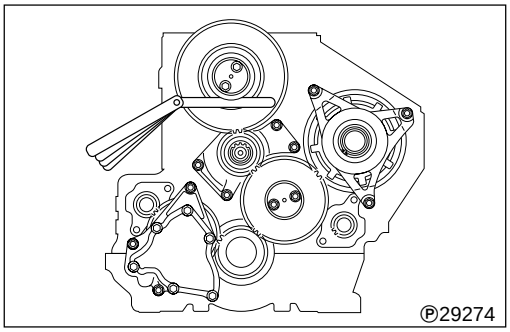

(2) End play of each gear and shaft

If the reading is more than the limit, replace defective parts.

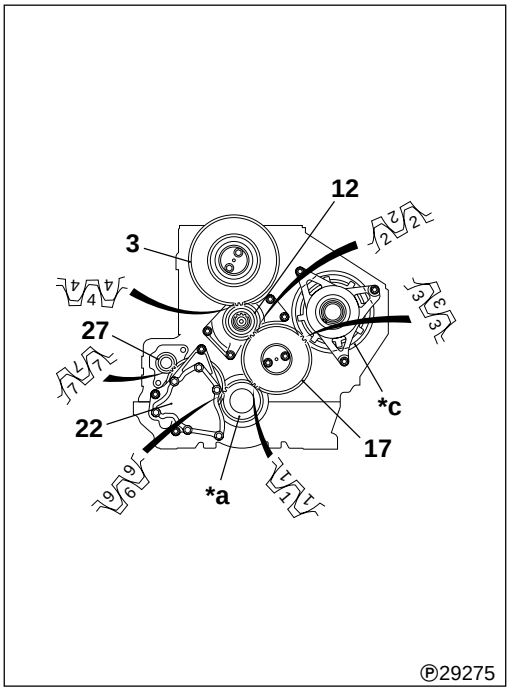

3 12 17 22 **Installation of timing gears**

Install the timing gears in the following sequence.

- Place the piston of No. 1 cylinder at the top dead center to position the crankshaft gear ***a**.
- Install the gear of the oil pump assembly **22** while aligning the alignment marks "**6**" and "**7**" with those on the crankshaft gear ***a** and balance shaft gear RH **27**, respectively.
- Install No. 1 idler gear assembly **17** while aligning the alignment marks "**1**" and "**3**" with those on the crankshaft gear ***a** and injection pump gear ***c**, respectively.
- Install the fan shaft assembly **12** while aligning the alignment mark "**2**" with that of No. 1 idler gear assembly **17**.
- Install the idler gear assembly **3** while aligning the alignment mark "**4**" with that of the fan shaft assembly **12**.

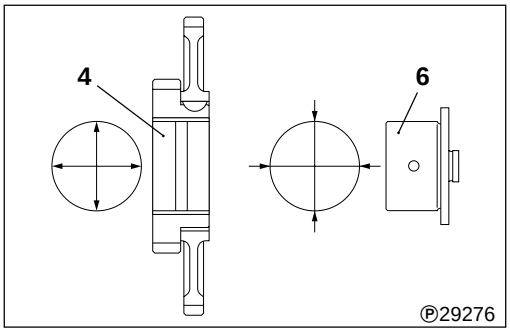

4 6 **Idler gear bushing and idler shaft**

[Inspection]

If the reading is more than the limit, replace defective parts.

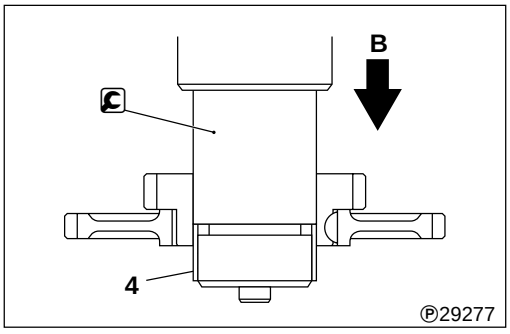

Idler gear bushing

[Removal]

B: Press
C: Idler Gear Bushing Puller

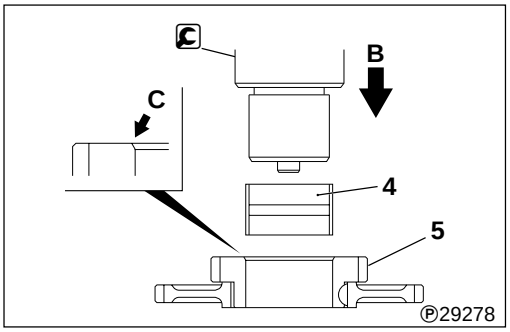

[Installation]

- Face the idler gear **5** in the illustrated direction. Using 🔧 Idler Gear Bushing Puller, press-fit the idler gear bushing **4** into the idler gear up to the chamfered portion **C**.

  B: Press

- After press-fitting the bushing, re-measure the clearance. If the reading is less than the standard limits, ream the idler gear bushing **4** until the clearance falls within the standard limits.

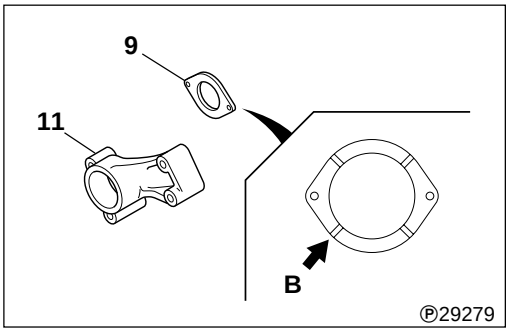

9 Installation of thrust plate

Install the thrust plate **9** with that side which does not have oil grooves **B** toward the fan shaft case **11**.

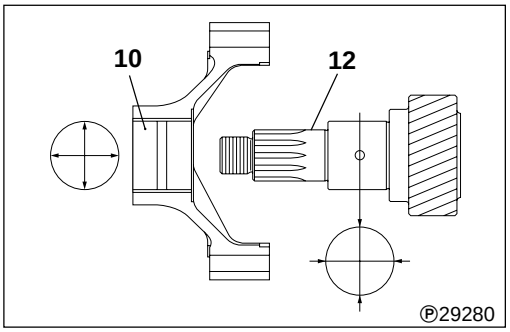

10 12 Fan shaft case bushing and fan shaft assembly

[Inspection]

If the clearance is more than the limit, replace defective parts.

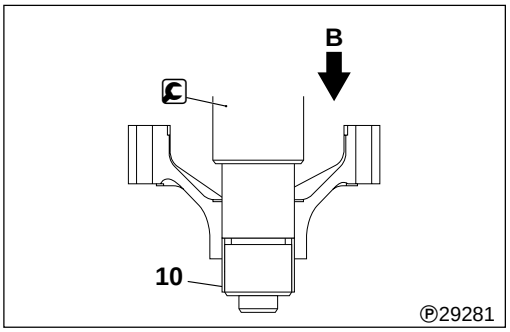

Fan shaft case bushing

[Removal]

B: Press
🔧**:** Idler Gear Bushing Puller

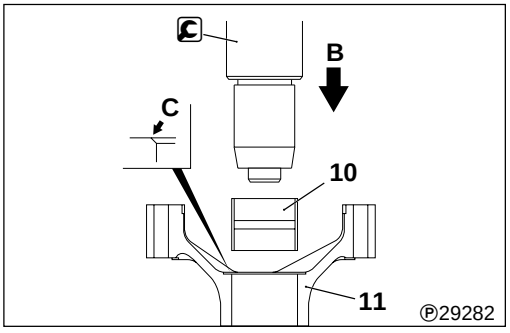

[Installation]

- Face the fan shaft case in the illustrated direction. Using 🔧 Idler Gear Bushing Puller, press-fit the fan shaft case bushing up to the chamfered portion **C** of the fan shaft case.

  B: Press

- After press-fitting the bushing, re-measure the clearance. If the reading is less than the standard limits, ream the fan shaft case bushing **10** until the clearance falls within the standard limits.

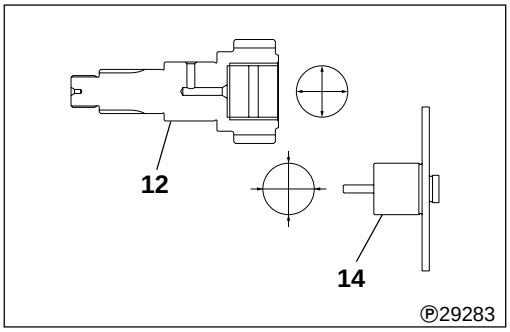

12 14 **Fan shaft assembly and fan gear shaft**

[Inspection]

If the clearance is more than the limit, replace defective parts.

14 **Installation of fan gear shaft**

Install the fan gear shaft **14** with its oil hole upward.

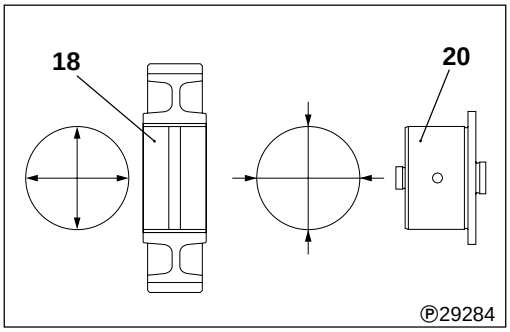

18 20 **No. 1 idler gear bushing and No. 1 idler shaft**

[Inspection]

If the clearance is more than the limit, replace defective parts.

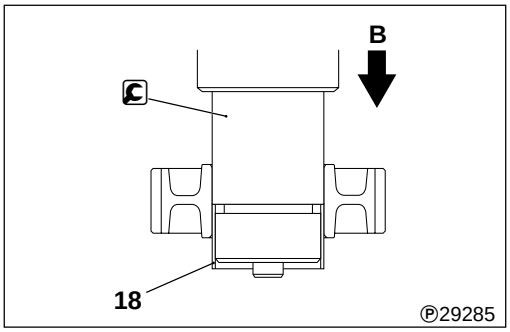

Idler gear bushing

[Removal]

B: Press
C: Idler Gear Bushing Puller

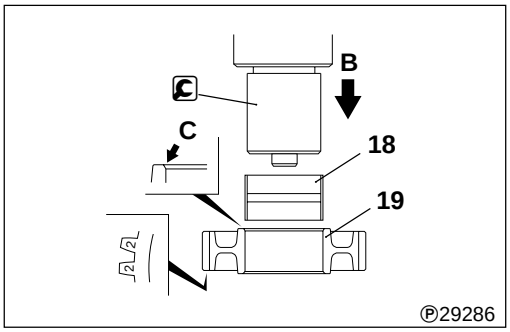

[Installation]

- Face the No. 1 idler gear **19** in the illustrated direction. Using C Idler Gear Bushing Puller, press-fit the idler gear bushing up to the chamfered portion **C** of the No. 1 idler gear.

  B: Press
- After press-fitting the bushing, re-measure the clearance. If the reading is less than the standard limits, ream the No. 1 idler gear bushing **18** until the clearance falls within the standard limits.

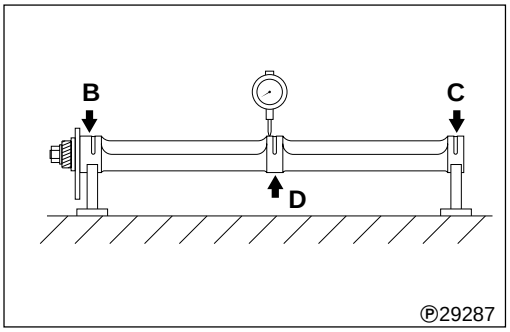

25 33 Balance shaft assembly

[Inspection]

- Check the balance shaft assemblies RH **25** and LH **33** for bend.
- Measure the balance shaft bend at No. 2 journal **D** while supporting the shaft at No. 1 journal **B** and No. 3 journal **C**.

NOTE

The bend of the balance shaft assemblies RH 25 and LH 33 is one half of the reading of the dial indicator taken after turning the balance shaft assembly through a rotation.

- If the reading exceeds the limit, disassemble the balance shaft assembly RH **25**, LH **33**, and replace the balance shaft RH **31**, LH **39**.

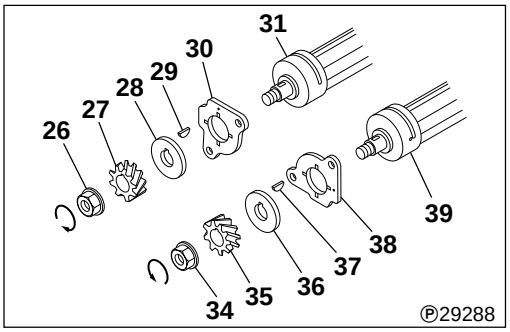

[Disassembly]

- The nut **26** of the balance shaft RH **31** and the nut **34** of the balance shaft LH **39** are different in the thread cutting direction.
- Remove the nut **26** by turning counter-clockwise. Remove the nut **34** by turning clockwise.

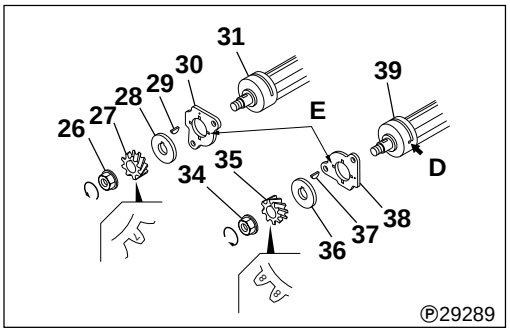

[Assembly]

- Of the balance shaft RH **31** and LH **39**, one with a shaft support hole **D** (ϕ 5 mm {ϕ 0.2 in.}) in No. 1 journal is the balance shaft LH **39**.
- Install the thrust plates **30** and **38** in the illustrated direction.

  E: Oil groove
- Install the balance shaft gears RH **27** and LH **35** in the illustrated direction.
- Install the nut **26** by turning clockwise. Install the nut **34** by turning counter-clockwise.

[Installation]

- The installation position of the balance shaft assembly RH **25** is determined by the gears to put in mesh when oil pump assembly **22** is installed. 📖 P. 11A-49
- The balance shaft assembly LH **33** is not brought in mesh with any gear until when the vacuum pump assembly is installed with the front case attached. Therefore, the following steps must be performed before installation.
  - Remove the plug **G** from the upper crankcase ***b**.
  - Insert a screwdriver from the hole from which the plug **G** was removed into the shaft support hole **E** (ϕ 5 mm {ϕ 0.2 in.}) provided in the No. 1 journal **B** of the balance shaft assembly LH **33** to support the balance shaft assembly.
  - Align the alignment marks of all the timing gears. 📖 P. 11A-56
  - By so doing, the balance shaft assembly LH **33** can be positioned. Keep it in position until the vacuum pump assembly is installed (📖 P. 11A-49).

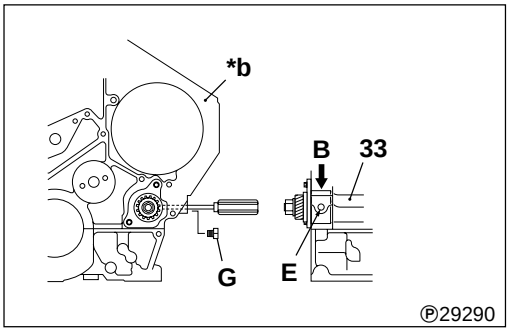

PISTONS, CONNECTING RODS AND CYLINDER LINERS

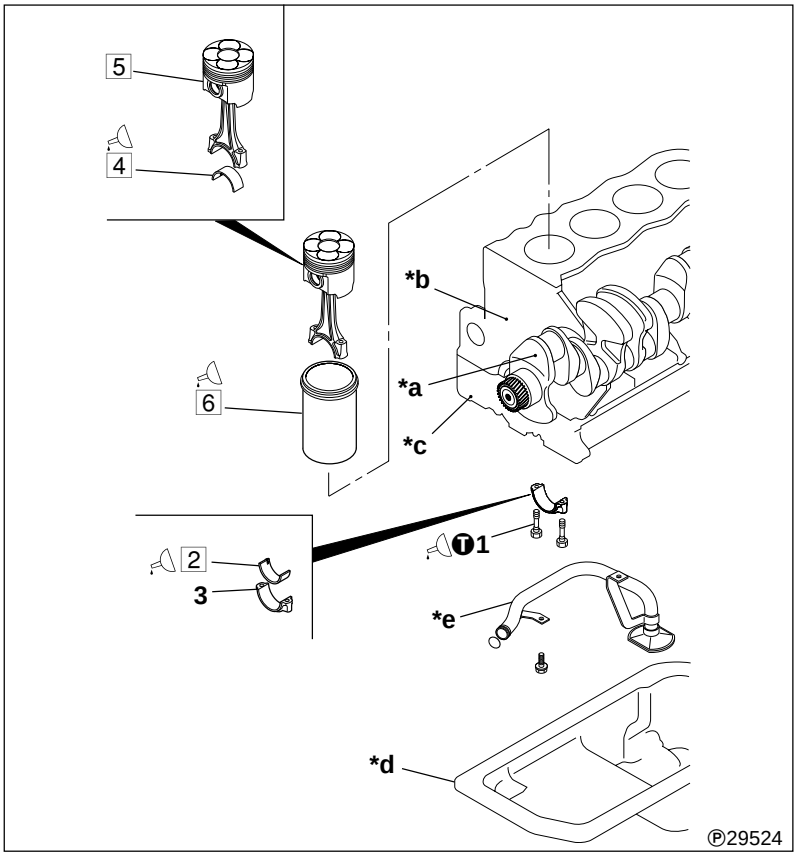

● **Pre-disassembly inspection**

P. 11A-61

● **Removal sequence**

1 Bolt
2 Lower connecting rod bearing
3 Connecting rod cap
4 Upper connecting rod bearing
5 Piston and connecting rod assembly P. 11A-65
6 Cylinder liner

***a:** Crankshaft assembly P. 11A-76
***b:** Upper crankcase P. 11A-76
***c:** Lower crankcase P. 11A-76
***d:** Oil pan Group 12
***e:** Oil strainer Group 12

NOTE:

Since the bolts 1 (for installing connecting rod cap 3) utilize the torque-turn tightening method, they must not be removed unless it is absolutely necessary.

● **Installation sequence**

Follow the disassembly sequence in reverse.

Service standards

Unit: mm {in.}

Location	Maintenance item		Standard value (Basic diameter in [ ])	Limit	Remedy
–	Piston protrusion		–0.09 to 0.09 {–0.0035 to 0.0035}	–	Inspect each location
	Connecting rod end play		0.15 to 0.45 {0.0039 to 0.018}	0.6 {0.024}	Replace
2,4	Connecting rod bearing	Oil clearance	[65 {2.56}] 0.04 to 0.09 {0.0016 to 0.0035}	0.2 {0.0079}	Replace
		Span when free	–	Less than 69.5 {2.73}	
5,6	Piston and connecting rod assembly-to-cylinder Liner clearance		[114 {4.49}] 0.135 to 0.155 {0.0053 to 0.0061}	–	Replace
6	Cylinder liner	Flange projection	0.01 to 0.07 {0.00039 to 0.0028}	–	Replace
		Inside diameter	ϕ 114 to 114.02 {ϕ 4.4881 to 4.4889}	ϕ 114.25 {ϕ 4.498}	Replace
		Cylindricity	0.03 {0.0012} or less	–	Replace
		Difference in cylinder liner flange projection from adjacent cylinders	0.04 {0.0016} or less	–	Replace

T Tightening torques

Unit: N·m {ft.lbs, kgf·m}

Location	Parts to be tightened	Tightening torque	Remarks
1	Bolt (connecting rod cap installation)	29 {22, 3} +90°	Wet

Lubricant

Location	Points of application	Specified lubricant	Quantity
1	Bolt threads	Engine oil	As required
2, 4	Connecting rod bearing inside surface	Engine oil	As required
6	Portions of cylinder liner held by upper crankcase	Engine oil	As required

Special tools

Unit: mm {in.}

Location	Tool name and shape	Part No.	Application
5	A: Piston Guide Clamp B: Piston Guide Lever 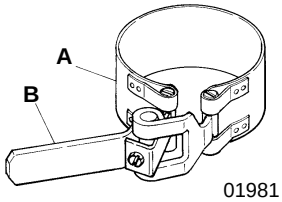 01981	A: MH063432 B: MH061658	Installing piston and connecting rod assembly
6	Cylinder Liner Extractor 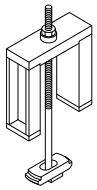 Ⓟ30008	MH062537	Removing cylinder liners
	Cylinder Liner Installer 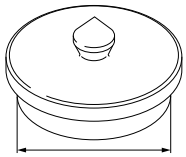 **ϕ 113.5** **{ϕ 4.46}** Ⓟ30010	MH063606	Installing cylinder liners
	A: Adapter B: Bolt C: Washer 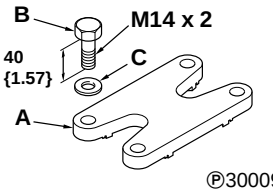 Ⓟ30009	A: MH063433 B: MF130625 C: MH005012	Measuring cylinder liner flange projection amount and their difference from adjacent cylinders.

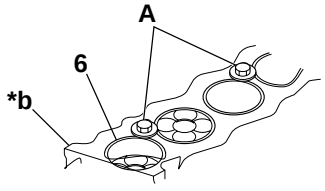

Ⓟ29525

◆ Service procedure

● **Pre-disassembly inspection**

CAUTION ⚠

The cylinder liners 6 may be forced out if the upper crankcase *b is turned over or if the crankshaft assembly *a is rotated with the pistons inserted. Before beginning with inspection procedures, be sure to hold each cylinder liner at its flange section using a washer A or a similar tool.

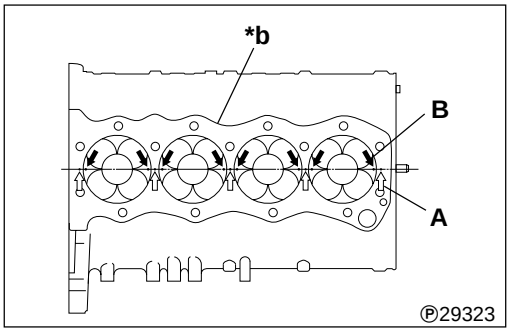

(1) Piston protrusion from crankcase top surface

NOTE:

The piston protrusion affects engine performance and must therefore be checked.

- Set the piston at top dead center.
- Make standard points **A** (five points) on upper crankcase assembly ***b** the 0 (zero) point and measure any protrusion relative to this point.
- Measure at four points on each piston at the nearest standard point from the zero point and produce the average value.

  B: Measurement point (16 points)
- If the average value is out of specification, check the clearances between all relevant parts.

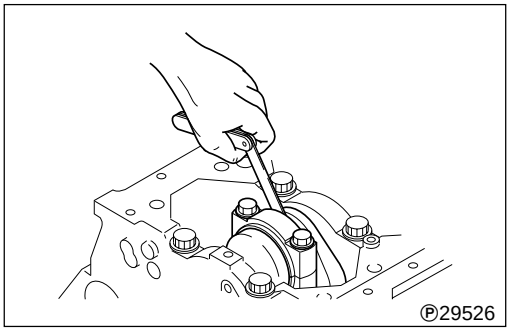

(2) Connecting rod end play

- Measure the end play every connecting rod.
- If any measurement exceeds the specified limit, replace the defective part (s).

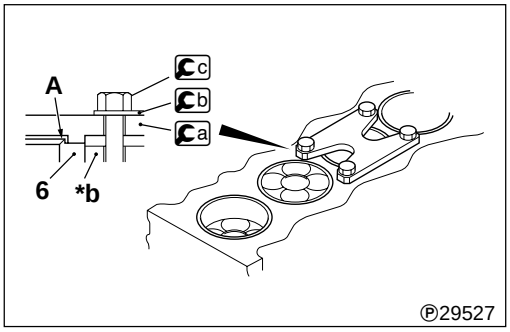

(3) Cylinder liner flange protrusion amount and its difference between adjacent cylinders.

- Install the [a] Adapter on the upper crankcase in such a way that it may not ride on the flange **A** of the cylinder liner **6** and secure it by tightening the [b] Washer and [c] Bolt to a torque of 49 N·m {36 lbf.ft, 5 kgf·m}.

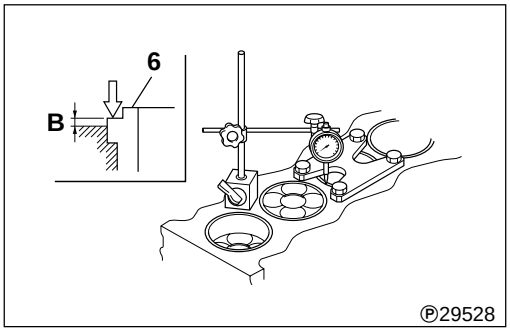

- Measure the protrusion amount **B** of flange of the cylinder liners **6**.
- If the measurement is out of specification, replace the defective part(s).
- Calculate the differences of the protrusion amounts between adjacent cylinders. If any difference is out of specification, check the mounting condition of the liners and replace the defective part(s).

CAUTION ⚠

If the cylinder liner 6 flange protrusion is insufficient, bearing pressure on the cylinder head gasket will be too low in the region of the bore, possibly causing gas to leak.

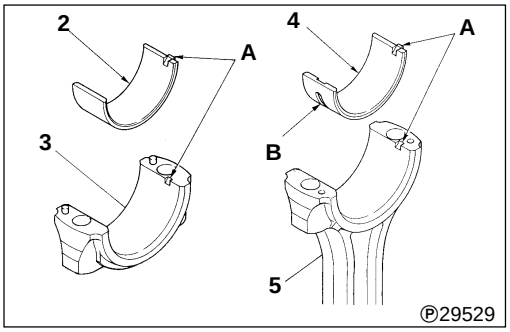

2 4 Connecting rod bearings

[Installation]

Fit the lower connecting rod bearing **2** into the connecting rod cap **3**, and fit the upper connecting rod bearing **4** into the piston and connecting rod assembly **5.** Make sure the lugs **A** on the bearings are fitted into their respective grooves.

CAUTION ⚠

The upper connecting rod bearing 4 has an oil hole B. The lower connecting rod bearing 2 has no oil hole. Take care not to confuse the upper and lower parts.

[Inspection]

CAUTION ⚠

- **Do not attempt to manually expand a connecting rod bearing 2, 4 if its span is insufficient.**
- **Upper and lower connecting rod bearing 2,4 must be replaced as a set.**

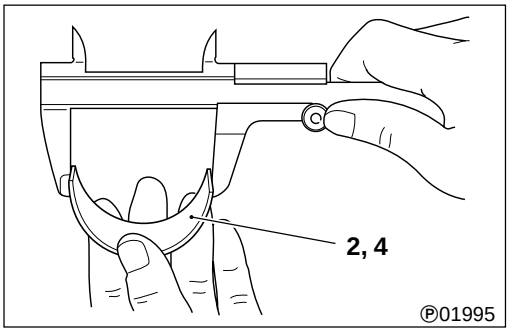

(1) Span when free

If the span is less than the specified requirement, replace the upper and lower connecting rod bearings **2**, **4** as a set.

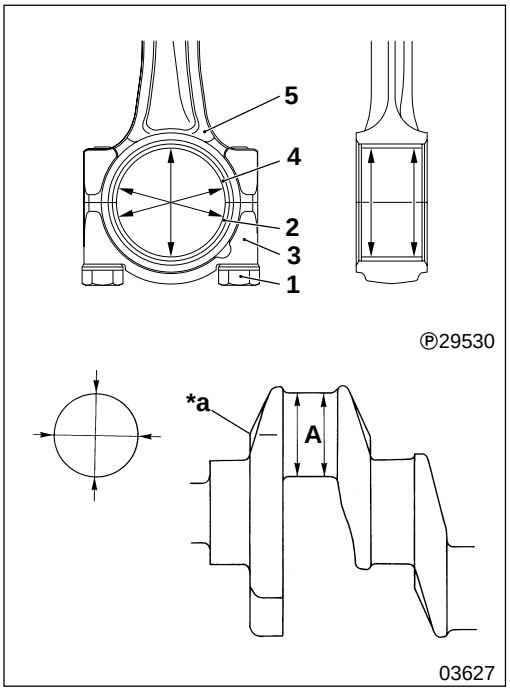

(2) Connecting rod bearing-to-crankshaft pin clearance (oil clearance)

- Fit the lower connecting rod bearing **2** into the connecting rod cap **3**, and fit the upper connecting rod bearing **4** into the piston and connecting rod assembly **5**. Then, tighten the bolts **1** to the specified torque.
- Measure the inside diameter of the connecting rod bearings **2**, **4** and the outside diameter of the crankshaft ***a** pin **A**. If the clearance exceeds the specified limit, replace the defective part(s).
- If the connecting rod bearing **2**, **4** have to be changed to undersized ones, adjust crankshaft ***a** pin outer diameter **A** in accordance with the specified procedure to fit the undersized dimensions. 📖 P. 11A-82

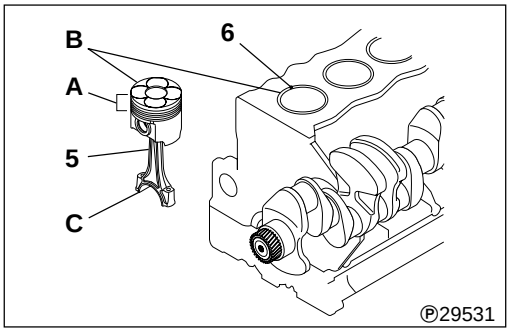

5 **Installing piston and connecting rod assembly**

- Ensure the gaps of the piston rings **A** remain in their correct positions. P. 11A-70
- Check that the size marks **B** on the piston and cylinder liner are the same. P. 11A-65
- Use care to prevent the connecting rod **C** from damaging the cylinder liner **6** and crankshaft pin.

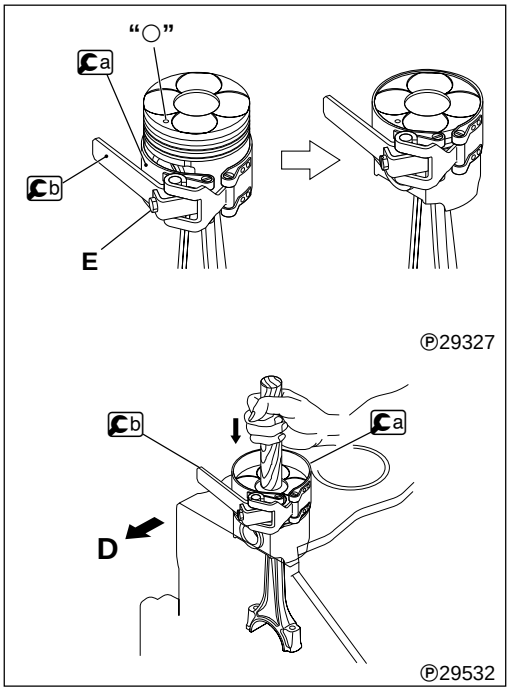

- With the piston's front mark "○" facing the front of the engine **D**, carefully insert the piston and connecting rod assembly into the cylinder liner.
- Using the bolt **E** of the b Piston Guide Lever, adjust the inside diameter of the a Piston Guide Clamp such that it matches the piston's outside diameter.
- After adjustment, remove it from the piston and smear engine oil over the following items**:**
  - Outside of piston
  - Inside of the a Piston Guide Clamp
  - Inside of the cylinder liner

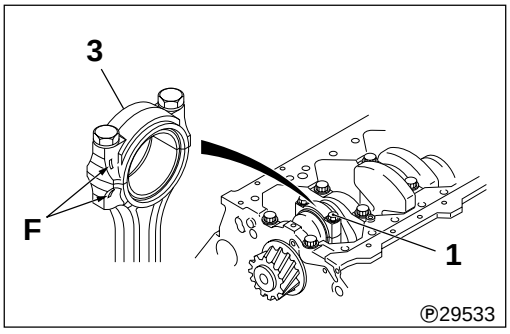

- With the piston installed, align the mating marks **F** on the connecting rod and connecting rod cap **3** and tighten the bolts **1** to the specification.
- Tighten bolts **1** alternately in the following manner.
  - First tighten to a torque of 29 N·m {22 ft.lbs, 3 kgf·m}.
  - Then tighten further 90° ± 5°.

NOTE:

After installation of connecting rod cap 3, inspect the following points:

- **End play of the connecting rod: P. 11A-62**
- **Piston Protrusion: P. 11A-62**

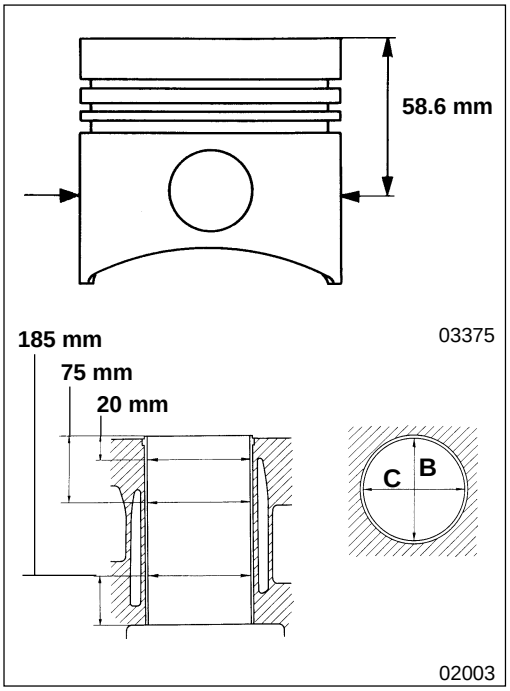

5 6 **Piston-and-connecting rod assembly and cylinder liners**

[Inspection]

- Take measurements to determine the clearance between the piston and cylinder liner **6**.
  - **A:** Outside diameter measurement position
  - **B:** Direction of crankshaft axis
  - **C:** Perpendicular to crankshaft axis
- If the clearance is out of specification, replace the defective part(s).

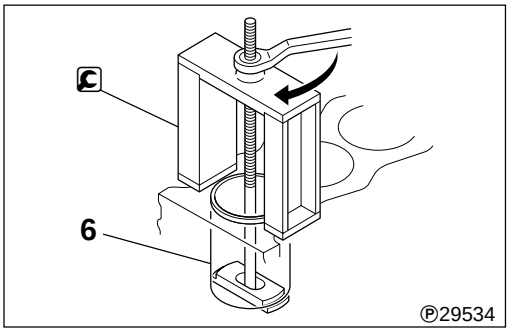

Cylinder liners

[Removal]

- **C:** Cylinder Liner Extractor

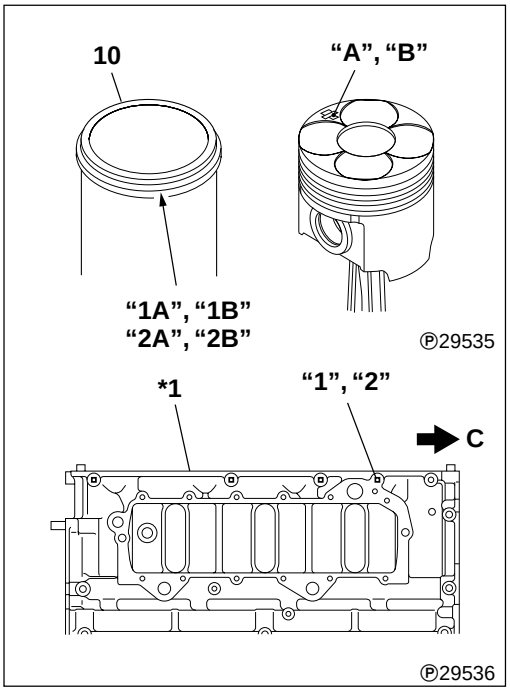

[Installation]

- Select a cylinder liner **6** which has the same size mark as those stamped on the upper crankcase ***b** and the piston.
- The size marks on the upper crankcase ***b** are arranged in the order of No. **1**, **2**, **3** and **4** cylinders starting from the engine front **C**.

Size marks on upper crankcase	Size marks on cylinder liners	Size mark on pistons
"1"	"1A"	"A"
	"1B"	
"2"	"2A"	
	"2B"	"B"

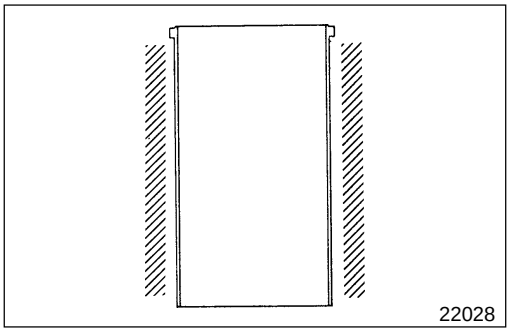

- Apply engine oil to the indicated ▨ parts of the cylinder liner **6**.

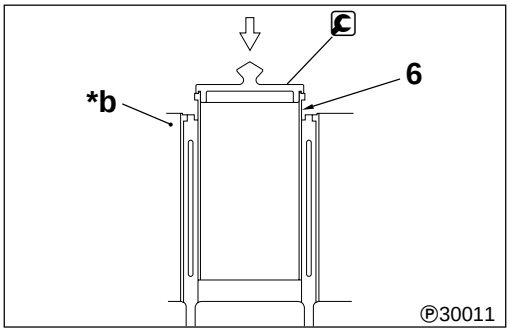

- Using the C Cylinder Liner Installer, gently tap down the cylinder liner **6** until it is snugly seated on the upper crankcase ***b**.

CAUTION ⚠

The cylinder liner 6 is thin in wall thickness.
Use utmost care when handling it.

Piston and Connecting Rod Assembly

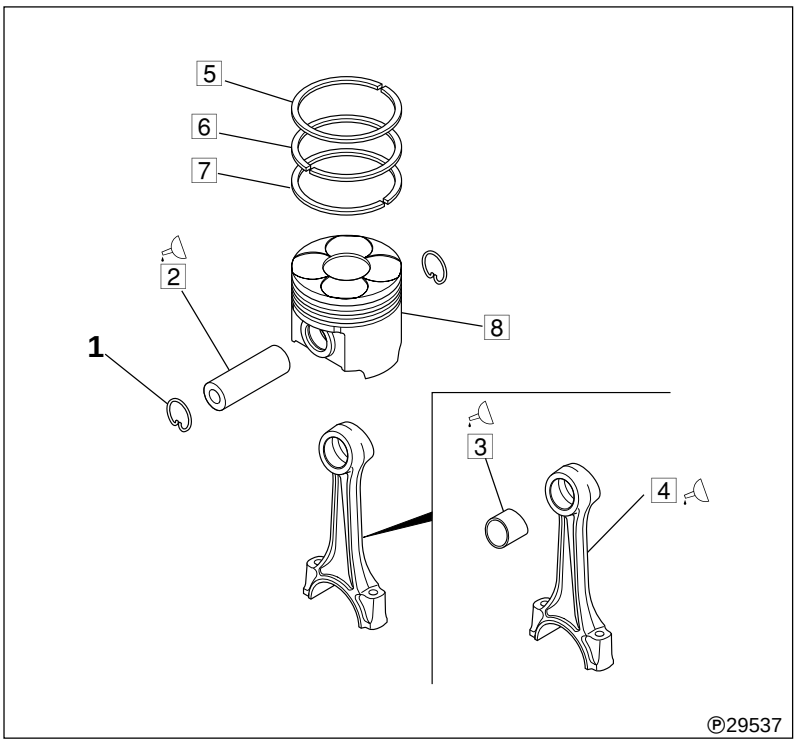

● **Disassembly sequence**

1 Snap ring
2 Piston pin
3 Connecting rod bushing
4 Connecting rod
5 1st compression ring
6 2nd compression ring
7 Oil ring
8 Piston

● **Assembly sequence**

Follow the disassembly sequence in reverse.

Service standards

Unit: mm {in.}

Location	Maintenance item		Standard value	Limit	Remedy
2, 3	Piston pin-to-connecting small end bushing clearance		[36 {1.42}] 0.03 to 0.04 {0.0012 to 0.0016}	0.1 {0.0039}	Replace
2, 8	Piston pin-to-piston clearance		[36 {1.42}] 0.007 to 0.021 {0.00028 to 0.00083}	0.05 {0.002}	Replace
4	Connecting rod bend		–	0.05 {0.002}	Replace
	Connecting rod twist		–	0.1 {0.0039}}	Replace
5 to 7	Piston ring end gap	1st compression ring	0.3 to 0.45 {0.012 to 0.018}	1.5 {0.059}	Replace
		2nd compression ring	0.4 to 0.55 {0.016 to 0.022]	1.5 {0.059}	
		Oil ring	0.3 to 0.5 {0.012 to 0.02}	1.5 {0.059}	
5 to 8	Piston ring-to-piston ring groove clearance	1st compression ring	0.02 to 0.10 {0.00079 to 0.0039}	0.2 {0.0079}	Replace
		2nd compression ring	0.07 to 0.10 {0.0028 to 0.0039}	0.15 {0.0059}	
		Oil ring	0.03 to 0.06 {0.0012 to 0.0024}	0.15 {0.0059}	

Lubricant

Location	Points of application	Specified lubricant	Quantity
2	Piston pin outer surface	Engine oil	As required
3	Connecting rod bushing outer surface	Engine oil	As required
4	Bushing installation surface of connecting rod	Engine oil	As required

Special tools

Unit: mm {in.}

Location	Tool name and shape	Part No.	Application
3	Connecting Rod Bushing Puller Kit 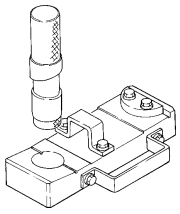 02015	Use Locally Manufactured Equivalent	Removing and installing connecting rod bushings
5 to 7	Piton Ring Tool **ϕ 60 to 120 {ϕ 2.36 to 4.72}** 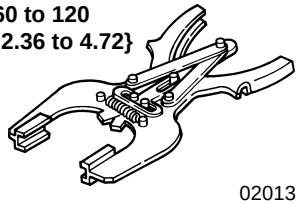 02013	Obtain Locally	Removing and installing rings

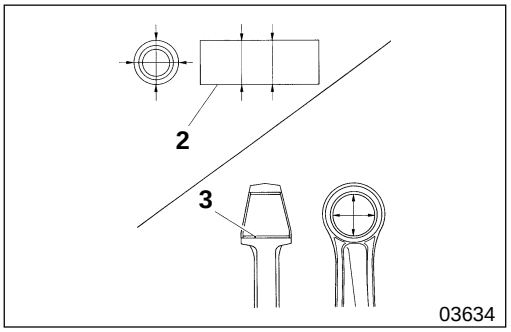

03634

◆ Service procedure

2 3 **Piston pin and connecting rod**

[Inspection]

If the clearance exceeds the specified limit, replace the defective part(s).

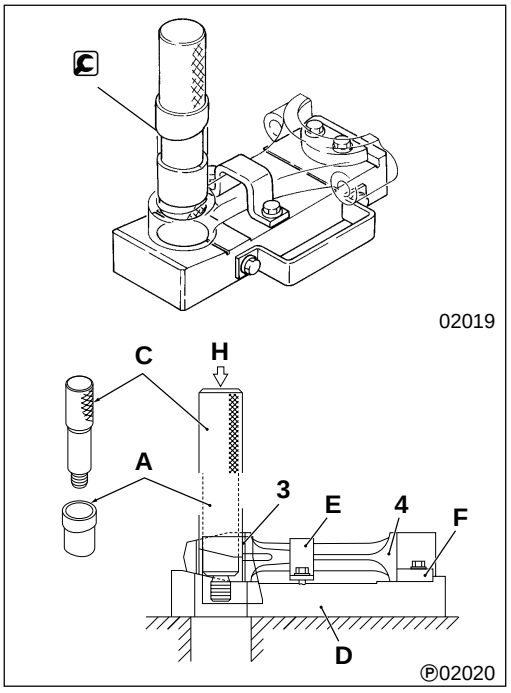

02019
Ⓟ02020

Connecting rod bushing

Replace the connecting rod bushing **3** using the Connecting Rod Bushing Puller Kit.
(Components of the Connecting Rod Bushing Puller Kit)

- **A:** Collar
- **B:** Collar
- **C:** Puller
- **D:** Base
- **E:** Bracket
- **F:** Plate
- **G:** Nut

[Removal]

- Remove the upper bearing (if fitted) from the big end of the connecting rod **4**.
- Mount the connecting rod **4** on the base **D** and lock it in position with the bracket **E** and place **F**.
- Fit the Collar **A** over the Puller **C** in the direction shown. Then, slowly apply pressure of approximately 49 kN (11020 lbf, 5,000 kgf) **H** until the connecting rod bushing **3** is pressed out.

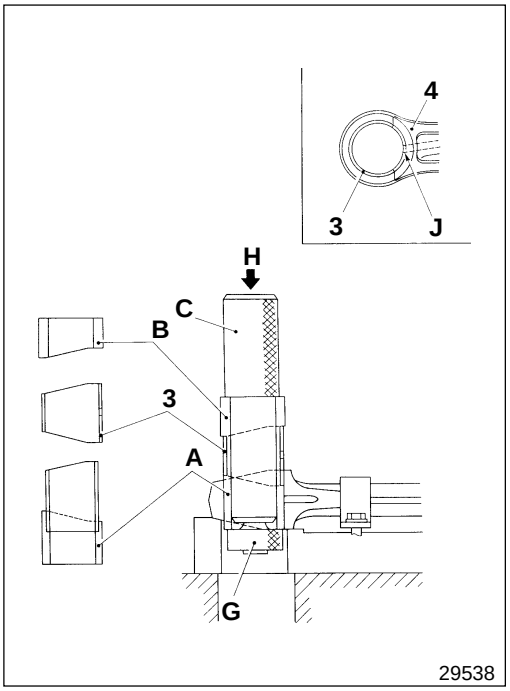

[Installation]

- Apply engine oil to the small end of the connecting rod **4** and to the outer surface of the connecting rod bushing **3**.
- Fit the Collar **B** over the Puller **C**, position the connecting rod bushing **3** and the Collar **A**, and lock this arrangement together with the Nut **G**.
- Align the oil holes **J** in the connecting rod bushing **3** and in the small end of the connecting rod **4**. Then, use a press to slowly apply pressure of approximately 49 kN (11020 lbf, 5,000 kgf) **H** until the bushing is pressed into place.
- After press-fitting the connecting rod bushing **3**, ream it to achieve the specified normal clearance between the bushing and piston pin **2**.

NOTE:

After reaming the connecting rod bushing 3, insert the piston pin 2 and check that it turns smoothly and without play.

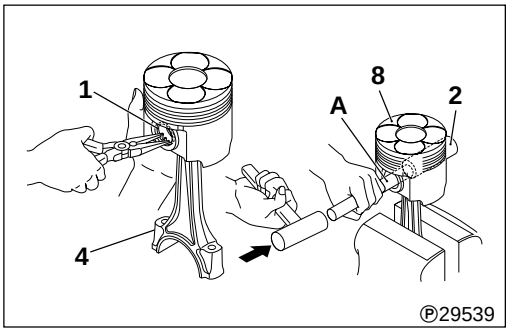

2 4 8 **Piston Pin, connecting rod, and piston.**

[Removal]

- Removal the snap ring **1** and tap out the piston pin **2** using a rod **A** and hammer.
- If the piston pin **2** is difficult to remove, heat the piston **8** in hot water or using a piston heater.

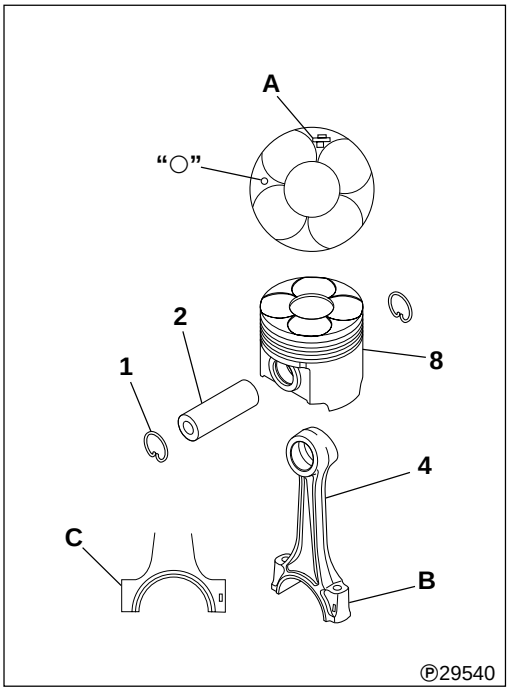

[Installation]

- Apply engine oil to the piston pin **2**. With the connecting rod **4** and piston **8** and aligned as illustrated, insert the piston pin to hold these components together.
  - **A:** Weight mark
  - **B:** Weight mark (**A** through **G**: "**A**" stands for the largest weight)
  - **C:** Alignment mark for connecting rod cap
  - "○"**:** Front mark
- If the piston pin **2** is difficult to insert, heat the piston pin **8** in hot water or using a piston heater.

CAUTION ⚠

- **Make sure that all pistons have the same weight mark.**
- **The connecting rods must all have the same weight mark.**
- **After inserting the pin 2, check that it turns smoothly and without play.**

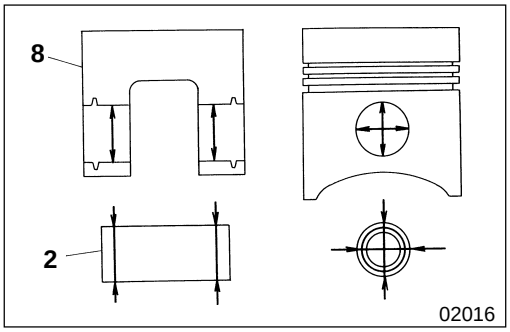

2 8 Piston pin-to-piston clearance

If the clearance exceeds the specified limit, replace the defective part(s).

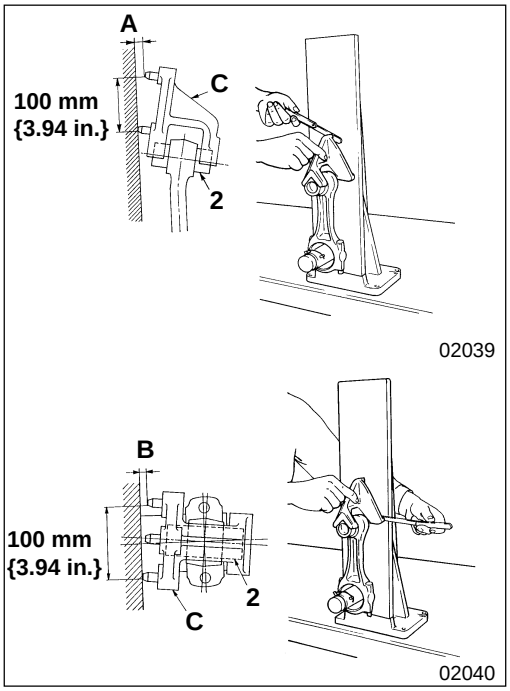

4 Connecting rod bend and twist

- Fit the connecting rod bushing **3** and piston pin **2** in their respective positions of the connecting rod **4**.
- Measure the extent of bending **A** and twisting **B** in the connecting rod **4**. If either measurement exceeds the specified limit, replace the connecting rod.

  C: Connecting rod aligner (Measurement device)

NOTE:

- **Before mounting the connecting rod 4 on the connecting rod aligner C, install the upper and lower connecting rod bearings in their respective positions. P. 11A-64**
- **Measurements must be made with the connecting rod cap mounting bolts tightened to the specification. P. 11A-64**

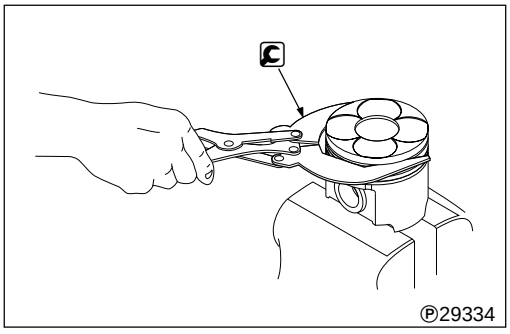

5 to 8 Piston rings and piston
Piston rings

[Removal]

C: Piston Ring Tool

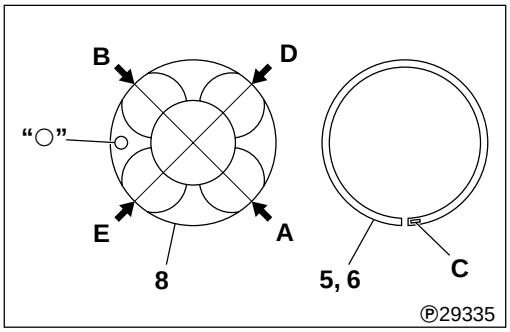

[Installation]

- Fit the oil ring **7** onto the piston **8** with its gap **A** and the expander spring end joint **B** in the position illustrated.
- Fit the piston ring **5**, **6** onto the piston **8** such that the manufacturer's marks **C** near the gaps face upward.
- Align the gaps **D**, **E** of the piston ring **5**, **6** as illustrated.

  D: 1st compression ring gap
  E: 2nd compression ring gap
  "○"**:** Front mark

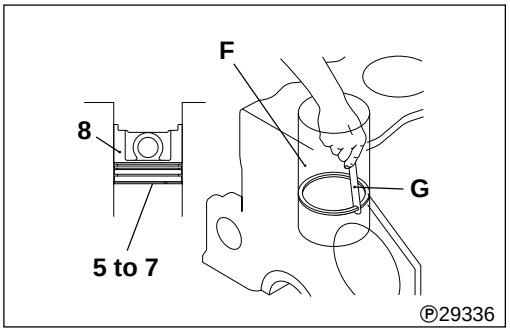

[Inspection]

(1) Piston ring end gap

- Using the crown of a piston **8**, push the piston ring **5**, **6** or **7** horizontally into a cylinder liner **F** in the upper crankcase for measurement.
- Taking care not to remove the piston ring **5**, **6** or **7**, measure the end gap using a thickness gauge **G**. Replace all the rings of piston if any gap exceeds the specified limit.

NOTE:

- **To keep the piston ring 5, 6 or 7 horizontal, be sure to insert them into the cylinder liner F using a piston 8.**
- **Push the piston ring 5, 6 or 7 down to the bottom of cylinder liner F; the bottom should be less worn than the top.**
- **Piston rings 5, 6 or 7 must be replaced as a set. Never replace piston rings individually.**

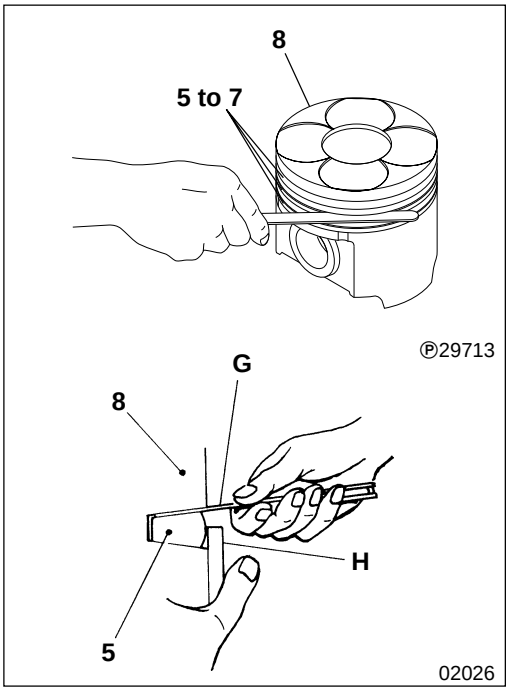

(2) Piston ring-to-piston ring groove clearance

- If any measurement exceeds the specified limit, replace the defective part(s).
- Measure the 1st compression ring **5** clearance with a thickness gauge **G** while pressing the ring against the piston **8** with a straight edge **H**.

NOTE:

- **Remove any carbon deposits from the ring groove of the piston 8 and measure the clearance around the piston's entire periphery.**
- **Piston ring 5, 6, 7 must be replaced as a set. Never replace piston rings individually.**

FLYWHEEL

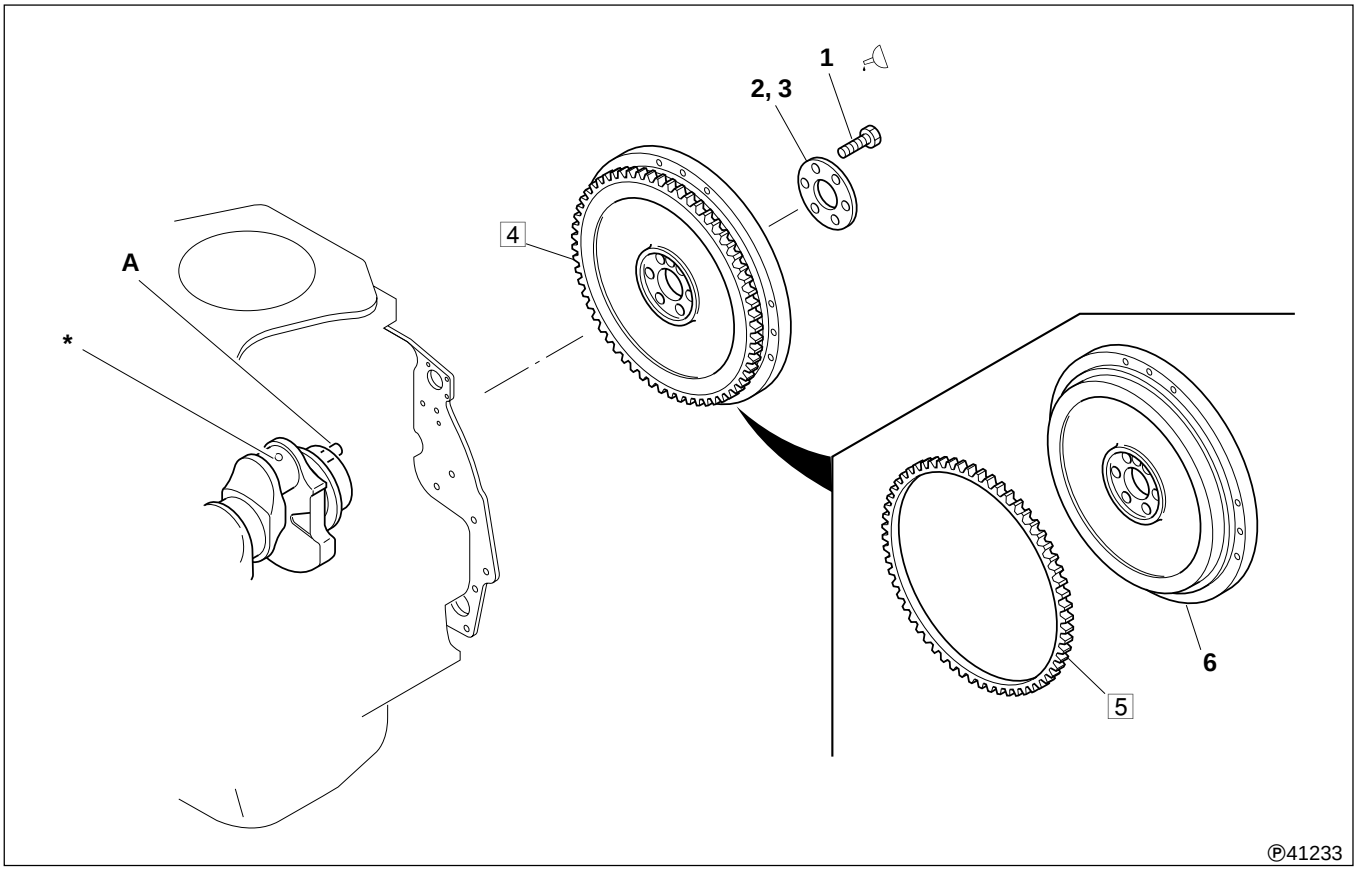

● **Disassembly sequence**

1 Bolt
2 Plate
3 Pilot bearing
4 Flywheel assembly
5 Ring gear
6 Flywheel
***:** Crankshaft assembly
📖 P. 11A-76
A: Locating pin

● **Assembly sequence**
Follow the disassembly sequence in reverse.

CAUTION ⚠

- **Make sure that the mounting surface of the flywheel assembly 4 is free from any foreign substances, oil and detrimental flaws.**
- **After installing flywheel assembly 4, check for runout.**

NOTE

- **Do not remove the pilot bearing 3 or ring gear 5 unless an abnormality is evident.**

❶ Tightening torques

Unit: N·m {lbf.ft, kgf·m}

Location	Parts to be tightened	Tightening torque	Remarks
1	Blot (flywheel assembly installation)	39.0 {29.0, 4.0} +40°	Wet

Lubricant

Location	Points of application	Specified lubricant	Quantity
1	Blot threads	Engine oil	As required

Special tools

Unit: mm {in.}

Location	Tool name and shape	Part No.	Application
4	Socket Wrench  **Width across flats: 22 {0.87}** Ⓟ01984	Obtain Locally	Installation of flywheel
	Magnet Base 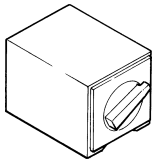 00471	Obtain Locally	

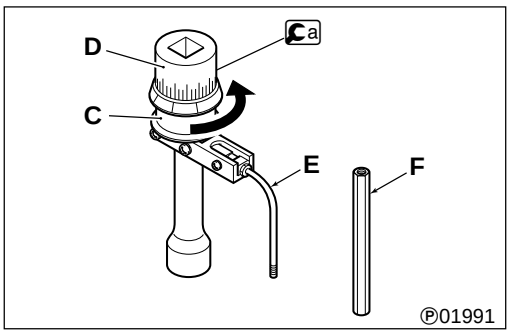

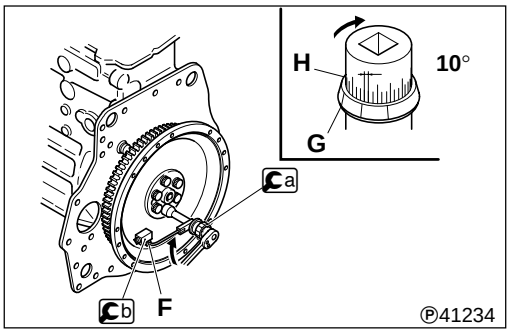

◆ Service procedure

[Installation]

- Tighten the bolts **1** to the specified torque (39.0 N·m {29 ft.lbs**,** 4.0 kgf·m}. After that, turn the bolts further in accordance with the following procedure.
- Turn the holder **C** of the a Socket Wrench counterclockwise to the tension the built-in spring.

  D: Socket
  E: Rod
  F: Rod (extension)

- Fit the b Magnet Base on the flywheel at a position where it can come in contact with the Rod **F** (for extension) as shown in the illustration.
- Set the rod **F** (for extension) such that it may be pressed against the b Magnet Base by the spring force.
- Align any inscribed line **G** on the holder **C** with any inscribed line **H** on the socket **D**. (Use this point as reference 0° position.)
- From the above reference position, turn the socket **D** clockwise by 40° to tighten the bolt further.

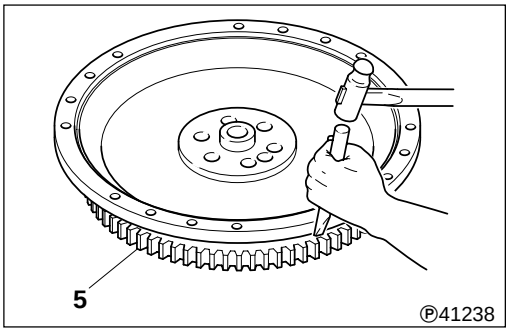

5 **Ring gear**

[Inspection]

Inspect ring gear **5** for damage and abnormal wear. If any defect is evident, the ring gear must be replaced.

[Removal]

Heat the ring gear **5** evenly with an acetylene torch or the like.

WARNING ⚠

Be careful not to get burned.

- Remove the ring gear **5** from the flywheel by tapping around its entire periphery.

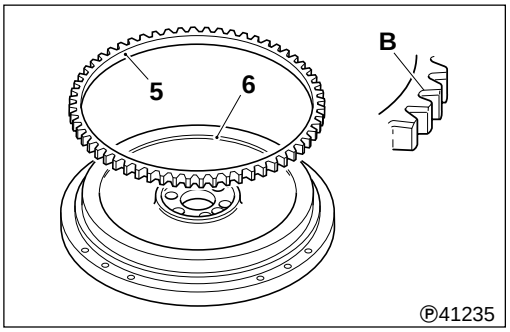

[Installation]

Using an acetylene torch or the like, heat the ring gear **5** to approximately 100 °C {212 °F} for **3** minutes.

WARNING ⚠

Be careful not to get burned.

- Fit the ring gear **5** with the non-chamfered side of its teeth toward the flywheel **6**.

  B: Chamfered side of ring gear **5**.

CRANKSHAFT AND CRANKCASE

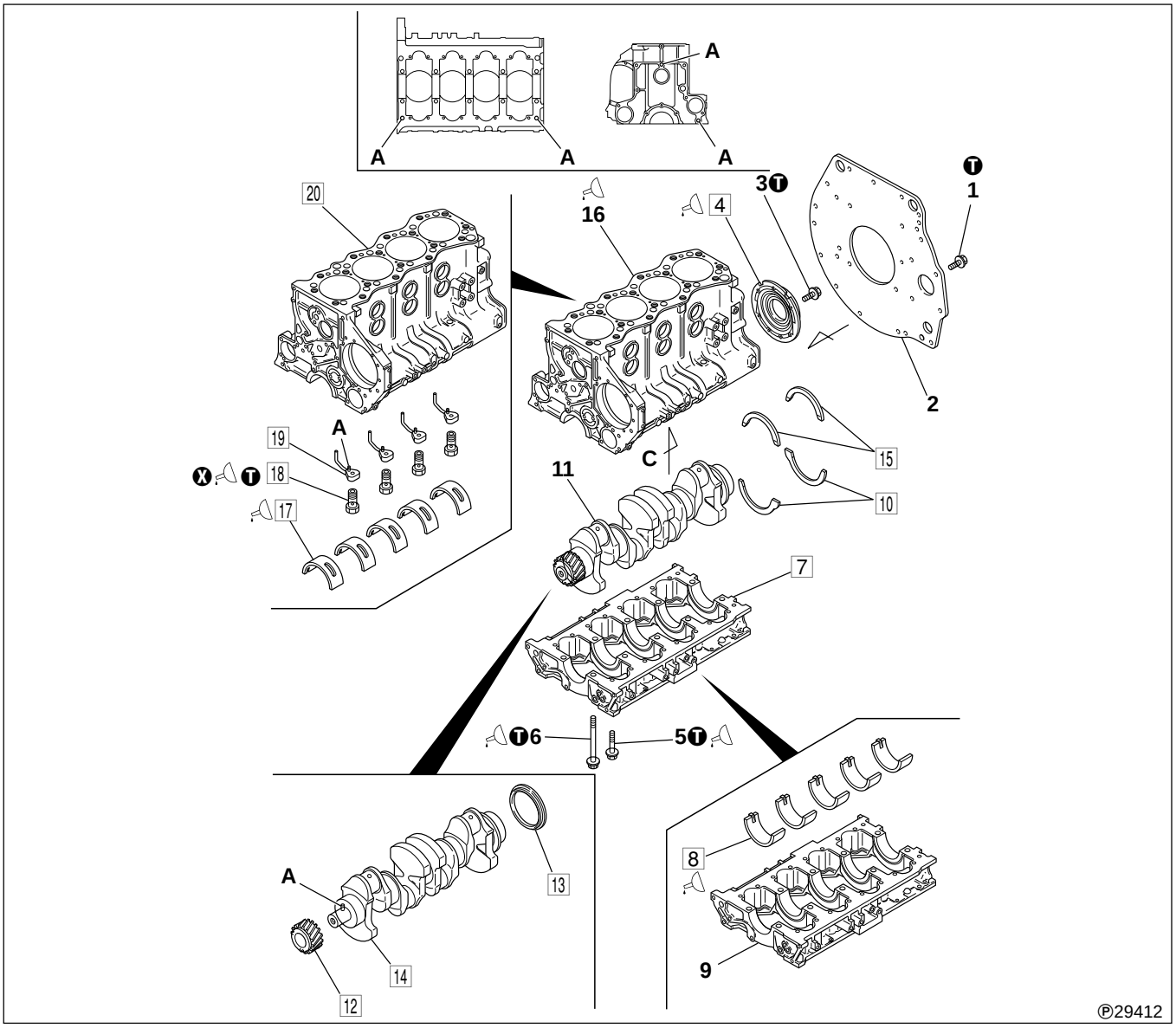

● **Pre-disassembly inspection**

P. 11A-78

● **Disassembly sequence**

1 Bolt
2 Rear plate
3 Bolt
4 Rear oil seal
5 Bolt
6 Main cap bolt
7 Lower crankcase assembly
8 Lower main bearing
9 Lower crankcase
10 Lower thrust plate
11 Crankshaft assembly
*** 12** Crankshaft gear
*** 13** Rear oil seal slinger
14 Crankshaft
15 Upper thrust plate
16 Upper crankcase assembly
17 Upper main bearing
*** 18** Check valve
19 Oil jet
20 Upper crankcase

A: Locating pin
X: Non-reusable part

NOTE:

- **Do not remove parts marked * unless defects are evident.**
- **The lower crankcase 9 and upper crankcase 20 have been machined in a pair. Therefore, replacing either one of the pair is not allowed.**

● **Assembly sequence**

Follow the disassembly sequence in reverse.

CAUTION ⚠

- **If the main cap bolt shows evidence of having been tightened three times, replace it. P. 11A-79**
- **Do not overtighten the check valve 18. If the tightening torque exceeds the specified one, the check valve may malfunction, resulting in seizure of the engine.**

Service standards

Unit: mm {in.}

Location	Maintenance item			Standard value (Basic diameter in [ ])	Limit	Remedy
–	Crankshaft end play			0.10 to 0.28 {0.0039 to 0.0110}	0.4 {0.016}	Replace thrust plate
8, 17	Main bearing	Oil clearance	No. 1, 2, 4, 5	[86 {3.385}] 0.04 to 0.11 {0.0016 to 0.0043}	0.15 {0.0059}	Replace
			No. 3	[86 {3.385}] 0.06 to 0.13 {0.0024 to 0.0051}		
		Span when free (See pg.11A-80)		–	Less than 91.5 {3.60}	Replace
14	Crankshaft	Bend		0.02 {0.00079} or less	0.05 {0.002}	Correct or replace
		Pin and journal	Roundness	0.01 {0.00039} or less	0.03 {0.0012}	Correct or replace
			Cylindricity	0.06 {0.00024} or less	–	Correct or replace
20	Distortion of upper crankcase top surface			0.07 {0.0028} or less	0.2 {0.0079}	Replace

❶ Tightening torques

Unit: N·m {ft.lbs, kgf·m}

Location	Parts to be tightened	Tightening torque	Remarks
1	Bolt (rear plate installation)	63,7 {47, 6.5}	—
3	Bolt (rear oil seal installation)	9.8 {7.2, 1.0}	—
5	Bolt (lower crankcase installation)	23.5 {17, 2.4}	Wet
6	Main cap bolt (lower crankcase installation)	49 {36, 5.0} + 90°	• Wet • Reusable 3 times
18	Check valve	29.4 {22, 3.0}	Wet

Lubricant and sealant

Location	Points of application	Specified lubricant/sealant	Quantity
4	Rear oil seal lip	Engine oil	As required
	Upper and lower crankcase contracting surface of rear oil seal	Threebond 1207	As required
5, 6	Bolt threads and seating surface	Engine oil	As required
8, 17	Main bearing inside surfaces	Engine oil	As required
16	Lower crankcase attaching surface of upper crankcase	Threebond 1207	As required
18	Check valve threads	Engine oil	As required

Special tools

Unit: mm {in.}

Location	Tool name and shape	Part No.	Application
12	Gear Puller 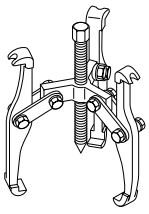 Ⓟ02065	Obtain Locally	Removing crankshaft gear
13	Rear Oil Seal Slinger Installer 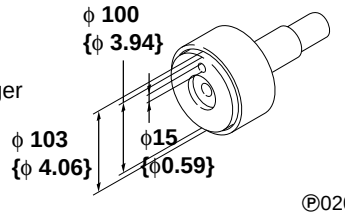 Ⓟ02051	MH061470A	Installing rear oil seal slinger

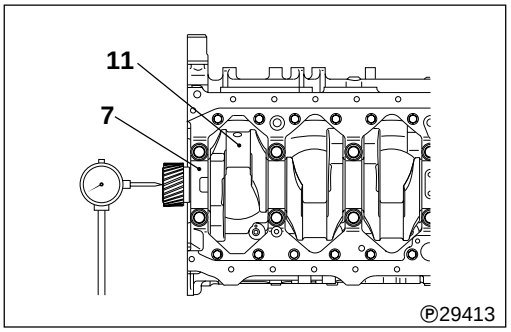

Ⓟ29413

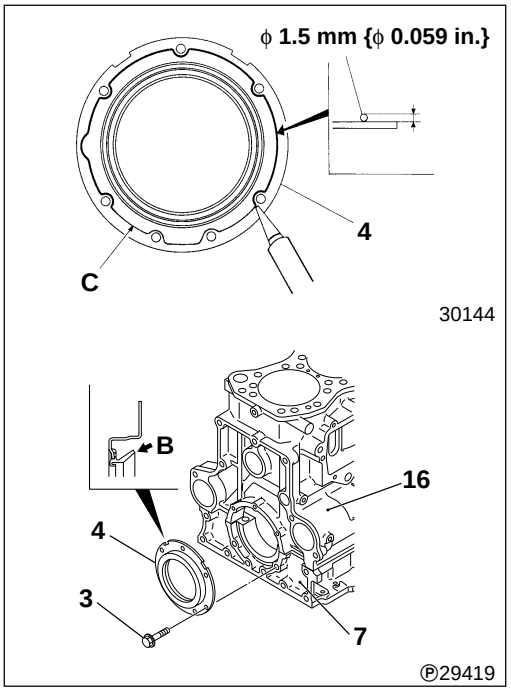

30144
Ⓟ29419

◆ Service procedure

● **Pre-disassembly inspection**
Crankshaft end play

- Before removing the lower crankcase assembly **7**, measure the extent of crankshaft end play.
- If the measurement exceeds the specified limit, replace the thrust plates with oversize ones. 📖 P. 11A-87

4 **Mounting of rear oil seal**

- Apply engine oil to lips **B** of rear oil seal **4**.
- Apply sealant **D** along black line **C** stamped on the rear oil seal **4** evenly without break. (ϕ 1.5 mm {ϕ 0.059 in.})
- After applying sealant **D**, install the rear oil seal **4** between the lower crankcase assembly **7** and upper crankcase assembly **16** within three minutes.

CAUTION ⚠

- **Make sure that the sealant application surfaces are clean and free from grease and oil.**
- **Use care not to let the applied sealant slip out of place during installation.**
- **After fitting rear oil seal, wait at least an hour before starting the engine.**
- **Apply a new bead of sealant D whenever mounting bolts 3 of rear oil seal have been loosened.**

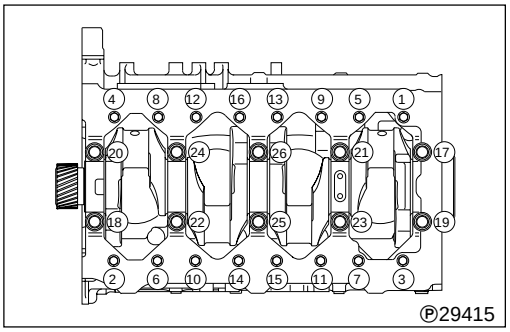

Ⓟ29415

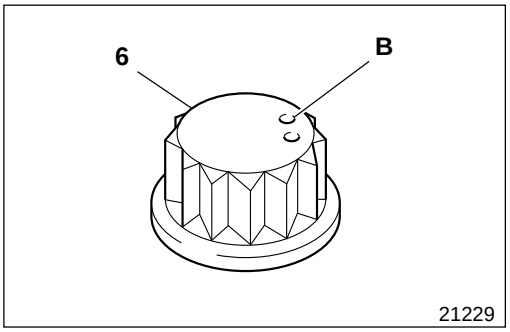

21229

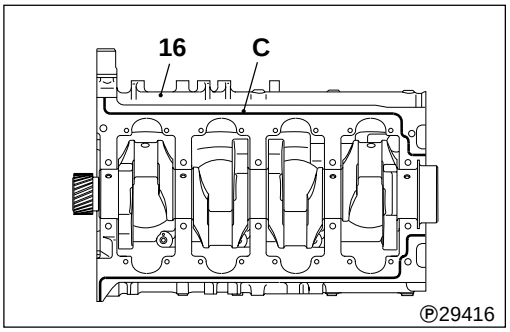

Ⓟ29416

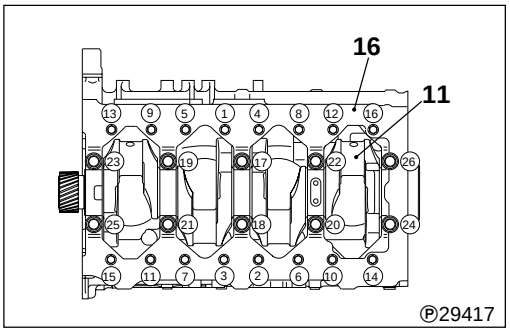

Ⓟ29417

7 **Lower crankcase assembly**

- ① – ⑯ : Bolt **5**
- ⑰ – ㉖ : Main cap bolt **6**

[Removal]

- Gradually loosen the bolts **5** in the sequence of numbers ① – ⑯ shown in the illustration.
- Then, gradually loosen the main cap bolts **6** in the sequence of numbers ⑰ – ㉖ shown, and remove.

[Installation]

CAUTION ⚠

- **Before installing the lower crankcase assembly check the head of the main cap bolt 6 for punch marks B.**
- **The number of punch marks corresponds to the number of times the bolt has been tightened using torque-turn method (bolts with two or less punch marks are reusable). If there are three, replace the main cap bolt.**

- Apply ϕ 2 mm {ϕ 0.079 in.} thick bead of specified sealant **C** to the fitting surface of the upper crankcase assembly **16** as shown.
- After applying sealant **C**, install the lower crankcase assembly **7** to the upper crankcase assembly **16** within three minutes and secure with the main cap bolts **6** and the bolts **5** as follows:

CAUTION ⚠

- **Make sure that the sealant application surfaces are clean and free from grease and oil.**
- **Use care not to let the applied sealant C slip out of place during installation.**

- Apply a thin coat of engine oil to the threaded part and seating surface of each main cap bolt **6**, then tighten the bolts to a torque of 49 N·m {36 lbf.ft, 5.0 kgf·m} in the sequence of the numbers shown (⑰ – ㉖)
- After tightening, give the bolts an additional 90° turn.
- Following the main cap bolts **6**, tighten the bolts **5** to the specified torque in the sequence of the numbers shown (① – ⑯).

CAUTION ⚠

- **After installation, wait at least an hour before starting the engine.**
- **Apply a new bead of sealant C whenever the bolts 5 or the main cap bolts 6 have been loosened.**

- After tightening the main cap bolts **6** using the torque-turn tightening method, make a punch mark on the head of each one to indicate the time of use.

NOTE:

Since bolts 1 utilize the torque-turn tightening method, they must not be tightened further after this procedure.

- After installing the lower crankcase assembly, check the following:
  - Smooth rotation of crankshaft assembly **11**
  - End play of the crankshaft assembly **11** P. 11A-78

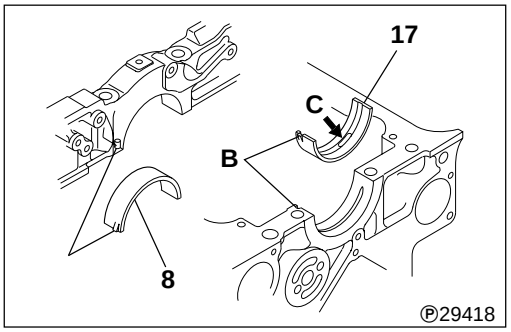

8 **17** **Main bearings**

[Installation]

Install the main bearings **8**, **17** such that their lugs **B** fit into the corresponding grooves.

CAUTION ⚠

The upper main bearing 17 has an oil hole C. The lower main bearing 8 has no oil hole. Take care not to confuse the upper and lower parts.

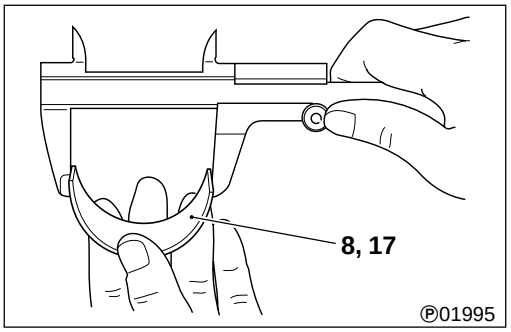

[Inspection]

CAUTION ⚠

- **Do not attempt to manually expand either bearing 8, 17 if its span is insufficient.**
- **Upper and lower bearings 8, 17 must be replaced as a set.**

(1) Span when free

If either bearing's span when free exceeds the specified limit, the bearings **8**, **17** must be replaced.

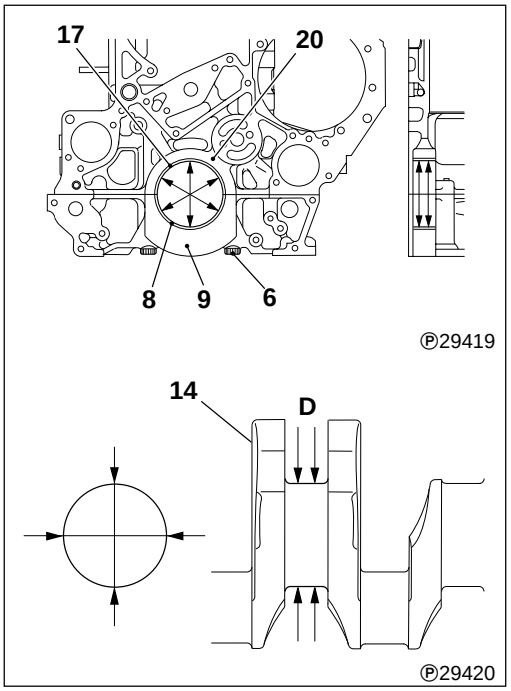

(2) Main bearing-to-crankshaft clearance

- Fit the upper main bearing **17** into the upper crankcase **20** and the lower main bearing **8** into the lower crankcase **9**. Then, tighten the main cap bolts **6** to their specified torque (49 N·m {36 lbf.ft, 5.0 kgf·m}).
- Measure the internal diameters of the main bearings **8**, **17** and the journal outside diameter **D** of the crankshaft **14**. If the clearance exceeds the specified limit, replace the defective part(s).

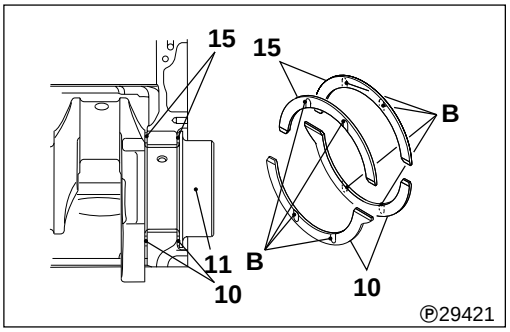

10 15 **Thrust plate**

Install the thrust plates **10**, **15** to the crankshaft assembly **11** at No. 5 journal only. Install all halves of the thrust plates with the oil groove **B** oriented outward.

NOTE:

If any oversize thrust plates are to be used, be sure to use an upper thrust plate 15 and lower thrust plate 10 of the same size at one side. However, using the same size upper (or lower) thrust bearings on both sides is not necessary.
Available oversize: 0.15, 0.30, 0.45 mm {0.0059, 0.012, 0.018 in.}

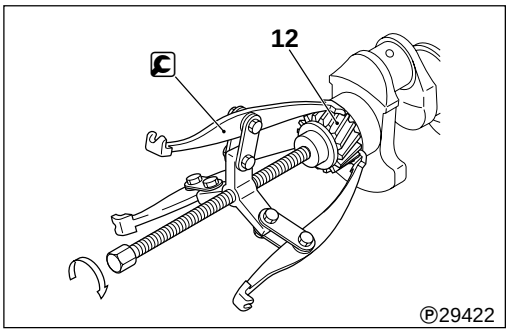

12 **Crankshaft gear**

[Removal]

: Gear Puller

CAUTION ⚠

Do not tap off the crankshaft gear 12 since this could damage it.

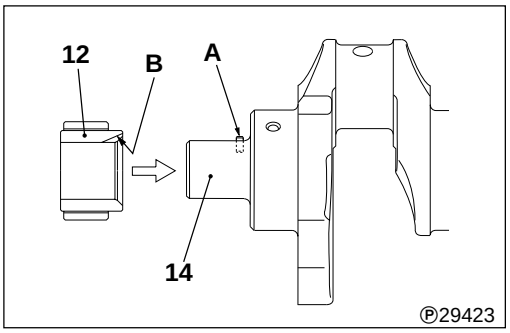

[Installation]

- Using a piston heater or the like, heat the crankshaft gear **12** to a temperature of approximately 150 °C {302 °F}.

WARNING ⚠

Be careful not to get burned.

- Align the location pin **A** on the crankshaft **14** with the notch **B** in the crankshaft gear **12**. Then, drive the gear into position by striking its end face with a plastic mallet.

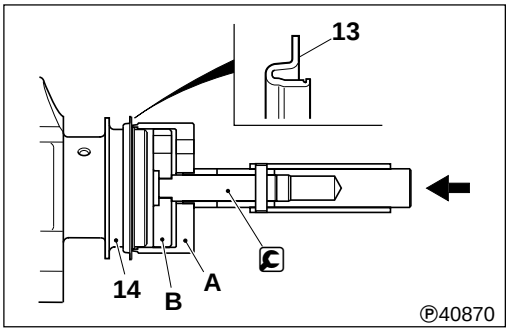

13 **Rear oil seal slinger**

[Removal]

Taking care not to damage the crankshaft **14**, split the oil seal slinger using a chisel or the like.

[Installation]

With the rear oil seal slinger **13** directed as illustrated, drive it onto the crankshaft using the Rear Oil Slinger Installer until the tools end face **A** is pressed firmly against the guide **B**.

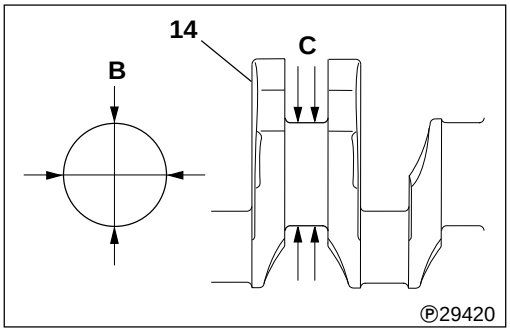

14 **Crankshaft**

[Inspection]

(1) Roundness and cylindricity of crankshaft journal and pin

If either measurement exceeds the specified limit, grind it to undersize or replace the crankshaft **14**.

B: Roundness
C: Cylindricity

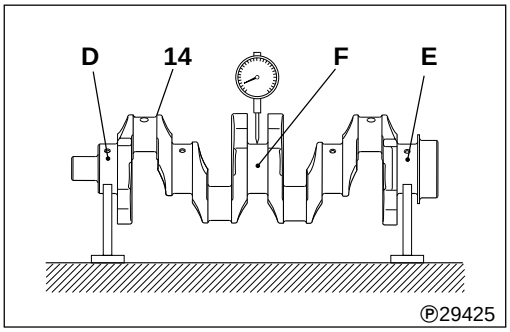

(2) Bend

- Support the crankshaft **14** at its No. 1 journal **D** and No. 7 journal **E**. Measure the extent of bending in the crankshaft at the center of the No. 4 journal **F**.
- If the measurement exceeds the specified limit, replace the crankshaft **14**.

NOTE:

Turn the crankshaft 14 through one revolution. One-half of the dial indicator reading represents the extent of bending.

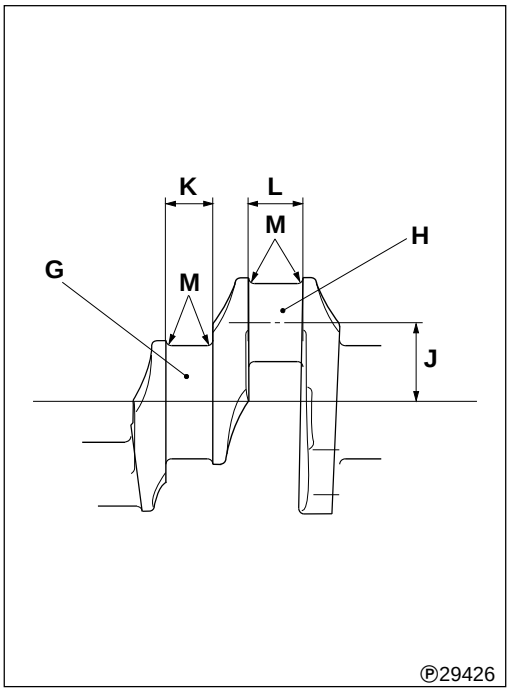

[Rectification]

NOTE:

If the crankshaft 14 is rectified by grinding, the main bearings 8, 17 must be replaced with undersized ones.
Available undersizes: 0.25 mm, 0.50 mm 0.75 mm, 1.00 mm {0.0098, 0.02, 0.03, 0.039 in.}

- Grind such that the center-to-center distance **J** between the journal **G** and pin **H** never be changed.
  J: 60 ± 0.05 mm {2.36 ± 0.002 in.}
- Grind such that the journal width **K** and pin width **L** do not change.
  K: 33.5 mm {1.32 in.} (No. 1 journal)
  35 mm {1.38 in.} (No. 2 to No. 4 journals)
  $35^{+0.039}_{0}$ mm {$1.38^{+0.0015}_{0}$ in.} (No. 5 journal)
  L: $41^{+0.2}_{0}$ mm {$1.61^{+0.0079}_{0}$ in.}
- Finish the corner fillet smoothly and to the specified radius M.
  M: 5 mm {0.2 in.}
- Carry out a magnetic inspection to check for cracks caused by grinding. Also, check that the Shore hardness of the surface has not dropped below Hs 75.

Crankshaft undersize dimensions

Unit: mm {in.}

		Degree of undersize			
		0.25 {0.0098}	0.50 {0.020}	0.75 {0.030}	1.00 {0.039}
Finished journal diameter	No. 1, 2, 4, 5	85.68 to 85.70 {3.373 to 3.374}	85.43 to 85.45 {3.363 to 3.364}	85.18 to 85.20 {3.353 to 3.354}	84.93 to 84.95 {3.343 to 3.344}
	No. 3	85.66 to 85.68 {3.372 to 3.373}	85.41 to 85.43 {3.362 to 3.363}	85.16 to 85.18 {3.352 to 3.353}	84.91 to 84.93 {3.342 to 3.343}
Finished pin diameter		64.69 to 64.71 {2.546 to 2.547}	64.44 to 64.46 {2.537 to 2.5378}	64.19 to 64.21 {2.527 to 2.528}	63.94 to 63.96 {2.517 to 2.518}
Roundness		0.01 {0.00039} or less			
Cylindricity		0.006 {0.00024} or less			

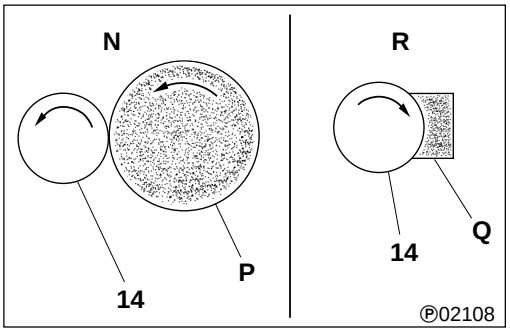

- When grinding **N**, turn the crankshaft **14** counter-clockwise as viewed from its front end. The grinder **P** should rotate in the same direction.
- When finishing **R** the crankshaft **14** with whetstone or sandpaper **Q**, rotate the crankshaft clockwise.

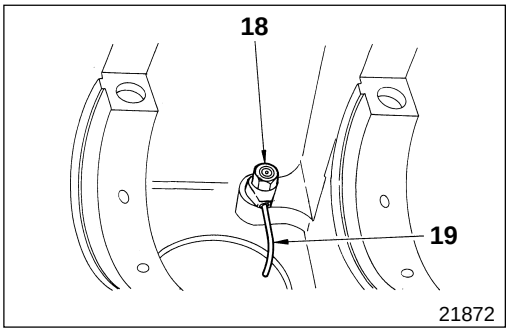

18 19 Installation of check valve and oil jet

CAUTION ⚠

Do not overtighten the check valve 18. If the tightening torque exceeds the specified one, the check valve may malfunction, resulting in seizure of the engine.

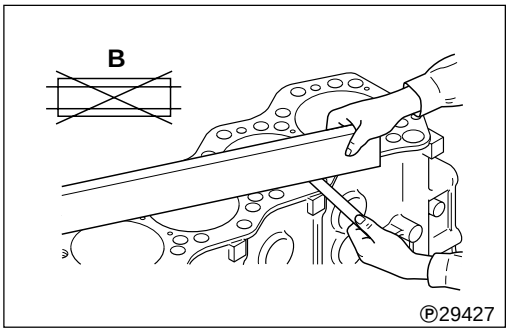

20 Inspecting upper crankshaft

- Measure the upper surface distortion of the upper crankcase **20**.
- If distortion exceeds the specified limit, correct it with a surface grinder.

B: Measurement positions

CAUTION ⚠

When grinding the crankcase 20, take care that the piston protrusions stay within specification.

BALANCE SHAFT BUSHINGS

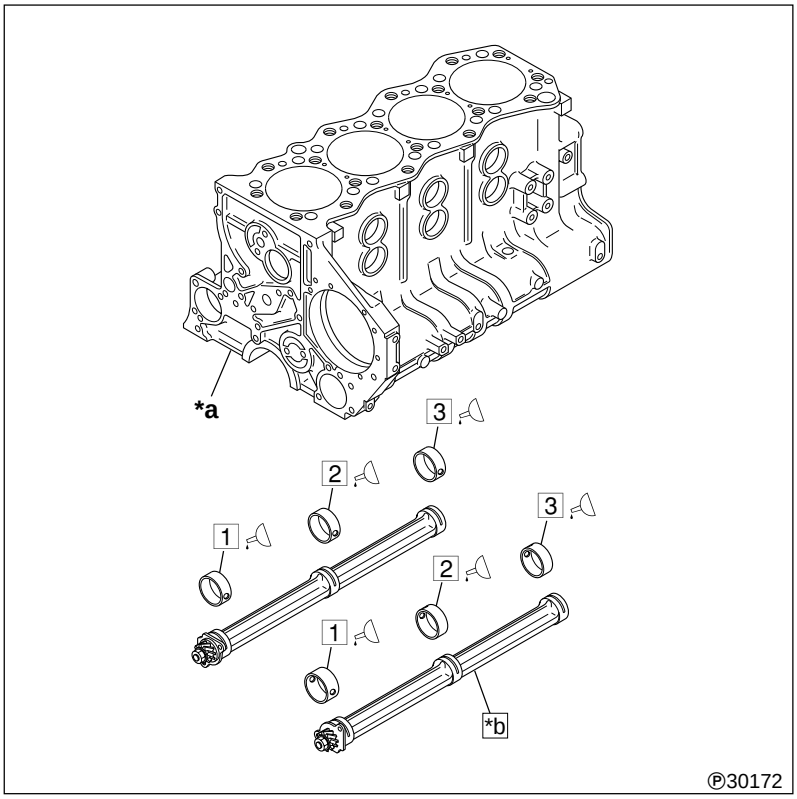

● **Disassembly sequence**

1 No. 1 balance shaft bushing
2 No. 2 balance shaft bushing
3 No. 3 balance shaft bushing

***a:** Upper crankcase 📖 P. 11A-76
***b:** Balance shaft 📖 P. 11A-52

CAUTION ⚠

Do not remove the balance shaft bushings 1 through 3 unless something wrong is evident.

● **Assembly sequence**

Follow the disassembly sequence in reverse.

Service standards

Unit: mm {in.}

Location	Maintenance item		Standard value (Basic diameter in [ ])	Limit	Remedy
***b, 1 to 3**	Clearance between balance shaft and balance shaft bushing	No. 1 journal	[51.5 {2.027}] 0.055 to 0.099 {0.0021 to 0.0039}	0.15 {0.0059}	Replace
		No. 2 journal	[51 {2.0}] 0.075 to 0.119 {0.0029 to 0.0046}		
		No. 3 journal	[50.5 {1.98}] 0.055 to 0.099 {0.0021 to 0.0039}		

Lubricant

Location	Points of application	Specified lubricant and/or sealant	Quantity
1 to 3	Inside surface of balance shaft bushing	Engine oil	As required

Special tools

Unit: mm {in.}

Location	Tool name and shape	Part No.	Application
1 to 3	Balance shaft bushing installer and extractor Dimensions A and C / Dimension B No. 1: ϕ 55.25 {ϕ 2.175} / ϕ 51.5 {ϕ 2.027} No. 2: ϕ 55 {ϕ 2.165} / ϕ 51 {ϕ 2.007} No. 3: ϕ 55.75 {ϕ 2.155} / ϕ 50.5 {ϕ 1.988} 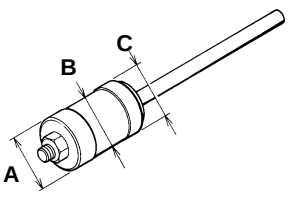 02083	MH062782	Installation and removal of balance shaft bushing

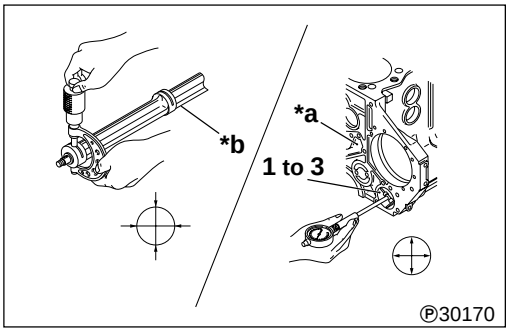

◆ Service procedure

[*b] [1] to [3] Balance shaft and balance shaft bushing

[Inspection]

If the clearance is more than the limit, replace defective parts.

NOTE:

Measure the inner diameter of the balance shaft bushings 1 through 3 with the bushings installed on the upper crankcase *a.

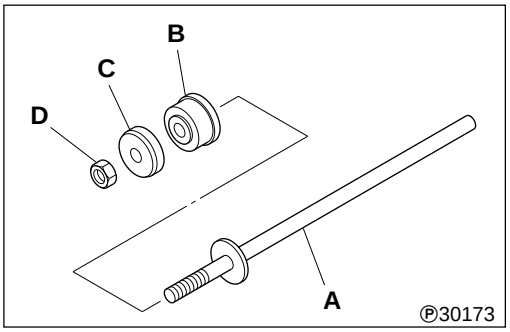

Balance shaft bushing

Use the [C] Balance Shaft Bushing Installer & Extractor to replace the balance shaft bushings **1** through **3**.
(Components of [C] Balance Shaft Bushing Installer & Extractor)

- **A:** Rod
- **B**: Adapter
- **C**: Guide piece
- **D**: Nut

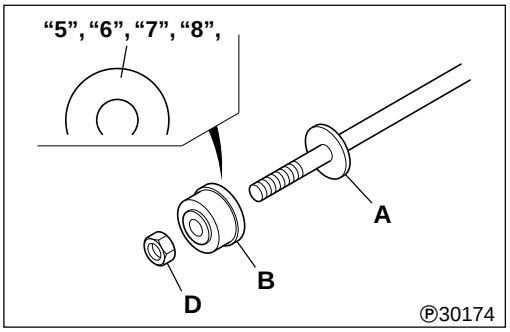

[Removal]

- Drive out the balance shaft bushings **1** to **3** using the [C] Balance Shaft Bushing Installer & Extractor consisting of the adapter **B** appropriate to each bushing secured on rod **A** with nut **D**.

Balance shaft bushing		Identification mark of adapter **B**
No. 1	Left	5
	Right	6
No. 2		7
No. 3		8

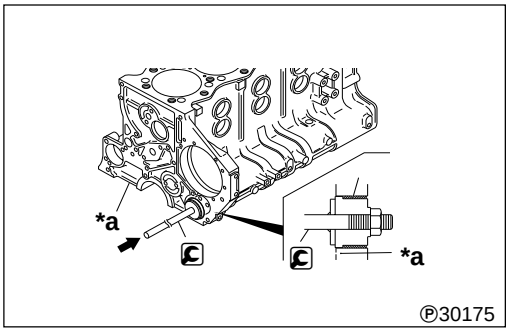

- Remove the No. 1 balance shaft bushing **1** from the front side of the upper crankcase ***a**.

  [C]: Balance Shaft Bushing Installer & Extractor

BALANCE SHAFT BUSHINGS

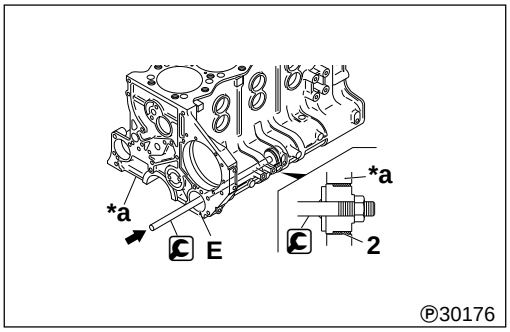

- Remove the No. 2 balance shaft bushing **2** from the upper crankcase ***a** by inserting the Balance Shaft Bushing Installer & Extractor through the hole **E** from which the No. 1 balance shaft bushing was removed.

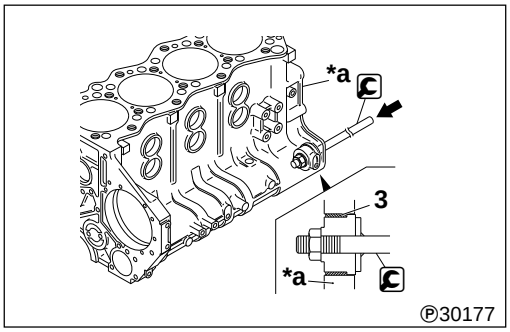

- Remove the No. 3 balance shaft bushing **3** from the rear side of the upper crankcase ***a**.

  : Balance Shaft Bushing Installer & Extractor

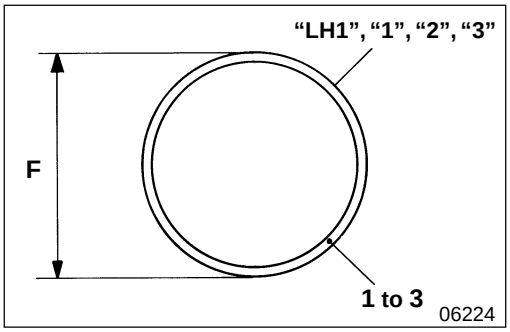

[Installation]

- Identify balance shaft bushings **1** through **3** by the marks "1", "2", "3" or "LH1" stamped on each bushing.
  If the mark on a bushing is unclear, identify the bushing by measuring the outside diameter **F** of the bushing.

Balance shaft bushing (from front of engine)		Mark	Outside diameter (mm {in.})
No. 1	Left (two oil holes)	LH1	ϕ 55.25 {ϕ 2.175}
	Right (one oil hole)	1	
No. 2		2	ϕ 55 {ϕ 2.165}
No. 3		3	ϕ 54.75 {ϕ 2.155}

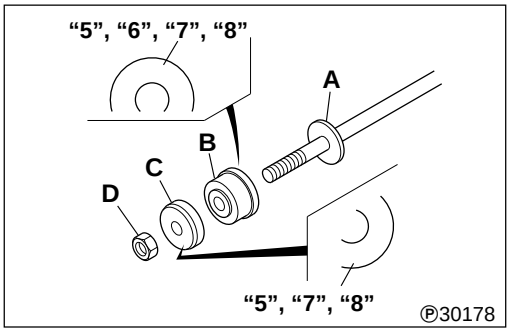

- Drive the balance shaft bushings **1** through **3** in position by hammering on the Balance Shaft Bushing Installer & Extractor consisting of the adapter **B** and guide piece **C** appropriate to each bushing secured on the rod **A** with nut **D**.

Balance shaft bushing		Identification mark of adapter **B**	Identification mark of guide piece **C**
No. 1	Left	5	5
	Right	6	
No. 2		7	7
No. 3		8	8

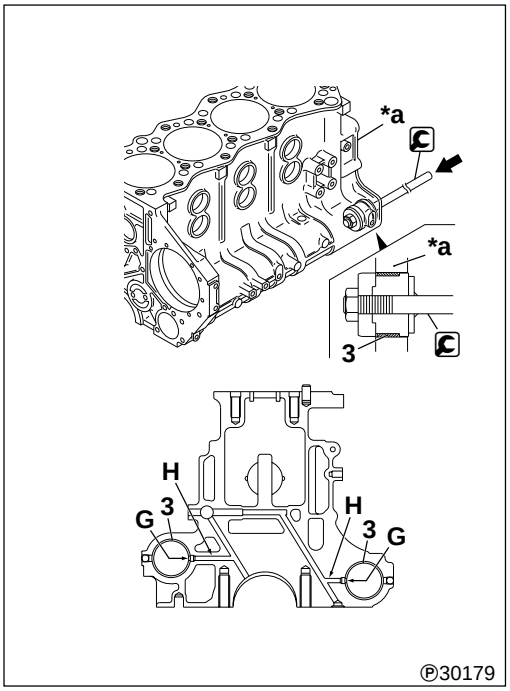

- Install the No. 3 balance shaft bushing **3** from the rear side of the upper crankcase ***a**.
  In this case, make sure that the oil hole **G** in the bushing matches the oil passage **H** in the crankcase.
  : Balance Shaft Bushing Installer & Extractor

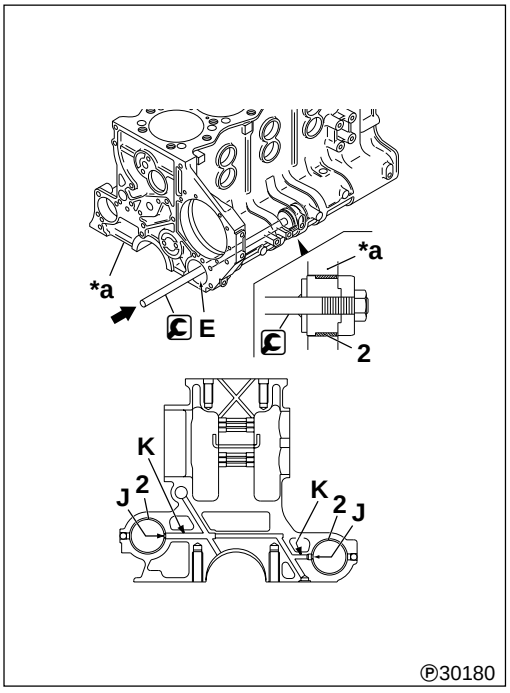

- Install the No. 2 balance shaft **2** by inserting the Balance Shaft Bushing Installer & Extractor through the No. 1 balance shaft bushing mounting hole **E** of the upper crankcase ***a**.
  In this case, make sure that the oil hole **J** in the bushing matches the oil passage **K** in the crankcase.
  : Balance Shaft Bushing Installer & Extractor

BALANCE SHAFT BUSHINGS

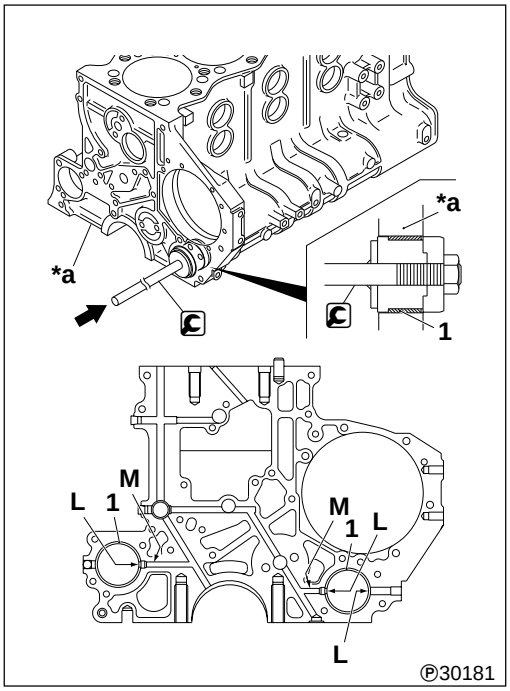

- Install the No. 1 balance shaft bushing **1** from the front side of the upper crankcase ***a**.
  In this case, make sure that the oil hole **L** in the bushing matches the oil passage **M** in the crankcase.

  : Balance Shaft Bushing Installer & Extractor

CAUTION ⚠

- **The No. 1 balance bushings 1 include the right and left ones which are different from each other. Use care to prevent confusion when installing them.**
  The left one has two oil holes, whereas the right one has one oil hole.
- **Before installing No. 1 balance bushing 1, check to ensure that No. 2 balance shaft bushing 2 has been installed.**

MITSUBISHI
FUSO

FE

Service Manual

Group 11
Engine

Table of Contents

BACK

HOME

MITSUBISHI FUSO TRUCK OF AMERICA, Inc.

Pub No. TWSE9501-11

GROUP 11 ENGINE

SPECIFICATIONS 2

STRUCTURE AND OPERATION 3

TROUBLESHOOTING 6

INSPECTION AND ADJUSTMENT MOUNTED IN VEHICLE
- Inspection of Engine Compression 7
- Inspection and Adjustment of Valve Clearance 9

CYLINDER HEAD AND VALVE MECHANISM 12

TIMING GEAR 26

CAMSHAFT 30

PISTON, CONNECTING ROD AND CYLINDER SLEEVE 36

FLYWHEEL 50

CRANKSHAFT AND CRANKCASE 54

SPECIFICATIONS

Item		Specifications	
Vehicle model		FE639	FE649
Engine model		4D34T3	
Type		4-cylinder in-line, water-cooled 4-cycle diesel	
Combustion chamber type		Direct injection type	
Valve mechanism		Overhead valve (OHV) type	
Maximum output	HP/rpm (SAE Gross)	135/3000	145/2900
Maximum torque	lbf.ft/rpm (SAE Gross)	253/1800	275/1600
Bore×stroke	mm {in.}	ø104×115 {4.09×4.53}	
Total displacement	cm^3 {cu. in.}	3907 {240}	
Compression ratio		17.5	

Engine Body

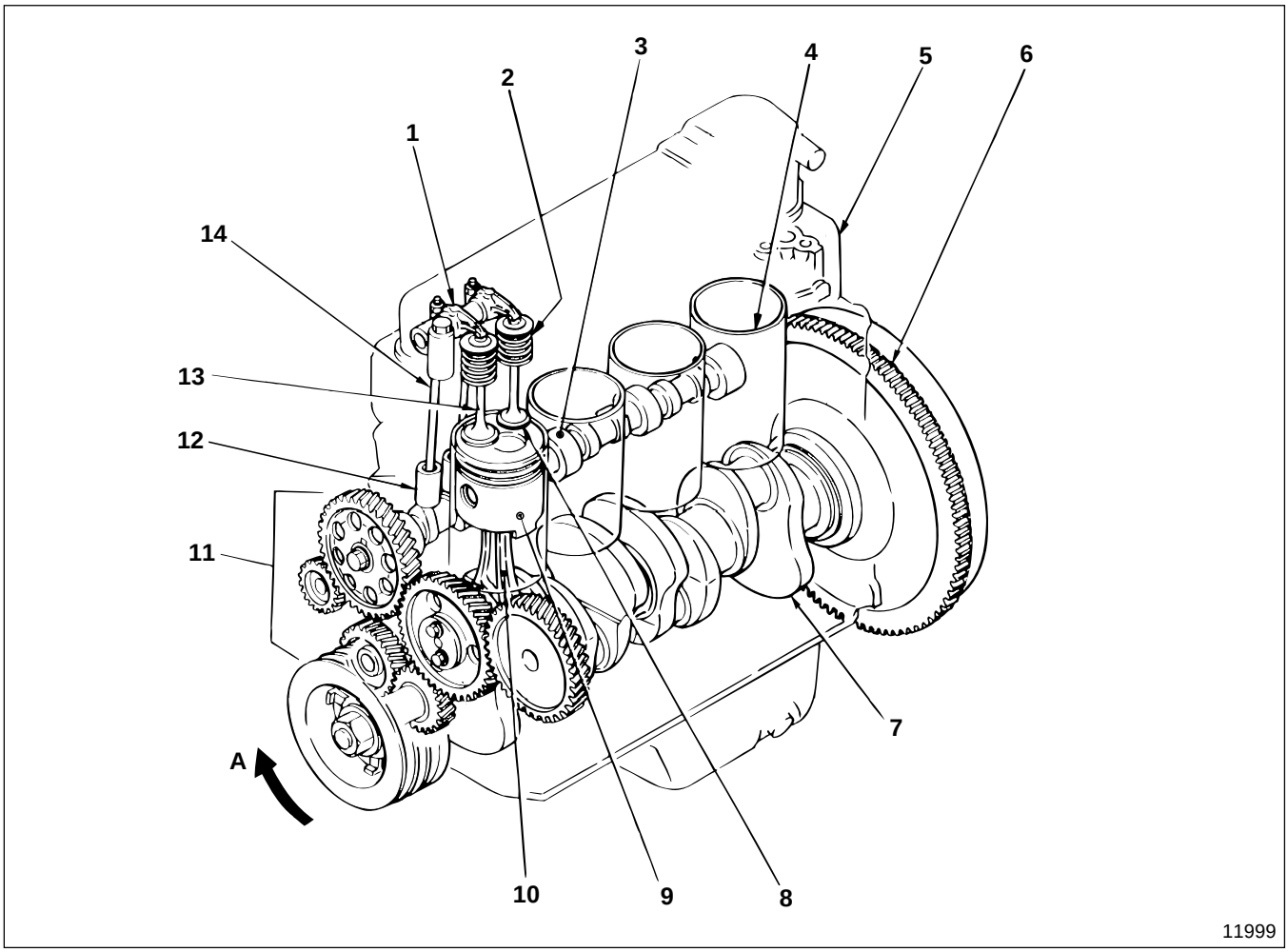

1 Rocker arm
2 Valve spring
3 Camshaft
4 Cylinder sleeve
5 Cylinder head
6 Flywheel
7 Crankshaft
8 Exhaust valve
9 Piston
10 Connecting rod
11 Timing gear
12 Tappet
13 Inlet valve
14 Push rod

A : Direction of rotation

Connecting Rod

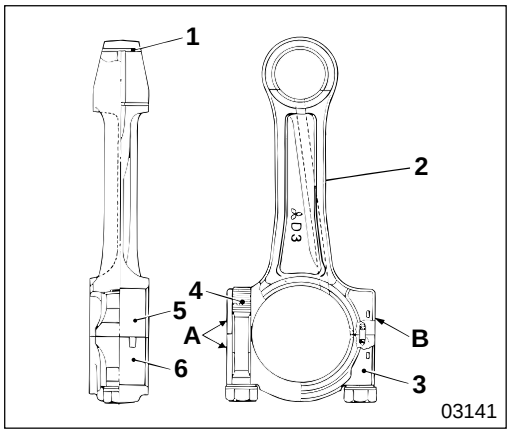

1 Connecting rod bushing
2 Connecting rod
3 Connecting rod cap
4 Connecting rod bolt
5 Upper connecting rod bearing
6 Lower connecting rod bearing

A : Alignment mark
B : Mass mark
(A, B, C, D, E, F, G)

Piston

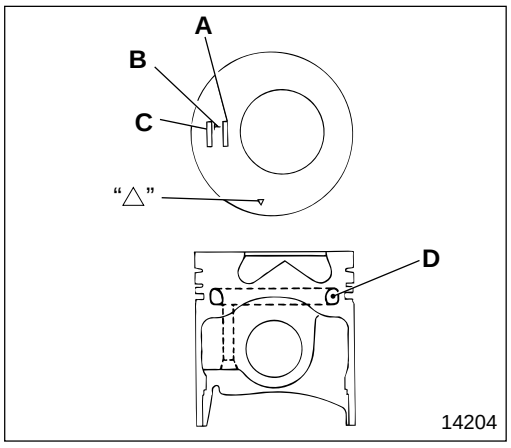

A : Stamped mass
B : Stamped "T"
C : Part number
D : Free space for piston cooling
△ : Front mark

Timing Gear

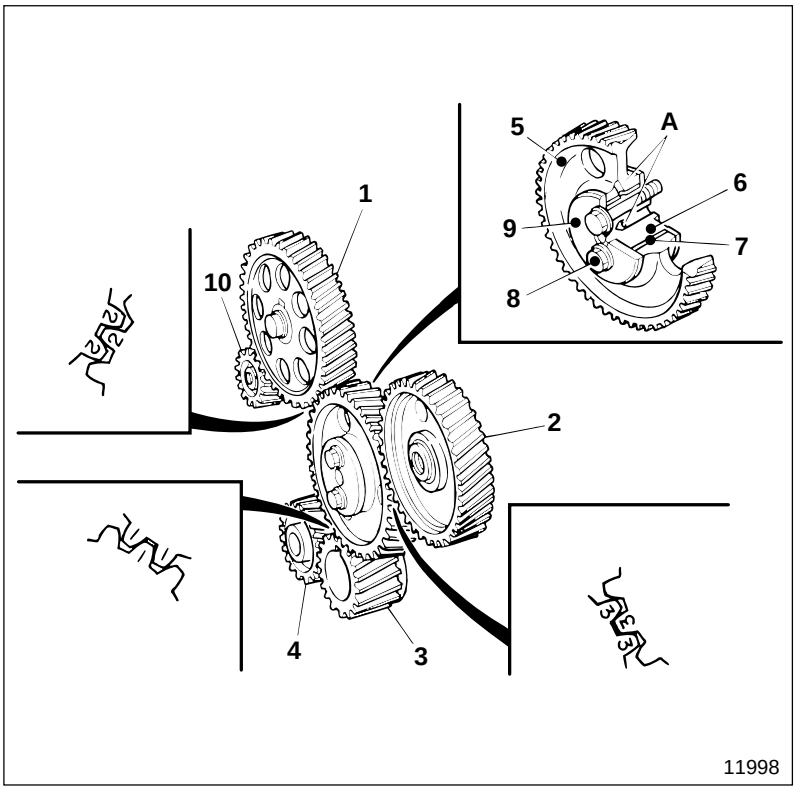

1 Camshaft gear
2 Injection pump gear
3 Crankshaft gear
4 Oil pump gear
5 Idler gear
6 Idler shaft
7 Idler bushing
8 Bolt
9 Thrust plate
10 Power steering oil pump gear

A : Oil hole

Alignment marks "**1**", "**2**", "**3**" are punch-marked on each timing gear to ensure proper engagement of the gears at installation.

Symptoms / Possible causes	Decrease of power	Engine noise abnormal	Remarks
Oil viscosity unsuitable	○		Gr 12
Fuel incorrect or unsuitable	○		
Valve clearance faulty	○	○	
Head gasket faulty	○	○	
Valve and valve seat worn, and carbon deposits	○	○	
Valve spring fatigued	○	○	
Piston ring worn or damaged	○	○	
Piston ring grooves worn or damaged	○	○	
Injection timing faulty	○	○	Gr 13
Injection pump malfunctioning	○	○	Gr 13
Cooling system malfunctioning	○		Gr 14
Injection nozzle malfunctioning	○	○	Gr 13
Fuel system sucking air	○		Gr 13
Air cleaner mesh clogged	○		Gr 15
Muffler clogged	○		Gr 15
Pipe and hose installation faulty		○	
Ancillary equipment (injection pump, alternator, etc.) or installation faulty		○	Gr 13 Gr 54
V-belt loose or damaged		○	Gr 14
Crankshaft pulley mounted incorrectly		○	
Air cleaner or muffler malfunctioning		○	Gr 15
Rocker shaft and bracket faulty		○	
Rocker shaft bracket lubrication faulty		○	
Timing gear backlash faulty		○	
Timing gear system and idler shaft lubrication faulty		○	
Connecting rod small end bushing worn and piston pin worn		○	
Crankshaft pin and big end bearing of connecting rod worn or damaged		○	
Crankshaft journal and main bearing worn or damaged		○	
Crankshaft and camshaft end play excessive		○	
Tappet and camshaft worn		○	

Inspection of Engine Compression

Service standards

Location	Maintenance item		Standard value	Limit	Remedy
—	Engine Compression	Each cylinder (200 rpm)	2550 kPa {370 lbf/in^2, 26 kgf/cm^2}	1960 kPa {285 lbf/in^2, 20 kg/cm^2}	Inspect
		Pressure difference between each cylinder	—	within 390 kPa {57 lbf/in^2, 4 kgf/cm^2}	Inspect

Special tools

Unit : mm {in.}

Location	Tool name and shape	Part No.	Application
—	Compression gauge adapter 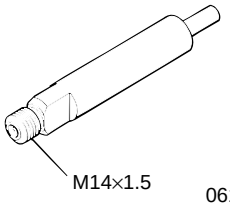 06197	MH061460	Measurement of engine compression

The decrease of engine compression is a signal that it is time to overhaul the engine. It is strongly recommended that this item is inspected periodically and that you record the history of deterioration in engine performance as this will help you to diagnose causes of future irregularities.
When the vehicle is still new or immediately after installation of new parts, there may be a slight increase in engine compression, but normal performance will be restored soon.

- Before inspection make sure that engine oil, starter and battery are in normal condition.
- Before inspecting the vehicle do the following:
  - Run the engine to bring the temperature of the coolant up to approximately 75 to 85°C {167 to 185°F}.
  - Turn all the lights and accessory equipment OFF.
  - Put transmission in neutral. (P range for automatic transmission)
  - Set the steering wheel at center and straight position.

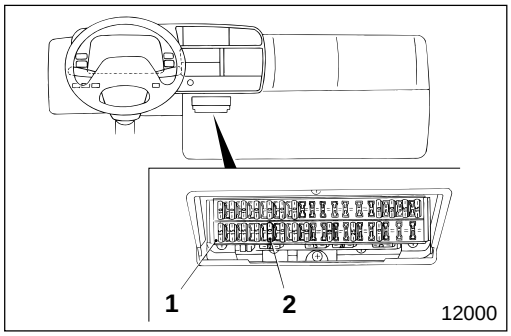

- Remove fuse **2** for the fuel-cut motor from fuse box **1** inside the cab to prevent the fuel from being injected when the engine is cranked by the starter.

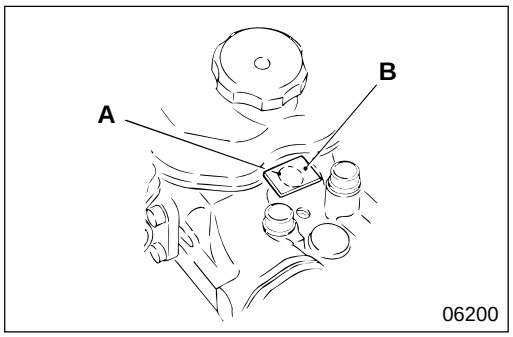

- Remove all the injection nozzles. Gr 13
- Check that no foreign particles are sticking to waste cloth **B** covering injection nozzle mounting hole **A** after cranking the engine.

WARNING

You must stay clear of injection nozzle mounting hole A when you crank the engine during this inspection. Assume that all cylinders have cracked, and that coolant, engine oil, fuel, etc. have seeped into the cylinder chambers. If this is the state when the engine is cranked, there is an extreme danger of these substances being injected out of the injection nozzle mounting hole at high temperature.

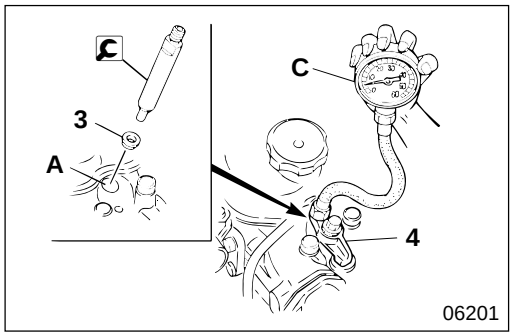

- Mount gasket **3** and compression gauge adaptor in injection nozzle mounting hole **A** and fasten them with nozzle bridge **4**, then mount compression gauge **C**.
- Measure engine compression while cranking the engine.
- Measure engine compression of cylinders and calculate the difference among the cylinders.
- If the engine compression and pressure difference between each cylinder deviate from the limit, reinspect by pouring a small amount of engine oil into injection nozzle mounting hole **A**.
  - When pressure is high : It is likely that either wear or damage of the slide-contact area of both the piston ring and the cylinder inner surface has taken place.
  - When pressure is low : It is likely that burning of the valve, faulty contact of valve surfaces and/or faults in the cylinder head gasket have developed.

Inspection and Adjustment of Valve Clearance

Service standards

Unit : mm {in.}

Location	Maintenance item	Standard value	Limit	Remedy
—	Valve clearance (When engine is cold)	0.4 {0.016}	—	Adjust

Special tools

Unit : mm {in.}

Location	Tool name and shape	Part No.	Application
—	Cranking handle 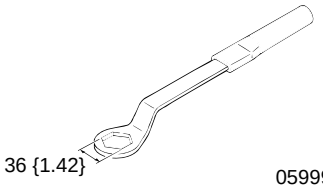 05999	MH061289	Cranking of engine
—	Flat-blade screwdriver 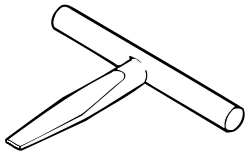 06000	MH060008	Valve clearance adjustment (Used for an installed engine)

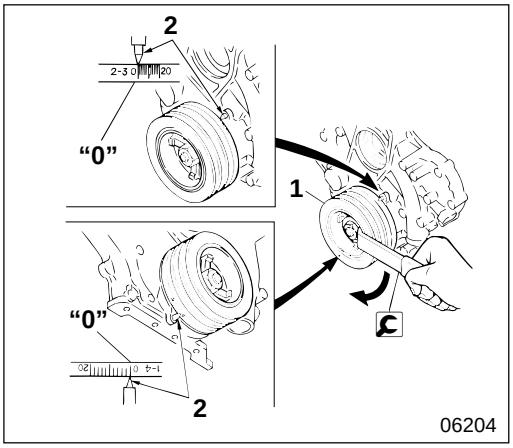

06204

Inspect and adjust the valve clearance while the engine is cold in the following way.

[Inspection]

- Crank the engine to move No.1 or No.4 piston to top dead center. Do this by turning crankshaft pulley **1** clockwise using cranking handle to align stamped mark "**0**" on the crankshaft pulley with pointer **2**.

NOTE

- **The cylinder whose push rod is not pushing up the inlet/outlet rocker is the one whose piston is at top dead center.**
- **There are two pointers 2. Use any one of the two pointers to align the stamped mark of crankshaft pulley 1 in the position as illustrated.**

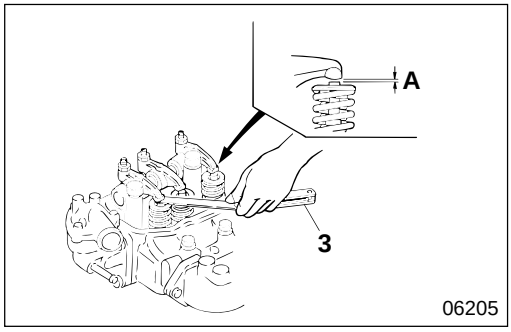

- Measure valve clearance **A** when either No.1 or No.4 piston is at top dead center in accordance with the following tabulated sequence of each valve.

Cylinder No.	1		2		3		4	
Valve arrangement	In-take	Ex-haust	In-take	Ex-haust	In-take	Ex-haust	In-take	Ex-haust
No.1 piston at top dead center	○	○	○	—	—	○	—	—
No.4 piston at top dead center	—	—	—	○	○	—	○	○

NOTE

Be sure when taking measurements using feeler gauge 3 that some resistance is felt when inserting the gauge. If the gauge can be inserted freely without any resistance, an accurate measurement cannot be obtained.

- If the measured value deviates from the limit, adjust as follows:

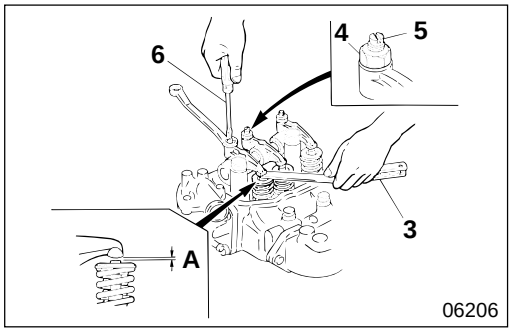

[Adjustment]

- Adjust valve clearance **A** so that feeler gauge **3** encounters some resistance when it is inserted. Do this by loosening lock nut **4** and turning adjusting screw **5**.
- After adjusting, tighten adjusting screw **5** using screwdriver **6** and tighten lock nut **4**. Reinspect valve clearance **A** using feeler gauge **3**.

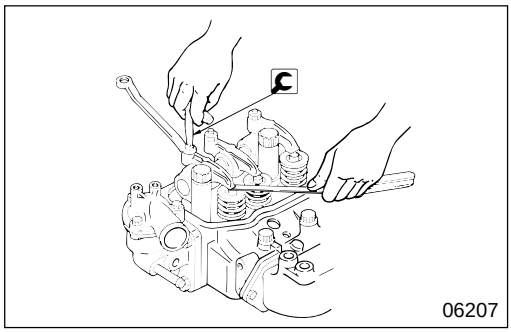

- When turning adjusting screw **5** on an engine that is installed, using flat-blade screwdriver will make the work easier.

M E M O

CYLINDER HEAD AND VALVE MECHANISM

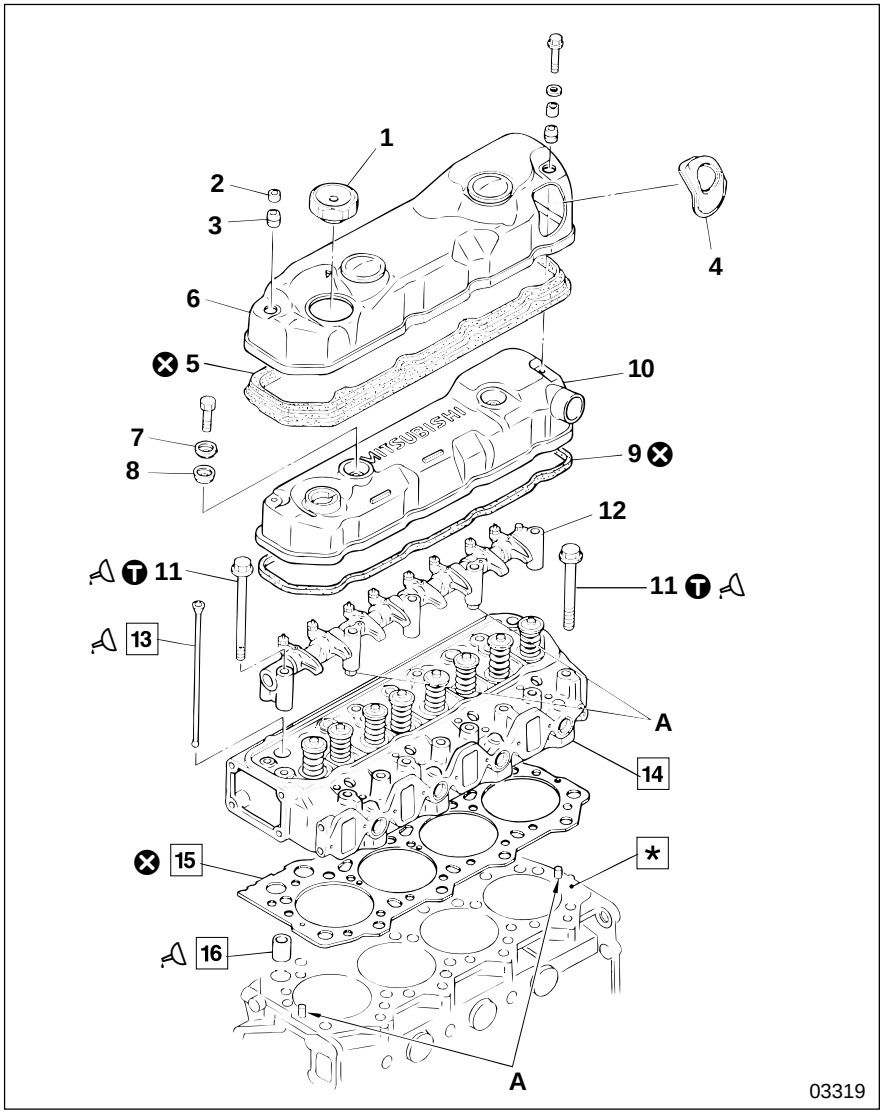

● **Disassembly sequence**

1 Oil filler cap
2 Spacer
3 Insulator
4 Breather cap
5 Rocker cover gasket
6 Outer rocker cover
7 Washer
8 Insulator
9 Inner rocker cover gasket
10 Inner rocker cover
11 Cylinder head bolt
12 Rocker and bracket assembly 🕮 P11-16
13 Push rod
14 Cylinder head and valve assembly 🕮 P11-18
15 Cylinder head gasket
16 Tappet

***** : Crankcase 🕮 P11-54
A : Positioning pin
⊗ **:** Non-reusable parts

● **Assembly sequence**

Follow the disassembly sequence in reverse.

Service standards

Unit : mm {in.}

Location	Maintenance item	Standard value (Basic diameter in [ ])	Limit	Remedy
13	Push rod deflection	—	0.4 {0.016}	Replace
16, *	Clearance between tappet and crankcase tappet hole	[28] 0.05 to 0.09 {[1.10] 0.0020 to 0.0035}	0.2 {0.0079}	Replace

Ⓣ Tightening torque

Unit : N·m {lbf.ft, kgf·m}

Location	Parts to be tightened	Tightening torque	Remarks
11	Cylinder head bolt	145 {110, 15}+90°	Wet Reuse up to three times

Lubricant

Location	Points of application	Kinds	Quantity
11	Thread area of cylinder head bolt	Engine oil	As required
13	Both ends of push rod	Engine oil	As required
16	Outer periphery of tappet	Engine oil	As required

Special tools

Location	Tool name and shape	Part No.	Application
14	Socket wrench 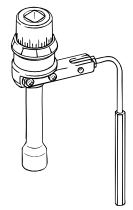 01984	MH061560	Installation of cylinder head and valve assembly
16	Tappet extractor 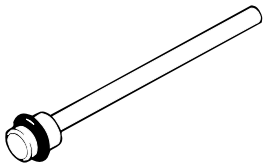 03320	MH063329	Removal of tappet

◆ Service procedure

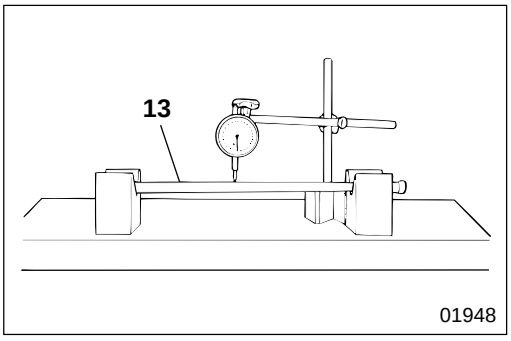

01948

13 **Push rod deflection**

If the measured value is higher than the limit, replace push rod **13**.

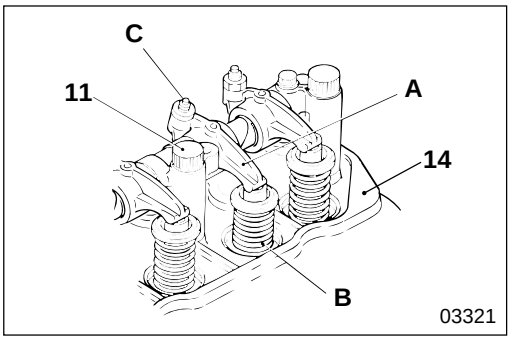

03321

14 **Cylinder head and valve assembly**

[Removal]

- Before undoing cylinder head bolts **11**, first loosen adjusting screw **C** of rocker **A** that pushes down valve spring **B**.

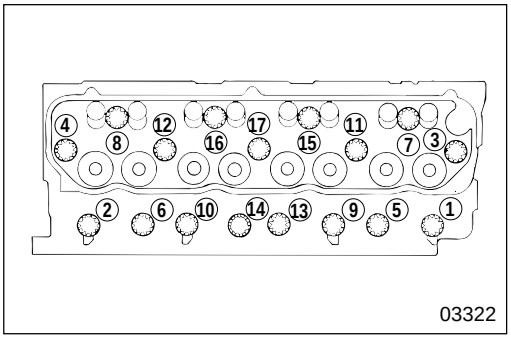

03322

- First loosen cylinder head bolts **11** in the numbered order as illustrated, then remove them.

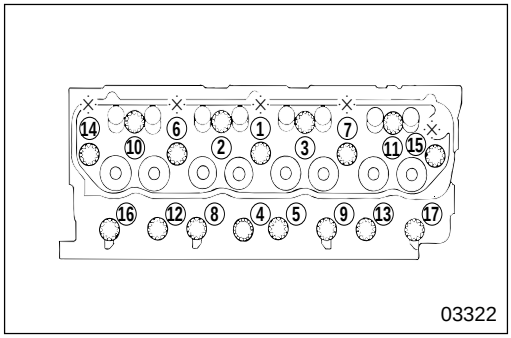

[Installation]

- Center punch the heads of cylinder head bolts **11** before installation.

CAUTION

If there are already three center-punch marks, replace the cylinder head bolt with a new one.

- After tightening cylinder head bolts **11** at specified torque in the numbered order as illustrated, tighten further as follows:
  ⁘ : Tightened simultaneously with rocker and bracket assembly

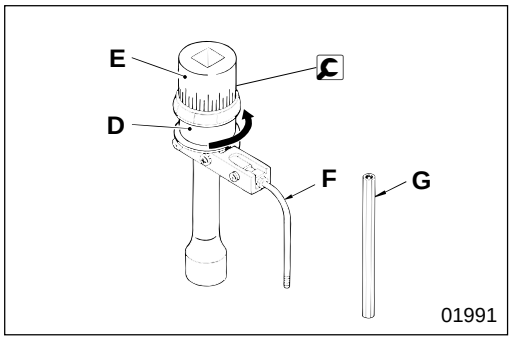

- Turn socket wrench holder **D** counterclockwise and keep the spring in the wrench compressed.
  E : Socket
  F : Rod
  G : Rod (for connection)

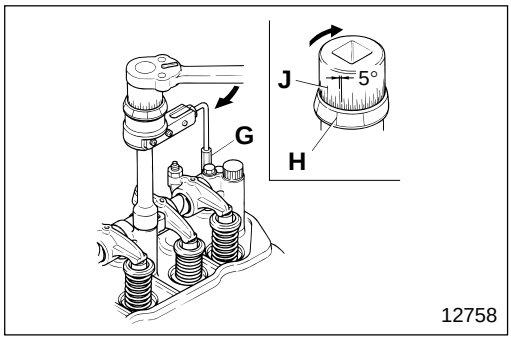

- Set socket wrench holder **D** so that the repercussive force of the spring presses rod **G** (for connection) against adjacent parts such as, rocker shaft bracket or the injection pipe.
- Select a scale that is convenient for reading graduation **H** on holder **D**.
- Tighten further by turning socket **E** clockwise by 90° (setting is in 5° increments), referring to graduation **J** on the selected scale.

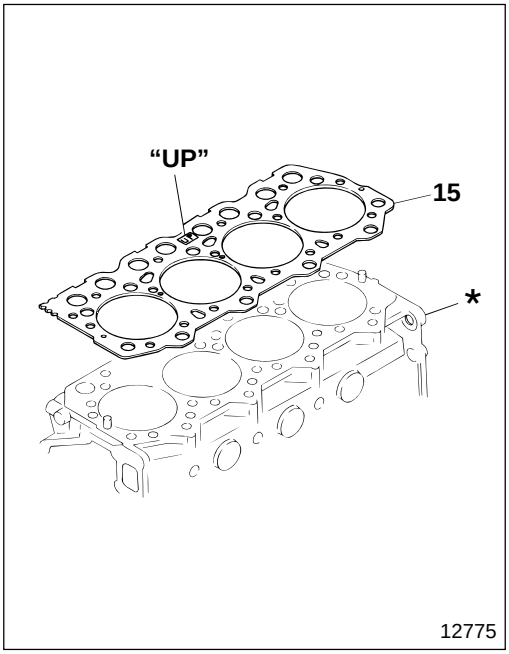

15 **Cylinder head gasket**

[Removal]

CAUTION

Be careful not to scratch the cylinder head or crankcase * when you remove cylinder head gasket 15.

[Installation]

Install cylinder head gasket **15** onto crankcase * in the direction as illustrated.

CAUTION

Be sure to measure the amount of protrusion whenever a piston or connecting rod is replaced, since replacement changes the amount of protrusion.

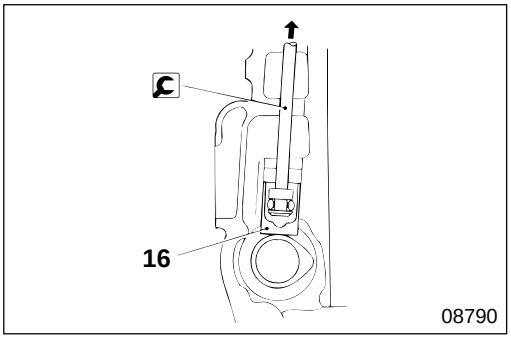

16 **Removal of tappet**

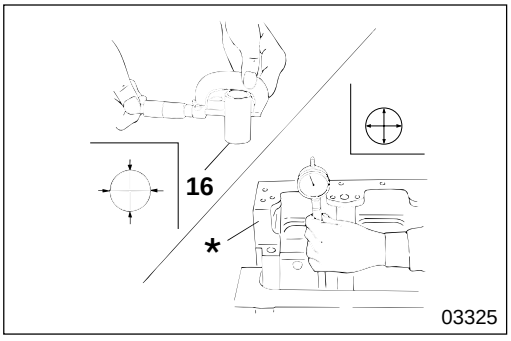

16 ***** **Clearance between tappet and crankcase tappet hole**

If the measured value is higher than the limit, replace the faulty parts.

CYLINDER HEAD AND VALVE MECHANISM

Rocker and Bracket Assembly

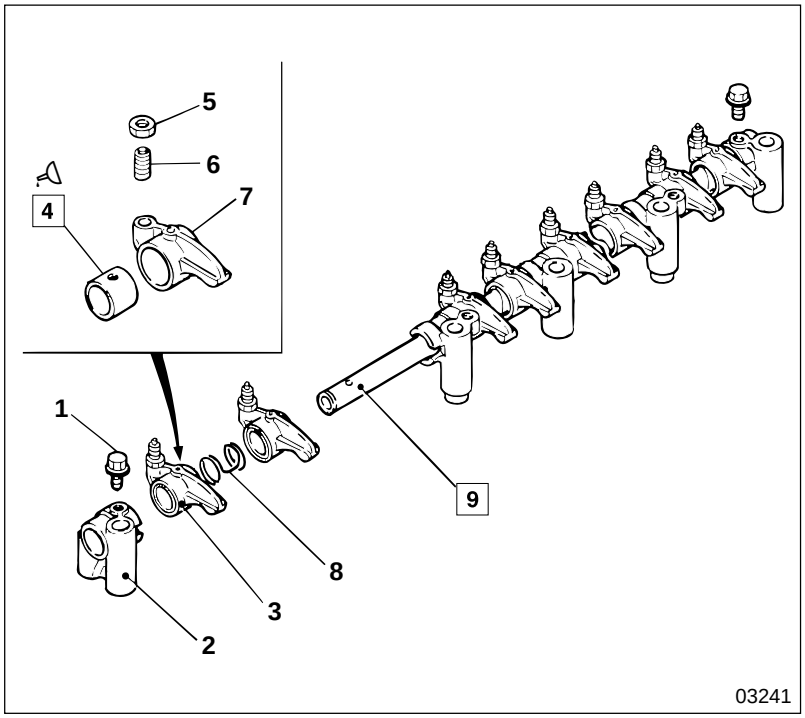

● **Disassembly sequence**

1 Set bolt
2 Rocker shaft bracket
3 Rocker assembly
4 Rocker bushing
5 Lock nut
6 Adjusting screw
7 Rocker
8 Rocker shaft spring
9 Rocker shaft

● **Assembly sequence**

Follow the disassembly sequence in reverse.

Service standards

Unit : mm {in.}

Location	Maintenance item	Standard value (Basic diameter in [ ])	Limit	Remedy
4, 9	Clearance between rocker bushing and rocker shaft	[19] 0.06 to 0.11 {[0.75] 0.0024 to 0.0043}	0.2 {0.0079}	Replace

Lubricant

Location	Points of application	Kinds	Quantity
4	Inner surface of rocker bushing	Engine oil	As required

Special tools

Unit : mm {in.}

Location	Tool name and shape	Part No.	Application
4	Rocker bushing puller 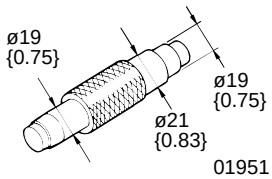	MH061378	Removal and installation of rocker bushing

◆ Service procedure

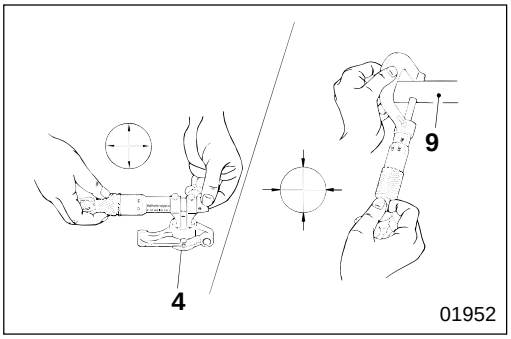

4 **9** **Rocker bushing and rocker shaft**

[Inspection]
If the clearance is higher than the limit, replace the faulty parts.

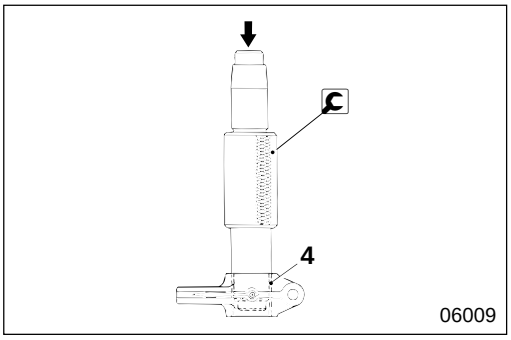

Rocker bushing

[Removal]

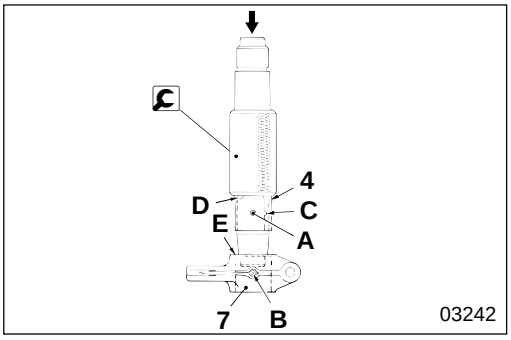

[Press-fitting]

- Align oil hole **A** of rocker bushing **4** with oil hole **B** of rocker **7**.
- Position clinch **C** and split **D** of rocker bushing **4** in the direction as illustrated.
- Press-fit rocker bushing **4** from chamfered side **E** of rocker **7**.

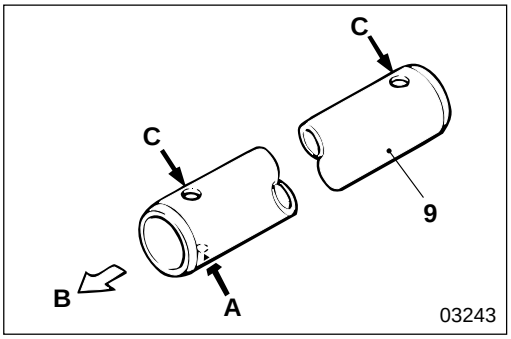

9 **Installation of rocker shaft**

When installing rocker shaft **9**, bring oil passage hole for lubrication **A** to front side **B**.

C : Fixing hole of the set bolt.

CYLINDER HEAD AND VALVE MECHANISM

Cylinder Head and Valve Assembly

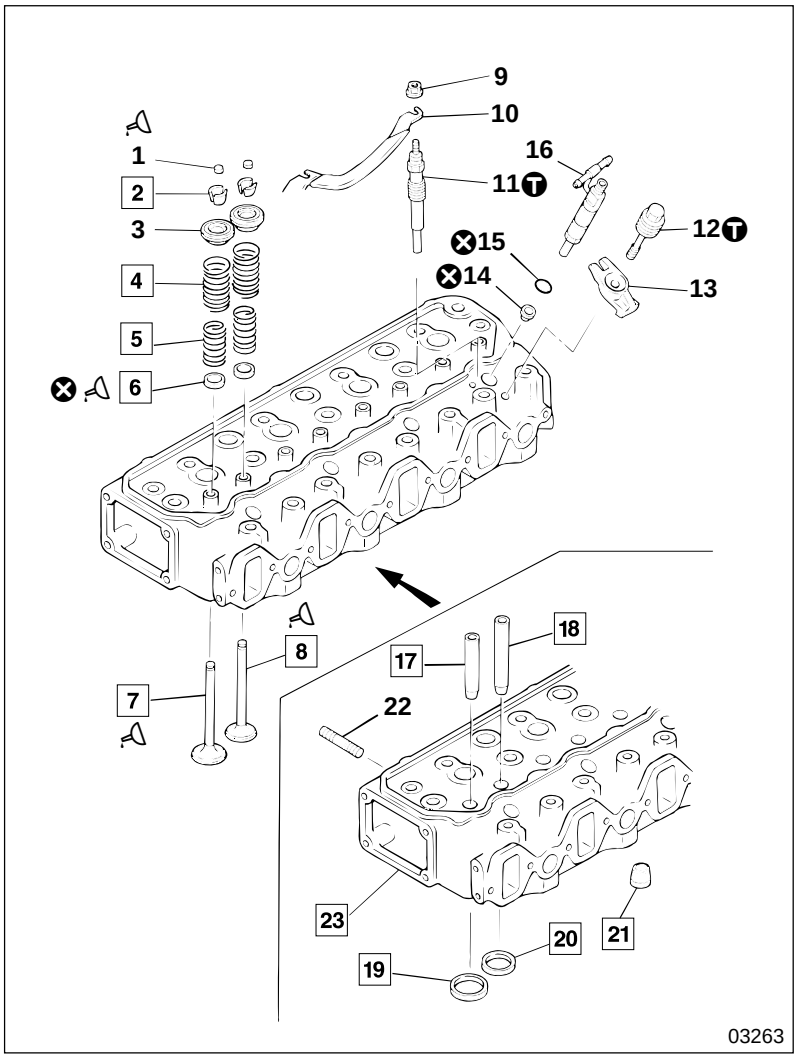

● **Disassembly sequence**

1 Valve cap
2 Valve cotter
3 Upper retainer
4 Outer valve spring
5 Inner valve spring
6 Valve stem seal
7 Inlet valve
8 Exhaust valve
9 Nut
10 Connecting plate
11 Glow plug Gr 54
12 Bolt
13 Nozzle bridge
14 Nozzle tip gasket
15 O-ring
16 Injection nozzle Gr 13
17 Inlet valve guide
18 Exhaust valve guide
19 Inlet valve seat
20 Exhaust valve seat
21 Water director
22 Stud
23 Cylinder head

⊗ : Non-reusable parts

CAUTION

Be careful of the protrusion of glow plug 11 and injection nozzle 16 from the bottom surface of cylinder head 23.

● **Assembly sequence**

Follow the disassembly sequence in reverse.

NOTE

When inlet valve 7 and exhaust valve 8 have been removed, replace valve stem seal 6.

Service standards

Unit : mm {in.}

Location	Maintenance item		Standard value (Basic diameter in [ ])	Limit	Remedy
4	Outer valve spring	Without load	66.1 {2.60}	63.0 {2.48}	Replace
		Installed load (Installed length 47.25 {1.86})	27±14 N {62±3.0 lbf, 27.9±1.4 kgf}	230 N {52 lbf, 23.7 kgf}	Replace
		Tilt	—	2.5 {0.098}	Replace
5	Inner valve spring	Without load	60.0 {2.36}	52.1{2.05}	Replace
		Installed load (Installed length 40.3 {1.59})	119±5.9 N {27±1.3 lbf, 12.1±0.6 kgf}	79 N {18 lbf, 8.1 kgf}	Replace
		Tilt	—	2 {0.079}	Replace
7	Inlet valve	Stem diameter	8.96 to 8.97 {0.3527 to 0.3531}	8.85 {0.348}	Replace
		Valve recess from the cylinder head bottom surface	0.75 to 1.25 {0.030 to 0.049}	1.5 {0.059}	Inspect each part
		Valve margin	1.5 {0.059}	1.2 {0.047}	Correct or replace
		Valve seat angle	45°±15'	—	Correct or replace
7, 17	Clearance between inlet valve stem and inlet valve guide		[9] 0.04 to 0.06 {[0.35] 0.0016 to 0.0024}	0.15 {0.0059}	Replace
8	Exhaust valve	Outer diameter of stem	8.93 to 8.94 {0.3515 to 0.3519}	8.85 {0.348}	Replace
		Valve recess from the cylinder head bottom surface	0.95 to 1.45 {0.037 to 0.057}	1.7 {0.067}	Inspect each part
		Valve margin	1.5 {0.059}	1.2 {0.047}	Correct or replace
		Valve seat angle	45°±15'	—	Correct or replace
8, 18	Clearance between exhaust valve stem and exhaust valve guide		[9] 0.07 to 0.1 {[0.35] 0.0028 to 0.0039}	0.2 {0.0079}	Replace
19	Seat width of inlet valve seat		2±0.2 {0.079±0.0079}	2.8 {0.11}	Correct or replace
20	Seat width of exhaust valve seat		2±0.2 {0.079±0.0079}	2.8 {0.11}	Correct or replace
23	Cylinder head	Distortion of bottom	0.05 {0.0020} or less	0.2 {0.0079}	Correct or replace
		Height from top to bottom	95±0.1 {3.74±0.0039}	94.6 {3.72}	Replace

Tightening torque

Unit : N·m {lbf.ft, kgf·m}

Location	Parts to be tightened	Tightening torque	Remarks
11	Glow plug	15 to 20 {11 to 14, 1.5 to 2.0}	—
12	Bolt (Nozzle bridge mounting)	25 {18, 2.5}	—

Lubricant

Location	Points of application	Kinds	Quantity
1	Slide contact areas of valve cap and rocker	Engine oil	As required
6	Lip of valve stem seal	Engine oil	As required
7, 8	Valve stem	Engine oil	As required

Special tools

Unit : mm {in.}

Location	Tool name and shape	Part No.	Application
2	Valve lifter 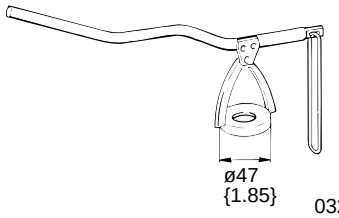 03265	30091-08500	Removal and installation of valve cotter
6	Valve stem seal installer 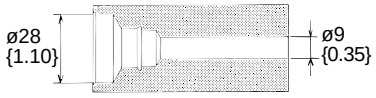 01957	MH061293	Installation of valve stem
7, 8	Valve lapper 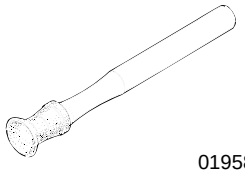 01958	30091-07500	Fitting of valve and valve guide
17, 18	Valve guide remover 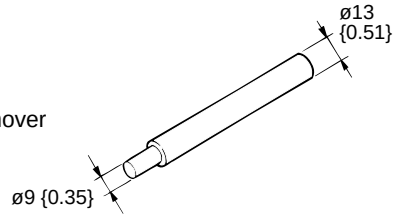 01959	MH061066	Removal of valve guide
	Valve guide installer 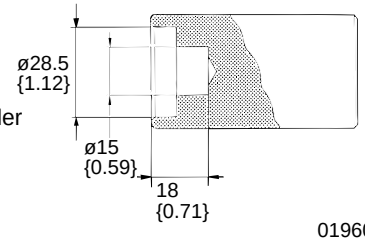 01960	MH061998	Press-fitting of valve guide
19, 20	**A** : Caulking tool body **B** : Caulking ring | | **C** dimension | | Inlet | ø47.6 {1.87} | | Exhaust | ø40.6 {1.60} | 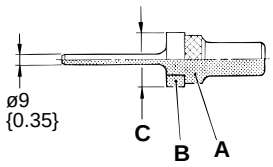 01961	**A** : MH061067 **B** : MH061275 (Inlet) MH061069 (Exhaust)	Press-fitting of valve seat

◆ Service procedure

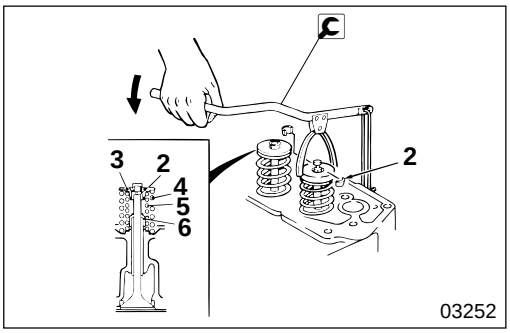

2 **Valve cotter**

[Removal]
Remove valve cotter **2** making sure that valve springs **4**, **5** are squarely and evenly pressed down by 🔧 valve lifter.

[Installation]
Follow the removal procedure in reverse.

CAUTION⚠

Be sure not to press down on valve springs 4, 5 too hard because this would cause upper retainer 3 to contact valve stem seal 6 and damage it.

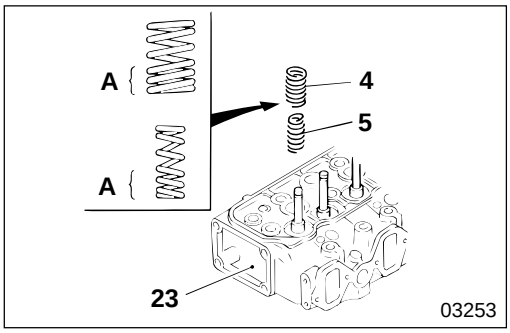

4 **5** **Installation of outer and inner valve springs**

Install outer springs **4** and inner springs **5** in cylinder head **23** in the direction as illustrated.

A : Closely wound area

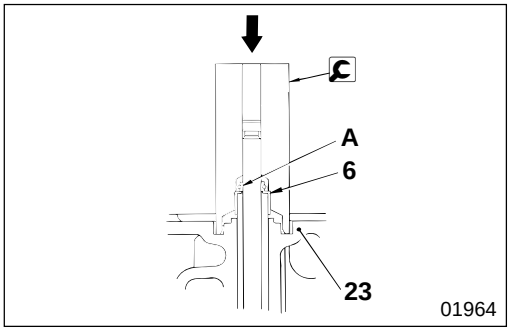

6 **Installation of valve stem seal**

- Apply engine oil to lip **A** of valve stem seal **6**.
- Tap down 🔧 valve stem seal installer until it hits cylinder head **23**.

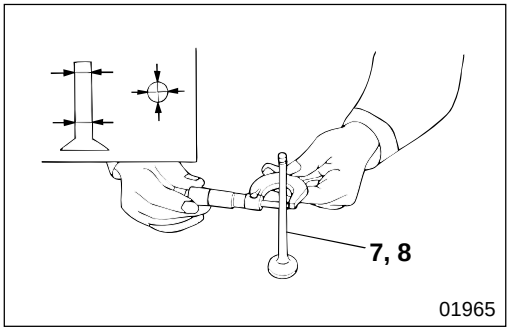

7 **8** **Inlet valve and exhaust valve**

[Inspection]

(1) Inspection of stems

If the measured value is lower than the limit or in the case of excessive wear, replace valves **7**, **8**.

CAUTION⚠

Be sure to lap valve seats 19, 20 when valves 7, 8 are replaced with new ones. 🕮 **P11-23**

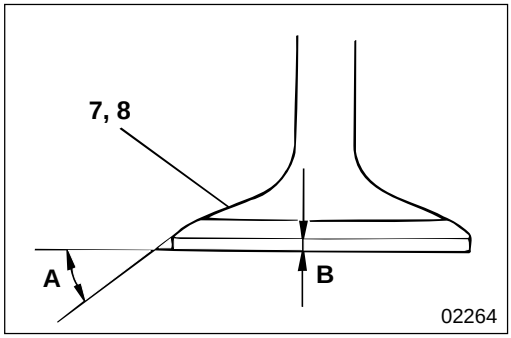

(2) Valve seat angle and valve margin

If the measured value is higher than the limit, correct or replace valves **7**, **8**.

A : Valve seat angle
B : Valve margin

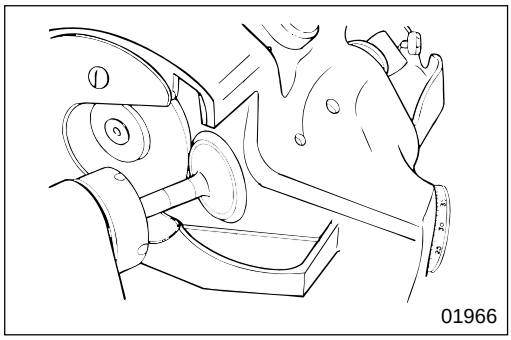

[Correction]

NOTE

- **Be sure to keep the grinding work as light as possible.**
- **Be sure to replace valves 7, 8 after grinding if valve margin deviates from the limit.**
- **Be sure to lap valve 7, 8 and valve seats 19, 20 after grinding.** **P11-23**

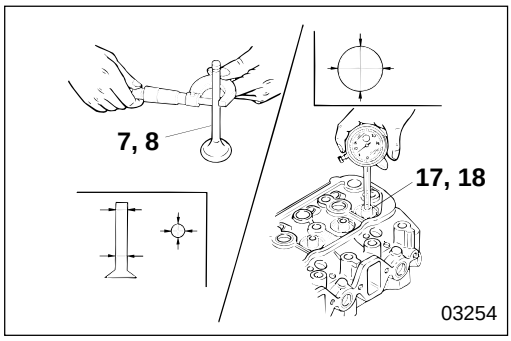

7 **8** **17** **18** **Valve and valve guide**

[Inspection]
When the clearance is higher than the limit, replace the faulty parts.

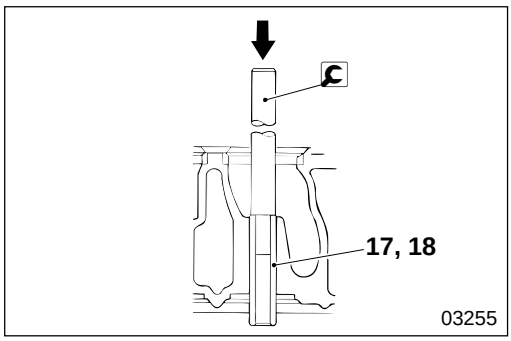

Valve guide

[Removal]

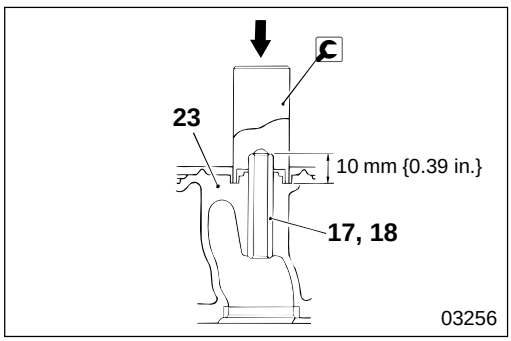

[Installation]

- Tap down valve guides **17**, **18** with 🔧 valve guide installer until it hits cylinder head **23**.

CAUTION ⚠

- **The length of fit of valve guides 17, 18 is standardized. Be sure to use 🔧 valve guide installer.**
- **Be sure to distinguish between valve guides 17, 18. Exhaust valve guide 18 is longer.**

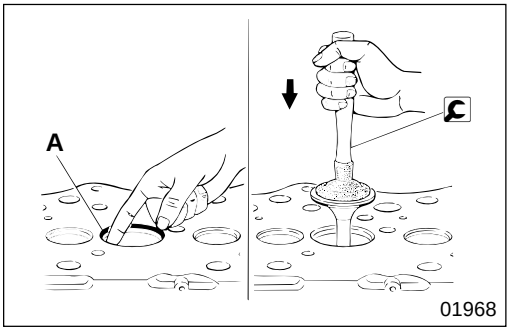

7 **8** **19** **20** **Valve and valve seat**

[Inspection]

- Apply red lead evenly to entire surface **A** of valve seats **19**, **20** that contact valves **7**, **8**.
- Fit valves **7**, **8** to valve seats **19**, **20** and tap once without rotating.

NOTE

Be sure to carry out inspection under the condition that valves 7, 8 and all parts of valve guides 17, 18 are normal.

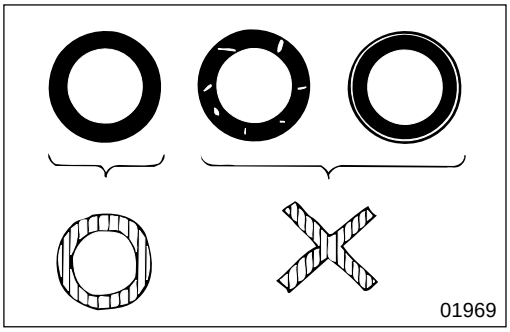

- Check how much red lead has transferred to valves **7**, **8** to determine the contact of the valve and the seat. According to the degree of abnormality, take proper measures to correct it.

Contact conditions	Correction measures
Minor fault	Valve lapping
Major fault	Repair of valve and seat or replacement of both

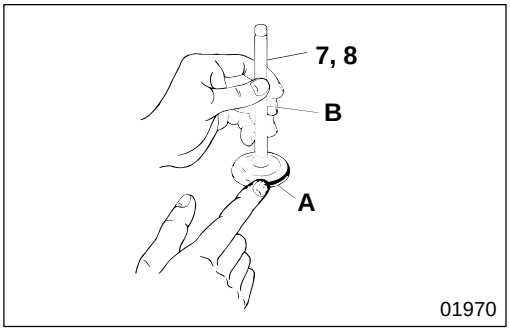

[Correction]

Valve polishing is done in the following manner:

- Apply valve lapping compound thinly to contact surface **A** of valves **7**,**8** with valve seats **19**, **20**.

CAUTION ⚠

Take care not to smear stems B of valves 7, 8 with the compound.

NOTE

- **Start with medium grit compound (120 to 150 grit) and for finishing up, use finer grit (200 grit or finer).**
- **Mixing with a small amount of engine oil will make the compound consistent and make even application easier.**

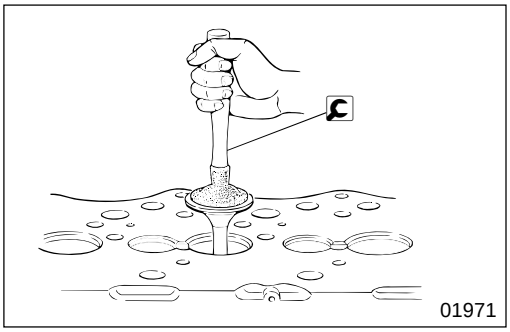

- Tap valves **7**, **8** against valve seats **19**, **20** several times while rotating the valves slightly at each strike.
- Clean off the compound with gas oil.
- Apply engine oil to contact surface **A** of valve seats **19**, **20** and smooth the surface.
- Check the contact of valves **7**, **8** and valve seats **19**, **20**.
- If contact does not take place completely around the seat, replace valve seats **19**, **20**.

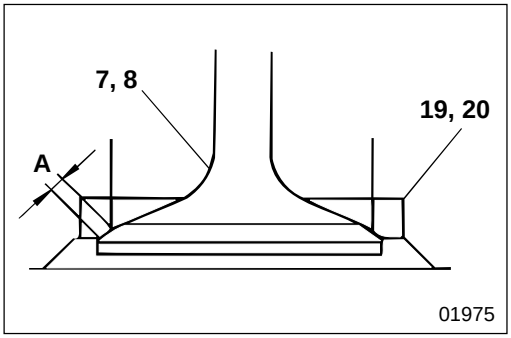

19 **20** **Valve seat**

[Inspection]

(1) Valve seat width

If the measured value is higher than the limit, replace valve seats **19**, **20**.

A : Valve seat width

NOTE

Be sure to lap and fit valves 7, 8 and valve seats 19, 20 after correction or replacement.

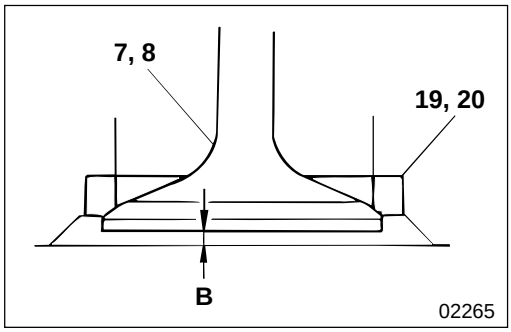

(2) Extent of valve recess from the bottom surface of cylinder head

If the measured value is higher than the limit, correct or replace the faulty parts.

B : Extent of valve recess

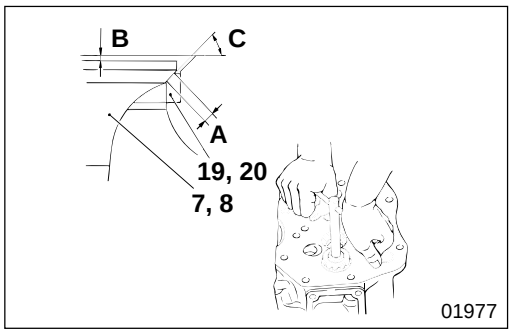

[Correction]

- Grind valve seats **19**, **20** using valve seat cutter or valve seat grinder.
- After grinding, do another light abrasion using 400 grit emery paper placed between the cutter and the seat.
- Adjust the seat width **A** of valves **7**, **8** using 15° or 75° cutter to make seat width conform to the standard value.

C : Valve seat angle

CAUTION ⚠

Be sure that as a result of grinding, recess B of valves 7, 8 does not become higher than the limit.

- After correction is done, be sure to carry out lapping and fitting on valves **7**, **8** and valve seats **19**, **20**.

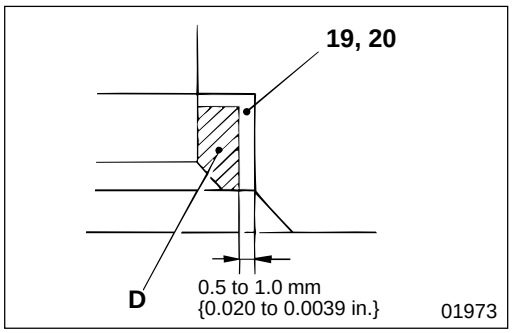

[Removal]

- Valve seats **19**, **20** have been set in by the cooling-off-process, and have to be thinned by grinding off the inner side for removal under normal temperature.

D : Part to be ground

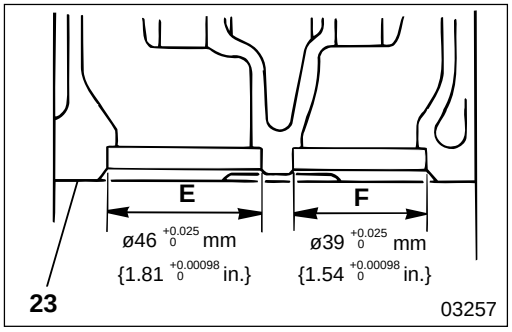

[Installation]

- Make sure that the diameter of valve seat hole of cylinder head **23** conforms to the standard value.
  E : Inlet valve seat hole diameter
  F : Exhaust valve seat hole diameter

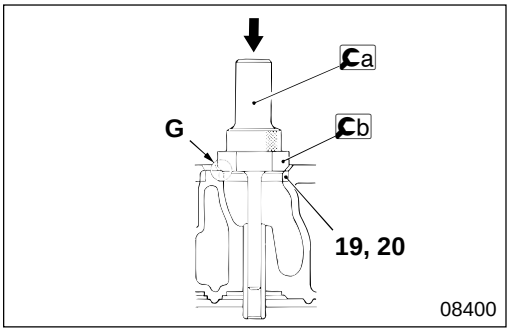

- Immerse valve seats **19**, **20** in liquid nitrogen and cool them substantially. Press-fit into the cylinder head using Ca caulking tool body and Cb caulking rings inlet and exhaust.

CAUTION

Be sure, when press-fitting, to place the chamfered side G of Cb caulking rings inlet and exhaust against valve seats 19, 20.

- After installation of valve seats **19**, **20**, work until they contact valves **7**, **8** smoothly.

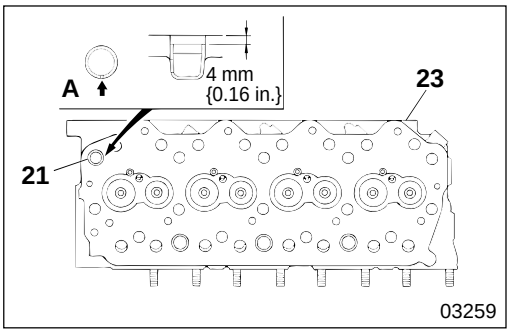

21 Installation of water director

- With indent **A** set in the direction as illustrated, press-fit water director **21** into cylinder head **23** to the specified depth.

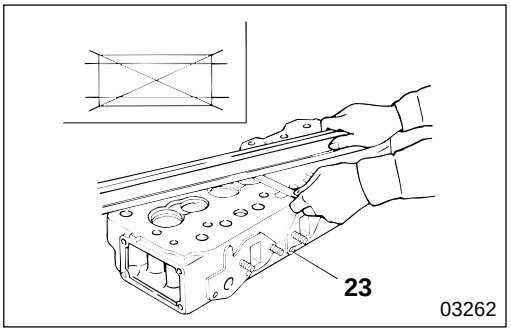

23 Inspection of cylinder head

Measure the extent of distortion of the bottom of cylinder head **23**, and if the measured value is higher than the standard value, grind using a surface grinder.

CAUTION

Be sure to keep the amount of grinding within the limit of the height of cylinder head 23.

TIMING GEAR

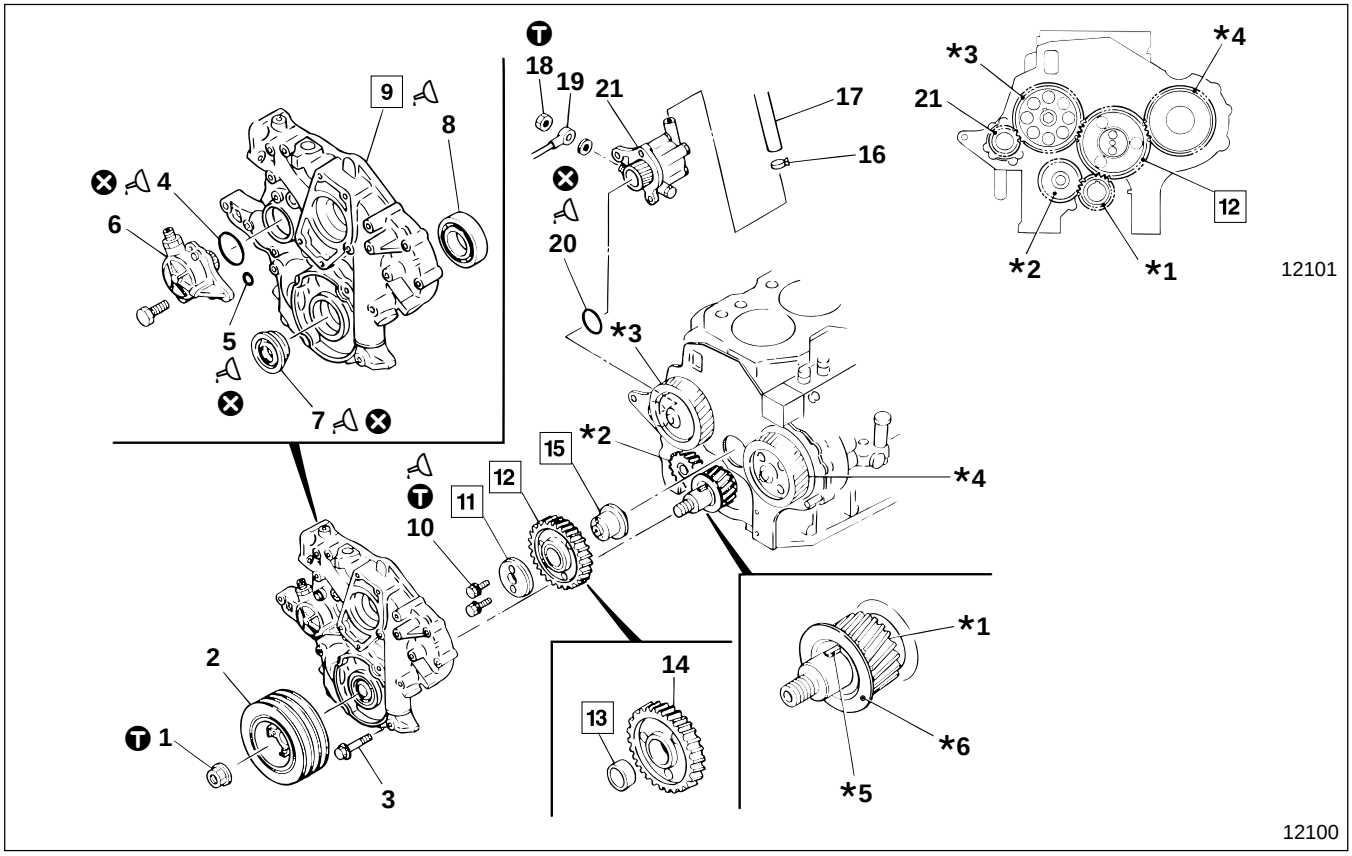

● **Inspection before disassembly**

P11-28

● **Disassembly sequence**

1 Nut
2 Crankshaft pulley
3 Bolt
4 O-ring
5 O-ring
6 Vacuum pump assembly Gr 35
7 Front oil seal
8 Bearing
9 Timing gear case
10 Bolt
11 Thrust plate
12 Idler gear assembly
13 Idler gear bushing
14 Idler gear
15 Idler shaft
16 Clamp
17 Rubber hose Gr 37
18 Nut
19 Pressure hose Gr 37
20 O-ring
21 Power steering oil pump Gr 37

***1** : Crankshaft gear P11-54
***2** : Oil pump gear Gr 12
***3** : Camshaft gear P11-30
***4** : Injection pump gear Gr 13
***5** : Key P11-54
***6** : Front oil seal slinger P11-54

⊗ : Non-reusable parts

NOTE

Do not remove front oil seal 7 and bearing 8 unless it is faulty.

● **Assembly sequence**

Follow the disassembly sequence in reverse.

CAUTION⚠

Be sure to install key *5 when installing crankshaft pulley 2.

Service standards

Unit : mm {in.}

Location	Maintenance item		Standard value (Basic diameter in [ ])	Limit	Remedy
—	Backlash of gears	Idler gear assembly and crankshaft gear	0.07 to 0.15 {0.0028 to 0.0059}	0.3 {0.012}	Replace
		Idler gear assembly and camshaft gear	0.07 to 0.17 {0.0028 to 0.0067}	0.3 {0.012}	
		Idler gear assembly and injection pump gear	0.07 to 0.17 {0.0028 to 0.0067}	0.3 {0.012}	
		Crankshaft gear and oil pump gear	0.10 to 0.18 {0.0039 to 0.0071}	0.3 {0.012}	
		Camshaft gear and power steering oil pump gear	0.08 to 0.16 {0.0031 to 0.0063}	0.3 {0.012}	
—	End play of idler gear		0.05 to 0.15 {0.0020 to 0.0059}	0.3 {0.012}	Inspect
13, 15	Clearance between idler gear bushing and idler shaft		[45] 0.03 to 0.06 {[1.77] 0.0012 to 0.0024}	0.1 {0.0039}	Replace

Tightening torque

Unit : N·m {lbf.ft, kgf·m}

Location	Parts to be tightened	Tightening torque	Remarks
1	Nut (Crankshaft pulley mounting)	590 {435, 60}	—
10	Bolt (Thrust plate mounting)	24 {17, 2.4}	—
18	Nut (Pressure hose mounting)	29 to 39 {22 to 29, 3 to 4}	—

Lubricant and sealant

Location	Points of application	Kinds	Quantity
4, 5, 20	Entire body of O-ring	Engine oil	As required
7	Front oil seal lip	Engine oil	As required
9	Mounting surface of timing gear case	THREEBOND 1207C	As required
10	Thread area of bolt	Engine oil	As required

Special tools

Unit : mm {in.}

Location	Tool name and shape	Part No.	Application
13	Idler gear bushing puller 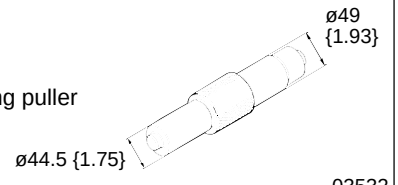	MH062224	Removal and installation of idler gear bushing

◆ Service procedure

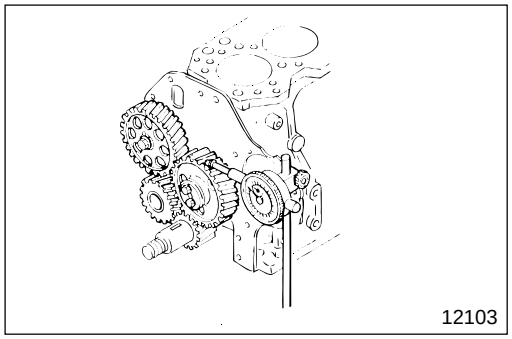

● **Inspection before disassembly**

(1) Backlash of each gear

Measure three or more locations on the pairing gears and if the measurements are higher than the limit, replace the faulty parts.

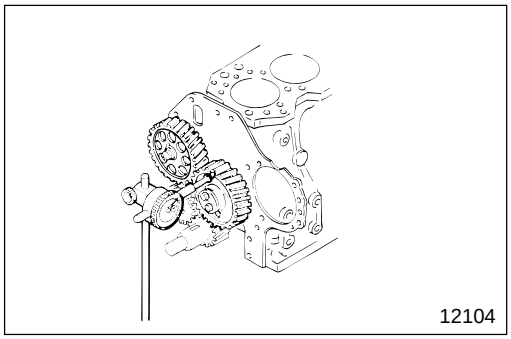

(2) End play of idler gear

If the measured value is higher than the limit, replace the faulty parts.

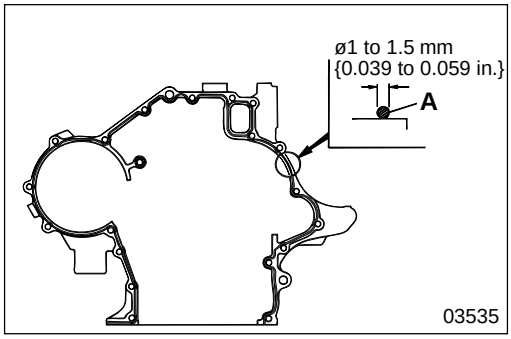

9 Installation of timing gear case

Apply sealant **A** to the mounting surface of timing gear case **9** evenly without break. After applying sealant, within three minutes, mount to the front plate.

CAUTION ⚠

- **Be sure to clean and wipe off oily substances from the surface where sealant A is to be applied.**
- **Make sure that sealant A is not transferred to other areas while the mounting work is being done.**
- **Be sure to reapply sealant A if the bolts are loosened or removed by any cause whatsoever after mounting.**
- **Do not start the engine within an hour of mounting.**

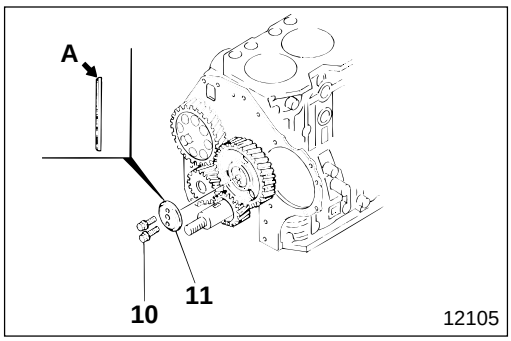

11 Installation of thrust plate

A : Chamfered side

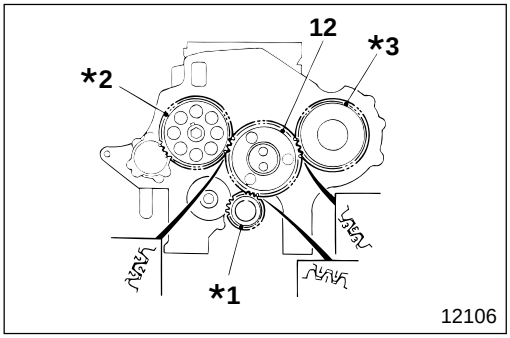

12 **Installation of idler gear assembly**

Install idler gear assembly **12** by matching alignment marks **"1"**, **"2"**, **"3"** on the gears that engage with those on the assembly.

***1** : Crankshaft gear
***2** : Camshaft gear
***3** : Injection pump gear

NOTE

When aligning each gear with its alignment mark, make sure that pistons No.1, 4 are higher than top dead center.

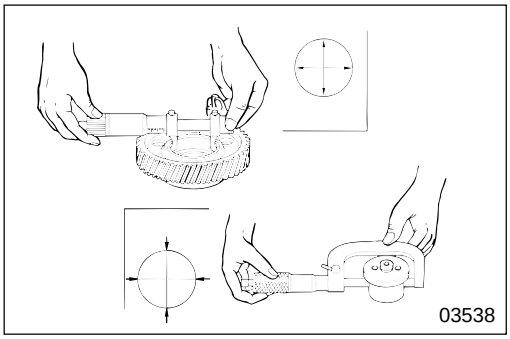

13 **15** **Idler gear bushing and idler shaft**

[Inspection]
If the clearance is higher than the limit, replace the faulty parts.

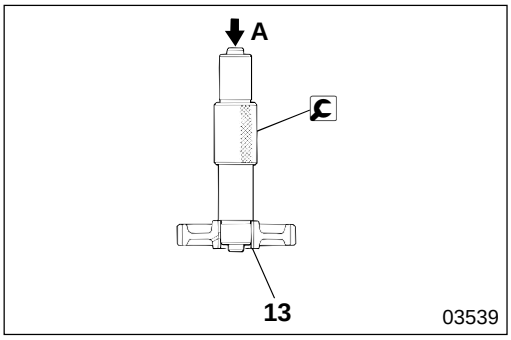

Idler gear bushing

[Removal]
A : Press

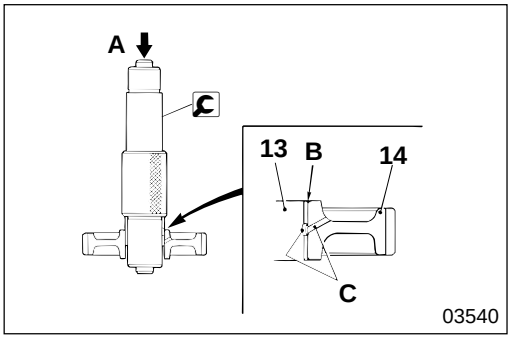

[Press-fitting]

- Press-fit idler gear bushing **13** from chamfered side **B** of idler gear **14** and align oil holes **C** of the idler gear and the bushing.
- After press-fitting, finish the fitting by bringing the clearance between idler gear bushing **13** and the idler shaft to the standard value.

CAMSHAFT

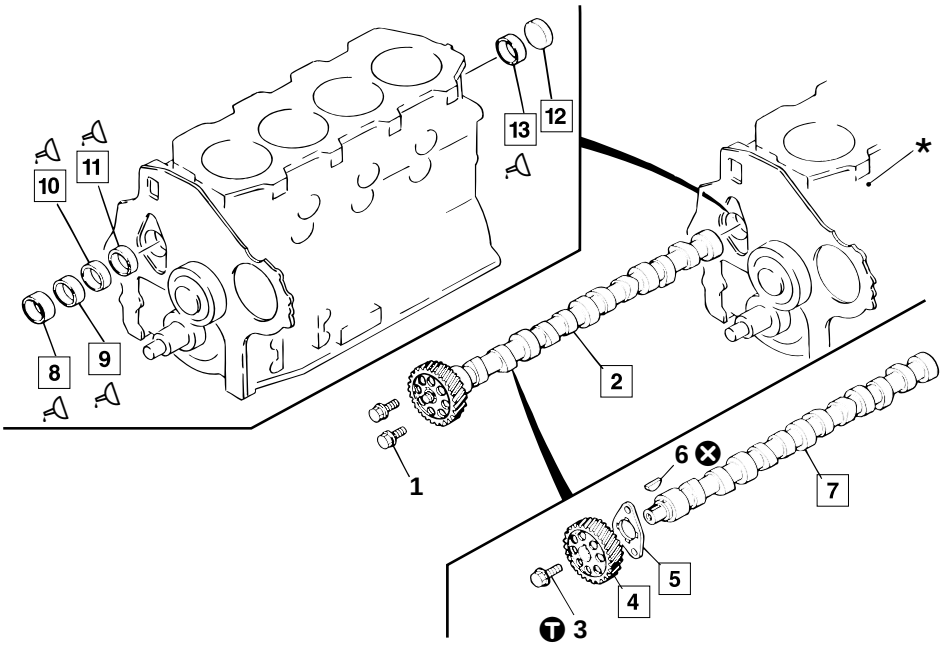

● **Disassembly sequence**

1 Bolt
2 Camshaft assembly
3 Bolt
4 Camshaft gear
5 Thrust plate
6 Key
7 Camshaft
8 No.1 camshaft bushing
9 No.2 camshaft bushing
10 No.3 camshaft bushing
11 No.4 camshaft bushing
12 Sealing cap
13 No.5 camshaft bushing

* : Crankcase 🕮 P11-54
⊗ : Non-reusable parts

NOTE

Do not remove camshaft gear 4 unless it is faulty.

● **Assembly sequence**

Follow the disassembly sequence in reverse.

Service standards

Unit : mm {in.}

Location	Maintenance item			Standard value (Basic diameter in [ ])	Limit	Remedy
—	End play of camshaft assembly			0.05 to 0.22 {0.0020 to 0.0087}	0.3 {0.012}	Inspect
4, 7	Interference of camshaft gear and camshaft			[30] 0.03 to 0.07 {[1.2] 0.0012 to 0.0028}	—	Reuse up to three times
7	Camshaft	Difference between long and short diameters	Inlet	7.195±0.05 {0.28±0.0020}	6.70 {0.26}	Replace (Long diameter 47.105 {1.85} Short diameter 39.910 {1.57})
			Exhaust	7.321±0.05 {0.29±0.0020}	6.82 {0.27}	Replace (Long diameter 46.979 {1.84} Short diameter 39.658 {1.56})
		Bend		0.02 {0.00079} or less	0.05 {0.0020}	Replace
7 to 11, 13	Clearance between camshaft and camshaft bushing		No.1 to No.4	[54.5] 0.04 to 0.09 {[2.15] 0.0016 to 0.0035}	0.15 {0.0059}	Repair or replace
			No.5	[53] 0.04 to 0.09 {[2.09] 0.0016 to 0.0035}	0.15 {0.0059}	

Ⓣ Tightening torque

Unit : N·m {lbf.ft, kgf·m}

Location	Parts to be tightened	Tightening torque	Remarks
3	Bolt	34 to 39 {25 to 29, 3.5 to 4.0}	—

Lubricant

Location	Points of application	Kinds	Quantity
8 to 11, 13	Inner surface of camshaft bushing	Engine oil	As required

Special tools

Unit : mm {in.}

Location	Tool name and shape	Part No.	Application
8 to 11, 13	Camshaft bushing installer and extractor 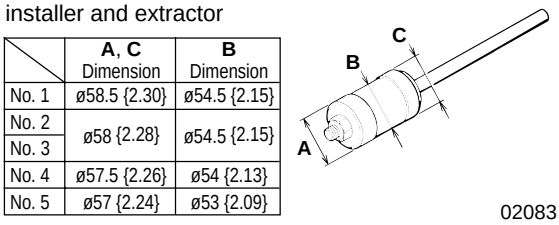 02083	MH061276	Removal and press-fitting of camshaft bushing

	A, **C** Dimension	**B** Dimension
No. 1	ø58.5 {2.30}	ø54.5 {2.15}
No. 2	ø58 {2.28}	ø54.5 {2.15}
No. 3		
No. 4	ø57.5 {2.26}	ø54 {2.13}
No. 5	ø57 {2.24}	ø53 {2.09}

◆ Service procedure

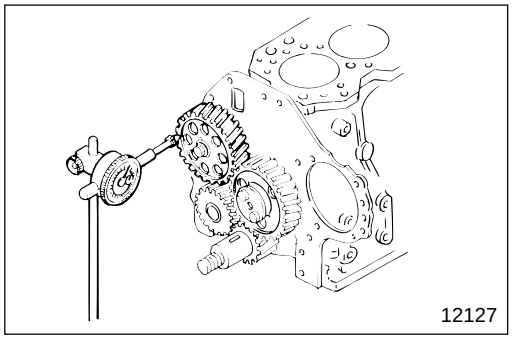
12127

● Inspection before disassembly

Camshaft end play

If the measured value is higher than the limit, replace the faulty parts.

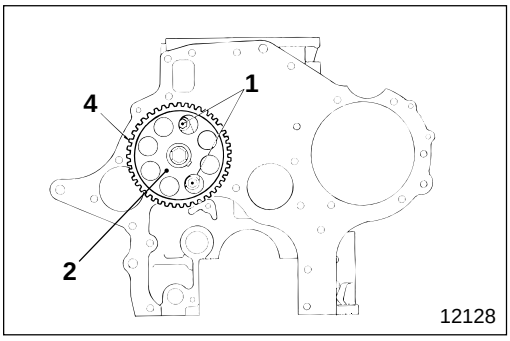

12128

2 **Camshaft assembly**

[Removal]

Remove camshaft assembly **2** by undoing bolts **1** through the holes in camshaft gear **4**.

CAUTION⚠

Be careful not to damage the camshaft bushings when you remove camshaft assembly 2.

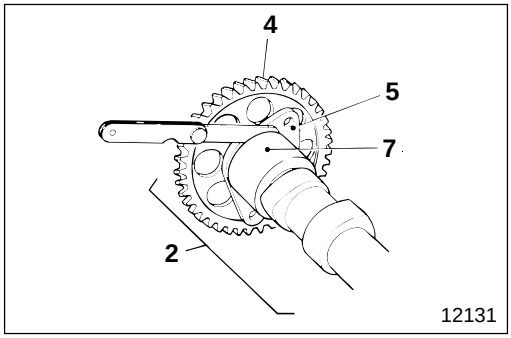

[Installation]
- Before installing camshaft assembly **2**, measure the end play between thrust plate **5** and camshaft **7**.
- If the measured value is higher than the limit, replace thrust plate **5**.
- Install the camshaft assembly by matching the alignment mark on camshaft gear **4** with the alignment mark on the idler gear. P11-29

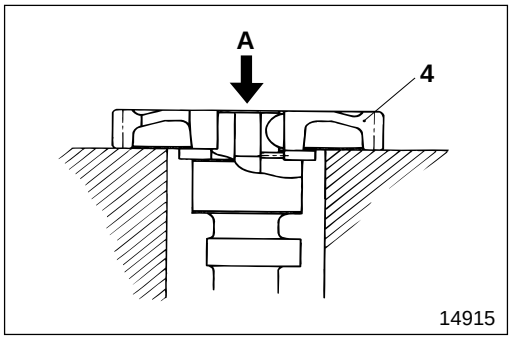

4 **Camshaft gear**

[Removal]
A : Press

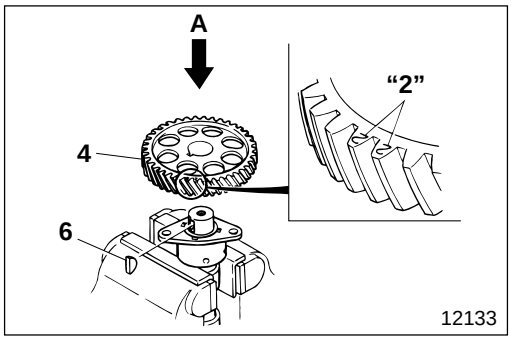

[Installation]
- Install camshaft gear **4** onto camshaft **7** in the direction as illustrated.
  A : Press
- Be sure when finishing the installation to install key **6**.

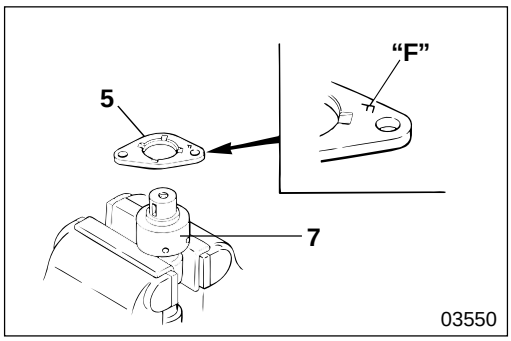

5 **Installation of thrust plate**

- Install thrust plate **5** onto camshaft **7** in the direction as illustrated.

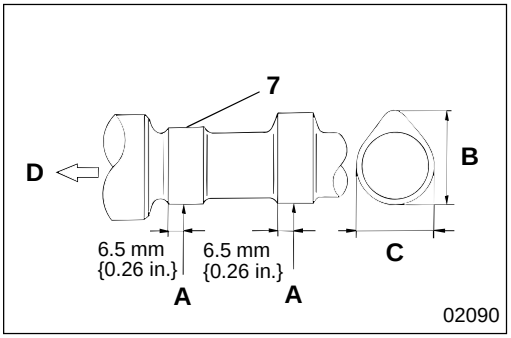

7 Inspection of camshaft

(1) Difference between long diameter and short diameter

If the measured value is lower than the limit, replace camshaft **7**.

NOTE

Measure at point A, as illustrated, because the cam is tapered.

B : Long diameter
C : Short diameter
D : Front of the engine

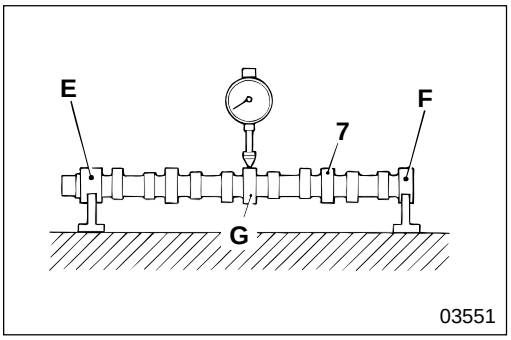

(2) Degree of bend

To measure bend, support camshaft **7** at area **E** of No.1 journal, and area **F** of No.5 journal. Then, measure the amount of bend at area **G** of No.3 journal. If the measured values are higher than the limit, replace the camshaft.

NOTE

Degree of bend of camshaft 9 is a half of the indicated value of the gauge after rotating the shaft 360°.

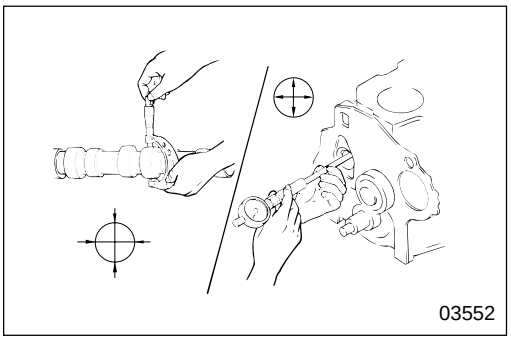

7 to 11 13 Camshaft and camshaft bushing

[Inspection]
If the clearance is greater than the limit, replace the faulty parts.

NOTE

Measure bushings 8 to 11, 13 mounted in the crankcase.

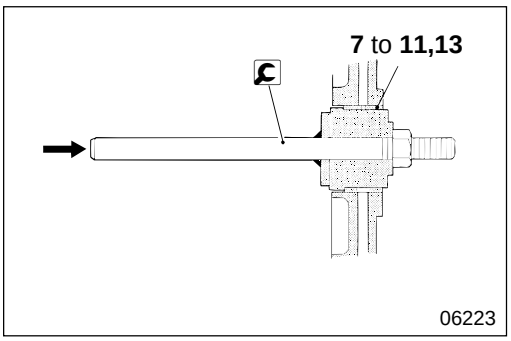

Camshaft bushing

[Removal]
Remove No. 5 camshaft bushing **13** from the rear of the engine by striking camshaft bushing installer and extractor.

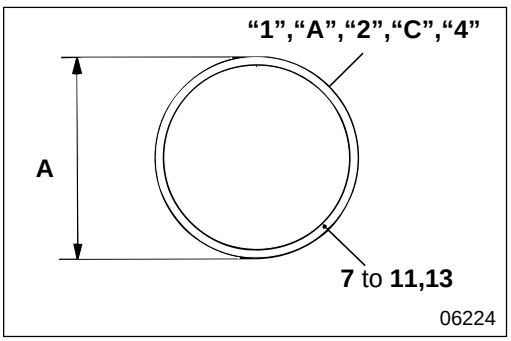

[Press-fitting]

- Identify, by referring to the table below, No.1 to No.5 camshaft bushings by noting marks **"1"**, **"A"**, **"2"**, **"C"**, **"4"** on camshaft bushings **7** to **11**, **13**. If you cannot identify the mark, measure outer diameter **A** of the bushing and refer to the table below.

Bushing No. (from the front of the engine)	Mark	Outer diameter A (mm {in.})
No.1	1	ø58.50 {2.30}
No.2	A	ø58.25 {2.29}
No.3	2	ø58.06 {2.28}
No.4	C	ø57.75 {2.27}
No.5	4	ø57.06 {2.25}

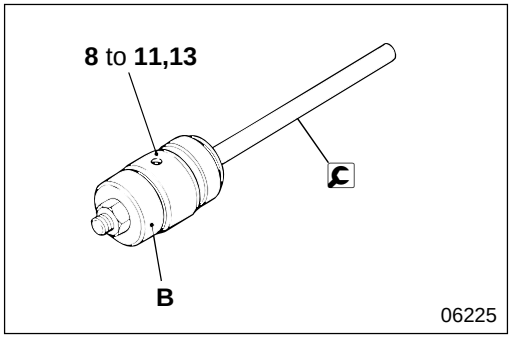

- For press-fitting, mount guide **B** to camshaft bushing installer and extractor.
- Install camshaft bushings **8** to **11** and **13** in descending order, from No.5 to No.1.
- Install No.5 camshaft bushing **13** from the rear end of the engine, and No.4 to No.1 camshaft bushings **8** to **11** from the front end of the engine.

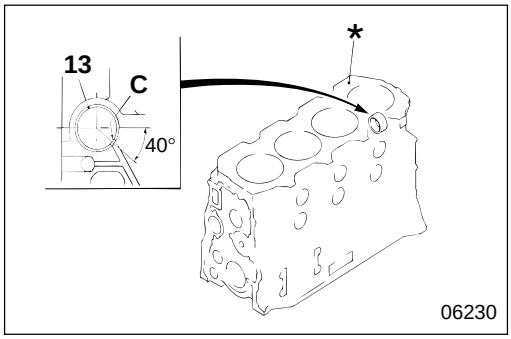

- Align oil hole **C** of No.5 camshaft bushing **13** in the direction as illustrated.

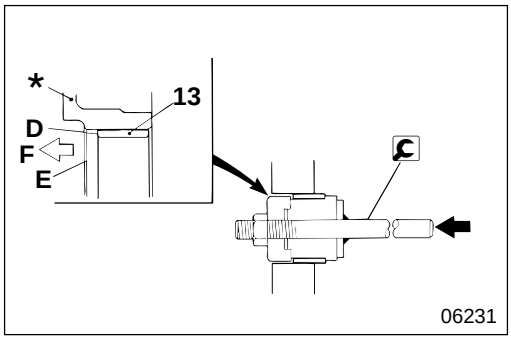

- Press in until surface **D** of No. 5 camshaft bushing **13** is flush with chamfered part **E** of crankcase *.
  F : Front of the engine

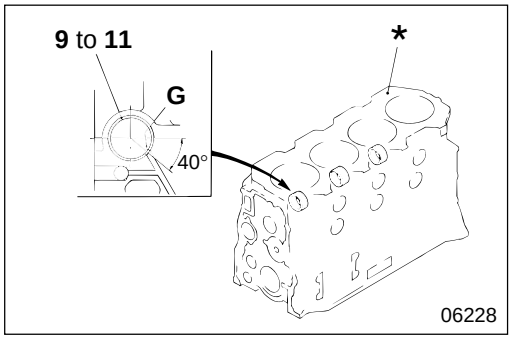

- Align oil hole **G**, of No.2 to No.4 camshaft bushings **9** to **11**, in the direction as illustrated, and press-fit in the order of No. 4, 3, 2.

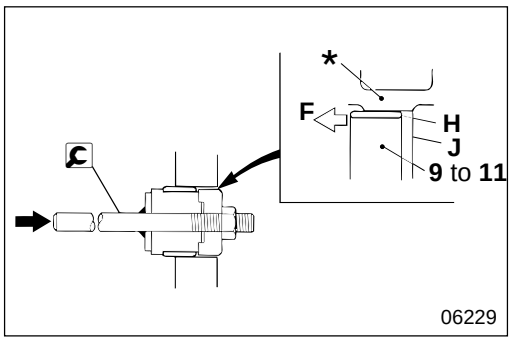

- Press in until surface **H** of No.2 to No.4 camshaft bushings **9** to **11** is flush with surface **J** of crankcase *.
  F : Front of the engine

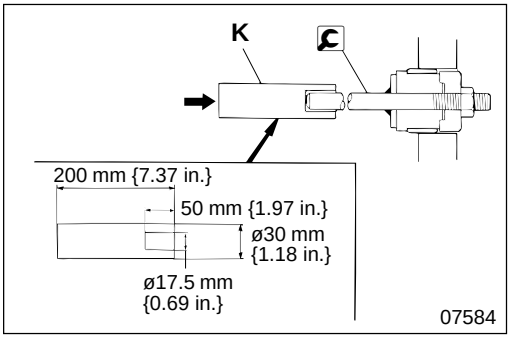

- For press-fitting of No.4 camshaft bushing **11**, use tool **K** as illustrated.

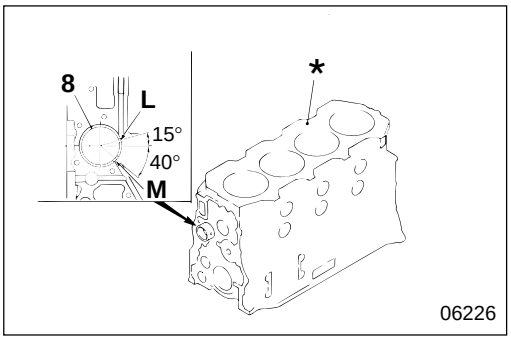

- Align oil holes **L**, **M** of No.1 camshaft bushing **8** in the direction as illustrated.
  L : ø3 mm {0.11 in.}
  M : ø8 mm {0.31 in.}
  ***** : Crankcase

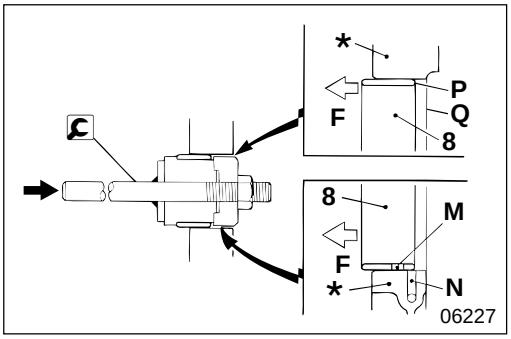

- Align oil hole **M** of No.1 camshaft bushing **8** with oil hole **N** of crankcase ***** and press in until camshaft bushing surface **P** is flush with crankcase surface **Q**.
  F : Front of the engine

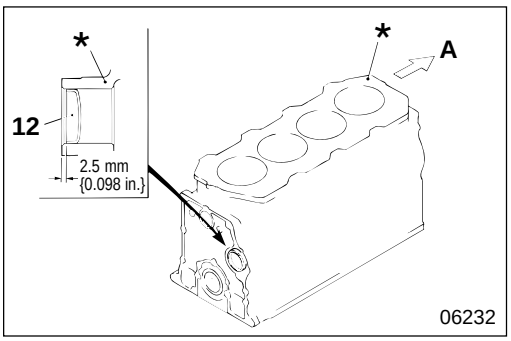

12 **Installation of sealing cap**

Press-fit sealing cap **12** into crankcase ***** to the specified depth.
A : Front of the engine

PISTON, CONNECTING ROD AND CYLINDER SLEEVE

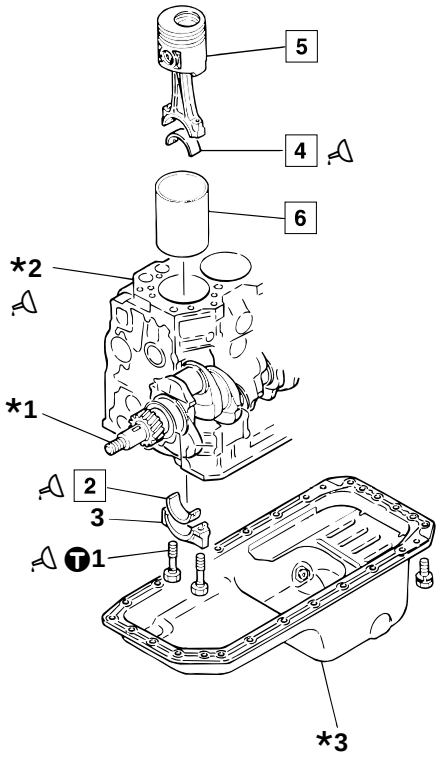

03373

● **Disassembly sequence**

1 Bolt
2 Lower connecting rod bearing
3 Connecting rod cap
4 Upper connecting rod bearing
5 Piston and connecting rod assembly
📖 P11-44
6 Cylinder sleeve

***1** : Crankshaft 📖 P11-54
***2** : Crankcase 📖 P11-54
***3** : Oil pan Gr 12

● **Assembly sequence**

Follow the disassembly sequence in reverse.

Service standards

Unit : mm {in.}

Location	Maintenance item		Standard value (Basic diameter in [ ])	Limit	Remedy
—	Extent of piston protrusion		0.47 to 0.64 {0.019 to 0.025}	—	Inspect
—	End play of connecting rod		0.15 to 0.45 {0.0059 to 0.018}	0.6 {0.024}	Inspect
2, 4	Connecting rod bearing	Oil clearance	[60] 0.04 to 0.09 {[2.36] 0.0016 to 0.0035}	0.2 {0.0079}	Replace
		Expansion	—	Upper : less than 64.5 {2.54} Lower : less than 64.27 {2.53}	
5, 6	Clearance between piston and connecting rod assembly and cylinder sleeve		[104] 0.07 to 0.11 {[4.094] 0.0028 to 0.0043}	—	Adjust or replace with oversizes
6	Cylinder sleeve	Inner diameter	104 to 104.03 {4.094 to 4.095}	104.25 {4.10}	Adjust or replace with oversizes
		Circular accuracy	0.01 {0.00039} or less	—	
		Cylindrical accuracy	0.03 {0.0012} or less	—	
6, *2	Interference between cylinder sleeve and crankcase	Standard	0.17 to 0.23 {0.0067 to 0.0091}	—	Replace with oversizes
		Oversize	0.19 to 0.21 {0.0075 to 0.0083}	—	Replace

Tightening torque

Unit : N·m {lbf.ft, kgf·m}

Location	Parts to be tightened	Tightening torque	Remarks
1	Bolt	30 {22, 3}+90°±5°	Wet

Lubricant

Location	Points of application	Kinds	Quantity
1	Thread area of bolt	Engine oil	As required
2, 4	Inner surface of bearing	Engine oil	As required
***2**	Sleeve hole of crankcase	Spindle oil (ISO VG 32)	As required

PISTON, CONNECTING ROD AND CYLINDER SLEEVE

Special tools

Unit : mm {in.}

Location	Tool name and shape	Part No.	Application
5	Socket wrench 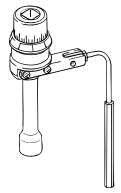 01984	MH061560	Installation of piston and connecting rod assembly
	A : Piston guide clamp **B** : Piston guide lever 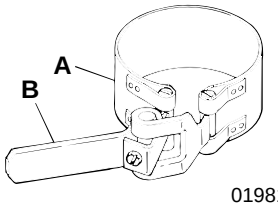 01981	**A** : MH061890 **B** : MF061658	
6	Cylinder sleeve installer 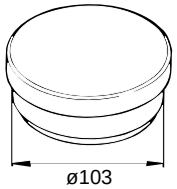 ø103 {4.06} 03377	MH062228	Installation of cylinder sleeve

◆ Service procedure

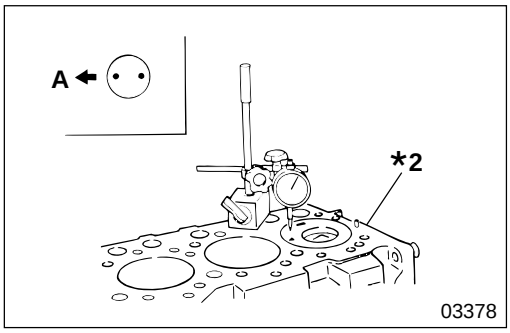

03378

● **Inspection before disassembly**

(1) Extent of piston protrusion from the upper surface of crankcase *2

NOTE

Always inspect the extent of piston protrusion because it affects the engine performance greatly.

- Measure piston protrusion at two points on the top of the piston, and produce the average value.
  A : Front of the engine
- If the average valve deviates from the limit, inspect clearance of the related parts.

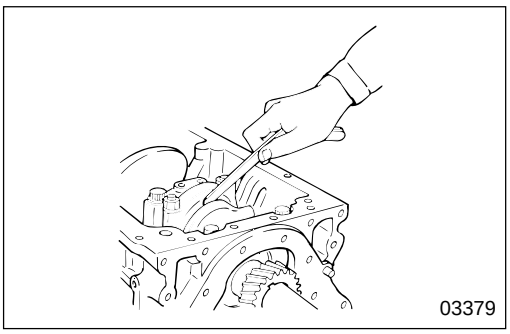
03379

(2) End play of connecting rod

- Measure the end play of each connecting rod.
- If the measured value is higher than the limit, replace the faulty parts.

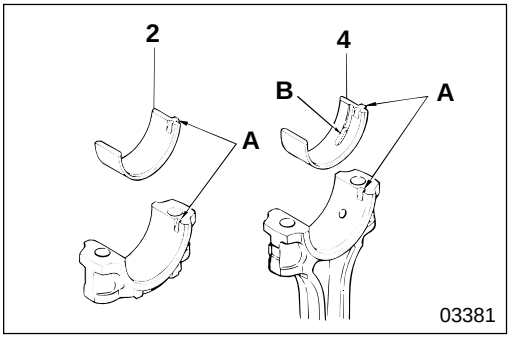

2 **4** **Connecting rod bearing**

[Installation]
Install connecting rod bearings **2**, **4** by matching lugs **A** to the connecting rods.

CAUTION

Be sure to distinguish between upper and lower connecting rod bearings 2, 4. The upper bearing has oil opening B while the lower bearing has no oil opening.

[Inspection]

CAUTION

- **Do not forcibly open or expand connecting rod bearings 2, 4.**
- **When either upper or lower connecting rod bearings 2, 4 needs replacing, replace as a set.**

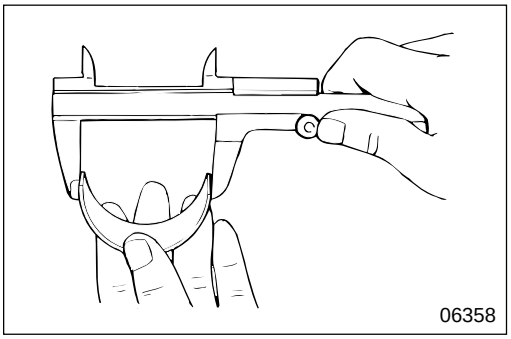

(1) Expansion at free state

If the measured value is lower than the limit, replace connecting rod bearings **2**, **4**.

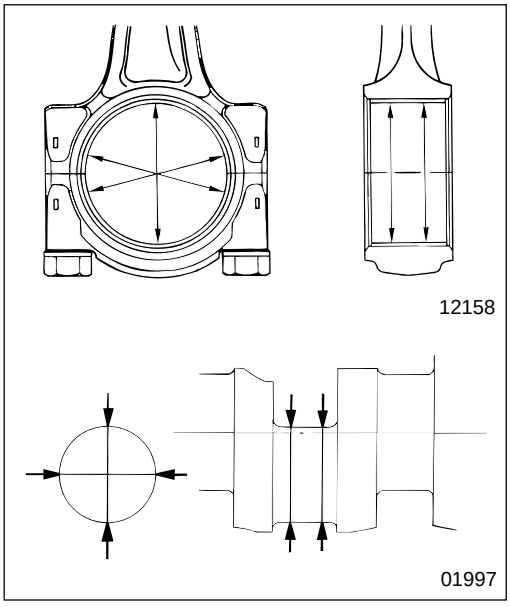

(2) Clearance between connecting rod bearing and crankshaft

If the clearance between connecting rod bearing **2**, **4** and crankshaft ***1** is lower than the limit, replace the faulty parts.

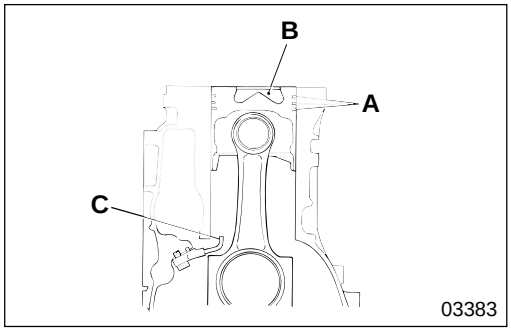

5 **Installation of piston and connecting rod assembly**

CAUTION

- **Be sure to fit piston ring A in the correct position.**
  P11-48
- **Be careful not to scratch or damage head B of the piston (a part of the combustion chamber).**
- **Make sure that the connecting rod does not hit oil jet C.**

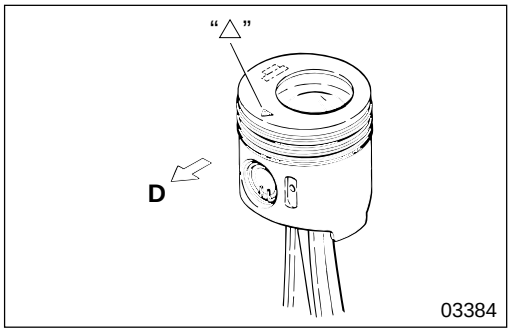

- Install piston front mark "△" directed towards the front of the engine using the following procedure.
  D : Front of the engine

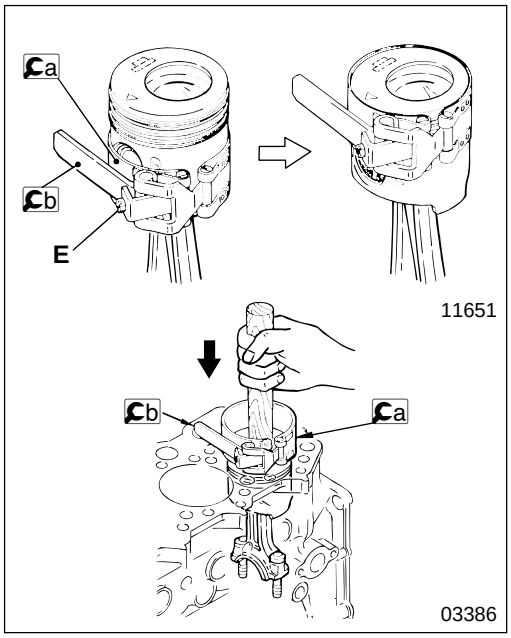

- Match the inner diameter of a piston guide clamp to the outer diameter of the piston skirt by turning adjusting bolt **E** of b piston guide lever.
- After adjusting, set a piston guide clamp and b piston guide lever at the top of the piston so that the clamp is flush with the top of the piston.

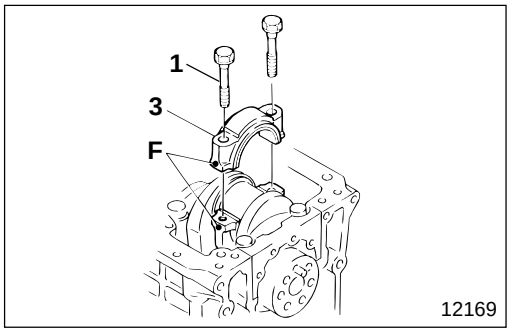

- After the piston is inserted, align alignment marks **F** on the connecting rod with the alignment marks on connecting rod cap **3** and tighten bolt **1** at specified torque. Then tighten the bolt further as follows:

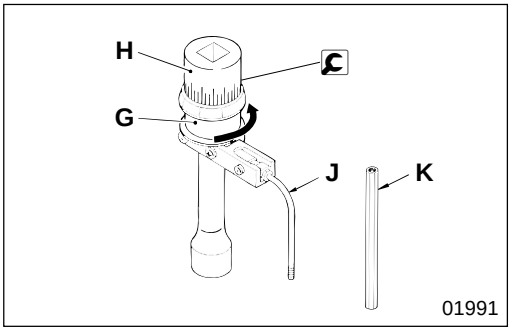

- Turn socket wrench holder **G** counterclockwise and keep the spring in the wrench compressed.
  H : Socket
  J : Rod
  K : Rod (for connection)

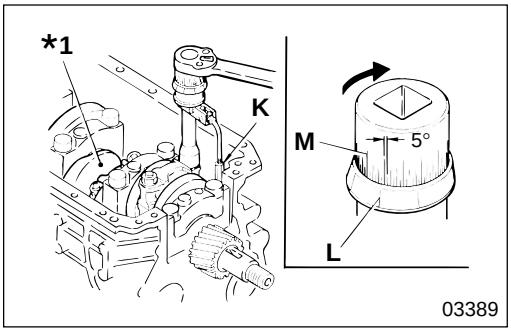

- Set socket wrench holder **G** so that the repercussive force of the spring presses rod **K** (for connection) against crankshaft ***1**.
- Select a scale that is convenient for reading graduation **L** on holder **G** side.
- Tighten further by turning socket **H** clockwise by 90° (setting is in 5° increments), referring to graduation **M** on the selected scale.

NOTE

After installation of connecting rod cap 3, inspect the following points :

- **End play of the connecting rod : 📖 P11-38**
- **Piston protrusion : 📖 P11-38**

5 **6** **Piston and connecting rod assembly, and cylinder sleeve**

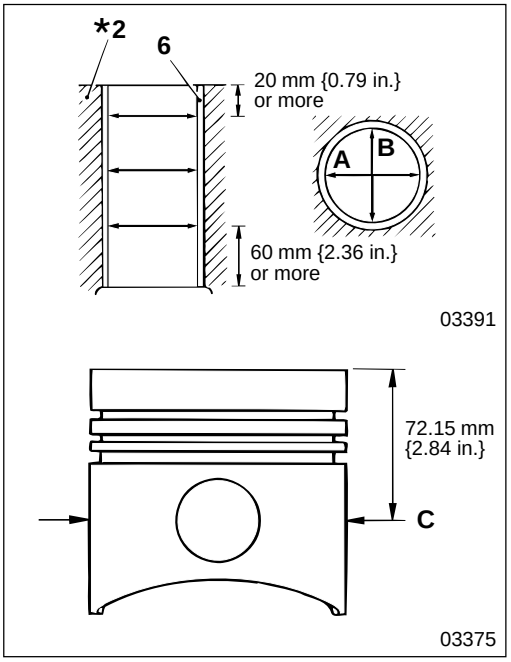

[Inspection]

- If the inner diameter of cylinder sleeve **6** is higher than the limit, bore the cylinder sleeve oversize and use an oversized piston.
  A : In the direction of the crankshaft axis
  B : At right angles to the crankshaft axis

- If the clearance between piston **5** and cylinder sleeve **6** deviates from the standard value, even when the inner diameter of the cylinder sleeve is within the limit, replace the piston.

[Selection of oversized piston]
Extent of oversize : 0.50, 1.00 mm {0.020, 0.039 in.}

- Determine the extent of oversize by measuring the inner diameters of all the cylinders and calculating the maximum wear amount of all the cylinders.
- Measure the outer diameter of the oversized piston to be used.
  C : Position to measure the outer diameter of the piston

- Bore cylinder sleeve **6** and hone it to make the clearance between piston **5** and the cylinder sleeve conform to the standard value.

NOTE

- **Even if only one cylinder sleeve 6 requires boring, all the other cylinder sleeves must be bored to the identical oversize.**
- **Piston rings must be replaced with the corresponding oversized ones.**

PISTON, CONNECTING ROD AND CYLINDER SLEEVE

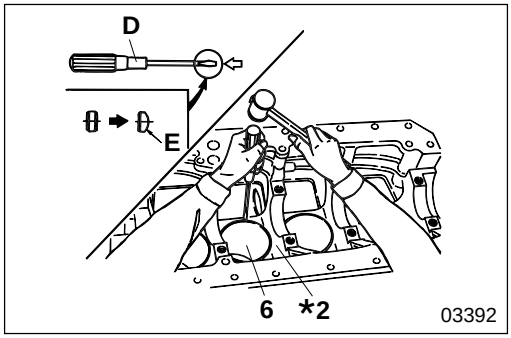

Cylinder sleeve

[Removal]

- Mount a boring machine on crankcase ***2** and center. Centering must be done at the lower part of cylinder sleeve **6** which is less unevenly worn.
- Bore until the thickness of cylinder sleeve **6** is approximately 0.5 mm {0.020 in.}.
- Insert tool **D** (a modified screwdriver) between crankcase ***2** and cylinder sleeve **6**, break the sleeve by tapping it gently, then remove.

CAUTION

Make sure when inserting tool D that round part E is facing crankcase *2.

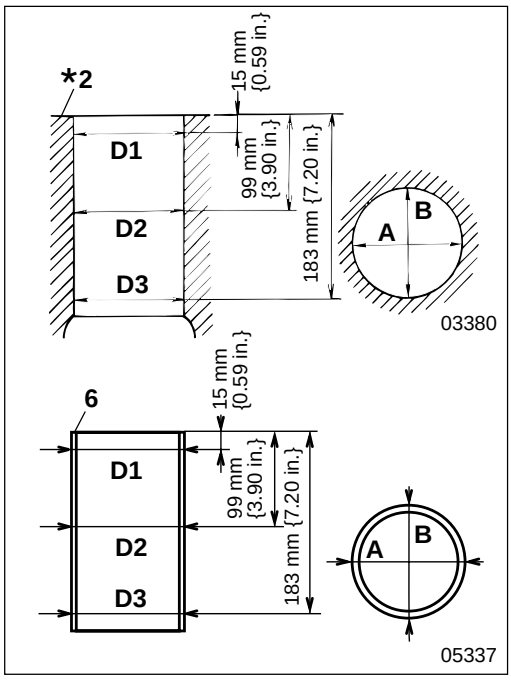

[Installation]

- Inspect sleeve hole of crankcase ***2** before installing cylinder sleeve **6**. If there are irregularities, such as defects or insufficient interference, correct them by boring.

NOTE

- **Pull out cylinder sleeve 6 of all cylinders and bore the sleeve holes perfectly round when you bore the sleeve holes of crankcase *2.**
- **Apply spindle oil (ISO VG 32) when you push cylinder sleeve 6 into the sleeve hole of crankcase *2.**

Inspection of interference must be carried out as follows.

- Measure the inner diameter of the sleeve hole of crankcase ***2** and the outer diameter of cylinder sleeve **6** at the specified positions illustrated.
- Take the average value at the top, middle and bottom (**D1**, **D2**, **D3**) and across the diameter (**A**, **B**). If the interference is lower than the limit, bore the sleeve hole of crankcase ***2** oversize.

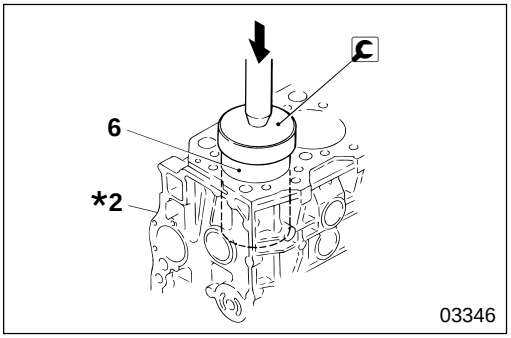

< If interference is sufficient >

- Press-fit cylinder sleeve **6** into crankcase ***2** from the chamfered end using cylinder sleeve installer.

NOTE

Align the top of cylinder sleeve 6 with the top of crankcase *2 when press-fitting.

- After press-fitting, make the inner diameter of cylinder sleeve **6** conform to the standard value by honing the surface.

< If interference is insufficient >

- Prepare cylinder sleeve **6** which is 0.5 mm {0.020 in.} oversize in diameter.
- Hone crankcase ***2**, making the clearance between the outer diameter of cylinder sleeve **6** and the sleeve hole of crankcase ***2** conform to the standard value.
- Press-fit cylinder sleeve **6** into crankcase ***2** from the chamfered end using cylinder sleeve installer.

NOTE

Align the upper face of cylinder sleeve 6 with the upper face of crankcase *2 when press-fitting.

- After press-fitting, make the inner diameter of cylinder sleeve **6** conform to the standard value by honing the surface.

PISTON, CONNECTING ROD AND CYLINDER SLEEVE

Piston and Connecting Rod Assembly

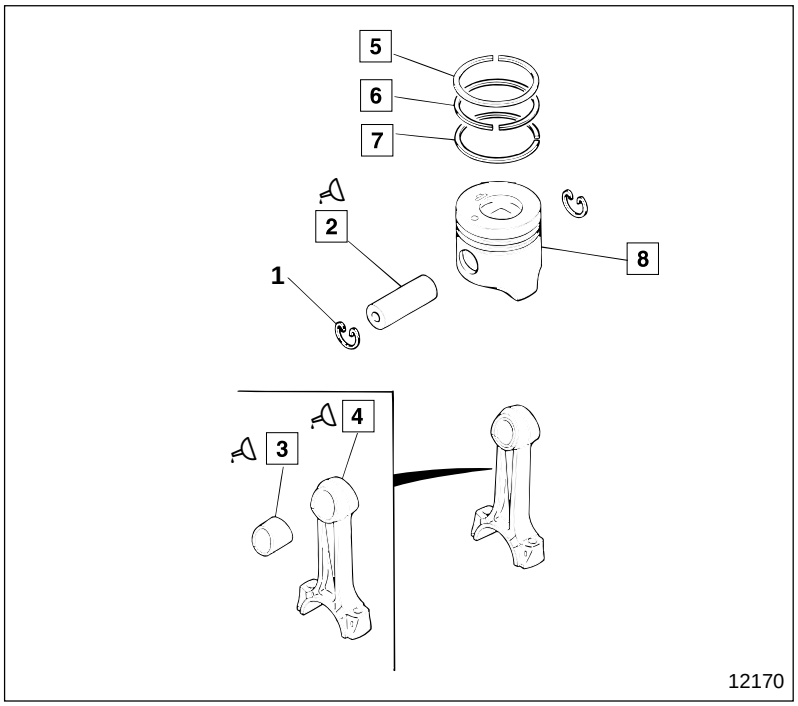

● **Disassembly sequence**

1 Snap ring
2 Piston pin
3 Connecting rod bushing
4 Connecting rod
5 1st compression ring
6 2nd compression ring
7 Oil ring
8 Piston

● **Assembly sequence**

Follow the disassembly sequence in reverse.

Service standards

Unit : mm {in.}

Location	Maintenance item		Standard value (Basic diameter in [ ])	Limit	Remedy
2, 3	Clearance between piston pin and connecting rod bushing		[36] 0.03 to 0.04 {[1.42] 0.0012 to 0.0016}	0.1 {0.0039}	Replace
2, 8	Clearance between piston and piston pin		[36] 0.007 to 0.021 {[1.42] 0.00028 to 0.00083}	0.05 {0.0020}	Replace
4	Degree of bend and distortion of connecting rod		—	0.05 {0.0020}	Repair or replace
5 to 7	Deviation of piston ring fitted position	1st compression ring	0.3 to 0.45 {0.012 to 0.018}	1.5 {0.059}	Replace
		2nd compression ring	0.4 to 0.55 {0.016 to 0.022}		
		Oil ring	0.25 to 0.45 {0.0098 to 0.018}		
5 to 8	Clearance between piston ring and piston ring groove	1st compression ring	0.02 to 0.10 {0.00079 to 0.0039}	0.2 {0.0079}	Replace
		2nd compression ring	0.05 to 0.08 {0.0020 to 0.0031}	0.15 {0.0059}	
		Oil ring	0.03 to 0.06 {0.0012 to 0.0024}		

Lubricant

Location	Points of application	Kinds	Quantity
2	Exterior of piston pin	Engine oil	As required
3	Exterior of connecting rod bushing	Engine oil	As required
4	Bushing attachment area of connecting rod	Engine oil	As required

Special tools

Unit : mm {in.}

Location	Tool name and shape	Part No.	Application
3	Connecting rod bushing puller kit 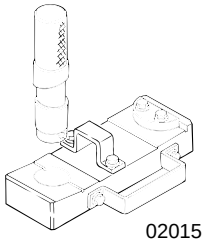 02015	MH062225	Removal and installation of connecting rod bushing
5 to 7	Piston ring tool 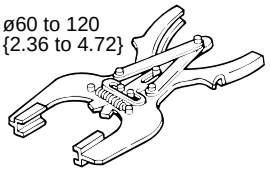 02013	MH060014	Removal and installation of piston ring

◆ Service procedure

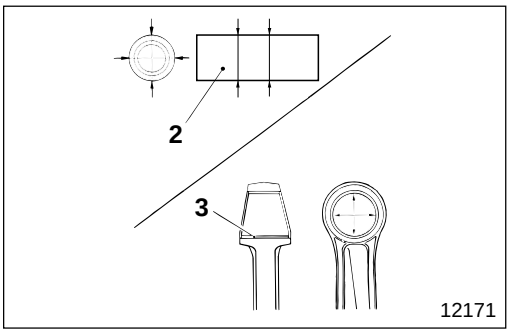

12171

2 **3** **Piston pin and connecting rod bushing**

[Inspection]
If the clearances are higher than the limit, replace the faulty parts.

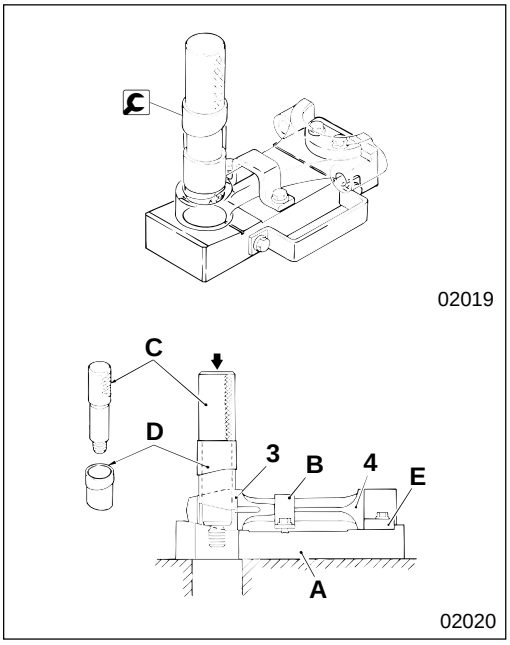

02019
02020

Connecting rod bushing

Use 🔧 connecting rod bushing puller kit to replace connecting rod bushing **3**.
(Components of 🔧 connecting rod bushing puller kit)
A : Base **B** : Bracket **C** : Puller **D** : Collar **E** : Plate **F** : Collar **G** : Nut

[Pulling-out]

- Remove upper connecting rod bearing from the big end of connecting rod **4**.
- Place connecting rod **4** on base **A** and fix it to the base at two points, bracket **B** and plate **E**.
- Fit collar **D** in puller **C** in the direction as illustrated, and pull out connecting rod bushing **3** with a gradual load of approximately 49 kN {11020 lbf, 5000 kgf}.

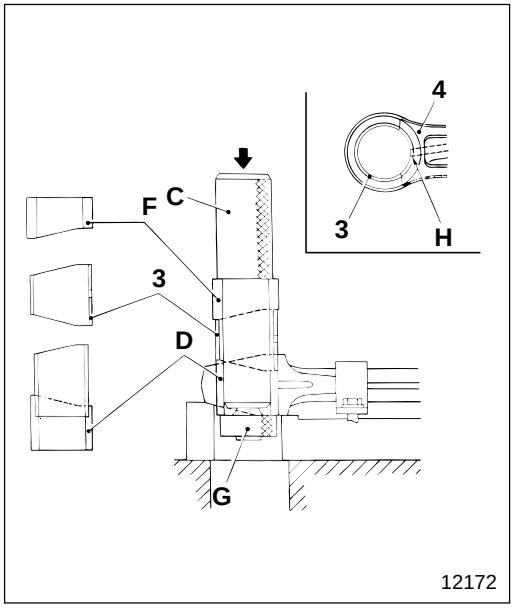

[Press-fitting]
- Apply engine oil to the exterior peripheral area of connecting rod bushing **3** and the inner area of the bushing fitting ring of connecting rod **4**.
- Fit collar **F**, connecting rod bushing **3** and collar **D** in puller **C** in the arrangement and direction as illustrated and mount them with nut **G**.
- Align oiling holes **H** of connecting rod bushing **3** and connecting rod **4**, and gradually press in the bushing with approximately 49 kN {11023 lbf, 5000 kgf} load.
- After press-fitting, ream connecting rod bushing **3** to make its clearance with piston pin **2** conform to the standard value.

NOTE

After press-fitting bushing 3, insert piston pin 2 and make sure that the rod moves smoothly without any excessive play.

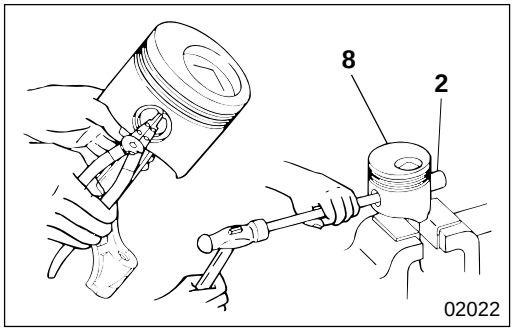

2 **4** **8** **Piston pin and connecting rod and piston**

[Disassembly]
- Drift out piston pin **2** using a rod.
- When removal of piston pin **2** is difficult, warm piston **8** using a piston heater or hot water.

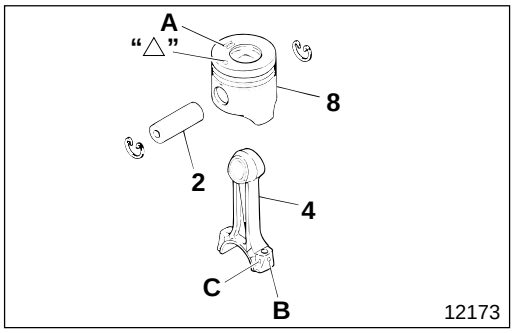

[Installation]
- Apply engine oil to piston pin **2** and assemble connecting rod **5** and piston **8** in the direction as illustrated.
  A : Piston mass (Mass of piston is marked)
  B : Connecting rod mass mark (Alphabetical: A, B, C, D, E, F, G)

  C : Mounting base of connecting rod cap
  △ : Front mark

- When piston pin **2** insertion is difficult, warm piston **8** using a piston heater or hot water.

CAUTION⚠
- **Make sure that the total mass error of all pistons 8 in one engine is 10 g {0.35 oz.} or less.**
- **Be sure to install connecting rods 4, to be used in one engine, that have identical mass mark B.**
- **Be sure that after inserting piston pin 2 the connecting rod operates smoothly without excessive play.**

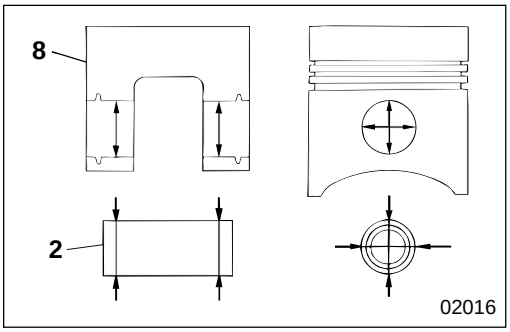

2 **8** **Clearance between piston pin and piston**

If the clearance is higher than the limit, replace the faulty parts.

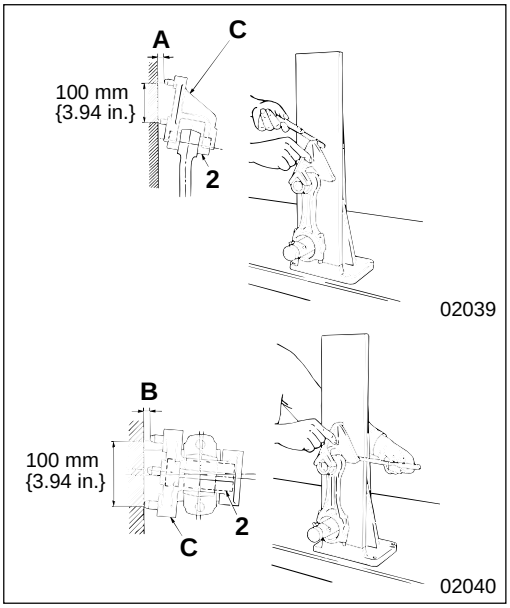

4 **Degree of bend or distortion of connecting rod**

- Mount connecting rod bushing **3** and piston pin **2** to connecting rod **4**.
- Measure degree of bend **A** and distortion **B** of connecting rod **4**. If the measured value is higher than the limit, repair or replace the connecting rod.
  C : Connecting rod aligner (Measuring instrument)

NOTE

- **When making measurements by mounting connecting rod 5 to connecting rod aligner C, make sure that the upper connecting rod bearing and the lower connecting rod bearing are mounted on the rod.**
- **Mount the connecting rod cap by tightening the bolt at specified torque.** 🕮 **P11-36**

PISTON, CONNECTING ROD AND CYLINDER SLEEVE

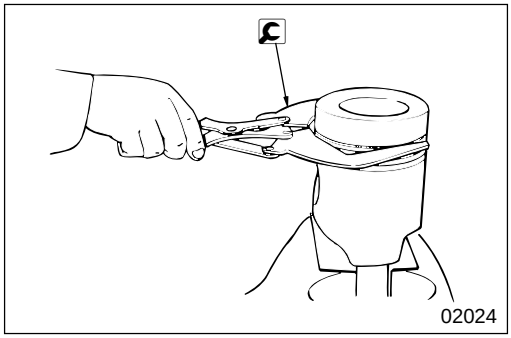

5 to **8** **Piston ring and piston**

Piston ring
[Removal]

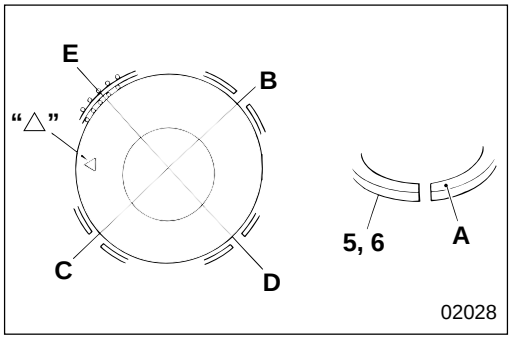

[Installation]
- Install oil ring **7** so that split **D** and the butting joint of expander spring **E** come to the points as illustrated.
- Compression rings **5** and **6** have a manufacturer's mark **A** at the split, and installation should be made with the mark outward.
  B : The split of the 1st compression ring
  C : The split of the 2nd compression ring
  D : Oil ring slit
  E : Oil ring expander spring butt joint
  △ : Front mark of piston

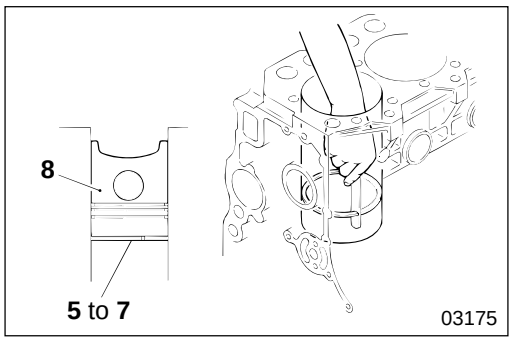

[Inspection]

(1) Clearance of piston ring slit
- Install piston rings **5** to **7** into the crankcase cylinder sleeve using the head of piston **8** to level the piston ring.
- Measure the clearance of the piston ring split while keeping them level and stationary. If the measured value is higher than the limit, replace the piston ring.

NOTE
- **Use piston 8 to ensure that piston rings 5 to 7 are kept level when inserting them into the crankcase cylinder sleeve.**
- **Insert piston rings 5 to 7 into the lower part of the crankcase cylinder sleeve, where the area is less worn, when measuring clearance of piston ring split 5 to 7.**
- **Exchange the whole set of piston rings 5 to 7 as a set if any of the rings is faulty.**

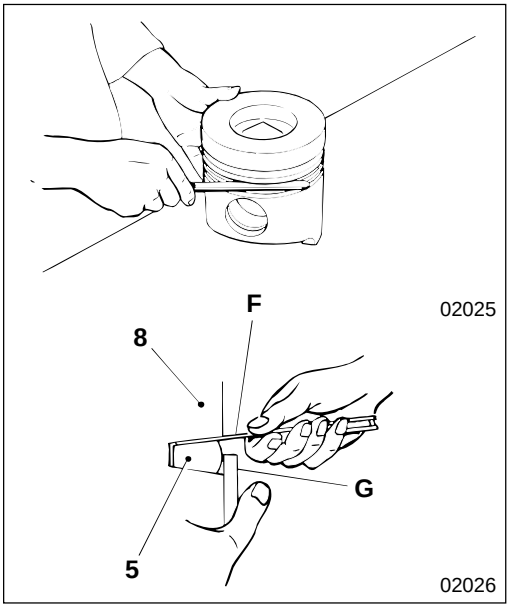

(2) Clearance between piston ring and ring groove

- If the measured value is higher than the limit, replace the faulty parts.
- Measure using feeler gauge **F**, by pressing 1st compression ring **5** against piston **8** with straight edge **G**.

NOTE

- **Measurement has to be conducted around the whole periphery of piston 8 after removing carbon deposits.**
- **Be sure to exchange the whole set of piston rings 5 to 7 as a set if any of the rings is faulty.**

FLYWHEEL

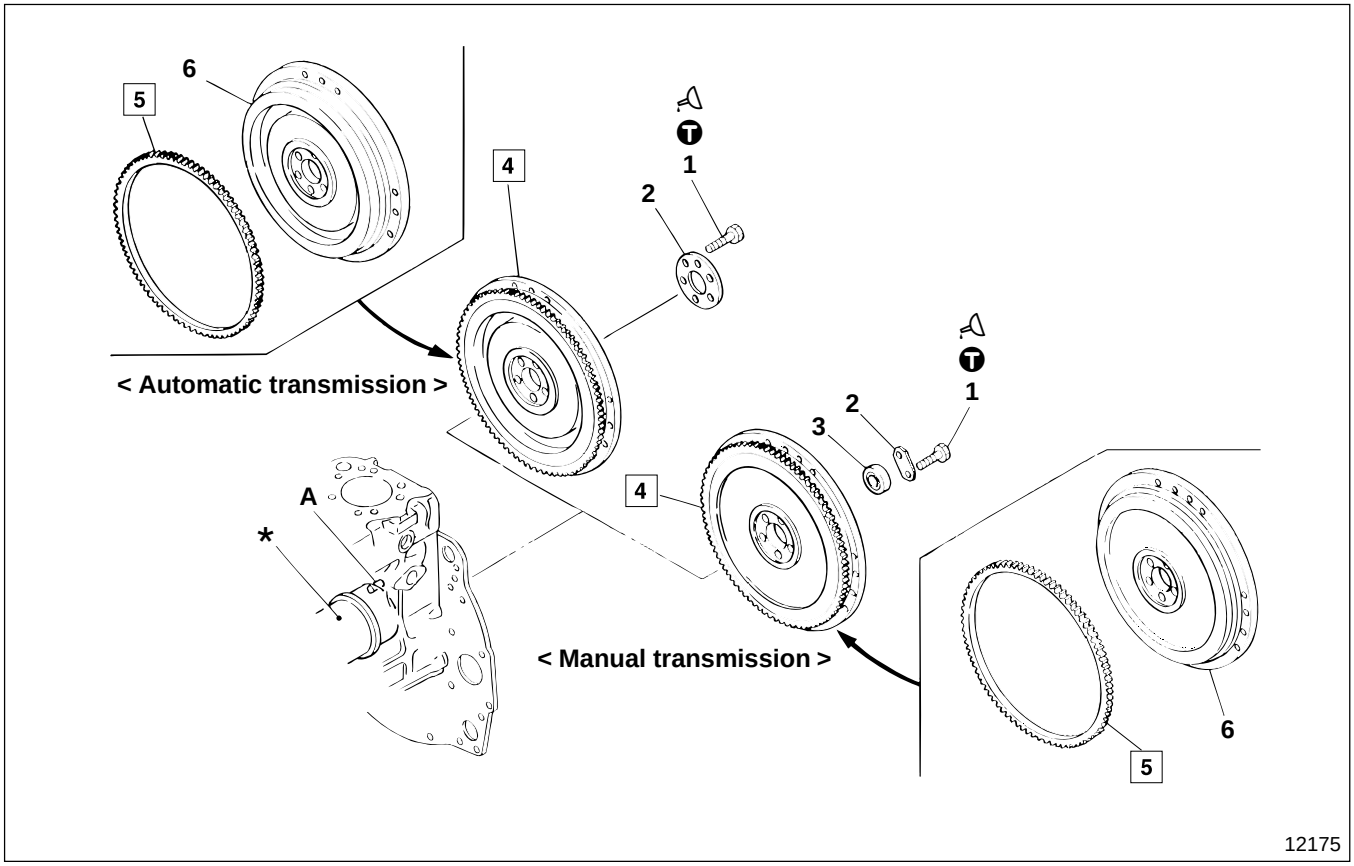

● **Disassembly sequence**

1 Bolt
2 Plate < Manual transmission >
Wear plate < Automatic transmission >
3 Bearing < Manual transmission >
4 Flywheel assembly
5 Ring gear
6 Flywheel

***** : Crankshaft assembly
🕮 P11-54
A : Positioning pin

● **Assembly sequence**

Follow the disassembly sequence in reverse.

NOTE

Be sure to check wobble of flywheel 6 after installing flywheel assembly 4. 🕮 **P11-51**

Service standards

Unit : mm {in.}

Location	Maintenance item		Standard value	Limit	Remedy
4	Flywheel assembly < Manual transmission >	Height from bolt mounting surface to friction surface	24.5 {0.96}	23.5 {0.93}	Repair or replace
		Distortion of friction surface	0.05 {0.0020} or less	0.2 {0.0079}	
		Wobble of friction surface	—	0.2 {0.0079}	

Ⓣ Tightening torque

Unit : N·m {lbf.ft, kgf·m}

Location	Parts to be tightened	Tightening torque	Remarks
1	Bolt (Flywheel mounting)	39 {29, 4}+40°	Wet

Lubricant

Location	Points of application	Kinds	Quantity
1	Thread area of bolt	Engine oil	As required

Special tools

Location	Tool name and shape	Part No.	Application
4	Socket wrench 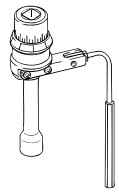 01984	MH061560	Installation of flywheel assembly
	Magnetic base < Manual transmission >  00471	MH062356	

◆ Service procedure

4 Flywheel assembly

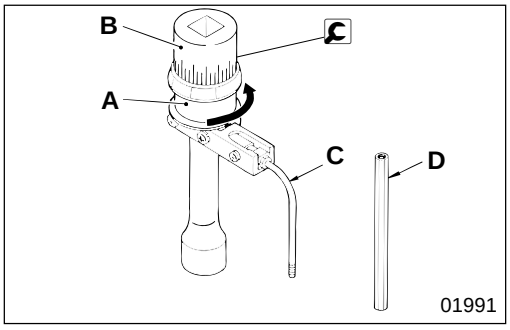

01991

[Installation]

- After tightening bolt **1** at specified torque, tighten further as follows:
- Turn [C] socket wrench holder **A** counterclockwise and keep the spring in the wrench compressed.
  - **B** : Socket
  - **C** : Rod
  - **D** : Rod (for connection)

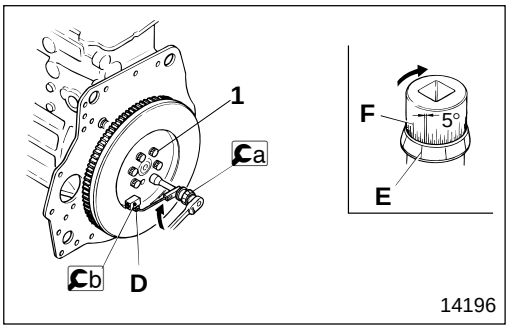

14196

- Set [Ca] socket wrench holder **A** so that the repercussive force of its spring presses rod **D** (for connection) against [Cb] magnetic base
- Select a scale that is convenient for reading graduation **E** on holder **A** side.
- Tighten further by turning the socket clockwise by 40° (setting is in 5° increments) referring to graduation **F** on the selected scale.

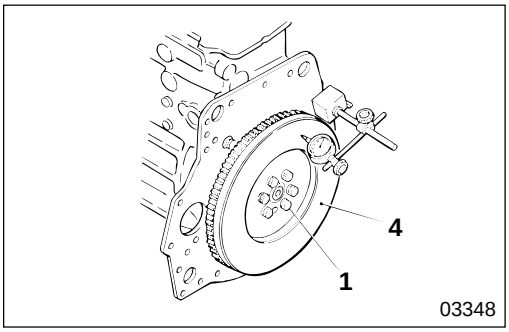

03348

[Inspection]

< Manual transmission >

(1) Wobble

If the measured value is higher than the limit, check the fastening of bolt **1**, the attachment surface of crankshaft assembly, and depending on the condition found, either repair or replace flywheel assembly **4**.

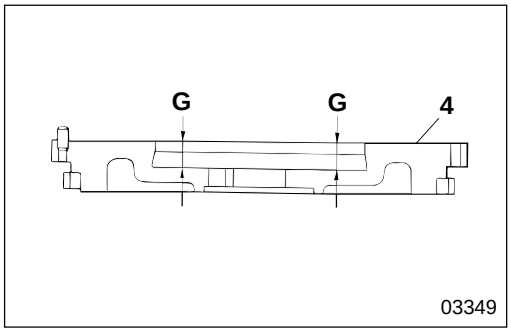

(2) Height of friction surfaces

If the measured value is lower than the limit, repair or replace flywheel assembly **4**.

G : Height from bolt mounting surface to friction surface

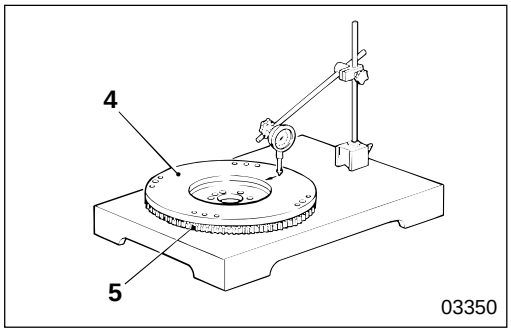

(3) Distortion of friction surface

If the measured value is lower than the limit, repair or replace flywheel assembly **4**.

NOTE

If any fault is found in ring gear 5, replace it first, then begin the inspection.

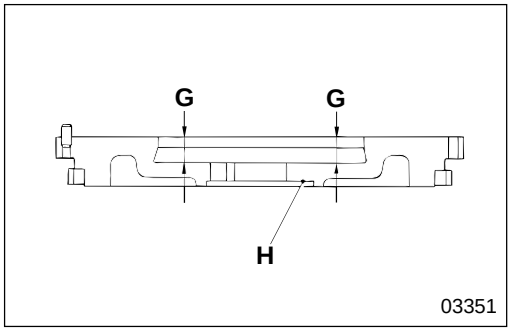

[Correction]

Make sure when grinding the friction surfaces for correction, that height **G** is not lower than the limit while maintaining the degree of parallel with surface **H** within 0.1 mm {0.0039 in.}.

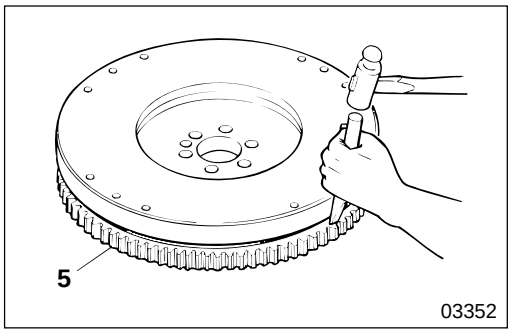

5 **Ring gear**

[Inspection]

Check and see if there is any damage, wear or other fault, and if any fault is found, replace ring gear **5**.

[Removal]

- Heat up ring gear **5** evenly using an acetylene torch.
- Hammer the outer edge of ring gear **5** evenly until it drops off.

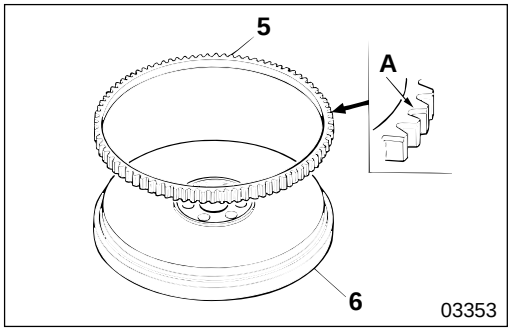

[Installation]

- Heat up ring gear **5** using a piston heater to approximately 100°C {212°F} for three minutes.
- With the side of the chamfered teeth of ring gear **5** facing you, mount it on flywheel **6**.

  A : Chamfered ring gear side

M E M O

CRANKSHAFT AND CRANKCASE

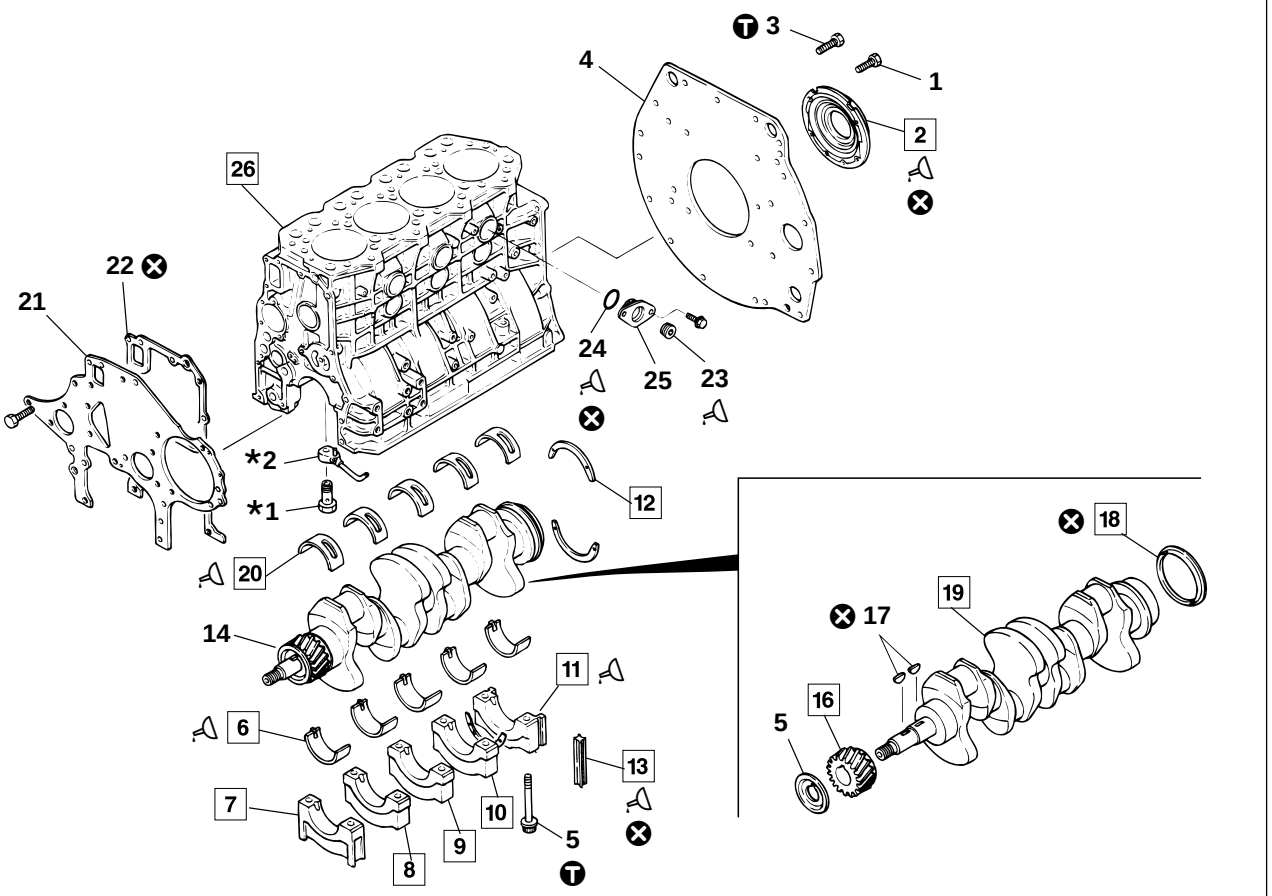

● **Inspection before disassembly**

P11-56

● **Disassembly sequence**

1 Bolt
2 Rear oil seal
3 Bolt
4 Rear plate
5 Bolt
6 Lower main bearing
7 No.1 main bearing cap
8 No.2 main bearing cap
9 No.3 main bearing cap
10 No.4 main bearing cap
11 Rear main bearing cap
12 Thrust plate
13 Side seal
14 Crankshaft assembly
15 Front oil seal slinger
16 Crankshaft gear
17 Key
18 Rear oil seal slinger
19 Crankshaft
20 Upper main bearing
21 Front plate
22 Gasket
23 Taper plug
24 O-ring
25 Block heater adaptor
26 Crankcase

***1** : Check valve Gr 12
***2** : Oil jet Gr 12
⊗ : Non-reusable parts

NOTE

Do not remove crankshaft gear 16, check valve *1 and oil jet *2 unless they are faulty.

● **Assembly sequence**

Follow the disassembly sequence in reverse.

Service standards

Unit : mm {in.}

Location	Maintenance item			Standard value (Basic diameter in [ ])	Limit	Remedy
—	Crankshaft end play			0.10 to 0.26 {0.0039 to 0.010}	0.4 {0.016}	Inspect
6, 20	Main bearing	Oil clearance	No.1, 2, 4, 5	[78] 0.04 to 0.09 {[3.07] 0.0016 to 0.0035}	0.15 {0.0059}	Replace
			No.3	[78] 0.06 to 0.12 {[3.07] 0.0024 to 0.0047}		
		Expansion at free state		—	less than 82.5 {3.25}	Replace
19	Crankshaft	Degree of bend		0.02 {0.00079} or less	0.05 {0.0020}	Replace
		Pin and journal	Circular accuracy	0.01 {0.00039} or less	0.03 {0.0012}	Repair or replace
			Cylindrical accuracy	0.006 {0.00024} or less	—	Repair or replace
26	Crankcase top surface distortion			0.07 {0.0028} or less	0.2 {0.0079}	Repair or replace

Tightening torque

Unit : N·m {lbf.ft, kgf·m}

Location	Parts to be tightened	Tightening torque	Remarks
3	Bolt (Rear plate mounting)	64 {47, 6.5}	—
5	Bolt (Main bearing cap mounting)	59 {43, 6}+90°	Wet Reuse up to three times

Lubricant and sealant

Location	Points of application	Kinds	Quantity
2	Rear oil seal lip	Engine oil	As required
	Rear oil seal mounting surface to crankcase	THREEBOND 1207C	As required
6, 20	Interior of main bearing	Engine oil	As required
11	Pack side seal driving groove of rear main bearing	THREEBOND 1207C	As required
13	Side seal tip and groove	THREEBOND 1207C	As required
23	Thread area of taper plug	THREEBOND 2410	As required
24	O-ring	Soapy water	As required

Special tools

Unit : mm {in.}

Location	Tool name and shape	Part No.	Application
7 to 11	Socket wrench  01984	MH061560	Installation of main bearing cap
11	Bearing cap extractor 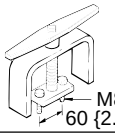 03516	MH061083	Removal of rear main bearing cap
15	Rear oil seal slinger installer 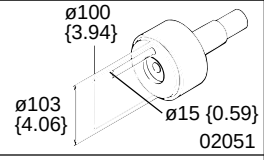 02051	MH062677	Installation of rear oil seal slinger
16	Gear puller 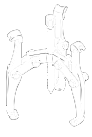 02065	MH061326	Removal of crankshaft gear

◆ Service procedure

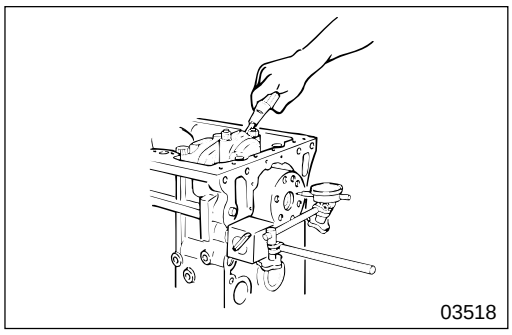

● **Inspection before disassembly**

Crankshaft assembly end play
If the measured value is higher than the limit, replace thrust plates **12** with oversized ones. 🕮 P11-58
< Available oversize ones >
+0.15, +0.30, +0.45 mm
{+0.0059, +0.012, +0.018 in.}

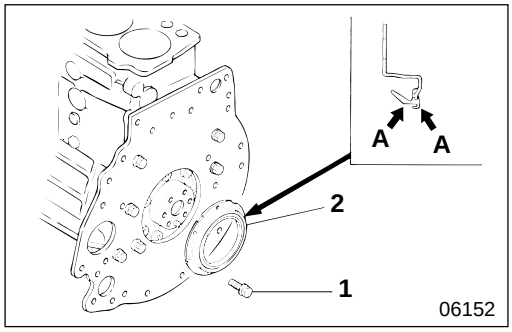

2 **Mounting of rear oil seal**

- Apply engine oil to lip area **A** of rear oil seal **2**.

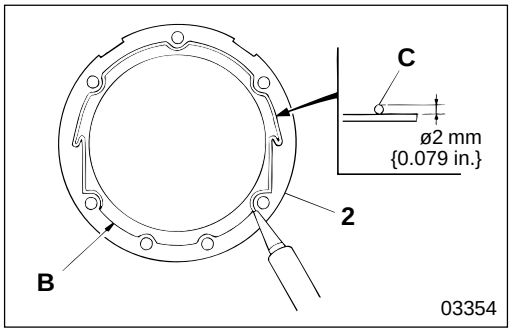

- Apply sealant **C** along line **B** on rear oil seal **2** evenly without break.
- After applying sealant **C**, within three minutes, mount rear oil seal **2**.

CAUTION⚠
- **Do not start the engine within an hour of mounting rear oil seal 2.**
- **Be sure to reapply sealant C if bolts 1 (for mounting rear oil seal 2) are loosened or removed by any cause whatsoever after mounting.**

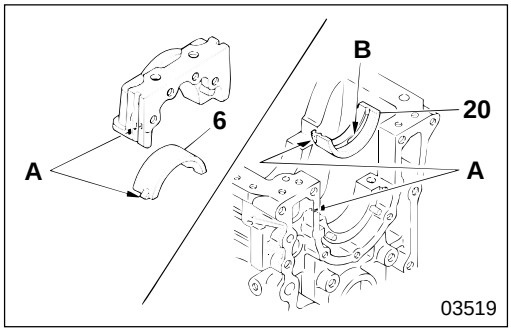

6 **20** **Main bearing**

[Installation]
When installing main bearings **6**, **20**, align lugs **A**.

CAUTION⚠
Be sure to distinguish between main bearings 6, 20. The upper bearing has oil opening B while the lower bearing has no oil opening.

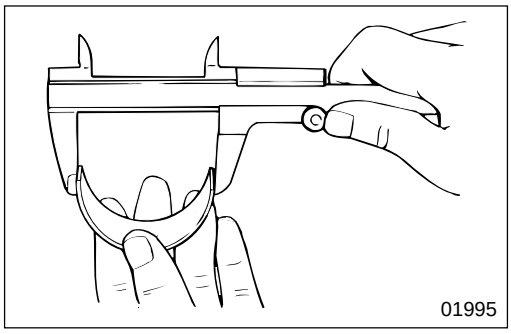

[Inspection]

CAUTION⚠
- **Do not forcibly expand main bearings 6, 20.**
- **Be sure to replace both upper and lower main bearings 6, 20 as a pair when replacement is necessary.**

(1) Expansion at free state

If the measured value is lower than the limit, replace main bearings **6**, **20**.

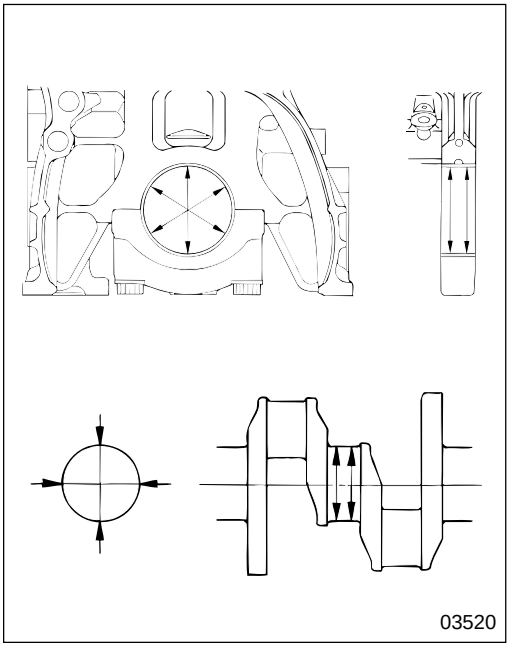

(2) Clearance between main bearing and crankshaft

If the measured value is lower than the limit, replace faulty parts.

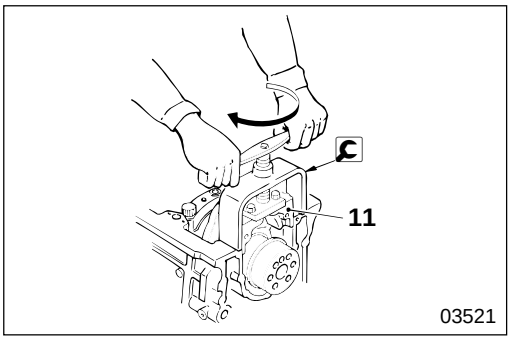

7 to 11 Main bearing cap

[Removal]

Use bearing cap extractor to remove rear main bearing cap **11** because side seal **13** is installed between crankcase **23** and the rear main bearing.

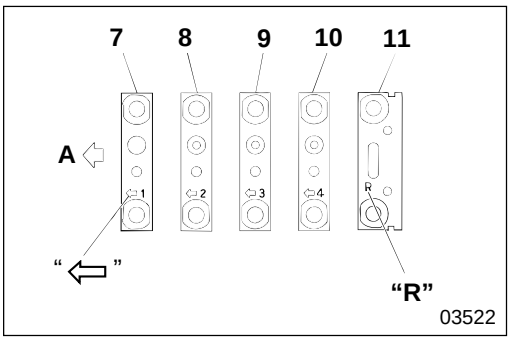

[Installation]

- Install main bearing caps **7** to **11** in the direction as illustrated.
  A : Front of engine

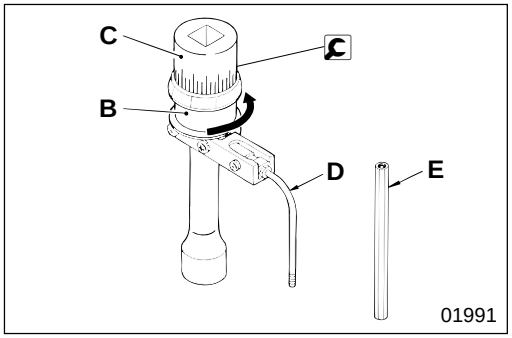

- Center punch the head of bolt **5** before installation.

CAUTION

If there are already three center-punch marks, replace the cylinder head bolt with a new one.

- After tightening bolt **5** at specified torque, tighten further as follows:
- Turn socket wrench holder **B** counterclockwise and keep the spring in the wrench compressed.
  C : Socket
  D : Rod
  E : Rod (for connection)

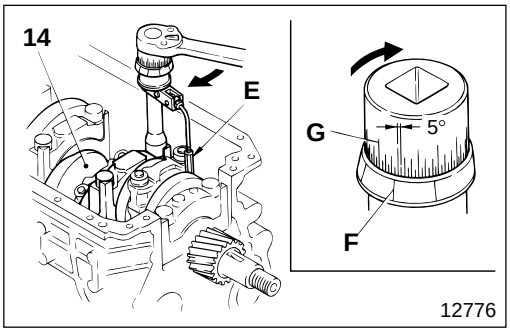

- Set socket wrench holder **B** so that the repercussive force of the spring presses rod **E** (for connection) against crankshaft assembly **14**.
- Select a scale that is convenient for reading graduation **F** on holder **B**.
- Tighten further by turning socket **C** clockwise by 90° (setting is in 5° increments), referring to graduation **G** on the selected scale.
- After installation, check the following points :
  - Crankshaft assembly **14** can be rotated easily by hand.
  - The end play of crankshaft assembly **14**. P11-56

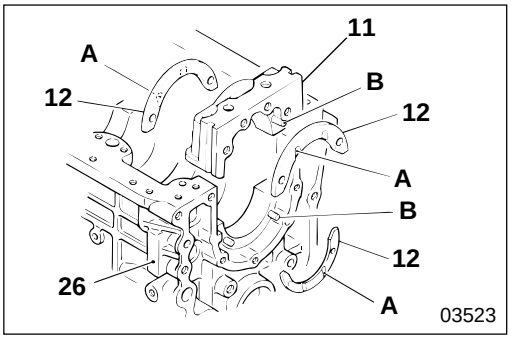

12 Installation of thrust plate

Install thrust plates **12** on both ends of rear main bearing **11** and the rear end of crankcase **26** in the direction as illustrated.
A : Oil groove
B : Positioning pin

CAUTION

When installing oversized thrust plates 12, mount them on the front and rear of rear main bearing cap 11. It is not necessary that the thrust plates used are all of the same size, but use the same-size-combination of thrust plates for mounting on the rear of crankcase 26 and on the rear of the rear bearing cap.

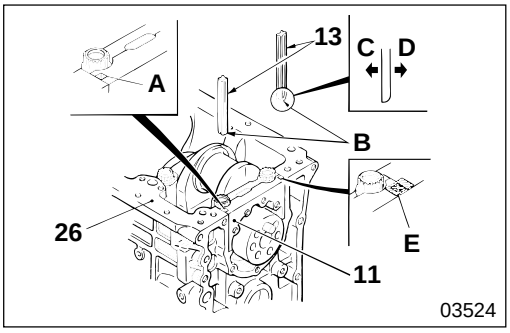

13 Installation of side seal

- Supply sealant in side seal mounting groove **A** of rear main bearing cap **11**.
- Apply sealant at end **B** of side seal **13**.
- Press in side seal **13** between rear main bearing cap **11** and crankcase **26** in the direction as illustrated.
  C : Rear main bearing cap side
  D : Crankcase side
- After pressing in, apply sealant to side seal mounting **E** of rear main bearing cap **11**.

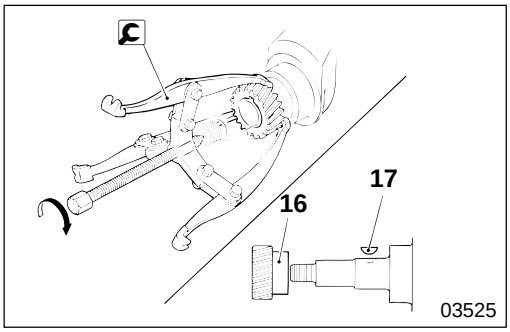

16 Crankshaft gear

[Removal]
Never remove crankshaft gear **16** by striking, hitting or hammering it.

[Installation]
Before installing heat up crankshaft gear **16** using a piston heater or similar device to approximately 100°C {212°F}.

NOTE

Install key 17 to prevent rotation.

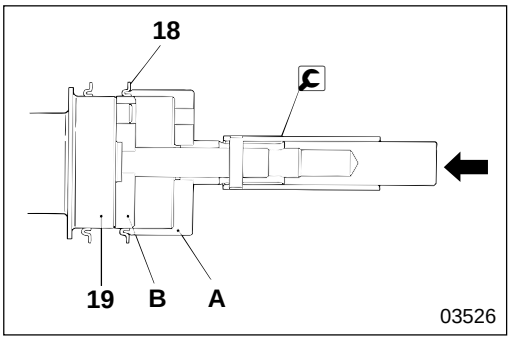

18 Installation of rear oil seal slinger

Install rear oil seal slinger **18** using oil seal slinger installer. Strike installer **A** until it hits guide **B** positively.

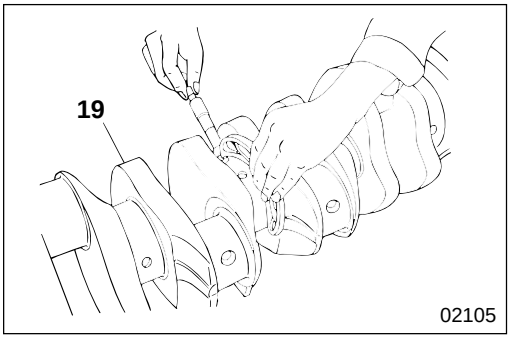

19 Crankshaft

[Inspection]

(1) Cylindrical and circular accuracy of the journal and the pin

If the measured value is higher than the limit, grind and correct crankshaft **19** to convert it to the undersize specifications or replace it.

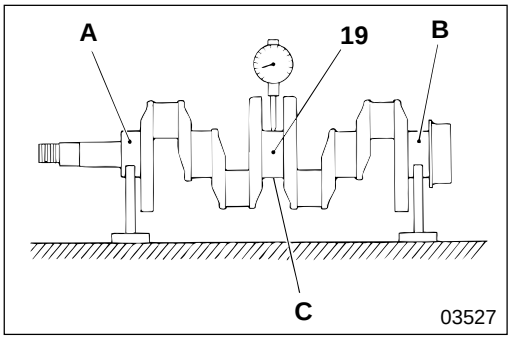

(2) Degree of bend

The degree of bend of crankshaft **19** is measured at No.3 journal **C** by supporting No.1 journal **A** and No.2 journal **B.** If the measured value is higher than the limit, replace the crankshaft.

NOTE

The degree of bend of crankshaft 19 is half of the indicated value of the gauge after rotating the shaft 360°.

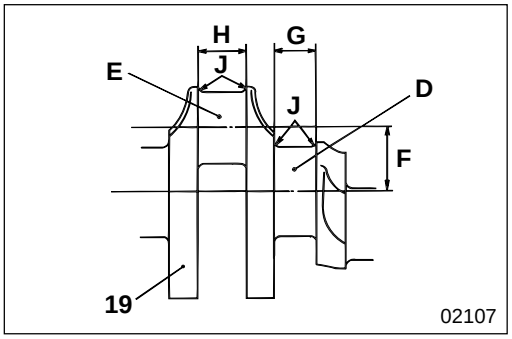

[Correction]

NOTE

Be sure to replace main bearings 6, 20 with those that meet the undersize specifications after crankshaft 19 is corrected by grinding.

- Set **F**, distance between the center line of the journal **D** and that of the pin **E**, constant.
  F : 57.5±0.05 mm {2.26±0.0020 in.}
- Set the width of journal **G** and pin **H** so they are constant.
  G : 35 mm {1.38 in.} (32 mm {1.26 in.} for No.1 journal)
  H : $41\ ^{+0.2}_{0}$ mm
  $\{1.61\ ^{+0.0079}_{0}$ in.$\}$

- Finish the fillet **J** smoothly.
  J : R4±0.2 mm {0.0079 in.}
- Check and confirm that there has been no cracking caused by grinding using the magnetic particle inspection method (Magnafluxing). Also make sure the surface hardness has not deteriorated (Shore hardness to be maintained at not less than Hs 75).
- When grinding **K**, set crankshaft **19** and grinder **L** so that they both rotate counterclockwise as viewed from the front of the crankshaft.
- To finish grinding **M** using a grindstone or emery paper **N,** rotate crankshaft **19** clockwise.

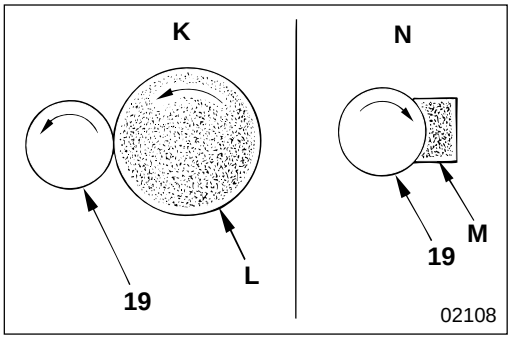

Undersize specifications of crankshaft Unit : mm {in.}

		Undersize scales			
		0.25 {0.0098}	0.50 {0.020}	0.75 {0.030}	1.00 {0.039}
Finish outer diameter of journal	No.1, 2, 4, 5 journals	77.68 to 77.70 {3.058 to 3.059}	77.43 to 77.45 {3.048 to 3.049}	77.18 to 77.20 {3.038 to 3.039}	76.93 to 76.95 {3.028 to 3.029}
	No.3 journal	77.66 to 77.68 {3.057 to 3.058}	77.41 to 77.43 {3.047 to 3.048}	77.16 to 77.18 {3.037 to 3.038}	76.91 to 76.93 {3.027 to 3.028}
Finish outer diameter of pin		59.695 to 59.715 {2.3501 to 2.3509}	59.445 to 59.465 {2.340 to 2.341}	59.195 to 59.215 {2.33 to 2.331}	58.945 to 58.965 {2.320 to 2.321}
Circular accuracy		0.01 {0.00039} or less			

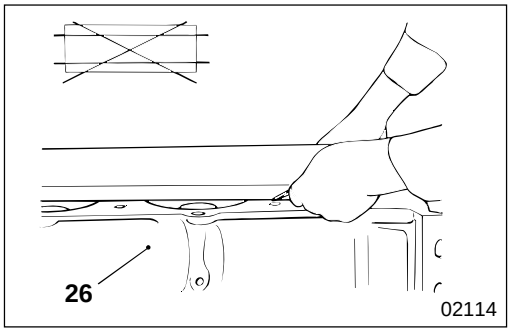

Cylindrical accuracy
0.006 {0.00024} or less

MITSUBISHI FUSO

FE

Service Manual

Group 12 - Lubrication

Group 12A - Lubrication
2001 Model Change
<4M50>

BACK HOME

MITSUBISHI FUSO TRUCK OF AMERICA, Inc.

Pub No. TWSE9501-00

MITSUBISHI
FUSO

FE

Service Manual

Group 12A
Lubrication
<4M50T2>

2001 Model Year Change

Table of Contents

MITSUBISHI FUSO TRUCK OF AMERICA, Inc.

BACK HOME

Pub No. TWSE9501-512A

GROUP 12A LUBRICATION

SPECIFICATIONS 12A- 2

STRUCTURE AND OPERATION 12A- 4

TROUBLESHOOTING 12A-14

ON-VEHICLE INSPECTION AND ADJUSTMENT

- **Oil Filter Replacement 12A-16**
- **Engine Oil Replacement 12A-17**
- **Oil Pressure Measurement 12A-18**

OIL PAN, OIL STRAINER AND OIL JET 12A-20

OIL PUMP 12A-22

OIL FILTER 12A-26

OIL COOLER 12A-28

SPECIFICATIONS

Item			Specifications
Mode of lubrication			Oil pump type
Oil filter type			Paper-filter, spin-on type
Oil cooler type			Shell and plate type (multi-plate type)
Engine oil	Grade		API CD or higher
	Oil quantity	Oil pan	Approx.9 L {9.5 qts}
		Oil filter	Approx.1 L {1.1 qts}

MEMO

Lubrication System (Oil Flow)

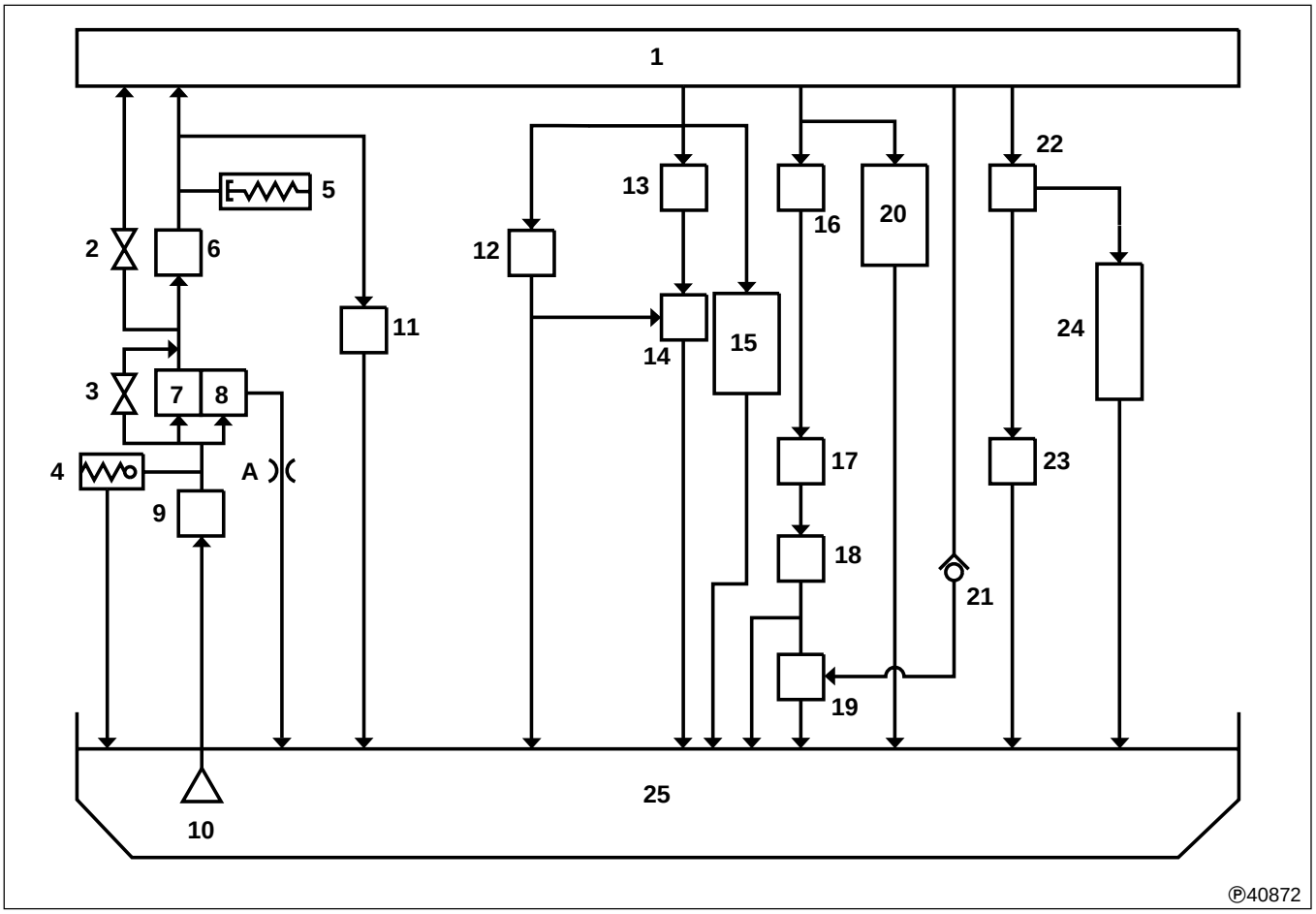

1 Main oil gallery
2 Bypass valve
3 Bypass valve
4 Relief valve
5 Engine oil pressure switch
6 Oil cooler
7 Full-flow oil filter
8 Bypass oil filter
9 Oil pump
10 Oil strainer
11 Turbocharger
12 Vacuum pump
13 Idler bushing
14 Timing gear
15 Balancer bushing LH
16 Crankshaft main bearing
17 Connecting rod bearing
18 Connecting rod bushing
19 Piston
20 Balancer bushing RH
21 Oil jet check valve
22 Rocker bushing
23 Camshaft bushing
24 Rocker roller
25 Oil pan

A: Orifice

Oil Pump

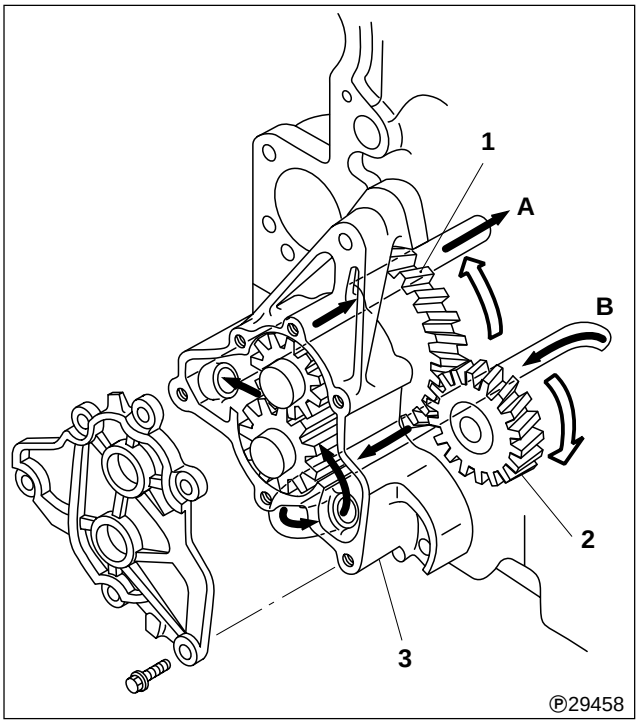

1 Oil pump gear
2 Crankshaft gear
3 Oil pump

A: To oil filter
B: From oil strainer

Oil pump **3** is a gear type. It is driven by rotation of the crankshaft via crankshaft gear **2** and oil pump gear **1**.

Oil Filter

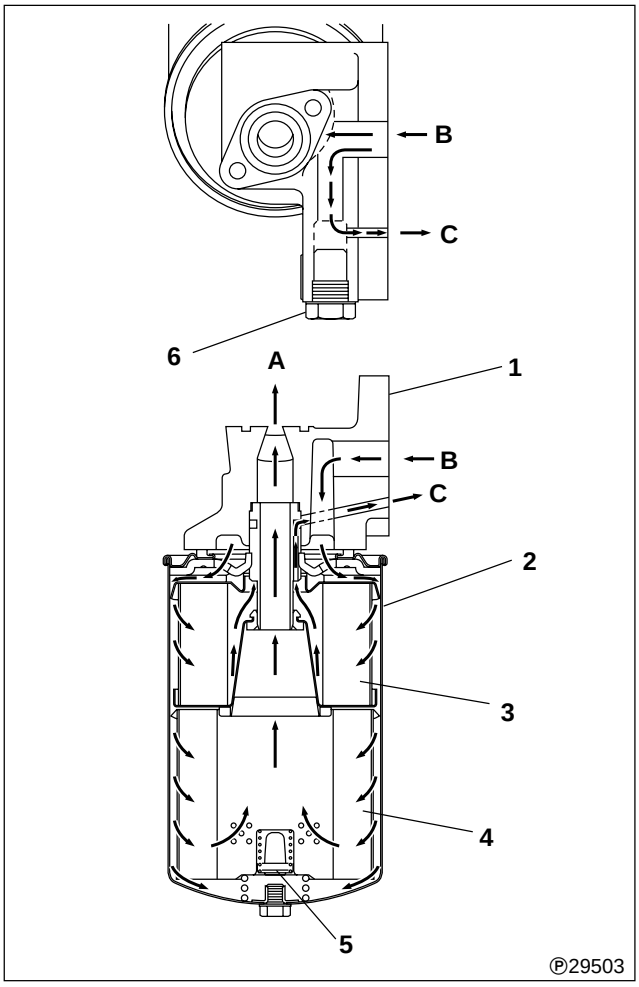

1 Oil filter head
2 Oil filter
3 Bypass filter
4 Full-flow filter
5 Bypass valve
6 Regulator valve

A: To oil cooler
B: From oil pump
C: To oil pan

- The oil filter is a spin-on filter-paper type incorporating a bypass filter **3** and a full-flow filter **4**.
  A bypass valve **5** is fitted at the bottom of the filter assembly. If the elements become clogged, the bypass valve opens and allows oil to flow to oil cooler without passing through the elements. This operation prevents seizure of the engine.
- When the pressure of oil going to the main oil gallery exceeds a specified level, regulator valve **6** opens, allowing some of the engine oil to return to the oil pan. The oil pressure is thus constantly regulated.

Oil Cooler

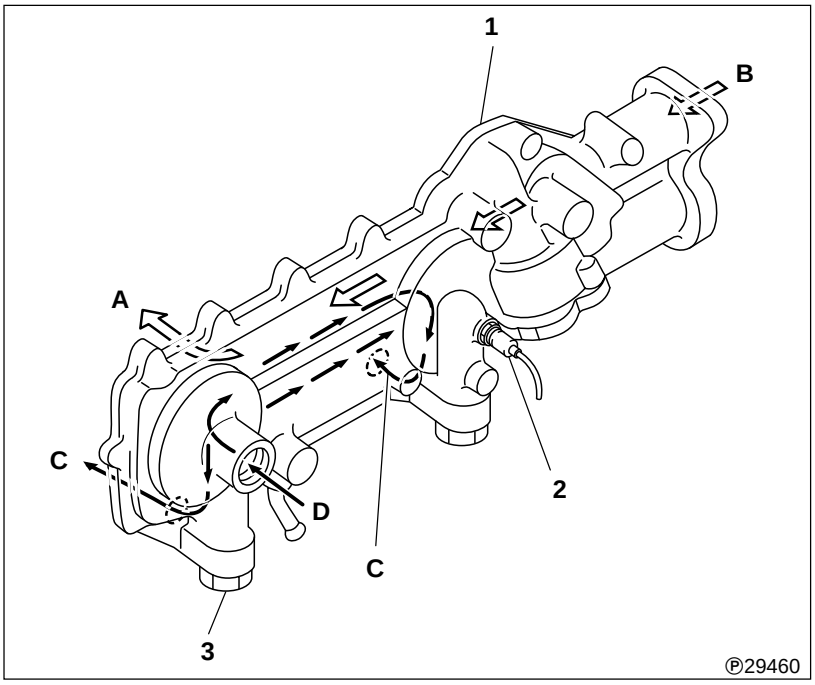

1 Oil cooler
2 Engine oil pressure switch
3 Bypass valve

A: Coolant outlet
B: Coolant inlet
C: To main oil gallery
D: From oil filter

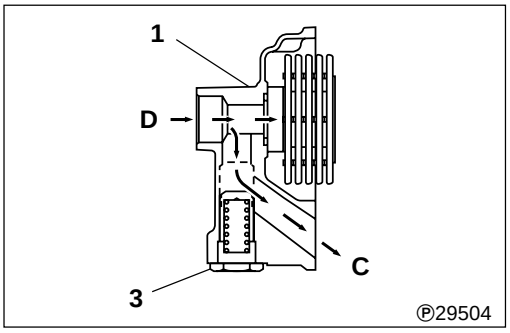

● **Bypass valve**

When the oil's viscosity is high at low temperatures or when oil cooler **1** element is clogged and resists the oil's flow, bypass valve **3** opens, thus allowing engine oil to flow to main oil gallery without passing through the cooler.

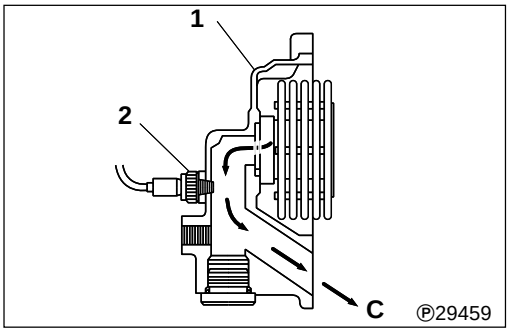

● **Oil pressure switch**

If the pressure of oil fed to main oil gallery drops below the specified level, electric contacts close inside engine oil pressure switch **2**. As a result, a warning lamp illuminates in the meter cluster to alert the driver.

Lubrication of Related Parts

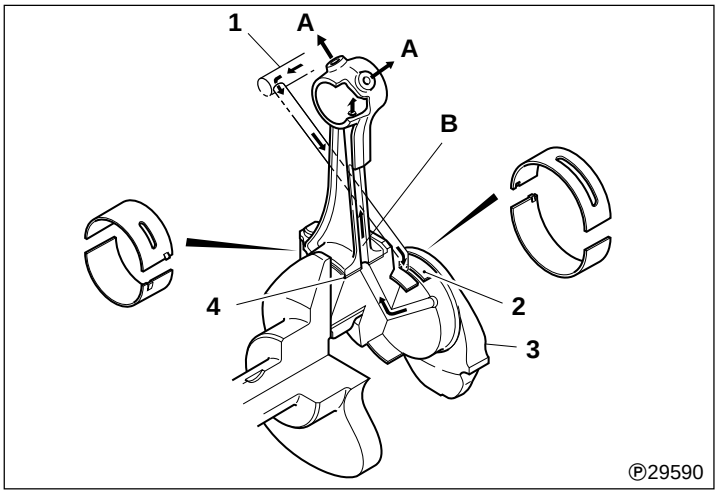

● **Main bearing and connecting rod bearing**

1 Main oil gallery
2 Main bearing
3 Crankshaft
4 Connecting rod bearing

A: Oil jet
B: Connecting rod oil passage

Oil supplied via the oil passage in the crankshaft flows through oil passage **B** in the connecting rod to lubricate the connecting rod's small end. The oil then sprays out from oil jet **A** at the top of the connecting rod to cool the piston.

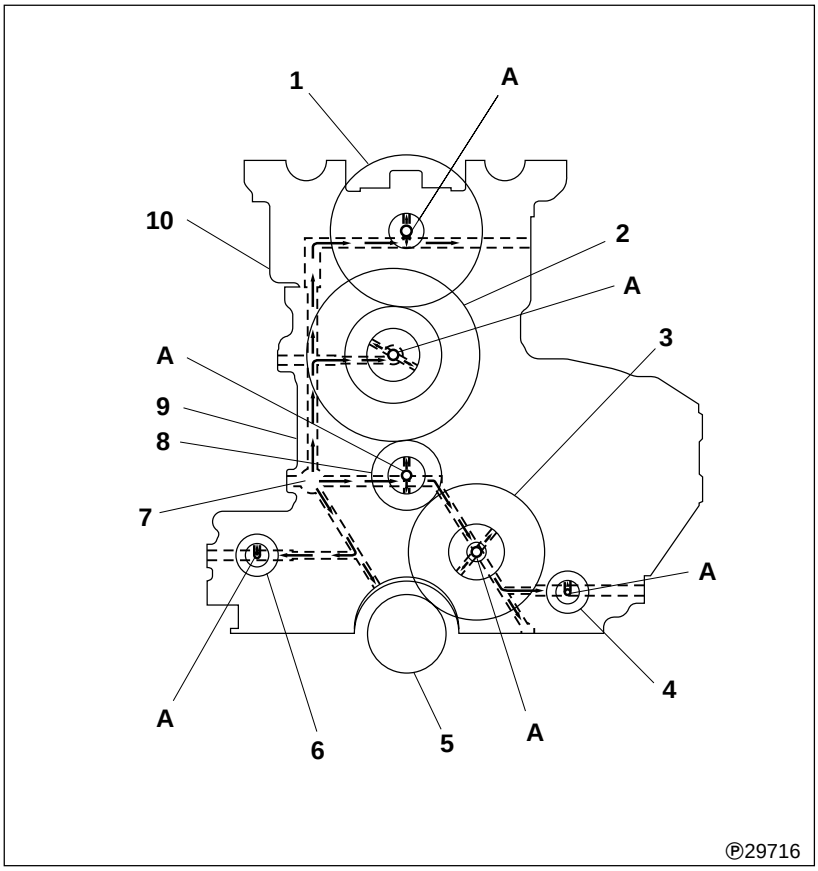

● **Timing gear**

1 Head idler gear
2 Idler gear A, B
3 Idler gear No.1
4 Balanceshaft gear LH
5 Crankshaft gear
6 Balanceshaft gear RH
7 Main oil gallery
8 Fan shaft assembly
9 Upper crankcase
10 Cylinder head

A: Oil hole

Engine oil from main oil gallery **7** passes through upper crankcase **9** and cylinder head **10** to lubricate the journals of the gears. The oil that has lubricated head idler gear **1** sprays out of oil hole in the gear boss and returns to the oil pan through inside the front case while lubricating the gears.

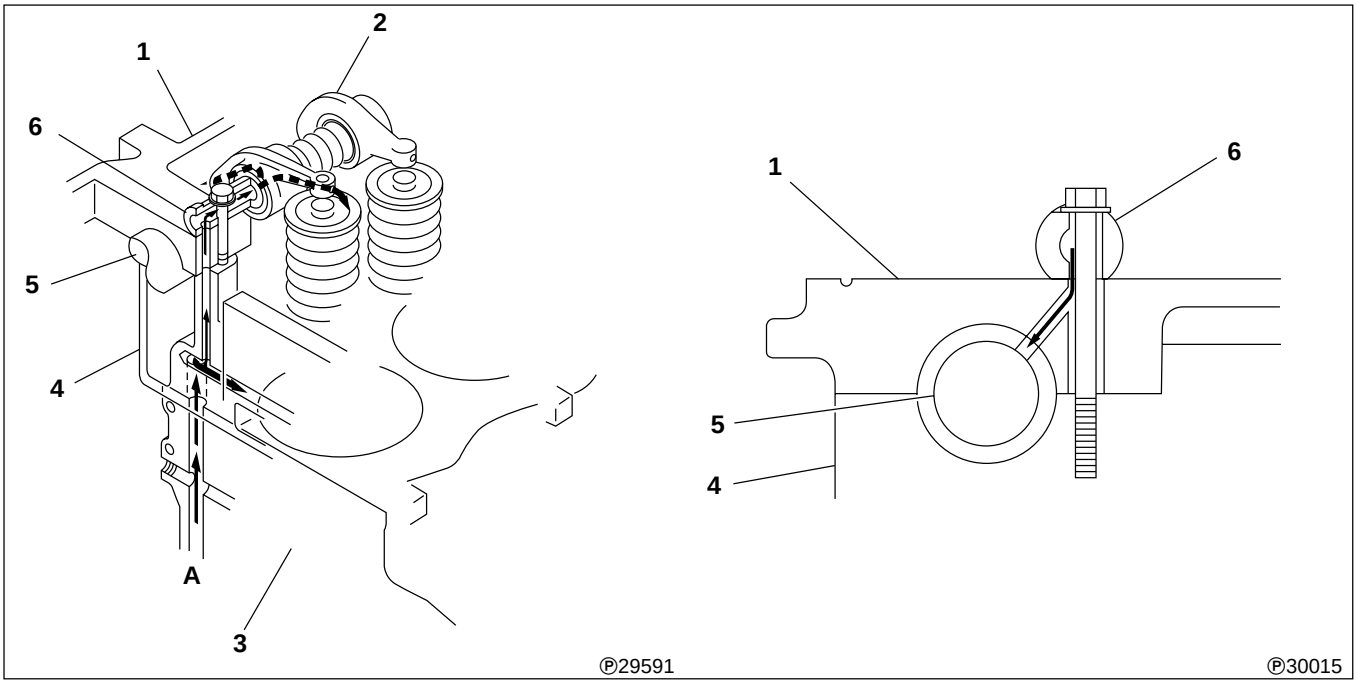

● **Valve mechanism**

1 Camshaft frame
2 Rocker arm
3 Upper crankcase
4 Cylinder head
5 Camshaft
6 Rocker shaft

A: From main oil gallery

Engine oil from main oil gallery **A** passes through upper crankcase **3**, cylinder head **4** and camshaft frame **1** to rocker shaft **6**. Then, the oil flows through the oil passage of rocker shaft and returns to the oil pan while lubricating rocker arm **2** and camshaft **5**.

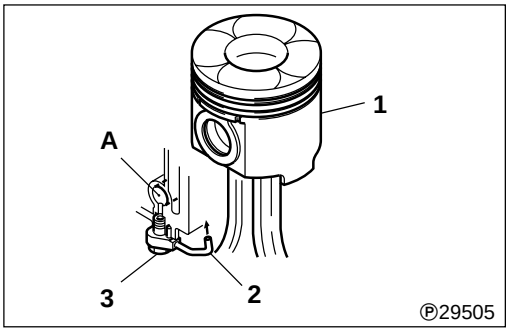

● **Oil jet**

1 Piston
2 Oil jet
3 Check valve

A: Main oil gallery

An oil jet **2** is fitted in the lower part of the main oil gallery **A** for each cylinder. These oil jets cool the pistons **1** by injecting oil into them. Each oil jet is fitted with check valve **3** that opens and closes at specified oil pressure levels. At low engine speeds, these check valves close to maintain the required volume of oil in the lubrication system and prevent reductions in oil pressure.

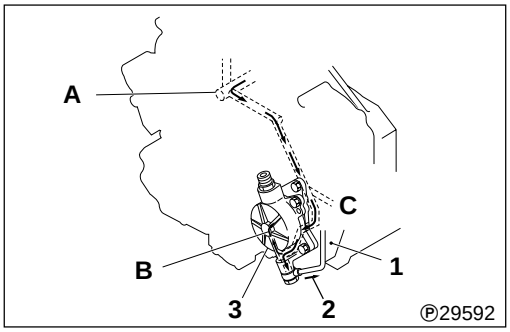

● **Vacuum pump**

1 Front case
2 Oil pipe
3 Vacuum pump

A: Main oil gallery
B: To front case
C: To automatic timer

Engine oil delivered from main oil gallery **A** flows to vacuum pump **3** where it branches into two flows; one is, after lubricating the vanes, discharged into front case **1** from the air vent hole and returns to the oil pan. The other passes through oil pipe **2** to lubricate various parts of the automatic timer and then returns to the oil pan.

Lubrication System Monitoring Circuit

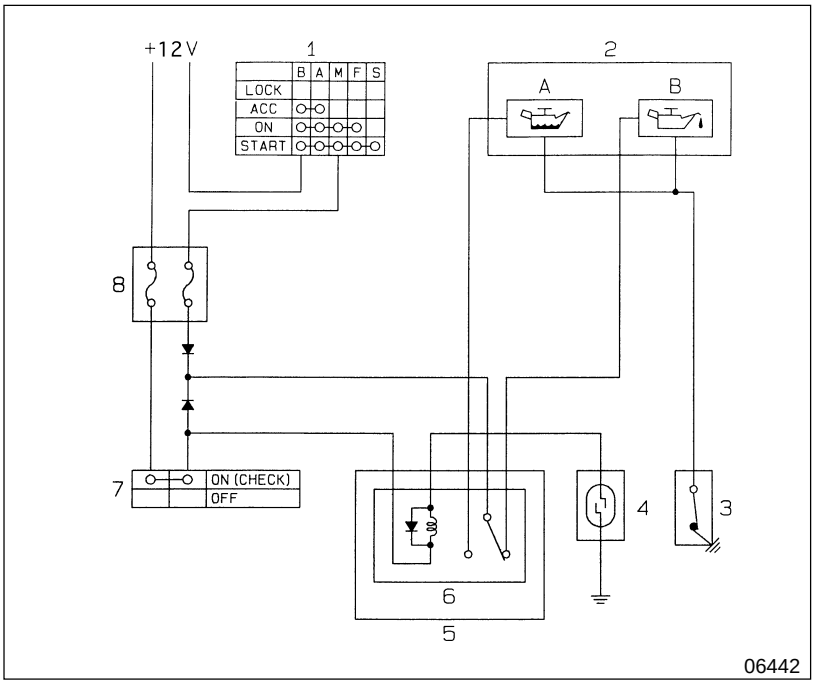

1 Starter switch
2 Meter cluster
3 Oil pressure switch
4 Oil level sensor
5 Relay box
6 Oil level relay
7 Oil level check switch
8 Fuse box

A: Oil level indicator lamp
B: Oil pressure warning lamp

This circuit monitors the lubrication system by detecting the pressure and level of engine oil.

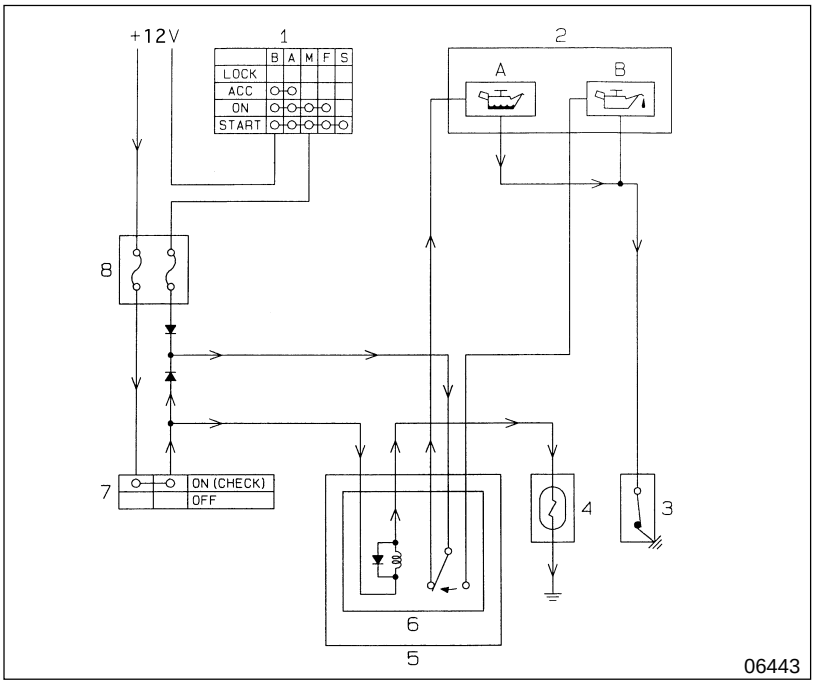

- Oil level normal (oil level sensor ON)
  When oil level check switch **7** is turned ON while the engine is not running (oil pressure switch **3** ON), oil level sensor **4** is grounded and therefore oil level relay **6** is energized. This allows current to flow through the route given below and turn on oil level indicator lamp **A**.

Fuse box **8** → oil level check switch **7** → relay box **5**
→ oil level relay **6** → oil level sensor **4** → ground
→ meter cluster **2** → oil level indicator lamp **A**
→ oil pressure switch **3** → ground

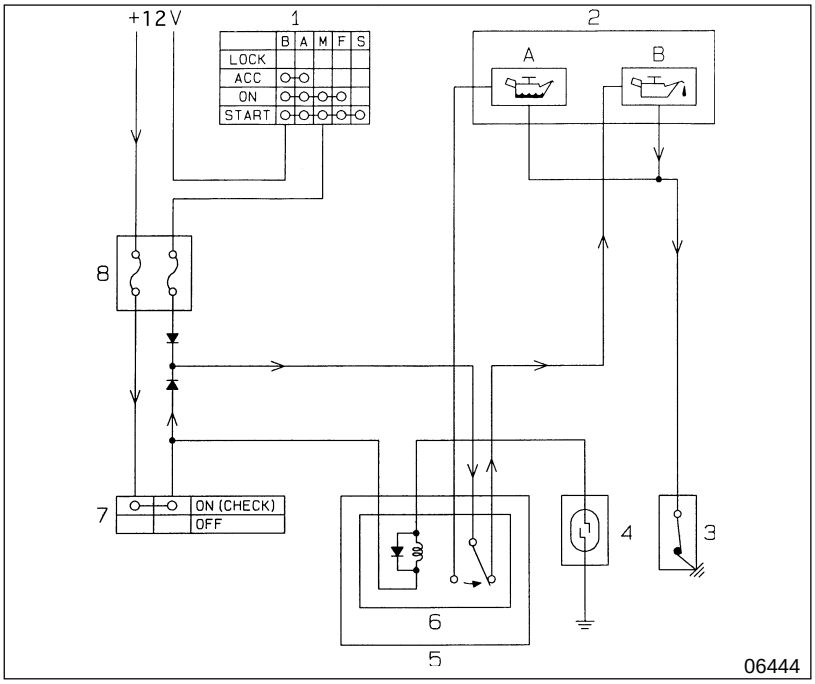

● Oil level low (oil level sensor OFF)
Even when oil level check switch **7** is turned ON while the engine is not running (oil pressure switch **3**: ON), oil level relay **6** is not energized because oil level sensor **4** is off. This causes the current to flow through the route given below and turn on oil pressure warning lamp **B**.

Fuse box **8** → oil level switch **7** → Relay box **5** → oil level relay **6** → meter cluster **2** → oil pressure warning lamp **B** → oil pressure switch **3** → ground

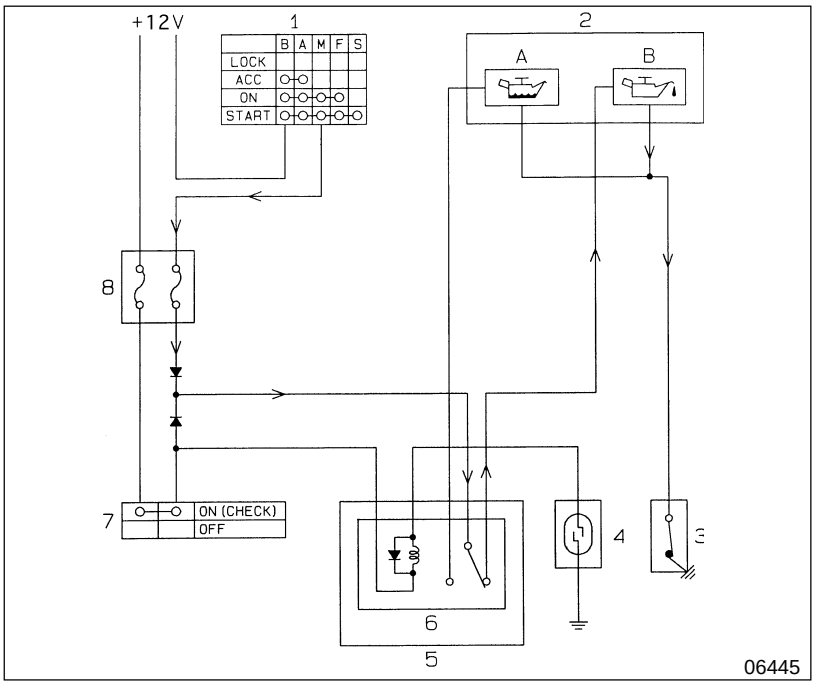

● Oil pressure abnormal (oil pressure switch ON)
The oil pressure drops while the engine is running oil pressure switch **3** turns ON. As a result, current flows through the route given below to turn on oil pressure warning lamp **B**. When oil pressure is normal, oil pressure switch **3** remains off and no current flow.

Starter switch **1** → fuse box **8** → relay box **5** → oil level relay **6** → meter cluster **2** → oil pressure warning lamp **B** → oil pressure switch **3** → ground

MEMO

Possible causes \ Symptoms		Engine hard to start	Overheating	Low oil pressure	Excessive oil consumption (oil leakage)	Remarks
Oil cooler	Oil cooler element installed poorly		×	×	×	
	Gasket defective		×	×	×	
	O-ring defective		×	×	×	
	Oil cooler element clogged		×	×		
	Oil cooler element damaged		×	×	×	
	Fatigue in bypass valve spring		×			
Oil pump	Oil pump malfunctioning		×	×		
	Interference between oil pump gear and oil pump case or cover	×		×		
Oil filter	Oil filter fitted poorly				×	
	Element clogged		×	×		
	Gasket defective			×		
Fatigue in regulator valve spring				×		
Oil strainer installed poorly, clogged			×	×		
Front case installed poorly					×	Group 11A
Fan shaft front oil seal defective					×	Group 11A
Crankshaft rear oil seal defective					×	Group 11A
Piston cooling oil jet(s) defective			×			
Oil working its way up into combustion chamber(s)					×	
Oil working its way down into combustion chamber(s)					×	
Oil viscosity too high		×				
Unsuitable of quality			×			
Deterioration in oil			×			
Fuel mixed with oil			×			

MEMO

ON-VEHICLE INSPECTION AND ADJUSTMENT

Oil Filter Replacement

Lubricant

Location	Points of application	Specified lubricant	Quantity
2	Oil filter	Engine oil (API CD or higher)	Approx.1 L {1.1 gts}

Special tools

Unit: mm {in.}

Location	Tool name and shape	Part No.	Application
—	Oil Filter Element Socket 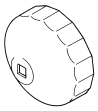 08550	MH061566	Oil filter removal
	Oil Filter Wrench 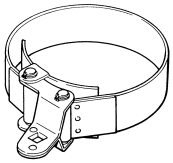 **ϕ107 to 120 {ϕ4.21 to 4.72}** 01503	MH063200	

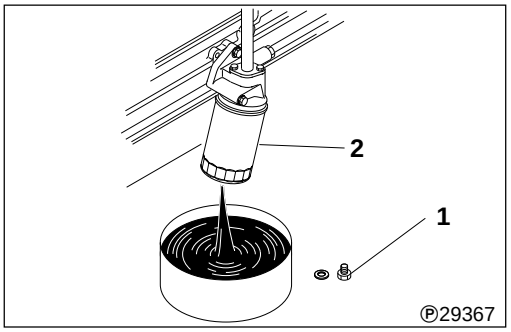

WARNING ⚠

- **Wipe up any spilled engine oil since it may cause a fire.**
- **Do not touch oil when the engine is hot since it can inflict severe burns.**

CAUTION ⚠

When pouring oil into the engine, take care not to spill any on the V-ribbed belt. Contact with oil could make the V-ribbed belt slip, rendering the cooling system less effective.

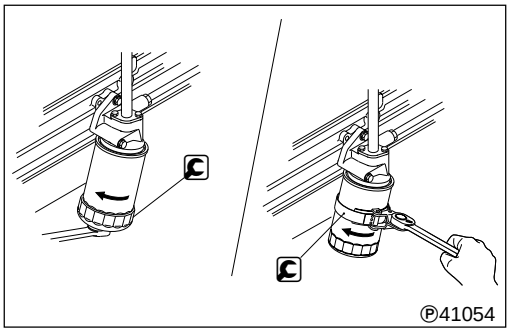

Loosen oil filter drain plug **1** to drain the engine oil from inside the filter **2**.
[Removal]

: Oil Filter Element Socket or Filter Wrench

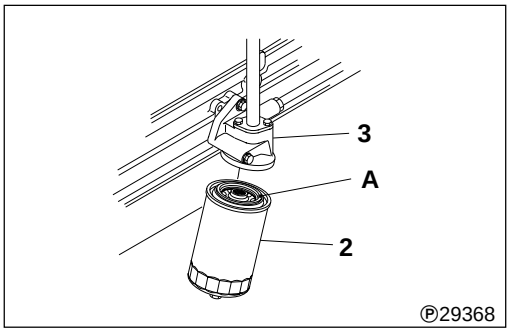

[Installation]

- Clean the surface of oil filter head **3** to which oil filter **2** is fitted.
- Apply a thin coat of engine oil to the gasket A of oil filter **2**.
- Screw oil filter **2** into oil filter head **3** by hand until gasket **A** contacts the oil filter head. Then, tighten oil filter **2** further by giving it a 3/4 turn.
- After installing the oil filter, start the engine and check gasket **A** for oil leakage.
- Check to see if the engine oil level is in the specified range.

Engine Oil Replacement

❶ Tightening torques

Unit: N·m {ft.lbs, kgf·m}

Location	Parts to be tightened	Tightening torque	Remarks
2	Oil pan drain plug	34.3 to 43.1 {25 to 32, 3.5 to 4.4}	—
3	Oil filter drain plug	9.8±1.96 {7.2±1.4, 1.0±0.2}	—

Lubricant

Location	Points of application	Specified lubricant	Quantity
—	Oil pan	Engine oil (API CD or higher)	Approx.9 L {9.5 qts}
—	Oil filter	Engine oil (API CD or higher)	Approx.1 L {1.1 qts}

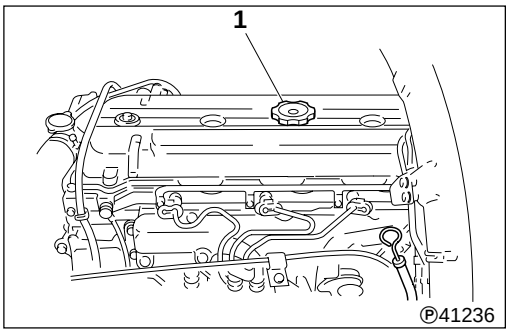

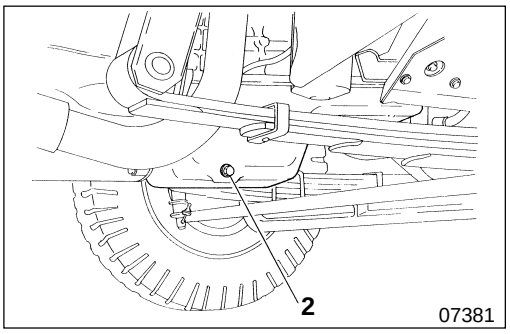

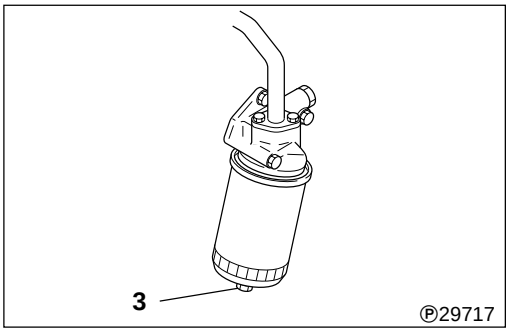

WARNING ⚠

- **Wipe up any spilled engine oil since it can cause a fire.**
- **Do not touch oil when the engine is hot since it can inflict severe burns.**

CAUTION ⚠

When pouring oil into the engine, take care not to spill any on the V-ribbed belt. Contact with oil could make the V-ribbed belt slip, rendering the cooling system less effective.

[Draining]

- Warm up the engine, then remove oil filler cap **1**.
- Remove oil pan drain plug **2** and oil filter drain plug **3**. Then, drain the engine oil.

[Filling]

Tighten oil pan drain plug **2** and oil filter drain plug **3** to their specified torques. Then, add new engine oil to the specified level.

ON-VEHICLE INSPECTION AND ADJUSTMENT

Oil Pressure Measurement
Service standards

Location	Maintenance item		Standard value	Limit	Remedy
—	Oil pressure (at oil temperature of 158 to 194°F, 70 to 90°C)	At no-load minimum speed	145 kPa {21 psi^2, 1.5kgf/cm^2}	49 kPa {7.1 psi^2, 0.5 kgf/cm^2}	Check
		At no-load maximum speed	295 to 490 kPa {43 to 71 psi^2, 3 to 5 kgf/cm^2}	195 kPa {28 psi^2, 2 kgf/cm^2}	

❶ Tightening torque

Unit: N·m {ft.lbs, kgf·m}

Location	Parts to be tightened	Tightening torque	Remarks
2	Engine oil pressure switch	7.8 to 14.7 {5.8 to 11.0, 0.8 to 1.5}	Check with engine cold

Sealant

Location	Point of application	Specified sealant	Quantity
2	Threaded part of engine oil pressure switch	Teflon tape	3 and half turns

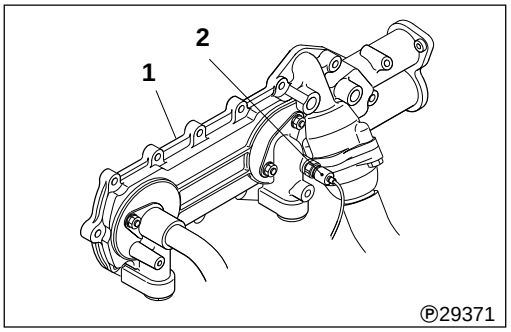

- Remove engine oil pressure switch **2** from oil cooler **1**.

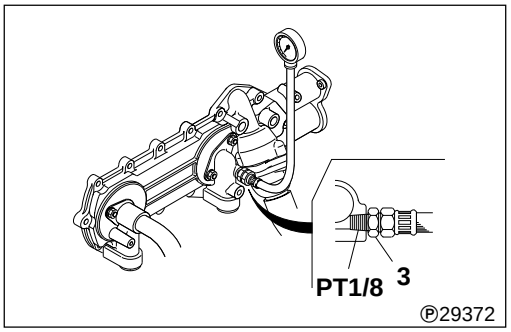

- Fit adapter **3** onto the engine oil pressure switch **2** mounting, then fit the oil pressure gauge onto the adapter.
- Warm up the engine until the oil temperature reaches 158 to 194°F (70 to 90°C).
- Measure the oil pressure at no-load minimum speed and at no-load maximum speed. If the measured values are below the specified standard values, overhaul the lubrication system.
- After taking measurements, fit oil pressure switch **2** and tighten it to the specified torque.

CAUTION ⚠

Oil pressure switch 2 must be fitted when the engine is cold.

Inspection of oil pressure switch

ELECTRICAL SYSTEM

MEMO

OIL PAN, OIL STRAINER AND OIL JET

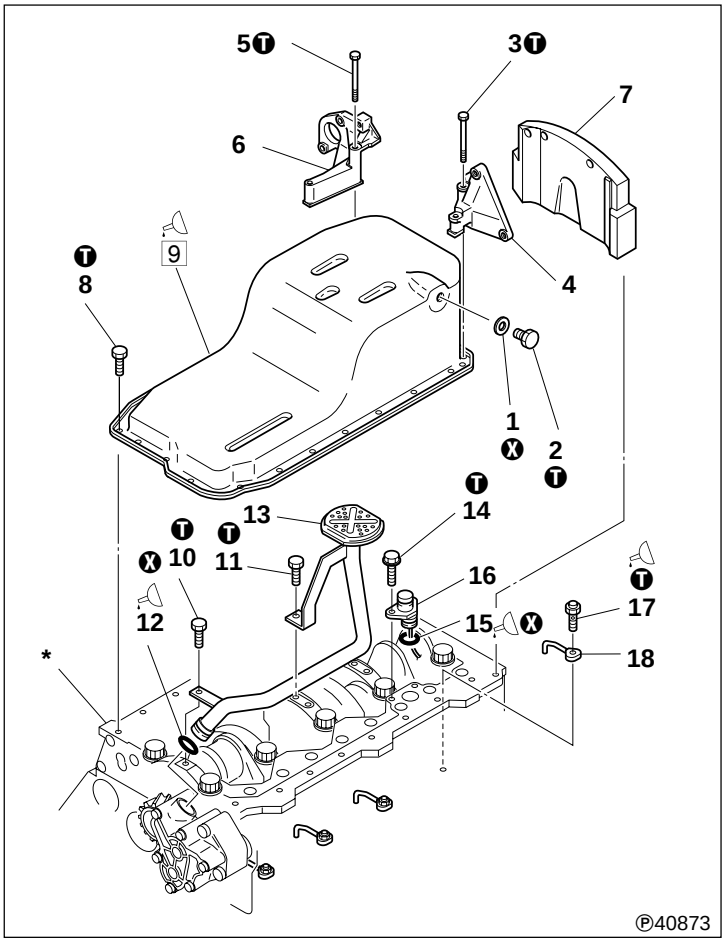

● **Disassembly sequence**

1 Gasket
2 Oil drain plug
3 Bolt
4 Stiffner RH
5 Bolt
6 Stiffner LH
7 Rubber spacer
8 Bolt
9 Oil pan
10 Bolt
11 Bolt
12 O-ring
13 Oil strainer
14 Bolt
15 O-ring
16 Engine oil level sensor ELECTRICAL SYSTEM
17 Check valve
18 Oil jet

***:** Crankcase Group 11A
X: Non-reusable part

● **Assembly sequence**

Follow the disassembly sequence in reverse.

CAUTION ⚠

Do not tighten check valve 17 in excess of the specified torque. Excessive tightness can cause defective operation, resulting in scorching of the engine.

❶ Tightening torques

Unit: N·m {ft.lbs, kgf·m}

Location	Parts to be tightened	Tightening torque	Remarks
2	Oil drain	34.3 to 43.1 {25 to 32, 3.5 to 4.4}	—
3	Bolt (spacer stay RH mounting)	23.5 {17.3, 2.4}	—
5	Bolt (spacer stay LH mounting)	23.5 {17.3, 2.4}	—
8	Bolt (oil pan mounting)	23.5 {17.3, 2.4}	—
10	Bolt (oil strainer mounting)	23.5 {17.3, 2.4}	—
11	Bolt (oil strainer mounting)	23.5 {17.3, 2.4}	—
14	Bolt (engine oil level sensor mounting)	23.5 {17.3, 2.4}	—
17	Check valve	29.4 {22, 3.0}	Wet

Lubricant and/or sealant

Location	Points of application	Specified lubricant and/or sealant	Quantity
9	Crankcase mounting surface of oil pan	Threebond 1207C	As required
12, 15	Entire circumference of O-ring	Engine oil	As required
17	Threads of check valve	Engine oil	As required

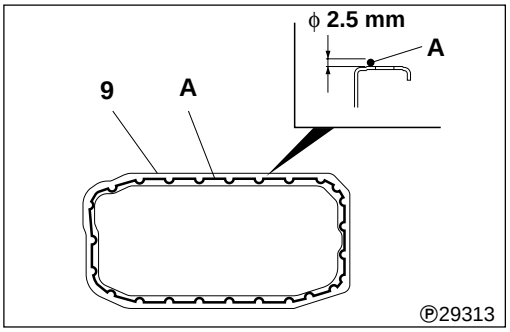

◆ Service procedure

9 Fitting oil pan

- Apply sealant **A** to the mounting surface of oil pan **9** as illustrated. Apply the sealant evenly and without breaks.
- Within three minutes of applying sealant **A**, fit oil pan **9** onto the crankcase*.

CAUTION ⚠

- **Clean the oil pan mounting surface and ensure it is free of oily substances before applying sealant.**
- **Carefully mount oil pan exactly in the correct position. Ensure that sealant A does not spread to other areas.**
- **After fitting oil pan 9, wait at least one hour before starting the engine.**
- **Reapply sealant A to the oil pan mounting surface whenever the mounting bolts 8 of oil pan 9 have been loosened.**

OIL PUMP

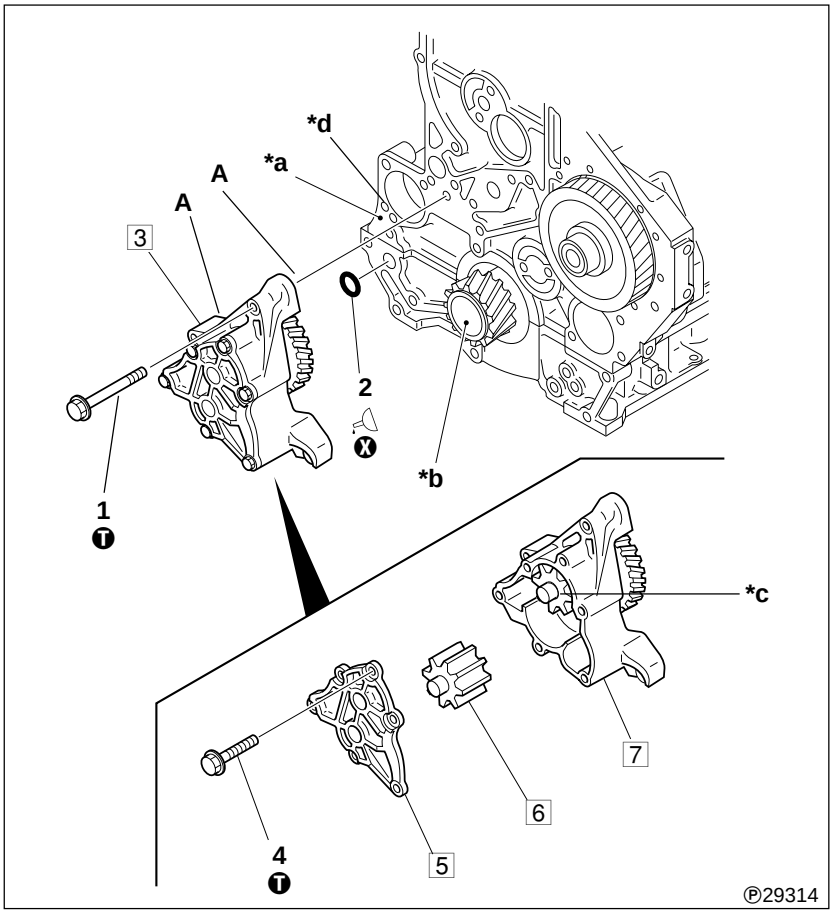

● **Disassembly sequence**

1 Bolt
2 O-ring
3 Oil pump assembly
4 Bolt
5 Oil pump cover
6 Driven gear assembly
7 Oil pump case assembly

***a:** Crankcase 📖 Group 11A
***b:** Crankshaft gear
***c:** Drive gear
***d:** Balanceshaft gear RH
A: Locating pin (Bushing)
Ⓧ: Non-reusable part

● **Assembly sequence**

Follow the disassembly sequence in reverse.

Service standards

Unit: mm {in.}

Location	Maintenance item	Standard value (Basic diameter in[ ])	Limit	Remedy
—	Backlash between oil pump gear and crankshaft gear 📖 Gr.11	0.12 to 0.15 {0.0047 to 0.0059}	0.3 {0.012}	Replace
—	Backlash between oil pump gear and balanceshaft gear 📖 Gr.11	0.19 to 0.22 {0.0075 to 0.0087}	0.3 {0.012}	Replace
5, 6, 7	Clearance between gear shaft and oil pump case and cover	[20 {0.79}] 0.04 to 0.075 {0.0016 to 0.0028}	0.15 {0.0059}	Replace
5, *C	Clearance between gear shaft and oil pump cover	[20 {0.79}] 0.04 to 0.075 {0.0016 to 0.0028}	0.15 {0.0059}	Replace
6, 7, *C	Difference between height of each gear and depth of oil pump case	0.040 to 0.094 {0.0016 to 0.0035}	0.15 {0.0059}	Replace
	Clearance between tooth tips of each gear and oil pump case	0.13 to 0.22 {0.0051 to 0.0087}	0.23 {0.0091}	Replace

Ⓣ Tightening torques

Unit: N·m {ft.lbs, kgf·m}

Location	Parts to be tightened	Tightening torque	Remarks
1	Bolt (oil pump assembly mounting)	27.4 {20, 2.8}	—
4	Bolt (oil pump cover mounting)	8.2±2.46 {5.8±1.8, 0.8±0.25}	—

Sealant

Location	Points of application	Specified sealant	Quantity
—	Oil pump gears	Engine oil	As required
2	Entire circumference of O-ring	Engine oil	As required

Special tools

Unit: mm {in.}

Location	Tool name and shape	Part No.	Application
5	Pump Cover Pin 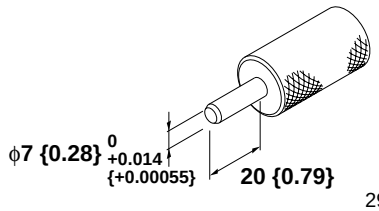	MH063431	Oil pump cover installation

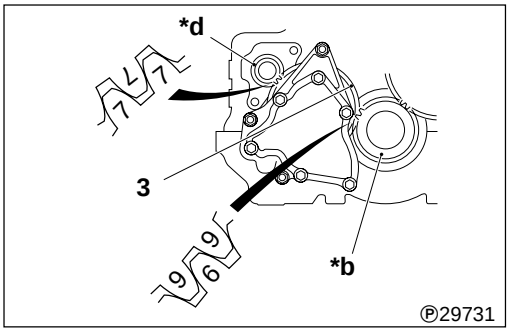

Service procedure

3 Installation of oil pump assembly

- With No. 1 cylinder set at its top dead center, position crankshaft gear ***b**.
- Install oil pump assembly **3** while meshing its gear with crankshaft gear ***b** and balance shaft gear RH ***d** at the match marks "**6**" and "**7**" as shown.

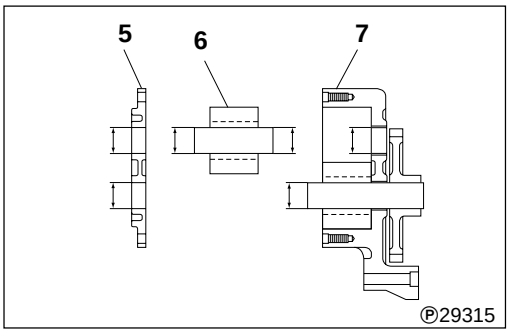

5 to 7 Inspection of oil pump cover, driven gear assembly and oil pump case assembly

Measure the clearance between each gear shaft and oil pump case assembly **7** or cover **5**. Replace the oil pump assembly if any measurement is out of specification.

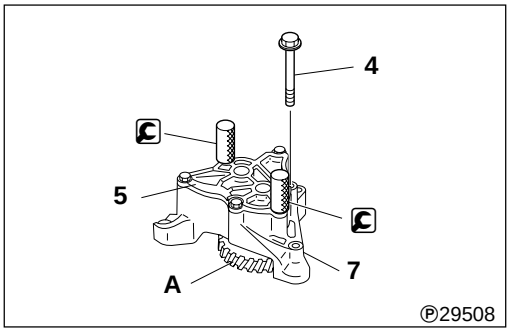

5 7 **Installation of oil pump cover and oil pump case assembly**

- Position oil pump cover **5** on oil pump case assembly **7** using two 🔧 Pump Cover Pins.
- Fit bolt **4** and tighten it to the specified torque.
- Remove 🔧 Pump Cover Pins, then fit other bolts **4** and tighten them to the specified torque.

CAUTION ⚠

- **Before assembly, apply engine oil to various parts. Pour approximately 5 cm³ {0.3 Cu.in.} of engine oil into the assembly from the oil outlet before installing to the engine.**
- **After assembly, turn the oil pump gear A by hand and check that it rotates smoothly. If the gear does not rotate smoothly, disassemble and reassemble the components.**

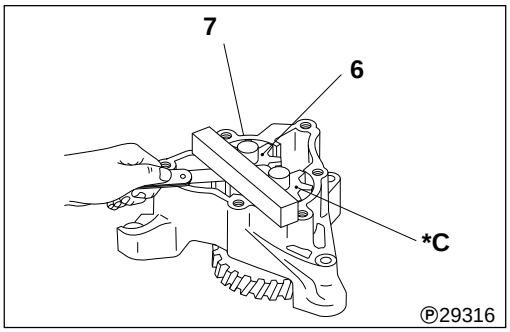

6 7 **Inspection of driven gear assembly and oil pump case assembly**

(1) Differences between gear heights and oil pump case depth

Replace the oil pump assembly if the measurement is out of specification.

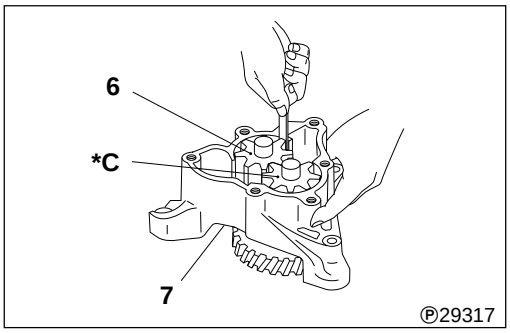

(2) Clearance between gear teeth tip and oil pump case

Replace the oil pump assembly if the measurement is out of specification.

MEMO

OIL FILTER

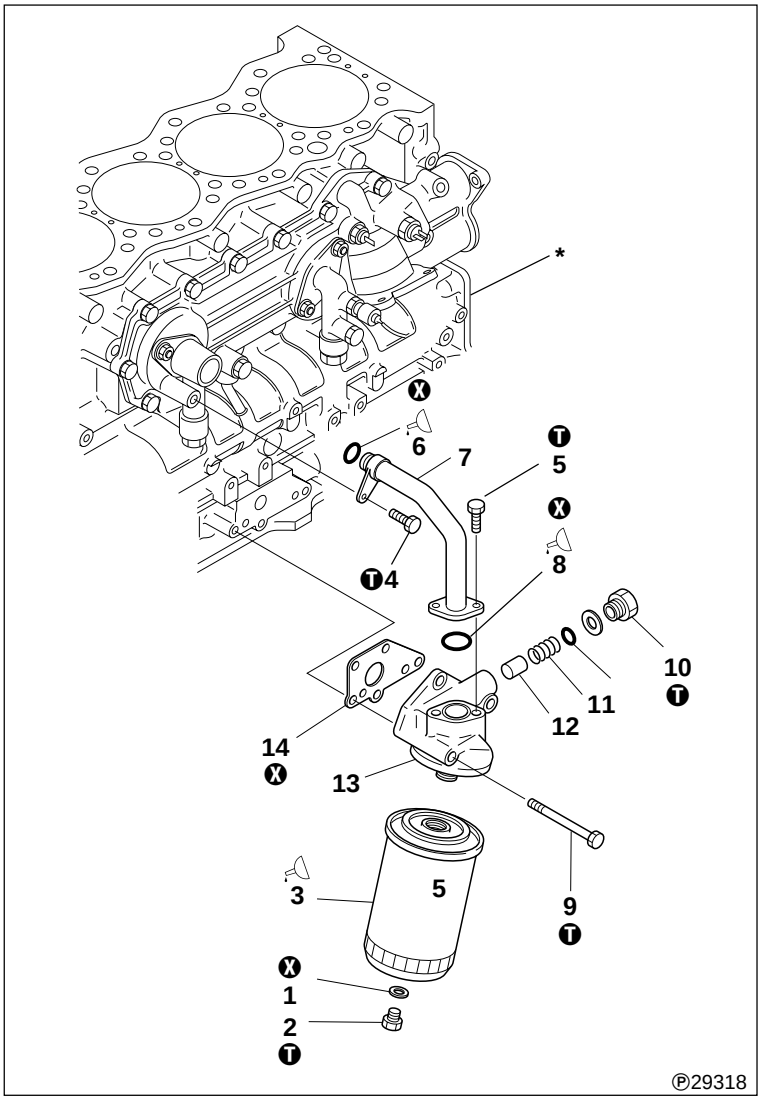

● **Disassembly sequence**

1 Gasket
2 Oil drain plug
3 Oil filter P. 12A-16
4 Bolt
5 Bolt
6 O-ring
7 Oil pipe
8 O-ring
9 Bolt
10 Plug
11 Spring
12 Regulator valve
13 Oil filter head
14 Gasket

***:** Crankcase Group 11A
Ⓧ: Non-reusable part

● **Assembly sequence**

Follow the disassembly sequence in reverse.

WARNING ⚠

- **Wipe up any spilled engine oil since it may cause a fire.**
- **Do not touch oil when the engine is hot since it can inflict severe burns.**

CAUTION ⚠

- **When pouring oil into the engine, take care not to spill any on the V-ribbed belts. Contact with oil could make the V-ribbed belts slip, rendering the cooling system less effective.**
- **Fit gasket 14 in right direction. If installed in wrong direction, it blocks oil hole.**

Service standards

Location	Maintenance item	Standard value	Limit	Remedy
12	Regulator valve opening pressure	$600\ ^{+100}_{0}$ kPa {$85\ ^{+14.2}_{0}$ lbf/in.^{2}, $6\ ^{+1}_{0}$ kgf/cm^2}	—	Replace spring

T Tightening torques

Unit: N·m {ft.lbs, kgf·m}

Location	Parts to be tightened	Tightening torque	Remarks
2	Oil drain plug	9.8±1.96 {7.2±1.4, 1.0±0.2}	—
4	Bolt (Oil pipe mounting)	9.8 {7.2, 1.0}	—
5	Bolt (Oil pipe mounting)	23.5 {17, 2.4}	—
9	Bolt (Oil filter head mounting)	44.1 {33, 4.5}	—
10	Plug (Regulator valve mounting)	60 {43, 6.0}	—

Lubricant

Location	Points of application	Specified lubricant	Quantity
3	Gasket of oil filter	Engine oil	As required
6, 8	Entire circumference of O-ring	Engine oil	As required

Special tools

Unit: mm {in.}

Location	Tool name and shape	Part No.	Application
3	Oil Filter Element Socket 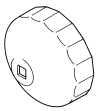 08550	Obtain Locally	Oil filter removal
	Filter Wrench 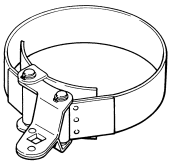 **ϕ107 to 120 {4.21 to 4.72}** 01503	Obtain Locally	

OIL COOLER

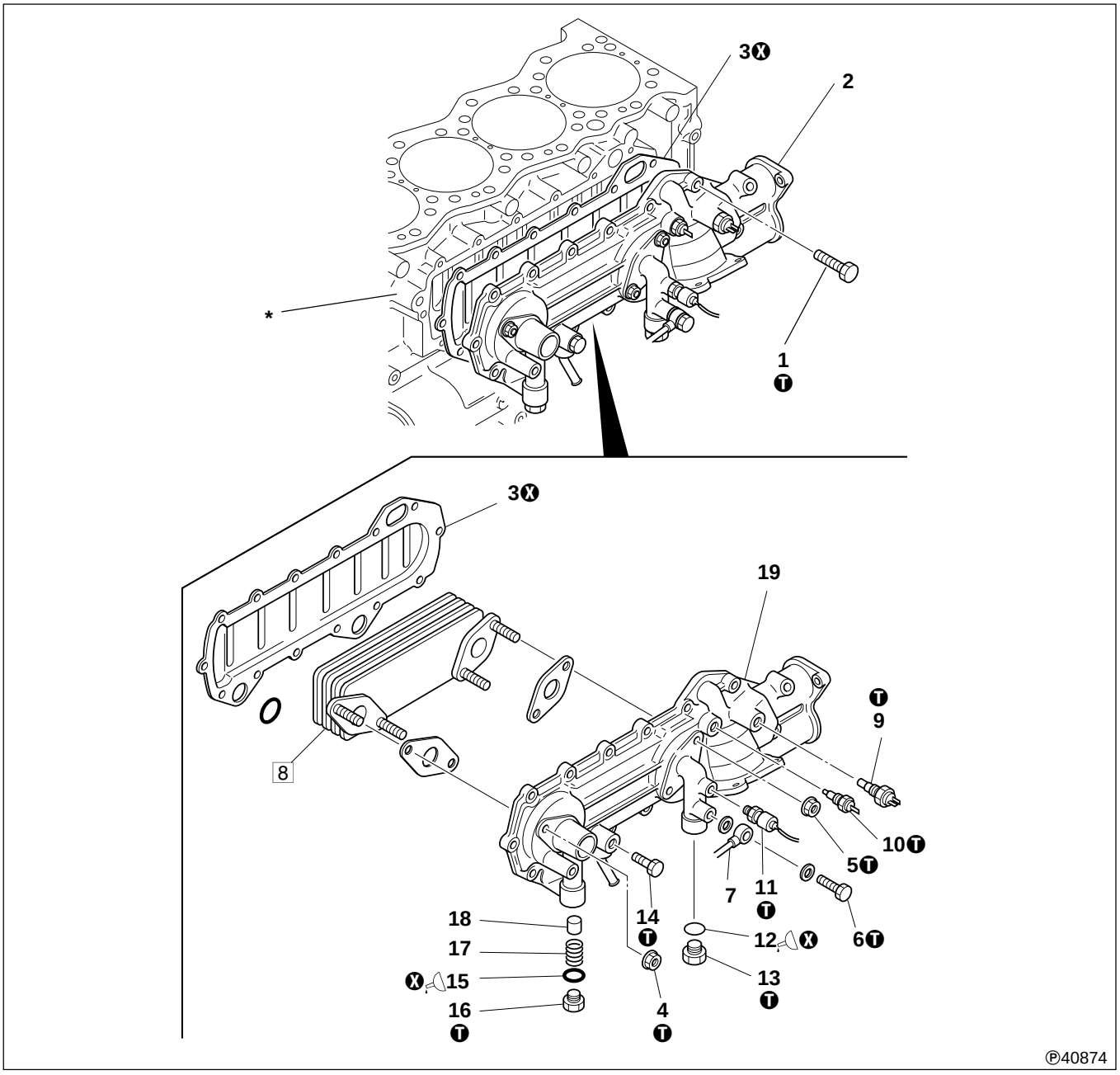

● **Disassembly sequence**

1 Bolt
2 Oil cooler assembly
3 Gasket
4 Nut
5 Nut
6 Eyebolt
7 Oil pipe
8 Oil cooler element
9 Coolant temperature sensor (for engine control)
Electrical
10 Coolant temperature sensor (for MUTIC)
Electrical
11 Engine oil pressure switch
Electrical
12 O-ring
13 Plug
14 Water drain valve
15 O-ring
16 Plug
17 Spring
18 Bypass valve
19 Oil cooler body

***:** Crankcase Group 11A
X: Non-reusable part

● **Assembly sequence**

Follow the disassembly sequence in reverse.

Service standards

Location	Maintenance item	Standard value	Limit	Remedy
8	Oil cooler element air leakage (air pressure of 980 kPa {140 psi^2, 10 kgf/cm^2} for 15 seconds)	0 cm^3 {0 Cu.in.}	—	Replace
18	Bypass valve opening pressure	390 kPa {57 psi^2, 4 kgf/cm^2}	—	Replace spring

❶ Tightening torque

Unit: N·m {ft.lbs, kgf·m}

Location	Parts to be tightened	Tightening torque	Remarks
1	Bolt (Oil cooler assembly mounting)	23.5 {17, 2.4}	—
4	Nut (Oil cooler element mounting)	24.5±5 {18±3.6, 2.5±0.5}	—
5	Nut (Oil cooler element mounting)	24.5±5 {18±3.6, 2.5±0.5}	—
6	Eyebolt (Oil pipe mounting)	21.6 {16, 2.2}	—
9	Coolant temperature sensor	34.3 {25, 3.5}	—
10	Coolant temperature sensor	34.3 {25, 3.5}	—
11	Engine oil pressure switch	7.8 to 14.7 {5.8 to 11.0, 0.8 to 1.5}	—
13	Plug	34.5±5 {25±3.6, 3.5±0.5}	—
14	Water drain valve	19.5 to 29.5 {14 to 22, 2.0 to 3.0}	—
16	Plug	34.3±4.9 {25±3.6, 3.5±0.5}	—

Lubricant

Location	Points of application	Specified lubricant	Quantity
12, 15	Entire circumference of O-ring	Engine oil	As required

◆ Service procedure

● **Cleaning**

- Check whether carbon deposits or sludge have accumulated in the oil passage of oil cooler element **8** or in the oil cooler's bypass arrangement. Remove any deposits with cleaning solvent.
- Clean out any water scale or fur that has accumulated in the oil cooler element **8** or oil cooler body **19**.

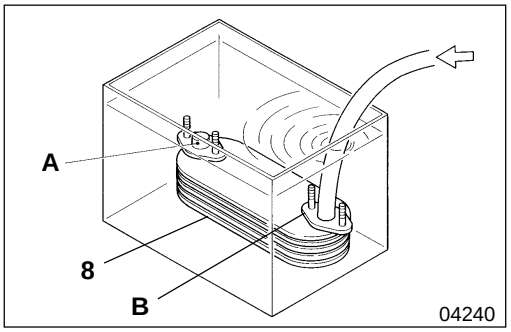

8 **Inspection of oil cooler element**

- Plug outlet **A** of oil cooler element **8** and connect a hose to the oil inlet **B**. Then, immerse the oil cooler element in a tank of water.
- Apply an air pressure of 980 kPa {140 psi^2, 10 kgf/cm^2} via the hose and check that no air leaks from the oil cooler element **8**.
- If any air leaks, replace the oil cooler element **8**.

MITSUBISHI
FUSO

FE

Service Manual

Group 12
Lubrication

Table of Contents

BACK

HOME

MITSUBISHI FUSO TRUCK OF AMERICA, Inc.

Pub No. TWSE9501-12

GROUP 12 LUBRICATION

SPECIFICATIONS 2

STRUCTURE AND OPERATION 3

TROUBLESHOOTING 12

INSPECTION AND ADJUSTMENT MOUNTED IN VEHICLE

- Replacement of Oil Filter 13
- Replacement of Engine Oil 14
- Measurement of Oil Pressure 15

OIL PAN, OIL STRAINER AND OIL JET 16

OIL PUMP 18

OIL COOLER AND OIL FILTER 22

SPECIFICATIONS

Item			Specifications
Mode of lubrication			Oil pump type
Oil filter type			Spin-on filter paper type
Oil cooler type			Shell and plate type (Multiple-plate type)
Engine oil	Grade		Grade CD or above as per API classification
	Quantity of oil L {qts}	Oil pan	Approximately 8 {8.5}
		Oil filter	Approximately 1 {1.1}

Lubrication System (Flow of Oil)

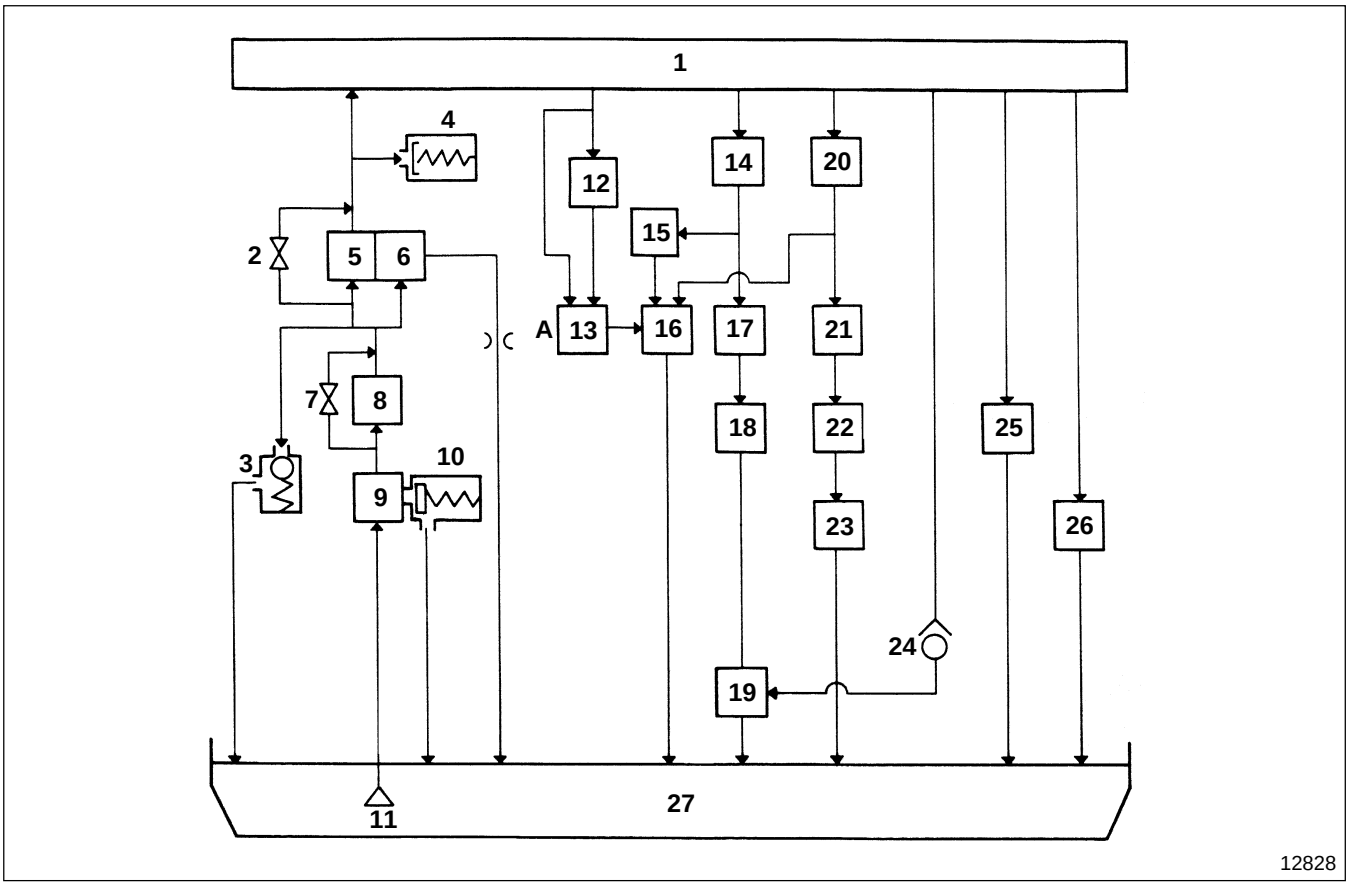

1 Main oil gallery
2 Bypass valve (Built-in within oil filter)
3 Regulator valve
4 Engine oil pressure switch
5 Full-flow filter element
6 Bypass filter element
7 Bypass valve
8 Oil cooler
9 Oil pump
10 Relief valve (Built-in within oil pump)
11 Oil strainer
12 Injection pump
13 Automatic timer
14 Crankshaft main bearing
15 Idler bushing
16 Timing gear
17 Connecting rod bearing
18 Connecting rod bushing
19 Piston
20 Camshaft bushing
21 Rocker bushing
22 Push rod
23 Tappet
24 Check valve for oil jet
25 Turbocharger
26 Vacuum pump
27 Oil pan

A : Orifice

Oil Pump

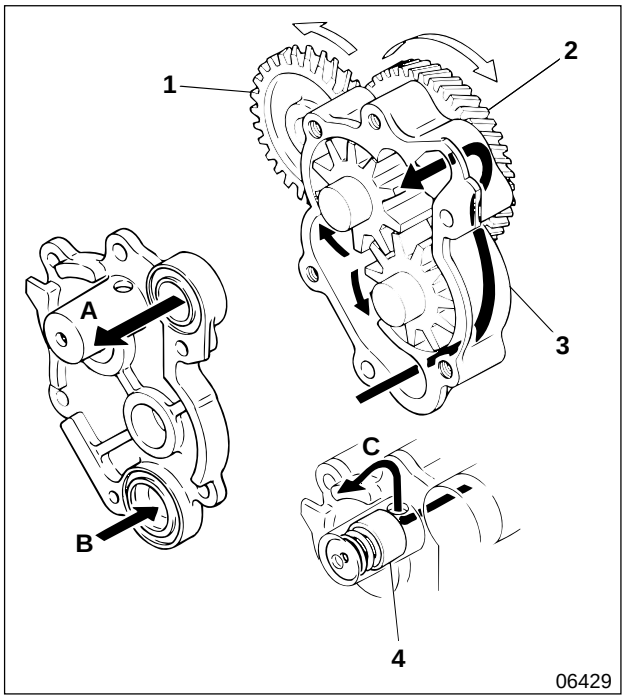

1 Crankshaft gear
2 Oil pump gear
3 Oil pump
4 Relief valve

A : To oil cooler
B : From oil strainer
C : To oil pan

Oil pump **3** is a gear type, driven by rotation of the crankshaft transmitted by crankshaft gear **1** that engages oil pump gear **2**. Relief valve **4** is installed on the oil pump and when the oil pump discharge pressure becomes higher than the standard pressure level, part of the engine oil is returned to the oil pan by relief action of the valve, protecting the lubricating system from breakdown caused by excessive oil pressure.

Oil Cooler and Oil Filter

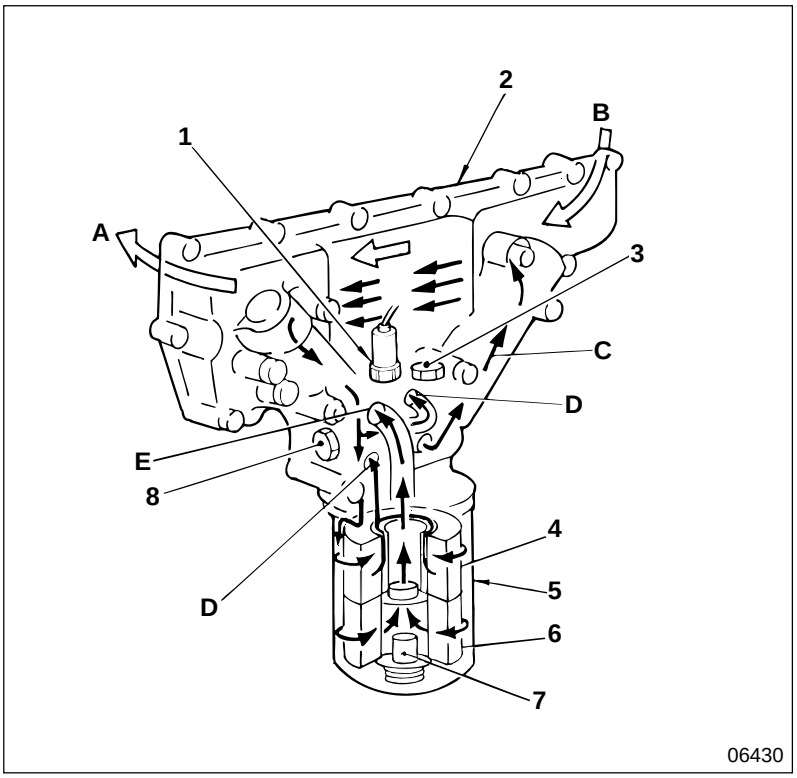

1 Engine oil pressure switch
2 Oil cooler
3 Regulator valve
4 Bypass filter element
5 Oil filter
6 Full-flow filter element
7 Bypass valve
8 Bypass valve

A : Coolant exit port
B : Coolant entry port
C : To oil cooler
D : To oil pan
E : To main oil gallery

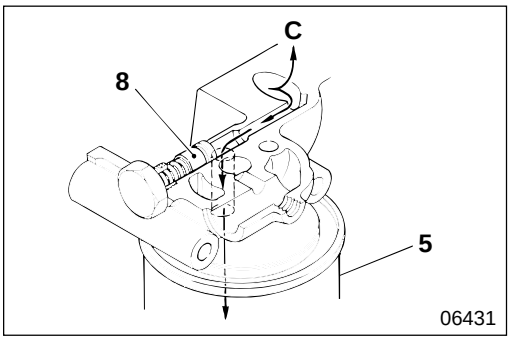

● **Operation of bypass valve**

When the viscosity of the engine oil is high at low temperatures, or when oil cooler **2** element is clogged, flow resistance is high, and if this happens, bypass valve **8** opens to let the engine oil return directly to oil filter **5** without going through the oil cooler.

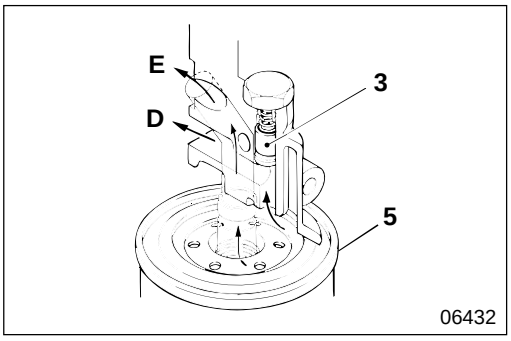

● **Operation of regulator valve**

When the oil pressure in the main oil gallery becomes higher than standard, regulator valve **3** opens to let part of the oil return to oil pan **D**, thereby regulating the oil pressure.

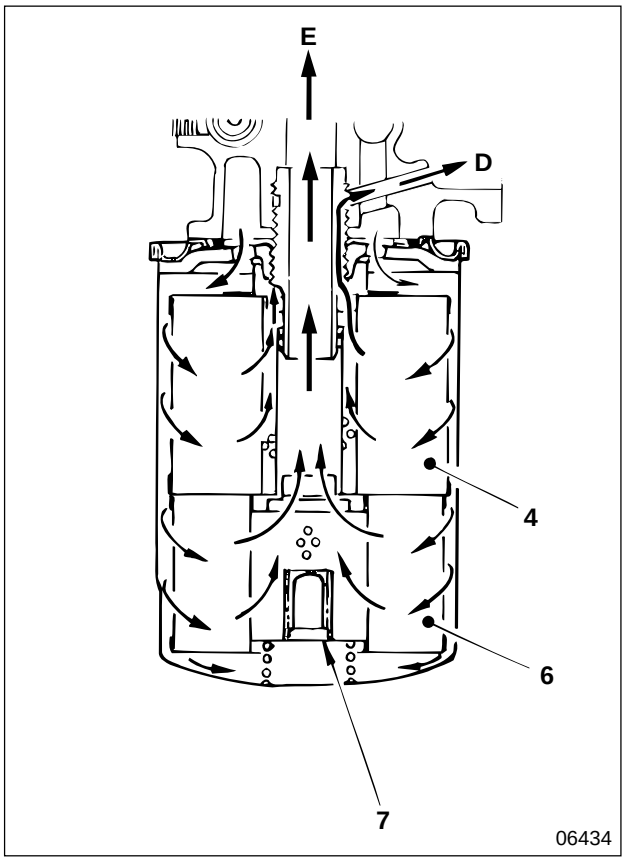

● **Oil filter element**

This oil filter uses a spin-on, filter paper type element, that integrates full-flow filter element **6** and bypass filter element **4**. When the filter element is clogged, bypass valve **7**, installed at the base of the filter, opens to let the oil bypass the element and flow directly to main oil gallery **E**, preventing engine seizure.

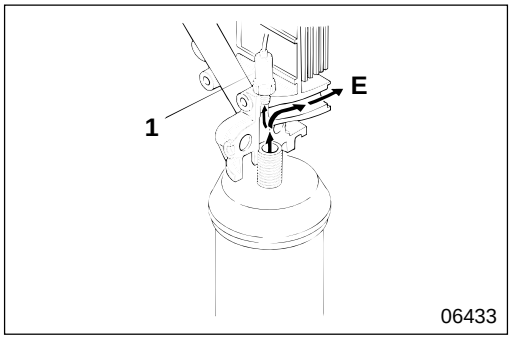

● **Operation of engine oil pressure switch**

When pressure for delivering the oil to main oil gallery **E** becomes lower than standard, the built-in electric contact point of engine oil pressure switch **1** closes to light the warning lamp in the meter cluster, warning the driver that the oil pressure is abnormal.

Lubrication of Related Parts

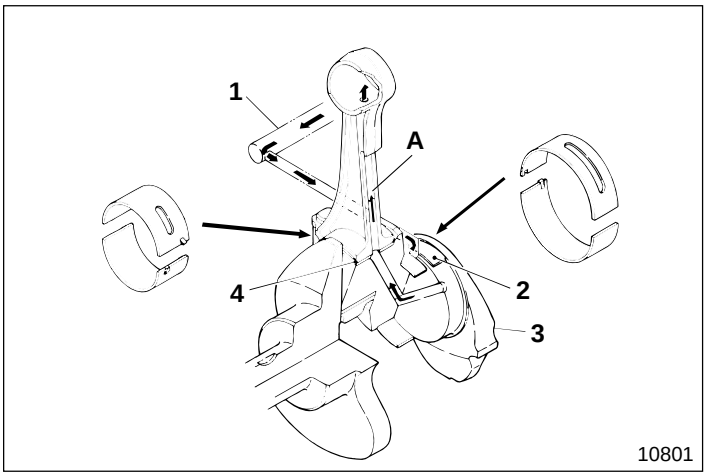

● **Main bearing and connecting rod bearing**

1 Main oil gallery
2 Main bearing
3 Crankshaft
4 Connecting rod bearing

A : Connecting rod oil passage

Engine oil supplied through the oil passage drilled in the crankshaft flows through connecting rod oil passage **A** to lubricate the small end of the connecting rod.

● **Timing gear**

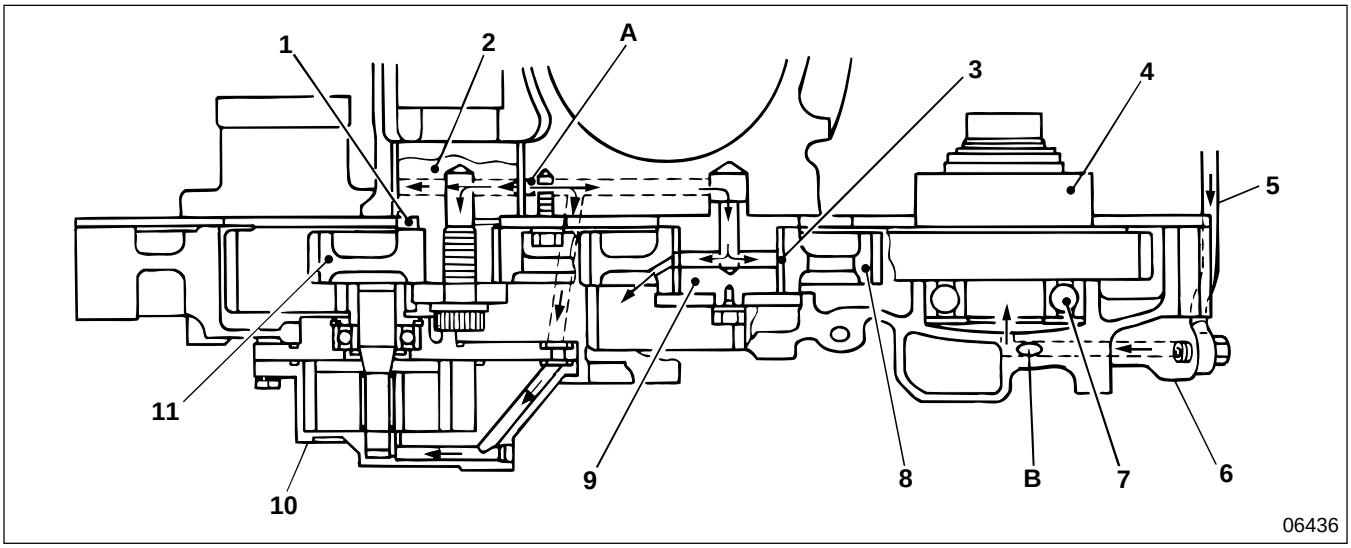

1 Thrust plate
2 Camshaft
3 Idler gear bushing
4 Automatic timer
5 Oil pipe
6 Timing gear case
7 Bearing
8 Idler gear
9 Idler shaft
10 Vacuum pump
11 Camshaft gear

A : From main oil gallery
B : Oil jet (for forced lubrication of automatic timer)

Eengine oil from main oil gallery **A** flows through the inside of camshaft **2** and idler shaft **9** and lubricates each gear along the way including vacuum pump **10**. Inside timing gear case **6** is oil jet **B** that constantly provides automatic timer **4** with forced lubrication.

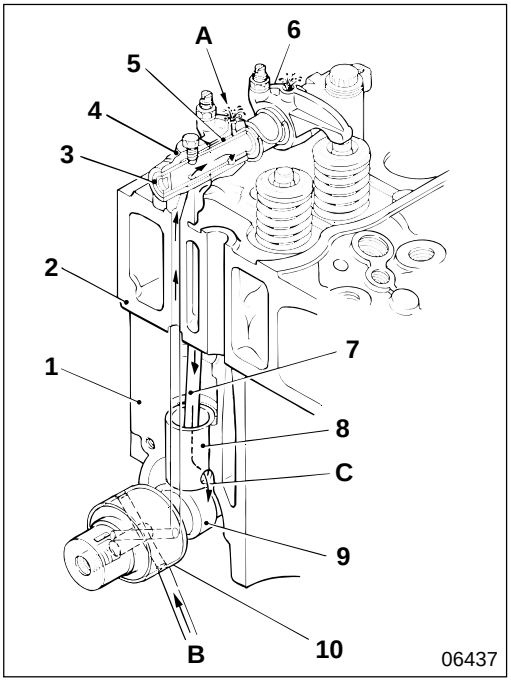

● **Valve mechanism**

1 Crankcase
2 Cylinder head
3 Rocker shaft
4 Rocker shaft bracket
5 Rocker bushing
6 Rocker
7 Push rod
8 Tappet
9 Camshaft
10 No. 1 camshaft bushing

A : Rocker oil hole
B : From main oil gallery
C : To oil pan

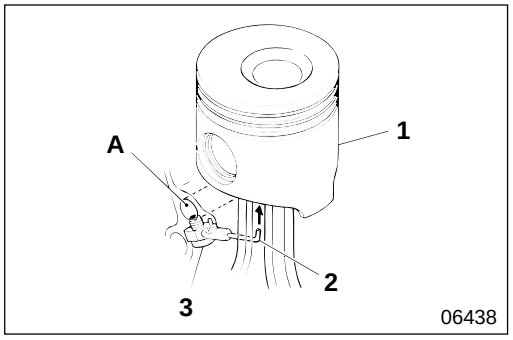

● **Oil jet**

1 Piston
2 Oil jet
3 Check valve

A : Main oil gallery

An oil jet **2** is installed, in the lower part of main oil gallery **A**, for each cylinder and cools piston **1** by injecting engine oil toward the inside of the piston. The oil jet is fitted with check valve **3** which opens and closes at standard oil pressure levels. This prevents a decrease of oil volume at low oil pressure as well as a decrease of oil pressure itself.

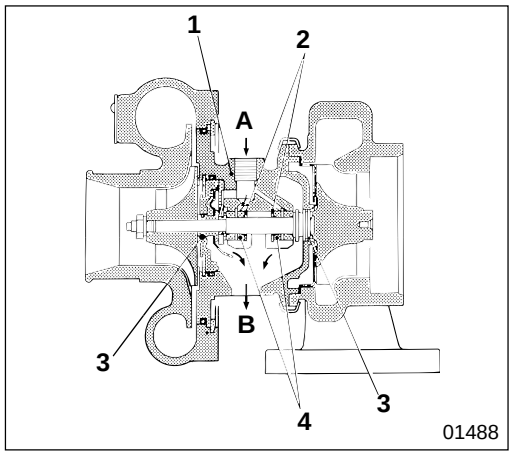

● **Turbocharger**

1 Bearing housing
2 Snap ring
3 Piston ring
4 Bearing

A : From main oil gallery
B : To oil pan

Engine oil is delivered from the main oil gallery to bearing housing **1** through the oil pipe to lubricate bearing **4**. Piston ring **3** installed at both ends of the turbine wheel shaft works as an oil seal.

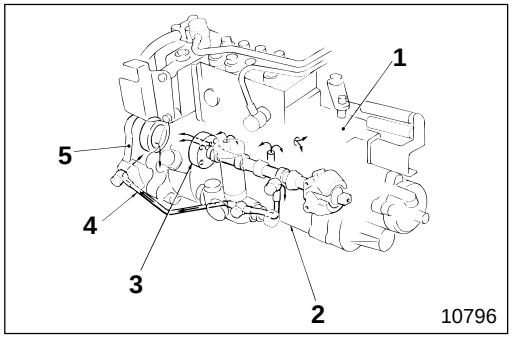

● **Injection pump**

1 Governor
2 Injection pump
3 Bearing cover
4 Oil pipe
5 Timing gear case

Engine oil that has lubricated injection pump **2** and governor **1** returns to the oil pan through the oil passage of bearing cover **3**.

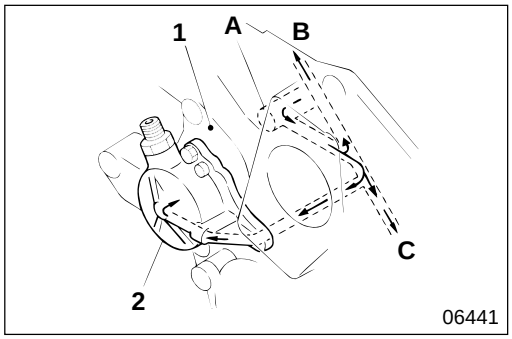

● **Vacuum pump**

1 Timing gear case
2 Vacuum pump

A : Main oil gallery
B : To camshaft
C : To crankshaft

Engine oil is delivered from main oil gallery **A** to vacuum pump **2** through the oil passage of timing gear case **1** to lubricate the vanes. Then, the oil is discharged to the timing gear case through the air outlet port together with air to be returned to the oil pan.

Lubrication System Electric Circuit

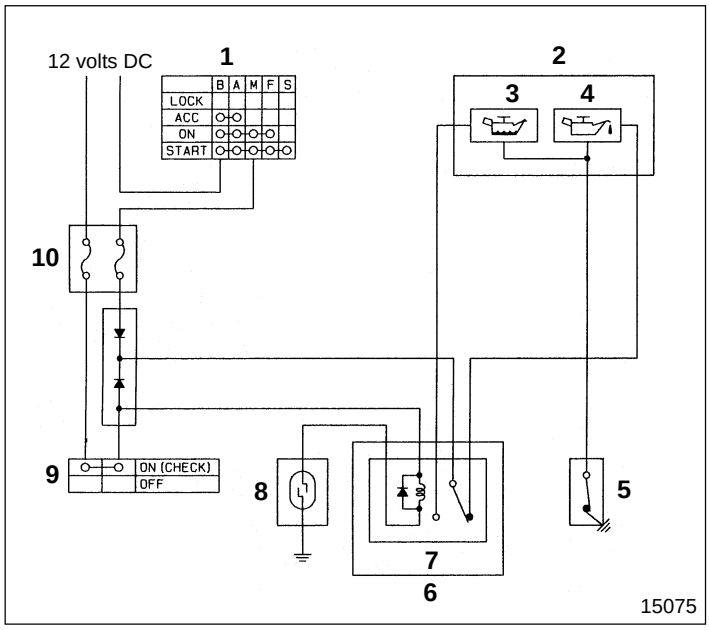

1 Starter switch
2 Meter cluster
3 Engine oil level indicator lamp (Green)
4 Engine oil pressure warning lamp (Red)
5 Engine oil pressure switch
6 Relay box
7 Engine oil level relay
8 Engine oil level sensor
9 Engine oil level check switch
10 Fuse box

This system detects irregularities of engine oil pressure and engine oil level using a sensor-based system.

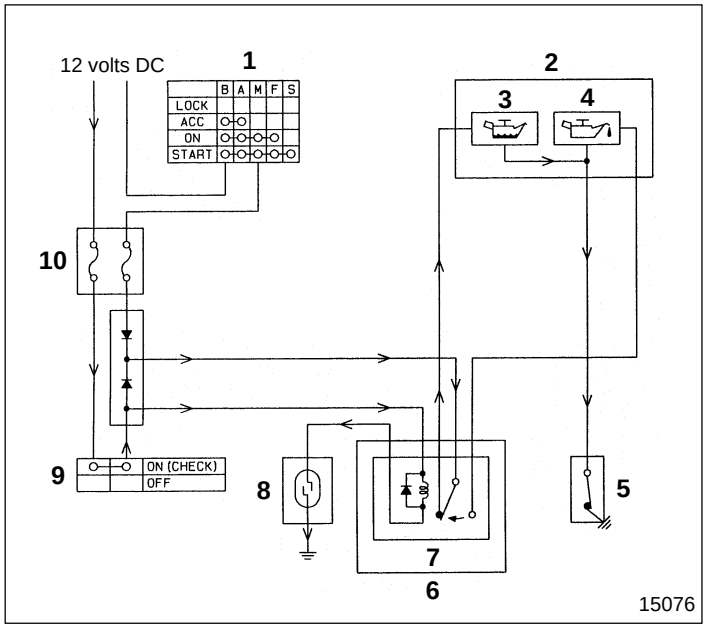

When oil level is normal
(Engine oil level sensor : ON)

When the engine is at a standstill (engine oil pressure switch **5** : ON), by turning engine oil level check switch **9** ON, engine oil level relay **7** is magnetized through engine oil level sensor **8** making electric current flow to light engine oil level indicator lamp **3**.

10 → **9** → **7** (coil) → **8** → Ground
10 → **7** (contact point) → **3** → **5** → Ground

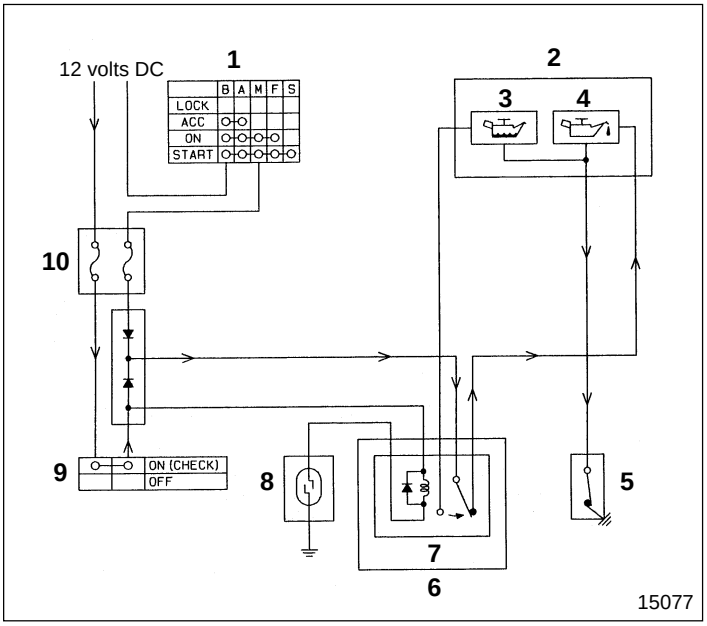

When oil level is low
(Engine oil level sensor : OFF)

When the engine is at a standstill (engine oil pressure switch **5** : ON), no magnetization of engine oil level relay **7** takes place when engine oil level switch **9** is turned ON because engine oil level sensor **8** is OFF, but electric current flows to light engine oil pressure warning lamp (Red) **4**.

10 → **9** → **7** → **4** → **5** → Ground

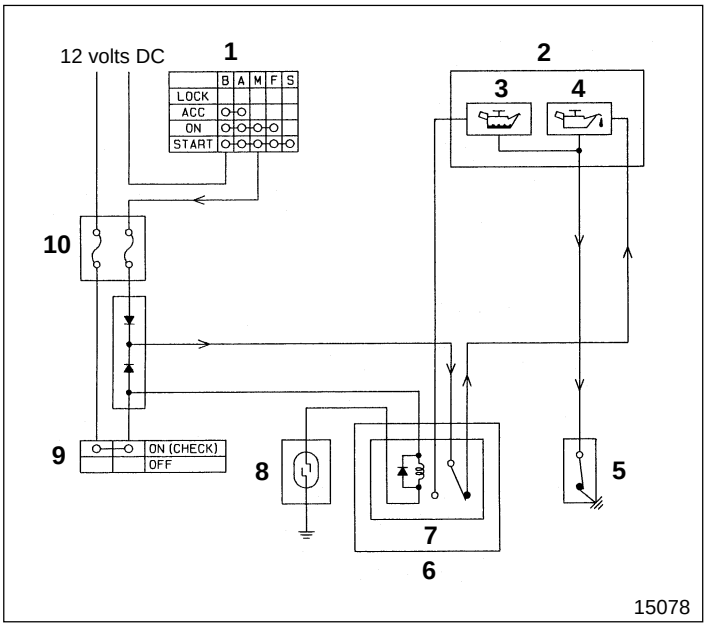

When oil level is abnormal
(Engine oil pressure switch : ON)

When the oil pressure drops while the engine is running, engine oil pressure switch **5** is ON, making electric current flow to light engine oil pressure warning lamp (Red) **4**. Under normal conditions, engine oil pressure switch **5** remains OFF and therefore no electric current flows.

1 → **10** → **7** → **4** → **5** → Ground

Possible causes / Symptoms		Engine hard to start	Overheating	Oil pressure low	Oil consumption excessive (Oil leakage)	Remarks
Oil cooler	Oil cooler element installation faulty		○	○	○	
	Gasket faulty		○	○	○	
	O-ring faulty		○	○	○	
	Oil cooler element clogged		○	○		
	Oil cooler element damaged		○	○	○	
	Bypass valve spring fatigued		○			
	Regulator valve spring fatigued			○		
Oil pump	Malfunctioning		○	○		
	Oil pump gear interfering with oil pump case or cover	○		○		
	Relief valve spring fatigued			○		
Oil filter	Installation faulty				○	
	Element clogged		○	○		
	Gasket faulty			○		
Oil strainer installation faulty or clogged			○	○		
Crankshaft front oil seal faulty					○	Gr 11
Crankshaft rear oil seal faulty					○	Gr 11
Timing gear case installation faulty					○	Gr 11
Oil jet for piston cooling faulty			○			
Oil working its way up into combustion chamber					○	
Oil working its way down into combustion chamber					○	
Oil viscosity too high		○				
Oil quality unsuitable			○			
Oil deteriorated			○			
Fuel mixed with oil			○			

Replacement of Oil Filter

Special tools

Unit : mm {in.}

Location	Tool name and shape	Part No.	Application
2	Oil filter wrench 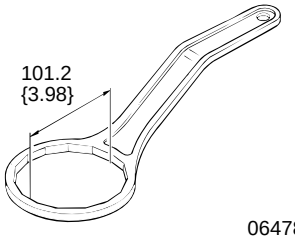 06478	MH061587	Removal of oil filter

WARNING

- **Wipe up any engine oil that has been spilled because it can cause a fire.**
- **Do not touch the engine while it is hot because it will burn you.**
- **When replacing oil filter 2, take care not to spill oil on the V-belt.**

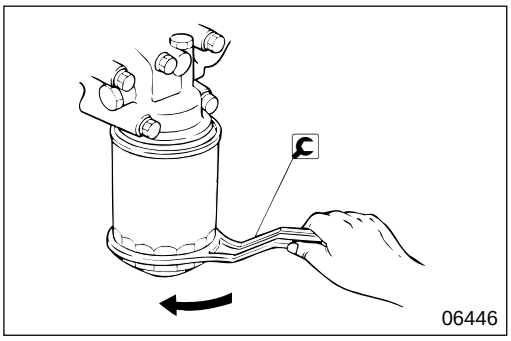

[Removal]

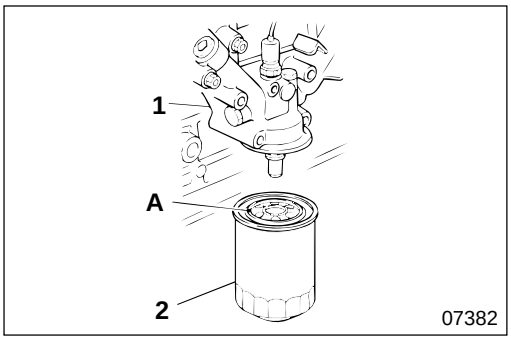

[Installation]

- Clean the surface of oil cooler body **1** that makes contact with oil filter **2**.
- Apply engine oil thinly and evenly to gasket area **A** of oil filter **2**.
- Screw in oil filter **2** to oil cooler body **1** until gasket area **A** sits on the body. From this position, tighten further by rotating by three quarters of a turn.
- After installation, run the engine and check that there is no oil leakage from gasket area **A**.
- Check the oil level and if it is low, fill to correct level.

Replacement of Engine Oil

Tightening torque

Unit : N·m {lbf.ft, kgf·m}

Location	Parts to be tightened	Tightening torque	Remarks
2	Oil pan drain plug	34 to 39 {25 to 29, 3.5 to 4.0}	—

Lubricant

Location	Points of application	Kinds	Quantity
—	Oil pan	Engine oil (Grade CD or above as per API Classification)	Approximately 8 L {8.5 qts}
—	Oil filter	Engine oil (Grade CD or above as per API Classification)	Approximately 1 L {1.1 qts}

WARNING

- **Wipe up any engine oil that has been spilled because it can cause a fire.**
- **Do not touch the engine while it is hot because it will burn you.**
- **When replacing oil, take care not to spill oil on the V-belt.**

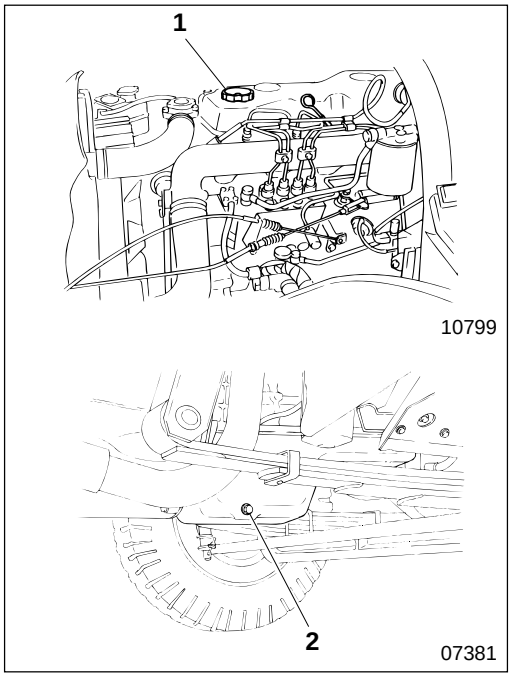

[Draining]
After warming-up the engine, remove oil filler cap **1** and remove drain plug **2** of the oil pan and drain the engine oil.

[Refilling]
Tighten drain plug **2** of the oil pan at specified torque and fill with the specified quantity of engine oil.

Measurement of Oil Pressure

Service standards

Location	Maintenance item		Standard value	Limit	Remedy
—	Oil pressure (Oil temperature 70 to 90°C {158 to 194°F})	At no-load minimum revolution	145 kPa {21 lbf/in², 1.5 kgf/cm²}	49 kPa {7.1 lbf/in², 0.5 kgf/cm²}	Inspect
		At no-load maximum revolution	295 to 490 kPa {43 to 71 lbf/in², 3 to 5 kgf/cm²}	195 kPa {28 lbf/in², 2 kgf/cm²}	

Tightening torque

Unit : N·m {lbf.ft, kgf·m}

Location	Parts to be tightened	Tightening torque	Remarks
2	Engine oil pressure switch	7.8 to 15 {5.8 to 11, 0.8 to 1.5}	When engine is cold

Sealant

Location	Points of application	Kinds	Quantity
2	Thread area of engine oil pressure switch	Teflon tape	3 1/2 turns

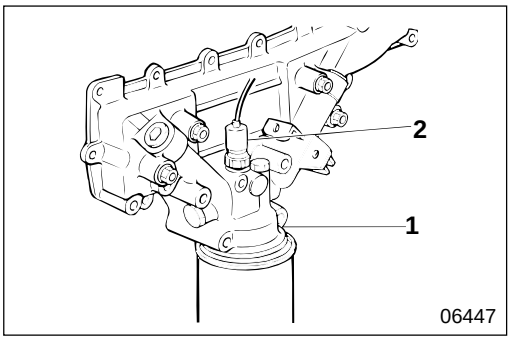

- Remove oil pressure switch **2** from oil cooler **1**.
- Mount the oil pressure gauge after installing adaptor **3** onto oil cooler **1**.
- Warm up the engine until the oil temperature reaches 70 to 90°C {158 to 194°F}.
- Measure oil pressure at no-load minimum revolution and at no-load maximum revolution. If the measured values are lower than the limit, overhaul the lubricating system.

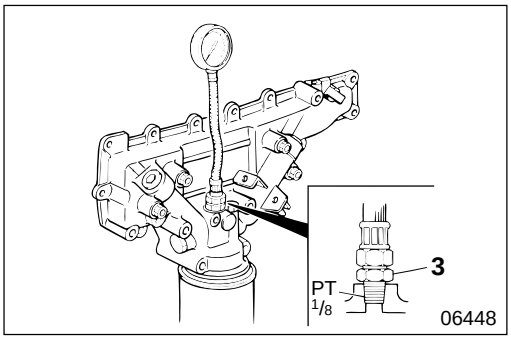

- After measurement, install engine oil pressure switch **2** and tighten at specified torque.

CAUTION

Make sure you install oil pressure switch 2 when the engine is cold.

Inspection of engine oil pressure switch
Gr 54

OIL PAN, OIL STRAINER AND OIL JET

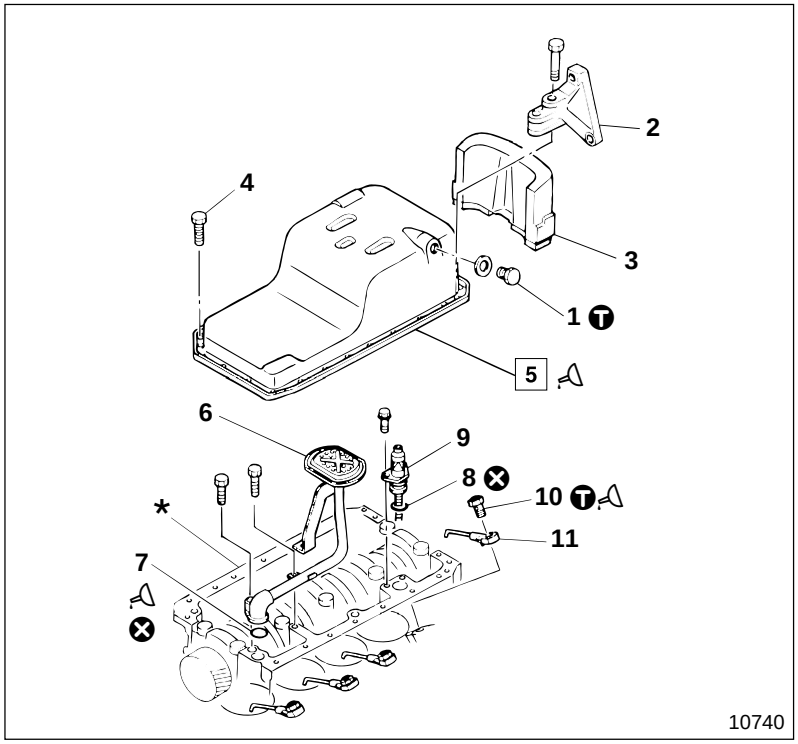

● **Disassembly sequence**

1 Drain plug
2 Stiffener
3 Rubber spacer
4 Bolt
5 Oil pan
6 Oil strainer
7 O-ring
8 O-ring
9 Engine oil level sensor Gr 54
10 Check valve
11 Oil jet

***** : Crankcase
⊗ : Non-reusable parts

● **Assembly sequence**

Follow the disassembly sequence in reverse.

CAUTION

Make sure that you do not tighten check valve 10 higher than the specified torque. Overtightening will cause damage to the check valve, resulting in serious overheating damage to the engine.

Ⓣ Tightening torque

Unit : N·m {lbf.ft, kgf·m}

Location	Parts to be tightened	Tightening torque	Remarks
1	Drain plug	34 to 39 {25 to 29, 3.5 to 4.0}	—
10	Check valve	29 {22, 3}	Wet

Lubricant and sealant

Location	Points of application	Kinds	Quantity
5	Oil pan to crankcase connecting surface	THREEBOND 1207C	As required
7	Body of O-ring	Engine oil	As required
10	Thread area of check valve	Engine oil	As required

◆ Service procedure

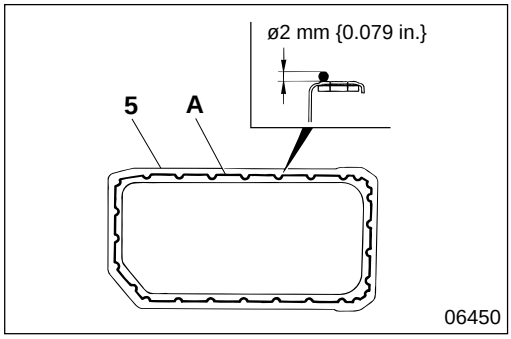

5 **Installation of oil pan**

- Apply sealant **A** to lower connecting surface of oil pan **5** as illustrated evenly without break.
- After applying sealant **A**, within three minutes, mount oil pan **5** to crankcase *****.

CAUTION

- **Be sure to clean and wipe off oily substances from the surface where sealant A is to be applied.**
- **Make sure that sealant A is not transferred to other areas while the mounting work is being done.**
- **Do not start the engine within an hour of mounting oil pan 5.**
- **Be sure to reapply sealant A if bolts 4 (for mounting oil pan 5) are loosened or removed by any cause whatsoever after mounting.**

M E M O

OIL PUMP

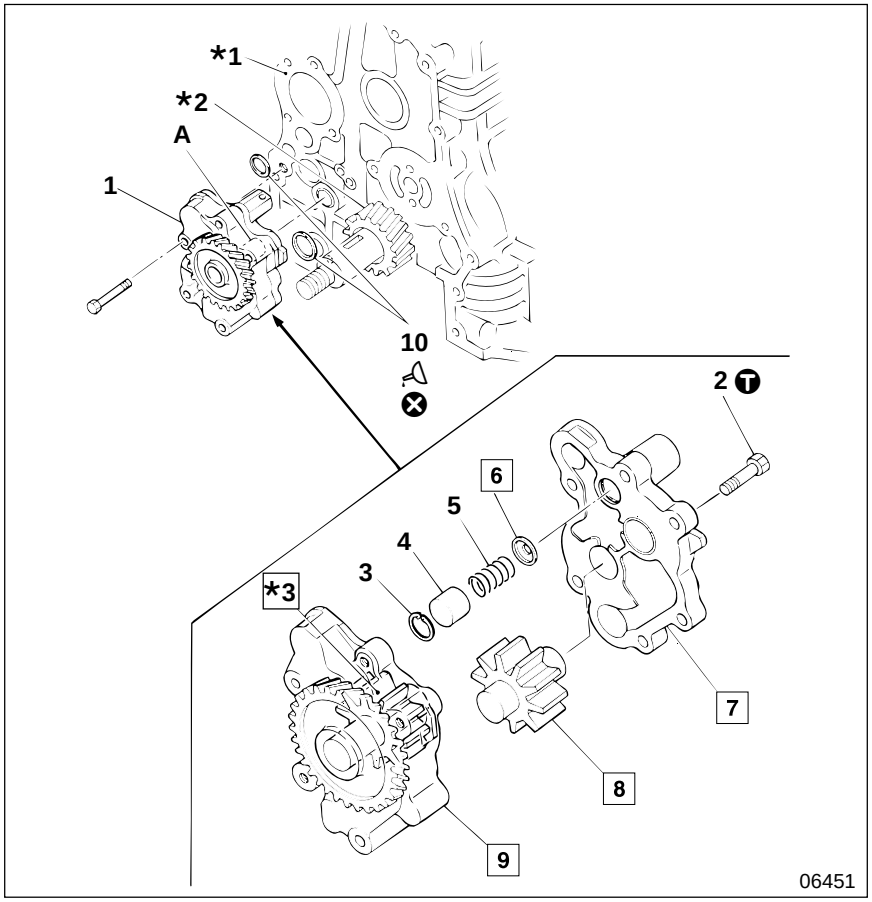

● **Disassembly sequence**

1 Oil pump assembly
2 Bolt
3 Snap ring
4 Relief valve
5 Spring
6 Seat
7 Oil pump cover
8 Driven gear assembly
9 Oil pump case assembly
10 O-ring

***1** : Crankcase Gr 11
***2** : Crankshaft gear
***3** : Drive gear

A : Positioning pin (Bushing)
⊗ : Non-reusable parts

● **Assembly sequence**

Follow the disassembly sequence in reverse.

Service standards

Unit : mm {in.}

Location	Maintenance item	Standard value (Basic diameter in [ ])	Limit	Remedy
—	Backlash between oil pump gear and crankshaft gear Gr 11	0.10 to 0.18 {0.0039 to 0.0071}	0.3 {0.012}	Replace
4	Relief valve opening pressure	1080±98 kPa {155±14 lbf/in2, 11±1.0 kgf/cm2}	—	—
5	Relief valve spring load (Installed length : 33.4 {1.31})	215±11 N {49±2.4 lbf, 22.1±1.1 kgf}	—	Replace
7, 8, 9	Clearance between gear shaft and oil pump case and oil pump cover	[20 {0.79}] 0.04 to 0.07 {0.0016 to 0.0028}	0.15 {0.0059}	Replace
7, *3	Clearance between gear shaft and oil pump cover	[20 {0.79}] 0.04 to 0.07 {0.0016 to 0.0028}	0.15 {0.0059}	Replace
8, 9, *3	Difference between height of each gear and depth of oil pump case	0.01 to 0.07 {0.00039 to 0.0028}	0.18 {0.0071}	Replace
	Clearance between tooth tip of each gear and oil pump case	0.10 to 0.19 {0.0039 to 0.0075}	0.2 {0.0079}	Replace

Ⓣ Tightening torque

Unit : N·m {lbf.ft, kgf·m}

Location	Parts to be tightened	Tightening torque	Remarks
2	Bolt (Oil pump cover mounting)	9.8±2.0 {7.2±1.4, 1.0±0.2}	—

Lubricant

Location	Points of application	Kinds	Quantity
10	Body of O-ring	Engine oil	As required

◆ Service procedure

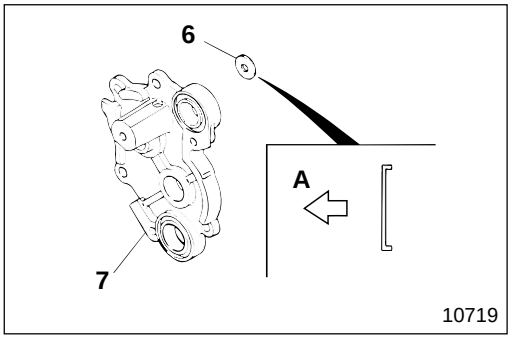

6 **Installation of seat**

A : Oil pump cover side

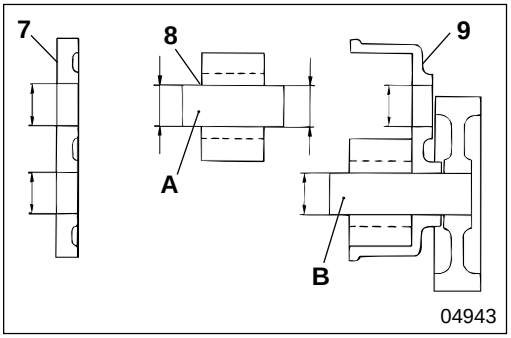

7 **to** **9** **Inspection of oil pump cover, driven gear assembly, and gear and case assembly**

- Measure the clearance between oil pump cover **7** and driven gear shaft **A**, and the clearance between oil pump gear case assembly **9** and the driven gear shaft.
  Measure the clearance between the oil pump cover and drive gear shaft **B**.
- If the measured values are higher than the limit, replace the faulty parts.

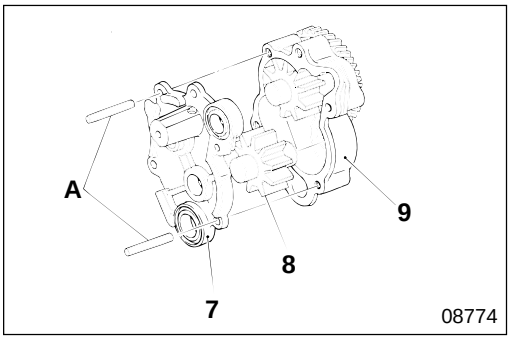

7 **9** **Installation of oil pump cover and oil pump case assembly**

- Prepare two pins **A** of 9 mm {0.35 in.} in outer diameter and position oil pump cover **7** and oil pump case assembly **9** as illustrated.

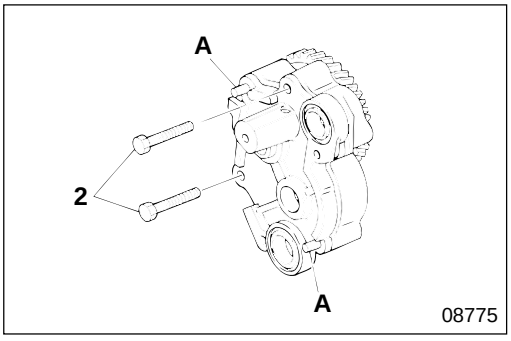

- Tighten the illustrated bolts **2** at specified torque.

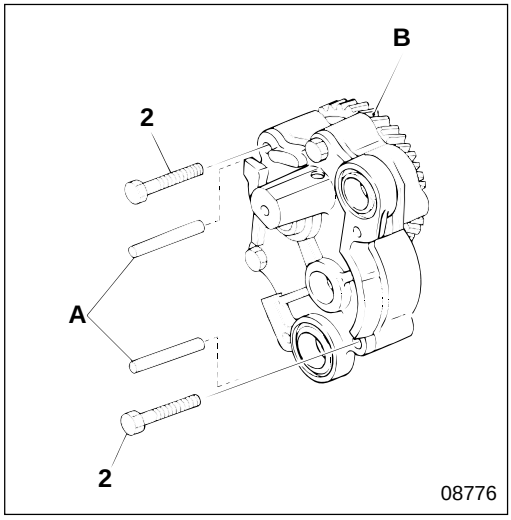

- Remove pins **A**, replacing them with bolts **2** and tighten at specified torque.

NOTE

Confirm smooth movement by rotating oil pump gear B by hand. If it catches, disassemble and reassemble it.

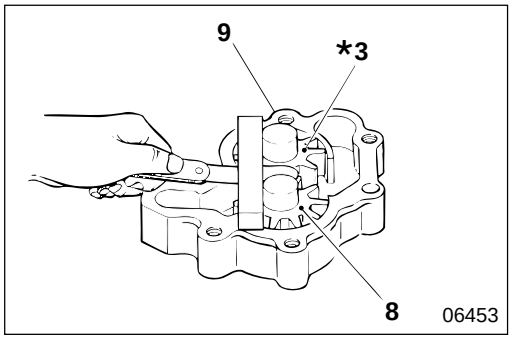

8 9 *3 Inspection of driven gear assembly, and oil pump case assembly

(1) Difference between height of each gear and depth of oil pump case

If the measured value is higher than the limit, replace the faulty parts.

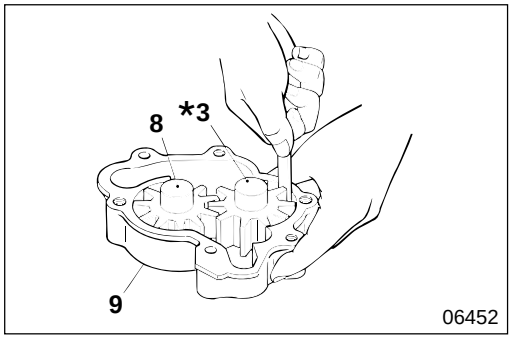

(2) Clearance between tooth tip and oil pump case

If the measured value is higher than the limit, replace the faulty parts.

M E M O

OIL COOLER AND OIL FILTER

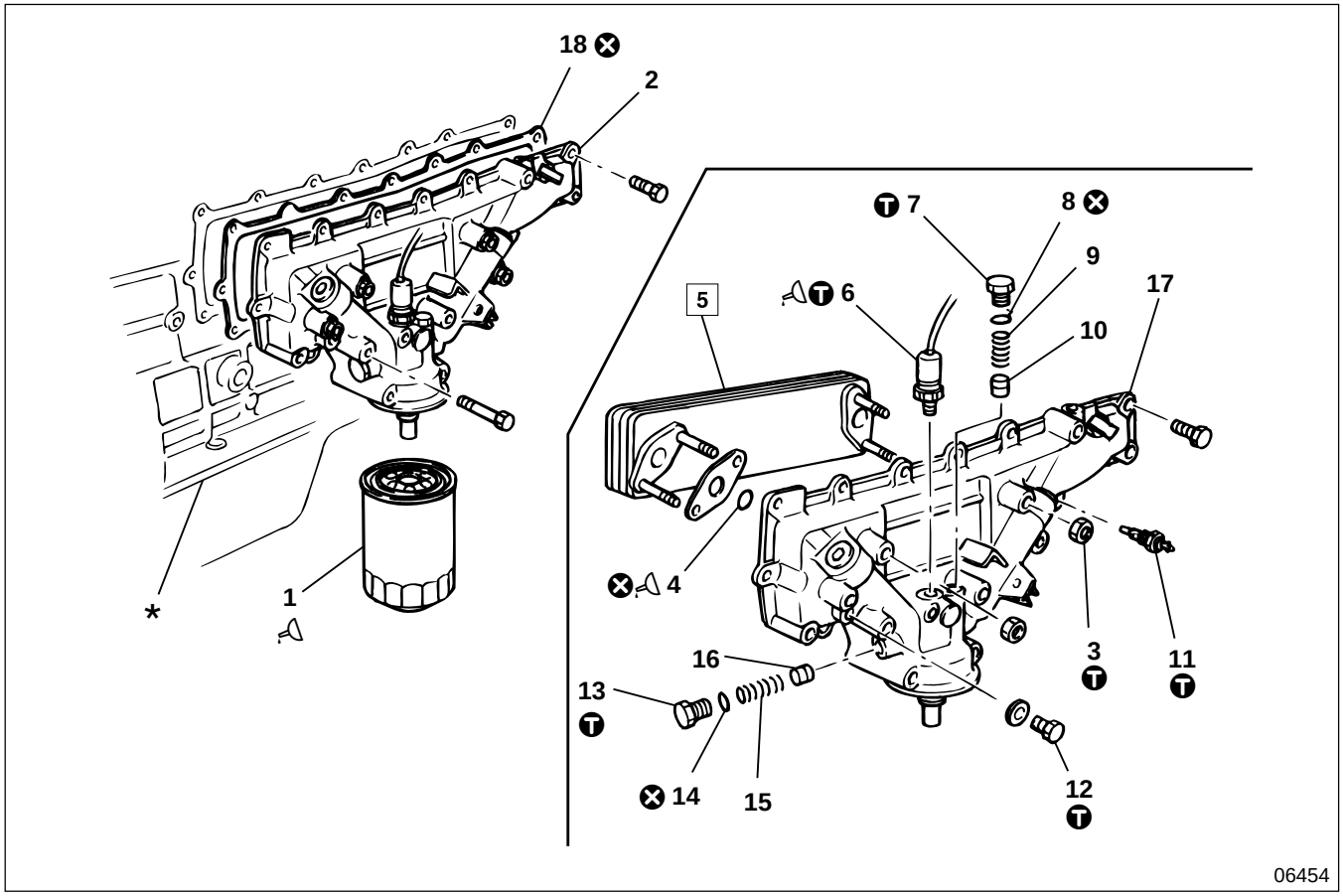

● **Disassembly sequence**

1 Oil filter P12-13
2 Oil cooler assembly
3 Nut
4 O-ring
5 Oil cooler element
6 Engine oil pressure switch Gr 54
7 Plug
8 O-ring
9 Spring
10 Regulator valve
11 Thermostat switch Gr 54
12 Drain plug
13 Plug
14 O-ring
15 Spring
16 Bypass valve
17 Oil cooler body
18 Gasket

*: Crankcase assembly Gr 11
⊗: Non-reusable parts

● **Assembly sequence**

Follow the disassembly sequence in reverse.

Service standards

Location	Maintenance item	Standard value	Limit	Remedy
5	Oil cooler element air leakage (Air pressure 980 kPa {140 lbf/in^2, 10 kgf/cm^2}, 15 seconds)	0 cm^3 {0 cu. in.}	—	Replace
10	Regulator valve opening pressure	590±29 kPa {85±4.3 lbf/in^2, 6.0±0.3 kgf/cm^2}	—	Replace
16	Bypass valve opening pressure	390±29 kPa {57±4.3 lbf/in^2, 4.0±0.3 kgf/cm^2}	—	Replace

Tightening torque

Unit : N·m {lbf.ft, kgf·m}

Location	Parts to be tightened	Tightening torque	Remarks
3	Nut (Oil cooler element mounting)	19.5±5 {14±3.6, 2.0±0.5}	—
6	Engine oil pressure switch	7.8 to 15 {5.8 to 11, 0.8 to 1.5}	—
7	Plug (Regulator valve spring mounting)	19.5±5 {14±3.6, 2.0±0.5}	—
11	Thermostat switch	34±5 {25±3.6, 3.5±0.5}	—
12	Drain plug (Oil cooler)	34 {25, 3.5}	—
13	Plug (Bypass valve spring mounting)	19.5±5 {14±3.6, 2.0±0.5}	—

Lubricant and sealant

Location	Points of application	Kinds	Quantity
1	Gasket area of oil filter with thin application P12-13	Engine oil	As required
4	Body of O-ring	Engine oil	As required
6	Thread area of engine oil pressure switch	Teflon tape	3 1/2 turns

◆ Service procedure

● Cleaning

- Check and see if any carbon deposits or sludge have developed in the oil passage of oil cooler element **5** or its bypass. Clean any deposits off thoroughly with cleaning solvent.
- Also clean any water scale or fur found in oil cooler element **5** or oil cooler body **17**.

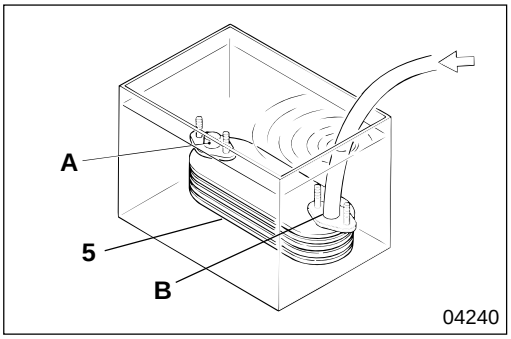

5 Inspection of oil cooler element

- Immerse oil cooler element **5** in a water tank after plugging exit port **A** and connecting the hose to engine oil entry port **B**.
- Apply air pressure of 980 kPa {140 lbf/in^2, 10 kgf/cm^2} via the hose and see if there is any air leakage from any part of oil cooler element **5**.
- If you see any leakage, replace oil cooler element **5**.

BACK HOME

MITSUBISHI FUSO

FE

Service Manual

Group 13 - Fuel & Engine Control

Group 13 - Fuel & Engine Control
1999 Minor Changes

Group 13A - Fuel & Engine Control
2001 Model Change <4M50>

Group 13E - Fuel & Engine Control
2001 Model Change <4M50>

MITSUBISHI FUSO TRUCK OF AMERICA, Inc.

Pub No. TWSE9501-00

MITSUBISHI
FUSO

FE

Service Manual

Group 13A
Fuel and Engine Control
<4M50T2>

2001 Model Year Change

Table of Contents

MITSUBISHI FUSO TRUCK OF AMERICA, Inc.

BACK HOME

Pub No. TWSE9501-513A

GROUP 13A FUEL AND ENGINE CONTROL

SPECIFICATIONS 13A- 2

STRUCTURE AND OPERATION 13A- 3
1. Fuel System (Fuel flow) 13A- 3
2. Engine Control 13A- 4
3. Fuel Filter 13A- 5

ON-VEHICLE INSPECTION AND ADJUSTMENT 13A- 6
1. Checking Minimum and Maximum No-Load Speeds 13A- 6
2. Bleeding Air from Fuel System 13A- 7
3. Replacing Fuel Filter 13A- 7

ENGINE CONTROL 13A-10

FUEL TANK 13A-13

FUEL FILTER 13A-14

INJECTION PUMP 13A-16

INJECTION NOZZLE 13A-20

For system control of the electronically controlled injection pump, refer to Group 13E Electronically Controlled Fuel System.

SPECIFICATIONS

Injection Pump Assembly

Item		Specification
Manufacturer		DENSO
Model		V4
Type		Distributor type electronically controlled pump
Spill valve solenoid		Electronically controlled
Timer	Control	High-pressure chamber control
	Drive	Timer controlled valve (TCV)
Feed pump type		Vane

Injection Nozzle Assembly

Item	Specification
Manufacturer	DENSO
Type	Hole-type (2-spring)
No. of holes	6
Hole diameter mm {in.}	ϕ 0.20 {0.0079}

Fuel Filter

Item	Specification
Fuel filter type	Spin-on type (paper filter)
Water level alarm	Provided
Priming pump	Provided

1. Fuel System (Fuel flow)

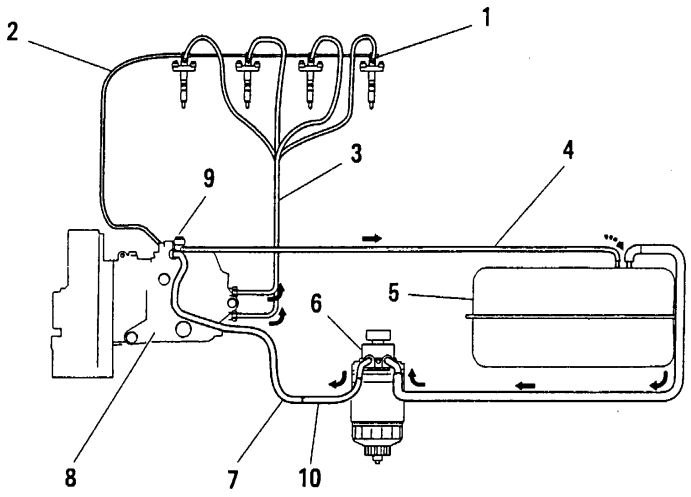

Ⓟ37446

1 Injection nozzle
2 Fuel leak-off pipe
3 Injection pipe
4 Fuel return pipe
5 Fuel tank
6 Fuel filter
7 Fuel suction pipe
8 V4 injection pump
9 Overflow valve
10 Fuel hose

- Fuel from the fuel tank **5** is drawn up by the feed pump, which is driven by the V4 injection pump **8**. Then, the fuel is delivered into the V4 injection pump through the fuel filter **6**.
- After filtration, the fuel is fed to the V4 injection pump **8**. From there, it is fed under high pressure to the injection nozzles **1**. The injection nozzles spray the fuel into the combustion chambers.
- Excess fuel from the injection nozzles **1** returns to the fuel tank **5** by way of the fuel leak-off pipe **2**.
- If the fuel pressure in the V4 injection pump **8** exceeds a preset level, the overflow valve **9** opens to allow excess fuel to return from the fuel return pipe **4** to the fuel tank **5**.

2. Engine Control

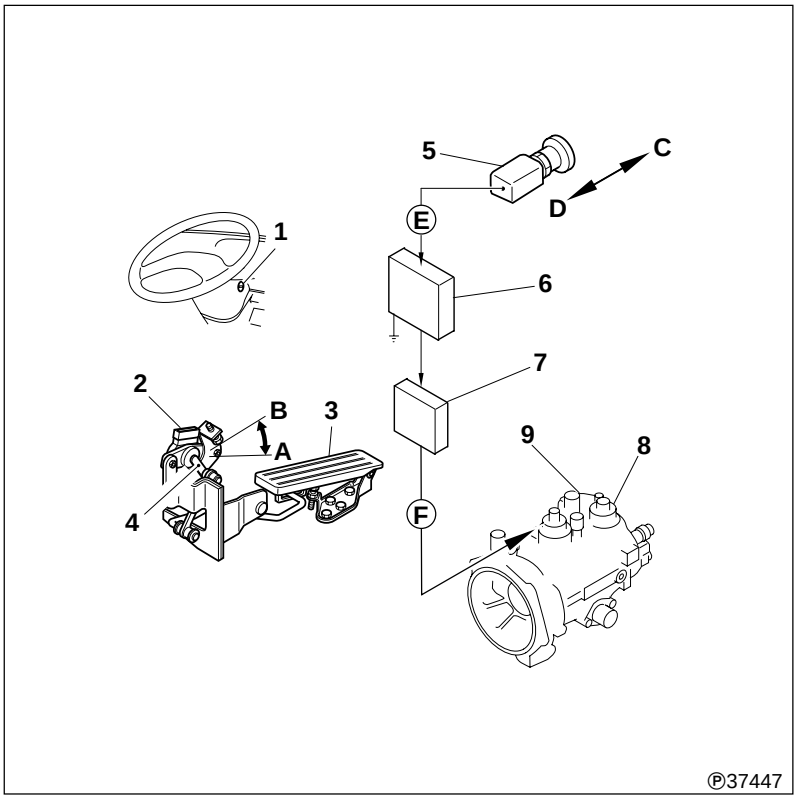

1 Starter switch
2 Accelerator position sensor & accelerator switch assembly
3 Accelerator pedal
4 Lever
5 Emergency engine stop switch
6 V4 ECU
7 EDU
8 Spill valve
9 V4 injection pump assembly

A: Idling position
B: Full-load position
C: Engine stopping position
D: Engine starting position
E: Fuel cut signal
F: Power supply

● **Accelerator position sensor & accelerator switch unit**

The accelerator position sensor & accelerator switch unit **2** consists of an accelerator position sensor and a built-in accelerator switch.

- The accelerator switch responds to the foot pressure acting upon the accelerator pedal **3**.
- The accelerator position sensor detects the movement of the accelerator pedal **3** and outputs an electric signal to the V4 ECU **6**. The lever **4** is constantly pulled by the return spring toward the idling position **A**.

● **Emergency engine stop switch**

The emergency engine stop switch **5** is used to stop the engine when the starter switch **1** placed in the ACC position fails to do it due to a system failure or for other reason. If the switch is pulled into the engine stopping position **C**, a fuel cut signal **F** is sent to the V4 ECU **6**, which in turn supplies power **F** to the spill valve **8** of the V4 injection pump assembly **9** to stop the engine.

CAUTION ⚠

When restarting the engine stopped by means of the emergency engine stop switch 5, set the starter switch 1 to the ACC or LOCK position beforehand to initialize the computer in the V4 ECU 6.

3. Fuel Filter

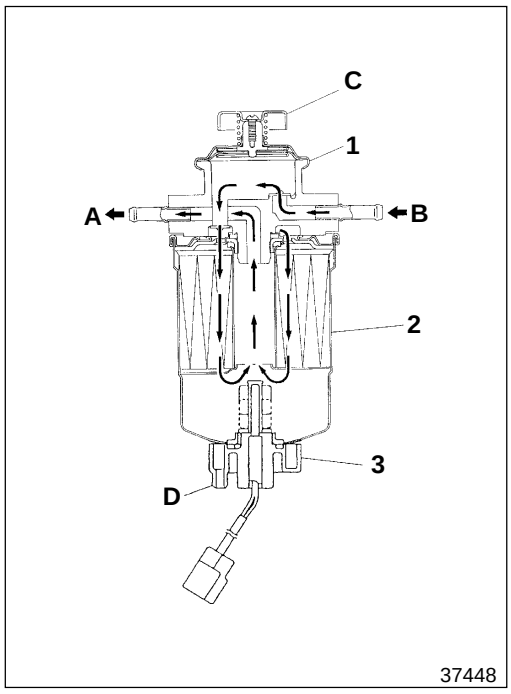

1 Fuel filter head
2 Fuel filter cartridge
3 Water level sensor

A: To injection pump
B: From fuel tank
C: Priming pump
D: Drain port

The fuel filter cartridge **2** serves also as a water separator, it separates water from fuel as well as removes impurities. Separated water is collected in the lower part of the filter. The filter is provided with a water level sensor **3**. When water is collected to a certain level, this sensor turns on the warning lamp in the meter cluster.
Collected water can be drained away through the drain port **D** by loosening the water level sensor **3**. The fuel filter head **1** is equipped with a priming pump **C** for bleeding the fuel system.

ON-VEHICLE INSPECTION AND ADJUSTMENT

1. Checking Minimum and Maximum No-Load Speeds

Service standards

Location	Maintenance item	Standard value	Limit	Remedy
–	No-load minimum speed (Idling speed)	650 ± 25 rpm	–	Check
–	No-load maximum speed	3400 ± 50 rpm	–	Check

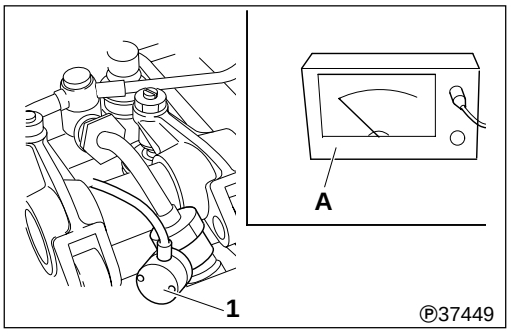

● **No-load minimum speed**

Prepare the vehicle for inspection as follows.

- Engine coolant temperature: 176 to 203°F {80 to 95°C}
- Lamps and electrical equipment: Off
- A/T: “P” range
- Steering wheel: Neutral position
- Connect a tachometer **A** to the injection nozzle **1** or the injection pipe.

NOTE:

Before connecting the tachometer A to the injection pipe, undo all clamps from the pipe.

- Check that the minimum speed meets the standard value when the accelerator pedal is free of foot pressure.
- If the reading deviates from the standard value, check the accelerator position sensor & accelerator switch unit **2** for malfunction. Gr 13E
- If the accelerator position sensor & accelerator switch unit **2** is found normal, check the fuel system diagnosis code, injection pump and ECU. Gr 13E

● **No-load maximum speed**

- Connect a tachometer **A** to the injection nozzle **1** or the injection pipe.

NOTE:

Before connecting the tachometer A to the injection pipe, undo all clamps from the pipe.

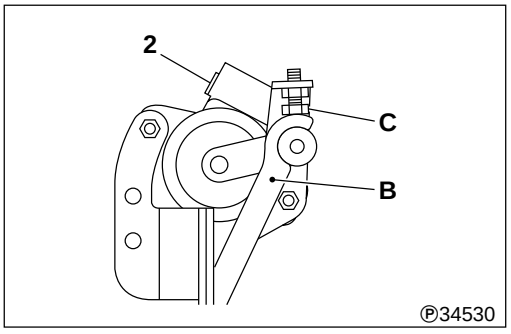

- Check that the maximum speed meets the standard value when the lever **B** of the accelerator position sensor & accelerator switch unit **2** is in contact with the full load stopper bolt **C**.
- If the reading deviates from the standard value, check the accelerator position sensor & accelerator switch unit **2** for malfunction. Gr 13E
- If the accelerator position sensor & accelerator switch unit **2** is found normal, check the fuel system diagnosis code, injection pump and ECU. Gr 13E

2. Bleeding Air from Fuel System

Ⓣ Tightening torque

Unit: N·m {ft.lbs, kgf·m}

Location	Parts to be tightened	Tightening torque	Remarks
1	Air vent plug	6 ± 1 {4.3 ± 0.7, 0.6 ± 0.1}	–

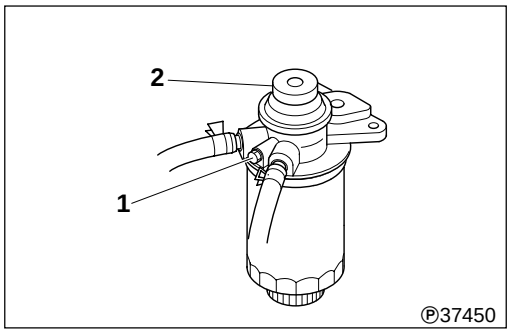

- Loosen the fuel filter air vent plug **1**.
- Operate the priming pump **2** to pump up fuel.
- Continue to pump fuel until no air bubbles are found in the fuel flowing out from the air vent plug **1**.
- After ascertaining that air bubbles have completely disappeared, tighten the air vent plug **1** securely.
- Operate the priming pump **2** further until it feels heavy.
- Wipe up all spilled fuel, then start the engine.
- Check that no fuel leakage occurs.

WARNING ⚠

- **Fuel is highly flammable. Keep it away from flames and sources of heat.**
- **Be sure to wipe up all spilled fuel. Unless it is wiped up, it could catch fire.**

3. Replacing Fuel Filter

Lubricant

Location	Point of application	Specified lubricant	Quantity
1	Gasket for fuel filter cartridge	Engine oil	As required

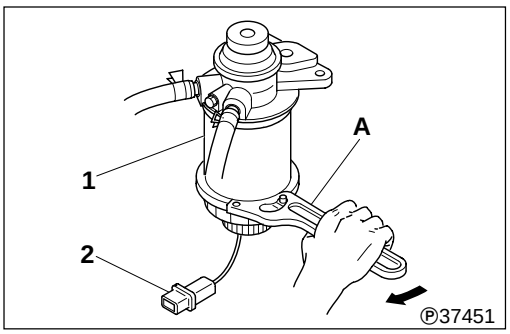

[Removal]

A: Filter Wrench
(Commercially available one: For filter diameter of approx. 90 mm {3.54 in.})

WARNING ⚠

- **Fuel is highly flammable. Keep it away from flames and sources of heat.**
- **To minimize the risk of fire, wipe up any spilled fuel.**

CAUTION ⚠

- **The water level sensor 2 may be reused if it properly functions.**

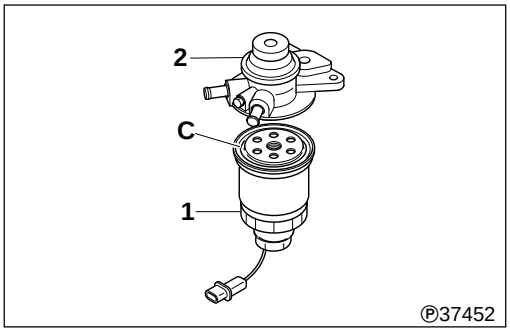

[Installation]

WARNING ⚠

Use of an unsuitable fuel filter cartridge 1 can lead to fuel leaks and fires. Be sure to use a genuine filter.

CAUTION ⚠

To prevent injection failures, keep dust and dirt out of the fuel filter cartridge 1 and the fuel pipe.

- To fit the fuel filter cartridge **1**, turn it until the gasket **C** touches seal surface of the fuel filter head **2**. Be sure to turn the filter by hand clockwise.
  Then, tighten the filter by 3/4 turn.
- Bleed all air out of the fuel system. P. 13A-7
- After fitting the filter, start the engine and check that no fuel leakage occurs.

MEMO

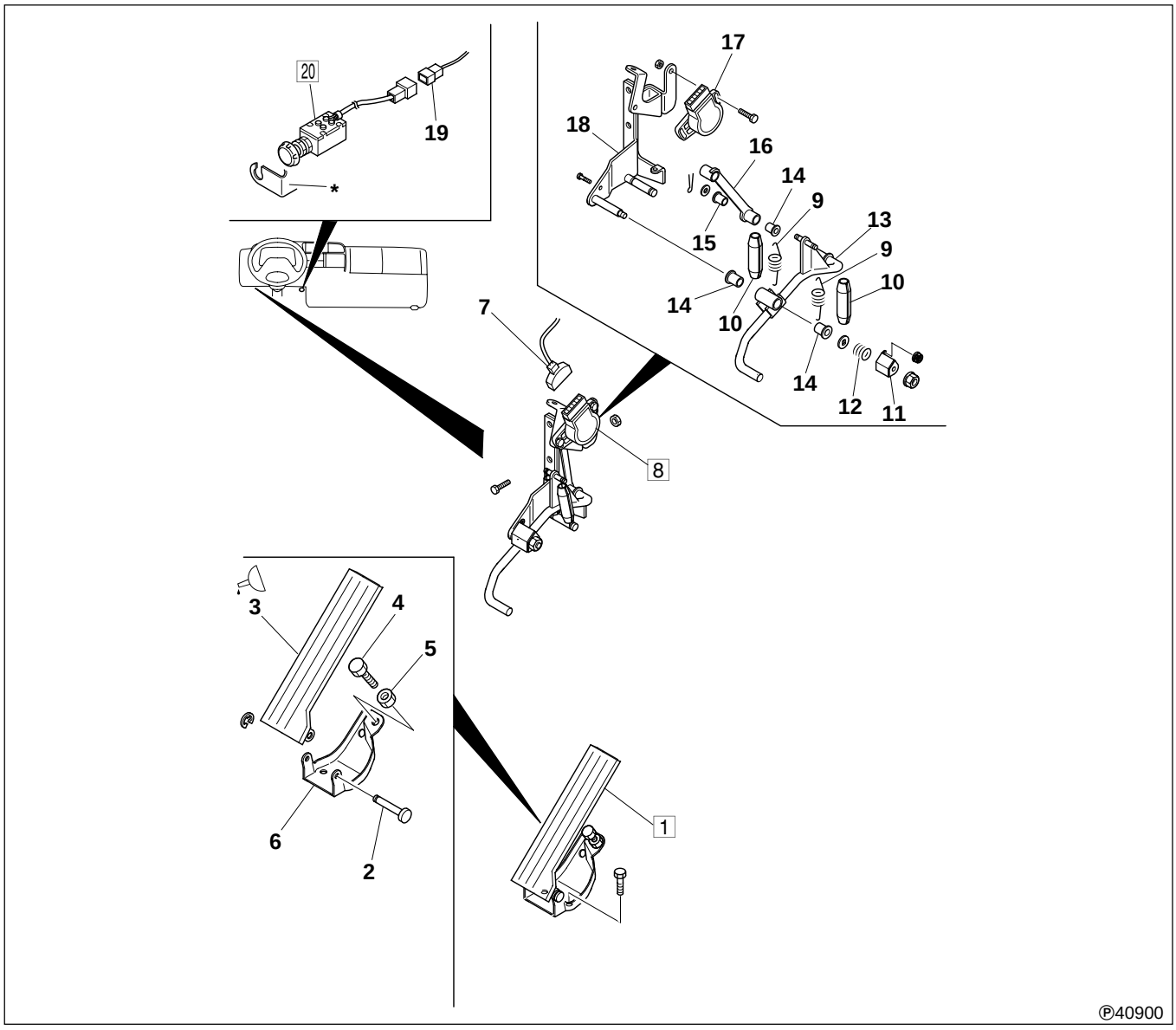

● **Disassembly sequence**

1 Accelerator pedal assembly
2 Clevis pin
3 Accelerator pedal
4 Stopper bolt
5 Nut
6 Accelerator pedal bracket
7 Harness connector
8 Accelerator position sensor & accelerator switch assembly
9 Return spring
10 Bushing
11 Shaft cover
12 Spring
13 Accelerator control arm
14 Bushing
15 Bushing
16 Accelerator control extension
17 Accelerator position sensor & accelerator switch unit
Gr 13E
18 Bracket
19 Harness connector
20 Emergency engine stop switch
Gr 13E
***:** Bracket

● **Assembly sequence**

Follow the disassembly sequence in reverse.

Service standards

Location	Maintenance item			Standard value	Limit	Remedy
17	Accelerator position sensor & accelerator switch output voltage  Ⓟ37519 (Backside of harness connector)	Sensor I ② - ⑤ Sensor II ② - ①	Idling position	0.85 ± 0.1 V	–	Replace
			Full-load position	4.15 ± 0.1 V	–	Replace
			Accelerator switch actuated position (no continuity between terminals ③ - ②)	1.0 ± 0.24 V	–	Replace

Lubricant

Location	Point of application	Specified lubricant	Quantity
3	Sliding contact surface between accelerator pedal and bracket	Mitsubishi chassis grease	As required

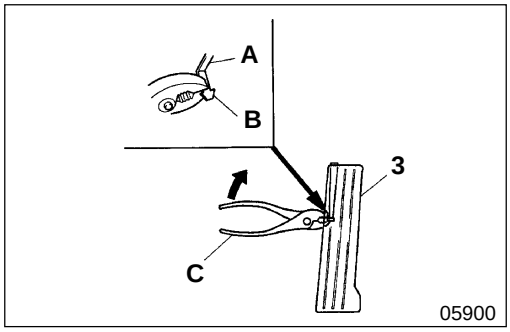

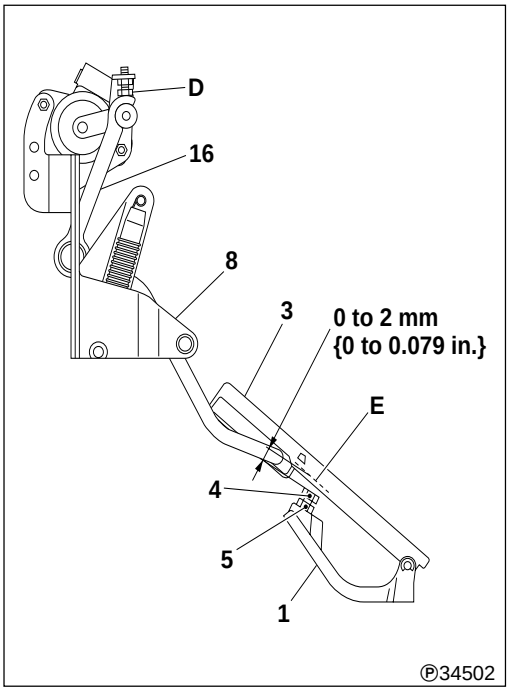

◆ Service procedure

1 Accelerator pedal assembly

[Removal]

Extract the stopper **A** from the accelerator pedal **3**.

To do so, pinch the hook **B** of the stopper with a pair of pliers **C** and pull it lightly toward the front of the vehicle while twisting the hook approximately 45 degrees.

CAUTION ⚠

Do not pull the stopper A by force. It could be damaged.

[Installation]

- Fit the accelerator pedal assembly **1** to the accelerator position sensor & accelerator switch assembly **8**.
- Depress the accelerator pedal **3** until the accelerator control extension **16** touches the stopper bolt **D** of the accelerator position sensor & accelerator switch assembly **8**.
- Check that the clearance between the stopper bolt **4** and the stopper bolt contacting surface **E** of the accelerator pedal **3** is within the tolerance shown in the illustration.
- If not, adjust the stopper bolt **4** to achieve the specified clearance. Secure the bolt with the nut **5**.

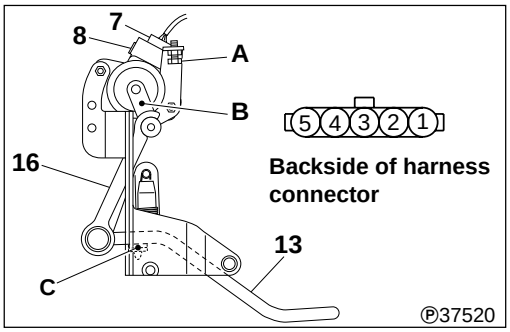

8 **Accelerator position sensor & accelerator switch assembly**

[Inspection]

- Fit the harness connector **7** to the accelerator position sensor & accelerator switch assembly **8**.
- Turn on the starter switch.
- Check the output voltage level of the accelerator position sensor & accelerator switch assembly **8** at the backside of the harness connector **7** in accordance with the table below.

Connector terminal / Control lever **B** position	Harness connector **7**					
	Accelerator position sensor I		Accelerator position sensor II		Accelerator switch	
	②	⑤	②	①	③	②
Idling position **D**	⊖ — ⊕		⊖ — ⊕		○ — ○	
Accelerator switch actuated position **E**	⊖ — ⊕		⊖ — ⊕		○	○
Full-load position **F**	⊖ — ⊕		⊖ — ⊕		○	○

○——○ Continuity established between terminals

D: Accelerator control arm **13** in contact with stopper **C**

E: Continuity lost between terminals ③ and ② as accelerator pedal is depressed

F: Accelerator control extension **16** in contact with stopper bolt **A**

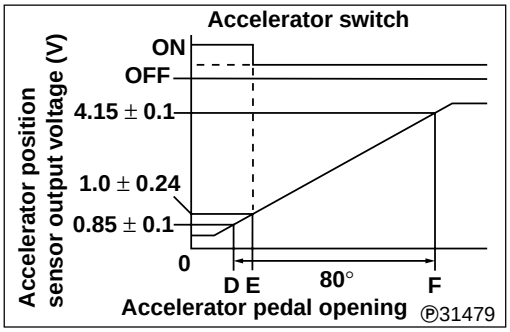

- If the sensor output voltage deviates from the specified value, rectify the deviation as follows.

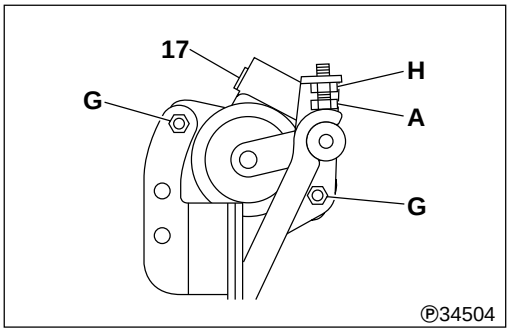

[Adjustment]

- Output voltage in idling position **D**:
  Loosen the screw **G** move the accelerator position sensor & accelerator switch unit **17** as required and retighten the screw.
- Output voltage with lever **B** in full-load position **F**:
  Loosen the nut **H**, turn the stopper bolt **A** as required and retighten the nut.

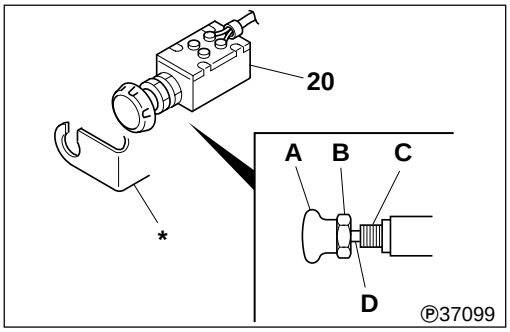

20 **Installation of emergency engine stop switch**

- Pull the knob **A** of the emergency engine stop switch **20** into the OFF position. Loosen the nut **B** to remove from the threaded end **C** of the switch.
- Set the shaft **D** in the bracket *****.
- Position the shaft **D** properly in the hole of the bracket ***** and tighten the nut **B**.

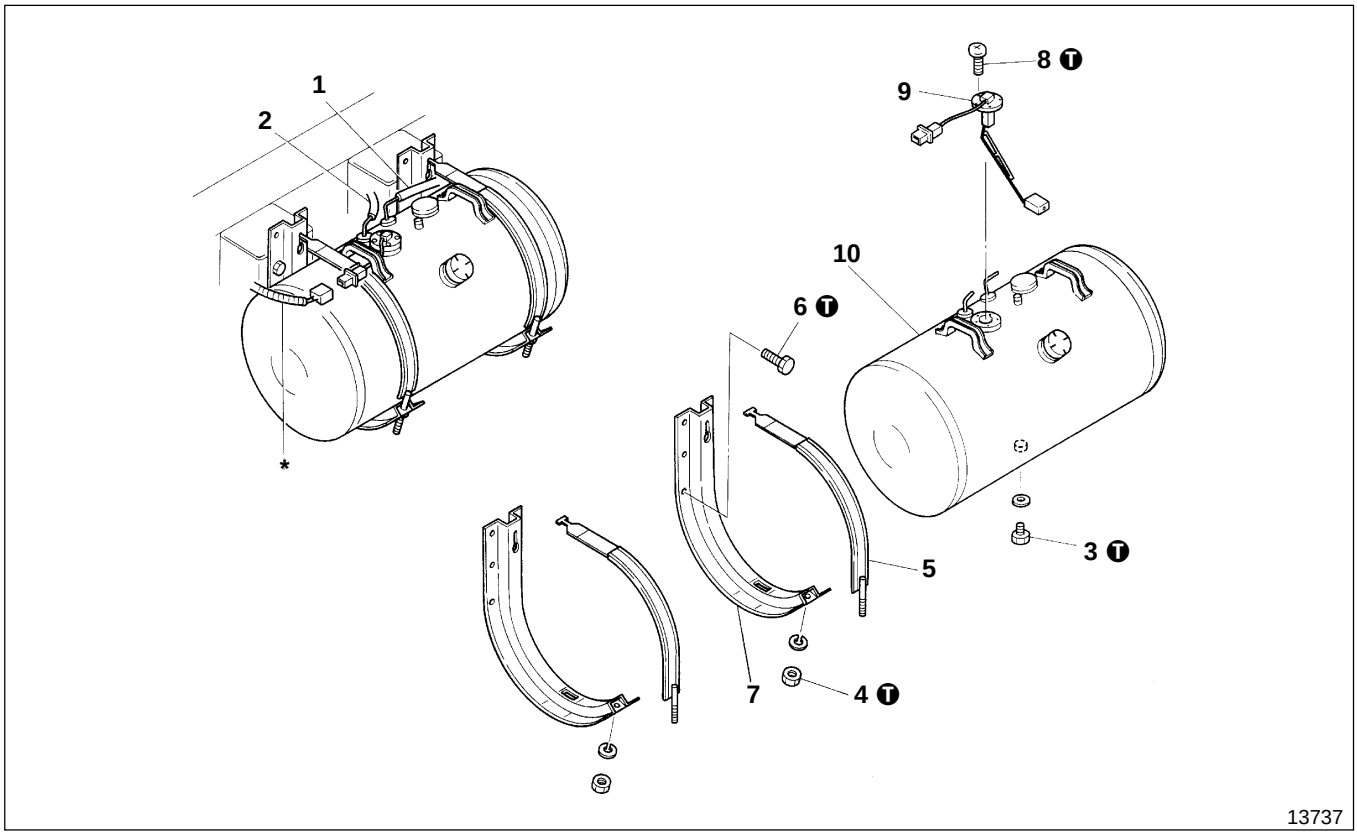

● **Work before removal**

WARNING ⚠

- **Keep unprotected lights away because of the risk of explosion.**
- **Wipe up any spilled fuel because it can cause a fire.**

NOTE:

Drain fuel before working on the job.

● **Removal sequence**

1 Suction hose
2 Return hose
3 Drain plug
4 Nut
5 Fuel tank band
6 Bolt
7 Fuel tank bracket
8 Screw
9 Fuel gauge unit Gr 54
10 Fuel tank
*: Chassis harness Gr 54

● **Installation sequence**

Follow the removal sequence in reverse.

T Tightening torque

Unit: N m {lbf.ft, kgf·m}

Location	Parts to be tightened	Tightening torque	Remarks
3	Drain plug	59 to 98 {43 to 72, 6 to 10}	–
4	Nut (Fuel tank band mounting)	5.9 to 9.8 {4.3 to 7.2, 0.6 to 1.0}	–
6	Bolt (Fuel tank bracket mounting)	59 to 78 {43 to 58, 6 to 8}	–
8	Screw (Fuel gauge unit mounting)	1.0 to 1.5 {0.7 to 1.1, 0.1 to 0.15}	–

FUEL FILTER

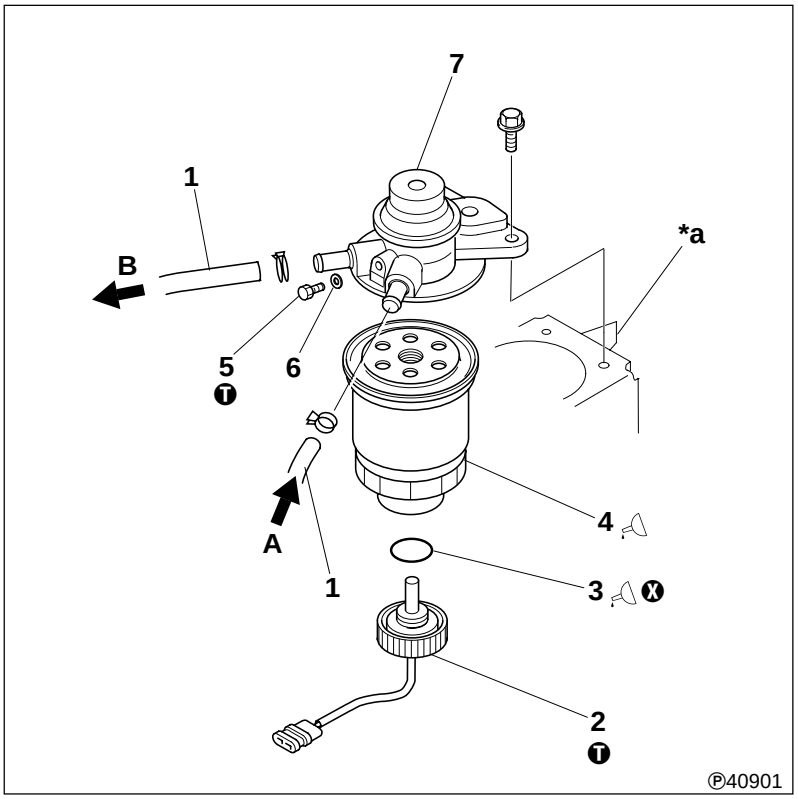

● **Disassembly sequence**

1 Fuel hose
2 Water level sensor Gr 54
3 O-ring
4 Fuel filter cartridge P. 13A-7
5 Air vent plug
6 Gasket
7 Fuel filter head

A: From fuel tank
B: To injection pump
***a**: Bracket
X: Non-reusable part

● **Assembly sequence**

Follow the disassembly sequence in reverse.

T Tightening torque

Unit: N·m {ft.lbs, kgf·m}

Location	Parts to be tightened	Tightening torque	Remarks
2	Water level sensor	2.5 ± 0.5 {1.81 ± 0.36, 0.25 ± 0.05}	–
5	Air vent plug	6 ± 1 {4.3 ± 0.7, 0.6 ± 0.1}	–

Lubricant

Location	Points of application	Specified sealant	Qunatity
3	O-ring	Engine oil	As required
4	Fuel filter cartridge gasket (surface in contact with fuel filter head)	Engine oil	As required

MEMO

INJECTION PUMP

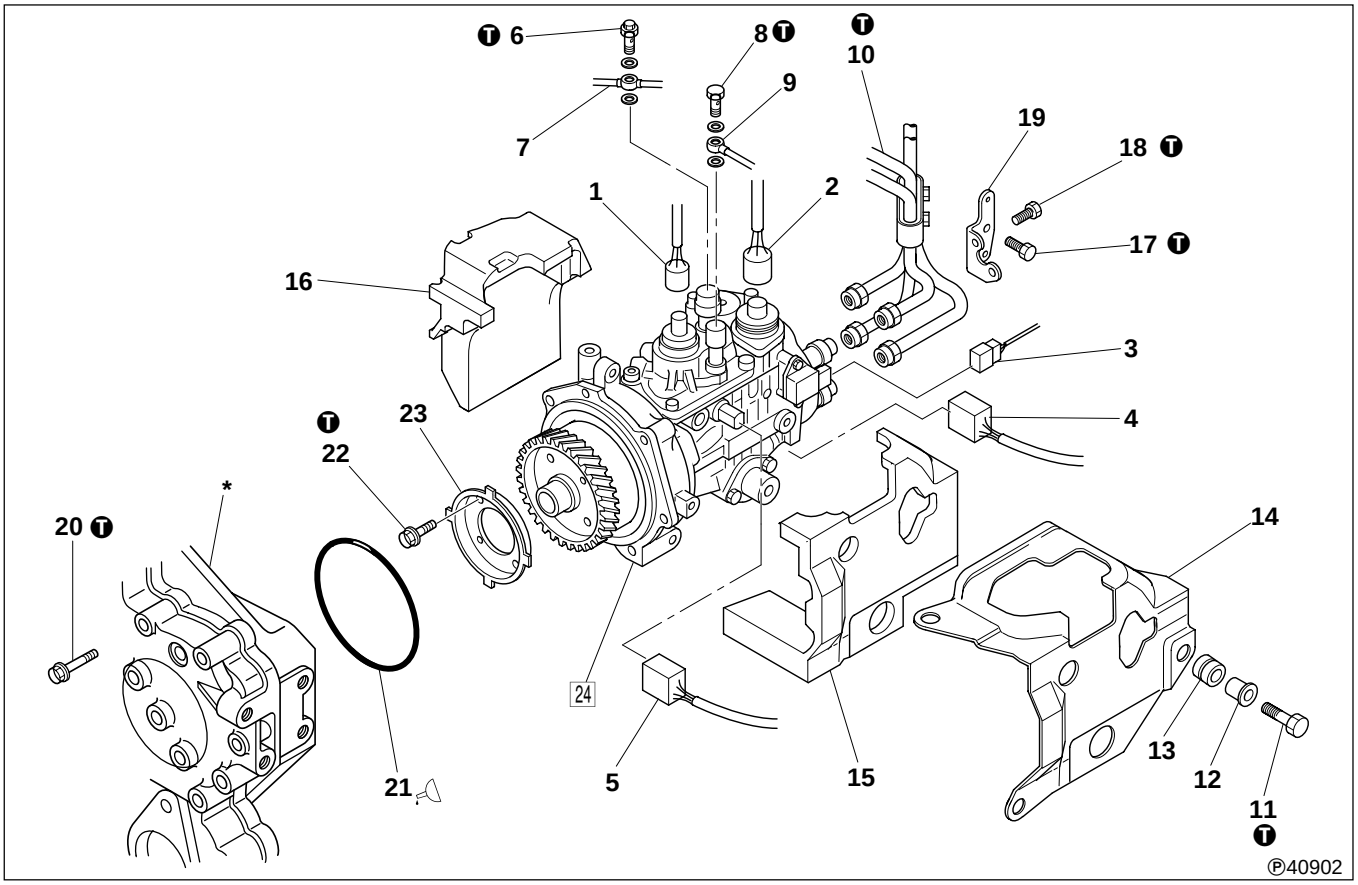

● **Disassembly sequence**

1 Harness connector (Engine speed sensor)
2 Harness connector (Spill valve)
3 Harness connector (Injection control ROM)
4 Harness connector (Timer control valve)
5 Harness connector (Fuel temperature sensor)
6 Overflow valve
7 Fuel return pipe
8 Eyebolt
9 Fuel suction pipe
10 Injection pipe
11 Bolt
12 Spacer
13 Insulator
14 Injection pump cover
15 Injection pump sound insulation
16 Rubber spacer
17 Bolt
18 Bolt
19 Pump bracket
20 Bolt
21 O-ring
22 Bolt
23 Sensor plate
24 Injection pump assembly
*****: Front case assembly Gr 11
X: Non-reusable part

● **Assembly sequence**

Follow the disassembly sequence in reverse.

CAUTION ⚠

- **For maintenance of the injection pump assembly 24, please contact a Denso service station.**
- **Dirt particles in the injection pump assembly 24 can seriously detract from engine performance. To prevent enter of dirt, cover all pipes, hoses and other parts after removal.**

❶ Tightening torques

Unit: N·m {ft.lbs, kgf·m}

Location	Parts to be tightened	Tightening torque	Remarks
6	Overflow valve (fuel return pipe mounting)	19.6 to 29.5 {14 to 22 , 2 to 3}	–
8	Eyebolt (fuel suction pipe mounting)	19.6 to 29.5 {14 to 22 , 2 to 3}	–
10	Injection pipe (union nut mounting)	29.4 {22, 3}	–
11	Bolt (injection pump cover mounting)	9.8 {7.2, 1}	–
17	Bolt (pump bracket mounting)	44.1 {33, 4.5}	–
18	Bolt (injection pump assembly mounting)	47.0 {35, 4.8}	–
20	Bolt (injection pump assembly mounting)	23.5 {17, 2.4}	–
22	Bolt (sensor plate mounting)	4.9 {3.6, 0.5}	–

Lubricant

Location	Points of application	Specified lubricant	Quantity
21	O-ring	Engine oil	As required

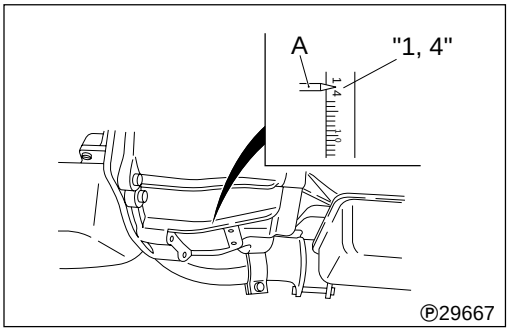

◆ Service procedure

24 **Installation of injection pump assembly**

- Crank the engine clockwise to bring the cylinder No. 1 piston to the top dead center of compression stroke; align the pointer **A** in the torque converter housing inspection opening with the inscribed mark between "**1**" and "**4**" on the flywheel.
- Check that the rocker arms of both inlet and exhaust valves of the cylinder No. 1 move.
- If the rocker arms still hold the valves down, give the engine another turn.

NOTE:

There are two kinds of marks inscribed in the flywheel, "I" and "IV" and "1" and "4". Do not confuse.

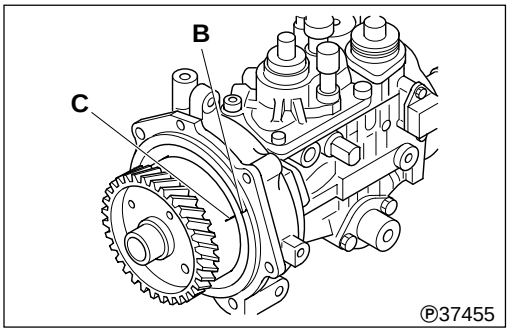

- Align the notch **B** in the flange plate with the inscribed mark **C** on the injection pump gear.

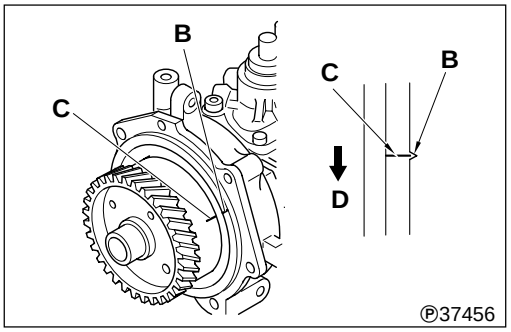

- Ascertaining the alignment between notch **B** and inscribed mark **C**, push in the injection pump assembly to install in position. At this time, the inscribed mark moves in the direction **D**.

MEMO

INJECTION NOZZLE

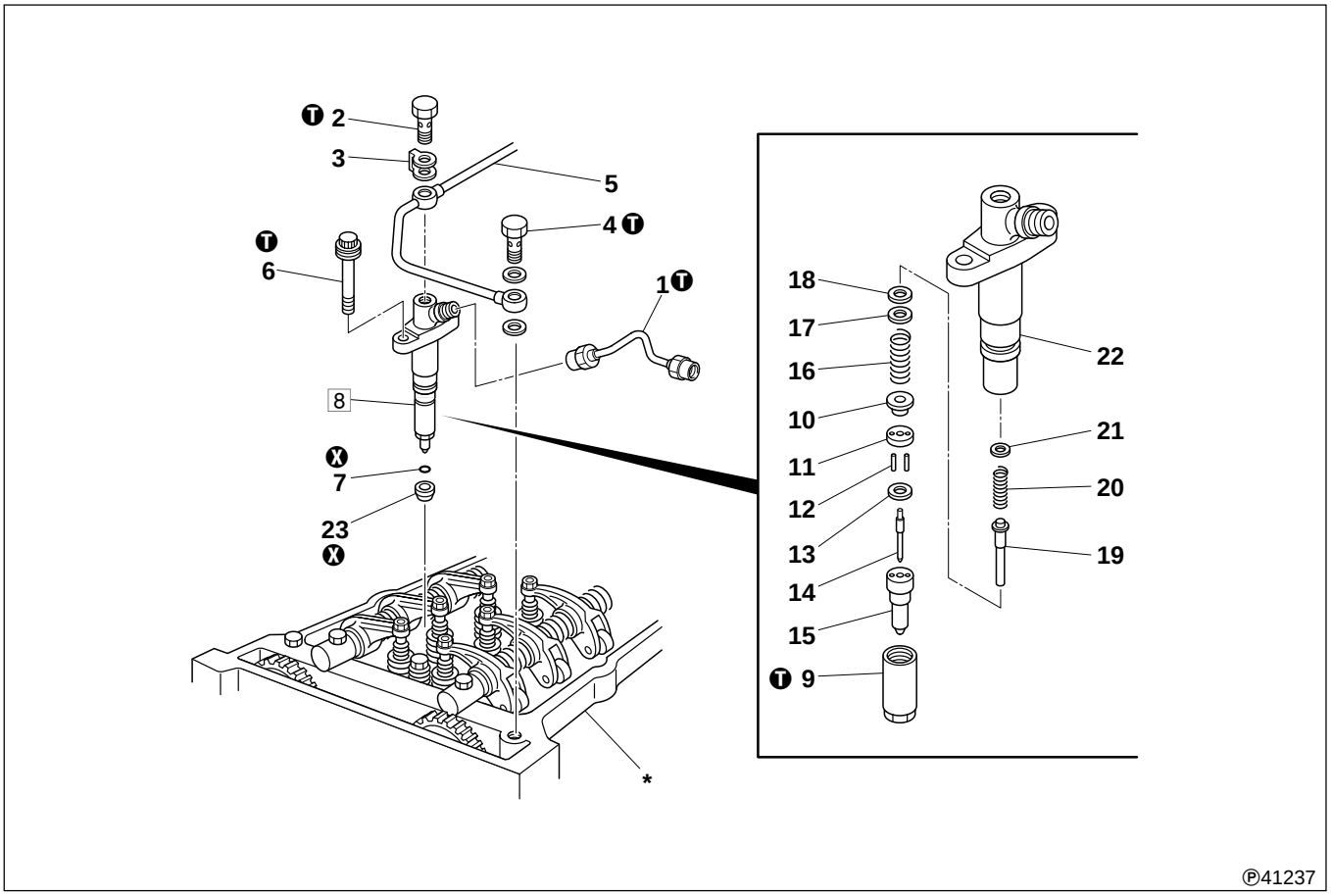

● **Disassembly sequence**

1 Injection pipe
2 Eyebolt
3 Gasket
4 Eyebolt
5 Leak-off pipe
6 Bolt
7 O-ring
8 Injection nozzle assembly
9 Retaining nut
10 Spring seat (for adjustment of pre-lift)
11 Tip packing
12 Straight pin
13 Washer (for adjustment of needle valve lift)
14 Needle valve
15 Nozzle
16 2nd pressure spring
17 Adjusting shim (for adjustment of 2nd valve opening pressure)
18 Spring seat
19 Pressure pin
20 1st pressure spring
21 Adjusting shim (for adjustment of 1st valve opening pressure)
22 Nozzle holder
23 Nozzle gasket
*****: Cylinder head 📖 Gr 11
X: Non-reusable part

● **Assembly sequence**

Follow the disassembly sequence in reverse.

CAUTION ⚠

- **Take care not to touch the sliding part of the needle valve 14. It could be scratched or corroded in the worst case, resulting in the loss of airtightness between the valve and the nozzle 15.**
- **Under no circumstances change the needle valve 14 and nozzle 15 combination between cylinders.**
- **Dirt particles can seriously detract from engine performance. To prevent ingress of dirt, cover parts to which the injection nozzle assemblies 8 were fitted after removal.**

NOTE:

Clean off any carbon deposits before disassembling, reassembling or adjusting the injection nozzle assembly 8. Before disassembly, check the pressure and shape of the spray and inspect the assembly for fuel leads. If no abnormality is apparent, do not commence disassembly.

Service standards

Unit: mm {in.}

Location	Maintenance item		Standard value	Limit	Remedy
8	Injection nozzle assembly injection pressure (valve opening pressure)	1st valve opening pressure	$16.18\ ^{+0.98}_{0}$ MPa {$2346\ ^{+142}_{0}$ psi^2, $165\ ^{+10}_{0}$ kgf/cm^2}	–	Adjust
		2nd valve opening pressure	20.10 ± 0.49 MPa {2915 ± 71 psi^2, 205 ±5 kgf/cm^2}	–	
–	Prelift		0.08 ± 0.01mm {0.0031 ± 0.14in}	–	Adjust
–	Needle valve lift		$0.25\ ^{+0.03}_{-0.02}$ {$0.0098\ ^{+0.0012}_{-0.00079}$ }	–	Adjust

❶ Tightening torques

Unit: N·m {ft.lbs, kgf·m}

Location	Parts to be tightened	Tightening torque	Remarks
1	Union nut (injection pipe mounting)	29.4 {22, 3.0}	–
2	Eyebolt (leak-off pipe (nozzle side) mounting)	29.4 {22, 3.0}	–
4	Eyebolt (leak-off pipe (head side) mounting)	20.6 {15, 2.1}	–
6	Bolt (injection nozzle assembly mounting)	14.7 {11, 1.5}	–
9	Retaining nut	25 to 34 {18 to 25, 2.5 to 3.5}	–

Special tool

Location	Tool name	Part No.	Application
–	Nozzle Cleaning Tool	⋆105789-0010	Cleaning injection nozzle assemblies
–	Tool Set	*95093-00040	Disassembly, assembly and adjustment of injection nozzle
–	*1 Attachment Measure	*95093-10300	Measurement of prelift
–	*1 Base	*95093-10230	Assembly of injection nozzle
–	Master Spring Seat	*95093-10330	Adjustment of 2nd valve opening pressure

⋆: ZEXEL product number
*: DENSO product number
*1: Component of Tool Set (95093-00040)

◆ Service procedure

● Inspection before disassembly

Fit the injection nozzle assembly **8** onto the nozzle tester **A** ready for inspection.

WARNING ⚠

Do not touch the spray that comes out of the nozzle.

NOTE:

Before commencing inspection, operate the lever on the nozzle tester A two or three times to bleed all air out of the arrangement.

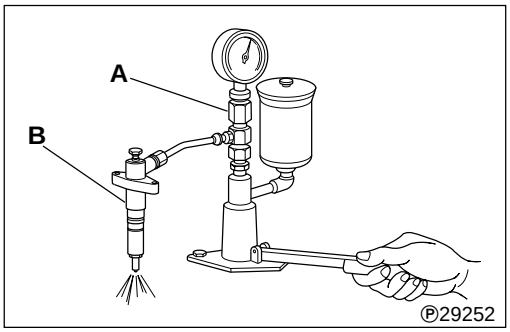

(1) Checking valve opening pressure

- Push down the lever on the nozzle tester **A** at a rate of 1 to 2 seconds per stroke. The pressure gauge reading will gradually rise, then the needle will suddenly deflect. Note the pressure when the needle starts to deflect.
- If the measurement is out of specification, disassemble the nozzle, clean it and make adjustments by changing the shims **17**, **21**.
- If the measurement is still out of specification after adjustment, replace the injection nozzle assembly **8**.

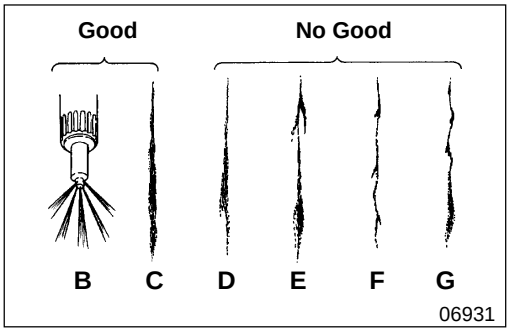

(2) Inspecting spray condition

- Pump the lever on the nozzle tester **A** at a rate of about 1 to 2 strokes per second and maintain a continuous spray.

  B: Even spray from all five injection orifices (Good)
  C: Even and symmetrical spray (Good)
  D: Asymmetrical spray (No Good)
  E: Branched spray (No Good)
  F: Thin spray (No Good)
  G: Irregular spray (No Good)

- If the spray is unsatisfactory, disassemble and clean the injection nozzle assembly **8**, then inspect the spray again. If the spray is still unsatisfactory, replace the injection nozzle assembly.
- Check that no fuel drips from the nozzle after the spray is complete.

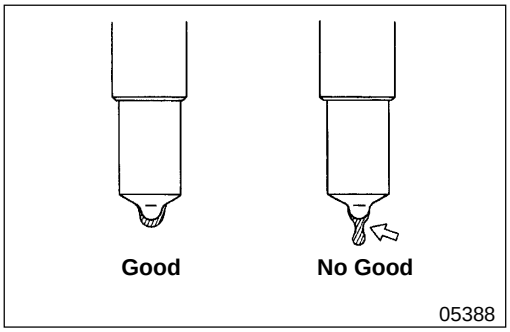

(3) Inspecting for oil-tightness and leaks

- Slowly increase the nozzle pressure to the pressure below the specified 1st valve opening pressure by 1.96 MPa {285 lbf/in^2, 20 kgf/cm^2}. Maintain this pressure for 10 seconds and check that no fuel drips from the end of the nozzle.
- If the injection nozzle assembly **8** appears defective, disassemble and clean it, then inspect it again. If the injection nozzle assembly still appears defective, it must be replaced.

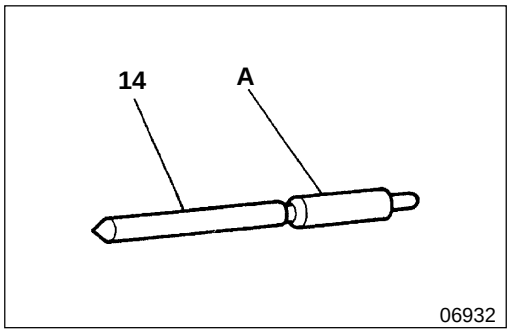

8 **Injection nozzle assembly**

[Disassembly]

CAUTION ⚠

- **Never touch the sliding part A of the needle valve 14.**
- **Never change the needle valve 14 and nozzle 15 combination on each cylinder.**

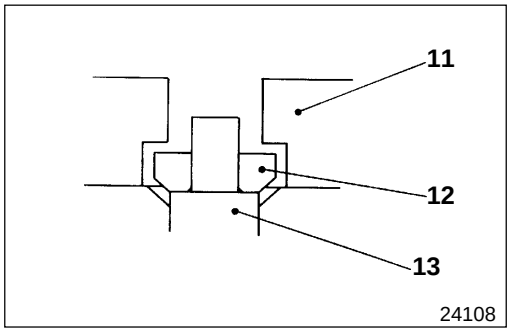

[Assembly]

Assemble the tip packing **11** and the washer **12** (for adjustment of needle valve lift) in the illustrated directions.

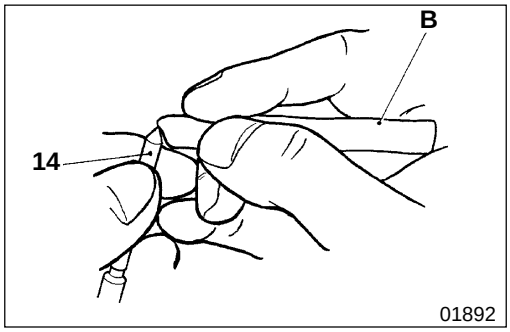

[Cleaning]

Wash the needle valve **14** and nozzle **15** in diesel fuel, then use the Cleaning Tool to remove any carbon deposits in accordance with the following procedure.

- Remove carbon from the end of the needle valve **14** using the Cleaning Bar **B** of the Cleaning Tool.

CAUTION ⚠

Do not use a wire brush or any hard metallic object for cleaning.

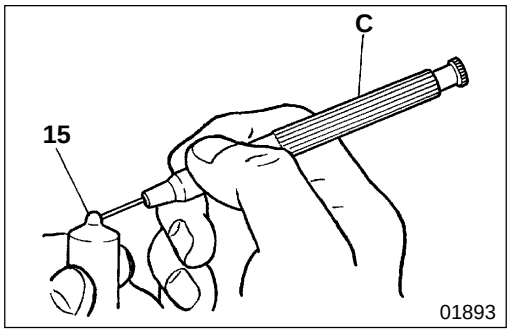

- Remove carbon from the injection orifice of the nozzle **15** using the Cleaning Needle **C** of the Cleaning Tool. Insert the Cleaning Needle and rotate it to remove carbon.

  Cleaning needle diameter: 0.20 mm {0.0079 in.} or smaller

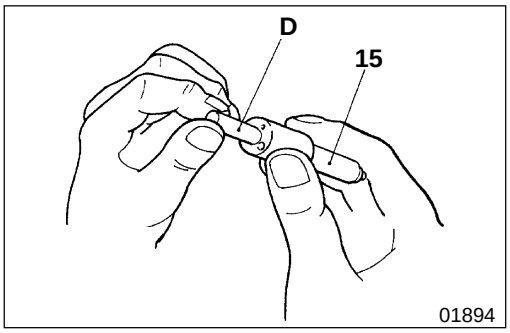

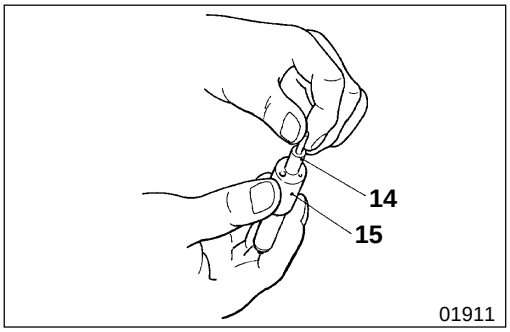

- Clean the seat of the nozzle **15** using the Cleaning Scraper **D** of the Cleaning Tool.
- To remove burned and hardened carbon, use FUSO Carbon Remover.

[Inspection]

- Wash the needle valve **14** and nozzle **15** in diesel fuel, then fit them together.
- Pull up the needle valve **14** by approximately 1/3 of its entire stroke, then check that it drops under its own weight. Repeat this test several times, turning the needle valve each time.
- If the needle valve **14** does not drop as required, wash it in diesel fuel and carry out this test again. If the needle valve is still defective, replace the needle valve and nozzle **15** as a set.

[Adjustment]

During reassembly, make adjustments in the sequence shown below.

CAUTION ⚠

- **Before making adjustments, wash all parts in diesel fuel and ensure that they are free of dirt and other foreign material.**
- **Do not touch the sliding surfaces of the needle valve 14.**

- Check needle valve full lift
- Check prelift
- Adjust 2nd valve opening pressure
- Adjust 1st valve opening pressure

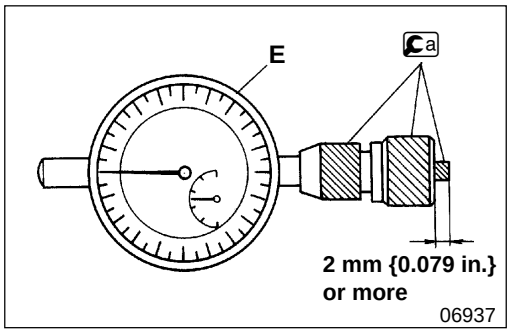

● **Checking needle valve full lift**

- Set the Ca Attachment Measure to a dial gauge **E**.

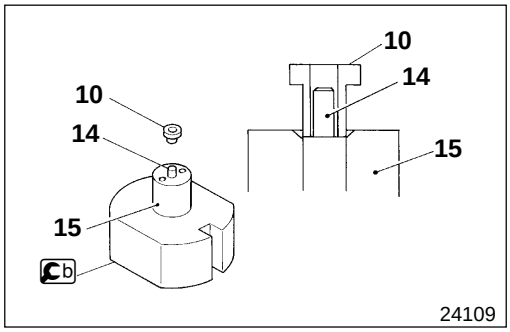

- Mount the nozzle **15** on the Cb base, with the needle valve **14** and spring seat **10** (for adjustment of pre-lift) fitted to the nozzle in that order.

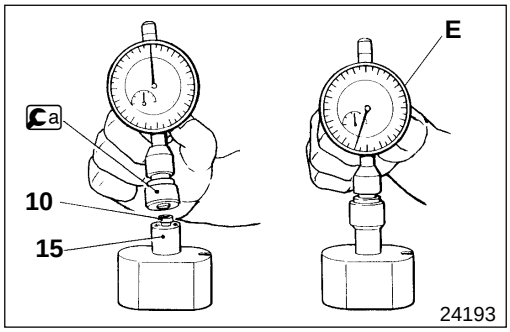

- Fit the Ca Attachment Measure onto the nozzle **15**.
- Zero the dial gauge **E**.

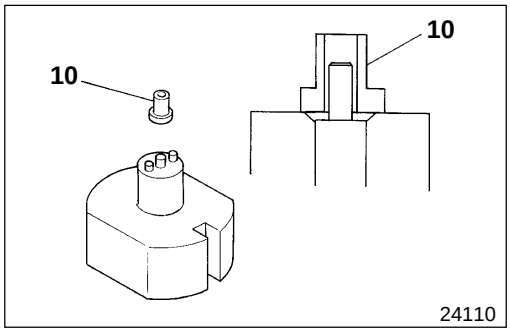

- Remove the Ca Attachment Measure. Remove the spring seat **10** (for adjustment of pre-lift) and refit it to the nozzle upside down.

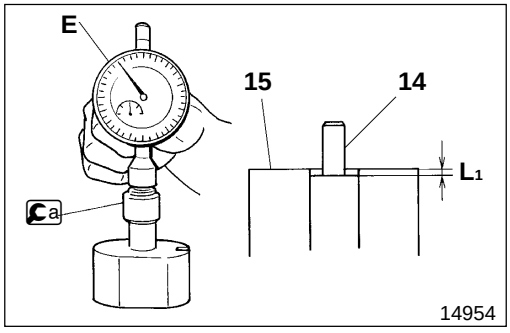

- Fit the Ca Attachment onto the nozzle **15** again, and read the dial gauge **E**. The reading should be the illustrated dimension **L_1.**

INJECTION NOZZLE

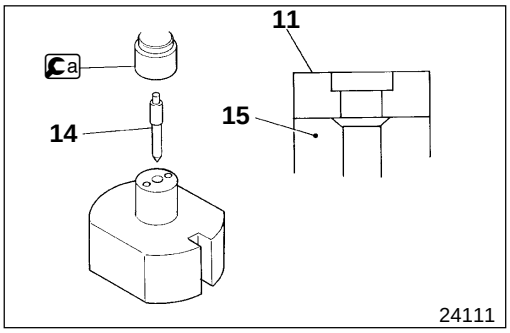

- Remove the a Attachment Measure and the needle valve **14**. Fit the tip packing **11** to the nozzle **15** as shown.

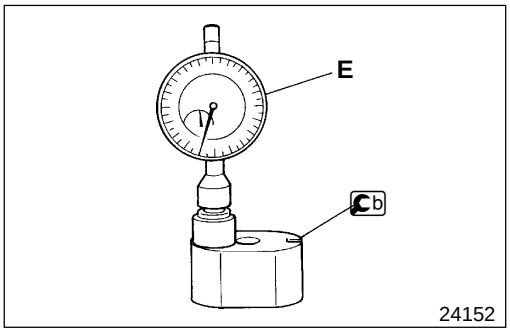

- Zero the dial gauge **E** on the b base.

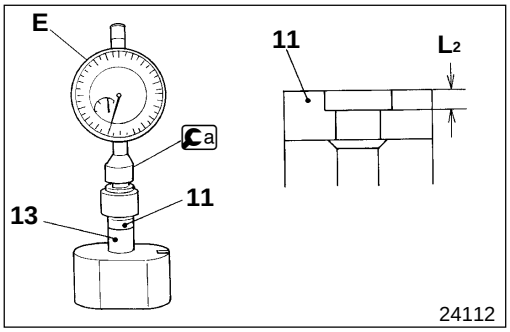

- Fit the a Attachment Measure to the tip packing **11**, and read the dial gauge **E**.
  The reading should be the illustrated dimension **L2**.

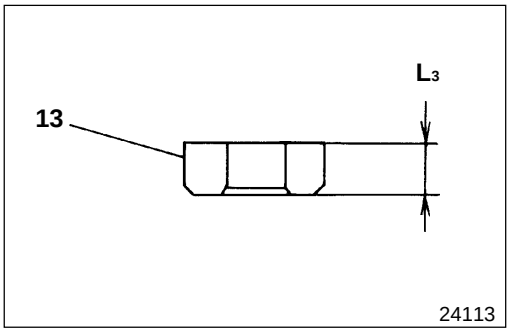

- Measure the thickness **L3** of the washer **13** (for adjustment of needle valve lift).

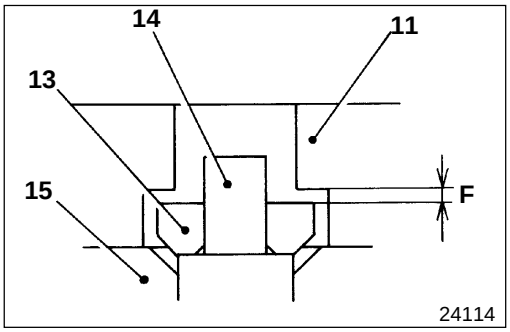

- Calculate the maximum lift **F** of the needle valve **14** from the measurements **L1**, **L2** and **L3** as follows.
  Maximum lift **F** = **L1** + **L2** - **L3**
- If the calculated value is out of specification, make the necessary adjustment by changing the washer **13** (for adjustment of needle valve lift).
  Washers **13** are available in the following thicknesses (**L3**):
  2.40, 2.425, 2.45, 2.475, 2.50 mm {0.094, 0.095, 0.096, 0.097, 0.098 in.} (5 sizes)

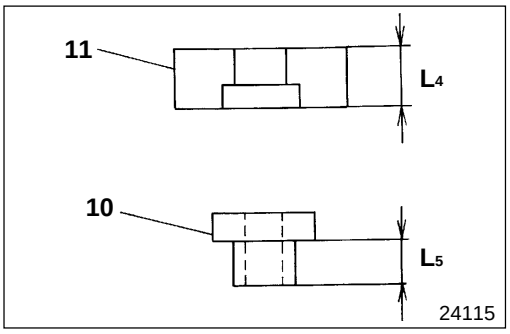

● **Adjusting pre-lift**

- Measure the thickness **L4** of the tip packing **11**.
- Measure the thickness **L5** of the spring seat **10 (**for adjustment of pre-lift).

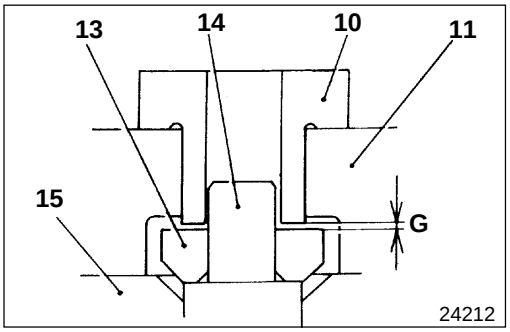

- Calculate the pre-lift **G** from the measurements **L1**, **L3**, **L4** and **L5** as follows.
  Pre-lift **G** = **L4** - **L5** - **L3** + **L1**
- If the calculated value is out of specification, make the necessary adjustment by changing the spring seat **10** (for adjustment of pre-lift).
  Spring seats 10 are available in the following thicknesses (L_5):
  2.59 to 2.80 mm {0.101 to 0.110 in.} (22 sizes at steps of 0.01 mm {0.00039 in.})

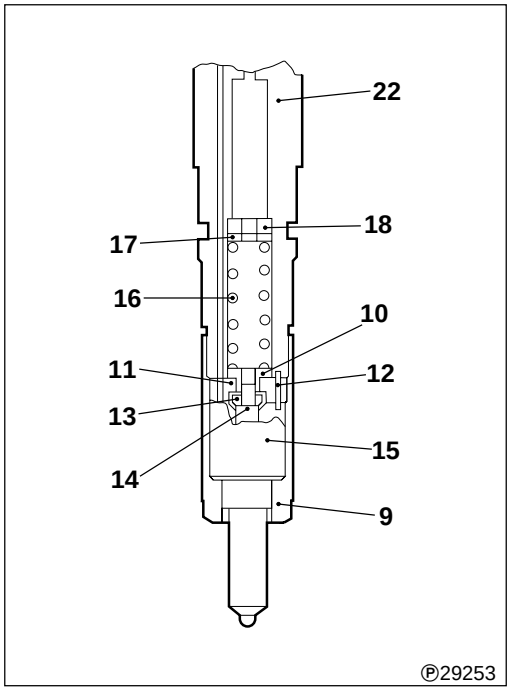

● **Adjusting 2nd valve opening pressure**

- Assemble parts to the nozzle holder **22** as shown. Fit the Ⓒ Master Spring Seat in the place of the spring seat **10** (for adjustment of pre-lift).
- Tighten the retaining nut **9** to the specified torque.
- Fit the nozzle assembly onto the nozzle tester and measure the 2nd valve opening pressure.

CAUTION ⚠

Never touch the spray that comes out of the nozzle.

- If the reading is out of specification, make the necessary adjustment by changing the adjusting shim **17** (for adjustment of 2nd valve opening pressure). Adjusting shims **17** are available in the following thicknesses.
  0.70 to 2.15 mm {0.028 to 0.085 in.} (30 sizes at steps of 0.05 mm {0.002 in.})
  0.975 to 1.775 mm {0.038 to 0.070 in.} (17 sizes at steps of 0.05 mm {0.002 in.})
- A difference of 0.025 mm {0.00098 in.} in the thickness of the adjustment shim **17** changes the 2nd valve opening pressure by 345 kPa {50 psi^2, 3.5 kgf/cm^2}.

INJECTION NOZZLE

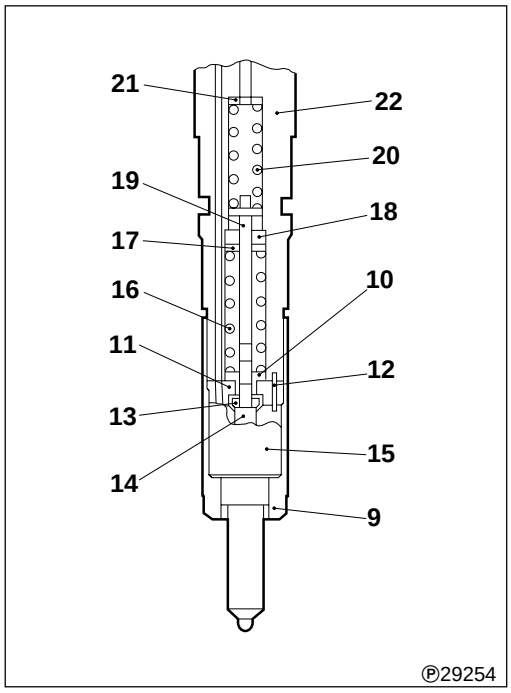

● **Adjusting 1st valve opening pressure**

- Assemble parts to the nozzle holder **22** as shown.
- Tighten the retaining nut **9** to the specified torque.
- Fit the nozzle assembly onto the nozzle tester and measure the 1st valve opening pressure.

CAUTION ⚠

Never touch the spray that comes out of the nozzle.

- If the reading is out of specification, make the necessary adjustment by changing the adjusting shim **21** (for adjustment of 1st valve opening pressure).

  Adjusting shims **21** are available in the following thicknesses:
  0.8 to 2.0, 2.05, 2.075 to 2.2 mm {0.031 to 0.079, 0.080, 0.081 to 0.087 in.} (56 sizes at steps of 0.025 mm {0.00098 in.})
  A difference of 0.025 mm {0.00098 in. } in the thickness of the adjusting shim **21** changes the 1st valve opening pressure by 345 kPa {20 psi^2, 3.5 kgf/cm^2}.

MITSUBISHI
FUSO

FE

Service Manual

Group 13E
Fuel and Engine Control
<4M50T2>

2001 Model Year Change

Table of Contents

MITSUBISHI FUSO TRUCK OF AMERICA, Inc.

BACK HOME

Pub No. TWSE9501-513E

GROUP 13E V4 SYSTEM <4M5>

SPECIFICATIONS 13E- 2

STRUCTURE AND OPERATION
- 1. General 13E- 3
- 2. Electronic Control System 13E- 5
- 3. Pin Configuration of Engine Control Unit 13E- 9

TROUBLESHOOTING
- 1. Inspection Procedures 13E-14
- 2. Connection of Multi-Use Tester II 13E-16
- 3. Reading and Erasing Diagnostic Trouble Codes 13E-17
- 4. Diagnostic Trouble Codes and Check Items 13E-19
- 5. Service Data of Multi-Use Tester II 13E-28
- 6. Actuator Test by Multi-Use Tester II 13E-30
- 7. Checks at Connector of Control Unit 13E-32
- 8. Checks on Intermittent Troubles 13E-35

INSPECTION OF ELECTRICAL EQUIPMENT 13E-36

LOCATIONS OF PARTS 13E-44

SPECIFICATIONS

Item			Specification
Injection pump assembly	Manufacturer		DENSO
	Model		V4
	Type		Distribution type electronically controlled pump
	Spill valve (Solenoid valve)		Electronically controlled type
	Timer	Control scheme	High pressure chamber control
		Drive method	Timer control valve (TCV)
	Overflow valve	Valve opening pressure kPa (psi^2, kgf/cm^2)	343 {49.8, 3.5}
	Feed pump	Type	Vane type
		Theoretical delivery rate cc {cu.in.}	6.4 {0.39} (per rotation)
	Fuel temperature sensor		Provided
	Engine speed sensor		Provided
Engine control unit	Manufacturer		DENSO
	Rated voltage V		12
Drive unit	Manufacturer		DENSO
	Rated voltage V		12

1. GENERAL

The V4 system adopts a distribution type injection pump, which features small size and light weight and yet high speed, as well as an electronic control unit which controls the fuel injection rate, fuel injection timing, etc., thereby operating the engine in an optimum condition.

Theory of Operation

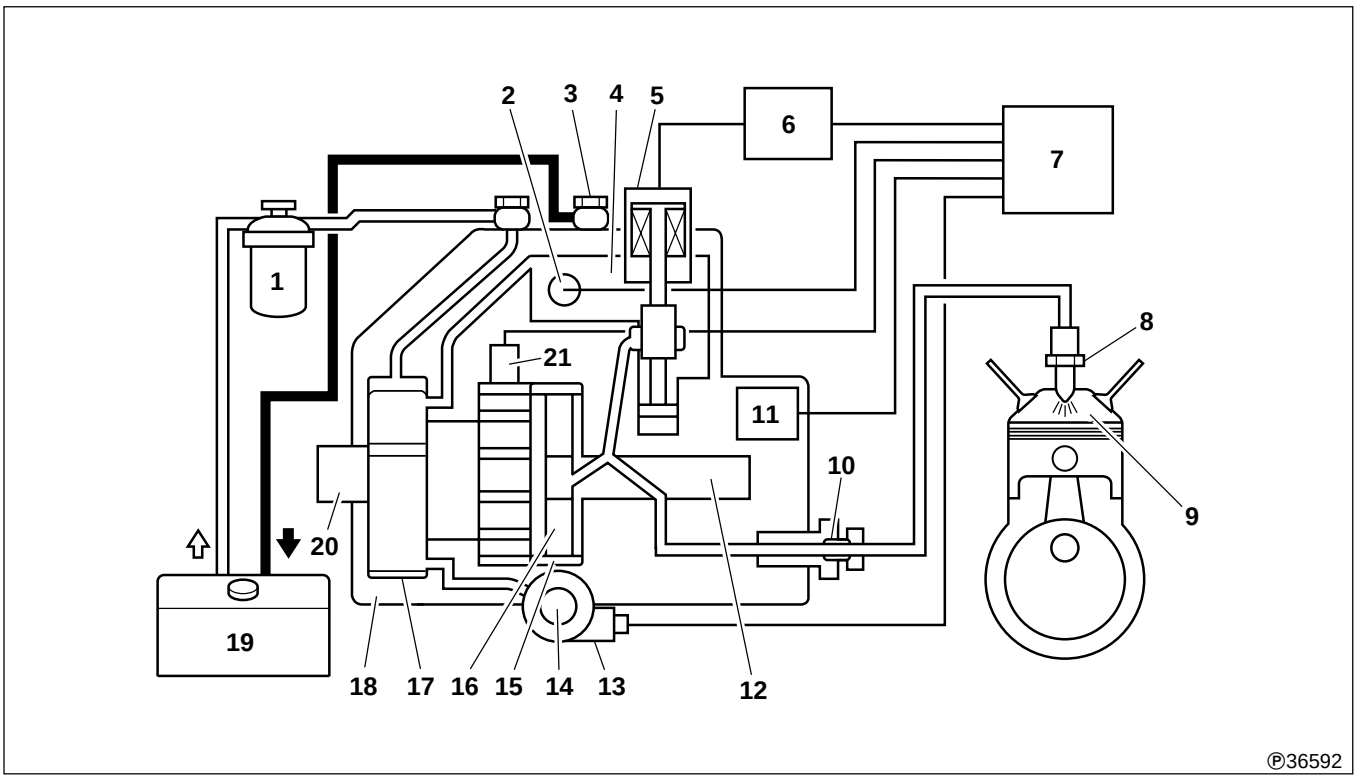

1 Fuel filter
2 Fuel temperature sensor
3 Overflow valve
4 Pump chamber
5 Spill valve
6 Drive unit
7 Engine control unit
8 Injection nozzle
9 Fuel chamber
10 Delivery valve
11 Injection rate adjusting read-only memory
12 Rotor
13 Timer control valve
14 Timer piston
15 Inner cam
16 Plunger
17 Feed pump
18 Injection pump proper
19 Fuel tank
20 Drive shaft
21 Engine speed sensor

- The feed pump **17** in the injection pump proper **18** pumps up the fuel from the fuel tank **19**, keeping the inside of the injection pump full of the fuel at all times.
- The rotor **12** rotates in the inner cam **15**.
- The drive unit **6** converts the spill valve **5** drive signal delivered from the engine control unit **7** into a high voltage signal to enhance the responsiveness of the spill valve **5**.
- The fuel injection rate is increased or reduced by adjusting the opening time of the spill valve **5**.
- When the spill valve **5** is opened, the inside of the rotor **12** is filled with the fuel.
- After it has been filled, the spill valve **5** closes to confine the fuel in the rotor **12**. In this condition, as the drive shaft **20** rotates, the fuel is pressurized by the inner cam **15** and plunger **16** and fed through the delivery valve **16** to the injection nozzle **8** from which it is injected.
- Then the spill valve **5** opens, and a resultant decline in the fuel pressure in the rotor **12** causes the delivery valve **10** to close, thereby bringing the fuel injection to an end.
- The overflow valve **3** returns the fuel to the fuel tank **19** when the fuel pressure in the injection pump exceeds a predetermined value.
- The fuel injection timing is controlled by the timer control valve **13** which controls the fuel pressure acting on the timer piston **14**.
- The timer control valve **13** is activated by commands from the engine control unit **7**.

2. ELECTRONIC CONTROL SYSTEM

2.1 System Block Diagram

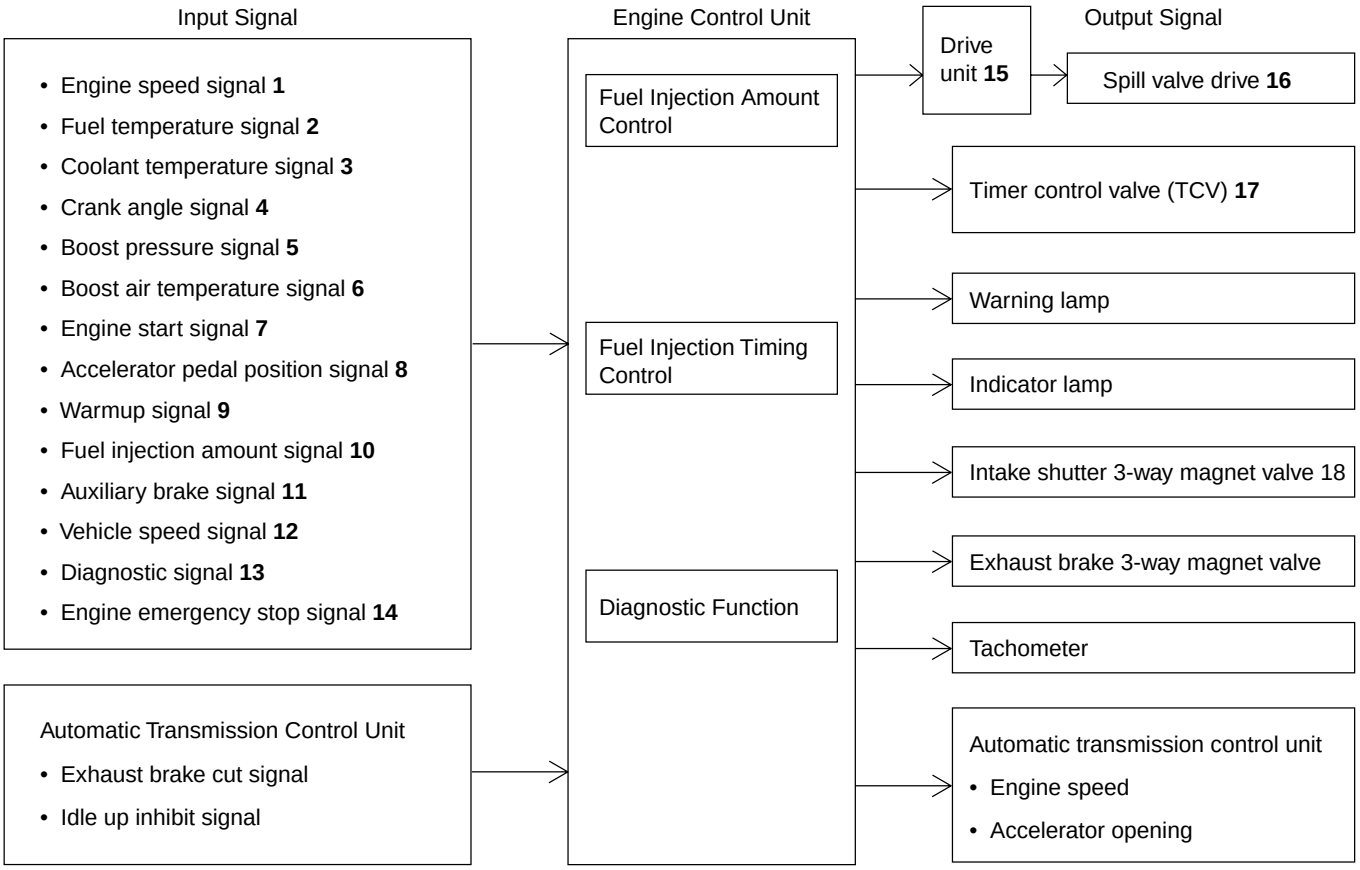

	Information Signal	Part Names	Major Function or Operation
1	Engine speed signal	Engine speed sensor	Detection of engine speed
2	Fuel temperature signal	Fuel temperature sensor	Detection of fuel temperature
3	Coolant temperature signal	Coolant temperature sensor	Detection of coolant temperature
4	Crank angle signal	TDC sensor	Detection of crank angle signal
5	Boost pressure signal	Boost pressure sensor	Detection of boost pressure
6	Boost air temperature signal	Boost air temperature sensor	Detection of boost air temperature
7	Engine start signal	Starter switch	Recognition of engine start when starter switch is placed at START position
8	Accelerator depressed signal	Accelerator position sensor	Detection of amount that accelerator pedal has been depressed
		Accelerator switch	Detection of released/depressed accelerator pedal
9	Warmup accelerating signal	Idle control variable resistor	Acceleration of warmup
		Cold start switch	
10	Fuel injection amount adjustment signal	Injection amount adjusting ROM	Adjustment of fuel injection amount
11	Auxiliary brake signal	Exhaust brake switch	Control of auxiliary brake
		Exhaust brake cut relay	
12	Vehicle speed signal	Vehicle speed sensor	Detection of vehicle speed

	Information Signal	Part Names	Major Function or Operation
13	Diagnostic signal	Diagnosis switch	Transmission of diagnosis signal
		Memory clear switch	Erasure of diagnostec trouble code Transmission of past diagnostic trouble code
14	Engine emergency stop signal	Emergency engine stop switch	Emergency shutdown of engine
15	–	Drive unit	Assurance of high voltage for high speed drive of spill valve
16	–	Spill valve	Control of fuel injection amount and injection rate
17	Timer control valve operation signal	Timer control valve	Operation of timer piston
18	–	Intake shutter 3-way magnet valve	Operation of intake shutter 3-way magnet valve

2.2 Fuel Injection Rate Control

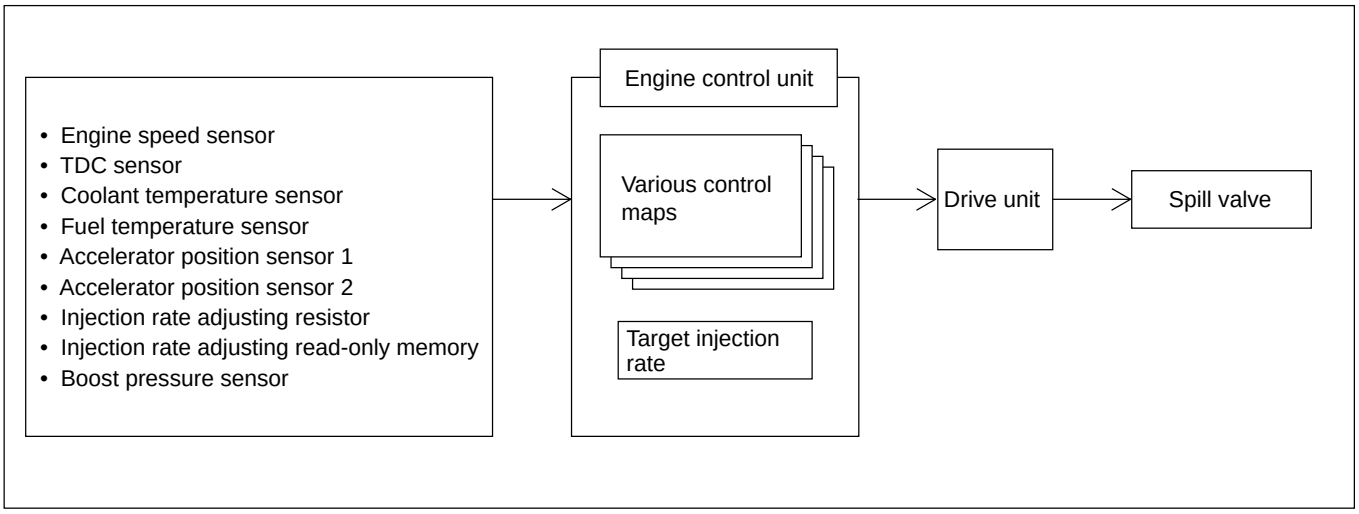

- During operation of the engine, the engine control unit (ECU) processes the individual information signals according to the control maps to select an appropriate injection mode from among the “basic”, “maximum” and “minimum”.
- After selection of the injection mode, the ECU calculates the minimum value to ensure that the maximum injection rate is not exceeded and determines the target injection rate.
- Once the target injection rate has been determined, the engine control unit outputs a signal to drive the spill valve.
- The signal to drive the spill valve is passed through the drive unit so that its responsiveness for high speed driving will be enhanced.
- The drive unit immediately converts the signal voltage delivered from the engine control unit to a high voltage.

2.3 Fuel Injection Timing Control

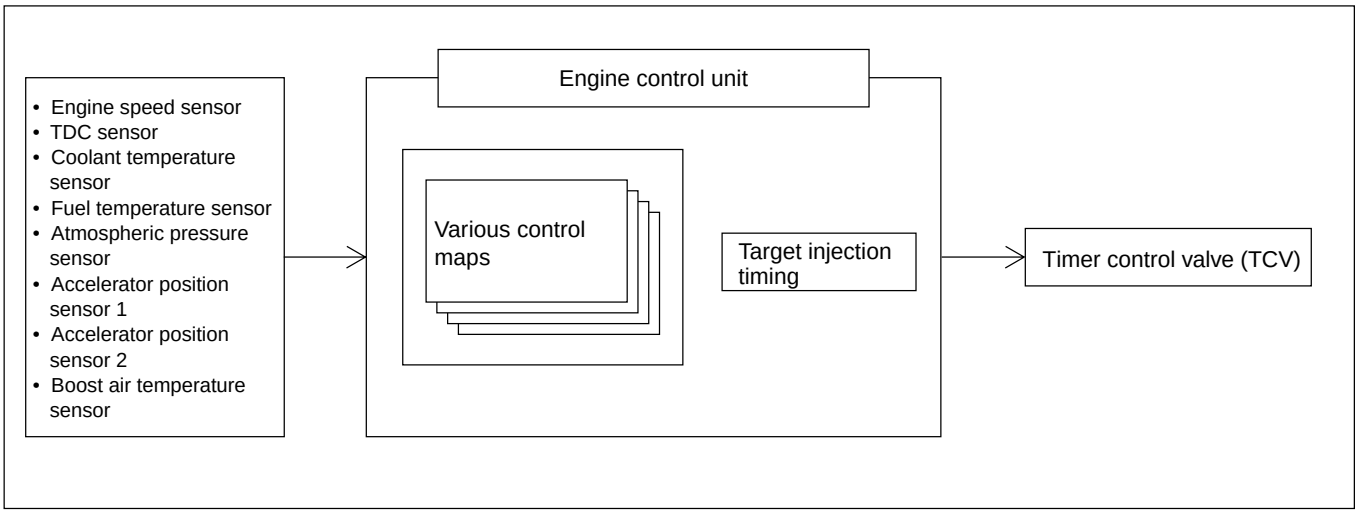

- During operation of the engine, the engine control unit (ECU) processes the individual information signals according to the control maps to calculate the target injection timing, and drives the timer control valve (TCV) in such a way that the real timing computed on the basis of the engine speed sensor and TDC sensor will match the target timing.
- Controls at the time of an engine start are achieved by the start compensation map contained in each control map.

2.4 Warmup Accelerating Function

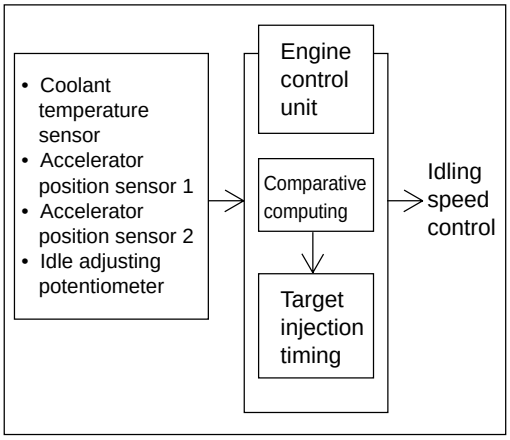

The warmup accelerating function varies the idling speed according to the engine coolant temperature to accelerate warmup. The function includes the automatic and manual modes. Either of the modes can be selected by pushing/pulling the idle adjusting potentiometer.

3. PIN CONFIGURATION OF ENGINE CONTROL UNIT

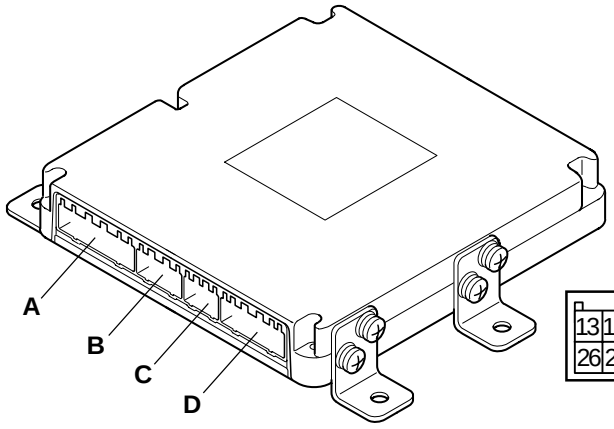

C: CC12B

6	5	4	3	2	1
12	11	10	9	8	7

D: CC22A

11	10	9	8	7	6	5	4	3	2	1
22	21	20	19	18	17	16	15	14	13	12

A: CC26A

13	12	11	10	9	8	7	6	5	4	3	2	1
26	25	24	23	22	21	20	19	18	17	16	15	14

B: CC16A

8	7	6	5	4	3	2	1
16	15	14	13	12	11	10	9

Ⓟ35643

Connector A: CC26A	
Pin No.	Connected to
1	–
2	Intake silencer 3-way magnet valve
3	Injection rate read-only memory
4	–
5	–
6	PMW acceleration OUT (signal)
7	Vehicle speed sensor (signal)
8	Engine control unit main relay 1
9	Engine control unit main relay 2
10	Drive unit relay
11	–
12	Timer control valve
13	Ground (ANALOG)
14	–
15	–
16	Drive unit (FAIL signal)
17	Injection rate adjusting read-only memory (CLK)
18	Magnet valve surge OUT 1
19	Magnet valve surge OUT 2
20	Drive unit (Spill valve signal)
21	Warning lamp (Red)
22	Warning lamp (Amber)
23	–
24	Engine control unit POWER-1
25	Exhaust brake
26	Ground (POWER)

Connector B: CC16A	
Pin No.	Connected to
1	Coolant temperature sensor
2	Injection rate adjusting resistor (signal)
3	Accelerator position sensor 1 (+5V)
4	Accelerator position sensor 2 (+5V)
5	Sensor power supply (+5V)
6	Accelerator position sensor (Ground-1)
7	–
8	Accelerator position sensor (Ground-2)
9	Boost pressure sensor (signal)
10	Idle adjusting potentiometer (signal)
11	Accelerator position sensor 1 (signal)
12	Fuel temperature sensor (signal)
13	Accelerator position sensor 2 (signal)
14	–
15	Boost air temperature sensor
16	Sensor ground

Connector C: CC12B	
Pin No.	Connected to
1	–
2	–
3	–
4	Engine speed OUT (signal)
5	TDC sensor (signal)
6	Engine speed sensor (signal)
7	–
8	Idle up cancel
9	–
10	Tachometer output (signal)
11	TDC sensor (ground)
12	Engine speed sensor (ground)

Connector D: CC22A	
Pin No.	Connected to
1	–
2	Starter switch (S terminal)
3	Starter switch (M terminal-1)
4	–
5	Multi-Use Tester (DTC)
6	–
7	–
8	–
9	Diagnosis switch
10	Accelerator switch
11	Ground (POWER)
12	Ground (ANALOG)
13	Multi-Use Tester (K-LINE)
14	Starter switch (M terminal-2)
15	Memory clear switch
16	Emergency engine stop switch
17	Auxiliary brake cut relay (for automatic transmission)
18	–
19	Cold start switch
20	Cooler switch
21	Exhaust brake switch
22	Engine control unit POWER-2

MEMO

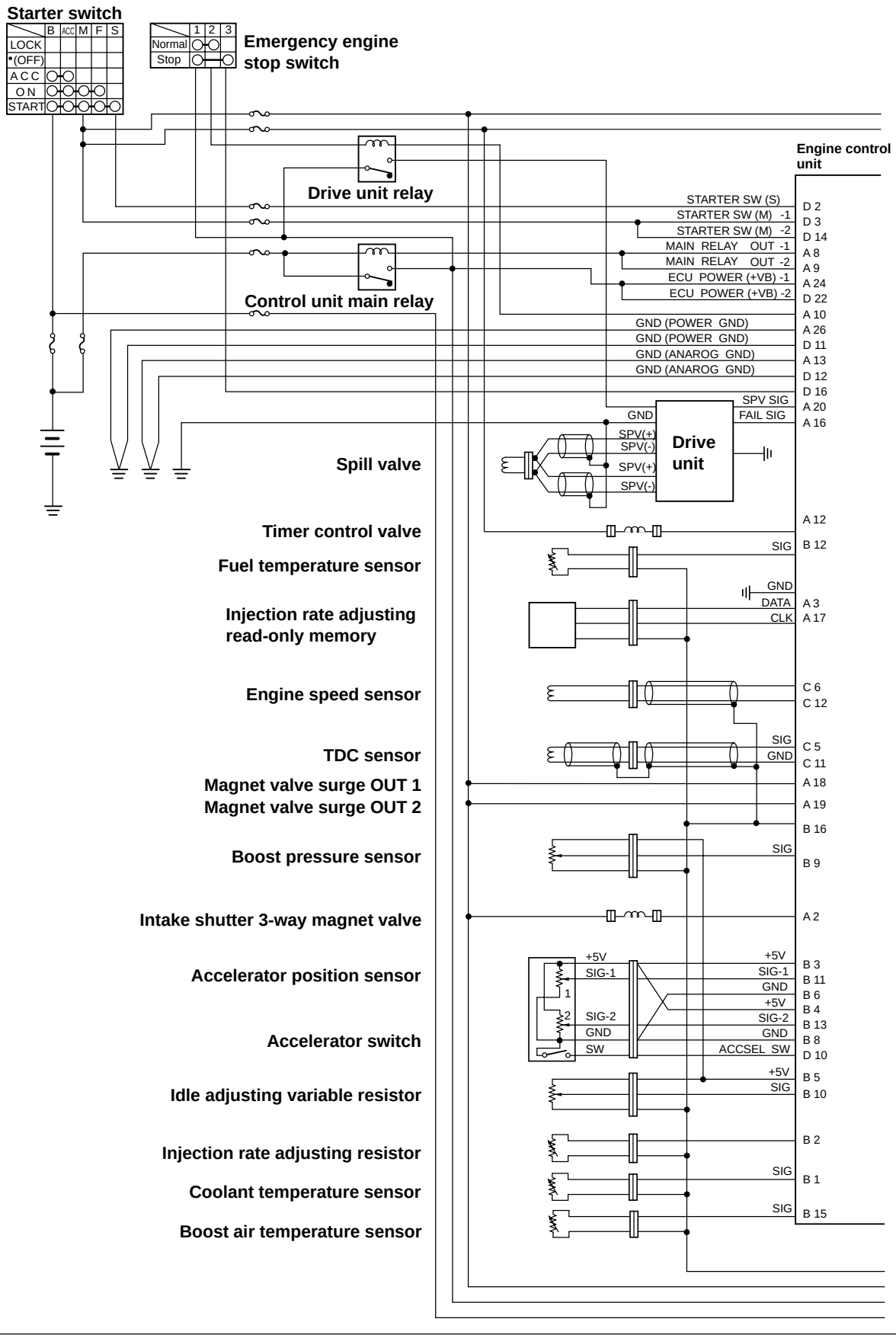
Starter switch
B ACC M F S
LOCK
•(OFF)
ACC
ON
START
1 2 3
Normal
Stop
Emergency engine stop switch
Drive unit relay
Control unit main relay
Engine control unit
STARTER SW (S) D 2
STARTER SW (M) -1 D 3
STARTER SW (M) -2 D 14
MAIN RELAY OUT -1 A 8
MAIN RELAY OUT -2 A 9
ECU POWER (+VB) -1 A 24
ECU POWER (+VB) -2 D 22
GND (POWER GND) A 10
GND (POWER GND) A 26
GND (ANAROG GND) D 11
GND (ANAROG GND) A 13
D 12
D 16
SPV SIG A 20
FAIL SIG A 16
GND
SPV(+)
SPV(-)
SPV(+)
SPV(-)
Drive unit
Spill valve
Timer control valve A 12
Fuel temperature sensor SIG B 12
GND
DATA A 3
CLK A 17
Injection rate adjusting read-only memory
Engine speed sensor C 6 C 12
TDC sensor SIG C 5
GND C 11
Magnet valve surge OUT 1 A 18
Magnet valve surge OUT 2 A 19
B 16
Boost pressure sensor SIG B 9
Intake shutter 3-way magnet valve A 2
+5V
SIG-1
1
2
SIG-2
GND
SW
Accelerator position sensor
Accelerator switch
+5V B 3
SIG-1 B 11
GND B 6
+5V B 4
SIG-2 B 13
GND B 8
ACCSEL SW D 10
Idle adjusting variable resistor +5V B 5
SIG B 10
Injection rate adjusting resistor B 2
Coolant temperature sensor SIG B 1
Boost air temperature sensor SIG B 15

Ⓟ41126

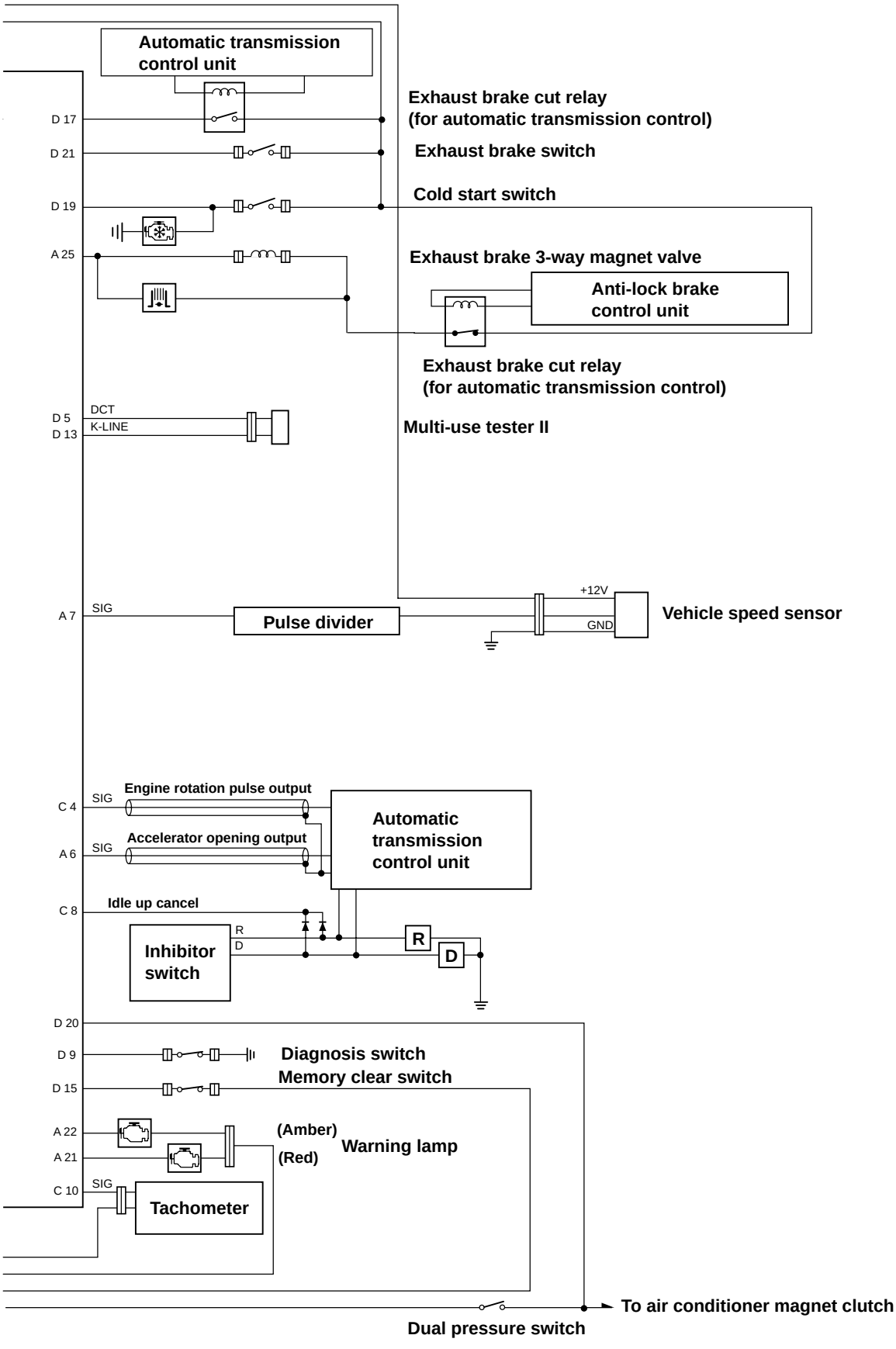
Automatic transmission control unit
D 17
Exhaust brake cut relay (for automatic transmission control)
D 21
Exhaust brake switch
D 19
Cold start switch
A 25
Exhaust brake 3-way magnet valve
Anti-lock brake control unit
Exhaust brake cut relay (for automatic transmission control)
D 5
D 13
DCT
K-LINE
Multi-use tester II
A 7
SIG
Pulse divider
+12V
GND
Vehicle speed sensor
C 4
SIG
Engine rotation pulse output
A 6
SIG
Accelerator opening output
Automatic transmission control unit
C 8
Idle up cancel
Inhibitor switch
R
D
D 20
D 9
Diagnosis switch
D 15
Memory clear switch
A 22
A 21
(Amber)
(Red)
Warning lamp
C 10
SIG
Tachometer
To air conditioner magnet clutch
Dual pressure switch

Ⓟ41127

TROUBLESHOOTING

1. INSPECTION PROCEDURES

Diagnostic Function

- Whenever the starter switch is placed at ON, the diagnostic function is activated to check all the sensors, etc. If any of them is found faulty, the warning lamp in the meter cluster is lit to alert the driver. At the same time, the fault location is stored in memory, and the system enters the backup mode.

  Warning Lamp Indications

	(Red)	(Amber)
Safety-critical error (Vehicle must not be driven)	ON	OFF
Non-safety-critical error (Vehicle can be driven despite poor control feeling)	OFF	ON

- The stored fault location can be read as a diagnostic trouble code by the Multi-Use Tester II or the diagnosis switch.

CAUTION ⚠

- **Check to ensure that the battery voltage is within the specified range.**
- **Check all the harness and device connectors for looseness. Always remove a connector at least 20 seconds after placing the starter switch at the LOCK position.**
- **Do not forget to clear the diagnostic trouble code by the Multi-Use Tester II or memory clear switch after a fault has been rectified.**
- **As a rule, inspection operations should be performed with the starter switch at the LOCK position. Some checks, however, may have to be made with the starter switch at the ON position. In such a case, use care to make sure that no short circuit develops between pins of the connectors or with the body.**
- **The resistance value of each component is affected by the temperature and the accuracy of the tester. The reading, therefore, does not always fall within the standard limits. Note that the check values shown in the text are the values obtained at normal temperature (10 to 35°C)**
- **Whether or not the system automatically returns to normal from the backup mode after a fault has been removed depends on the diagnostic trouble code (fault location). When the system returns to normal, the warning lamp will be OFF.**
- **Even when the fault has been removed and the system has been automatically returned to the normal mode, the diagnostic trouble code of the fault remains stored in the engine control unit.**
- **When a fault occurs at a point where the system is not automatically reset, perform the memory clear procedure to let the system exit from the backup mode. 🕮 P13E-17**

Inspection Flowchart

The system inspection can be performed effectively by use of the Multi-Use Tester II. The types of system inspections may be broadly divided as shown below in accordance with the trouble symptoms and diagnostic trouble code outputs.

- Inspections based on diagnostic trouble codes stored in the engine control unit
- Inspections of intermittent troubles

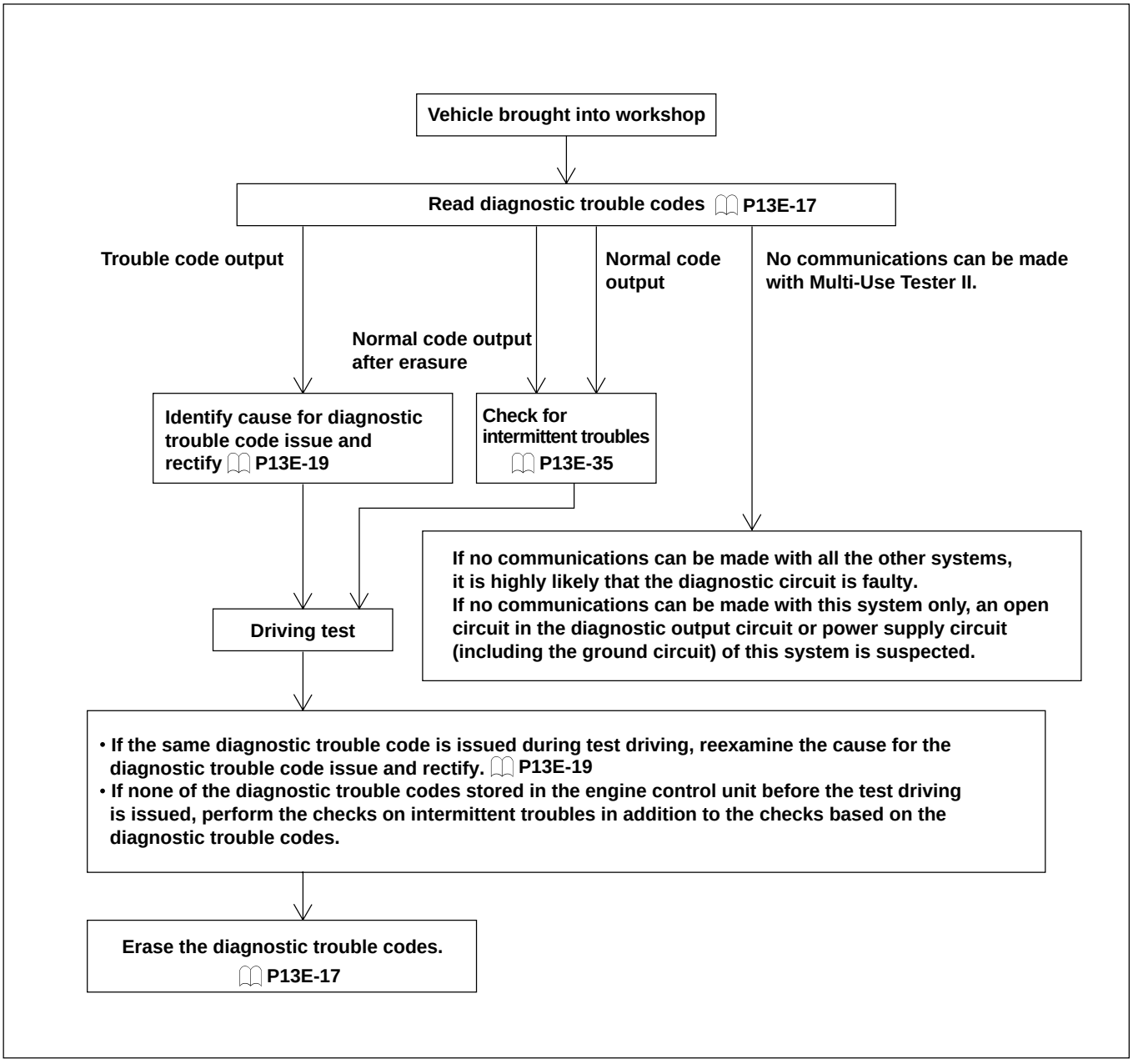

2. CONNECTION OF MULTI-USE TESTER II

Special Tools

Location	Name and Shape of Special Tool	Part No.	Application
–	Multi-Use Tester II 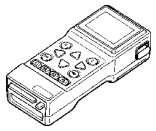 19492	MB991496	Inspection of system
–	Multi-Use Tester II harness (for communications) 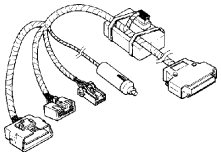 19141	MK327601	To supply power to Multi-Use Tester II proper and communicate with vehicle side electrical devices
–	Read-only memory pack (MRT-E7) 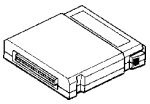 19493	MK386562	Data for inspection and control of engine control unit
–	Memory card (set in Multi-Use Tester II proper) 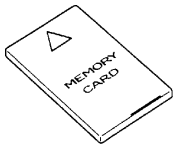 20538	MB991500	To write data
–	Multi-Use Tester II harness 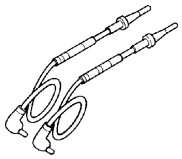 20536	MB991499	To use Multi-Use Tester II as a circuit tester

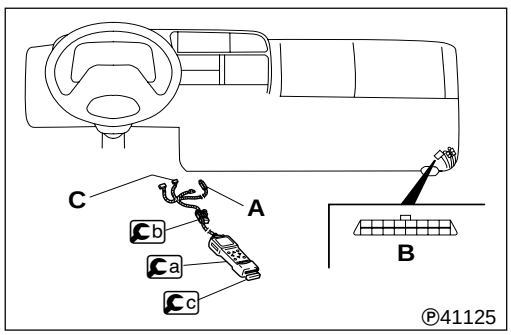

- Place the starter switch at the LOCK position.
- Connect the ⓒa Multi-Use Tester II harness to ⓒb Multi-Use Tester II and insert the ⓒc read-only memory in the tester.
- Connect the connector **A** to the cigar lighter socket.
- Connect the Multi-Use Tester II connector **C** (16 pins) to the data link connector **B** (16 pins).

NOTE:

For the operating procedures for the Multi-Use Tester II, refer to the instruction manual for the Multi-Use Tester II.

3. READING AND ERASING DIAGNOSTIC TROUBLE CODES

Two types of methods are available for reading or erasing a diagnostic trouble code; one using the Multi-Use Tester II and one using the vehicle side diagnostic functions.

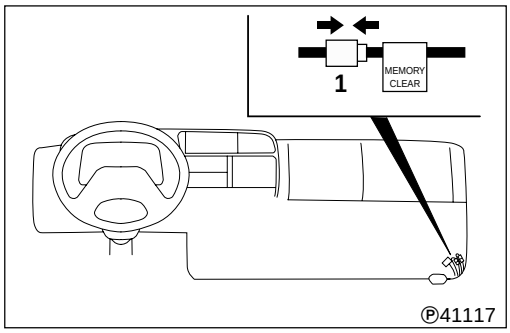

(1) Method using Multi-Use Tester II

● **Current Diagnostic Trouble Code**
- Check to see that the memory clear switch **1** is connected.
- Set the starter switch to ON.
- Operate the Multi-Use Tester II to read the current diagnostic trouble code and determine the fault location.

● **Past Diagnostic Trouble Code**
- Set the starter switch to ON.
- Disconnect the memory clear switch **1**.
- Operate the Multi-Use Tester II to read the past registered diagnostic trouble codes and determine the fault location.

● **Erasing Diagnostic Trouble Codes**
- Set the starter switch to ON.
- Operate the Multi-Use Tester II to erase all of the diagnostic trouble codes stored in the engine control unit.

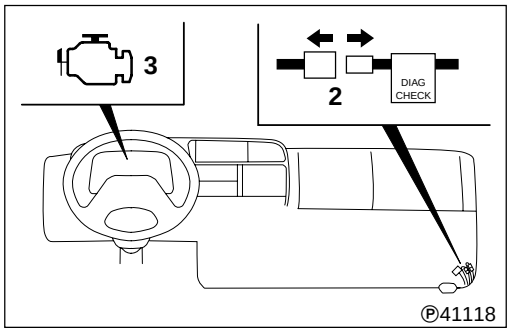

(2) Method Not Using Multi-Use Tester II (Method Using Diagnostic Switch and Memory Clear Switch)

● **Current Diagnostic Trouble Code**
- Set the starter switch to ON.
- Disconnect the diagnostic switch **2**.
- The diagnostic trouble code is displayed by flashes of the warning lamp **3**.

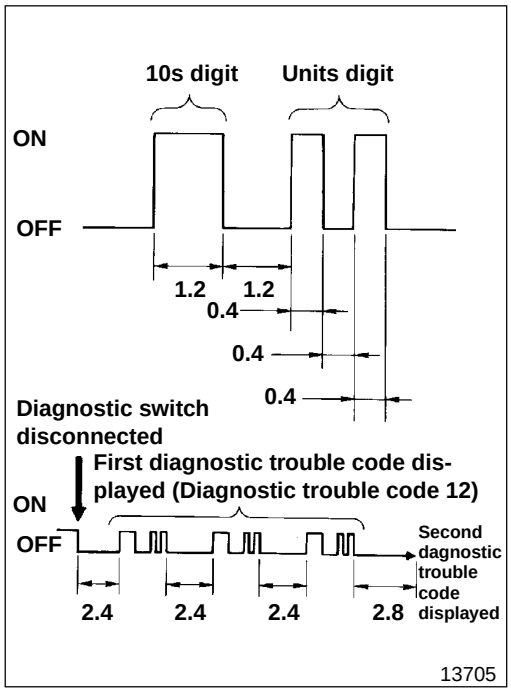

● **Reading Diagnostic Trouble Code**

- Diagnostic trouble codes are indicated by the number of times the warning lamp **3** flashes and their duration.
  - The flashing intervals also differ between the 10s digit and units digit.
  - 10s digit: 1.2 second interval
  - Units digit: 0.4 second interval
  - Each diagnostic trouble code is displayed from the 10s digit followed by the units digit. As for a code which has no 10s digit, units digit only is displayed.
- Each diagnostic trouble code is displayed three times in succession.
- If there is no more code stored, the sequence is then repeated from the beginning with each code indicated three times.
- When the diagnostic switch **2** is connected, the engine control unit will immediately stop displaying codes.

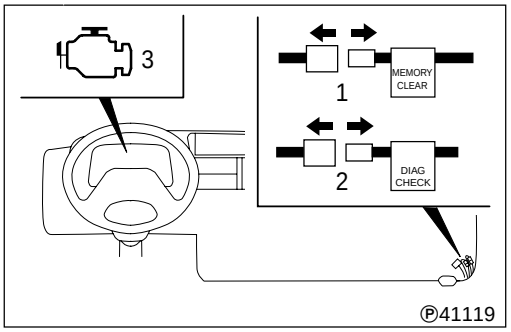

● **Past Diagnostic Trouble Codes**

- After reading the current diagnostic trouble codes (with the diagnostic switch **2** disconnected), disconnect the memory clear switch **1**. Then the warning lamp **3** will restart flashing.
- This time, the warning lamp displays the past diagnostic trouble codes. Determine the fault locations based on the indicated codes.

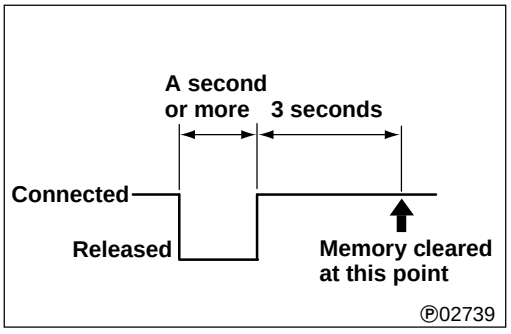

● **Erasing Diagnostic Trouble Codes**

Disconnect the memory clear switch **1** and the diagnostic switch **2** then reconnect them. Then all the diagnostic trouble codes stored in the engine control unit will be cleared.

CAUTION ⚠

- **If the contents of memory are not to be cleared after display of the stored codes, set the starter switch to OFF with the memory clear switch 1 disconnected. Thereafter, connect the memory clear switch.**
- **When you change the combination of the injection pump and engine control unit, you must rewrite the pump data stored in the engine control unit. For this purpose, be sure to perform the diagnostic trouble code erasing procedure.**
- **Whenever the engine control unit has been replaced with a new one, be sure to erase the diagnostic trouble codes by disconnecting the memory clear switch 1 and diagnostic switch 2 after connecting all the connectors. Upon completing the procedure, confirm that no diagnostic trouble codes is stored.**

4. DIAGNOSTIC TROUBLE CODES AND CHECK ITEMS

4.1 Diagnostic Trouble Code List

Multi-Use Tester II Screen Display		Where Described
Diagnostic Trouble Code	Message	
06	EDU/SPV	🕮 P13E-19
07	OVER REV	🕮 P13E-20
14	TDC SNSR	
15	NE SNSR	
16	ACCEL SNSR-2	🕮 P13E-21
19	AIR PRES SNSR	
21	WTR TEMP SNSR	
23	TCV	🕮 P13E-22
24	ACCEL SNSR-1	
25	SPEED SNSR	🕮 P13E-23
26	PUMP ROM	
27	SILENCER M/V	

Multi-Use Tester II Screen Display		Where Described
Diagnostic Trouble Code	Message	
31	IDL VOLUME	🕮 P13E-24
32	BOOST PRES	
33	ECU SYSTEM	
34	Q RESISTOR	🕮 P13E-25
41	FUEL TEMP	
44	BOOST TEMP	
45	FUEL CUT SW	🕮 P13E-26
46	EDU RELAY	
65	ACCEL SW	🕮 P13E-27
66	STARTER SW (S)	

4.2 Diagnostic Trouble Code Issued Conditions and Check Items

Perform service procedures taking the diagnostic trouble code issued conditions and the probable causes into consideration.

06 EDU/SPV		
Code issued condition [Reset condition]	Diagnostic trouble code **06** is intended for checking the drive unit and spill valve for anything abnormal. The code is issued when the FAIL signal is not input the specified number of consecutive times from the drive unit to the control unit despite the fact that the battery voltage is normal, the engine is running at a speed higher than the idling speed, and the drive unit is outputting the spill valve drive signal. [Starter switch OFF]	
Action taken by control unit	Engine stopped	
Warning lamp illuminated	(Red)	
Probable cause and check item	• Open or short circuit between control unit and drive unit, or between drive unit and spill valve • Faulty drive unit • Faulty spill valve	• Check on the basis of the service data of the Multi-Use Tester II. 🕮 P13E-28 No. 83: Spill valve operation check • Test the actuator by the Multi-Use Tester II. 🕮 P13E-30 No. 9B: Spill valve operation check • Check the drive unit. (Ask your DENSO service station to do the job.) • Check the spill valve. 🕮 P13E-36: Inspection of Electrical Devices **536** • Check the circuit between the control unit and drive unit or the circuit between the drive unit and spill valve. 🕮 P13E-48: Electrical wiring Diagram

07 OVER REV		
Code issued condition [Reset condition]	Diagnostic trouble code **07** is intended for checking whether the engine speed has reached an overspeed. When the engine speed reaches an overspeed, the code is issued. (When the engine speed decreases to fall within the normal range, a reset is made.)	
Action taken by control unit	Spill valve operation stopped	
Warning lamp illuminated	None	
Probable cause and check item	• Faulty spill valve of injection pump assembly • Overrevved engine during driving downhill • Faulty control unit	Check the injection pump assembly (Ask your DENSO service station to do the job.)

14 TDC SNSR		
Code issued condition [Reset condition]	Diagnostic trouble code **14** is intended for checking the TDC sensor operation. It is issued when the TDC sensor signal is not input to the control unit the specified number of consecutive times while the engine is running. [When normal TDC sensor signal input is restored, the system is reset.]	
Action taken by control unit	Injection timing feedback control stopped and open-loop control executed	
Warning lamp illuminated	(Amber)	
Probable cause and check item	• Open or short circuit between control unit and TDC sensor • Faulty TDC sensor • Faulty control unit	• Perform checks at control unit connector. 📖 P13E-32 **01**: Measure resistance of TDC sensor. • Check TDC sensor. 📖 P13E-36: Inspection of Electrical Devices **316** • Check circuit between control unit and TDC sensor. 📖 P13E-48: Electrical Writing Diagram

15 NE SNSR		
Code issued condition [Reset condition]	Diagnostic trouble code **15** is issued when the signal from the engine speed sensor is not input the specified number of times to the control unit while the engine is in operation. [When the signal from the engine speed sensor returns to normal, a reset is made.]	
Action taken by control unit	Synchronous control of spill valve with timer control valve interrupted	
Warning lamp illuminated	(Red)	
Probable cause and check item	• Open or short circuit in harness between control unit and engine speed sensor • Faulty engine speed sensor • Gap of engine speed sensor maladjusted • Faulty control unit	• Perform checks on the basis of the service data of the Multi-Use Tester II. 📖P13E-28 No. 01: Measure engine speed. • Perform checks at control unit connector. 📖 P13E-36 **02**: Measure resistance of engine speed sensor. • Check engine speed sensor. 📖 P13E-36: Inspection of Electrical Devices **263** • Check circuit between control unit and engine speed sensor. 📖 P13E-48: Electrical Wiring Diagram

16 ACCEL SNSR-2		
Code issued condition [Reset condition]	Diagnostic trouble code **16** is intended for checking the accelerator position sensor 2 for an abnormal voltage. The code is issued when the voltage of the accelerator position sensor 2 is out of the specified limits. When diagnostic trouble code **24** is also registered, the portion between the accelerator position sensors is faulty. [When the voltage of the accelerator position sensor 2 falls within the specified limits, a reset is made.]	
Action taken by control unit	① : Ordinary controls are made by using only accelerator position sensor 1 ② : When accelerator position sensor 1 is also faulty, controls are made on the assumption that the pedal is depressed 30% when accelerator switch is OFF and 0% when accelerator switch is ON.	
Warning lamp illuminated	① : None ② : (Amber)	
Probable cause and check item	• Open or short circuit in harness between control unit and accelerator position sensor 2 Faulty accelerator position sensor 2 • Faulty control unit	• Perform checks on the basis of the service data of the Multi-Use Tester II. 🕮 P13E-28 No. 0B: Accelerator pedal opening measurement. No. 0C: Measurement of accelerator position sensor output voltage. • Perform checks at control unit connector. 🕮 P13E-32 **03**: Measurement of accelerator position sensor 2 output voltage • Check accelerator position sensor 2. 🕮 P13E-36: Inspection of Electrical Devices **324** • Check circuit between control unit and accelerator position sensor 2. 🕮 P13E-48: Electrical Wiring Diagram

19 AIR PRES SNSR		
Code issued condition [Reset condition]	Diagnostic trouble code **19** is intended for checking the atmospheric pressure sensor (built into the control unit) for anything abnormal. The code is issued when a voltage signal from the atmospheric pressure sensor is out of the specified limits. [When the output voltage of the atmospheric pressure sensor falls within the specified range, a reset is made.]	
Action taken by control unit	Controls achieved on the assumption that atmospheric pressure is 100 kPa {29.9 in. Hg, 760 mmHg}.	
Warning lamp illuminated	None	–
Probable cause and check item	• Faulty atmospheric pressure sensor (built into control unit) Faulty control unit	Perform checks on the basis of the service data of the Multi-Use Tester II. 🕮 P13E-28 No. 14: Atmospheric pressure measurement.

21 WTR TEMP SNSR		
Code issued condition [Reset condition]	Diagnostic trouble code **21** is intended for checking for open or short circuit in the harness of the coolant temperature sensor or anything abnormal in coolant temperature sensor. The code is issued when the output voltage from the coolant temperature sensor is out of the specified limits. [When the output voltage of the coolant temperature sensor falls within the specified range, a reset is made.]	
Action taken by control unit	Controls achieved on the assumption that the coolant temperature is 80°C {178°F}	
Warning lamp illuminated	None	–
Probable cause and check item	• Open or short circuit in harness between control unit and coolant temperature sensor • Faulty coolant temperature sensor • Faulty control unit	• Perform checks on the basis of the service data of the Multi-Use Tester II. 🕮 P13E-28 No. 10: Engine coolant temperature measurement • Check coolant temperature sensor. 🕮 P13E-36: Inspection of Electrical Devices **262** • Check circuit between control unit and coolant temperature sensor. 🕮 P13E-48: Electrical Wiring Diagram

23 TCV		
Code issued condition [Reset condition]	Diagnostic trouble code **23** is intended for checking the harness of the timer control valve for open or short circuit and checking the timer control valve for anomalies. The code is issued when the real advance angle position of the timer continues to be out of the specified limits under the condition that fuel injection timing feedback control is in progress after completion of engine warmup. [When the advance angle re-enters the specified range with the engine at a speed of less than 1200 rpm, a reset is made.]	
Action taken by control unit	Controls are made on the assumption that the coolant temperature is 20°C {-4°F} when the engine is started, and 120°C {248°F} during operation.	
Warning lamp illuminated	None	–
Probable cause and check item	• Open or short circuit in harness between control unit and timer control valve • Faulty timer control valve • Faulty control unit	• Perform checks on the basis of the service data of the Multi-Use Tester II. 🕮 P13E-28 No. 09: Timer advance angle measurement • Check timer control valve. 🕮 P13E-36: Inspection of Electrical Devices **584** • Check circuit between control unit and timer control valve. 🕮 P13E-48: Electrical Wiring Diagram

24 ACCEL SNSR-1		
Code issued condition [Reset condition]	Diagnostic trouble code **24** is intended for checking the accelerator position sensor 1 for abnormal voltage. The code is issued when the output voltage of the accelerator position sensor 1 is out of the specified limits. When diagnostic trouble code 16 is also registered, the portion between the accelerator position sensors is faulty. [When the output voltage of the accelerator position sensor 1 re-enters the specified range, a reset is made.]	
Action taken by control unit	① : Ordinary controls are continued by using only the accelerator position sensor 2. ② : When accelerator position sensor 2 is also faulty, controls are made on the assumption that the pedal is depressed 30% when accelerator switch is OFF and 0% when accelerator switch is ON.	
Warning lamp illuminated	① : None ② : (Amber)	
Probable cause and check item	• Open or short circuit in harness between control unit and accelerator position sensor 1 • Faulty accelerator position sensor 1 • Faulty control unit	• Perform checks on the basis of the service data of the Multi-Use Tester II. 🕮 P13E-28 No. 0B: Accelerator pedal opening measurement No. 0C: Measurement of accelerator position sensor output voltage. • Perform checks at control unit connector. 🕮 P13E-32 **04** : Measurement of accelerator position sensor 1 output voltage • Check accelerator position sensor 1. 🕮 P13E-36: Inspection of Electrical Devices **324** • Check circuit between control unit and accelerator position sensor 1. 🕮 P13E-48: Electrical Wiring Diagram

25 SPEED SNSR		
Code issued condition [Reset condition]	Diagnostic trouble code **25** is intended for checking the harness of the vehicle speed sensor for open/short circuit and checking the vehicle speed sensor for abnormalities. The code is issued when there are no pulse inputs from the vehicle speed sensor to the control unit in the specified time duration. [When a pulse is input, a reset is made.]	
Action taken by control unit	ISC (Idle Speed Control) disabled	
Warning lamp illuminated	None	
Probable cause and check item	• Open or short circuit in harness between control unit and vehicle speed sensor • Faulty vehicle speed sensor • Faulty control unit	• Perform checks on the basis of the service data of the Multi-Use Tester II. 🕮 P13E-28 No. 0D: Vehicle speed measurement. • Perform checks at control unit connector. 🕮 P13E-32 **05**: Measurement of vehicle speed signal voltage. • Check vehicle speed sensor. 🕮 P13E-36: Inspection of Electrical Devices **265** • Check circuit between control unit and vehicle speed sensor. 🕮 P13E-48: Electrical Wiring Diagram

26 PUMP ROM		
Code issued condition [Reset condition]	Diagnostic trouble code **26** is intended for checking for an error in the loaded pump read-only memory data necessary for control of the injection rate. The code is issued when any of the following situations occurs. Loaded read-only memory has unmatched data. • Read-only memory data cannot be read. • Loaded data exceeds the upper limit of correction. • There is a mismatch between control unit backup data and loaded data. [No automatic reset takes place.]	
Action taken by control unit	Initial values used	
Warning lamp illuminated	None –	
Probable cause and check item	• Open or short circuit in harness between control unit and injection rate adjusting read-only memory • Faulty injection rate adjusting read-only memory • Faulty control unit	• Check injection rate adjusting read-only memory. (Ask your DENSO service station to do the job.) • Check circuit between control unit and injection rate adjusting read-only memory. 🕮 P13E-48: Electrical Wiring Diagram

27 SILENCER M/V		
Code issued condition [Reset condition]	Diagnostic trouble code **27** is intended for checking the harness of the intake silencer 3-way magnet valve for open/short circuit. [No automatic reset takes place.]	
Action taken by control unit	Intake silencer control disabled	
Warning lamp illuminated	(Amber)	
Probable cause and check item	• Open or short circuit in harness between control unit and intake silencer 3-way magnet valve • Faulty intake silencer 3-way magnet valve • Faulty control unit	• Check intake silencer 3-way magnet valve. P13E-36: Inspection of Electrical Devices **565** • Check circuit between control unit and intake silencer 3-way magnet valve. P13E-48: Electrical Wiring Diagram

31 IDL VOLUME		
Code issued condition [Reset condition]	Diagnostic trouble code **31** is intended for checking the harness of the idle adjusting potentiometer for open or short circuit and checking the idle adjusting potentiometer for abnormalities. The code is issued when the voltage of the idle adjusting potentiometer continues to be out of the specified limits for the predetermined period of time. [When the voltage of the idle adjusting variable resistor re-enters the specified range, a reset is made.]	
Action taken by control unit	Operation mode fixed to auto idle	
Warning lamp illuminated	None	–
Probable cause and check item	• Open or short circuit in harness between control unit and idle adjusting potentiometer • Faulty idle adjusting potentiometer • Faulty control unit	• Perform checks on the basis of the service data of the Multi-Use Tester II. 🕮 P13E-28 No. 0E: Measurement of idle adjusting variable resistor voltage. • Perform checks at control unit connector. 🕮 P13E-32 **06**: Measurement of idle adjusting variable resistor output voltage. • Check idle adjusting potentiometer. 🕮 P13E-36: Inspection of Electrical Devices **157** • Check circuit between control unit and idle adjusting potentiometer. 🕮 P13E-48: Electrical Wiring Diagram

32 BOOST PRES		
Code issued condition [Reset condition]	Diagnostic trouble code **32** is intended for checking the harness of the boost pressure sensor for open or short circuit and checking the boost pressure sensor for abnormalities. The code is issued when the output voltage of the boost pressure sensor continues to be out of the specified limits for the predetermined period of time. [When the voltage of the boost pressure sensor re-enters the specified range, a reset is made.]	
Action taken by control unit	Controls are made on the assumption that the boost pressure is 100 kPa {29.9 in. Hg, 760 mmHg}	
Warning lamp illuminated	None	–
Probable cause and check item	• Open or short circuit in harness between control unit and boost pressure sensor • Faulty boost pressure sensor • Faulty control unit	• Perform checks on the basis of the service data of the Multi-Use Tester II. 🕮 P13E-28 No. 15: Boost pressure measurement • Check boost pressure sensor. 🕮 P13E-36: Inspection of Electrical Devices **318** • Check circuit between control unit and boost pressure sensor. 🕮 P13E-48: Electrical Wiring Diagram

33 ECU SYSTEM		
Code issued condition [Reset condition]	Diagnostic trouble code **33** is issued in the following cases. ① : A/D converter out of order [When A/D converter returns to normal, a reset is made.] ② : Mutual monitoring error, interruption processing error [When starter switch is turned OFF, a reset is made.]	
Action taken by control unit	① : All Fail Safe functions against a faulty A/D input are activated. ② : Engine stopped	
Warning lamp illuminated	① : None ② : (Amber)	
Probable cause and check item	Faulty control unit	–

34 Q RESISTOR		
Code issued condition [Reset condition]	Diagnostic trouble code **34** is intended for checking the harness of the injection rate adjusting resistor for open or short circuit and checking the injection rate adjusting resistor for abnormalities. The code is issued when the output voltage of the injection rate adjusting resistor continues to be out of the specified limits for the predetermined period of time. [When the voltage of the injection rate adjusting resistor re-enters the specified range, a reset is made.]	
Action taken by control unit	The injection rate correction value is fixed to No. 1 value.	
Warning lamp illuminated	None	–
Probable cause and check item	• Open or short circuit in harness between control unit and injection rate adjusting resistor • Faulty injection rate adjusting resistor • Faulty control unit	• Perform checks on the basis of the service data of the Multi-Use Tester II. 🕮 P13E-28 No. 13: Resistor No. check of injection rate adjusting resistor. • Check circuit between control unit and injection rate adjusting resistor. 🕮 P13E-48: Electrical Wiring Diagram

41 FUEL TEMP		
Code issued condition [Reset condition]	Diagnostic trouble code **41** is intended for checking the harness of the fuel temperature sensor for open or short circuit and checking fuel temperature sensor for abnormalities. The code is issued when the output voltage of the fuel temperature sensor continues to be out of the specified limits for the predetermined period of time. [When the voltage of the fuel temperature sensor re-enters the specified range, a reset is made.]	
Action taken by control unit	Control is made on the assumption that fuel temperature is 40°C {104°F}	
Warning lamp illuminated	None	–
Probable cause and check item	• Open or short circuit in harness between control unit and fuel temperature sensor • Faulty fuel temperature sensor • Faulty control unit	• Perform checks on the basis of the service data of the Multi-Use Tester II. 🕮 P13E-28 No. 11: Fuel temperature measure. • Perform checks at control unit connector. 🕮 P13E-32 **12**: Measurement of fuel temperature sensor resistance. • Check fuel temperature sensor. 🕮 P13E-41: Inspection of Electrical Devices **323** • Check circuit between control unit and fuel temperature sensor. 🕮 P13E-48: Electrical Wiring Diagram

44 BOOST TEMP		
Code issued condition [Reset condition]	Diagnostic trouble code **44** is intended for checking the harness of the boost air temperature sensor for open or short circuit and checking the boost air temperature sensor for abnormalities. [When the voltage of the boost air temperature sensor re-enters the specified range, a reset is made.]	
Action taken by control unit	Control is made on the assumption that boost air temperature is 80°C {176°F}	
Warning lamp illunimated	None	–
Probable cause and check item	• Open or short circuit in harness between control unit and boost air temperature sensor • Faulty boost air temperature sensor • Faulty control unit	• Check boost air temperature sensor. 🕮 P13E-36 **303**: Inspection of Electrical Devices • Check circuit between control unit and boost air temperature sensor. 🕮 P13E-48: Electrical Wiring Diagram

45 FUEL CUT SW		
Code issued condition [Reset condition]	Diagnostic trouble code **45** is intended for checking the harness of the emergency engine stop switch for open or short circuit and checking the emergency engine stop switch for abnormalities. The code is issued when a fault is detected in the circuit with both emergency engine stop switch and starter switch at the ON position (without starting the engine). [When the emergency engine stop switch is set to OFF, a reset is made.]	
Action taken by control unit	Engine start inhibited	
Warning lamp illuminated	(Red)	–
Probable cause and check item	• Open or short circuit in harness between control unit and emergency engine stop switch • Faulty emergency engine stop switch • Faulty control unit	• Perform checks on the basis of the service data of the Multi-Use Tester II. 🕮 P13E-28 No. 42: Operation check of emergency engine stop switch. • Perform checks at control unit connector. 🕮 P13E-32 **11**: Measurement of emergency engine stop switch operating voltage. • Check emergency engine stop switch. 🕮 P13E-36: Inspection of Electrical Devices **156** • Check circuit between control unit and emergency engine stop switch. 🕮 P13E-48: Electrical Wiring Diagram

46 EDU RELAY		
Code issued condition [Reset condition]	Diagnostic trouble code **46** is issued in the following cases. ①: Drive unit relay is not ON with drive unit relay ON command issued. [When the drive unit relay is turned ON by the drive unit relay ON command, and the voltage exceeds 16V, a reset is made.] ②: Drive unit relay is not OFF with drive unit relay OFF command issued. [When the drive unit relay is turned OFF by the drive unit relay OFF command, and the voltage exceeds 16V, a reset is made.]	
Action taken by control unit	①: Drive unit relay OFF ②: Ordinary controls continued	
Warning lamp illuminated	①: (Amber) ②: None	
Probable cause and check item	• Open or short circuit in harness between control unit and drive unit relay • Faulty drive unit relay	• Check drive unit relay. 🕮 P13E-36: Inspection of Electrical Devices **228** • Check circuit between control unit and drive unit relay. 🕮 P13E-48: Electrical Wiring Diagram

65 ACCEL SW		
Code issued condition [Reset condition]	Diagnostic trouble code **65** is intended for checking the harness of the accelerator switch for open or short circuit and checking the accelerator switch for abnormalities. The code is issued when the accelerator position sensor 1 or 2 shows an opening of more than 20% with the accelerator switch ON. [If the accelerator switch turns OFF when the accelerator position sensor shows an opening of more than 20%, a reset is made.]	
Action taken by control unit	Ordinary controls continued	
Warning lamp illuminated	None	–
Probable cause and check item	• Open or short circuit in harness between control unit and accelerator switch • Faulty accelerator switch • Faulty control unit	• Perform checks on the basis of the service data of the Multi-Use Tester II. 🕮 P13E-28 No. 43: Check of accelerator switch operating signal. Perform checks at control unit connector. 🕮 P13E-32 **09** : Measurement of accelerator switch operating voltage. Check accelerator switch. 🕮 P13E-36: Inspection of Electrical Devices **324** Check circuit between control unit and accelerator switch. 🕮 P13E-48: Electrical Wiring Diagram

66 STARTER SW (S)		
Code issued condition [Reset condition]	Diagnostic trouble code **66** is intended for checking the harness of the starter switch for open or short circuit and checking the starter switch for abnormalities. The code is issued when a start signal is input with the engine running at a speed higher than the specified speed. [When the start signal is no longer input, a reset is made.]	
Action taken by control unit	Ordinary controls continued	
Warning lamp illuminated	None	–
Probable cause and check item	• Open or short circuit in harness between control unit and starter switch • Faulty starter switch • Faulty control unit	• Perform checks on the basis of the service data of the Multi-Use Tester II. 🕮 P13E-28 No. 41: Start signal ON/OFF check. • Perform checks at control unit connector. 🕮 P13E-32 **13** : Measurement of starter switch signal voltage. • Check starter switch. 🕮 P13E-36: Inspection of Electrical Devices **002** • Check circuit between control unit and starter switch. 🕮 P13E-48: Electrical Wiring Diagram

5. SERVICE DATA OF MULTI-USE TESTER II

Screen Display of Multi-Use Tester II			Condition When Checking	Judging Criteria
No.	Item Name	Data		
1	ENGINE SPEED	■■■■. rpm	Racing (Engine running)	Synchronized with tachometer
3	INJ VOL	■■■. ■ %	Starter switch ON	0 %
9	TCV ANG DIFF	■■■. ■ deg	Warm engine running at idle	0 deg
0B	ACCEL (%)	■■■. ■ %	Accelerator pedal released	0 %
			Slowly depressed	Slowly increased
			Accelerator pedal fully depressed	100 %
0C	ACCEL (V)	■. ■■■ V	Accelerator pedal slowly depressed from released position	0.85 to 4.15 V
0D	VEHICLE SPEED	■■■. ■ MPH	During driving	Synchronized with speedometer
0E	IDL VOL SNSR	■. ■■■ V	Slow to fast	2.6 to 1.2 V
10	WATER TEMP	■■■. ■ °F	Engine cold	Equivalent to atmospheric temperature
			Engine warmup in progress	Slowly increased
			Engine stopped after warmup	Slowly decreased
11	FUEL TEMP	■■■. ■ °F	Engine cold	Equivalent to atmospheric temperature
			Engine warmup in progress	Slowly increased
			Engine stopped after warmup	Slowly decreased
13	Q RESISTOR	■■■■	–	Matches No. marked on injection rate adjusting resistor.
14	AIR PRESS	■■■■. mmHg	Altitude 0 m	13.5 mmHg
			Altitude 600 m	12.7 mmHg
			Altitude 1200 m	11.7 mmHg
15	BOOST PRESS	■■■■. mmHg	Engine speed 3400 rpm	260 mmHg
16	BATT VOLTAGE	■■. ■■ V	Starter switch ON	Matches battery voltage.
17	PTO-ACCEL (%)	■■■. ■ %	When PTO is used (MIN-MAX)	0 to 100 %
18	PTO-ACCEL (V)	■. ■■■ V	When PTO is used (MIN-MAX)	1 to 3.0 V
19	PTO RESISTOR	■■■■	–	Matches No. marked on power take-off resistor.
41	START SIG	ON/OFF	Engine cranked by starter switch	ON
			Starter switch at any other position than S	OFF
42	FUEL CUT SW	ON/OFF	Switch ON	ON
			Switch OFF	OFF
43	ACCEL SW	ON/OFF	Accelerator pedal depressed	ON
			Accelerator pedal released	OFF
44	A/C SW	ON/OFF	When air conditioner compressor is in operation	ON
			When air conditioner compressor is idle	OFF
45	COLD START SW	ON/OFF	Warming switch ON	ON
			Warming switch OFF	OFF

Screen Display of Multi-Use Tester II			Condition When Checking	Judging Criteria
No.	Item Name	Data		
46	DIAGNOSIS SW	ON/OFF	Diagnostic switch ON	OFF
			Diagnostic switch OFF	ON
47	DIAG RESET SW	ON/OFF	Memory clear switch ON	OFF
			Memory clear switch OFF	ON
51	EXH.BRAKE SW	ON/OFF	Exhaust brake switch ON (when exhaust brake is active)	ON
			Exhaust brake switch OFF (when exhaust brake is inactive)	OFF
53	NEUTRAL SW	ON/OFF	Transmission at neutral	ON
			Transmission at any other position than neutral	OFF
55	IDL-UP CNCL	ON/OFF	Automatic transmission select lever at R, D, 2 or L	ON
			At any other position than mentioned above	OFF
61	SILENCER M/V	Gr17		
71	EXH. BRAKE M/V	ON/OFF	When exhaust brake is active	ON
			When exhaust brake is inactive	OFF
73	DIAG LAMP (R)	ON/OFF	Starter switch ON (engine not made to start)	ON
			No error generated after engine has started	OFF
74	DIAG LAMP (U)	ON/OFF	Starter switch ON (engine not made to start)	ON
			No error generated after engine has started	OFF
			When warmup system is inactive	OFF
83	SPV	ON/OFF	When engine is running	ON (ON → OFF repeated)
			When engine is stationary	OFF

6. ACTUATOR TEST BY MULTI-USE TESTER II

Screen Display of Multi-Use Tester II		Operation Check Procedures
No.	Item Name	
9B	SPV	Operating sound of solenoid valve
9C	TCV-OFF	No operating sound of solenoid valve
9D	TCV-ON	Operating sound of solenoid valve
91	SILENCER M/V	Gr17
94	EXH. BRAKE M.V	ON/OFF sound of magnetic valve
97	DIAG LAMP (R)	ON/OFF state of warning lamp (Red)
98	DIAG LAMP (A)	Operating state of warning lamp (Amber)
99	A/C SIG	High idling speed
9A	IDL-UP CNCL	Low idling speed

MEMO

7. CHECKS AT CONNECTOR OF CONTROL UNIT

This method of checks is useful for checking whether all the signals of the control unit are transmitted without any error through the vehicle side harness and connector.
The numbers in the table correspond to the call numbers used in “4. DIAGNOSTIC TROUBLE CODES AND CHECK ITEMS” for referencing this section.

Pin Configuration of Control Unit

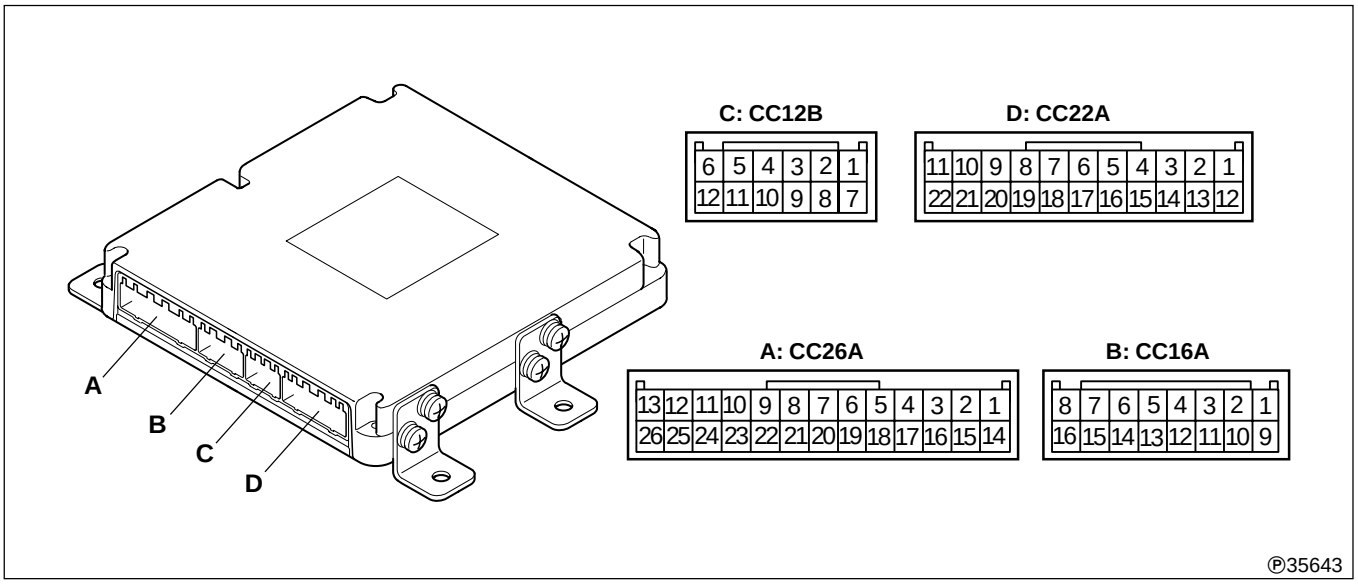

No.	Item	Reference Page
01	Resistance of TDC sensor	🕮 P13E-33
02	Resistance of engine speed sensor	
03	Output voltage of accelerator position sensor 1	
04	Output voltage of accelerator position sensor 2	
05	Signal voltage of vehicle speed sensor	
06	Output voltage of idle adjusting potentiometer	🕮 P13E-34
09	Voltage of accelerator switch	
11	Voltage of emergency engine stop switch	
12	Resistance of fuel temperature sensor	
13	Voltage of starter switch (start signal)	

Checking Procedures

CAUTION ⚠

Each item is checked by one of two methods; one by disconnecting the connectors and one by leaving the connectors connected.
Pay heed to the following points.

- **Be sure not to touch any other pin than the one to be checked.**
  Especially, use utmost care that a short circuit is never produced between pins by the tester.
- **All the illustrations of the connectors in the table show the connectors on the control unit side. Be careful not to confuse the pins with those to be checked.**

Check Item	Checking Procedure
01 Resistance of TDC sensor	[Conditions] • Starter switch OFF • Disconnect connector and make checks at vehicle side harness connector (25°C {77°F}). [Judging Criteria] Between pins: C ⑤ – C ⑪ 1.5 ± 0.2 kΩ
02 Resistance of engine speed sensor	[Conditions] • Starter switch OFF • Disconnect connector and make checks at vehicle side harness connector. [Judging Criteria] Between pins: C ⑥ – C ⑫ 230 ± 25 Ω
03 Output voltage of accelerator position sensor 2	[Conditions] • Starter switch OFF • Leave vehicle side harness connected (make checks from back side of connector). [Judging Criteria] Between pins (⊕ — ⊖): B ⑬ – B ⑧ • When accelerator pedal is released: 0.85V • When accelerator pedal is depressed: 4.15V
04 Output voltage of accelerator position sensor 1	[Conditions] • Starter switch OFF • Leave vehicle side harness connected (make checks from back side of connector). [Judging Criteria] Between pins (⊕ — ⊖): B ⑪ – B ⑥ • When accelerator pedal is released: 0.85V • When accelerator pedal is depressed: 4.15V
05 Signal voltage of vehicle speed sensor	[Conditions] • Starter switch ON • Leave vehicle side harness connected (make checks from back side of vehicle side connector). • Using chassis dynamometer or something else, slowly rotate wheels. [Judging Criteria] Between pins (⊕ — ⊖): A ⑰ – A ⑬ • Hi: Approx. 8V • Lo: 0.5V or less

Check Item	Checking Procedure
06 Output voltage of idle adjusting potentiometer	[Conditions] • Starter switch ON • Leave vehicle side harness connected (make checks from back side of connector). [Judging Criteria] Between pins (⊕ — ⊖): C ⑤ – C ⑩ • When knob is pulled: Approx. 1 to 3V • When knob is pushed all the way: Approx. 3.6 to 4.3V
09 Voltage of accelerator switch	[Conditions] • Starter switch ON • Leave vehicle side harness connected (make checks from back side of connector). [Judging Criteria] Between pins (⊕ — ⊖): D ⑩ – B ⑧ • When accelerator pedal is depressed: 0V • When accelerator pedal is released: 5V
11 Voltage of emergency engine stop switch	[Conditions] • Starter switch ON • Leave vehicle side harness connected (make checks from back side of connector). [Judging Criteria] Between pins (⊕ — ⊖): D ㉒ – D ⑯ • Switch at stop position: 0V • Switch at normal position: 24V
12 Resistance of fuel temperature sensor	[Conditions] • Starter switch OFF • Leave vehicle side harness connected (make checks from back side of connector). [Judging Criteria] Between pins: B ⑫ – B ⑯ 2.5 ± 1.0 kΩ
13 Voltage of starter switch (starter signal)	[Conditions] • Leave vehicle side harness connected (make checks from back side of connector). • Starter switch (S position) [Judging Criteria] Between pins (⊕ — ⊖): D ② – D ⑪ 24V

8. CHECKS ON INTERMITTENT TROUBLES

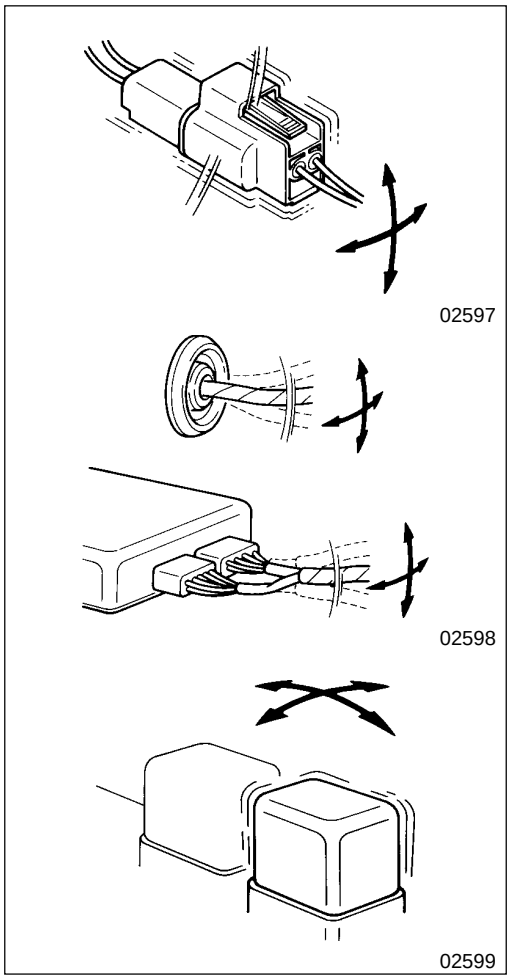

A intermittent trouble often occurs in a specific condition. Therefore, pinpointing the condition will make it easy to estimate the cause. To pinpoint the condition for a intermittent trouble, ask the customer in detail about the driving condition when the trouble occurs, weather, occurrence frequency and symptoms, and reproduce the symptoms of the trouble.
Depending on the condition where the trouble occurs, determine whether the cause of the trouble is vibration, temperature or any other factor.
If the probable cause is vibration, perform the following checks on the relevant connectors harnesses, etc. and check whether the symptoms of the trouble are reproduced.

- Lightly move the connector up and down and to the right and left.
- Lightly move the harness up and down and to the right and left.
- Lightly shake the sensors and other devices by hand.
- Lightly shake the wiring harness located in the moving components such as the suspension.

The connectors and other parts to be checked are identifiable from the descriptions in the Probable Causes or the Checking Procedures for the displayed diagnostic trouble code.

INSPECTION OF ELECTRICAL EQUIPMENT

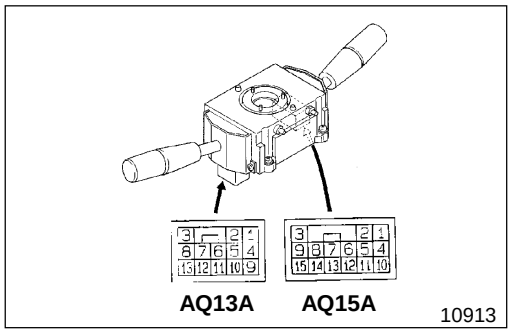

001 Checking Combination Switch

- Perform continuity checks according to the following table.
  AQ15A Connector Connection Table

		⑤	⑥
Exhaust brake switch	OFF		
	ON	○—○	

○—○ : There must be continuity between the pins.

- If there is anything wrong, replace the switch.

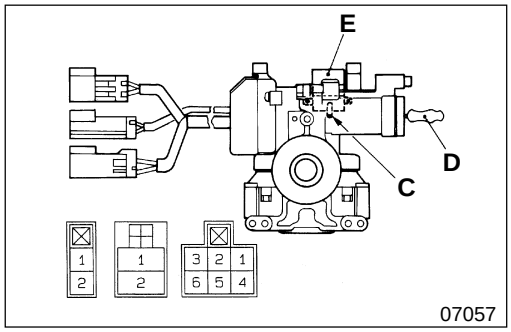

002 Checking Starter Switch

- Perform continuity checks according to the following table.
- If there is anything wrong, replace the starter switch. Gr37

(1) Continuity Check

		AP2A		AN6A				
		②	①	③	④	②	⑥	⑤
LOCK	Key not in position							
	Key in position						○—○	
• (OFF)							○—○	
ACC		○——		○			○—○	
ON		○—	○—	○—	○		○—○	
START		○—	○—	○—	○—	○	○—○	
		B	M	A	F/M	S	K1	K2

○—○ : There must be continuity between the pins.

(2) Checking Key Interlock Solenoid

	AN2A		LOCK	ACC	ON	START	Remarks
	①	②					
Rotating range of key **D**	⊕—⊖			←		→	Plunger **C** is locked and key **D** cannot be removed.
			←			→	Plunger **C** is free and key **D** can be removed.

⊕—⊖ : Apply voltage across these pins.
DC 12V
E: Key interlock solenoid

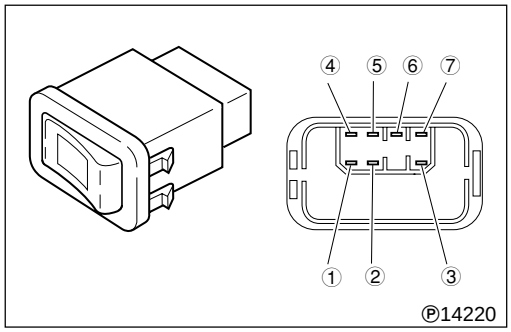

014 Checking Cold Start Switch

- Perform continuity checks according to the following table.

	①	⑤
ON	○—○	
OFF		

○—○ : There must be continuity between the pins.

- If there is anything wrong, replace the switch.

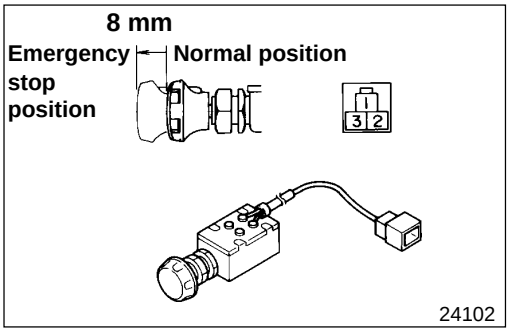

156 Checking Emergency Engine Stop Switch

- Perform continuity checks according to the following table.

	①	②	③
Normal position	○——	——○	
Emergency stop position	○——		——○

○——○ : There must be continuity between the pins.

- If there is anything wrong, replace the switch.
  Gr13A

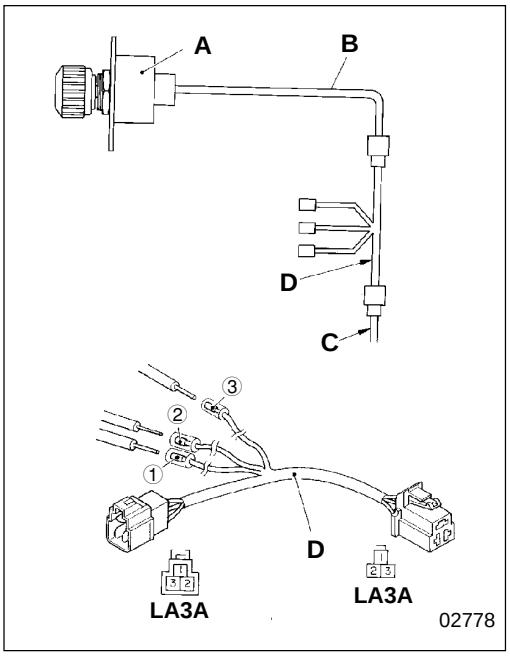

157 Checking Idle Adjusting Potentiometer

- Disconnect the harness **B** of the idle adjusting variable resistor **A** from the vehicle side harness **C**, and connect the inspection harness **D** between them.
- Set starter switch to ON.
- Measure the output voltage of the idle adjusting variable resistor **A** according to the following table.

	②	③		
Standard value	⊖	⊕	Output voltage PULL (Knob in pulled position)	1 to 3 V
			Output voltage PUSH (Knob in pushed position)	3.6 to 4.3 V

- If the reading is out of the standard value range, replace the idle adjusting potentiometer **A**.

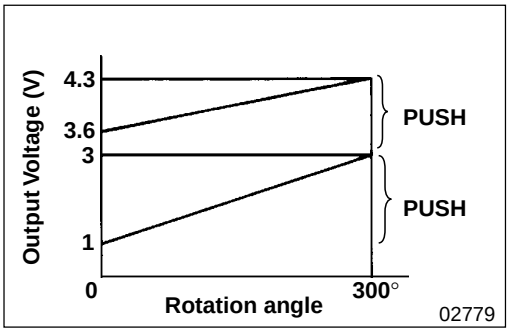

Output Characteristics

INSPECTION OF ELECTRICAL EQUIPMENT

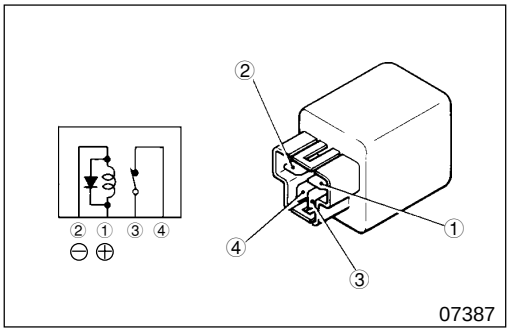

180 Checking Relay (Normally closed type 4-pin)

- Perform continuity and operation checks according to the following table.

	①	②	③	④
When not energized	○——○		○——○	
When energized	⊕——⊖		◌·····◌	

○——○ : There must be continuity between the pins.
⊕——⊖ : Apply a voltage of 12 V DC across these pins.
◌·····◌ : Continuity between these pins must be lost.

- If there is anything wrong, replace the relay.

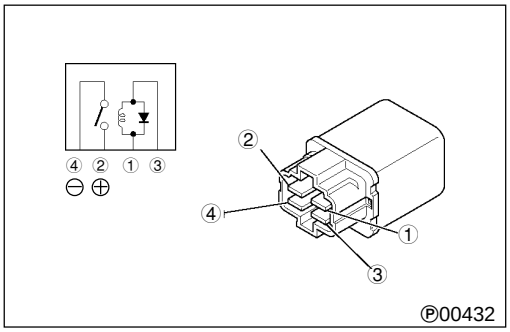

181 Checking Relay (Normally open type 4-pin)

- Perform continuity and operation checks according to the following table.

	①	②	③	④
When not energized	○——○			
When energized	⊕——⊖	○——○		○——○

○——○ : There must be continuity between the pins.
⊕——⊖ : Apply a voltage of 12V DC across these pins.

- If there is anything wrong, replace the relay.

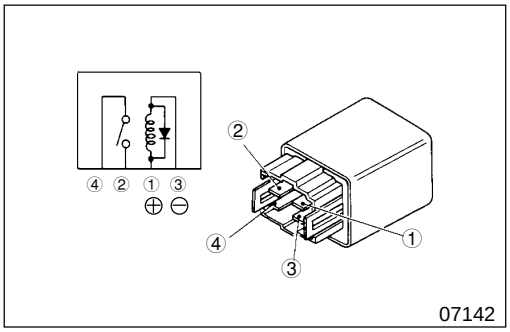

185 Checking Relay (Normally open type 4-pin)

- Perform continuity and operation checks according to the following table.

	①	②	③	④
When not energized	○——○			
When energized	⊕——⊖	○——○		○——○

○——○ : There must be continuity between the pins.
⊕——⊖ : Apply a voltage of 12V DC across these pins.

- If there is anything wrong, replace the relay.

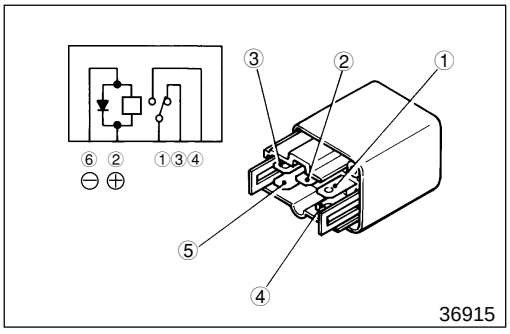

228 Checking Relay (Normally open type 6-pin)

- Perform continuity and operation checks according to the following table.

	①	②	③	④	⑥
When not energized	○——○	○——○			
When energized	○——○	⊕——⊖		○——○	

○——○ : There must be continuity between the pins.
⊕——⊖ : Apply a voltage of 12 V DC across these pins.

- If there is anything wrong, replace the relay.

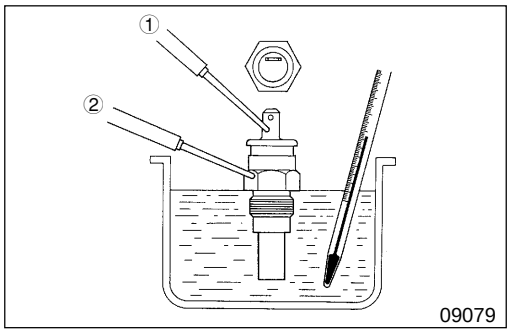

262 Checking Coolant Temperature Sensor

- Put the coolant temperature sensor in a container filled with engine oil.
- Heat the engine oil to various specified temperatures while stirring the engine oil.
- Measure the resistance value between pins ① and ② (body).

Standard value	0°C {32°F}	(8.62 kΩ)
	20°C {68°F}	(3.25 kΩ)
	40°C {104°F}	(1.5 kΩ)
	60°C {140°F}	620 ± 62 Ω

Reference value in parentheses

- If the reading is out of the standard value, replace the coolant temperature sensor. Gr14

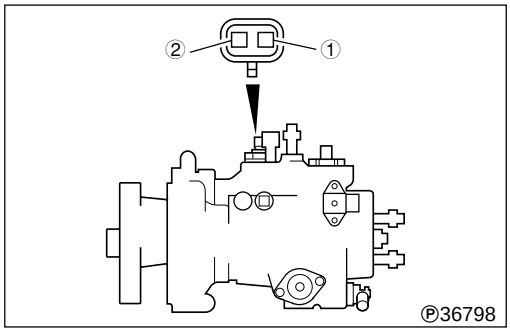

263 Checking Engine Speed Sensor

- Measure the resistance value between pins ① and ②.

Standard value (at 20°C {68°F})	230 ± 25 Ω

- If the reading is out of the standard value range, replace the engine speed sensor. Ask your DENSO service station to replace it.

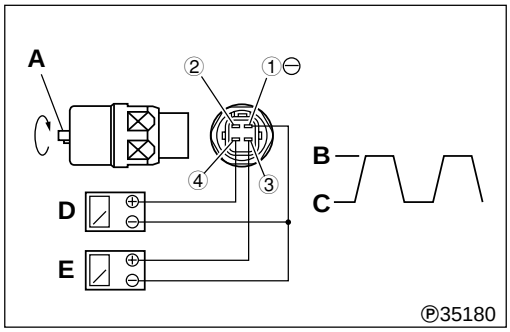

265 Checking Vehicle Speed Sensor

- Slowly rotate portion **A** of the vehicle speed sensor with a voltage of 12V DC applied across pins ① and ③.
- Measure the maximum value (high pulse voltage **B**) and minimum value (low pulse voltage **C**) of the voltage generated across the pins ① and ②.

D: Tester (to check 25 pulses)

Standard value	Low pulse	0.5 V or less
	High pulse	8 ± 1 V

- If the reading is out of the standard value, replace the vehicle speed sensor.

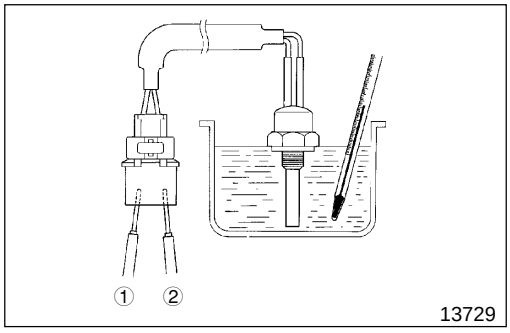

304 Checking Boost Air Temperature Sensor

- Place the boost air temperature sensor in glycerin in a container.
- Raise the glycerin temperature to the specified values and stir the glycerin.
- Measure the resistance between pins ① and ②.
- If the measured value deviates from the standard value, replace the boost air temperature sensor. Gr15

Standard value	0°C {32°F}	5880 ± 588 Ω
	20°C {68°F}	2450 ± 245 Ω
	80°C {176°F}	322 ± 48 Ω

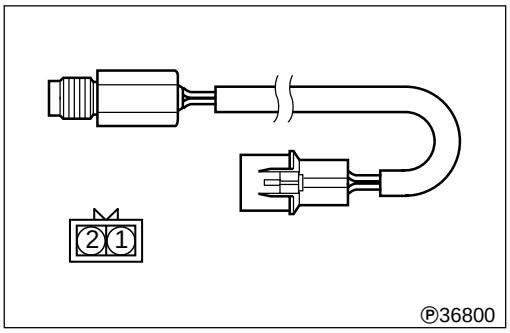

316 Checking TDC Sensor

- Measure the resistance between pins ① and ②.

Standard value (at 25°C {77°F})	1.5 ± 0.2 kΩ

- If the reading is out of the standard value, replace the TDC sensor.

318 Checking Boost Pressure Sensor

<Checking by use of Multi-Use Tester II>

P13E-28

NOTE:

The boost pressure checking conditions differ between when the boost pressure is checked by use of the Multi-Use Tester II and when it is checked without use of the Multi- Use Tester II. So the standard values also differ.

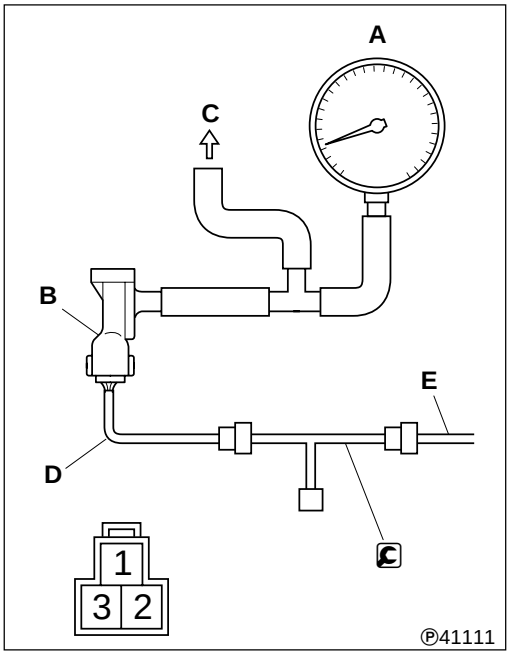

<Checking without use of Multi-Use Tester II>

- Disconnect the harness **D** of the boost pressure sensor from the chassis side harness **E** and connect the C inspection harness between them.

Too Name and Shape	Part No.
Inspection Harness 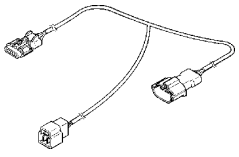 02806	MC854336

- Mount pressure gauge **A** for measurement of the boost pressure.
  C: To inlet manifold
- Set the starter switch to ON.
- Measure the output voltage of the boost pressure sensor **B** according to the following table.

Item	Connector Pin		
	① Power (+)	② GND (-)	③ Output (+)
Power voltage	○	○	
* Output voltage (Refer to the output characteristics shown at left.)		○	○

*: Start the engine before measurement.

Output Characteristics

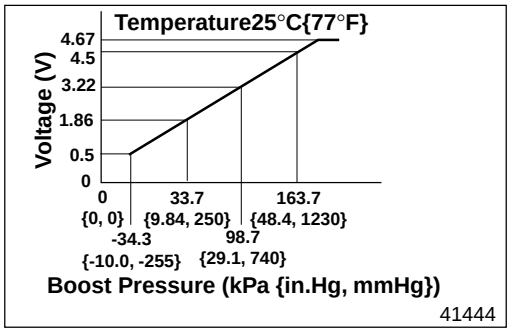

Standard Value	② - ③	5 V
	① - ②	0.5 V/–34.3 kPa {–10.0 in. Hg, –255 mmHg}
		1.86 V/33.7 kPa {9.84 in. Hg, 250 mmHg}
		3.22 V/98.7 kPa {29.1 in. Hg, 740 mmHg}
		4.5 V/163.7 kPa {48.4 in. Hg, 1230 mmHg}

- If the results of the above mentioned checks show any deviation from the standard values, replace the boost pressure sensor **B**.

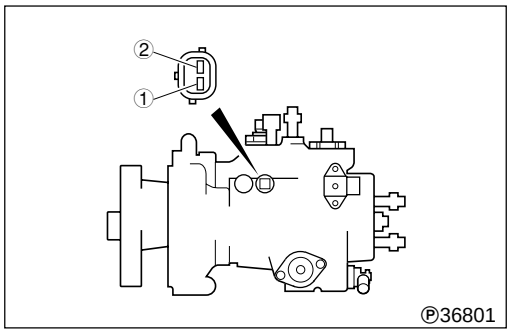

323 Checking Fuel Temperature Sensor

- Measure the resistance between pins ① and ②

Standard value (at 20°C {68°F})	2.5 ± 1.0 kΩ

- If the reading is out of the standard value range, replace the fuel temperature sensor. Ask your DENSO service station to replace it.

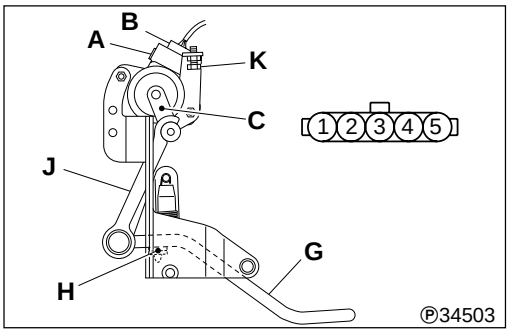

324 Checking Accelerator Position Sensor

[Inspection]

- Set the starter switch to ON.
- Measure the output voltage of the accelerator position sensor **A** from the back side of harness connector **B** according to the following table.

Lever **C** position		Accelerator Position Sensor 1		Accelerator Position Sensor 2		Accelerator Switch	
		②	①	②	⑤	②	③
		⊕	⊖	⊕	⊖	⊕	⊖
Standard value	Idling position **D**	0.85 ± 0.1 V		0.85 ± 0.1 V		4V or more	
	Accelerator switch operating position **E**	1.0 ± 0.24 V		1.0 ± 0.24 V		1V or less	
	Full load position **F**	4.0 ± 0.1 V		4.0 ± 0.1 V			

○——○ : There must be continuity between the pins.

⊕ , ⊖ : Polarity when voltage is measured

D: Where accelerator control arm **G** is in contact with stopper **H**

E: Where voltage across pins ② and ③ is reduced to 1V or less by slowly depressing the accelerator pedal

F: Where accelerator control extension **J** is in contact with stopper bolt **K**

- If the output voltage is out of the standard value range, adjust by the following procedures.

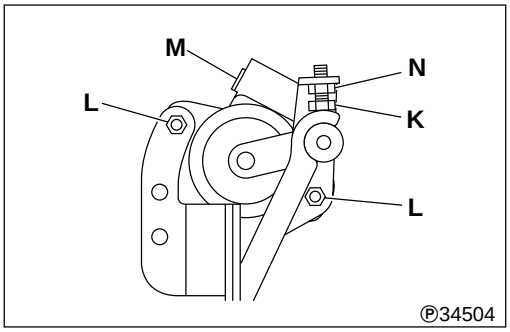

[Adjustment]

- Adjust the output voltage at the idling position **D** by loosening the screw **L** and moving the accelerator position sensor **A**.
  After the adjustment, retighten the screw.
- Adjust the output voltage at the full load position **F** by loosening the nut **M** and adjusting the stopper bolt **K**.
  After the adjustment, lock the bolt with the nut.

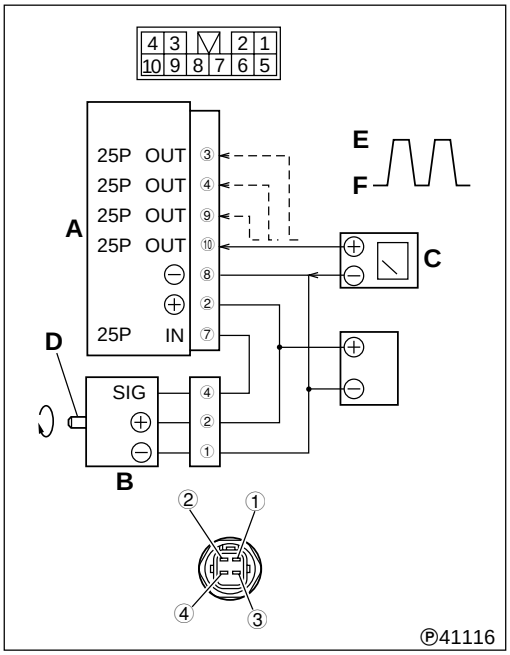

351 Checking Pulse Divider

- Wire the pulse divider **A** as shown.
  B: Vehicle speed sensor (Use 25-pulse pins.)
  C: Tester
- Slowly rotate the shaft **D** of the vehicle speed sensor **B** by hand and measure the maximum value (high pulse voltage **E**) and the minimum value (low pulse voltage **F**) of the voltage generated across each of the output pins (③, ④, ⑨, ⑩) and pin ⑧ of the pulse divider **A**.

Standard value	Low pulse voltage **F**	0.5V or less
	High pulse voltage **E**	8 ± 1 V

- If the reading is out of the standard value, replace the pulse divider **A**.

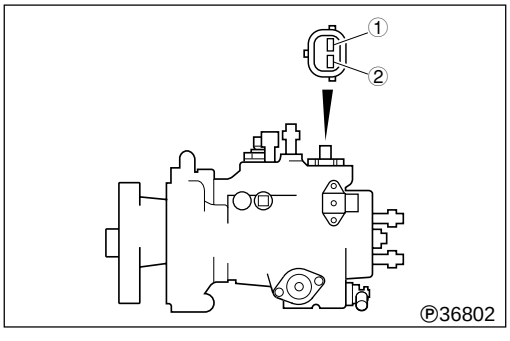

536 Checking Spill Valve

- Measure the resistance between pins ① and ②.

Standard value (at 20°C {68°F})	1.5 ± 0.5 Ω

- If the reading is out of the standard value range, replace the spill valve. Ask your DENSO service station to replace it.

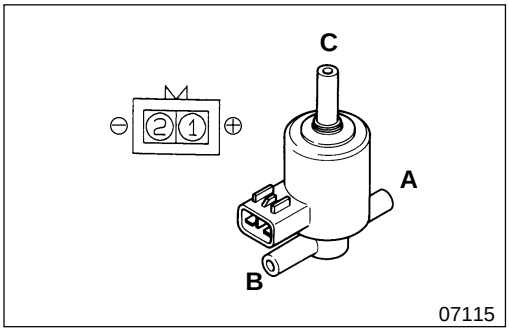

565 Checking 3-Way Magnet Valve

Perform the following checks. If there is anything wrong, replace the 3-way magnet valve.

(1) Operation Check

- Apply DC voltage across pins ① and ② and slowly increase, beginning at 0V.
- Measure the voltage at the time when the 3-way magnet valve is operated.
  (Determine whether the magnet valve is ON or OFF on the basis of its operating sound.)

Standard value (Lowest operating voltage)	11 V or less

(2) Continuity and Air Tightness Checks

Perform continuity checks according to the following table.

	Input Port **A**	Output Port **B**	Exhaust Port **C**
ON	○——○		
OFF		○——○	

○——○ : There must be continuity between the pins.

Negative pressure at the time of check: 100 kPa {30 in.Hg, 750 mmHg}

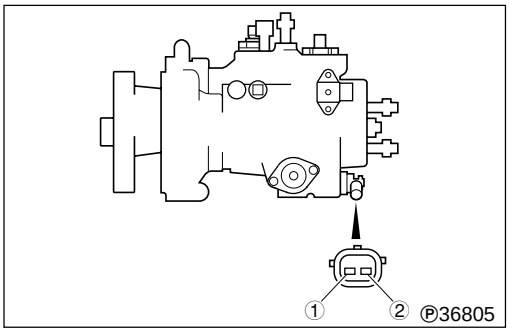

584 Checking Timer Control Valve

- Measure the resistance between pins ① and ②.

Standard value (at 20°C {68°F})	11.3 ± 3 Ω

- If the reading is out of the standard value range, replace the timer control valve. Ask your DENSO service station to replace it.

LOCATIONS OF PARTS

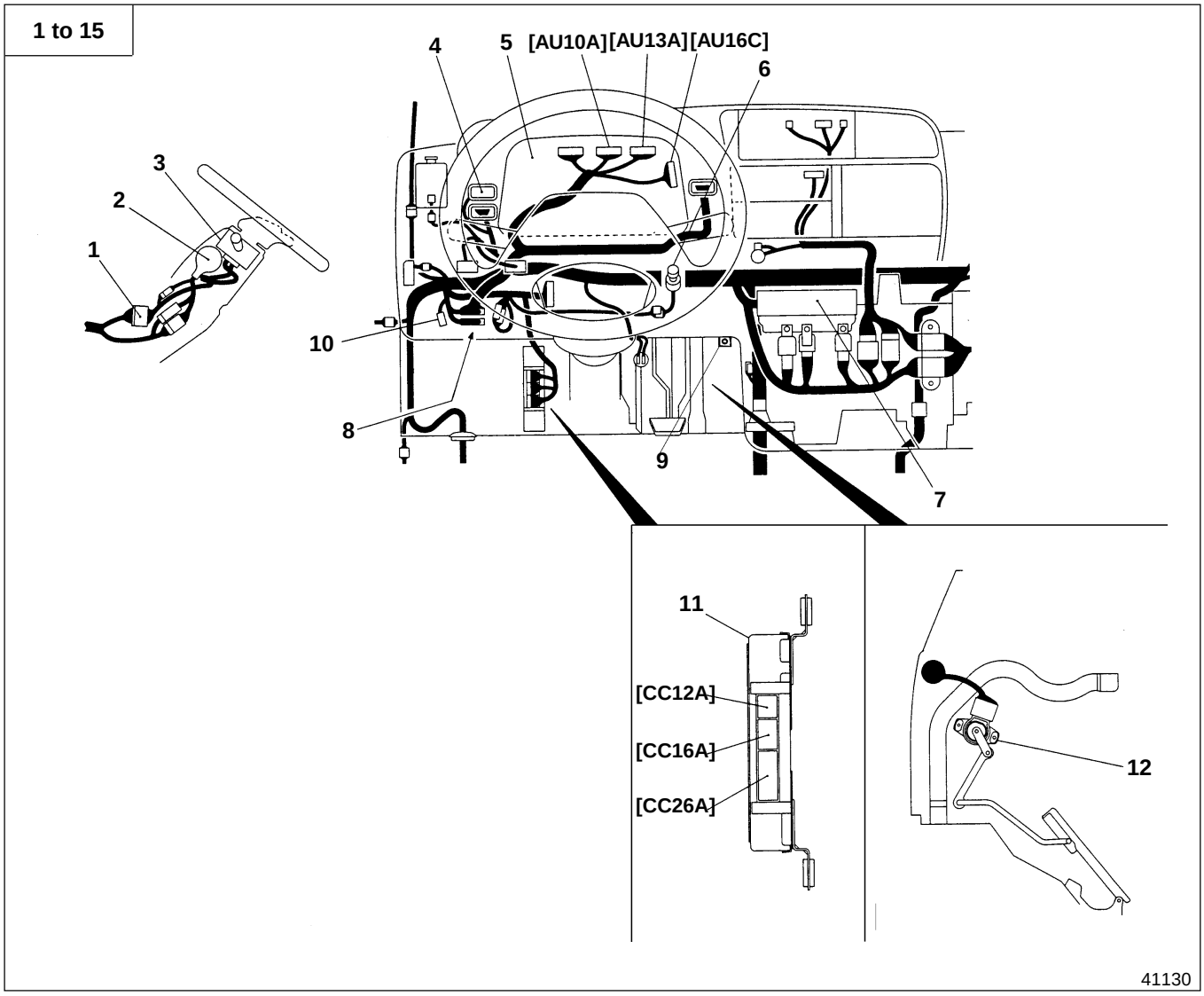

1 Connection of cab harness and column harness
2 Starter switch
3 Combination switch
4 Warming up switch
5 Meter cluster
6 Idling speed adjustment potentiometer
7 Fuse box
8 Connection of cab harness and meter harness
9 Emergency engine stop switch
10 Fuel injection rate adjustment resistor
11 Automatic transmission control unit
12 Accelerator pedal sensor

Connector type shown in [ ]

16 to 30

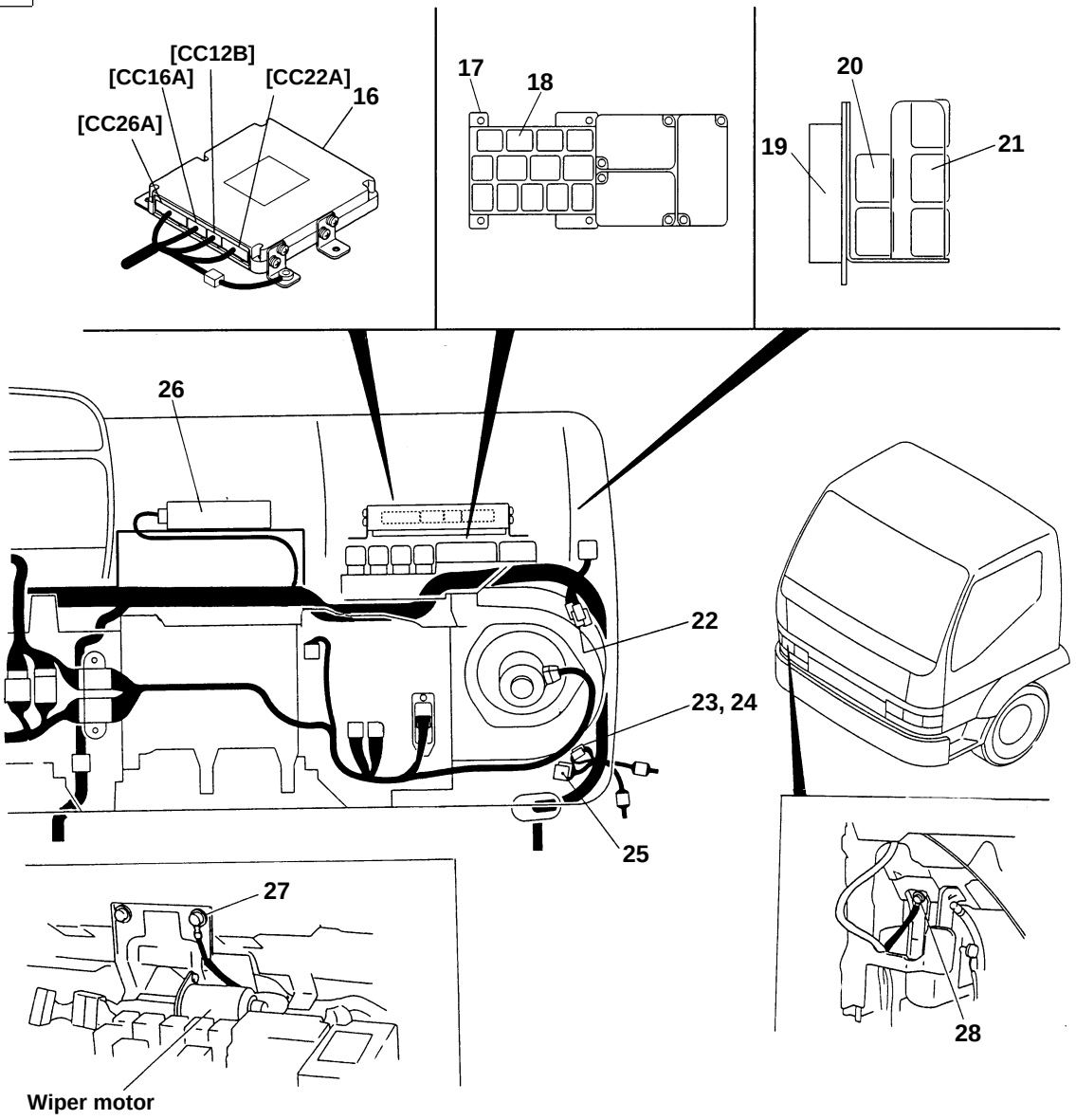

16 Engine control unit
17 Relay box
18 Exhaust brake cut relay
19 Drive unit
20 Drive unit relay
21 Electric control main relay
22 Diode
23 Diagnosis switch
24 Memory clear switch
25 Multi-use tester-II connector
26 Pulse divider
27 Cab ground
28 Cab ground

Connector type shown in [ ]

LOCATIONS OF PARTS

31 to 40

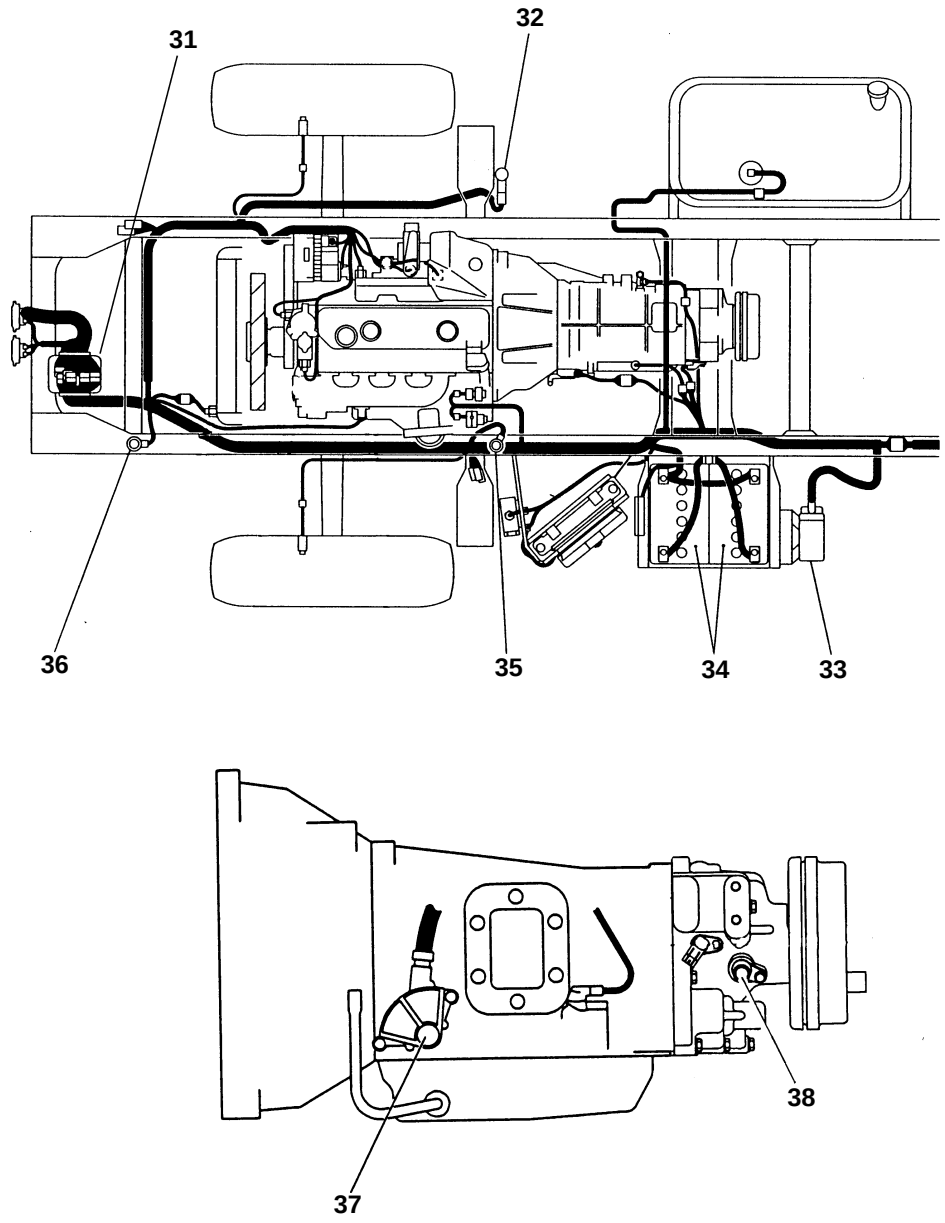

31 Connected of cab harness and chassis harness
32 Exhaust brake 3-way magnetic valve
33 High current fuse box
34 Battery
35 Chassis ground
36 Chassis ground
37 Inhibitor swtich
38 Vehicle speed sensor

Connector type shown in [ ]

41 to 50

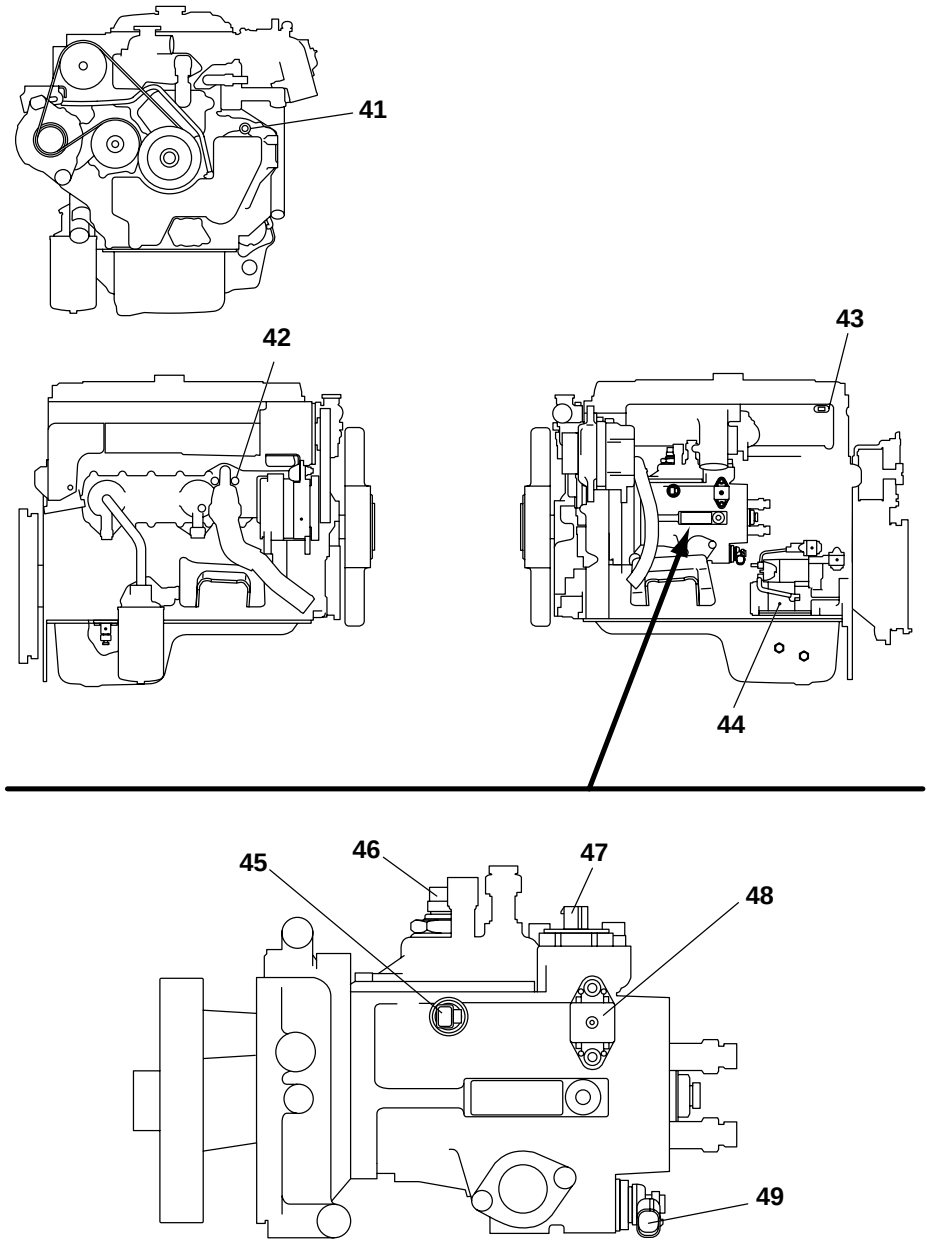

41 Top dead center (TDC) sensor
42 Coolant temperature sensor
43 Boost pressure sensor
44 Starter
45 Fuel temperature sensor
46 Engine speed sensor
47 Spill valve
48 Injection rate adjusting read-only memory
49 Timer control valve
50 Missing number

ELECTRICAL WIRING DIAGRAM

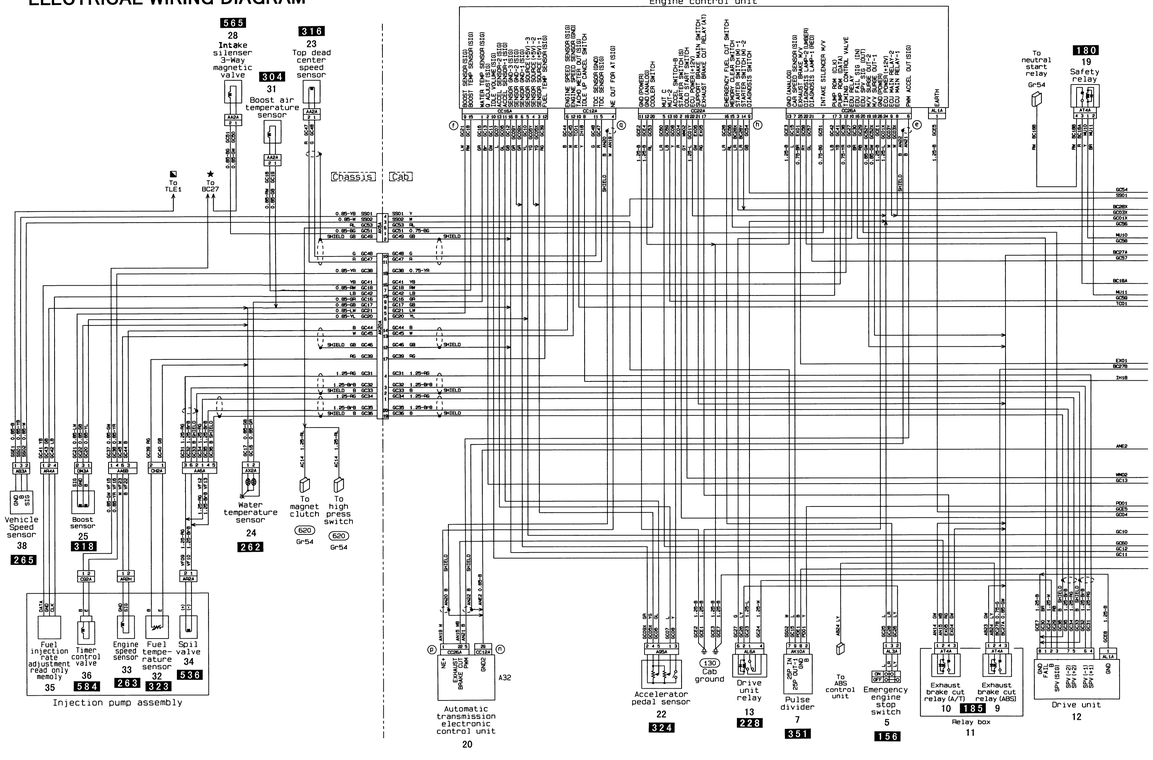

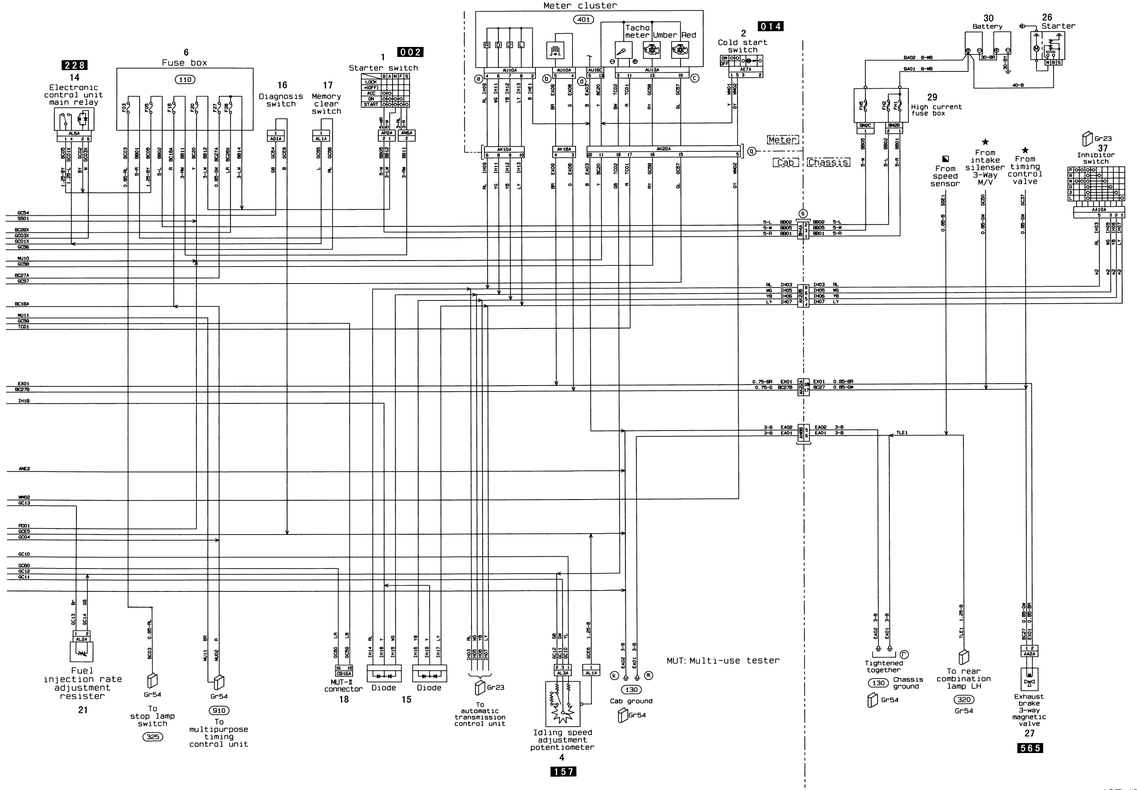

MITSUBISHI
FUSO

FE.FG

Service Manual

Group 13
Fuel and Engine Control

'99 Minor Change

Table of Contents

MITSUBISHI FUSO TRUCK OF AMERICA, Inc.

BACK HOME

Pub No. TWSE9501-313

GROUP 13 FUEL AND ENGINE CONTROL

SPECIFICATIONS ..... 13 - 2

STRUCTURE AND OPERATION ..... 13 - 4

TROUBLESHOOTING ..... 13 -32

READING AND ERASING DIAGNOSIS CODES ..... 13 -36

SERVICE PROCEDURES USING MUT-II ..... 13 -42

INSPECTION BASED ON DIAGNOSIS CODE ..... 13 -44

ON-VEHICLE INSPECTION AND ADJUSTMENT

- Checking and Adjusting Injection Timing ..... 13 -48
- Bleeding Air from Fuel System ..... 13 -51
- Cleaning Gauze Filter ..... 13 -51
- Replacing Fuel Filter ..... 13 -52

ENGINE CONTROL ..... 13 -53

FUEL TANK ..... 13 -58

FUEL FILTER ..... 13 -59

WATER SEPARATOR ..... 13 -60

INJECTION PUMP ..... 13 -62

INJECTION NOZZLE ..... 13 -66

INSPECTION OF OTHER DEVICES ..... 13 -70

ELECTRIC CIRCUIT AND PART INSTALLATION LOCATIONS ..... 13 -82

SPECIFICATIONS

Injection Pump

Item	Specifications
Manufacturer	ZEXEL
Body model	MD-TICS (Pre-stroke control type)
Governor type	RED-III Electronic control governor
Feed pump model	KD

Injection Nozzle

Item	Specifications
Manufacturer	ZEXEL
Model and type	DLLA hole type 1-spring nozzle
Nozzle orifice quantity	5
Orifice diameter mm {in.}	ϕ 0.25 {0.0098}

Fuel Filter Type

Item	Specifications
Filter type	Spin-on type

M E M O

Fuel System (Flow of Fuel)

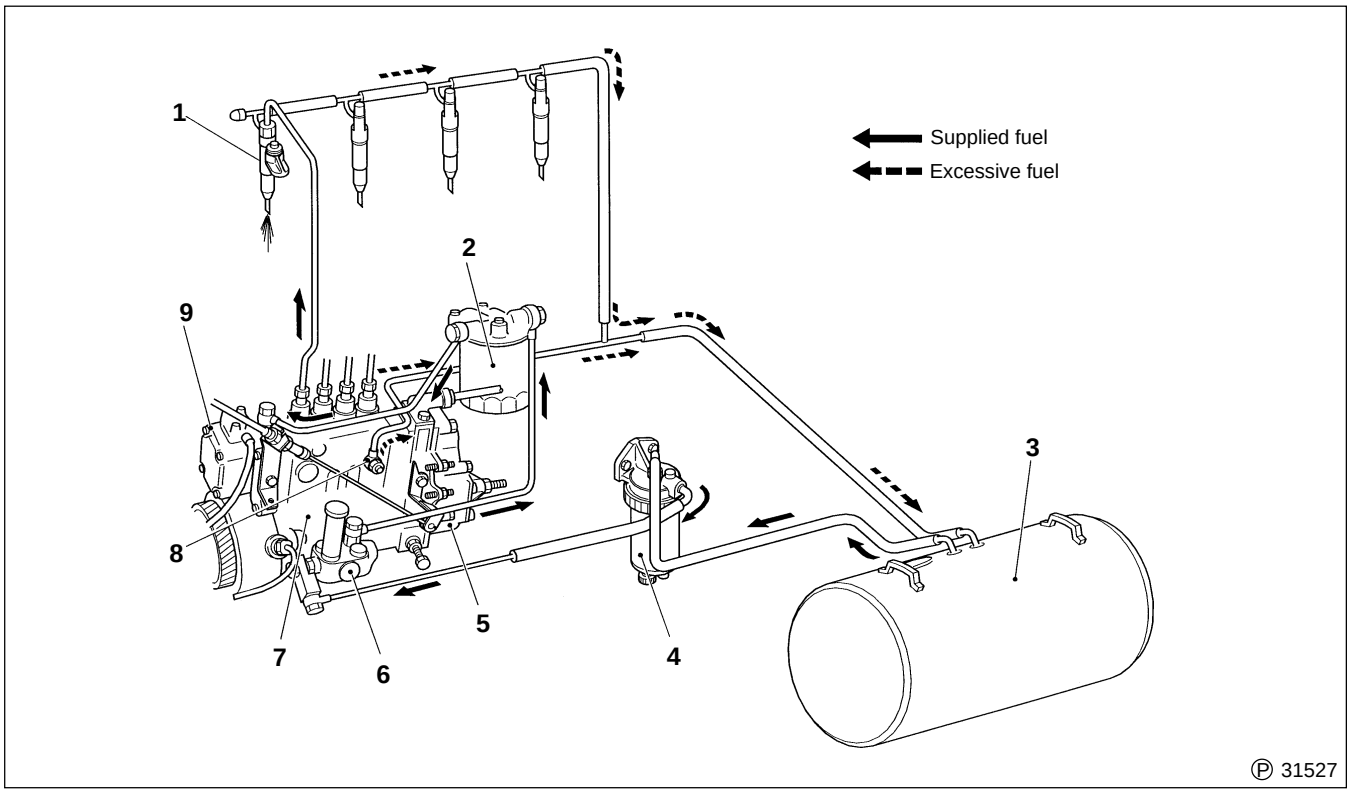

1 Injection nozzle
2 Fuel filter
3 Fuel tank
4 Water separator
5 Electronic governor
6 Feed pump
7 Injection pump
8 Overflow valve
9 Pre-stroke actuator

Fuel in fuel tank **3** is sucked up by feed pump **6** which is driven by the cam action of injection pump **7** and is filtered through fuel filter **2** which removes dirt and other foreign particles.
Filtered fuel is sent to the injection pump where the fuel pressure is boosted and injected through injection nozzle **1** into the combustion chamber.
When fuel pressure is higher than the specified value, overflow valve **8** opens to let the fuel return to the fuel tank.

Engine Control

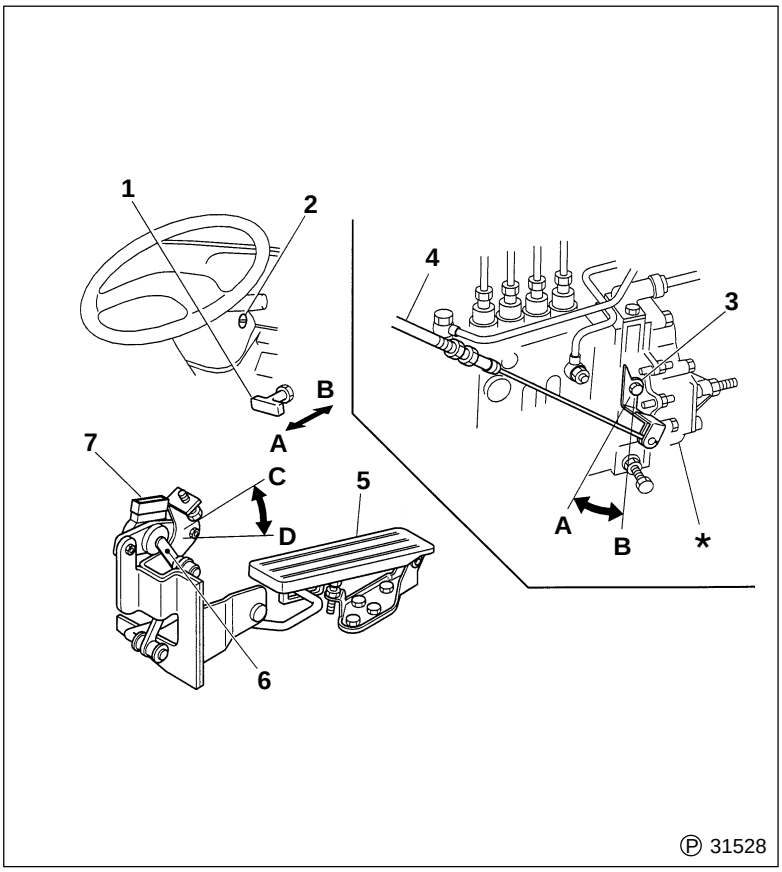

1 Emergency engine stop handle
2 Starter switch
3 Engine stop lever
4 Engine stop cable
5 Accelerator pedal assembly
6 Lever
7 Accelerator pedal position sensor

***** : Electronic governor

A : Engine-stop position
B : Engine start-up position
C : Full-load position
D : Idling position

● **Accelerator switch**

The accelerator switch is integrated in the accelerator pedal position sensor **7**. It detects the pressing of accelerator pedal assembly **5**.

● **Accelerator pedal position sensor**

Accelerator pedal position sensor **7** detects the movement of accelerator pedal assembly **5**, and sends an electric signal to the electronic governor control unit. Lever **6** of the accelerator pedal position sensor is constantly pulled by the return spring towards idle position **D**.

● **Emergency engine stop button**

In normal condition, turn starter switch **2** to the ACC position to electrically shut down the engine operation.
In the case the engine does not stop when the starter switch is turned to the ACC position due to malfunction of the electronic governor system or other cause, stop the engine by pulling emergency engine stop handle **1** to move stop lever **3** of electronic governor ***** to engine-stop position **A**.

CAUTION ⚠

When the engine is stopped by pulling engine stop handle 1, set starter switch 2 to the ACC or LOCK position to reset the control unit computer.
Restarting the engine without resetting the computer results in unstable engine speed control.

Fuel Gauge Electric Circuit

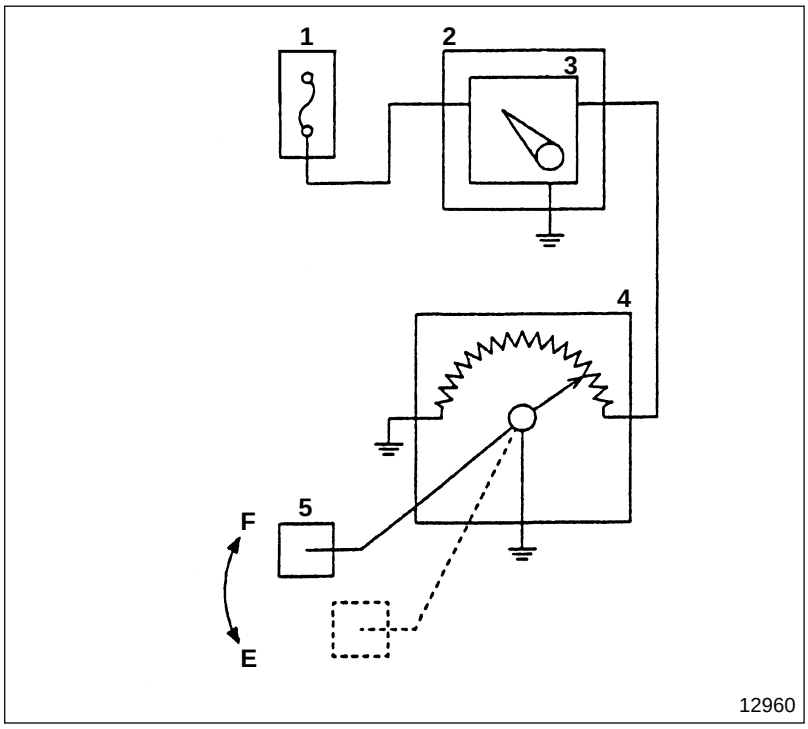

1 Fuse box
2 Meter cluster
3 Fuel gauge
4 Fuel gauge sending unit
5 Float

The fuel gauge circuit indicates the amount of fuel remaining in the fuel tank by means of a gauge.

Water Separator

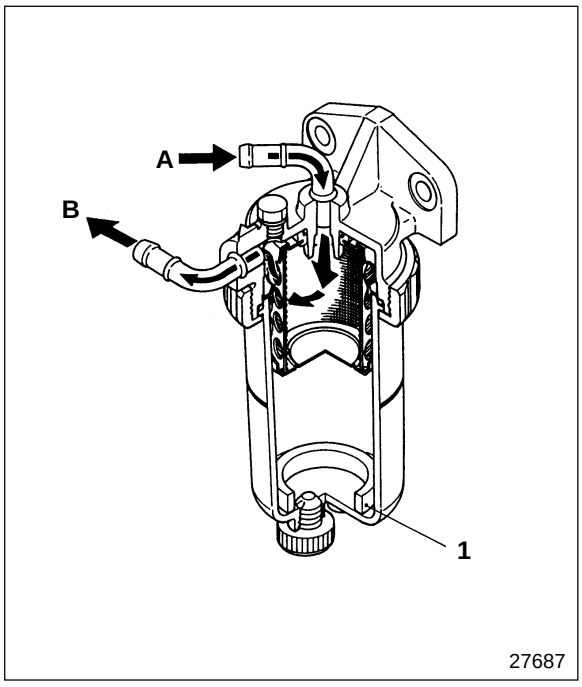

1 Water level ring

A : From fuel tank
B : To feed pump

The water separator is installed between the fuel tank and the feed pump. Any water present in the fuel is separated by the baffle plate and the screen assembly.

Fuel Filter

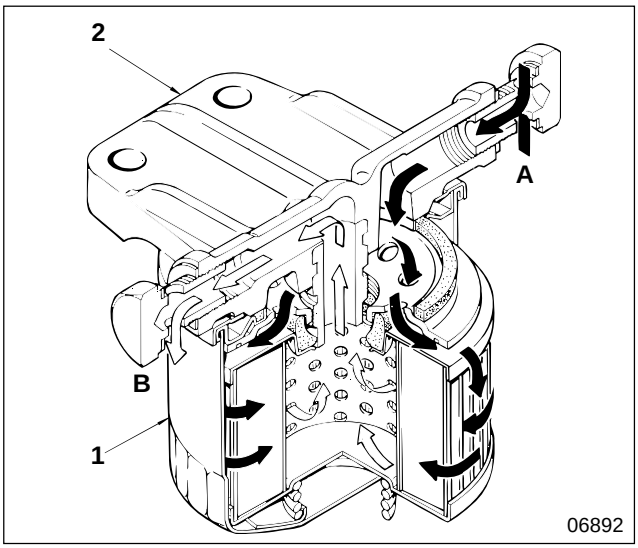

1 Fuel filter
2 Fuel filter head

A : From feed pump
B : To injection pump

Pressurized fuel is delivered from the feed pump of the injection pump to the fuel filter which separates water from the fuel. Dirt and other foreign particles are removed from the fuel by fuel filter **1**.

Configuration of Electronic Governor and Pre-stroke Control Injection Pump System

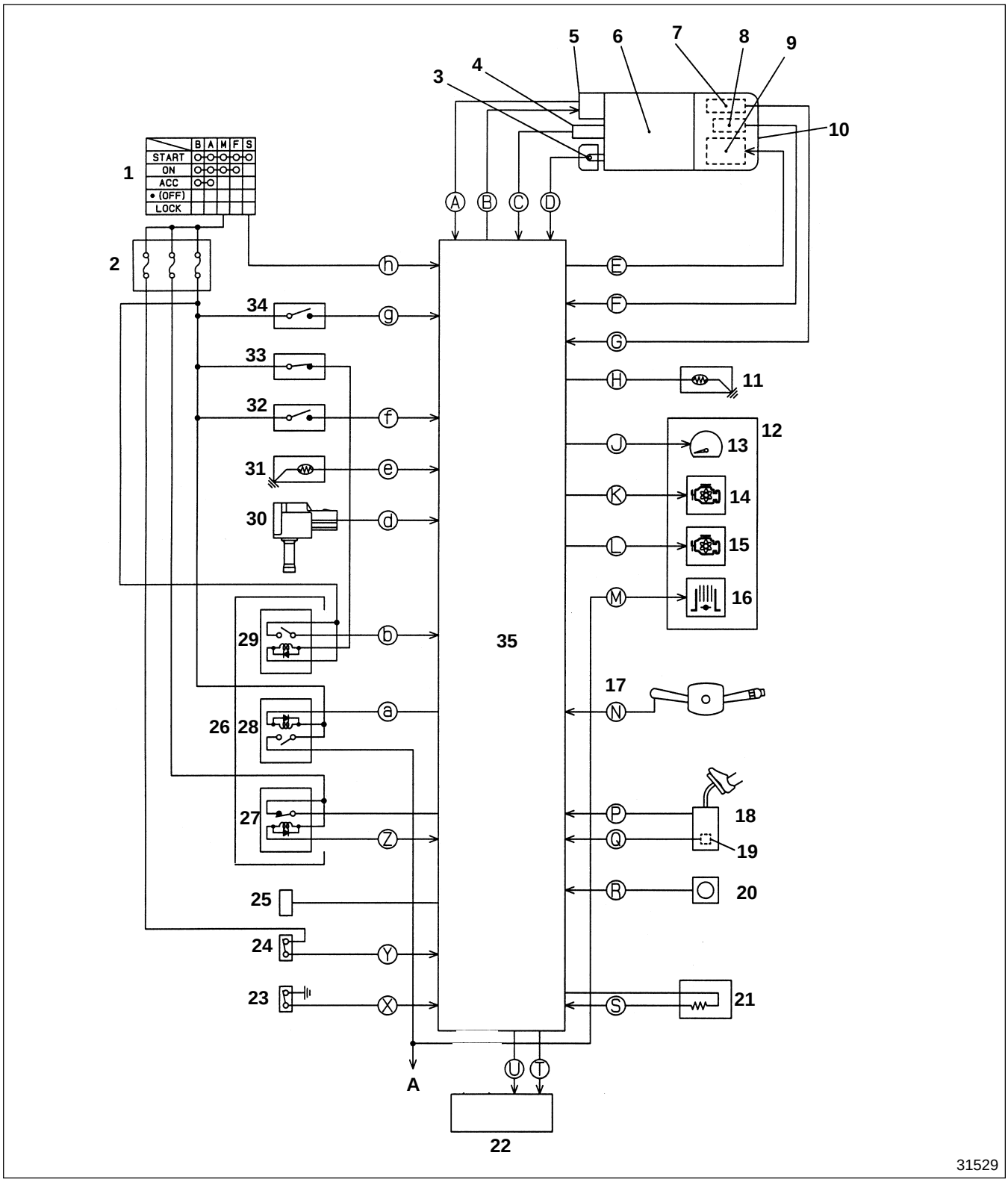

A : To exhaust brake 3-way magnetic valve Gr 54

Part		Main function/operation	Data signal
1	Starter switch	Sensing of start signal	ⓗ : Start signal
2	Fuse box	—	—
3	Engine speed sensor	Sensing of engine speed	Ⓓ : Engine speed signal
4	Sub control rack position sensor	Sensing of control rack position	Ⓒ : Control rack position signal (backup)
5	Pre-stroke actuator • Pre-stroke position sensor • Drive unit	— —	Ⓐ : Pre-stroke position signal Ⓑ : Actuator drive signal
6	Pre-stroke control type injection pump	Alteration of pre-stroke (advancement of fuel injection timing)	—
7	Control rack position sensor	Sensing of control rack position	Ⓖ : Control rack position signal
8	Backup engine speed sensor	Sensing of engine speed	Ⓕ : Engine speed signal (backup)
9	Linear DC motor	Activation of rack	Ⓔ : Linear DC motor drive signal
10	Electronic governor	—	—
11	Boost temperature sensor	Detection of engine intake air temperature	Ⓗ : Boost temperature signal
12	Meter cluster	—	—
13	Tachometer	—	Ⓙ : Tachometer drive signal
14	Warning lamp (Orange)	Indication of system faults and diagnosis codes	Ⓚ : Lamp illumination signal
15	Warning lamp (Red)		Ⓛ : Lamp illumination signal
16	Indicator lamp	—	Ⓜ : Lamp illumination signal
17	Auxiliary brake switch	ON/OFF switching of Exhaust brake	Ⓝ : Exhaust brake ON signal
18	Accelerator pedal position sensor	Sensing of accelerator pedal depression amount	Ⓟ : Accelerator pedal position signal
19	Accelerator pedal switch	Turns OFF when accelerator pedal is depressed	Ⓠ : Accelerator pedal depression signal
20	Idling speed adjustment potentiometer	Shortening of warmup time	Ⓡ : Warmup time shortening signal
21	Fuel injection rate adjustment resistor	Correction of fuel injection rate	Ⓢ : Injection volume correction signal
22	Automatic transmission control unit	Automatic transmission control	Ⓣ : Accelerator position signal Ⓤ : Engine speed signal
23	Diagnosis switch	Generation of diagnosis codes	Ⓧ : Diagnosis code signal
24	Memory clear switch	Eraser of diagnosis codes	Ⓨ : Diagnosis code eraser signal
25	MUT-II connector (16 pin)	Connection of MUT-II	—
26	Relay box	—	—
27	Pre-stroke cut relay	Closes contacts upon plunger pre-stroke operation	Ⓩ : Pre-stroke operation signal
28	Exhaust brake relay	Closes contacts upon exhaust brake operation	ⓐ : Exhaust brake operation signal
29	Transmission neutral relay	Contact closed when transmission is in neutral	ⓑ : Transmission neutral signal
30	Boost pressure sensor	Sensing of boost pressure	ⓓ : Boost pressure signal
31	Coolant temperature sensor	Sensing of engine coolant temperature	ⓔ : Coolant temperature signal
32	Clutch pedal switch	Turns OFF when clutch pedal is depressed	ⓕ : Clutch pedal depression signal
33	Transmission neutral switch	Turns OFF when transmission neutral is selected	—
34	Warming switch	Shortening of warmup time	ⓖ : Warmup time shortening signal
35	Electronic governor control unit	Control of overall system	—

- The electronic governor and pre-stroke control injection pump system combines an electronic governor **10** with an injection pump **6** that has an electronically controlled pre-stroke adjustment feature.
- The injection pump's plunger lift speed varies in accordance with the engine speed, causing concomitant variations in the injection pipe pressure.
- Variations in the injection pipe pressure make it difficult to achieve an optimum spray from the injection nozzles and the optimum air/fuel mixture.
- To compensate for changes in the injection pipe pressure, the injection pump plunger pre-stroke is increased at low and mid- range speeds, thus ensuring that fuel injection takes place late in the cam lift, when plunger movement is relatively fast.
- At high speeds, the plunger pre-stroke is decreased, thus ensuring that fuel injection takes place in early in the cam lift, when plunger movement is relatively slow. Excessive increases in injection pipe pressure are thus prevented.
- By adjusting the plunger pre-stroke in this manner, the pre-stroke control injection pump **6** ensures that the spray and air/ fuel mixture are always optimally suited to combustion.
- The overall benefits are higher engine torque and cleaner exhaust emissions than are possible with a conventional injection pump.
- Control operations are performed by the electronic governor control unit **35**, which receives data from sensors on the engine and other vehicle components, processes them, and issues appropriate drive signals to the pre-stroke actuator **5** (located at the rear of the injection pump) and to the linear DC motor **9** (located inside the electronic governor).

The system's control functions (including auxiliary functions) are shown in the following table.

Item	Operation	Data source	
		Sensor(s)	Data signal(s)
Fuel injection rate control	The fuel injection rate is optimized to match engine operating conditions. P13-12	3, 7, 18, 19, 21, 28	Ⓓ, Ⓖ, Ⓟ, Ⓠ, Ⓢ, ⓑ
Pre-stroke control	The timing sleeve position is altered, thereby changing the pre-stroke and advancing the fuel injection timing. P13-13	3, 5, 18, 31	Ⓓ, Ⓐ, Ⓑ, Ⓟ, ⓔ
* Control rack preliminary operation	In cold weather and other conditions that are unfavorable for engine startup, the control rod is caused to move slightly in the fuel increase direction, thus enhancing startabilily. This operation takes place when the starter switch is turned ON.	1, 18, 19, 31	ⓗ, Ⓟ, Ⓠ, ⓔ
* Warmup time shortening function	In cold weather, the engine's idling speed is increased to shorten the time required for warmup. P13-14	18, 19, 20	Ⓟ, Ⓠ, Ⓡ
* Overrun prevention function	In the event of an abnormal increase in engine speed, the control rack is pulled in the fuel decrease direction to prevent the engine from overrunning.	3	Ⓓ
* Emergency vehicle operation function (used in event of control rack position sensor fault)	In the event of a fault in the control rack position sensor **7**, the control rack position is sensed by the sub control rack position sensor **4**. If both rack position sensors develop faults, thus preventing detection of the rack position and optimization of the fuel injection rate, the fuel injection rate is controlled in accordance with engine speed signals only. P13-16	3, 4, 7	Ⓓ, Ⓒ, Ⓖ
* Auxiliary brake control function	The auxiliary braking devices (exhaust brake) are controlled by the electronic governor control unit **35**. (In a conventional system, the auxiliary braking devices are controlled by switches, relays, and dedicated controllers.) P13-17	3, 16, 18, 19, 29, 32, 33	Ⓓ, Ⓜ, Ⓟ, Ⓠ, ⓑ, ⓕ
* Fault diagnosis function	The status of each system sensor is monitored continuously during engine operation. In the event of a fault, a warning lamp is illuminated to alert the driver and data related to the fault are stored in memory. P13-34	ALL	ALL
* Fail-safe function	In the event of a fault, a backup mode is selected and remedial action is taken in accordance with the type of fault. P13-38	ALL	ALL
* Reverse engine operation prevention function	In the event of reverse engine operation, the control rack is pulled in the fuel decrease direction to stop the engine.	3	Ⓓ

* : Auxiliary function

System Block Diagram

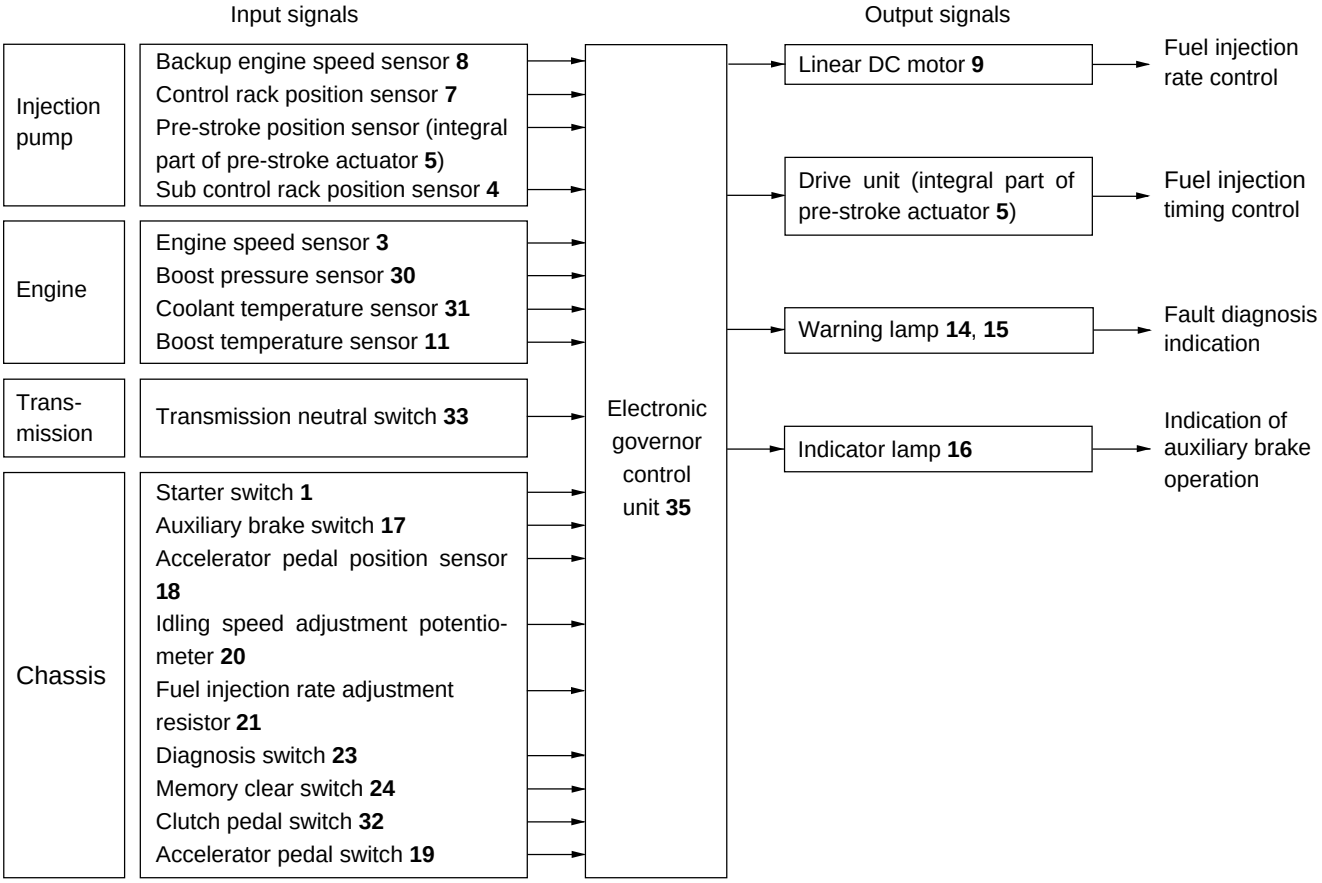

● Fuel Injection Rate Control

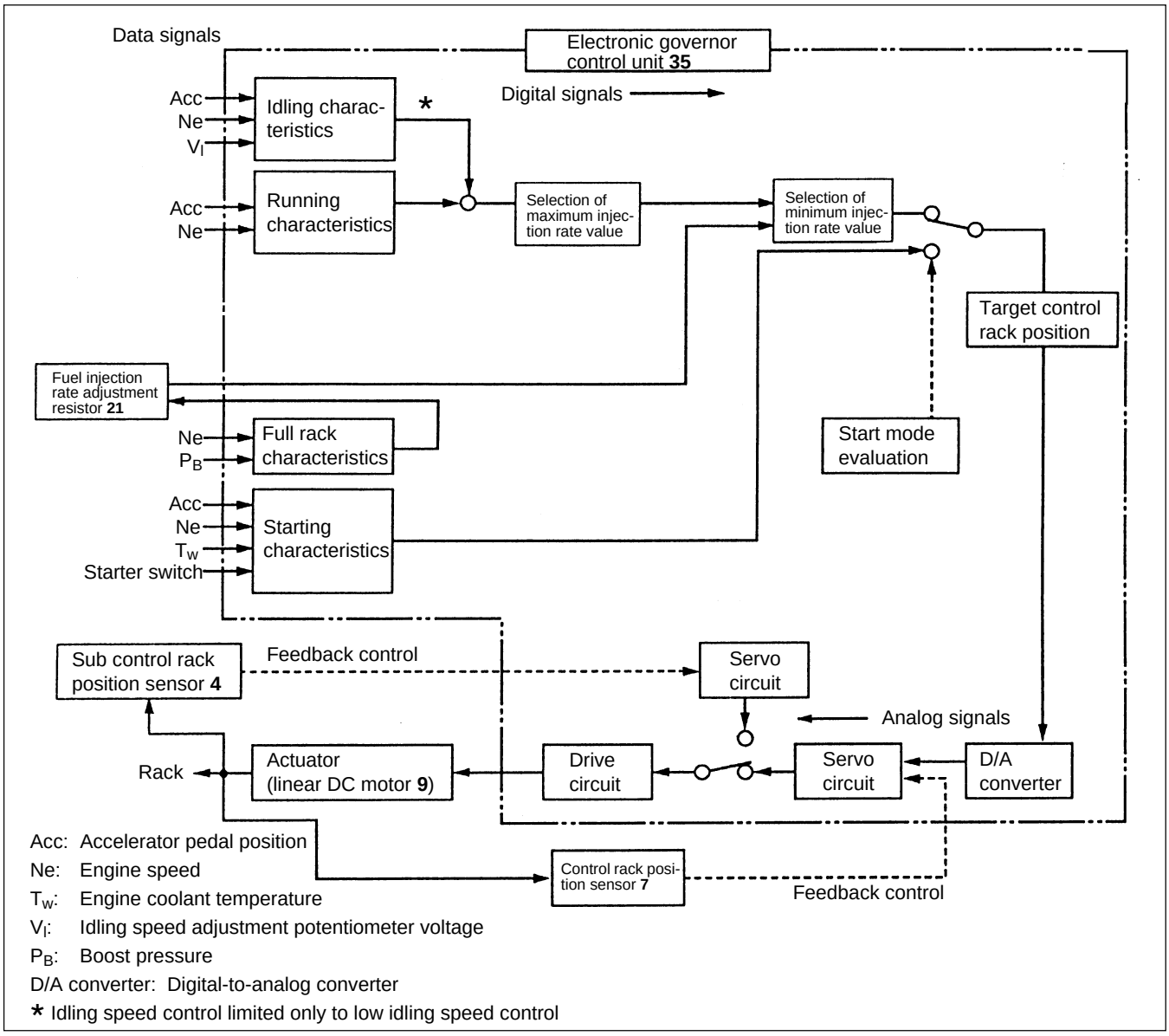

Operation of electronic governor control unit 35

- During engine operation, control is effected in accordance with the idling characteristics and running characteristics. The maximum fuel injection rate value is selected in accordance with the output signals.
- After this selection, the control unit calculates and determines the minimum injection rate to prevent the injection rate selected in accordance with the full rack characteristics from exceeding the maximum injection rate. The target control rack position is thus determined. (During engine startup, control is effected in accordance with the starting characteristics, with the target rack position determined directly in accordance with the data signals.)
- The determined control rack position signal is converted into a continuous analog signal. By way of the servo circuit and drive circuit, the signal is applied to the linear DC motor **9**, which moves the rack.

Operation of control rack position sensor 7

- The control rack position sensor **7** monitors the operation of the linear DC motor **9**. In accordance with the position of the control rack, the sensor determines whether the linear DC motor is operating in accordance with the target, and it transmits feedback signals to the electronic governor control unit **35**.
- In accordance with the feedback signals, the electronic governor control unit **35** calculates the actual control rack position. If the actual position differs from the target, the control unit issues a correction command.
- Through repetition of this process, the system ensures that the control rack position complies with the target at all times.

● Pre-stroke control

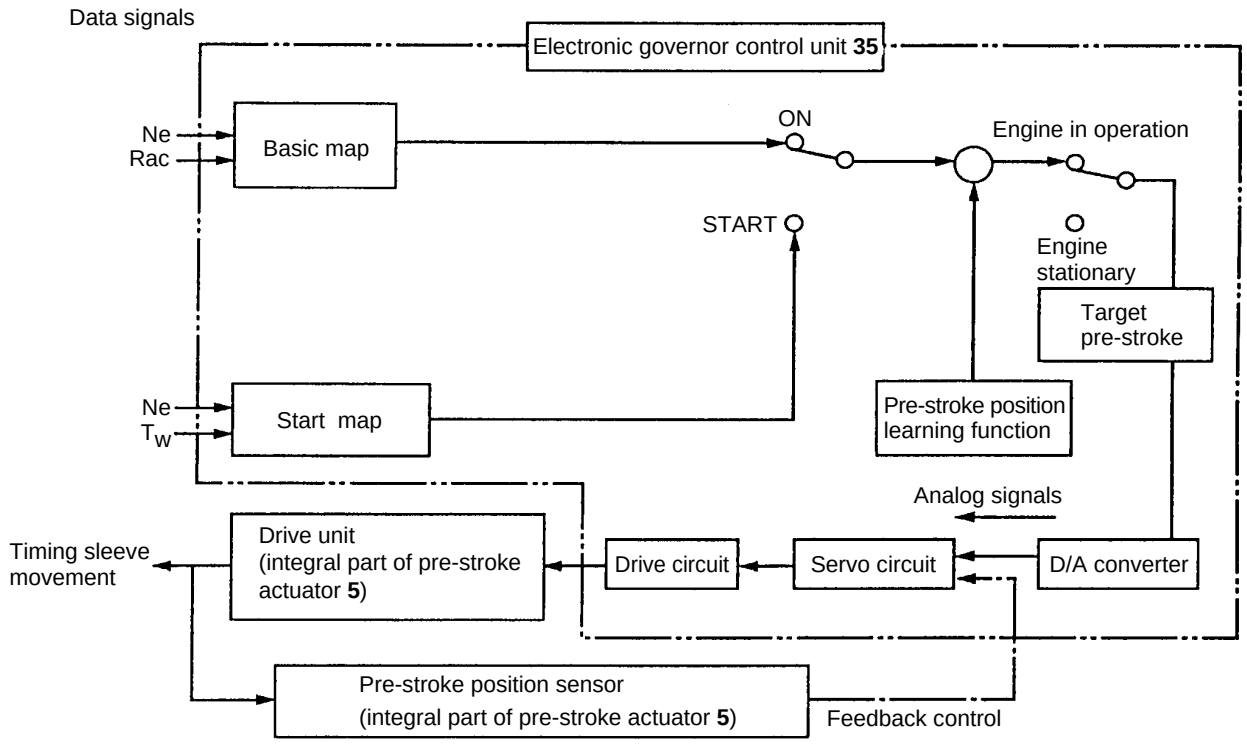

Rac: Control rack position
Ne: Engine speed
T_W: Engine coolant temperature
D/A converter: Digital-to-analog converter

Operation of electronic governor control unit 35

- During engine operation, control is effected in accordance with the basic map.
- The pre-stroke position learning function compensates for pre-stroke position sensor adjustment errors and other injection pump errors using the pre-stroke position sensor output voltage, thereby enabling determination of the target pre-stroke.
- The determined target pre-stroke value is converted into a continuous analog signal. By way of the servo circuit and drive circuit, the signal is applied to the drive unit. The drive unit moves the timing sleeve to alter the pre-stroke.
- During engine startup, control is effected in accordance with the start map.

Operation of pre-stroke position sensor (integral part of pre-stroke actuator 5)

- The pre-stroke position sensor monitors the operation of the drive unit. In accordance with the position of the timing sleeve, the sensor determines whether pre-stroke control is being performed in accordance with the target, and it transmits feedback signals to the electronic governor control unit **35**.
- In accordance with the feedback signals, the electronic governor control unit **35** calculates the actual timing sleeve position. If the actual position differs from the target, the control unit issues a correction command.
- Through repetition of this process, the system ensures that the timing sleeve position complies with the target at all times. The appropriate pre-stroke is achieved as a result.

● Warmup time shortening function

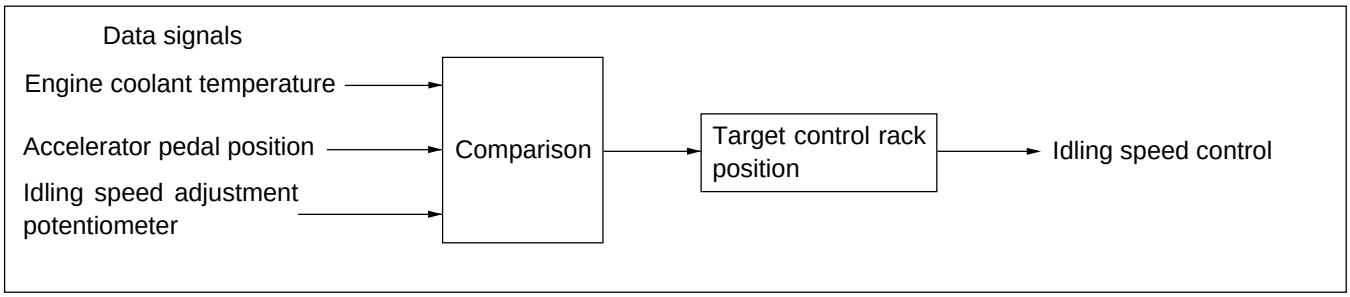

The warmup time shortening function increases the engine's idling speed in accordance with the coolant temperature, thereby shortening the time required for the engine to warm up. Control is effected automatically or manually in accordance with the position of the idling speed adjustment potentiometer **20**. Automatic control is selected by pushing the potentiometer, and manual control is selected by pulling it.

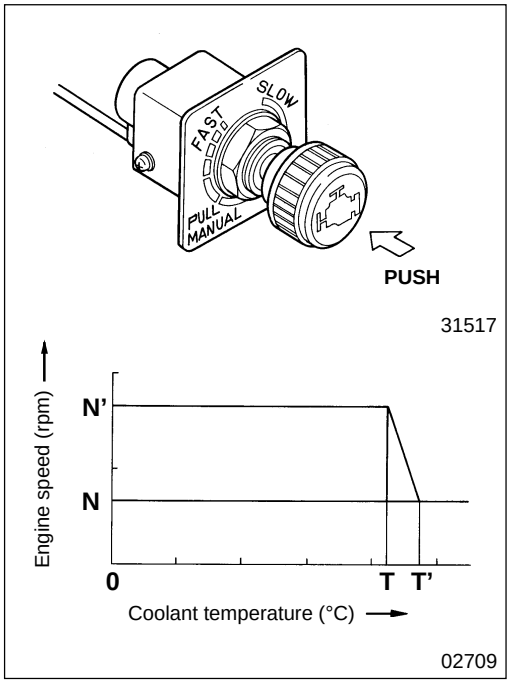

Automatic control (Potentiometer pushed)

- Automatic control is selected when the idling speed adjustment potentiometer **20** is pushed.
- When the coolant temperature is low, the engine's idling speed is automatically increased to shorten the time required for warmup.
- If the coolant temperature increases from **T** to **T'** (see the graph), the engine speed is decreased from **N'** to **N**, thus returning to its standard idling level.

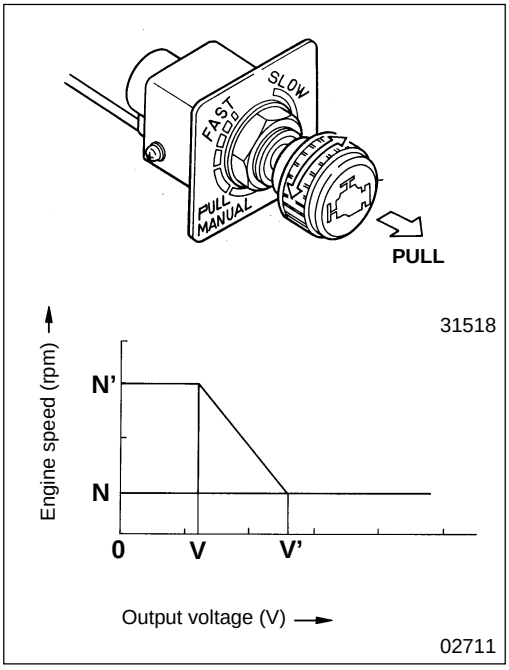

Manual control (Potentiometer pulled)

- When the idling speed adjustment potentiometer **20** is pulled, the automatic mechanism is deselected. The driver can then adjust the idling speed as desired by rotating the potentiometer. (Rotation of the potentiometer causes the potentiometer's output voltage to change accordingly.)
- With the output voltage between **0** and **V**, the engine speed stays at the **N** to **N'** level.
- If the output voltage is increased from **V** to **V'** (see the graph), the engine speed decreases from **N'** until it reaches its standard idling level **N**.

● Emergency vehicle operation function (Used in event of control rack position sensor fault)

Fault in Control rack position sensor 7

In the event of a fault in the control rack position sensor **7**, detection of the control rack position is performed using the sub control rack position sensor **4**. This enables more-or-less normal vehicle operation.

Fault in control rack position sensor 7 and sub control rack position sensor 4

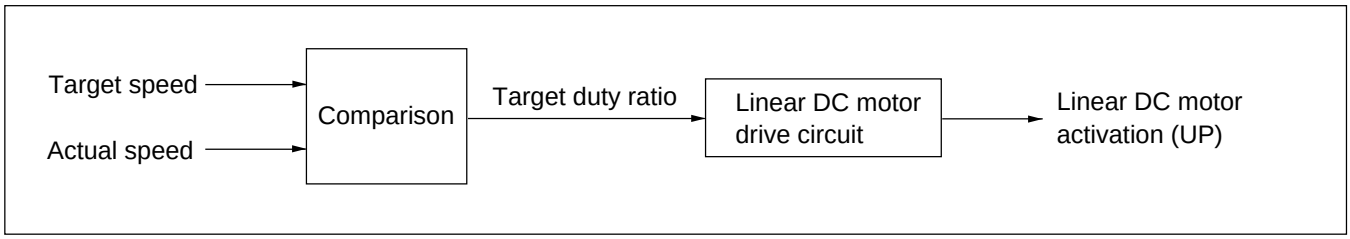

In the event of faults in both the control rack position sensor **7** and sub control rack position sensor **4**, the position of the rack, which is controlled by the linear DC motor **9**, cannot be sensed directly. The fuel injection rate cannot be controlled normally with the engine in this condition. As an emergency measure, therefore, control operations are performed in accordance with engine speed data signals only. For this function, target engine speeds for given degrees of accelerator pedal depression are pre-programmed into the electronic governor control unit **35**. Control is effected as follows:

- The target engine speed is compared with the actual engine speed (this is indicated by the engine speed sensor **3**).
- The target duty ratio is determined in accordance with the result of the comparison. In accordance with the target duty ratio, a drive signal is transmitted to the UP-side (speed increasing side) circuit to effect control over the engine speed. If the target engine speed exceeds the actual engine speed or vice versa, the UP-side circuit's ON time period is altered such that the target engine speed is maintained.

The target duty ratio is the ratio of the time periods during which the linear DC motor's UP-side and DOWN-side (speed decreasing side) circuits are energized. It is calculated as follows:

$$\text{Duty ratio} = \frac{\text{UP-side circuit ON time period}}{\text{UP-side circuit ON time period + DOWN-side circuit ON time period}} \times 100\%$$

CAUTION ⚠

When this function is activated, the warning lamp 14, 15 flashes to indicate that the engine must be inspected immediately. 🕮 **P13-34**

● Auxiliary brake control function

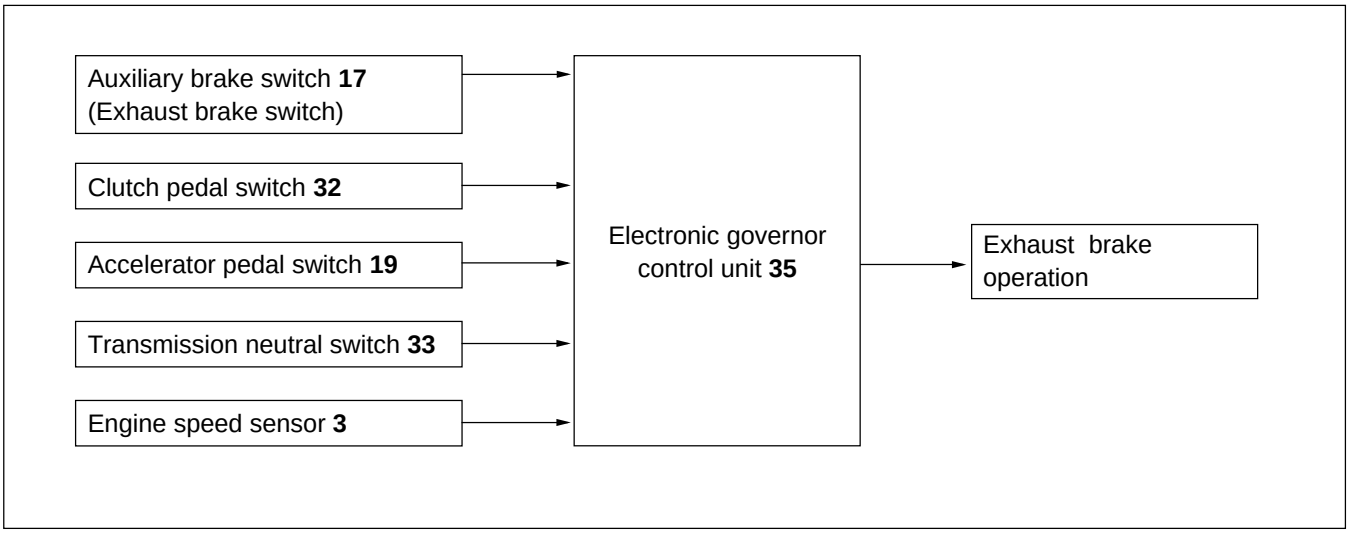

The auxiliary brake control function acts upon the auxiliary braking devices, i.e., the exhaust brake, when the following conditions are satisfied:

- Clutch pedal switch **32**: OFF (clutch pedal released)
- Accelerator pedal switch **19**: ON (accelerator pedal released)
- Transmission neutral switch **33**: ON (transmission not in neutral)

Electronic Governor Control Unit

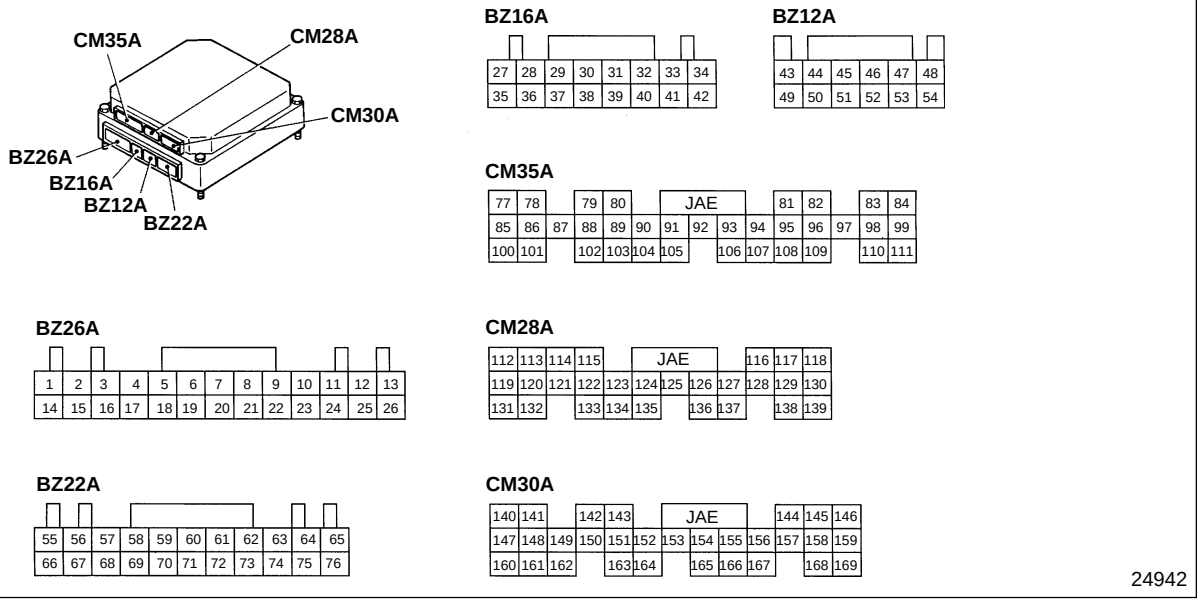

24942

Connector	Terminal	Connected to		Connector	Terminal	Connected to		Connector	Terminal	Connected to	
BZ 26A	1	Linear DC motor	⊕	BZ 26A	19	Pre-stroke cut relay		BZ 16A	37	—	
	2		⊖		20	DDS-3	(DATA)		38	Idling speed adjustment potentiometer (GND)	
	3	—			21		(STB)		39	Accelerator pedal position sensor II (GND)	
	4				22	—			40	—	
	5	Warning lamp	(Red)		23	Start signal			41		
	6		(Orange)		24	—			42		
	7	DDS-3 (CLK)			25	Control unit power supply (starter switch terminal M)		BZ 12A	43	Boost pressure sensor (SIG)	
	8	Automatic transmission control unit (SIG)			26	Control unit GND			44	Accelerator pedal position sensor I	(SIG)
	9	—		BZ 16A	27	—			45		(+5V)
	10	Memory clear switch			28				46	Engine speed sensor (SIG)	
	11	Diagnosis switch			29				47	Backup engine speed sensor (SIG)	
	12	Control unit power supply (starter switch terminal M)			30	Idling speed adjustment potentiometer (SIG)			48	—	
	13	Control unit GND (analog GND)			31	Accelerator pedal position sensor II (SIG)			49	Boost pressure sensor (GND)	
	14	Linear DC motor	⊕		32	Boost temperature sensor (SIG)			50	Accelerator pedal position sensor I (GND)	
	15		⊖		33	Accelerator pedal switch			51	Boost pressure sensor (+5V)	
	16	—			34	—			52	Engine speed sensor (GND)	
	17				35	Idling speed adjustment potentiometer (+5V)			53	Backup engine speed sensor (GND)	
	18				36	—			54	—	

Connector	Terminal	Connected to		Connector	Terminal	Connected to		Connector	Terminal	Connected to	
BZ 22A	55	—		CM 35A	94	—		CM 28A	132	Tachometer output	(SIG)
	56				95				133		(SIG)
	57	Control rack position sensor	(OSC)		96				134	—	
	58		(MDL)		97				135		
	59		(GND)		98	MUT-II (K-line)			136	Tachometer output	(GND)
	60		(SHIELD)		99	—			137		(GND)
	61	—			100	Control unit GND (power GND)			138	—	
	62	Pre-stroke position sensor	(OSC)		101				139		
	63		(MDL)		102	—		CM 30A	140	Warming switch	
	64	Pre-stroke actuator ⊖			103				141	Automatic transmission control unit (SIG)	
	65	Pre-stroke cut relay (+24V)			104				142	Automatic transmission control unit (GND)	
	66	Control unit GND			105	Sub control rack position sensor	(OSC)		143	Accelerator pedal position sensor II (+5V)	
	67	—			106		(MDL)		144	Fuel injection rate adjustment resistor (GND)	
	68	Control rack position sensor	(OSC)		107		(GND)		145	—	
	69		(MDL)		108		(SHIELD)		146		
	70		(GND)		109	—			147		
	71		(SHIELD)		110				148		
	72	—			111				149		
	73	Pre-stroke position sensor	(GND)	CM 28A	112				150		
	74		(SHIELD)		113	Exhaust brake switch			151		
	75	Pre-stroke actuator ⊕			114	—			152		
	76	Pre-stroke power supply (GND)			115				153		
CM 35A	77	—			116				154	Transmission neutral relay	
	78				117				155	—	
	79				118				156		
	80				119	Fuel injection rate adjustment resistor (SIG)			157	Clutch pedal switch	
	81				120	—			158	—	
	82				121				159		
	83				122				160		
	84				123	Automatic transmission control unit (GND)			161		
	85	Exhaust brake relay			124	—			162		
	86				125	Coolant temperature sensor (SIG)			163		
	87	—			126	—			164		
	88				127				165		
	89				128				166		
	90				129				167	Idle up prohibit switch	
	91				130				168	—	
	92				131				169		
	93	Automatic transmission control unit									

Electronic governor control unit

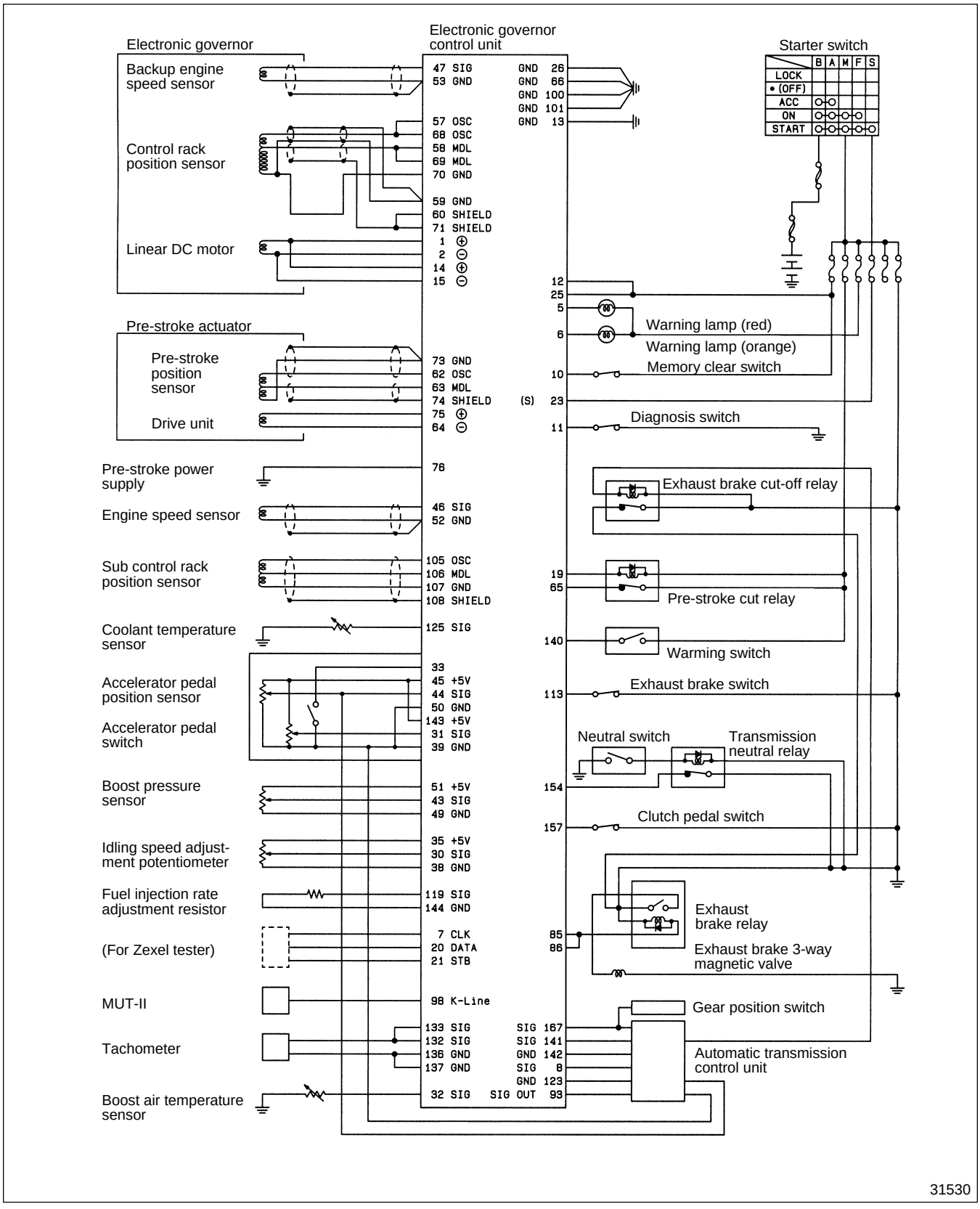

Engine speed sensor

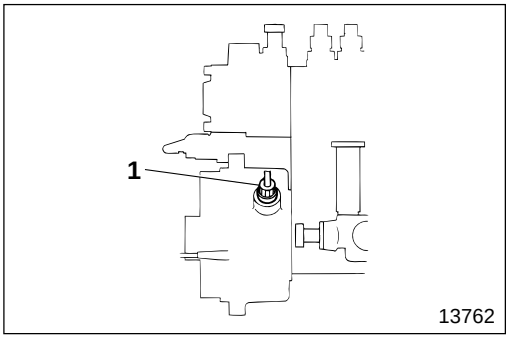

- The engine speed sensor **1** is a pickup type. It converts the rotation speed of a injection pump into electric signals.
- Signals generated by the engine speed sensor are fed to the electronic governor control unit which uses them as correction values in its calculation of the target pre-stroke position.

Coolant temperature sensor

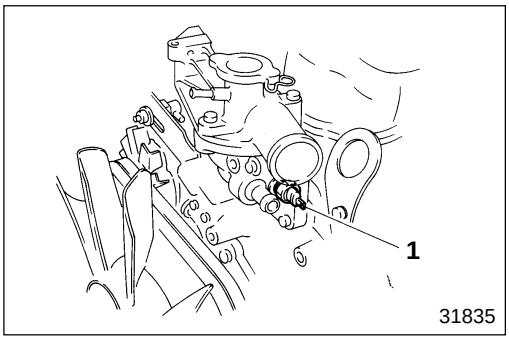

- The coolant temperature sensor **1** is a thermistor type. It converts the engine coolant temperature into electric signals.
- Signals generated by the coolant temperature sensor are fed to the electronic governor control unit which uses them as correction values in its calculation of the target rack position.

Sub control rack position sensor

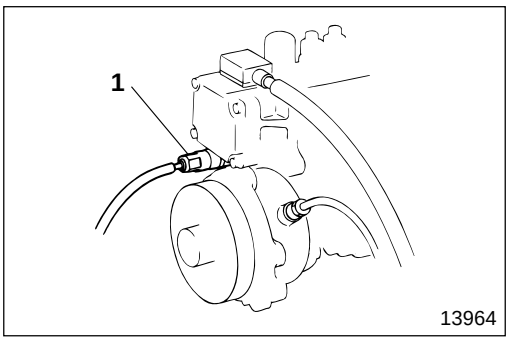

- The sub control rack position sensor **1** provides backup detection of the control rack position in the event of a fault in the control rack position sensor.
- The sub control rack position sensor **1** converts the degree of control rack movement into electric signals.
- Signals generated by the sub control rack position sensor are fed to the electronic governor control unit which uses them as correction values in its calculation of the target rack position.

Boost pressure sensor

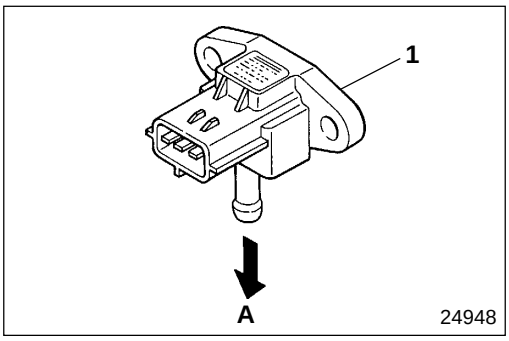

The boost pressure sensor **1** feeds boost pressure information to the electronic governor control unit. During turbocharged engine operation, it enables the full rack signal (maximum fuel injection rate value) characteristics to be selected by the control unit in accordance with the engine speed.

A : To intake manifold

Boost air temperature sensor

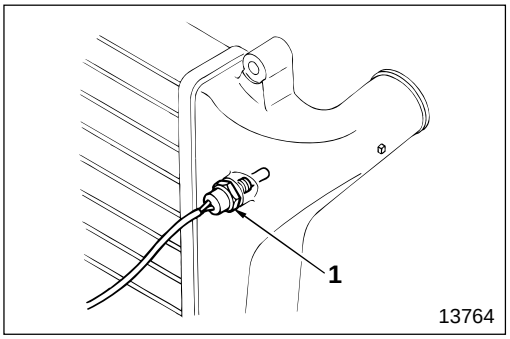

- Boost air temperature sensor **1** is a thermistor type that converts the intake air temperature, immediately after its passage through the intercooler, into an electric signal.
- This electric signal is transmitted to the pre-stroke control unit as the boost air temperature signal, which is used as the correction value by the electronic governor control unit to determine the desired pre-stroke position value.

Accelerator pedal position sensor and accelerator pedal switch

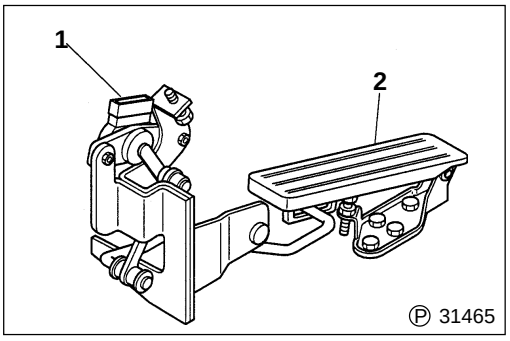

- The accelerator pedal position sensor **1** provides the electronic governor control unit with information on the degree to which the accelerator pedal **2** is depressed.
- The accelerator pedal switch detects whether the accelerator pedal is currently depressed or released.
  Accelerator switch is integrated in accelerator pedal position sensor **1**.

Pre-stroke position sensor

P13-12

Idling speed adjustment potentiometer

P13-14

Linear DC motor

P13-28

Control rack position sensor

P13-28

Backup engine speed sensor

P13-29

Pre-stroke Control Injection Pump Unit

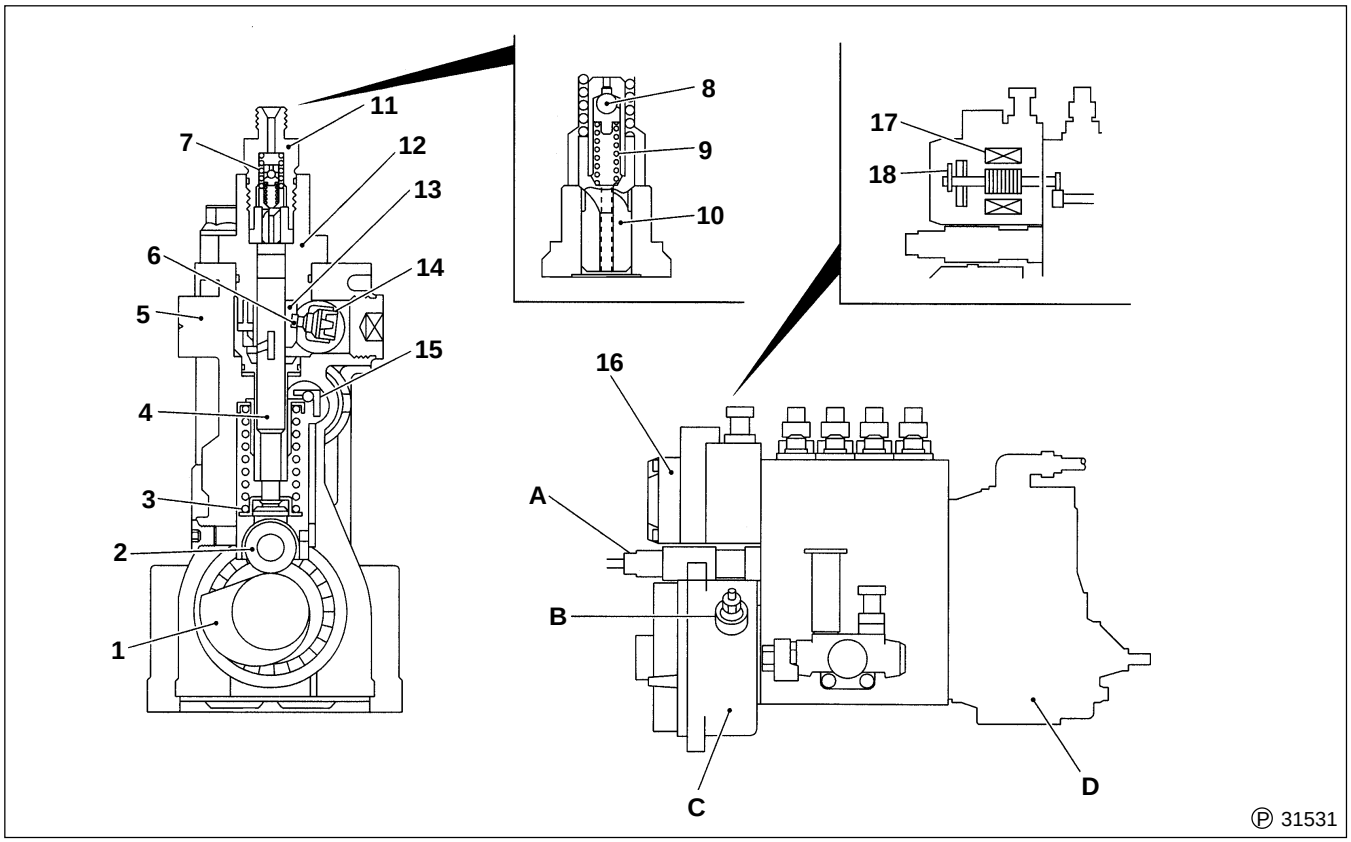

1 Camshaft
2 Tappet
3 Plunger spring
4 Plunger
5 Pump housing
6 Pin
7 Delivery valve spring
8 Ball
9 Spring
10 Delivery valve
11 Delivery valve holder
12 Plunger barrel
13 Timing sleeve
14 Timing rod
15 Control rod
16 Pre-stroke actuator
17 Drive unit
18 Pre-stroke position sensor

A : Sub-control rod position sensor
B : Engine speed sensor
C : Mechanical timer
D : Electronic governor

- The injection pump is provided with a mechanism that enables variation of the plunger pre-stroke.
- Variation of the plunger pre-stroke enables the creation of air/fuel mixture and spray conditions that are optimally suited to combustion. The overall benefits are higher engine torque and cleaner exhaust emissions than are possible with a conventional injection pump.

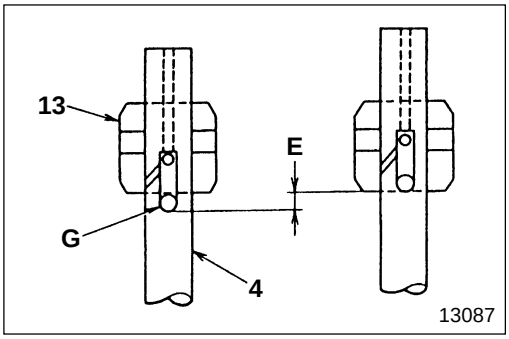

Pre-stroke

The term “pre-stroke” refers to the stroke dimension **E** of a plunger **4** from the plunger’s bottom dead center position to the point at which its fuel inlet hole **G** is closed by the timing sleeve **13** and fuel feed begins. This stroke dimension is constant in a conventional injection pump.

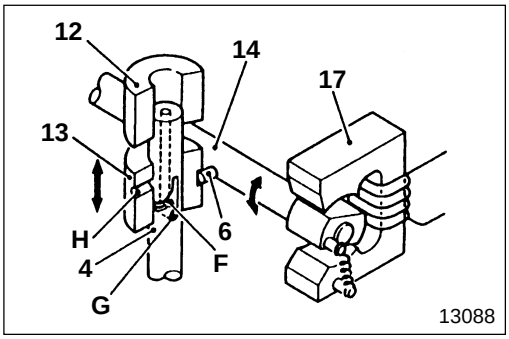

Variable pre-stroke mechanism

F : Lead
G : Inlet hole
H : Outlet hole

- In contrast to the fixed plunger barrel arrangement of a conventional injection pump, each plunger barrel **12** in the pre-stroke control type injection pump incorporates a vertically moveable timing sleeve **13**.
- Movement of the timing sleeve is effected by the timing rod **14**, pin **6**, and drive unit **17**.
- When the drive unit **17** rotates the timing rod **14**, the pin **6** moves the timing sleeve **13** up or down accordingly.
- Since the timing sleeve **13** incorporates a fuel outlet hole **H**, the pre-stroke changes in accordance with the movement of the timing sleeve.

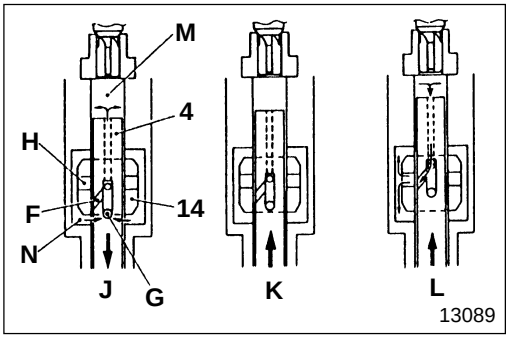

Fuel feed action

J : Fuel intake
K : Start of pressurization
L : End of pressure feed

- As the plunger **4** moves downward from its top dead center position and its inlet hole **G** opens, fuel flows into the pressure chamber **M** owing to the vacuum pressure created by the plunger’s downward movement and the fuel pressure produced by the feed pump.
- When the plunger **4** moves upward but its lift dimension is still small, the fuel in the pressure chamber **M** escapes into the sump **N** through the inlet hole **G** in the plunger. Thus, the pressure in the pressure chamber does not increase.
- As the plunger **4** moves further upward and the inlet hole **G** is closed by the timing sleeve **13**, the fuel starts to be pressurized. The pressure increases as the plunger moves upward, and the injection pump starts to feed the pressurized fuel to each injector.
- When the lead **F** in the plunger **4** becomes aligned with the outlet hole **H** in the timing sleeve **13**, the fuel in the pressure chamber **M** returns to the sump **N**, thus completing the pressure feed cycle.
- Adjustment of the injected fuel volume is achieved by rotation of the plunger **4**, which alters the position of the outlet hole **H** in the timing sleeve **13** relative to the lead **F** in the plunger.

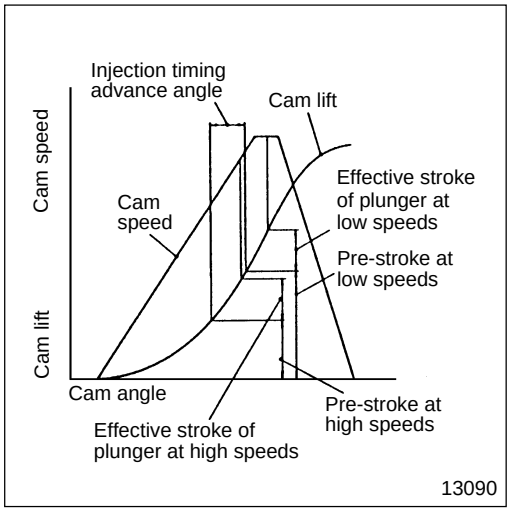

Fuel injection timing and fuel injection characteristics

- Changes in the position of the timing sleeve **13** cause concomitant changes in the pre-stroke, which in turn alter the fuel injection timing.
- A decrease in the pre-stroke causes the fuel inlet hole **G** in the plunger **4** to close earlier such that the fuel injection timing is advanced.
- This arrangement provides highly responsive control over the injection timing and thus enhances the engine's cold startability.

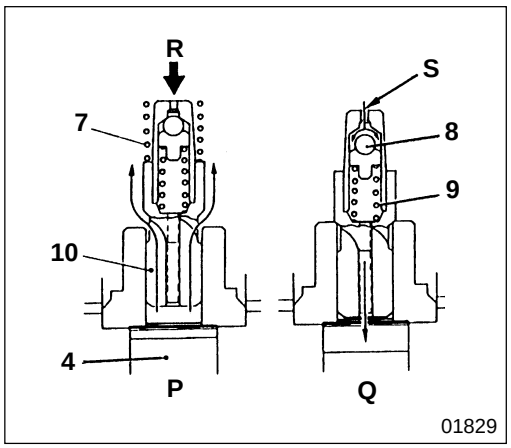

Delivery valve

P : Start of pressure feed
Q : End of pressure feed

- The delivery valve **10** keeps constant the residual pressure **R** in the injection pipe at all engine speeds. This operation prevents the generation of bubbles in the fuel (this is known as "cavitation") and thus enables fuel injection at a high pressure.
- When the plunger **4** moves upward and the pressure of the fuel pushed by the plunger overcomes the residual pressure **R** in the injection pipe and the preset force of the delivery valve spring **7**, the delivery valve is pushed upward and delivery of the pressurized fuel begins.
- As soon as fuel delivery is complete, the fuel in the injection pipe rapidly returns to the plunger side and the delivery valve closes.
- Surplus fuel slowly returns through the orifice **S**, thus reducing the pressure in the injection pipe.
- When the preset force of the spring **9** in the delivery valve **10** is exactly offset by the pressure in the injection pipe, the ball **8** closes the orifice **S**, thus ensuring that the residual pressure **R** in the injection pipe remains constant.

M E M O

Electronic Governor

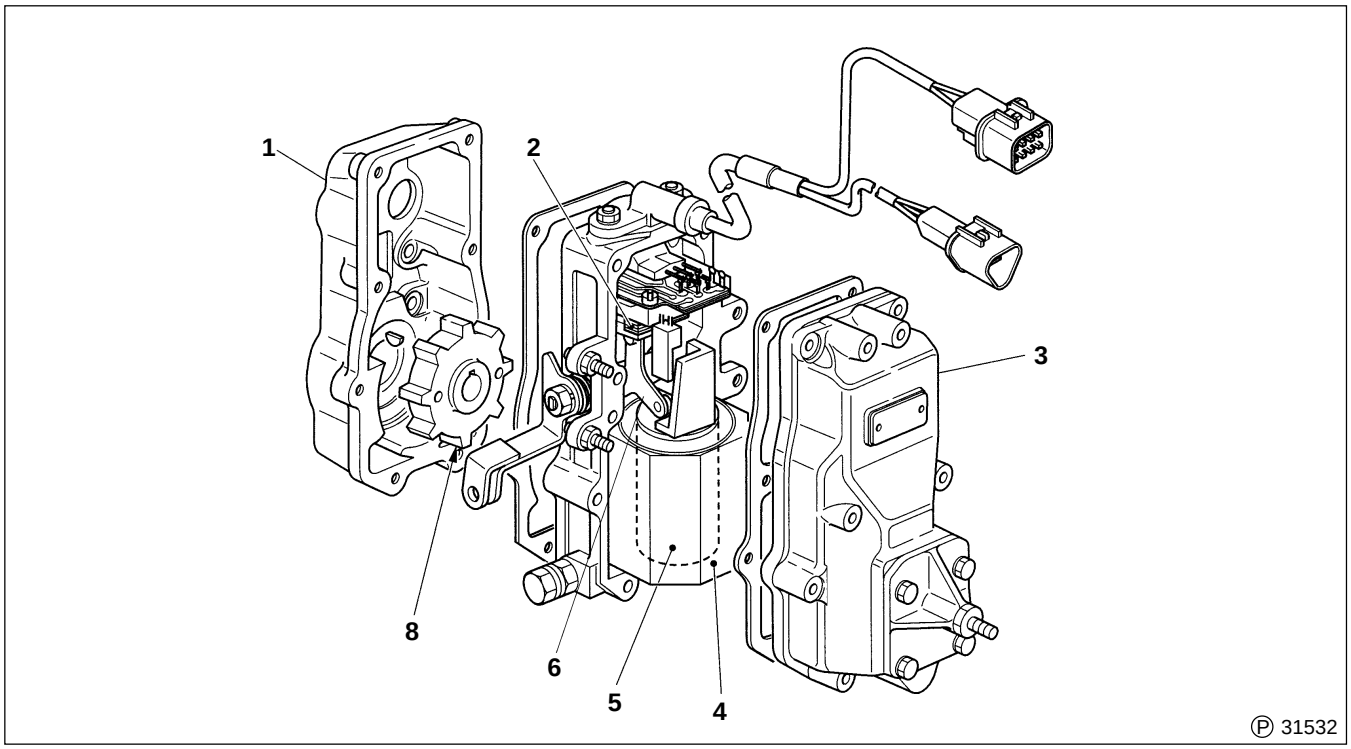

1 Housing
2 Control rack position sensor
3 Cover
4 Coil assembly
5 Linear DC motor
6 Link
7 Emergency engine stop lever
8 Sensing gear

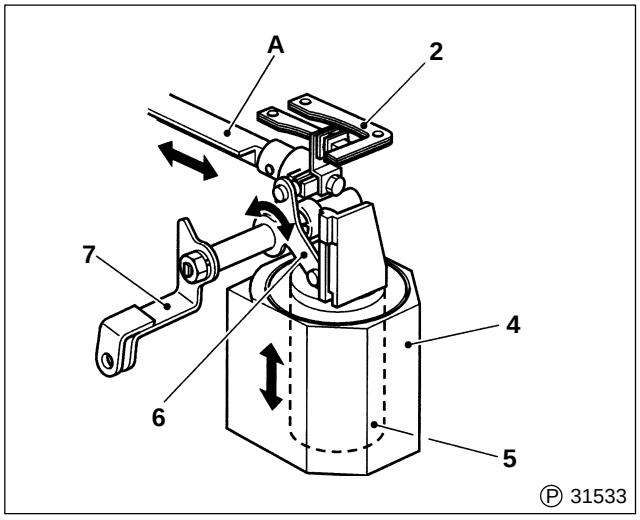

● Linear DC motor

The linear DC motor **5** moves the coil assembly **4** vertically in accordance with signals from the electronic governor control unit. Via the link **6**, this movement is transmitted to the control rack **A**, which moves longitudinally to increase and decrease the fuel quantity.

● Control rack position sensor

The control rack position sensor **2** senses whether the control rack **A** is moved to the correct position by the linear DC motor **5**. In the event of a discrepancy between the actual control rack position and the target control rack position (this is determined by the electronic governor control unit), the control unit instructs the linear DC motor to perform a corrective movement.

● **Emergency engine stop lever**

The emergency engine stop lever **7** is connected to the link **6**. Via a cable, it enables the link to be moved from the driver's seat. In the event of a system fault that prevents the engine from being stopped normally, operation of the emergency engine stop lever forces the control rack **A** to move to the position at which fuel injection is terminated. This operation takes place irrespective of the position of the linear DC motor **5**.

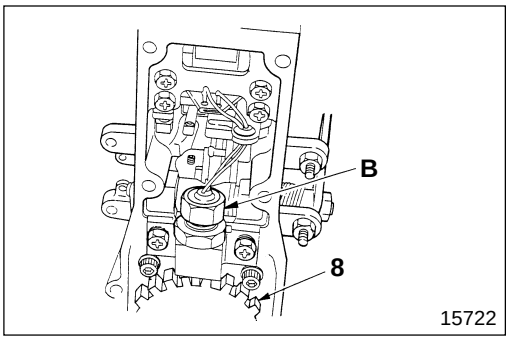

● **Backup engine speed sensor**

The backup engine speed sensor **B** is fitted inside the governor. It converts the rotation speed of the sensing gear **8** into electric signals and feeds the signals to the electronic governor control unit to provide an indication of the engine speed.

Feed Pump

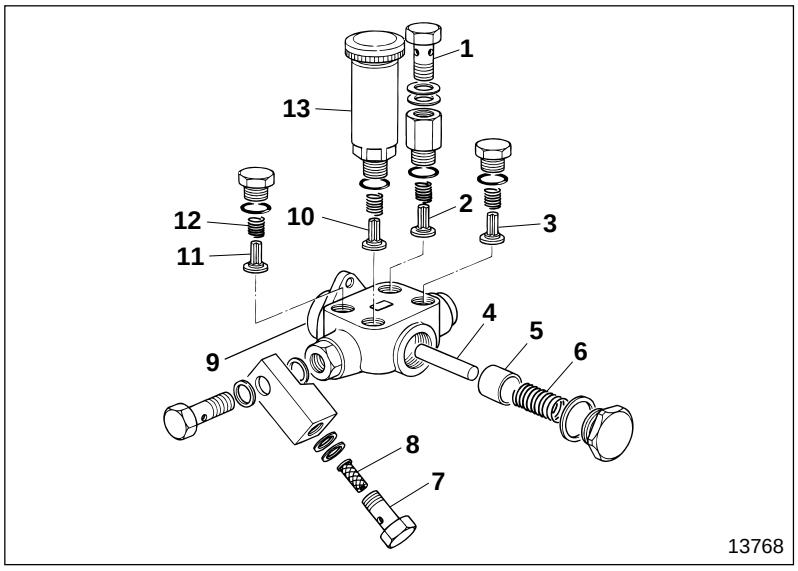

1 Eye bolt on fuel outlet side
2 Check valve
3 Check valve
4 Push rod
5 Piston
6 Piston spring
7 Eye bolt on fuel inlet side
8 Gauze filter
9 Feed pump housing
10 Check valve
11 Check valve
12 Check valve spring
13 Priming pump

- The feed pump is a double-action type pump which, with four check valves operating, sucks and discharges fuel during both strokes of pistons **5**.
- Push rod **4** makes contact with the injection pump camshaft directly, moving piston **5**.
- Priming pump **13** can be manually operated, when the injection pump is not operating, to suck up fuel and thus can be used for air bleeding.
- Gauze filter **8** eliminates large foreign particles from the fuel sucked up from the fuel tank to prevent clogging of the feed pump. This gauze filter must be cleaned with diesel fuel periodically.

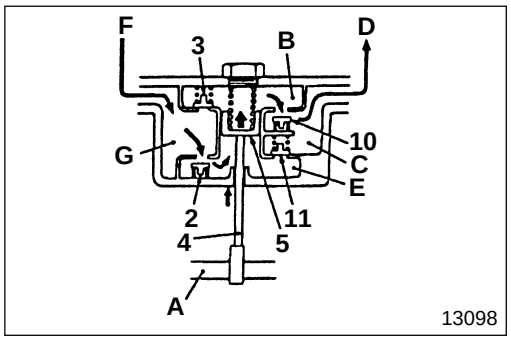

The rotation of injection pump camshaft **A**, pushes up push rod **4** and piston **5**, and the pressure in inner chamber **B** increases. This closes check valve **3**, and check valve **10** opens to let the fuel in inner chamber **B** flow through outer chamber **C** to fuel filter **D**.
When the pressure in inner chamber **E** decreases, check valve **11** closes, and check valve **2** opens to let fuel flow from fuel tank **F** through outer chamber **G** to inner chamber **E**.

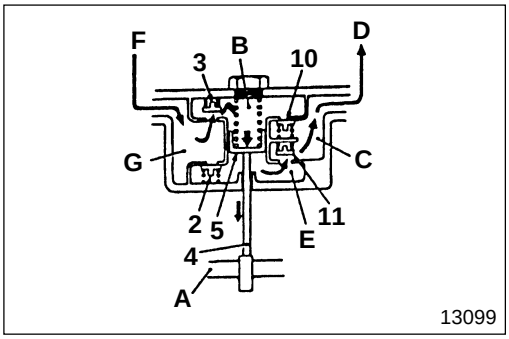

When injection pump camshaft **A** rotates further, it pushes down push rod **4** and piston **5**, and the pressure in inner chamber **E** increases. This closes check valve **2**, and check valve **11** opens to let the fuel in inner chamber **E** flow through outer chamber **C** to fuel filter **D**.
When the pressure in inner chamber **B** decreases, check valve **10** closes, and check valve **3** opens to let fuel from fuel tank **F** flow through outer chamber **G** to inner chamber **B**.

Injection Nozzle

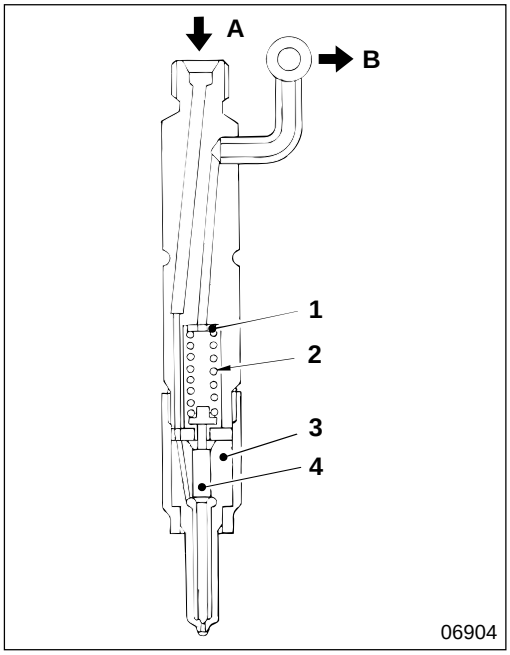

1 Washer
2 Spring
3 Nozzle tip
4 Needle valve

A : From injection pump
B : To fuel tank

- As the pressure of the fuel delivered from the injection pump overcomes the repercussive force of spring **2**, needle valve **4** is pushed up to allow the fuel to spray out the opening at the tip of the nozzle .

- Injection pressure can be adjusted by increasing or decreasing the number of washers **1**.

Possible causes \ Symptoms		Engine will not start	Engine difficult to start	Engine knocks	Unstable engine output	Insufficient engine output	Engine maximum speed too high	Unstable engine idling	Engine stops soon after starting	Engine does not reach maximum speed	Engine will not stop	Accelerator pedal too stiff	Defective fuel supply	Warning lamp illuminates	Remarks
Defective pre-stroke injection pump system														○	
Injection pump proper	Defective injection pump proper	○	○	○	○	○	○	○	○	○	○				*
	Defective mounting (poorly adjusted injection timing)		○		○	○		○							
	Defective overflow valve operation	○	○			○		○					○		
Defective pre-stroke actuator				○	○	○		○							
Fuel feed pump	Gauze filter clogged	○	○			○		○	○				○		
	Check valve not operating	○											○		
	Sticky piston	○											○		
	Sticky push rod	○											○		
	Defective check valve operation	○	○		○			○					○		
	Piston worn		○		○			○					○		
Defective governor				○	○	○	○	○	○	○	○				*
Injection nozzles	Sticky needle valve	○													
	Valve opening pressure too low	○								○					
	Blocked injection orifice	○		○		○		○		○					
	Poor airtightness in nozzle	○		○		○		○		○					
	Valve opening pressure too high			○											
	Broken spring				○	○									
	Defective sliding action in needle valve				○										
	Defective valve opening pressure				○										
	Weakness/deterioration in spring							○							
Fuel filter	Clogged filter	○			○			○	○						
Fuel tank empty		○													
Fuel pipes blocked and/or fuel leaking from connections		○													
Air or water in fuel system		○			○			○	○						
Low-quality fuel in use			○	○		○		○							

* : Must be serviced by ZEXEL service station.

Possible causes \ Symptoms		Engine will not start	Engine difficult to start	Engine knocks	Unstable engine output	Insufficient engine output	Engine maximum speed too high	Unstable engine idling	Engine stops soon after starting	Engine does not reach maximum speed	Engine will not stop	Accelerator pedal too stiff	Defective fuel supply	Warning lamp illuminates	Remarks
Engine control	Incorrect accelerator pedal stopper bolt adjustment					○				○					
	Rusted accelerator pedal arm											○			
	Defective accelerator pedal position sensor													○	
Cracked fuel pipe													○		
Leaky fuel tank													○		
Incorrect oil viscosity			○												Gr 12
Incorrect valve clearance			○					○							Gr 11
Defective cylinder head gasket			○					○							Gr 11
Wear and/or carbon deposits on valve and valve seat			○					○							Gr 11
Weakness/deterioration in valve spring			○					○							Gr 11
Worn/damaged piston ring(s)			○					○							Gr 11
Worn/damaged piston ring groove(s)			○					○							Gr 11
Worn piston and cylinder liner			○												Gr 11
Cooling system malfunctioning			○					○							Gr 14
Defective starter switch			○												Gr 54

Fault Diagnosis Function

- While the starter switch is in the ON position, the fault diagnosis function continuously monitors relevant sensors for faults.
  In the event that a fault is detected, the function illuminates a warning lamp (red or orange) in the meter cluster to alert the driver, memorizes the location of the fault, and switches to a backup mode.
- The memorized fault location can be read as a diagnosis code using an MUT-II or the diagnosis switch.

Warning lamp illumination

	(Orange)	(Red)
1. Safety-critical error (vehicle must not be driven)	OFF	ON
2. Non-safety-critical error (vehicle can be driven despite poor control feeling)	ON	OFF

CAUTIONS

- **The fault diagnosis function requires a battery voltage of 12 V or higher.**
- **In the event of fault detection, check the harnesses and connectors for looseness. Before undoing any connector, turn the starter switch to the LOCK position and wait for 20 seconds.**
- **After rectifying a fault, delete the fault code using the MUT-II or memory clear switch.**
- **As a general rule, inspections should be performed with the starter switch in the LOCK position. If any inspection requires that the starter switch be in the ON position, be careful to avoid short circuits between connector terminals and with the vehicle body.**
- **All component resistances shown in this manual assume a temperature range of 10 to 35°C {50 to 95°F}. In practice, component values may not comply with standard values owing to temperature effects and/or to inaccuracy in the test instrument.**
- **After the rectification of a fault, the system's ability to return to normal operation automatically depends upon the diagnosis code, i.e., the fault location. When the system returns to normal operation, the warning lamp goes out.**
- **When the system returns to normal operation after the rectification of a fault, the diagnosis code remains stored in electronic governor control unit.**

Inspection Procedure

Inspection of the electronic governor and pre-stroke control injection pump system can be performed most effectively using an MUT-II. Types of system inspection can, in accordance with fault systems and diagnosis codes, be broadly classified as follows:

- Inspections based on diagnosis codes stored in the control unit
- Inspections based on symptoms
- Inspections of intermittent faults

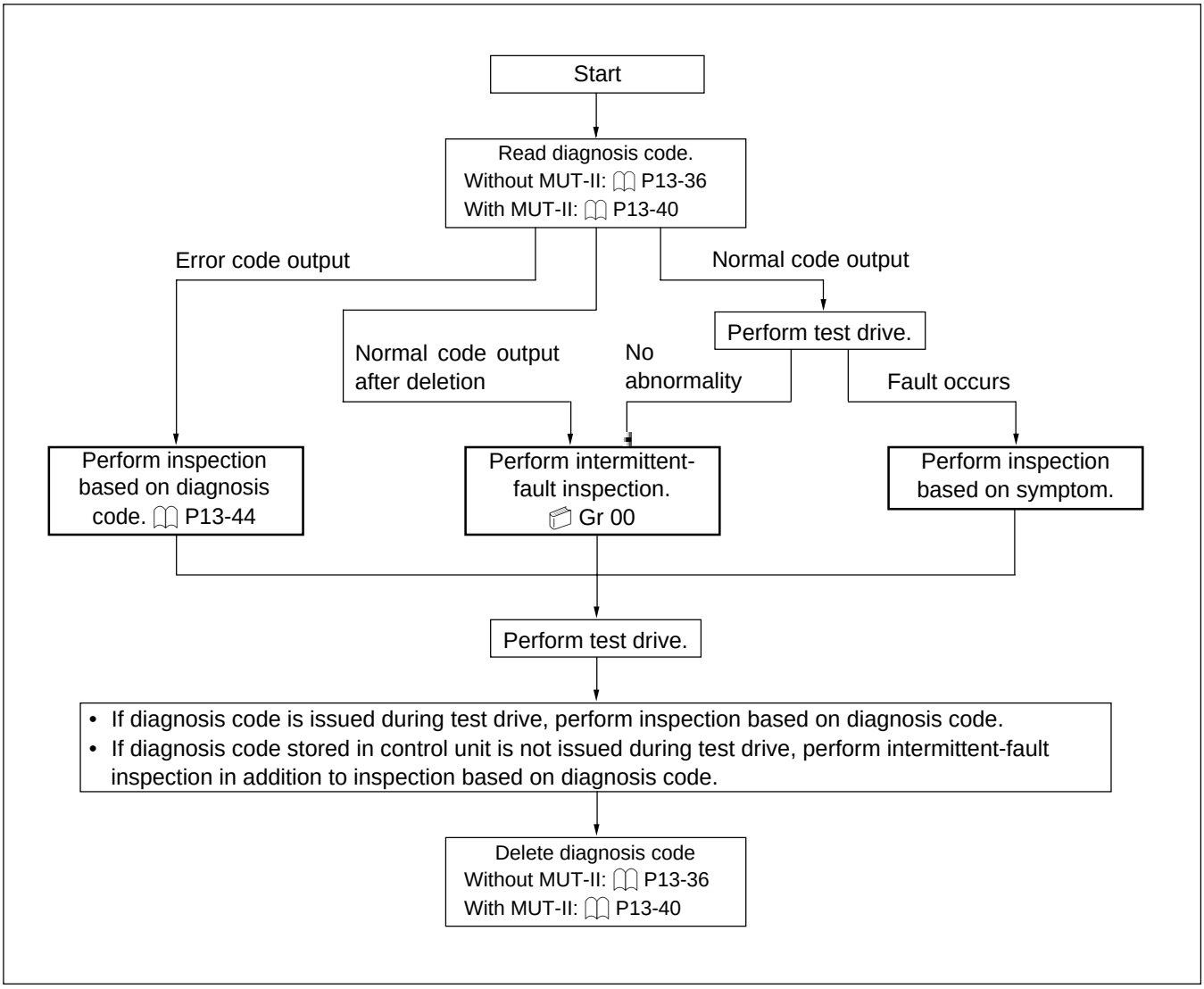

READING AND ERASING DIAGNOSIS CODES

Without MUT-II

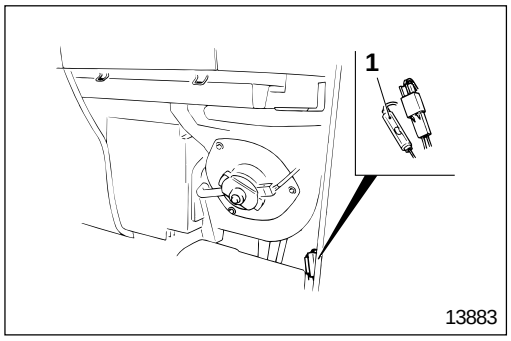

Current diagnosis code

- Turn ON the starter switch.
- Disconnect the diagnosis switch **1**.

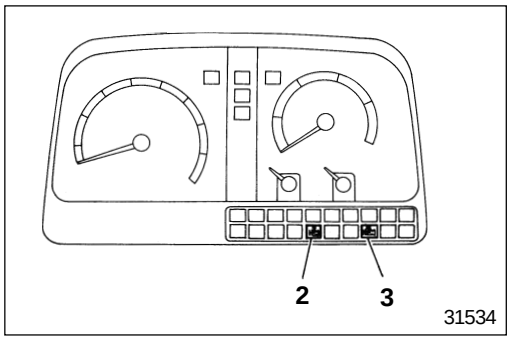

- The diagnosis code is indicated by flashing of warning lamp **2** (red) or warning lamp **3** (orange).

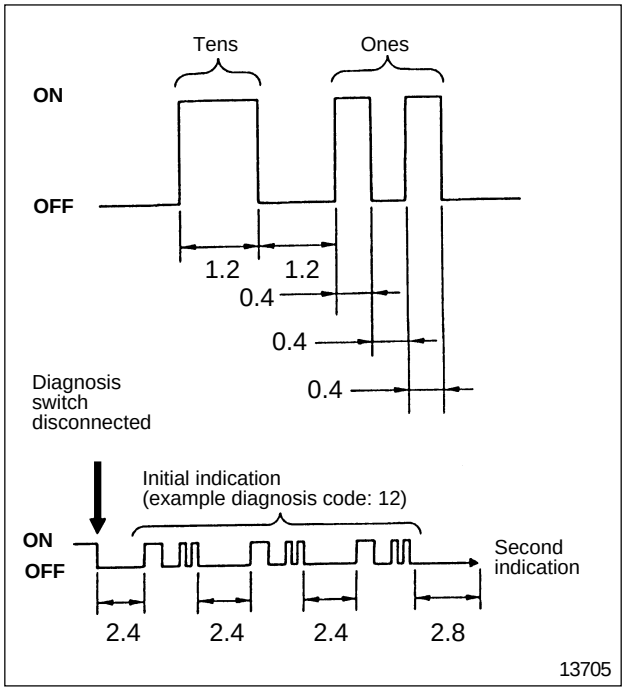

Diagnosis code indication

- Diagnosis codes are indicated by the numbers and durations of the warning lamp flashes.
  - Flashes for units of ten and units of one have different lengths, as follows:
    Units of ten: 1.2 seconds
    Units of one: 0.4 second
  - For each diagnosis code, units of ten are given first, followed by units of one. For a code that has no units of ten, only units of one are given.
- Each diagnosis code is indicated three times. If there are no new codes, the sequence is then repeated from the beginning with each code indicated three times.
- When the diagnosis switch **1** is connected, the control unit immediately stops the indication of codes.

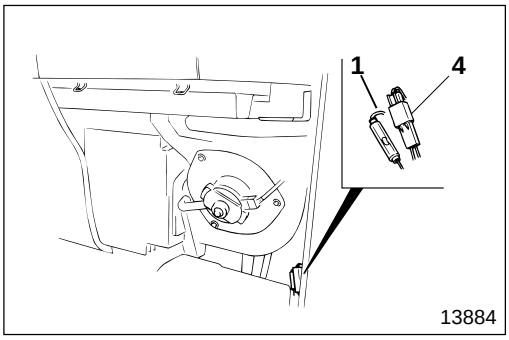

Past diagnosis codes

With the diagnosis switch **1** disconnected, disconnect the memory clear switch **4** after reading the current diagnosis code(s). The warning lamp will begin to flash again, this time to indicate any past diagnosis code(s). Verify the fault location in accordance with the code(s).

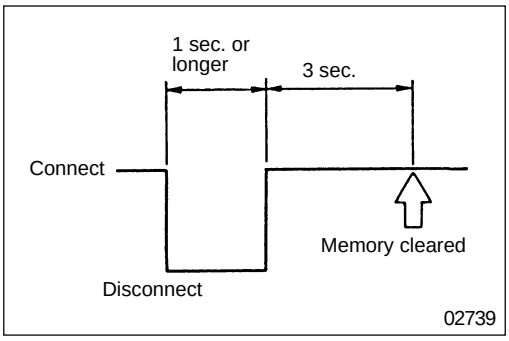

Diagnosis code eraser

To eraser all stored diagnosis codes from the control unit, disconnect and reconnect the memory clear switch **4**.

CAUTION

- **Stored codes are cleared only by disconnection and reconnection of the memory clear switch 4.**
- **To prevent the memory contents from being cleared after the indication of stored codes, turn OFF the starter switch with the memory clear switch 3 disconnected then connect the memory clear switch.**

READING AND ERASING DIAGNOSIS CODES

Diagnosis Codes Table

Diagnosis code	Fault location	Warning lamp	Electronic control unit countermeasure(s) in the case of failure (back-up mode)	Drive ability
01	Normal	—	—	○
03	Pre-stroke actuator learning function	Orange	Provides control with “0” as correction value.	○
06	Sub-control rack position sensor	Orange	Normal control using the main control rack position sensor	○
11	Governor servo	Red	*1 Engine stopped by the pull-down function.	×
12	Pre-stroke servo	Orange	Pre-stroke control stop engine revolution speed limit (approximately 1800 rpm)	△
13	Pre-stroke sensor	Orange	Pre-stroke control stop engine revolution speed limit (approximately 1800 rpm)	△
14	Back-up engine speed sensor	Orange	Control using the main engine speed sensor	○
15	Engine speed sensor	Orange	Calculate the engine revolution speed from the pulse count of the back-up engine speed sensor.	○
14+15	Both the back-up engine sensor and the main engine speed sensors are faulty upon start-up.	Red	Do not start the engine.	○
16	Accelerator pedal position sensor II	Orange	Control using the accelerator pedal sensor I	○
21	Water temperature sensor	Orange	Set the water temperature to 80 °C {176°F}.	○
22	Control rack position sensor	Orange	Switch to the sub-control rack position sensor control.	△
24	Accelerator pedal position sensor I	Orange	Control using the accelerator pedal position sensor II.	○
24+16	Both accelerator pedal position sensor I and accelerator pedal position sensor II are faulty	Red	Set the maximum accelerator depression angle to 30 degrees even if the accelerator pedal is depressed.	△
31	Idling adjustment volume	Orange	Set to auto idling.	○
32	Boost pressure sensor	Orange	Set the boost pressure to 0 kpa {0 mmHg, 0 in. Hg}.	△*2
33	RAM (ECU internal memory circuit)	Red	Do not start the engine.	×
41	Boost temperature sensor	Orange	Normal control assuming the boost temperature is 80 °C {176 °F}.	○
45	Reverse engine operation	Orange	*1 Engine stopped by the pull-down function.	×*2
65	Accelerator switch	Orange	Limited accelerator depressing angle (Approximately 30%)	○

*1 : The pull-down function indicates the rack pull-back action. In the event of an engine over-run or severe accident, the rack is pulled back immediately to the no-injection direction in order to protect the engine.

*2 : Driveable if the starter switch is turned OFF once and then restarted again.

○ : Driveable
△ : Back-up mode driving possible
× : Undriveable

M E M O

READING AND ERASING DIAGNOSIS CODES

With MUT-II

Special tools

Location	Tool name and shape	Part No.	Application
—	MUT-II PLUS 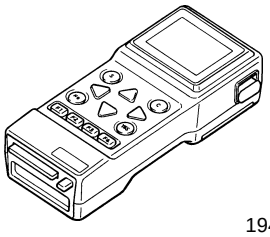 19492	MB991496-A	Inspection of electronic governor and pre-stroke control injection pump system
—	MUT Communication 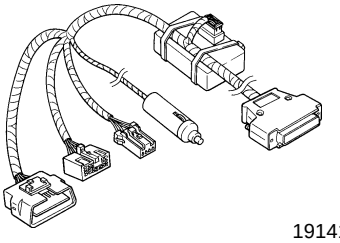 19141	MK327601	
—	ROM Pack (MRT-E4) 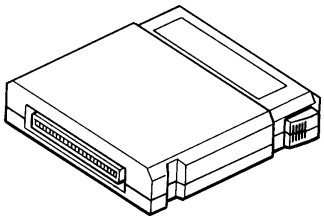 19493	MK327927	

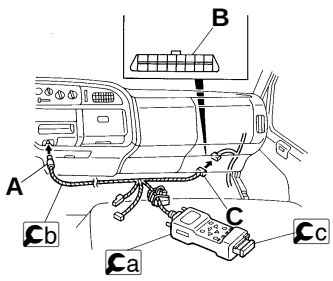

31469

Connecting the MUT-II

- Turn the starter switch to the LOCK position.
- Connect the b MUT Communication Harness to the a MUT-II, and insert the c ROM Pack.
- Plug connector **A** into the cigarette lighter socket.
- Fit connector **C** onto MUT connector **B** (16 pin) in the relay box.

NOTE

Instructions for operation of the MUT-II are given in the separate MUT-II Reference Manual.

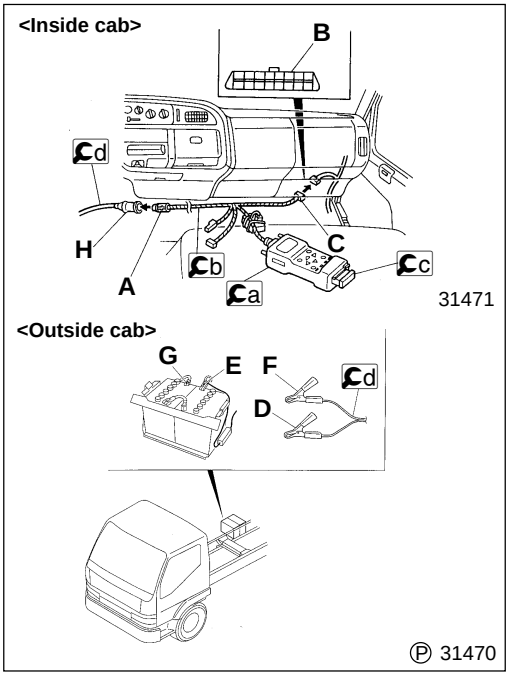

- To verify the service data “START SIG”, connect the MUT-II as follows:
- Turn the starter switch to the LOCK position.
- Connect the b MUT Communication Harness to the a MUT-II, and insert the c ROM Pack.
- Attach the (+) clamp **D** (red) of the d Battery Clamp Harness to the battery’s (+) terminal **E**. Attach the (–) clamp **F** (black) of the d Battery Clamp Harness to the battery’s (–) terminal **G**.
- Fit the connector **A** into the socket **H** of the d Battery Clamp Harness.
- Fit connector **C** onto MUT connector **B** (16 pin) in the relay box.

CAUTION ⚠

Connect the (+) clamp D (red) of the b Battery Clamp Harness before connecting the (–) clamp F (black).

Current diagnosis codes

- Turn the starter switch to the ON position.
- Determine the fault location(s) in accordance with the past MUT-II diagnosis code(s).

Past diagnosis codes

- Turn the starter switch to the ON position.
- Determine the fault location(s) in accordance with the past MUT-II diagnosis code(s).

Diagnosis code erasure

- Turn the starter switch to the ON position.
- Using the MUT-II, erase all diagnosis codes stored in the control unit.

Diagnosis codes

Diagnosis codes are indicated as shown in the following table. For details of these codes, refer to the “Without MUT-II” section. 🕮 P13-36

Display item			
Diagnosis code	Fault	Diagnosis code	Fault
03	PS OFFSET	**22**	RACK SNSR
06	SUB RACK SNSR	**24**	ACCEL. SNSR-1
11	GOV. SERVO	**31**	IDLE VOLUME
12	PS SERVO	**32**	BST PRES SNSR
13	PS SNSR	**33**	RAM
14	SUB NE SNSR	**41**	BST TEMP SNSR
15	NE SNSR	**45**	ENG. REVERSE
16	ACCEL. SNSR-2	**65**	ACCEL SW
21	WTR TEMP SNSR		

SERVICE PROCEDURES USING MUT-II

Service operations can be performed most effectively using the following MUT-II functions:

● Reading of diagnosis codes

Using the diagnosis code function, it is possible to read diagnosis codes stored in the control unit.

● Erasure of diagnosis codes

By selecting the diagnosis code erasure function from the special function menu, it is possible to erase diagnosis codes stored in the control unit.

● Indication of service data

When required for service operations, data in the control unit's random-access memory can be displayed as numeric values or graphs.

Service data

MUT-II display			Inspection procedure	
No.	Data signal	Type of data	Inspection condition	Evaluation criterion
11	ENGINE SPEED	IIII. rpm	Gradual acceleration (during engine operation)	Synchronization with tachometer
12	TARGET RACK	II.II mm	Starter switch ON	3 mm
13	REAL RACK	II.II mm	Starter switch ON	3 mm
14	ACCEL. VOLT	I.III V	Accelerator pedal gradually depressed from throttle-fully-open to throttle-fully-closed position	1 to 3 V
15	WATER TEMP	III.I °F	Engine cold Engine warming up Engine stopped after warmup	Same as ambient temperature Gradual increase Gradual decrease
16	BOOST PRESS	IIII. mmHg	Engine running at high idling speed	270 mmHg or higher
17	PS ANG. DIFF.	II.II deg	400 < Ne ≦ 2,000 Ne: Engine speed	–5.5° or greater 5.5° or smaller
18	SUPPLY VOLT	II.II V	Starter switch ON	7 to 16 Volts
19	ACCEL. STROKE	III.I %	Throttle completely closed Pedal gradually depressed Throttle completely open	0 % Gradual increase 100 %
20	BOOST TEMP	III.I °F	Engine cold Engine warming up Engine stopped after warmup	Same as ambient temperature Gradual increase Gradual decrease
21	START SIG	ON/OFF	Engine cranked using starter switch	ON
33	ACCEL. SW	ON/OFF	Accelerator pedal depressed	OFF
34	DIAGNOSIS SW	ON/OFF	Diagnosis switch turned ON/OFF	ON/OFF
35	DIAG. RESET SW	ON/OFF	Memory clear switch turned ON/OFF	ON/OFF
37	CLUTCH SW	ON/OFF	Clutch pedal depressed	ON
38	NEUTRAL SW	ON/OFF	Transmission in neutral	OFF
42	EXH. BRAKE SW	ON/OFF	Switch ON	ON
51	A/C SW	ON/OFF	Air conditioner switch turned ON or OFF	ON/OFF
61	EXH. BRAKE SIG	ON/OFF	Exhaust brake operating	ON
75	IDLE UP CNCL	ON/OFF	Idle up prohibited (other than N range)	ON

M E M O

INSPECTION BASED ON DIAGNOSIS CODE

Diagnosis code	Diagnosis code display condition (s)	Cause	Remedy
03	Indicates that pre-stroke learning function has not been excuted.	Faulty timing rod, timing sleeve or other parts in the injection pump assembly.	Repair or replace the injection pump assembly. *
		Faulty adjusment or pre-stroke position sensor	Repair or replace the injection pump assembly. *
		Faulty electronic governor control unit	Replace the electronic governor control unit
06	Displayed if the output voltage of the control rack position sensor is less than 0.06 V or more than 3.5 V.	Open or short in harness wire or poor connector contact between the sub-control rack position sensor and the electronic governor control unit	Inspect the harness and the connector 🕮 P13-82
		Open, short, or poor connector contact in the sub-control rack position sensor	Inspect the sub-control rack position sensor 🕮 P13-74
		Faulty electronic governor control unit	Replace the electronic governor control unit
11	Displayed if the difference between the target control rackposition and the actual control rack position is ± 1mm {0.039 in.}.	Open or short in harness wire or poor connector contact between the linear DC motor and the electronic governor control unit	Inspect the harness and the connector 🕮 P13-82
		Open or shorted wire in the linear DC motor connector	Inspect the linear DC motor 🕮 P13-77
		Poor adjustment of the emergency engine stop cable (The lever is pulled in the stop direction)	Inspect the emergency engine stop button 🕮 P13-79
		Faulty injection pump assembly rack movement or poor governor actuator link	Repair or replace the injection pump assembly. *
		Faulty electronic governor control unit	Replace the electronic governor control unit
12	Displayed if the difference between the target timing rod angle and the actual timing rod angle is ± 2°.	Open or short in harness wire or poor connector contact between the pre-stroke actuator, pre-stroke cut relay, and electronic governor control unit	Inspect the harness and the connector 🕮 P13-82
		Open or shorted wire in the pre-stroke cut relay	Inspect the pre-stroke cut relay 🕮 P13-73
		Faulty pre-stroke actuator	Repair or replace the injection pump assembly. *
		Faulty timing rod, timing sleeve, etc. in the injection pump assembly	Repair or replace the injection pump assembly. *
		Faulty electronic governor control unit	Replace the electronic governor control unit

*: Contact your MFTA representative for current injection pump repair and replacement procedures.

Diagnosis code	Diagnosis code display condition (s)	Cause	Remedy
13	Displayed if the output voltage of the pre-stroke position sensor is less than 0.9 V or more than 3.4 V.	Open or short in harness wire or poor connector contact between the pre-stroke position sensor and the electronic governor control unit	Inspect the harness and the connector 🕮 P13-82
		Open or shorted pre-stroke position sensor coil	Inspect the pre-stroke actuator 🕮 P13-75
		Faulty electronic governor control unit	Replace the electronic governor control unit
14	Displayed if the pulse count of the back-up engine speed sensor is less than that of the main engine speed sensor.	Open or short in harness wire or poor connector contact between the back-up engine speed sensor and the electronic governor control unit	Inspect the harness and the connector 🕮 P13-82
		Faulty back-up engine speed sensor	Repair or replace the injection pump assembly. *
		Faulty electronic governor control unit	Replace the electronic governor control unit
15	Displayed if the pulse count of the main engine speed sensor is less than that of the back-up engine speed sensor.	Open or short in harness wire or poor connector contact between the speed sensor and the electronic governor control unit	Inspect the harness and the connector 🕮 P13-82
		Open or shorted wire or improperly assembled coil in the engine speed sensor main unit	Inspect the engine speed sensor main unit 🕮 P13-78
		Faulty electronic governor control unit	Replace the electronic governor control unit
16	Displayed if the output voltage of the accelerator pedal position sensor is less than 0.5 V or more than 4.5 V.	Open or short in harness wire or poor connector contact between the accelerator pedal position sensor II and the electronic governor control unit	• Inspect the accelerator position sensor using MUT-II 🕮 P13-42 • Inspect the harness and the connector 🕮 P13-82
		Internal malfunction or faulty adjustment of the lever portion of the accelerator pedal position sensor II	• Inspect the accelerator pedal position sensor 🕮 P13-54 • Inspect the accelerator pedal position sensor using MUT-II 🕮 P13-42
		Faulty electronic governor control unit	Replace the electronic governor control unit
21	—	Open or short in harness wire or poor connector contact between the coolant temperature sensor and the electronic governor control unit	Inspect the harness and the connector 🕮 P13-82
		Faulty coolant temperature sensor	• Inspect the coolant temperature sensor 🕮 P13-74 • Inspect the coolant temperature sensor using MUT-II 🕮 P13-42
		Faulty electronic governor control unit	Replace the electronic governor control unit

*: Contact your MFTA representative for current injection pump repair and replacement procedures.

INSPECTION BASED ON DIAGNOSIS CODES

Diagnosis code	Diagnosis code display condition (s)	Cause	Remedy
22	Displayed if the output voltage of the control rack position sensor I is less than 0.5 V or more than 4.5 V.	Open or short in harness wire or poor connector contact between the control rack position sensor and the electronic governor control unit	Inspect the harness and the connector 🕮 P13-82
		Open or shorted wire in the coil or poor control rack position sensor contact	• Inspect the control rack position sensor 🕮 P13-76 • Inspect the control rack position sensor using MUT-II 🕮 P13-42
		Faulty movement of the injection pump assembly control hook or poor governor actuator link.	Repair or replace the injection pump assembly. *
		Faulty electronic governor control unit	Replace the electronic governor control unit
24	Displayed if the output voltage of the accelerator pedal position sensor I is less than 0.5 V or more than 4.5 V.	Open or short in harness wire or poor connector contact between the accelerator pedal position sensor and the electronic governor control unit	• Inspect the accelerator position sensor using MUT-II 🕮 P13-42 • Inspect the harness and the connector 🕮 P13-82
		Internal malfunction or poor adjustment of the accelerator pedal position sensor I lever	• Inspect the accelerator position sensor I 🕮 P13-54
		Faulty electronic governor control unit	Replace the electronic governor control unit
31	Displayed if the output voltage of the idling adjustment volume is less than 0.6 V or mor than 4.6 V.	Stuck idling speed adjustment potentio-meter knob (between PUSH and PULL)	Reset the knob to PUSH or PULL
		Open or short in harness wire or poor connector contact between the idling speed adjustment potentiometer and the electronic governor control unit	Inspect the harness and the connector 🕮 P13-82
		Open wire in the switch portion of the idling speed adjustment potentiometer or faulty internal movement	Inspect the idling speed adjustment potentiometer 🕮 P13-73
		Faulty electronic governor control unit	Replace the electronic governor control unit
32	Displayed if the output voltage of the boost pressure sensor is less than 0.5 V or more than 4.8 V.	Open or short in harness wire or poor connector contact between the boost pressure sensor and the electronic governor control unit	Inspect the harness and the connector 🕮 P13-82
		Internal malfunction of boost pressure sensor	• Inspect the boost pressure sensor using MUT-II 🕮 P13-42 • Inspect the boost pressure sensor 🕮 P13-75
		Clogged boost hose or faulty assembly	Inspect the boost hose
		Faulty electronic governor control unit	Replace the electronic governor control unit

*: Contact your MFTA representative for current injection pump repair and replacement procedures.

Diagnosis code	Diagnosis code display condition (s)	Cause	Remedy
33	Displayed if the electronic governor control unit is faulty.	Faulty electronic governor control main unit	In order to reset the electronic governor control unit, temporarily turn the starter switch OFF and erase the diagnostic codes by pressing the memory clear switch P13-37 Replace the electronic governor control unit if the diagnostic codes persist after performing the above procedure
41	Displayed if the output voltage of the boost temperature sensor is more than 4.9 V.	Open or short in harness wire and poor connector contact between the boost temperature sensor and the electronic governor control unit	Inspect the harness and the connector P13-82
		Open or shorted wire or poor assembly of the boost temperature sensor coil	• Inspect the boost temperature sensor P13-79 • Inspect the boost temperature sensor using MUT-II P13-49
		Faulty electronic governor control unit	Replace the electronic governor control unit
45	—	Faulty phase of engine speed sensor and backup engine speed sensor	• Inspect the engine speed sensor P13-78 • Repair or replace the injection pump assembly. *
65	Faulty accelerator switch	Open or short in harness wire or poor connector contact between the accelerator switch and theelectronic governor control unit	Inspect the harness and the connector P13-82
		Open or shorted wire in the accelerator switch	Inspect the accelerator switch (Accelerator switch is built in the accelerator pedal position switch.) P13-54
		Faulty electronic governor control unit	Replace the electronic governor control unit

*: Contact your MFTA representative for current injection pump repair and replacement procedures.

ON-VEHICLE INSPECTION AND ADJUSTMENT

Checking and Adjusting Injection Timing

Service standards

Location	Maintenance item	Standard value	Limit	Remedy
—	Fuel injection timing (BTDC)	3° ± 0.5°	—	Adjust

Tightening torque

Unit : N·m {lbf.ft, kgf·m}

Location	Parts to be tightened	Tightening torque	Remarks
6	Union nut	29 to 49 {22 to 36, 3 to 5}	—
7	Delivery valve holder	100 to 110 {76 to 83, 10.5 to 11.5}	—

Special tools

Unit : mm {in.}

Location	Tool name and shape	Part No.	Application
—	Cranking handle 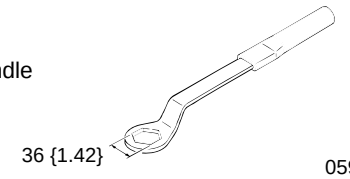	MH061289	Cranking of engine
15, 16	Universal extension 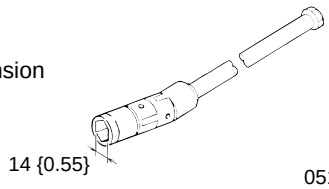	MH061099	Inspection and adjustment of fuel injection timing

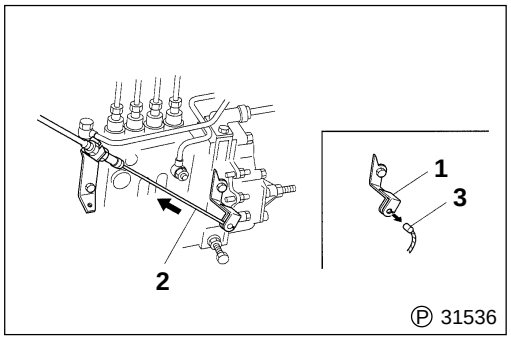

[Inspection]

NOTE

Set the starter switch to "LOCK" or "ACC" before starting operation.

- Pull governor stop level **1** toward STOP direction.
- Remove cable end **3** of engine stop cable **2.**

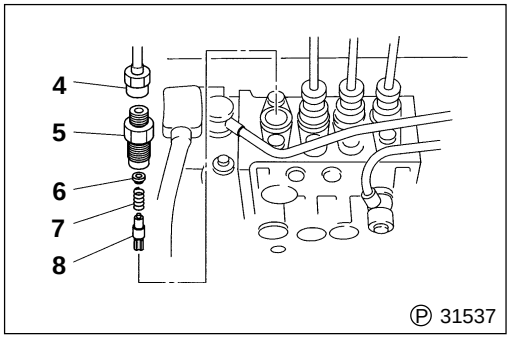

- Remove union nut **4** of the injection pipe, delivery valve holder **5**, stopper **6**, delivery valve spring **7** and delivery valve **8** from the injection pump of No.1 cylinder.
- After removing these parts, install delivery valve holder **5**.

CAUTION ⚠

Be sure to keep all the removed parts in diesel fuel to keep them free from dirt.

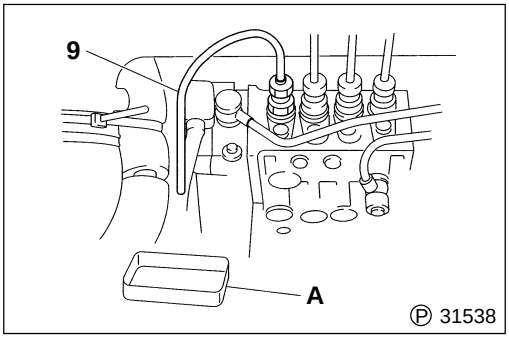

- Mount extra injection pipe **9** on No.1 cylinder. Direct the free end the pipe downwards so that the fuel discharge can be clealy of served.
  A : Oil tray

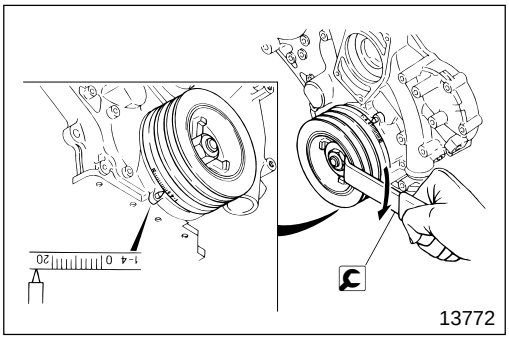

- Turn the crankshaft more than 180° in the direction of engine rotation and bring No.1 cylinder to approximately 30° before top dead center the compression cycle.

NOTE

Refer to the location where there are 30° gradations, since angle gradations on the crankshaft pulley side only extend to 20°.

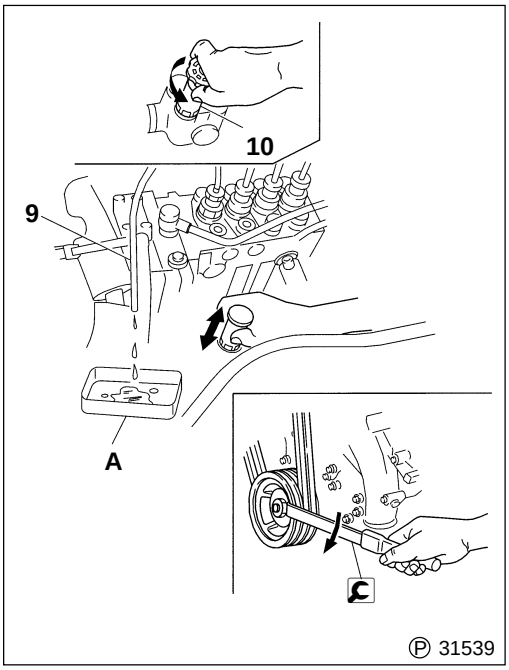

- Turn the engine in the direction of engine rotation slowly while discharging fuel from injection pipe **9**, deliver fuel using priming pump **10**
  A : Oil tray
- When the discharge of fuel from injection pipe **9** becomes intermittent, turn the crankshaft slower, stop turning the crankshaft when the discharge stops completely.

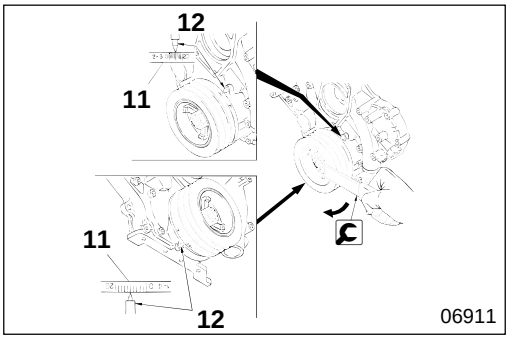

- Make sure that indent **11** on the crankshaft pulley and pointer **12** on the timing gear case show the standard fuel injection timing.

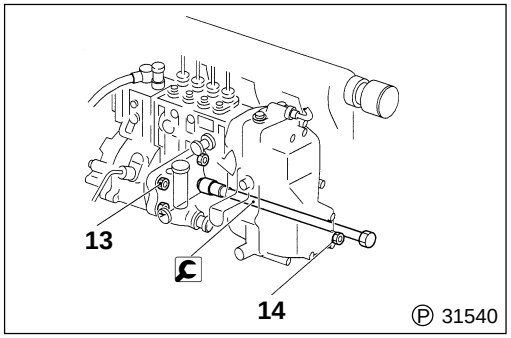

- Adjust fuel injection timing as follows if it does not conform to the standard value.

[Adjustment]

- Loosen injection pump mounting nuts **13**, **14**.
  13 : 4 points (on flange)
  14 : 1 point

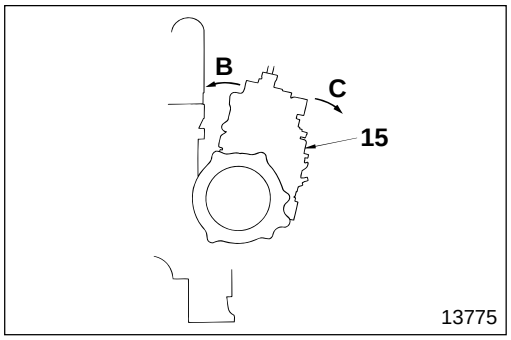

- When fuel injection timing is retarded, tilt injection pump **15** torward crankcase side **B**.
- When fuel injection timing is advanced, tilt injection pump **15** towards **C**.

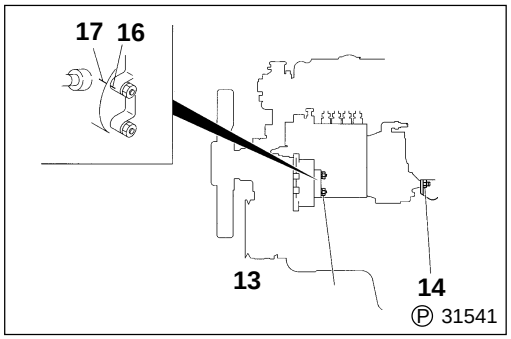

- Adjustment of one graduation on indented scale **16** of the timer case flange adjusts fuel injection timing by 6°.
  17 : Pointer
- Tighten nuts **13**, **14** at specified torque, and remeasure fuel injection timing

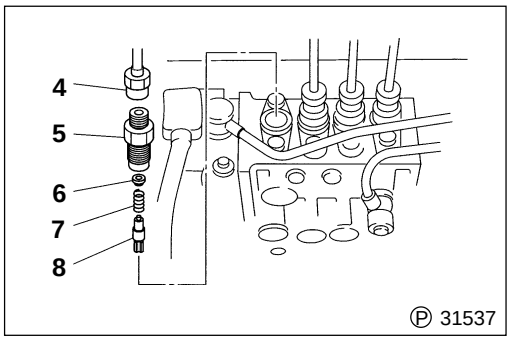

- After making sure that the fuel injection timing conforms to the standard value, install delivery value **8**, delivery value spring **7** and stopper **6**, then tighten delivery value holder **5**, and union nut **4**.
- Tighten each part at specified torque.

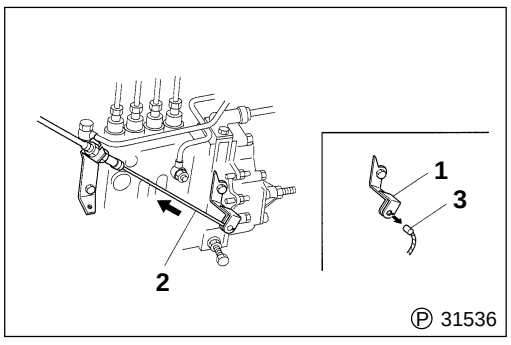

- With stop level **1** pulled toward the STOP direction, insert cable end **3** through the stop lever slot.
- Adjust engine stop cable **2** after installing it. 🕮 P13-55

Bleeding Air from Fuel System

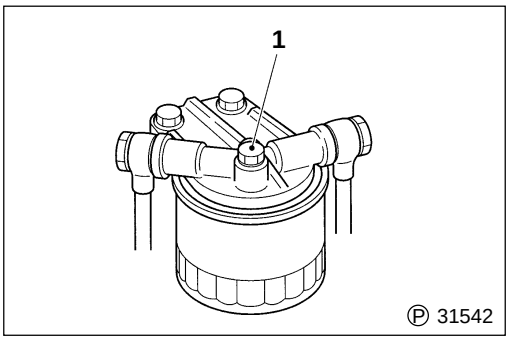

- Loosen the fuel filter air plug **1**.

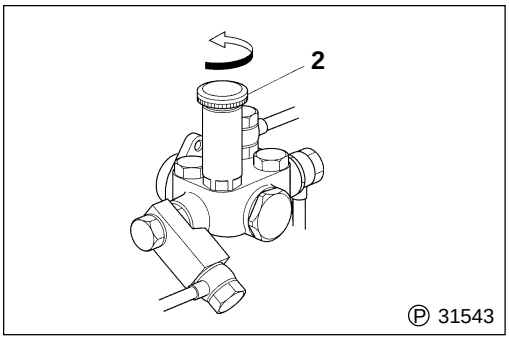

- Turn the priming pump knob **2** counterclockwise until it pops up.
- Move the priming pump knob **2** up and down to feed fuel through the fuel filter.
- When fuel emerging from the fuel filter air plug **1** no longer contains air bubbles, tighten the air plug securely.

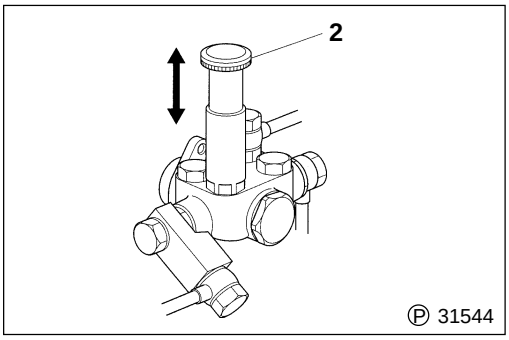

- Move the priming pump knob **2** up and down five or six more times. Then, press the knob down and screw it clockwise to lock it in position.
- Wipe up all spilled fuel, then start the engine.
- Check that no fuel leakage occurs.

WARNING⚠

- **Be sure to wipe up all spilled fuel. Unless it is wiped up, it could catch fire.**
- **Fuel is highly flammable. Keep it away from flames and sources of heat.**

Cleaning Gauze Filter

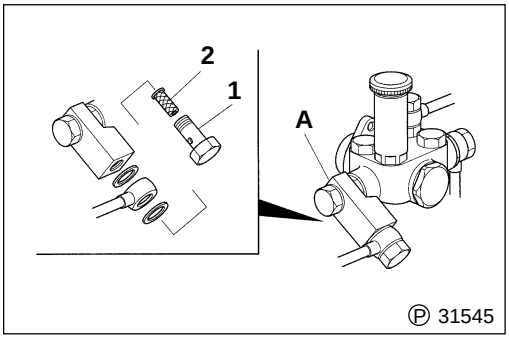

- Remove the eyebolt **1** from the suction port side **A** of the fuel feed pump.
- Remove the gauze filter **2** from the eyebolt **1**.
- Clean the gauze filter **2** in diesel fuel.
- Refit the gauze filter **2** and eyebolt **1** in the opposite order to that in which they were removed.
- Bleed all air out of the fuel system. 🕮 P13-51
- Start the engine and check that no fuel leakage occurs.

WARNING⚠

- **To minimize the risk of fire, wipe up any spilled fuel.**
- **Fuel is highly flammable. Keep it away from flames and sources of heat.**
- **After refitting the gauze filter, check that no fuel leakage occurs.**

Replacing Fuel Filter

Lubricant

Location	Points of application	Specified lubricant	Quantity
1	Gasket between fuel filter and fuel filter head	Engine oil	As required

Special tool

Unit : mm {in.}

Location	Tool name and shape	Part No.	Application
1	Filter wrench 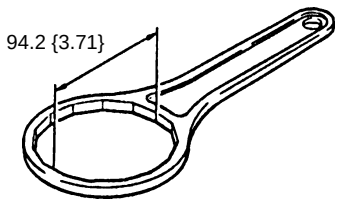 01882	MH061572	Fuel filter removal

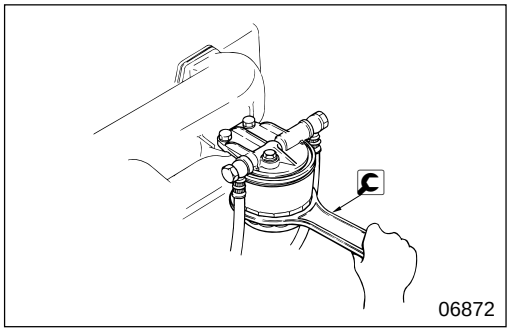

[Removal]

: Filter Wrench

WARNING

- **Fuel is highly flammable. Keep it away from flames and sources of heat.**
- **To minimize the risk of fire, wipe up any spilled fuel.**

[Installation]

WARNING

Use of an unsuitable fuel filter 1 can lead to fuel leaks and fires. Be sure to use a genuine filter.

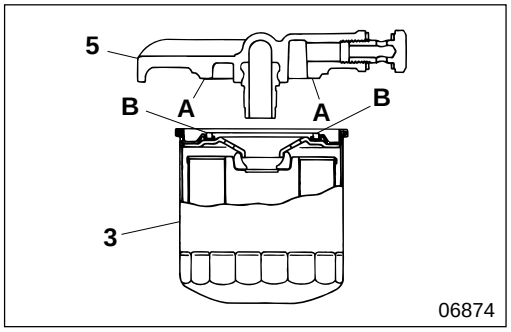

- To fit the fuel filter **1**, turn it until the gasket **B** touches surface **A** of the fuel filter head **2**. Then, tighten the filter by 1 to $1\frac{1}{8}$ turn. Be sure to turn the filter by hand.
- Bleed all air out of the fuel system. P13-51

WARNING

After fitting the fuel filter 1, start the engine and check that no fuel leakage occurs. Any leaking fuel could cause a fire.

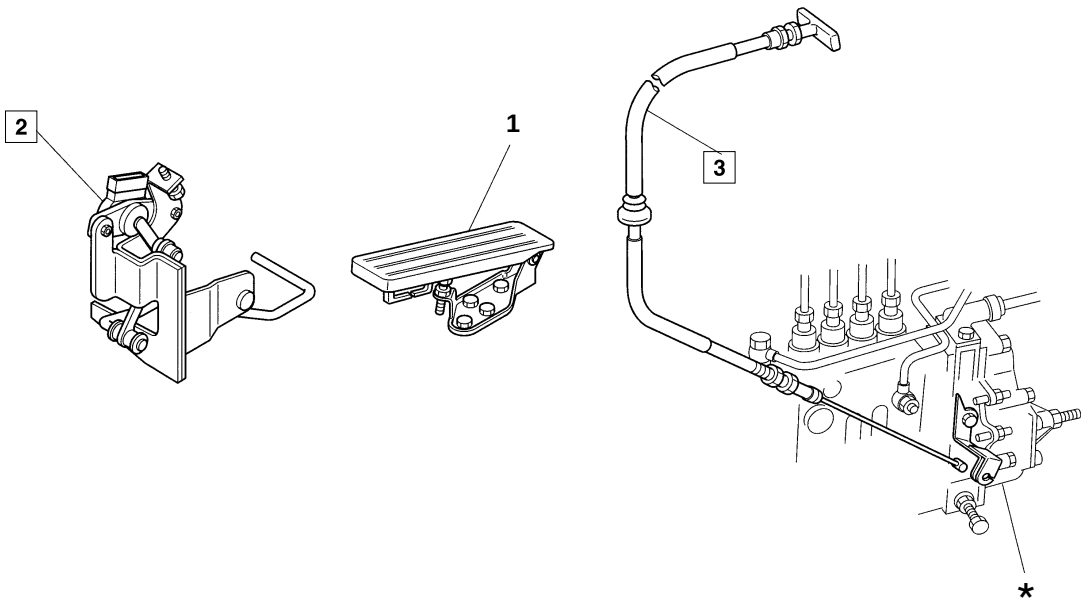

● **Removal sequence**

1 Accelerator pedal assembly 🕮 P13-56
2 Accelerator pedal position sensor assembly
3 Emergency engine stop cable
***** : Injection pump assembly

● **Installation sequence**

Follow the removal sequence in reverse.

Service standards

Location	Maintenance item			Standard value	Limit	Remedy
4	Output voltage of accelerator pedal position sensor 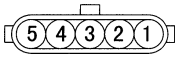 Ⓟ31477	Sensor II: ① – ④	Idle position	0.85 ± 0.1 V	—	Adjust or replace
		Sensor I: ④ – ⑤	Full-load position	4.15 ± 0.1 V	—	Adjust or replace
	Output voltage of accelerator switch 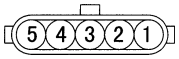 Ⓟ31477		Electrical conduction between terminals ② and ③ of accelerator switch	1.00 ± 0.24 V	—	Adjust or replace

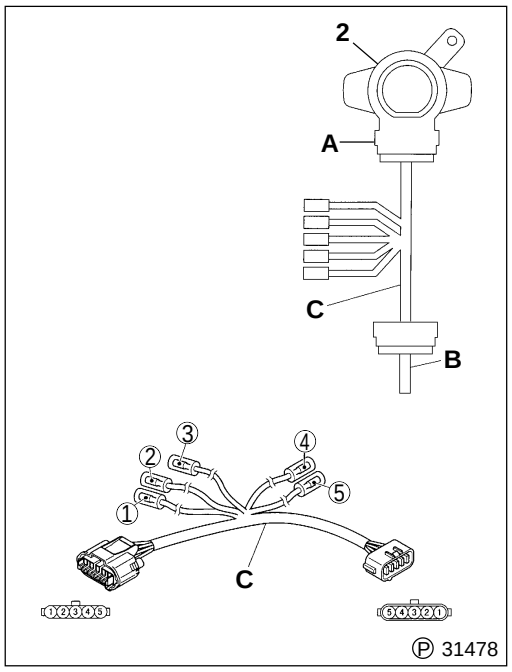

2 **Inspection of accelerator pedal position sensor assembly**

- Disconnect connector **A** of accelerator pedal position sensor **2** from harness **B** on the cab side. Prepare inspection harness **C,** and connect it between the above two connectors. Note: This harness is not necessary with MUT-II PLUS tester.
- Set the starter switch to the ON position.
- Measure the output voltages of accelerator pedal position sensor **4** and the accelerator switch according to the table below. Adjust, if necessary.

Item	Connector terminal					
	Accelerator position sensor inspection harness					
	Sensor II		Sensor I		Accelerator switch	
	①	④	④	⑤	②	③
Output voltage ***a** (Idle position)	⊖	⊕	⊖	⊕		
Output voltage ***b** (Full-load position)	⊖	⊕	⊖	⊕		
Output voltage ***c** (Accelerator switch activating point)					⊖	⊕

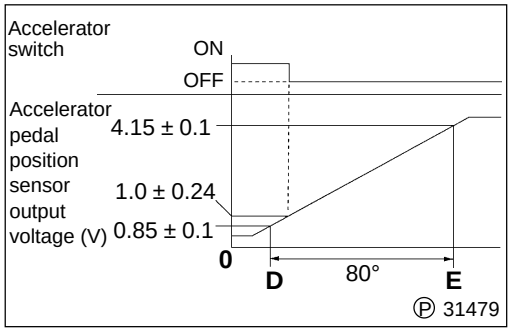

***a** : Measure voltage with accelerator pedal at idle position.
***b** : Measure voltage with the accelerator pedal at full-load position.
***c** : Press accelerator pedal gradually from idle position. Measure voltage when electrical conduction stops between connector terminals ② and ③ of accelerator pedal position sensor 2.
D : Idle position
E : Full-load position

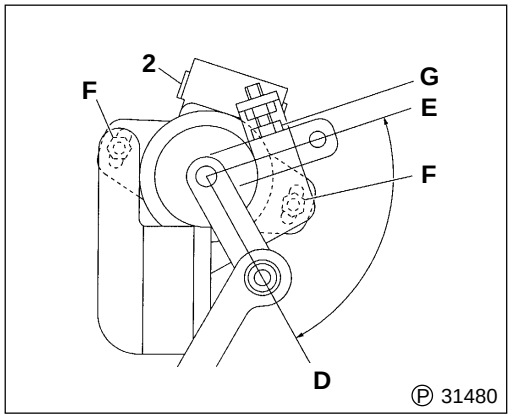

- If measured value ***a** and ***b** deviate from the standard values, adjust the following adjusting bolts.

Adjustment item	Adjusting bolt
***a** Idle position output voltage	Screw **F**
***b** Full-load position output voltage	Full-load stopper bolt **G**

- If the measured output voltage at accelerator switch activating point ***c** deviates from the standard value, replace accelerator pedal position sensor **2**.

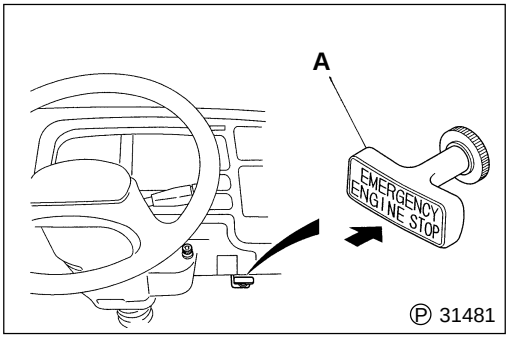

5 **Installation of emergency engine stop cable**

- Mount stop button **A** on emergency engine stop cable **5** and press the button firmly in position.

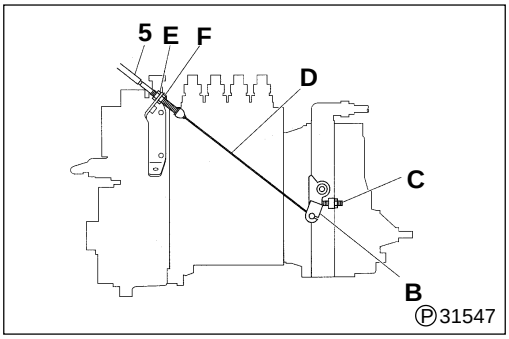

- With stop lever **B** of the governor contacting stopper bolt **C**, adjust nut **E** so that inner cable **D** of emergency stop cable **5** is taut. Then, tighten nut **F** to secure it in place.
- After installation, start the engine. Pull the stop button to make sure that the engine stops operating.

Accelerator Pedal Assembly

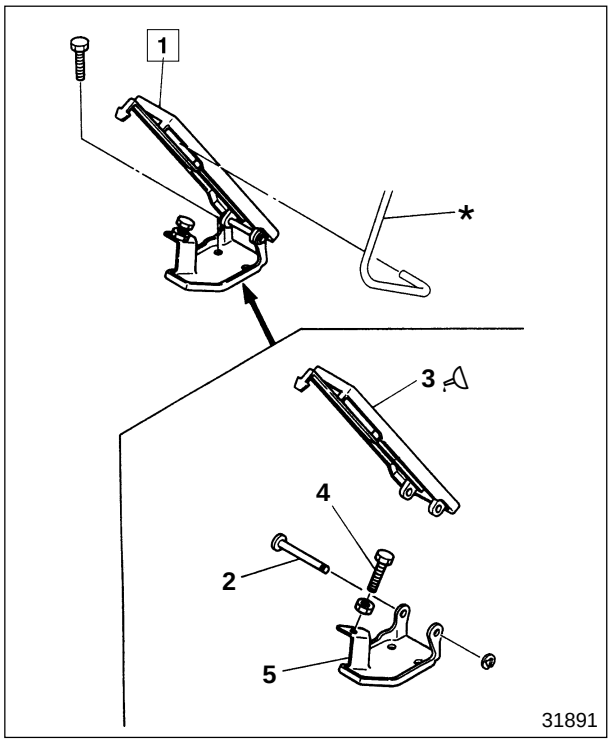

● **Disassembly sequence**

1 Accelerator pedal assembly
2 Clevis pin
3 Accelerator pedal
4 Stopper bolt
5 Accelerator pedal bracket

***** : Accelerator pedal position sensor assembly P13-57

● **Assembly sequence**

Follow the disassembly sequence in reverse.

Lubricant

Location	Points of application	Specified lubricant	Quantity
3	Slide-contacting surfaces of accelerator pedal and bracket	Chassis grease [NLGI No.1 (Ca soap)]	As required

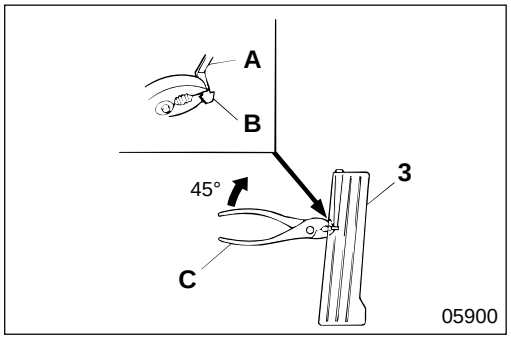

◆ Service procedure

1 **Removal of accelerator pedal assembly**

Pinch hook **B** of stopper **A** of accelerator pedal **3** using pliers **C** and rotating approximately 45° pull out the stopper towards the front of the vehicle.

CAUTION

Take care not to damage stopper A itself during removal, do not pull it out too forcibly.

Accelerator Position Sensor Assembly

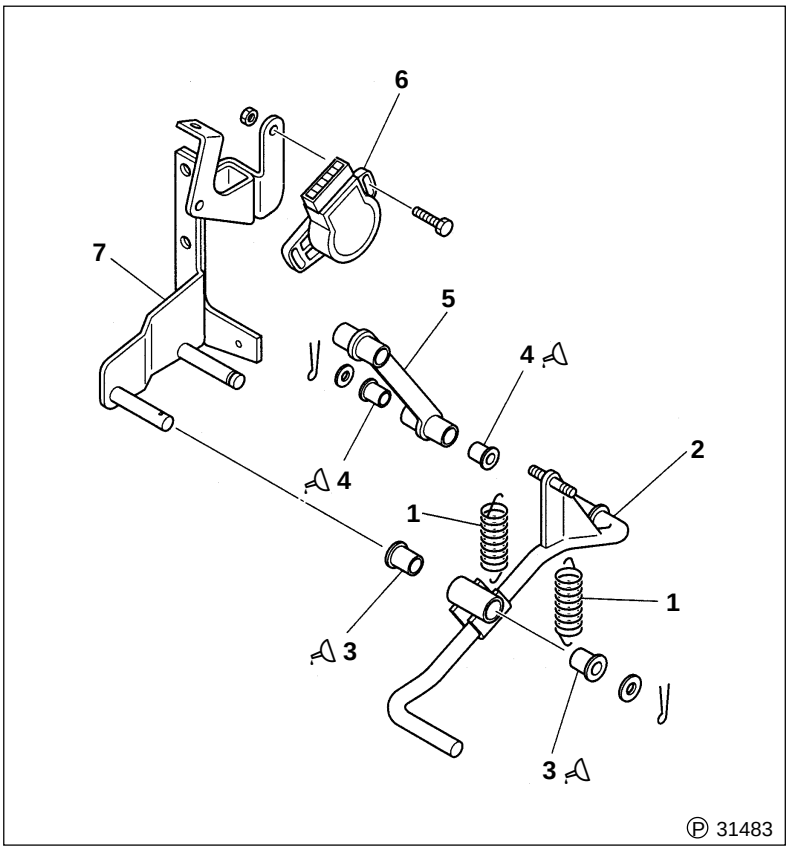

● **Removal sequence**

1 Return spring
2 Accelerator control arm
3 Bushing
4 Bushing
5 Accelerator control extension
6 Accelerator pedal position sensor
7 Bracket

● **Installation sequence**

Follow the removal sequence in reverse.

Lubricant

Location	Points of application	Specified Lubricant	Quantity
3, 4	Slide-contacting surfaces of bushing and support assembly	Chassis grease [NLGI No.1 (Ca soap)]	As required

FUEL TANK

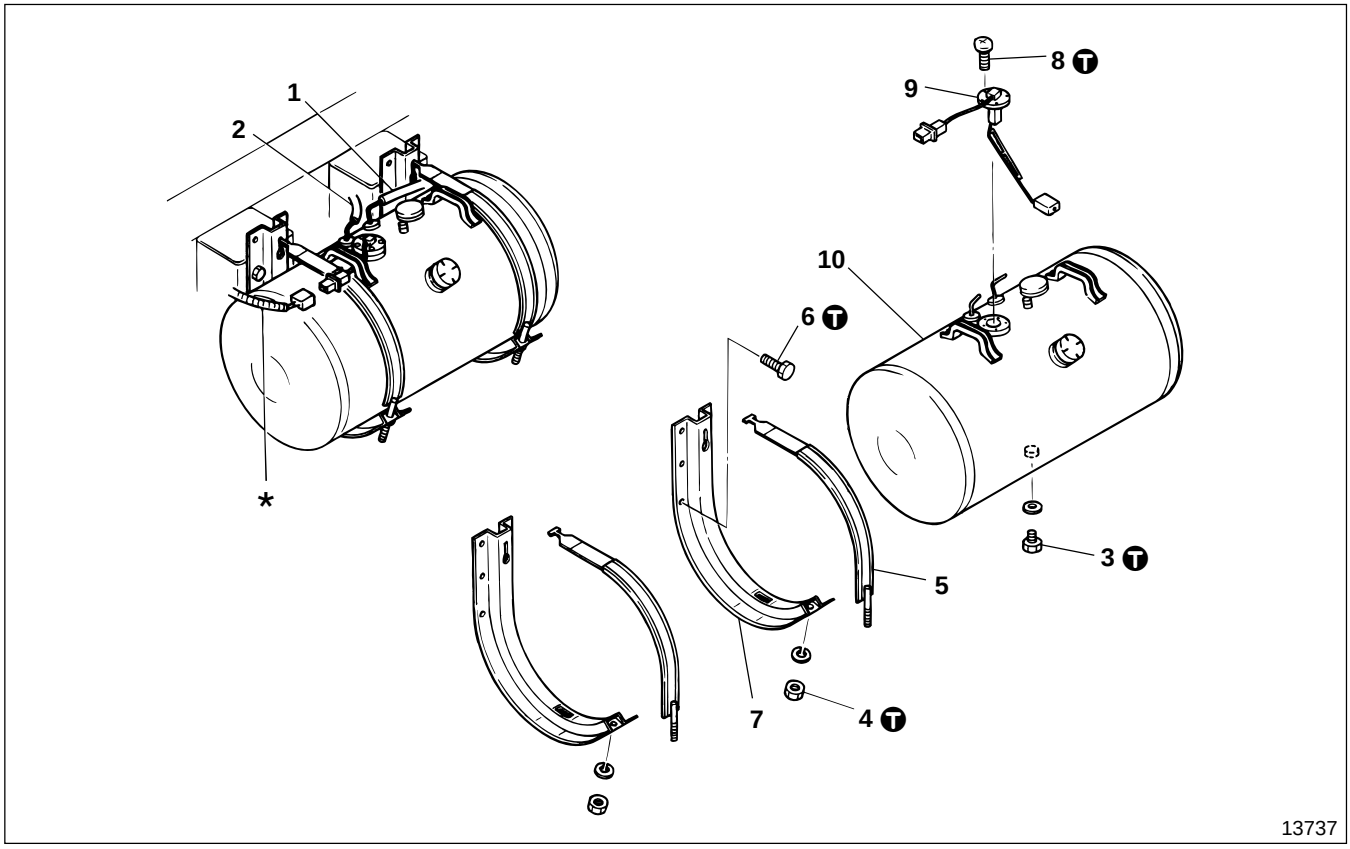

● **Work before removal**

WARNING ⚠

- **Keep drop lights away because of the risk of explosion.**
- **Wipe up any spilled fuel because it can cause a fire.**

NOTE

Drain fuel before working on the job.

● **Removal sequence**

1 Suction hose
2 Return hose
3 Drain plug
4 Nut
5 Fuel tank band
6 Bolt
7 Fuel tank bracket
8 Screw
9 Fuel gauge sending unit Gr 54
10 Fuel tank
***** : Chassis harness Gr 54

● **Installation sequence**

Follow the removal sequence in reverse.

T Tightening torque

Unit : N·m {lbf.ft, kgf·m}

Location	Parts to be tightened	Tightening torque	Remarks
3	Drain plug	59 to 98 {43 to 72, 6 to 10}	—
4	Nut (Fuel tank band mounting)	5.9 to 9.8 {4.3 to 7.2, 0.6 to 1.0}	—
6	Bolt (Fuel tank bracket mounting)	59 to 78 {43 to 58, 6 to 8}	—
8	Screw (Fuel gauge sending unit mounting)	1.0 to 1.5 {0.7 to 1.1, 0.1 to 0.15}	—

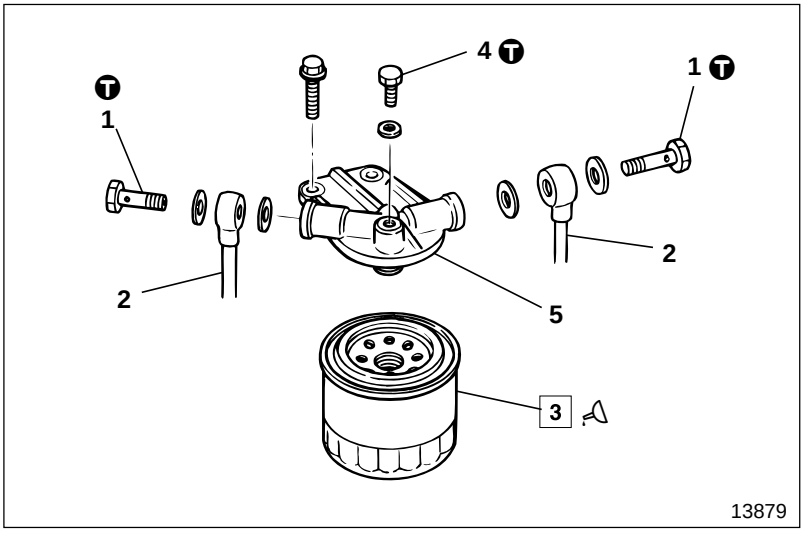

● **Disassembly sequence**

1 Eye bolt
2 Fuel feed pipe
3 Fuel filter
4 Air vent plug
5 Fuel filter head

● **Assembly sequence**

Follow the disassembly sequence in reverse.

Tightening torque

Unit : N·m {lbf.ft, kgf·m}

Location	Parts to be tightened	Tightening torque	Remarks
1	Eye bolt	25 to 34 {18 to 25, 2.5 to 3.5}	—
4	Air vent plug	7.8 to 12 {5.8 to 8.7, 0.8 to 1.2}	—

Lubricant

Location	Points of application	Specified lubricant	Quantity
3	Gasket contact surfaces of fuel filter and fuel filter head	Engine oil	As required

Special tools

Unit : mm {in.}

Location	Tool name and shape	Part No.	Application
3	Filter wrench 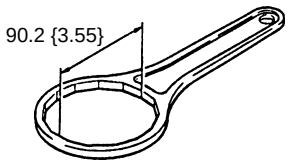 01882	MH061509	Removal of fuel filter

WATER SEPARATOR

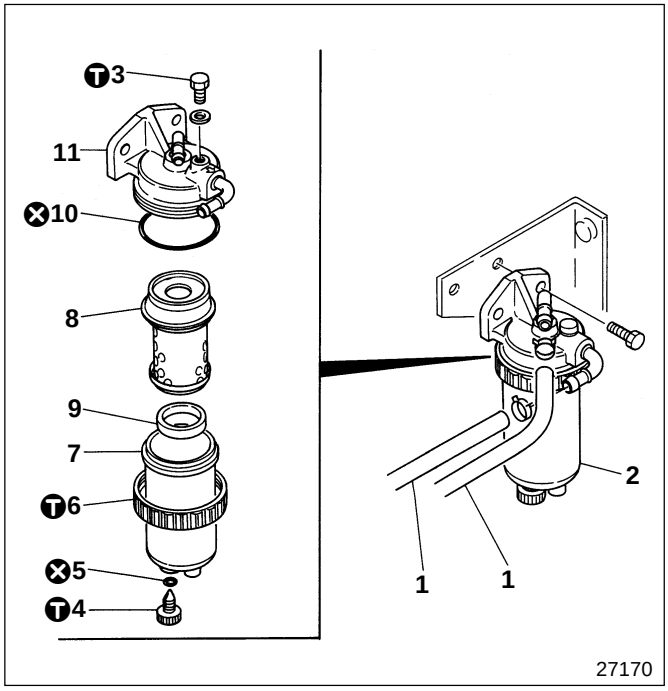

● **Disassembly sequence**

1 Fuel hose
2 Water separator assembly
3 Air vent plug
4 Drain plug
5 O-ring
6 Ring nut
7 Case
8 Screen assembly
9 Water level ring
10 O-ring
11 Head

⊗ : Non-reusable part

● **Assembly sequence**

Follow the disassembly sequence in reverse.

● **Operations after assembly**

Bleed all air out of the fuel system. 📖 P13-51

WARNING ⚠

- **Fuel is highly flammable. Keep it away from flames and sources of heat.**
- **After assembling the water separator, start the engine and check that no fuel leakage occurs. Any leaking fuel could cause a fire.**

Ⓣ Tightening torque

Unit : N·m {lbt.ft, kgf·m}

Location	Parts to be tightened	Tightening torque	Remarks
3	Air vent plug	8 to 12 {5.8 to 8.7, 0.8 to 1.2}	—
4	Drain plug	3 to 4 {2.2 to 2.9, 0.3 to 0.4}	—
6	Ring nut	23 to 27 {17 to 20, 2.3 to 2.8}	—

M E M O

INJECTION PUMP

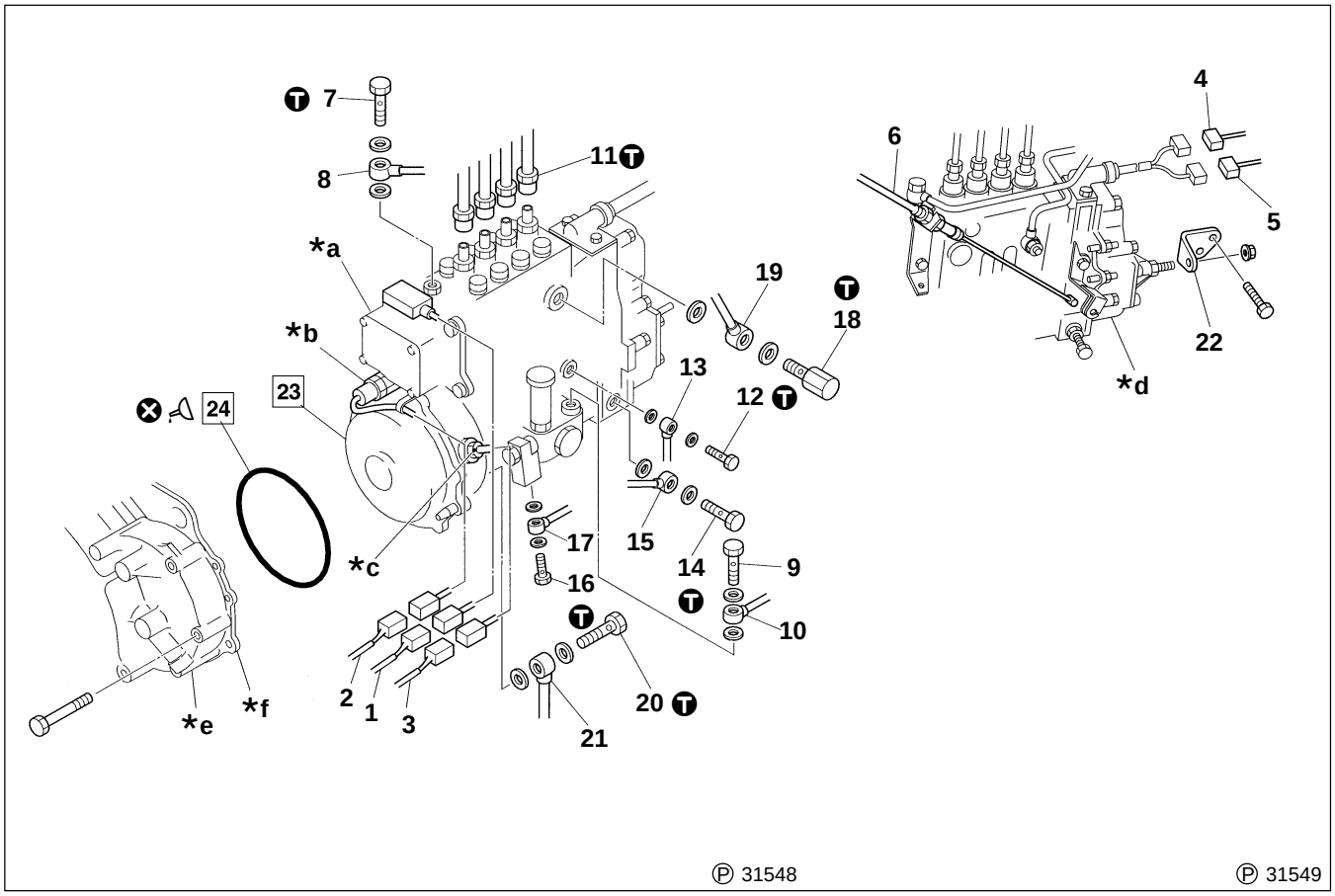

● **Removal sequence**

1 Harness (6 pin)
2 Harness (4 pin)
3 Harness (3 pin)
4 Harness (10 pin)
5 Harness (3 pin)
6 Engine stop cable 🕮 P13-55
7 Eye bolt
8 Fuel feed pipe
9 Eye bolt
10 Fuel feed pipe
11 Injection pipe
12 Overflow valve
13 Fuel return pipe
14 Eye bolt
15 Oil pipe
16 Eye bolt
17 Fuel suction pipe
18 Eye bolt
19 Oil pipe
20 Eye bolt
21 Oil pipe
22 Pump stay
23 Injection pump assembly
24 O-ring

***a** : Pre-stroke actuator 🕮 P13-13, 24
***b** : Sub control rod position sensor 🕮 P13-21
***c** : Engine speed sensor 🕮 P13-21
***d** : Electronic governor 🕮 P13-28
***e** : Timing gear case 📦 Gr 11
***f** : Front plate 📦 Gr 11
⊗ : Non-reusable parts

WARNING ⚠

- **Fuel ignites easily. Do not get it near flame or heat.**
- **Wipe up any spilled fuel because it can cause a fire.**

CAUTION ⚠

- **Be sure to protect all openings by covering them after removal of hoses and pipes because the engine performance is adversely affected if dirt and foreign particles enter injection pump assembly 23.**
- **Do not hold the control lever when lifting injection pump assembly 23. Also, do not remove the control lever because removal of the lever might cause poor performance of the pump.**

● **Installation sequence**

Follow the removal sequence in reverse.

Tightening torque

Unit : N·m {lbf.ft, kgf·m}

Location	Parts to be tightened	Tightening torque	Remarks
7	Eye bolt (Fuel feed pipe mounting)	25 to 29 {18 to 22, 2.5 to 3}	—
9	Eye bolt (Fuel feed pipe mounting)	25 to 29 {18 to 22, 2.5 to 3}	—
11	Injection pipe (Union nut fastening)	29 to 49 {22 to 36, 3 to 5}	—
12	Overflow valve	25 to 29 {18 to 22, 2.5 to 3}	—
14	Eye bolt (Oil pipe mounting)	9.8 to 13 {7.2 to 9.4, 1 to 1.3}	—
16	Eye bolt (Fuel suction pipe mounting)	25 to 29 {18 to 22, 2.5 to 3}	—
18	Eye bolt (Oil pipe mounting)	20 to 29 {14 to 22, 2 to 3}	—
20	Eye bolt (Oil pipe mounting)	20 to 29 {14 to 22, 2 to 3}	—

Lubricant

Location	Points of application	Specified lubricant	Quantity
24	Entire body of O-ring	Engine oil	As required

Special tools

Unit : mm {in.}

Location	Tool name and shape	Part No.	Application
23	Socket wrench 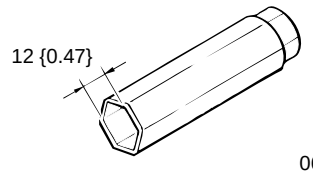 06876	31391-14100	Removal and installation of injection pump assembly
—	Cranking handle 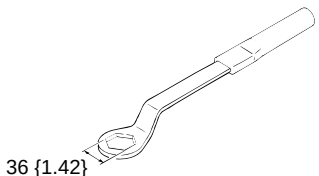 05999	MH061289	Cranking of engine

◆ Service procedure

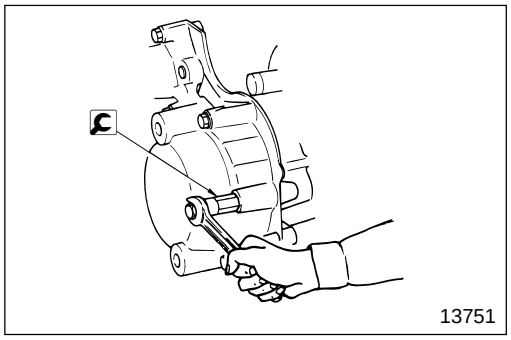

23 **Injection pump assembly**

[Removal]

- Refer to Removal sequence on page 13-62.

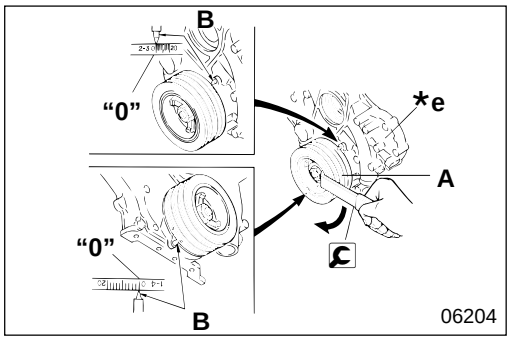

[Installation]

- To bring No. 1 cylinder piston to top dead center in the compression cycle, align pointer **B** of timing gear case ***e** with indent mark "**0**" on crankshaft pulley **A** by turning the crankshaft pulley clockwise using cranking handle. At this point, make sure that the intake and exhaust valves of No. 1 cylinder are not depressed by the push rod. If they are depressed, make another full rotation of the crankshaft pulley.

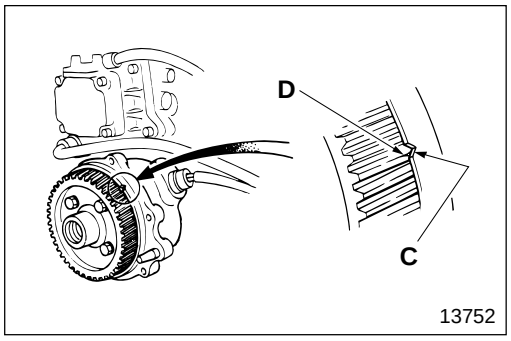

- Align indent **C** on the timer case with indent **D** on the injection pump gear.

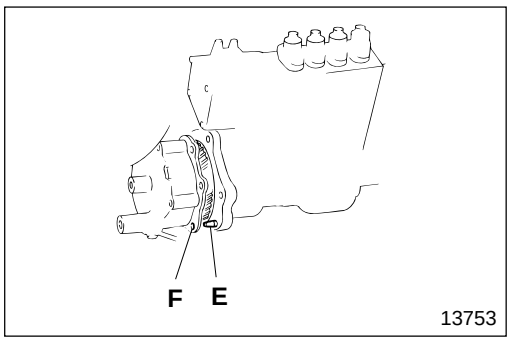

- By aligning guide bar **E** of the timer case with guide hole **F** of the front plate, push in the idler gear up to a fraction of an inch short of engaging the injection pump gear.

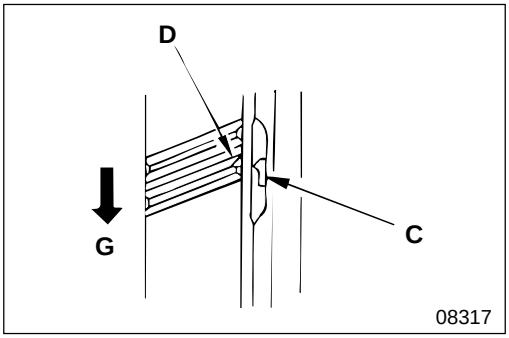

- Making sure that alignment mark **C** on the timer case aligns with indent **D** on the injection pump gear, push in the injection pump assembly.
  As this fitting is taking place, the indent will turn in direction **G**.

INJECTION NOZZLE

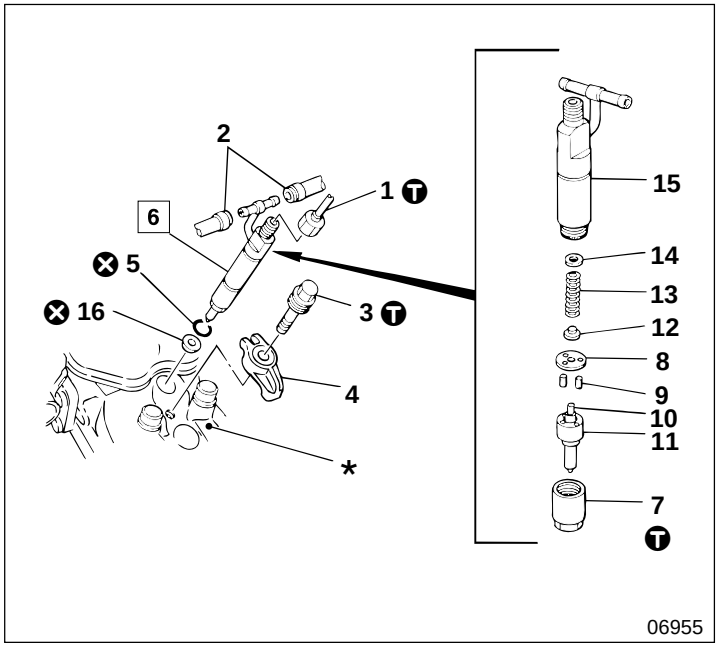

● **Inspection before disassembly**

P13-67

● **Disassembly sequence**

1 Injection pipe
2 Leak-off pipe
3 Bolt
4 Bridge
5 O-ring
6 Injection nozzle assembly
7 Retaining nut
8 Tip packing
9 Straight pin
10 Needle valve
11 Nozzle
12 Pressure pin
13 Spring
14 Adjusting shim
15 Nozzle holder
16 Nozzle gasket

* : Cylinder head Gr 11
⊗ : Non-reusable parts

● **Assembly sequence**

Follow the disassembly sequence in reverse.

WARNING ⚠

Wipe up any spilled fuel because it can cause a fire.

CAUTION ⚠

- **Be sure not to touch the slide-contact area of needle valve 10 because any scratches or corrosion might spoil the airtightness of nozzle 11. It must be handled with utmost care.**
- **Never change the combination of needle valve 10 and nozzle 11 for each cylinder.**
- **Be sure to protect all openings by covering them after removal of hoses and pipes because the engine performance is adversely affected if dirt and foreign particles enter injection nozzle assembly 6.**

NOTE

Remove carbon deposits and clean injection nozzle assembly 6 before working on it, then test the injection pressure and jet spray condition, and check for fuel leakage before disassembly. If no fault is found, do not disassemble.

Service standards

Location	Maintenance item	Standard value	Limit	Remedy
6	Valve opening pressure	21.6 MPa {3130 lbf/ in^2, 220 kgf/cm^2}	—	Adjust

T Tightening torque

Unit : N·m {lbf.ft, kgf·m}

Location	Parts to be tightened	Tightening torque	Remarks
1	Union nut (Injection pipe mounting)	25 {18, 2.5}	—
3	Bolt (Bridge mounting)	25 {18, 2.5}	—
7	Retaining nut	34 to 44 {25 to 33, 3.4 to 4.5}	—

Special tools

Location	Tool name and shape	Part No.	Application
—	Nozzle cleaning tool	★105789-0010	Cleaning of injection nozzle assembly

★ ZEXEL code number

◆ Service procedure

● Inspection before disassembly

Attach injection nozzle assembly **6** to nozzle tester **A**, and conduct the following inspection.

WARNING ⚠

Never touch the spray from nozzle 11 or let your hands get too close to the spray point during the test.

NOTE

Before inspection, bleed the air out in a couple of bursts by pressing nozzle tester A lever.

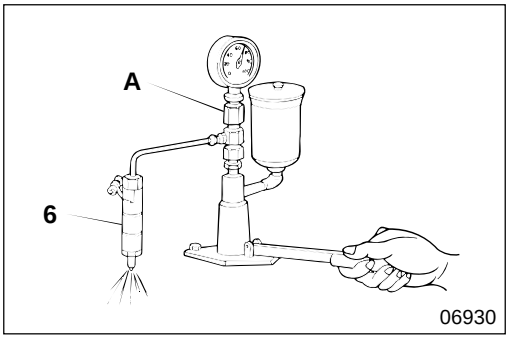

(1) Valve opening pressure

- Raise the pressure of nozzle tester **A** by operating the lever, and measure the pressure that the gauge registers when the pressure is released which will be observed by the sudden movement of the gauge indicator.
- If the measured value deviates from the standard value, disassemble the nozzle and clean, and adjust it using adjusting shims **14**.
- Variation of 0.05 mm {0.0020 in.} thickness in adjusting shims **14** causes a difference of 735 kPa {105 lbf/in^2, 7.5 kgf/cm^2} of pressure, for example, to alter the pressure for 98 kPa {14 lbf/in^2, 1 kgf/cm^2}, a thickness of 0.0067 mm {0.00026 in.} is required.
- If the performance cannot reach the standard value even after adjustment, replace injection nozzle assembly **6**.

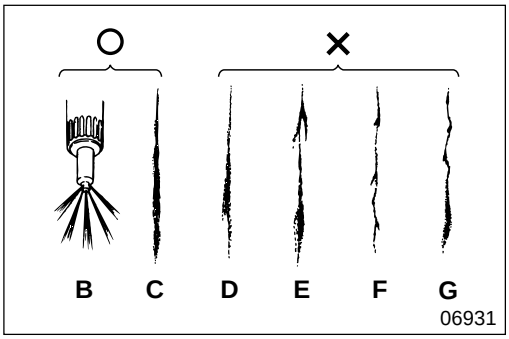

(2) Spray condition

- Test injection spray condition by quick lever actions of nozzle tester **A**, 4 to 6 actions per second.
  - **B** : Even spray from all five orifices (Good)
  - **C** : Even and symmetrical spray (Good)
  - **D** : Asymmetrical spray (Faulty)
  - **E**: Spray direction deviates from the nozzle axis line (Faulty)
  - **F**: Thin and insufficient spray (Faulty)
  - **G**: Irregular spray (Faulty)
- If faulty spray cannot be corrected, disassemble injection nozzle assembly **6** and clean every part and repeat the test.
  If faulty spray still occurs after repeating test, replace the injection nozzle assembly.
- Make sure that there is no post-spray dripping after injection.

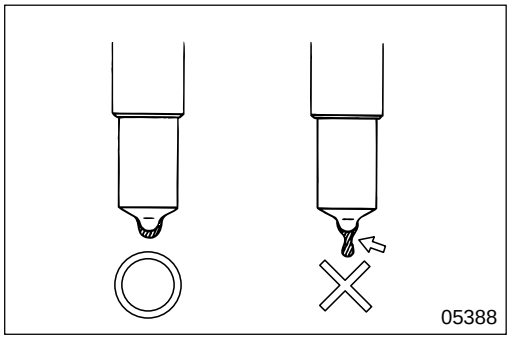

(3) Fuel air tightness and leakage at related contact points

- Maintain interior pressure of nozzle at 1960 kPa {285 lbf/in^2, 20 kgf/cm^2} lower than the valve opening pressure, and check and see if any fuel seeps out of the nozzle tip within 10 seconds.
- If any fault is found, disassemble injection nozzle assembly **6** and clean every part and repeat the test. If any fault is still found, replace the injection nozzle assembly.

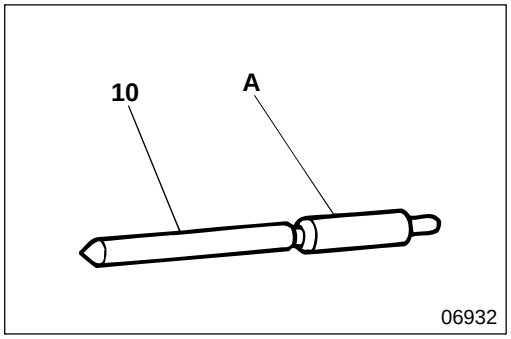

6 Injection nozzle assembly

[Disassembly]

CAUTION

- **Be sure not to touch sliding part A of needle valve 10 with your hands.**
- **Never change the combination of removed needle valve 10 and nozzle 11 for each cylinder.**

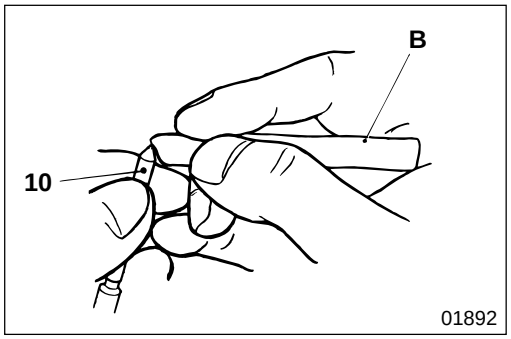

[Cleaning]

Clean needle valve **10** and nozzle **11** with diesel fuel (cleaning solvent). Remove carbon deposits with 🔧 cleaning tool in the following manner:

- Clean needle valve **10** by removing carbon deposits from its tip using cleaning bar **B** of 🔧 cleaning tool.

CAUTION

Never use a wire brush or hard steel for cleaning.

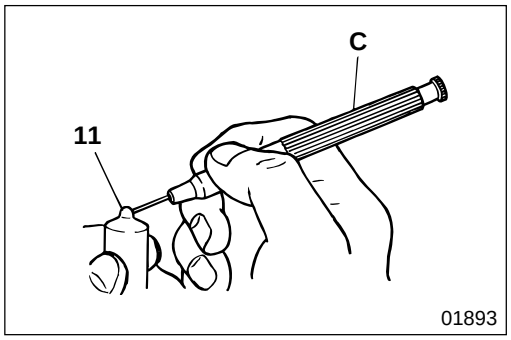

- To clean nozzle **11**, remove carbon deposits from the orifices of the nozzle using needle cleaner **C** of 🔧 cleaning tool, by inserting it into the orifices and turning it.
  Needle cleaner diameter : ø0.25 mm {0.0098 in.} or less

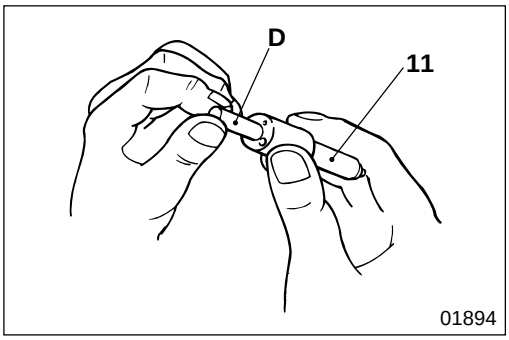

- Clean the seat of nozzle **11** using cleaning needle **D** of [C] cleaning tool.
- Use FUSO carbon remover to remove hard-to-remove, burnt-on carbon deposits.

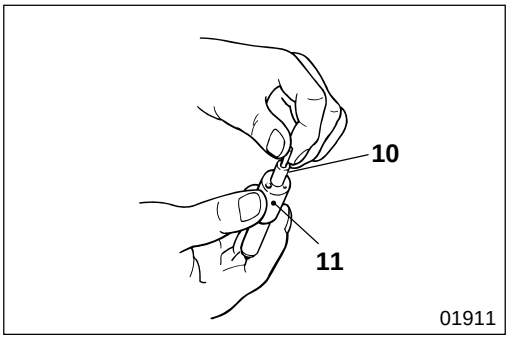

[Inspection]

- Immerse needle valve **10** and nozzle **11** in diesel fuel (cleaning solvent) and clean them thoroughly.
- Check and see if needle value **10** drops by its own weight into the nozzle from the position where a third of its length is pulled out. (Repeat this several times rotating the needle valve.)
- If needle valve **10** does not drop smoothly, repeat cleaning and repeat the test. If any fault is still found, replace both the needle valve and nozzle **11** together as a set.

INSPECTION OF OTHER DEVICES

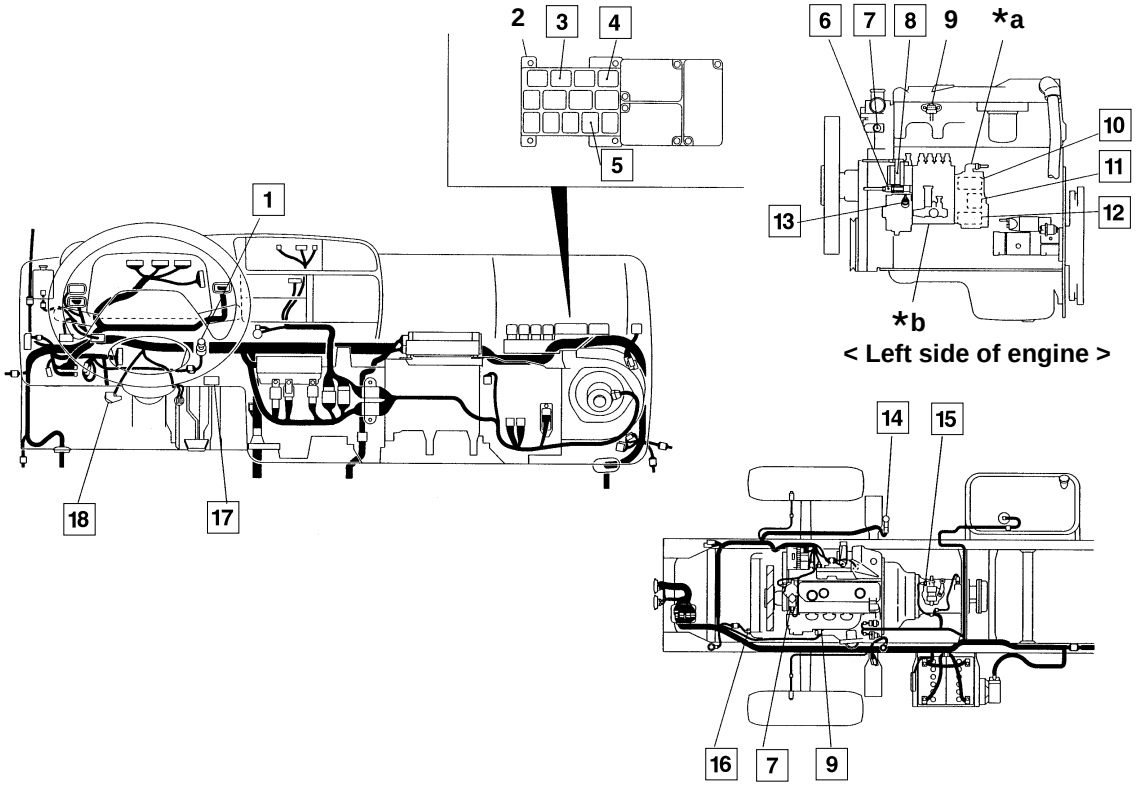

1 Idling speed adjustment potentiometer
2 Relay box
3 Exhaust brake cut relay < A/T >
Transmission neutral relay < M/T >
4 Pre-stroke cut relay
5 Exhaust brake relay < M/T >
6 Sub control rack position sensor
7 Engine coolant temperature sensor
8 Pre-stroke actuator
9 Boost pressure sensor
10 Control rack position sensor
11 Backup engine speed sensor
12 Linear DC motor
13 Engine speed sensor
14 Exhaust brake 3-way magnetic valve
15 Transmission neutral switch < M/T >
16 Boost temperature sensor
17 Emergency engine stop button
18 Clutch pedal switch
19 Fuel injection rate adjustment resistor

***a** : Electronic governor
***b** : Injection pump
M/T : Manual transmission
A/T : Automatic transmission

Service standards

Unit : mm {in.}

Location	Maintenance item			Standard value	Limit	Remedy
1	Output voltage of idling speed adjustment potentiometer  16184	②—③	Knob pulled	1 to 3 V	—	Replace
			Knob pushed	3.6 to 4.3 V	—	
6	Resistances of sub control rack position sensor  13725		① – ④	92.5 to 101.5 Ω	—	Repair or replace the injection pump assembly. *
			① – ③	92.5 to 101.5 Ω	—	
			③ – ④	185 to 203 Ω	—	
7	Engine coolant temperature sensor	Between terminal and body	20°C {68°F}	(3.25 kΩ)	—	Replace
			40°C {104°F}	(1.5 kΩ)	—	
			60°C {140°F}	(620 ± 62 kΩ)	—	
8	Resistance of pre-stroke actuator (measured at connector) 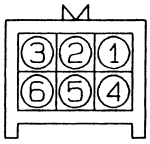 13714		②—③	5.5 to 6.1Ω	—	Repair or replace the injection pump assembly. *
			①—③	11.0 to 12.2 Ω	—	
			①—②	5.5 to 6.1Ω	—	
			④—⑤	2.45 to 2.95 Ω		
10	Resistances of control rack position sensor	<Connector: 3 pin> 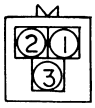 16165	③ – ④ <3 pin>	31.5 to 36.5 Ω	—	Repair or replace the injection pump assembly. *
		<Connector: 10 pin> 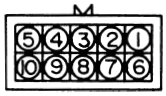 16160	③ – ⑨ <10 pin>	18.0 to 21.0 Ω	—	
			④ – ⑨	13.5 to 15.5 Ω	—	
		<Governor actuator> 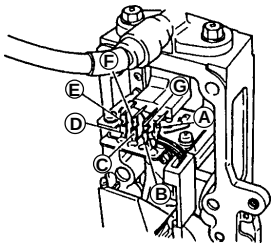 24816	Ⓖ-Ⓒ	31.5 to 36.5 Ω	—	
			Ⓖ-Ⓕ	18.0 to 21.0 Ω	—	
			Ⓒ-Ⓕ	13.5 to 15.5 Ω	—	

The values in ( ) are reference values

*: Contact your MFTA representative for current injection pump repair and replacement procedures.

INSPECTION OF OTHER DEVICES

Unit : mm {in.}

Location	Maintenance item			Standard value	Limit	Remedy
12	Resistances of linear DC motor	<Connector: 3 pin> 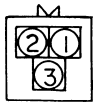 16165	① – ②	9.0 to 9.8 Ω	—	Repair or replace the injection pump assembly. *
		<Connector: 10 pin> 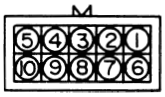 16160	① – ②		—	
		<Governor actuator> 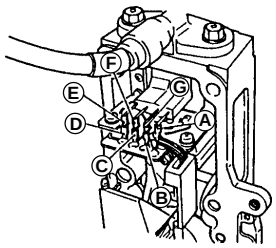 24816	Ⓐ–Ⓑ		—	
13	Resistance of engine speed sensor (at 25°C {77°F})	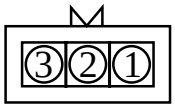 14013	①—②	2.1 to 2.5 kΩ	—	Replace
14	Minimum operating voltage of 3-way magnetic valve	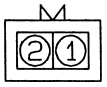 14318		11 V or less	—	Replace
16	Resistance valve of boost temperature sensor	0°C {32°F}		5880 ± 588 Ω	—	Replace
		20°C {68°F}		2455 ± 245 Ω	—	
		80°C {176°F}		322 ± 32 Ω	—	

*: Contact your MFTA representative for current injection pump repair and replacement procedures.

Tightening torque

Unit : N·m {lbt.ft, kgf·m}

Location	Parts to be tightened	Tightening torque	Remarks
7	Coolant temperature sensor	34 ± 6.9 {25 ± 5, 3.5 ± 0.7}	—
13	Lock nut of engine speed sensor	24 to 35 {17 to 26, 2.4 to 3.6}	—

◆ Service procedure

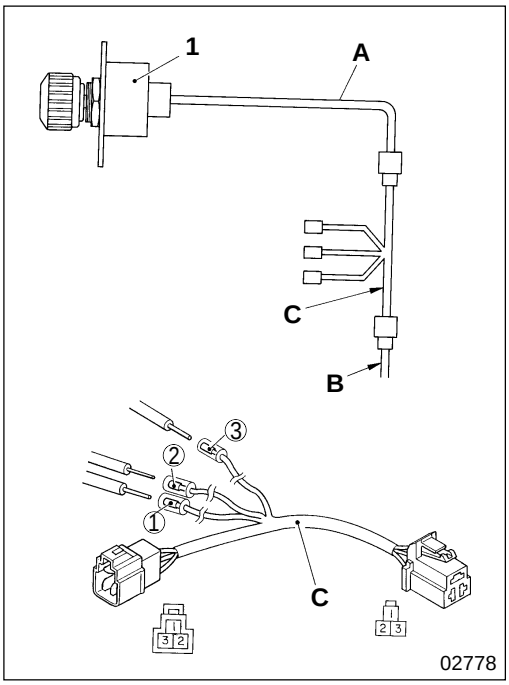

1 **Inspection of idling speed adjustment potentiometer**

- Disconnect the harness **A** of the idling speed adjustment potentiometer **1** from the cab-side harness **B**. Then, connect an inspection harness **C** between harnesses **A** and **B**. (The inspection harness must be made specially for this procedure, but is not necessary with MUT II PLUS tester.)
- Turn the starter switch to the ON position.
- Check the output voltages of the idling speed adjustment potentiometer **1** in accordance with the following table.

Item	Connector terminal		
	Accelerator pedal position sensor inspection harness		
	①: Power supply (+)	②: GND (–)	③: Output(+)
Output voltage with knob pulled		⊖	⊕
Output voltage with knob pushed			

Output characteristics

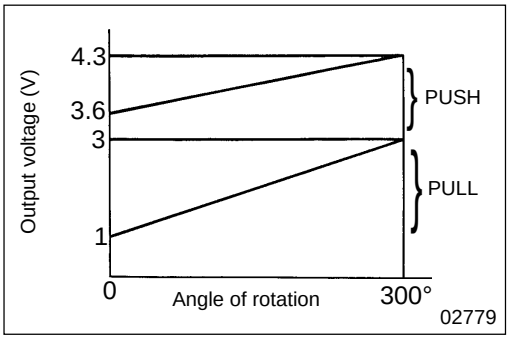

- If the output voltages are out of specification, replace the idling speed adjustment potentiometer **1.**

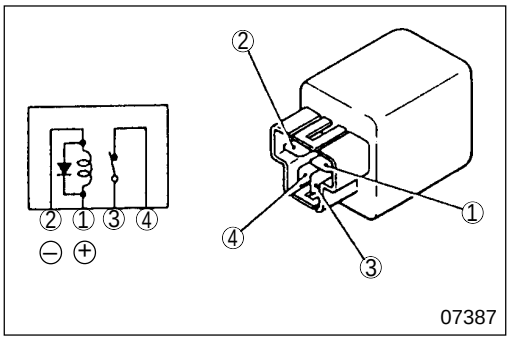

3 **4** **Inspection of pre-stroke cut relay and exhaust brake cut relay (normally-closed type with 4-pin connector)**

- Perform continuity checks in accordance with the following table.

	①	②	③	④
Not energized	○	○	○	○
Energized	⊕	⊖	〔	〕

○——○ : Continuity exists between terminals.
⊕——⊖ : Terminals across which 12 V DC is applied
〔- - - -〕 : Continuity no longer exists between terminals

- Replace the relay if any abnormality is evident.

INSPECTION OF OTHER DEVICES

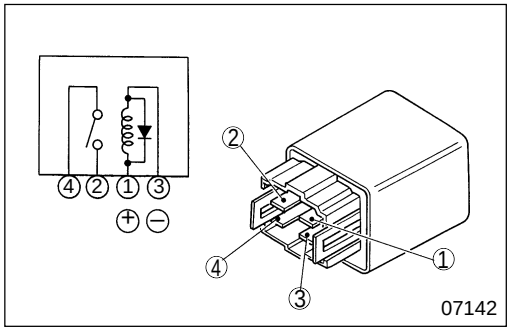

5 **Inspection of exhaust brake relay (Open type 4 pin)**

- Follow the table below to inspect continuity :

	①	②	③	④
No current	○		○	
Current	⊕		⊖	○

○—○ : There is continuity between terminal ○ and ○.
⊕—⊖ : Indicates that **12** volts DC is applied to the line between the terminals.

- If any fault is found, replace the relay.

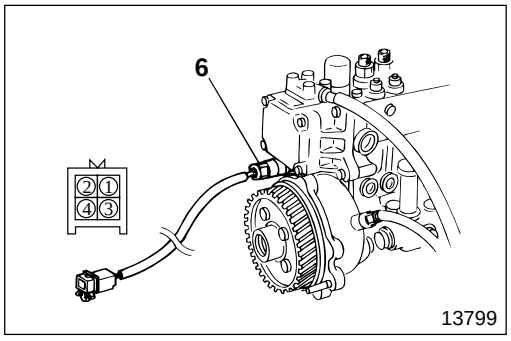

6 **Inspection of sub control rack position sensor**

- Measure the resistances between the following terminals : ① and ④ ; ① and ③ ; ③ and ④.
- If any resistance is out of specification, replace the sub control rack position sensor **6**.
- Have replacement performed by the nearest MFTA Dealer.

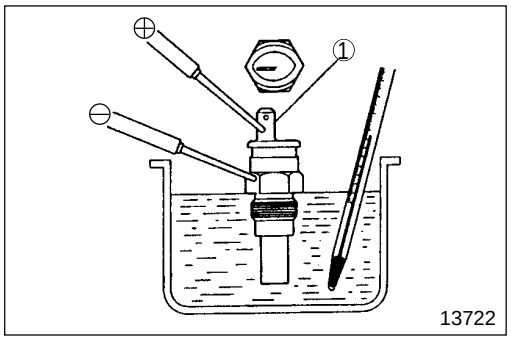

7 **Inspection of engine water temperature sensor**

- Put the engine water temperature sensor **7** in a container of engine oil.
- Heat the oil to each of the specified temperatures. Stir the oil to ensure that it heats up evenly.
- At each of the specified temperatures, measure the resistance between the terminal ① and body of the engine water temperature sensor **7**.
- If the measurements are out of specification, replace the engine water temperature sensor.

Item			Standard value (reference values)	Limit	Remedy
Engine coolant temperature sensor	Between terminal and body	20°C {68°F}	(3.25 k)ohms	—	Replace
		40°C {104°F}	(1.5 k)ohms	—	
		60°C {140°F}	(620 ± 62 k)ohms	—	

8 Inspection of pre-stroke actuator

Perform the following inspections. If any abnormality is evident, have inspection and repair performed by the nearest MFTA Dealer.

CAUTION ⚠

The pre-stroke actuator 8 must be inspected when the engine is cold.

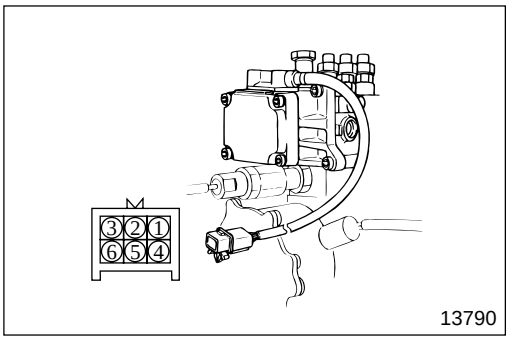

(1) Measurements on connectors

Measure the resistance between terminals ② and ③; ① and ③; ① and ②; ④ and ⑤.

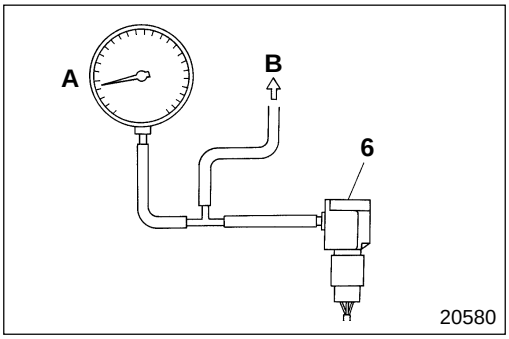

9 Inspection of boost pressure sensor

- Mount pressure gauge **A** for boost pressure measurement as shown in the diagram.
- Connect the MUT-II . 🕮 P13-42.
- Set the MUT-II for boost pressure measurement
- Start the engine. Compare the value displayed on the MUT-II and the value indicated by pressure gauge **A**. If the values are different, replace boost pressure sensor **9**.

  B : To inlet manifold.

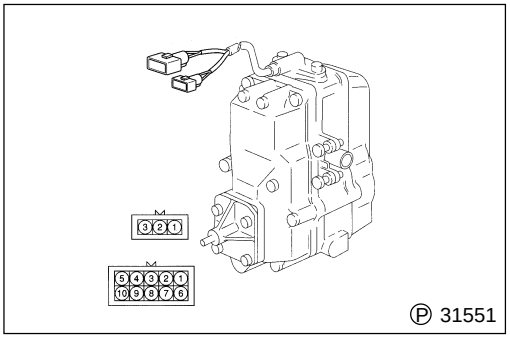

10 Inspection of control rack position sensor

Perform the following inspections. If any abnormality is evident, have inspection and repair performed by the nearest MFTA Dealer.

● **Measurements on connectors**

Measure the resistances between the following terminals: 3-pin connector's ③ and ④; 10-pin connector's ③ and ⑨; ④ and ⑨.

12 Inspection of linear DC motor

Perform the following inspections. If any abnormality is evident, have inspection and repair performed by the nearest MFTA Dealer.

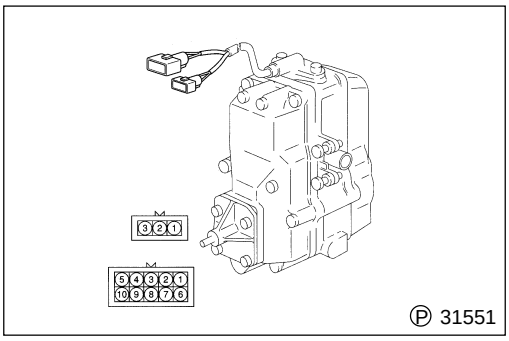

(1) Measurements on connectors

Measure the resistance between terminals ① and ② on each connector.

INSPECTION OF OTHER DEVICES

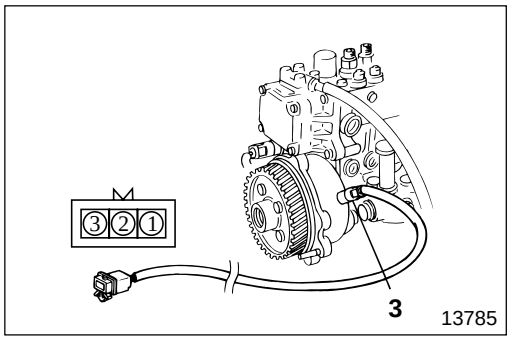

13 Engine speed sensor

[Inspection]

(1) Main unit

- Measure the resistance between terminals ① and ②.
- If the measured value deviates from the standard value, replace engine speed sensor **13**.

CAUTION ⚠

Be sure to check the tightening torque of engine speed sensor 13. If the tightening torque is insufficient, the sensor may not output a signal.

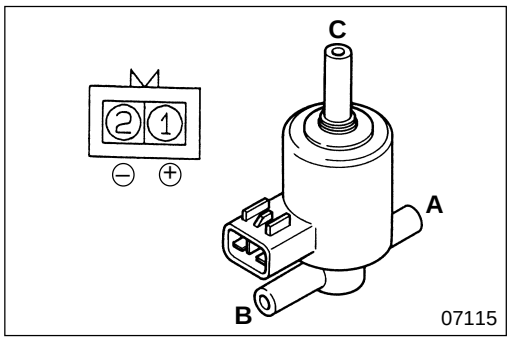

14 Inspection of 3-way magnetic valve

Carry out the following inspection. If any fault is found, replace 3-way magnetic valves **14** :

Air circuit table (There is air continuity between terminals ○ and ○.)

	Input port A	Output port B	Exhaust port C
ON	○	○	
OFF		○	○

(1) Operation inspection

- Apply voltage between terminals ① and ②, increasing gradually from 0 volt.
- Measure voltage (minimum operating voltage) when magnetic valves **14** starts operating. (You can tell if the magnetic valves are ON or OFF by listening for an operating sound.)

(2) Airtightness inspection

- When magnetic valve is ON :
  - Close output port **B.**
  - Apply 12 volts DC between terminals ① and ②.
  - Make sure that there is no air suction from exhaust port **C** when negative pressure (–100 kPa {–30 in.Hg, –750 mmHg}) is applied to input port **A**.
- When magnetic valve is OFF :
  - Close exhaust port **C**.
  - Make sure that there is no air suction from output port **B** when negative pressure (–100 kPa {–30 in.Hg, –750 mmHg}) is applied to input port **A**.

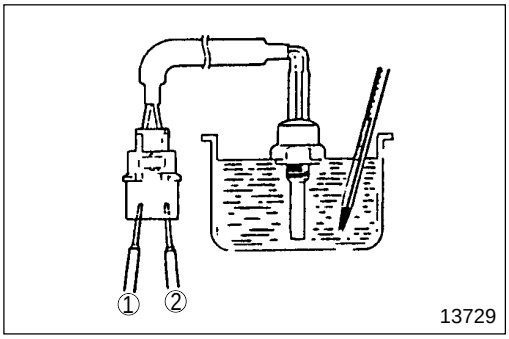

16 **Inspection of boost temperature sensor**

- Place boost temperature sensor **16** in glycerin in a container.
- Raise the glycerin temperature to the specified values and stir the glycerin.
- Measure the resistance between terminals ① and ②.

Item	Standard value	Limit	Remedy
0°C {32°F}	5880 ± 588 ohms	—	Replace
20°C {68°F}	2455 ± 245 ohms	—	
80°C {176°F}	322 ± 32 ohms	—	

- If the measured value deviates from the standard value, replace boost temperature sensor. Gr 15

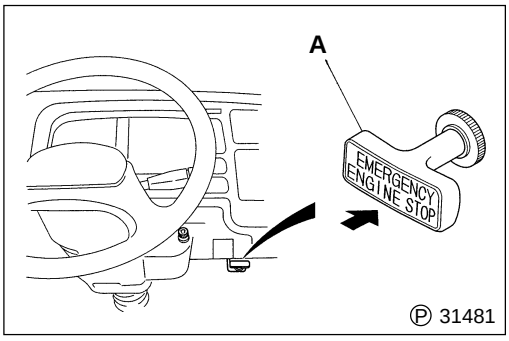

17 **Inspection of emergency engine stop handle**

- Push emergency engine stop handle **17** all the way.
- In this step, make sure that stop lever **A** of the governor is in contact with stopper bolt **B**.
- If the stop lever does not contact the stopper bolt, turn nut **C** until they contact, and tighten nut **D** to secure it in place.
- Inner wire **E** of stop cable **F** should be taut. If not, make adjustment.

CAUTION

Be careful not to make the tension of inner wire E too high, since excess tension prevents stop lever A from fully contacting stopper bolt B.

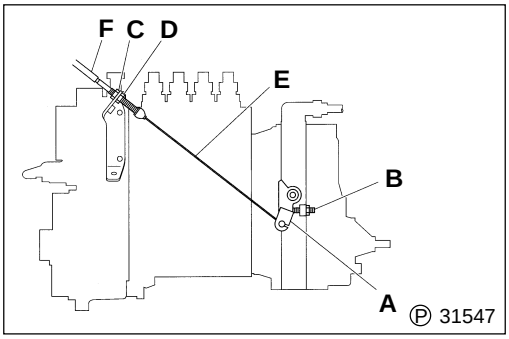

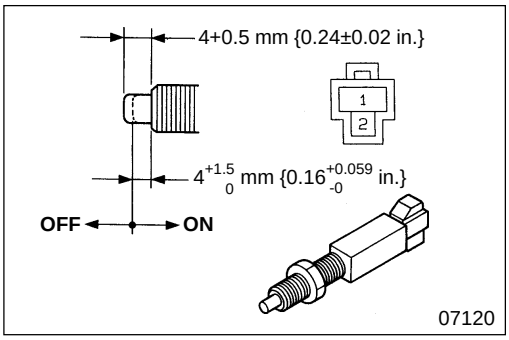

18 **Inspection of clutch switch**

- Follow the table below to inspect continuity:

	①	②
OFF		
ON	○—○	

○—○ : There is continuity between terminals ○ and ○.

- If any fault is found, replace clutch switch **18**. Gr 21

ELECTRIC CIRCUIT AND PART INSTALLATION LOCATIONS

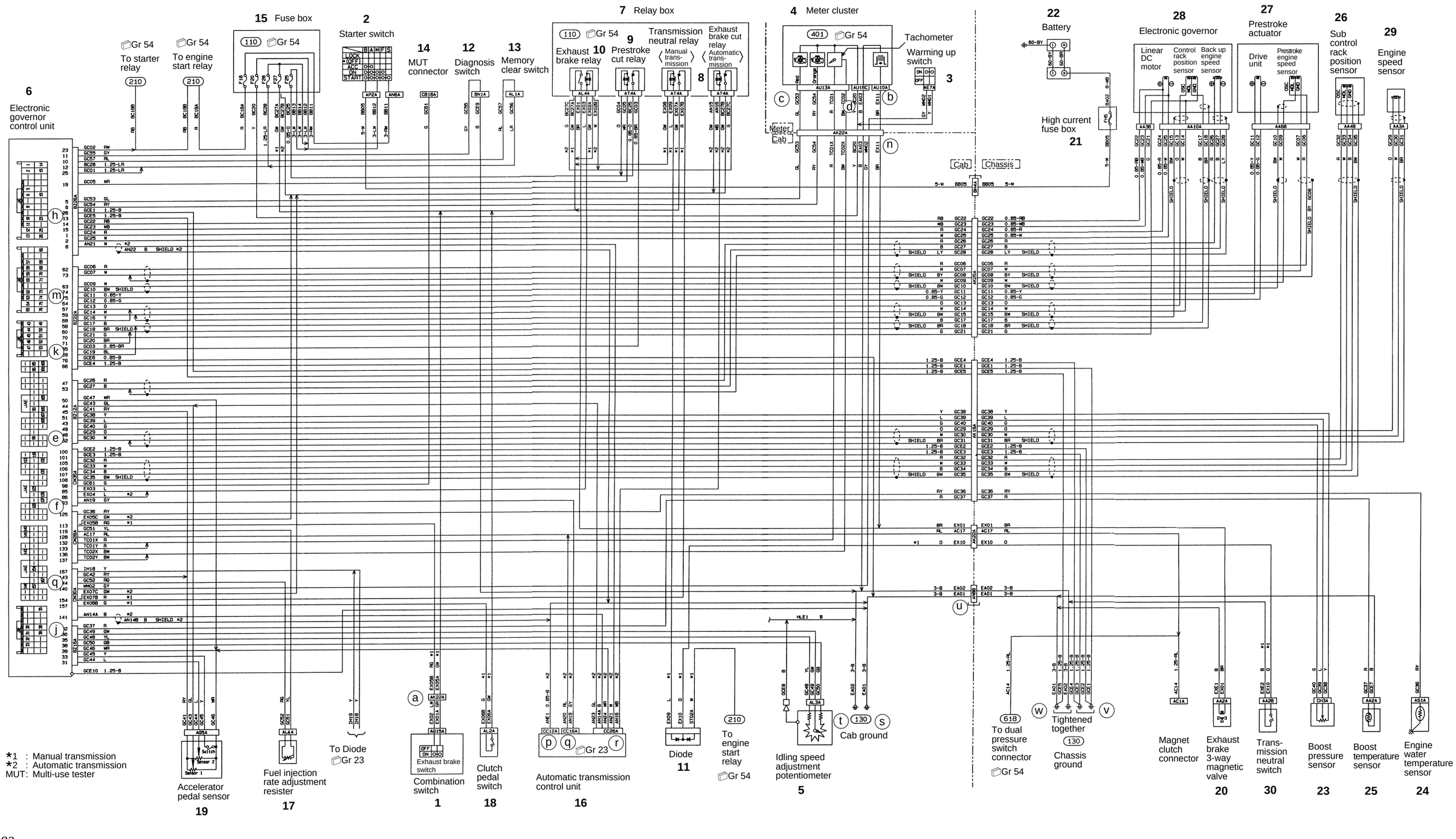

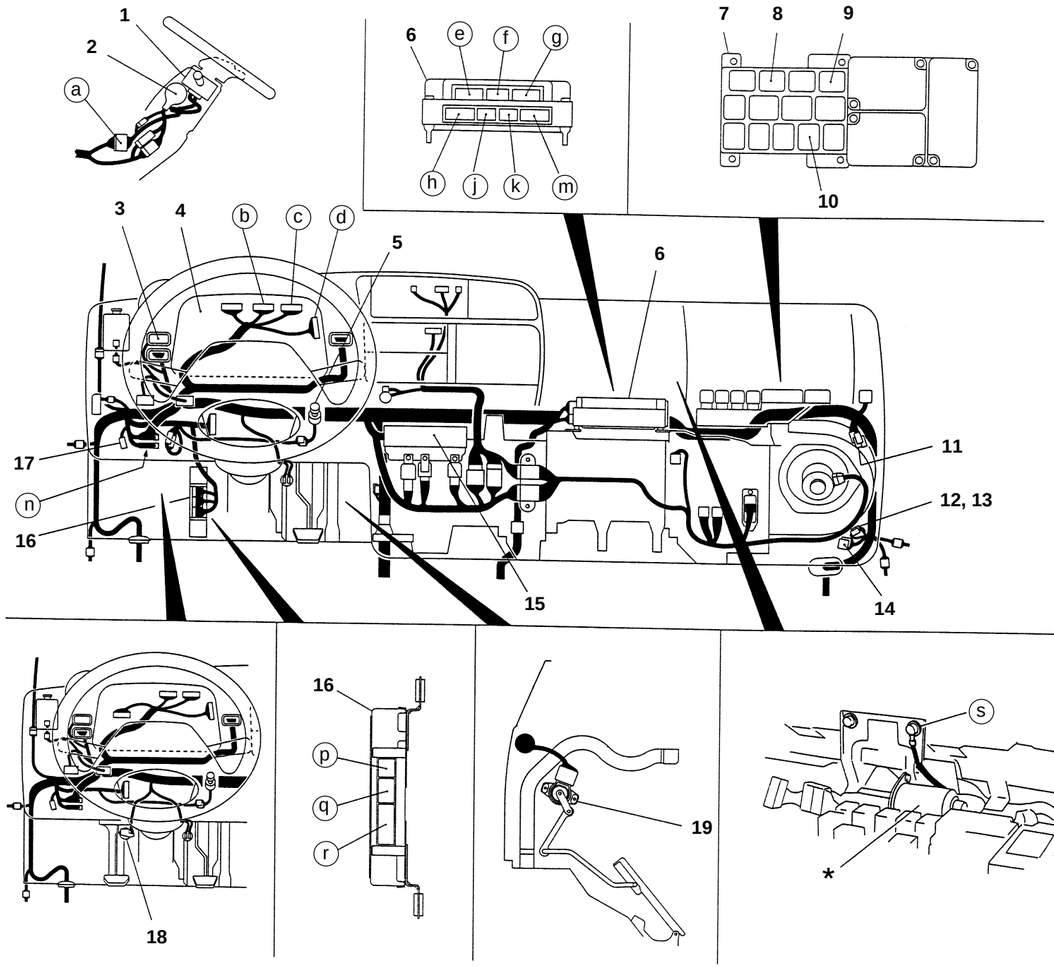

30983

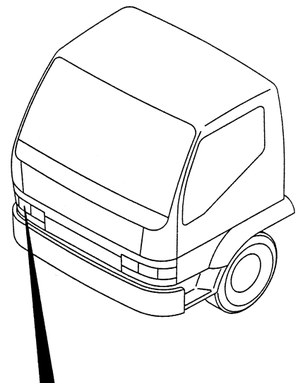

< Automatic transmission >

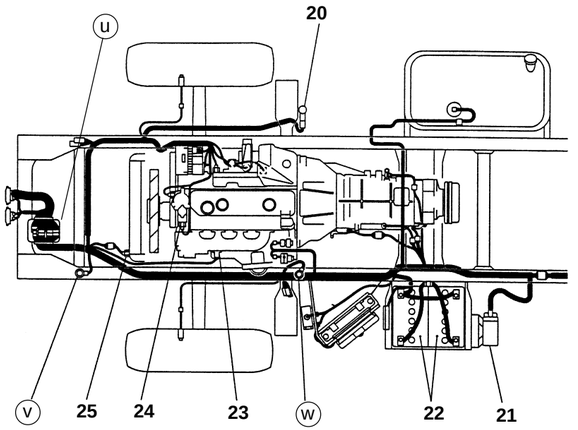

< Manual transmission >

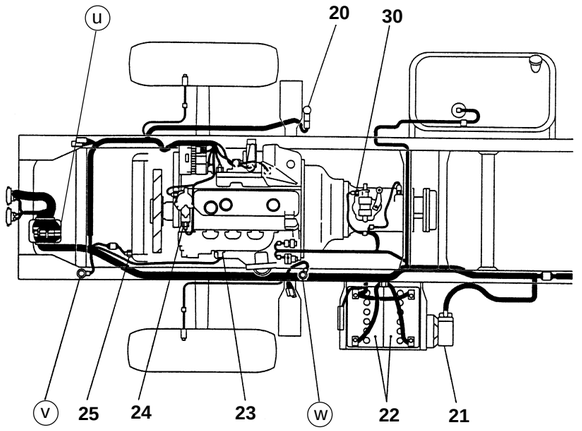

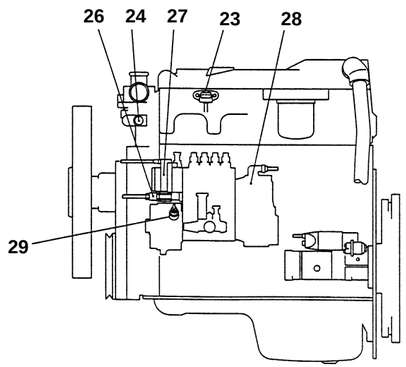

<Left side of engine >

1 Combination switch
2 Starter switch
3 Warming up switch
4 Meter cluster
5 Idling speed adjustment potentiometer
6 Electronic governor control unit
7 Relay box
8 Transmission neutral relay < M/T >
Exhaust brake cut relay < A/T >
9 Prestroke cut relay
10 Exhaust brake relay
11 Diode
12 Diagnosis switch
13 Memory clear switch
14 Multi-use tester connector
15 Fuse box
16 Automatic transmission control unit
17 Fuel injection rate adjustment resister
18 Clutch pedal switch
19 Accelerator pedal sensor
20 Exhaust brake 3-way magnetic valve
21 High current fuse box
22 Battery
23 Boost pressure sensor
24 Engine water temperature sensor
25 Boost temperature sensor
26 Sub control rack position sensor
27 Pre-stroke actuator
28 Electronic governor
29 Engine speed sensor
30 Transmission neutral switch < M/T >

* : Wiper motor
M/T : Manual transmission
A/T : Automatic transmission

MITSUBISHI
FUSO

FE

Service Manual

Group 13
Fuel and Engine Control

Table of Contents

BACK

HOME

MITSUBISHI FUSO TRUCK OF AMERICA, Inc.

Pub No. TWSE9501-13

GROUP 13 FUEL AND ENGINE CONTROL

SPECIFICATIONS 2

STRUCTURE AND OPERATION 4

TROUBLESHOOTING 24

INSPECTION AND ADJUSTMENT MOUNTED IN VEHICLE

- Inspection and Adjustment of Fuel Injection Timing 28
- Inspection and Adjustment of No-Load Minimum and Maximum Revolution 31
- Inspection and Adjustment of Idling Actuator < with Cab Cooler > 32

PRE-STROKE CONTROL INJECTION PUMP SYSTEM

- Troubleshooting Procedure 34
- Electric Circuit and Position of Parts Installation 40
- Inspection by Individual Diagnosis Code 42
- Inspection of Temporary Faults 60

ENGINE CONTROL 62

FUEL TANK 67

WATER SEPARATOR 68

FUEL FILTER 70

INJECTION PUMP 72

INJECTION NOZZLE 76

SPECIFICATIONS

Injection Pump

Item	Specifications
Manufacturer	ZEXEL
Body model	MD-TICS (Pre-stroke control type)
Governor type	RLD all-speed mechanical governor with boost compensator
Feed pump model	KD

Injection Nozzle

Item	Specifications
Manufacturer	ZEXEL
Model and type	DLLA hole type 1-spring model
Number of orifices	5
Orifice diameter mm {in.}	ø0.25 {0.0098}

Fuel Filter Type

Item	Specifications
Filter type	Spin-on type

M E M O

Fuel System (Flow of Fuel)

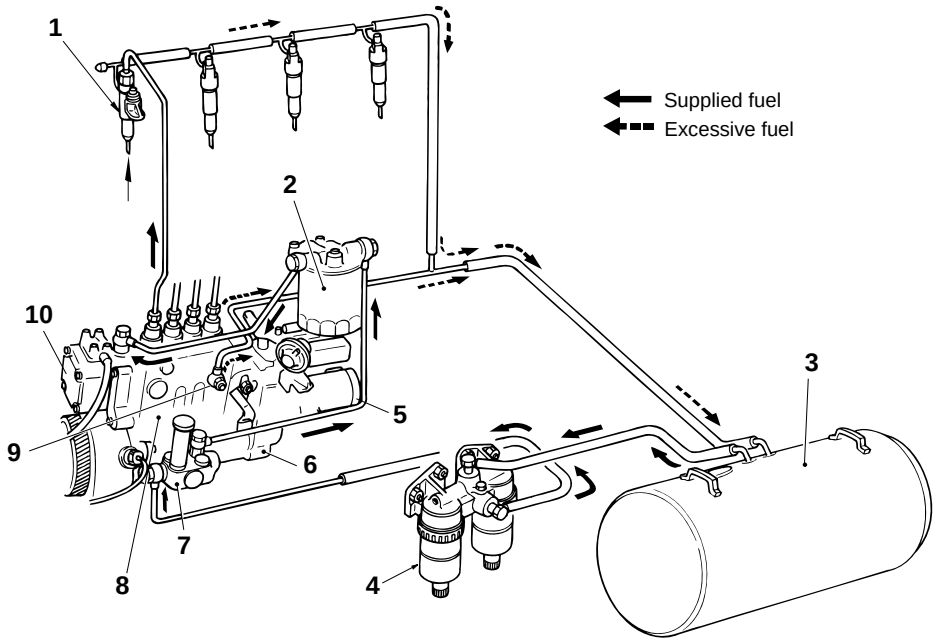

1 Injection nozzle
2 Fuel filter
3 Fuel tank
4 Water separator
5 Boost compensator
6 Governor
7 Feed pump
8 Injection pump
9 Overflow valve
10 Pre-stroke actuator

Fuel in fuel tank **3** is sucked up by feed pump **7** which is driven by the cam action of injection pump **8** and is filtered through fuel filter **2** which removes dirt and other foreign particles.
Filtered fuel is sent to the injection pump where the fuel pressure is boosted and injected through injection nozzle **1** into the combustion chamber.
When fuel pressure is higher than the specified value, overflow valve **9** opens to let the fuel return to the fuel tank.

Engine Control

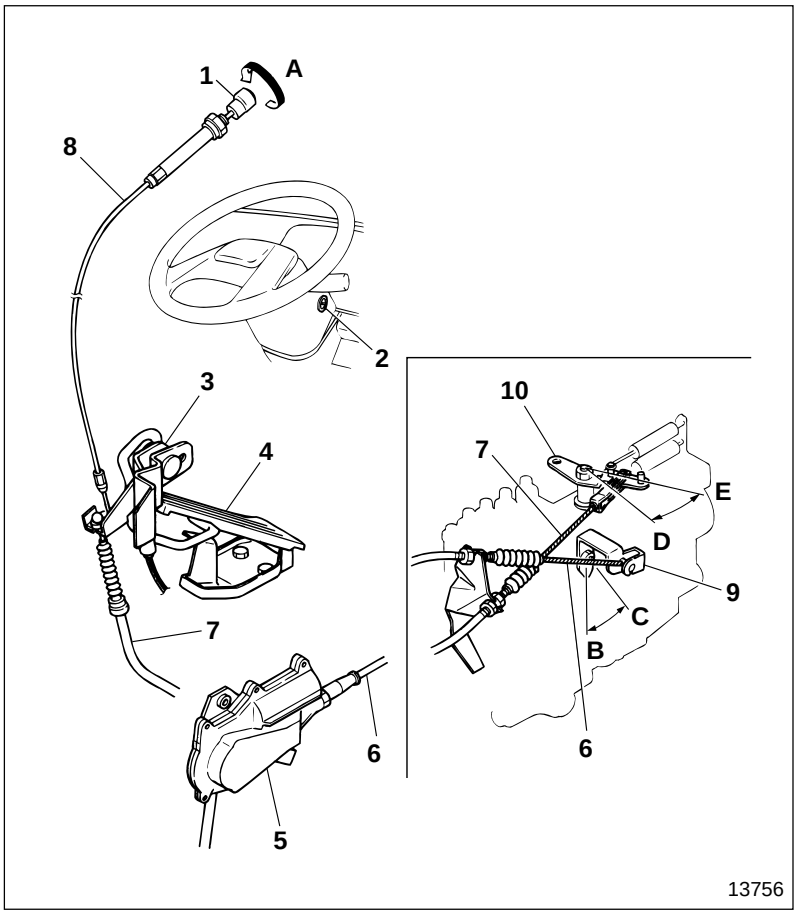

1 Idling control knob
2 Starter switch
3 Accelerator arm assembly
4 Accelerator pedal assembly
5 Fuel-cut motor
6 Engine-stop cable
7 Accelerator control cable
8 Idling control cable
9 Engine-stop lever
10 Idling control lever

A : Idling revolution rising
B : Engine-stop position
C : Engine start-up position
D : Full-load position
E : Idling position

(1) Idling control knob

Idling control knob **1** is for making fine adjustment to the idling revolution of the engine. Turning the knob clockwise raises the revolution. It works in the same way as accelerator pedal assembly **4** does when it is depressed.

(2) Fuel-cut motor

Fuel-cut motor **5** is connected to starter switch **2**, and it is activated by the starter switch being turned ON (or to S). This brings engine-stop lever **9** of the governor to engine-stop position **B** (or engine start-up position **C**), and stops (or starts) the engine. P13-6

(3) Accelerator pedal

When accelerator pedal assembly **4** is freed from foot pressure, the governor return spring forces idling control lever **10** to idling position **E**, restoring the pedal to its original position.

Engine Stopping Circuit

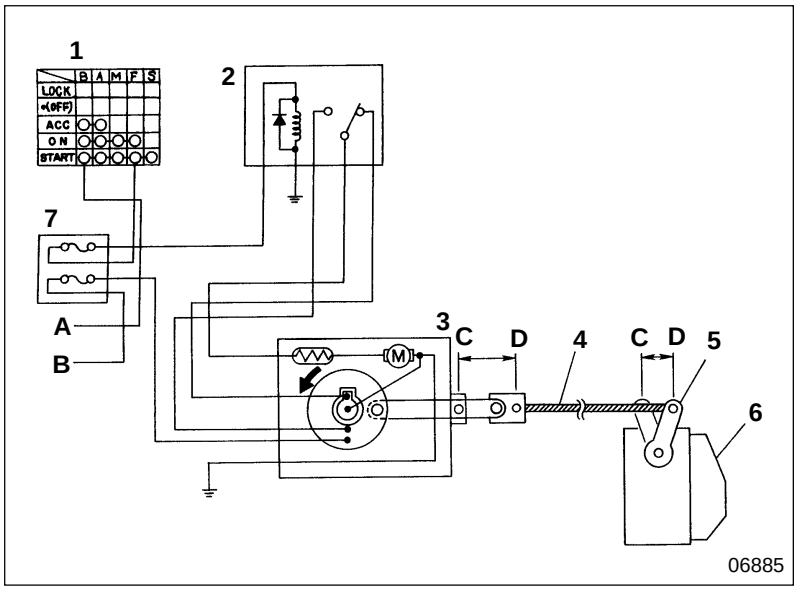

1 Starter switch
2 Fuel-cut relay
3 Fuel-cut motor
4 Engine-stop cable
5 Engine-stop lever
6 Governor
7 Fuse box

A : Power source
B : Power source
C : Engine-stop position
D : Engine start-up position

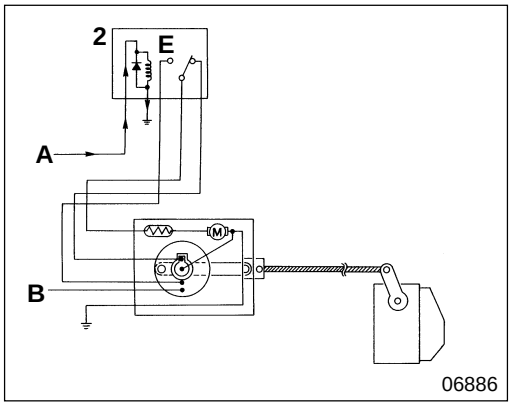

● **At engine start-up (starter switch ON)**

- Electric current flows as illustrated, and coil **E** of fuel-cut relay **2** is magnetized.

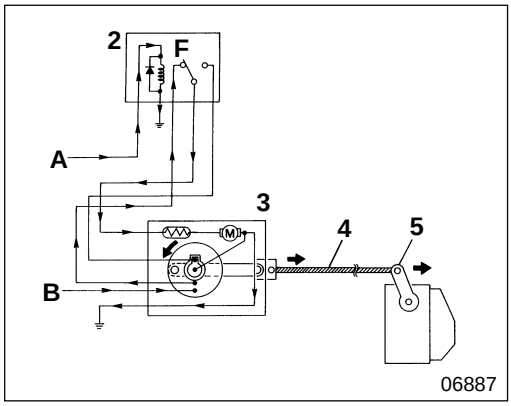

- Contact point **F** of fuel-cut relay **2** closes, and fuel-cut motor **3** is activated.
- Engine-stop cable **4** is pushed out, and engine-stop lever **5** moves to engine start-up position.

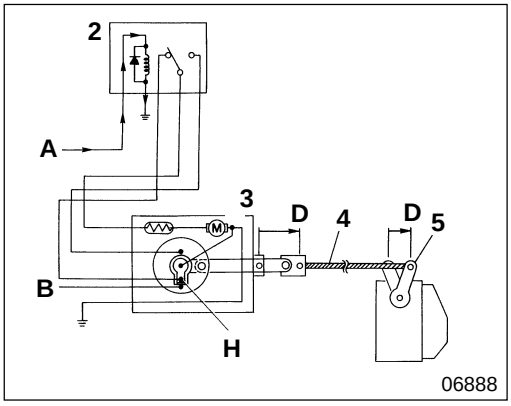

- Engine-stop lever **5** moves to engine start-up position **D**, and fuel is ready to flow. Contact point **H** of fuel-cut motor **3** opens, and the fuel-cut motor stops.

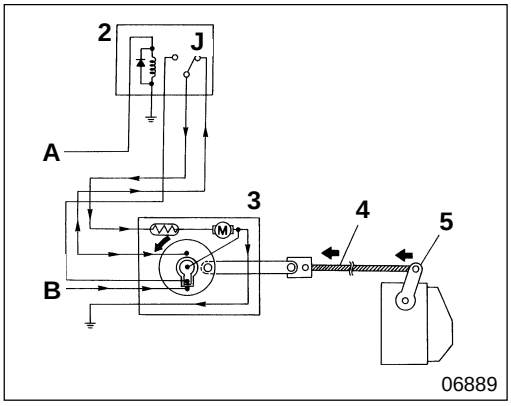

● **When engine is at standstill (starter switch OFF)**

- Electric current from the starter switch is broken, and contact point **J** of fuel-cut relay **2** closes, and fuel-cut motor **3** is activated.
- Engine-stop cable **4** is pulled to bring engine-stop lever **5** to engine-stop position.

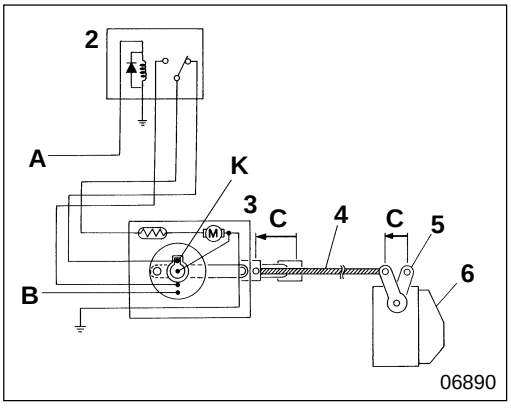

- When engine-stop lever **5** reaches engine-stop position **C**, fuel flow stops and the engine stops. Simultaneously, contact point **K** of fuel-cut motor **3** opens, and the fuel-cut motor stops.

Fuel Gauge Electric Circuit

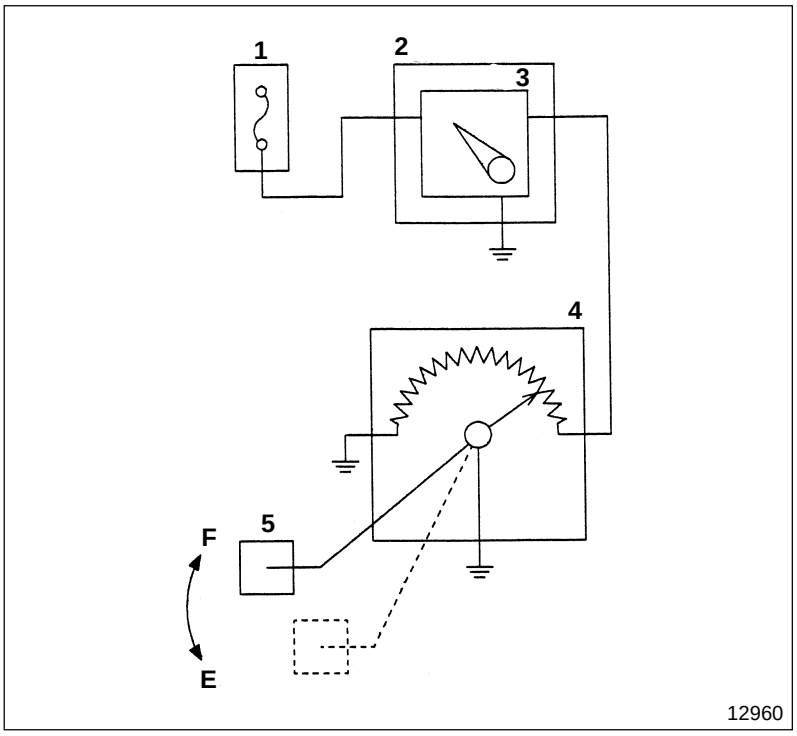

1 Relay and fuse box
2 Meter cluster
3 Fuel gauge
4 Fuel gauge unit
5 Float

The fuel gauge circuit indicates the amount of fuel remaining by means of a gauge.

Water Separator

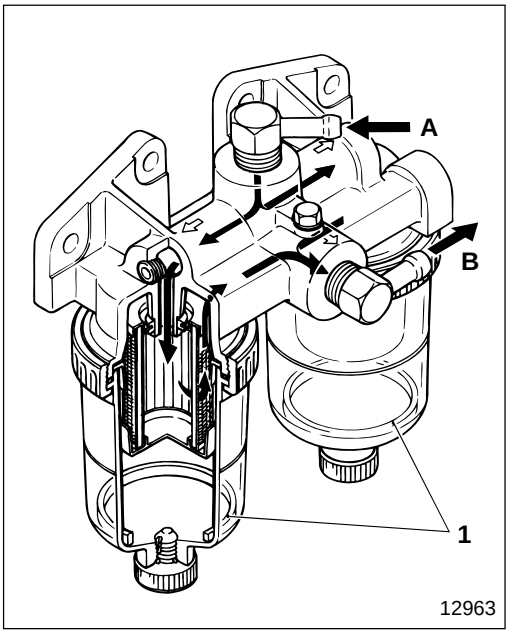

1 Water level ring

A : From fuel tank
B : To feed pump

The water separator is installed between the fuel tank and the feed pump. Any water present in the fuel is separated by the baffle plate and the screen assembly.

Fuel Filter

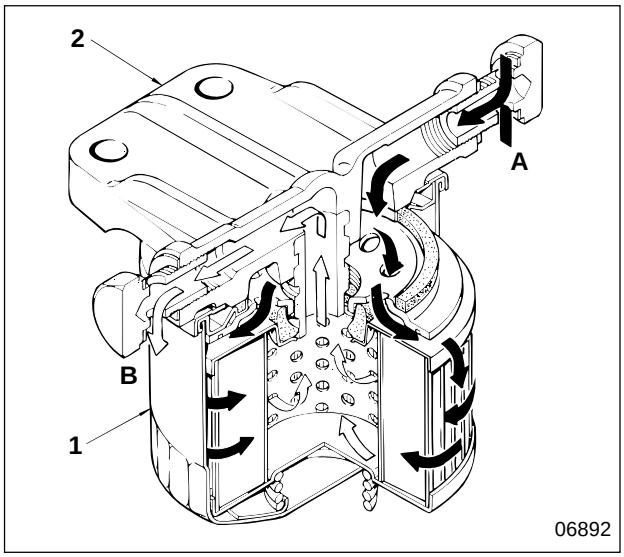

1 Fuel filter
2 Fuel filter head

A : From feed pump
B : To injection pump

Pressurized fuel is delivered from the feed pump of the injection pump to the fuel filter which separates water from the fuel. Dirt and other foreign particles are removed from the fuel by fuel filter **1**.

Structure of Pre-stroke Control Injection Pump System

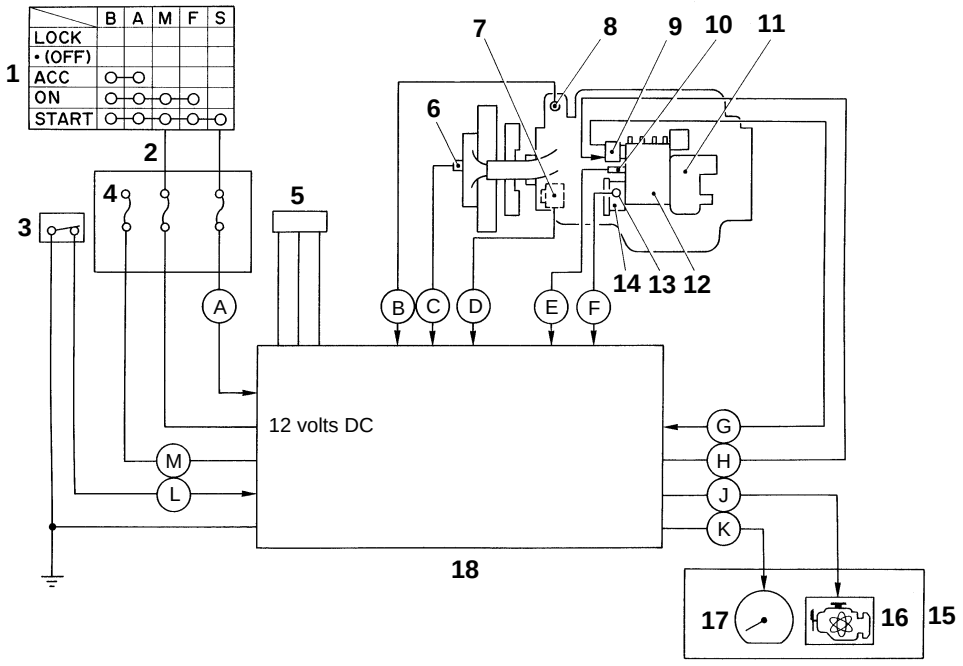

13758

Part name	Main function	Main signal
1 Starter switch	Detection of start signal	Ⓐ : Start signal
2 Fuse box		
3 Diagnosis switch	Transmission of diagnosis code signal	Ⓛ : Diagnosis code signal
4 Memory clear switch (Uses Fuse No. F4)	Clearing of diagnosis code	Ⓜ : Diagnosis code clearing signal
5 Multi-use tester connector	Connection of multi-use tester	
6 Boost air temperature sensor	Detection of engine intake air temperature	Ⓒ : Boost air temperature signal
7 Alternator	Detection of engine revolution	Ⓓ : Alternator L terminal signal
8 Water temperature sensor	Detection of engine coolant temperature	Ⓑ : Engine coolant temperature signal
9 Pre-stroke actuator		
• Pre-stroke position sensor		Ⓖ : Pre-stroke position signal
• Drive unit		Ⓗ : Actuator drive signal
10 Control rod position sensor	Detection of control rod position	Ⓔ : Control rod position signal
11 Mechanical governor	Control of fuel injection quantity (Mechanical control)	
12 Pre-stroke control injection pump	Change of pre-stroke (Adjustment of fuel injection timing)	
13 Engine revolution sensor	Detection of engine revolution	Ⓕ : Engine revolution signal
14 Mechanical timer (Dummy timer)	Absorption of torsional vibration, smoothing of revolution	
15 Meter cluster		
16 Warning lamp	Indication of system abnormality, indication of diagnosis code	Ⓙ : Lamp lighting signal
17 Tachometer		Ⓚ : Tachometer drive signal
18 Pre-stroke control unit	Control of entire system	

- The pre-stroke control injection pump system uses, in the injection pump body, electronically controlled pre-stroke control injection pump **12**, mechanical governor **11**, and mechanical timer **14**.
- The lifting speed of the plunger in the injection pump varies with the engine revolution. Because of this, the pressure in the injection pipe also changes.
- This change of pressure in the injection pipe means the appropriate state of fuel injection and air/fuel mixture from the injection nozzle is no longer obtainable.
- In low- and medium-range engine revolution, the amount of pre-stroke is made larger so that the fuel is injected at the point the plunger lifting speed increases during the second half of cam lift. 🕮 P13-18
- On the other hand, in high-range engine revolution, the amount of pre-stroke is made smaller so that the fuel is injected while the plunger lifting speed remains low during the first half of cam lift. This prevents the pressure in the injection pipe from becoming excessively high.
- Because of this variation in the amount of pre-stroke, pre-stroke control injection pump **12** can obtain the appropriate injection state and air/fuel mixture for combustion.
- Thus, engine torque is larger than engines that use a normal injection pump. Also, the exhaust gas emission is cleaner.
- Control is achieved by making the pre-stroke adjustable in conjunction with the drive of pre-stroke actuator **9**, which is mounted on the rear of the injection pump body. This pre-stroke actuator is activated by commands received from pre-stroke control unit **18**, which processes data signals received from the various sensors installed on the engine and vehicle body.
  This system also has a trouble diagnosis function and a fail-safe function. The following table shows control items.

Control item	Control description	Information source	
		Sensor	Data signal
Pre-stroke control	Adjusts the fuel injection timing by changing the timing sleeve position to change the pre-stroke	6 to 10, 13, 12	Ⓐ to Ⓗ
Trouble diagnosis function	Checks and diagnoses the status of the sensors of the pre-stroke control injection pump system while the engine is running. Warns the driver, via warning lamp **16**, if any trouble occurs, and memorizes the data on the trouble 🕮 P13-13	ALL	ALL
Fail-safe function	When trouble occurs, backup mode is activated and countermeasures for the trouble are taken 🕮 P13-13	ALL	ALL
* Fuel injection quantity control	Controlled by mechanical governor **11** 🕮 P13-20	—	—

* : This is not controlled by the pre-stroke control injection pump system but by ordinary mechanical control.

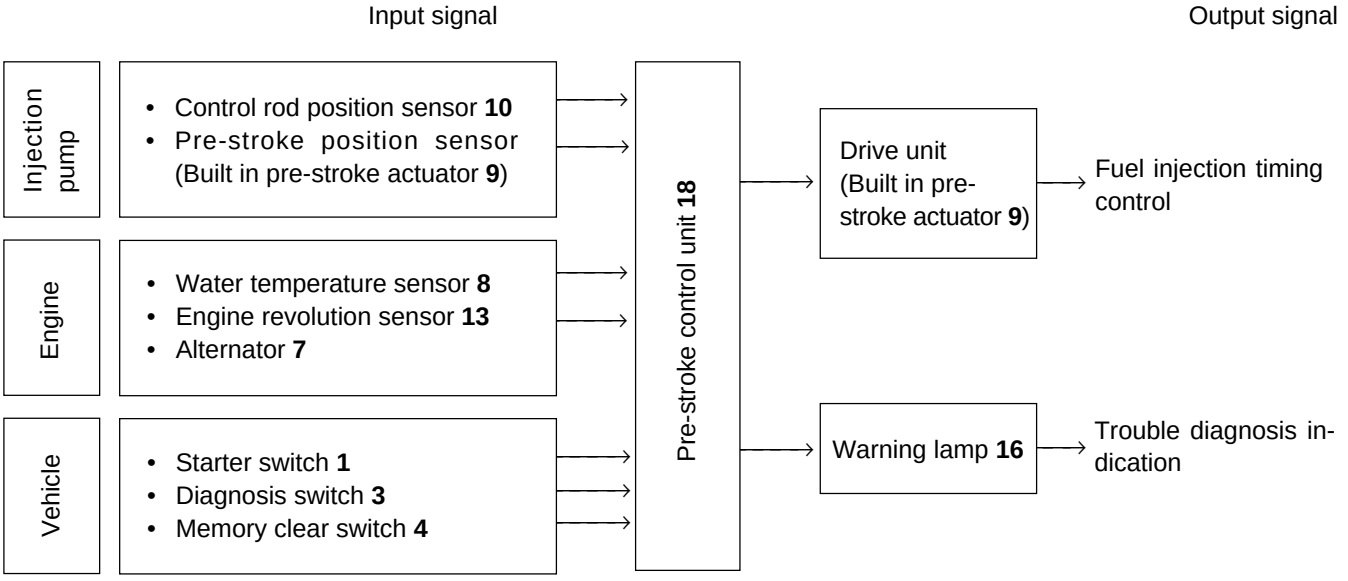

● Pre-stroke control

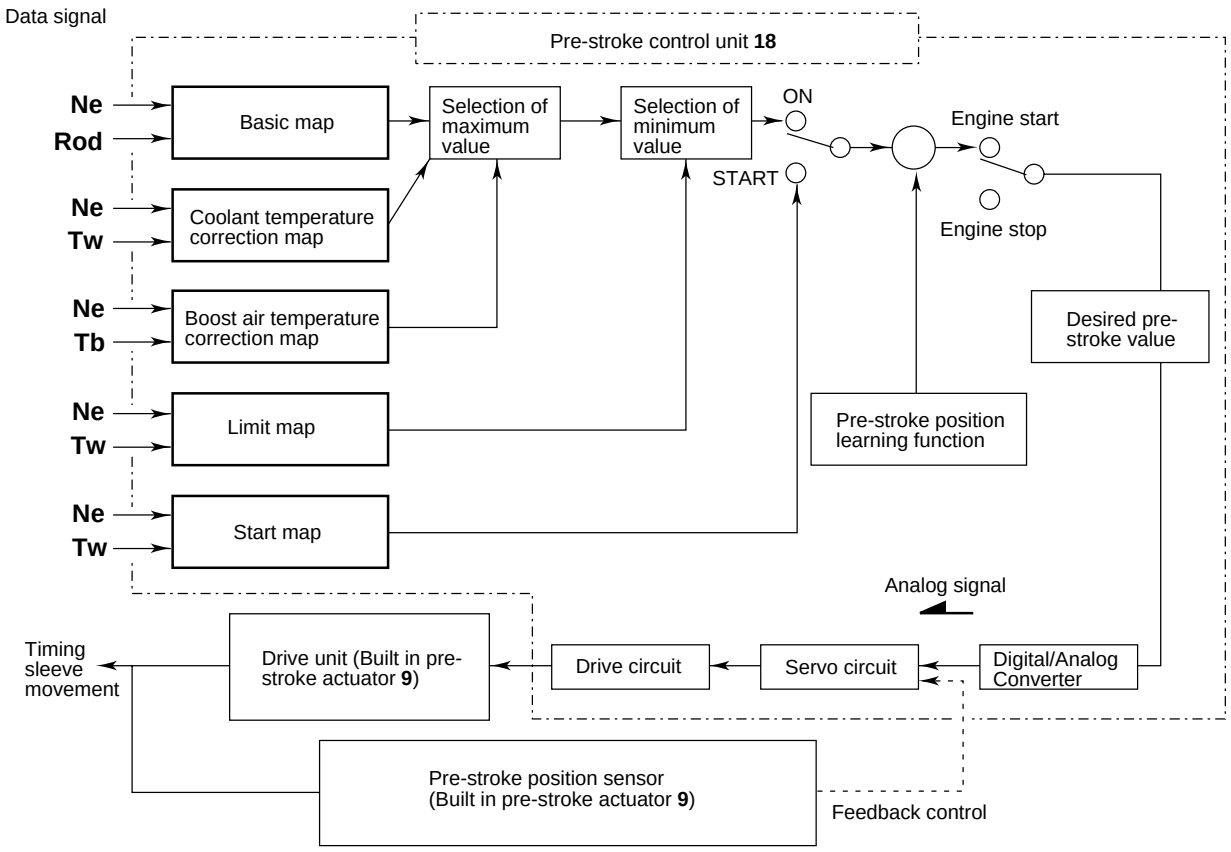

Ne : Engine revolution **Rod** : Control rod position
Tw : Engine coolant temperature **Tb** : Engine intake air temperature
Digital/Analog converter : Converts digital signals into analog signals

Control by Pre-stroke Control Unit 18

- The control unit commands the system while the engine is running, and selects the maximum value of the desired pre-stroke value based on data signals received from the basic map, coolant temperature correction map, and boost air temperature correction map.
- After the maximum value has been selected, the limit map selects and processes the minimum value so that the desired pre-stroke value does not exceed the maximum value.
- The desired pre-stroke value is further determined by the pre-stroke position learning function. This corrects any deviation in positional adjustment by the pre-stroke position sensor and any deviation by the injection pump, correcting the output voltage of the pre-stroke position sensor.
- The pre-stroke thus determined is converted into continuous analog signals by the Digital/Analog converter and transmitted through the servo circuit and drive circuit to actuate the drive unit. The drive unit moves the timing sleeve position to change the pre-stroke.
- Control at the time of engine start up is handled by the start map.

Control by Pre-stroke Position Sensor (built in pre-stroke actuator 9)

- The pre-stroke position sensor monitors the operating condition of the drive unit by feeding back signals to pre-stroke control unit **18** and judging whether the pre-stroke is controlled in accordance with the desired value by noting the timing sleeve position.
- When pre-stroke control unit **18** receives the feedback signals, it computes the actual measured value of the timing sleeve position, and if there is any difference between the desired and actual values, it issues a correction command.
- This operation is repeated to constantly maintain the timing sleeve position at the desired position, thus determining the final pre-stroke.

● Trouble diagnosis function, fail-safe function

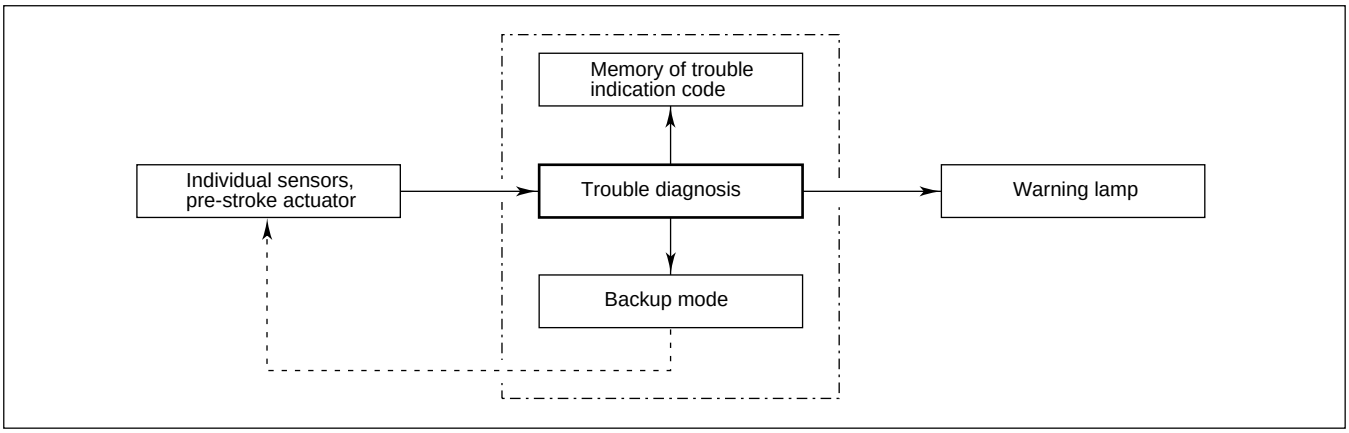

- The trouble diagnosis function detects and diagnoses troubles reported by the various sensors and the pre-stroke actuator, while the engine is running. If any trouble occurs, this function warns the driver by lighting warning lamp and at the same time stores the trouble point in memory as a diagnosis code.
- The fail-safe function is put into operation simultaneously and the trouble is treated accordingly in the backup mode.
- In the backup mode, the pre-stroke control starts when trouble occurs. If the trouble does not affect the operation of the engine, fixed data from the backup mode is used to treat the trouble. If the trouble dangerously affects the operation of the engine, the pre-stroke control stops.
- If the function goes into backup mode, the function stays in that mode until the starter switch is set to LOCK. When a normal signal is returned, control of the system returns and warning lamp goes off.
- There are two kinds of diagnosis code, current and previous.
  - Current diagnosis code : Indicates data when the engine has been running with the starter switch set to ON since the abnormality occurred.
  - Previous diagnosis code : Indicates previous data when the engine was stopped with the starter switch set to ACC or LOCK after the abnormality occurred.

Table of diagnosis codes

Diagnosis code	Abnormal item	Countermeasures taken by pre-stroke control unit (Backup mode)
01	Normal	—
03	Pre-stroke learning function	Controls with correction value assumed to be 0
04	Pre-stroke actuator power source	Stoppage of pre-stroke control
05	Engine revolution sensor (No pulse)	Controls with engine revolution assumed to be 0
12	Pre-stroke servo system	Stoppage of pre-stroke control
13	Pre-stroke position sensor	Stoppage of pre-stroke control
15	Engine revolution sensor (Wiring breakage)	Controls with engine revolution assumed to be 0
21	Water temperature sensor	Controls with water temperature assumed to be 80˚C {176˚F}
22	Control rod position sensor	Controls with control rod position assumed to be full load
41	Boost air temperature sensor	Controls with boost air temperature assumed to be 80˚C {176˚F}

It is possible to run the vehicle even if the pre-stroke control develops an abnormality. However, do not run the vehicle for a long period of time, run it only for the time necessary to obtain repairs.

Pre-stroke Control Unit

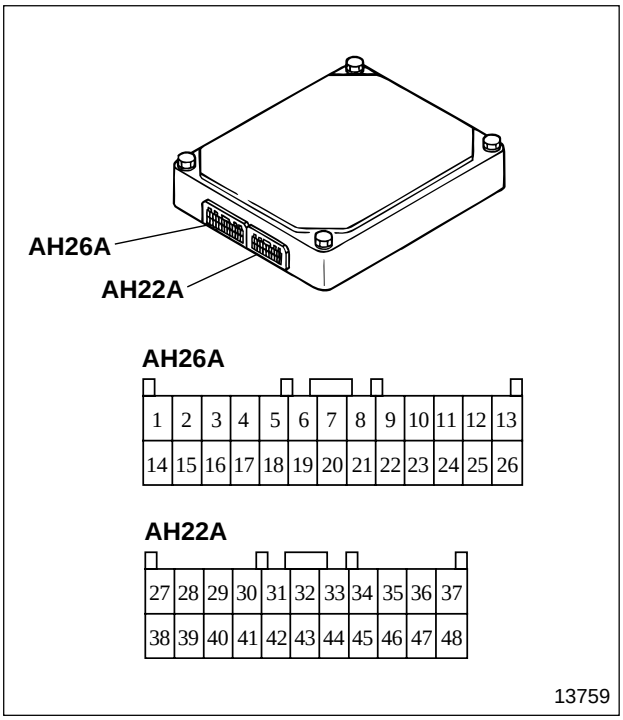

- The pre-stroke control unit monitors and computes data signals received from the various sensors and, using its internal computer, converts the computed results into control signals (pre-stroke actuator drive signals).
- These signals operate the various instruments to control the system.

Connector AH26A		Connector AH22A	
Terminal No.	Connecting destinations	Terminal No.	Connecting destinations
1	Drive unit ⊖	27	Pre-stroke cut relay (Contact point)
2	—	28	Multi-use Tester (SEL)
3	—	29	Diagnosis switch
4	Boost air temperature sensor	30	—
5	Water temperature sensor	31	Tachometer (SIG)
6	Pre-stroke position sensor (OSC)	32	Multi-use tester (SIG)
7	Pre-stroke position sensor (MDL)	33	DDS-III (DATA)
8	Control rod position sensor (OSC)	34	DDS-III (CLOCK)
9	Control rod position sensor (MDL)	35	DDS-III (STB)
10	Engine revolution sensor (SIG)	36	—
11	—	37	Control unit power source (12 volts DC)
12	—	38	Pre-stroke actuator power source ⊖
13	—	39	Alternator terminal L
14	Drive unit ⊕	40	Starter switch terminal S
15	—	41	—
16	Pre-stroke cut relay (Coil)	42	Tachometer (GND)
17	—	43	—
18	—	44	—
19	Pre-stroke position sensor (GND)	45	Warning lamp
20	Pre-stroke position sensor (SHIELD)	46	Ground
21	Control rod position sensor (GND)	47	Ground (CASE GND)
22	—	48	Ground (POWER GND)
23	Engine revolution sensor (GND)	—	—
24	—	—	—
25	—	—	—
26	Memory clear switch (Using F4 fuse)	—	—

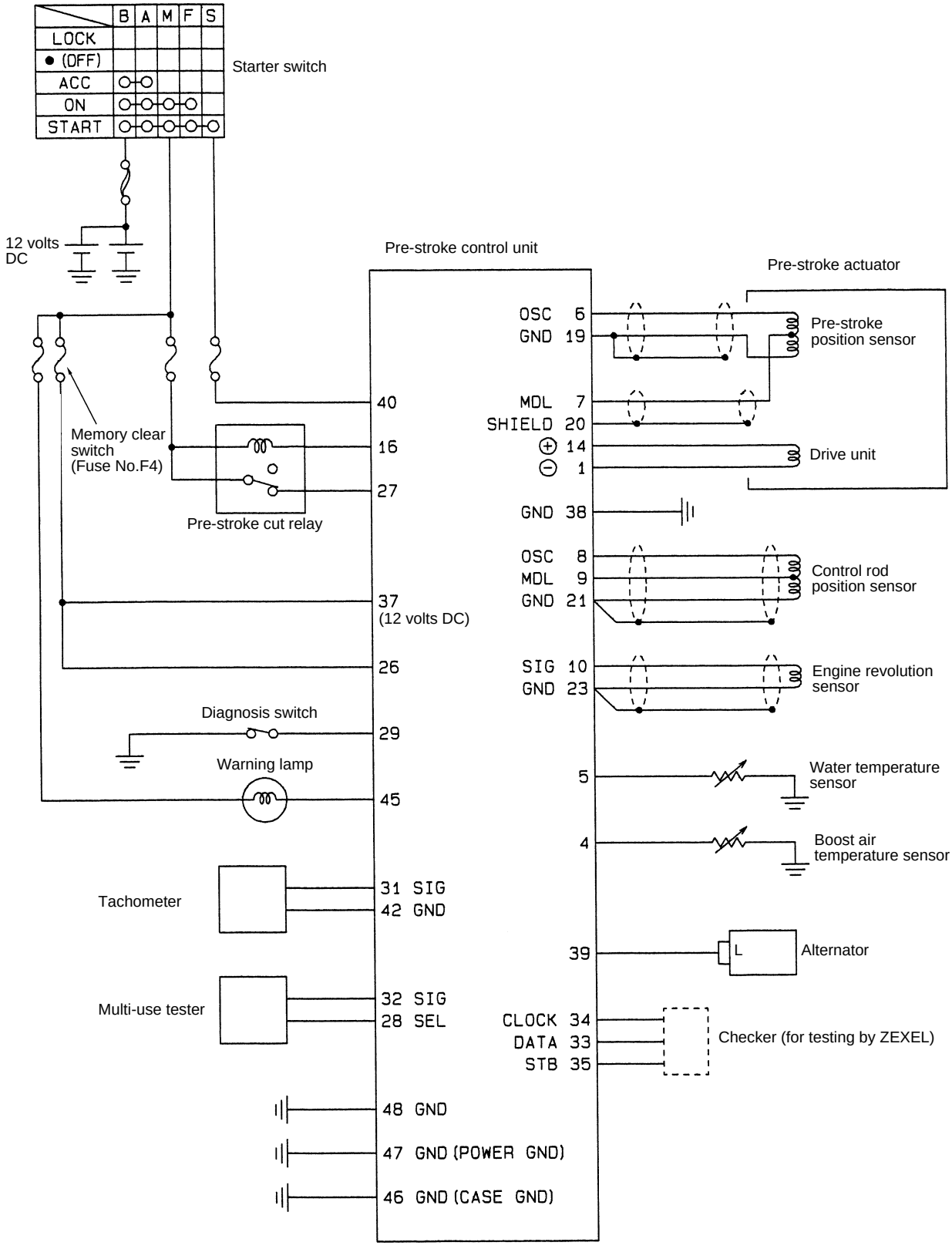
B A M F S
LOCK
● (OFF)
ACC
ON
START
Starter switch
12 volts DC
Pre-stroke control unit
Pre-stroke actuator
OSC 6
GND 19
Pre-stroke position sensor
MDL 7
SHIELD 20
⊕ 14
⊖ 1
Drive unit
GND 38
OSC 8
MDL 9
GND 21
Control rod position sensor
SIG 10
GND 23
Engine revolution sensor
5
Water temperature sensor
4
Boost air temperature sensor
39
L
Alternator
CLOCK 34
DATA 33
STB 35
Checker (for testing by ZEXEL)
40
16
27
Memory clear switch (Fuse No.F4)
Pre-stroke cut relay
37 (12 volts DC)
26
Diagnosis switch
29
Warning lamp
45
Tachometer
31 SIG
42 GND
Multi-use tester
32 SIG
28 SEL
48 GND
47 GND (POWER GND)
46 GND (CASE GND)

14462

Engine Revolution Sensor

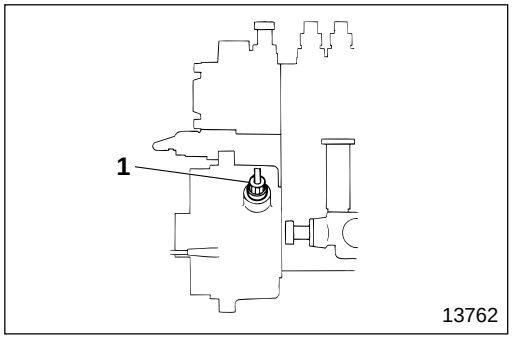

- Engine revolution sensor **1** is a pick-up type that detects the revolution of the injection pump and converts the revolution value into an electric signal.
- This electric signal is transmitted to the pre-stroke control unit as the engine revolution signal, which is used as the correction value by the control unit to determine the desired pre-stroke position value.

Water Temperature Sensor

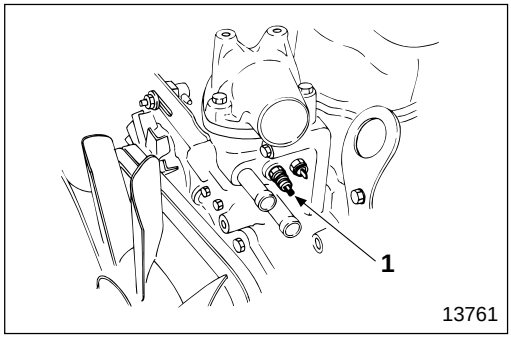

- Water temperature sensor **1** is a thermistor type that converts the coolant temperature into an electric signal.
- This electric signal is transmitted to the pre-stroke control unit as the engine coolant temperature signal, which is used as the correction value by the control unit to determine the desired pre-stroke position value.

Boost Air Temperature Sensor

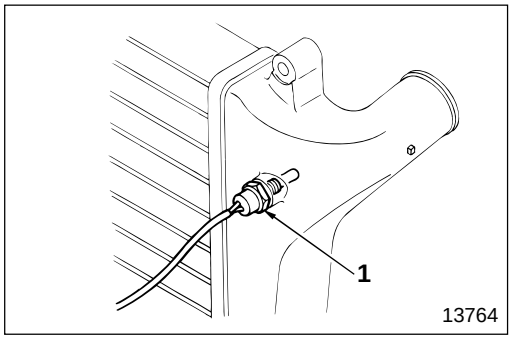

- Boost air temperature sensor **1** is a thermistor type that converts the intake air temperature, immediately after its passage through the intercooler, into an electric signal.
- This electric signal is transmitted to the pre-stroke control unit as the boost air temperature signal, which is used as the correction value by the control unit to determine the desired pre-stroke position value.

Control Rod Position Sensor

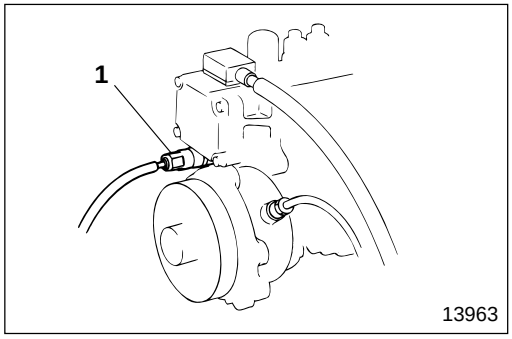

- Control rod position sensor **1** is a resistor type that converts the amount of movement of the control rod into an electric signal.
- This electric signal is transmitted to the pre-stroke control unit as the control rod position signal, which is used as the correction value by the control unit to determine the desired pre-stroke position value.

Pre-stroke Position Sensor P13-10, 12

Injection Pump Body

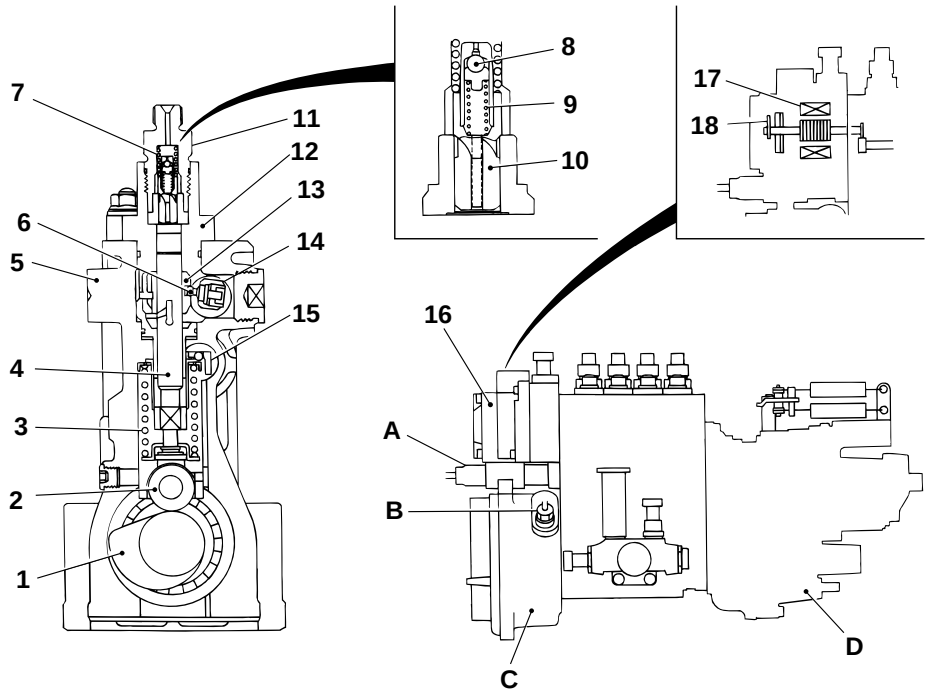

13765

1 Camshaft
2 Tappet
3 Plunger spring
4 Plunger
5 Pump housing
6 Pin
7 Delivery valve spring
8 Ball
9 Spring
10 Delivery valve
11 Delivery valve holder
12 Plunger barrel
13 Timing sleeve
14 Timing rod
15 Control rod
16 Pre-stroke actuator
17 Drive unit
18 Pre-stroke position sensor

A : Control rod position sensor P13-16
B : Engine revolution sensor P13-16
C : Mechanical timer (Dummy timer)
D : Mechanical governor P13-20

- The injection pump has a variable pre-stroke mechanism.
- Because of the variation in the amount of pre-stroke, the appropriate injection state and air/fuel mixture for combustion can be obtained, thus the engine torque is larger than when a normal injection pump is used and the exhaust gas emission is cleaner.

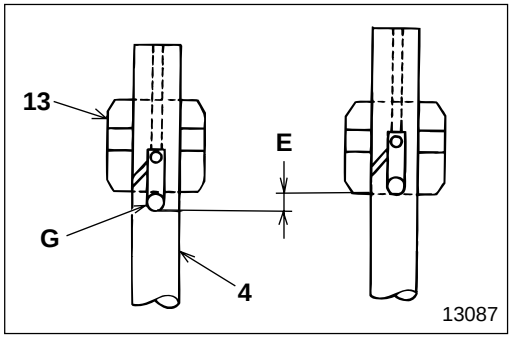

Pre-stroke

Pre-stroke is stroke **E** whose range is from the bottom dead point of plunger **4** to the starting point of pressurized delivery of fuel, at which point suction port **G** is closed by timing sleeve **13**. An ordinary injection pump has a fixed stroke length.

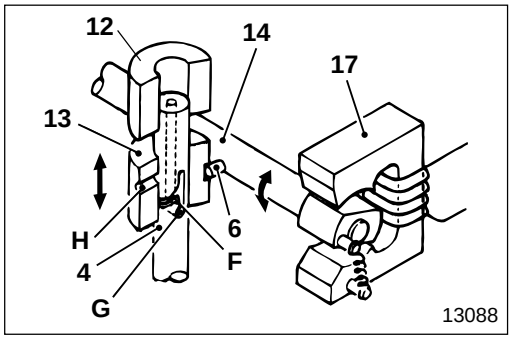

Pre-stroke variable mechanism

F : Indent
G : Suction port
H : Exhaust port

- In a conventional injection pump, plunger barrel **12** is fixed. In the pre-stroke control injection pump system, vertically movable timing sleeve **13** is fitted in the fixed plunger barrel.
- Timing rod **14**, pin **6** and drive unit **17** are installed to operate timing sleeve **13**.
- The operation of drive unit **17** rotates timing rod **14**, causing pin **6** to move timing sleeve **13** vertically.
- As timing sleeve **13** is fitted with fuel exhaust port **H**, the pre-stroke changes in accordance with the movement of the timing sleeve.

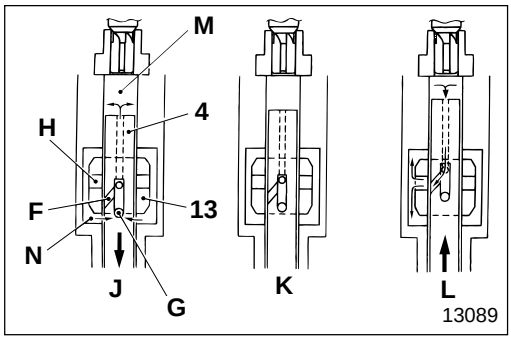

Pressurized fuel delivery

J : Ongoing suction
K : Start of pressurization
L : Delivery ends

- When suction port **G** opens as plunger **4** moves down from the top dead point, fuel is delivered into pressure chamber **M** by both the negative pressure caused by the downward movement of the plunger and the pressure of the fuel itself delivered by the feed pump.
- When the lift of plunger **4** is low enough, the pressure in pressure chamber **M** does not increase as the fuel in the pressure chamber flows via suction port **G** into fuel reservoir **N**, even if the plunger lifts.
- As plunger **4** lifts further and suction port **G** is closed by timing sleeve **13**, pressurization of the fuel starts. The pressure increases as the plunger lifts further, making the injection pump start pressurized fuel delivery.
- When indent **F** on plunger **4** meets exhaust port **H** of timing sleeve **13**, the fuel in pressure chamber **M** is pushed back to fuel reservoir **N**, stopping pressurized fuel delivery.
- Adjustment of the fuel quantity to be injected is made by changing the relative meeting position of exhaust port **H** of timing sleeve **13** and indent **F**, by the rotation of plunger **4**.

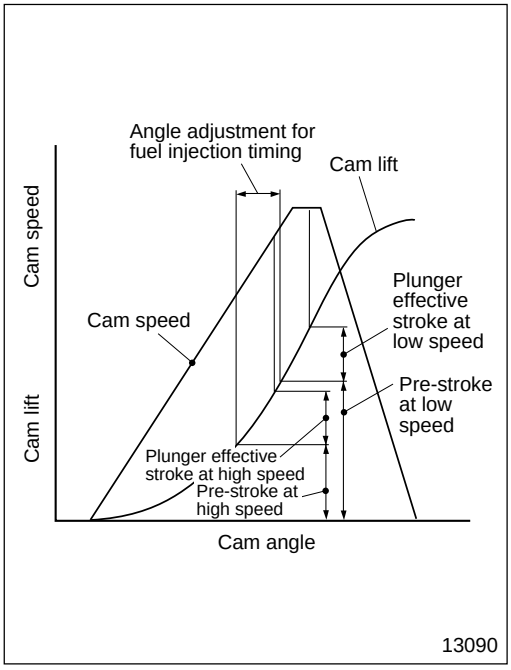

Fuel injection timing and fuel injection characteristics

- The pre-stroke changes according to changes in the position of timing sleeve **13**, whereby the fuel injection timing can be advanced or retarded.
- By making the pre-stroke smaller, suction port **G** of plunger **4** closes early, making the fuel injection timing quicker accordingly.
- By making the pre-stroke larger, suction port **G** of plunger **4** closes late, making the fuel injection timing slower accordingly.
  The quick response of the fuel injection timing improves engine start - up performance at low temperatures.

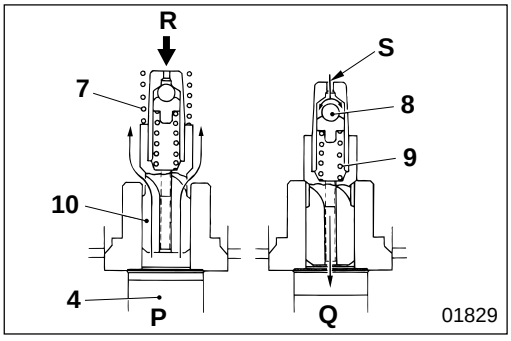

Delivery valve

P : Start of pressurized delivery
Q : End of pressurized delivery

- Delivery valve **10** keeps residual pressure **R** in the injection pipe at a certain level throughout the entire engine revolution range preventing cavitation and allowing high-pressure injection.
- When the fuel pressure on plunger **4** side, as the plunger is lifted, overcomes the combined force of residual pressure **R** in the injection pipe and the repercussive force of delivery valve spring **7** of the plunger, delivery valve **10** is pushed up and pressurized fuel delivery starts.
- Fuel in the injection pipe returns quickly to plunger **4** side the moment pressurized delivery from the plunger ends, and the delivery valve is closed.
- The excess fuel is returned slowly through orifice **S**, reducing the pressure in the injection pipe.
- When the repercussive force of spring **9** in delivery valve **10** equalizes with the pressure in the injection pipe, ball **8** closes orifice **S** and residual pressure **R** in the injection pipe is kept at a specified level.

Governor

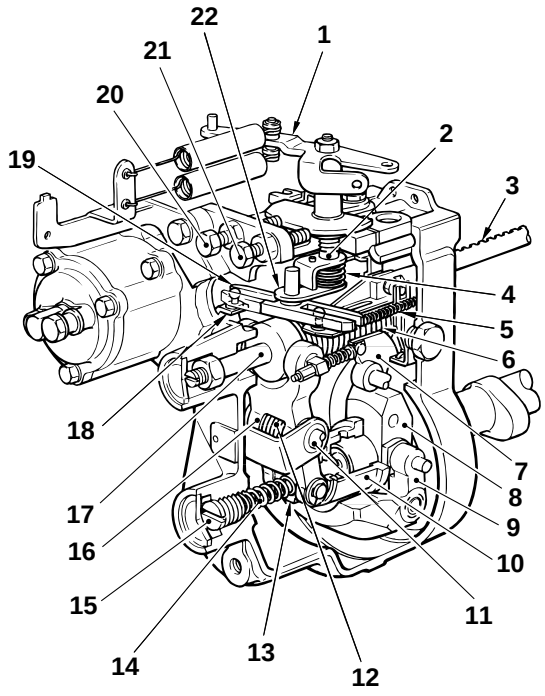

13766

1 Control lever
2 Adjusting lever shaft
3 Control rod
4 Cancel spring B
5 Start spring
6 Governor spring
7 Torque cam
8 Flyweight holder
9 Flyweight
10 Sleeve
11 Tension lever shaft
12 Cancel spring A
13 Shifter
14 Idling spring
15 Idling screw
16 Tension lever
17 Governor shaft
18 Guide lever
19 Floating lever
20 Idling set bolt
21 Full-speed set bolt
22 Supporting lever

The governor is a mechanical type that uses centrifugal force generated by flyweights **9**, its characteristics are between those of a minimum/maximum speed governor and those of an all-speed governor. Because there is no repercussive force from governor spring **6** or control lever **1**, when the accelerator pedal is depressed, the repercussive force transmitted to the accelerator pedal, via the control lever, is quite light, making accelerator pedal operation easy.

Boost Compensator

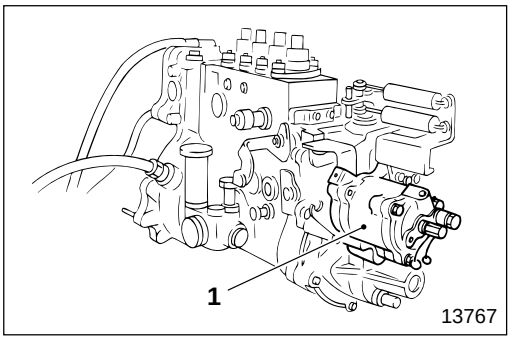

Boost compensator **1** is a device that automatically adjusts the quantity of fuel to be injected to suit the increase in the intake air mass delivered into the engine cylinders by the turbocharger.

Feed Pump

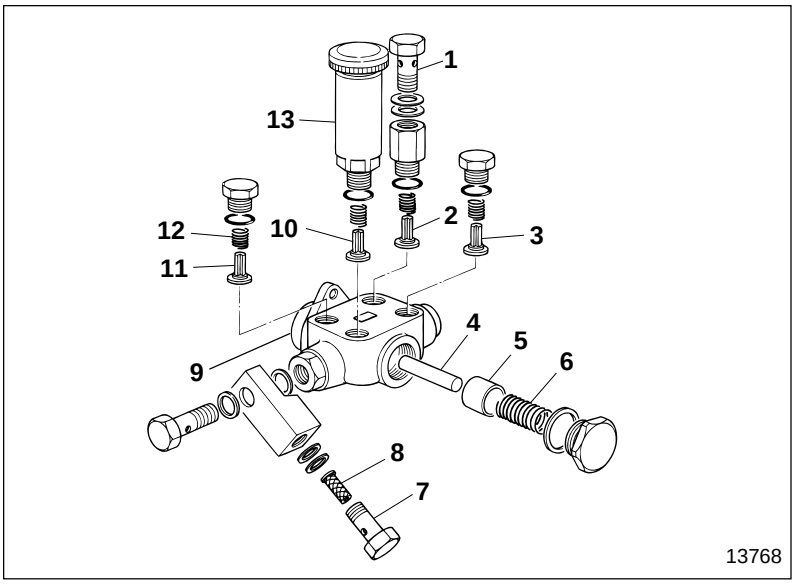

1 Eye bolt on fuel outlet side
2 Check valve
3 Check valve
4 Push rod
5 Piston
6 Piston spring
7 Eye bolt on fuel inlet side
8 Gauze filter
9 Feed pump housing
10 Check valve
11 Check valve
12 Check valve spring
13 Priming pump

- The feed pump is a double-action type pump which, with four check valves operating, sucks and discharges fuel during both strokes of pistons **5**.
- Push rod **4** makes contact with the injection pump camshaft directly, moving piston **5**.
- Priming pump **13** can be manually operated, when the injection pump is not operating, to suck up fuel and thus can be used for air bleeding.
- Gauze filter **8** eliminates large foreign particles from the fuel sucked up from the fuel tank to prevent clogging of the feed pump. This gauze filter must be cleaned with gas oil periodically.

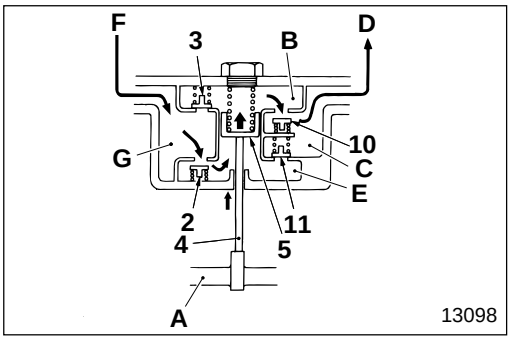

The rotation of injection pump camshaft **A**, pushes up push rod **4** and piston **5**, and the pressure in inner chamber **B** increases. This closes check valve **3**, and check valve **10** opens to let the fuel in inner chamber **B** flow through outer chamber **C** to fuel filter **D**.
When the pressure in inner chamber **E** decreases, check valve **11** closes, and check valve **2** opens to let fuel flow from fuel tank **F** through outer chamber **G** to inner chamber **E**.

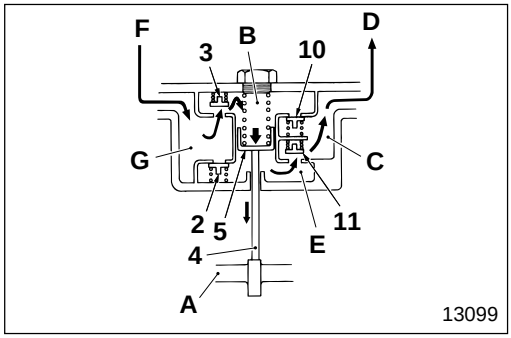

When injection pump camshaft **A** rotates further, it pushes down push rod **4** and piston **5**, and the pressure in inner chamber **E** increases. This closes check valve **2**, and check valve **11** opens to let the fuel in inner chamber **E** flow through outer chamber **C** to fuel filter **D**.
When the pressure in inner chamber **B** decreases, check valve **10** closes, and check valve **3** opens to let fuel from fuel tank **F** flow through outer chamber **G** to inner chamber **B**.

Injection Nozzle

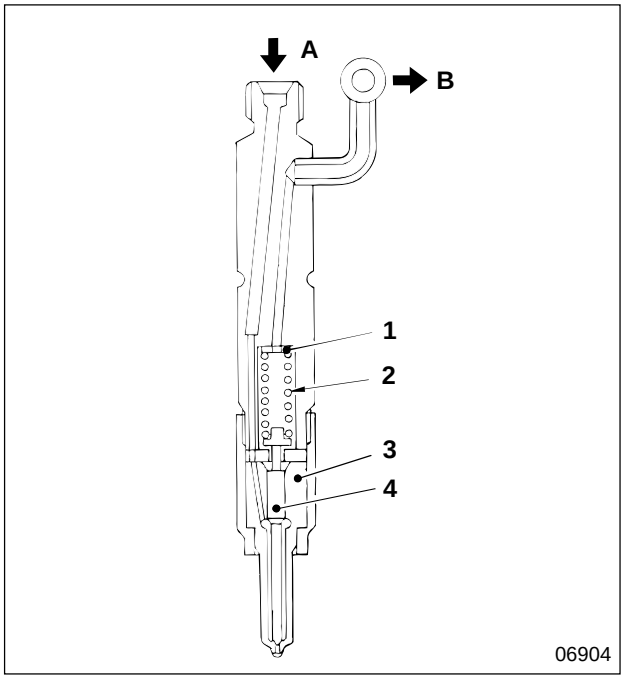

1 Washer
2 Spring
3 Nozzle tip
4 Needle valve

A : From injection pump
B : To fuel tank

- As the pressure of the fuel delivered from the injection pump overcomes the repercussive force of spring **2**, needle valve **4** is pushed up to allow the fuel to spray out the opening at the tip of the nozzle.

- Injection pressure can be adjusted by increasing or decreasing the number of washers **1**.

M E M O

Possible causes \ Symptoms		Engine does not start	Engine hard to start	Engine knocks	Engine output inconsistent	Engine output does not develop full power	Engine maximum revolution too high	Engine idling unstable	Engine starts but stalls	Engine revolution does not reach specified maximum speed	Engine does not stop	Accelerator pedal hard to depress	Fuel supply insufficient
Injection pump body	Pre-stroke control faulty (Warning lamp lights) 📖 P13-34		○	○	○	○							
	Plunger stuck	○											
	Control rod stuck	○											
	Delivery valve stuck	○											
	Tappet worn	○											
	Camshaft worn	○											
	Injection timing adjusted incorrectly		○		○	○		○					
	Plunger worn					○		○					
	Delivery valve seated incorrectly					○							
	Injection timing too fast			○									
	Plunger sliding stroke short				○								
	Plunger spring damaged				○			○					
	Control rod not moving smoothly	○	○		○		○	○					
	Tappet worn, not moving smoothly				○								
	Delivery valve spring damaged				○	○							
	Airtightness incorrect due to delivery valve holder loosened				○	○							
	Control pinion loosened							○					
	Plunger spring setting faulty							○					
	Delivery valve holder tightened excessively							○					
	Injection amount of each cylinder uneven		○					○					
	Overflow valve stuck	○	○		○								
Fuel feed pump	Gauze filter clogged	○						○	○				
	Check valve malfunctioning	○											
	Piston stuck	○											
	Push rod worn	○											
	Push rod stuck	○											
	Check valve sliding movement faulty		○		○			○					
	Piston worn		○		○			○					

Possible causes \ Symptoms		Engine does not start	Engine hard to start	Engine knocks	Engine output inconsistent	Engine output does not develop full power	Engine maximum revolution too high	Engine idling unstable	Engine starts but stalls	Engine revolution does not reach specified maximum speed	Engine does not stop	Accelerator pedal hard to depress	Fuel supply insufficient
Governor	Full-speed stopper position short of standard value					○							
	Governor spring weak					○				○			
	Control lever position adjusted incorrectly				○	○				○			
	Flyweight malfunctioning						○						
	Idling spring weak							○					
	Linkage bent							○					
	Linkage friction excessive or linkage too loose							○					
	Round nut loosened							○					
	Idling set bolt adjusted incorrectly							○					
	Control lever sliding movement faulty											○	
	Stop mechanism damaged										○		
Injection nozzle	Needle valve stuck	○											
	Valve opening pressure too low	○								○			
	Injection nozzle clogged	○		○		○		○		○			
	Nozzle airtightness incorrect	○		○		○		○		○			
	Valve opening pressure too high			○									
	Spring fractured				○	○							
	Needle valve sliding movement faulty				○								
	Valve opening pressure faulty				○								
	Spring fatigued							○					
Fuel filter	Filter clogged	○			○			○	○				
No fuel in fuel tank		○											
Fuel pipe clogged or fuel leakage from connections		○											
Air or water in fuel system		○			○			○	○				
Low-quality fuel being used			○	○		○		○					

Possible causes \ Symptoms		Engine does not start	Engine hard to start	Engine knocks	Engine output inconsistent	Engine output does not develop full power	Engine maximum revolution too high	Engine idling unstable	Engine starts but stalls	Engine revolution does not reach specified maximum speed	Engine does not stop	Accelerator pedal hard to depress	Fuel supply insufficient
Engine control	Accelerator pedal stopper bolt adjusted incorrectly					○				○			
	Accelerator pedal arm rusted											○	
	Accelerator control cable connection faulty											○	
	Accelerator control cable sliding movement faulty											○	
	Engine stop cable damaged or stretched										○		
	Engine stop cable adjusted incorrectly										○		
Fuel pipe cracked													○
Fuel tank airtightness incorrect													○
Oil viscosity unsuitable	Gr 12		○										
Valve clearance incorrect	Gr 11		○					○					
Head gasket faulty	Gr 11		○					○					
Valve and valve seat worn and carbon deposits	Gr 11		○					○					
Valve spring fatigued	Gr 11		○					○					
Piston ring worn or damaged	Gr 11		○					○					
Piston ring groove worn or damaged	Gr 11		○					○					
Piston and cylinder worn	Gr 11		○										
Cooling system malfunctioning	Gr 14		○					○					
Starter switch faulty	Gr 54		○										
Glow relay faulty	Gr 54		○										
Multipurpose timing control unit faulty	Gr 54		○										
Fuel-cut motor faulty	Gr 54	○									○		
Fuel-cut relay faulty	Gr 54	○									○		

M E M O

INSPECTION AND ADJUSTMENT MOUNTED IN VEHICLE

Inspection and Adjustment of Fuel Injection Timing

Service standards

Location	Maintenance item	Standard value	Limit	Remedy
—	Fuel injection timing	7°	—	Adjust

Tightening torque

Unit : N·m {lbf.ft, kgf·m}

Location	Parts to be tightened	Tightening torque	Remarks
6	Union nut	100 to 110 {76 to 83, 10.5 to 11.5}	—
7	Delivery valve holder	29 to 49 {22 to 36, 3 to 5}	—

Special tools

Unit : mm {in.}

Location	Tool name and shape	Part No.	Application
—	Cranking handle 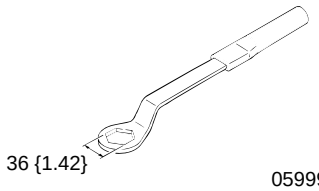 05999	MH061289	Cranking of engine
15, 16	Universal extension 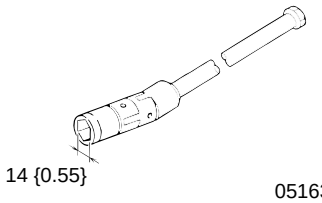 05163	MH061099	Inspection and adjustment of fuel injection timing

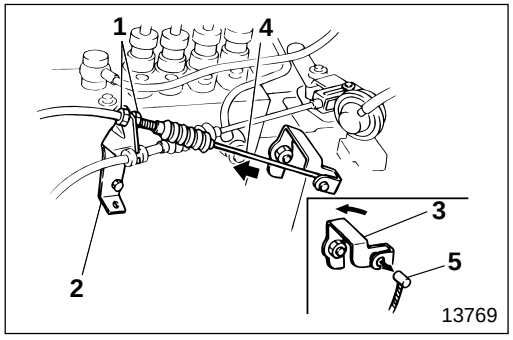

13769

[Inspection]

NOTE

Set the starter switch to “LOCK” or “ACC” before starting operation.

- Loosen lock nut **1** of control cable bracket **2** and remove from the bracket slit.
- Pull governor stop lever **3** toward STOP direction.
- Remove cable end **5** of engine stop cable **4**.

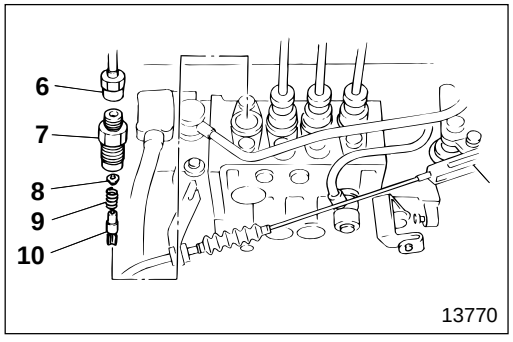

13770

- Remove union nut **6** of the injection pipe, delivery valve holder **7**, stopper **8**, delivery valve spring **9** and delivery valve **10** from the injection pump of No.1 cylinder.
- After removing these parts, install delivery valve holder **7**.

CAUTION

Be sure to keep all the removed parts in gas oil to keep them free from dirt.

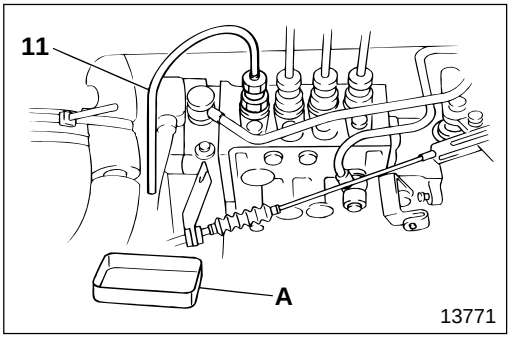

- Mount extra injection pipe **11** on No.1 cylinder. Direct the free end of the pipe downwards so that the fuel discharge can be clearly observed.
  A : Oil tray

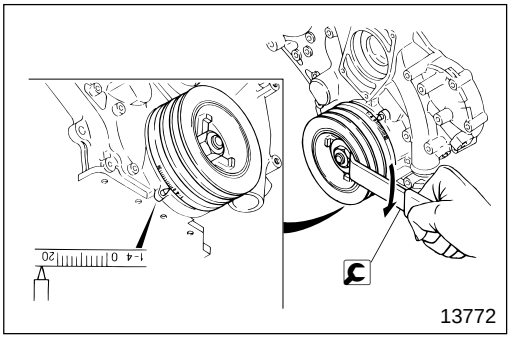

- Turn the crankshaft more than 180° in the forward running direction and bring No.1 cylinder to approximately 30° before top dead center in the compression cycle.

NOTE

Refer to the location where there are 30° gradations, since angle gradations on the crankshaft pulley side only extend to 20°.

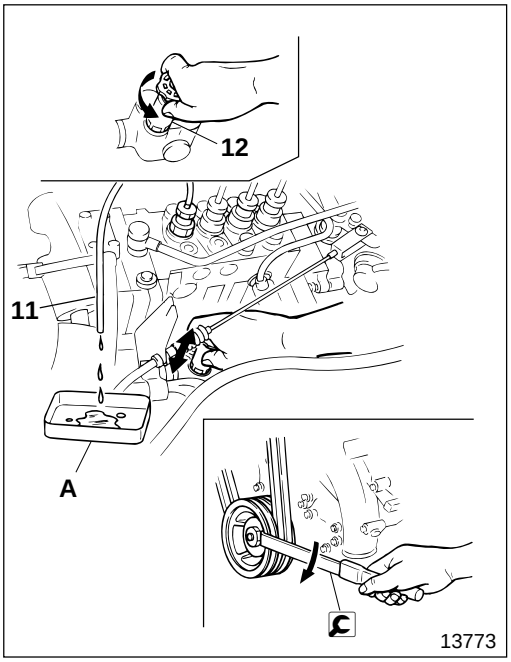

- Turn the engine in the forward running direction slowly while discharging fuel from injection pipe **11**, deliver fuel using priming pump **12**.
  A : Oil tray
- When the discharge of fuel from injection pipe **11** becomes intermittent, turn the crankshaft slower, stop turning the crankshaft when the discharge stops completely.

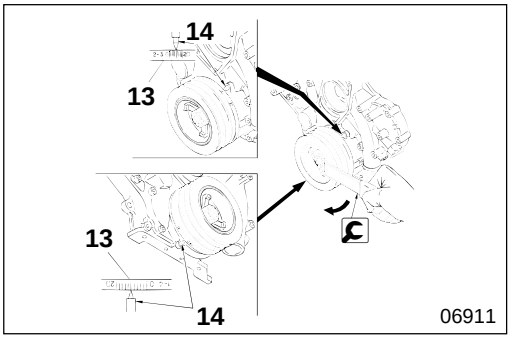

- Make sure that indent **13** on the crankshaft pulley and pointer **14** on the timing gear case show the standard fuel injection timing.

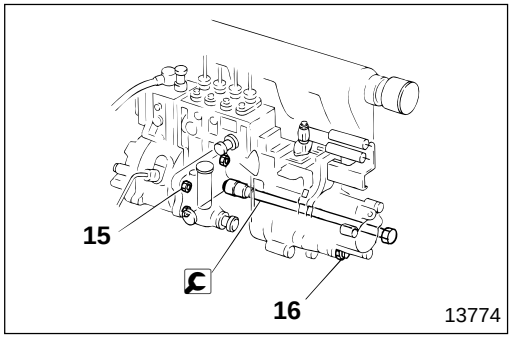

- Adjust fuel injection timing as follows if it does not conform to the standard value.

[Adjustment]

- Loosen injection pump mounting nuts **15**, **16**.
  15 : 4 points (on flange)
  16 : 1 point

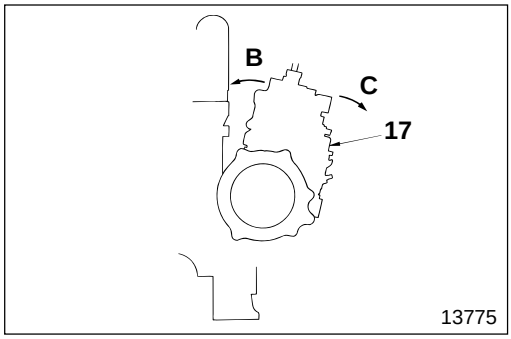

- When fuel injection timing is retarded, tilt injection pump **17** toward crankcase side **B**.
- When fuel injection timing is advanced, tilt injection pump **17** away from crankcase **C**.

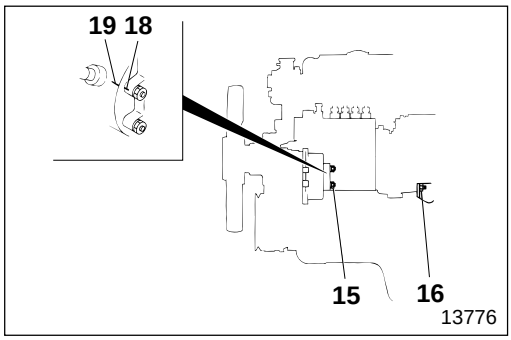

- Adjustment of one graduation on indented scale **18** of the timer case flange adjusts fuel injection timing by 6°.
  19 : Pointer
- Tighten nuts **15**, **16** at specified torque, and remeasure fuel injection timing.

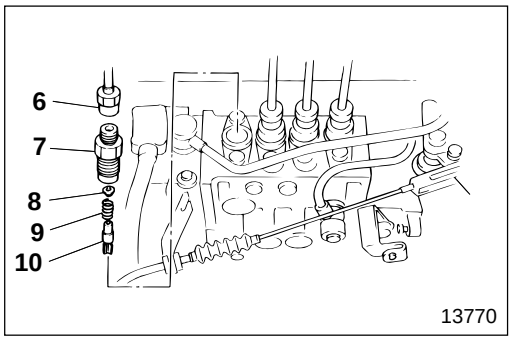

- After making sure that the fuel injection timing conforms to the standard value, install delivery valve **10**, delivery valve spring **9** and stopper **8**, then tighten delivery valve holder **7**, and union nut **6**.
- Tighten each part at specified torque.

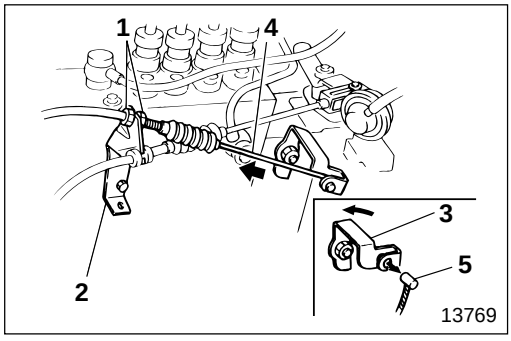

- With stop lever **3** pulled toward the STOP direction, insert cable end **5** through the stop lever slit.
- Fix to control wire bracket **2** with lock nut **1**.
- Adjust engine stop cable **4** after installing it. P13-64

Inspection and Adjustment of No-load Minimum and Maximum Revolution

Service standards

Location	Maintenance item		Standard value	Limit	Remedy
—	No-load minimum revolution (Idling revolution)	Manual transmission	700 to 750 rpm	—	Adjust
		Automatic transmission	* 750 to 800 rpm	—	Adjust
—	No-load maximum revolution		3650 to 3750 rpm	—	Adjust

* : Revolutions per minute in P range

● **Before inspecting the vehicle do the following :**

- Run the engine to bring the coolant temperature up to approximately 80 to 90°C {176 to 194°F}.
- Turn all the lights and accessory equipment OFF.
- Put transmission in neutral. (For automatic transmission, put transmission into the P range.)
- Set the steering wheel at center and straight position.

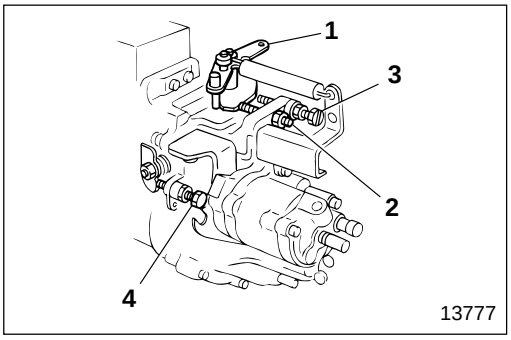

(1) No-load minimum revolution (Idling revolution)

- Make sure that control lever **1** strikes idling set bolt **2**, and in this state, check and see if the minimum revolution is within the standard value.
- If the minimum revolution deviates from the standard value, adjust using idling set bolt **2**.
- After adjustment increase the revolution from between 2800 rpm to 3400 rpm once, and check the minimum revolution.

(2) No-load maximum revolution

- Make sure that adjusting lever **1** strikes full-speed set bolt **3**, and in this condition, check and see if the maximum revolution is within the standard value.
- If the maximum revolution deviates from the standard value, adjust using full-speed set bolt **3**.

CAUTION

Never change the fixed position of full-load stopper bolt 4.

NOTE

Ensure that the engine does not stall or hunt when adjusting lever 1 is moved from the full-speed position to the idling position quickly. If performance is faulty, adjust it to within standard values.

INSPECTION AND ADJUSTMENT MOUNTED IN VEHICLE

Inspection and Adjustment of Idling Actuator < with Cab Cooler >

Service standards

Location	Maintenance item		Standard value	Limit	Remedy
—	Idling revolution		625±25 rpm	—	Adjust
—	Idling revolution under idling operation	Manual transmission	950 to 1000 rpm	—	Adjust
		Automatic transmission	850 to 900 rpm	—	Adjust

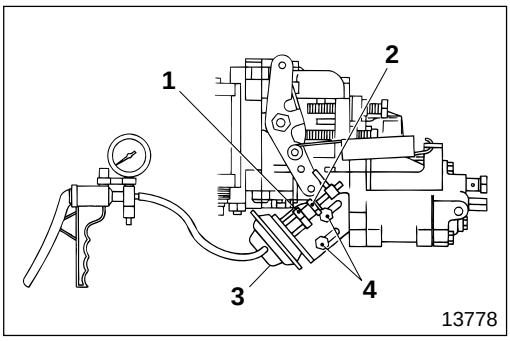

● **Before inspecting the vehicle do the following:**

- Run the engine to bring the coolant temperature up to approximately 80 to 90°C {176 to 194°F}.
- Turn all the lights and accessory equipment OFF.
- Put transmission in neutral. (For automatic transmission, put transmission into the P range.)

[Inspection]

- Make sure that idling speed is within the standard value.

- If idling speed deviates from the standard value, adjust idling speed. P13-31
- Apply vacuum of more than 47 kPa {14 in.Hg, 350 mmHg} to activate actuator **3**, and in that state, make sure that the idling speed is within the standard value.

- If the idling speed deviates from the standard value, adjust in the following manner.

[Adjustment]

- Activate actuator **3** by applying vacuum of more than 47 kPa {14 in.Hg, 350 mmHg}.
- Loosen lock nut **1**, and adjust idling speed by turning adjusting screw **2** until idling speed conforms to the standard value.

- After depressing the accelerator pedal several times, make sure that the idling speed is within the standard value.

NOTE

If adjustment using adjusting screw 2 fails to meet the standard value, loosen actuator mounting bolts 5 and adjust by shifting the position of actuator 3. Then, tighten mounting bolts 4 at specified torque.

M E M O

PRE-STROKE CONTROL INJECTION PUMP SYSTEM

Troubleshooting Procedure

The pre-stroke control type injection pump system has a trouble diagnosis function, this function is used for troubleshooting.

This means you have to read the diagnosis code memorized in the pre-stroke control unit, and carry out an inspection based on this code. There are two ways of reading the code; with a multi-use tester, and without a multi-use tester.

In the case of trouble that does not have a diagnosis code, the normal 01 code is indicated, and it is necessary to carry out a check depending on the situation. In this case, inspect the electric circuits and their relative devices.

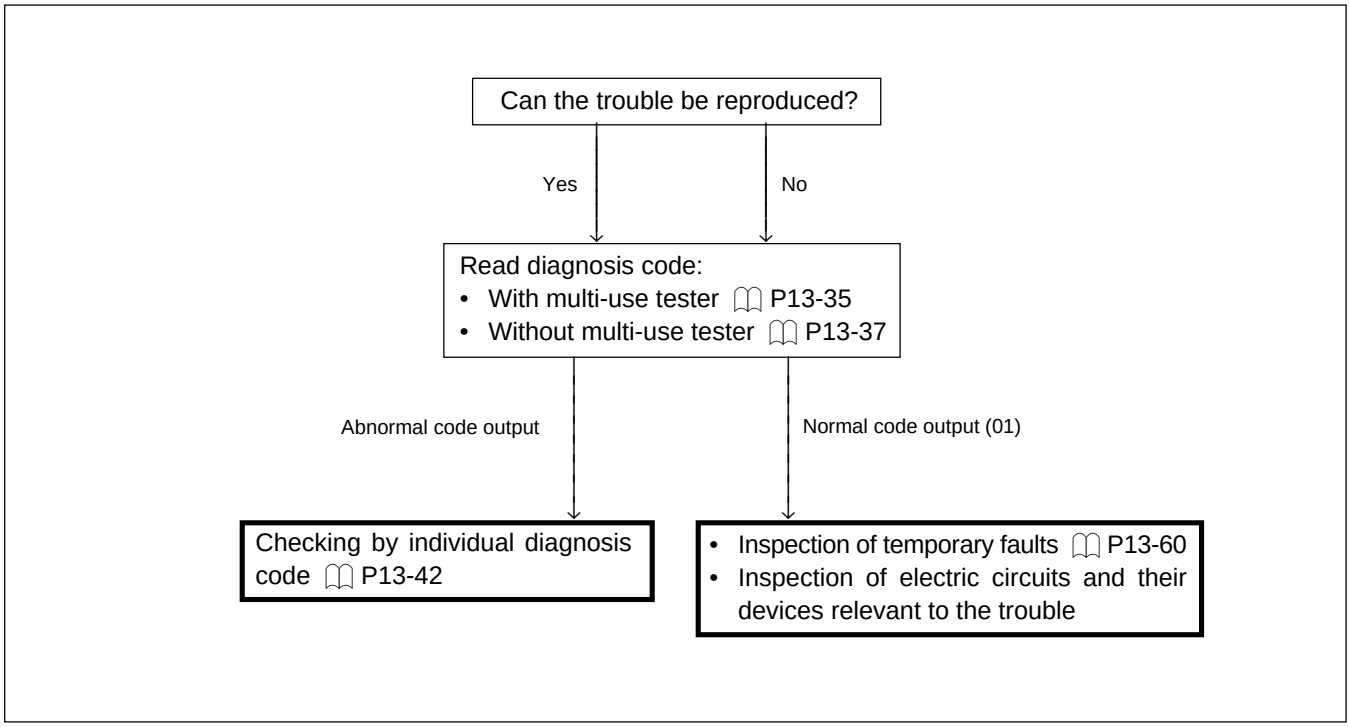

● Inspection with multi-use tester

Special tools

Tool name and shape	Part No.	Application
Multi-use tester sub-assembly 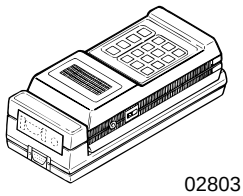 02803	MC858999	Inspection of system
Multi-use tester harness 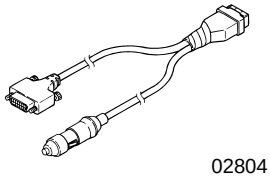 02804	MB991231	
ROM pack 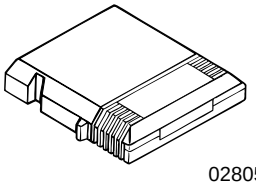 02805	MC858989	

● Inspection flow chart

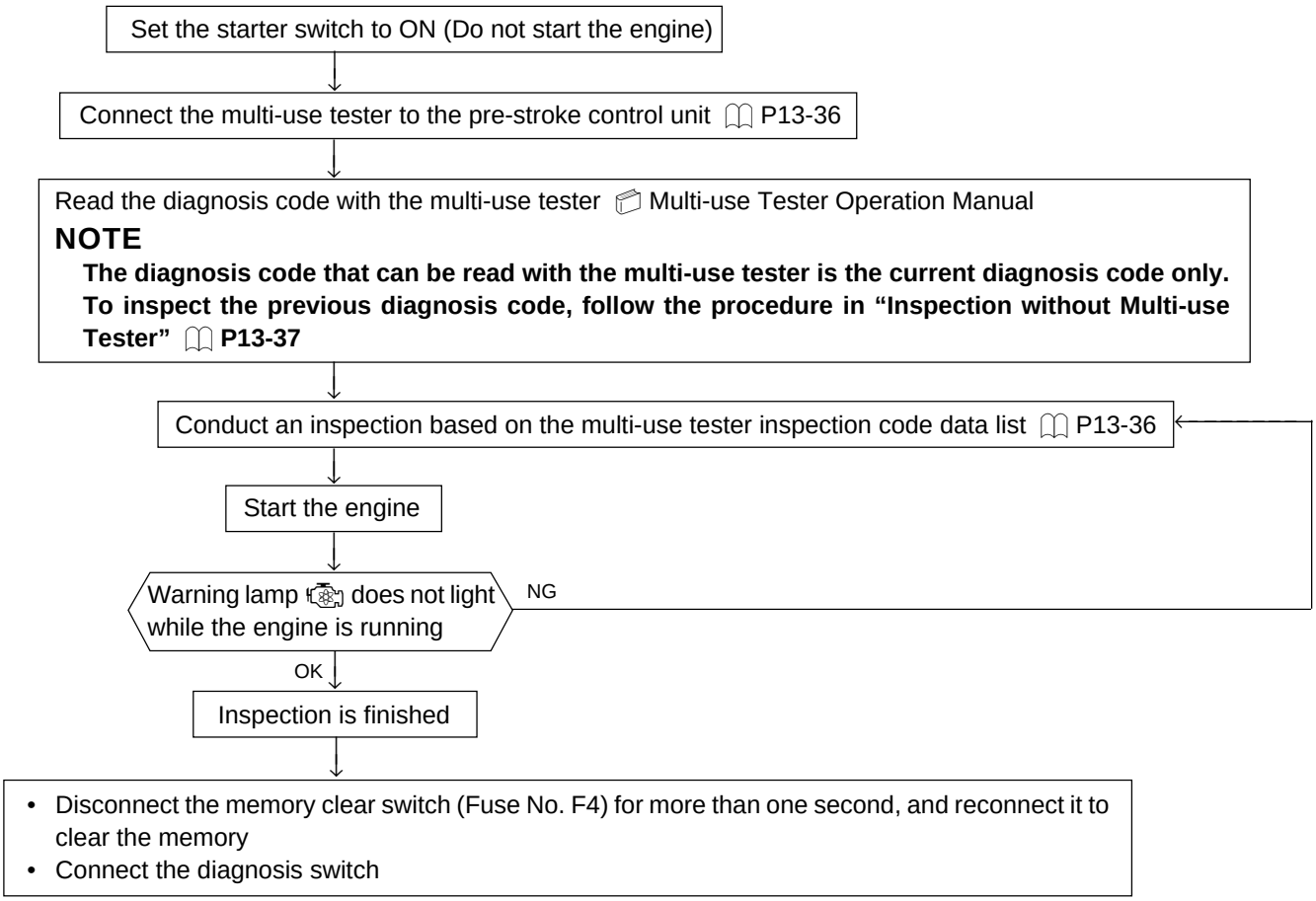

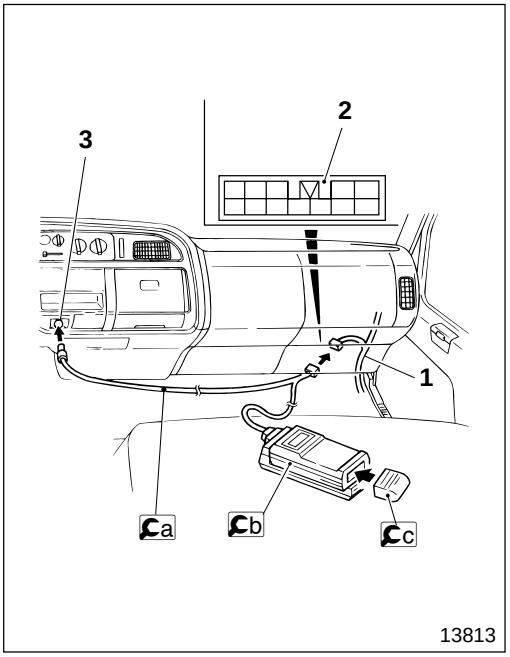

● **Connection of Multi-use Tester to Pre-Stroke Control Unit**

- Set the starter switch to LOCK.
- Connect a multi-use tester harness to multi-use tester connector **2** of cab harness **1** and to cigarette lighter socket **3**.
- Connect a multi-use tester harness to b multi-use tester sub-assembly.
- Connect c ROM pack to b multi-use tester sub-assembly.

NOTE

Refer to the Multi-use Tester Operation Manual for details regarding the operation of the multi-use tester.

● **Inspection with Multi-use Tester**

Inspection using service data is possible as well as by diagnosis code indication (self-diagnosis) using the multi-use tester. This enables you to compare the indicated figures (service data) that represent the data signals from the various sensors on the vehicle with the judgement standards, and judge whether they are good or bad. The service data code is indicated as well as the diagnosis code.

Self-diagnosis			Inspection using Service Data				
Indicated on multi-use tester			Indicated on multi-use tester			Inspection procedure	
Diagnosis code	Trouble item (Inspected instrument)	Inspection procedure	Service data code	Data signal name	Service data	Condition at inspection	Judgement standard
03	PS OFFSET	🕮 P13-42	—				
04	PS VOLTAGE		—				
05	NE NO PULS		—				
12	PS SERVO		12	PS ANG DIFF	■■.■■ deg	Engine running	Within ±5.5 deg
13	PS SNSR		—			400<Ne≦2000 Ne : Engine revolution	Within ±2°CA
15	NE SNSR		15	ENGINE SPEED	■■ rpm	Racing	Synchronization with tachometer
—			16	CTRL ROD ADJ	■■ V	Starter switch set to ON	Within ±0.04 V
21	WTR TEMP SNSR		21	WATER TEMP	■■ °F	While engine is cool While engine is warmed up Engine is stopped after warming up	Equivalent to ambient temperature Gradually rising temperature Gradual falling temperature
22	CTRL ROD SNSR		22	CTRL ROD VOLT	■■ V	Engine running	3 V or less
41	BST TEMP SNSR		41	BOOST TEMP	■■ °F	At high idling	4.9 V or less

● Inspection without multi-use tester

● Inspection flow chart

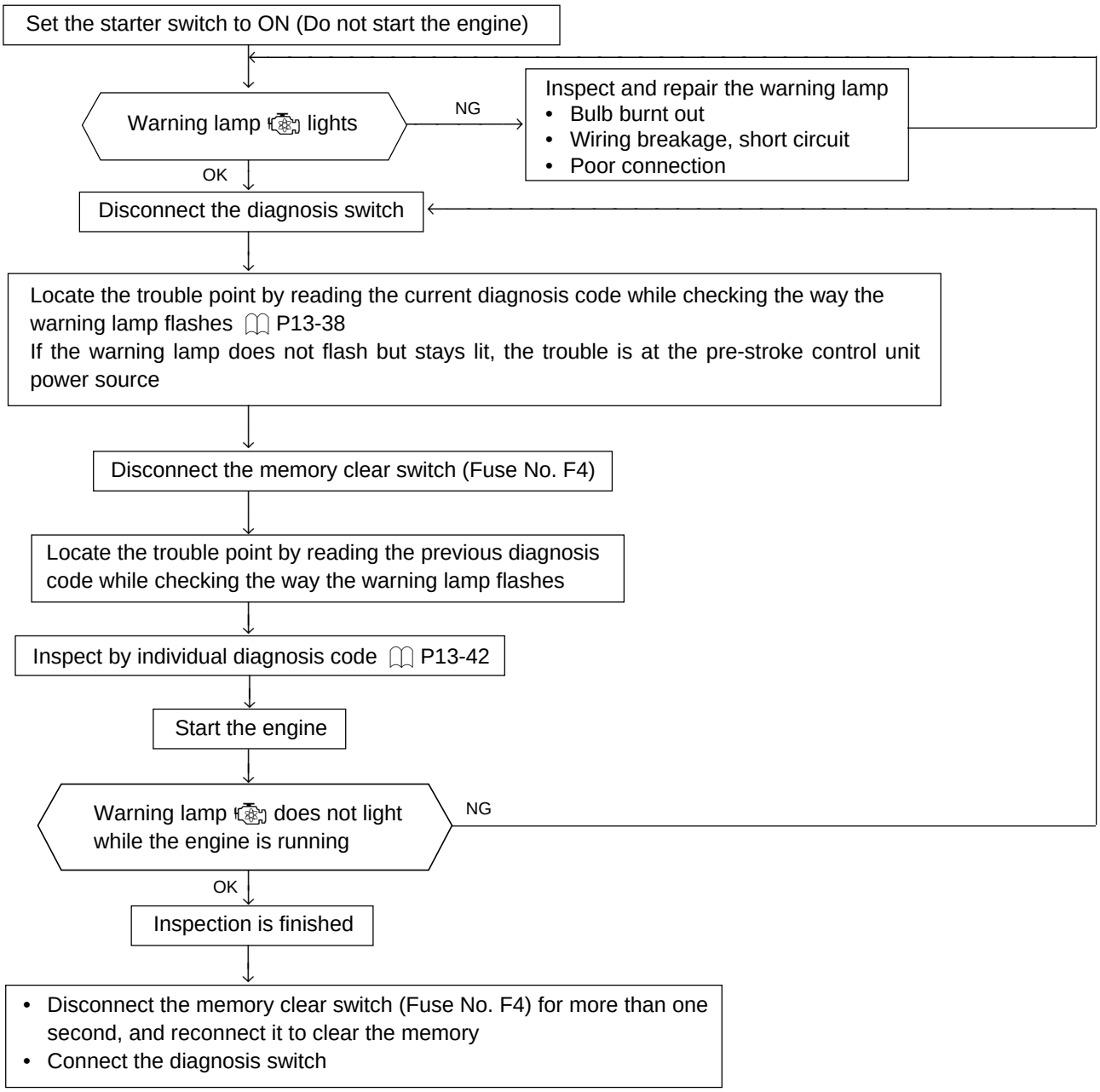

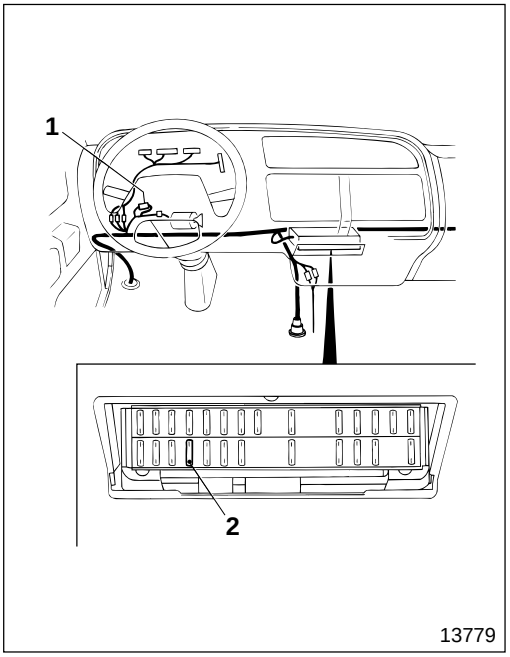

● **Reading of Diagnosis Code with Warning Lamp**

CAUTION

- **Make sure you read the current diagnosis codes first, then read the previous diagnosis codes.**
- **You must take care not to disconnect memory clear switch 2 (Fuse No. F4) before removing diagnosis switch 1 (1-pin connector without locking device) because this would make it impossible for the system to indicate the current diagnosis code.**
- **Note that if memory clear switch 2 is reconnected after being disconnected, it will clear all the diagnosis codes.**

Current diagnosis code

- When diagnosis switch **1** is disconnected, the pre-stroke control unit starts diagnosis of the trouble and indicates the current diagnosis codes by flashing warning lamp within the meter cluster.

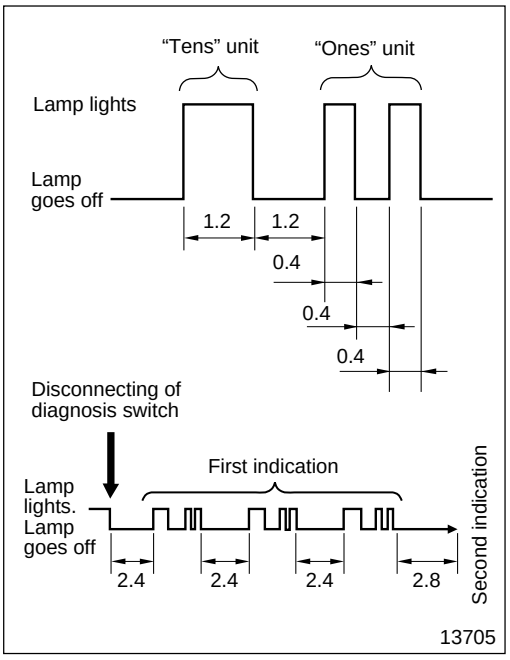

- The diagnosis codes are read by the number of flashes and the duration of flashes of warning lamp .
  - The flash duration differs for the "tens" unit and the "ones" unit.
    "Tens" unit : Every 1.2 seconds
    "Ones" unit : Every 0.4 seconds
  - The number of flashes indicates the numeral for each unit.
  - The diagnosis code indication shows the "tens" unit first, then the "ones" unit. However, when the "tens" unit begins with a zero, only the "ones" unit is shown.
- A diagnosis code is shown by the repetition of three consecutive indications. After the code indication, if another code does not exist, the indication returns to the first code and is again shown three times.
- When diagnosis switch **1** is connected, the pre-stroke control unit immediately terminates code indication.

Previous diagnosis code

After reading the current diagnosis codes (with diagnosis switch **1** disconnected), disconnect memory clear switch **2** (Fuse No. F4). Warning lamp starts flashing again. This flashing indicates the previous diagnosis codes, and by interpreting these codes, the location of the trouble is determined.

Diagnosis code	Warning lamp flashing pattern
01 (Normal)	
03 (Pre-stroke learning faulty)	
04 (Pre-stroke actuator power source faulty)	
05 (Engine revolution sensor no pulse faulty)	
12 (Pre-stroke servo system faulty)	
13 (Pre-stroke position sensor faulty)	
15 (Engine revolution sensor wiring breakage faulty)	
21 (Water temperature sensor faulty)	
22 (Control rod position sensor faulty)	
41 (Boost air temperature sensor faulty)	

13970

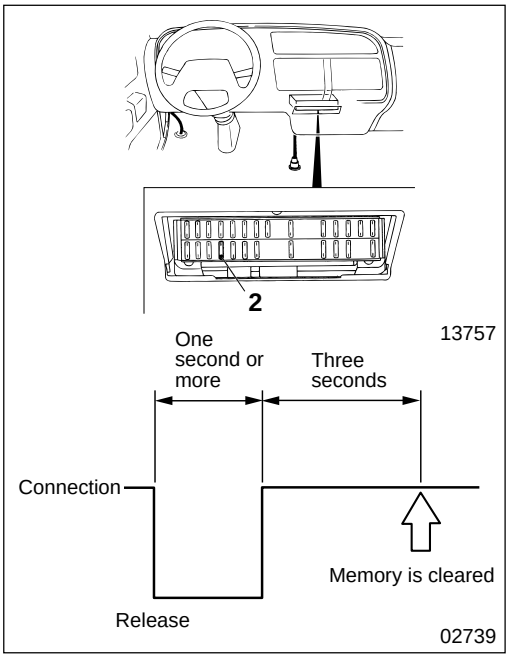

Clearing diagnosis codes

By disconnecting memory clear switch **2** (Fuse No. F4) once and reconnecting it, all the diagnosis codes memorized in the pre-stroke control unit are cleared.

CAUTION

Clearing of diagnosis codes must be done using memory clear switch 2.

Electric Circuit and Position of Parts Installation

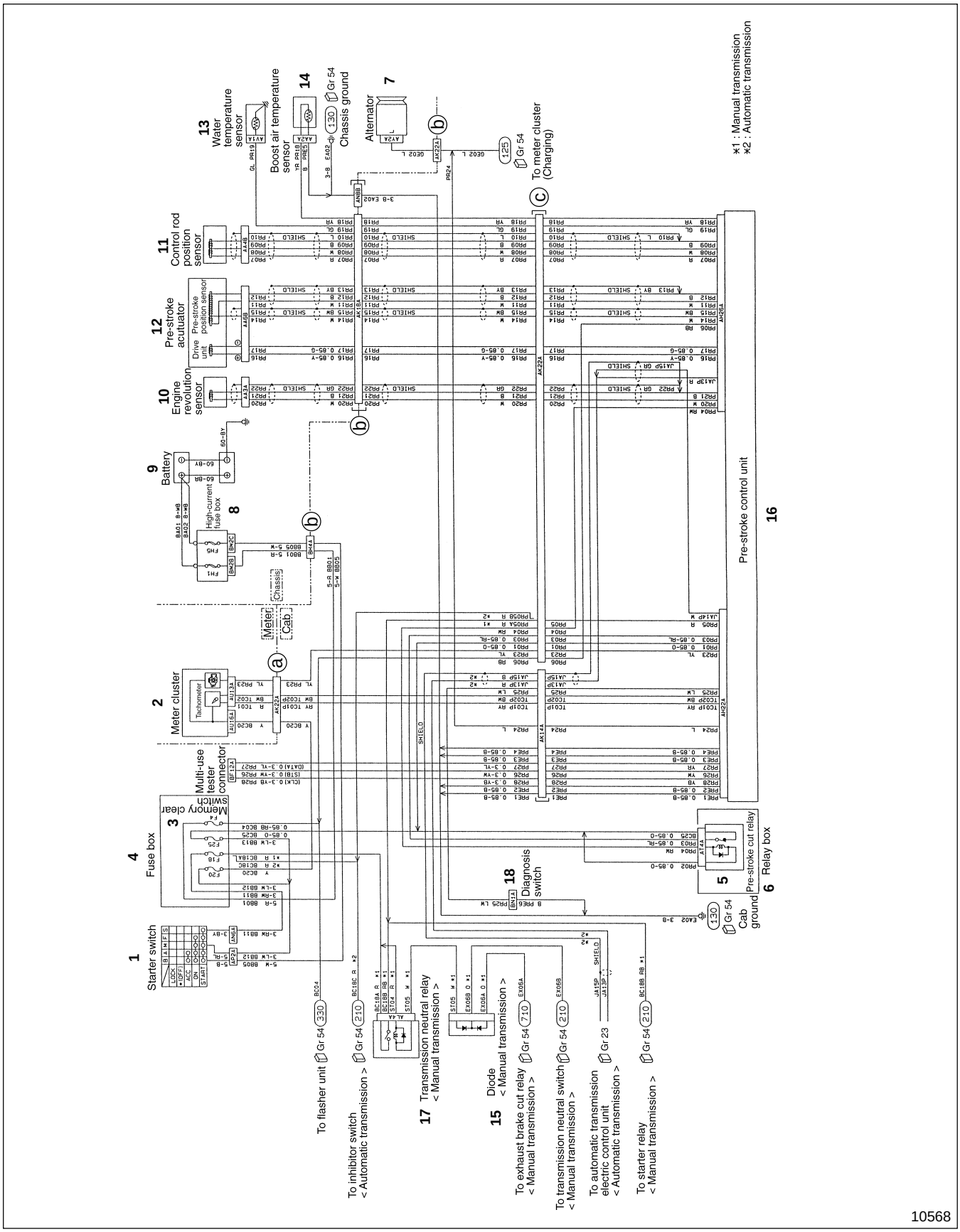

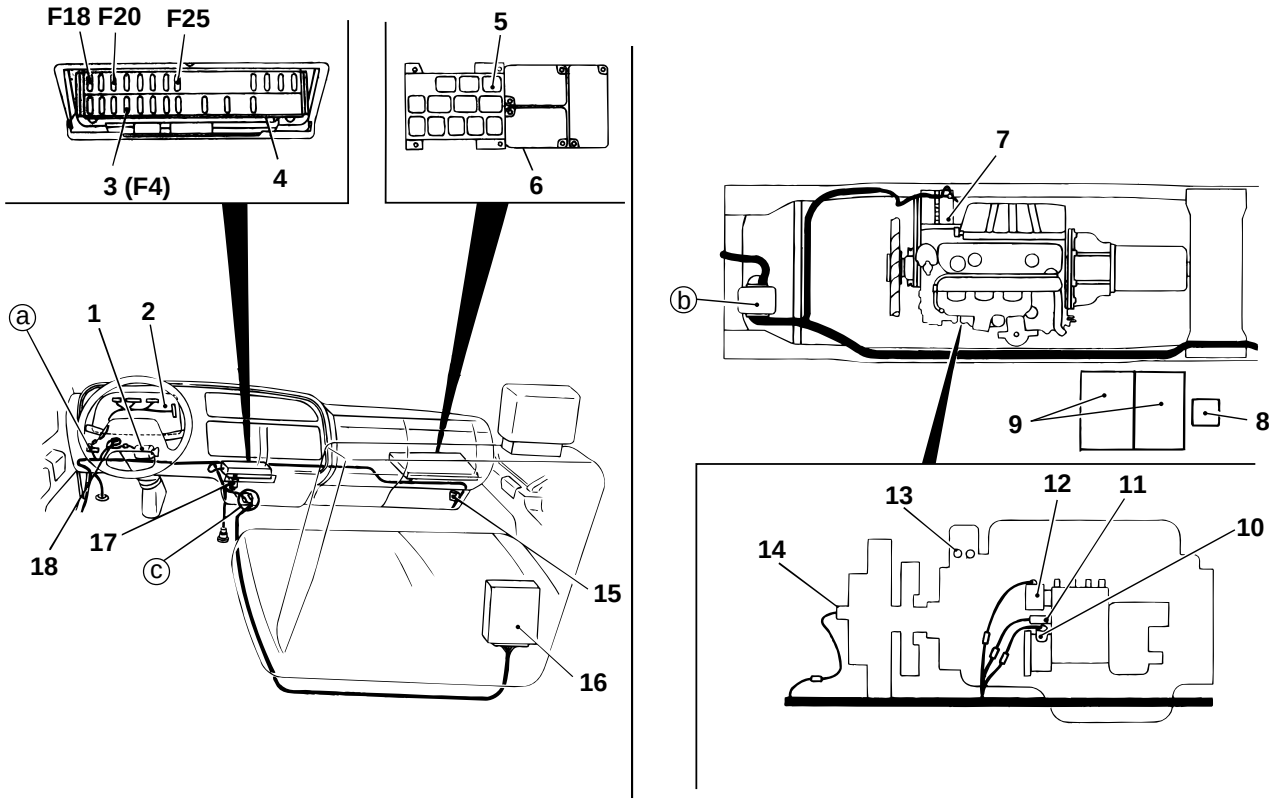

13780

1 Starter switch
2 Meter cluster
3 Memory clear switch (F4 fuse)
4 Fuse box
5 Pre-stroke cut relay
6 Relay box
7 Alternator
8 High-current fuse box
9 Battery
10 Engine revolution sensor
11 Control rod position sensor
12 Pre-stroke actuator
(with built-in pre-stroke position sensor)
13 Water temperature sensor
14 Boost air temperature sensor
15 Diode < Manual transmission >
16 Pre-stroke control unit
17 Transmission neutral relay
< Manual transmission >
18 Diagnosis switch

Inspection by Individual Diagnosis Code

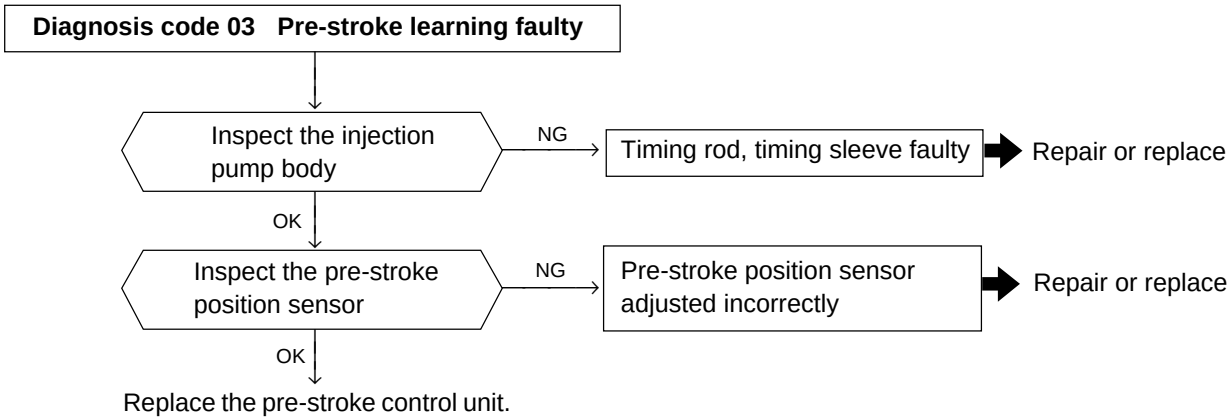

When diagnosis code 03 is indicated, inspect the injection pump body and the pre-stroke position sensor. However, special tools and equipment are necessary for this work, so it is recommended that the work be carried out by a ZEXEL service station. If the inspection result shows normal, replace the pre-stroke control unit.

M E M O

PRE-STROKE CONTROL INJECTION PUMP SYSTEM

Diagnosis code 04 Pre-stroke actuator power source faulty

Inspect the harness and connector
- NG → • Wiring breakage, harness short circuit • Connector not connected properly → Repair or replace
- OK ↓

Inspect the pre-stroke cut relay 🕮 P13-45
- NG → • Wiring breakage, coil short circuit • Installation faulty → Repair, adjust or replace
- OK ↓

Replace the pre-stroke control unit.

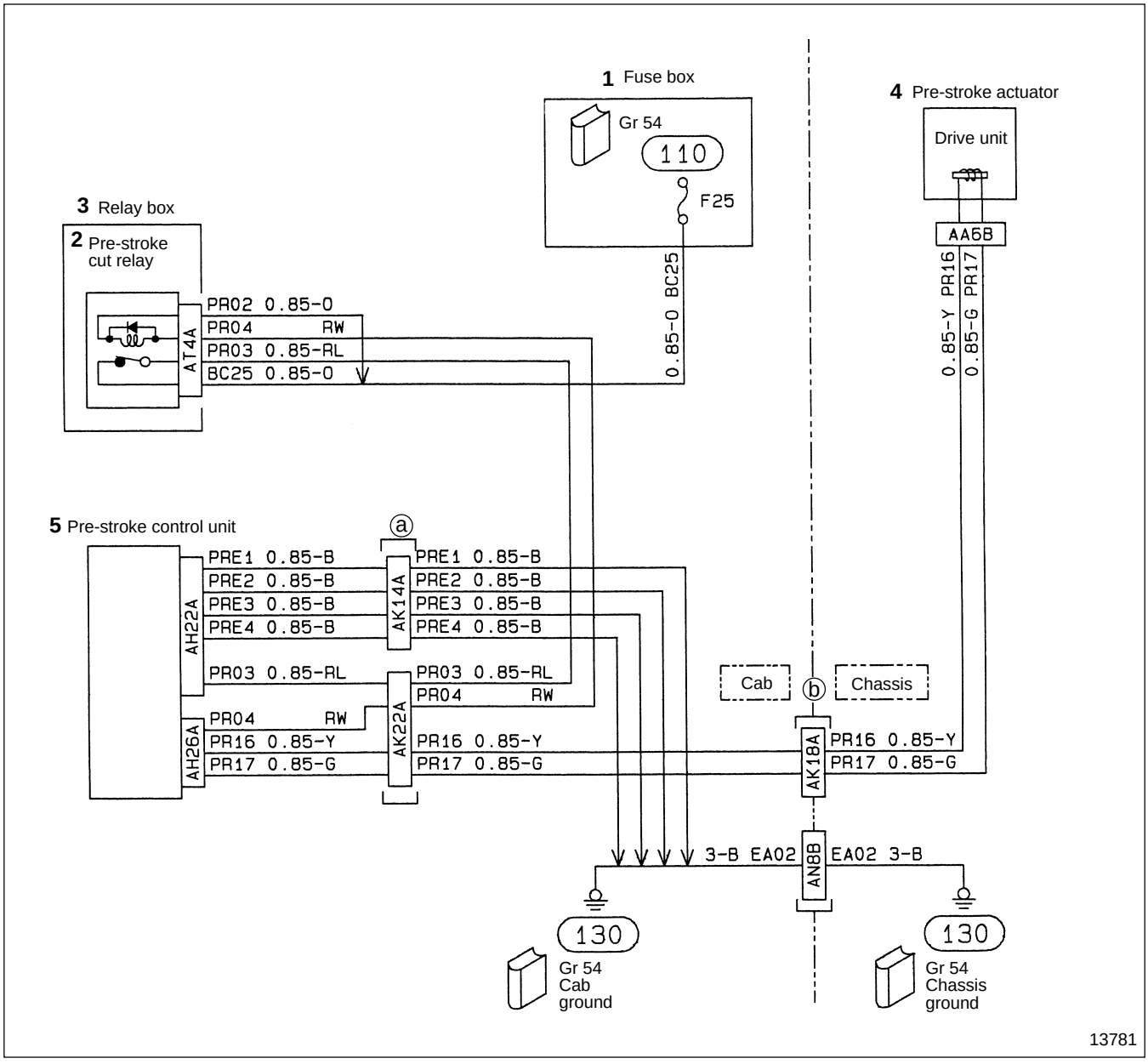

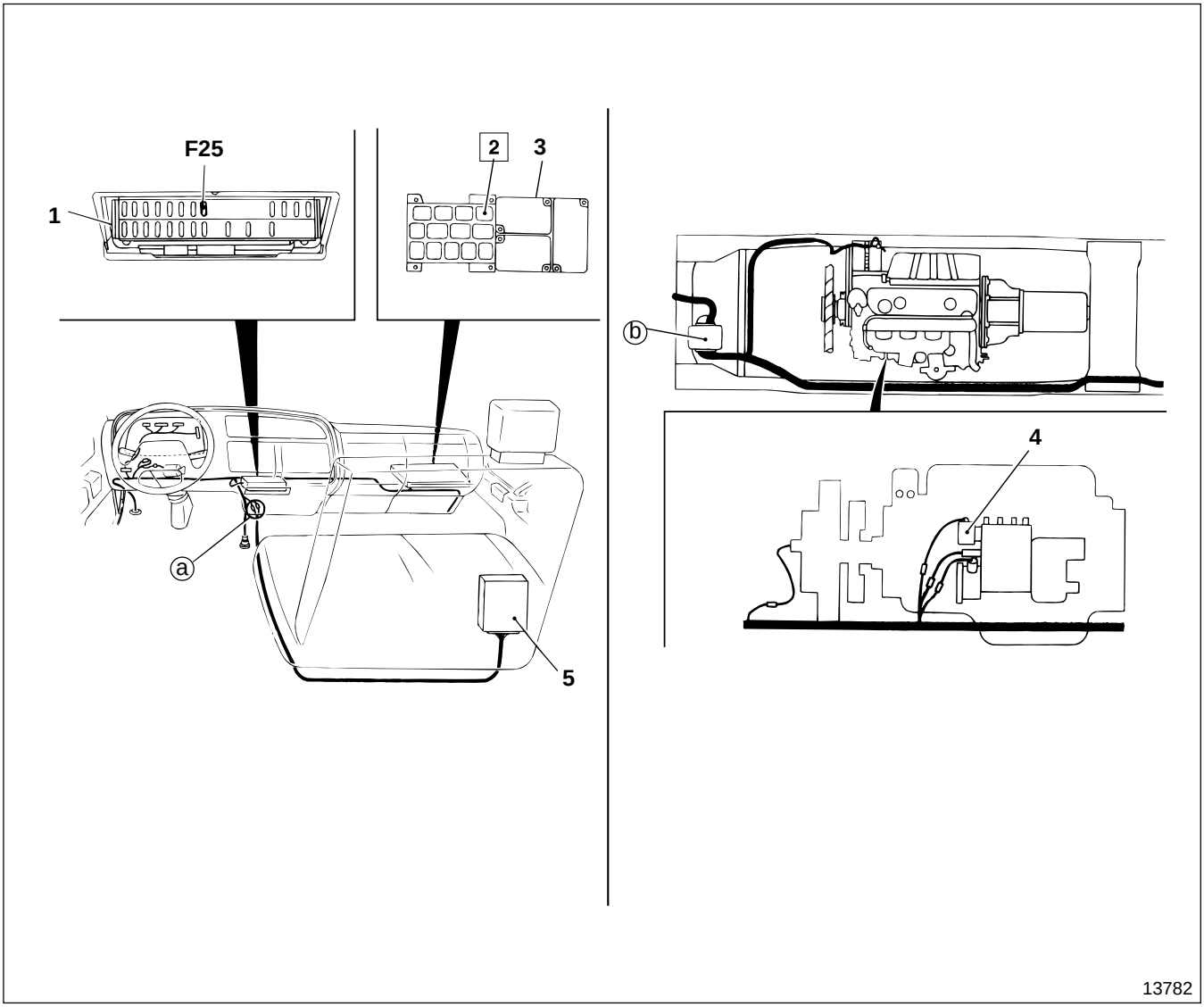

1 Fuse box
2 Pre-stroke cut relay
3 Relay box
4 Pre-stroke actuator
5 Pre-stroke control unit

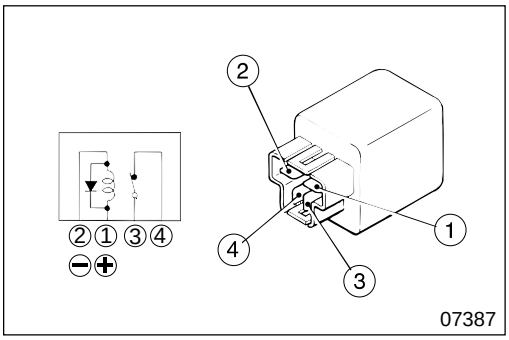

◆ Service procedure

2 **Inspection of pre-stroke cut relay**

- Follow the table below to inspect continuity.

	①	②	③	④
No current	○—○			○—○
Current	⊕—⊖		◌—◌	

○—○ : There is continuity between terminals ○ and ○.
⊕—⊖ : Indicates that 12 volts DC is applied to the line between the terminals.
◌—◌ : Indicates that continuity is lost between the terminals.

- If any fault is found, replace pre-stroke cut relay **2**.

PRE-STROKE CONTROL INJECTION PUMP SYSTEM

Diagnosis code 05 Engine revolution sensor faulty
(No pulse error : Output signal from the sensor is weak or unstable)

Inspect the harness and connector
NG
- Wiring breakage, harness short circuit
- Connector not connected properly

→ Repair or replace

OK

Inspect the engine revolution sensor. P13-48
Inspect the output voltage of alternator terminal L Gr 54
NG
- Wiring breakage, coil short circuit
- Installation faulty

→ Repair, adjust or replace

OK

Replace the pre-stroke control unit.

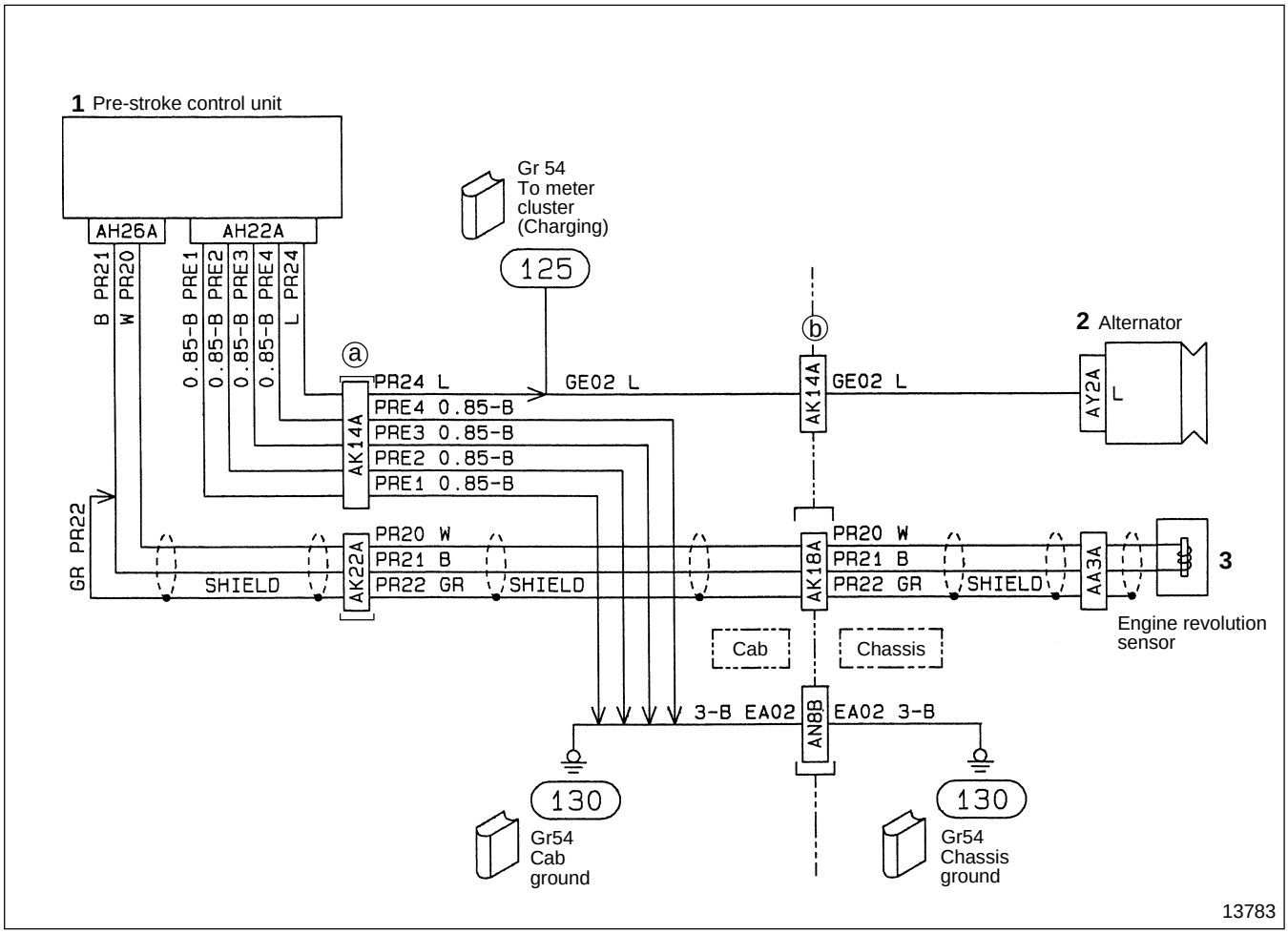

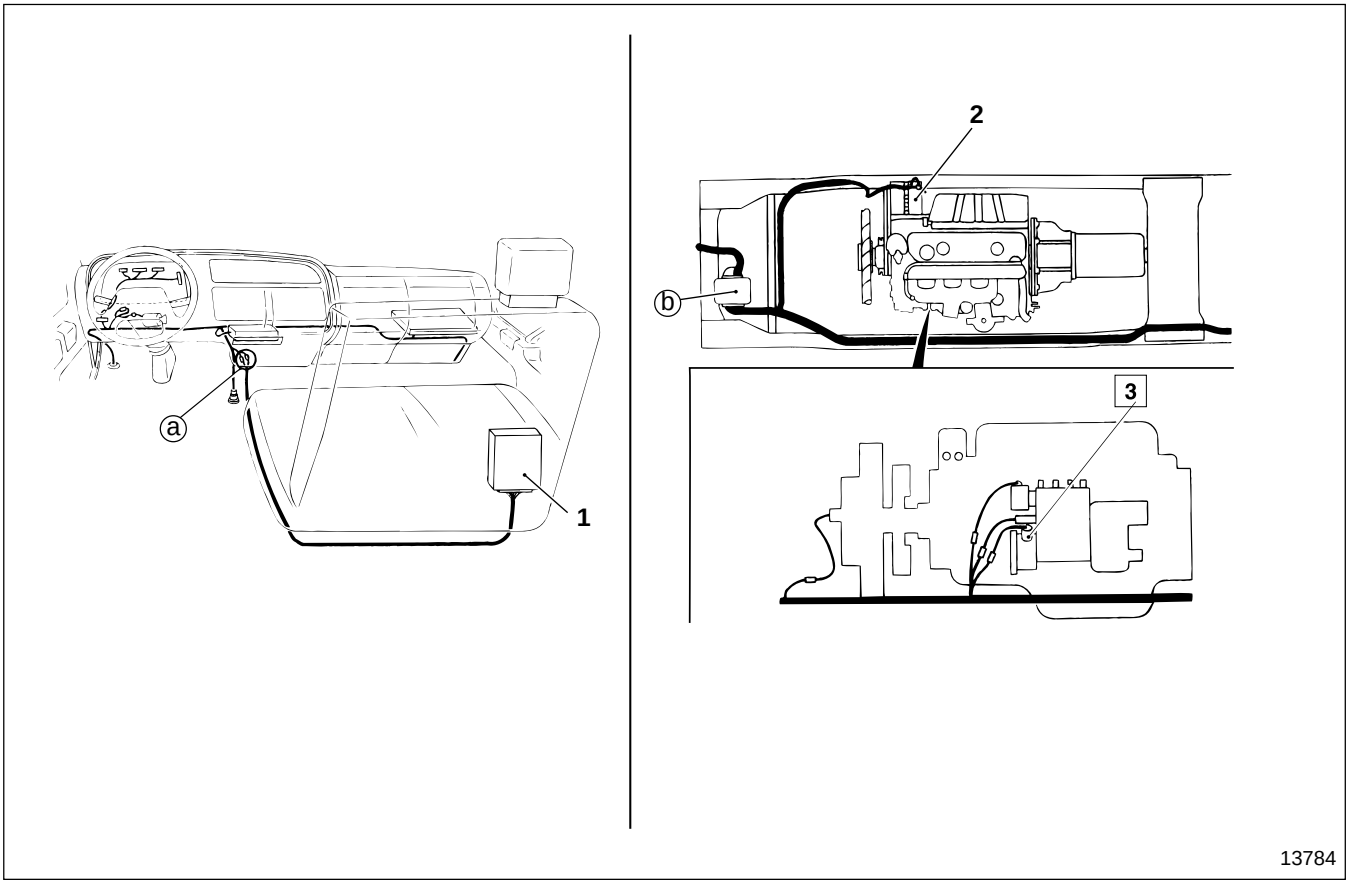

1 Pre-stroke control unit
2 Alternator
3 Engine revolution sensor

Service standards

Location	Maintenance item		Standard value	Limit	Remedy
3	Resistance value of engine revolution sensor (at 25˚C {77˚F}) 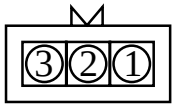 14013	① - ②	2.3±0.2 kΩ	—	Replace

Tightening torque

Unit : N·m {lbf.ft, kgf·m}

Location	Parts to be tightened	Tightening torque	Remarks
3	Engine revolution sensor	25 to 34 {18 to 25, 2.5 to 3.5}	—

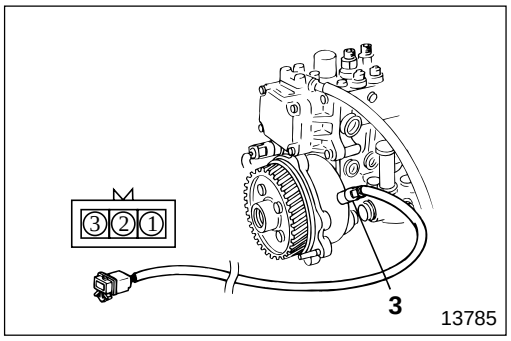

◆ Service procedure

3 **Inspection of engine revolution sensor**

- Measure the resistance between terminals ① and ②.
- If the measured value deviates from the standard value, replace engine revolution sensor **3**.

NOTE

When the engine revolution sensor is replaced, tighten at specified torque.

M E M O

PRE-STROKE CONTROL INJECTION PUMP SYSTEM

Diagnosis code 12 Pre-stroke servo system faulty

Inspect the harness and connector — NG → • Wiring breakage, harness short circuit • Connector not connected properly → Repair or replace

OK

Inspect the pre-stroke actuator 🕮 P13-52 — NG → • Copper plate mounting nut loose • Wiring breakage, coil short circuit • Rotor rotation faulty • Spring faulty → ★ Repair, adjust or replace

OK

★ Inspect the injection pump body — NG → Timing rod, timing sleeve faulty → ★ Repair, adjust or replace

OK

Replace the pre-stroke control unit.

★ : To be carried out by a ZEXEL service station

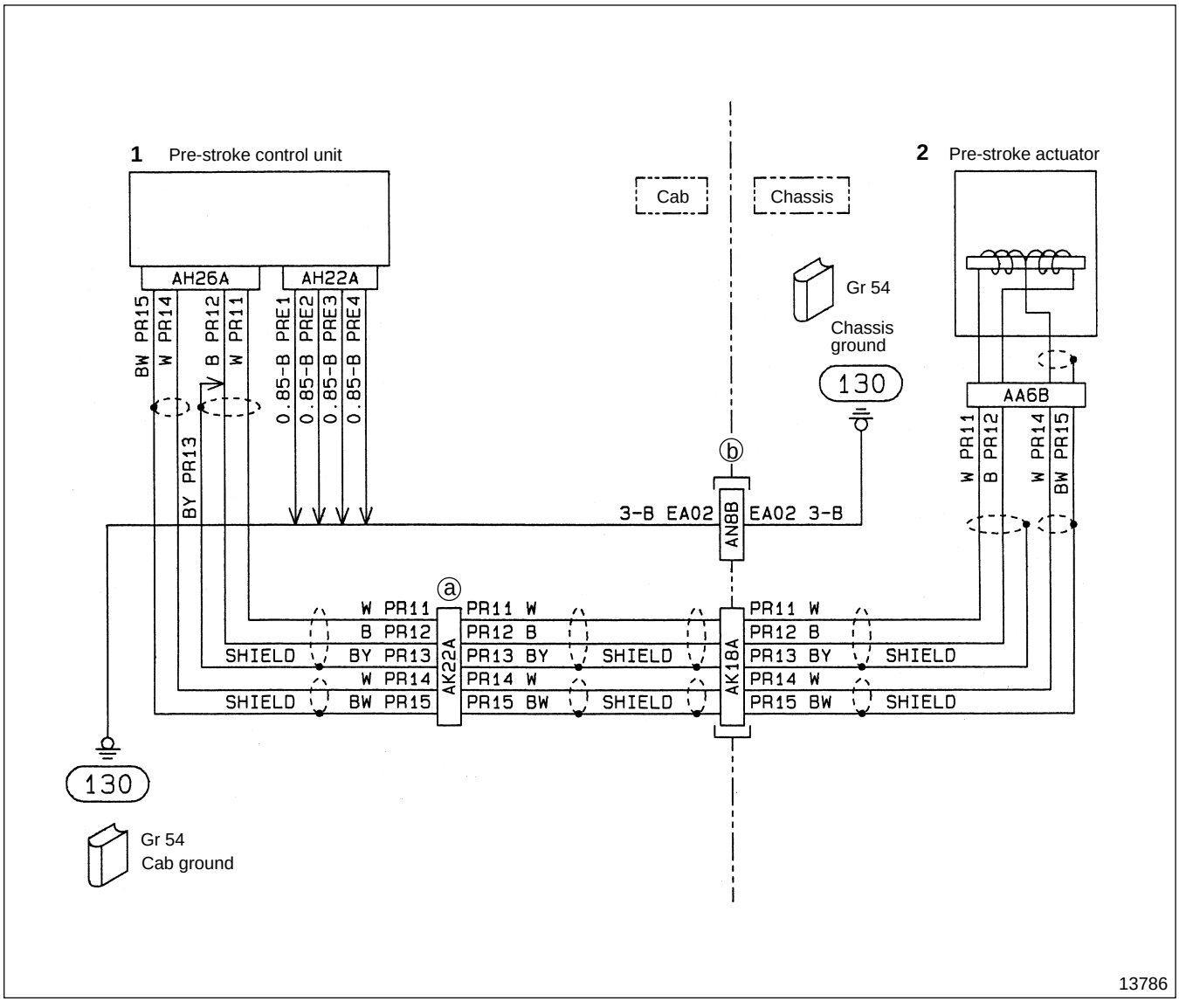

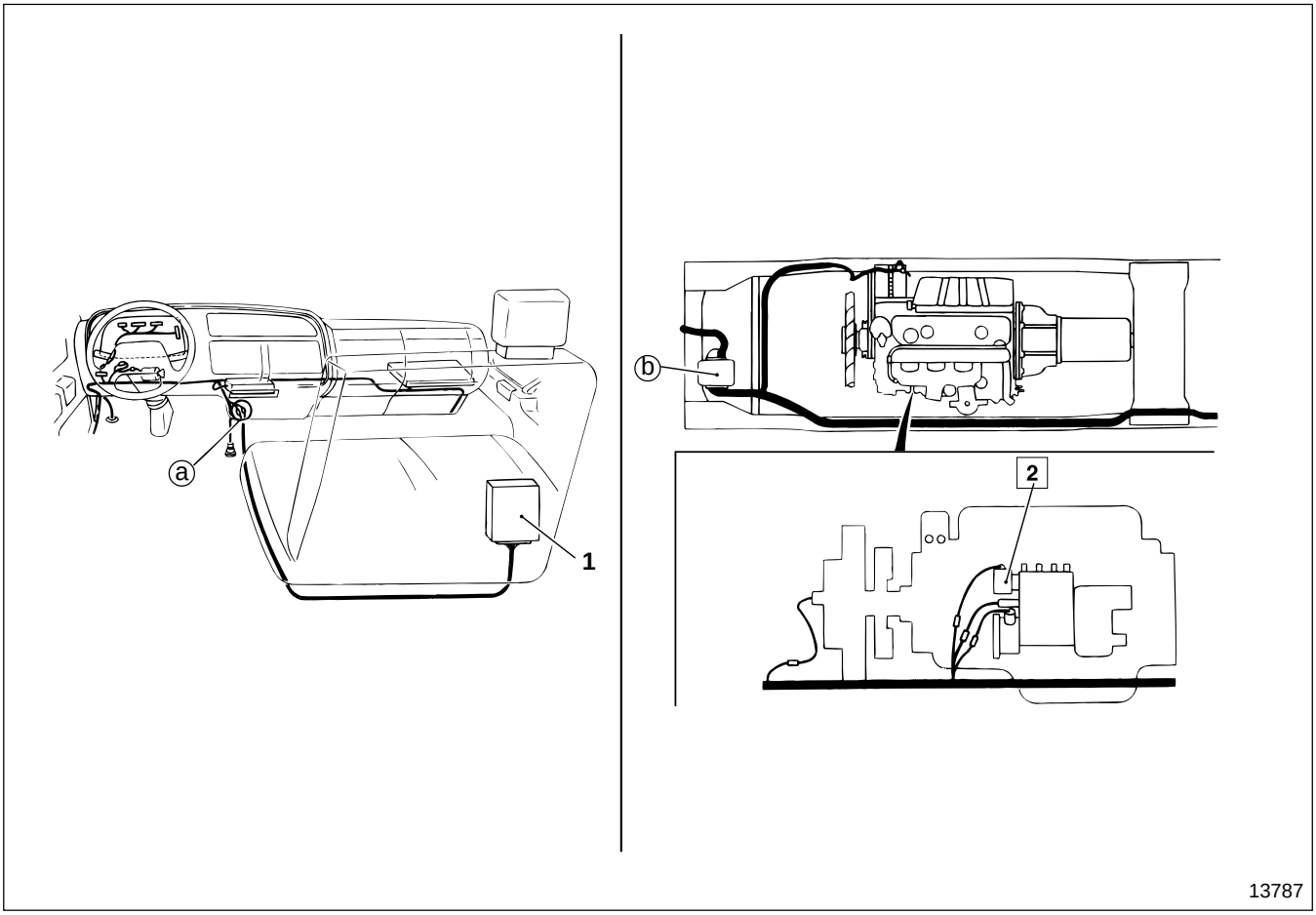

1 Pre-stroke control unit
2 Pre-stroke actuator

Service standards

Location	Maintenance item		Standard value	Limit	Remedy
2	Resistance value of pre-stroke actuator (at connector point) 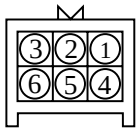 13714	②-③	5.5 to 6.1 Ω	—	Replace (to be carried out by a ZEXEL service station)
		①-③	11.0 to 12.2 Ω	—	
		①-②	5.5 to 6.1 Ω	—	
		④-⑤	1.0 to 1.3 Ω	—	
	Resistance value of pre-stroke actuator (Actuator body) 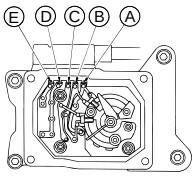 13789	ⒶⒸ	11.0 to 12.2 Ω	—	Replace (to be carried out by a ZEXEL service station)
		ⒷⒸ	5.5 to 6.1 Ω	—	
		ⒶⒷ	5.5 to 6.1 Ω	—	
		ⒹⒺ	1.0 to 1.3 Ω	—	

◆ Service procedure

2 Inspection of pre-stroke actuator

Inspect the following points and if any fault is found, have the unit inspected and repaired by a ZEXEL service station.

NOTE

Inspection of pre-stroke actuator 2 must be carried out when the engine is cold.

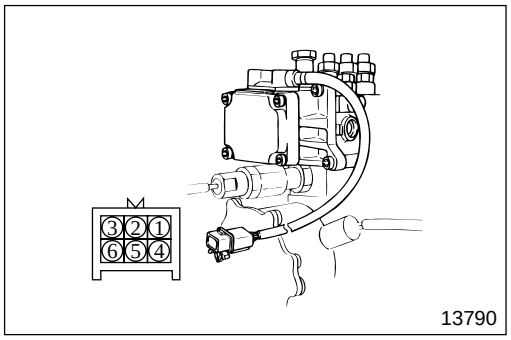

13790

(1) Inspection at connector point

- Measure resistance between terminals ②-③, ①-③, ①-② and ④-⑤.

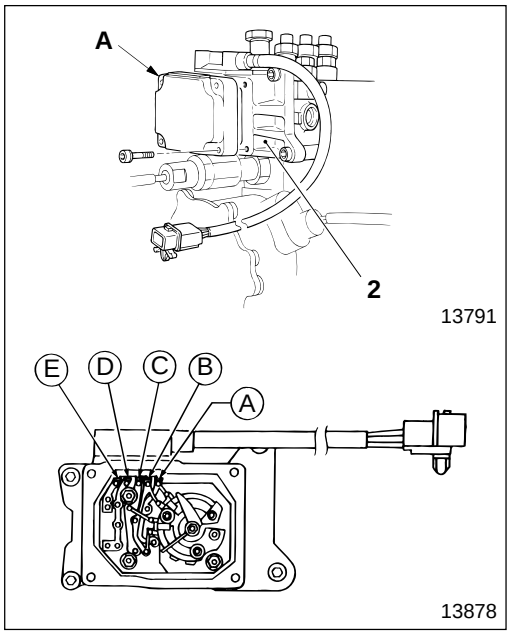

13791
13878

(2) Inspection of pre-stroke actuator body

- Remove cover **A** from pre-stroke actuator **2**.

CAUTION ⚠

- **Remove only cover A from pre-stroke actuator 2, never remove the actuator body itself. If the actuator is removed, it requires special tools to replace and adjust it.**
- **When removing cover A, do not exert excessive force on pre-stroke actuator 2 with your hands or by treading on it, etc.**

- Measure resistance between terminals Ⓐ-Ⓒ, Ⓑ-Ⓒ, Ⓐ-Ⓑ and Ⓓ-Ⓔ.

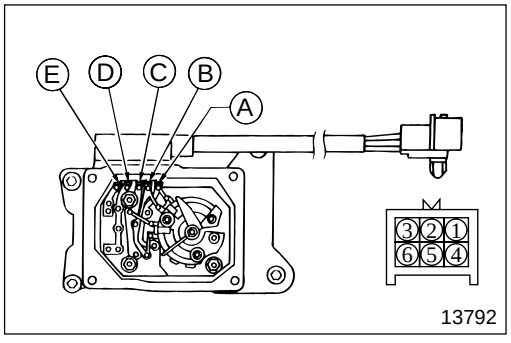

13792

(3) Inspection of continuity between pre-stroke actuator and connector

Make sure that continuity exists between terminals as listed in the table below.

Connector terminal	Pre-stroke actuator body	Application
④	Ⓓ	Pre-stroke actuator driving power source ⊖
⑤	Ⓔ	Pre-stroke actuator driving power source ⊕
⑥	GND	Shield
①	Ⓒ	Pre-stroke position sensor (GND)
②	Ⓑ	Pre-stroke position sensor (MDL)
③	Ⓐ	Pre-stroke position sensor (OSC)

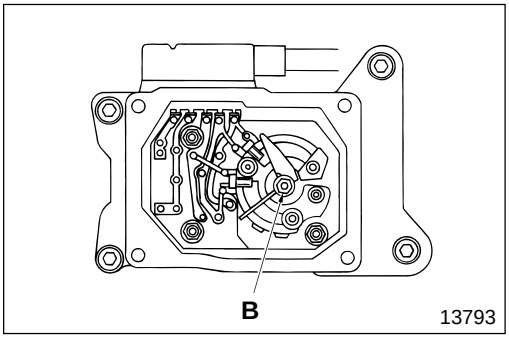

(4) Inspection of copper plate mounting nut

Check that copper plate mounting nut **B** was not loosened when the cover of pre-stroke actuator **2** was removed.
If nut **B** is loose, tighten it.

Diagnosis code 13 Pre-stroke position sensor faulty

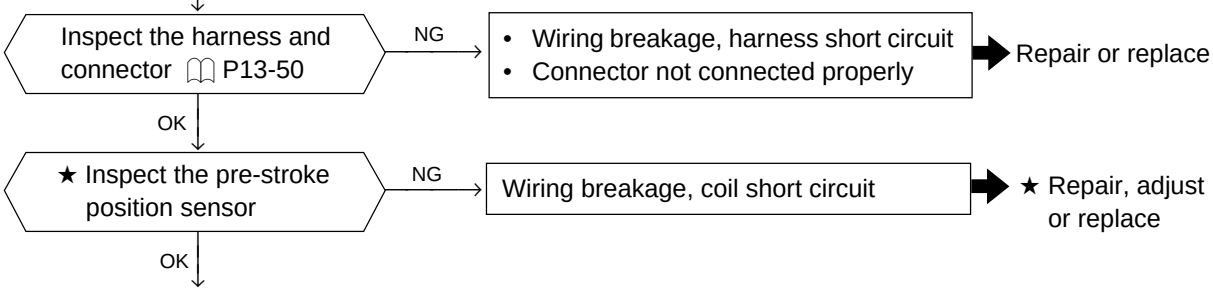

★ : To be carried out by a ZEXEL service station

Diagnosis code 15 Engine revolution sensor faulty
(Wiring breakage error : No output signal transmitted by the sensor)

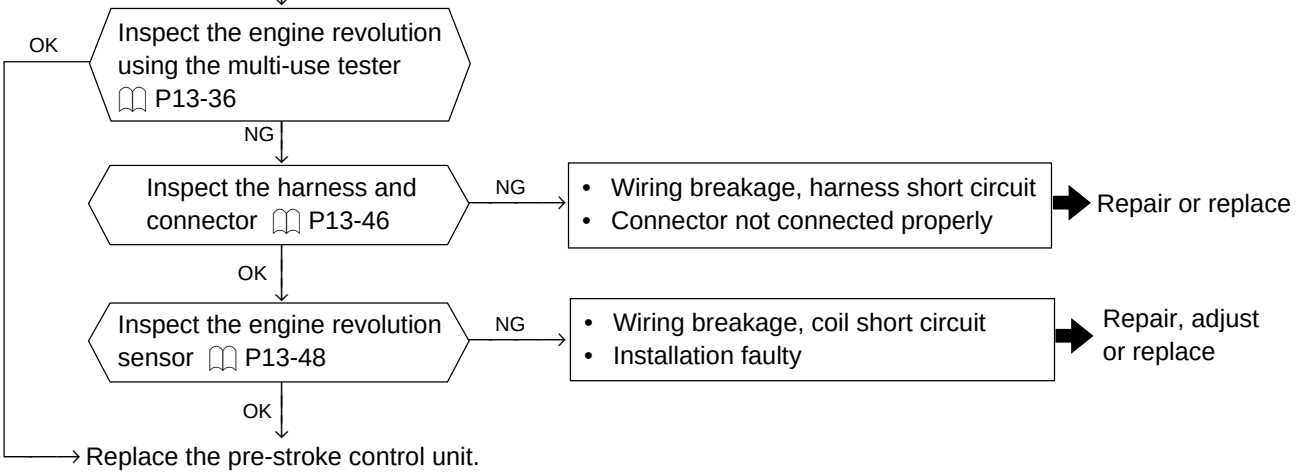

PRE-STROKE CONTROL INJECTION PUMP SYSTEM

Diagnosis code 21 Water temperature sensor faulty

- Inspect the engine coolant temperature using the multi-use tester 🕮 P13-36
  - OK → Replace the pre-stroke control unit.
  - NG →
- Inspect the harness and connector
  - NG →
    - Wiring breakage, harness short circuit
    - Connector not connected properly

    → Repair or replace
  - OK →
- Inspect the water temperature sensor 🕮 P13-55
  - NG →
    - Wiring breakage, coil short circuit
    - Installation faulty

    → Repair, adjust or replace
  - OK → Replace the pre-stroke control unit.

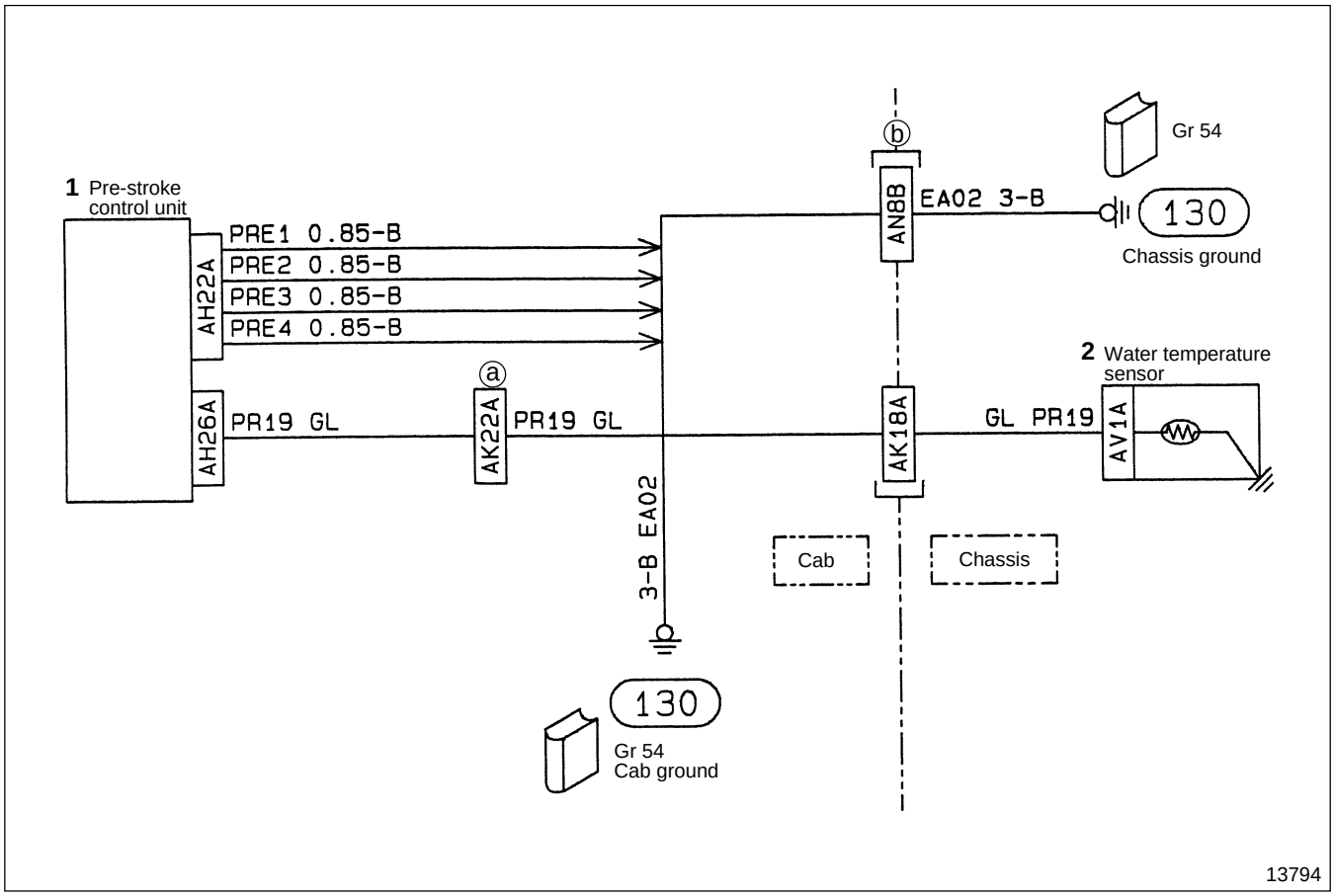

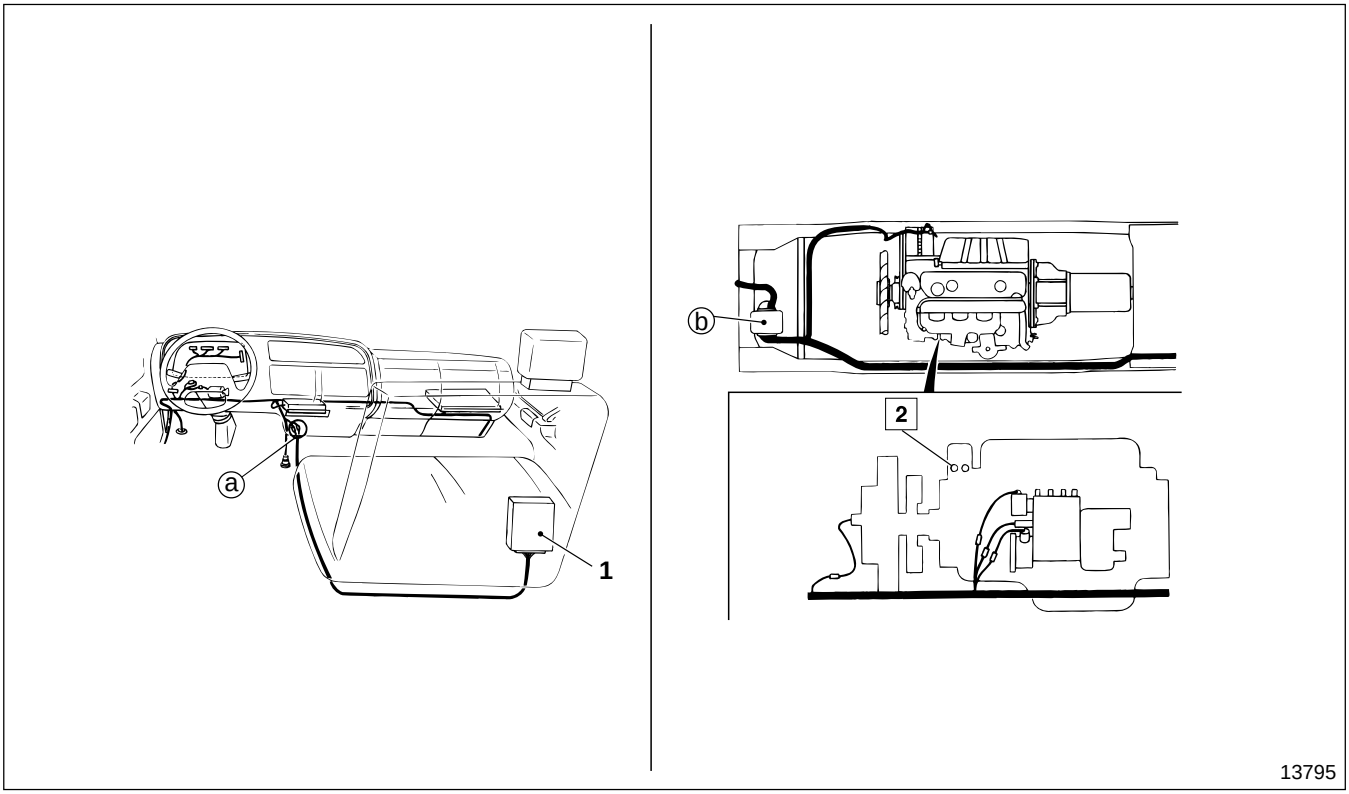

1 Pre-stroke control unit
2 Water temperature sensor

Service standards

Location	Maintenance item		Standard value	Limit	Remedy
2	Resistance value of water temperature sensor	20˚C {68˚F}	3250 Ω	—	Replace
		40˚C {104˚F}	1500 Ω	—	Replace
		60˚C {140˚F}	620±62 Ω	—	Replace

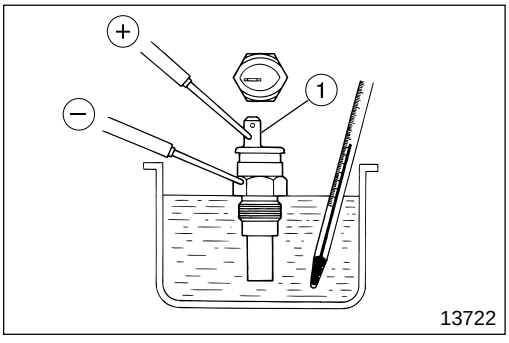

◆ Service procedure

2 **Inspection of water temperature sensor**

- Place water temperature sensor **2** in engine oil in a container.
- Raise the oil temperature to the specified values and stir the oil.
- Measure the resistance between terminal ① and the body.
- If the measured value deviates from the standard value, replace water temperature sensor **2**. Gr 14

PRE-STROKE CONTROL INJECTION PUMP SYSTEM

Diagnosis code 22 Control rod position sensor faulty

- Inspect the control rod position sensor power output voltage using the multi-use tester 🕮 P13-36
  - OK → Replace the pre-stroke control unit.
  - NG → Inspect the harness and connector
    - NG → • Wiring breakage, harness short circuit • Connector not connected properly → Repair or replace
    - OK → Inspect the control rod position sensor 🕮 P13-56
      - NG → • Wiring breakage, coil short circuit • Installation faulty → ★ Repair, adjust or replace
      - OK → Replace the pre-stroke control unit.

★ : To be carried out by a ZEXEL service station

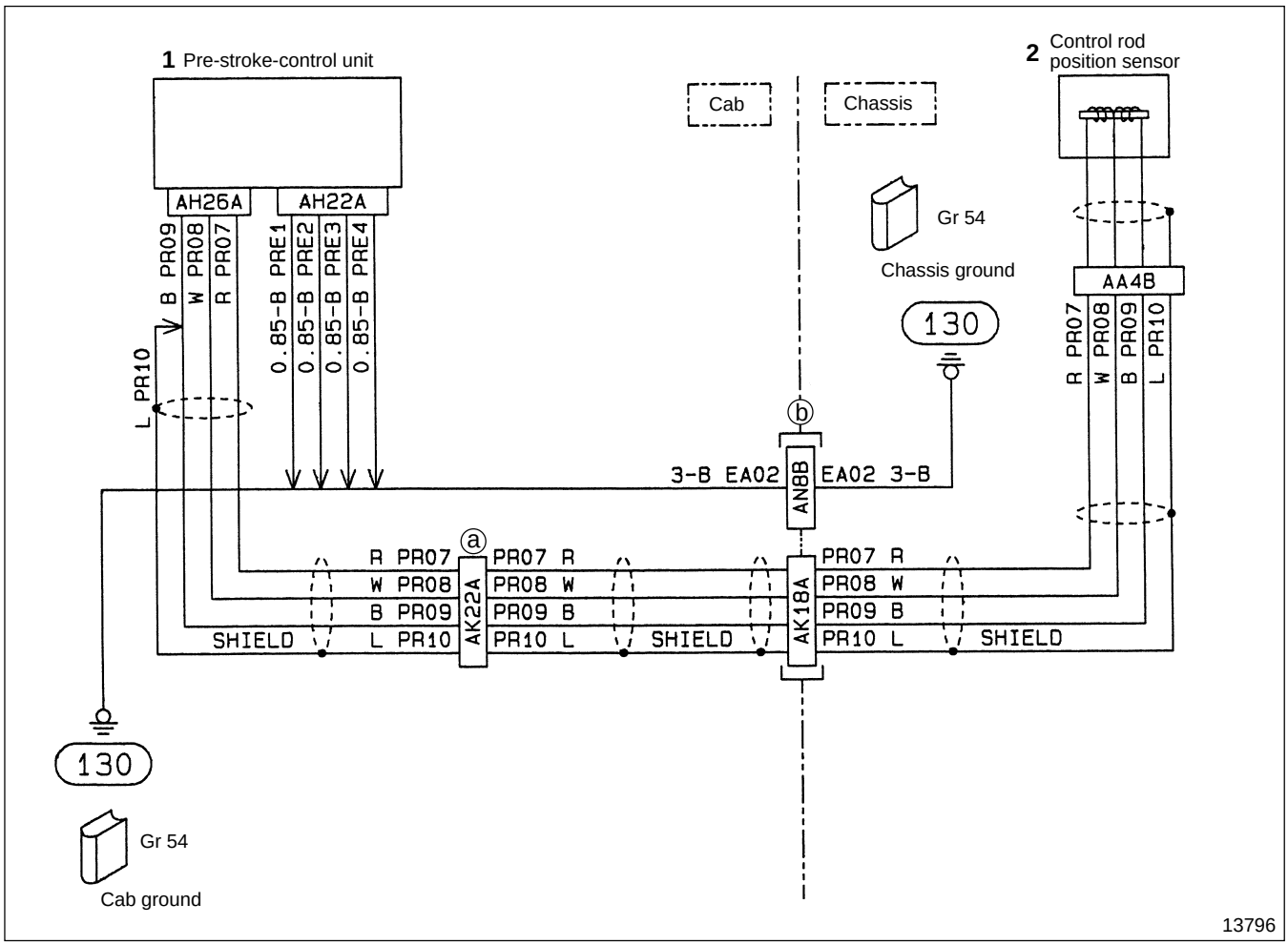

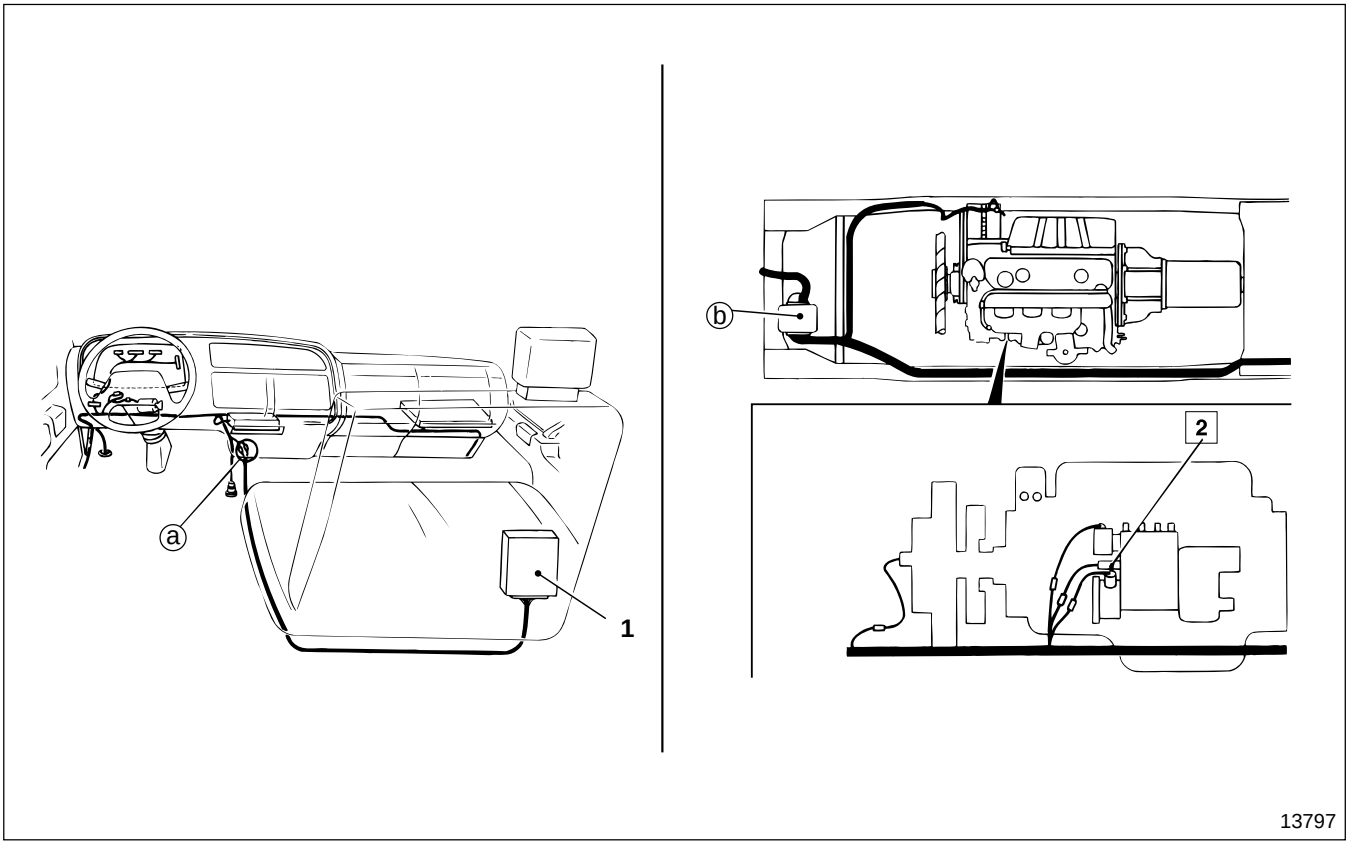

1 Pre-stroke control unit
2 Control rod position sensor

Service standards

Location	Maintenance item		Standard value	Limit	Remedy
2	Resistance value of control rod position sensor 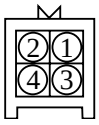 13725	①-④	92.5 to 101.5 Ω	—	Replace (To be carried out by a ZEXEL service station)
		①-③	92.5 to 101.5 Ω	—	
		③-④	185 to 203 Ω	—	

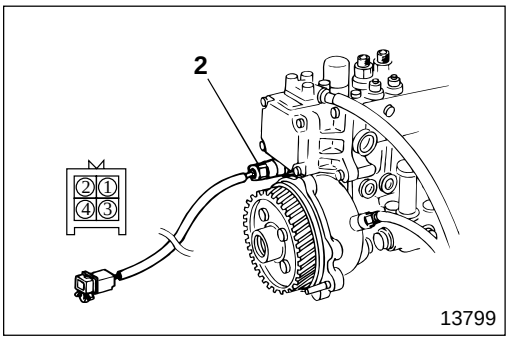

◆ Service procedure

2 **Inspection of control rod position sensor**

- Measure resistance between terminals ①-④, ①-③ and ③-④.
- If the measured value deviates from the standard value, replace control rod position sensor **2**.
- Replacement work is to be carried out by a ZEXEL service station.

PRE-STROKE CONTROL INJECTION PUMP SYSTEM

Diagnosis code 41 Boost air temperature sensor faulty

- Inspect the engine intake air temperature using the multi-use tester 🕮 P13-36
  - OK → Replace the pre-stroke control unit.
  - NG → Inspect the harness and connector
    - NG → • Wiring breakage, harness short circuit • Connector not connected properly → Repair or replace
    - OK → Inspect the boost air temperature sensor 🕮 P13-59
      - NG → • Wiring breakage, coil short circuit • Installation faulty → Repair, adjust or replace
      - OK → Replace the pre-stroke control unit.

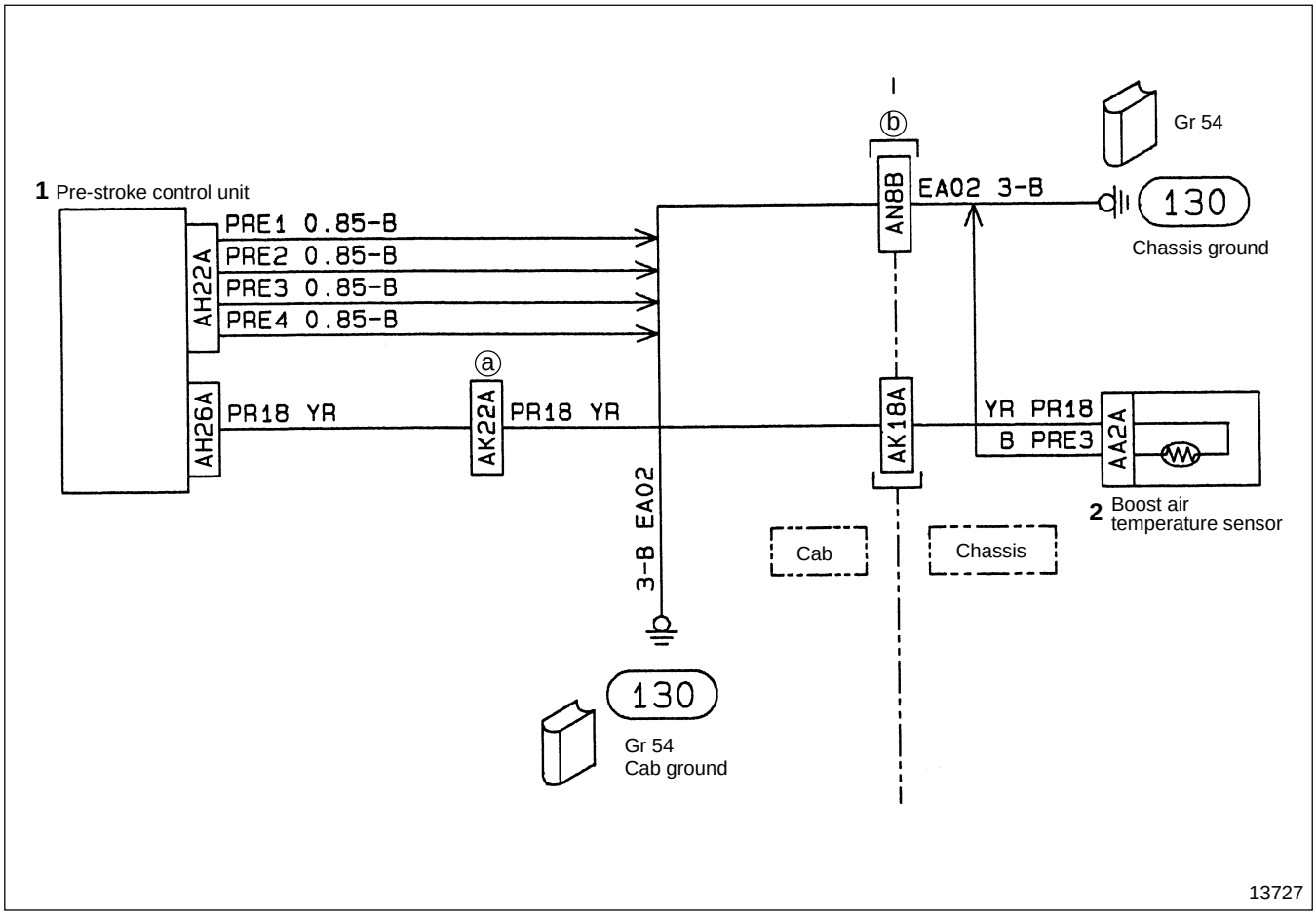

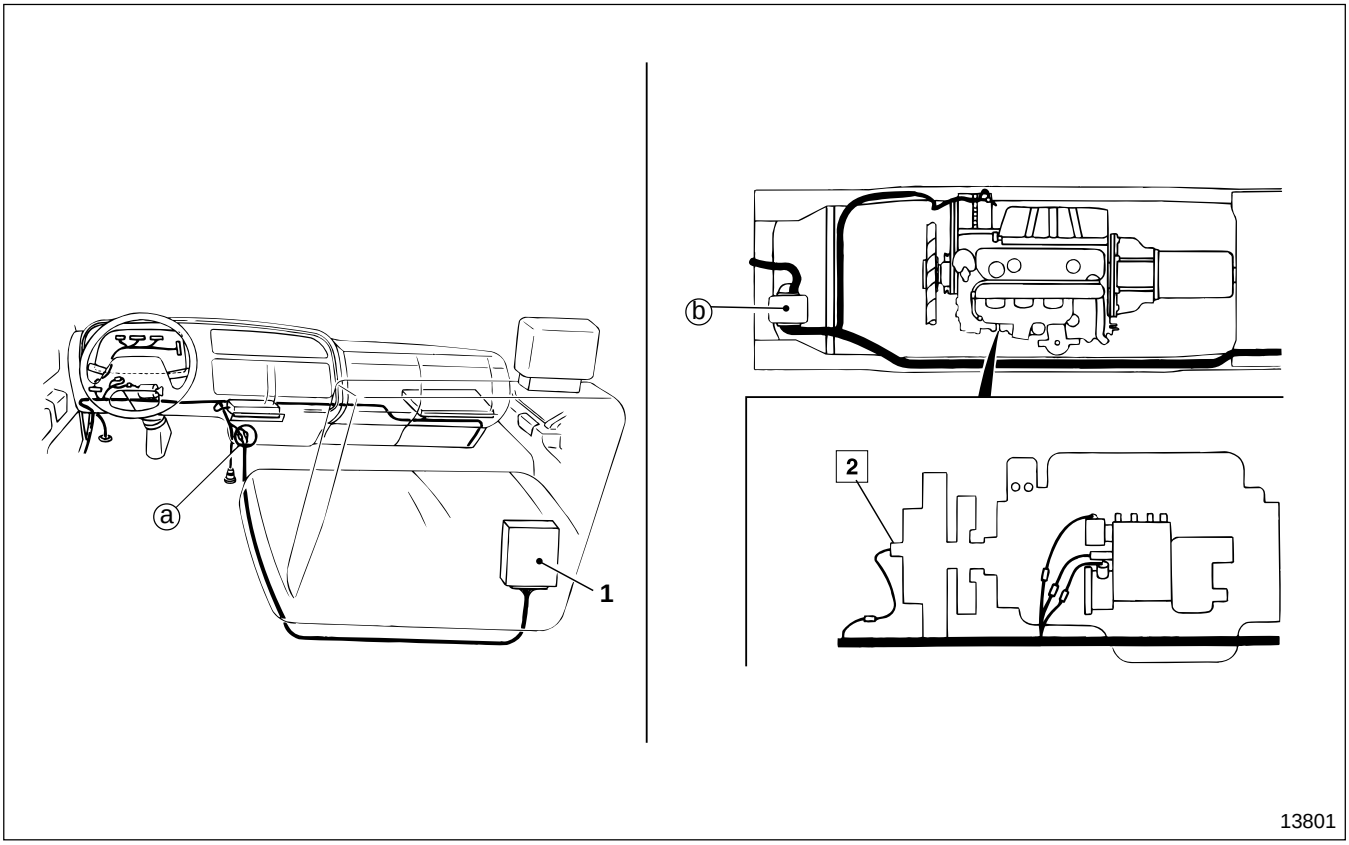

1 Pre-stroke control unit
2 Boost air temperature sensor

Service standards

Location	Maintenance item		Standard value	Limit	Remedy
2	Resistance value of boost air temperature sensor	0˚C {32˚F}	5880±588 Ω	—	Replace
		20˚C {68˚F}	2455±245 Ω	—	Replace
		80˚C {176˚F}	322±32 Ω	—	Replace

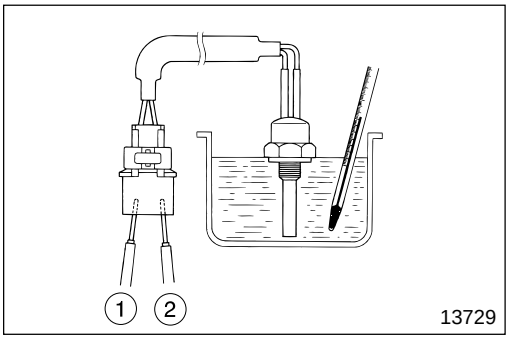

◆ Service procedure

2 **Inspection of boost air temperature sensor**

- Place boost air temperature sensor **2** in rape seed oil in a container.
- Raise the oil temperature to the specified values and stir the oil.
- Measure the resistance between terminals ① and ②.
- If the measured value deviates from the standard value, replace boost air temperature sensor **2**. Gr 15

Inspection of Temporary Faults

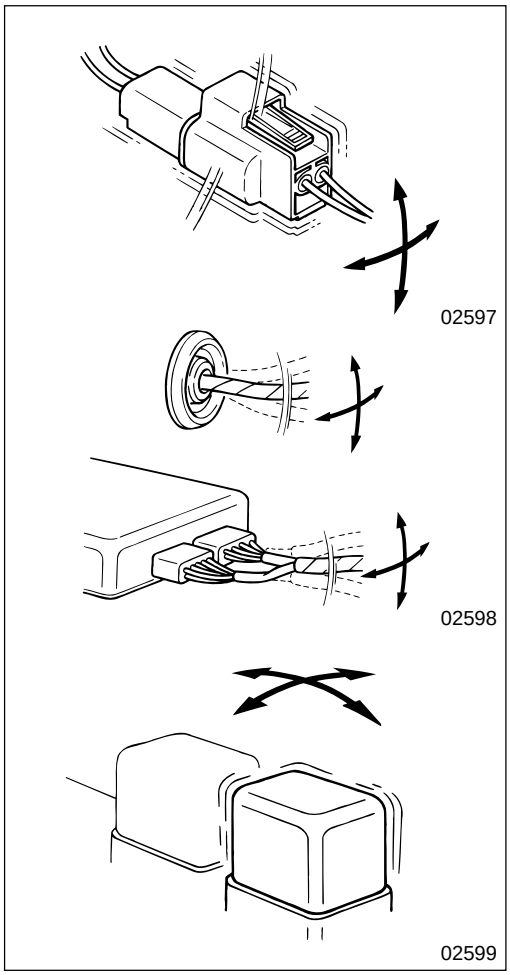

Temporary faults often occur under certain conditions. So identifying those conditions helps to find possible causes. To find the conditions under which temporary faults occurred, you need to reproduce the faults after interviewing customers in detail about actual driving conditions, weather, frequency of occurence and fault phenomena.
Then determine if the faults were caused by vibration, temperature or other possible elements depending on the actual conditions identified.
If vibration is suspected as a possible cause, inspect individual connectors as follows to check if the fault will occur:

- Shake the connector gently in all four directions of the arrows as illustrated.
- Shake the wiring harness gently in all four directions of the arrows as illustrated.
- Wiggle each sensor or piece of equipment by hand.
- Gently shake the wiring harnesses near movable parts such as suspensions.

The inspection subjects include possible causes related to the diagnosis code outputs and faults, as well as the connectors and other parts in the inspection procedure.

M E M O

ENGINE CONTROL

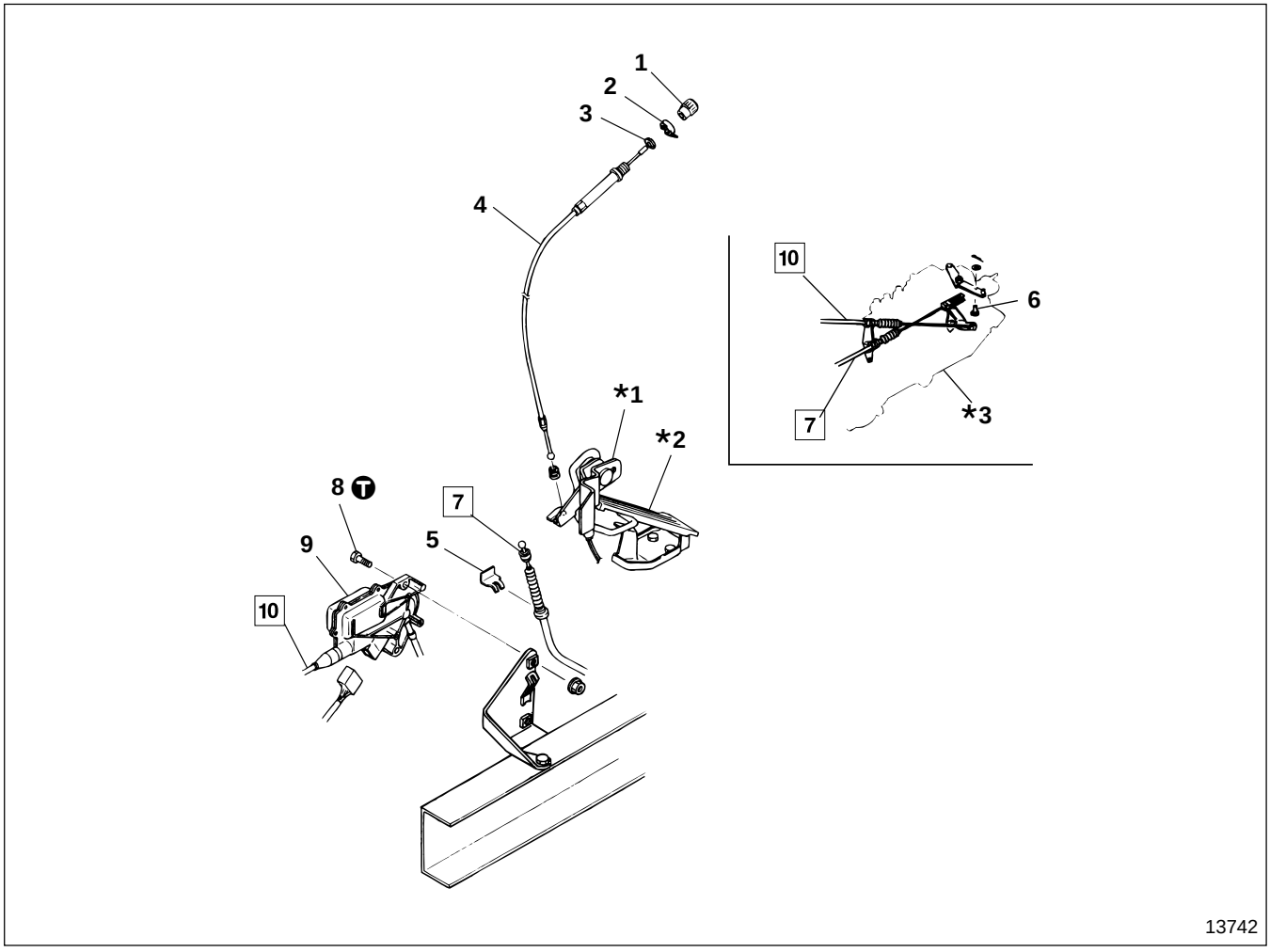

● **Disassembly sequence**

1 Idling control knob
2 Clip
3 Nut
4 Idling control cable
5 Cable clip
6 Clevis pin
7 Accelerator control cable
8 Bolt
9 Fuel-cut motor Gr 54
10 Engine stop cable

***1** : Accelerator arm assembly P13-66
***2** : Accelerator pedal assembly P13-65
***3** : Injection pump assembly P13-72
***4** : Frame Gr 41

● **Assembly sequence**

Follow the disassembly sequence in reverse.

CAUTION

Be sure when laying and routing cables, not to let them contact metal edges.

Tightening torque

Unit : N·m {lbf.ft, kgf·m}

Location	Parts to be tightened	Tightening torque	Remarks
8	Bolt (Fuel-cut motor mounting)	4.9 to 5.9 {3.6 to 4.3, 0.5 to 0.6}	—

◆ Service procedure

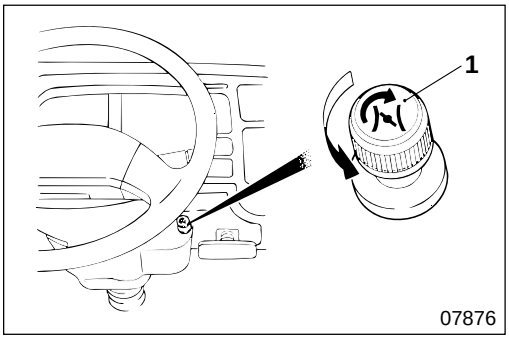

4 Installation of idling control cable

- Rotate idling control knob **1** counterclockwise until the inner cable protrudes at its maximum.

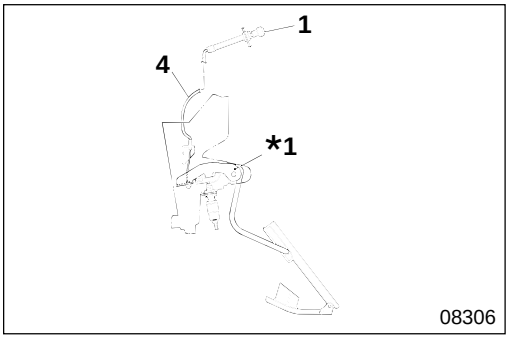

- While maintaining this state, install accelerator arm assembly ***1**.

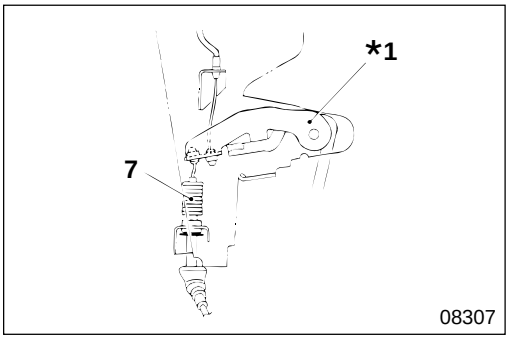

7 Accelerator control cable

[Installation]

- Mount accelerator control cable **7** to accelerator arm assembly ***1**.

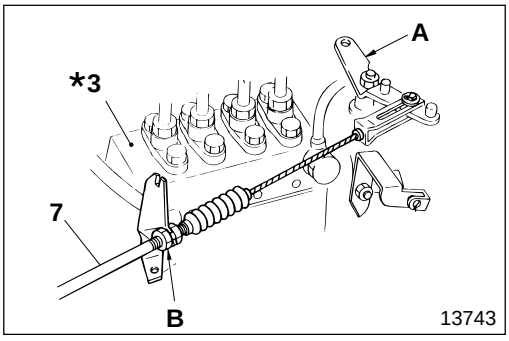

- Make sure that the accelerator pedal does not move by turning idling control knob **1** clockwise as far as it will go.
- Mount the engine end of accelerator control cable **7** to control lever **A** of injection pump assembly ***3**.
- Tighten the accelerator control cable **7** using adjustor nut **B** so that the accelerator pedal does not move.

NOTE

When mounting accelerator control cable 7, do not move control lever A.

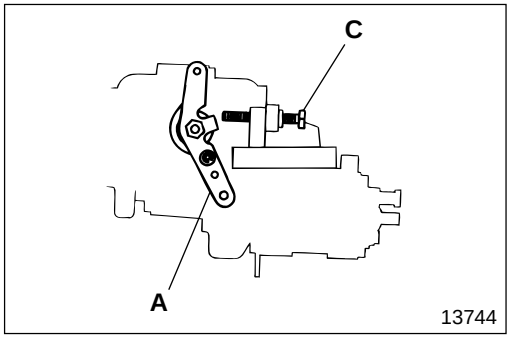

[Adjustment]

- Turn the starter switch ON, and press down on the accelerator pedal until control lever **A** hits stopper bolt **C**.

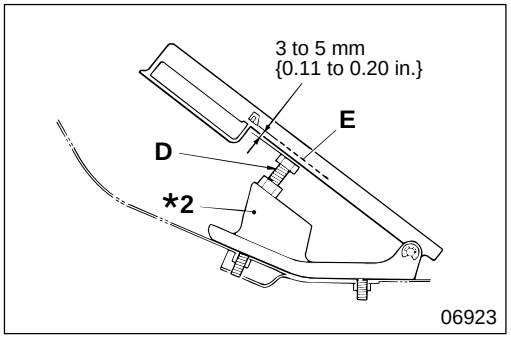

- Adjust the height of stopper bolt **D** of accelerator pedal assembly ***2** in such a manner that the clearance between stopper bolt contact surface **E** and the stopper bolt conforms to the specified value.

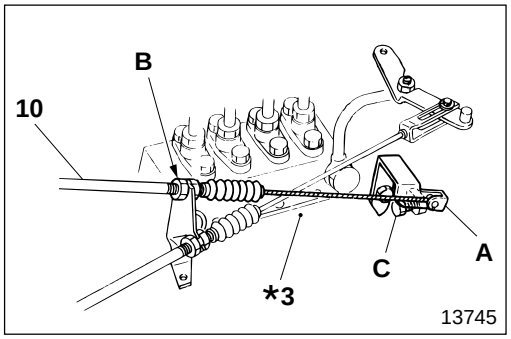

10 **Installation of engine stop cable**

- Mount engine stop cable **10** to stop lever **A** of injection pump assembly ***3**.
- Turn the starter switch to ACC or LOCK. Fasten using mounting nut **B** while keeping stop lever **A** pressed against stopper bolt **C**.
- After installation, start the engine using the starter switch, and make sure that the engine stops when the switch is turned to ACC.

Accelerator Pedal Assembly

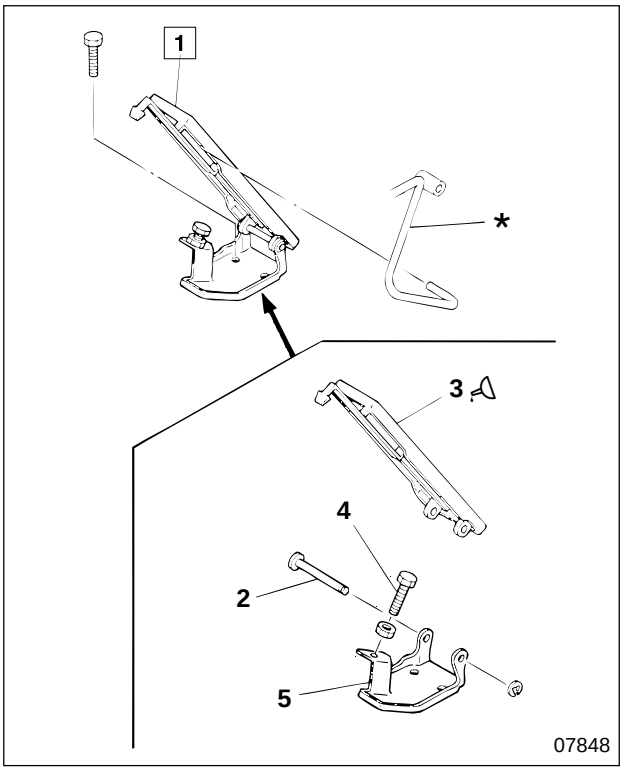

● **Disassembly sequence**

1 Accelerator pedal assembly
2 Clevis pin
3 Accelerator pedal
4 Stopper bolt
5 Accelerator pedal bracket

***** : Accelerator arm assembly 🕮 P13-66

● **Assembly sequence**

Follow the disassembly sequence in reverse.

Lubricant

Location	Points of application	Kinds	Quantity
3	Slide-contacting surfaces of accelerator pedal and bracket	Chassis grease [NLGI No.1 (Ca soap)]	As required

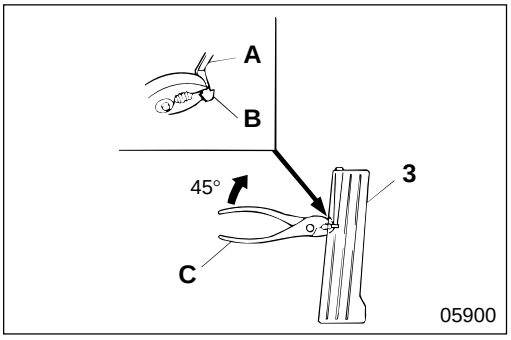

◆ Service procedure

1 **Removal of accelerator pedal assembly**

Pinch hook **B** of stopper **A** of accelerator pedal **3** using pliers **C** and rotating approximately 45° pull out the stopper towards the front of the vehicle.

CAUTION⚠

Take care not to damage stopper A itself during removal, do not pull it out too forcibly.

Accelerator Arm Assembly

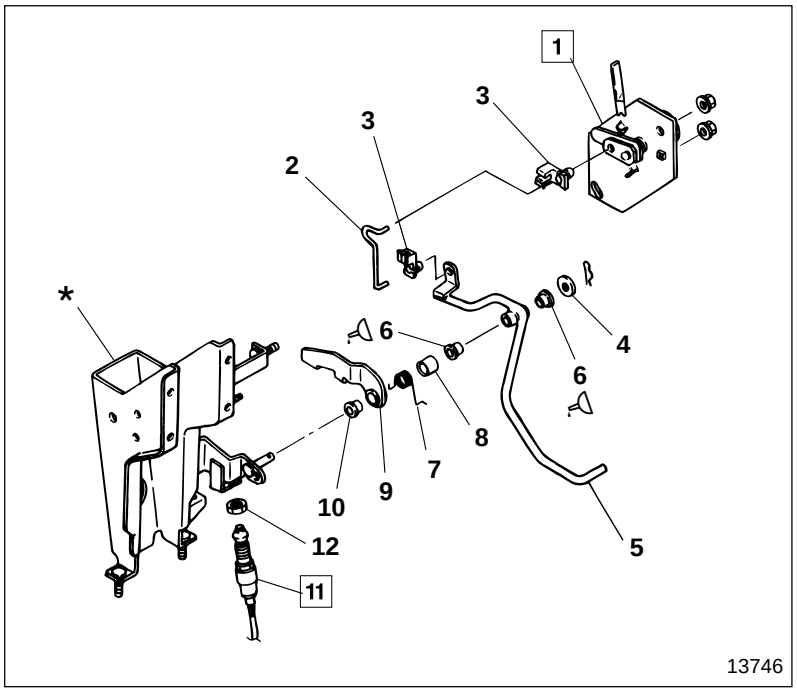

● **Disassembly sequence**

1 Accelerator sensor Gr 54
< Automatic transmission >
2 Sensor rod < Automatic transmission >
3 Bushing linkage
< Automatic transmission >
4 Washer
5 Accelerator arm
6 Bushing
7 Spring
8 Collar
9 Accelerator lever
10 Bushing
11 Accelerator switch Gr 35, 54
12 Nut

***** : Support assembly Gr 35

● **Assembly sequence**

Follow the disassembly sequence in reverse.

Lubricant

Location	Points of application	Kinds	Quantity
6	Slide-contacting surfaces of bushing and support assembly	Chassis grease [NLGI No.1 (Ca soap)]	As required

◆ Service procedure

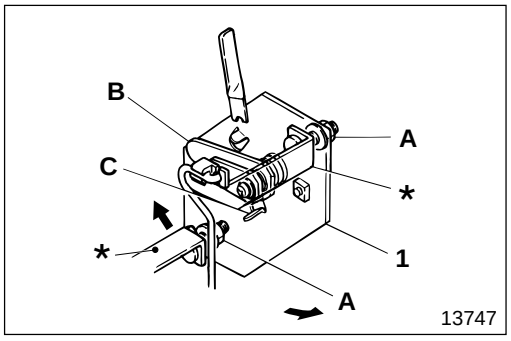

1 **Installation of accelerator sensor**

- Install accelerator sensor **1** onto support assembly ***** and fasten temporarily with nut **A**.
- Adjust accelerator sensor **1** by moving it so lever **B** comes into contact with idling stopper **C** during idling operation.
- Tighten nut **A** after adjustment.

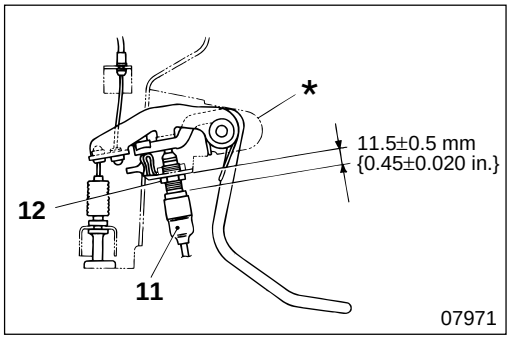

11 **Installation of accelerator switch**

- Screw in accelerator switch **11** and fasten with nut **12** in such a way that the clearance between the accelerator switch and support assembly ***** is set to the standard value.

- Inspect and adjust the exhaust brake system. Gr 35

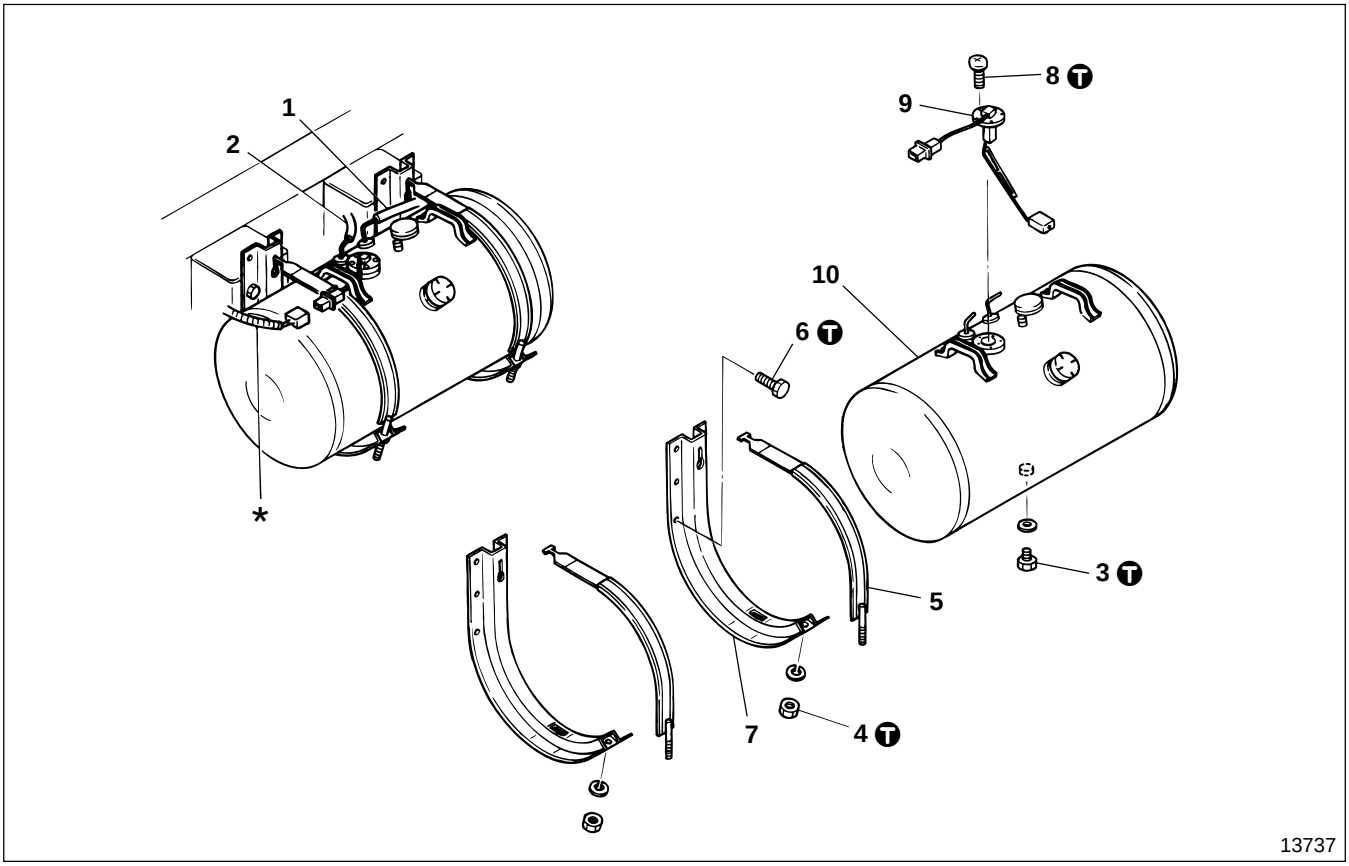

● **Work before removal**

WARNING

- **Keep naked lights away because of the risk of explosion.**
- **Wipe up any spilled fuel beacuase it can cause a fire.**

NOTE

Drain fuel before working on the job.

● **Removal sequence**

1 Suction hose
2 Return hose
3 Drain plug
4 Nut
5 Fuel tank band
6 Bolt
7 Fuel tank bracket
8 Screw
9 Fuel gauge unit Gr 54
10 Fuel tank

* : Chassis harness Gr 54

● **Installation sequence**

Follow the removal sequence in reverse.

T Tightening torque

Unit : N·m {lbf.ft, kgf·m}

Location	Parts to be tightened	Tightening torque	Remarks
3	Drain plug	59 to 98 {43 to 72, 6 to 10}	—
4	Nut (Fuel tank band mounting)	5.9 to 9.8 {4.3 to 7.2, 0.6 to 1.0}	—
6	Bolt (Fuel tank bracket mounting)	59 to 78 {43 to 58, 6 to 8}	—
8	Screw (Fuel gauge unit mounting)	1.0 to 1.5 {0.7 to 1.1, 0.1 to 0.15}	—

WATER SEPARATOR

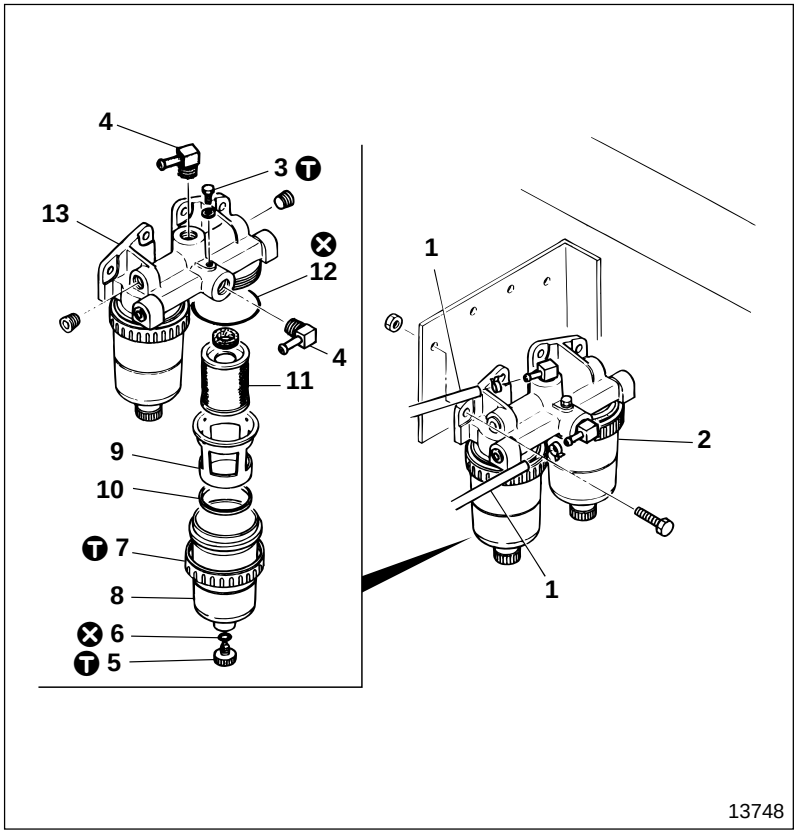

● **Disassembly sequence**

1 Fuel feed hose
2 Water separator assembly
3 Air vent plug
4 Connector
5 Drain plug
6 O-ring
7 Ring nut
8 Case
9 Baffle plate and screen assembly
10 Water level ring
11 Clean screen
12 O-ring
13 Head

⊗ : Non-reusable parts

WARNING

- **Fuel ignites easily. Do not get it near flame or heat.**
- **Wipe up any spilled gas oil because it can cause a fire.**

● **Assembly sequence**

Follow the disassembly sequence in reverse.

T Tightening torque

Unit : N·m {lbf.ft, kgf·m}

Location	Parts to be tightened	Tightening torque	Remarks
3	Air vent plug	7.8 to 12 {5.8 to 8.7, 0.8 to 1.2}	—
5	Drain plug	2.9 to 3.9 {2.2 to 2.9, 0.3 to 0.4}	—
7	Ring nut	5.9 to 7.8 {4.3 to 5.8, 0.6 to 0.8}	—

M E M O

FUEL FILTER

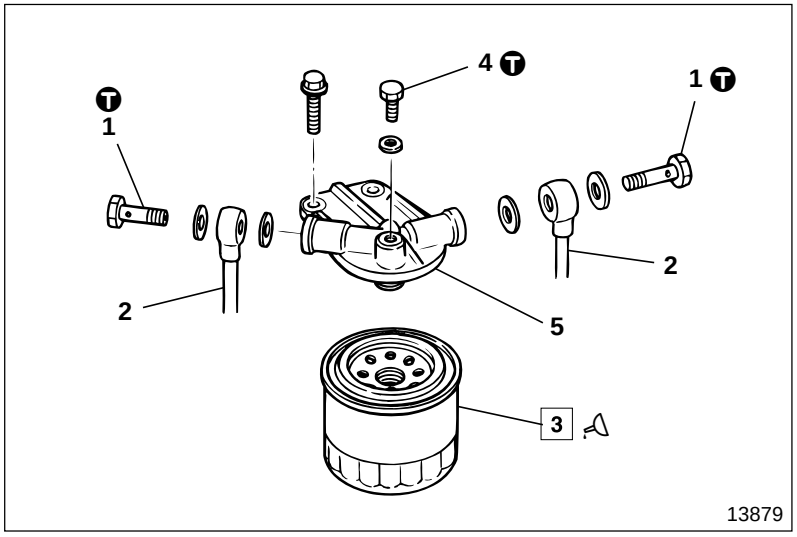

● **Disassembly sequence**

1 Eye bolt
2 Fuel feed pipe
3 Fuel filter
4 Air vent plug
5 Fuel filter head

● **Assembly sequence**

Follow the disassembly sequence in reverse.

Tightening torque

Unit : N·m {lbf.ft, kgf·m}

Location	Parts to be tightened	Tightening torque	Remarks
1	Eye bolt	25 to 34 {18 to 25, 2.5 to 3.5}	—
4	Air vent plug	7.8 to 12 {5.8 to 8.7, 0.8 to 1.2}	—

Lubricant

Location	Points of application	Kinds	Quantity
3	Gasket contact surfaces of fuel filter and fuel filter head	Engine oil	As required

Special tools

Unit : mm {in.}

Location	Tool name and shape	Part No.	Application
3	Filter wrench 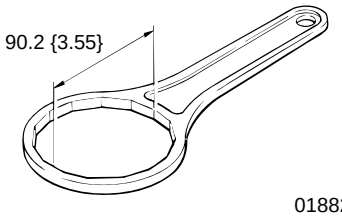 01882	MH061509	Removal of fuel filter

◆ Service procedure

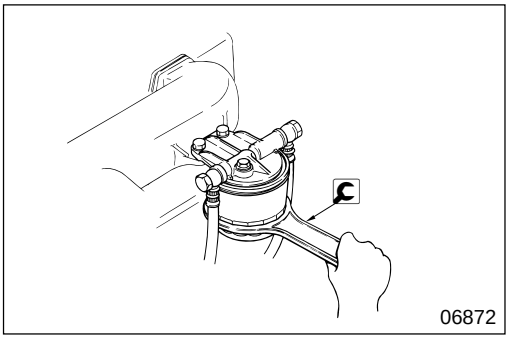

3 **Fuel filter**

WARNING⚠

- **Fuel ignites easily. Do not get it near flame or heat.**
- **Wipe up any spilled gas oil because it can cause a fire.**

[Removal]

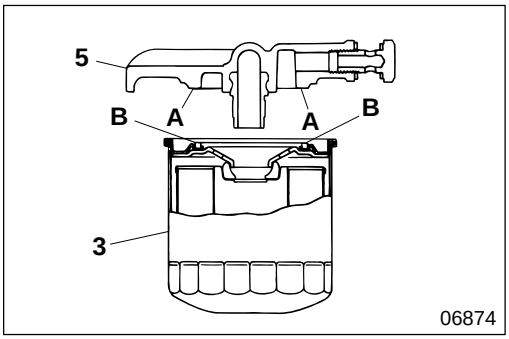

[Installation]

WARNING⚠

You must use a genuine replacement part filter because using unsuitable fuel filter 3 can cause fuel leakage and a fire.

- Install by tightening by three-quarters to one full turn after contact surface **A** of fuel filter head **5** contacts gasket **B** of fuel filter **3**. Be sure to tighten by hand.
- After installation, run the engine to check for fuel leakage.

INJECTION PUMP

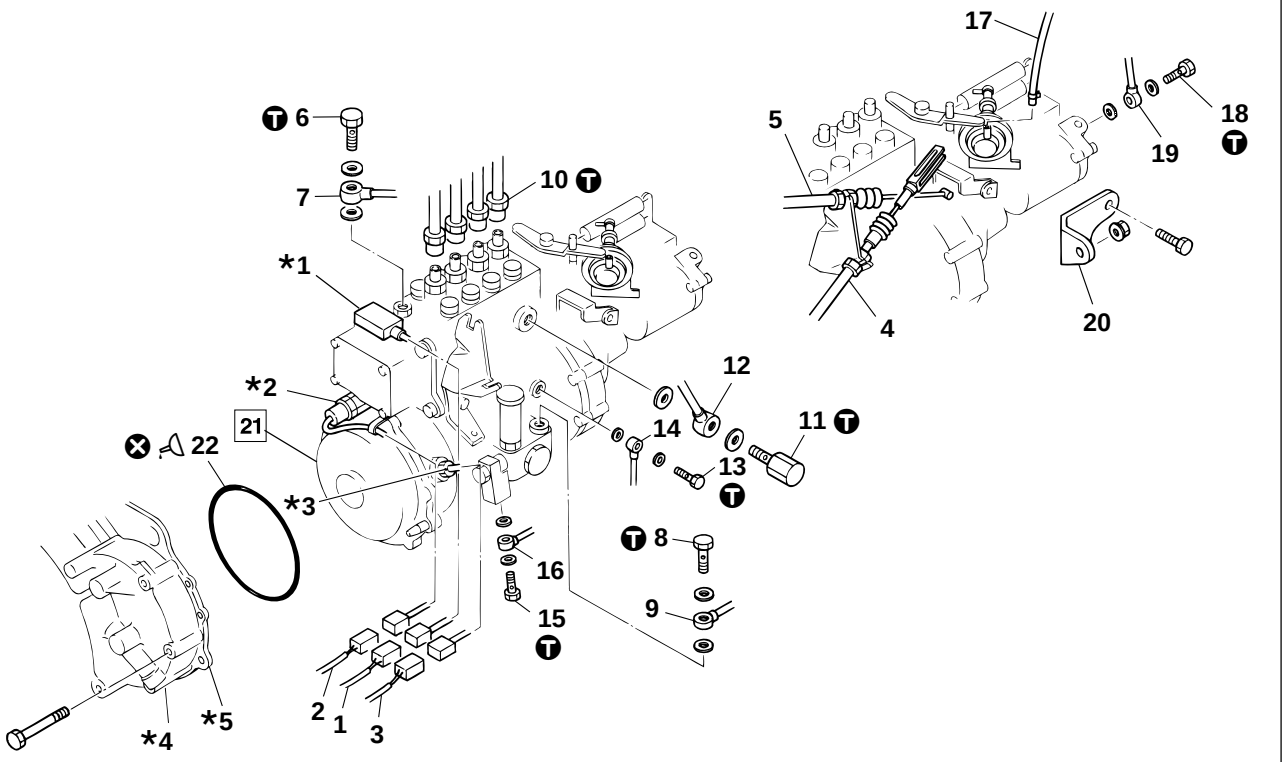

● **Removal sequence**

1 Harness (Pre-stroke actuator)
2 Harness (Control rod position sensor)
3 Harness (Engine revolution sensor)
4 Accelerator control cable P13-62
5 Engine stop cable P13-62
6 Eye bolt
7 Fuel feed pipe
8 Eye bolt
9 Fuel feed pipe
10 Injection pipe
11 Overflow valve
12 Fuel return pipe
13 Eye bolt
14 Oil pipe
15 Eye bolt
16 Fuel suction pipe
17 Vacuum hose
18 Eye bolt
19 Boost hose
20 Pump stay
21 Injection pump assembly
22 O-ring

***1** : Pre-stroke actuator P13-10, 12
***2** : Control rod position sensor P13-16
***3** : Engine revolution sensor P13-16
***4** : Timing gear case Gr 11
***5** : Front plate Gr 11
⊗ : Non-reusable parts

WARNING⚠

- **Fuel ignites easily. Do not get it near flame or heat.**
- **Wipe up any spilled fuel because it can cause a fire.**

CAUTION⚠

- **Be sure to protect all openings by covering them after removal of hoses and pipes because the engine performance is adversely affected if dirt and foreign particles enter injection pump assembly 21.**
- **Do not hold the control lever when lifting injection pump assembly 21. Also, do not remove the control lever because removal of the lever might cause poor performance of the pump.**

● **Installation sequence**

Follow the removal sequence in reverse.

Tightening torque

Unit : N·m {lbf.ft, kgf·m}

Location	Parts to be tightened	Tightening torque	Remarks
6	Eye bolt (Fuel feed pipe mounting)	25 to 29 {18 to 22, 2.5 to 3}	—
8	Eye bolt (Fuel feed pipe mounting)	25 to 29 {18 to 22, 2.5 to 3}	—
10	Injection pipe (Union nut fastening)	29 to 49 {22 to 36, 3 to 5}	—
11	Overflow valve	25 to 29 {18 to 22, 2.5 to 3}	—
13	Eye bolt (Oil pipe mounting)	9.8 to 13 {7.2 to 9.4, 1 to 1.3}	—
15	Eye bolt (Fuel suction pipe mounting)	25 to 29 {18 to 22, 2.5 to 3}	—
18	Eye bolt (Boost hose mounting)	12 to 15 {8.7 to 11, 1.2 to 1.5}	—

Lubricant

Location	Points of application	Kinds	Quantity
22	Entire body of O-ring	Engine oil	As required

Special tools

Unit : mm {in.}

Location	Tool name and shape	Part No.	Application
21	Socket wrench 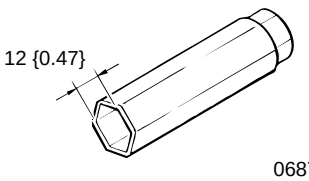 06876	31391-14100	Removal and installation of injection pump assembly
—	Cranking handle 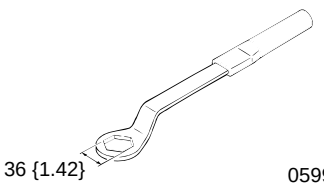 05999	MH061289	Cranking of engine

◆ Service procedure

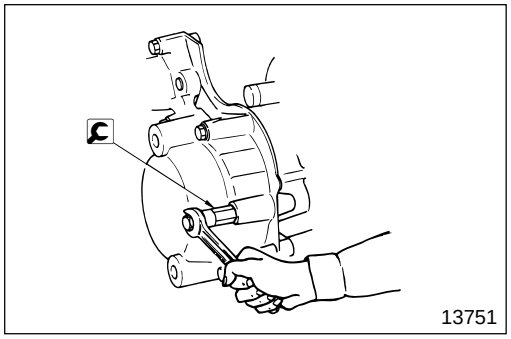

21 **Injection pump assembly**

[Removal]

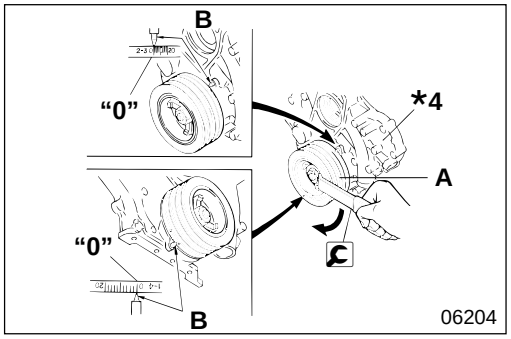

[Installation]

- To bring No. 1 cylinder piston to top dead center in the compression cycle, align pointer **B** of timing gear case ***4** with indent mark "**0**" on crankshaft pulley **A** by turning the crankshaft pulley clockwise using 🔧 cranking handle. At this point, make sure that the intake and exhaust valves of No.1 cylinder are not depressed by the push rod. If they are depressed, make another full rotation of the crankshaft pulley.

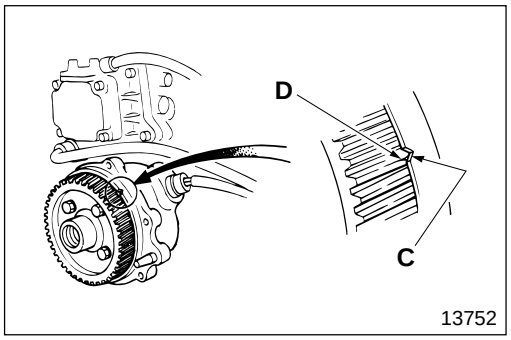

- Align indent **C** on the timer case with indent **D** on the injection pump gear.

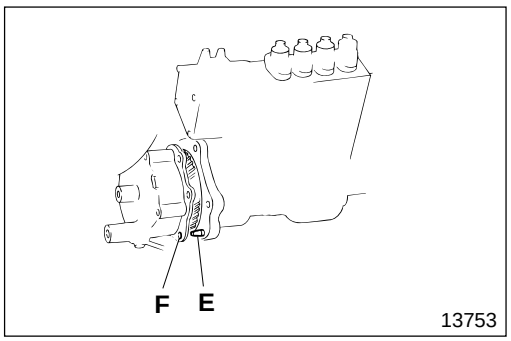

- By aligning guide bar **E** of the timer case with guide hole **F** of the front plate, push in the idler gear up to a fraction of an inch short of engaging the injection pump gear.

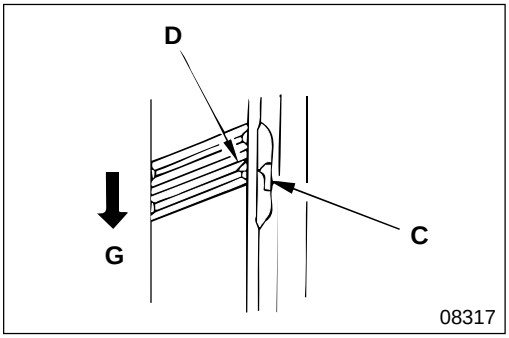

- Making sure that alignment mark **C** on the timer case aligns with indent **D** on the injection pump gear, push in the injection pump assembly.
  As this fitting is taking place, the indent will turn in direction **G**.

INJECTION NOZZLE

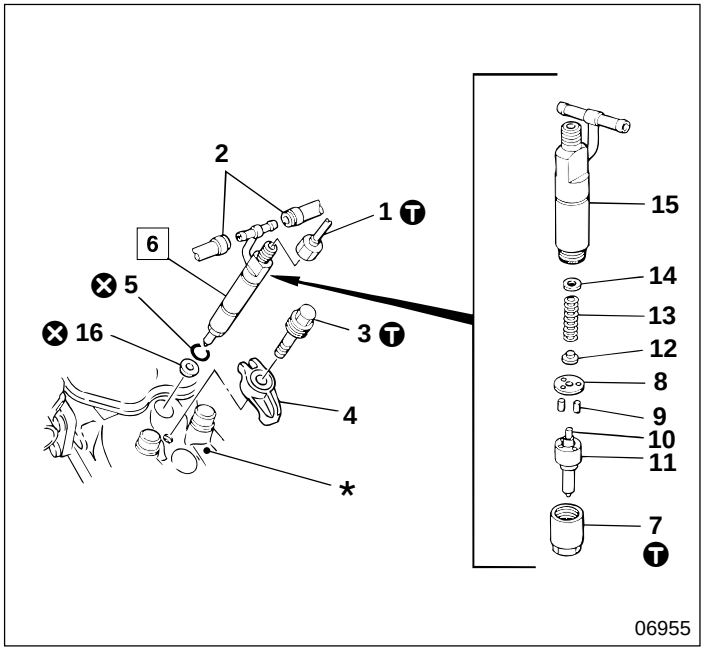

● **Inspection before disassembly**

📖 P13-77

● **Disassembly sequence**

1 Injection pipe
2 Leak-off pipe
3 Bolt
4 Bridge
5 O-ring
6 Injection nozzle assembly
7 Retaining nut
8 Tip packing
9 Straight pin
10 Needle valve
11 Nozzle
12 Pressure pin
13 Spring
14 Adjusting shim
15 Nozzle holder
16 Nozzle gasket

* : Cylinder head 📖 Gr 11
⊗ : Non-reusable parts

● **Assembly sequence**

Follow the disassembly sequence in reverse.

WARNING ⚠

Wipe up any spilled fuel because it can cause a fire.

CAUTION ⚠

- **Be sure not to touch the slide-contact area of needle valve 10 because any scratches or corrosion might spoil the airtightness of nozzle 11. It must be handled with utmost care.**
- **Never change the combination of needle valve 10 and nozzle 11 for each cylinder.**
- **Be sure to protect all openings by covering them after removal of hoses and pipes because the engine performance is adversely affected if dirt and foreign particles enter injection nozzle assembly 6.**

NOTE

Remove carbon deposits and clean injection nozzle assembly 6 before working on it, then test the injection pressure and jet spray condition, and check for fuel leakage before disassembly. If no fault is found, do not disassemble.

Service standards

Location	Maintenance item	Standard value	Limit	Remedy
6	Valve opening pressure	21.6 MPa {3130 lbf/in^2, 220 kgf/cm^2}	—	Adjust

T Tightening torque

Unit : N·m {lbf.ft, kgf·m}

Location	Parts to be tightened	Tightening torque	Remarks
1	Union nut (Injection pipe mounting)	25 {18, 2.5}	—
3	Bolt (Bridge mounting)	25 {18, 2.5}	—
7	Retaining nut	34 to 44 {25 to 33, 3.4 to 4.5}	—

Special tools

Location	Tool name and shape	Part No.	Application
—	Nozzle cleaning tool	★105789-0010	Cleaning of injection nozzle assembly

★ ZEXEL code number

◆ Service procedure

● Inspection before disassembly

Attach injection nozzle assembly **6** to nozzle tester **A**, and conduct the following inspection.

WARNING

Never touch the spray from nozzle 11 or let your hands get too close to the spray point during the test.

NOTE

Before inspection, bleed the air out in a couple of bursts by pressing nozzle tester A lever.

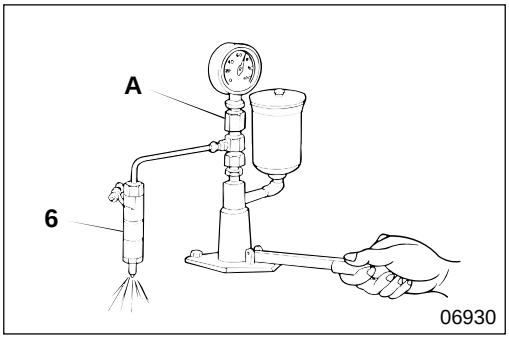

(1) Valve opening pressure

- Raise the pressure of nozzle tester **A** by operating the lever, and measure the pressure that the gauge registers when the pressure is released which will be observed by the sudden movement of the gauge indicator.
- If the measured value deviates from the standard value, disassemble the nozzle and clean, and adjust it using adjusting shims **14**.
- Variation of 0.05 mm {0.0020 in.} thickness in adjusting shims **14** causes a difference of 735 kPa {105 lbf/in^2, 7.5 kgf/cm^2} of pressure, for example, to alter the pressure for 98 kPa {14 lbf/in^2, 1 kgf/cm^2}, a thickness of 0.0067 mm {0.00026 in.} is required.
- If the performance cannot reach the standard value even after adjustment, replace injection nozzle assembly **6**.

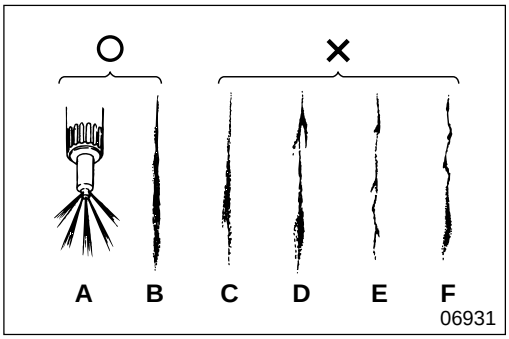

(2) Spray condition

- Test injection spray condition by quick lever actions of nozzle tester **A**, 4 to 6 actions per second.
  - **A** : Even spray from all five orifices (Good)
  - **B** : Even and symmetrical spray (Good)
  - **C** : Asymmetrical spray (Faulty)
  - **D** : Spray direction deviates from the nozzle axis line (Faulty)
  - **E** : Thin and insufficient spray (Faulty)
  - **F** : Irregular spray (Faulty)
- If faulty spray cannot be corrected, disassemble injection nozzle assembly **6** and clean every part and repeat the test.
  If faulty spray still occurs after repeating test, replace the injection nozzle assembly.
- Make sure that there is no post-spray dripping after injection.

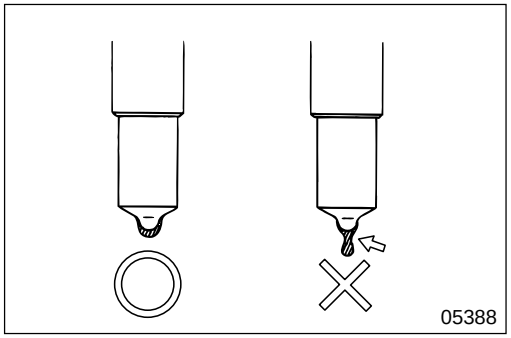

(3) Fuel air tightness and leakage at related contact points

- Maintain interior pressure of nozzle at 1960 kPa {285 lbf/in^2, 20 kgf/cm^2} lower than the valve opening pressure, and check and see if any fuel seeps out of the nozzle tip within 10 seconds.
- If any fault is found, disassemble injection nozzle assembly **6** and clean every part and repeat the test. If any fault is still found, replace the injection nozzle assembly.

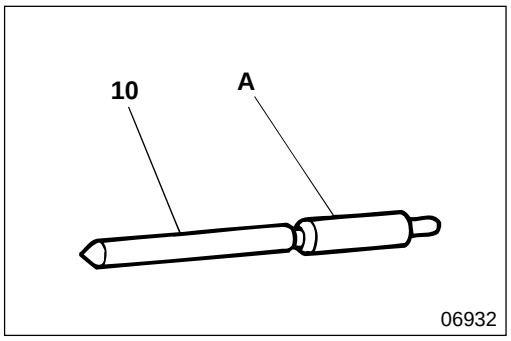

6 Injection nozzle assembly

[Disassembly]

CAUTION

- **Be sure not to touch sliding part A of needle valve 10 with your hands.**
- **Never change the combination of removed needle valve 10 and nozzle 11 for each cylinder.**

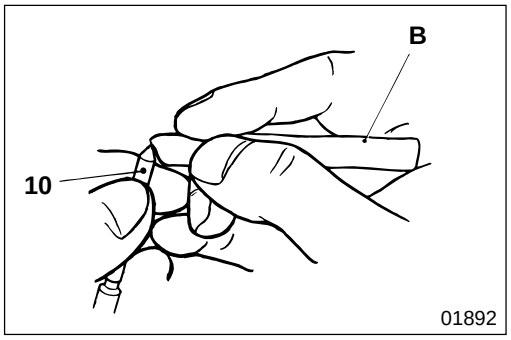

[Cleaning]

Clean needle valve **10** and nozzle **11** with gas oil (cleaning solvent).

Remove carbon deposits with cleaning tool in the following manner:

- Clean needle valve **10** by removing carbon deposits from its tip using cleaning bar **B** of cleaning tool.

CAUTION

Never use a wire brush or hard steel for cleaning.

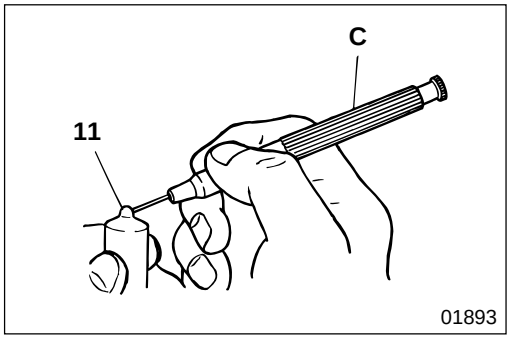

- To clean nozzle **11**, remove carbon deposits from the orifices of the nozzle using needle cleaner **C** of cleaning tool, by inserting it into the orifices and turning it.
  Needle cleaner diameter : ø0.25 mm {0.0098 in.} or less

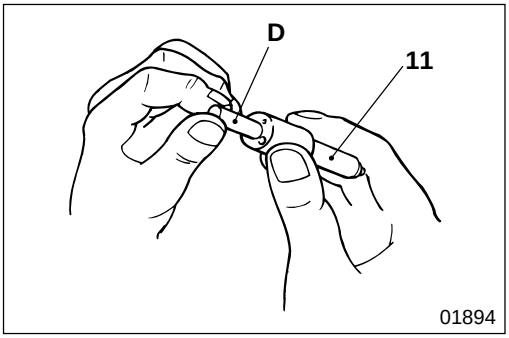

- Clean the seat of nozzle **11** using cleaning needle **D** of cleaning tool.
- Use FUSO carbon remover to remove hard-to-remove, burnt-on carbon deposits.

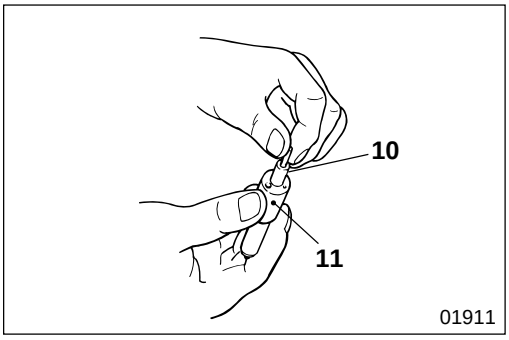

[Inspection]

- Immerse needle valve **10** and nozzle **11** in gas oil (cleaning solvent) and clean them thoroughly.
- Check and see if needle value **10** drops by its own weight into the nozzle from the position where a third of its length is pulled out. (Repeat this several times rotating the needle valve.)
- If needle valve **10** does not drop smoothly, repeat cleaning and repeat the test. If any fault is still found, replace both the needle valve and nozzle **11** together as a set.

MITSUBISHI FUSO

FE

Service Manual

Group 14 - Cooling

Group 14A - Cooling
2001 Model Change
<4M50>

BACK HOME

MITSUBISHI FUSO TRUCK OF AMERICA, Inc.

Pub No. TWSE9501-00

MITSUBISHI
FUSO

FE

Service Manual

Group 14A
Cooling
<4M50T2>

2001 Model Year Change

Table of Contents

MITSUBISHI FUSO TRUCK OF AMERICA, Inc.

BACK HOME

Pub No. TWSE9501-514A

GROUP 14A COOLING

SPECIFICATIONS 14A- 2

STRUCTURE AND OPERATION 14A- 2

TROUBLESHOOTING 14A- 4

ON-VEHICLE INSPECTION AND ADJUSTMENT 14A- 6
- Replacing Coolant and Cleaning Cooling System 14A- 6
- Air Bleeding of Cooling System 14A- 8
- Gas Leak Testing 14A- 8

RADIATOR 14A-10

COOLING FAN, V-RIBBED BELT AND WATER PUMP 14A-18

WATER HOSE & PIPE 14A-24

THERMOSTAT 14A-26

SPECIFICATIONS/STRUCTURE AND OPERATION

SPECIFICATIONS

Item	Specifications
Kind of cooling system	Forced water circulation system
Water pump type	Belt-driven involute type
Thermostat type	Wax-pellet, bottom bypass type (with jiggling valve)
Automatic cooling fan coupling type	Continuous control type
Radiator type	Tube and corrugated fin type
Coolant capacity L {qts}	13 {14}

STRUCTURE AND OPERATION

Cooling System (Flow to Coolant)

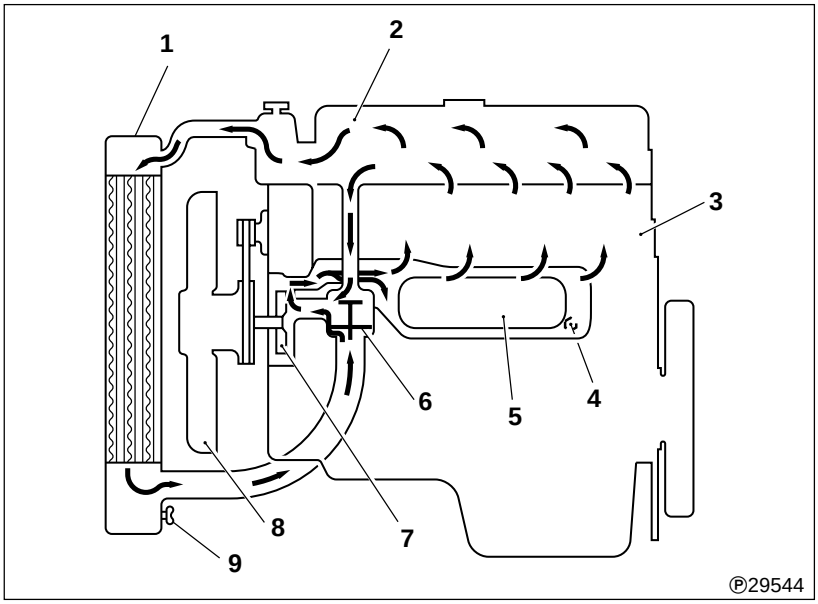

1 Radiator
2 Cylinder head
3 Crankcase
4 Crankcase drain cock
5 Oil cooler
6 Thermostat
7 Water pump
8 Cooling fan
9 Radiator drain cock

Water Pump

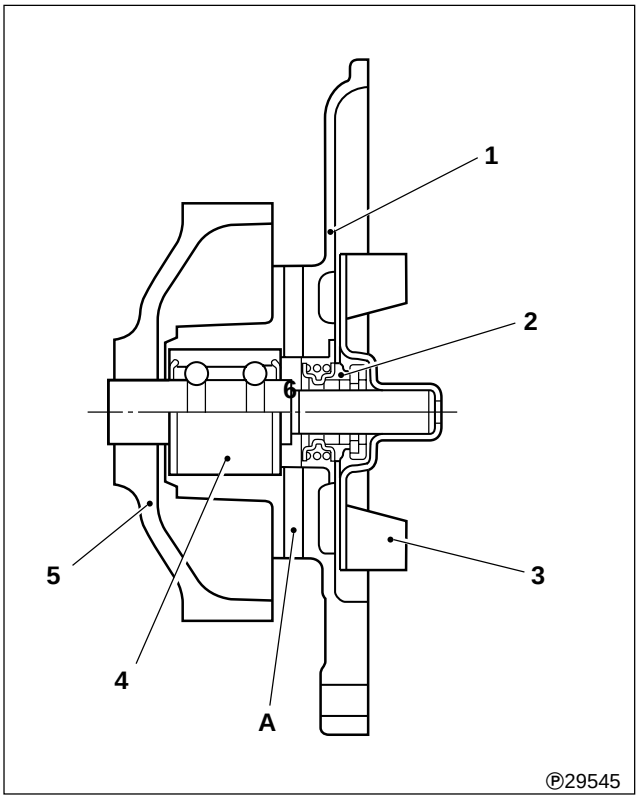

1 Case
2 Unit seal
3 Impeller
4 Unit bearing
5 Pulley

A: Drain hole

Thermostat

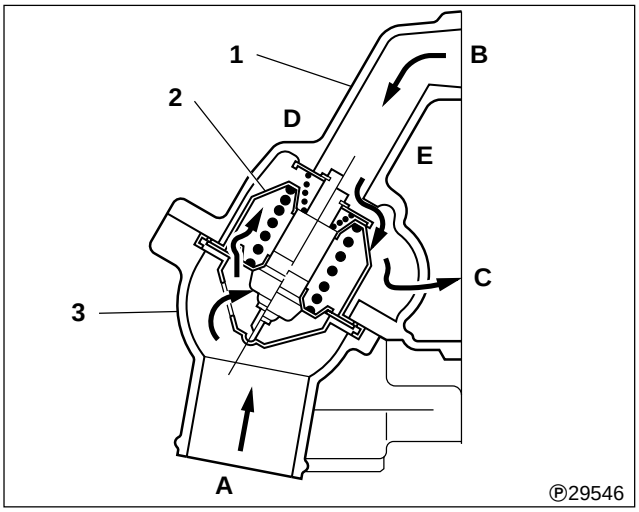

1 Oil cooler
2 Thermostat
3 Thermostat cover

A: From radiator
B: From cylinder head
C: To water pump
D: With high coolant temperature
E: With low coolant temperature

Thermostat **2** is a bottom bypass type that uses wax-charged pellets as its regulating element. As the wax changes from solid to liquid in with temperature increases, the total wax volume changes. As a result, the position of the valve, changed by the coolant temperature, regulates the flow of coolant from the radiator and cylinder head (by-pass side) before entering the engine to control the coolant temperature (inlet control type).

TROUBLESHOOTING

Possible causes \ Symptoms		Overheating (insufficient cooling)	Overcooling	Abnormal noise	Excessive coolant loss	Remarks
V. ribbed belt	Loose or damaged	×		×		
	Excessive tension			×		
	Oil on belt	×				
Water pump	Water pump fitted poorly	×		×	×	
	Unit bearing defective	×		×		
	Impeller defective	×		×		
	Unit seal defective	×			×	
	Loose fit between unit bearing and flange and/or impeller	×		×		
Thermostat	Case fitted poorly	×			×	
	Valve opening temperature too high; valve remains closed	×				
	Valve opening temperature too low; valve remains open		×			
Radiator	Space between core and fins clogged	×				
	Core cracked and/or soldered joints separated	×			×	
Cooling fan	Fan shroud fitted poorly	×		×		
Automatic cooling fan coupling	Bearing defective	×		×		
	Bimetal damaged	×				
	Bimetal contaminated with foreign particles	×	×			
	Silicone oil leaking	×		×		
Oil cooler	Oil cooler fitted poorly	×			×	Group 12A
	Gasket defective	×			×	
Cylinder head	Cylinder head fitted poorly	×			×	Group 11A
	Gasket defective	×			×	
Coolant quantity insufficient		×				
Coolant passages dirty and/or clogged		×				
Hoses fitted poorly		×			×	
Ambient temperature extremely low			×			

MEMO

ON-VEHICLE INSPECTION AND ADJUSTMENT

Replacing Coolant and Cleaning Cooling System

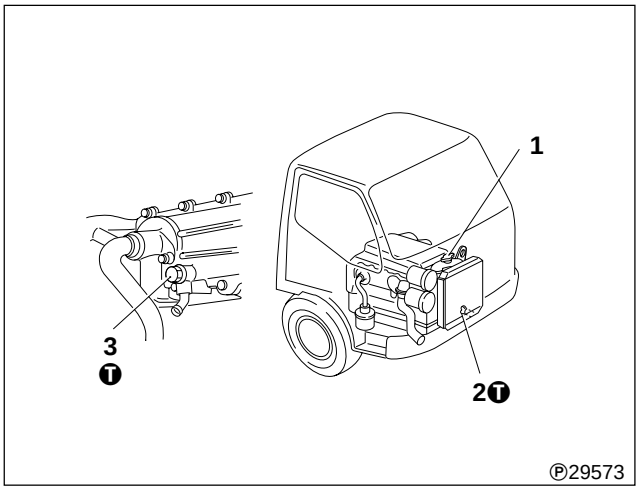

1 Pressure cap
2 Drain cock
3 Water drain plug

T Tightening torque

Unit: N·m {ft.lbs, kgf·m}

Location	Parts to be tightened	Tightening torque	Remarks
2	Drain cock	2 {14.5, 0.2}	—
3	Water drain plug	24.5±4.9 {18.1±3.6, 2.5±0.5}	—

Using the radiator for extended periods without cleaning the cooling system will cause overheating since rust and scale will accumulate. The cooling system must be cleaned periodically.

● **Draining the coolant**

Before draining the coolant, loosen the pressure cap **1** to reduce the pressure in the cooling system.

WARNING ⚠

- **To avoid being scalded, make sure the coolant has cooled sufficiently before loosening the pressure cap 1.**
- **Unless care is taken, opening the pressure cap 1 when the coolant is hot can cause the coolant to spray out. Cover the pressure cap with a cloth, and loosen the cap slowly to bleed off the pressure before opening it fully.**

● **Cleaning procedure**

- Run the engine and keep the coolant at a temperature of approximately 90°C {194°F} such that the thermostat valves remain open and the coolant circulates continuously in the radiator.
- To increase the coolant temperature quickly, cover the front of the radiator with cardboard or a similar material.
- If cleaning is carried out after a large amount of rust has accumulated, the radiator may start to leak. Carefully examine the radiator for leaks after cleaning the cooling system.
- Soft water to be used should have the following properties.

CAUTION ⚠

Do not use hard water as it causes scale and rust.

Required properties of soft water

Total hardness	300 ppm or less
Sulfate SO_4^-	100 ppm or less
Chloride Cl^-	100 ppm or less

Total dissolved solids	500 ppm or less
pH	6 to 8

Method of cleaning the cooling system depends on its condition.

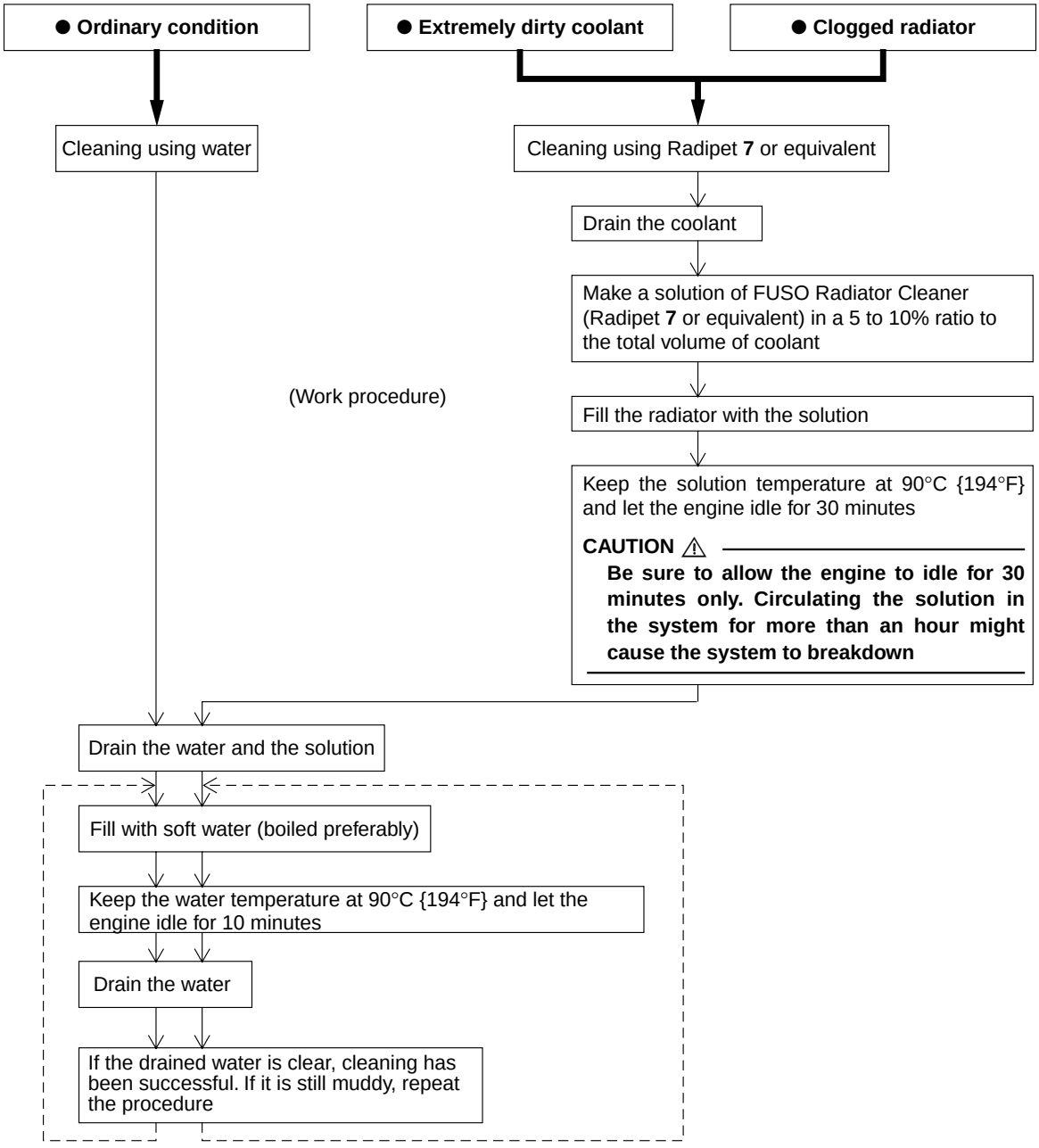

DANGER ⚠

If FUSO DIESEL LONG LIFE COOLANT solution gets in your eyes accidentally, you must immediately rinse your eyes with copious amounts of water, and be sure to consult a doctor.

WARNING ⚠

FUSO DIESEL LONG LIFE COOLANT is inflammable. Do not put it near unprotected lights.

NOTE:

- **After cleaning with solution, fill with coolant as quickly as possible.**
- **To prevent freezing of the coolant and corrosion of the cooling system, use specified coolant solution of FUSO DIESEL LONG LIFE COOLANT. (See the Owner's Handbook for use of these materials.)**

ON-VEHICLE INSPECTION AND ADJUSTMENT

Air Bleeding of Cooling System

- Remove the pressure cap. Then, introduce cooling water little by little up to the water outlet pipe neck. Do not pour water up to the outlet port brim, otherwise water would overflow out of the outlet port after the engine is started as water will expand due to temperature rise.
- With the pressure cap removed, run the engine at idle. While keeping temperature at 90°C {194°F}, bleed the cooling system completely.
- After bleeding the cooling system of air, add coolant to the water outlet pipe and reservoir tank as required.

Gas Leak Testing

The presence of air or exhaust gas in the coolant increases corrosion and rust in the cooling system. Check for air or exhaust gas in the coolant using the following procedure.

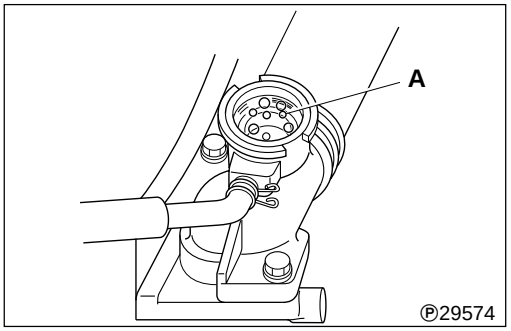

- Open the pressure cap.

WARNING ⚠

Make sure the coolant is cool before loosening the pressure cap. If the coolant is hot, it may spray out.

- Run the engine and let the coolant temperature reach approximately 90°C {194°F}.
- If bubbles **A** appear continuously, there is air or exhaust gas in the coolant.
- If the coolant contains air, the cylinder head bolts, water pump mounting bolt, or hose connections may be loose. Alternatively, the hoses may be damaged.
- If the coolant contains exhaust gas, it is possible that the cylinder head gasket is damaged or that the cylinder head is cracked.

MEMO

RADIATOR

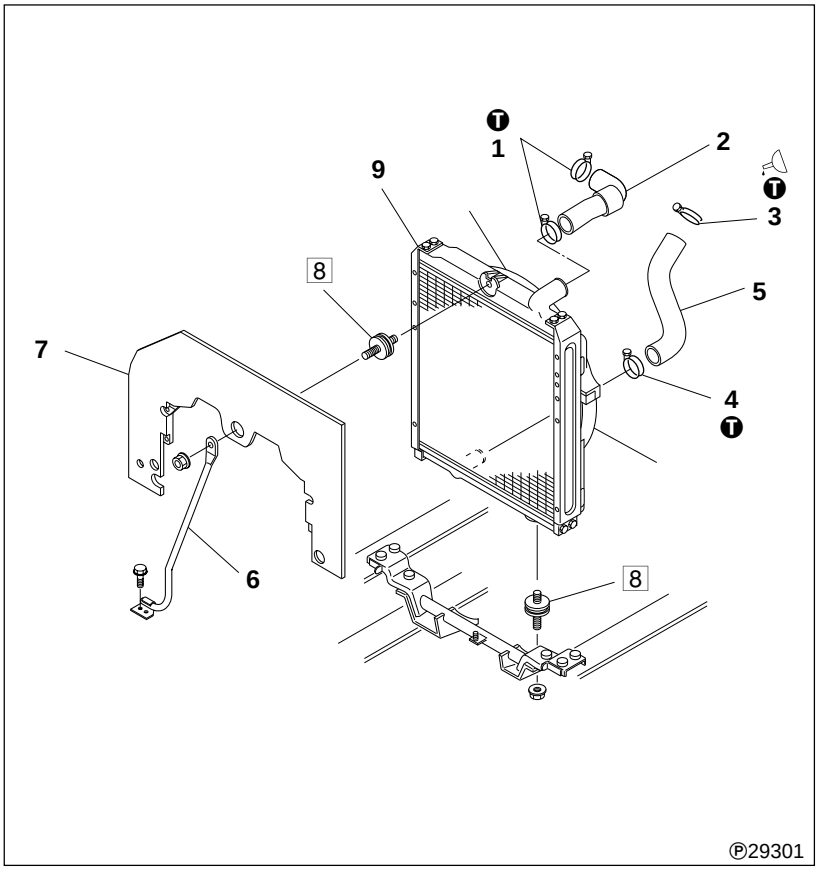

● **Disassembly sequence**

1 Clamp
2 Upper hose
3 Clamp
4 Clamp
5 Lower hose
6 Radiator support
7 Baffle plate
8 Support cushion
9 Radiator assembly P. 14A-12

● **Assembly sequence**

Follow the disassembly sequence in reverse.

Tightening torques

Unit: N·m {ft.lbs, kgf·m}

Location	Parts to be tightened	Tightening torque	Remarks
1, 4	Clamp	3 to 4.5 {2.2 to 3.3, 0.3 to 0.45}	—
3	Clamp	1.5 to 2 {1.1 to 1.4, 0.15 to 0.2}	Wet

Lubricant

Location	Points of application	Specified lubricant	Quantity
3	Threads of clamp	Engine oil	As required

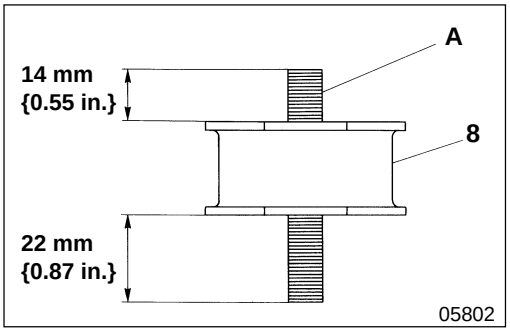

◆ Service procedur-

8 Support cushio

Install the support cushion **8** with its shorter threaded part **A** on the radiator side

RADIATOR

Radiator Assembly

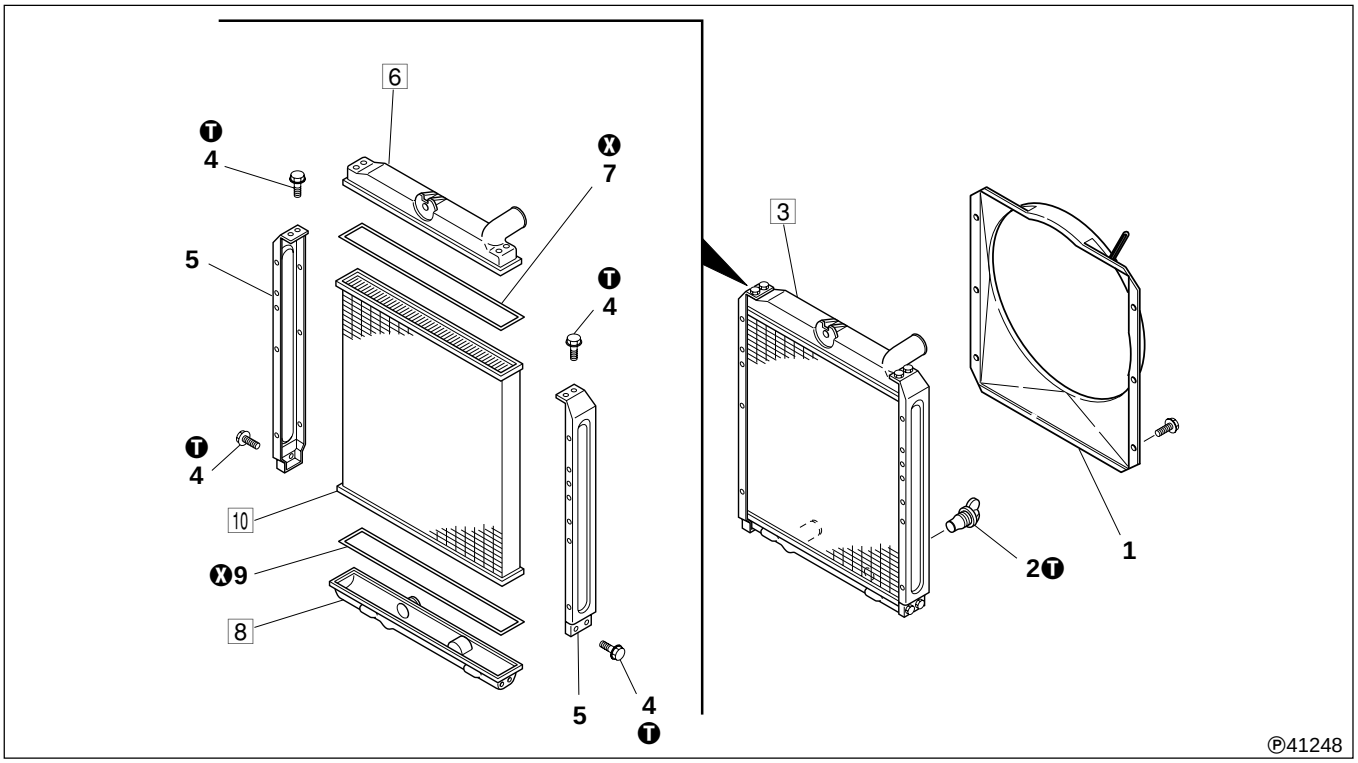

● **Disassembly sequence**

1 Radiator shroud
2 Drain cock
3 Radiator assembly
4 Bolt
5 Side member
6 Upper tank
7 O-ring
8 Lower tank
9 O-ring
10 Core

X: Non-reusable part

CAUTION ⚠

- **Do not disassemble the radiator assembly 3 unless defects are evident.**
- **The upper tank 6 and lower tank 8 are made of plastic and could crack if subjected to undue shock. Handle them with care.**
- **Replace the core 10 if the clinching tabs that hold the upper tank 6 or lower tank 8 have two paint marks, showing that the tabs have been bent back twice.** 📖 **P. 14A-13**

● **Assembly sequence**

Follow the disassembly sequence in reverse.

Service standards

Location	Maintenance item	Standard value	Limit	Remedy
3	Radiator air leakage (with air pressure of 150 kPa {21 psi, 1.5 kgf/cm^2})	0 cm^3 {0 cu.in.}	—	Rectify or replace

Tightening torque

Unit: N·m {ft.lbs, kg·fm}

Location	Parts to be tightened	Tightening torque	Remarks
2	Drain cock	2 {1.4, 0.2}	—
4	Bolt (side member mounting)	13 {9.4, 1.3}	—

Special tool

Location	Tool name and shape	Part No.	Application
6, 8	Lock & Break Tool	Obtain locally or use sublet repair	Upper tank, lower tank removal

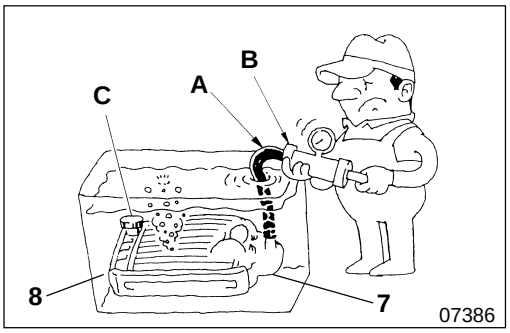

Service procedure

3 **Radiator inspection**

- Fit a hose **A**, and radiator cap tester **B** onto the radiator upper tank **6**.
- Fit a plug **C** onto the radiator lower tank **8**, then immerse the radiator in a tank of water.
- Using the radiator cap tester **B**, apply the specified air pressure of 150 kPa {21 psi, 1.5 kgf/cm^2}, and check for air leakage.
- If air leakage is apparent, repair or replace the radiator assembly **3**.

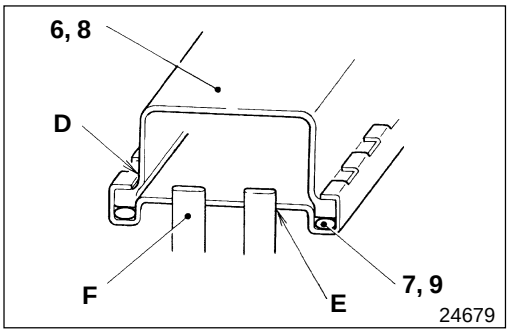

- Replace the following parts according to the leaking locations.

Leaking location	Part to replace
Tank root **D**	O-ring **7** or **9**
Tank **6**	Tank **6**, O-ring **7**
Tank **8**	Tank **8**, O-ring **9**
Tube fitted area **E**	Core **10**, O-ring **7**, **9**
	* Tube **F** (TIG welded), O-ring **7**, **9**
Tube **F**	Core **10**, O-ring **7**, **9**

*: When repaired

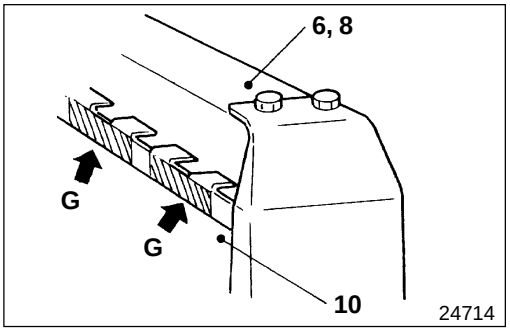

CAUTION ⚠

Replace the core 10 if its clinching tabs that hold the upper tank 6 or lower tank 8 have two paint marks G, evidence of the tabs having been bent back twice.

The tabs are provided with one paint mark each time they are bent back. Count the paint marks on each of upper and lower tabs separately.

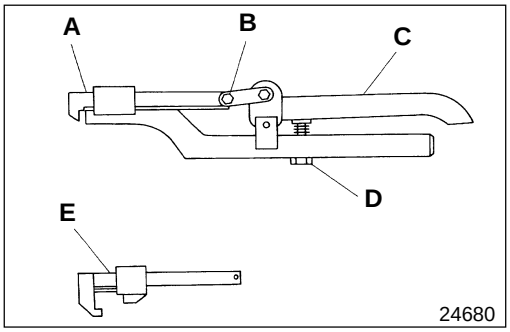

6 8 **Upper tank and lower tank**

Remove and reinstall the tanks using the Lock and Break Tool.

- **A** Attachment (for tank removal
- **B** Attachment locking bol
- **C** Slide handl
- **D** Stopper/adjuster bol
- **E** Attachment (for tank installation

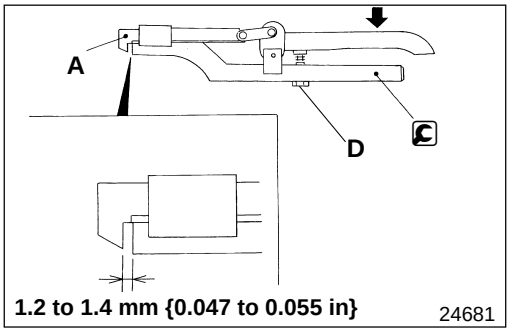

[Rexmoval]

- Fit attachment **A** onto the end of the Lock and Break Tool, set it to the illustrated dimension and lock it in position with the stopper/adjuster bolt **D**.

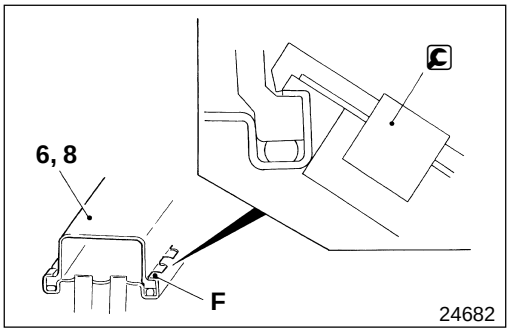

- Using the Lock and Break Tool, bend up the tabs **F** of the core **10** that hold the tank **6**, **8**.
- Straighten the tabs **F** completely as shown by gripping the Lock and Break Tool.

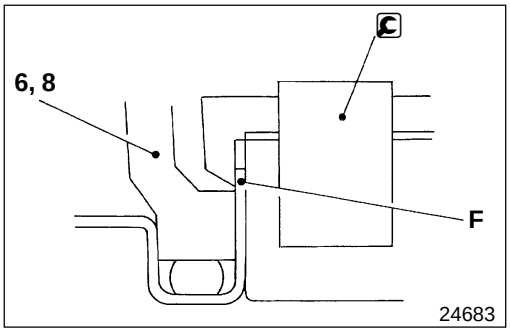

- After straightening all the tabs **F**, grasp the inlet or outlet pipe and remove the tank **6**, **8**.
- If the tank **6**, **8** is difficult to remove, tap it with a rubber or plastic hammer **G**.

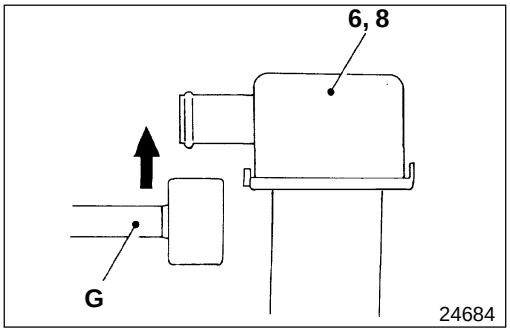

CAUTION ⚠

The tanks 6 and 8 are made of plastic and may crack if subjected to undue shock. Handle them with care.

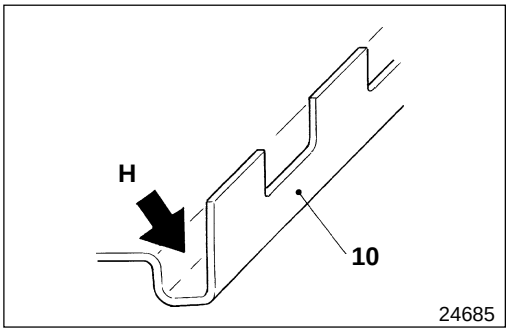

[Inspection]

- Check the tank mounting channels **H** of the core **10** for foreign matters.
- If foreign matter is stuck inside the mounting channels, rub them away with sandpaper (approx. #1000) or blow them out with compressed air.

CAUTION ⚠

If any foreign matter (even a single hair) remains when the O-ring 7, 9 and tank 6, 8 are fitted, leakage can occur. Carefully inspect and clean each tank mounting channel H entirely.

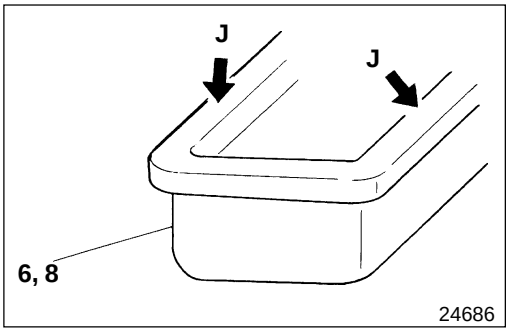

- Clean the core contacting surface **J** of the tank **6**, **8** and inspect it for damage. Replace the tank if any defect is evident.

CAUTION ⚠

Perform procedure with bare hands to prevent foreign matter from sticking to the surface J.

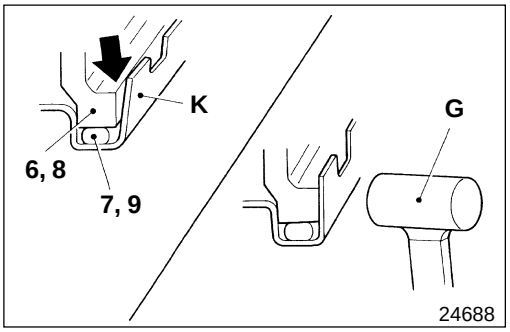

[Installation]

- Install the tank **6**, **8** in position. Check that the sub-plate **K** of the core is in close contact with the tank. If there is any space, tap the sub-plate lightly with a rubber or plastic hammer to eliminate space.

CAUTION ⚠

Handle the parts with bare hands to prevent foreign matter from sticking to the O-ring 7, 9 and tank 6, 8.

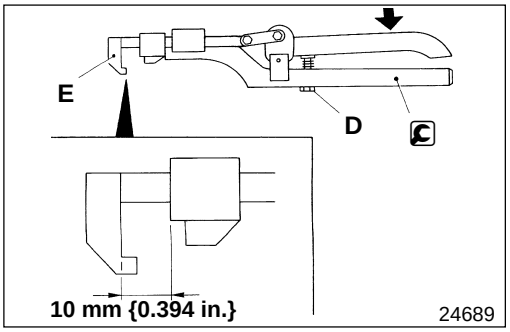

- Fit attachment **E** onto the end of the Lock and Break Tool, set it to the illustrated dimension and lock it in position with the stopper/adjuster bolt **D**.

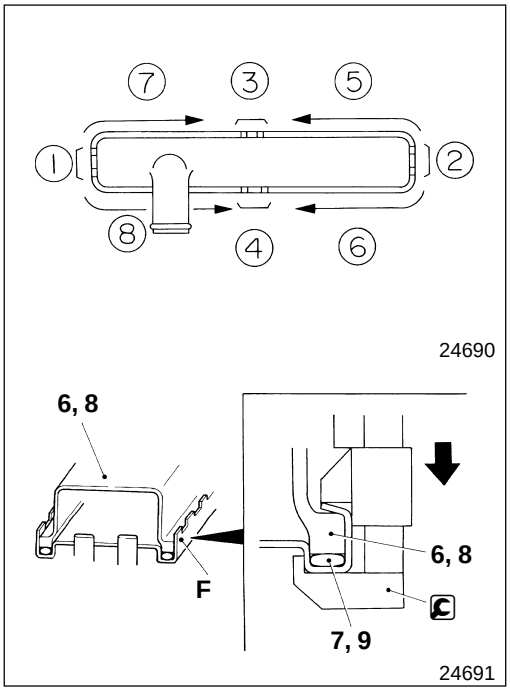

- Clinch the tabs **F** of the core **10** to hold the tank **6**, **8** in the illustrated order.
  ① to ④: Two center tabs on each side
  ⑤ to ⑧: Remaining tabs in illustrated sequence
  : Lock and Break Tool (with attachment **E**)

NOTE :

The sides ① and ② do not allow the Lock and Break Tool to be used for clinching. Clinch these sides using a pair of pliers with tape wrapped around its jaws.

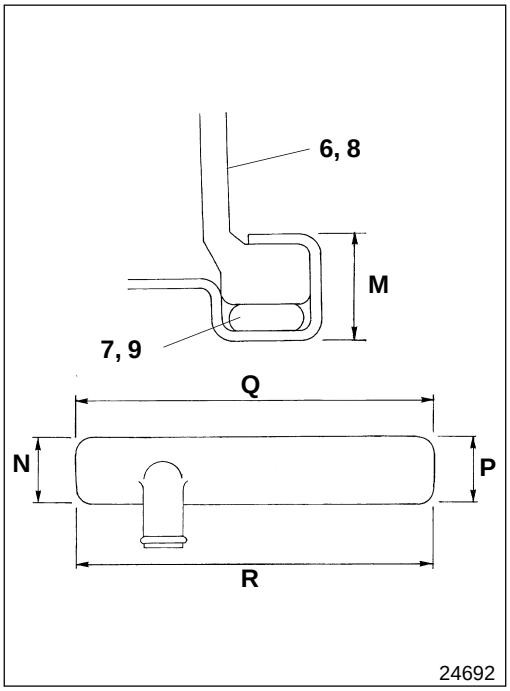

- Check that the tabs has been clinched to the following dimensions.
  M: 14.65 to 15.05 mm {0.576 to 0.592 in.} (Sides **N** and **P**)
  10.05 to 10.45 mm {0.395 to 0.411 in.} (Sides **Q** and **R**)
- Check for leaks. P. 14A-13
- Provide a paint mark to the sub-plate **K** of the core **10** to indicate that the tabs have been bent up and then down.

NOTE:

Provide one paint mark after each removal of the tank.

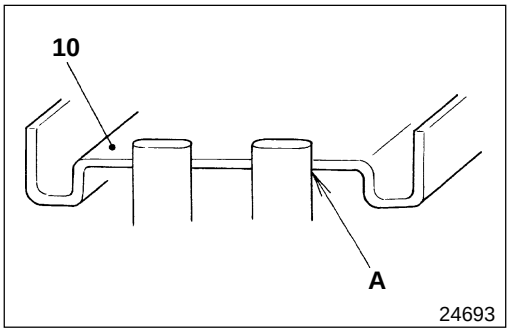

11 Core

If water leaks from the tube fitted area **A**, replace the core **10** or repair it by the following method.

[Repair]

NOTE:

Repair is carried out by tungsten inert gas arc (TIG) welding, which requires the skill of a trained welder.

WARNING ⚠

To avoid danger, dry the core 10 completely before welding.

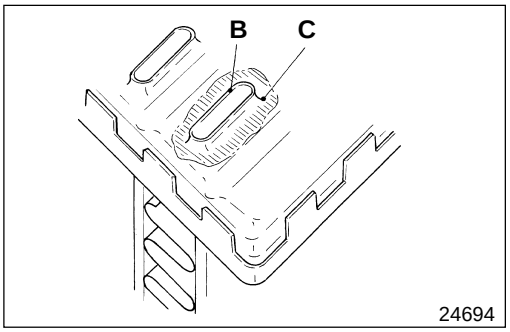

- Clean both edges **B** of the leaky tube and their surroundings **C** using a stainless steel wire brush. Scrub the surface until it glistens with exposed aluminum.

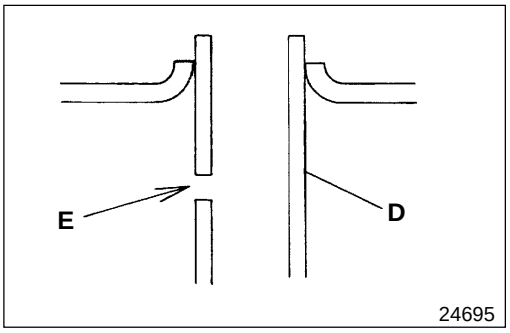

- Since both ends of the tube are covered with weld metal, make a small hole **E** in the tube **D** to allow air venting.

NOTE:

Absence of the small hole E causes escaping air to produce small pin holes in the weld.

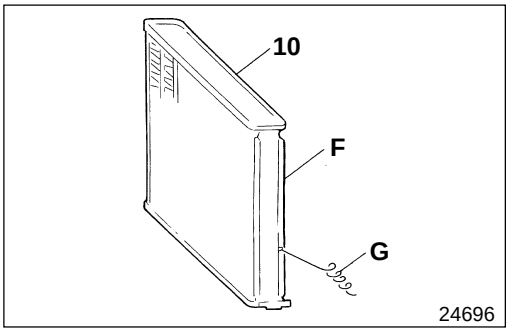

- Connect a grounding wire **G** from the support **F** of the core **10** to an appropriate object.

CAUTION ⚠

Improper connection of the grounding wire G causes a short circuit during welding work and the core could be fused at the welded portion.

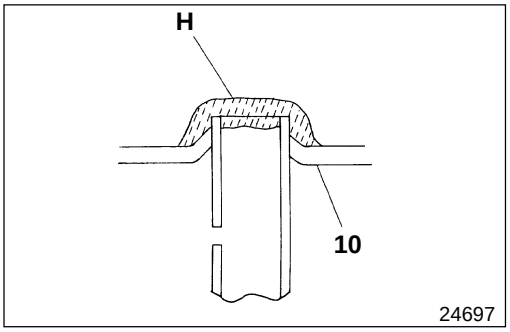

- Cover both ends of the tube with welding metal.
  H: Tungsten inert gas arc weld (TIG)
  Welding conditions:
  Welding rod: A4043 (approx. ϕ 2 mm {ϕ 0.0079 in.} in diameter)
  Welding current: 80A AC
- After welding, check for the following defects. Rectify the weld or replace the core **10** if any of the defects is evident.
  - Undercut
  - Bead crack
  - Crack in base metal

CAUTION ⚠

Weld with sufficient care. Poor welding may cause leakage to recur.

COOLING FAN, V-RIBBED BELT AND WATER PUMP

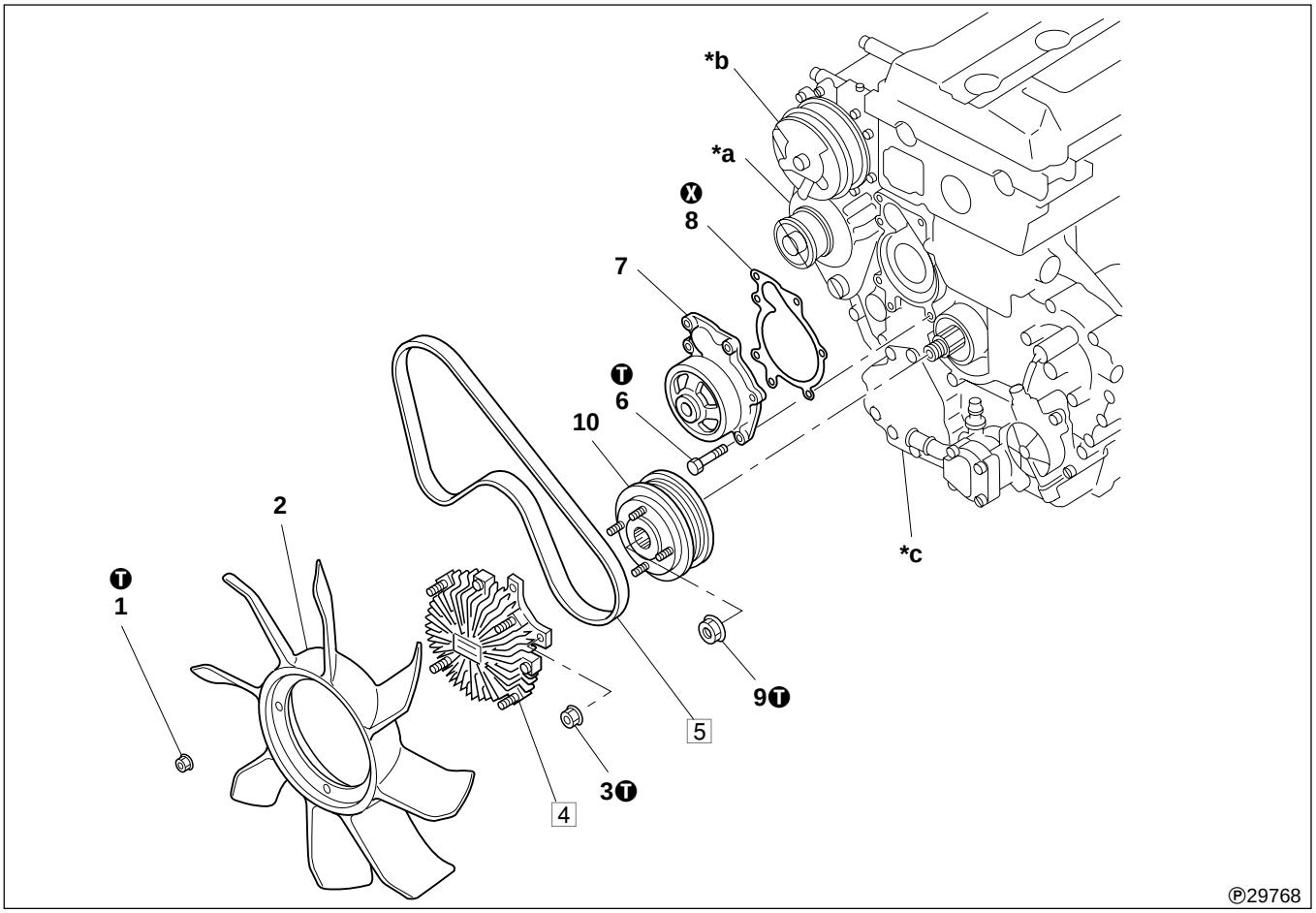

● **Disassembly sequence**

1 Nut
2 Cooling fan
3 Nut
4 Automatic cooling fan coupling
5 V-ribbed belt (for water pump)
6 Bolt
7 Water pump assembly
8 Gasket
9 Nut
10 Fan pulley

***a:** Altenator ELECTRICAL
***b:** Compressor
***c:** Front case Group 11A
X: Non-reusable part

● **Assembly sequence**

Follow the disassembly sequence in reverse

Service standard

Unit: mm {in.}

Location	Maintenance item		Standard value	Limit	Remedy
5	V-ribbed belt tension (for water pump)	When belt is new	9 to 11 (0.35 to 0.43)	—	Adjust
		When belt in use is re-tensioned	11 to 13 (0.43 to 0.51)	—	

Tightening torque

Unit: N·m {ft.lbs, kgf·m}

Location	Parts to be tightened	Tightening torque	Remarks
1	Nut (cooling fan mounting)	4.9 {3.6, 0.5}	—
3	Nut (for automatic cool fan coupling mounting)	12.7 {9.4, 1.3}	—
6	Bolt (for water pump assembly mounting)	23.5 {17.4, 2.4}	—
9	Nut (for fan pulley mounting)	196.1 {145, 20}	—

Special tools

Location	Tool name and shape	Part No.	Application
5	Belt Tension Gauge  03612	Obtain Locally	V-ribbed belt tension measurement

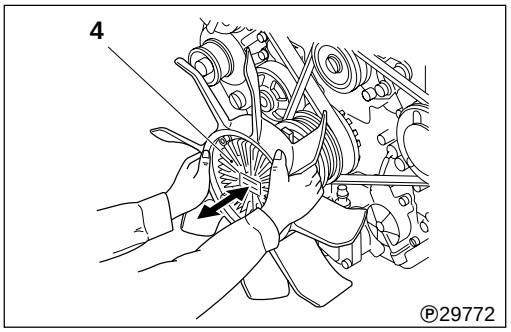

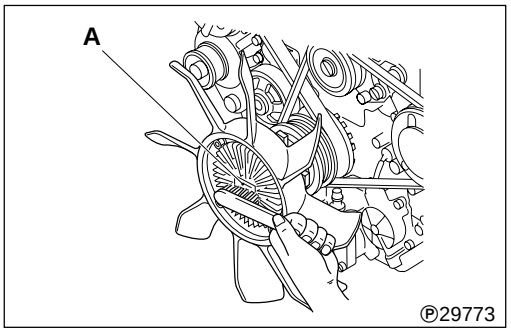

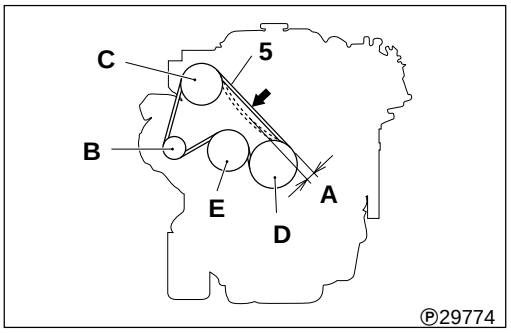

◆ Service Procedure

4 **Automatic cooling fan coupling**

[Inspection

Inspect the automatic cooling fan coupling **4** in accordance with the following procedure. If any defect is apparent, replace the unit

Check for leakage of oil from the coupling body

Rotate the automatic cooling fan coupling **4** by hand and check fo irregular movement or abnormal noise caused by a defect in the bearing

Check for excessive axial play in the automatic cooling fan coupling when the engine is cool

[Cleaning

If any foreign particles have adhered to the bimetal **A**, brush them of gently

5 **V-ribbed belt tension**

[Inspection]

NOTE

Before checking for tension, crank the engine one turn or mor clockwise

Apply force of approximately 98 N {22 lbf, 10 kgf} to the span center of th V-ribbed belt **5**, and measure the extent of belt deflection **A**

B Alternator pulle

C Air conditioner compressor pulley or tention pulle

D: Fan pulley

E: Water pump pulley

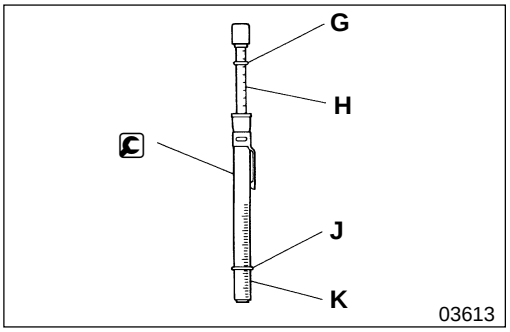

● **Use of belt tension gauge**

- Set the upper O-ring **G** of the Belt Tension Gauge to a push load of 98 N {22 lbf, 10 kgf} on scale **H**.
- Set the lower O-RING **J** of the Belt Tension Gauge to the belt's specified maximum deflection value on scale **K**.

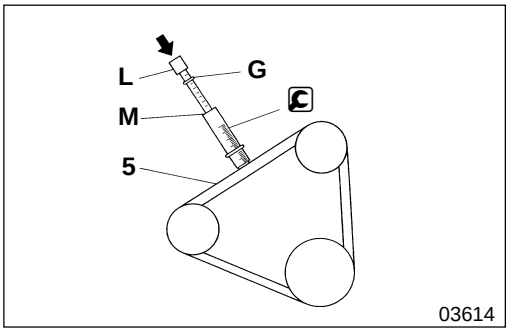

- Apply the Belt Tension Gauge to the center of the V-ribbed belt **5** and push **L** until the upper O-ring **G** reaches the flange **M**.

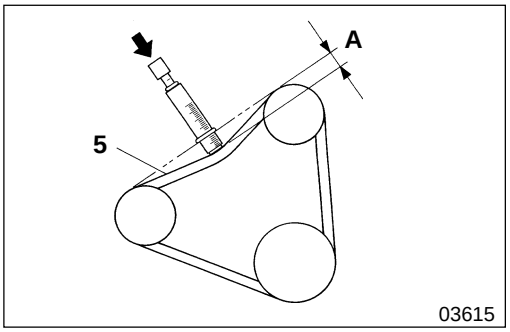

- Measure the deflection **A** of the V-ribbed belt **5**. If the measurement does not comply with the standard value, adjust the tension in accordance with the following procedure.

[Adjustment]

(1) Tension adjustment of V-ribbed belt for water pump

CAUTION ⚠

- **Excessive tension in the V-ribbed belt 5 may damage the belt and related bearings.**
- **Keep the V-ribbed belt 5 free of oil. If the belt becomes oily, it may slip, resulting in overheating of the engine and insufficient charging of the battery.**

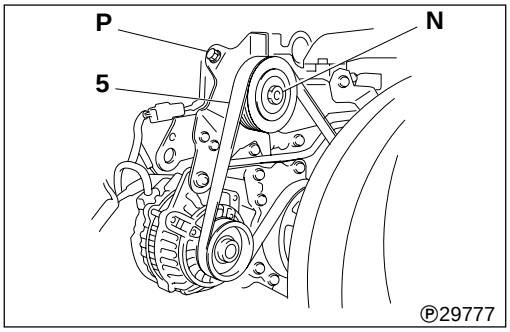

[Without air-conditioner]

- Loosen the tensioner pulley mounting sleeve **N**, then adjust the tension of the V-ribbed belt **5** using the adjustment bolt **P**.
- When the adjustment is completed, securely tighten the sleeve **N**.

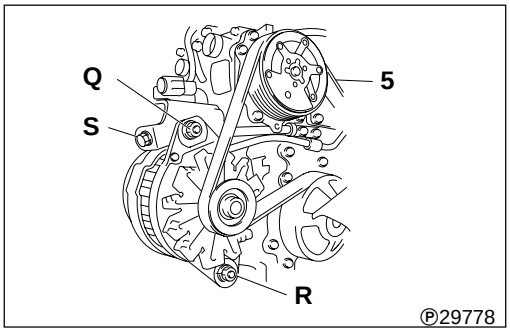

[With air-conditioner]

- Loosen the alternator mounting nuts **Q** and **R**, then adjust the tension of the V-ribbed belt **5** using the adjustment bolt **S**.
- When the adjustment is completed, securely tighten the nuts **Q** and **R**.

MEMO

WATER HOSE & PIPE

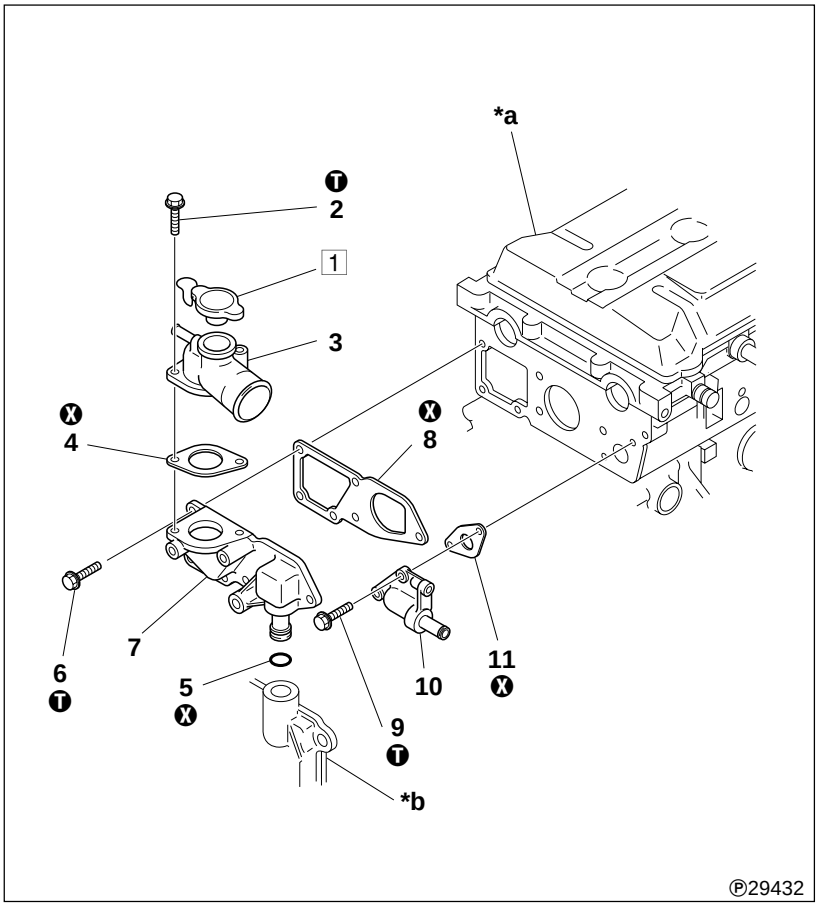

● **Disassembly sequence**

1 Pressure cap
2 Belt
3 Water outlet pipe
4 Gasket
5 O-ring
6 Bolt
7 Water outlet case
8 Gasket
9 Bolt
10 Heater elbow
11 Gasket

***a:** Cylinder head Group 11A
***b:** Breather cover Group 11A
X: Non-reusable part

● **Assembly sequence**

Follow the disassembly sequence in reverse.

Service standards

Location	Maintenance item	Standard value	Limit	Remedy
1	Valve opening pressure of pressure cap	90±15 kPa {12.8±2.2 psi, 0.9 ±0.15 kgf/cm^2}	—	Replace

Tightening torque

Unit: N·m {lbf.ft, kgf·m

Location	Parts to be tightened	Tightening torque	Remarks
2	Bolt (for water outlet pipe mounting)	23.5 {17.4, 2.4}	—
6	Bolt (for water outlet case mounting)	23.5 {17.4, 2.4}	—
9	Bolt (for heater elbow mounting)	23.5 {17.4, 2.4}	—

◆ Service procedure

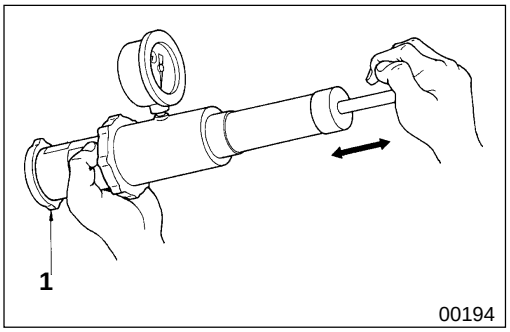

1 Pressure cap inspection

(1 Pressure valve opening pressur

If the gauge reading deviates from the standard value, replace the pressure cap **1**

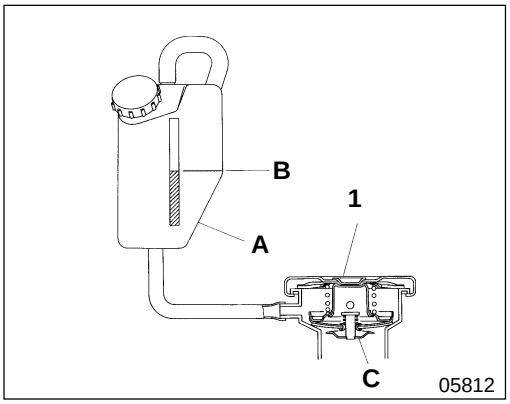

(2) Vent valve inspection

- Observe the water level **B** in the reservoir tank **A**.
- Run the engine at a high speed. Stop the engine when a small amount of coolant has overflowed into the reservoir tank **A**.
- Wait for a while in this condition. When the coolant returns to the ambient temperature, check to see if the water level in the reservoir tank **A** has returned to the level at which it was observed before the engine was started.
- If the water level has not dropped, the vent valve **C** is faulty. Replace the pressure cap **1**.

NOTE:

If the pressure cap 1 is removed before the coolant temperature drops to the ambient temperature, the vacuum in the radiator is lost, preventing the coolant from returning to the radiator.

THERMOSTAT

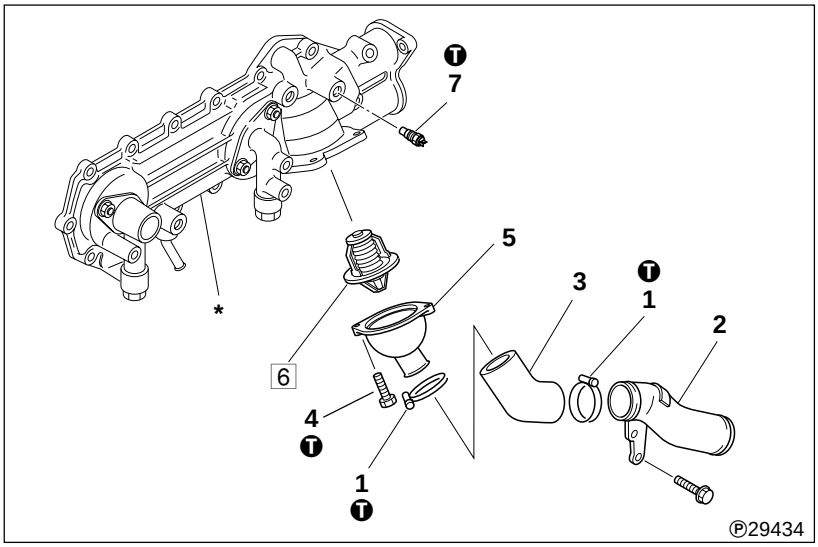

● **Disassembly sequence**

1 Clamp
2 Water pipe
3 Rubber hose
4 Bolt
5 Thermostat cover
6 Thermostat
7 Water temperature sensor
ELECTRICAL

***:** Oil cooler Group 12A

● **Assembly sequence**

Follow the disassembly sequence in reverse.

Service standards

Location	Maintenance item		Standard value	Limit	Remedy
6	Thermostat	Valve opening temperature	76.5±2°C {170±36°F}	—	—
		Valve lift/temperature	10 mm or more/90° {194°F}	—	—

Tightening torque

Unit: N·m {lbf.ft, kgf·m

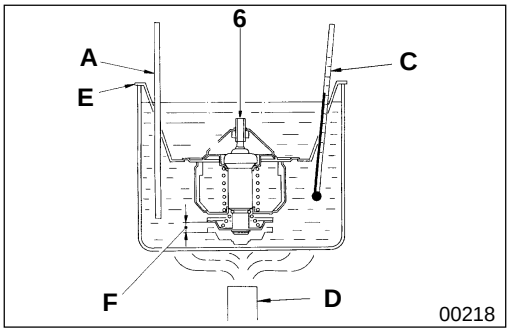

◆ Service procedur

6 **Thermostat**

[Inspection

Place the thermostat in a container of water. Then, carry out the followin inspection procedure while stirring the water with a rod **A** to ensure that i is heated evenly. If the measurements do not comply with the standar values, replace the thermostat **6**

(1 Valve opening temperatur

Support the thermostat **6** with wire **E** to keep it away from the hea source **D**

Gradually heat the water until it reaches the valve opening tempera- ture

- Maintain this temperature for approx five minutes and check that the valve **B** is open.
- When the water temperature drops below 65 °C {149 °F}, check the the valve **B** is completely closed.

C: Thermometer

(2) Valve lift

Heat the water to slightly higher than the valve opening temperature. With the valve **B** fully open, maintain this water temperature for five minutes. Measure the extent of valve lift **F**.

MEMO

MITSUBISHI
FUSO

FE

Service Manual

Group 14
Cooling

Table of Contents

BACK

HOME

MITSUBISHI FUSO TRUCK OF AMERICA, Inc.

Pub No. TWSE9501-14

GROUP 14 COOLING

SPECIFICATIONS 2

STRUCTURE AND OPERATION 2

TROUBLESHOOTING 6

INSPECTION AND ADJUSTMENT MOUNTED IN VEHICLE

- Replacing Coolant and Cleaning Cooling System 8
- Air Bleeding of Cooling System 10
- Gas Leakage Test 10

RADIATOR 12

COOLING FAN AND V-BELT 14

WATER PUMP 18

THERMOSTAT 20

SPECIFICATIONS/STRUCTURE AND OPERATION

SPECIFICATIONS

Item	Specifications
Kind of cooling system	Forced water circulation system
Water pump type	Belt-driven involute type
Thermostat type	Wax-pellet, bottom bypass type (with jiggling valve)
Automatic cooling fan coupling type	Continuous control type
Radiator type	Tube and corrugated fin type
Coolant capacity L {qts}	13 {14}

STRUCTURE AND OPERATION

Cooling System (Flow of Coolant)

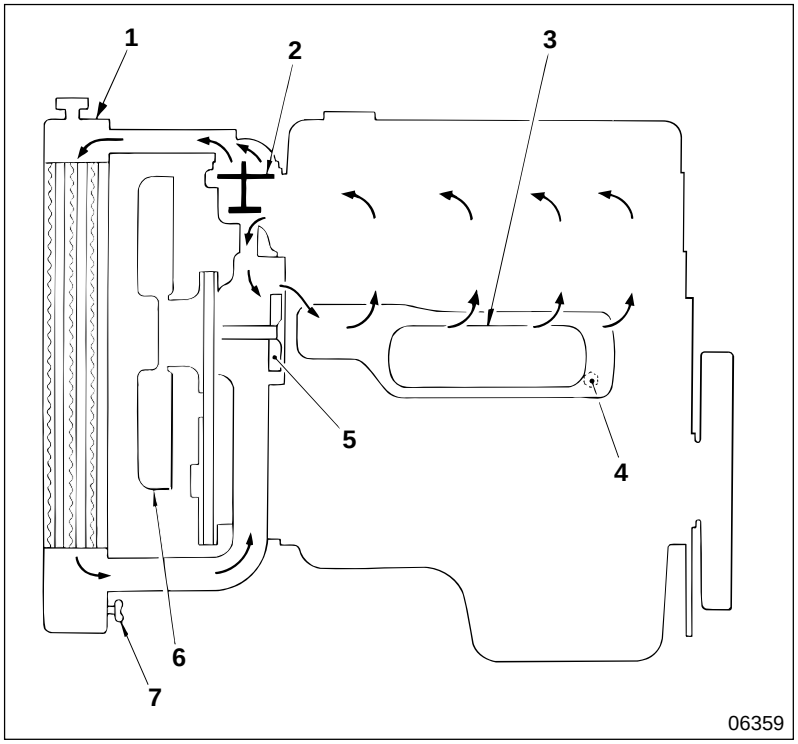

1 Radiator
2 Thermostat
3 Oil cooler
4 Crankcase drain plug
5 Water pump
6 Cooling fan
7 Radiator drain cock

Water Pump

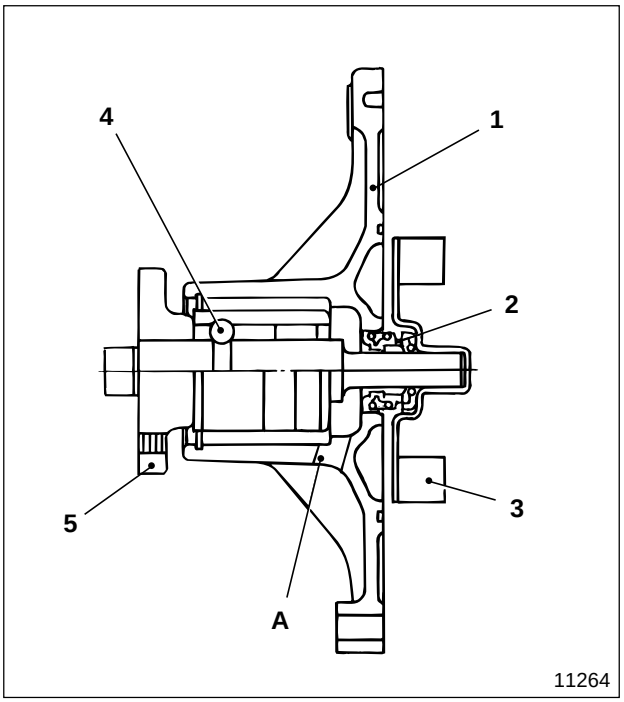

1 Case
2 Unit seal
3 Impeller
4 Ball bearing
5 Flange

A : Drain hole

Thermostat

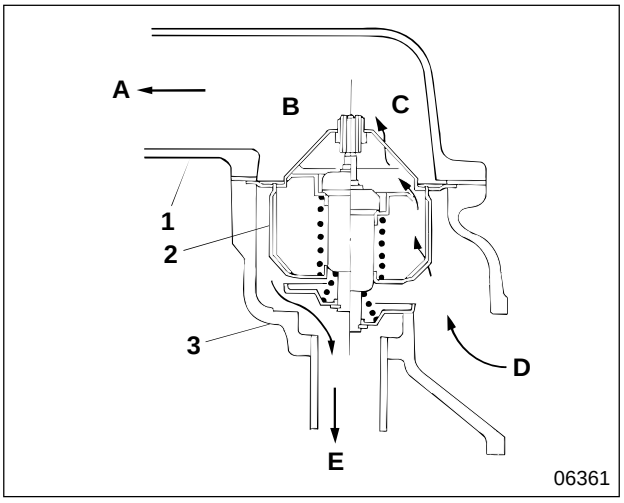

1 Thermostat cover
2 Thermostat
3 Thermostat case

A : To radiator
B : When low coolant temperature
C : When high coolant temperature
D : From cylinder head
E : To water pump

Thermostat **2** is a bottom bypass type that uses wax pellets as its regulating element. As the wax changes its form from solid to liquid according to changes in temperature, the volume of the wax changes. Therefore, the position of the valve, changed by the coolant temperature, regulates the flow of the coolant to the radiator and water pump (bypass side) and controls the coolant temperature.

Cooling System Electric Circuit

● Water temperature gauge circuit

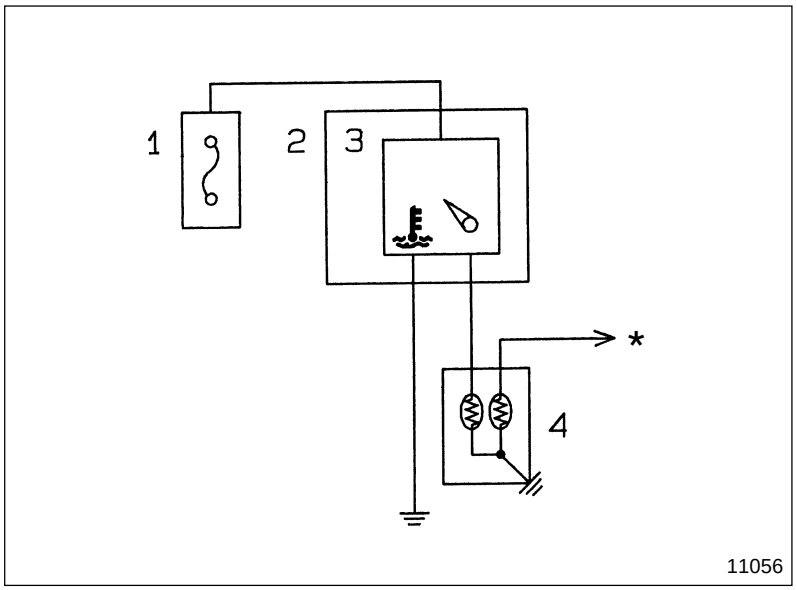

1 Fuse box
2 Meter cluster
3 Water temperature gauge
4 Water temperature sensor

***** : To multipurpose control unit Gr 54

This circuit detects the coolant temperature by changes of resistance in water temperature sensor **4** and relays the signal to water temperature gauge **3** in meter cluster **2** to indicate the temperature.

● Overheating Circuit

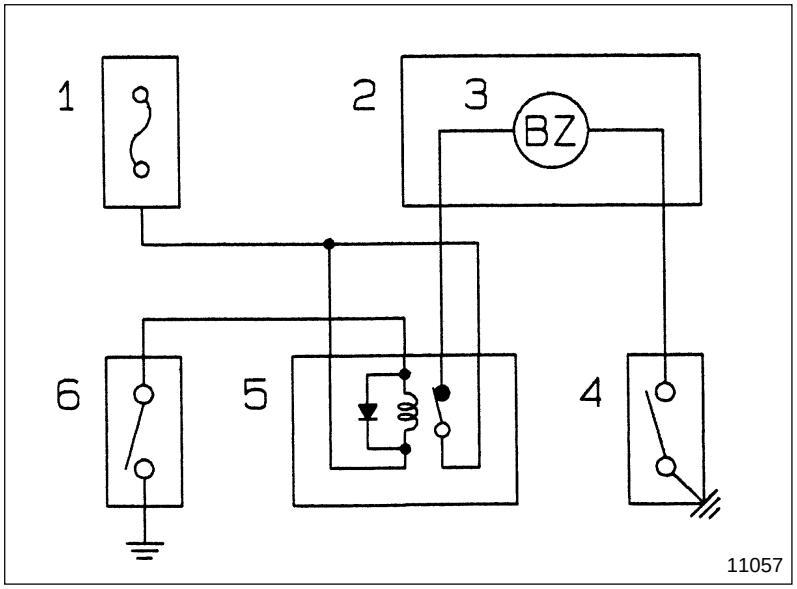

1 Fuse box
2 Meter cluster
3 Overheating buzzer
4 Overheating switch
5 Overheating relay
6 Parking brake switch

When this circuit detects extremely high coolant temperature, it sounds overheating buzzer **3** to warn the driver of the abnormal condition. To stop the buzzer, first stop the vehicle, then pull up the parking lever.

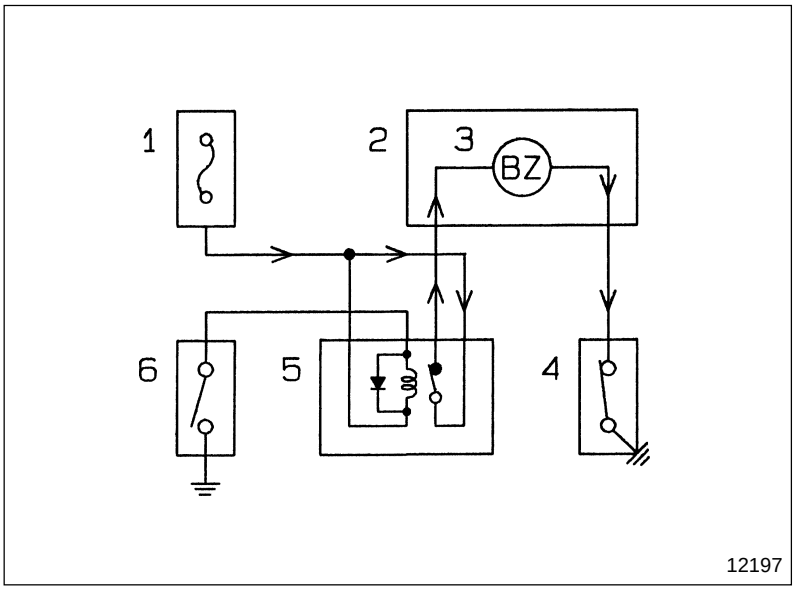

When overheating switch is activated

- 1→5 (Contact point)→3→4→Ground
- Buzzer **3** sounds.

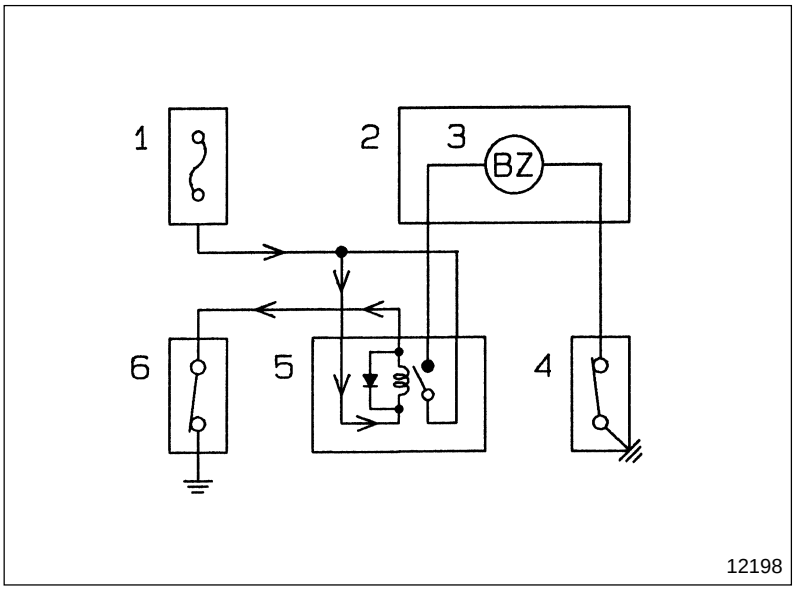

When parking brake switch is activated

- 1→5 (Coil)→6→Ground
- Buzzer **3** stops sounding as the contact points of overheating relay **5** opens.

TROUBLESHOOTING

Possible causes / Symptoms		Overheating (Low cooling effect)	Overcooling	Noise occurs	Coolant loss excessive	Remarks
V-belt	Loose or damaged	○		○		
	Tension excessive			○		
	Oily	○				
Water pump	Water pump installation faulty	○		○	○	
	Unit bearing faulty	○		○		
	Impeller faulty	○		○		
	Unit seal faulty	○			○	
	Unit bearing-to-flange and to-impeller fitting loose	○		○		
Thermostat	Case installation faulty	○			○	
	Valve opening temperature too high, valve remains closed	○				
	Valve opening temperature too low, valve remains open		○			
Radiator	Space between core and fins clogged	○				
	Core cracked or soldered area separated	○			○	
	Pressure cap airtightness poor	○				
	Water level sensor leaking water	○			○	
Automatic cooling fan coupling	Bearing faulty	○		○		
	Bimetal damaged	○				
	Bimetal contaminated with foreign particles	○	○			
	Silicon oil leaking	○		○		
Oil cooler	Oil cooler installation faulty	○			○	Gr 12
	Gasket faulty	○			○	Gr 12
Cylinder head	Cylinder head installation faulty	○			○	Gr 11
	Gasket faulty	○			○	Gr 11
Coolant quantity insufficient		○				
Coolant passage furred and clogged		○				
Water hose installation faulty		○			○	
Exterior temperature extremely cold			○			

M E M O

Replacing Coolant and Cleaning Cooling System

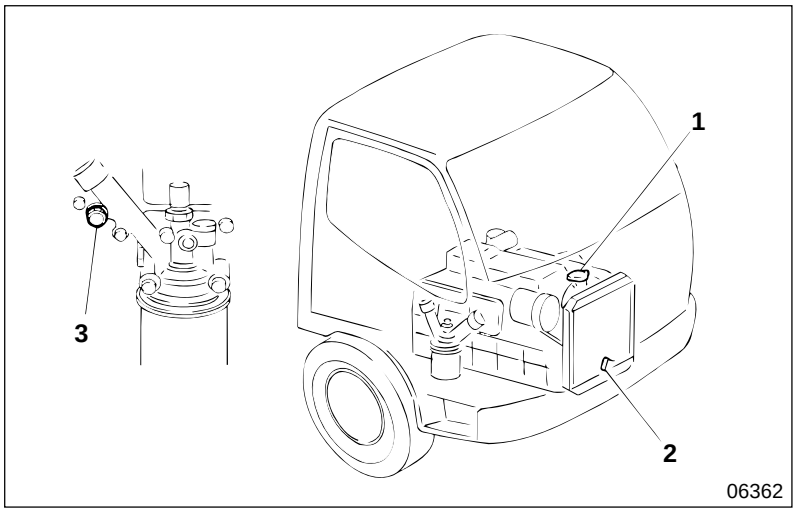

1 Pressure cap
2 Radiator drain plug
3 Crankcase drain plug

Tightening torque

Unit : N·m {lbf.ft, kgf·m}

Location	Parts to be tightened	Tightening torque	Remarks
3	Crankcase drain plug	34 to 39 {25 to 29, 3.5 to 4.0}	—

Using the radiator for a long period of time without cleaning it will cause overheating because rust and scale deposits will accumulate inside the cooling system. Periodical cleaning is recommended.

● **Draining coolant**

First loosen pressure cap **1,** to lower the pressure in the cooling system, before draining coolant.

WARNING

- **You must make sure that the engine coolant is cold before draining it so as not to scald yourself.**
- **It is dangerous to open pressure cap 1, when the coolant temperature is high, without taking due care because the hot water would spray out. Be sure to cover the pressure cap with a cloth and loosen slowly to bleed the pressure before opening fully.**

● **Cleaning procedure**

- Keep the coolant temperature at approximately 90°C {194°F} so that the thermostat valve remains open and the coolant continues to circulate in the radiator.
- For the sake of convenience you can raise the coolant temperature quickly by covering the front of the radiator with corrugated cardboard or something similar.
- Set the temperature adjusting lever of the heater controller at maximum so that the coolant can circulate freely in the heater piping area.
- In cases where a great amount of rust has accumulated it often happens that as a result of cleaning the radiator starts leaking. Conduct a thorough check for leakage after cleaning.
- Soft water to be used should have the following properties.

CAUTION

Do not use hard water as it causes scale and rust.

Required properties of soft water

Total hardness	300 ppm or less	Total dissolved solids	500 ppm or less
Sulfate SO_4^-	100 ppm or less	pH	6 to 8
Chloride Cl^-	100 ppm or less		

Method of cleaning the cooling system depends on its condition.

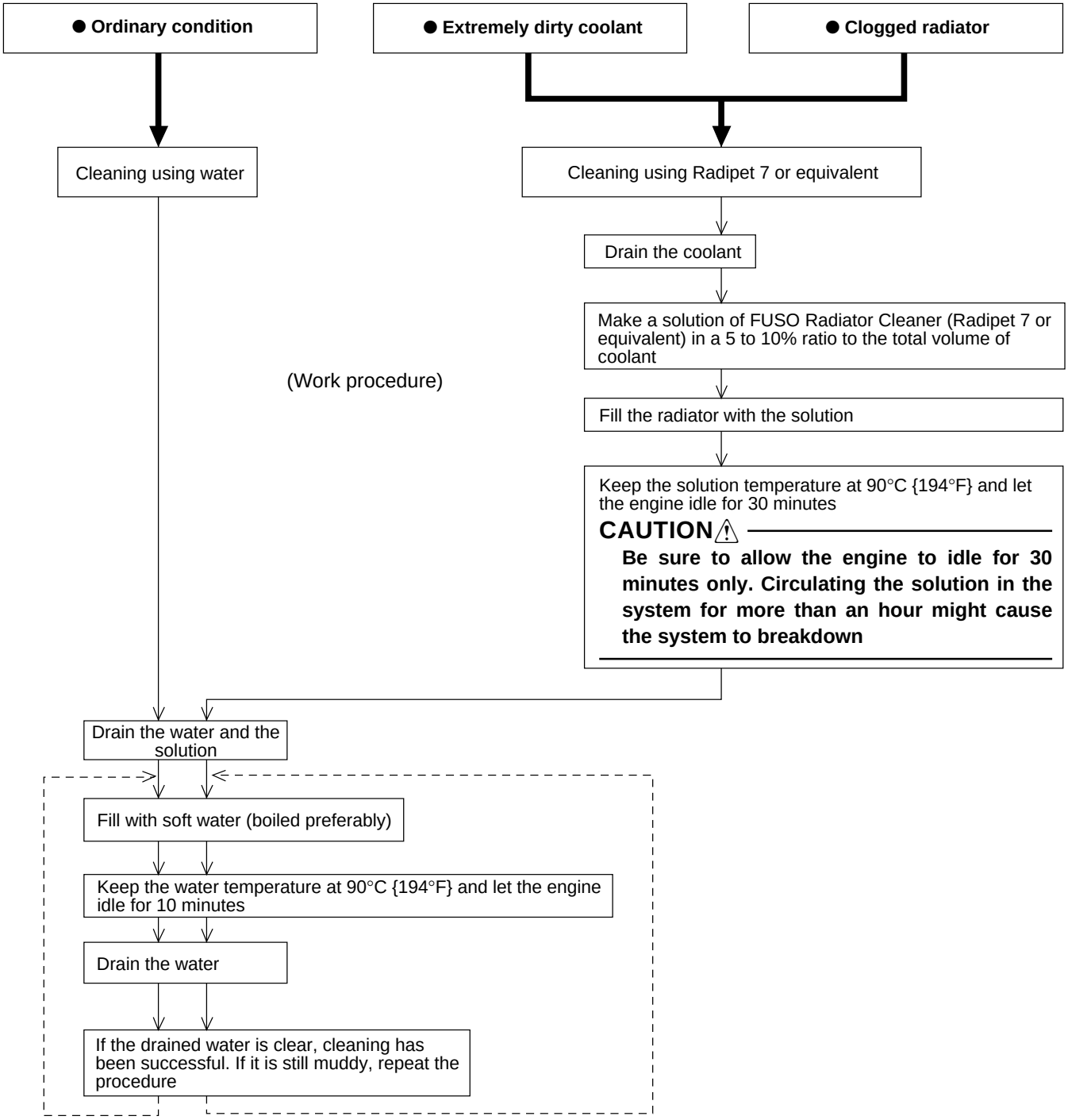

DANGER

If FUSO DIESEL LONG LIFE COOLANT solution gets in your eyes accidentally, you must immediately rinse your eyes with copious amounts of water, and be sure to consult a doctor.

WARNING

FUSO DIESEL LONG LIFE COOLANT is inflammable. Do not put it near naked lights.

NOTE

- **After cleaning with solution, fill with coolant as quickly as possible.**
- **To prevent freezing of the coolant and corrosion of the cooling system, use specified coolant solution of FUSO DIESEL LONG LIFE COOLANT. (See the Owner's Handbook for use of these materials.)**

Air Bleeding of Cooling System

- Remove the pressure cap and keep the coolant temperature at 90°C {194°F} while letting the engine idle and bleed the air out completely. Keep the temperature adjusting lever of the heater controller at maximum so that the coolant can circulate freely in the heater piping area.
- After completing adequate air bleeding of the cooling system, refill coolant sufficiently enough for the radiator and the reservoir tank.

Gas Leakage Test

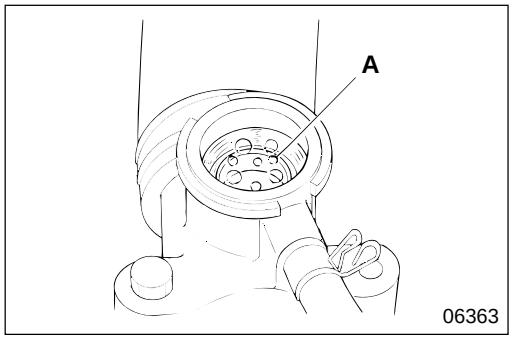

Air or exhaust gas in the coolant increases corrosion and rusting in the system. Therefore, carry out the following test:

- Remove the pressure cap.

WARNING ⚠

Be sure that the coolant temperature is low enough so that hot coolant does not spout out when you loosen the pressure cap.

- Run the engine to bring the coolant temperature to approximately 90°C {194°F}.
- If air bubbles **A** continuously rise from the coolant, it is an indication that air or exhaust gas has gotten into the coolant.
- If it is air, it is possible that the cylinder head bolts, the water pump mounting bolts or the hose connections are loose, or that the hose is damaged.
- If it is exhaust gas, it is possible that the cylinder head gaskets are damaged, or that the cylinder head is cracked.

M E M O

RADIATOR

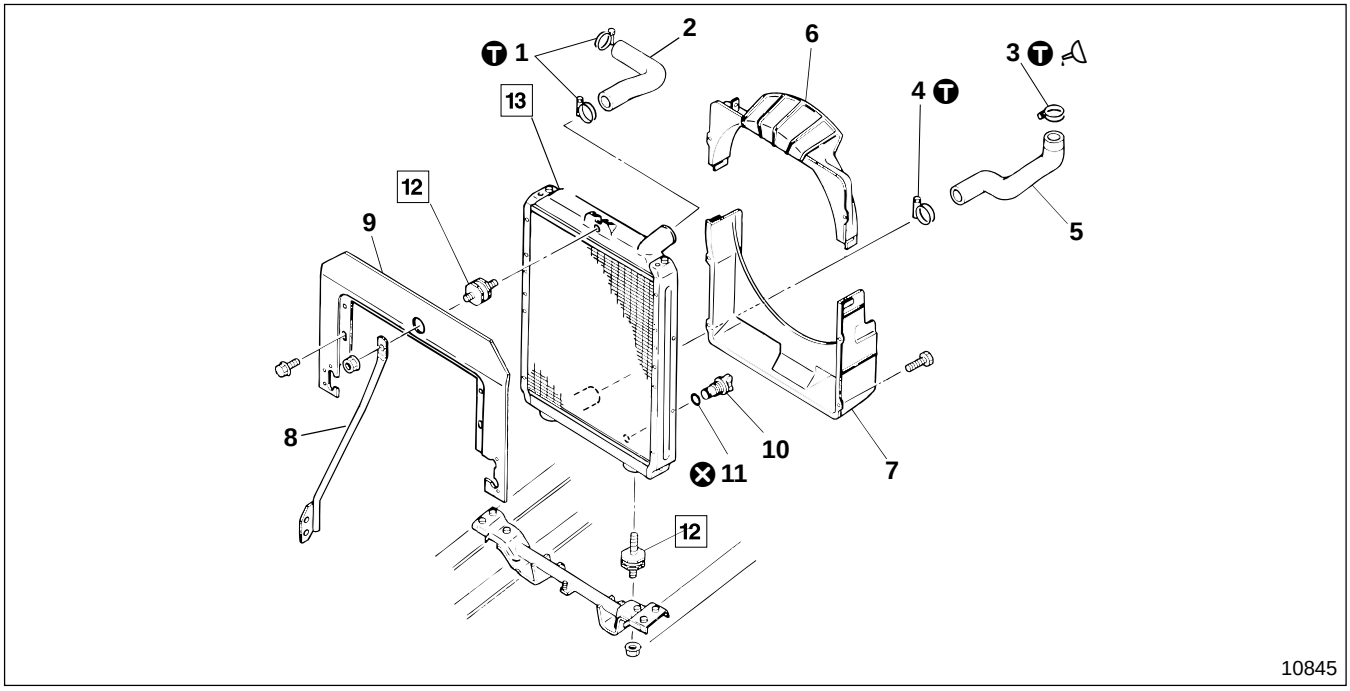

● **Disassembly sequence**

1 Hose clamp
2 Inlet hose
3 Hose clamp
4 Hose clamp
5 Outlet hose
6 Upper radiator shroud
7 Lower radiator shroud
8 Radiator support
9 Baffle plate
10 Radiator drain plug
11 O-ring
12 Support cushion
13 Radiator

⊗: Non-reusable parts

● **Assembly sequence**

Follow the disassembly sequence in reverse.

Service standards

Location	Maintenance item	Standard value	Limit	Remedy and remarks
13	Radiator air leakage (Air pressure of 150 kPa {21 lbf/in^2, 1.5 kgf/cm^2})	0 cm^3 {0 cu. in.}	—	Correct or replace

Ⓣ Tightening torque

Unit : N·m {lbf.ft, kgf·m}

Location	Parts to be tightened	Tightening torque	Remarks
1, 4	Hose clamp	3.9 {2.9, 0.4}	—
3	Hose clamp	1.5 to 2 {1.1 to 1.4, 0.15 to 0.2}	Wet

Lubricant

Location	Points of application	Kinds	Quantity
3	Thread area of bolt	Engine oil	As required

◆ Service procedure

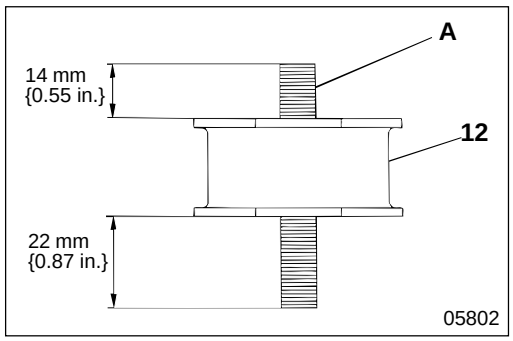

12 **Support cushion**

Place support cushion **12** so that thread part **A** (shorter than the other side) comes to the radiator side for mounting.

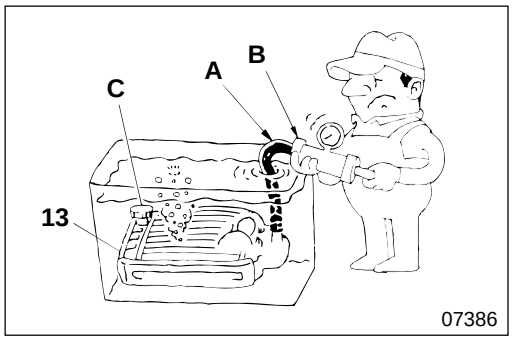

13 **Inspection of radiator**

- Install radiator cap tester **B** by connecting hose **A** to the radiator inlet hole.
- Plug any other openings **C** with plugs, and immerse the radiator in a water tank.
- Apply specified air pressure of 150 kPa {21 lbf/in^2, 1.5 kgf/cm^2} using cap tester **B**, and check if there is any air leakage.
- If you find air leakage, correct or replace radiator **13**.

COOLING FAN AND V-BELT

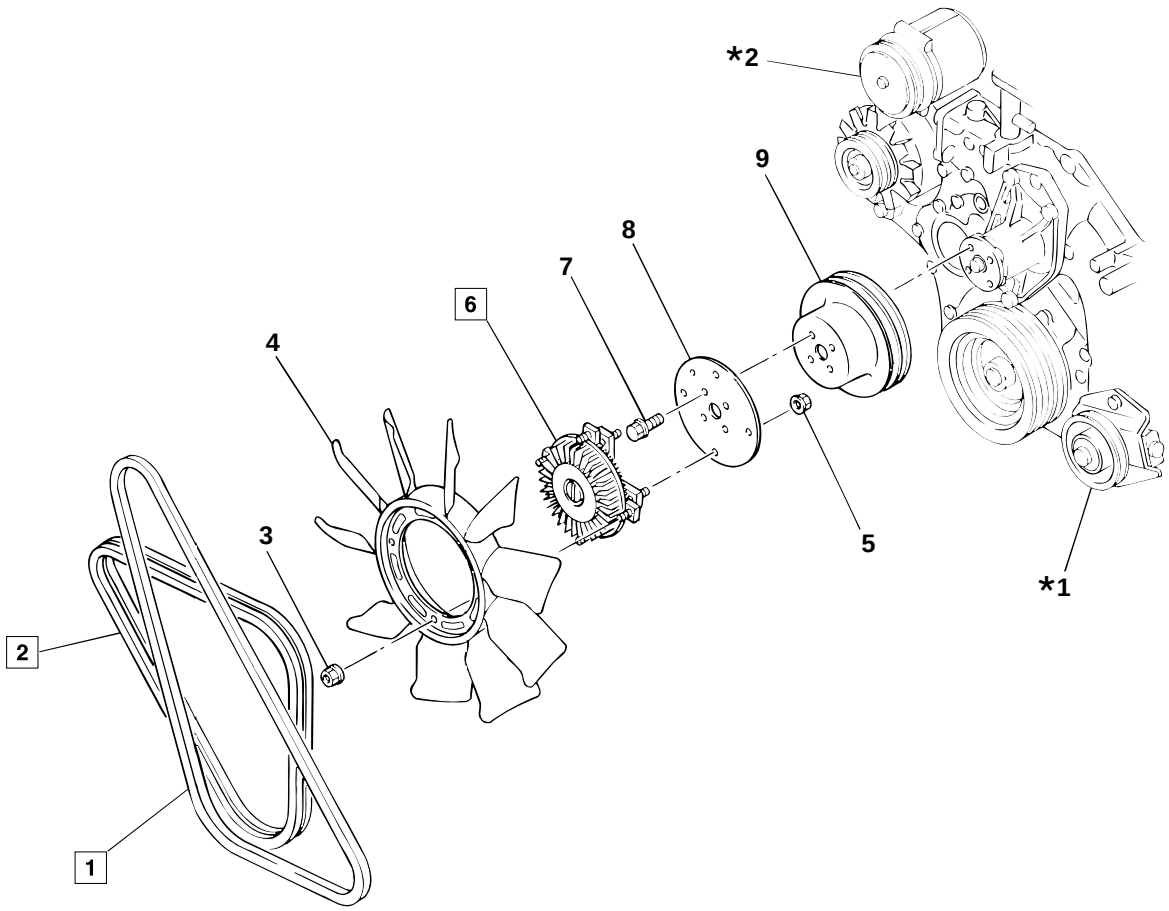

● **Disassembly sequence**

1 V-belt (Compressor)
2 V-belt (Fan)
3 Nut
4 Cooling fan
5 Nut
6 Automatic cooling fan coupling
7 Bolt
8 Coupling plate
9 Water pump pulley

***1** : Tension pulley Gr 54
***2** : Cooler compressor Gr 54

● **Assembly sequence**

Follow the disassembly sequence in reverse.

CAUTION

- **Be sure to replace automatic cooling fan coupling 6 as an assembly if it is faulty because it is a unit construction.**
- **Be sure to replace V-belts 2 as a set to maintain even tension between them.**

Service standards

Unit : mm {in.}

Location	Maintenance item	Standard value	Limit	Remedy
1	V-belt tension (Air-conditioner)	16 to 20 {0.63 to 0.79}	—	Adjust
2	V-belt tension (Fan)	12 to 16 {0.47 to 0.63}	—	Adjust

Special tools

Unit : mm {in.}

Location	Tool name and shape	Part No.	Application
1, 2	Belt tension gauge  03612	MH062345	Measurement of tension of V-belt

◆ Service procedure

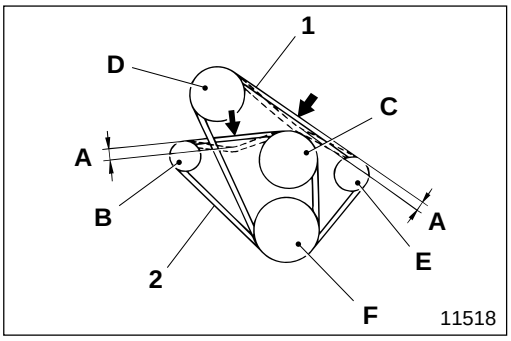

1 **2** **V-belt**

[Inspection]

Measure the extent of flex **A** when the center of V-belts **1**, **2** as illustrated is depressed with a force of 98 N {72 lbf, 10 kgf}.

B : Alternator pulley
C : Water pump pulley
D : Cooler compressor pulley (Air-conditioner)
E : Tension pulley
F : Crankshaft pulley

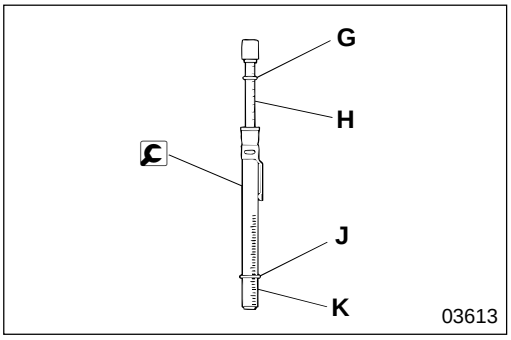

● **Use of special tool belt tension gauge**

- Set upper O-ring G of belt tension gauge to 98 N {72 lbf, 10 kgf} (push load) on graduation **H**.
- Set lower O-ring **J** of belt tension gauge to graduation **K** (maximum flex of belt).

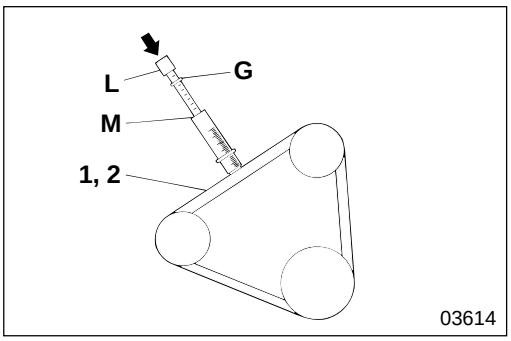

- Place belt tension gauge at the center of V-belts **1**, **2** perpendicularly as illustrated and push top **L** all the way down until upper O-ring **G** hits upper edge **M**.

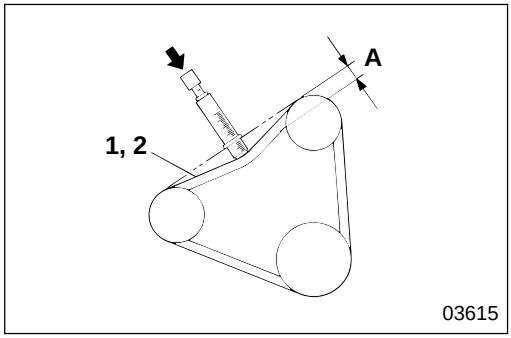

- Measure the extent of flex **A** of V-belts **1**, **2** at this point, and if the measured value deviates from the standard value, adjust as follows.

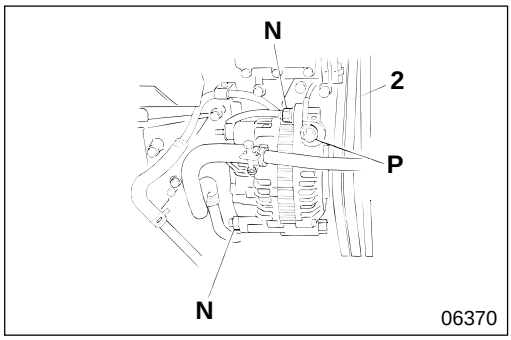

[Adjustment]

(1) Adjustment of V-belt tension for fan

- Loosen alternator mounting bolts **N** (two places), and adjust the tension of V-belts **2** by moving adjusting bolt **P**.
- After adjustment, tighten the bolts and nuts securely.

CAUTION⚠

- **Bear in mind that excessive tension of V-belts 2 might damage the belts and bearings that engage with the V-belts.**
- **Be sure to replace V-belts 2 as a set to maintain even tension between them.**
- **Be careful not to let oil stick to V-belts 2, if oil gets onto the belts, it causes slipping, resulting in overheating and insufficient battery charging.**

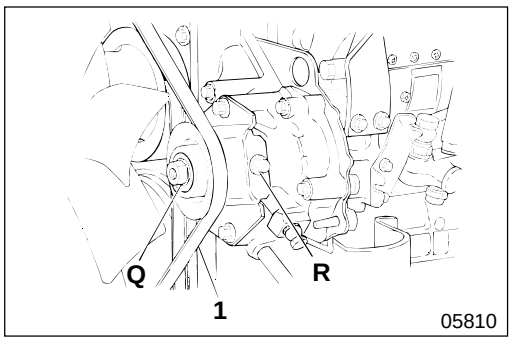

(2) Adjustment of V-belt tension for air-conditioner

- Loosen tension pulley mounting nut **Q**, and adjust the tension of V-belt **1** by adjusting bolt **R**.
- After adjustment, tighten the bolts and nuts securely.

CAUTION⚠

- **Bear in mind that excessive tension of V-belt 1 might damage the belt and bearings that engage with the V-belt.**
- **Be careful not to let oil stick to V-belt 1, if oil gets onto the belt, it causes slipping, resulting in poor performance of the air-conditioner.**

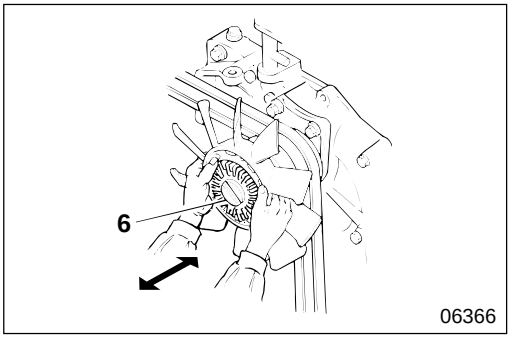

6 Automatic cooling fan coupling

[Inspection]

Carry out the following inspection of automatic cooling fan coupling **6** and if any fault is found, replace the unit.

- Check for any leakage of lubricating oil sealed in the coupling body.
- Rotate automatic cooling fan coupling **6** by hand, and check for any irregularity in rotation related to the coupling bearing or any abnormal noise.
- Check for any excessive play of automatic cooling fan coupling **6** in the axial direction when the engine is cool.

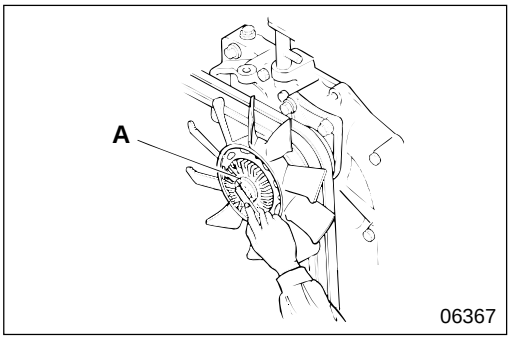

[Cleaning]

- If there are any foreign particles sticking to bimetal **A**, remove them by brushing lightly.

WATER PUMP

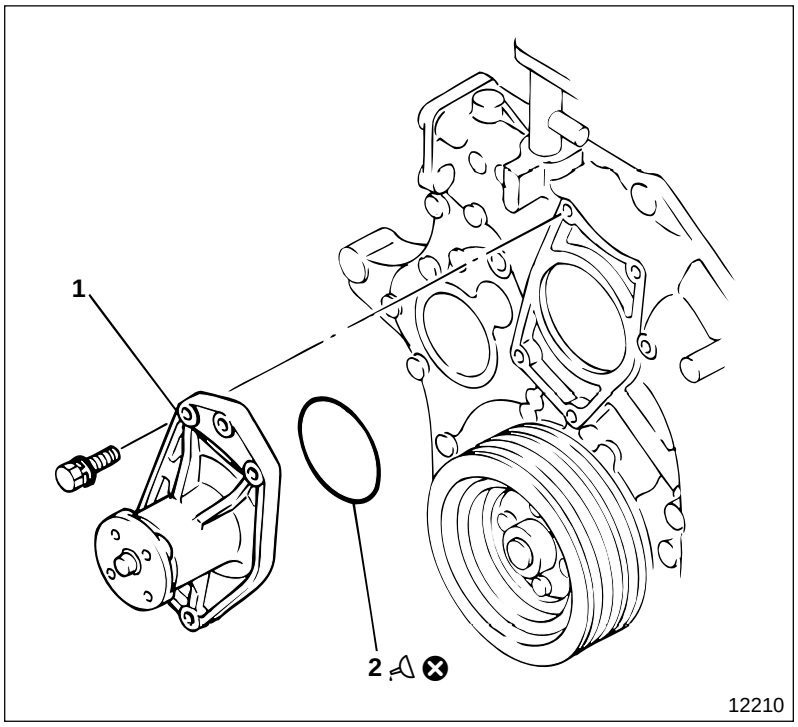

● **Removal sequence**

1 Water pump assembly
2 O-ring

⊗ : Non-reusable parts

● **Installation sequence**

Follow the removal sequence in reverse.

CAUTION

- **Be sure to replace water pump assembly 1 as an assembly if it is faulty because it is a unit construction.**
- **Never apply engine oil to the O-ring because it will cause the O-ring to swell.**

Lubricant

Location	Points of application	Kinds	Quantity
2	Periphery of O-ring	Soapy water	As required

M E M O

THERMOSTAT

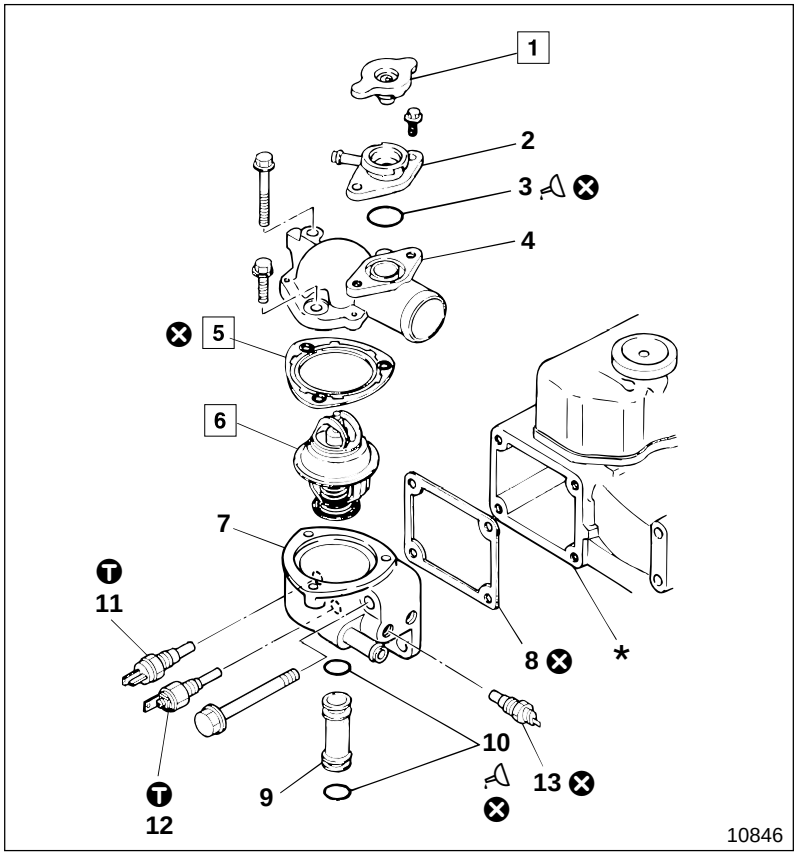

● **Disassembly sequence**

1 Pressure cap
2 Water filler
3 O-ring
4 Thermostat cover
5 Thermostat cover gasket
6 Thermostat
7 Thermostat case
8 Thermostat case gasket
9 Bypass pipe
10 O-ring
11 Water temperature sensor (Water temperature gauge and multi-purpose timing control unit) Gr 54
12 Overheating switch Gr 54
13 Water temperature sensor (Pre-stroke control type injection pump) Gr 54

* : Cylinder head
⊗ : Non-reusable parts

● **Assembly sequence**

Follow the disassembly sequence in reverse.

CAUTION ⚠

Be sure to apply soapy water to O-ring 3, 10 for easier fitting. Never use engine oil because it will cause the O-ring to swell.

Service standards

Unit : mm {in.}

Location	Maintenance item		Standard value	Limit	Remedy and remarks
1	Pressure cap valve opening pressure		88±15 kPa {13±2.1 lbf/in^2, 0.9±0.15 kgf/cm^2}	—	Replace
6	Thermostat	Valve opening temperature	82±2°C {180±36°F}	—	Replace
		Extent of valve lift (95°C {203°F})	10 {0.39} or more	—	Replace

Ⓣ Tightening torque

Unit : N·m {lbf.ft, kgf·m}

Location	Parts to be tightened	Tightening torque	Remarks
11	Water temperature sensor	34±6.9 {25±5.1, 3.5±0.7}	—
12	Overheating switch	27 to 41 {20 to 30, 2.8 to 4.2}	—
13	Water temperature sensor	34±6.9 {25±5.1, 3.5±0.7}	—

Lubricant

Location	Points of application	Kinds	Quantity
3, 10	O-ring	Soapy water	As required

◆ Service procedure

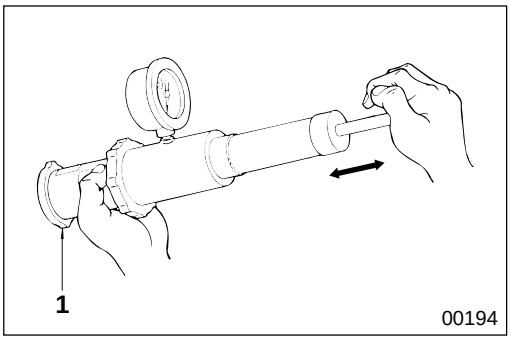

1 Inspection of pressure cap

(1) Pressure valve opening pressure

If the measured value deviates from the standard value, replace pressure cap **1**.

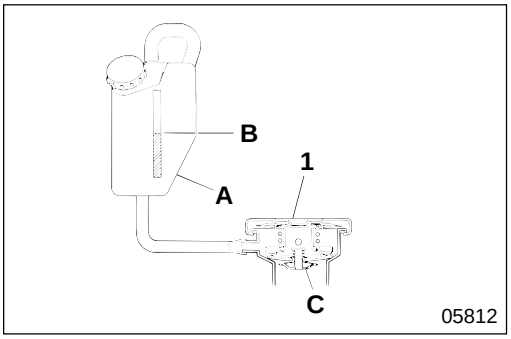

(2) Inspection of vent valve

- Take note of the liquid level **B** of reservoir tank **A** beforehand.
- Run the engine at a high revolution and before the overflow reaches the capacity of tank **A** stop the engine.
- Leave things for a while. Check the time it takes for the coolant temperature to return to the ambient temperature, and check whether the coolant level in tank **A** is the same as before running the engine.
- If the coolant level has not returned to that before running the engine, it means vent valve **C** is faulty, therefore replace pressure cap **1**.

NOTE

Do not remove pressure cap 1 before the coolant temperature decreases to the ambient temperature. If you do the coolant will not return to reservoir tank A because negative pressure in the radiator is lost.

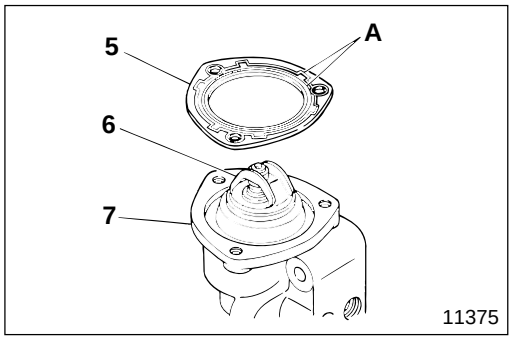

5 Mounting of thermostat cover gasket

Mount thermostat cover gasket **5** on thermostat case **7** in the direction as illustrated.

A : Sealant application surface

THERMOSTAT

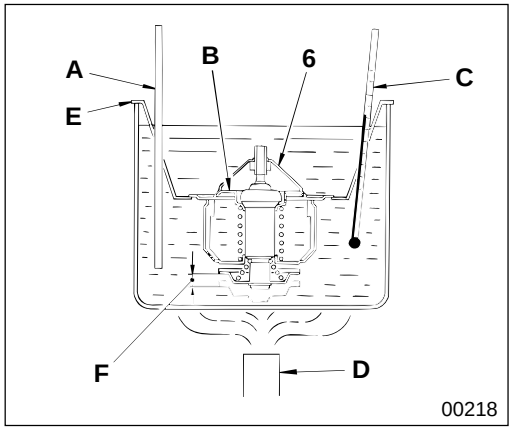

6 Thermostat

[Inspection]
Stir the water using stick **A** to maintain an even water temperature in the container, then carry out the following tests. If the measured value deviates from the standard value, replace thermostat **6**.

(1) Valve opening temperature

- Hold thermostat **6** with wire **E** so as not to get the thermostat too close to heat **D**.
- Heat the water gradually to raise the temperature to the valve opening temperature.
- Maintain this temperature for five minutes and make sure that valve **B** has opened.
- Make sure that valve **B** has closed when the water temperature has dropped to 65°C {149°F}.

C : Water temperature gauge

(2) Extent of valve lift

Measure valve lift **F**, while maintaining the water temperature a little higher than the valve opening temperature, with valve **B** fully open for five minutes.

MITSUBISHI FUSO

FE

Service Manual

Group 15 - Intake & Exhaust

Group 15A - Intake & Exhaust
2001 Model Change
<4M50>

BACK HOME

MITSUBISHI FUSO TRUCK OF AMERICA, Inc.

Pub No. TWSE9501-00

MITSUBISHI
FUSO

FE

Service Manual

Group 15A
Intake and Exhaust
<4M50T2>

2001 Model Year Change

Table of Contents

MITSUBISHI FUSO TRUCK OF AMERICA, Inc.

BACK HOME

Pub No. TWSE9501-515A

GROUP 15A INTAKE AND EXHAUST

SPECIFICATIONS / STRUCTURE AND OPERATION 15A- 2
1. Air Cleaner 15A- 2
2. Turbocharger Assembly 15A- 3

TROUBLESHOOTING 15A- 4

ON-VEHICLE INSPECTION AND ADJUSTMENT 15A- 5
1. Measurement of Turbocharger Boost Pressure 15A- 5

AIR DUCT AND AIR CLEANER 15A- 8

TURBOCHARGER 15A-11

INTERCOOLER 15A-16

INTAKE MANIFOLD 15A-18

EXHAUST MANIFOLD 15A-20

EXHAUST PIPE AND MUFFLER 15A-21

SPECIFICATIONS / STRUCTURE AND OPERATION

SPECIFICATIONS

Item		Specifications
Air cleaner element		Cyclone paper filter type
Turbocharger	Model	TD05
	Manufacturer	Mitsubishi Heavy Industries
Intercooler type		Tube and corrugated fin (air cooled)

STRUCTURE AND OPERATION

1. Air Cleaner

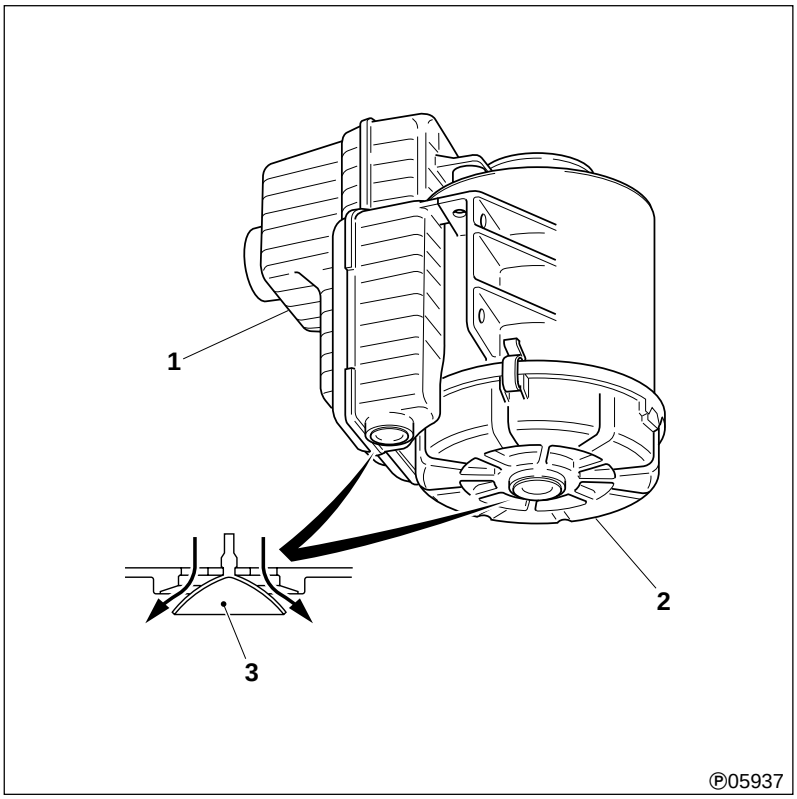

1 Air box
2 Air cleaner assembly
3 Unloader valve

- The air cleaner assembly **2** utilizes a single element.
- The air box **1** and the air cleaner assembly **2** incorporate an unloader valve **3**.
- The unloader valve vibrates due to a vacuum fluctuation when the engine speed drops below a predetermined level, automatically discharging accumulated water and dust.

2. Turbocharger Assembly

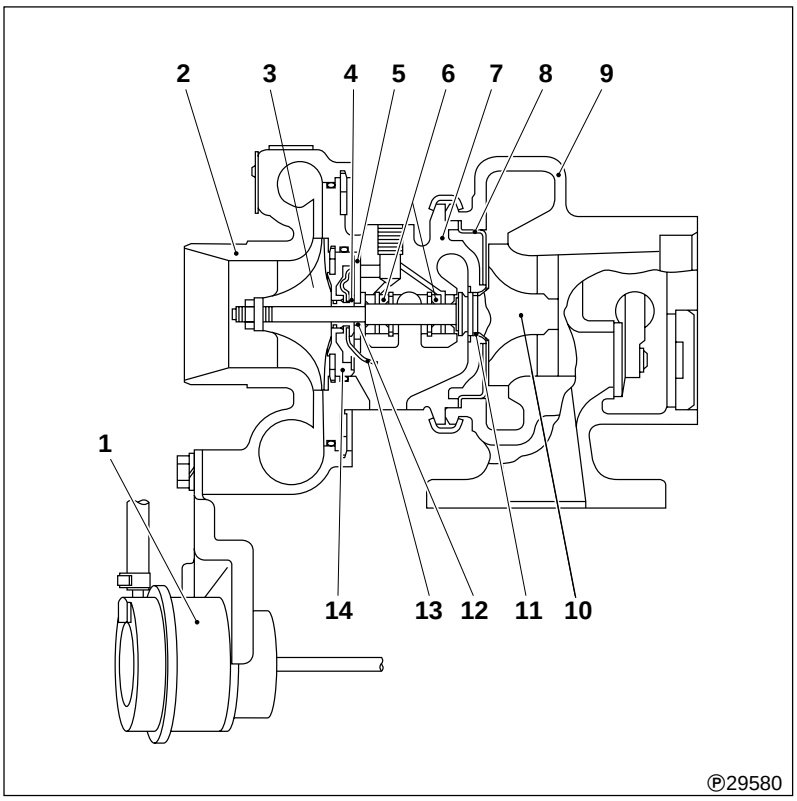

1 Actuator
2 Compressor cover
3 Compressor wheel
4 Thrust sleeve
5 Thrust bearing
6 Bearing
7 Bearing housing
8 Turbine back plate
9 Turbine housing
10 Shaft and turbine wheel
11 Piston ring
12 Thrust ring
13 Oil deflector
14 Insert

3 to 14: Cartridge assembly

● **Waste gate mechanism**

- The waste gate mechanism has actuator assembly **1** to let extra exhaust gas escape. By so doing, the boost pressure is properly controlled to prevent the turbine wheel from overrunning and prevent an excessive pressure in the intake manifold.
- The boost pressure is led from compressor cover **2** through a rubber hose to chamber **A** of actuator assembly **1**. When the boost pressure **C** that acts on chamber **A** is below the setting, the actuator assembly does not operate, and the waste gate valve remains closed, and exhaust gas **D** is blown against turbine wheel **10**.

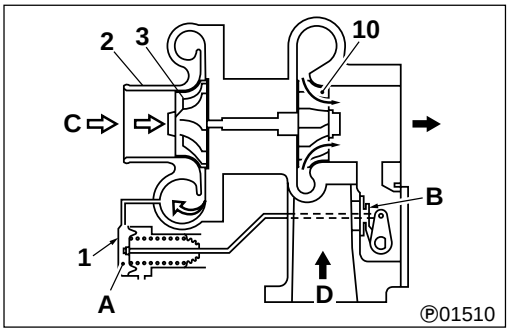

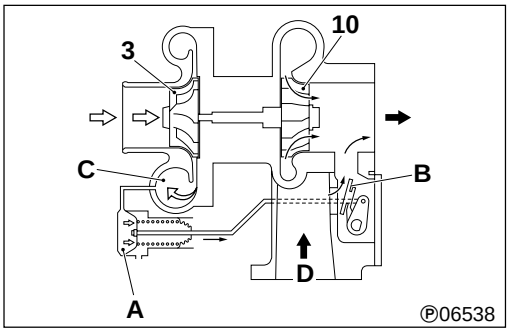

- When the boost pressure that acts on chamber **A** exceeds the setting, the waste gate valve is opened. As a result, the amount of exhaust gas blown against turbine wheel **10** decreases, the rotating speed of compressor wheel **3** also decreases, and the boost pressure falls.

Possible causes \ Symptoms			Engine hard to start	Black exhaust gas	White exhaust gas	Insufficient engine output	Excessive oil consumption	Strange sound or vibration in intake and exhaust system	Remarks
Clogged air cleaner element			×	×		×			
Deformed front pipe, muffler, tail pipe								×	
Improperly mounted front pipe, muffler, tail pipe								×	
Incorrect valve clearance				×					Group 11A
Defective head gasket				×					Group 11A
Worn valve and valve seat and deposited carbon				×					Group 11A
Sagging valve spring				×					Group 11A
Worn or damaged piston ring					×		×		Group 11A
Worn or damaged piston ring groove of piston					×		×		Group 11A
Malfunctioning cooling equipment				×		×			Group 14A
Excessive engine oil					×				Group 12A
Seizure of major moving parts				×					Group 11A
Turbo-charger	Cartridge assembly	Defective bearing		×		×		×	
		Carbon deposited on shaft and turbine wheel		×		×			
		Shaft and turbine wheel interfering with turbine back plate		×		×			
		Shaft and turbine wheel interfering with turbine housing		×		×			
		Bent shaft and turbine wheel		×		×		×	
		Damaged shaft and turbine wheel		×		×		×	
		Compressor wheel interfering with compressor housing		×		×			
		Thrust sleeve and thrust bearing seizure		×		×		×	
		Damaged compressor wheel		×		×		×	
		Oil leaks due to worn piston ring and insert			×		×		
		Improperly mounted piston ring					×		
		Unsmooth sliding of internal parts due to clogged lubrication oil pipe and eyebolt		×		×			
		Damaged oil seals due to clogged oil return pipe			×		×		
	Improperly mounted compressor housing			×		×	×	×	
	Improperly mounted turbine housing					×		×	
Intercooler	Foreign substances deposited on intercooler front core					×			

1. Measurement of Turbocharger Boost Pressure

Service standards

Location	Maintenance item	Standard value	Limit	Remedy
–	Boost pressure (at ambient temperature of 20°C {68°F} and atmospheric pressure of 100 kPa {29.9 in.Hg, 760 mmHg})	–	34.7 kPa {10.2 in.Hg, 260 mmHg}/ 3750 rpm 136 kPa {10.2+29.9 in.Hg/260+760 mmHg} when measured by MUT	Inspect/ adjust

Special tool

Location	Tool name and shape	Part No.	Application
–	Boost pressure gauge 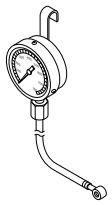 Ⓟ01524	Obtain Locally	Measurement of boost pressure

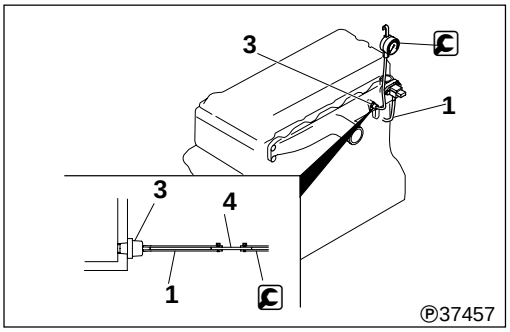

Ⓟ37457

- Before measuring the boost pressure, clean or replace the air cleaner element.
- Disconnect the vacuum hose **1** at the boost pressure sensor **2** side.
- Connect the pipe **4** (MH062049 [component part of MH062047]) between the vacuum hose **1** fitted to the gas filter assembly **3** and the Boost Pressure Gauge.
- Warm up the engine, then measure the boost pressure at the engine's maximum idling speed. At the same time, measure the engine speed and ambient temperature.

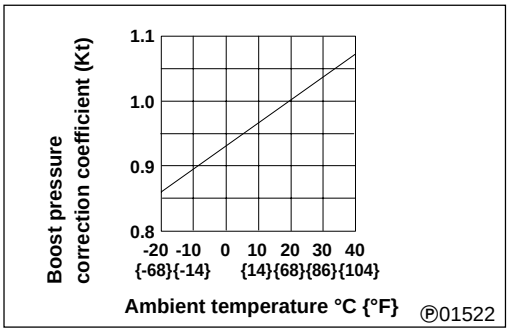

Ⓟ01522

- Correct the measurement to determine the boost pressure under standard conditions. (The boost pressure varies in accordance with the ambient temperature and engine speed.)

  [Correction for ambient temperature]

  From the graph, determine the boost pressure correction coefficient Kt for the ambient temperature.

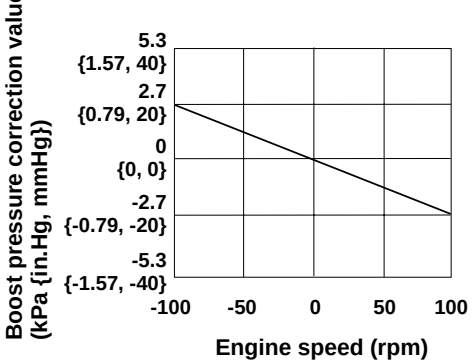

(Differece between the median of the no-load maximum engine speed and the actual engine speed used for boost pressure measurement)

Ⓟ06165

[Correction for engine speed]

From the engine speed during boost pressure measurement, subtract the median of the maximum idling speed. From the result, determine the boost pressure correction value (**Pa**) in accordance with the graph.

Median**:** 3,750 rpm

[Calculation of corrected boost pressure]

If the measured boost pressure is **P**, the corrected boost pressure **Pb** is determined as follows**:**

Pb = KtP + Pa

Pb: Corrected boost pressure
P: Measured boost pressure
Kt: Boost pressure correction coefficient for ambient temperature
Pa: Boost pressure correction value

If **Pb** is out of specification, the turbocharger must be inspected and adjusted.

MEMO

AIR DUCT AND AIR CLEANER

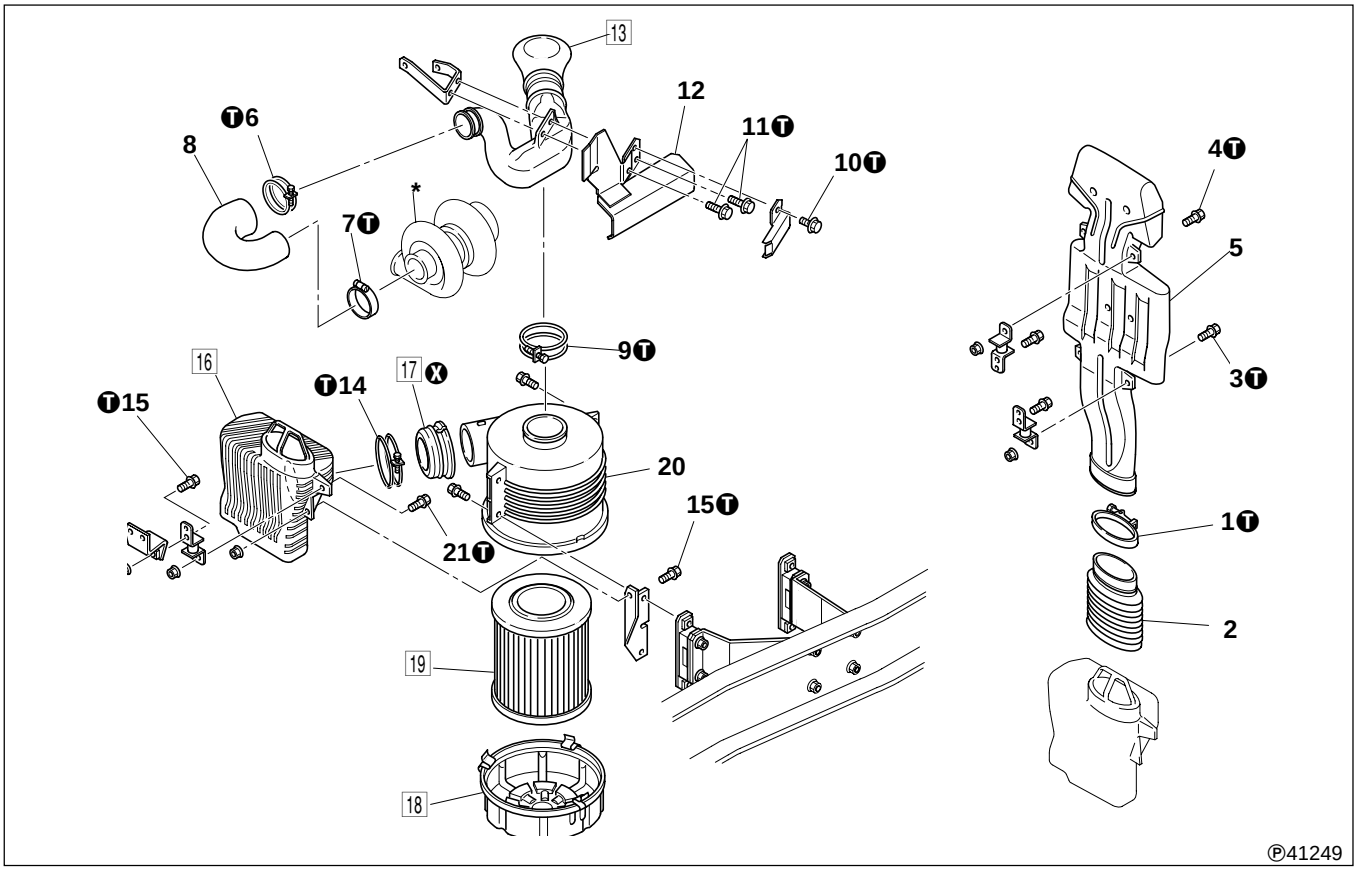

● **Disassembly sequence**

1 Clamp
2 Connector
3 Bolt
4 Bolt
5 Air inlet duct
6 Clamp
7 Clamp
8 Air hose
9 Clamp
10 Bolt
11 Bolt
12 Bracket
13 Air duct
14 Clamp
15 Bolt
16 Air box
17 Rubber seal
18 Air cleaner cap
19 Air cleaner element
20 Air cleaner case

***:** Turbocharger 📖 P. 15A-11
X: Non-reusable parts

● **Assembly sequence**

Follow the disassembly sequence in reverse.

T Tightening torque

Unit: N·m {ft.lbs, kgf·m}

Location	Parts to be tightened	Tightening torque	Remarks
1, 6, 7, 9, 14	Clamp	2.9 to 3.4 {2.2 to 2.5, 0.3 to 0.35}	–
3, 4	Bolt (air inlet duct mounting)	4 to 6 {2.9 to 3.6, 0.4 to 0.5}	–
10, 11	Bolt (air duct bracket mounting)	12 to 15 {8.7 to 11.0, 1.2 to 1.5}	–
15	Bolt (air box bracket mounting)	4 to 6 {2.9 to 3.6, 0.4 to 0.5}	–
21	Bolt (air box mounting)	12 to 15 {8.7 to 11.0, 1.2 to 1.5}	–

◆ Service procedure

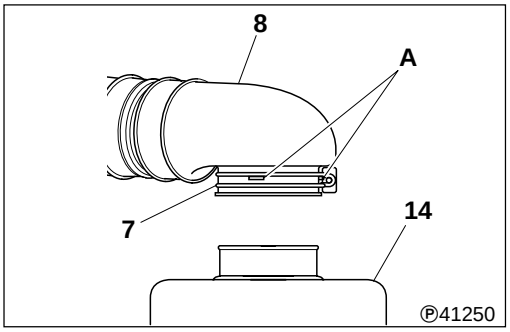

13 **Installation of air duct**

- Fit clamp **7** over protrusions **A** of air duct **8**.
- Push air duct **8** in until it hits air cleaner case **14**.

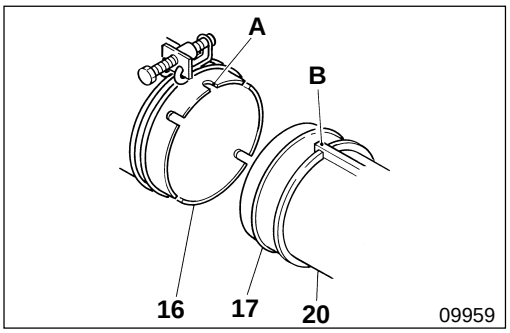

16 **Installation of air box**

Align slit **A** of air box **16** with key **B** of air cleaner case **14**.

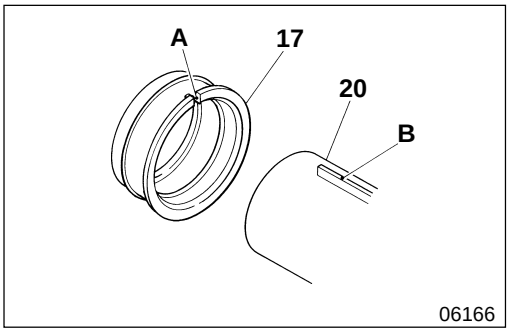

17 **Installation of rubber seal**

Align slit **A** of rubber seal **17** with key **B** of air cleaner case **20**.

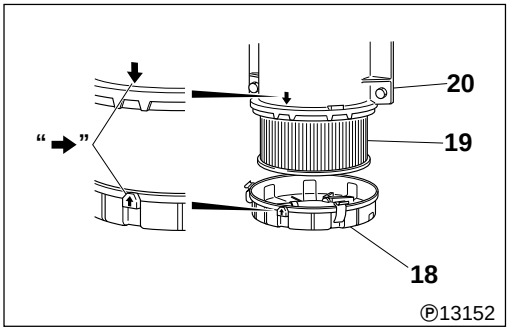

18 **Installation of air cleaner cap**

➡: Alignment mark

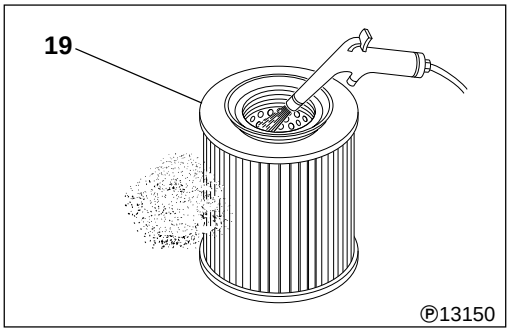

19 **Air cleaner element**

[Cleaning]

- Blow compressed air of 685 kPa {100 lbf/in^2., 7 kgf/cm^2} or less through air cleaner element **19** from the inside.
- When using compressed air, move the blower's nozzle up and down along the pleats of air cleaner element **19** evenly.

CAUTION ⚠

- **Do not tap or hit air cleaner element 19 to remove dust.**
- **Do not blow compressed air through air cleaner element 19 from the outside.**

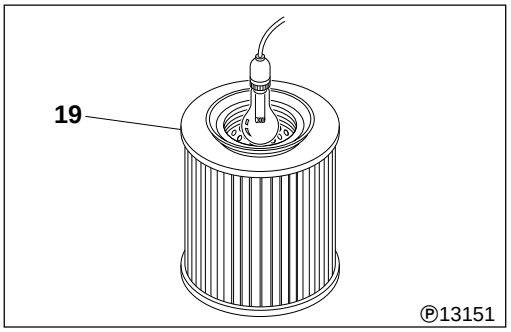

[Inspection]

- Illuminate the inside of air cleaner element **19**.
- If parts of the filter paper are torn or thin, or if the packing of the upper surface of air cleaner element **19** is damaged, replace the air cleaner element.

NOTE:

If the dust on air cleaner element 19 is wet due to oil smoke or soot, replace the air cleaner regardless of the scheduled replacement interval.

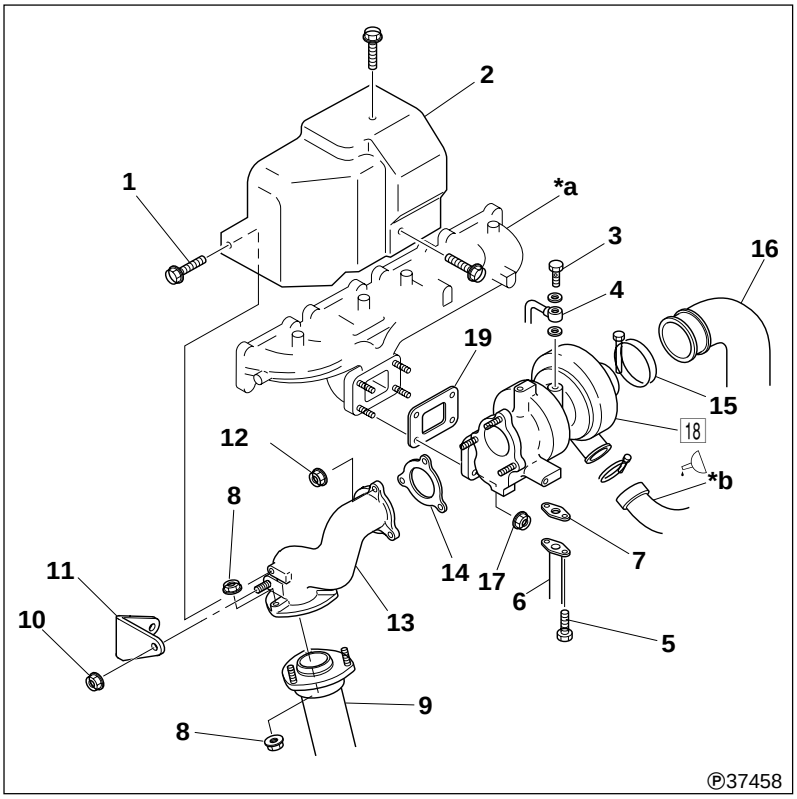

● **Disassembly sequence**

1 Bolt
2 Insulator
3 Eyebolt
4 Oil pipe
5 Bolt
6 Oil return pipe
7 Gasket
8 Nut
9 Front pipe
10 Nut
11 Exhaust pipe stay
12 Nut
13 Exhaust pipe
14 Coupler gasket
15 Clamp
16 Air inlet hose
17 Nut
18 Turbocharger assembly P. 15A-13
19 Gasket

***a:** Exhaust manifold P. 15A-20
***b:** Rubber hose P. 15A-16
X : Non-reusable part

● **Reassembly sequence**

Follow the disassembly sequence in reverse.

T Tightening torques

Unit: N·m {ft.lbs, kgf·m}

Location	Parts to be tightened	Tightening torque	Remarks
1	Bolt (for insulator mounting)	11.8 {8.7, 1.2}	–
3	Eyebolt (for oil pipe mounting)	23.5 {17, 2.4}	–
5	Bolt (for oil return pipe mounting)	4.9 {3.6, 0.5}	–
8	Nut (front pipe mounting)	20 to 25 {14 to 18, 2 to 2.5}	–
10, 12, 17	Nut (for exhaust pipe stay, exhaust pipe, turbocharger assembly mounting)	41.2 {30, 4.2}	–
15	Clamp	8.8 ± 0.98 {5.8 ± 0.7, 0.9 ± 0.1}	–

Lubricant

Location	Points of application	Specified lubricant	Quantity
18	Turbocharger assembly oil hole (supply at time of installation)	Engine oil	As required

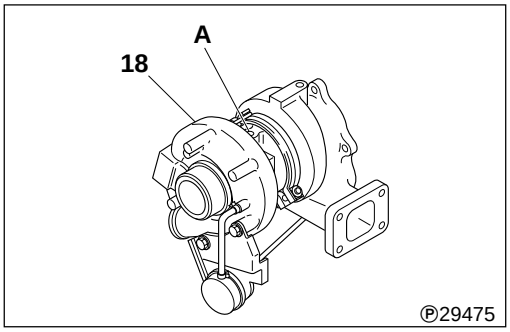

◆ Service procedure

18 Installation of turbocharger assembly

Before installing the turbocharger assembly **8**, pour engine oil into the oil hole **A** to ensure smooth operation of the internal parts.

Turbocharger assembly

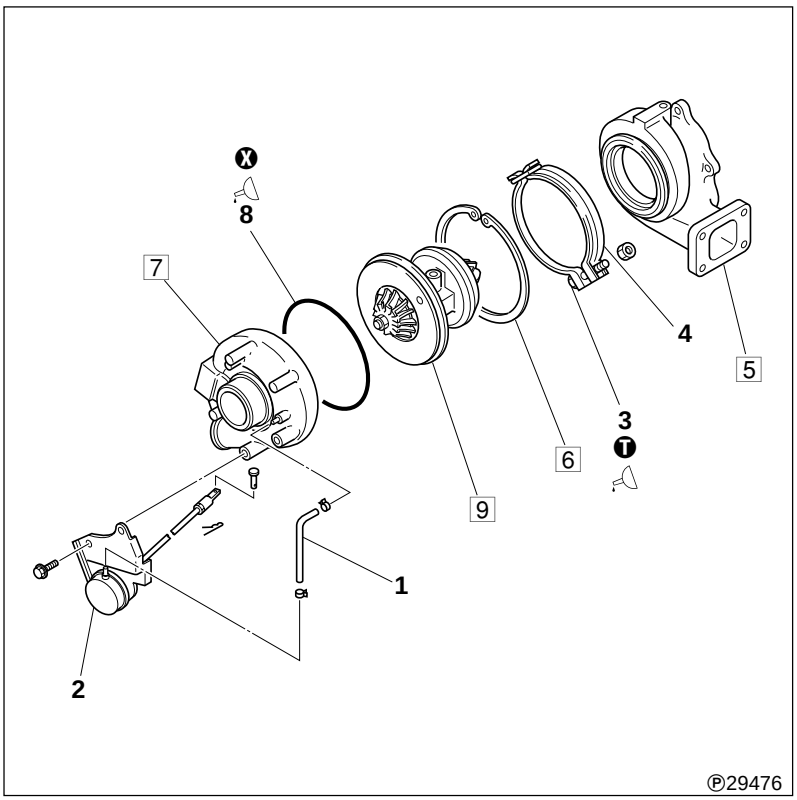

● **Operation before disassembly**
P. 15A-14

● **Disassembly sequence**

1 Hose
2 Actuator
3 Bolt
4 Coupling
5 Turbine housing
6 Snap ring
7 Compressor cover
8 O-ring
9 Cartridge assembly

X: Non-reusable part

● **Assembly sequence**

Follow the disassembly sequence in reverse.

● **Inspection after assembly**
P. 15A-14

NOTE

Cartridge assembly 9 cannot be disassembled. Replace the entire assembly if the turbine wheel or compressor wheel becomes damaged or if the assembly does not rotate smoothly or is otherwise defective.

Service standards

Unit: mm {in.}

Location	Maintenance item			Standard value	Limit	Remedy
9	Cartridge assembly	Axial play in shaft		0.05 to 0.09 {0.0020 to 0.0035}	0.1 {0.0039}	Replace
		Play at right angle to axial direction	Turbine wheel side	0.40 to 0.53 {0.016 to 0.021}	0.58 {0.023}	Replace
			Compressor wheel side	0.55 to 0.66 {0.022 to 0.026}	0.72 {0.028}	

T Tightening torque

Unit: N·m {ft.lbs, kgf·m}

Location	Parts to be tightened	Tightening torque	Remarks
3	Bolt (Coupling securing)	3.9 to 4.9 {2.9 to 3.6, 0.4 to 0.5}	Wet

Lubricant and sealant

Location	Points of application	Specified lubricant and/or sealant	Quantity
3	Threads of bolt	Molybdenum disulfide grease	As required
8	Entire periphery of O-ring	Engine oil	As required

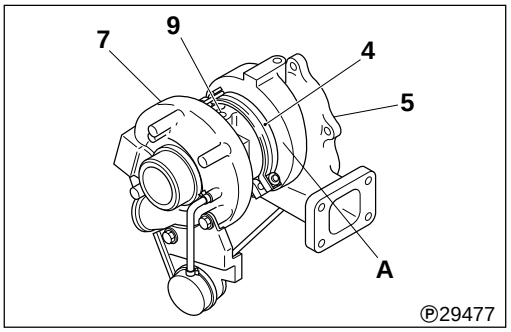

◆ Service procedure

● **Operations before disassembly**

Make alignment marks **A** on the coupling **4**, turbine housing **5**, compressor cover **7**, and cartridge assembly **9**.

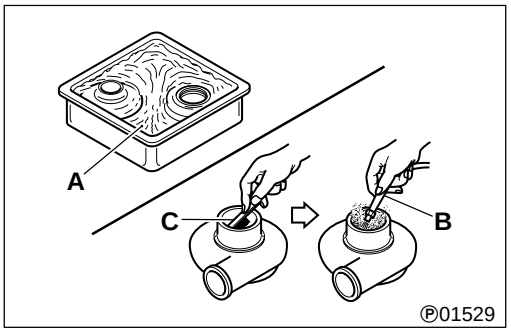

● **Cleaning after disassembly**

- Visually check the disassembled parts for scorches, abrasion, and other marks that may be difficult to see after cleaning. Replace any part that appears defective.
- Immerse the disassembled parts in a non-flammable solvent **A** and remove the parts from the solvent and blow them dry with compressed air **B**. Before this procedure, remove adhering matter if any using a plastic scraper on a wire brush **C**.
- Immerse the parts in the solvent **A** again.
- Blow the parts dry with compressed air **B**.

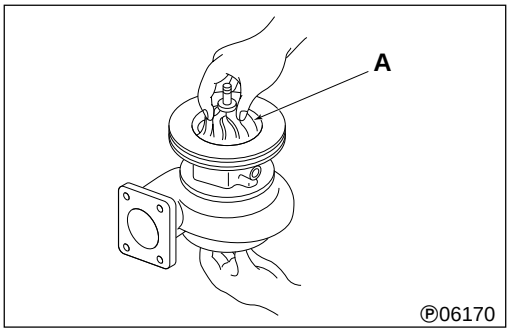

● **Inspection after assembly**

Manually rotate the wheel **A** of the cartridge assembly **9** to check that it turns smoothly.

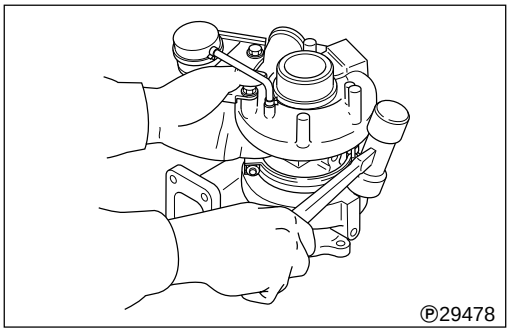

5 **Removal of turbine housing**

CAUTION ⚠

- **While using care to prevent damage to the turbine housing, lightly strike its entire circumference with a rubber hammer or similar tool.**
- **Since the blades of the turbine wheel are easily bent, use care to make sure that they do not hit turbine housing 5.**

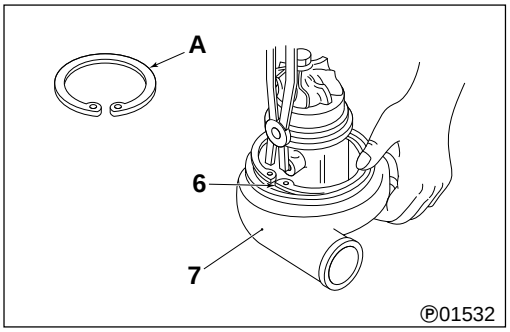

6 **Installing snap ring**

- Fit snap ring **6** onto compressor cover **7** with its tapered surface **A** facing upward.

WARNING ⚠

When fitting snap ring 6, hold it down to prevent it from flying off.

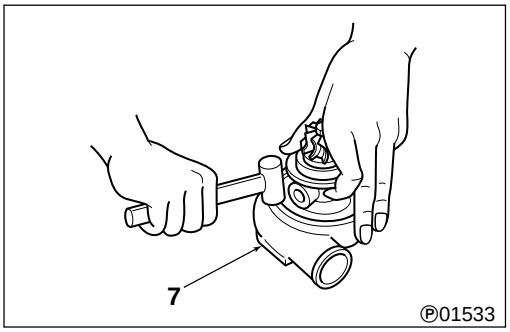

7 **Removal of compressor cover**

CAUTION ⚠

- **While using care to prevent damage to compressor cover 7, lightly strike its entire circumference with a rubber hammer or similar tool.**
- **Since the blades of the compressor wheel are easily bent, use care to make sure that they do not hit the compressor cover.**

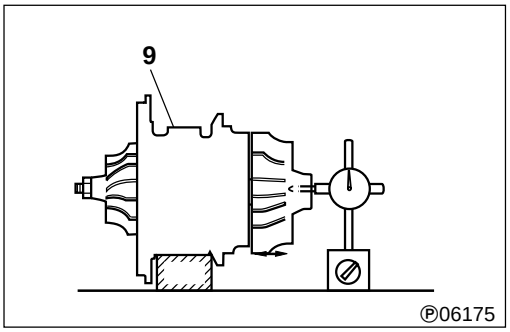

9 **Inspection of cartridge assembly**

(1) Axial play in shaft and turbine wheel assembly

If the measurement exceeds the specified limit, replace cartridge assembly **9**.

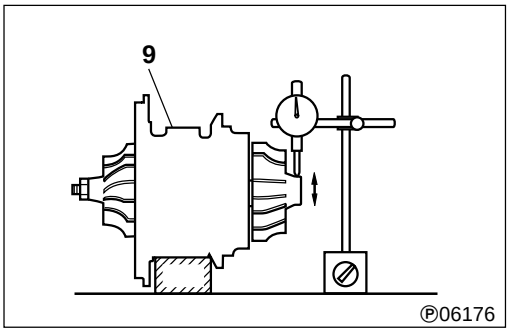

(2) Play at right angle to shaft direction in shaft and turbine wheel assembly

- Play on turbine wheel side
  If the measurement exceeds the specified limit, replace cartridge assembly **9**.

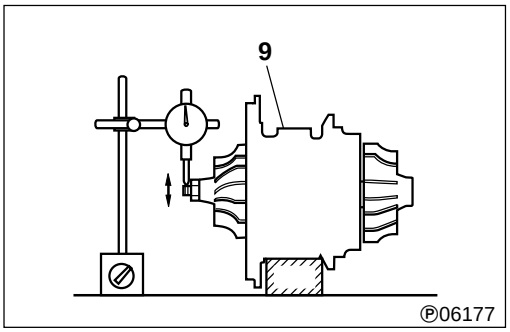

- Play on compressor wheel side
  If the measurement exceeds the specified limit, replace cartridge assembly **9**.

INTERCOOLER

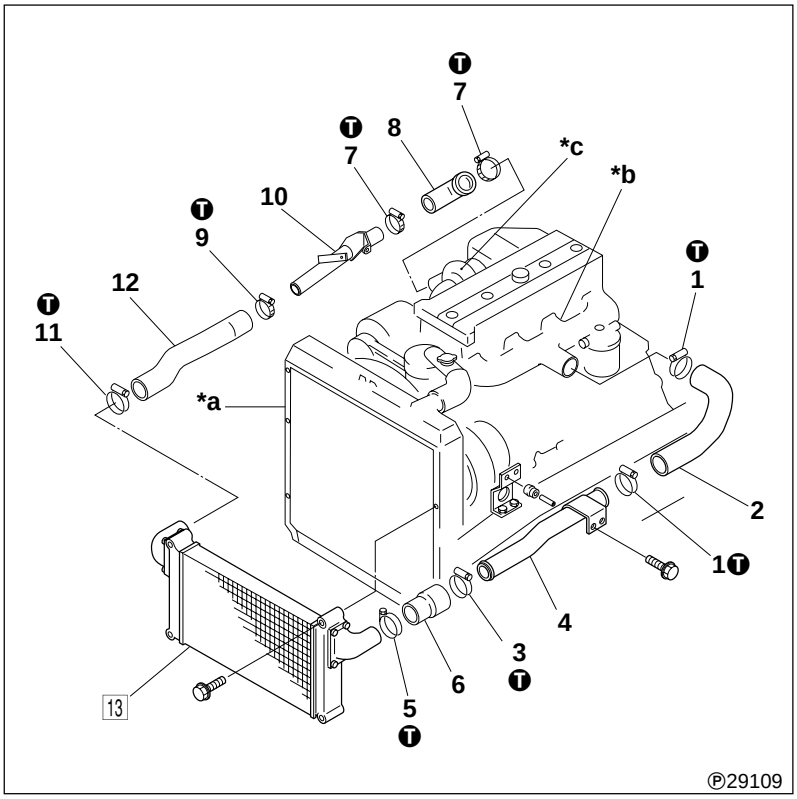

● **Disassembly sequence**

1 Clamp
2 Air inlet hose
3 Clamp
4 Air inlet pipe
5 Clamp
6 Air inlet hose
7 Clamp
8 Rubber hose
9 Clamp
10 Air inlet pipe
11 Clamp
12 Air inlet hose
13 Intercooler

***a:** Radiator Group 14A
***b:** Intake manifold P. 15A-18
***c:** Turbocharger assembly P. 15A-13

● **Reassembly sequence**

Follow the disassembly sequence in reverse.

Service standard

Location	Maintenance item	Standard value	Limit	Remedy
13	Intercooler air leakage (at air pressure of 150 kPa {21 psi, 1.5 kgf/cm²})	0 cm³ {0 cu.in.}	–	Replace

❶ Tightening torque

Unit: N·m {ft.lbs, kgf·m}

Location	Parts to be tightened	Tightening torque	Remarks
1, 3, 5, 9, 11	Clamp	2.9 to 3.4 {2.2 to 2.5, 0.3 to 0.35}	–
7	Clamp	3.9 to 4.9 {2.9 to 3.6, 0.4 to 0.5}	–

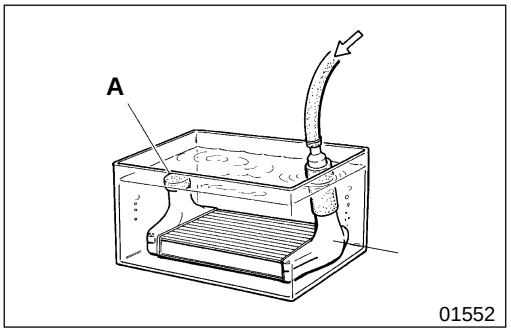

◆ Service procedure

13 Inspection of intercooler

Fit a cap over one of the air ports **A** on the intercooler **13**, connect a hose to the other port, and immerse the intercooler in a tank of water. Then, apply the specified air pressure (150 kPa {21 lbf/in², 1.5 kgf/cm²}) via the hose and check for air leakage.
If leakage is apparent, replace the intercooler **13**.

MEMO

INTAKE MANIFOLD

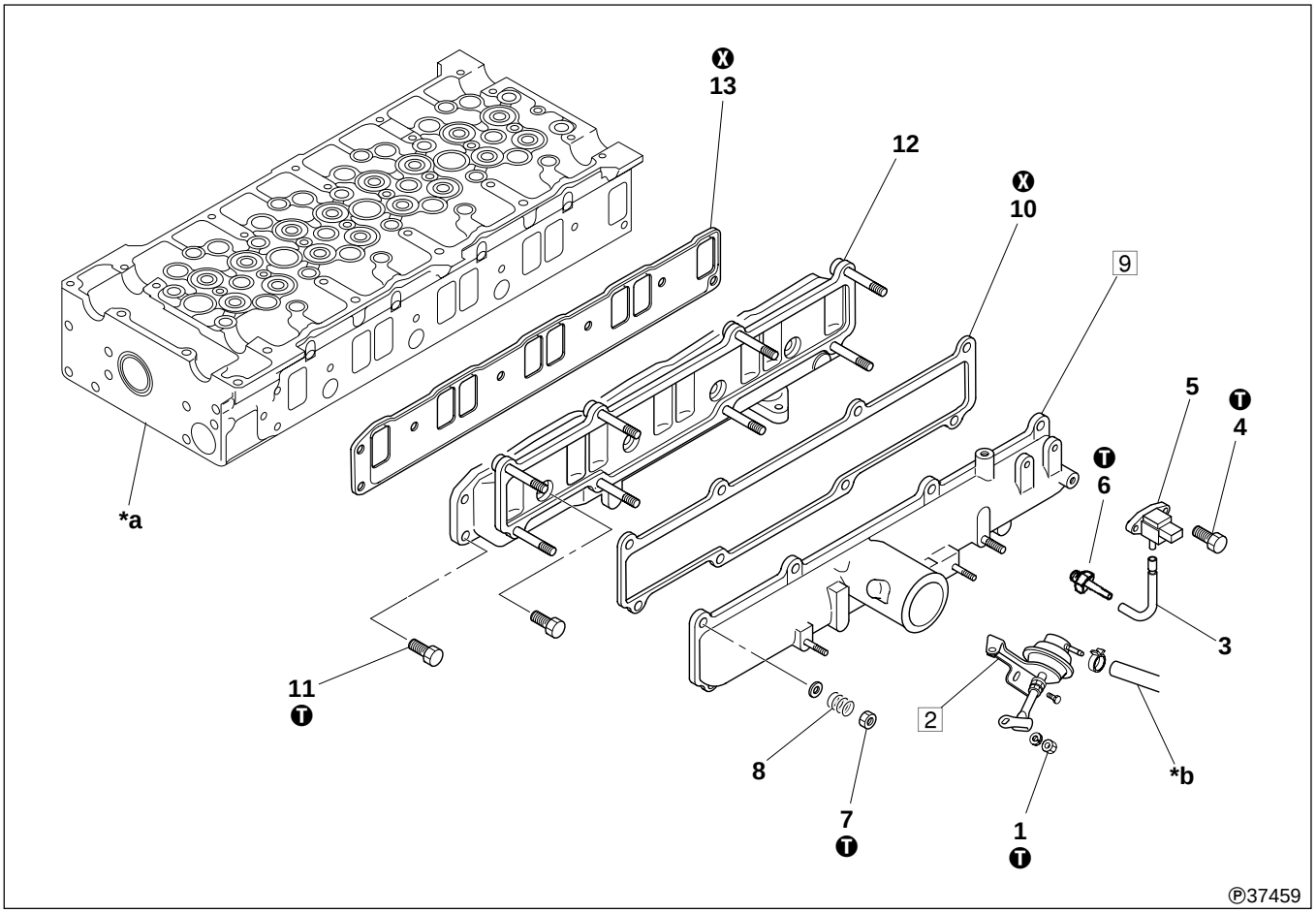

● **Disassembly sequence**

1 Nut
2 Actuator assembly
3 Pressure hose
4 Bolt
5 Boost pressure sensor
6 Pressure hose fitting
7 Nut
8 Spring
9 Intake manifold B
10 Gasket B
11 Bolt
12 Intake manifold A
13 Gasket A

***a:** Cylinder head Group 11A
***b:** Vacuum hose Group 17A
X: Non-reusable part

● **Reassembly sequence**

Follow the disassembly sequence in reverse.

Service standards

Unit: mm {in.}

Location	Maintenance item		Standard value	Limit	Remedy
2, 9	Butterfly valve intake manifold clearance	Clearance B	$4.0^{+0.5}_{0}$ {$0.16^{+0.02}_{0}$}	–	Replace

❶ Tightening torques

Unit: N·m {ft.lbs, kgf·m}

Location	Parts to be tightened	Tightening torque	Remarks
1	Nut (actuator assembly mounting)	8 {5.8, 0.8}	–
4	Bolt (boost pressure sensor mounting)	4.9 {3.6, 0.5}	–
6	Pressure hose fitting	14.7 to 19.6 {11.0 to 14.0, 1.5 to 2.0}	–
7	Nut (intake manifold B mounting)	10.8 {8.0, 1.1}	–
11	Bolt (intake manifold A mounting)	44.1 {33.0, 4.5}	–

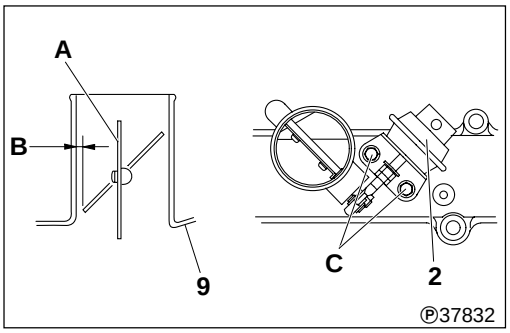

◆ Service procedure

2 9 Clearance between butterfly valve and intake manifold B

Apply a vacuum of more than 67 kPa {19.7 in.Hg, 500 mmHg} to the actuator assembly **2** to bring the double nut into contact with its bracket. While keeping this condition, adjust the clearance **B** between the butterfly valve **A** and the intake manifold B **9** for the specified standard value using the oblong holes **C** in the actuator assembly bracket.

EXHAUST MANIFOLD

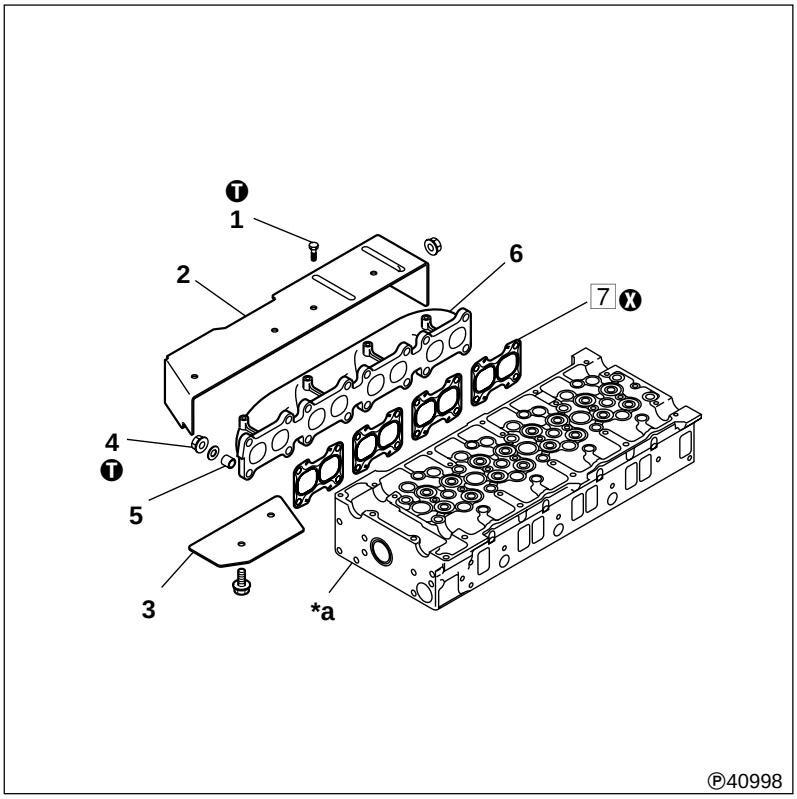

● **Disassembly sequence**

1 Bolt
2 Insulator
3 Lower insulator
4 Nut
5 Spacer
6 Exhaust manifold
7 Gasket

***:** Cylinder head Group 11A
Ⓧ: Non-reusable part

● **Reassembly sequence**

Follow the disassembly sequence in reverse.

Ⓣ Tightening torques

Unit: N·m {ft.lbs, kgf·m}

Location	Parts to be tightened	Tightening torque	Remarks
1	Bolt (insulator manifold mounting)	18.0 {13.0, 1.8}	–
4	Nut (exhaust manifold mounting)	41.2 {30.0, 4.2}	–

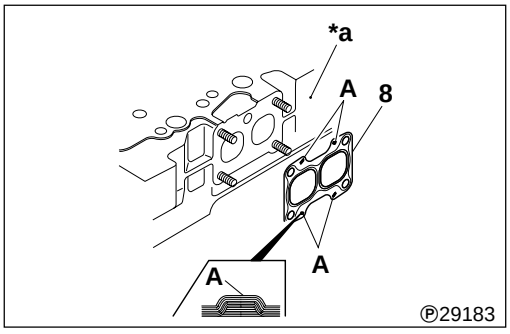

◆ Service procedure

8 **Installation of gasket**

Fit the gasket **8** with the side having projections **A** facing the cylinder head ***a**.

A: Projections

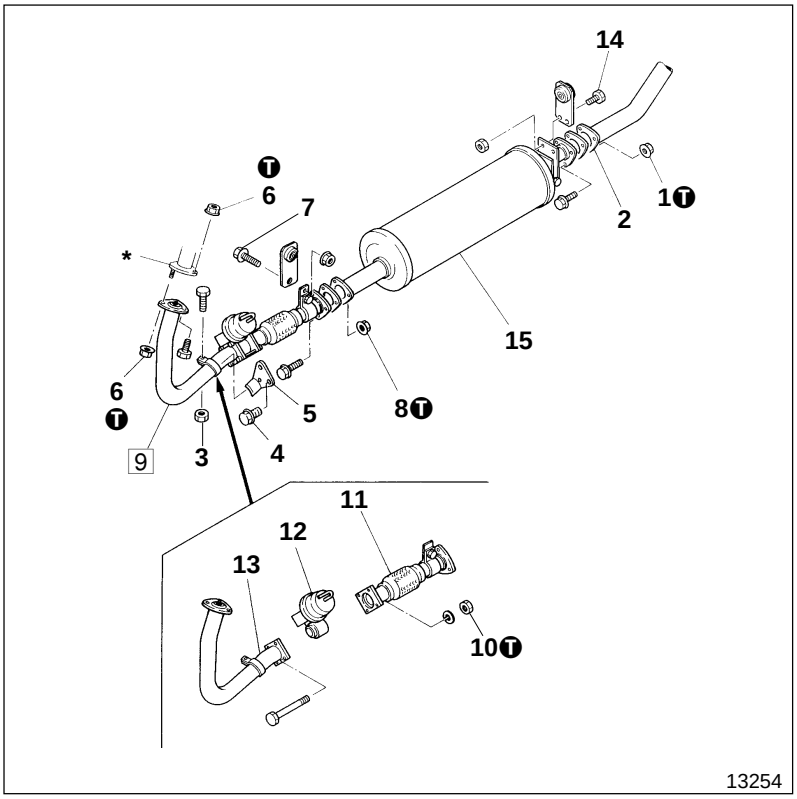

● **Disassembly sequence**

1 Nut
2 Tail pipe
3 Nut
4 Bolt
5 Exhaust pipe bracket
6 Nut
7 Bolt
8 Nut
9 Front pipe assembly
10 Nut
11 Front pipe
12 Exhaust brake unit Group 35
13 Front pipe
14 Bolt
15 Muffler

***:** Exhaust manifold

● **Assembly sequence**

Follow the disassembly sequence in reverse.

WARNING ⚠

- **Never hit or kick muffler 15, or the catalyst in the muffler will be damaged.**
- **A small amount of water sometimes collects inside muffler 15. Never touch this water, if you do by mistake, wash it off immediately with clean water.**

❶ Tightening torque

Unit: N·m {ft.lbs, kgf·m}

Location	Parts to be tightened	Tightening torque	Remarks
1, 8	Nut (Tail pipe and muffler mounting)	26 to 33 {20 to 25, 2.7 to 3.4}	–
6	Nut (Front pipe assembly mounting)	20 to 25 {14 to 18, 2.0 to 2.5}	–
10	Nut (Exhaust brake unit mounting)	27 {20, 2.75}	–

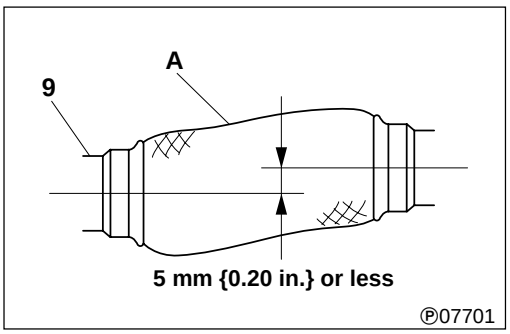

◆ Service procedure

9 Installation of front pipe assembly

Install front pipe assembly **9** so that the offset tolerance in the vertical and horizontal sections between the front and back of bellows **A** conforms to the specified value.

CAUTION ⚠

Be sure when installing front pipe assembly 9, that bellows A are not bent or stretched, since the bellows are designed to reduce the external noise of the vehicle but not to absorb dimensional errors in the installation of pipes.

MITSUBISHI
FUSO

FE

Service Manual

Group 15
Intake and Exhaust

Table of Contents

BACK

HOME

MITSUBISHI FUSO TRUCK OF AMERICA, Inc.

Pub No. TWSE9501-15

GROUP 15 INTAKE AND EXHAUST

SPECIFICATIONS 2

STRUCTURE AND OPERATION 2

TROUBLESHOOTING 5

INSPECTION AND ADJUSTMENT MOUNTED IN VEHICLE

- Measurement of Turbo Boost Pressure 6

AIR DUCT AND AIR CLEANER 8

TURBOCHARGER 12

INTERCOOLER 18

INTAKE MANIFOLD 20

EXHAUST MANIFOLD 22

EXHAUST PIPE AND MUFFLER 24

SPECIFICATIONS/STRUCTURE AND OPERATION

SPECIFICATIONS

Items		Specifications
Air cleaner element		Cyclone paper filter type
Turbocharger	Model	TD05
	Manufacturer	MITSUBISHI HEAVY INDUSTRIES
Intercooler type		Air-cooled, tube and corrugated fin type

STRUCTURE AND OPERATION

Air Cleaner

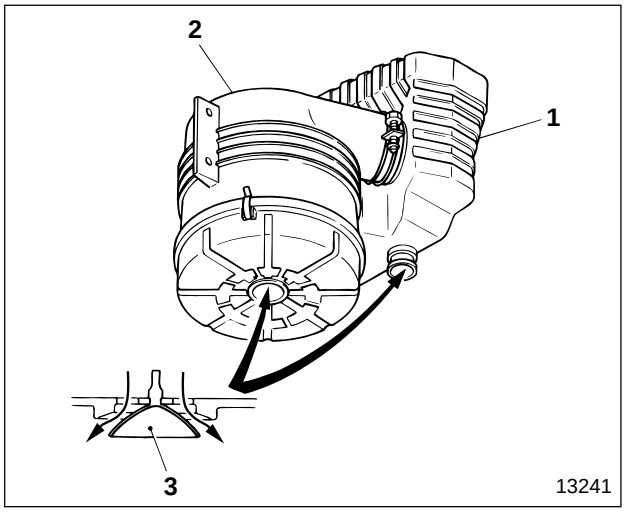

1 Air box
2 Air cleaner assembly
3 Unloader valve

- Air cleaner assembly **2** uses a single element.
- Air box **1** and air cleaner assembly **2** are fitted with unloader valve **3**. Water, dust and dirt that collect in the unit are automatically vented by vibration caused by the change of negative pressure when the engine revolution falls below the specified revolution.

Turbocharger

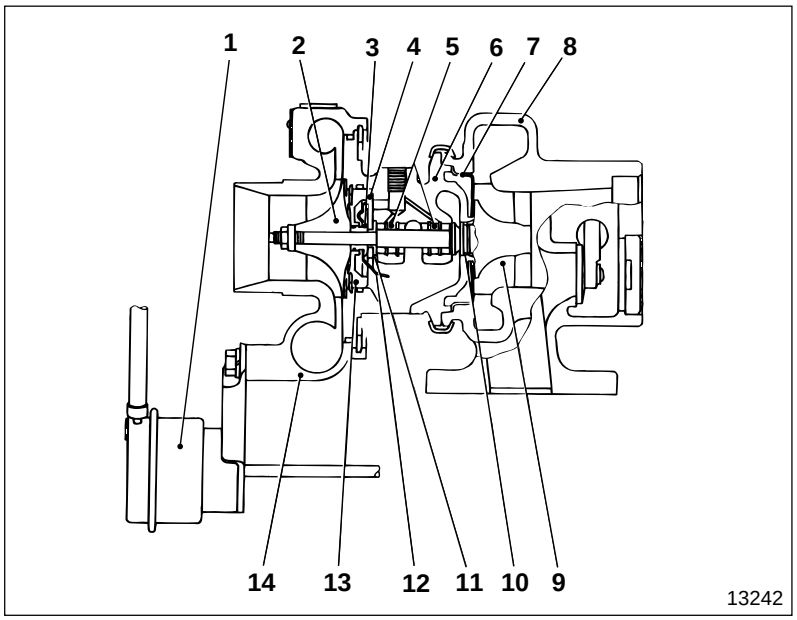

1 Actuator
2 Compressor wheel
3 Thrust sleeve
4 Thrust bearing
5 Bearing
6 Bearing housing
7 Turbine backplate
8 Turbine housing
9 Shaft and turbine wheel
10 Piston ring
11 Thrust ring
12 Oil deflector
13 Inserter
14 Compressor cover

2 to **13** : Cartridge assembly

Waste gate mechanism

- The waste gate mechanism relieves the boost pressure of excess exhaust gas using actuator **1**. This controls the boost pressure appropriately and prevents the turbocharger from overrunning, and prevents excessive pressure in the intake manifold.
- The boost pressure is fed into chamber **A** of actuator **1** from compressor cover **14** via a rubber hose. When boost pressure **C**, acting on the chamber, is lower than the preset value, the actuator does not operate and waste gate valve **B** remains closed, therefore exhaust gas **D** is blown against shaft and turbine wheel **9**.

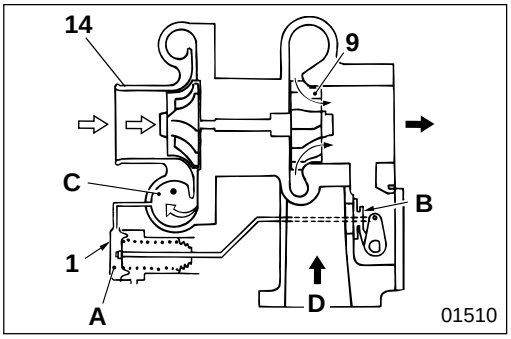

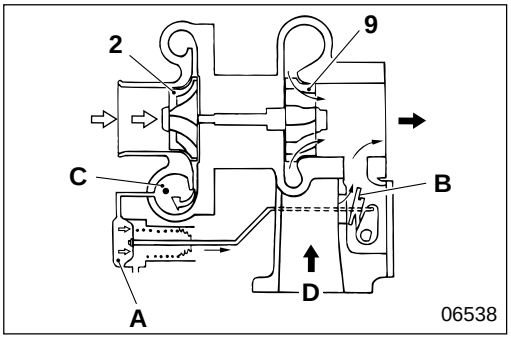

- As the boost pressure acting on chamber **A** increases to become higher than the preset value, waste gate valve **B** is opened and the exhaust gas blown against shaft and turbine wheel **9** decreases. Therefore the rotation of compressor wheel **2** decreases, causing the boost pressure to decrease.

Operation of over-boost valve

- Over-boost valve **E** operates when the boost pressure increases abnormally because of faulty operation of the waste gate mechanism.

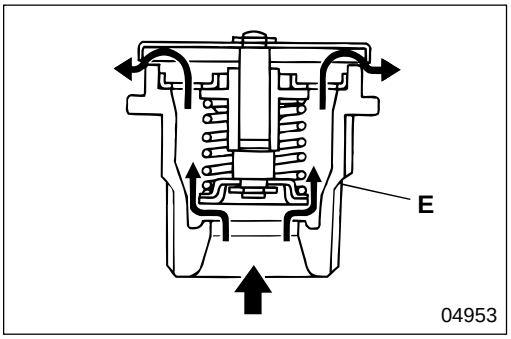

- If boost pressure **C** of over-boost valve **E** increases to become higher than the preset value, the excessive boost pressure is discharged into the atmosphere, protecting the engine from excessive boost pressure. When the valve is operating, a pipe-blowing sound is generated.

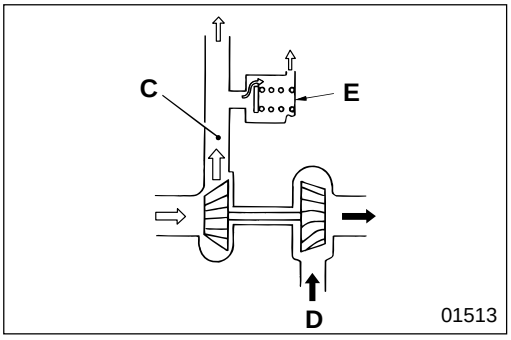

Muffler

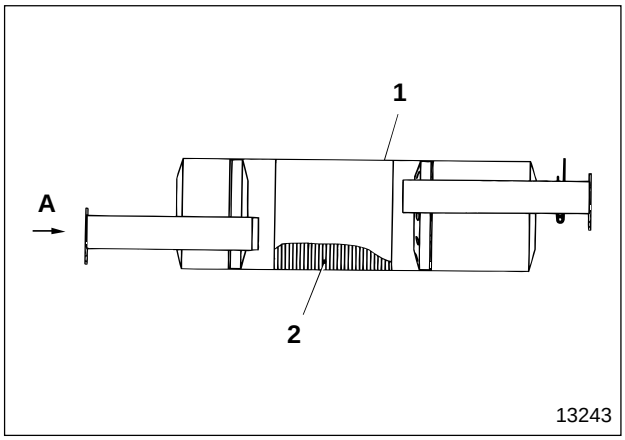

1 Muffler
2 Catalytic converter

A : Exhaust gas intake

Converter **2** is built into muffler **1** to decrease the amount of particulate matter (PM) in the exhaust gas.

Possible causes \ Symptoms			Engine hard to start	Exhaust gas dark	Exhaust gas whitish	Engine output insufficient	Oil consumption excessive	Noise and vibration in intake/exhaust systems	Remarks
Air cleaner	Air cleaner element clogged		○	○		○			
Turbocharger	Cartridge assembly	Bearing faulty		○		○		○	
		Carbon deposits on shaft and turbine wheel		○		○			
		Shaft and turbine wheel interfering with turbine backplate		○		○			
		Shaft and turbine wheel interfering with turbine housing		○		○			
		Shaft and turbine wheel bent		○		○		○	
		Shaft and turbine wheel broken		○		○		○	
		Compressor wheel interfering with compressor housing		○		○			
		Thrust sleeve and thrust bearing seized		○		○		○	
		Compressor wheel broken		○		○		○	
		Engine oil leaking because piston ring and inserter worn		○	○		○		
		Piston rings installation faulty					○		
		Parts not sliding smoothly because oil lubrication pipe and eye bolt clogged		○		○			
		Oil seals damaged because oil return pipe clogged			○		○		
	Compressor housing installation faulty			○		○	○	○	
	Turbine housing installation faulty					○		○	
Intercooler	Foreign particles on intercooler front core					○			
Actuator	Butterfly valve does not open			○	○	○			
	Butterfly valve opening and closing adjusted incorrectly			○	○	○			
Front pipe, muffler and tail pipe deformed								○	
Front pipe, muffler and tail pipe installation faulty								○	
Valve clearance faulty				○					Gr 11
Head gasket faulty				○					Gr 11
Valve and valve seat worn and carbon deposits				○					Gr 11
Valve spring fatigued				○					Gr 11
Piston ring worn and damaged				○					Gr 11
Piston ring groove worn and damaged				○					Gr 11
Cooling system malfunctioning				○					Gr 14
Engine oil excessive				○					Gr 12
Main moving parts seized				○					Gr 11
Fuel injection quantity uneven or excessive				○					Gr 13

INSPECTION AND ADJUSTMENT MOUNTED IN VEHICLE

Measurement of Turbo Boost Pressure

Service standards

Location	Maintenance item	Standard value	Limit	Remedy
—	Boost pressure (Air temperature 20°C {68°F}, Atmospheric pressure 100 kPa {29.9 in. Hg, 760 mmHg})	—	36 kPa {10.6 in. Hg, 270 mmHg}/ 3700 rpm	Inspect and adjust

Special tools

Location	Tool name and shape	Part No.	Application
—	Boost pressure gauge 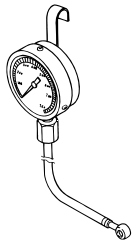 01524	MH061366	Measurement of turbo boost pressure

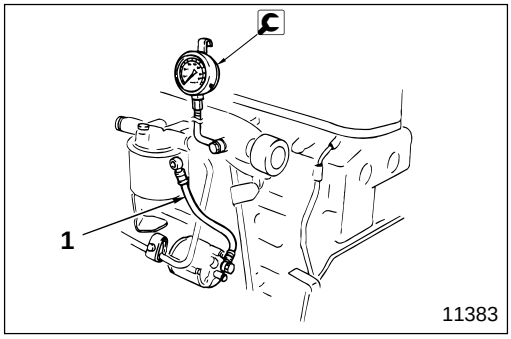

- Before measuring the turbo boost pressure, clean or replace the air cleaner element.
- Remove boost compensator hose **1** and attach boost pressure gauge.
- After warming up the engine, measure the boost pressure at the no-load maximum engine speed. Also measure the engine speed and the air temperature.

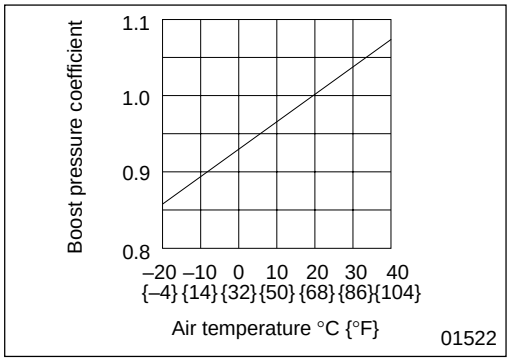

- Correct the boost pressure at standard conditions. (Since the boost pressure varies depending on the air temperature and engine speed.)
  [Correction for air temperature]
  Identify boost pressure coefficient depending on the air temperature from the graph.

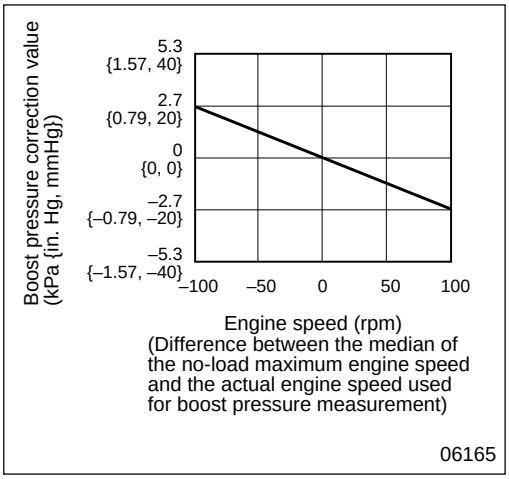

[Correction for engine speed]
Subtract the engine speed actually used for measuring the boost pressure from the median of the no-load maximum engine speed. Identify the boost pressure correction value (**Pa**) according to the graph.

Median value : 3700 rpm

[Calculation of corrected boost pressure]
Given the measured boost pressure to be **P**, corrected boost pressure **Pb** can be calculated from the following equation:

Pb = ktP + Pa

- **Pb** : Corrected boost pressure
- **P** : Measured boost pressure
- **kt** : Boost pressure correcting coefficient depending on air temperature
- **Pa** : Boost pressure correction value

If **Pb** is lower than the limit, the turbocharger must be inspected and adjusted.

AIR DUCT AND AIR CLEANER

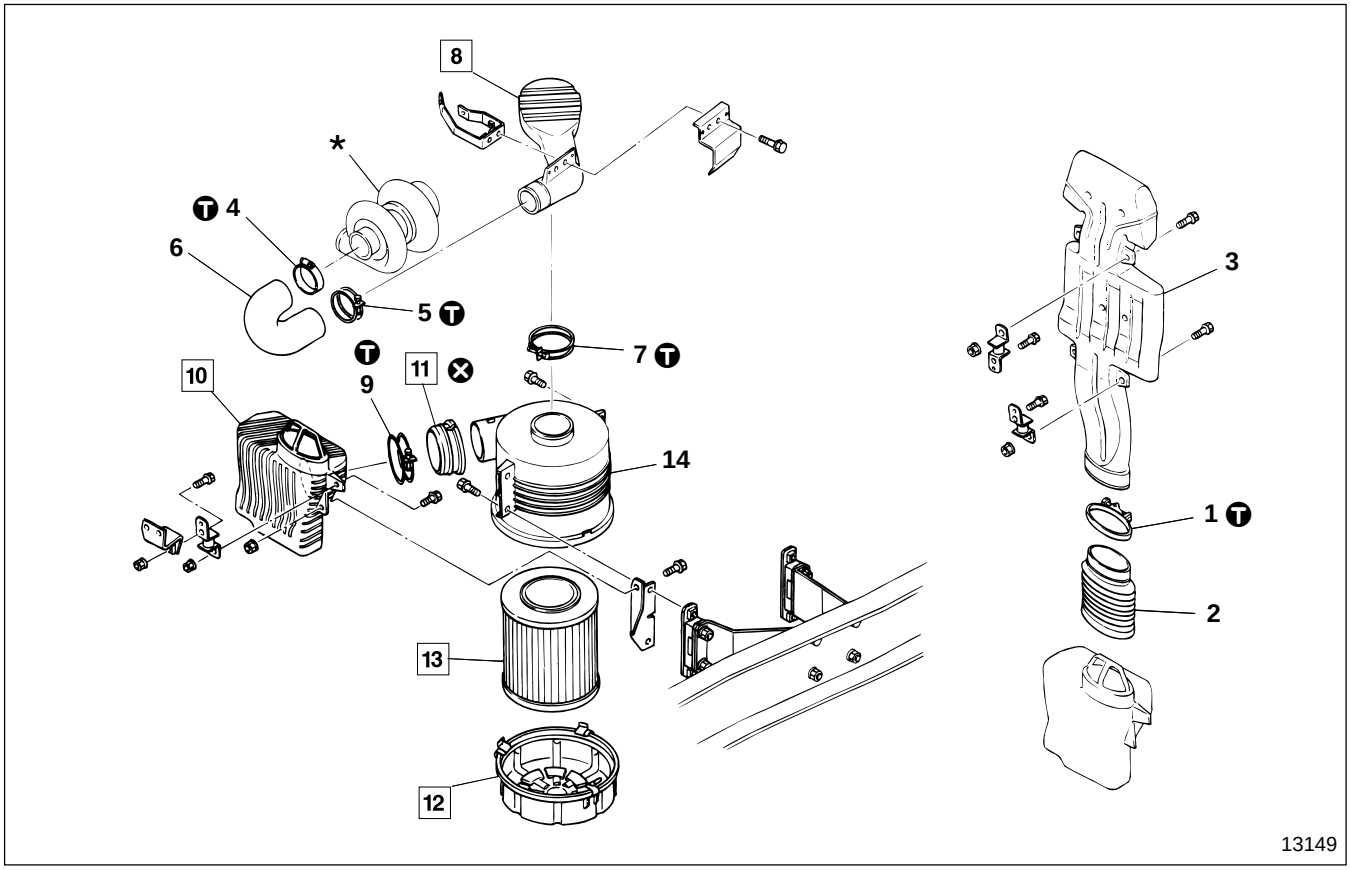

● **Disassembly sequence**

1 Clamp
2 Connector
3 Air inlet duct
4 Clamp
5 Clamp
6 Air hose
7 Clamp
8 Air duct
9 Clamp
10 Air box
11 Rubber seal
12 Air cleaner cap
13 Air cleaner element
14 Air cleaner case

*: Turbocharger 📖 P15-12
⊗: Non-reusable parts

● **Assembly sequence**

Follow the disassembly sequence in reverse.

Ⓣ Tightening torque

Unit : N·m {lbf.ft, kgf·m}

Location	Parts to be tightened	Tightening torque	Remarks
1, 4, 5, 7, 9	Clamp	2.9 to 3.4 {2.2 to 2.5, 0.3 to 0.35}	—

◆ Service procedure

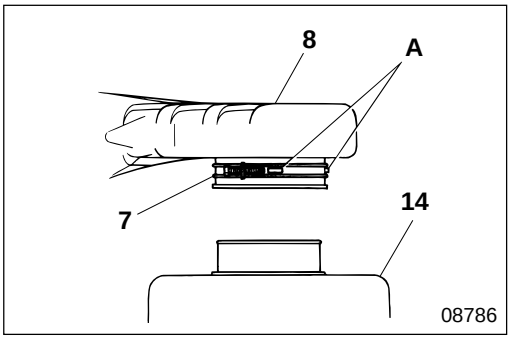

8 **Installation of air duct**

- Fit clamp **7** over protrusions **A** of air duct **8**.
- Push air duct **8** in until it hits air cleaner case **14**.

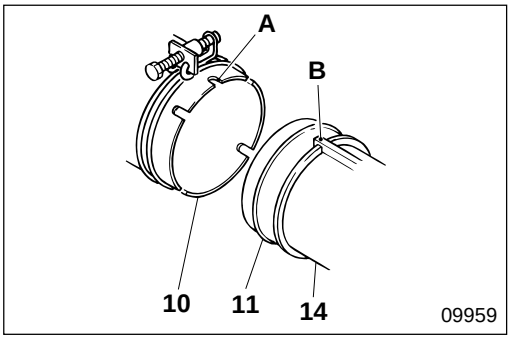

10 **Installation of air box**

Align slit **A** of air box **10** with key **B** of air cleaner case **14**.

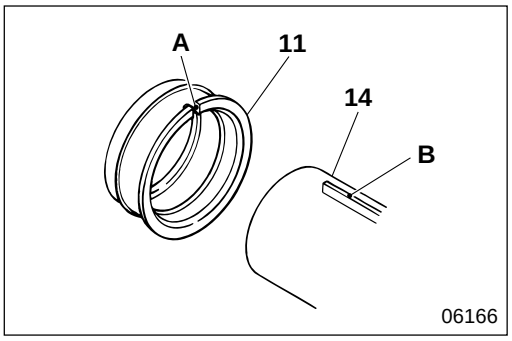

11 **Installation of rubber seal**

Align slit **A** of rubber seal **11** with key **B** of air cleaner case **14**.

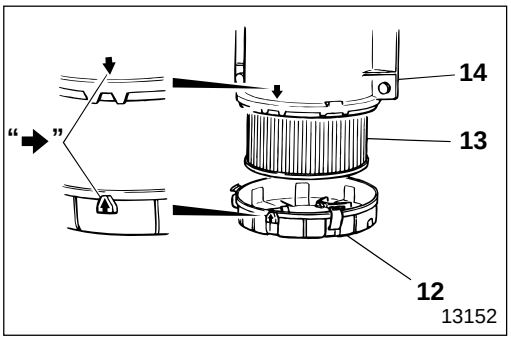

12 **Installation of air cleaner cap**

➡ : Alignment mark

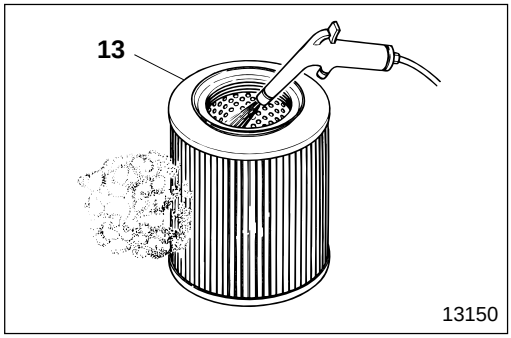

13 **Air cleaner element**

[Cleaning]

- Blow compressed air of 685 kPa {100 lbf/in^2, 7 kgf/cm^2} or less through air cleaner element **13** from the inside.
- When using compressed air, move the blower's nozzle up and down along the pleats of air cleaner element **13** evenly.

CAUTION⚠

- **Do not tap or hit air cleaner element 13 to remove dust.**
- **Do not blow compressed air through air cleaner element 13 from the outside.**

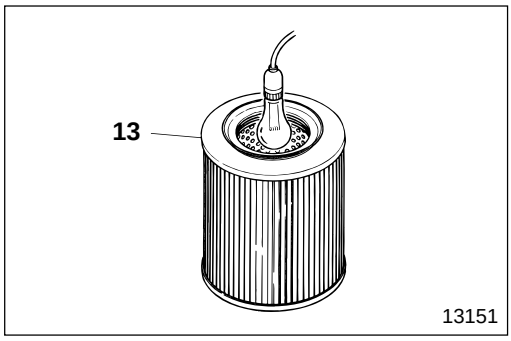

[Inspection]

- Illuminate the inside of air cleaner element **13**.
- If parts of the filter paper are torn or thin, or if the packing of the upper surface of air cleaner element **13** is damaged, replace the air cleaner element.

NOTE

If the dust on air cleaner element 13 is wet due to oil smoke or soot, replace the air cleaner regardless of the scheduled replacement interval.

M E M O

TURBOCHARGER

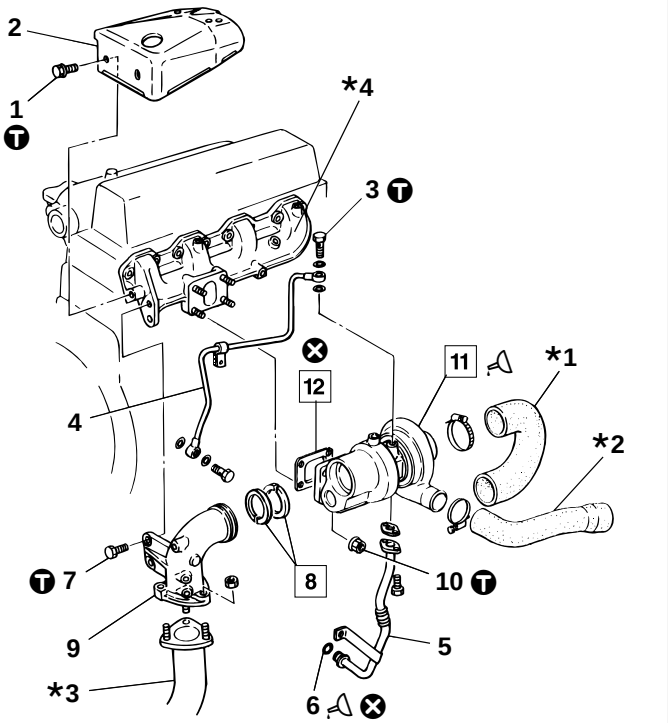

● **Removal sequence**

1 Bolt
2 Insulator
3 Eye bolt
4 Oil pipe
5 Oil return pipe
6 O-ring
7 Bolt
8 Seal ring
9 Exhaust pipe
10 Nut
11 Turbocharger assembly P15-14
12 Gasket

***1** : Air hose P15-8
***2** : Air inlet hose P15-19
***3** : Front pipe P15-24
***4** : Exhaust manifold P15-22
⊗ : Non-reusable parts

● **Installation sequence**

Follow the removal sequence in reverse.

Ⓣ Tightening torque

Unit : N·m {lbf.ft, kgf·m}

Location	Parts to be tightened	Tightening torque	Remarks
1	Bolt (Insulator mounting)	12 {8.7, 1.2}	—
3	Eye bolt	17 to 23 {12 to 17, 1.7 to 2.3}	—
7	Bolt (Exhaust pipe mounting)	41 to 54 {30 to 40, 4.2 to 5.5}	—
10	Nut (Turbocharger assembly mounting)	41 to 54 {30 to 40, 4.2 to 5.5}	—

Lubricant

Location	Points of application	Kinds	Quantity
6	O-ring	Engine oil	As required
11	Supply when installing turbocharger assembly	Engine oil	As required

◆ Service procedure

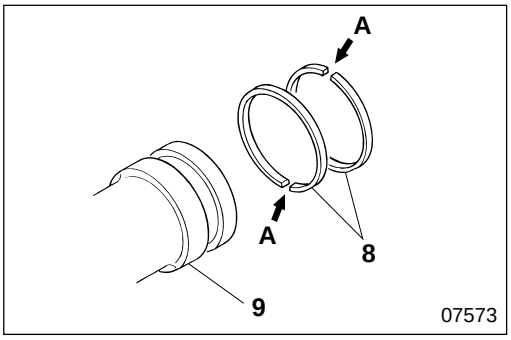

8 **Installation of seal ring**

Offset splits **A** of seal rings **8** at 180°.

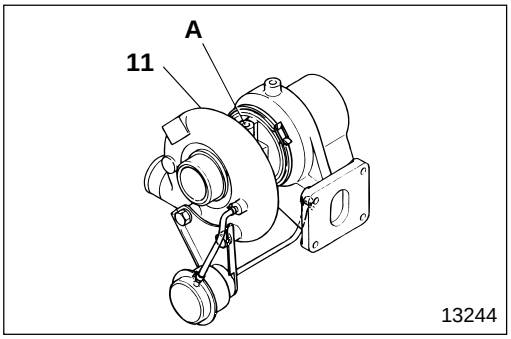

11 **Installation of turbocharger assembly**

When installing turbocharger assembly **11**, supply engine oil via oil port **A** as required to ensure that parts move smoothly.

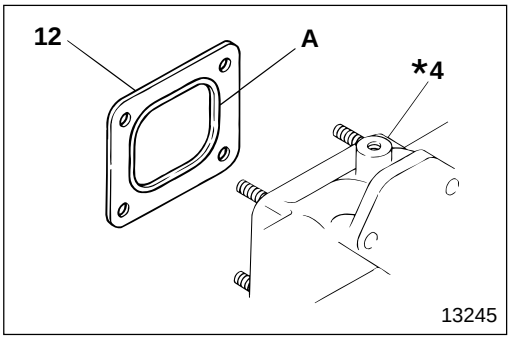

12 **Installation of gasket**

Install gasket **12** to exhaust manifold ***4** in the direction as illustrated.

A : Grommet lip

TURBOCHARGER

Turbocharger Assembly

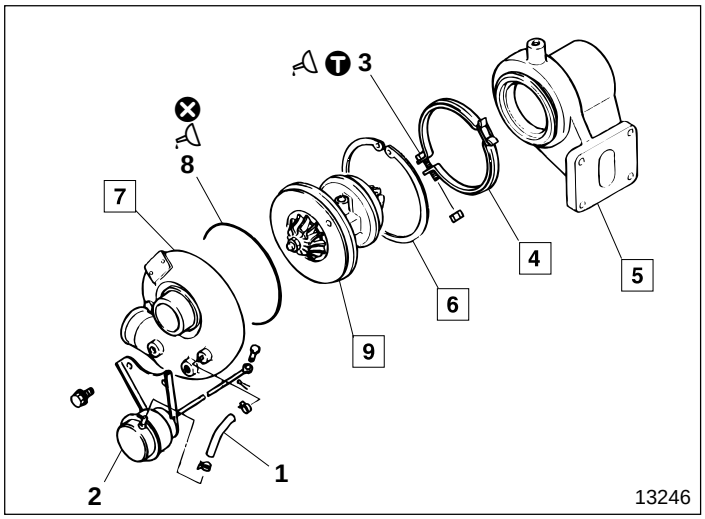

● **Work before disassembly**

P15-15

● **Disassembly sequence**

1 Hose
2 Actuator
3 Bolt
4 Coupling
5 Turbine housing
6 Snap ring
7 Compressor cover
8 O-ring
9 Cartridge assembly

⊗ : Non-reusable parts

● **Assembly sequence**

Follow the disassembly sequence in reverse.

● **Inspection after assembly**

P15-15

NOTE

Since cartridge assembly 9 is a unit construction, if the turbine wheel or the compressor wheel is damaged, or the cartridge assembly does not revolve smoothly, or any other fault is found, replace the assembly as a unit.

Service standards

Unit : mm {in.}

Location	Maintenance item			Standard value	Limit	Remedy
9	Cartridge assembly	Play in the shaft direction		0.05 to 0.09 {0.0020 to 0.0035}	0.1 {0.0039}	Replace
		Play at right angles to the shaft	Turbine wheel side	0.40 to 0.53 {0.016 to 0.021}	0.58 {0.023}	Replace
			Compressor wheel side	0.55 to 0.66 {0.022 to 0.026}	0.72 {0.028}	Replace

Ⓣ Tightening torque

Unit : N·m {lbf.ft, kgf·m}

Location	Parts to be tightened	Tightening torque	Remarks
3	Bolt (Coupling mounting)	3.9 to 4.9 {2.9 to 3.6, 0.4 to 0.5}	—

Lubricant

Location	Points of application	Kinds	Quantity
3	Thread area of bolt	Molybdenum disulfide grease	As required
8	Periphery of O-ring	Engine oil	As required

◆ Service procedure

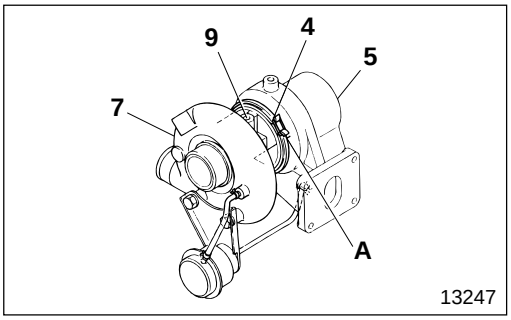

● Work before disassembly

Put alignment marks **A** on coupling **4**, turbine housing **5**, compressor cover **7** and cartridge assembly **9**.

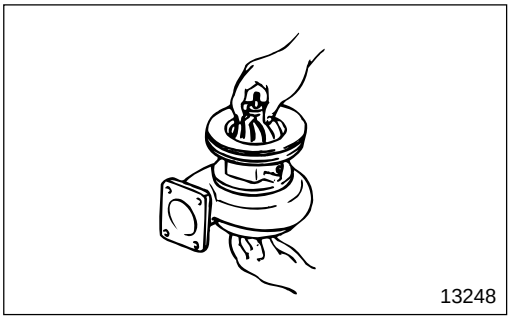

● Inspection after assembly

Turn the turbine wheel and the compressor wheel of cartridge assembly **9** to make sure that they turn smoothly.

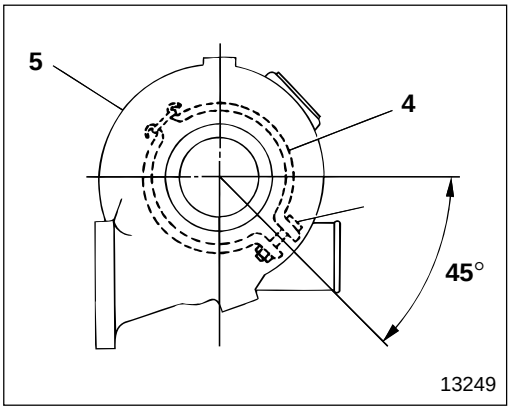

4 Installation of coupling

Install coupling **4** onto turbine housing **5** in the direction as illustrated.

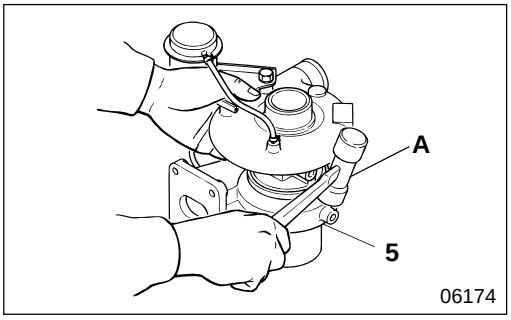

5 Removal of turbine housing

CAUTION⚠

- **When removing turbine housing 5, tap all around the circumference lightly using rubber-headed hammer A so as not to damage the turbine housing.**
- **Do not hit the turbine wheel near turbine housing 5, since the blade of the turbine wheel can be easily bent.**

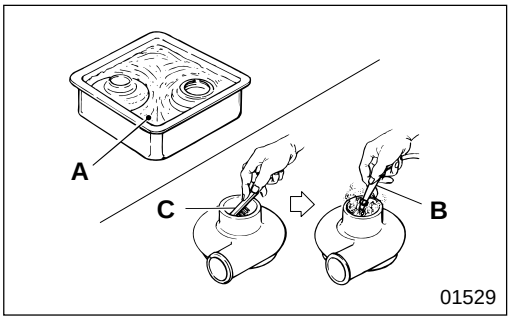

5 7 Cleaning of turbine housing and compressor cover

- Visually inspect related parts before cleaning to check if there are any burns or scratches as these would not be seen after cleaning. If any fault is found, replace the faulty parts.
- Remove any foreign particles before cleaning by scraping them off using plastic scraper or bristle-headed brush **C**. Immerse the disassembled parts in nonflammable solvent **A** (DAIDO KAGAKU KOGYO DAICLEANER T-30), then take them out and blow compressed air **B** on them.

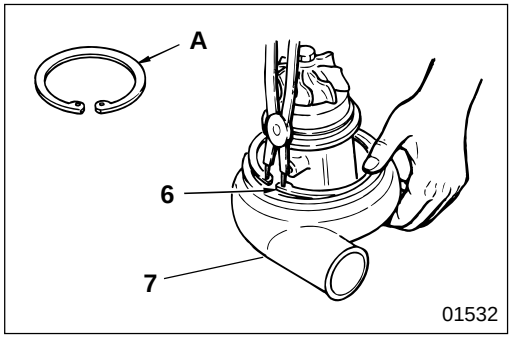

6 Installation of snap ring

Install snap ring **6** into compressor cover **7** with taper surface **A** upward.

WARNING

Use your hand to hold snap ring 6 in place to prevent it from springing out.

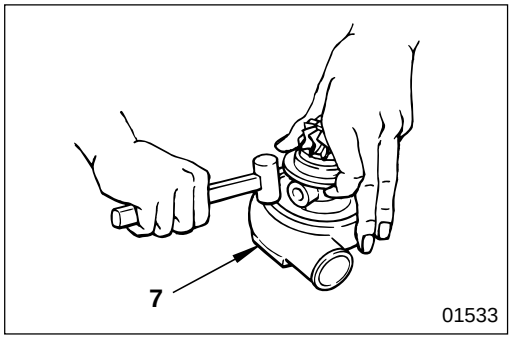

7 Removal of compressor cover

CAUTION

- **When removing compressor cover 7, tap all around the circumference lightly so as not to damage the compressor cover.**
- **Avoid hitting the compressor wheel near compressor cover 7, since the blade of the compressor wheel can be easily bent.**

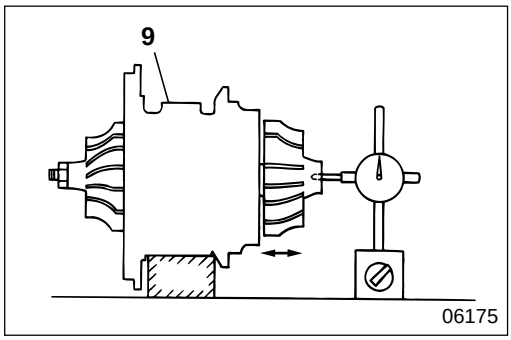

9 Inspection of cartridge assembly

(1) Play in the shaft direction of the shaft and turbine wheel assembly

If the measured value deviates from the standard value, replace cartridge assembly **9**.

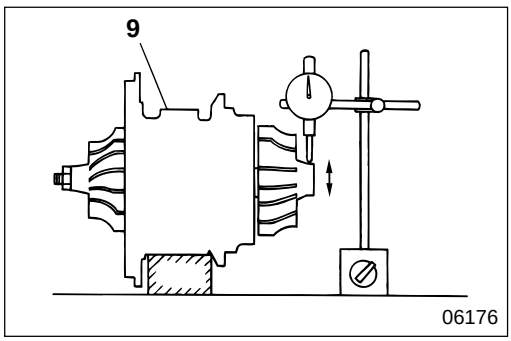

(2) Play at right angles to the shaft of the shaft and turbine wheel assembly

- Play on turbine wheel side
  If the measured value is higher than the limit, replace cartridge assembly **9**.

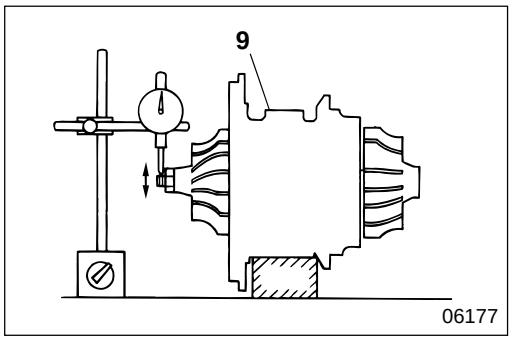

- Play on compressor wheel side
  If measured value is higher than the limit, replace cartridge assembly **9**.

M E M O

INTERCOOLER

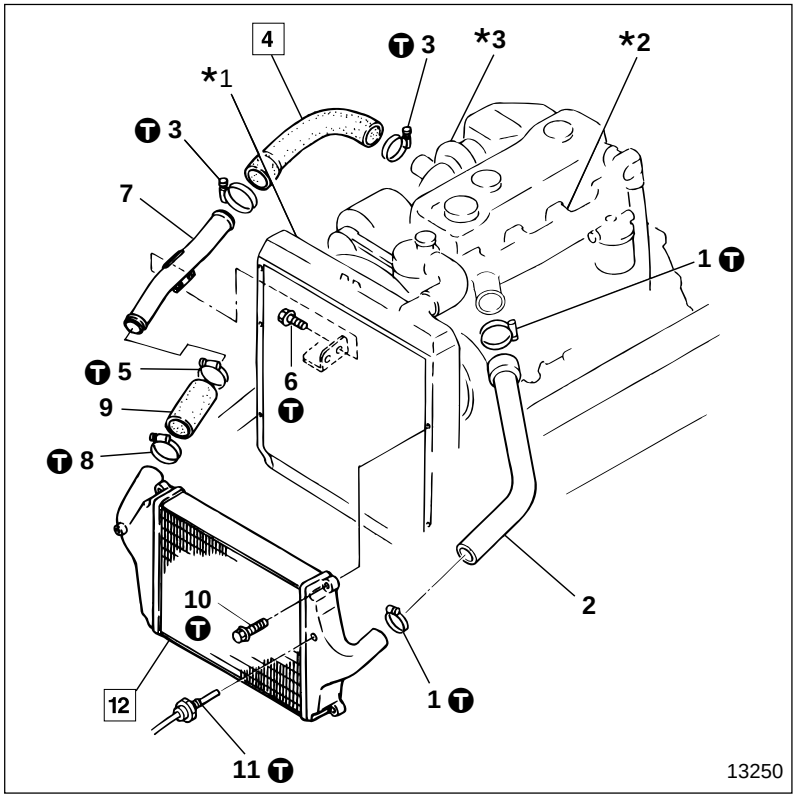

● **Disassembly sequence**

1 Clamp
2 Air inlet hose
3 Clamp
4 Air inlet hose
5 Clamp
6 Bolt
7 Air inlet pipe
8 Clamp
9 Air inlet hose
10 Bolt
11 Boost air temperature sensor Gr 13
12 Intercooler

***1** : Radiator Gr 14
***2** : Exhaust manifold P15-22
***3** : Turbocharger P15-12

● **Assembly sequence**

Follow the disassembly sequence in reverse.

Service standards

Location	Maintenance item	Standard value	Limit	Remedy
12	Air leakage from intercooler (Air pressure : 150 kPa {21 lbf/in^2, 1.5 kgf/cm^2})	0 cm^3 {0 cu. in.}	—	Replace

Ⓣ Tightening torque

Unit : N·m {lbf.ft, kgf·m}

Location	Parts to be tightened	Tightening torque	Remarks
1, 3, 5, 8	Clamp (Air inlet hose mounting)	2.9 to 3.4 {2.2 to 2.5, 0.3 to 0.35}	—
6	Bolt (Air inlet pipe mounting)	12 to 15 {8.7 to 11, 1.2 to 1.5}	—
10	Bolt (Intercooler mounting)	12 to 15 {8.7 to 11, 1.2 to 1.5}	—
11	Boost air temperature sensor	14.7±2 {11±1.4, 1.5±0.2}	—

◆ Service procedure

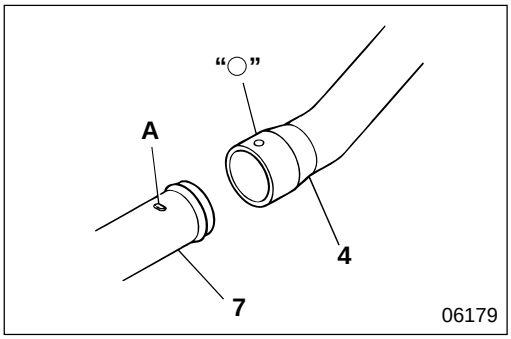

4 **Installation of air inlet hose**

Align alignment mark "○" of air inlet hose **4** with padded part **A** of air inlet pipe **7**.

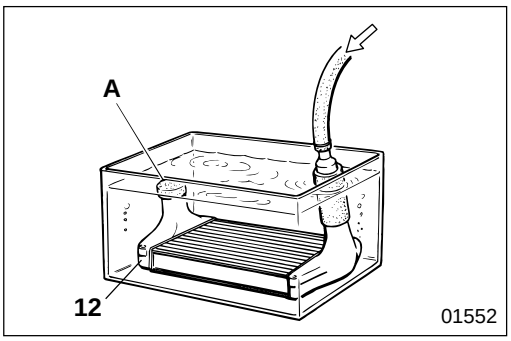

12 **Inspection of intercooler**

- Fit plug **A** on one of the air inlets of intercooler **12** and connect a hose to the other, then lower the intercooler into the water tank. Apply air at the specified pressure (150 kPa {21 lbf/in^2, 1.5 kgf/cm^2}) from the hose side and check for air leaks.
- If air leaks, replace intercooler **12**.

INTAKE MANIFOLD

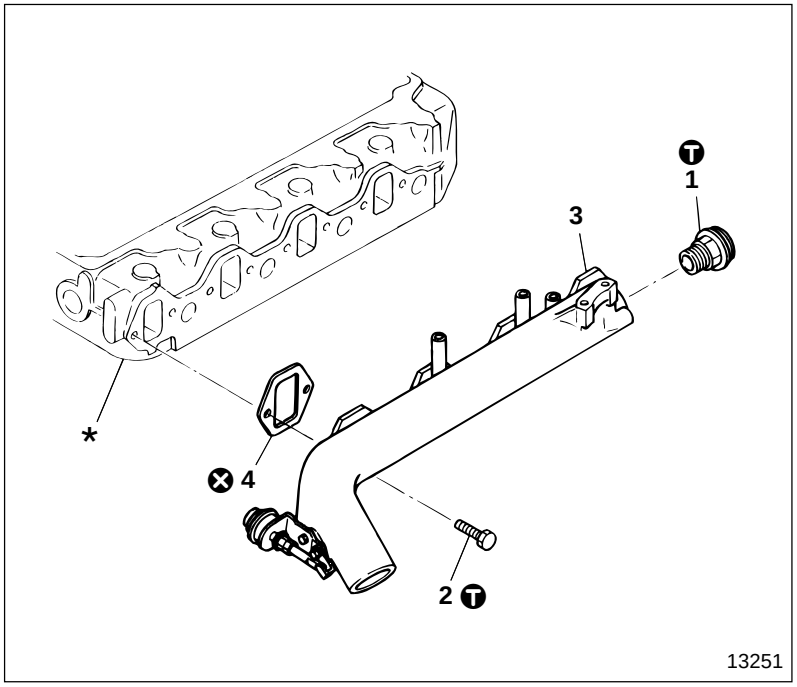

● **Disassembly sequence**

1 Over-boost valve
2 Bolt
3 Intake manifold assembly Gr 35
4 Gasket

* : Cylinder head Gr 11
⊗ : Non-reusable parts

● **Assembly sequence**

Follow the disassembly sequence in reverse.

Ⓣ Tightening torque

Unit : N·m {lbf.ft, kgf·m}

Location	Parts to be tightened	Tightening torque	Remarks
1	Over-boost valve	31 {23, 3.2}	—
2	Bolt (Intake manifold assembly mounting)	16 to 24 {12 to 17, 1.6 to 2.4}	—

M E M O

EXHAUST MANIFOLD

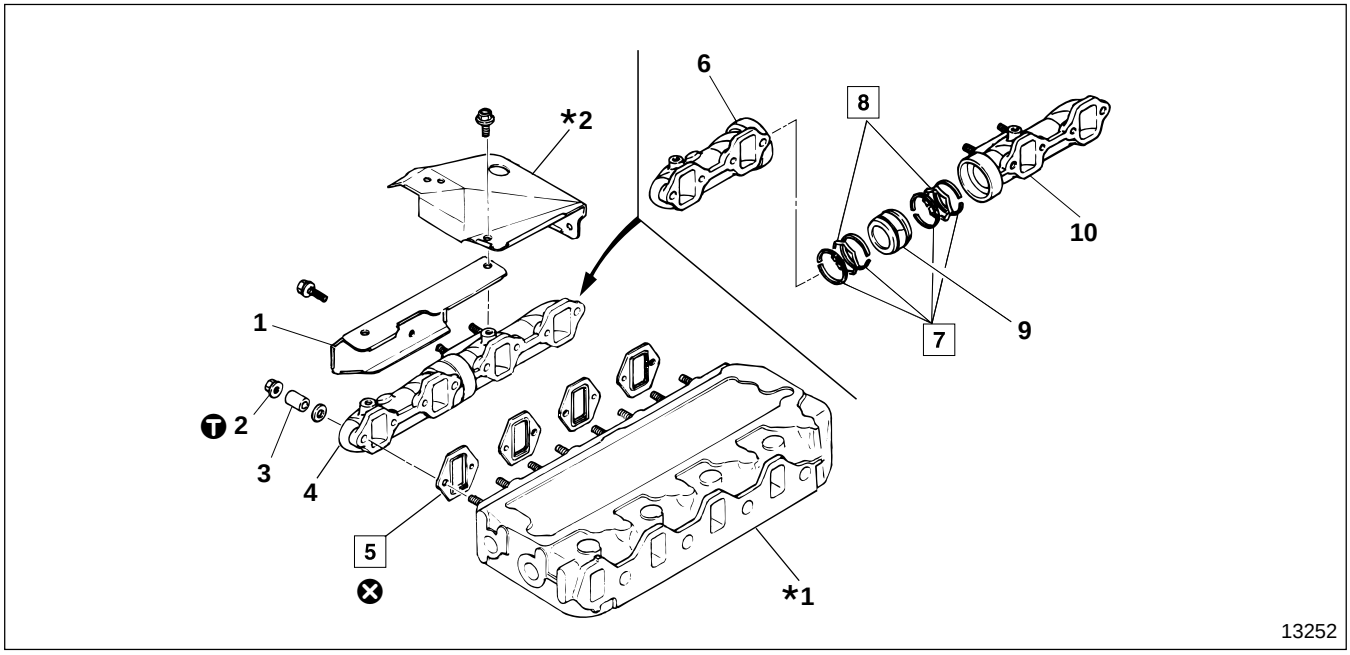

● **Disassembly sequence**

1 Insulator
2 Nut
3 Distance piece
4 Exhaust manifold assembly
5 Gasket
6 Front exhaust manifold
7 Seal ring
8 Expansion ring
9 Joint
10 Rear exhaust manifold

***1** : Cylinder head Gr 11
***2** : Insulator P 15-12
⊗ : Non-reusable parts

● **Assembly sequence**

Follow the disassembly sequence in reverse.

Tightening torque

Unit : N·m {lbf.ft, kgf·m}

Location	Parts to be tightened	Tightening torque	Remarks
2	Nut (Front exhaust manifold and rear exhaust manifold mounting)	41 to 54 {30 to 40, 4.2 to 5.5}	—

◆ Service procedure

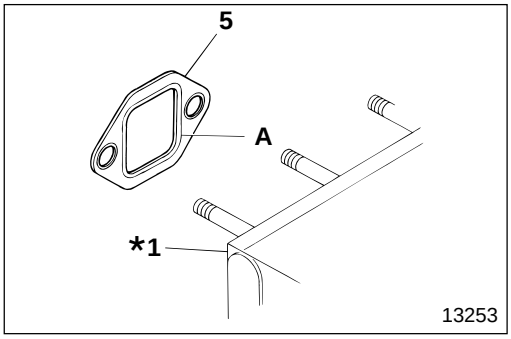

5 **Installation of gasket**

Install gasket **5** on cylinder head ***1** in the direction as illustrated.

A : Grommet lip

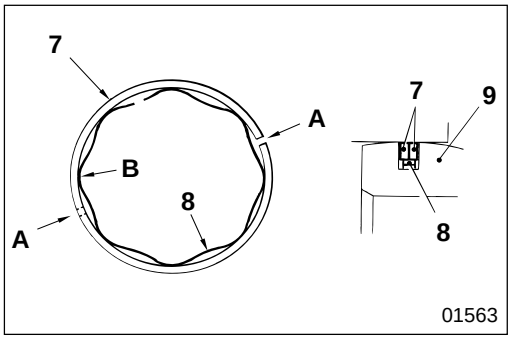

7 **8** **Installation of seal ring and expansion ring**

- Offset splits **A** of seal rings **5** at 180°.
- Align so that expansion ring **8** protrusions **B** and splits **A** of seal rings **7** do not meet.

EXHAUST PIPE AND MUFFLER

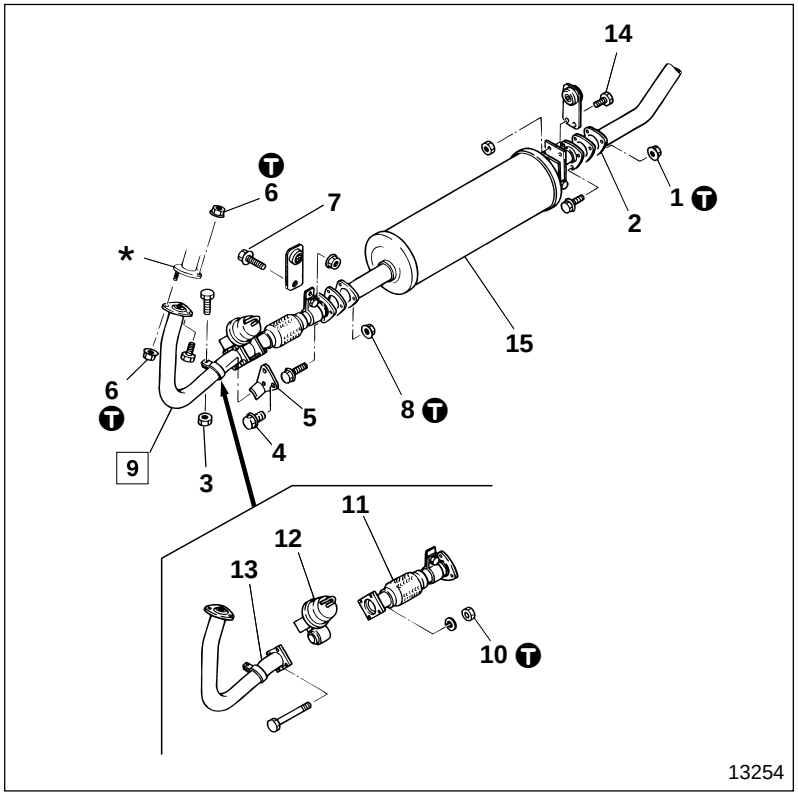

● **Disassembly sequence**

1 Nut
2 Tail pipe
3 Nut
4 Bolt
5 Exhaust pipe bracket
6 Nut
7 Bolt
8 Nut
9 Front pipe assembly
10 Nut
11 Front pipe
12 Exhaust brake unit Gr 35
13 Front pipe
14 Bolt
15 Muffler

***** : Exhaust manifold

● **Assembly sequence**

Follow the disassembly sequence in reverse.

WARNING

- **Never hit or kick muffler 15, or the catalyzer in the muffler will be damaged.**
- **A small amount of water sometimes collects inside muffler 15. Never touch this water, if you do by mistake, wash it off immediately with clean water.**

Tightening torque

Unit : N·m {lbf.ft, kgf·m}

Location	Parts to be tightened	Tightening torque	Remarks
1, 8	Nut (Tail pipe and muffler mounting)	26 to 33 {20 to 25, 2.7 to 3.4}	—
6	Nut (Front pipe assembly mounting)	20 to 25 {14 to 18, 2.0 to 2.5}	—
10	Nut (Exhaust brake unit mounting)	27 {20, 2.75}	—

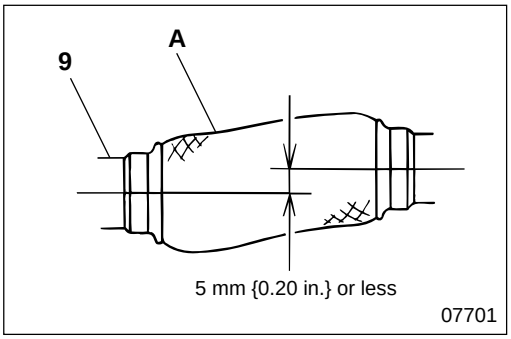

◆ Service procedure

9 Installation of front pipe assembly

Install front pipe assembly **9** so that the offset tolerance in the vertical and horizontal sections between the front and back of bellows **A** conforms to the specified value.

CAUTION⚠

Be sure when installing front pipe assembly 9, that bellows A are not bent or stretched, since the bellows are designed to reduce the external noise of the vehicle but not to absorb dimensional errors in the installation of pipes.

MITSUBISHI
FUSO

FE

Service Manual

Group 21
Clutch

Table of Contents

BACK

HOME

MITSUBISHI FUSO TRUCK OF AMERICA, Inc.

Pub No. TWSE9501-21

GROUP 21 CLUTCH

SPECIFICATIONS 2

STRUCTURE AND OPERATION 2

TROUBLESHOOTING 5

INSPECTION AND ADJUSTMENT MOUNTED IN VEHICLE
- Clutch Fluid (Brake Fluid) Replacement and Air Bleeding 6
- Clutch Pedal Free Play 8

CLUTCH PEDAL 10

CLUTCH MASTER CYLINDER 12

CLUTCH POWER CYLINDER 14

WORK BEFORE REMOVAL AND INSTALLATION OF CLUTCH BODY 16

CLUTCH BODY 18

CLUTCH CONTROL 22

SPECIFICATIONS/STRUCTURE AND OPERATION

SPECIFICATIONS

Item		Specifications
Clutch	Model	C4W30
Drive type		Strap drive
Clutch disc	Type	Dry, single plate type
Pressure plate	Type	Diaphragm spring type
Control type		Hydraulic pressure type
Clutch master cylinder	Manufacturer	NISSIN KOGYO
Clutch power cylinder	Manufacturer	NISSIN KOGYO

STRUCTURE AND OPERATION

Clutch Control

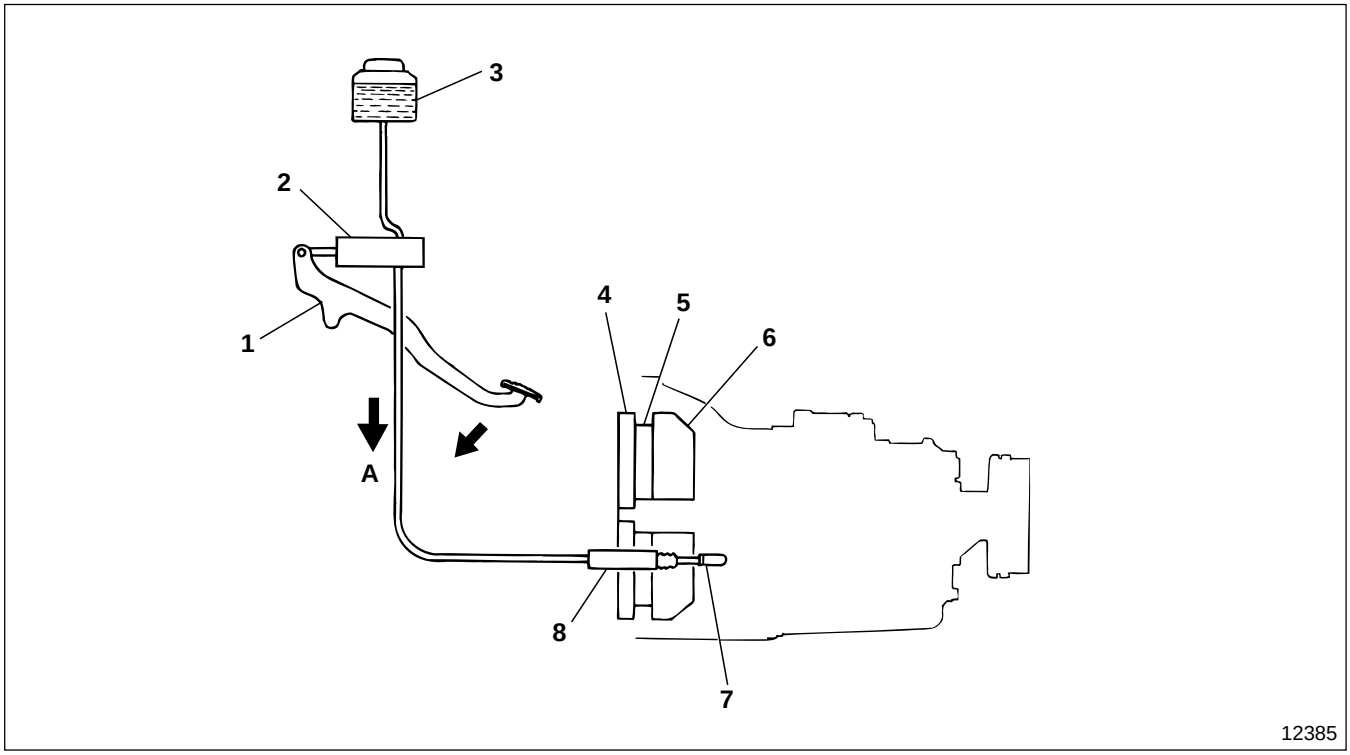

1 Clutch pedal
2 Clutch master cylinder
3 Fluid tank
4 Flywheel
5 Clutch disc
6 Clutch cover assembly
7 Push rod
8 Clutch power cylinder

A : Hydraulic pressure

Clutch Master Cylinder

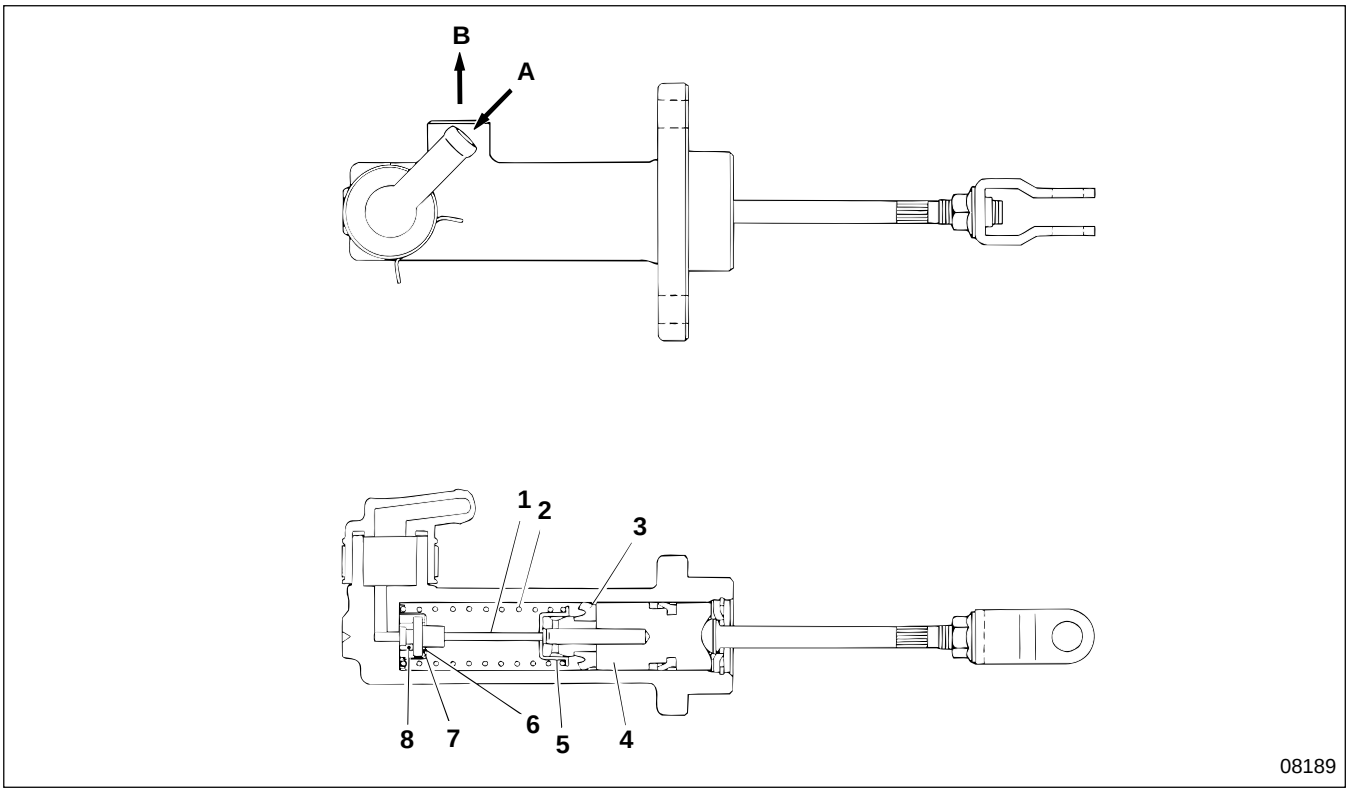

1 Valve stem
2 Return spring
3 Pressure cup
4 Piston
5 Spring seat
6 Valve spring
7 Valve case
8 Valve seal

A : From fluid tank
B : To clutch power cylinder (hydraulic pressure)

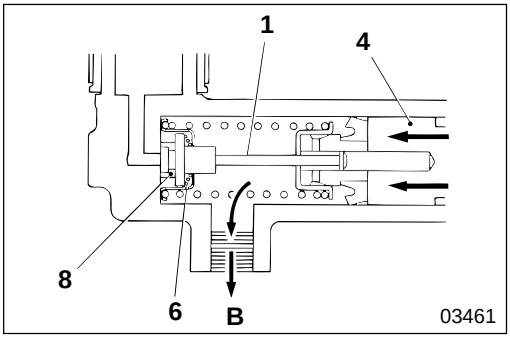

When clutch pedal is depressed

- As piston **4** is pressed in the direction as illustrated, valve spring **6** of valve stem **1** forces down valve seal **8** to close the fluid tank port.
- Then, the hydraulic pressure in the master cylinder increases to transmit hydraulic pressure **B** to the power cylinder.

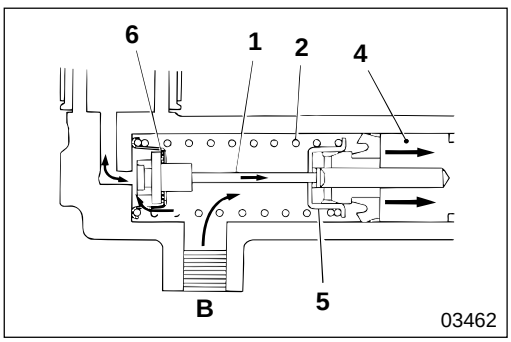

When clutch pedal is released

- As the clutch pedal is released, hydraulic pressure **B** from the power cylinder and return spring **2** push back piston **4**.
- At the same time, valve stem **1** is retracted by spring seat **5** and compresses valve spring **6** to open the fluid tank port.
- Thus released, hydraulic pressure **B** in the master cylinder returns piston **4** to its original position.

Clutch Body

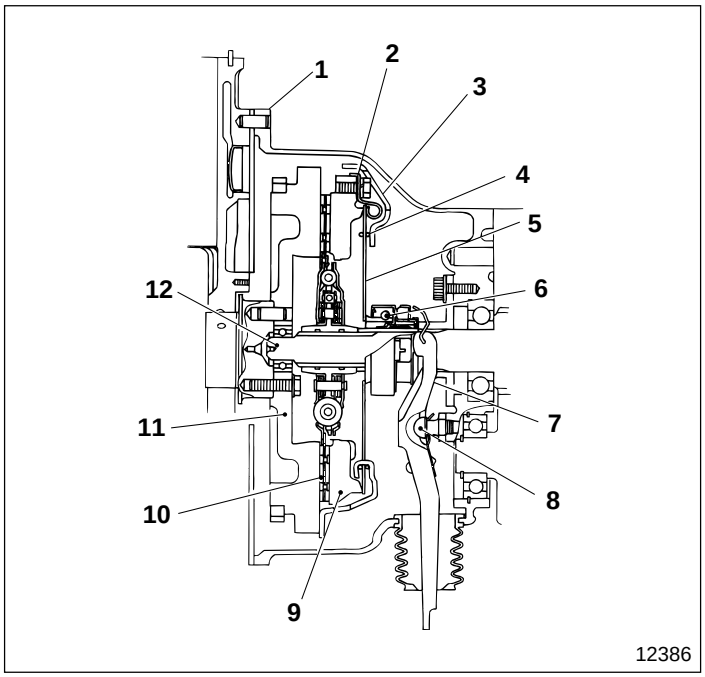

1 Clutch housing
2 Strap plate
3 Clutch cover
4 Pivot ring
5 Diaphragm spring
6 Clutch release bearing
7 Clutch release rocker arm
8 Rocker arm pivot
9 Pressure plate
10 Clutch disc
11 Flywheel
12 Drive pinion

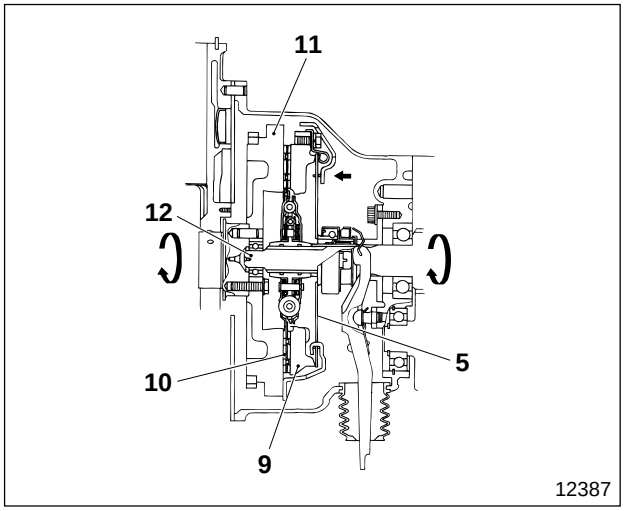

When clutch pedal is released

- Pressure plate **9**, activated by diaphragm spring **5**, forces clutch disc **10** against flywheel **11**.
- Clutch disc **10** forced against flywheel **11** runs together with the flywheel and transmits power from the engine to transmission drive pinion **12**.

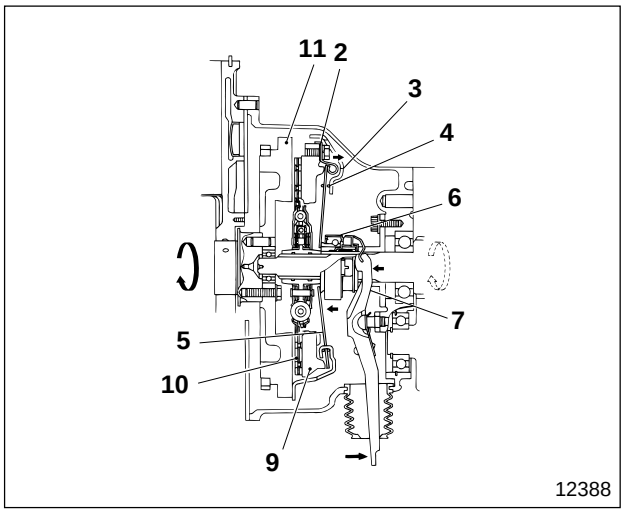

When clutch pedal is depressed

- Hydraulic pressure generated within the clutch master cylinder activates the power cylinder. This pushes out clutch release bearing **6** via clutch release rocker arm **7** to compress diaphragm spring **5**. The diaphragm spring supported by pivot ring **4** retracts pressure plate **9**, which is connected to clutch cover **3** via the strap plate **2**. The resulting clearance between clutch disc **10** and flywheel **11** cuts off the transmission of engine power.

Possible causes \ Symptoms		Clutch disengaged but drags	Clutch slips	Clutch does not engage smoothly	Clutch makes noise on disengagement	Clutch makes noise on engagement	Judder when vehicle starting	Clutch pedal hard to depress	Remarks
Clutch cover assembly	Diaphragm spring heights uneven	○	○	○			○		
	Pressure plate warped or faulty	○	○	○			○		
	Diaphragm spring fatigued		○	○		○			
	Rivets loose						○		
	Strap plate bent				○				
Clutch disc	Disc deformed	○		○			○		
	Disc rivets loose			○			○		
	Disc torsion spring fatigued or fractured		○	○	○	○	○		
	Spline worn	○			○	○	○		
	Spline rusted	○		○					
	Facing worn		○					○	
	Facing surface hardened		○	○			○		
	Facing oily or greasy		○	○			○		
Clutch pedal	Pedal free play inadequate		○						
	Pedal free play excessive	○							
	Pedal stroke inadequate	○							
	Return spring fatigued		○	○					
	Pedal friction surfaces faulty			○			○	○	
Clutch master cylinder	Piston and piston cup sliding movement faulty	○	○	○				○	
	Spring fatigued	○	○	○					
	Brake fluid port clogged	○	○	○					
Clutch power cylinder	Piston and piston cup sliding movement faulty	○	○	○					
	Spring fatigued	○	○	○					
	Brake fluid port clogged	○	○	○					
Clutch control	Release bearing faulty	○			○		○		
Transmission drive pinion spline worn		○				○			Gr 22
Engine idling speed too slow		○				○			Gr 13
Engine mounting fatigued		○					○		Gr 10
Flywheel warped, deformed or stepped wear		○	○	○			○		Gr 11
Flywheel pilot bearing faulty		○			○				Gr 11
Air mixed in clutch hydraulic system		○							
Clutch hydraulic system leaking		○							

Clutch Fluid (Brake Fluid) Replacement and Air Bleeding

Tightening torque

Unit : N·m {lbf.ft, kgf·m}

Location	Parts to be tightened	Tightening torque	Remarks
1	Bleeder screw	10.8 to 14.7 {8 to 11, 1.1 to 1.5}	—

Fluid

Location	Points of application	Kinds	Quantity
4	Fluid tank	Brake fluid (SAE J1703f or FMVSS No.116 DOT3)	As required

WARNING

- **The clutch fluid system and the brake fluid system use the fluid tank in common. Therefore, replacement the clutch fluid must be carried out simultaneously with that of the brake fluid. Gr 35**
- **You must use new brake fluid (SAE J1703f or FMVSS No. 116 DOT3). Do not add different quality fluid or mineral oil (gas oil, engine oil, gear oil, automatic transmission fluid, etc.) to the clutch system, because this will cause the rubber parts of the clutch system and brake system to swell, resulting in faulty clutch operation, as well as ineffective braking and brake dragging.**
- **Do not allow foreign particles or water to become mixed into the brake fluid when refilling, because this will result in faulty clutch and brake operations.**
- **If you use a mug for adding brake fluid, keep it solely for that purpose to prevent contamination from different quality fluids or mineral oils.**

CAUTION

- **Be careful not to splash brake fluid on related parts as this could damage the paintwork.**
- **Be sure to wipe off brake fluid immediately if you splash it on the paintwork.**

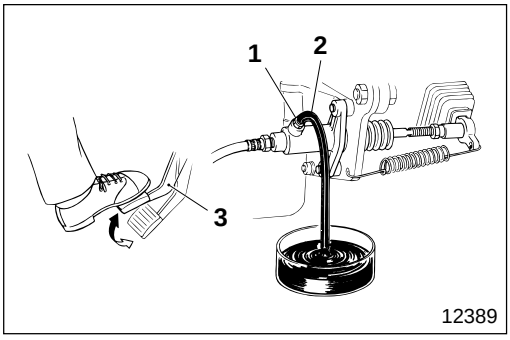

(1) Replacement of brake fluid

- Attach vinyl pipe **2** to bleeder screw **1** of the clutch power cylinder.
- Loosen bleeder screw **1** and depress clutch pedal **3** several times to drain brake fluid completely.

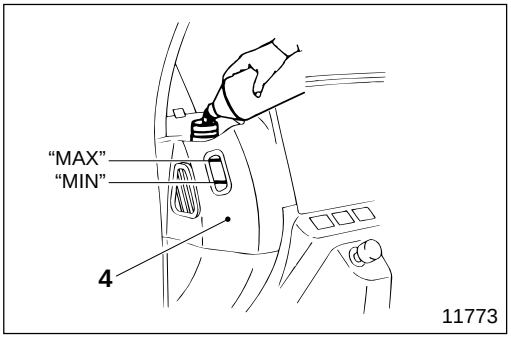

- Supply new brake fluid to the "MAX" level of fluid tank **4**. Depress clutch pedal **3** repeatedly until the old brake fluid discharged from vinyl pipe **2** is replaced by the new brake fluid.

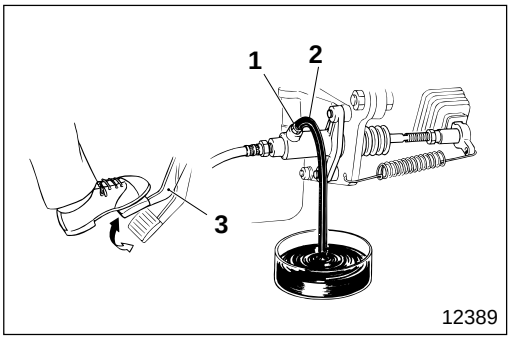

(2) Air bleeding of clutch system

NOTE

Carry out this operation maintaining the brake fluid level in fluid tank 4 between "MAX" and "MIN".

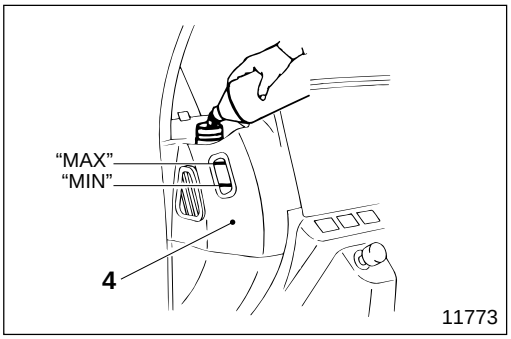

- Attach vinyl pipe **2** to bleeder screw **1** of the clutch power cylinder as in the replacement procedure.
- Fill fluid tank **4** with brake fluid, and loosen bleeder screw **1** of the clutch power cylinder, then depress clutch pedal **3** continuously.
- Keep depressing clutch pedal **3**, and tighten bleeder screw **1** when air is bled completely.
- Depress clutch pedal **3** several times again, then keep it depressed at its fullest extent.
- With the clutch pedal depressed, loosen bleeder screw **1** to drain brake fluid containing air. Release the pedal after tightening the bleeder screw.
- Repeat this operation until air is no longer present in the fluid being drained.
- When this operation is completed, tighten bleeder screw **1** at specified torque.
- Check that brake fluid is at the "MAX" level of fluid tank **4**, and supply new brake fluid if necessary.
- Check for brake fluid leakage from each of the parts with clutch pedal **3** depressed.

INSPECTION AND ADJUSTMENT MOUNTED IN VEHICLE

Clutch Pedal Free Play

Service standards

Unit : mm {in.}

Location	Maintenance item	Standard value	Limit	Remedy
2	Push rod stroke	4 {0.16}	—	Adjust or replace
6	Clutch pedal free play	36 to 53 {1.42 to 2.09}	—	Adjust or replace

Inspect and adjust the free play of the clutch pedal, by noting the stroke of the clutch power cylinder push rod, after the clutch pedal has been correctly adjusted.

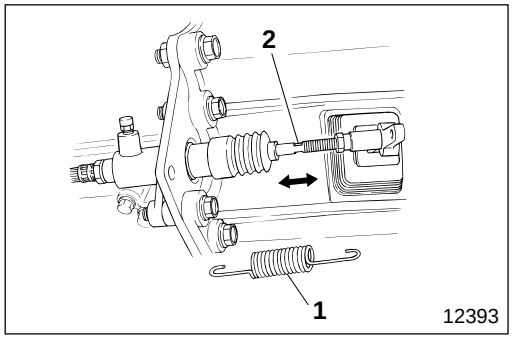

[Inspection]

- Bleed air from the clutch system 🕮 P21-7
- Adjust the clutch pedal 🕮 P21-11
- Disconnect return spring **1** and check the free play of push rod **2** by hand. If the measured value deviates from the standard value, adjust as follows:

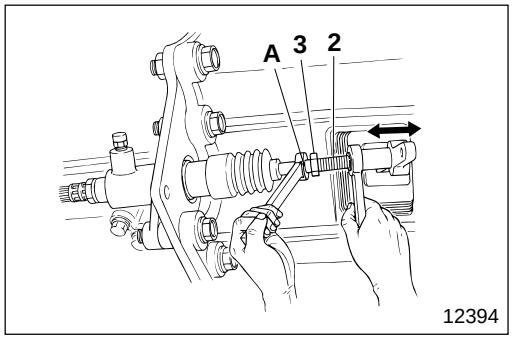

[Adjustment]

- Loosen nut **3** and turn flat parts **A** of push rod **2** to extend push rod until it stops.
- Then, return flat parts **A** of push rod **2** by the following value and retighten nut **3**.

  Amount of return : Approximately three and one fifth of a turn

- If push rod **2** cannot be returned by the above amount, the clutch disc is worn beyond the limit and needs replacing.

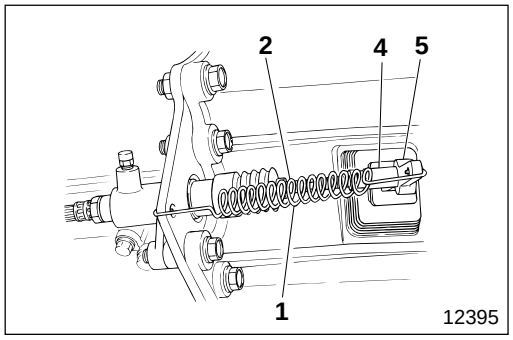

- Install return spring **1**, and check that there is no space between push rod cap **4** and clutch release rocker arm **5** by moving push rod **2**.

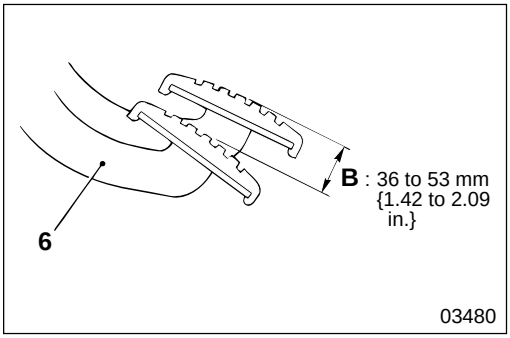

[Confirmation]
Push clutch pedal **6** with your hand until you feel a resistance and measure free play **B**.
If the measured value deviates from the standard value, readjust or replace the clutch disc.

CLUTCH PEDAL

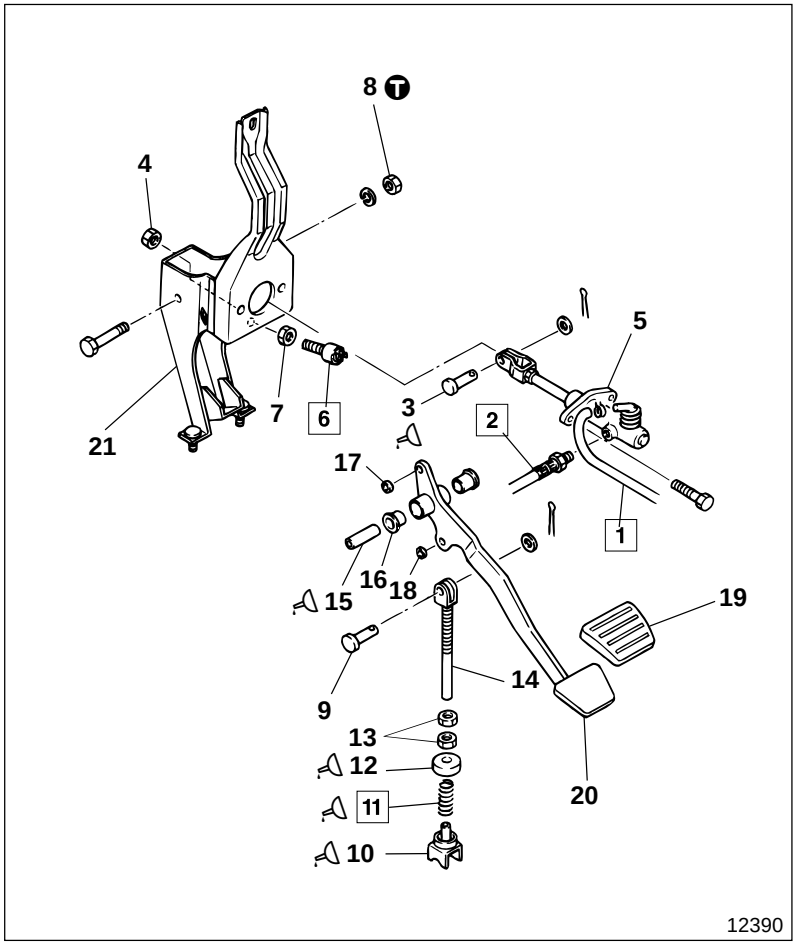

● **Disassembly sequence**

1 Fluid hose
2 Fluid hose
3 Clevis pin
4 Nut
5 Clutch master cylinder P21-12
6 Clutch switch Gr 54
7 Lock nut
8 Nut
9 Clevis pin
10 Spring holder
11 Return spring
12 Plate
13 Nut
14 Spring assist rod
15 Collar
16 Bushing
17 Bushing
18 Bushing
19 Pedal pad
20 Clutch pedal
21 Clutch pedal support

● **Assembly sequence**

Follow the disassembly sequence in reverse.

● **Adjustment after assembly**

P21-11

Service standards

Unit : mm {in.}

Location	Maintenance item	Standard value (Basic diameter in [ ])	Limit	Remedy
11	Installed load of return spring (Installed length 37 {1.46})	185 N {41 lbf, 18.7 kgf}	165 N {37 lbf, 16.8 kgf}	Replace
15, 16	Clearance between collar and bushing	[14] 0.02 to 0.26 {[0.55] 0.00079 to 0.010}	0.3 {0.012}	Replace

Tightening torque

Unit : N·m {lbf.ft, kgf·m}

Location	Parts to be tightened	Tightening torque	Remarks
8	Nut (Clutch pedal mounting)	16.7 to 25.5 {12 to 19, 1.7 to 2.6}	—

Lubricant

Location	Points of application	Kinds	Quantity
3	Clevis pin	Chassis grease [NLGI No.1 (Ca soap)]	As required
10 to 12	Friction surfaces of spring holder, return spring and plate	Chassis grease [NLGI No.1 (Ca soap)]	As required
15	External surface of collar	Chassis grease [NLGI No.1 (Ca soap)]	As required

◆ Service procedure

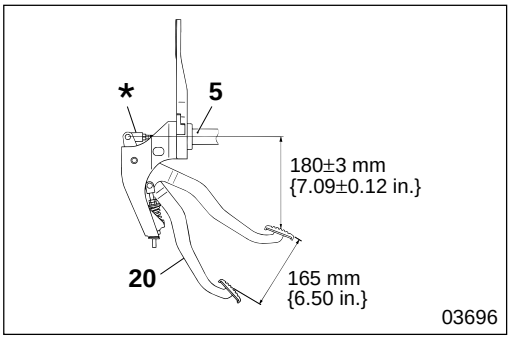

● Adjustment after assembly

Adjustment of clutch pedal

Adjust clevis * of clutch master cylinder **5** so that clutch pedal **20** is installed as illustrated. 🕮 P21-13

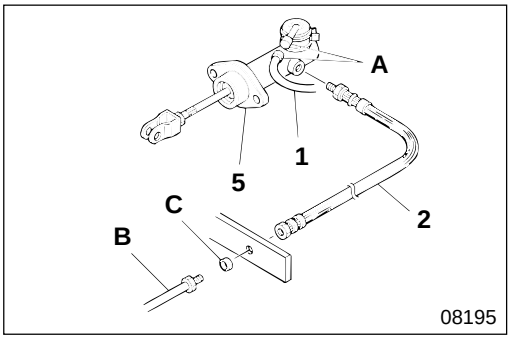

1 **2** **Removal and installation of fluid hose**

- Remove fluid hose **1** from the fluid tank and clutch master cylinder **5**, and fit stopper **A** after draining is completed.
- Remove fluid hose **2** from clutch master cylinder **5** after removing pipe **B** from the cab, then fit stopper **C** to pipe **B**.
- After installation, bleed the system. 🕮 P21-7

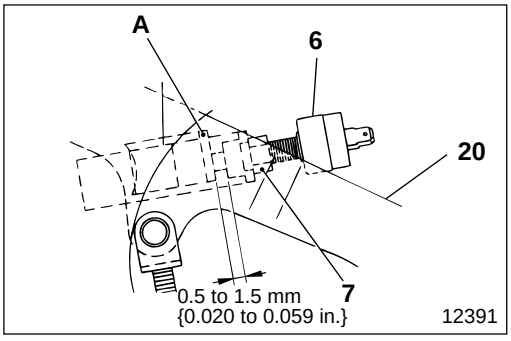

6 **Installation of clutch switch**

After adjusting clutch pedal **20**, adjust the clearance between the thread end of clutch switch **6** and pedal stopper **A** so that it is within the standard value, and tighten lock nut **7**.

CAUTION⚠

Do not allow the thread end of clutch switch 6 to come into contact with pedal stopper A of clutch pedal 20 because this will cause the clutch to slip.

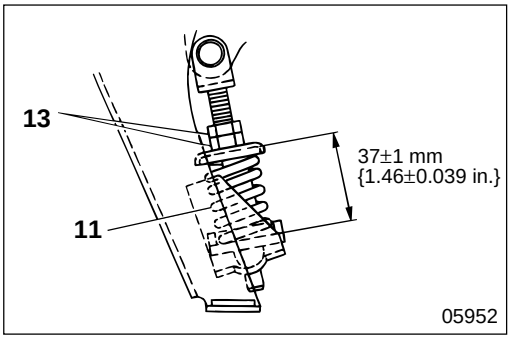

11 **Adjustment of return spring installation length**

Adjust return spring **11** to the installed length as illustrated using lock nut **13**.

CLUTCH MASTER CYLINDER

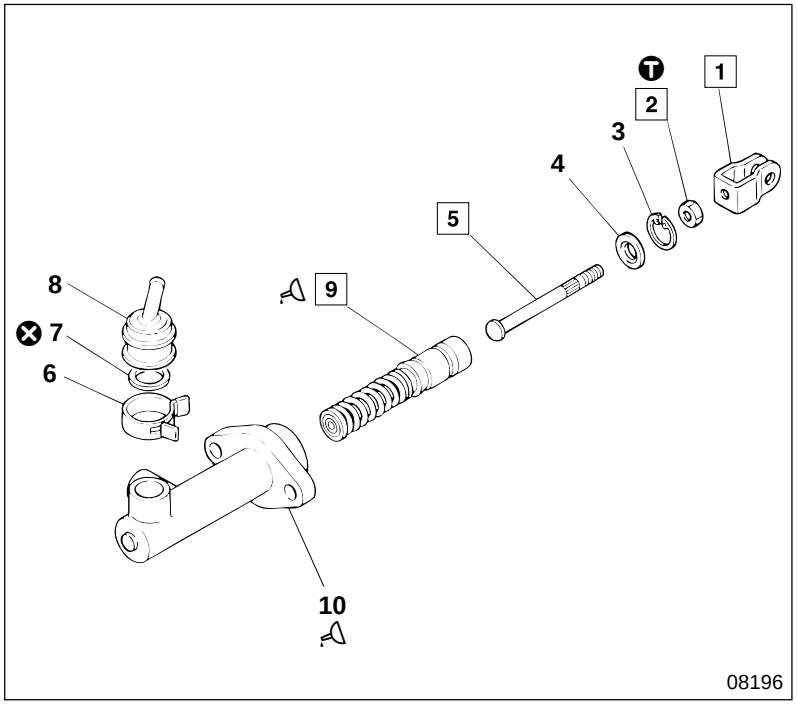

● **Disassembly sequence**

1 Clevis
2 Lock nut
3 Retaining ring
4 Stop plate
5 Push rod
6 Clip
7 Packing
8 Union collar
9 Piston assembly
10 Cylinder body

⊗ : Non-reusable parts

● **Assembly sequence**

8 → 7 → 10 → 6 → 9 → 5 → 4 → 3 → 2 → 1

Repair kit : Clutch master cylinder kit

Service standards

Unit : mm {in.}

Location	Maintenance item	Standard value (Basic diameter in [ ])	Limit	Remedy
9, 10	Clearance between piston assembly and cylinder body	[22.22] 0.02 to 0.10 {[0.87] 0.00079 to 0.0039}	0.2 {0.0079}	—

Ⓣ Tightening torque

Unit : N·m {lbf.ft, kgf·m}

Location	Parts to be tightened	Tightening torque	Remarks
2	Lock nut (Push rod mounting)	19 to 27 {14 to 20, 1.9 to 2.8}	—

Lubricant

Location	Points of application	Kinds	Quantity
9, 10	Friction surfaces of piston assembly and cylinder body	Rubber grease	0.2 to 0.3 g {0.0071 to 0.011 oz}

◆ Service procedure

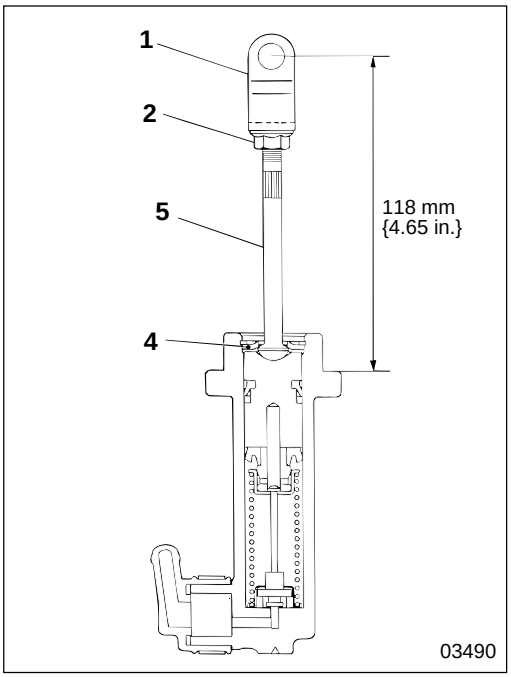

1 **2** **5** **Adjustment of push rod length**

- If the length, as illustrated, deviates from the specified value, loosen nut **2**, and adjust the length of push rod **5** by turning clevis **1**.
- Measure the length while push rod **5** is touching stop plate **4**.
- After adjustment, tighten nut **2** at specified torque.

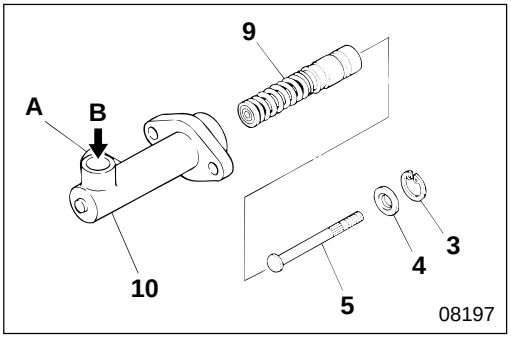

9 **Piston assembly**

[Removal]

- Remove retaining ring **3**, stop plate **4** and push rod **5**.
- Block port **A** of cylinder body **10**, and apply compressed air from **B** as illustrated to remove piston assembly **9**.

WARNING⚠

You must apply compressed air gradually when you remove piston assembly 9. If you applied compressed air strongly at one time, the piston assembly would be violently ejected.

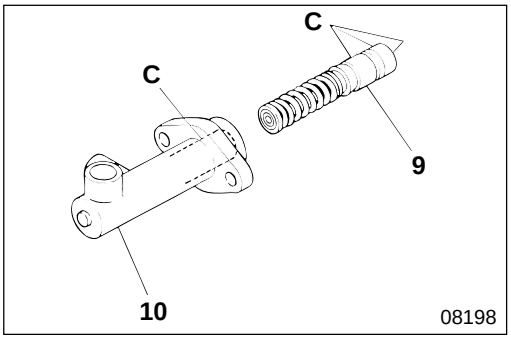

[Installation]

Before installing the assembly, apply rubber grease to friction surface **C** of piston assembly **9** and cylinder body **10**.

CLUTCH POWER CYLINDER

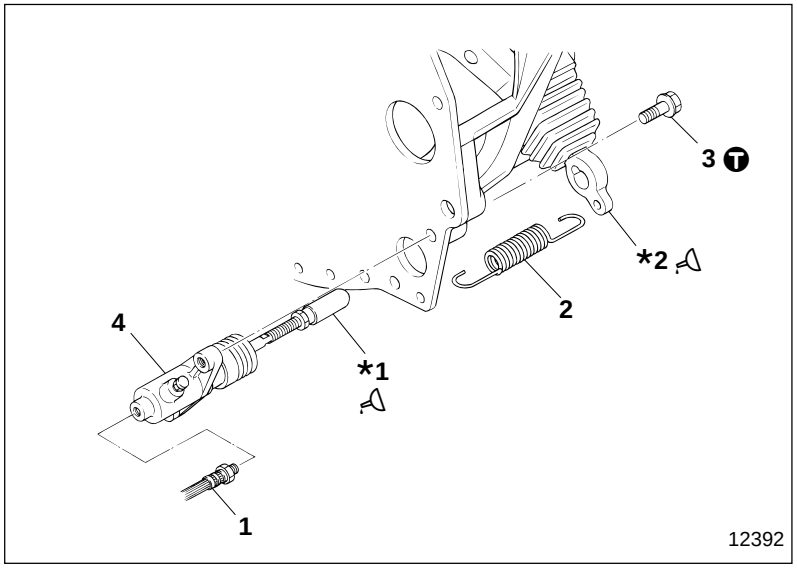

● **Removal sequence**

1 Fluid hose
2 Return spring
3 Bolt
4 Clutch power cylinder assembly
P21-15

***1** : Push rod cap
***2** : Clutch release rocker arm

● **Installation sequence**

Follow the removal sequence in reverse.

Ⓣ Tightening torque

Unit : N·m {lbf.ft, kgf·m}

Location	Parts to be tightened	Tightening torque	Remarks
3	Bolt (Clutch power cylinder mounting)	38 to 59 {28 to 43, 3.9 to 6.0}	—

Lubricant

Location	Points of application	Kinds	Quantity
***1, *2**	Contact areas of push rod cap edge and clutch release rocker arm	Wheel bearing grease [NLGI No.2 (Li soap)]	As required

Clutch Power Cylinder Assembly

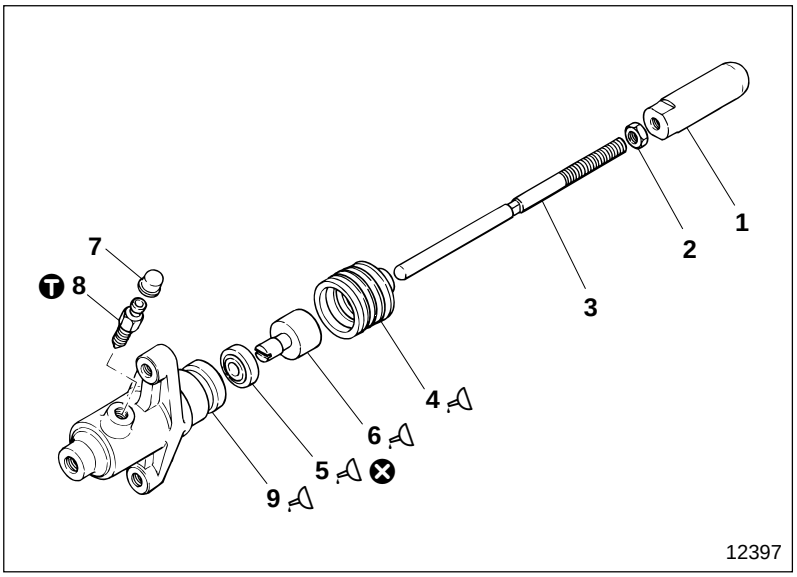

● **Disassembly sequence**

1 Push rod cap
2 Lock nut
3 Push rod
4 Dust cover
5 Piston cup
6 Piston
7 Bleeder cap
8 Bleeder screw
9 Cylinder body

⊗ : Non-reusable parts

● **Assembly sequence**

Follow the disassembly sequence in reverse.

Repair kit : Power cylinder kit

Service standards

Unit : mm {in.}

Location	Maintenance item	Standard value (Basic diameter in [ ])	Limit	Remedy
6, 9	Clearance between piston and cylinder body	[20.64] 0.02 to 0.11 {[0.81] 0.00079 to 0.0043}	0.2 {0.0079}	Replace

Ⓣ Tightening torque

Unit : N·m {lbf.ft, kgf·m}

Location	Parts to be tightened	Tightening torque	Remarks
8	Bleeder screw	10.8 to 14.7 {8 to 11, 1.1 to 1.5}	—

Lubricant

Location	Points of application	Kinds	Quantity
4	Engagement part of cylinder body	Rubber grease	As required
5, 6, 9	The area extending approximately 15 mm {0.59 in.} from the end surface of cylinder body	Rubber grease	As required
	Piston, piston cup (installation point) and internal surface of cylinder body	Rubber grease	As required

WORK BEFORE REMOVAL AND INSTALLATION OF CLUTCH BODY

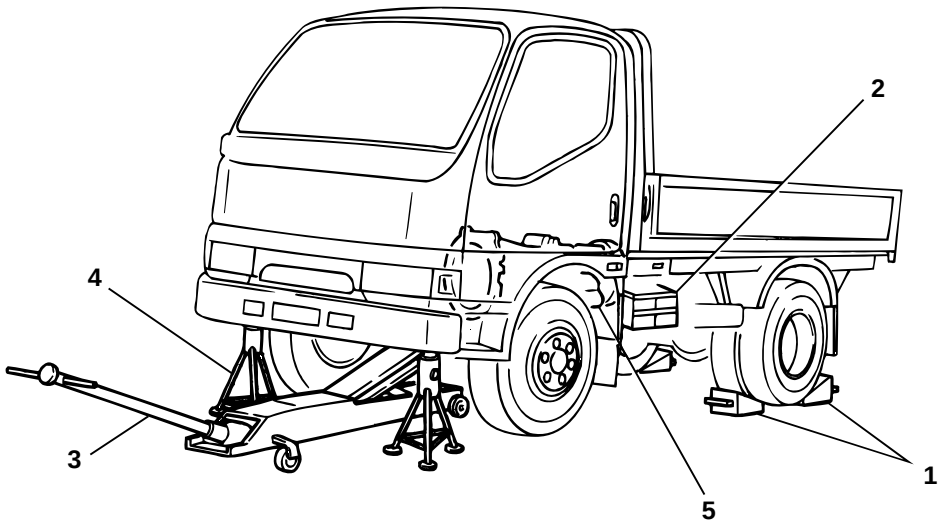

14121

● **Work sequence before removal**

1 Place wheel chocks.
2 Disconnect the negative battery cable. Gr 54
3 Jack up the front axle using a garage jack.
4 Support the front frame on rigid racks.
5 Remove the transmission. Gr 22

WARNING⚠

- **Since the parking brake will be removed, naturally it cannot be used. Therefore, you must chock the wheels securely so the vehicle does not move.**
- **Do not remove the chocks until the entire operation is completed.**
- **Supporting a vehicle on a garage jack only is extremely dangerous, so always support the frame on rigid racks.**
- **Leave the garage jack and rigid racks in place until the entire operation is completed. Never remove them during the operation.**

CAUTION⚠

Keep the transmission in neutral throughout the operation.

● **Work sequence after installation**

Follow the work sequence before removal in reverse.

M E M O

CLUTCH BODY

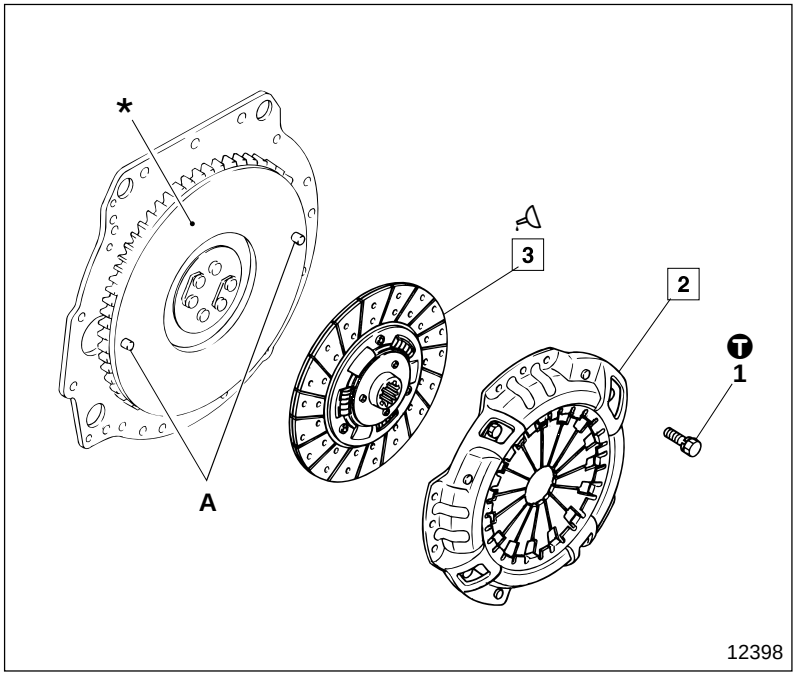

● **Removal sequence**

1 Bolt
2 Clutch cover assembly
3 Clutch disc

***** : Flywheel Gr 11
A : Positioning pins (two points)

WARNING

Be careful when you handle pressure plate and lever assembly 2 because it is rather heavy.

● **Installation sequence**

Follow the removal sequence in reverse.

CAUTION

Be careful not to get oily substances on clutch disc 3 surfaces because this will cause the clutch to slip.

Service standards

Unit : mm {in.}

Location	Maintenance item		Standard value	Limit	Remedy
2	Flatness of pressure plate		0.05 {0.0020} or less	0.2 {0.0079}	—
	Friction surface of pressure plate (Measured at specified positions)		5.5 {0.22}	4.5 {0.18}	Replace
	Clearance between diaphragm spring and pivot ring		—	Play	Replace
	Finger heights of diaphragm spring uneven		1.0 {0.039} or less	1.3 {0.051}	Correct
3	Clutch disc	Radial runout	1.0 {0.039} or less	1.5 {0.059}	Replace
		Lateral runout	1.0 {0.039} or less	1.5 {0.059}	Replace
		Play in rotation of spline	0.05 to 0.23 {0.0020 to 0.0091}	0.5 {0.020}	Replace
		Depth from facing surface to rivet	1.8 to 2.4 {0.071 to 0.094}	0.2 {0.0079}	Replace

Tightening torque

Unit : N·m {lbf.ft, kgf·m}

Location	Parts to be tightened	Tightening torque	Remarks
1	Bolt (Clutch cover assembly mounting)	32 to 49 {24 to 36, 3.3 to 5.0}	—

Lubricant

Location	Points of application	Kinds	Quantity
3	Spline of clutch disc	Molybdenum disulfide grease [NLGI No.2 (Li soap)]	3.2 to 4.2 g {0.11 to 0.15 oz}

Special tools

Unit : mm {in.}

Location	Tool name and shape	Part No.	Application
2, 3	Clutch alignment arbor 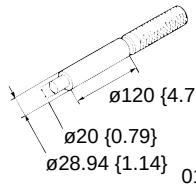	MH061387	Holding of clutch disc
	Sleeve 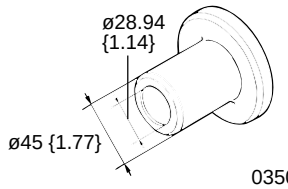	MH061425	Inspection of installed height of diaphragm spring
	Plate 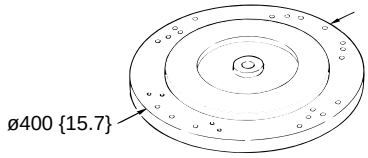	MH061424	Adjustment of diaphragm spring
	Adjust wrench 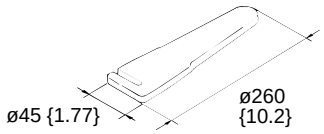	MH061426	Adjustment of diaphragm spring

◆ Service procedure

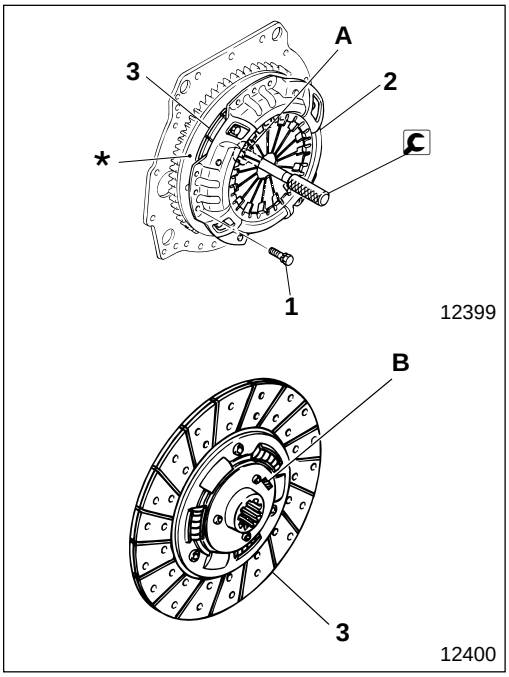

2 Clutch cover assembly

[Removal]

- Insert clutch alignment arbor into pilot bearing **A** on flywheel * to hold clutch disc **3**, and remove clutch cover assembly **2**.
- For installation, follow the removal sequence in reverse.
- Install clutch disc **3** so that part No. B is visible.
- Tighten bolts **1** gradually, in diagonal order, to specified torque.

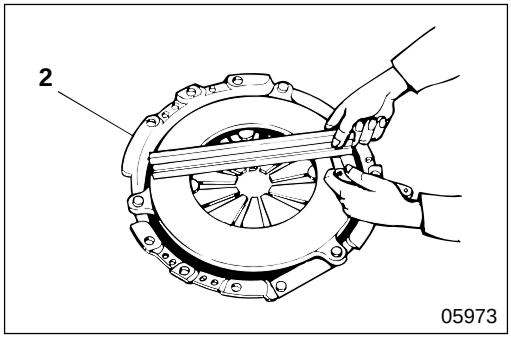

[Flatness of pressure plate]
If the measured value is higher than the limit, replace clutch cover assembly **2**.

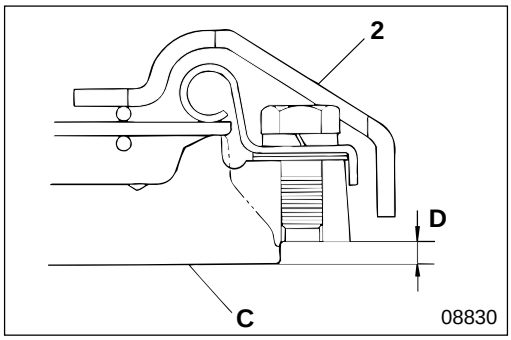

[Friction surface of pressure plate]
Measure pressure plate friction surface **C** at specified position **D** (measuring position of friction surface must be within the maximum and minimum diameters), and if the measured value is lower than the limit, replace clutch cover assembly **2**.

Maximum diameter	298 mm {11.7 in.}
Minimum diameter	192 mm {7.56 in.}

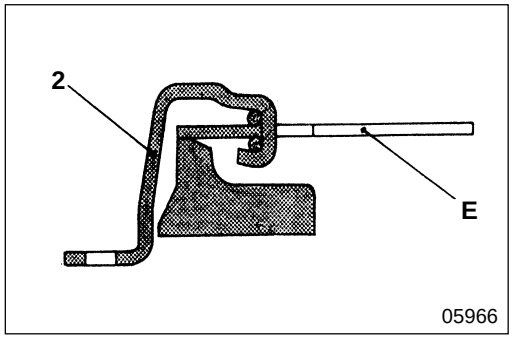

[Inspection]
- Check for play in diaphragm spring **E**.
- If there is play, replace clutch cover assembly **2**.

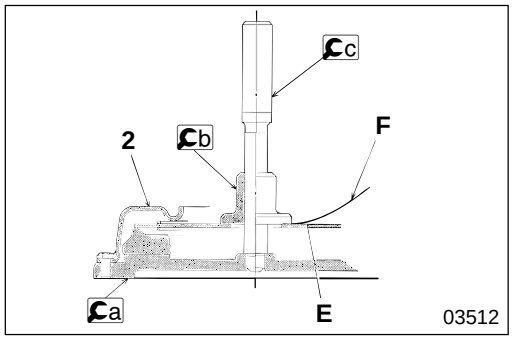

[Inspection of installation height]
- Place a plate on a surface plate and install clutch cover assembly **2**.
- Install b sleeve and c clutch alignment arbor, measure finger heights of diaphragm spring **E** to see if they are uneven, using feeler gauge **F**. If the measured value is higher than the limit, correct the heights.

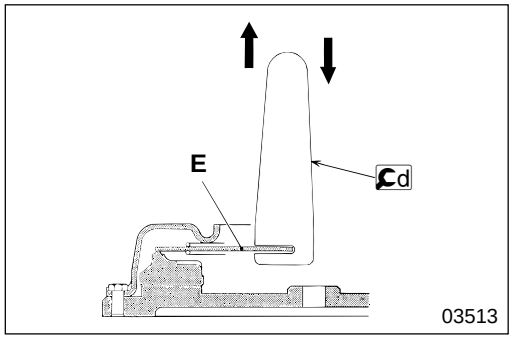

[Correction]
- Correct uneven finger heights of diaphragm spring **E** using d adjust wrench.

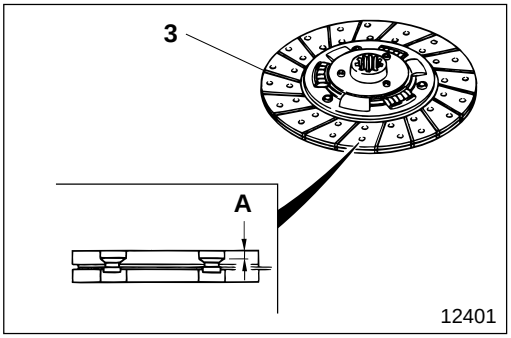

3 Clutch disc

(1) Height of facing

Measure dimension **A** of clutch disc **3**. If the measured value is lower than the limit, replace the clutch disc.

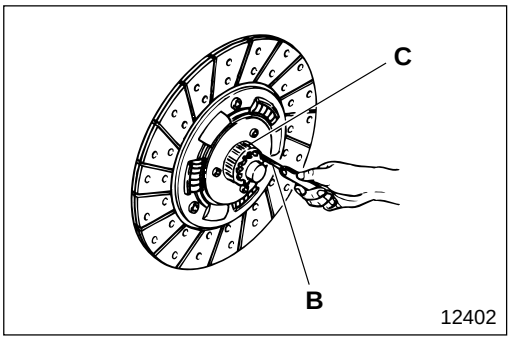

(2) Play in direction of revolution

- Reshape feeler gauge **B** for insertion into drive pinion spline **C**, and measure play. If the measured value is higher than the limit, replace clutch disc **3** or the drive pinion.
- Carry out the same measurement on new clutch disc **3**. If the measured value is higher than the limit, replace the drive pinion.

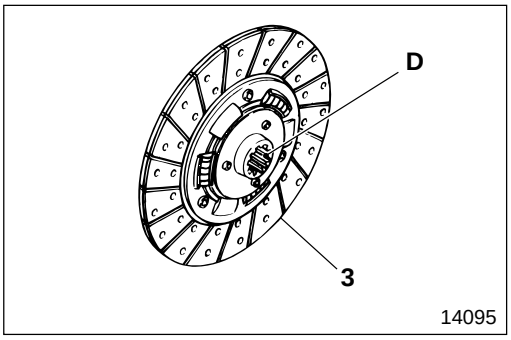

(3) Applying grease

Apply grease evenly to spline **D** entire tooth surface of clutch disc **3**. Apply grease to the grease groove of the spline up to its large diameter.

CAUTION⚠

Be careful not to apply too much grease because excessive grease causes grease leakage from spline D and makes the clutch slippery.

CLUTCH CONTROL

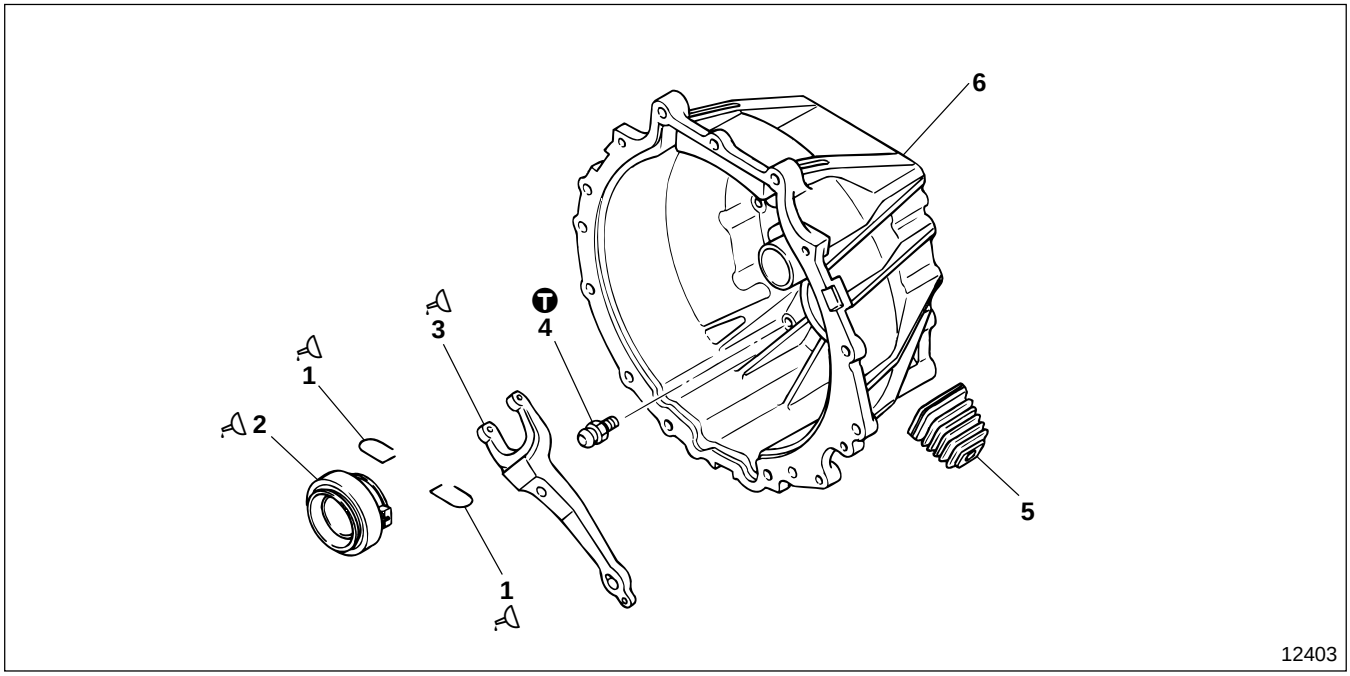

● **Disassembly sequence**

1 Return spring
2 Clutch release bearing
3 Clutch release rocker arm
4 Rocker arm pivot
5 Clutch rocker arm cover
6 Clutch housing

NOTE

Do not remove rocker arm pivot 4 unless it is faulty.

● **Assembly sequence**

Follow the disassembly sequence in reverse.

Ⓣ Tightening torque

Unit : N·m {lbf.ft, kgf·m}

Location	Parts to be tightened	Tightening torque	Remarks
4	Rocker arm pivot	57 {42, 5.8}	—

Lubricant

Location	Points of application	Kinds	Quantity
1 to 3	Friction surfaces of return spring, clutch release bearing, and clutch release rocker arm	Wheel bearing grease [NLGI No.2 (Li soap)]	As required

MITSUBISHI
FUSO

FE

Service Manual

Group 22
Manual Transmission

Table of Contents

BACK

HOME

MITSUBISHI FUSO TRUCK OF AMERICA, Inc.

Pub No. TWSE9501-22

GROUP 22 MANUAL TRANSMISSION

SPECIFICATIONS 2

STRUCTURE AND OPERATION 2

TROUBLESHOOTING 5

WORK BEFORE REMOVAL AND INSTALLATION OF TRANSMISSION ASSEMBLY 7

REMOVAL AND INSTALLATION OF TRANSMISSION ASSEMBLY 8

GEAR SHIFTER UPPER 10

REAR COVER AND REVERSE IDLER GEAR 16

TRANSMISSION BODY 20

DRIVE PINION ASSEMBLY 28

MAINSHAFT ASSEMBLY 30

COUNTERSHAFT ASSEMBLY < NON-BACKLASH MECHANISM > 36

TRANSMISSION CONTROL 40

SPECIFICATIONS/STRUCTURE AND OPERATION

SPECIFICATIONS

Item		Specifications
Mode of control		Floor shift remote control
Transmission model		M035S5
Gear ratio	1st	5.380
	2nd	3.028
	3rd	1.700
	4th	1.000
	5th	0.722
	Reverse	5.380
Oil capacity	L {qts}	Approximately 3.1 {3.3}
Mass	kg {lb}	Approximately 100 {220}

STRUCTURE AND OPERATION

Transmission Assembly

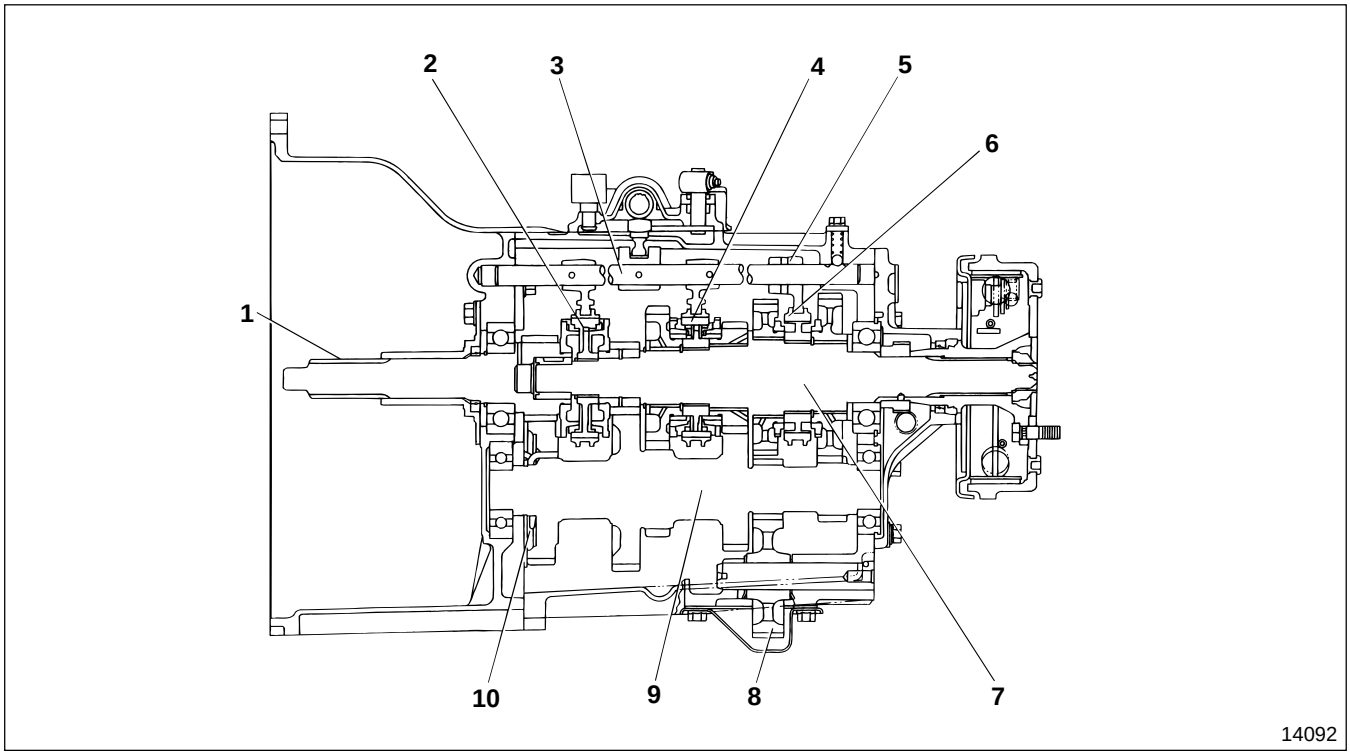

1 Drive pinion
2 4th and 5th synchronizer assembly
3 Shift rail
4 2nd and 3rd synchronizer assembly
5 Shift fork
6 1st and reverse constant-mesh assembly
7 Main shaft
8 Reverse idler gear
9 Countershaft
10 Non-backlash mechanism

The transmission changes revolution and torque generated by the engine into those that match the vehicle's power requirement (driving force). Revolution and torque are increased or decreased by making a selection from several sets of engaged gears. The transmission uses an interlock mechanism to avoid double engagement and the non-backlash mechanism reduces the idling noise of the transmission when the engine is idling.

Synchromesh Mechanism

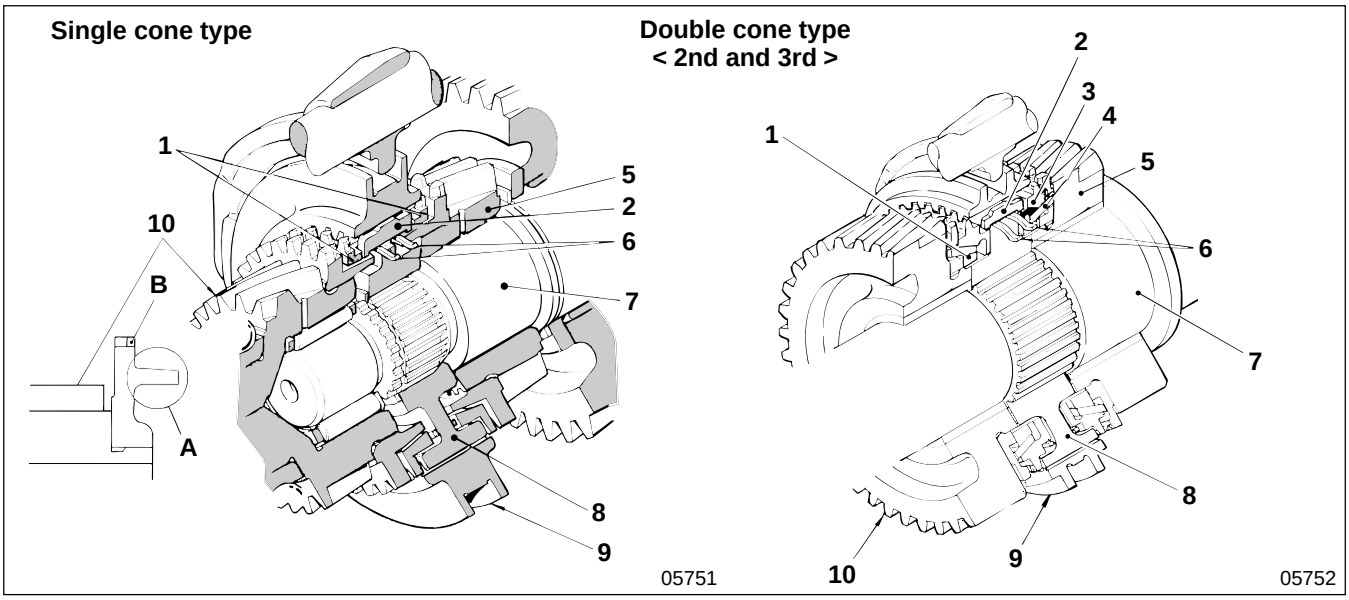

1 Synchronizer ring (Single cone type)
Inner synchronizer ring (Double cone type)
2 Shifting key
3 Outer synchronizer ring (Double cone type)
4 Center cone (Double cone type)
5 Overdrive gear (Single cone type)
3rd gear (Double cone type)
6 Shifting key spring
7 Mainshaft
8 Synchronizer hub
9 Synchronizer sleeve
10 Drive pinion (Single cone type)
2nd gear (Double cone type)

A : Taper cone
B : Dog clutch

The synchromesh mechanism synchronizes the rotating speed of mainshaft **7** and associated synchronizer hub **8** with the rotating speed of the gears to be selected when shifting gear.

Single cone type
In this cone type, gear taper cone **A** acts as a cone clutch for synchronization with synchronizer ring **1**. So the rotating speed of the gear to be synchronized with synchronizer hub **8** gradually changes to the matching speed. When synchronizer sleeve **9** moves into the appropriate position efficiently through this process and engages with the synchronizer hub and dog clutch **B** of the gear to be selected, gear shift is completed.

Double cone type < only for 2nd and 3rd gear >
In this cone type, unlike the single cone type, inner synchronizer ring **1**, center cone **4** and outer synchronizer ring **3** are used instead of just the synchronizer ring. The center cone is between the inner synchronizer ring and the outer synchronizer ring and reduces synchronizing time through more efficient operation of the cone clutch.

Interlock Mechanism

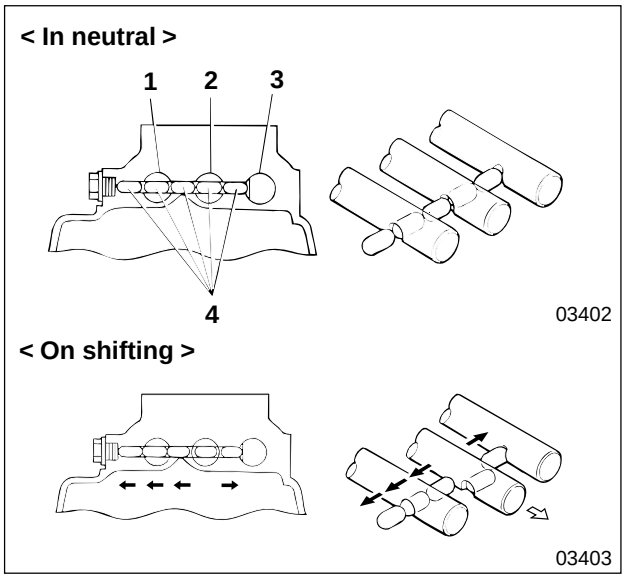

1 4th and 5th shift rail
2 2nd and 3rd shift rail
3 1st and reverse shift rail
4 Interlock pin

The interlock mechanism is designed to avoid double engagement of gears. When 2nd and 3rd shift rail **2** is shifted, interlock pins other than interlock pin **4** in the 2nd and 3rd shift rail are pushed by the 2nd and 3rd shift rail to lock other shift rails.

Non-Backlash Mechanism

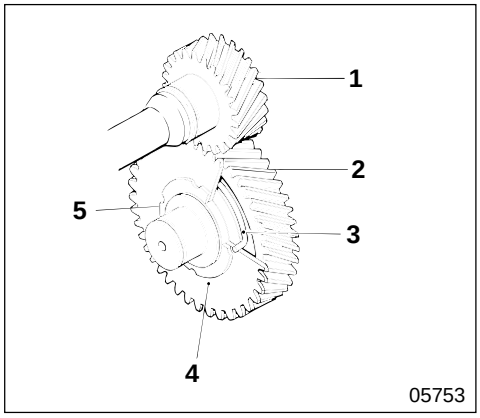

1 Drive pinion
2 Countershaft constant mesh gear
3 Sub-gear spring
4 Sub-gear
5 Sub-gear plate

Sub-gear spring **3** is between sub-gear **4** and countershaft constant mesh gear **2**. The sub-gear is engaged with drive pinion **1** together with countershaft constant mesh gear, being turned in the contracting direction of the sub-gear spring.

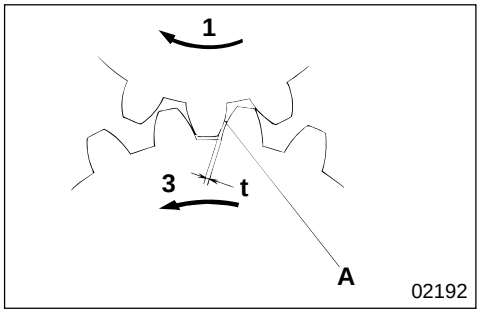

The revolution of drive pinion **1** varies in accordance to the engine revolution when idling.
Without a non-backlash mechanism, backlash **t** at point **A** would vary between zero to the maximum, causing a gear grinding noise.

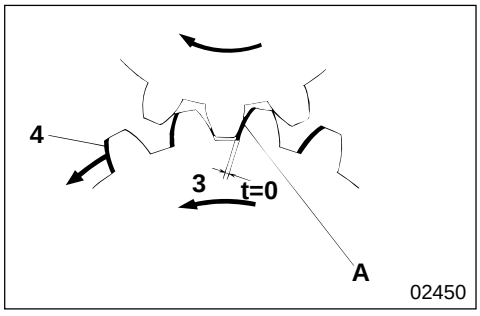

With a non-backlash mechanism, sub-gear **4** maintains backlash **t** at zero at point **A** regardless of change in revolution caused by the engine, eliminating gear grinding noise, resulting in a reduction of idling noise.

Possible causes \ Symptoms		Gears slip out of engagement	Gears hard to engage	Noise when engine is idling	Noise while cruising	Noise when changing gear	Remarks
Transmission body faulty	Mainshaft rear lock nut loose	○	○				
	Mainshaft thrust washer worn	○	○				
	Mainshaft bearing worn or damaged	○	○				
	Synchronizer ring and synchronizer sleeve spline worn	○					
	Synchronizer ring and gears taper cone area worn		○				
	Mainshaft pilot bearing worn or damaged			○	○		
	Drive pinion bearing worn or damaged			○			
	Non-backlash mechanism faulty			○			
	Countershaft bearing worn or damaged			○			
	Needle bearings of gears worn or damaged			○	○		
	Reverse idler gear and power take-off idler gear backlash excessive			○			
	Mainshaft and countershaft bearings worn or damaged				○		
	Mainshaft and countershaft gears backlash excessive				○		
	Splines of gears worn					○	
	Gears damaged				○		
	Gear oil insufficient				○		
Control mechanisms faulty	Control cable joint play	○	○				
	Control rod joint lubricated insufficiently		○				
	Bushings worn	○	○				
	Control rod length adjusted incorrectly		○				
	Control rod bent	○					
	Set board assembly bushings worn	○					
	Shift rail steel ball and groove worn	○					
	Shift rail poppet spring fatigued or fractured	○					
	Shift rail friction movement faulty		○				
	Shift fork claw worn		○				
	Shift fork bent		○				

TROUBLESHOOTING

Possible causes / Symptoms			Gears slip out of engagement	Gears hard to engage	Noise when engine is idling	Noise while cruising	Noise when changing gear	Remarks
Clutch faulty	Clutch engagement poor			○			○	Gr 21
	Clutch pedal play adjusted incorrectly		○					
Synchronizer faulty	Single cone type	Contacting surfaces of synchronizer ring and gear assembly taper cone worn		○			○	
	Double cone type	Contacting surfaces of synchronizer inner and outer rings and center cone worn		○			○	
	Shifting key worn						○	
	Shifting key spring deteriorated or damaged						○	
	Synchronizer sleeve worn or damaged					○	○	

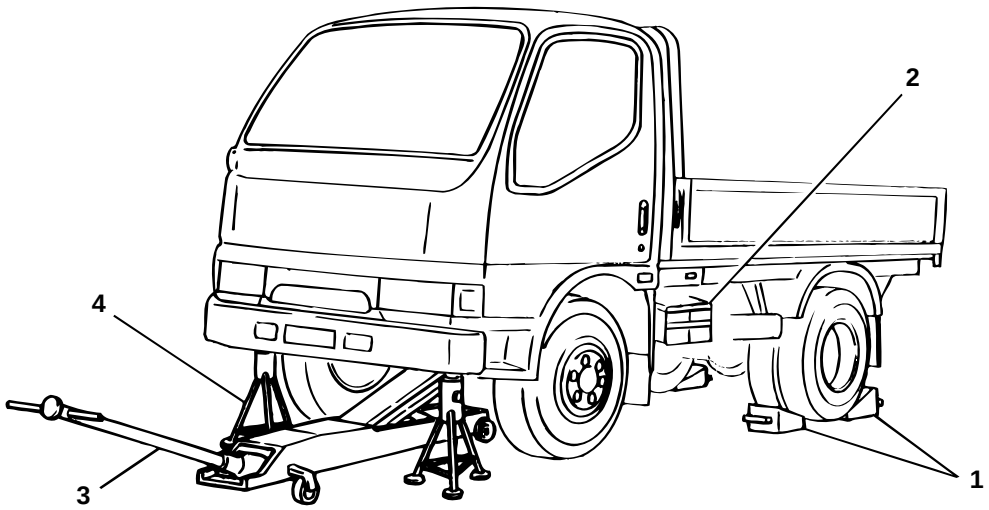

14096

● **Work sequence before removal**

1 Place wheel chocks.
2 Disconnect negative battery cable. Gr 54
3 Jack up the front axle on a garage jack.
4 Support the front frame on rigid racks.

WARNING⚠

- **Since the parking brake will be removed, naturally it cannot be used. Therefore, you must chock the wheels securely so the vehicle does not move.**
- **Do not remove the chocks until the entire operation is completed.**
- **Supporting a vehicle on a garage jack only is extremely dangerous, so always support the frame on rigid racks.**
- **Leave the garage jack and rigid racks in place until the entire operation is completed. Never remove them during the operation.**

CAUTION⚠

Keep the transmission in neutral throughout the operation.

● **Work sequence after installation**

Follow the work sequence before removal in reverse.

REMOVAL AND INSTALLATION OF TRANSMISSION ASSEMBLY

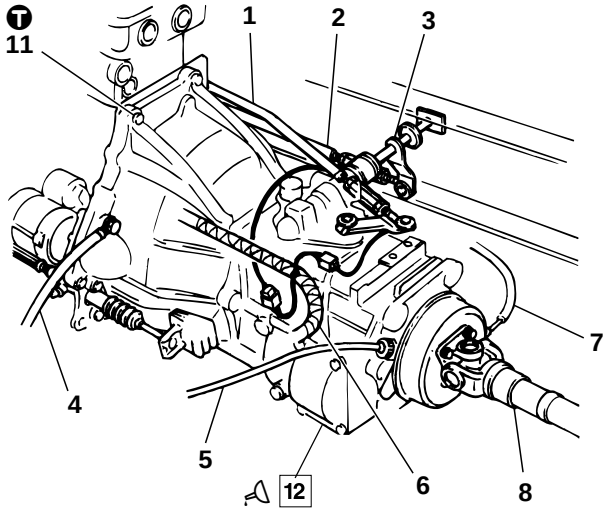

07340

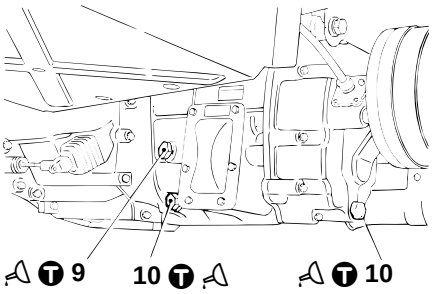

07358

● **Removal sequence**

1 Selector rod P22-40
2 Shift rod P22-40
3 Cross shaft P22-50
4 Harness (Ground)
5 Speedometer cable
6 Chassis harness
7 Parking brake Gr 36
8 Propeller shaft Gr 25
9 Inspection plug
10 Drain plug
11 Bolt
12 Transmission assembly

WARNING

The engine is hot immediately after it has stopped, so take care not to burn yourself.

NOTE

After removing propeller shaft 8, tie it to the frame at the height of installation assembly using a piece of rope, etc.

● **Installation sequence**

Follow the removal sequence in reverse.

T Tightening torque

Unit : N·m {lbf.ft, kgf·m}

Location	Parts to be tightened	Tightening torque	Remarks
9	Inspection plug	69±15 {51±11, 7±1.5}	—
10	Drain plug	69±15 {51±11, 7±1.5}	—
11	Bolt (Transmission assembly mounting)	47 {35, 4.8}	M10×1.25
		82 {61, 8.4}	M12×1.25

Lubricant and sealant

Location	Points of application	Kinds	Quantity
9	Thread area of inspection plug	THREEBOND 1105D	As required
10	Thread area of drain plug	THREEBOND 1105D	As required
12	Spline of drive pinion	Molybdenum disulfide grease [NLGI No.2 (Li soap)]	As required

◆ Service procedure

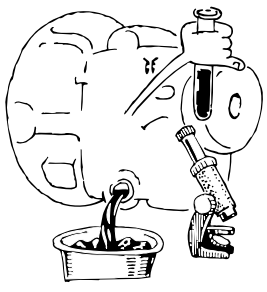

01116

● **Replacement of oil**

[Draining]

- When draining oil, check the quantity and quality of oil, especially for small pieces of metal and metal dust.
- Clean drain plug **10** before reinstalling it because it is magnetic.

[Filling]

- Check that drain plug **10** is tightened in the transmission case at specified torque.
- Pour in gear oil until the oil overflows from the inspection hole. (For oil quantity, see specifications.)

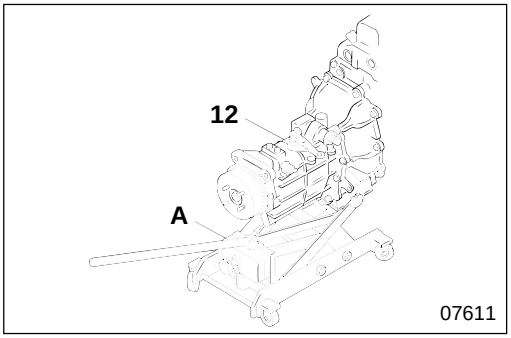

12 Transmission assembly

[Supporting transmission]
Support transmission assembly **12** on transmission jack **A**.

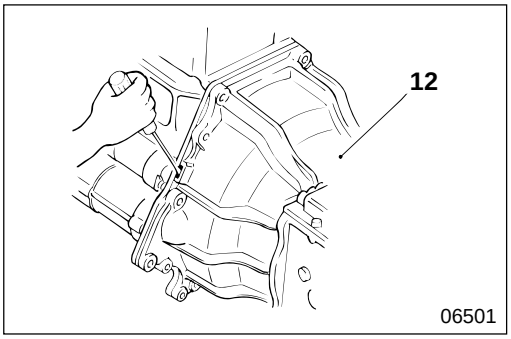

[Removal]
- Insert a screwdriver into the three removal grooves to remove transmission assembly **12** from the engine.

CAUTION
Make sure that you remove hoses and cables correctly during service operations.

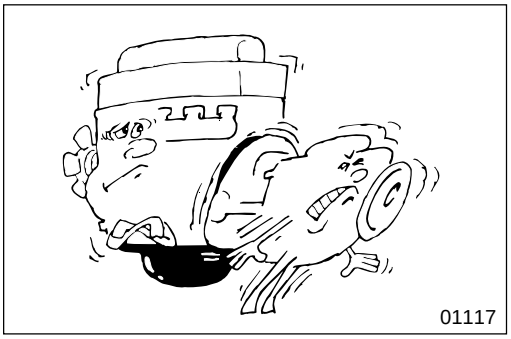

- Move transmission assembly **12** backward until the spline of the drive pinion is detached from the clutch.

CAUTION
Make sure that you pull transmission assembly 12 out in a straight line. If you seesaw the transmission assembly violently, you will damage the spline that connects the drive pinion and the clutch.

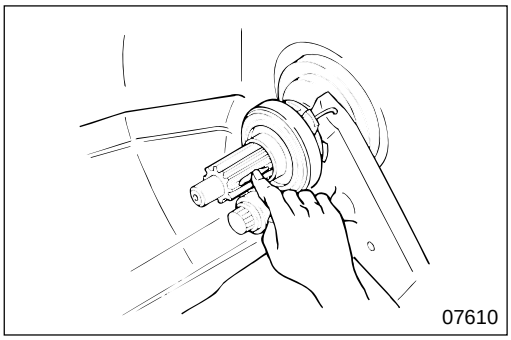

[Installation]
- Check the spline of the drive pinion for rust. If rust is found, remove it using a wire brush.
- Rub grease onto the friction surfaces of the drive pinion using your hand.

CAUTION
Make sure that you apply only the necessary amount of grease because too much grease would drip and cause clutch slip.

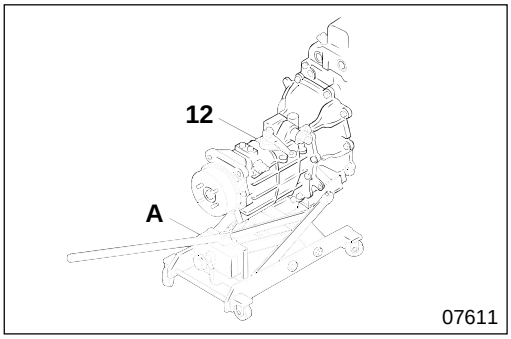

- Support transmission assembly **12** on transmission jack **A**, and insert the transmission assembly into the pilot bearing of the flywheel paying attention to the drive pinion spline.
- Tighten bolt **11** at specified torque to mount transmission assembly **12** to the engine.

GEAR SHIFTER UPPER

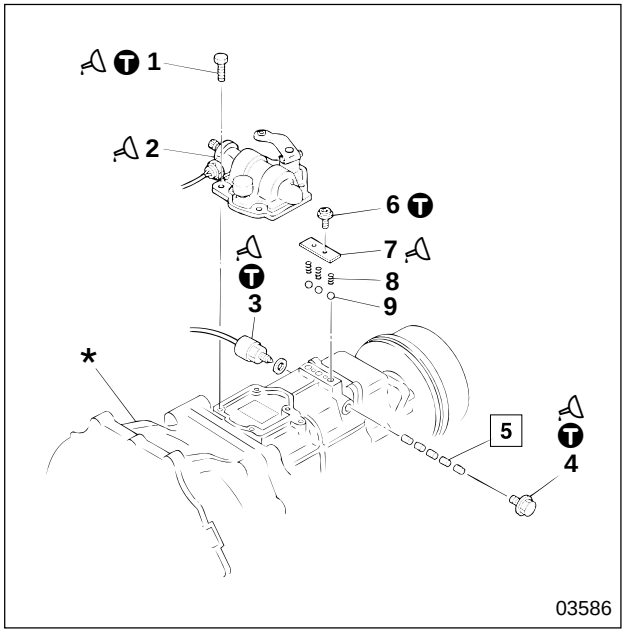

● **Disassembly sequence**

1 Bolt
2 Gear shifter upper assembly
3 Backup lamp switch
4 Screw plug
5 Interlock pins (×5)
6 Screws (×2)
7 Poppet spring plate
8 Poppet springs (×3)
9 Steel balls (×3)

*: Transmission body

● **Assembly sequence**

Follow the disassembly sequence in reverse.

Service standards

Unit : mm {in.}

Location	Maintenance item	Standard value	Limit	Remedy
8	Poppet spring free length	22.85 {0.90}	22.00 {0.87}	Replace

Tightening torque

Unit : N·m {lbf.ft, kgf·m}

Location	Parts to be tightened	Tightening torque	Remarks
1	Bolt (Gear shifter upper assembly mounting)	24 {17, 2.4}	—
3	Backup lamp switch	29 to 39 {22 to 29, 3 to 4}	—
4	Screw plug	39 {29, 4}	—
6	Screw (Poppet spring plate mounting)	24 {17, 2.4}	—

Sealant

Location	Points of application	Kinds	Quantity
1	Thread area of bolt	THREEBOND 1215	As required
2	Contact surface of transmission case	THREEBOND 1104J	As required
3	Thread area of backup lamp switch	THREEBOND 1215	As required
4	Thread area of screw plug	THREEBOND 1215	As required
7	Contact surface of transmission case	THREEBOND 1215	As required

◆ Service procedure

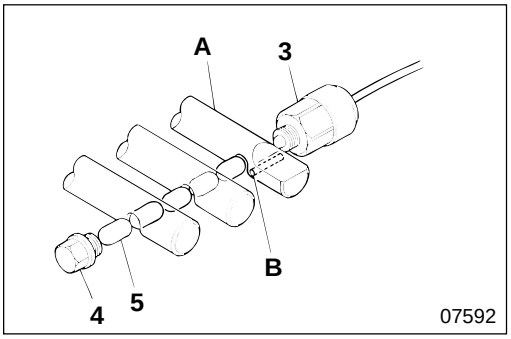

5 **Removal of interlock pin**

- 1st and reverse shift rail **A** is provided with hole **B** (ø3 mm {0.12 in.}) for the removal of interlock pin **5**.

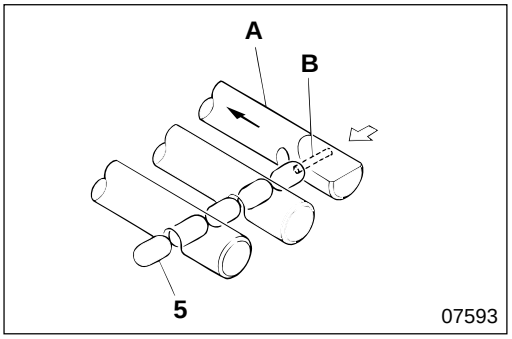

- When 1st and reverse shift rail **A** is shifted into reverse, hole **B** for removal of the interlock pin aligns with the interlock pin holes of the other shift rails, backup lamp switch **3** installation hole and screw plug **4** hole.
- Remove interlock pin **5** from back-up lamp switch **3** installation hole side using a wire.

GEAR SHIFTER UPPER

Gear Shifter Upper Assembly

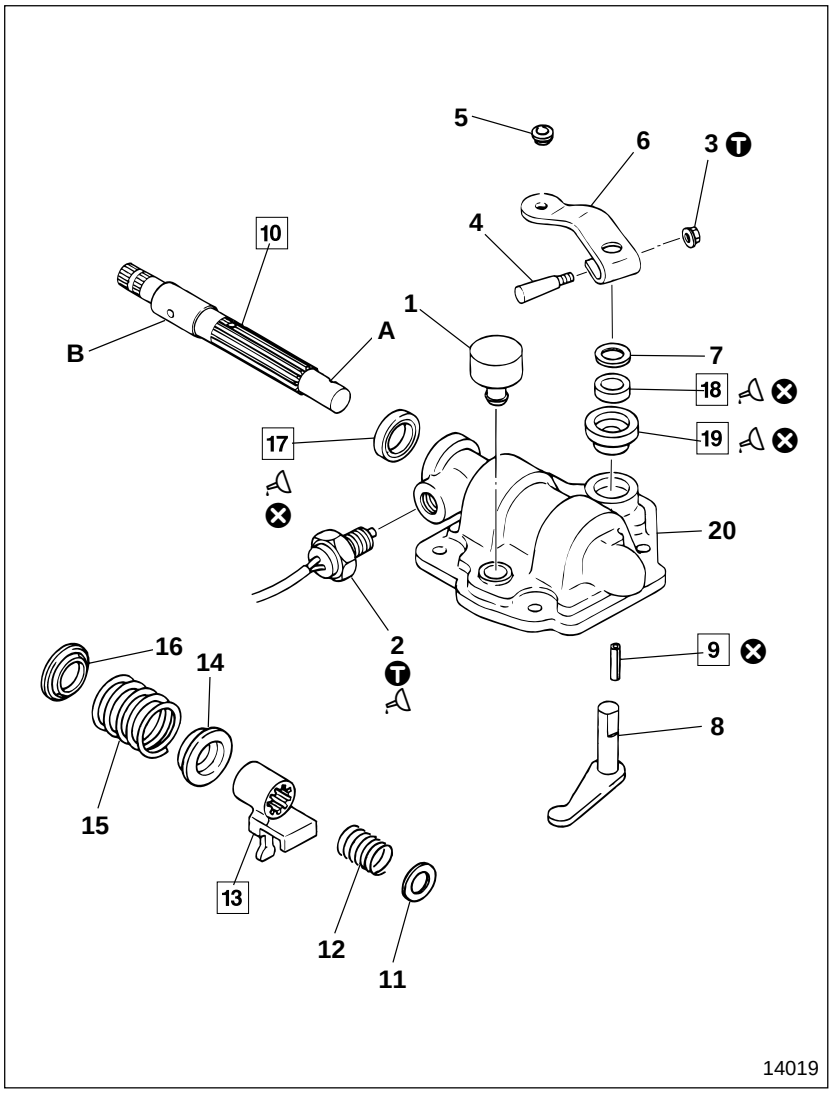

● **Disassembly sequence**

1 Air breather
2 Neutral switch Gr 54
3 Nut
4 Lock pin
5 Bushing
6 Gear selector lever
7 Washer
8 Gear selector lever
9 Spring pin
10 Torsion shaft
11 Spacer
12 4th and 5th return spring
13 Gear shift slide lever
14 Spring retainer
15 1st and reverse return spring
16 Spring retainer
17 Oil seal
18 Oil seal
19 Bushing
20 Selector lever case

A : Notch for spring pin
B : Recess for interlock switch
⊗ : Non-reusable parts

NOTE

Do not remove bushing 19 except for replacement.

● **Assembly sequence**

Follow the disassembly sequence in reverse.

CAUTION ⚠

Make sure that you turn gear selector lever 8 while assembling it to prevent damage to the lip area of oil seal 18.

Service standards

Unit : mm {in.}

Location	Maintenance item	Standard value	Limit	Remedy
12	4th and 5th return spring free length	39.25 {1.55}	37.25 {1.47}	Replace
15	1st and reverse return spring free length	39.9 {1.57}	37.9 {1.49}	Replace

Tightening torque

Unit : N·m {lbf.ft, kgf·m}

Location	Parts to be tightened	Tightening torque	Remarks
2	Neutral switch	49±2.9 {36±2.2, 5±0.3}	—
3	Nut (Lock pin mounting)	6.9 {5.1, 0.7}	—

Lubricant and sealant

Location	Points of application	Kinds	Quantity
2	Thread area of neutral switch	THREEBOND 1104J	As required
17	Lip area of oil seal	Wheel bearing grease [NLGI No.2 (Li soap)]	As required
18	Lip area of oil seal	Wheel bearing grease [NLGI No.2 (Li soap)]	As required
19	Inner surface of gear selector lever shaft bushing and its friction surface	Wheel bearing grease [NLGI No.2 (Li soap)]	As required
	Contact surfaces between bushing outer surface and selector lever case	THREEBOND 1104J	As required

Special tools

Unit : mm {in.}

Location	Tool name and shape	Part No.	Application
9	Spring pin puller 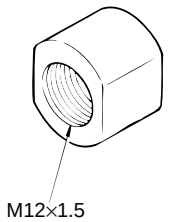 02399	MH062445	Removal of spring pin
	Reverse shaft puller 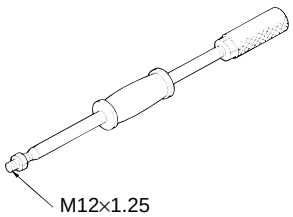 02118	03726-82000	

◆ Service procedure

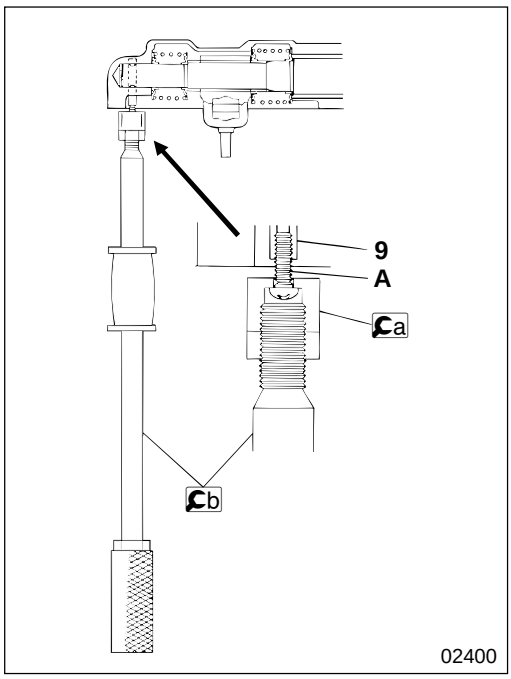

9 **Removal of spring pin**

- Tap spring pin **9** using an M4 tap.
- Attach a spring pin puller with an M4 screw **A** of appropriate length, and pull out spring pin **9** using b reverse shaft puller.

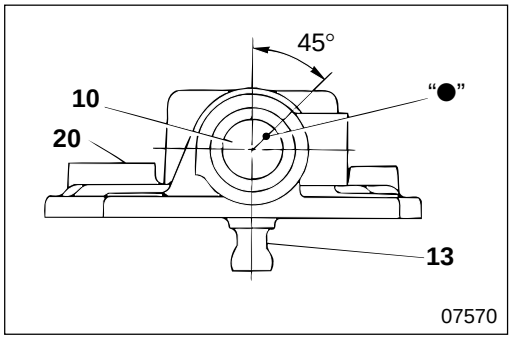

10 **13** **Installation of torsion shaft and gear shift slide lever**

When you install torsion shaft **10**, position punch mark "●" on the tip of the torsion shaft end and gear shift slide lever **13** as illustrated.

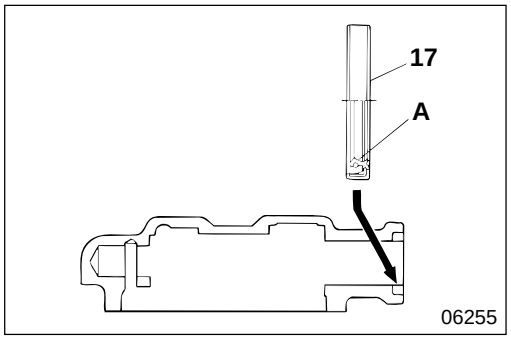

17 **Installation of oil seal**

Apply grease to lip area **A** of oil seal **17**, and press-fit evenly in the direction as illustrated.

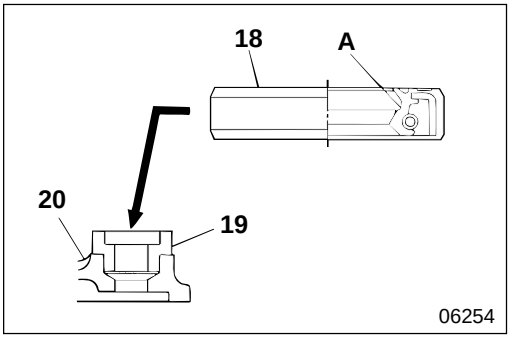

18 **Installation of oil seal**

Apply grease to lip area **A** of oil seal **18** with bushing **19** press-fitted onto selector lever case **20**, and press-fit evenly in the direction as illustrated.

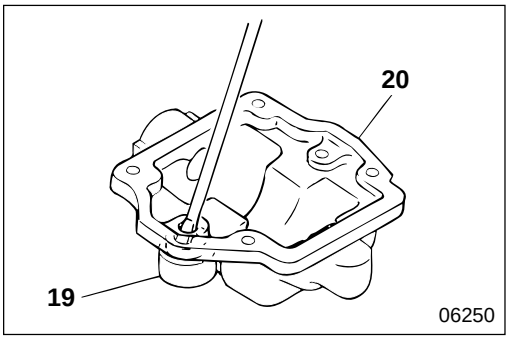

19 **Bushing**

[Removal]
Bushing **19** is press-fitted onto selector lever case **20**. For replacement, remove using a screwdriver.

CAUTION

Be careful not to damage selector lever case 20.

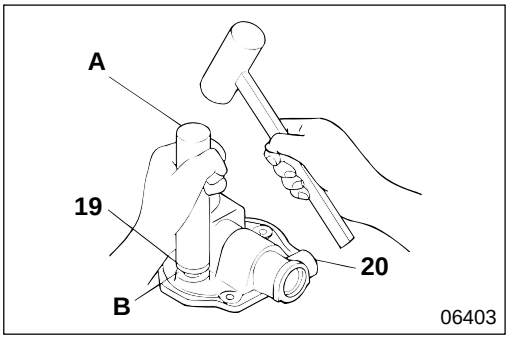

[Press-fitting]
Clean the inner surface of selector lever case **20**, and drive bushing **19** evenly into the case using bar **A** (approximately ø30 mm {1.18 in.}) taking care not to damage the case.
After press-fitting, apply sealant to bushing outer side **B**.

CAUTION

Make sure that you prevent sealant from sticking to the inner surface of bushing 19.

REAR COVER AND REVERSE IDLER GEAR

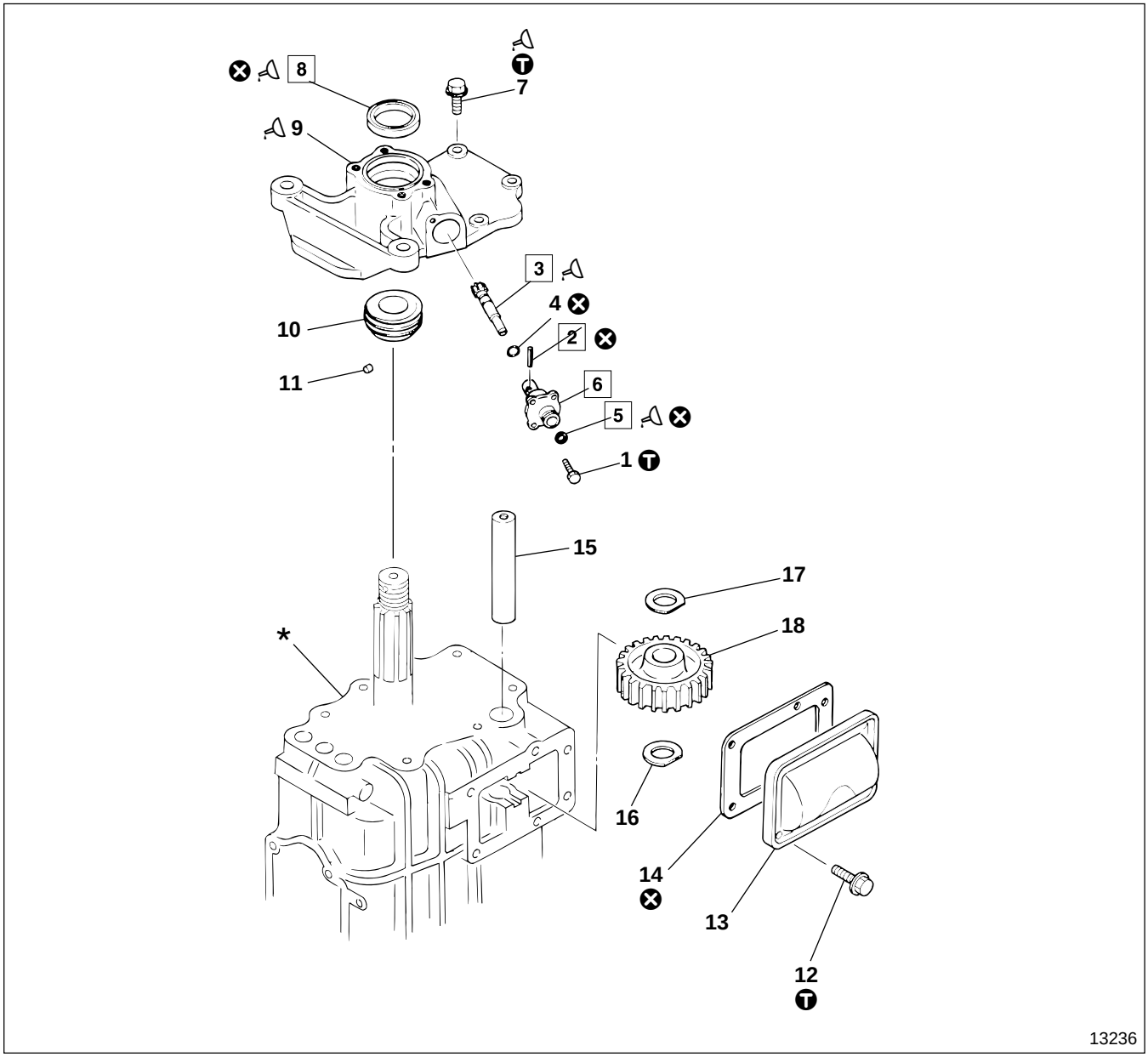

● **Disassembly sequence**

1	Bolt	**8**	Oil seal	**15**	Reverse idler gear shaft
2	Spring pin	**9**	Rear cover	**16**	Side washer
3	Speedometer gear	**10**	Speedometer worm	**17**	Side washer
4	O-ring	**11**	Pin	**18**	Reverse idler gear
5	Oil seal	**12**	Bolt		
6	Speedometer gear bushing	**13**	Reverse idler gear cover	*	: Transmission body
7	Bolt	**14**	Gasket	⊗	: Non-reusable parts

● **Assembly sequence**

*→18→17→16→15→14→13→12→11→10 →7 9→8 →1 6→5→4→3→2

Service standards

Unit : mm {in.}

Location	Maintenance item	Standard value (Basic diameter in [ ])	Limit	Remedy
3, 6	Clearance between speedometer gear and speedometer gear bushing	[12] 0.04 to 0.09 {[0.47] 0.016 to 0.0035}	0.15 {0.0059}	Replace
15, 18	Clearance between reverse idler gear shaft and reverse idler gear	[24] 0.05 to 0.08 {[0.94] 0.0020 to 0.0031}	0.20 {0.0079}	—
18	End play of reverse idler gear	0.26 to 0.64 {0.010 to 0.025}	0.9 {0.035}	Replace side washer

Tightening torque

Unit : N·m {lbf.ft, kgf·m}

Location	Parts to be tightened	Tightening torque	Remarks
1	Bolt (Speedometer gear bushing mounting)	24 {17, 2.4}	—
7	Bolt (Rear cover mounting)	44 {33, 4.5}	—
12	Bolt (Reverse idler gear cover mounting)	19 {14, 1.9}	—

Lubricant and sealant

Location	Points of application	Kinds	Quantity
3	Friction surfaces of speedometer gear and speedometer gear bushing	Molybdenum disulfide base grease	As required
5	Lip area of oil seal	Wheel bearing grease [NLGI No.2 (Li soap)]	As required
7	Thread area of bolt (only 3 upper bolts)	THREEBOND 1104J	As required
8	Lip area of oil seal	Wheel bearing grease [NLGI No.2 (Li soap)]	As required
9	Contact surfaces between rear cover and transmission case	THREEBOND 1215	As required

Special tools

Unit : mm {in.}

Location	Tool name and shape	Part No.	Application
8	Oil seal installer 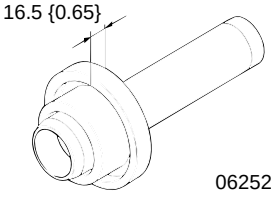	MH062691	Installation of rear cover oil seal
15	Reverse shaft puller 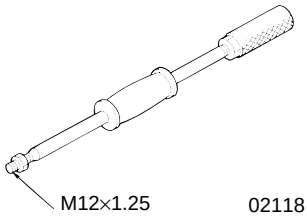	03726-82000	Removal of reverse idler gear shaft

◆ Service procedure

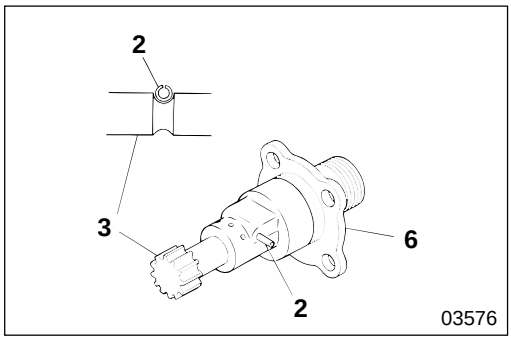

2 **Driving-in spring pin**

Drive spring pin **2** into speedometer gear bushing **6** with the opening in the opposite direction to speedometer gear **3**, as illustrated.

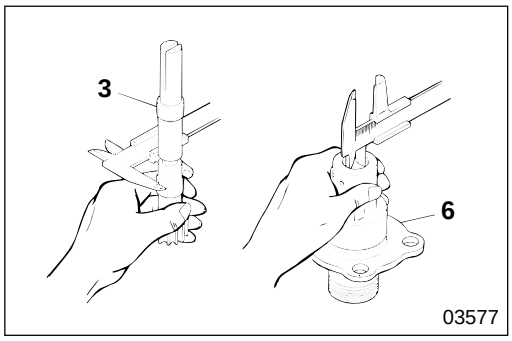

3 **6** **Clearance between speedometer gear and speedometer gear bushing**

If the clearance is higher than the limit, replace faulty parts.

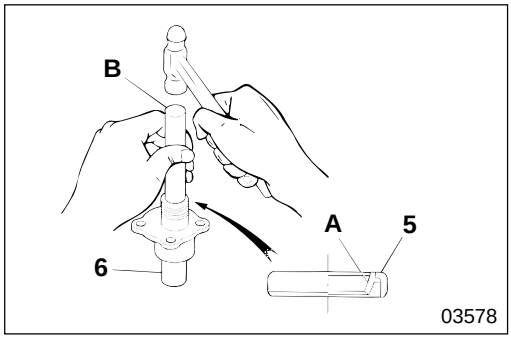

5 **Installation of oil seal**

Apply grease to lip area **A** of oil seal **5**, and drive oil seal evenly into speedometer gear bushing **6** in the direction as illustrated using bar **B** (approximately ø14 mm {0.55 in.}).

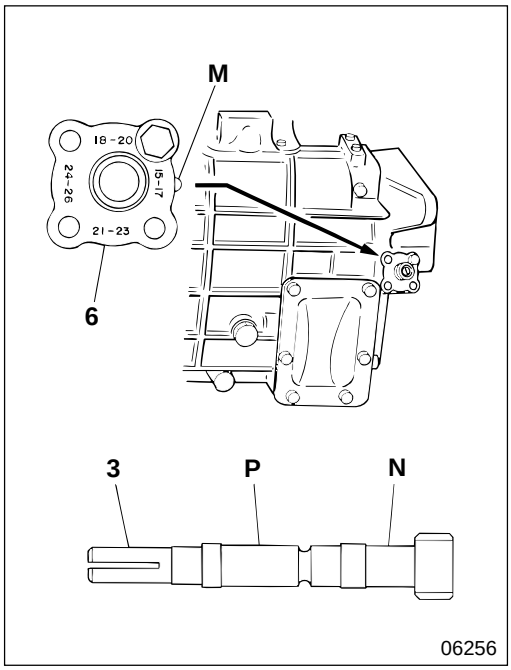

6 **Installation of speedometer gear bushing**

Due to its eccentric center arrangement, speedometer gear bushing **6** allows replacement of speedometer gear **3** with gears having a different number of teeth by changing only the installation direction, the worm gear does not have to be changed.
When installing the bushing, align stamped number, identical to the number of speedometer gear teeth, with alignment mark **M**.
The identification mark is stamped on points **N** or **P**. The following table shows the relationship between the identification marks and the number of speedometer gear teeth:

Identification mark	A	B	C	D	L	E	F	G	H	I	J	K
Number of teeth	15	16	17	18	19	20	21	22	23	24	25	26
Gear ratio	3.0	3.2	3.4	3.6	3.8	4.0	4.2	4.4	4.6	4.8	5.0	5.2

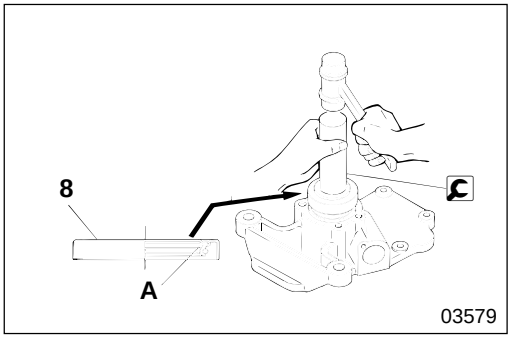

8 **Installation of oil seal**

Apply grease to lip area **A** of oil seal **8**, and press-fit it.

TRANSMISSION BODY

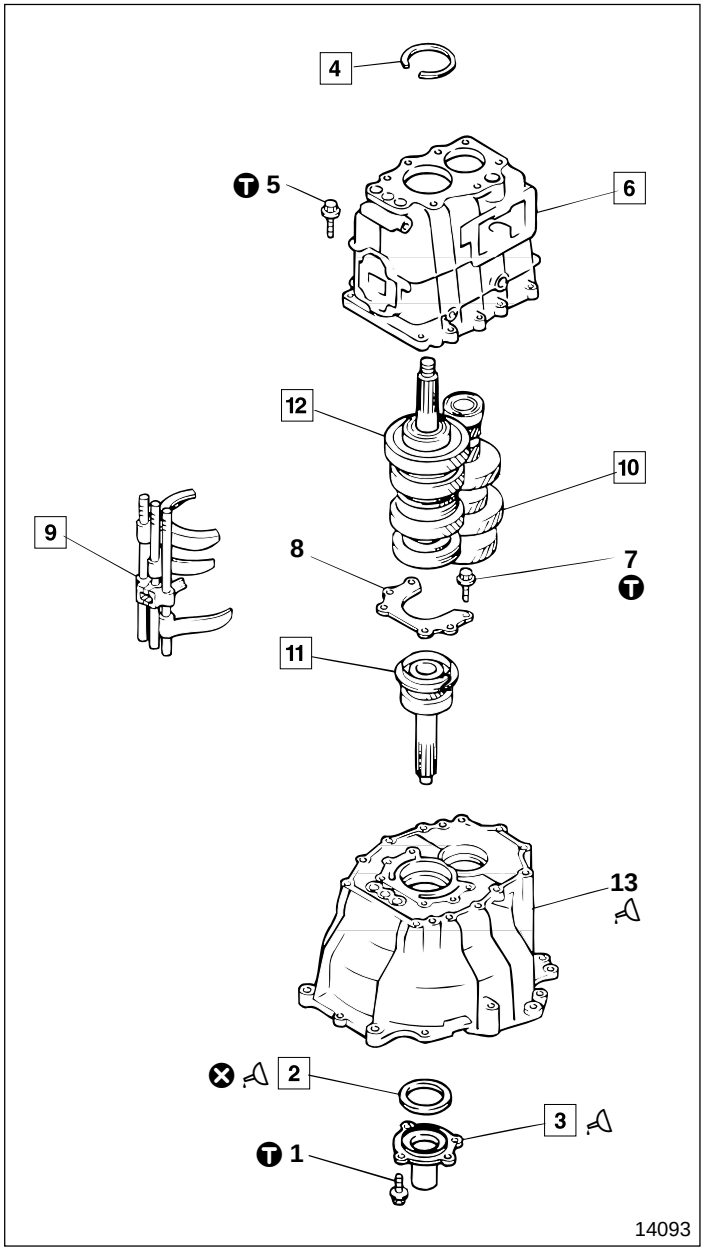

● **Disassembly sequence**

1 Bolt
2 Oil seal
3 Front bearing retainer
4 Snap ring
5 Bolt
6 Transmission case
7 Bolt
8 Bearing retainer
9 Shift rail and shift fork P22-26
10 Countershaft assembly P22-36
11 Drive pinion assembly P22-28
12 Mainshaft assembly P22-30
13 Clutch housing

⊗ : Non-reusable parts

NOTE

- **After removing parts 1 to 3, disassemble the transmission assembly with clutch housing 13 placed stably on a flat surface.**
- **Remove parts 9 to 12 as a group. Note that shift rail and shift fork 9 can be disassembled on their own when parts 9 to 12 are not disassembled. P22-26**

● **Assembly sequence**

13 → 8 → 7 → 6 → 5 → 4 → 3 → 2
12 → 11 → 10 → 9 → 1

Tightening torque

Unit : N·m {lbf.ft, kgf·m}

Location	Parts to be tightened	Tightening torque	Remarks
1	Bolt (Front bearing retainer mounting)	40 {30, 4.1}	—
5	Bolt (Transmission case mounting)	44 {33, 4.5}	—
7	Bolt (Bearing retainer mounting)	40 {30, 4.1}	—

Lubricant and sealant

Location	Points of application	Kinds	Quantity
2	Front bearing retainer oil seal lip area	Wheel bearing grease [NLGI No.2 (Li soap)]	As required
3	Contact surfaces between front bearing retainer and clutch housing assembly	THREEBOND 1215	As required
13	Contact surfaces between clutch housing assembly and transmission case	THREEBOND 1215	As required

Special tools

Unit : mm {in.}

Location	Tool name and shape	Part No.	Application
2	Oil seal installer 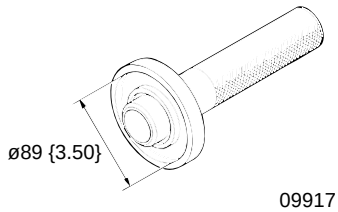 09917	MH062714	Installation of front bearing retainer oil seal
2, 3	Oil seal guide 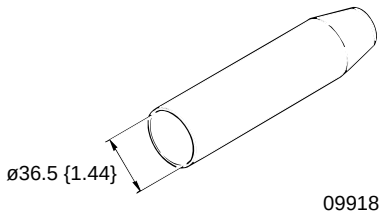 09918	MH063322	Protection of front bearing retainer oil seal
4	Snap ring expander 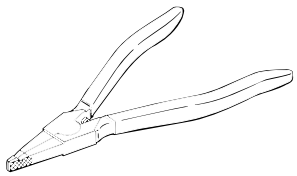 01137	MH061268	Removal and installation of snap ring
6	Eye bolt 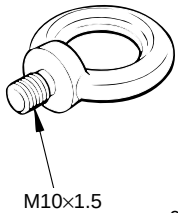 01140	MH062340	Lifting up transmission case

Unit : mm {in.}

Location	Tool name and shape	Part No.	Application
10	Set pin 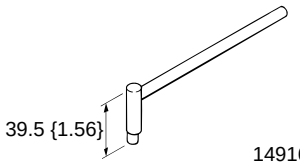	MH063385	Removal of countershaft assembly (for holding sub-gear)
10, 11, 12	Steel lifting band 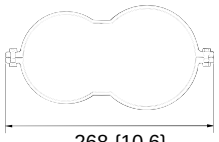	MH063311	Removal and installation of countershaft assembly, drive pinion assembly and mainshaft assembly
	Eye nut 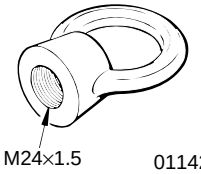	MH063308	
11, 12	Synchro guard 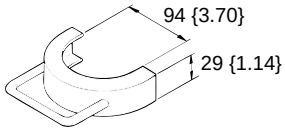	MH063318	Prevention of synchronizer sticking when driving-in mainshaft

◆ Service procedure

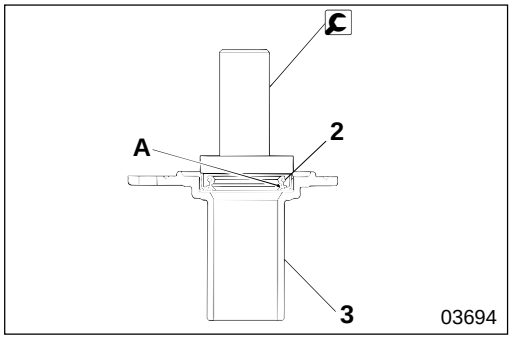

2 **Installation of oil seal**

Apply grease to lip area **A** of oil seal **2**, and press-fit into front bearing retainer **3**.

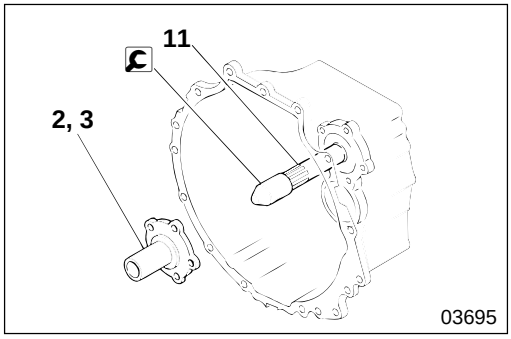

3 **Installation of front bearing retainer**

Install oil seal guide onto drive pinion **11** to protect oil seal **2** installed on front bearing retainer **3**. Then install the front bearing retainer.

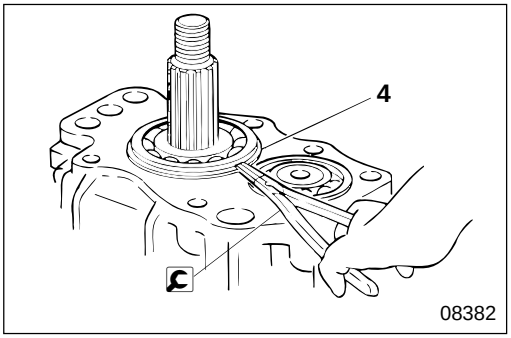

4 **Removal and installation of snap ring**

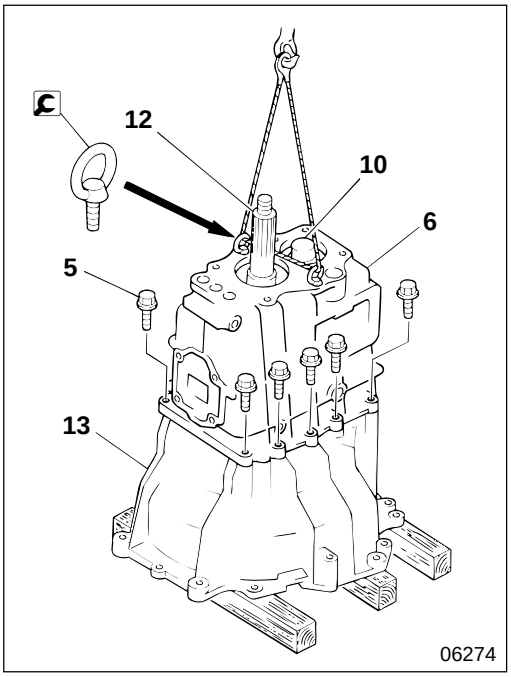

6 **Removal of transmission case**

- When lifting up with a crane, install 🔧 eye bolts on transmission case **6** and pass a steel sling through them.
- After removing bolt **5**, lift transmission case **6** up with a crane and keep hitting the rear ends of clutch housing **14**, mainshaft assembly **12** and countershaft assembly **10** to remove the transmission case.

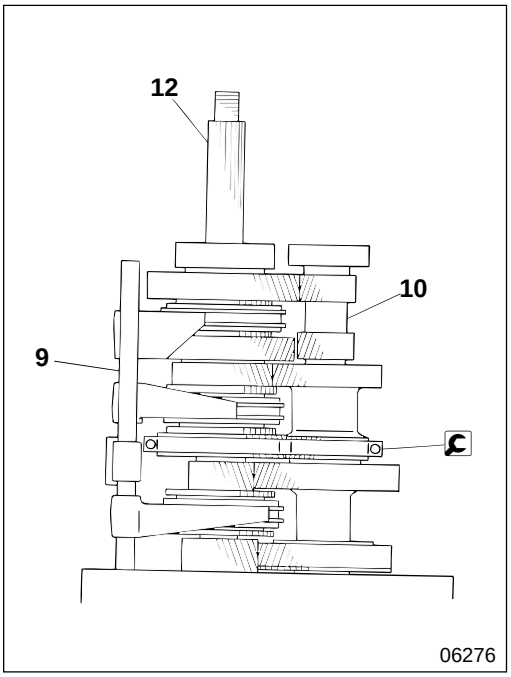

- After removing transmission case **6**, fit the 2nd gear using 🔧 steel lifting band to ensure safety.

CAUTION ⚠

Be sure to tighten 🔧 steel lifting band adequately enough to prevent it from coming undone, but not excessively, because excessive tightening would damage the gears, etc.

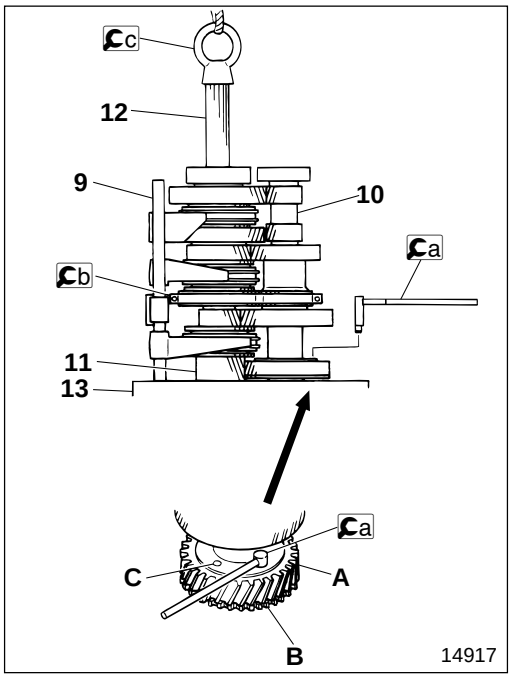

9 to 12 Removal and installation of shift rail and shift fork, countershaft assembly, drive pinion assembly and mainshaft assembly

[Removal]

- When removing or installing shift rail and shift fork **9**, countershaft assembly **10**, drive pinion assembly **11** and mainshaft assembly **12**, handle them as a group.
- Insert a set pin into alignment hole **C** of countershaft constant mesh gear **A** to hold sub-gear **B**.
- After removing the case, install c eye bolt on mainshaft assembly **12** with b steel lifting band fitted so that the whole assembly can be lifted up.
- Fix shift rail and shift fork **9** to mainshaft assembly **12** using rubber bands.
- Attach wooden blocks to clutch housing **13**. Then lift the whole assembly (with drive pinion assembly **11**) up with a crane to remove them. During hoisting, hit the assembly using a mallet.

CAUTION

- **Be sure to tighten b steel lifting band adequately enough to prevent it from coming undone, but not excessively, because excessive tightening would damage the gears, etc.**
- **Be sure that you support mainshaft assembly 12, etc. with your hand when lifting them because if the mainshaft assembly and countershaft assembly 10 become detached, drive pinion assembly 11 would fall.**

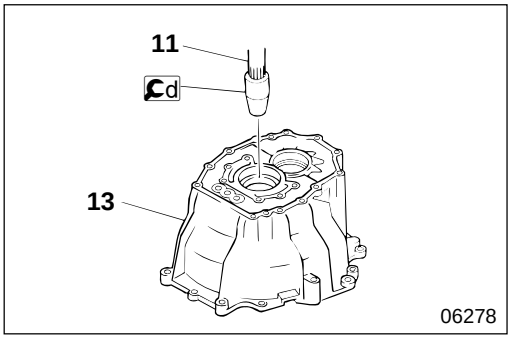

[Installation]

- Follow the removal sequence in reverse.
- Before installing parts, install d oil seal guide onto drive pinion **11** to prevent damage to oil seal **2** of front bearing retainer **3**.

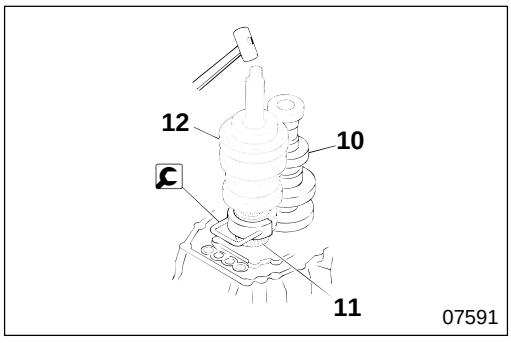

- To drive-in drive pinion **11**, mainshaft assembly **12** and countershaft assembly **10**, attach synchro guard which prevents the drive pinion and the mainshaft synchronizer sticking during installation.

NOTE

Remember to remove all special tools after use.

M E M O

Shift Rail and Shift Fork

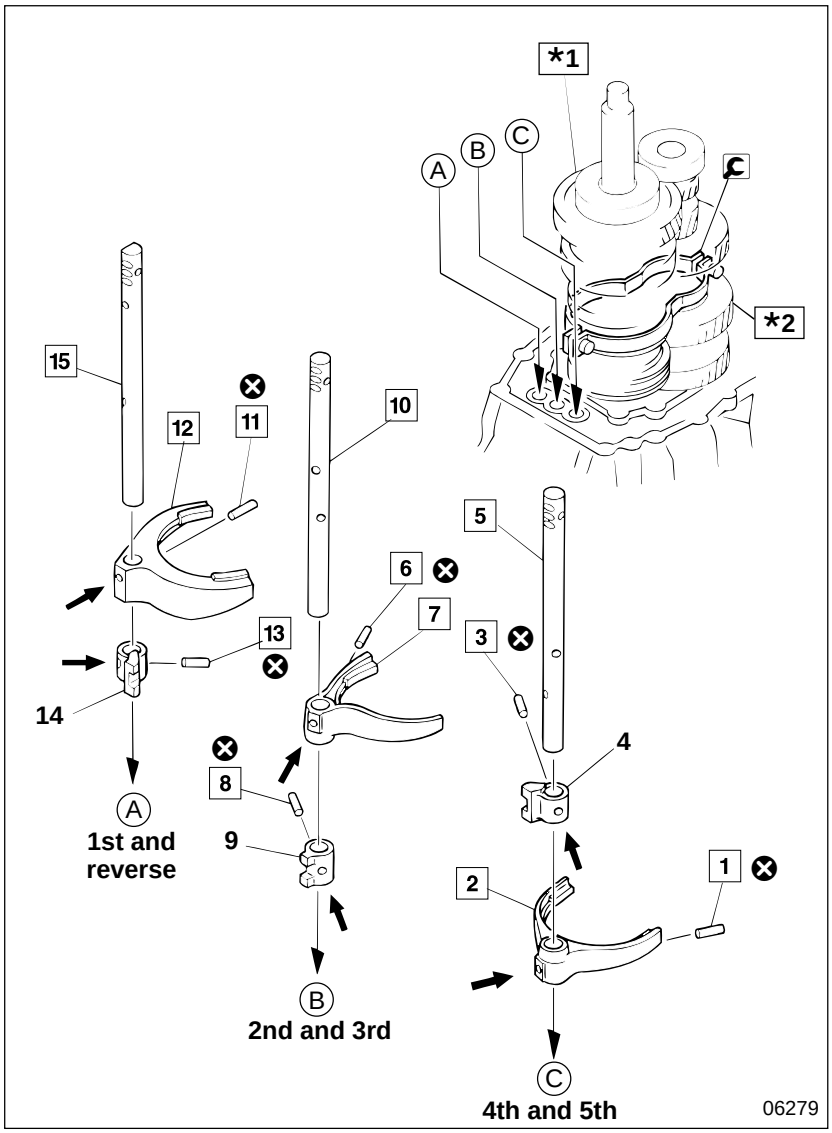

The arrows indicate spring pin withdrawal and driving-in directions.

● **Disassembly sequence**

(For disassembling shift rail and shift fork only)

1 Spring pin
2 4th and 5th shift fork
3 Spring pin
4 4th and 5th shift rail jaw
5 4th and 5th shift rail
6 Spring pin
7 2nd and 3rd shift fork
8 Spring pin
9 2nd and 3rd shift rail jaw
10 2nd and 3rd shift rail
11 Spring pin
12 1st and reverse shift fork
13 Spring pin
14 1st and reverse shift rail jaw
15 1st and reverse shift rail

*1 : Mainshaft assembly
*2 : Countershaft assembly
⊗ : Non-reusable parts

● **Assembly sequence**

Follow the disassembly sequence in reverse.

Service standards

Unit : mm {in.}

Location	Maintenance item	Standard value	Limit	Remedy
2, 7, 12	Shift fork claw tilt	0.1 {0.0039} or less	0.2 {0.0079}	Replace
2, 7, 12, *1	Clearance between shift fork and synchronizer sleeve	0.3 to 0.6 {0.012 to 0.024}	1.0 {0.039}	Replace
5, 10, 15	Deflection of shift rail	0.04 {0.0016} or less	0.05 {0.0020}	Correct or replace

◆ Service procedure

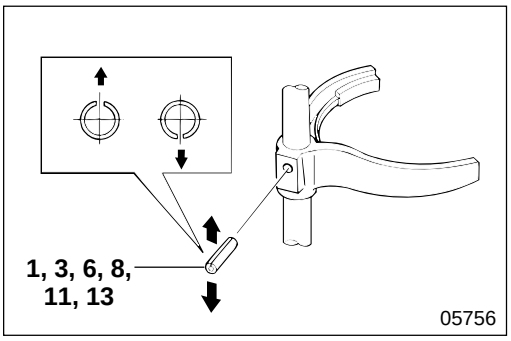

1 **3** **6** **8** **11** **13** **Driving-in spring pin**

For installation of spring pins **1**, **3**, **6**, **8**, **11**, **13**, position the openings in the direction of the shift rail axes.

CAUTION⚠

- **Be careful when driving in spring pins 1, 3, 6, 8, 11, 13, that you do not subject shift rails 5, 10, 15 to excessive strain, because this would cause faults such as bent shift rails.**
- **Make sure you do not drive in spring pins 1, 3, 6, 8, 11, 13 fully, leave 0 to 0.5 mm {0 to 0.020 in.} outside to prevent them from slipping out.**

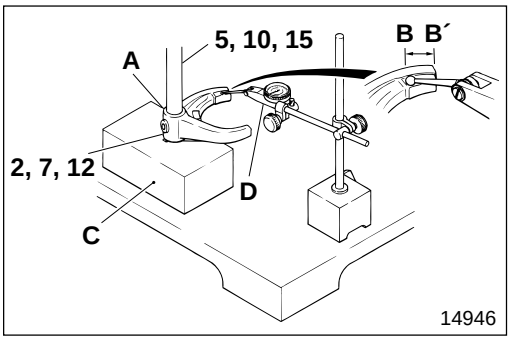

2 **7** **12** **Tilt of shift fork claw**

- Measure the tilt (difference between **B** and **B´**) of claw **B-B´** against hole **A** of shift rails **5**, **10**, **15** of shift forks **2**, **7**, **12** with the shift rails upright.
- If the tilt is higher than the limit, replace shift forks **2**, **7**, or **12**.

C : V-block
D : Dial gauge

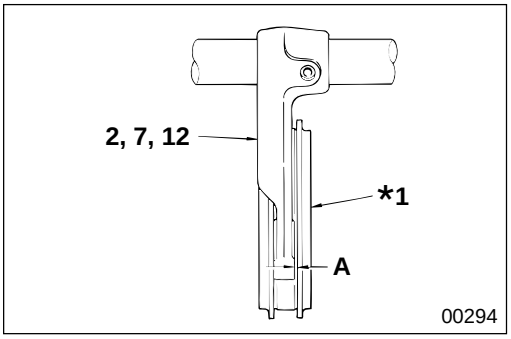

2 **7** **12** ***1** **Clearance between gear shift fork and mainshaft synchronizer sleeve**

If the measured value for clearance **A** is higher than the limit, replace faulty parts.

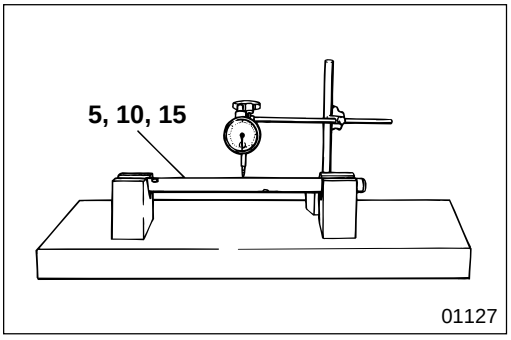

5 **10** **15** **Deflection of shift rail**

If the measured value is higher than the limit, correct or replace shift rails **5**, **10**, **15**.

NOTE

To measure the deflection of shift rails 5, 10, 15, turn them one full revolution and read the dial gauge indicator. The deflection is one half of the indicated value.

DRIVE PINION ASSEMBLY

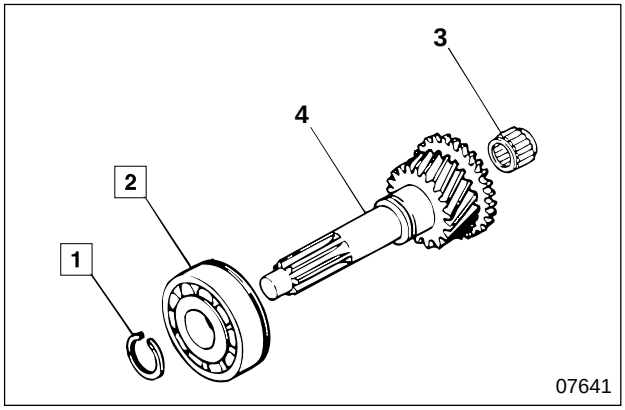

● **Disassembly sequence**

1 Snap ring
2 Drive pinion bearing
3 Pilot bearing
4 Drive pinion

● **Assembly sequence**

Follow the disassembly sequence in reverse.

Special tools

Unit : mm {in.}

Location	Tool name and shape	Part No.	Application
1	Snap ring expander 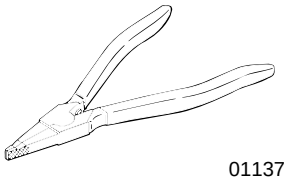 01137	MH061268	Removal and installation of snap ring
2	Bearing puller and installer 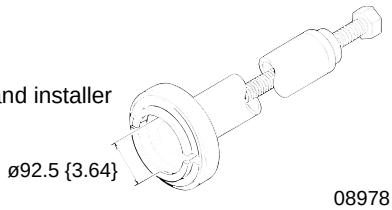 08978	MH062697	Removal and installation of drive pinion bearing

◆ Service procedure

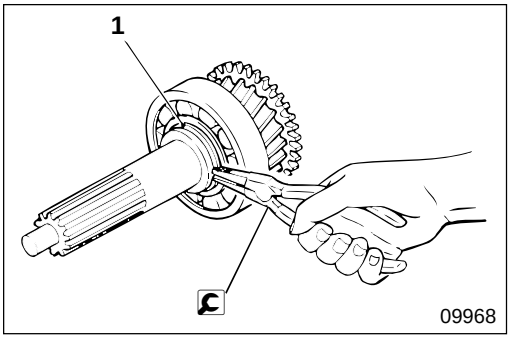

1 **Removal and installation of snap ring**

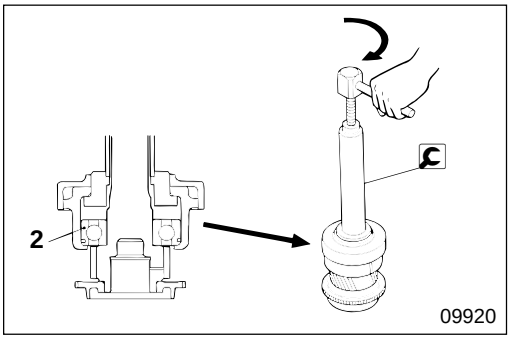

2 **Drive pinion bearing**

[Removal]

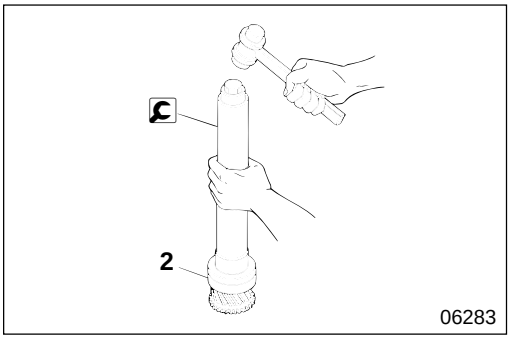

[Installation]
Press-fit drive pinion bearing **2** with its snap ring groove facing the gear side.

MAINSHAFT ASSEMBLY

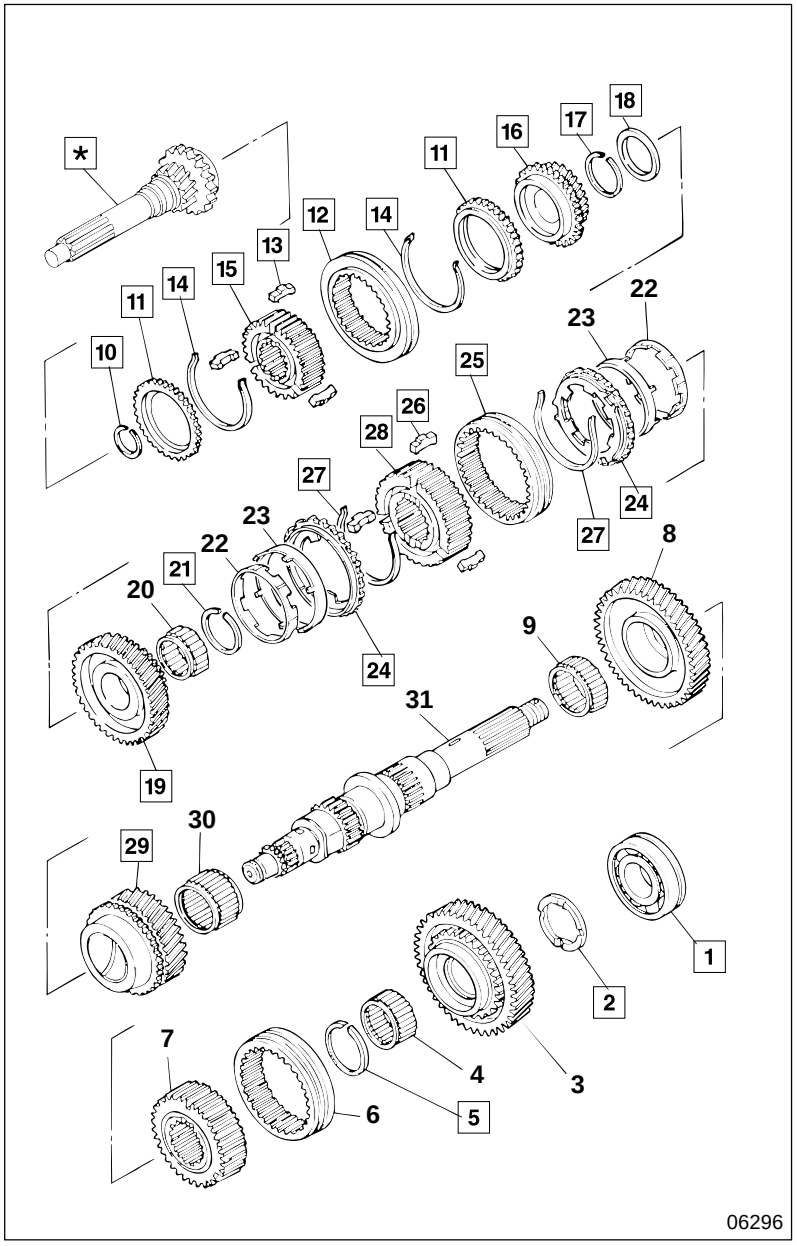

● **Work before disassembly**

P22-32

● **Disassembly sequence**

1 Bearing
2 1st gear thrust washer
3 1st gear assembly
4 Needle bearing
5 Snap ring
6 Synchronizer sleeve
7 Synchronizer hub
8 Reverse gear assembly
9 Needle bearing
10 Snap ring
11 Synchronizer ring
12 Synchronizer sleeve
13 Shifting key
14 Shifting key spring
15 Synchronizer hub
16 5th gear assembly
17 Snap ring
18 2nd gear thrust washer
19 2nd gear assembly
20 Needle bearing
21 Snap ring
22 Synchronizer inner ring
23 Synchronizer center cone
24 Synchronizer outer ring
25 Synchronizer sleeve
26 Shifting key
27 Shifting key spring
28 Synchronizer hub
29 3rd gear assembly
30 Needle bearing
31 Mainshaft

***** : Drive pinion

● **Assembly sequence**

31→30→29 ┐
28→25→26→27→24→23→22 ┘→21→20→19→18→17→16 ┐
15→12→13→14→11 ┘→10→9→8→7→6→5→4→3→2→1

Service standards

Unit : mm {in.}

Location	Maintenance item	Standard value	Limit	Remedy
3	End play of 1st gear assembly	0.15 to 0.46 {0.0059 to 0.018}	0.70 {0.028}	Replace
3, 4, 31	Play in the diameter direction after assembling 1st gear assembly	0.02 to 0.06 {0.00079 to 0.0024}	0.12 {0.0047}	Replace
8	End play of reverse gear assembly	0.15 to 0.46 {0.0059 to 0.018}	0.70 {0.028}	Replace
8, 9, 31	Play in the diameter direction after assembling reverse gear assembly	0.04 to 0.08 {0.0016 to 0.0031}	0.12 {0.0047}	Replace
11, 13	Clearance between synchronizer ring keyway and shifting key	3.5 to 3.7 {0.14 to 0.15}	4.50 {0.18}	Replace
11, 16	Clearance between synchronizer ring and 5th gear assembly	1.13 to 1.37 {0.044 to 0.054}	0.20 {0.0079}	Replace
11, *	Clearance between synchronizer ring and drive pinion	1.13 to 1.37 {0.044 to 0.054}	0.20 {0.0079}	Replace
13, 15	Clearance between shifting key and synchronizer hub keyway	0.05 to 0.20 {0.0020 to 0.0079}	0.50 {0.020}	Replace
16	End play of 5th gear assembly	0.20 to 0.56 {0.0079 to 0.022}	0.80 {0.031}	Replace
16, 31	Play in the diameter direction after assembling 5th gear assembly	0.05 to 0.09 {0.0020 to 0.0035}	0.20 {0.0079}	Replace
19	End play of 2nd gear assembly	0.15 to 0.61 {0.0059 to 0.024}	0.80 {0.031}	Replace
19, 20, 31	Play in the diameter direction after assembling 2nd gear assembly	0.02 to 0.05 {0.00079 to 0.0020}	0.12 {0.0047}	Replace
19, 24	Clearance between 2nd gear assembly and synchronizer outer ring	1.23 to 1.47 {0.048 to 0.058}	0.95 {0.037}	Replace
24, 26	Clearance between synchronizer outer ring keyway and shifting key	4.7 to 5.0 {0.19 to 0.20}	5.70 {0.22}	Replace
24, 29	Clearance between synchronizer outer ring and 3rd gear assembly	1.23 to 1.47 {0.48 to 0.058}	0.95 {0.037}	Replace
26, 28	Clearance between shifting key and synchronizer hub keyway	0.05 to 0.20 {0.0020 to 0.0079}	0.50 {0.020}	Replace
29	End play of 3rd gear assembly	0.15 to 0.46 {0.0059 to 0.018}	0.70 {0.028}	Replace
29, 30, 31	Play in the diameter direction after assembling 3rd gear assembly	0.02 to 0.06 {0.00079 to 0.0024}	0.12 {0.0047}	Replace

MAINSHAFT ASSEMBLY

Special tools

Unit : mm {in.}

Location	Tool name and shape	Part No.	Application
1	Bearing puller and installer 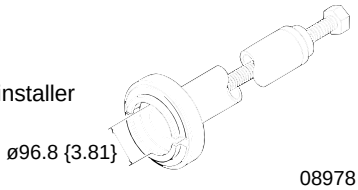 08978	MH062697	Removal and installation of mainshaft rear bearing
5, 10, 17, 21	Snap ring expander 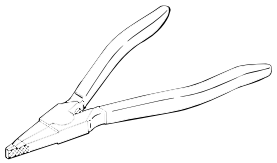 01137	MH061268	Removal and installation of snap ring

◆ Service procedure

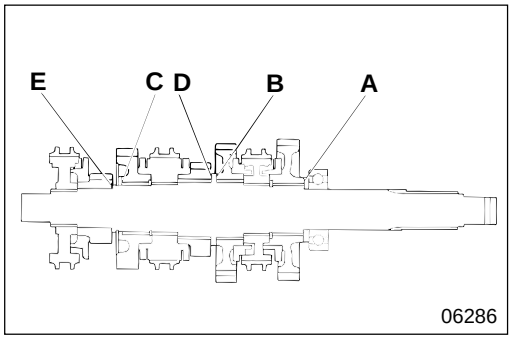

06286

● Work before disassembly

[Inspection]

(1) End play of gears

A : 1st gear
B : Reverse gear
C : 2nd gear
D : 3rd gear
E : 5th gear

If the measured value is higher than the limit, replace faulty parts.

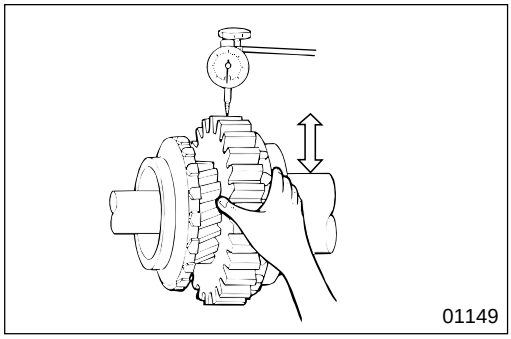
01149

(2) Play of gears in the diameter direction

If the measured value is higher than the limit, replace faulty parts.

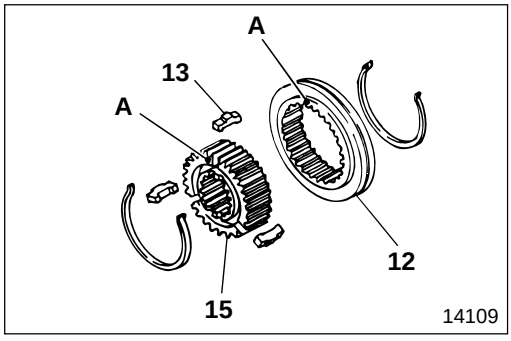

14109

[Alignment marks]

(1) Single cone synchromesh

Before disassembling synchronizer sleeve **12** and synchronizer hub **15**, put alignment marks **A** on the places where shifting keys **13** are installed. When reusing parts, align the alignment marks to assemble.

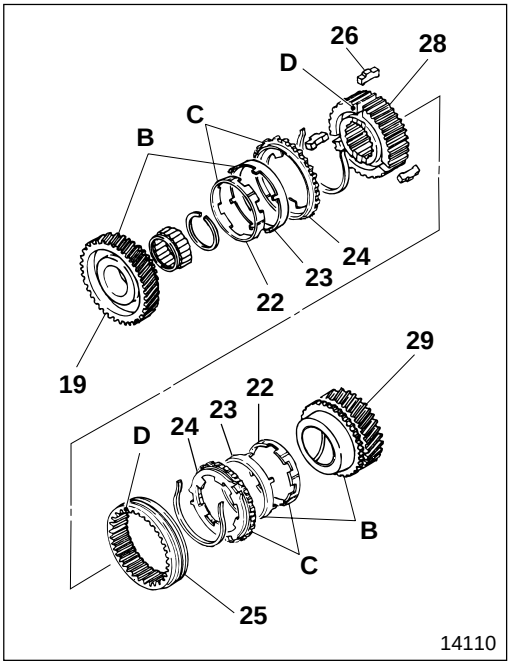

(2) Double cone synchromesh

- Before disassembling synchronizer center cone **23**, 2nd gear assembly **19**, and 3rd gear assembly **29**, put alignment marks **B** on them. Similarly, put alignment marks **C** on synchronizer inner ring **22**, and synchronizer outer ring **24**. When reusing parts, align the alignment marks to assemble.
- Before disassembling synchronizer sleeve **25** and synchronizer hub **28**, put alignment marks **D** on the places where shifting keys **26** are installed. When reusing parts, align the alignment marks to assemble.

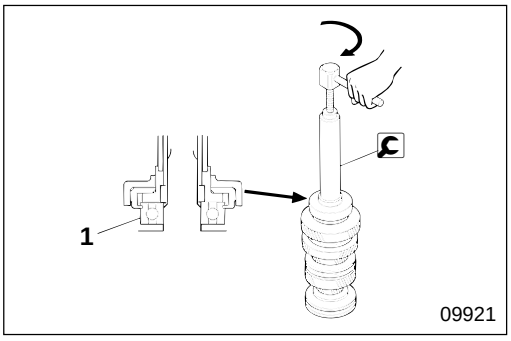

1 Bearing

[Removal]

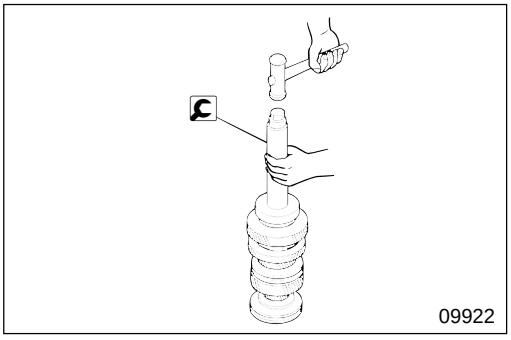

[Installation]
Press-fit bearing **1** with its snap ring groove facing the rear.

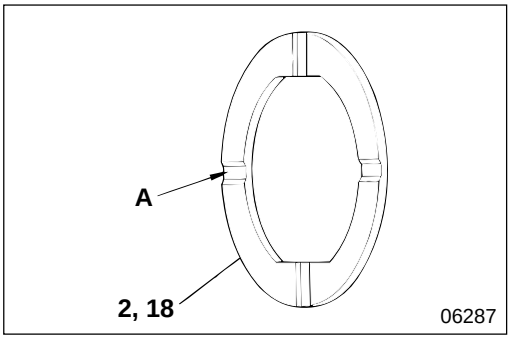

2 18 Installation of thrust washer

Install thrust washer with oil groove **A** facing gear side.

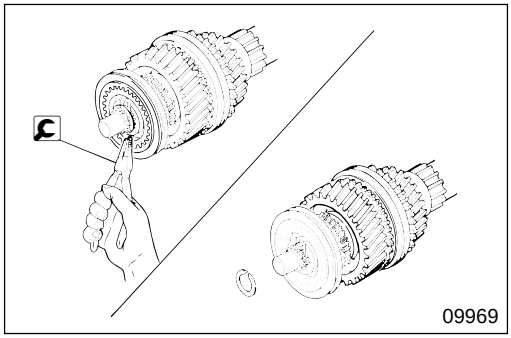

5 10 17 21 Removal and installation of snap ring

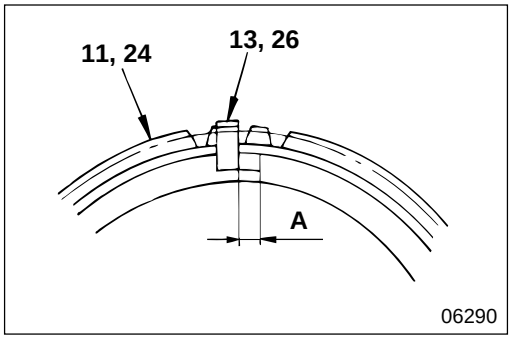

11 13 24 26 Clearance between synchronizer ring or synchronizer outer ring and shifting key

If the measured value for clearance **A** is higher than the limit, replace faulty parts.

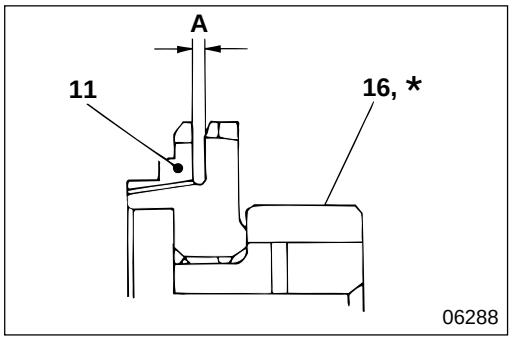

11 16 * Clearance between synchronizer ring and gear assemblies

- Press in synchronizer ring **11** evenly, and measure all circumferences.
- If the measured value for clearance **A** is lower than the limit, replace faulty parts.

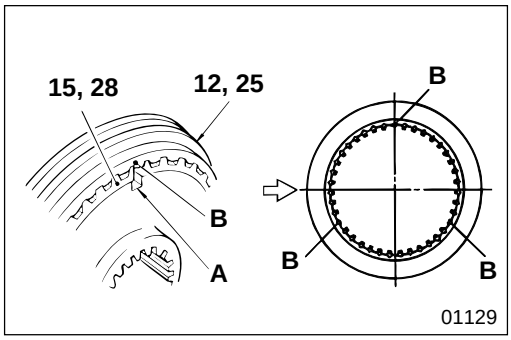

12 25 Installation of synchronizer sleeve

- To install synchronizer sleeves **12**, **25**, align three keyways **A** of synchronizer hubs **15**, **28** with the three stub teeth **B** of synchronizer sleeves.
- Before assembling synchronizer hubs **15**, **28** and synchronizer sleeves **12**, **25**, align the alignment marks (made before disassembly).

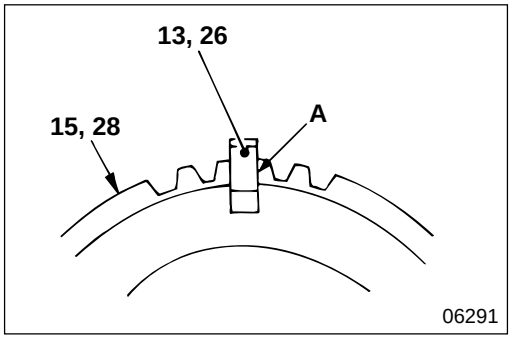

13 15 26 28 Clearance between shifting key and synchronizer hub

If the measured value for clearance **A** is higher than the limit, replace faulty parts.

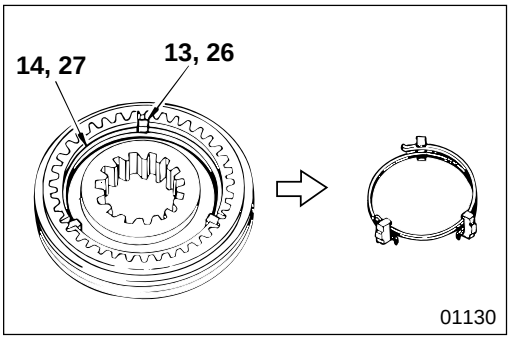

14 **27** **Installation of shifting key spring**

- Place shifting keys **13**, **26** into keyways of synchronizer hubs **15**, **28**, and install shifting key springs **14**, **27** taking care to locate the openings away from the shifting key positions.
- Two openings of shifting key springs **14**, **27** should not align with each other.

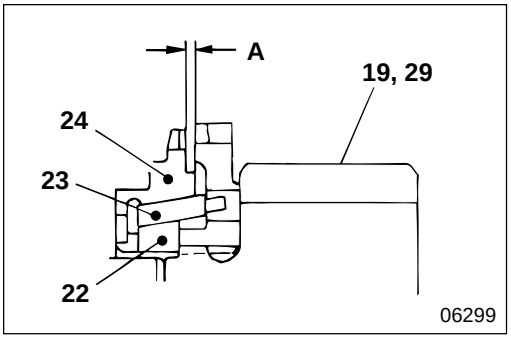

19 **24** **29** **Clearance between 2nd, 3rd gear assembly and synchronizer outer ring**

- Press in synchronizer inner ring **22**, synchronizer center cone **23** and synchronizer outer ring **24** evenly, and measure all circumferences.
- If the measured value for clearance **A** is lower than the limit, replace faulty parts.

COUNTERSHAFT ASSEMBLY <NON-BACKLASH MECHANISM>

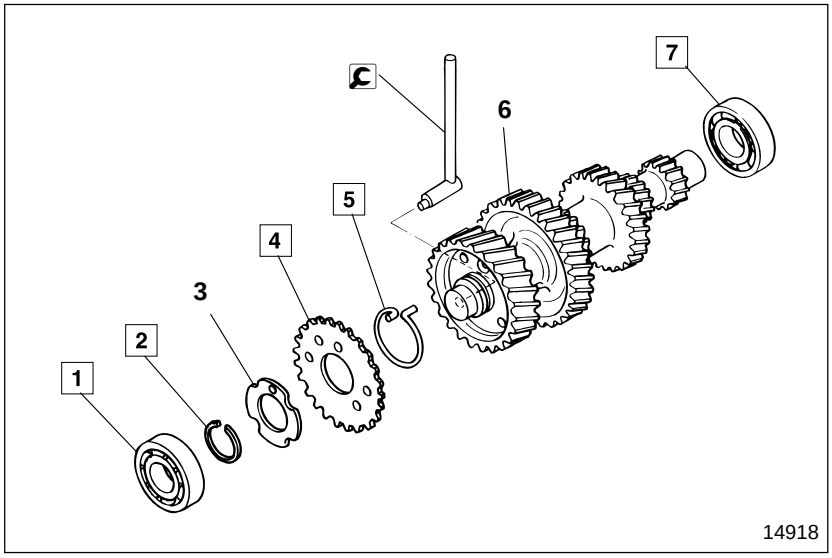

● **Disassembly sequence**

1 Countershaft front bearing
2 Snap ring
3 Sub-gear plate
4 Sub-gear
5 Sub-gear spring
6 Countershaft assembly
7 Countershaft rear bearing

WARNING ⚠

You must remove set pin that was installed before disassembling countershaft assembly 6. When removing the set pin, you must be very careful not to let sub-gear spring 5 rotate sub-gear 4, or you might hurt your hand.

● **Assembly sequence**

Follow the disassembly sequence in reverse.

Special tools

Unit : mm {in.}

Location	Tool name and shape	Part No.	Application
1	Bearing puller and installer 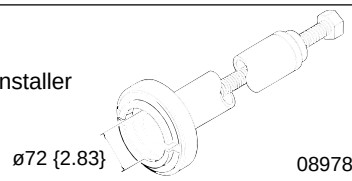	MH062697	Removal and installation of countershaft front bearing
2	Snap ring expander 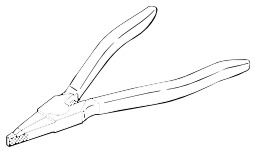	MH061268	Removal and installation of countershaft front bearing snap ring and sub-gear snap ring
4	Set pin 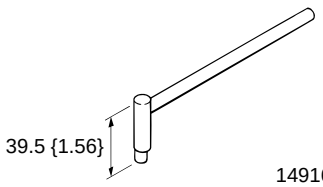	MH063385	Securing of sub-gear
	Jig assembly 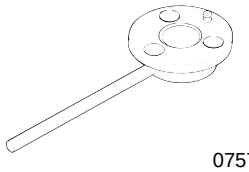	MH063313	Installation of sub-gear
7	Bearing puller and installer 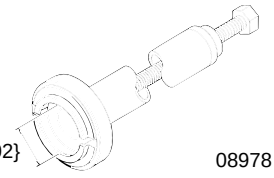	MH062697	Removal and installation of countershaft rear bearing

◆ Service procedure

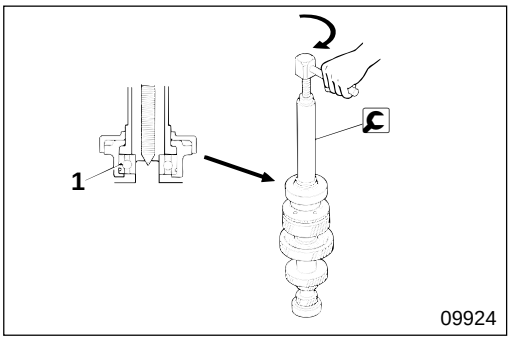

1 **Countershaft front bearing**

[Removal]

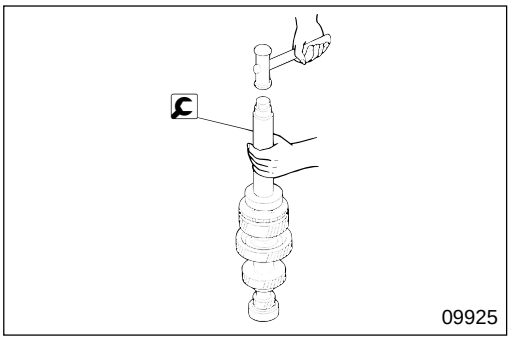

[Installation]
Press-fit countershaft front bearing **1** with its snap ring groove facing the gear side.

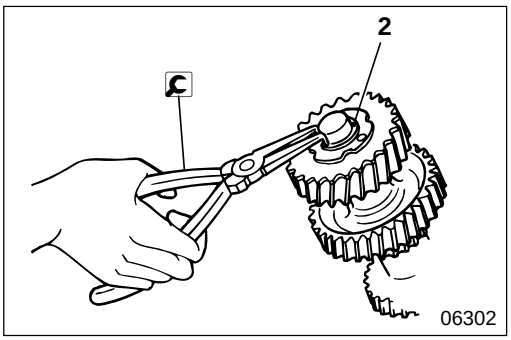

2 **Removal and installation of snap ring**

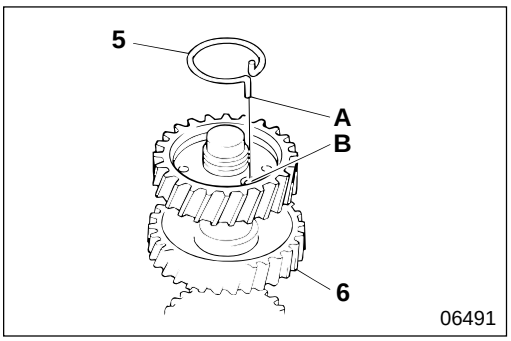

4 **5** **Sub-gear, sub-gear spring**

● **Installation of sub-gear spring**

Install sub-gear spring **5**, inserting longer bent end **A** of the sub-gear spring into constant mesh gear spring installation hole **B** of countershaft assembly **6**. Press the spring in until its rim is wholly fitted into the gear.

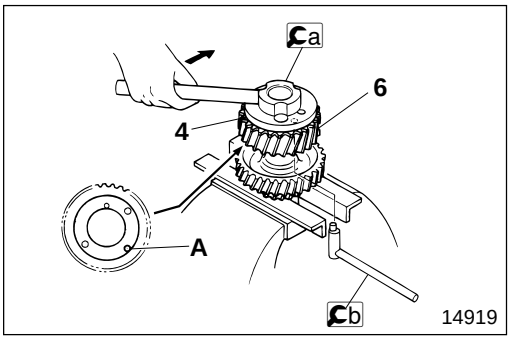

● **Positioning of sub-gear**

Turn sub-gear **4** to the right using a jig assembly, and insert b set pin into alignment hole **A**, in the direction as illustrated to secure the sub-gear, with all parts assembled except for snap ring **2** and countershaft front bearing **1**.
Turn the set pin so that the sub-gear and the constant mesh gear teeth are positioned identically.

COUNTERSHAFT ASSEMBLY <NON-BACKLASH MECHANISM>

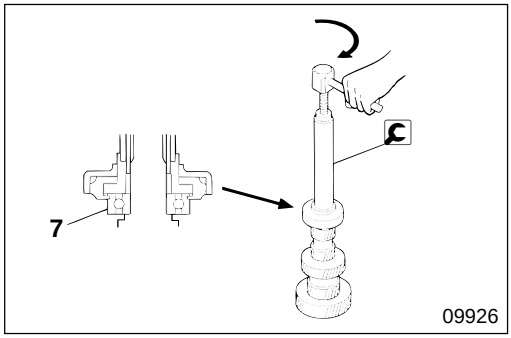

7 **Countershaft rear bearing**

[Removal]

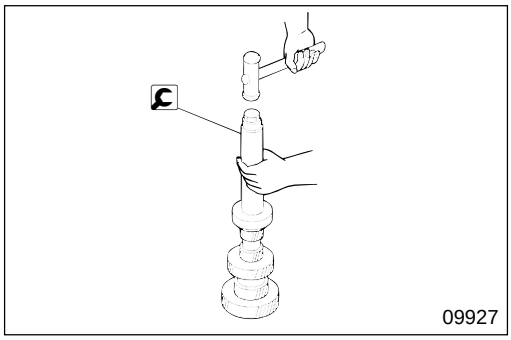

[Installation]
Press-fit countershaft rear bearing **7** with its snap ring groove facing the rear.

M E M O

TRANSMISSION CONTROL

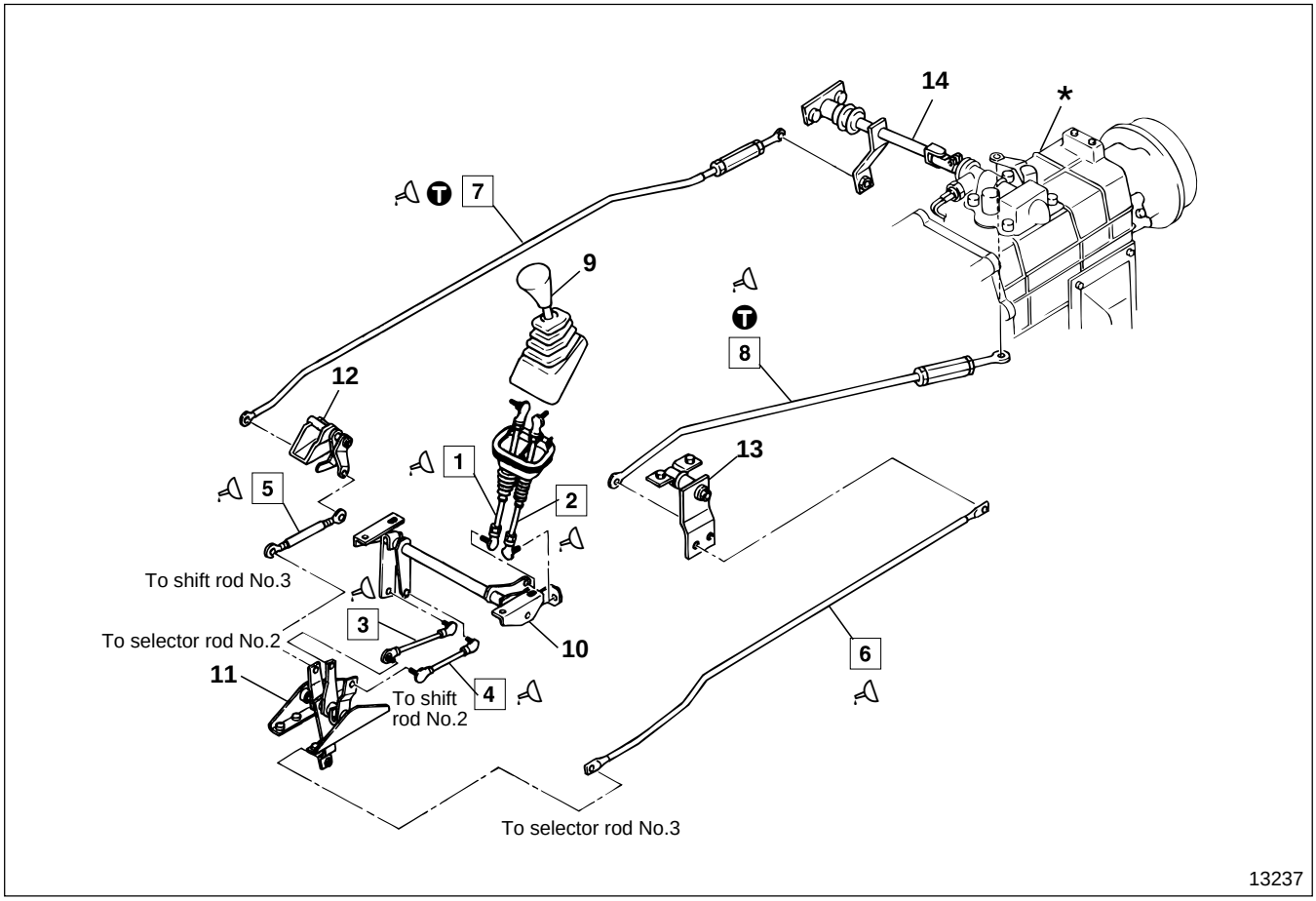

● **Removal sequence**

1 Shift rod No.1
2 Selector rod No.1
3 Shift rod No.2
4 Selector rod No.2
5 Shift rod No.3
6 Selector rod No.3
7 Shift rod No.4
8 Selector rod No.4
9 Change lever assembly 🕮 P22-42
10 Lever assembly 🕮 P22-44
11 No.1 cross lever assembly 🕮 P22-46
12 Shift lever assembly 🕮 P22-48
13 Selector lever assembly 🕮 P22-49
14 Cross shaft assembly 🕮 P22-50

***** : Transmission assembly

● **Installation sequence**

Follow the removal sequence in reverse.

Tightening torque

Unit : N·m {lbf.ft, kgf·m}

Location	Parts to be tightened	Tightening torque	Remarks
—	Nut (Ball joint mounting)	17 to 22 {12 to 16, 1.7 to 2.2}	—
—	Nut (Ball joint securing)	16 to 24 {12 to 17, 1.6 to 2.4}	—
7, 8	Knuckle (Turn buckle securing)	19 to 27 {14 to 20, 1.9 to 2.8}	—

Lubricant

Location	Points of application	Kinds	Quantity
1 to 8	Rod installation points	Chassis grease [NLGI No.1 (Ca soap)]	As required

◆ Service procedure

1 to **8** **Installation of rod**

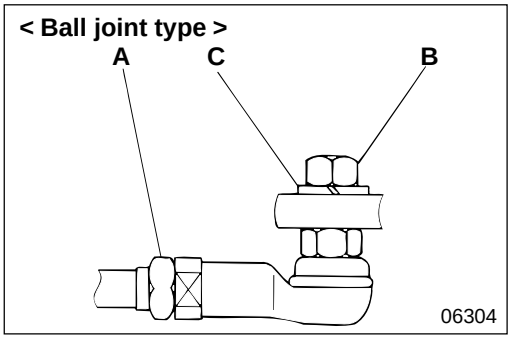

- Tighten nuts **A**, **B** at specified torque.
  A : T 16 to 24 N·m {12 to 17 lbf. ft, 1.6 to 2.4 kgf·m}
  B : T 17 to 22 N·m {12 to 16 lbf. ft, 1.7 to 2.2 kgf·m}
  C : Spring washer

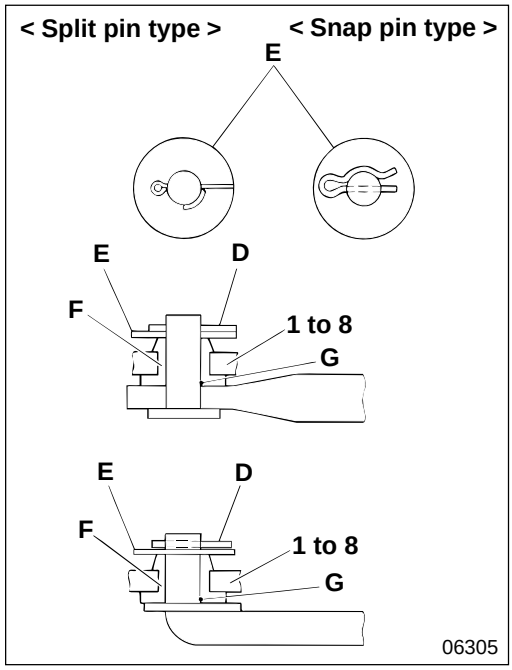

- Apply grease to area **G**.
- Install split pin or snap pin **D**.
  E : Washer
  F : Bushing

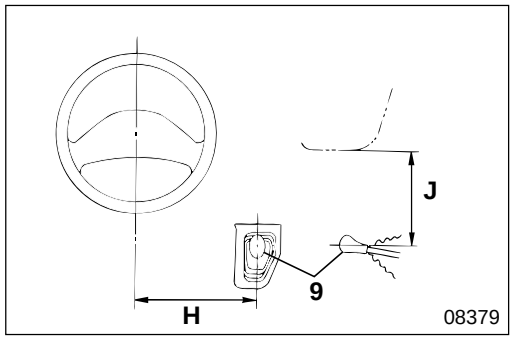

- Turn the turn buckles of shift rod No.4 **7** and selector rod No.4 **8** to adjust change lever assembly **9** position.

Left and right direction H (mm {in.}) (Distance from steering wheel center)	Fore-and-aft direction J (mm {in.}) (Distance from instrument panel)
362 to 372 {14.3 to 14.6}	301 to 311 {11.9 to 12.2}

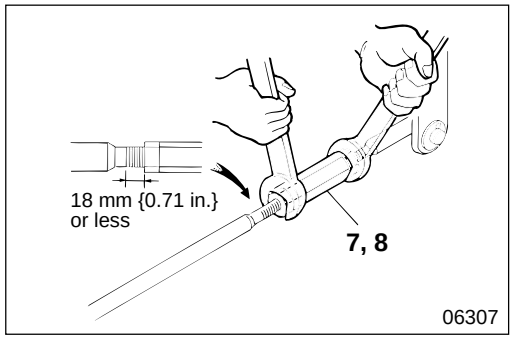

- Adjust the thread area dimension of rods **7**, **8** that extends from both ends of the turn buckles. Exposed threads should be almost identical at left and right ends.
- After adjustment, tighten lock nuts for turn buckles at specified torque.
- Make sure that shift or select into positions can be performed smoothly.

Change Lever Assembly

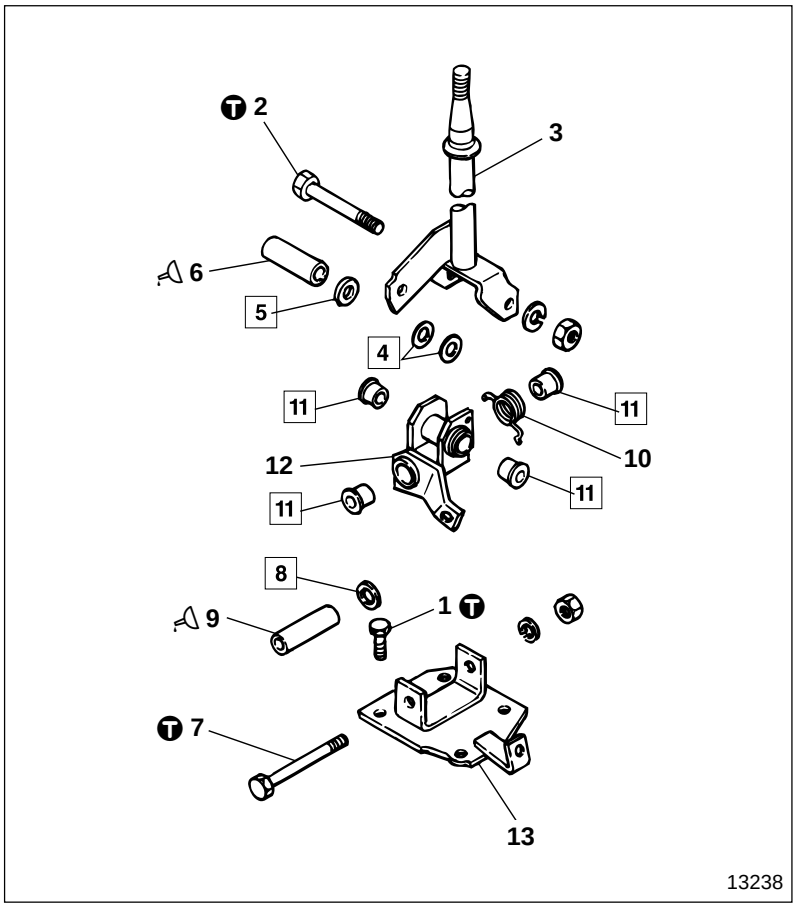

● **Disassembly sequence**

1 Bolt
2 Bolt
3 Lever assembly
4 Wave washer
5 Spacer
6 Collar
7 Bolt
8 Spacer
9 Collar
10 Return spring
11 Bushing
12 Cross sleeve
13 Change lever bracket

● **Assembly sequence**

13 →8→7→3
12→11→10→9→6
→5→4→2→1

Ⓣ Tightening torque

Unit : N·m {lbf.ft, kgf·m}

Location	Parts to be tightened	Tightening torque	Remarks
1	Bolt (Change lever assembly mounting)	9.8 to 15 {7.2 to 11, 1.0 to 1.5}	—
2	Bolt (Lever assembly mounting)	17 to 25 {12 to 19, 1.7 to 2.6}	—
7	Bolt (Cross sleeve mounting)	17 to 25 {12 to 19, 1.7 to 2.6}	—

Lubricant

Location	Points of application	Kinds	Quantity
6, 9	Periphery of collar	Chassis grease [NLGI No.1 (Ca soap)]	As required

◆ Service procedure

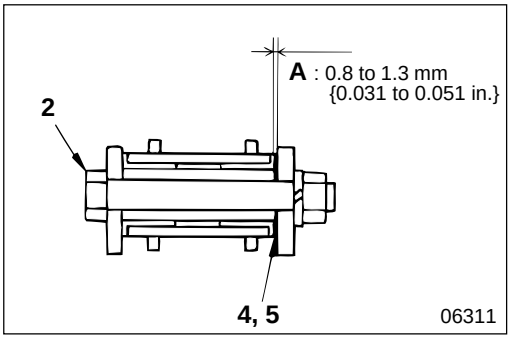

4 **5** **Selection of spacer and installation of wave washer**

- Select spacer **5** to give specified clearance **A** when bolt **2** is tightened at specified torque. Two thicknesses are available for the spacers: 0.3 mm {0.012 in.}, 0.5 mm {0.020 in.}.
- Obtain the specified clearance before inserting wave washer **4**.

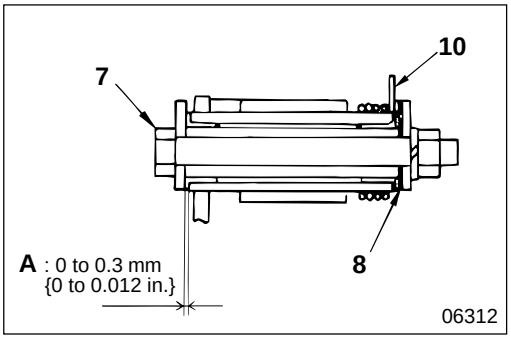

8 **Selection of spacer**

- Select spacer **8** to give specified clearance **A** when bolt **7** is tightened at specified torque. Two thicknesses are available for the spacers: 0.3 mm {0.012 in.}, 0.5 mm {0.020 in.}.
- Levers should operate smoothly after installation.

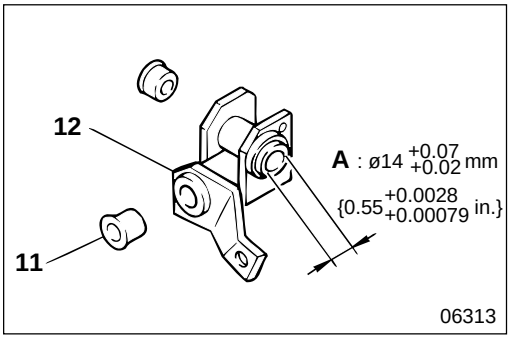

11 **Installation of bushing**

Press-fit bushings **11** (four bushings) into cross sleeve **12**, and ream to specified dimension **A** using a reamer.

Lever Assembly

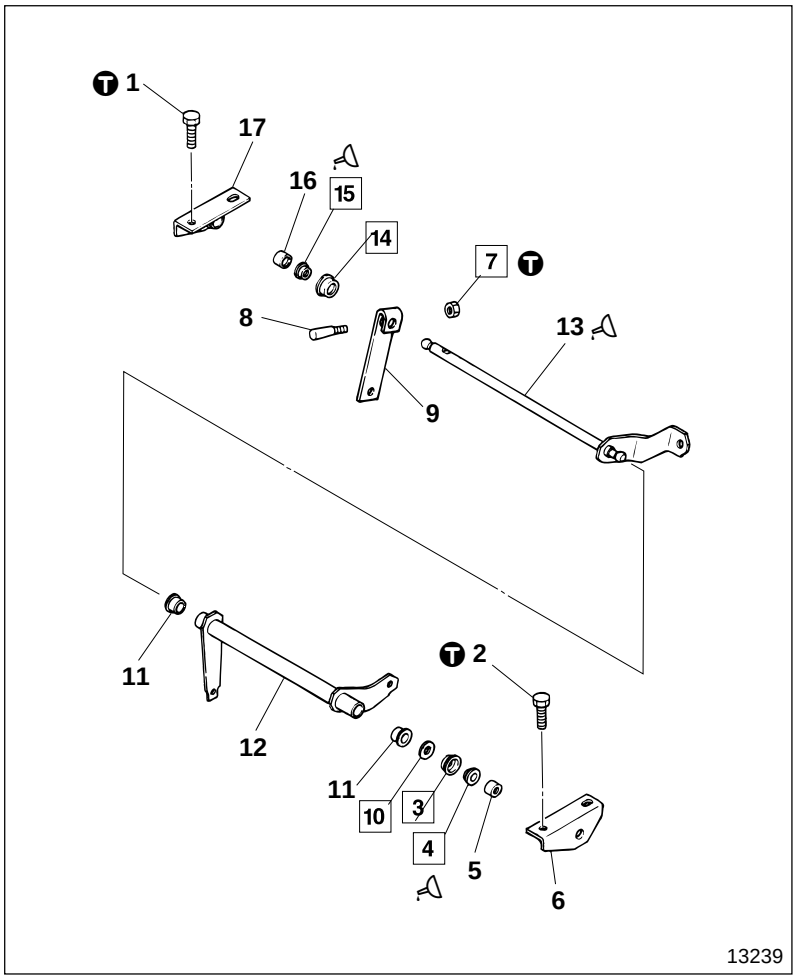

● **Disassembly sequence**

1 Bolt
2 Bolt
3 Cover
4 Dust boot
5 Bushing
6 Lever bracket A
7 Nut
8 Lock pin
9 Lever
10 Spacer
11 Bushing
12 Shift lever
13 Selector lever
14 Cover
15 Dust boot
16 Bushing
17 Lever bracket B

● **Assembly sequence**

17→16→15→14
9→13
→10
12→11
→2→1→8→7
6→5→4→3

Tightening torque

Unit : N·m {lbf.ft, kgf·m}

Location	Parts to be tightened	Tightening torque	Remarks
1, 2	Bolt (Lever bracket mounting)	27 to 34 {20 to 25, 2.8 to 3.5}	—
7	Nut (Lock pin tightening)	9.8 to 15.0 {7.2 to 11, 1.0 to 1.5}	—

Lubricant

Location	Points of application	Kinds	Quantity
4, 15	Pack interior of dust boot	Chassis grease [NLGI No.1 (Ca soap)]	As required
13	Periphery of selector lever	Chassis grease [NLGI No.1 (Ca soap)]	As required

◆ Service procedure

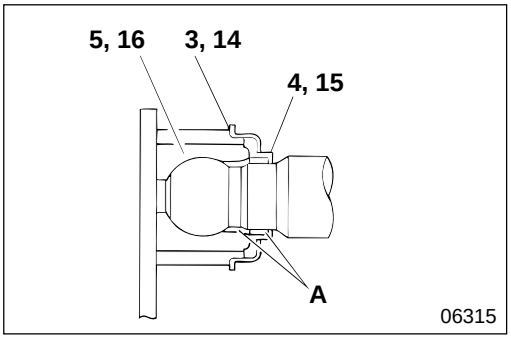

3 **4** **14** **15** **Installation of cover and dust boot**

- Press in covers **3**, **14** fully.
- Pack grease into interior space **A** of dust boots **4**, **15**.

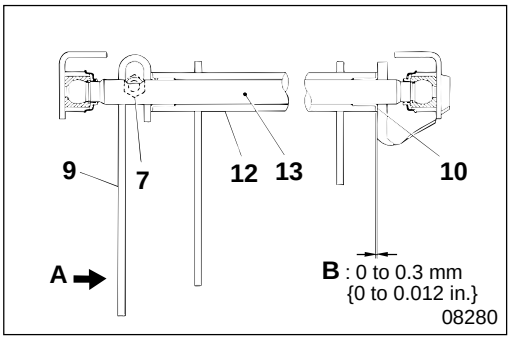

7 **Tightening nuts**

Tighten nut **7** at specified torque, pressing it to direction **A** at approximately 98 N {22 lbf, 10 kgf}.

10 **Selection of spacer**

- Select spacer **10** to give specified clearance **B** when nut **7** is tightened at specified torque. Two thicknesses are available for the spacers: 0.3 mm {0.012 in.}, 0.5 mm {0.020 in.}.

- Lever **9**, shift lever **12** and selector lever **13** should operate smoothly after installation.

No.1 Cross Lever Assembly

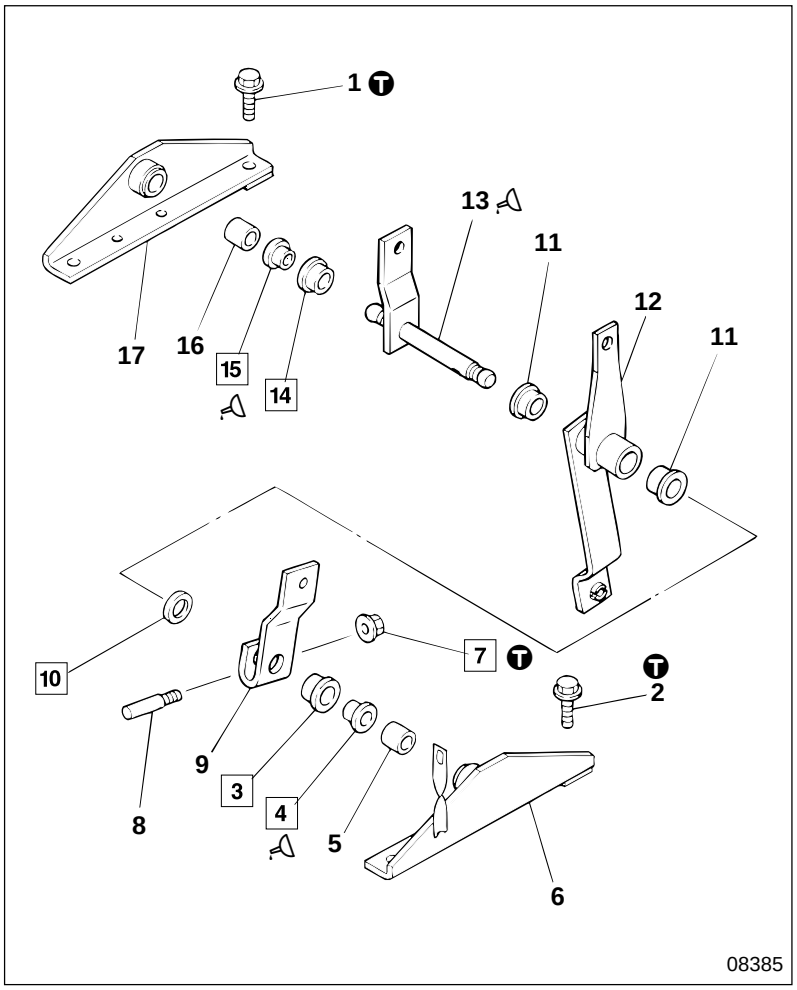

● **Disassembly sequence**

1 Bolt
2 Bolt
3 Cover
4 Dust boot
5 Bushing
6 Lever bracket
7 Nut
8 Lock pin
9 Lever
10 Spacer
11 Bushing
12 Selector lever
13 Shift lever
14 Cover
15 Dust boot
16 Bushing
17 Lever bracket

● **Assembly sequence**

17→16→15→14
13 →10→9
12→11 →2→1→8→7
6→5→4→3

Tightening torque

Unit : N·m {lbf.ft, kgf·m}

Location	Parts to be tightened	Tightening torque	Remarks
1, 2	Bolt (Lever bracket mounting)	27 to 34 {20 to 25, 2.8 to 3.5}	—
7	Nut (Lock pin tightening)	9.8 to 15.0 {7.2 to 11, 1.0 to 1.5}	—

Lubricant

Location	Points of application	Kinds	Quantity
4, 15	Pack interior of dust boot	Chassis grease [NLGI No.1 (Ca soap)]	As required
13	Periphery of shift lever	Chassis grease [NLGI No.1 (Ca soap)]	As required

◆ Service procedure

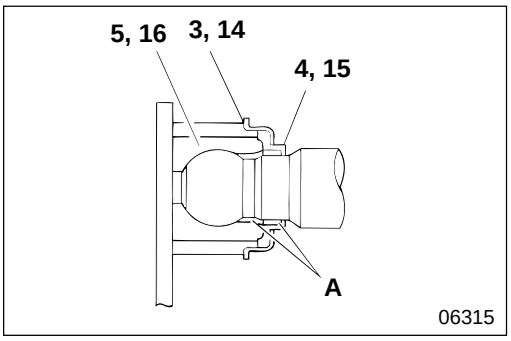

3 **4** **14** **15** **Installation of cover and dust boot**

- Press in covers **3**, **14** fully.
- Pack grease into interior space **A** of dust boot **4**, **15**.

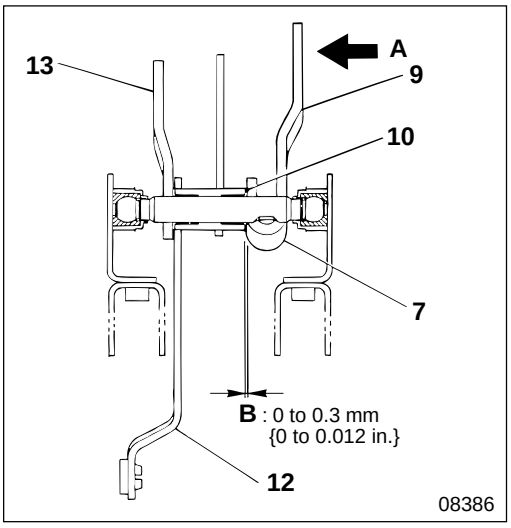

7 **Tightening nut**

Tighten nut **7** at specified torque pressing it to direction **A** at approximately 98 N {22 lbf, 10 kgf}.

10 **Selection of spacer**

- Select spacer **10** to give specified clearance **B** when nut **7** is tightened at specified torque. Two thicknesses are available for the spacers: 0.3 mm {0.012 in.}, 0.5 mm {0.020 in.}.

- Lever **9**, selector lever **12** and shift lever **13** should operate smoothly after installation.

Shift Lever Assembly

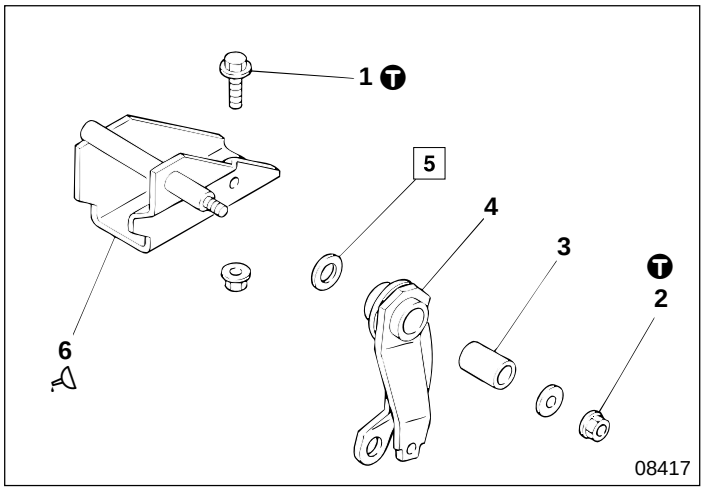

● **Disassembly sequence**

1 Bolt
2 Nut
3 Bushing
4 Shift lever
5 Spacer
6 Shift lever bracket

● **Assembly sequence**

6→5
4→3
→2→1

Tightening torque

Unit : N·m {lbf.ft, kgf·m}

Location	Parts to be tightened	Tightening torque	Remarks
1	Bolt (Shift lever bracket mounting)	27 to 34 {20 to 25, 2.8 to 3.5}	—
2	Nut (Shift lever mounting)	27 to 34 {20 to 25, 2.8 to 3.5}	—

Lubricant

Location	Points of application	Kinds	Quantity
6	Periphery of shift lever bracket shaft	Chassis grease [NLGI No.1 (Ca soap)]	As required

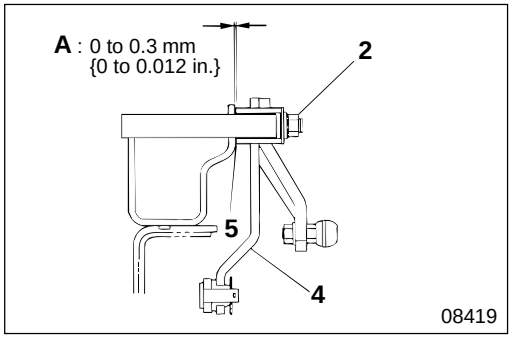

◆ Service procedure

5 **Selection of spacer**

- Select spacer **5** to give specified clearance **A** when nut **2** is tightened at specified torque. Two thicknesses are available for the spacers: 0.3 mm {0.012 in.}, 0.5 mm {0.020 in.}.
- Shift lever **4** should operate smoothly after installation.

Selector Lever Assembly

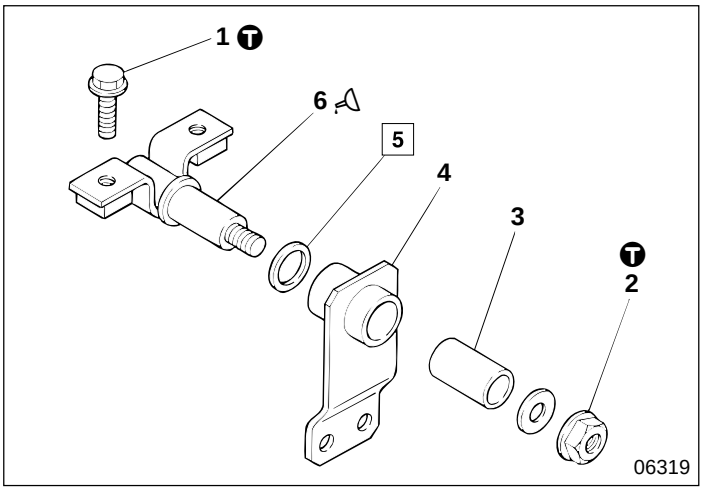

● **Disassembly sequence**

1 Bolt
2 Nut
3 Bushing
4 Selector lever
5 Spacer
6 Selector lever bracket

● **Assembly sequence**

6→5
4→3
→2→1

Tightening torque

Unit : N·m {lbf.ft, kgf·m}

Location	Parts to be tightened	Tightening torque	Remarks
1	Bolt (Selector lever bracket mounting)	27 to 34 {20 to 25, 2.8 to 3.5}	—
2	Nut (Selector lever mounting)	27 to 34 {20 to 25, 2.8 to 3.5}	—

Lubricant

Location	Points of application	Kinds	Quantity
6	Periphery of selector lever bracket shaft circumference	Chassis grease [NLGI No.1 (Ca soap)]	As required

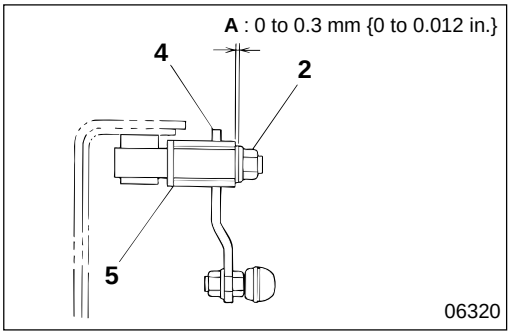

◆ Service procedure

5 **Selection of spacer**

- Select spacer **5** to give specified clearance **A** when nut **2** is tightened at specified torque. Two thicknesses are available for the spacers: 0.3 mm {0.012 in.}, 0.5 mm {0.020 in.}.
- Selector lever **4** should operate smoothly after installation.

Cross Shaft Assembly

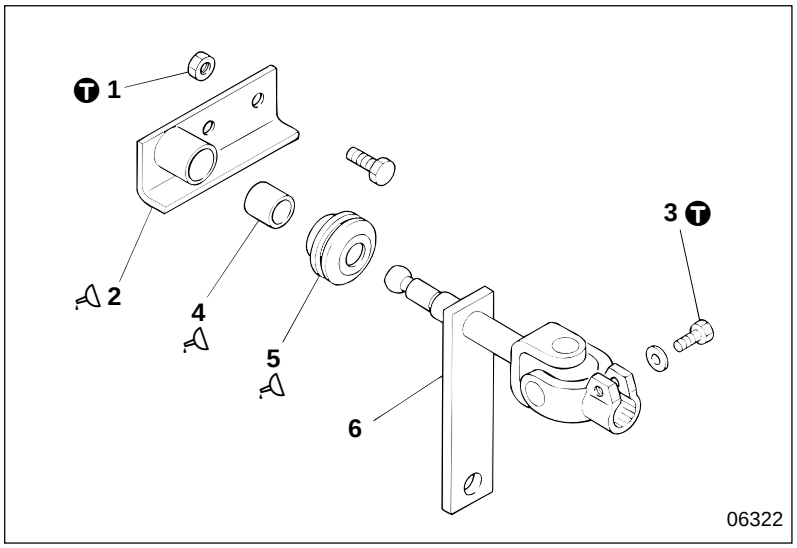

● **Disassembly sequence**

1 Nut
2 Cross shaft bracket
3 Bolt
4 Cross shaft bushing
5 Cross shaft boot
6 Cross shaft

● **Assembly sequence**

6→5→4→2→1→3

Tightening torque

Unit : N·m {lbf.ft, kgf·m}

Location	Parts to be tightened	Tightening torque	Remarks
1	Nut (Frame mounting)	9.8 to 15 {7.2 to 11, 1.0 to 1.5}	—
3	Bolt (Transmission side mounting)	15 to 20 {11 to 14, 1.5 to 2.0}	—

Lubricant

Location	Points of application	Kinds	Quantity
2	Pack pipe of cross shaft bracket	Chassis grease [NLGI No.1 (Ca soap)]	As required
4	Friction surfaces (inside and outside) of cross shaft bushing	Chassis grease [NLGI No.1 (Ca soap)]	As required
5	Pack interior of cross shaft boot	Chassis grease [NLGI No.1 (Ca soap)]	As required

MITSUBISHI FUSO

FE

Service Manual

Group 23 - Automatic Transmission

Group 23 - Automatic Transmission 1999 Minor Changes

BACK HOME

MITSUBISHI FUSO TRUCK OF AMERICA, Inc.

Pub No. TWSE9501-00

MITSUBISHI
FUSO

FE.FG

Service Manual

Group 23
Automatic Transmission

'99 Minor Change

Table of Contents

MITSUBISHI FUSO TRUCK OF AMERICA, Inc.

BACK HOME

Pub No. TWSE9501-323

GROUP 23 AUTOMATIC TRANSMISSION

SPECIFICATIONS 23- 2

STRUCTURE AND OPERATION 23- 4

TROUBLESHOOTING PROCEDURES 23-40

TROUBLESHOOTING 23-42

ON-VEHICLE INSPECTION AND ADJUSTMENT
- Stall Test 23-52
- Time Lag Test 23-53
- Line Pressure Test 23-54
- Road Test 23-56
- Inspection of Automatic Transmission Fluid 23-58
- Changing Automatic Transmission Fluid 23-59

REMOVAL AND INSTALLATION OF AUTOMATIC TRANSMISSION ASSEMBLY 23-60

OIL COOLER 23-65

AUTOMATIC TRANSMISSION CONTROL 23-68

REPLACEMENT OF AUTOMATIC TRANSMISSION PARTS 23-78

INSPECTION AND ADJUSTMENT OF OTHER DEVICES 23-84

SPECIFICATIONS

Specifications

Item \ Vehicle model			FE639	FE649
Manufacturer			Aisin Seiki Co., Ltd.	
Transmission type			M035A4	
Torque converter	Type		3-element, 1-stage, 2-phase (with lock-up clutch)	
	Stall torque ratio		1.82	
Automatic transmission	Type		Planetary gear type, 4 forward speeds, 1 reverse speed	
	Gear ratio	1st	3.018	
		2nd	1.548	
		3rd	1.000	
		4th	0.703	
		Rev	2.678	
Range selector pattern			P - R - N - D - 2 - L (Engine starts in P and N positions only)	
Automatic transmission fluid	Oil type		DEXRON III type	
	Total oil capacity L {qts}		13 {14}	
	Quantity of oil required in automatic transmission fluid change L {qts}		Approximately 4.5 {4.8}	

Automatic Transmission Assembly

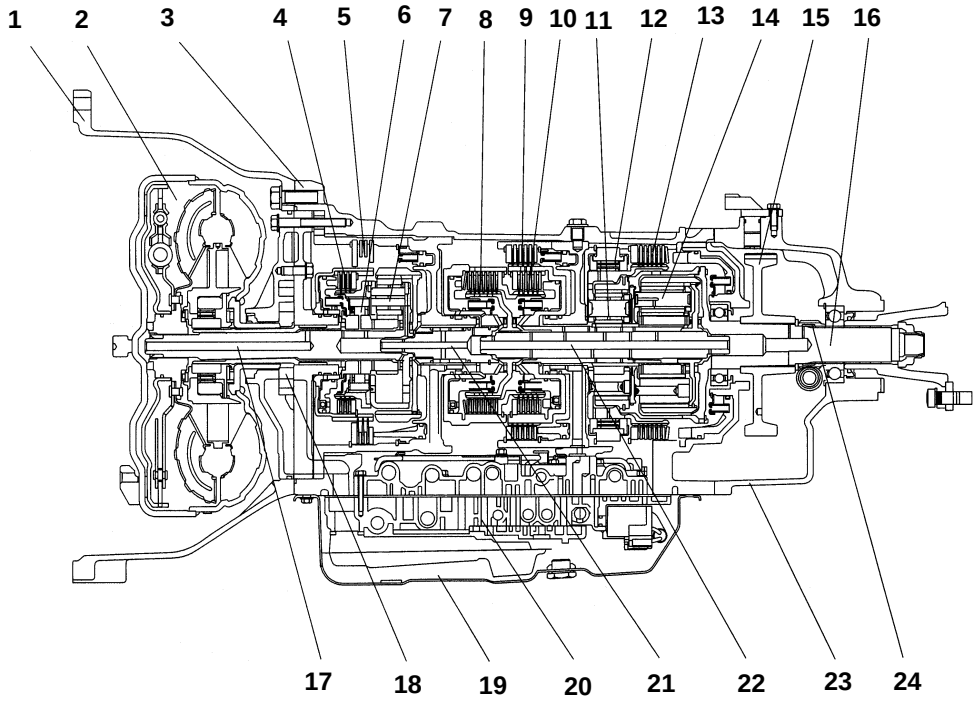

1 Converter housing
2 Torque converter
3 Transmission case
4 Overdrive direct clutch
5 Overdrive brake
6 Overdrive one-way clutch
7 Overdrive planetary gear
8 Front clutch
9 2nd brake
10 Rear clutch
11 Front planetary gear
12 No. 2 one-way clutch
13 1st and reverse brake
14 Rear planetary gear
15 Parking lock gear
16 Output shaft
17 Overdrive input shaft
18 Oil pump
19 Oil pan
20 Valve body
21 Input shaft
22 Intermediate shaft
23 Extension housing
24 Speedometer drive gear

The automatic transmission is comprised of a torque converter with a lock-up mechanism and a fully automatic 4-speed gear system.

● **Torque converter**

The torque converter is driven by the engine crankshaft, and functions as the input device for the transmission. The torque converter is a fluid coupling device that magnifies torque produced by the engine and absorbs shock that generates when the vehicle accelerates from a standstill or when the transmission shifts. At a cruising speed, the lock-up mechanism prevents slippage for improved power transmitting efficiency.

● **Transmission gear section**

The gear system provides four forward speeds and one reverse speed. The gear section contains two one-way clutches, three sets of planetary gears, each comprised of a sun gear, pinion gears and a ring gear, three sets of hydraulic wet-type multi-plate clutches; and three sets of wet-type multi-plate brakes.

● **Hydraulic control section**

The electronic control system uses a microcomputer to regulate the mechanism operations for precise shifting.

Control Mechanisms

Control system

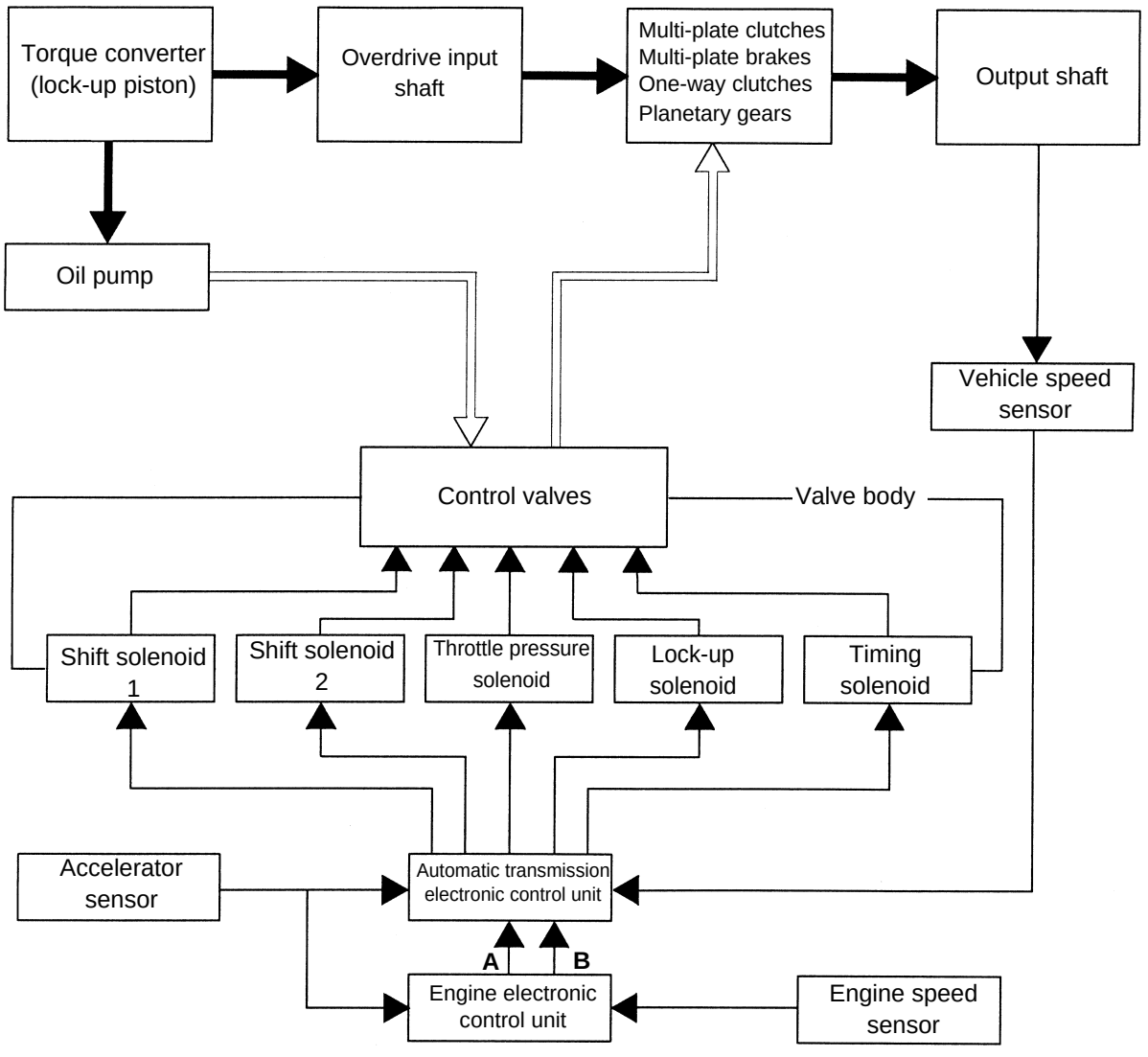

Control block diagram

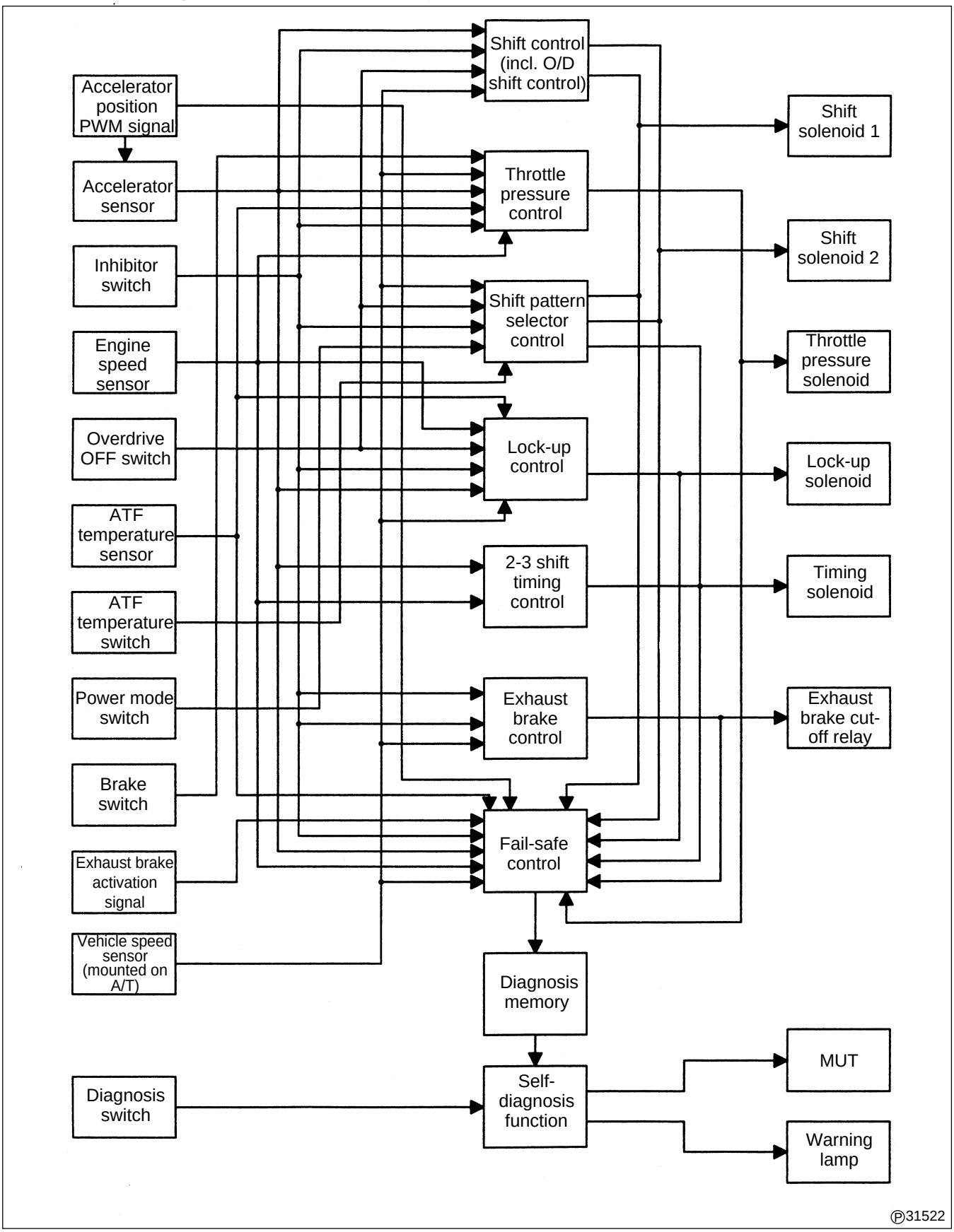

The control functions can be roughly divided into shift control, lock-up control and 2-3 shift control. The electronic control unit electronically controls these functions precisely in accordance with driving conditions.

Chart of control items, inputs and outputs

Item \ Control item			Shift control (incl. overdrive control)	Shift pattern selector control	Throttle pressure control	Lock-up control	2-3 shift control	Exhaust brake control	Fail-safe control	Self-diagnosis control
Input	Vehicle speed sensor	Mounted in speedometer cable (located inside cabin)	○	○	○	○		○	○ Note 1	○
Input	Throttle position PWM signal								○	○
Input	Engine speed sensor				○	○	○		○ Note 1	○
Input	Accelerator sensor		○		○	○	○	○	○ Note 1	○
Input	Overdrive OFF switch		○	○		○				
Input	Inhibitor switch		○	○	○	○		○	○ Note 1	○
Input	Automatic transmission fluid temperature switch			○						
Input	Automatic transmission fluid temperature sensor				○	○			○	○
Input	Power mode switch			○						
Input	Brake switch				○					
Input	Exhaust brake activation signal								○ Note 1	○
Input	Diagnosis switch									○ Note 2
Output	Shift solenoid 1		○	○					○ Note 1	○
Output	Shift solenoid 2		○	○					○ Note 1	○
Output	Timing solenoid			○			○		○ Note 1	○
Output	Lock-up solenoid					○			○ Note 1	○
Output	Throttle pressure solenoid				○				○ Note 1	○
Output	Exhaust brake cut-off relay							○	○ Note 1	○
Output	Warning lamp									○

Note 1 : The automatic transmission electronic control unit activates fail-safe functions when there is an abnormality in the input/output signals.

Note 2 : The self-diagnosis function activates.

● **Shift control**

Based on the accelerator operation signal transmitted from the accelerator sensor and the signal from the vehicle speed sensor, the automatic transmission electronic control unit outputs signals according to the predetermined shift curve. These signals are sent to shift solenoid 1, shift solenoid 2 and the timing solenoid mounted on the valve body, and automatically shift to the optimum gear.

● **Throttle pressure control**

The accelerator sensor detects the degree of throttle operation. This data is used to control the throttle pressure solenoid, and the hydraulic pressure supplied from the reducing valve is maintained at the optimum level (throttle pressure) according to the vehicle's operating condition.

● **2-3 shift control**

Based on the signal from the throttle sensor and the signal from the engine speed sensor, the automatic transmission electronic control unit outputs a signal to the timing solenoid mounted on the valve body, and controls the discharge timing of automatic transmission fluid to reduce shift shock.

● **Lock-up control**

The lock-up mechanism eliminates slippage of the torque converter for improved power transmitting efficiency. Based on the accelerator operation signal transmitted from the accelerator sensor and the signal from the vehicle speed sensor, the automatic transmission electronic control unit outputs a signal according to the predetermined shift curve. This signal is sent to the lock-up solenoid mounted on the valve body, and engages or disengages the lock-up mechanism.

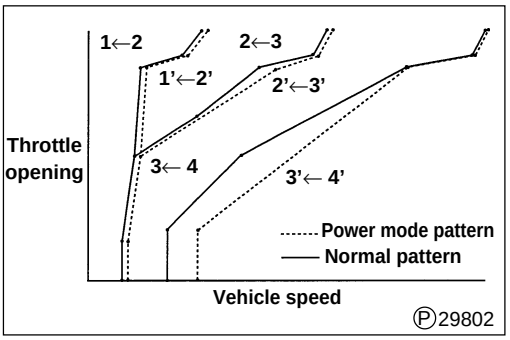

● **Shift pattern selector control**

This control function allows the selection between the economy mode for fuel-saving operation and the power mode for improved acceleration performance.

In the power mode, the shift points of the transmission are set to a higher vehicle speed than in the economy mode. The graph on the left shows the shift points during down-shifting operations.

● **Fail-safe control**

The fail-safe functions minimize adverse effects to the vehicle operation caused by malfunctioning of the vehicle speed sensor, engine speed sensor, accelerator sensor, inhibitor switch or solenoids.

• Accelerator sensor

This sensor prohibits lock-up control change and 2-3 shift timing control by determining the shift-point vehicle speed at closed throttle position and the line pressure at maximum pressure, thus allowing vehicle operation.

• Inhibitor switch

If the inhibitor switch malfunctions in a stationary or moving vehicle and there is no signal input to the automatic transmission electronic control unit, the automatic transmission electronic control unit determines the transmission position setting as the D range and prohibits shifting from 3rd to 4th gear. If the automatic transmission electronic control unit receives two or more signals, the automatic transmission electronic control unit operates according to the following priority order for the range selector position and enables vehicle operation: L > R > 2 > D > N >P. Since the manual valve changes the hydraulic circuit in the valve body according to the range selector position, the vehicle operates as follows.

Range selector lever position	Inhibitor switch input signal	Vehicle operating condition
P	P and other selector signals	P
R	R and other selector signals	R
N	N and other selector signals	N
D	D and other selector signals (excludes R, L and 2 range signals)	$D_1 \leftrightarrow D_2 \leftrightarrow D_3 \leftrightarrow D_4$
↑	D and L range signals	$D_1 \leftrightarrow D_2 \leftarrow D_3$
↑	D and R range signals	D_4
↑	D and 2 range signals	$D_1 \leftrightarrow D_2 \leftrightarrow D_3$
2	2 and other selector signals (excludes R and L signals)	$2_1 \leftrightarrow 2_2 \leftarrow 2_3$
↑	2 and L range signals	$2_1 \leftrightarrow 2_2 \leftarrow 2_3$
↑	2 and R range signals	2_3
L	L and other selector signals	$L_1 \leftrightarrow L_2 \leftarrow L_3$

• Engine speed sensor

The 2-3 shift timing control becomes inactive to ensure proper vehicle operation.

• Shift solenoid 1 and shift solenoid 2

If a solenoid malfunction occurs when the transmission is in the D, 2 or L range, the operating conditions of the solenoids change as shown in the following table. The automatic transmission electronic control unit also deactivates the lock-up solenoid and timing solenoid to allow vehicle operation.

Range selector position	Normal				Malfunctioning of S1			Malfunctioning of S2			Malfunctioning of S1 and S2		
	S1	S2	ST	Gear	S1	S2	Gear	S1	S2	Gear	S1	S2	Gear
D range	○	×	×	1st	–	×→○	3rd	○	–	1st	–	–	4th
	○	○	×	2nd	–	○	3rd	○→×	–	4th	–	–	4th
	×	○	×	3rd	–	○	3rd	×	–	4th	–	–	4th
	×	×	×	4th	–	×	4th	×	–	4th	–	–	4th
2 range	○	×	×	1st	–	×→○	3rd	○	–	1st	–	–	3rd
	○	○	×	2nd	–	○	3rd	○→×	–	3rd	–	–	3rd
	×	○	×	3rd	–	○	3rd	×	–	3rd	–	–	3rd
L range	○	×	×	1st	–	×	1st	○	–	1st	–	–	1st
	○	○	×	2nd	–	○	2nd	○	–	1st	–	–	1st
	×	○	○	3rd	–	○	2nd	×	–	1st	–	–	1st

○ : Electric current supplied × : Electric current not supplied – : Malfunctioning → : Fail-safe function
S1 : Shift solenoid 1 S2 : Shift solenoid 2 ST : Timing solenoid

• Throttle pressure solenoid

The malfunctioning solenoid is deactivated to bring the line pressure to a maximum level, thus allowing vehicle operation.

• Timing solenoid and lock-up solenoid

The malfunctioning solenoid is deactivated to allow vehicle operation.

● Self-diagnosis function

The warning lamp lights when an abnormality occurs during vehicle operation.

- The warning lamp does not light if the abnormality causes minimum effect to vehicle operation.
- The warning lamp lights in the case of the following malfunctions to indicate the abnormal condition since these malfunctions significantly reduce vehicle performance.
  Malfunction of vehicle speed sensor, malfunction of throttle position PWM signal, malfunction of shift solenoid 1, malfunction of shift solenoid 2, malfunction of accelerator sensor, malfunction of timing solenoid, malfunction of inhibitor switch, malfunction of throttle pressure solenoid.

CAUTION ⚠

The warning lamp lights only when the malfunction prevents proper vehicle operation.

The indicator lamp provides self-diagnosis information.

- To facilitate the discovery of malfunctions that may not reproduce themselves frequently, the automatic transmission electronic control unit stores in the memory information of malfunctions that occur during vehicle operation.
- An input of a self-diagnosis start signal produces the output of the data from the memory, and causes the automatic transmission warning lamp to flash according to the data.

CAUTION ⚠

The automatic transmission electronic control unit stores information of all malfunctions that occur after the previous self-diagnosis operation.

Electronic Control Devices

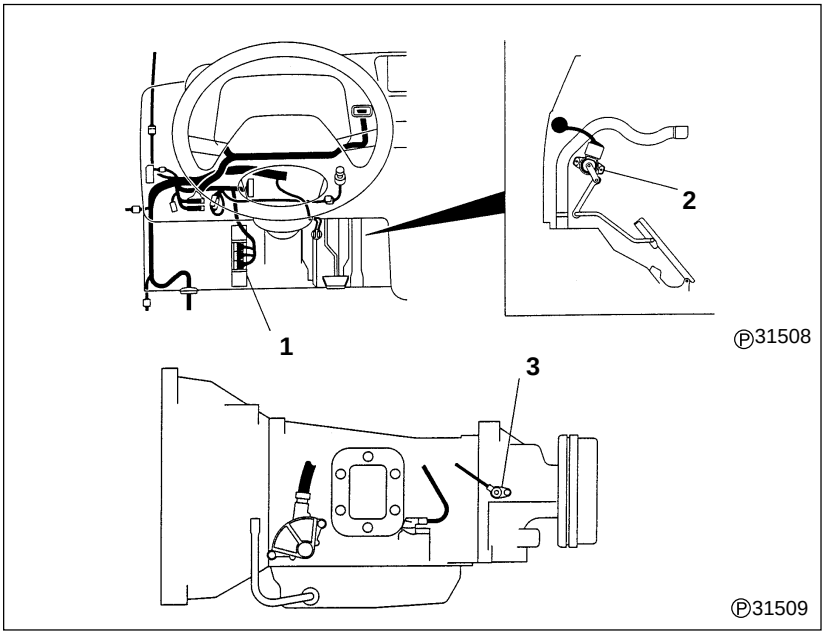

1 Automatic transmission electronic control unit
2 Accelerator sensor
3 Vehicle speed sensor

● Automatic transmission electronic control unit

The automatic transmission electronic control unit is mounted near the brake booster on the driver's seat side. It determines the vehicle operating conditions based on signals sent from sensors, and outputs signals to solenoids to regulate shift control, lock-up control and other automatic transmission functions.

The automatic transmission electronic control unit is also equipped with a self-diagnosis function for the detection of malfunctions of main sensors and solenoids.

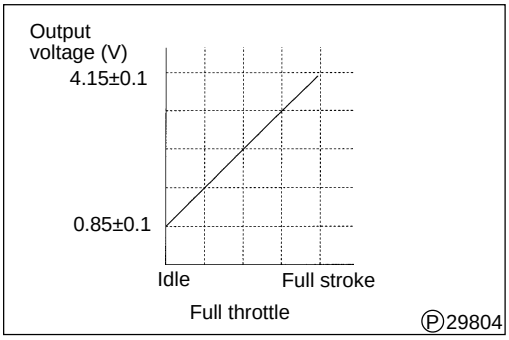

● Accelerator sensor

The accelerator sensor is mounted on the accelerator lever. It converts the accelerator pedal operation to voltage and sends it to the automatic transmission electronic control unit.

The output characteristic of the electric signal produced by the sensor is shown in the graph on the left. This output signal is used to determine the accelerator pedal angle and pressing speed.

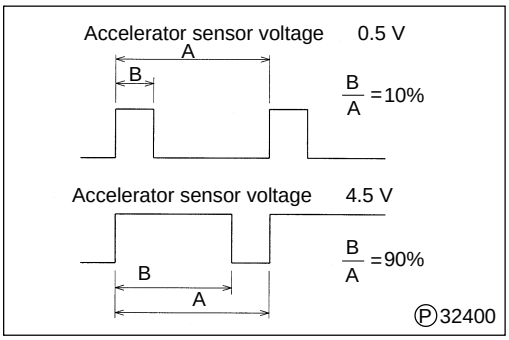

● Throttle position PWM signal

The accelerator sensor voltage detected by the electronic governor control unit is converted to a PWM signal and output to the automatic transmission electronic control unit. The PWM signal is a chopping wave with a duty ratio shown in the diagram at the left.

● **Vehicle speed sensor**

This sensor is mounted on the extension housing of the transmission, and converts the vehicle speed to a pulse signal by means of the parking lock gear and sends it to the automatic transmission electronic control unit.

● **Shift solenoids 1 and 2**

These solenoids are mounted on the valve body, and control shifting by turning ON and OFF in accordance with the signals sent from the automatic transmission electronic control unit.
The ON and OFF conditions of the two solenoids result in the following gear positions.

Shift solenoid 1	ON	ON	OFF	OFF
Shift solenoid 2	OFF	ON	ON	OFF
Gear position	1st gear	2nd gear	3rd gear	4th gear

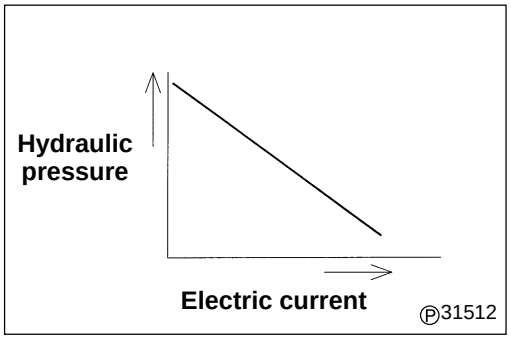

● **Throttle pressure solenoid**

The throttle pressure solenoid is mounted on the valve body. It adjusts the throttle pressure based on the throttle opening signal sent from the automatic transmission electronic control unit. The throttle pressure adjustment characteristics are shown in the diagram.

● **Timing solenoid**

This solenoid is mounted on the valve body, and regulates the 2-3 shift timing control by turning ON and OFF in accordance with the signal sent from the automatic transmission electronic control unit.

● **Lock-up solenoid**

The lock-up solenoid is mounted on the valve body. According to the signal sent from the automatic transmission electronic control unit, the solenoid repeats ON and OFF operations, thereby opening and closing the drain circuit to control the hydraulic pressure at a predetermined level. The lock-up solenoid is a duty-cycle type that can control the ON and OFF time ratio in each cycle between 0 and 100%.

● **Automatic transmission fluid temperature switch**

This switch is mounted on the oil cooler outlet section of the transmission case. It detects abnormal temperatures of the automatic transmission fluid and turns on the warning lamp located on the meter cluster to indicate the abnormal condition.

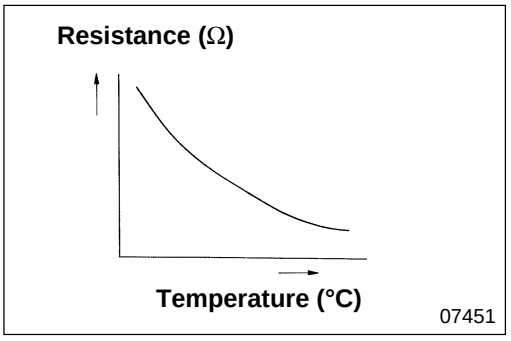

● **Automatic transmission fluid temperature sensor**

This sensor is mounted on the control valve in the transmission. It coverts temperature changes into continuous electric signals and sends to the automatic transmission electronic control unit. The characteristics of the sensor's electric output signal are shown at the left. Based on this output signal, the automatic transmission electronic control unit prohibits overdrive shifting and lock-up operation and also performs partial correction of line pressure control.

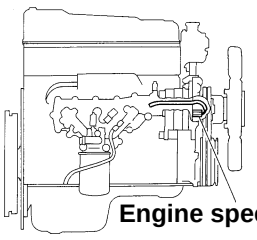

07959

● **Engine speed sensor**

The sensor converts the engine revolution speed to a pulse signal, and outputs to the electronic governor control unit. This signal is then transmitted from the electronic governor control unit to the automatic transmission control unit.

Overdrive OFF switch (OD OFF switch)

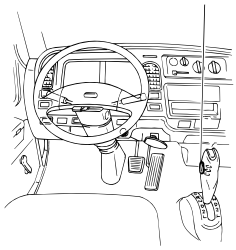

14030

● **Overdrive OFF switch**

This switch is mounted on the range selector lever. It is operated by the driver, and it allows switching between the 3-speed and 4-speed modes.

OFF : Transmission shifts to 4th gear for improved fuel efficiency.

ON : Transmission does not shift to 4th gear, thus increasing the engine brake effect and improving driveability on an up grade incline.

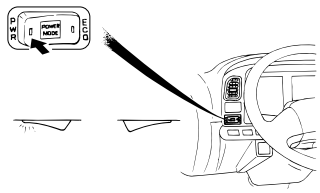

14024

● **Power mode switch**

This switch is provided on the instrument panel. It is used by the driver to select the shift-point vehicle speed setting.

PWR (power mode) : Sets the shift points to a higher vehicle speed to use engine power effectively.

ECO (economy mode) : Sets the shift points to a lower vehicle speed for improved fuel economy.

Hydraulic Control Devices

● **Valve Layout Diagram**

• **Upper valve body**

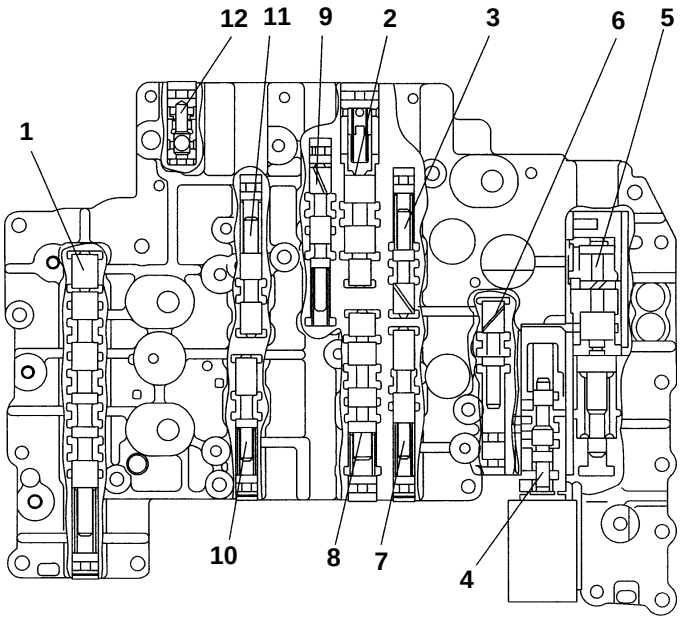

Ⓟ31513

• **Lower valve body**

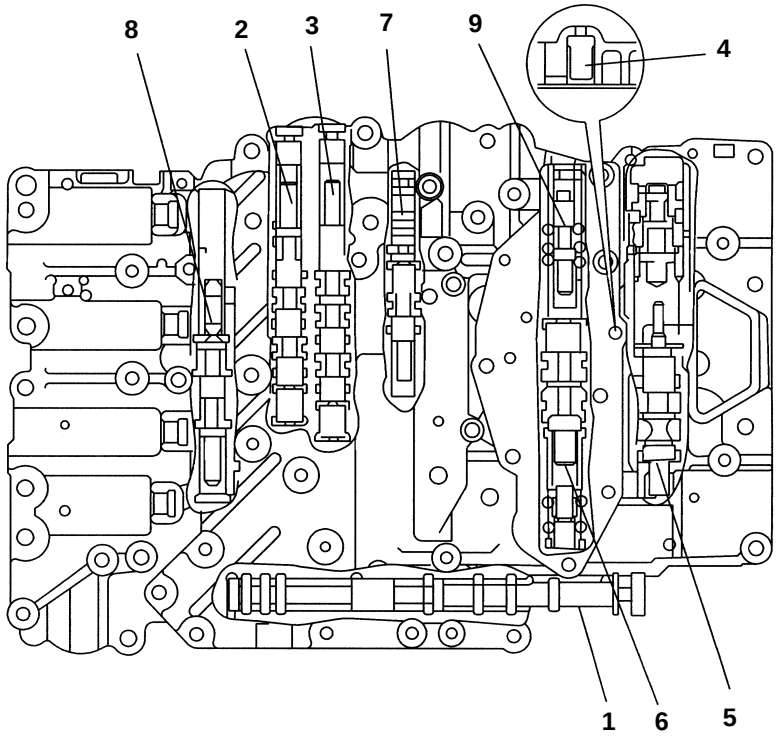

Ⓟ31514

● Valve Functions

- **Upper valve body**

No.	Valve name	Description of function
1	2-3 Shift valve	Switches between 2nd and 3rd gears
2	Reverse inhibitor valve	When range selector is shifted to R range while vehicle is moving forward at moderate or high speed, this valve, operated by solenoid output, prevents shifting to reverse.
3	Modulator valve	Adjusts line pressure and supplies hydraulic pressure to lock-up signal valve and orifice control valve
4	Throttle valve	Adjusts signal pressure (throttle pressure) that is used to provide optimum line pressure in accordance with operating conditions
5	Secondary regulator valve	Controls pressure of automatic transmission fluid supplied from primary regulator valve to torque converter as well as lubricating oil pressure
6	Reducing valve	Reduces line pressure and feeds to throttle valve
7	Lock-up signal valve	Engages and disengages lock-up mechanism
8	Accumulator control valve	Lowers accumulator back pressure when throttle opening becomes smaller, and obtains accumulator control pressure from line pressure that is used to reduce shift shock
9	Low coast modulator valve	Lowers line pressure to reduce shift shock when range selector is shifted to L range
10	Orifice control valve	Switches orifices to reduce shock
11	Low inhibitor valve	When range selector is shifted to L range at high vehicle speed, this valve, operated by timing solenoid output, shifts to 3rd gear
12	Check valve	Switches fluid passage to rear clutch (C2) in D range and R ranges

- **Lower valve body**

No.	Valve name	Description of function
1	Manual valve	Switches fluid passage according to the position (P, R, N, D, 2, L) of range selector lever
2	1-2 Shift valve	Switches between 1st and 2nd gears
3	3-4 Shift valve	Switches between 3rd and overdrive gears
4	Pressure relief valve	Maintains pressure supplied to cooler at low level
5	Primary regulator valve	Regulates hydraulic pressure (line pressure) to devices
6	Lock-up control valve	Adjust flow rate of automatic transmission fluid to torque converter
7	C0 exhaust valve	Reduces shock in 3rd-to-2nd shifting
8	2-3 Timing valve	Adjusts hydraulic pressure switching timing in 3rd-to-2nd shifting to reduce shock
9	Cutback valve	Applies cutback pressure to throttle valve to reduce line pressure

Shift Function

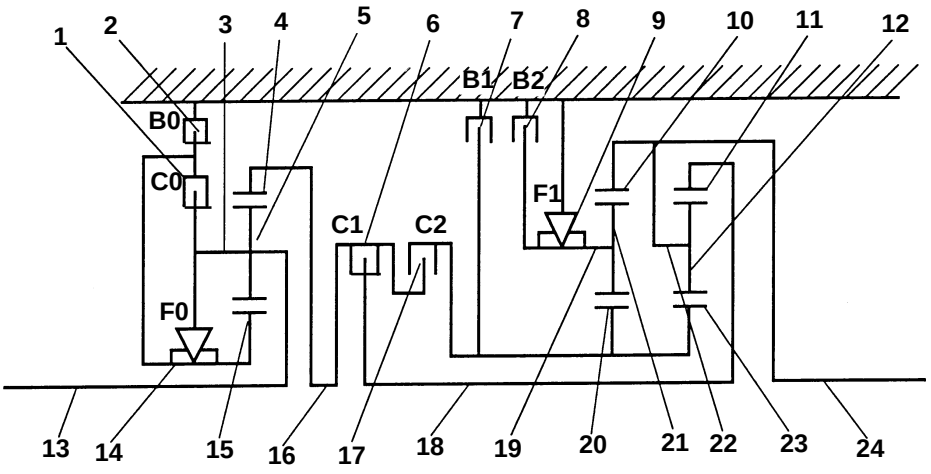

1 Overdrive direct clutch (C0)
2 Overdrive brake (B0)
3 Overdrive planetary carrier
4 Overdrive planetary ring gear
5 Overdrive planetary pinion gears
6 Front clutch (C1)
7 2nd brake (B1)
8 1st and reverse brake (B2)
9 No. 2 one-way clutch (F1)
10 Front planetary ring gear
11 Rear planetary ring gear
12 Rear planetary pinion gears
13 Overdrive input shaft
14 Overdrive one-way clutch (F0)
15 Overdrive planetary sun gear
16 Input shaft
17 Rear clutch (C2)
18 Intermediate shaft
19 Front planetary carrier
20 Front planetary sun gear
21 Front planetary pinion gears
22 Rear planetary carrier
23 Rear planetary sun gear
24 Output shaft

• Clutch and brake functions

	Name	Function
	Overdrive direct clutch (C0)	Interlocks overdrive sun gear and overdrive planetary carrier
	Overdrive brake (B0)	Prevents rotation of overdrive sun gear
	Overdrive one-way clutch (F0)	Prevents overdrive planetary carrier from rotating in counterclockwise direction relative to overdrive sun gear during driving
	Front clutch (C1)	Interlocks input shaft and intermediate shaft
	Rear clutch (C2)	Interlocks input shaft with front and rear planetary sun gears
	2nd brake (B1)	Prevents rotation of front and rear planetary sun gears
	1st and reverse brake (B2)	Prevents rotation of front planetary carrier
	No. 2 one-way clutch (F1)	Prevents counterclockwise rotation of front planetary carrier and allows only clockwise rotation

● Clutch, Brake and Solenoid Operations

Shift position		C0	C1	C2	B0	B1	B2	F0	F1	S1	S2	Remarks
P	Parking				○					○		Parking
R	Reverse	○		○			○	●				Reverse
N	Neutral				○					○		Neutral
D	1st	○	○					●	●	○		Automatic shifting 1↔ 2↔ 3 ↔ 4 [Overdrive OFF mode 1↔ 2↔ 3 ↔ 4]
	2nd		○			○		●		○	○	
	3rd	○	○	○				●			○	
	Overdrive		○	○	○							
2	1st	○	○					●	●	○		Automatic shifting 1↔ 2 ↔ 3
	2nd	○	○			○		●		○	○	
	3rd	○	○	○				●			○	
L	1st	○	○				○	●	●	○		Locked in 1st gear 1← 2 ← 3 (3rd gear shifting occurs only when timing solenoid activates.)
	2nd	○	○			○		●		○	○	
	3rd	○	○	○				●			○	

S1 and S2 refer to shift solenoid 1 and shift solenoid 2, respectively ○ : Activates ● : Activates only during driving
↔ : Overrun preventive control

● Overdrive Direct Clutch

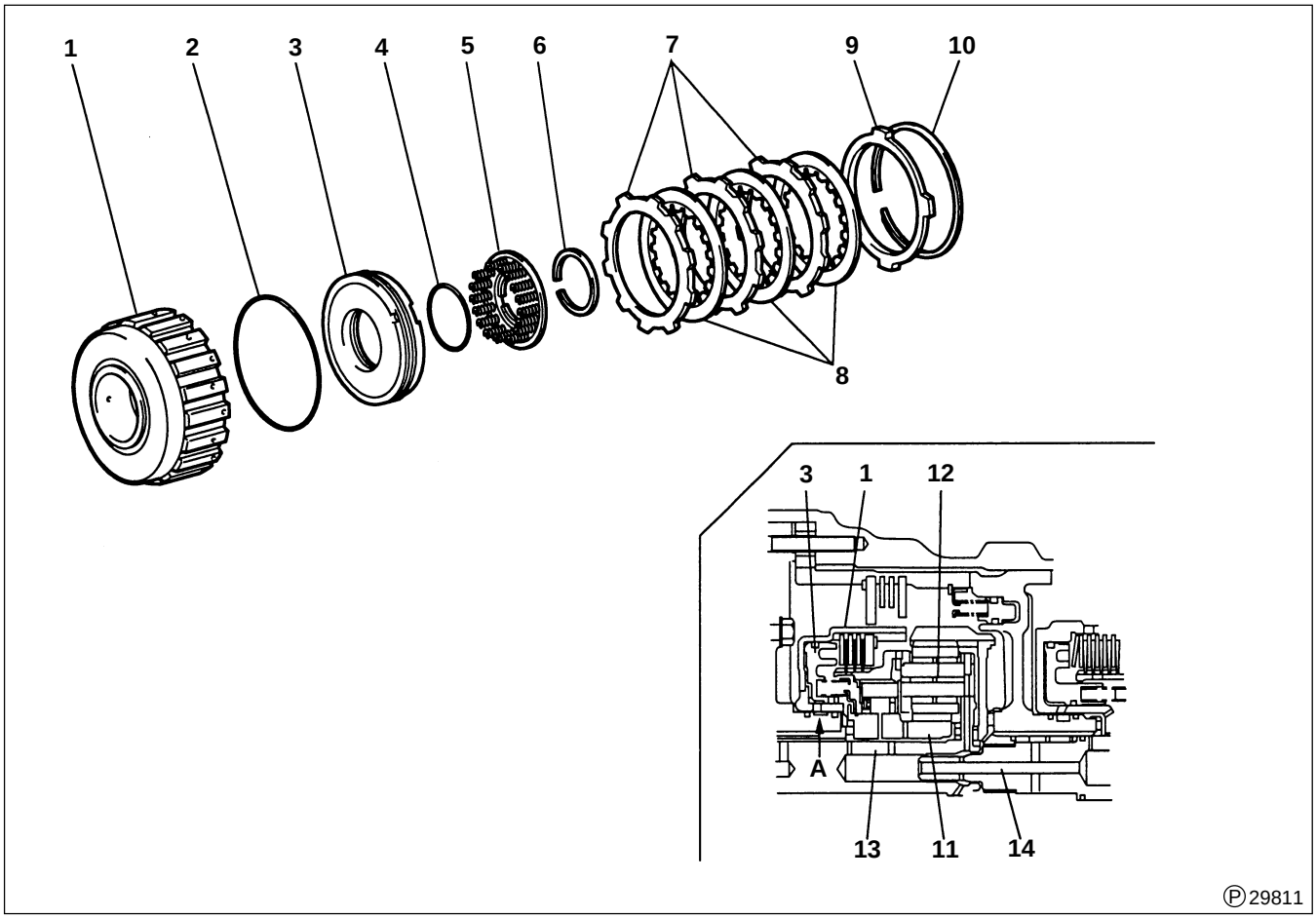

1 Overdrive direct clutch drum
2 O-ring
3 Overdrive direct clutch piston
4 O-ring
5 Overdrive clutch return springs
6 Snap ring
7 Clutch plates
8 Clutch discs
9 Clutch flange
10 Snap ring
11 Overdrive planetary sun gear
12 Overdrive planetary carrier
13 Overdrive input shaft
14 Input shaft

A : Operating pressure

< Active condition >

The control valve supplies operating pressure **A** to overdrive direct clutch piston **3**, coupling clutch discs **8** and clutch plates **7**. This interlocks overdrive planetary sun gear **11** with overdrive planetary carrier **12**.
As a result, the entire overdrive planetary gear acts as a single unit to transmit the engine's driving power from overdrive input shaft **13** to input shaft **14**.

< Inactivate condition >

Since operating pressure **A** is not supplied, the force of overdrive clutch return springs **5** presses against overdrive direct clutch piston **3**.
As a result, clutch plates **7** are separated from clutch discs **8**, and the engine power is not transmitted.

● Front Clutch (C1)

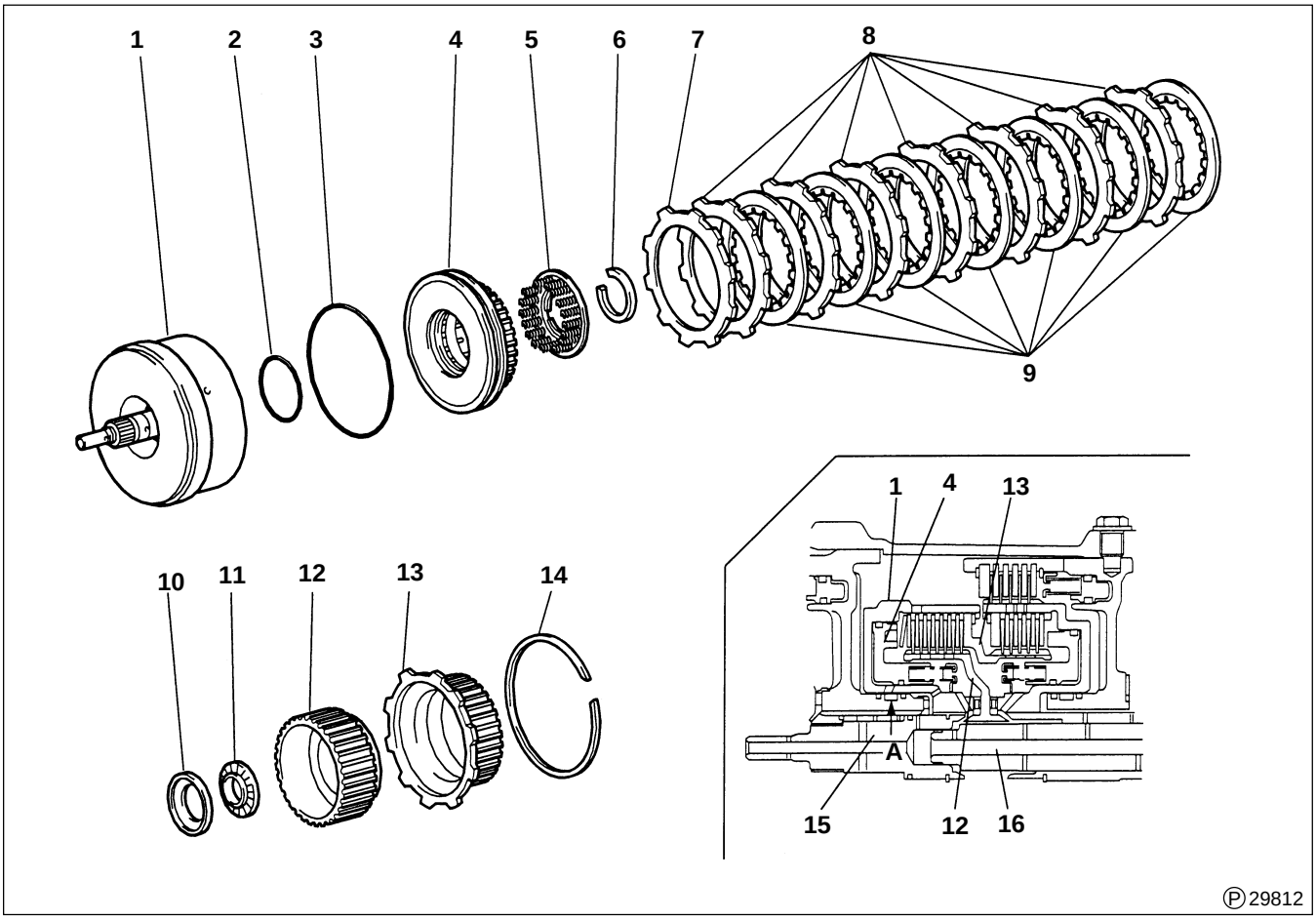

1 Front clutch drum
2 O-ring
3 O-ring
4 Front clutch piston
5 Front clutch return springs
6 Snap ring
7 Clutch cushion plate
8 Clutch plates
9 Clutch discs
10 Thrust bearing lace
11 Thrust bearing
12 Front clutch hub
13 Rear clutch hub
14 Snap ring
15 Input shaft
16 Intermediate shaft

A : Operating pressure

< Active condition >

The control valve supplies operating pressure **A** to front clutch piston **4**, which causes the coupling of clutch discs **9** and clutch plates **8**, thus transmitting the engine's driving power from input shaft **15** to front clutch hub **12** and intermediate shaft **16**.

< Inactivate condition >

Since operating pressure **A** is not supplied, the force of front clutch return springs **5** presses against front clutch piston **4**.

As a result, clutch plates **8** are separated from clutch discs **9**, and the engine power is not transmitted.

● Rear Clutch (C2)

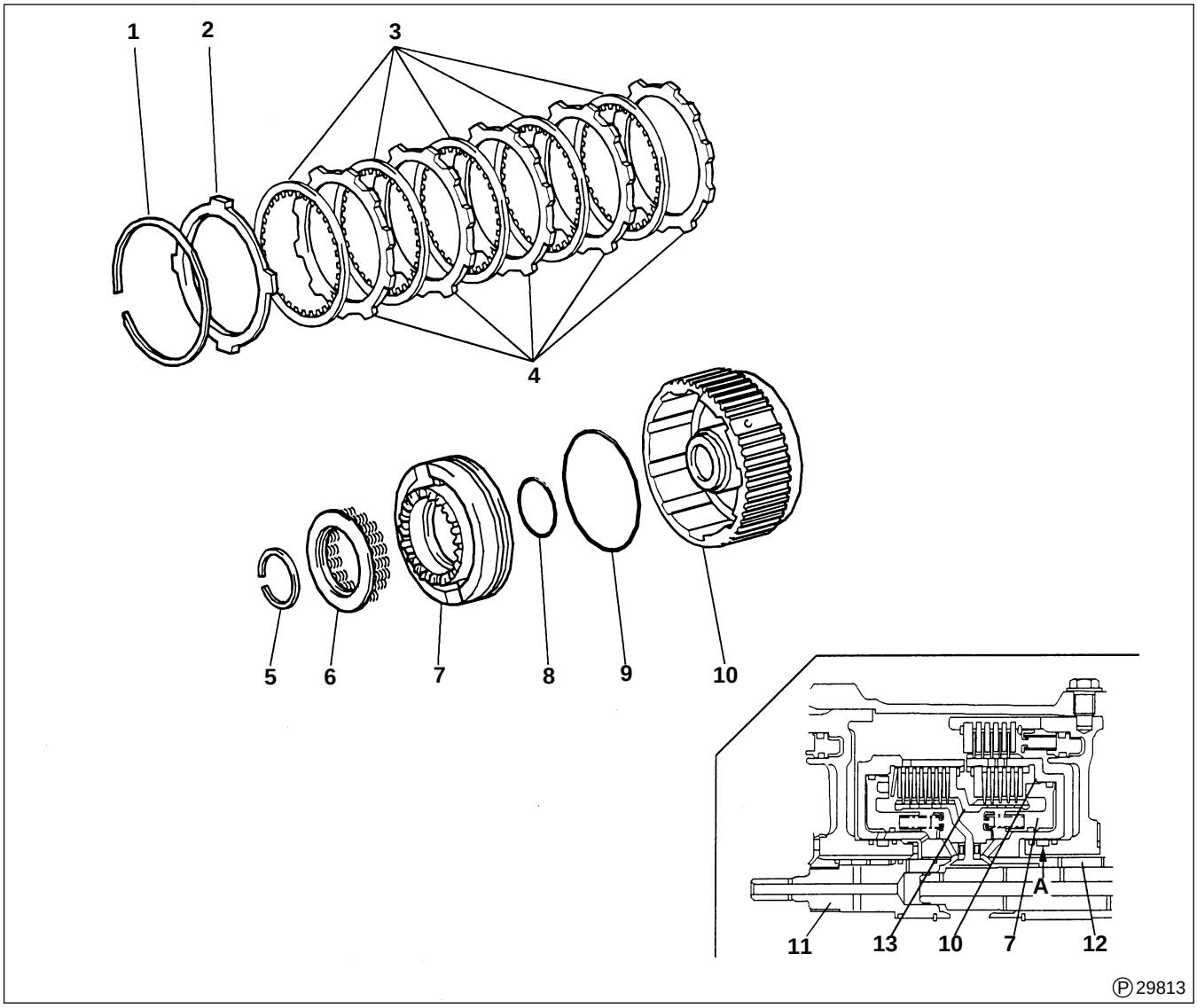

1 Snap ring
2 Clutch flange
3 Clutch discs
4 Clutch plates
5 Snap ring
6 Rear clutch piston return springs
7 Rear clutch piston
8 O-ring
9 O-ring
10 Rear clutch drum
11 Input shaft
12 Front and rear planetary sun gears
13 Rear clutch hub

A : Operating pressure

< Active condition >

The control valve supplies operating pressure **A** to rear clutch piston **7**, which causes the coupling of clutch discs **3** and clutch plates **4**, thus transmitting the engine's driving power from input shaft **11** and rear clutch hub **13** to rear clutch drum **10** and front and rear planetary sun gears **12**.

< Inactivate condition >

Since operating pressure **A** is not supplied, the force of rear clutch piston return springs **6** presses against rear clutch piston **7**.
As a result, clutch plates **4** are separated from clutch discs **3**, and the engine power is not transmitted.

● Overdrive Brake (B0)

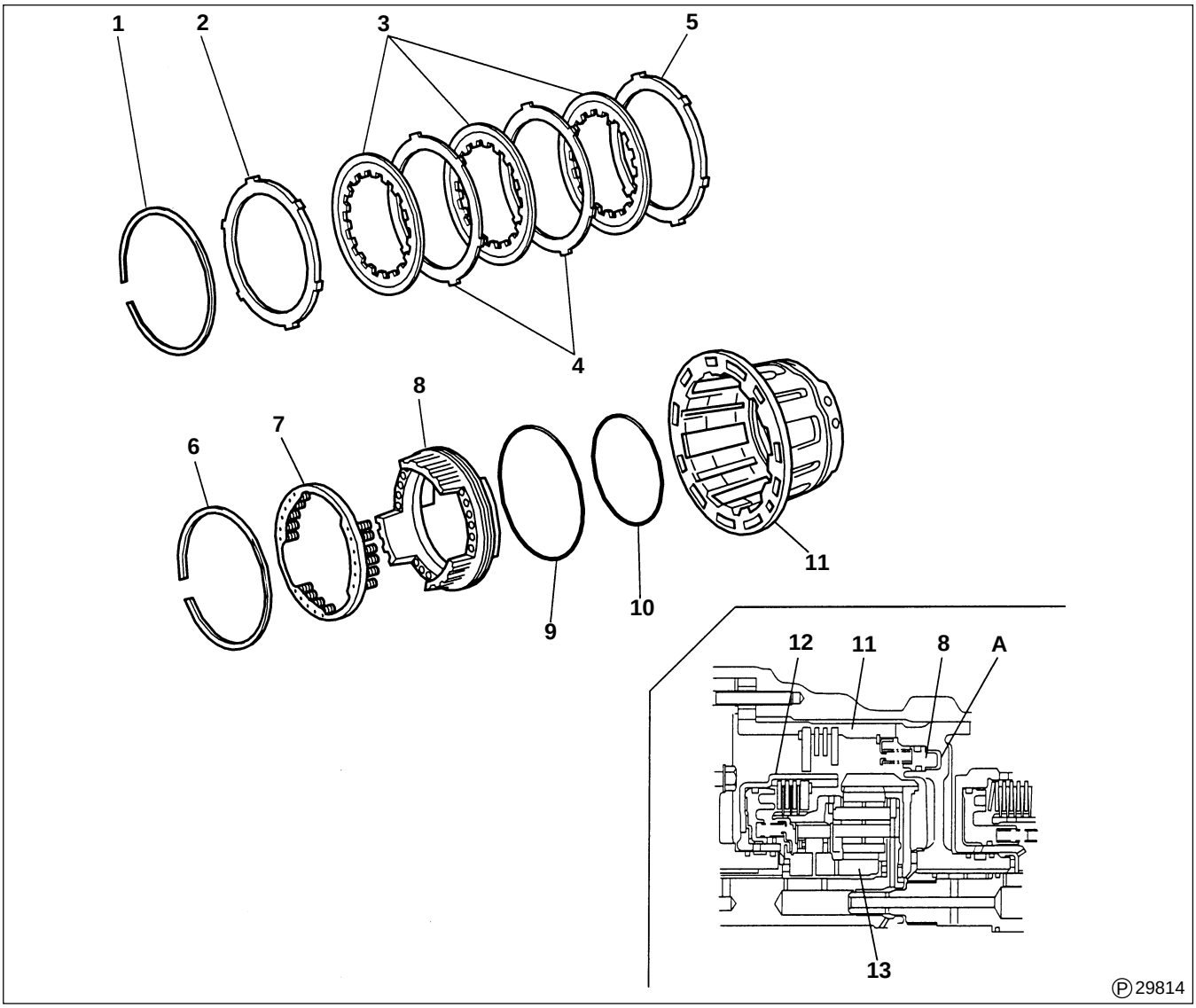

1	Snap ring	**6**	Snap ring	**11**	Overdrive case
2	Brake flange	**7**	Overdrive brake return springs	**12**	Overdrive direct clutch
3	Clutch discs	**8**	Overdrive brake piston	**13**	Overdrive planetary sun gear
4	Brake plates	**9**	O-ring		
5	Brake plates	**10**	O-ring	**A** :	Operating pressure

< Active condition >

The control valve supplies operating pressure **A** to overdrive brake piston **8**, which causes the coupling of clutch discs **3** and brake plates **4**, **5**, thus interlocking overdrive direct clutch **12** with overdrive case **11**. This sets overdrive planetary sun gear **13** in locked condition.

< Inactivate condition >

Since operating pressure **A** is not supplied, the force of overdrive brake return springs **7** presses against overdrive brake piston **8**.

As a result, brake plates **4**, **5** are separated from clutch discs **3**, and the engine power is not transmitted.

● 2nd Brake (B1)

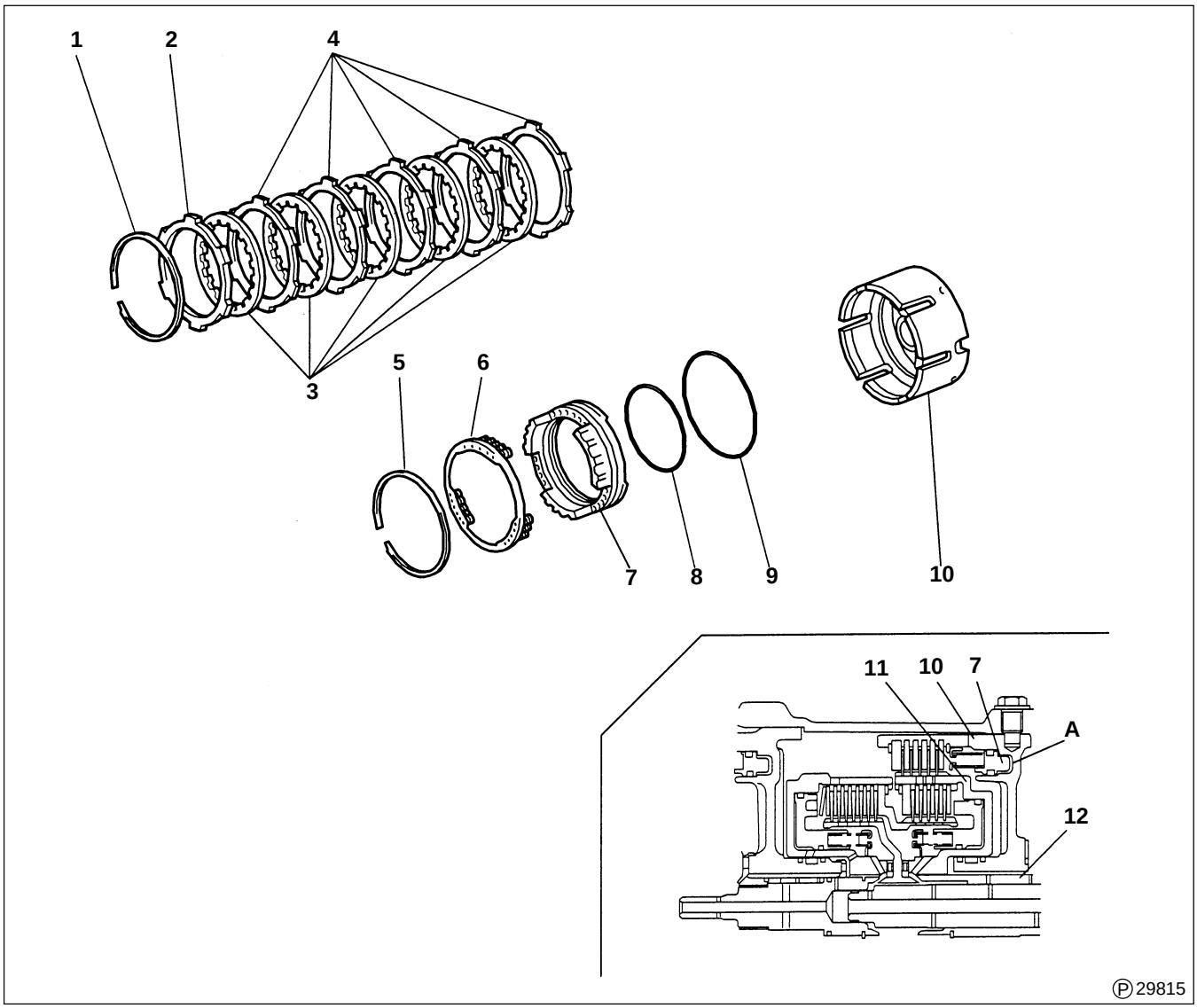

1 Snap ring
2 Brake flange
3 Clutch discs
4 Brake plates
5 Snap ring
6 2nd brake return springs
7 Brake piston No. 1
8 O-ring
9 O-ring
10 Center support
11 Rear clutch
12 Front and rear planetary sun gears

A : Operating pressure

< Active condition >

The control valve supplies operating pressure **A** to brake piston No.1 **7**, which causes the coupling of clutch discs **3** and brake plates **4**, thus interlocking rear clutch **11** with center support **10**. This sets front and rear planetary sun gears **12** in locked condition.

< Inactivate condition >

Since operating pressure **A** is not supplied, the force of 2nd brake return springs **6** presses against brake piston No.1 **7**.

As a result, brake plates **4** are separated from clutch discs **3**, and the engine power is not transmitted.

● 1st and Reverse Brake (B2)

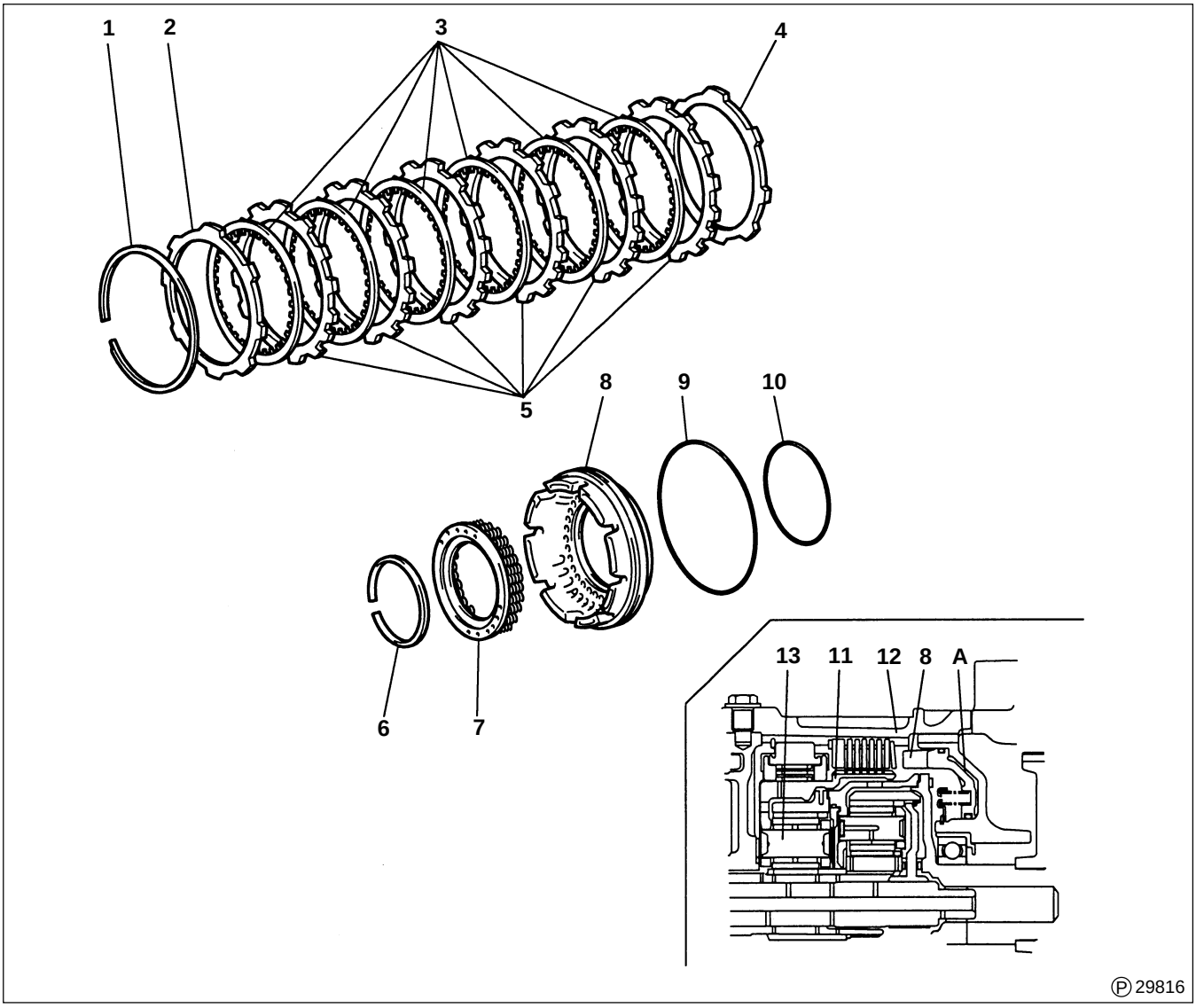

1 Snap ring
2 Brake flange
3 Clutch discs
4 Brake cushion plate
5 Brake plates
6 Snap ring
7 1st and reverse brake return springs
8 1st and reverse brake piston
9 O-ring
10 O-ring
11 1st and reverse brake hub
12 Transmission case
13 Front planetary carrier

A : Operating pressure

< Active condition >

The control valve supplies operating pressure **A** to 1st and reverse brake piston **8**, which causes the coupling of clutch discs **3** and brake plates **5**, thus interlocking 1st and reverse brake hub **11** with transmission case **12**. This sets front planetary carrier **13** in locked condition.

< Inactivate condition >

Since operating pressure **A** is not supplied, the force of 1st and reverse brake return springs **7** presses against 1st and reverse brake piston **8**.
As a result, brake plates **5** are separated from clutch discs **3**, and the engine power is not transmitted.

● Planetary Gears

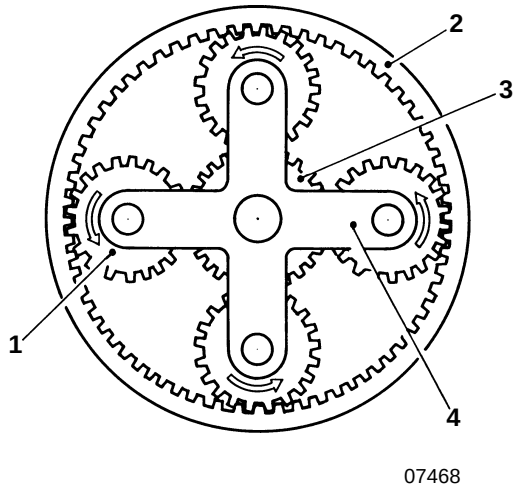

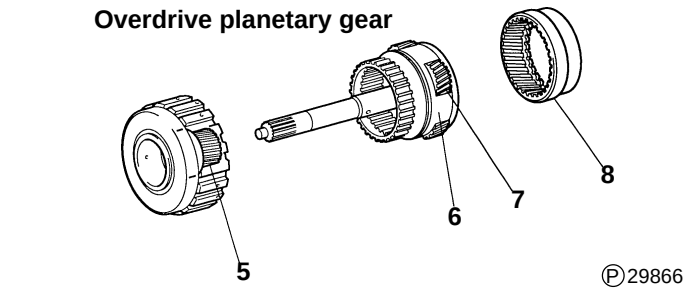

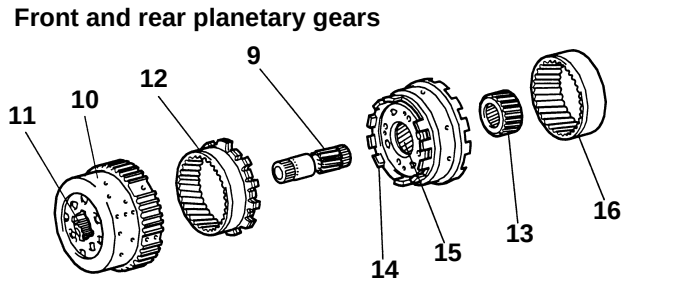

1 Pinion gear
2 Ring gear
3 Sun gear
4 Planetary carrier
5 Overdrive sun gear
6 Overdrive planetary carrier
7 Overdrive pinion gears
8 Overdrive ring gear
9 Front sun gear
10 Front planetary carrier
11 Front pinion gears
12 Front ring gear
13 Rear sun gear
14 Rear planetary carrier
15 Rear pinion gears
16 Rear ring gear

- Three sets of Simpson-type planetary gears provide a total of five gear ratios: four forward speeds and one reverse speed.
- Each planetary gear set consists of a sun gear **3** at the center and pinion gears **1** that revolve around the sun gear and on their axes. This set of gears are contained in a ring gear **2**. The pinion gears are attached to a planetary carrier **4**, so that all pinion gears rotate in the same direction and at the same rate. Gear shifting occurs when these four elements — sun gear, pinion gears, ring gear and planetary carrier — are provided with certain conditions. Clutches and brakes provide operating conditions to the planetary gears in accordance with shifting.

● Overdrive One-Way Clutch

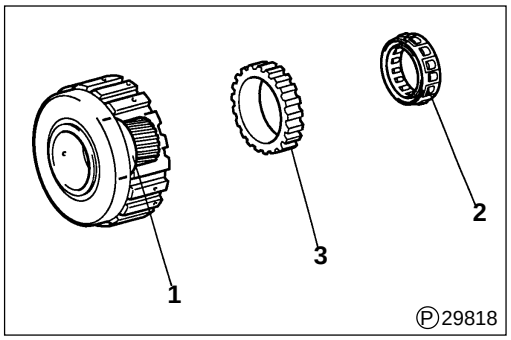

1 Overdrive direct clutch drum and overdrive one-way clutch inner race
2 Overdrive one-way clutch
3 Overdrive one-way clutch outer race

- During acceleration in the 1st, 2nd and 3rd gears, the overdrive one-way clutch **2** engages and becomes interlocked with the overdrive sun gear and overdrive planetary carrier.
- In the 4th gear, the overdrive one-way clutch **2** rotates freely.

● No. 2 One-Way Clutch

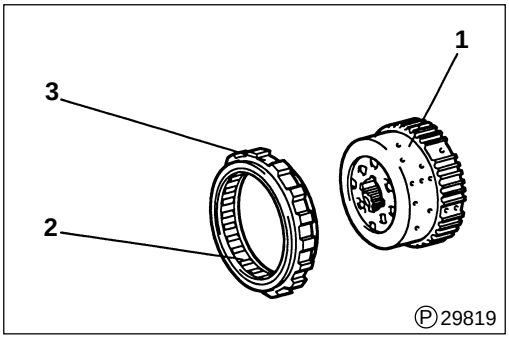

1 Front planetary carrier and No. 2 one-way clutch inner race
2 No. 2 one-way clutch
3 No. 2 one-way clutch outer race

- During acceleration in the 1st gear, the No. 2 one-way clutch **2** engages and becomes interlocked with the front planetary carrier.
- In the 1st, 2nd and 3rd gears, the No. 2 one-way clutch **2** rotates freely.

Torque Transmission Process

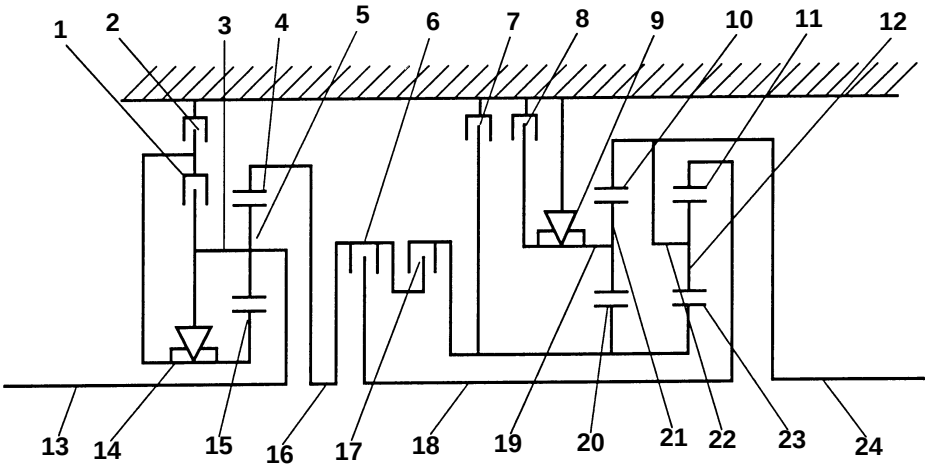

1 Overdrive direct clutch
2 Overdrive brake
3 Overdrive planetary carrier
4 Overdrive planetary ring gear
5 Overdrive planetary pinion gears
6 Front clutch
7 2nd brake
8 1st and reverse brake
9 No. 2 one-way clutch
10 Front planetary ring gear
11 Rear planetary ring gear
12 Rear planetary pinion gears
13 Overdrive input shaft
14 Overdrive one-way clutch
15 Overdrive planetary sun gear
16 Input shaft
17 Rear clutch
18 Intermediate shaft
19 Front planetary carrier
20 Front planetary sun gear
21 Front planetary pinion gears
22 Rear planetary carrier
23 Rear planetary sun gear
24 Output shaft

● D, and 2 Ranges (1st Gear)

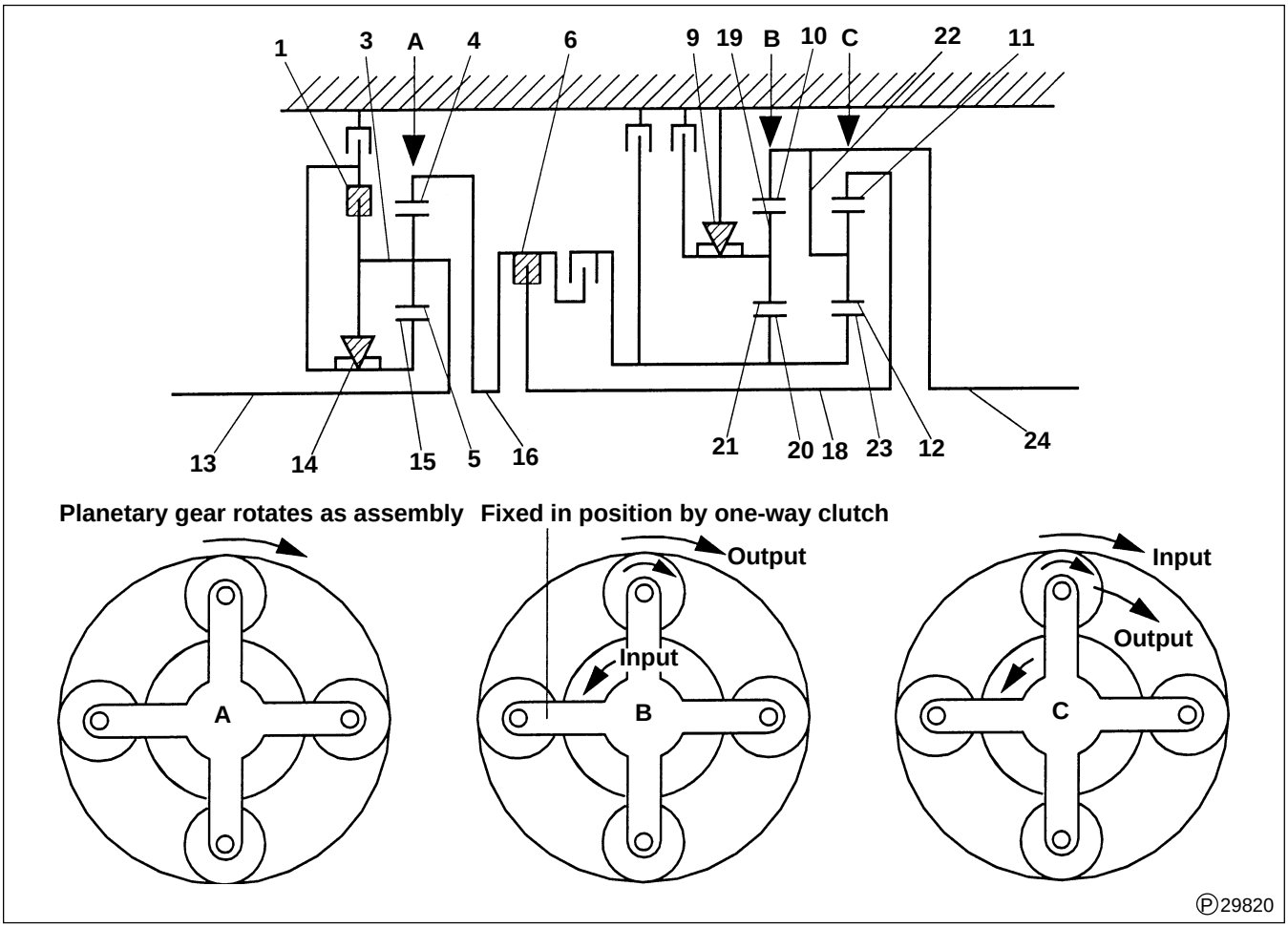

Overdrive direct clutch **1**, front clutch **6**, overdrive one-way clutch **14** and No. 2 one-way clutch **9** activate to provide the 1st gear. At overdrive planetary gear **A**, overdrive direct clutch **1** operates to interlock overdrive planetary carrier **3** (overdrive input shaft **13**) with overdrive planetary sun gear **15**. This disables overdrive planetary pinion gears **5** from rotating on their axes, and overdrive planetary carrier **3** becomes locked (direct coupling) in position with overdrive planetary ring gear **4**, thus transmitting driving force to input shaft **16**. Clockwise rotation of overdrive planetary carrier **3** results in a force that attempts to turn overdrive pinion gears **5** in a counterclockwise direction, producing clockwise rotating force for overdrive planetary sun gear **15**. However, since overdrive planetary sun gear **15** rotates faster than overdrive planetary carrier **3**, overdrive one-way clutch **14** activates, interlocking overdrive planetary carrier **3** with overdrive planetary sun gear **15**. This disallows overdrive planetary pinion gears **5** from rotating on their axes, in the same way as when overdrive direct clutch **1** activates. Therefore, overdrive planetary carrier **3** becomes locked (direct coupling) in position with overdrive planetary ring gear **4**, thus transmitting the driving force to input shaft **16**.

These two power transmitting systems reduce the load on overdrive direct clutch **1**.

The clockwise rotating force of input shaft **16** is transmitted to intermediate shaft **18** by the action of front clutch **6**, then turns rear planetary pinion gears **12** clockwise by means of rear planetary ring gear **11**. In this process, rear planetary carrier **22** is stationary due to vehicle weight. Therefore, rear planetary sun gear **23** receives counterclockwise rotating force and transmits this force to front planetary pinion gears **21**, exerting force to rotate front planetary carrier **19** in a counterclockwise direction. However, since No. 2 one-way clutch **9** prevents front planetary carrier **19** from rotating in a counterclockwise direction, pinion gears **12**, **21** cause front planetary ring gear **10** and rear planetary carrier **22** to rotate in a clockwise direction, thereby transmitting the rotating force to output shaft **24**. (Rotational directions are described as viewed from the torque converter side.)

Power transmitting process

Overdrive input shaft **13** → Overdrive planetary carrier **3** → Overdrive planetary pinion gears **5** → Overdrive planetary ring gear **4** → Input shaft **16** → Front clutch **6** → Intermediate shaft **18** → Rear planetary ring gear **11** → Rear planetary pinion gears **12** → Rear planetary carrier **22** → Output shaft **24**

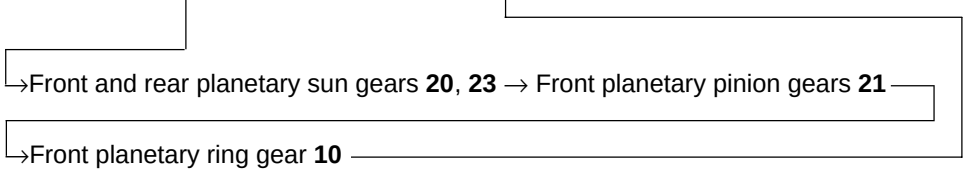

● D Range (2nd Gear)

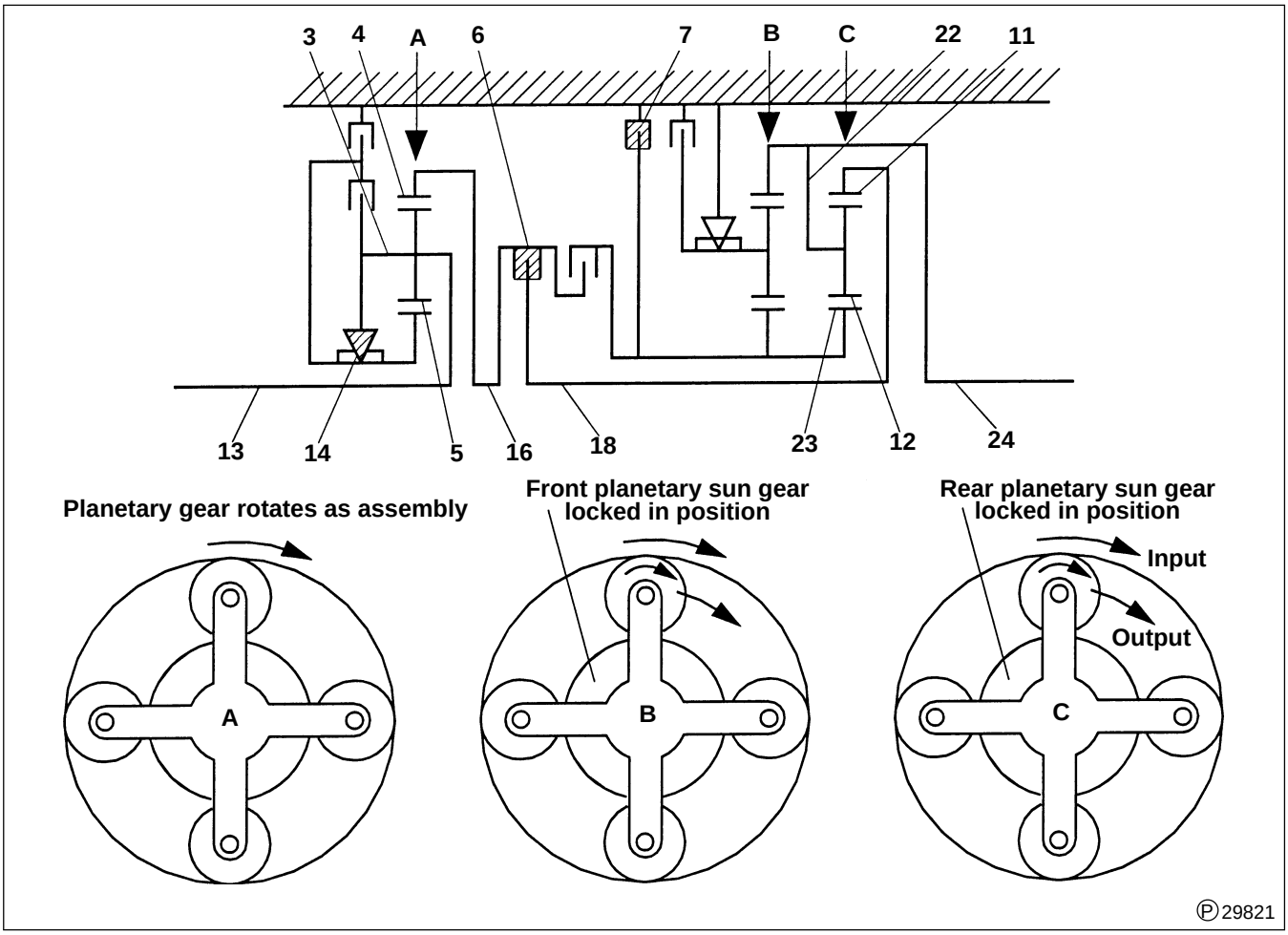

Front clutch **6**, 2nd brake **7** and overdrive one-way clutch **14** activate to provide the 2nd gear. In this gear, overdrive one-way clutch **14** transmits the rotating force of input shaft **16** to rear planetary pinion gears **12** by means of intermediate shaft **18** and rear planetary ring gear **11**. Although rear planetary sun gear **23**, which is meshed with pinion gears **12**, receives a counterclockwise rotating force, 2nd brake **7** prevents its rotation, disabling the transfer of the rotating force to front planetary gear **B**. As a result, the rotating force transmits to rear planetary carrier **22** via rear planetary pinion gears **12**, then to output shaft **24**.

Power transmitting process

Overdrive input shaft **13** → Overdrive planetary carrier **3** → Overdrive planetary pinion gears **5** → Overdrive planetary ring gear **4** → Input shaft **16** → Front clutch **6** → Intermediate shaft **18** → Rear planetary ring gear **11** → Rear planetary pinion gears **12** → Rear planetary carrier **22** → Output shaft **24**

● D, 2 and L Ranges (3rd Gear)

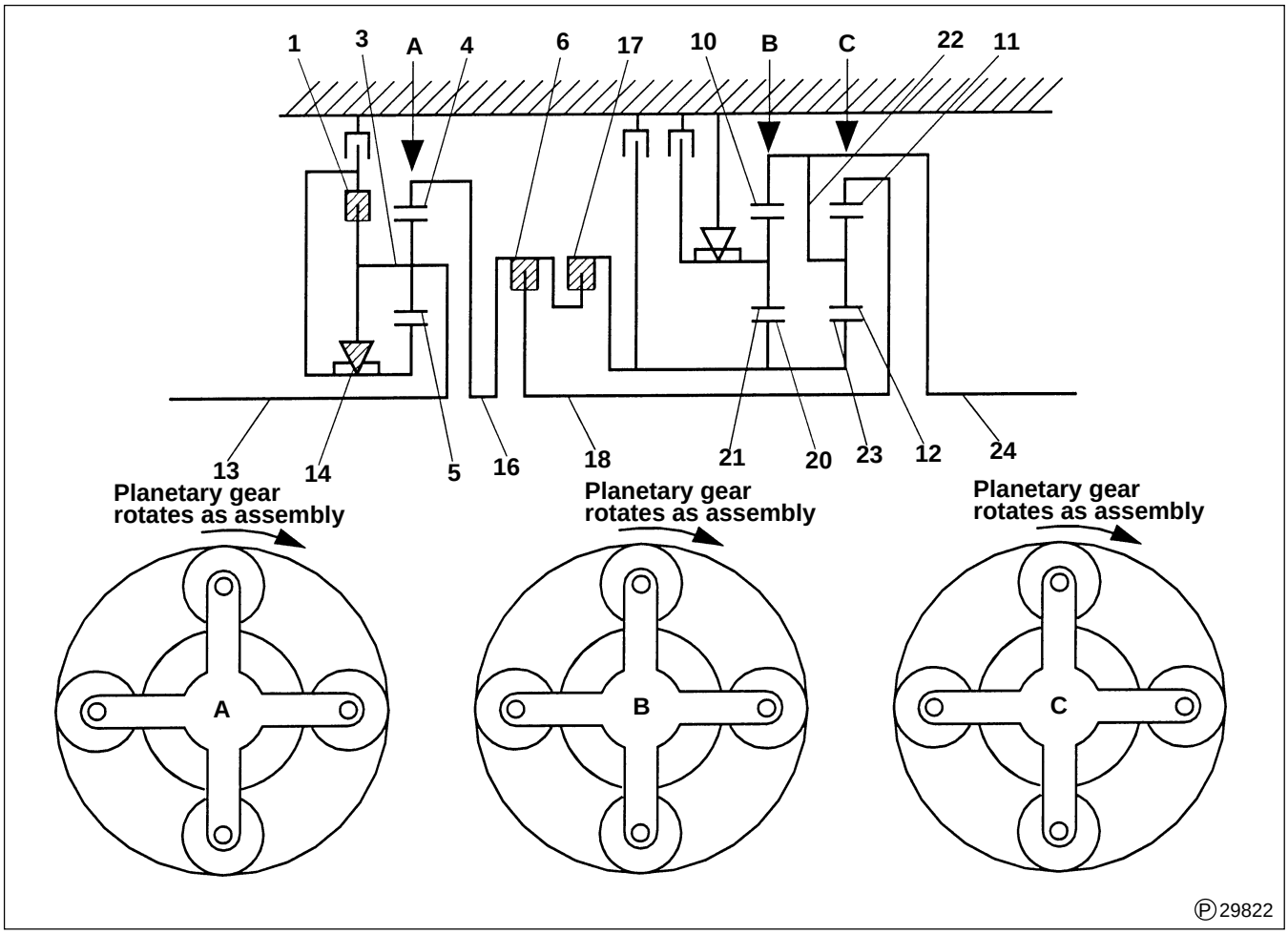

Overdrive direct clutch **1**, front clutch **6**, rear clutch **17** and Overdrive one-way clutch **14** activate to provide the 3rd gear. In this gear, front clutch **6** and rear clutch **17** cause intermediate shaft **18** and front and rear sun gears **20**, **23** to rotate in the same direction. Therefore, front and rear planetary pinion gears **12**, **21** become locked in position, thus the entire assemblies of planetary gears **A**, **B**, **C** rotate together to transmit the rotating force of input shaft **16** to output shaft **24** without reducing the rate of rotating speed.

Power transmitting process

Overdrive input shaft **13** → Overdrive planetary carrier **3** → Overdrive planetary pinion gears **5** → Overdrive planetary ring gear **4** → Input shaft **16** →Front clutch **6** → Intermediate shaft **18**

→Rear planetary ring gear **11** → Rear planetary pinion gears **12**

→Rear clutch **17**

→Rear planetary carrier **22** →Output shaft **24**

→Rear planetary sun gear **23** → Rear planetary pinion gears **12**

→Front planetary sun gear **20** → Front planetary pinion gears **21** → Front planetary ring gear **10**

● D Range (4th Gear)

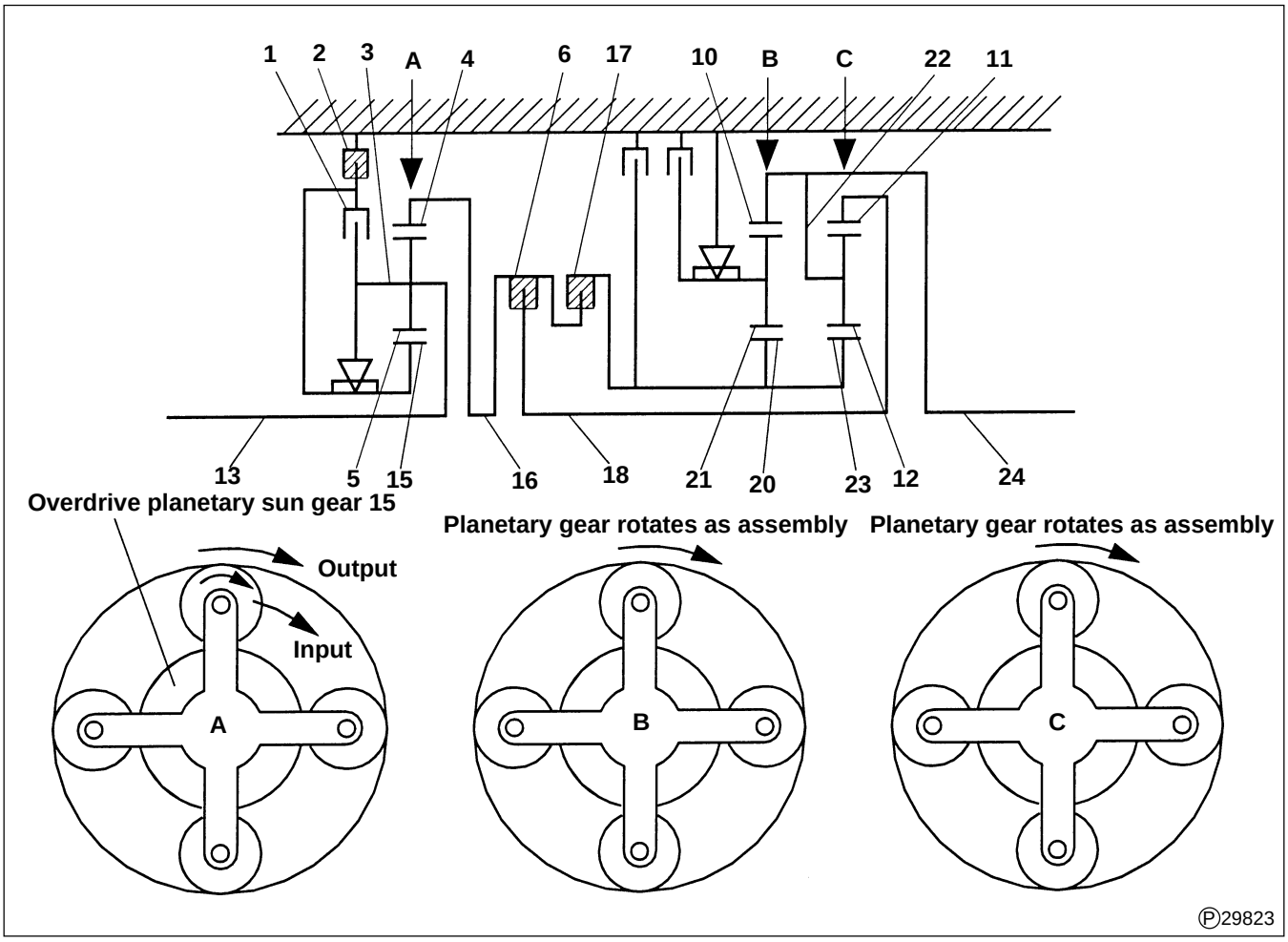

If the overdrive conditions (see the table below) are fulfilled when the transmission is in 3rd gear, overdrive direct clutch **1** disengages, and overdrive brake **2** activates at the same time to provide the overdrive gear ratio. In the overdrive gear, overdrive brake **2** is in operation, thus locking overdrive planetary sun gear **15** in position. Therefore, the rotating force transmitted from overdrive input shaft **13** to overdrive planetary carrier **3** causes overdrive planetary pinion gears **5** to revolve around the sun gear and on their own axes, which results in an increased rotating speed of overdrive planetary ring gear **4** (input shaft **16**). The rotating force of input shaft **16** is transmitted to output shaft **24**, in the same way as in the 3rd gear.

Overdrive conditions

Shift position	D
Overdrive OFF SW	OFF
Temperature of oil in oil pan	Approximately 0°C {32°F} or higher

Power transmitting process

Overdrive input shaft **13** → Overdrive planetary carrier **3** → Overdrive planetary pinion gears **5** → Overdrive planetary ring gear **4** → Input shaft **16** → Front clutch **6** → Intermediate shaft **18**

→ Rear planetary ring gear **11** → Rear planetary pinion gears **12**

→ Rear clutch **17** → Rear planetary carrier **22** → Output shaft **24**

→ Rear planetary sun gear **23** → Rear planetary pinion gears **12**

→ Front planetary sun gear **20** → Front planetary pinion gears **21** → Front planetary ring gear **10**

● 2 Range (2nd Gear)

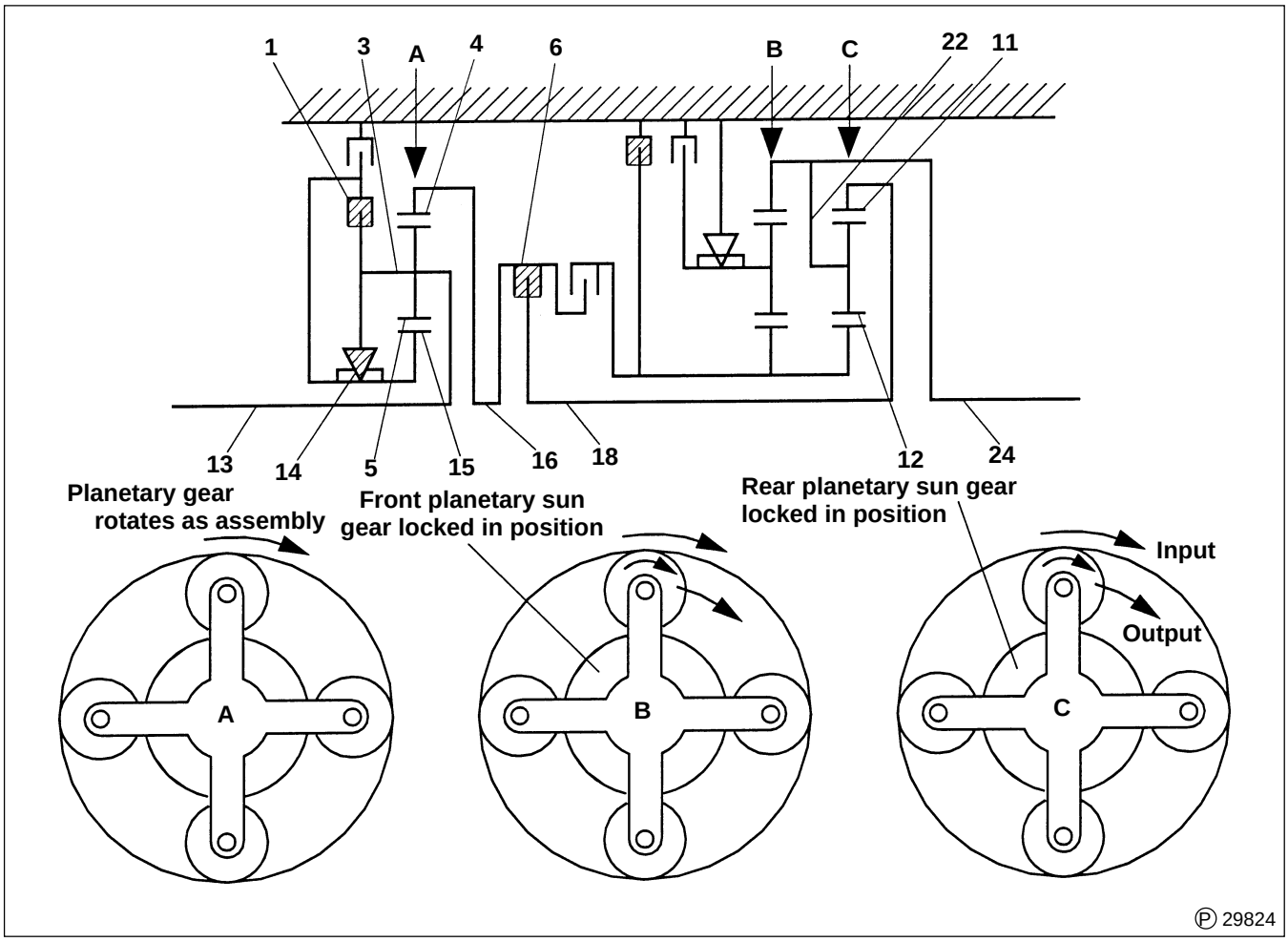

The rotating power is transmitted in the same way as in the previously described 2nd gear in the D range. However, when engine brake is applied, overdrive direct clutch **1** activates and prevents overdrive planetary sun gear **15** from rotating clockwise. In other words, when the transmission is in 2nd gear with the range selector in the D range, overdrive one-way clutch **14** transmits the rotating power to input shaft **16**. When the engine brake is applied, however, the counterclockwise rotating force of overdrive planetary sun gear **15** inactivates overdrive one-way clutch **14** and causes overdrive planetary sun gear **15** to spin freely. This disallows the transmission of the engine brake force. To properly transmit the engine brake force in the 2 range, overdrive direct clutch **1** is activated to interlock overdrive planetary sun gear **15** with overdrive planetary carrier **3**.

Power transmitting process

Overdrive input shaft **13** → Overdrive planetary carrier **3** → Overdrive planetary pinion gears **5** → Overdrive planetary ring gear **4** → Input shaft**16** → Front clutch **6** → Intermediate shaft **18** → Rear planetary ring gear **11** → Rear planetary pinion gears **12** → Rear planetary carrier **22** → Output shaft **24**

● L Range (1st Gear)

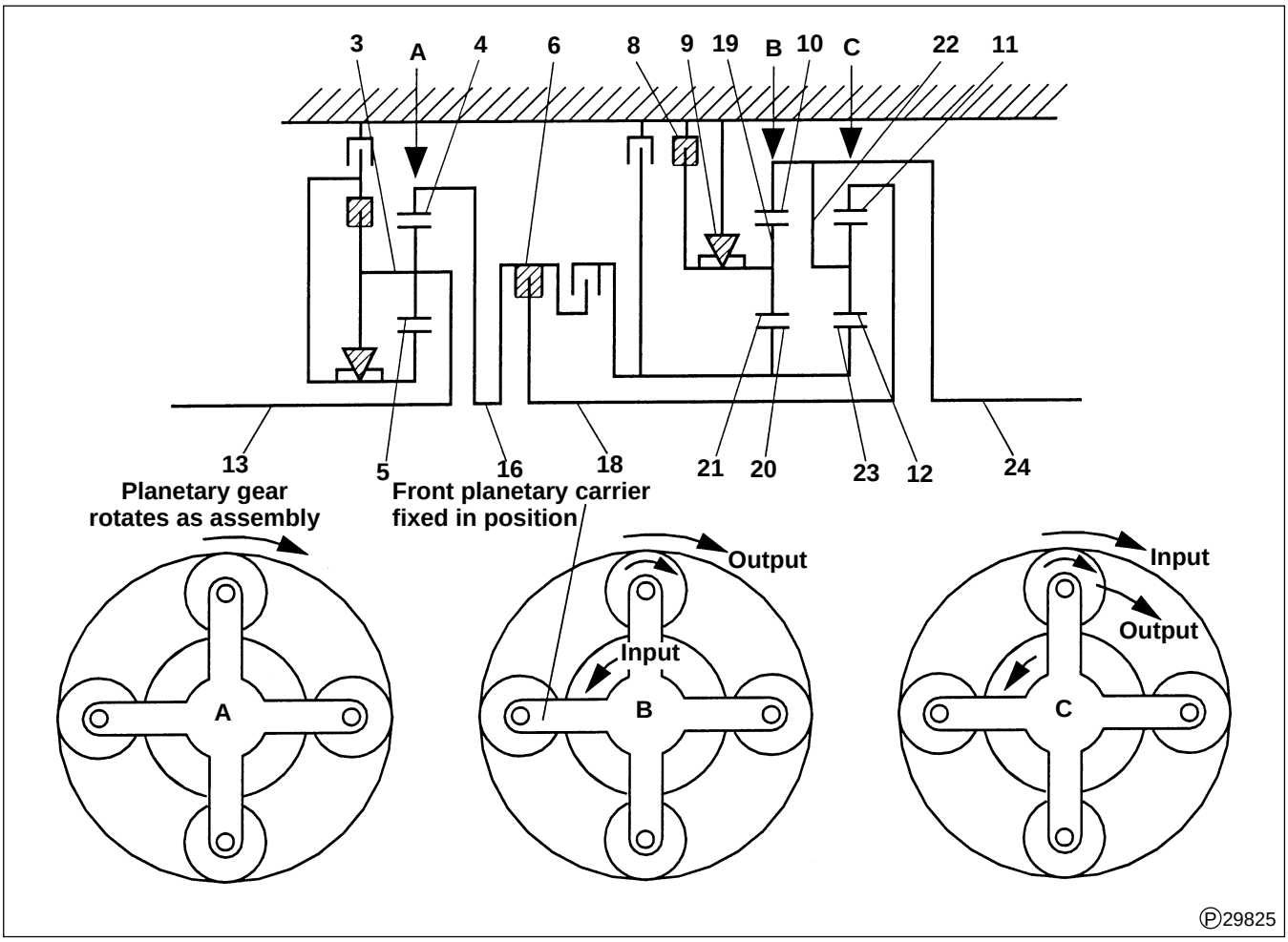

The rotating power is transmitted in the same way as in the previously described 1st gear in the D and L ranges. However, when the engine brake is applied, 1st and reverse brake **8** activates and prevents front planetary carrier **19** from rotating clockwise. In other words, when the transmission is in 1st gear with the range selector in the D or 2 range, No. 2 one-way clutch **9** prevents a counterclockwise rotation of front planetary carrier **19** and transmits the rotating power to output shaft **24**. When the engine brake is applied, however, a rotating force in the reverse direction is generated, inactivating No. 2 one-way clutch **9** and allowing front planetary carrier **19** to spin freely. This disallows the transmission of the engine brake force. To properly transmit the engine brake force in the L range, 1st and reverse brake **8** is activated to lock front planetary carrier **19** in position.

Power transmitting process

Overdrive input shaft **13** → Overdrive planetary carrier **3** → Overdrive planetary pinion gears **5** → Overdrive planetary ring gear **4** → Input shaft **16** → Front clutch **6** → Intermediate shaft **18** → Rear planetary ring gear **11** → Rear planetary pinion gears **12** → Rear planetary carrier **22** → Output shaft **24**

→Front and rear planetary sun gears **20**, **23** → Front planetary pinion gears **21**

→Front planetary ring gear **10**

● R Range

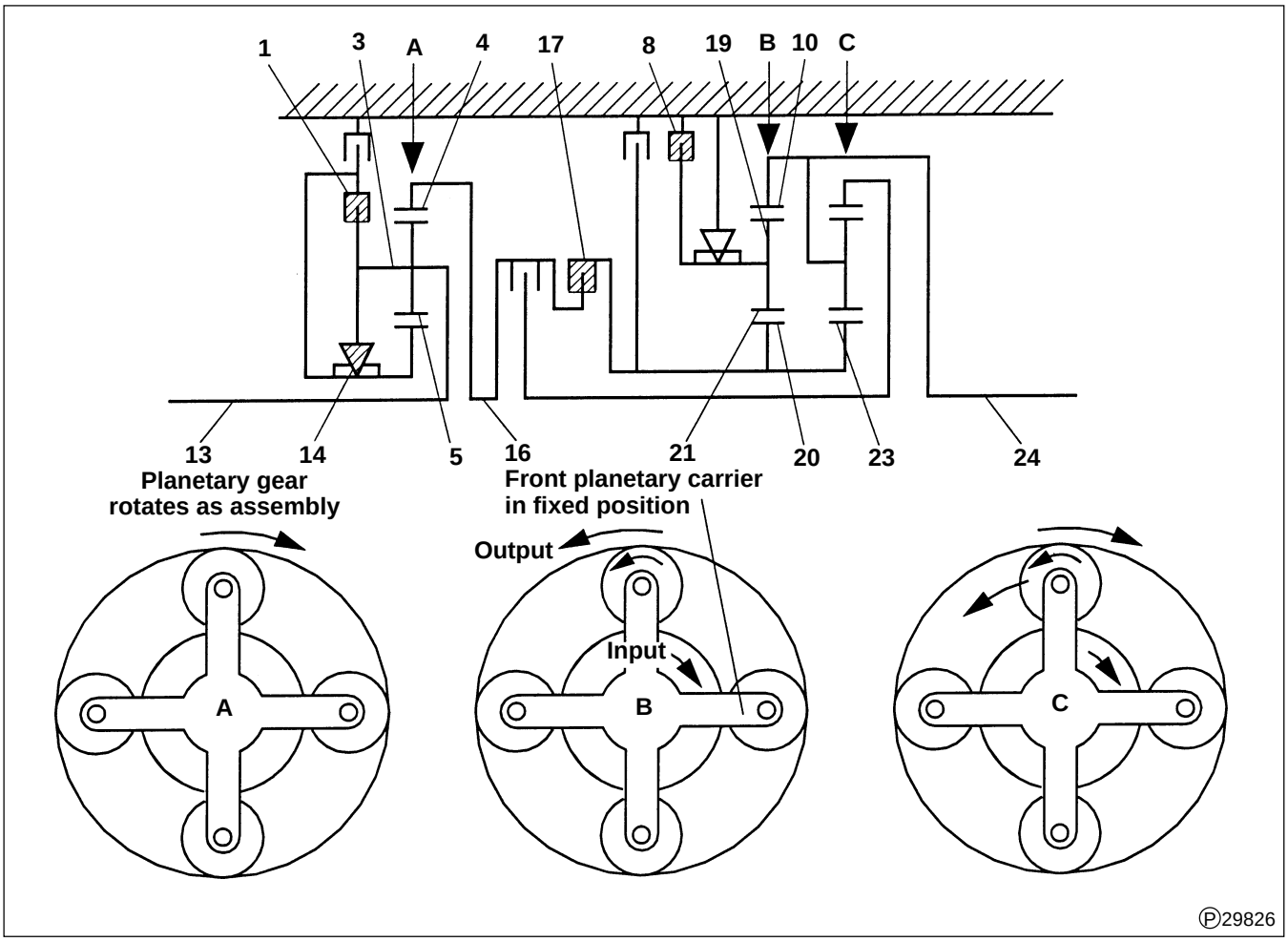

In the R range, overdrive direct clutch **1**, overdrive one-way clutch **14**, rear clutch **17** and 1st and reverse brake **8** activate to provide reverse gear. The rotating force of overdrive input shaft **13** is transmitted to input shaft **16** via direct coupling, in the same way as in the 1st gear in the D and 2 ranges. Since rear clutch **17** in operation, the rotating force of input shaft **16** is transmitted to pinion gears **21** of front planetary gear **B** by means of the sun gear. However, because front planetary carrier **19** is locked in position by 1st and reverse brake **8**, the rotating force of front planetary sun gear **20** is transmitted to the ring gear by means of front planetary pinion gears **21**, thus providing a counterclockwise rotating force to output shaft **24**.

Power transmitting process

Overdrive input shaft **13** → Overdrive planetary carrier **3** → Overdrive planetary pinion gears **5** → Overdrive planetary ring gear **4** → Input shaft **16** → Rear clutch **17** → Front planetary sun gear **20** → Front planetary pinion gears **12** → Front planetary ring gear **10** → Output shaft **24**

● N Range

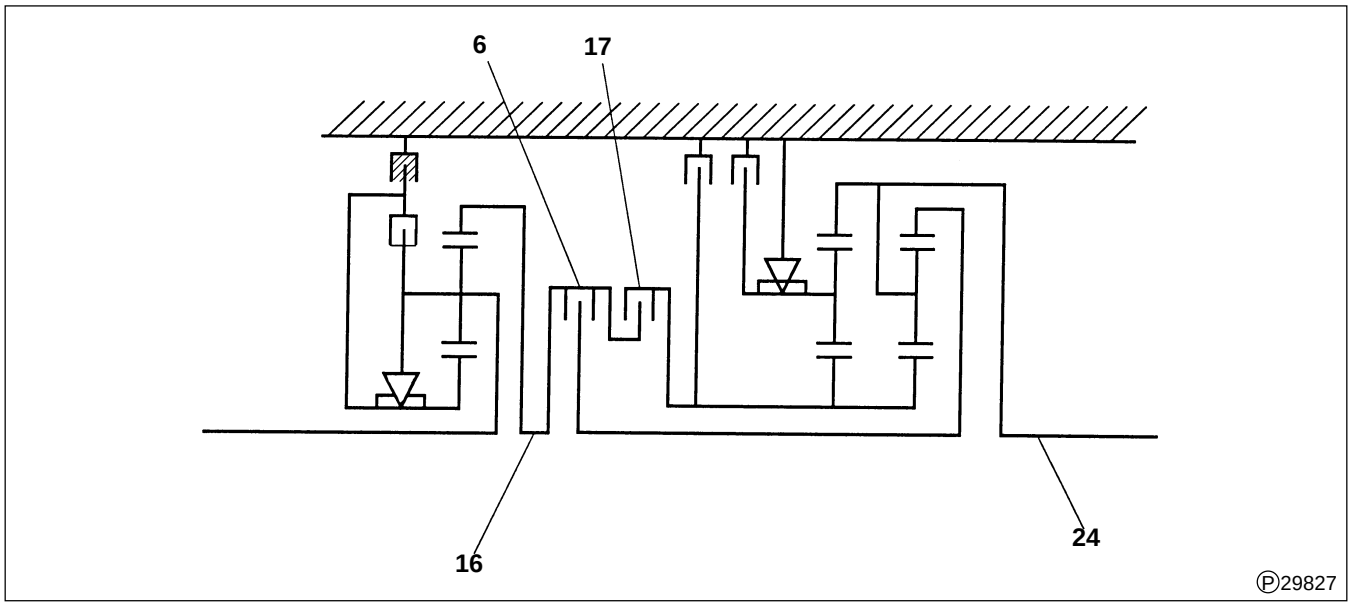

- **N range**

  Since front clutch **6** and rear clutch **17** are disengaged, the driving force of input shaft **16** is not transmitted to output shaft **24**.

● P Range

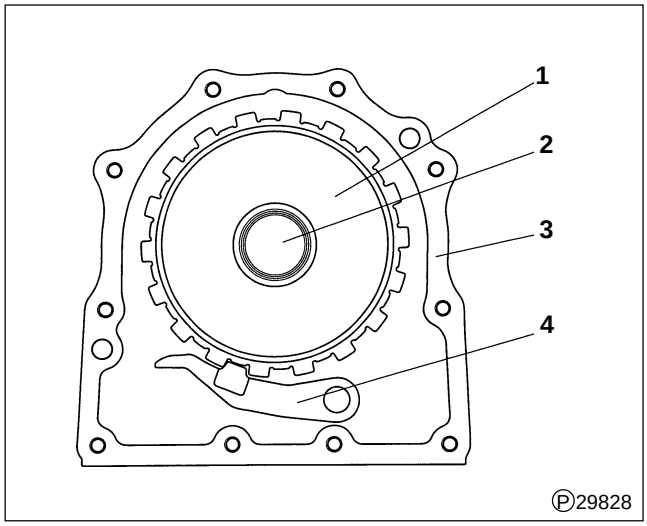

1 Parking lock gear
2 Output shaft
3 Transmission case
4 Parking lock pawl

- **P range**

  In the same way as in the N range, the driving force of the input shaft is not transmitted to output shaft **2**. Parking lock pawl **4**, which is linked with the range selector lever, meshes with parking lock gear **1** which is directly connected to the output shaft, thus disallowing vehicle movement.

● Torque Converter

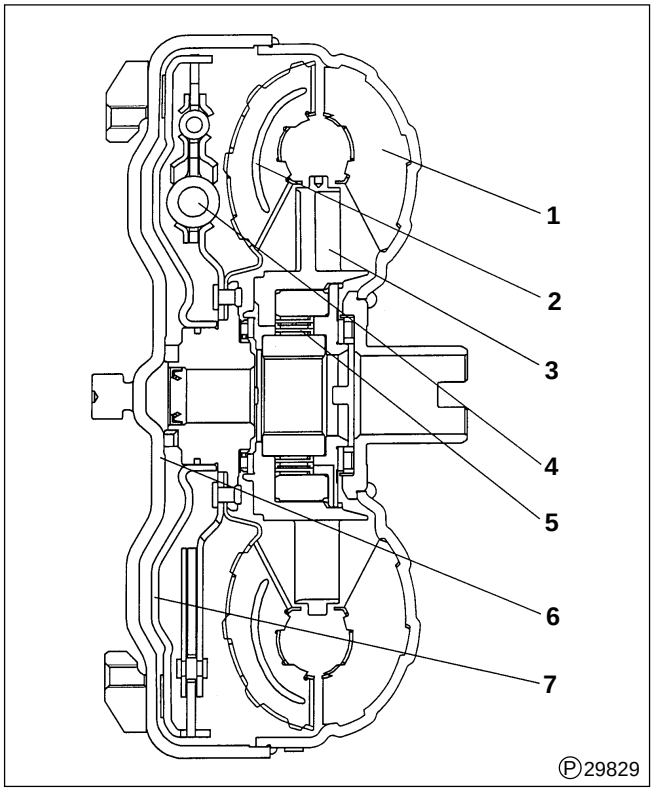

1 Pump impeller
2 Turbine liner
3 Stator
4 Lock-up damper
5 One-way clutch
6 Front converter cover
7 Lock-up piston

- The torque converter transfers engine torque to the transmission. It transmits engine torque by means of oil when it is not in a lock-up condition, and it transfers power via the lock-up piston when it is in a lock-up condition.
- The torque converter is a 3-element, 1-stage, 2-phase type.
- "1-stage" indicates that the torque converter has one turbine liner, which is an output element. "2-phase" means that it provides a torque converter function when the turbine liner speed is relatively slow as compared to the pump impeller speed, and acts as a fluid coupler when the turbine liner speed is high.

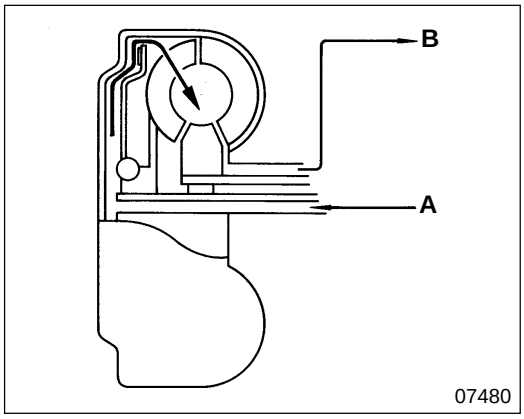

< Lock-up mechanism in inactive condition >

The lock-up control valve supplies the torque converter operating pressure through oil passage **A** to the space between the front converter cover and lock-up piston. This oil pressure separates the clutch facing of the lock-up piston from the front converter cover. As a result, the torque converter operating pressure supplied through oil passage **A** is released from oil passage **B**, and enters the oil cooler.

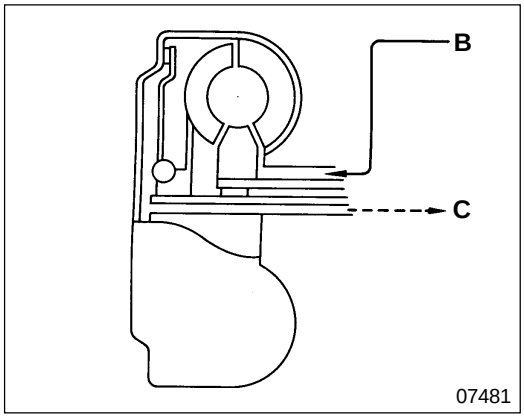

< Lock-up mechanism in active condition >

The lock-up control valve switches the operating oil passage. The torque converter operating pressure is supplied through oil passage **B** to the pump impeller, turbine liner and stator.
As a result, the oil pressure applied to the lock-up piston causes the clutch facing of the lock-up piston to engage with the front converter cover for improved power transmitting efficiency.
C : Drain

● Oil Pump

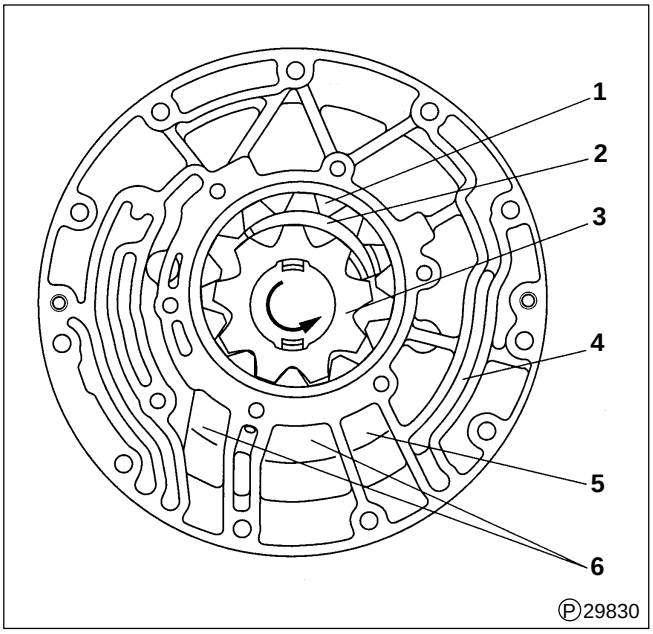

1 Driven gear
2 Crescent
3 Drive gear
4 Oil pump body
5 Outlet port
6 Inlet port

- Feature ..... The oil pump gears have a small number of gear teeth and features a special high-performance tooth profile.
- Operation ··· The drive gear is fitted to the extension sleeve of the torque converter, and rotates in the same direction (in the direction of the arrow) as the engine to compress and discharge the intake oil.

Operation Error Protection Device

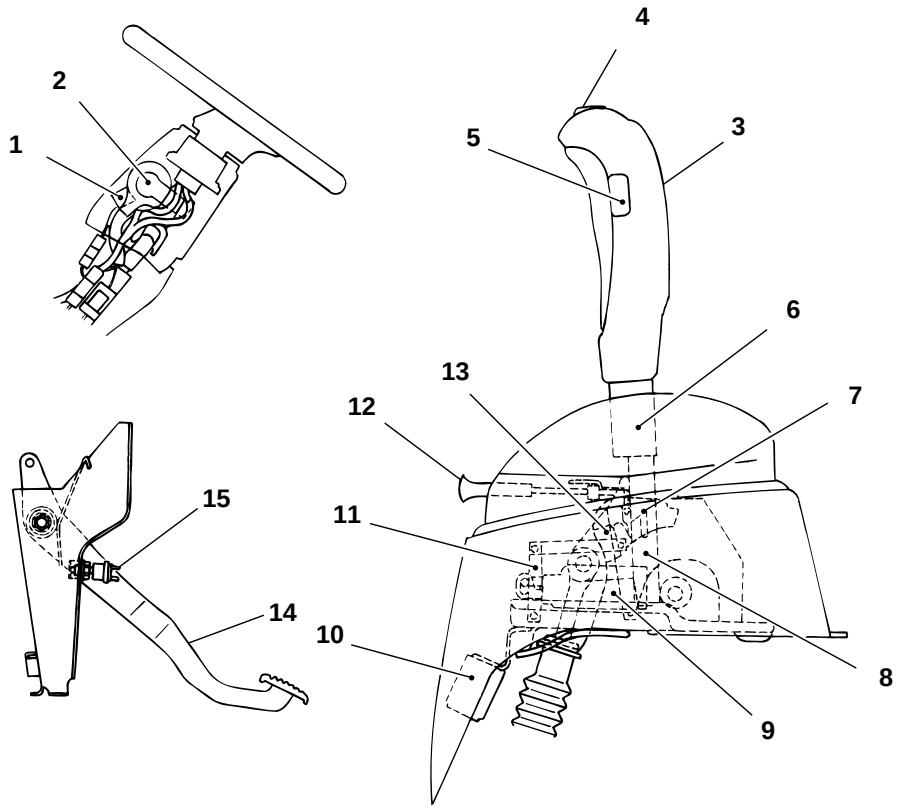

13990

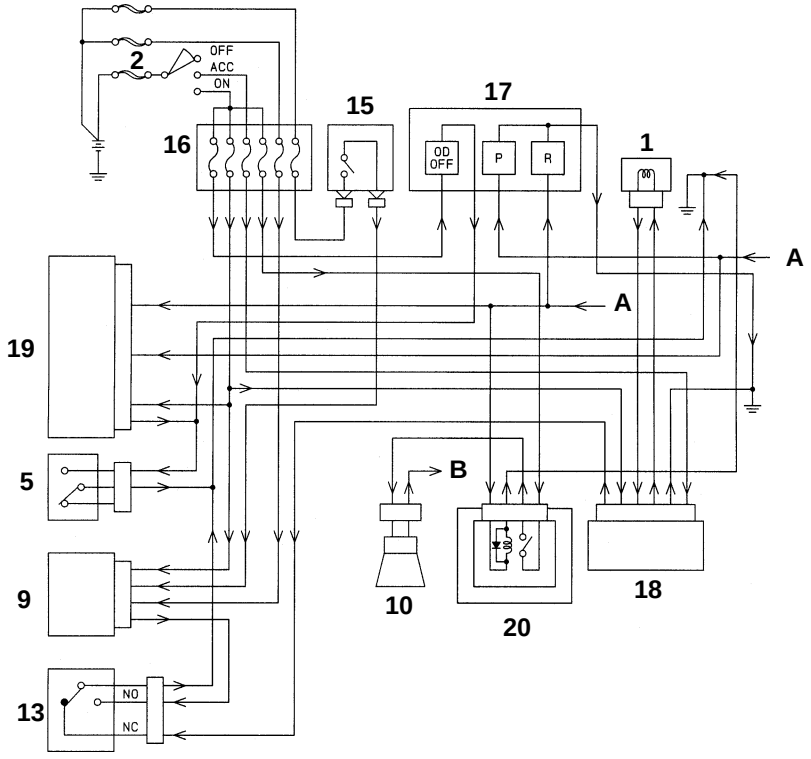

31559

1 Key interlock solenoid
2 Starter switch
3 Automatic transmission knob
4 Shift button
5 Overdrive OFF switch
6 Selector lever
7 Pin
8 Lever bracket
9 Shift lock actuator
10 Automatic transmission reverse buzzer
11 Shift lock link
12 Shift lock release knob
13 P range switch
14 Brake pedal
15 Stop lamp switch
16 Fuse box
17 Meter cluster
18 Key interlock electronic control unit
19 Automatic transmission electronic control unit
20 Backup lamp relay

A : From inhibitor switch
B : To backup buzzer

● **Parking Shift Lock Device with Key Interlock**

The key interlock device prevents the removal of the key unless selector lever **6** is in the P (Parking) range. The shift lock device disallows the selector lever from moving from the P range position unless brake pedal **15** is pressed, thereby preventing accidental vehicle movement caused by an unintended selector lever operation.

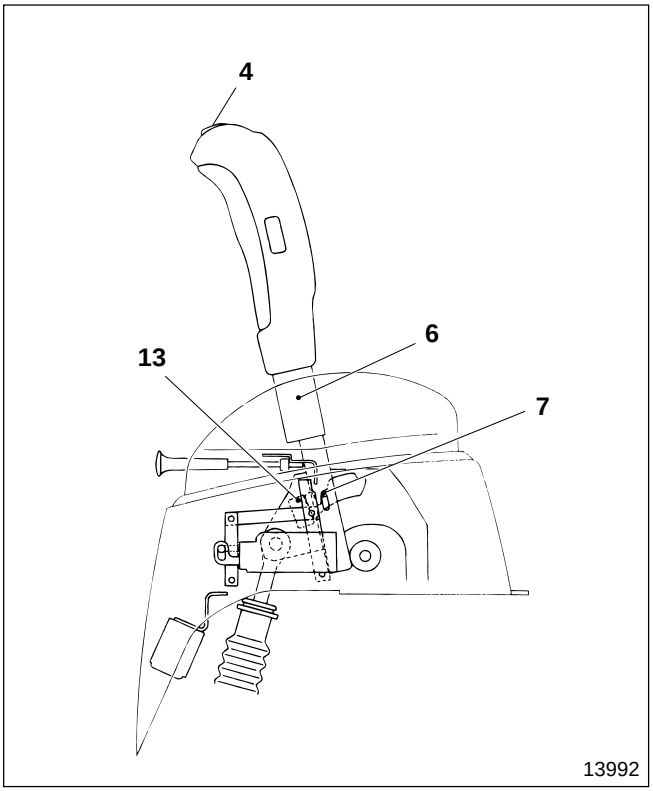

Key interlock device

< Lock condition >

Condition: When selector lever **6** is in a position other than the P range or when shift button **4** is pressed with the selector lever in the P range, pin **7** is not in contact with P range switch **13** (switch is set free). Therefore, the switch is ON.

↓

An electric current flows from key interlock electronic control unit **18** to key interlock solenoid **1** to activate the key interlock solenoid.

↓

Key interlock solenoid **1** turns ON to prevent starter switch **2** from being turned to the LOCK position, thus disabling the removal of the key.

< Unlock condition >

Condition: When selector lever **6** is in the P range and shift button **4** is not pressed, pin **7** presses again P range switch **13** (switch is activated). Therefore, the switch is OFF.

↓

No electric current flows from key interlock electronic control unit **18** to key interlock solenoid **1**. Therefore, the key interlock solenoid is OFF.

↓

Key interlock solenoid **1** does not turn ON, thereby disengaging starter switch **2** and allowing the switch to turn to the LOCK position for the removal of the key.

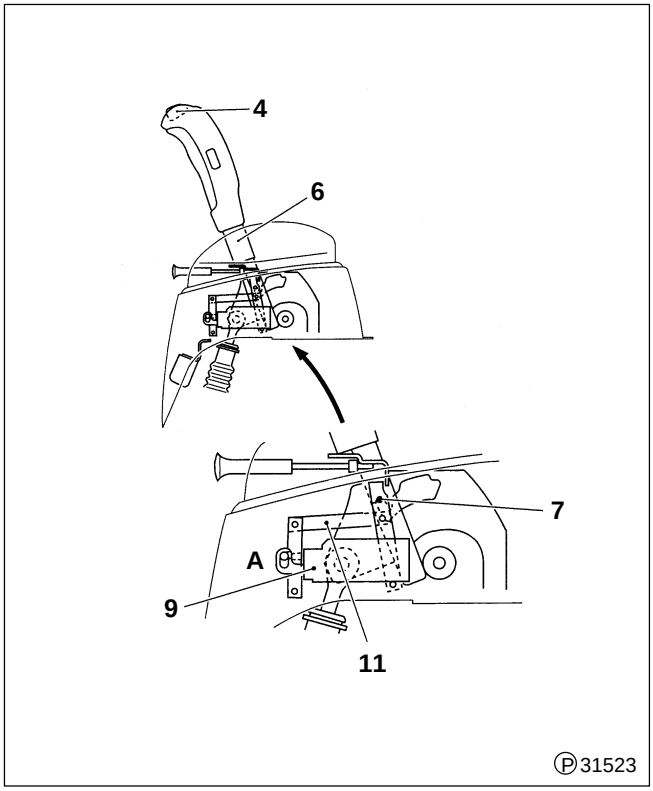

P shift lock device

- With selector lever **6** in the P range, when the electric current (see the table below) supplied to shift lock actuator **9** sets the shift lock actuator in lock position **A**, pin **7** is restrained by shift lock link **11** and disallows pressing of shift button **4**. Therefore, the selector lever cannot be moved from the P range.

Power supply		Switch		Operation mode	
IG	+B	Brake	P range	Unlock	Lock
○	○	○	○	○←	
○	○		○		→○
○	○	○		○	
○	○			○	
	○	○	○		→○
	○		○		→○
	○	○		○	
	○			○	

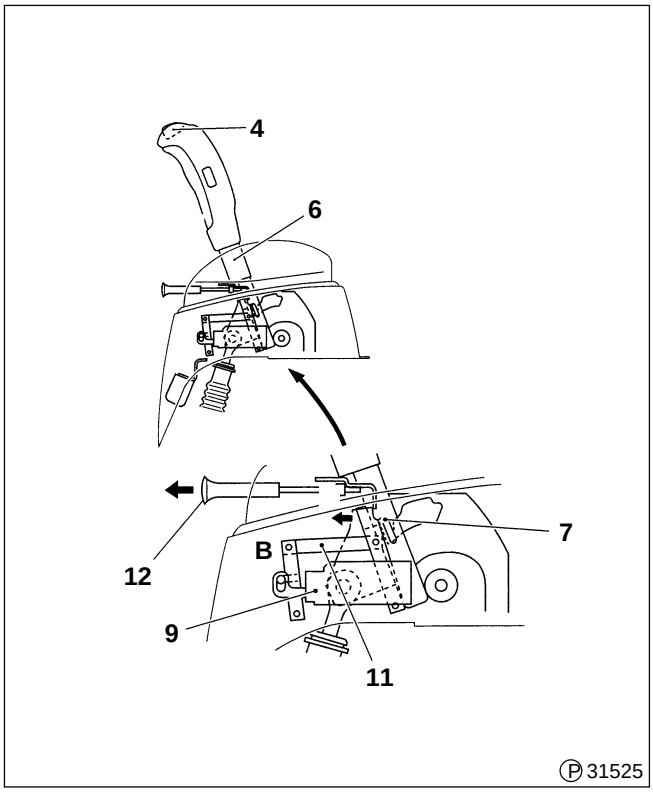

- With selector lever **6** in the P range, when the electric current (see the above table) supplied to shift lock actuator **9** sets the shift lock actuator in unlock position **B**, shift lock link **11** is in the forward position to set pin **7** free, thus allowing pressing of shift button **4**. Therefore, the selector lever can be moved from the P range to another range position.
- Should an electrical problem occur and hinder proper operation, pulling of shift lock release knob **12** deactivates the P shift lock.

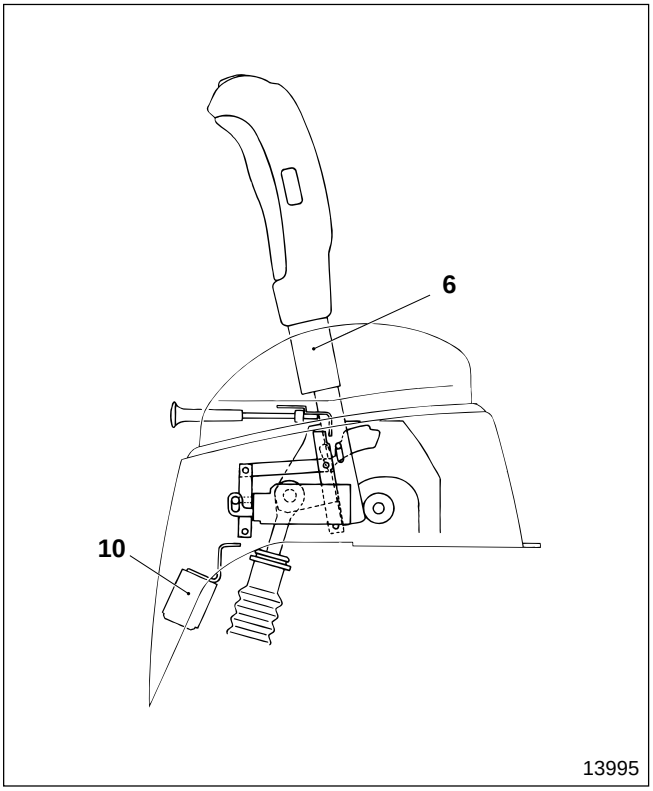

● **Selector lever reverse position warning device**

When starter switch **2** is ON, moving selector lever **6** to the R (reverse) range activates the reverse position detecting switch (inhibitor switch: built into automatic transmission) and turns on automatic transmission reverse buzzer **10** to warn the driver that the selector lever is in the reverse position.

TROUBLESHOOTING PROCEDURES

Automatic transmission problems can be caused by the following malfunctions.

- Engine malfunction
- Improperly adjusted parts
- Faulty hydraulic system
- Faulty mechanical functions
- Faulty electrical system

When diagnosing the above abnormalities, be sure to inspect the following basic items.

- Engine condition: Engine Shop Manual 4D3
- Accelerator control cable adjustment: Engine Shop Manual 4D3 Gr 13
- Automatic transmission fluid level and condition: P 23-56
- Range selector cable adjustment

In addition to the inspection of the above items, use the self-diagnosis function to locate the cause of the problem and take necessary measures.

After repair is complete, test-drive the vehicle to determine whether the problem is corrected or further inspection is necessary.

If the cause of the problem cannot be located, or if repair work does not correct the problem, conduct a line pressure test and a stall test. P 23-50, 52

It should be noted that special knowledge and tools are required to repair the automatic transmission unit or replace parts. Therefore, conduct an inspection for the purpose of evaluating the operating condition of the transmission. For maintenance or repair of the automatic transmission, contact your nearest authorized Mitsubishi dealer or distributor.

Use of the MUT-II allows efficient inspection of the automatic transmission system.

Self-diagnosis process

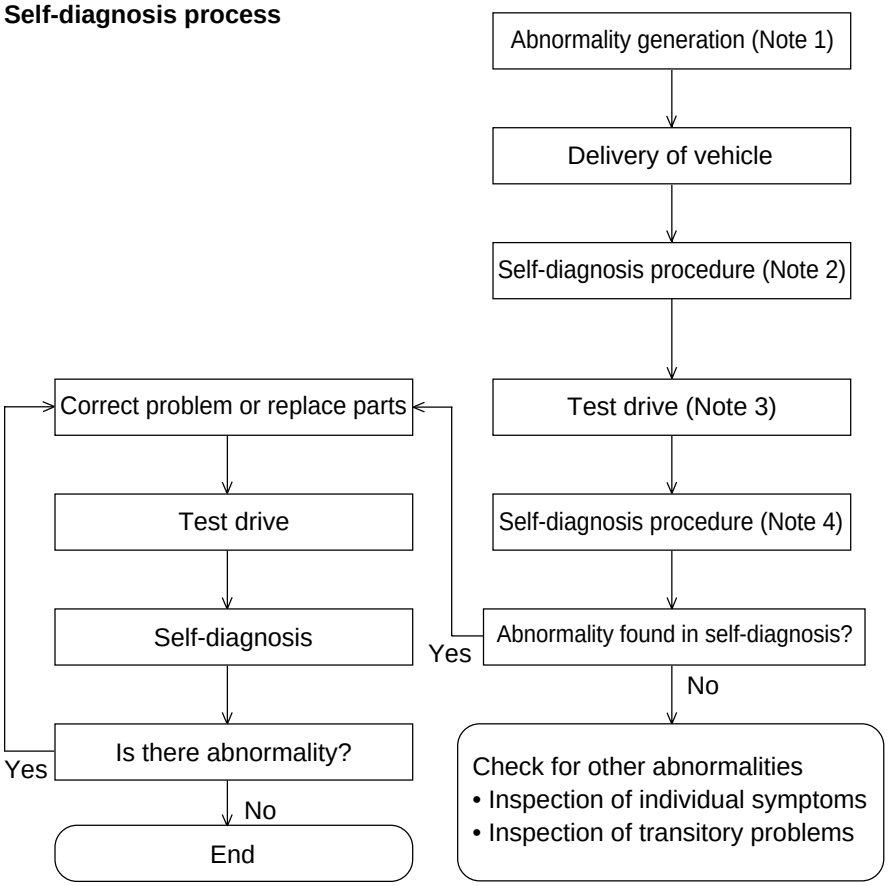

Note 1 : The following abnormalities significantly lower driving performance. In the case that these abnormalities generate during operation, the automatic transmission warning lamp lights.
- Faulty operation of vehicle speed sensors
- Faulty operation of solenoid other than lock-up solenoid
- Faulty operation of accelerator sensor
- Faulty operation of inhibitor switch
- Faulty throttle position PWM signal

Note 2 : Inspect for malfunctions that occurred during user operation. Record inspection results.

Note 3 :
- Check abnormal conditions.
- In a test drive, operate the accelerator pedal in full range (from the released position to full throttle) with a vehicle speed of up to approximately 50 km/h {31.1 mph}.

Note 4 : Inspect problems that generate during a test drive. Record inspection results.

Types of Self-Diagnosis

The following two types of self-diagnosis function can be selected.

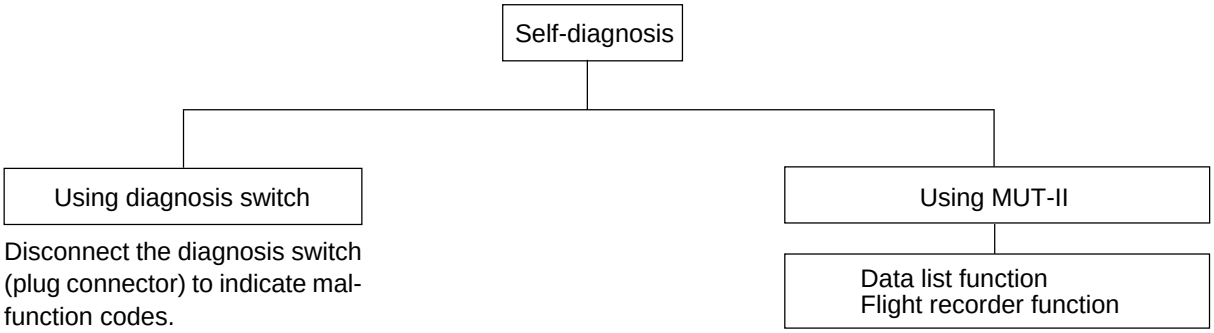

Disconnect the diagnosis switch (plug connector) to indicate malfunction codes.
Data of malfunctions stored in the memory can be deleted with the memory clear switch.

Connect the MUT-II to the automatic transmission electronic control unit with a test harness to download and display malfunction codes.
In addition to the self-diagnosis function, the MUT-II is equipped with a data list function that indicates sensor and switch values and a flight recorder function that records those data for a certain length of time before and after the triggering. These functions are useful in analyzing malfunctions.
(Refer to the MUT-II operation manual.)

Features of the two self-diagnosis methods

Item \ Self-diagnosis method	Use of diagnosis switch	Use of MUT-II
Convenience	○	◎
Number of self-diagnosis items	◎	◎
Data reading ease	○	◎
Data application range	×	◎

◎ : Good
○ : Fair
× : Bad

Using diagnosis switch to recall diagnosis codes and using memory clear switch to delete diagnosis codes

The diagnosis switch is used for the analysis of malfunction, and the memory clear switch allows deletion of stored diagnosis codes.

● **Recalling diagnosis code** P23-42

- Pull out the diagnosis switch to recall the diagnosis code of the current problem from the electronic control unit's memory.
- Pull out the diagnosis switch and memory clear switch to recall the diagnosis codes of the current and past problems from the electronic control unit's memory.

● **Deleting diagnosis codes** P23-43

Pull out and reinsert the memory clear switch to delete the diagnosis codes stored in the electronic control unit's memory.

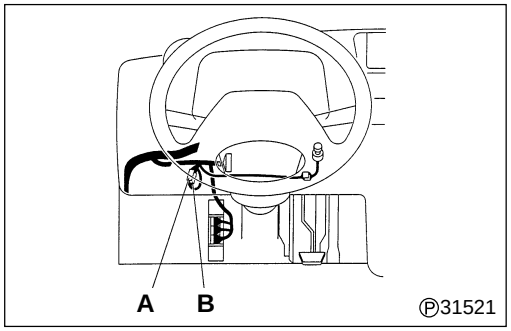

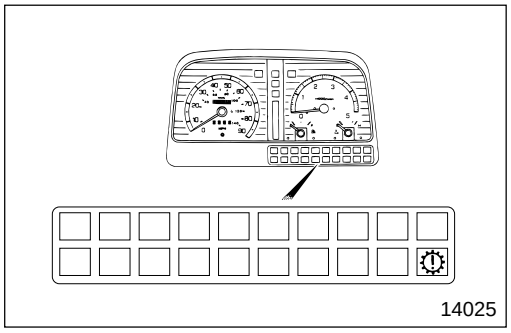

● **Procedure for recalling diagnosis codes**

[Current diagnosis code]

- Turn on the starter switch.
- Remove diagnosis switch **A** (plug connector). The warning lamp begins flashing. The flashing pattern indicates a diagnosis code. Check the code list to locate the problem location. P23-44

[Current and past diagnosis codes]

- Turn on the starter switch.
- Remove diagnosis switch **A** (plug connector) and memory clear switch **B** (1-pin connector). The warning lamp begins flashing to indicate diagnosis codes.
- The warning lamp indicates the diagnosis codes of past malfunctions and the diagnosis code of the current problem, if any.

CAUTION

If diagnosis switch A is connected first, diagnosis codes in the electronic control unit's memory are deleted, and a "01" (normal) code is indicated.

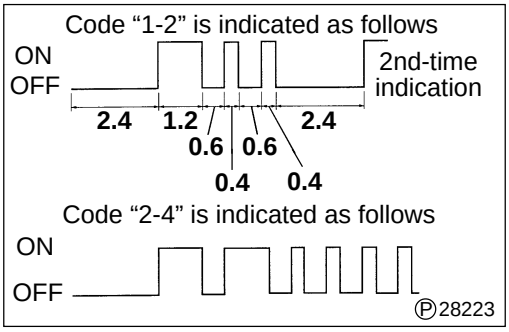

● **Procedure for reading diagnosis codes**

- The automatic transmission electronic control unit’s memory is stored with the data of all malfunctions that occurred after the previous self-diagnosis operation.
- The warning lamp turns off for 2.4 seconds after the self-diagnosis operation starts, then indicates a code.
  - The tens digit is indicated by 1.2-second ON operation and 0.6-second OFF operation.
  - The ones digit is indicated by 0.4-second ON operation and 0.6-second OFF operation.
  - The lamp remains OFF for 2.4 seconds between codes.
- If there are two or more malfunction codes in the memory, they are output in an order from the smallest code number. Each malfunction code is indicated three times before the following code is output.
- After all malfunction codes in the memory are output, the indication process repeats from the beginning.

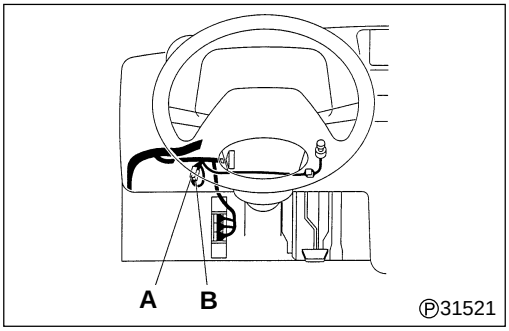

● **Procedure for deleting diagnosis codes**

- Keep diagnosis switch **A** (plug connector) connected.
- Turn on the starter switch.
- Disconnect memory clear switch **B** (1-pin connector). After more than one second, connect the memory clear switch. When the memory clear switch remains connected for more than three seconds, diagnosis codes in the electronic control unit are deleted.

● **Diagnosis Code Chart**

Diagnosis code	Problem location	Judgement criterion	Fail-safe measure
1	Normal		
11	Power supply voltage	Power supply voltage remains below 7.5 V for 1 second or longer with range selector in a position other than P or N range.	
13	Oil temperature sensor	When oil temperature of more than 135°C {275°F} or lower than -50°C{-58°F} is detected. Note that MUT display is fixed at “40°C {104°F}” after fail-safe judgement result.	Maximum oil temperature
15	Engine speed sensor	Engine speed sensor detects a value of less than 300 rpm when range selector is in a position other than P or N range and when output shaft rotating speed is 1000 rpm or higher.	Prohibits 2-3 shift timing control.
24	Accelerator sensor	• When accelerator sensor voltage is less than 0.4 V, or 4.6 V or higher	• Shift-point is set at 0% throttle opening. • Prohibits throttle learning function. • Prohibits 2-3 shift timing control. • Line pressure at maximum • Lock-up control change
25	Vehicle speed sensor 2	• Vehicle speed sensor 2 indicates sudden speed decrease.	• Maintains the gear selected immediately before malfunction detection. • Turns off shift solenoids 1, 2 when engine speed sensor detects a value of less than 1000 rpm.
31	Shift solenoid 1	• When solenoid output short-circuit occurs while solenoid is receiving current. • When solenoid output disconnection occurs while solenoid is not receiving current.	• Turns off malfunctioning shift solenoid. • Turns off lock-up solenoid and timing solenoid. • Refer to the chart on P23-54 for gear selection.
32	Shift solenoid 2	• When solenoid output short-circuit occurs while solenoid is receiving current. • When solenoid output disconnection occurs while solenoid is not receiving current.	• Turns off malfunctioning shift solenoid. • Turns off lock-up solenoid and timing solenoid. • Refer to the chart on P23-54 for gear selection.
34	Line pressure solenoid	When wire breakage or short-circuit occurs.	Turns off line pressure solenoid.
35	Lock-up solenoid	• When solenoid output short-circuit occurs while solenoid is receiving current. • When solenoid output disconnection occurs while solenoid is not receiving current.	Turns off lock-up solenoid.
43	Inhibitor switch	• No signal	Operates as D range and prohibits shifting to 4th gear.
		• Two or more signals	• Control function activates based on priority order of L > R > 2 > D > N (P). • Refer to pages 23 through 54 for actual vehicle operation conditions.
50	PTO solenoid	When solenoid output short-circuit occurs while solenoid is receiving current. When solenoid output is cut off while solenoid is not receiving current.	Turns off PTO solenoid.
51	Timing solenoid	• When solenoid output short-circuit occurs while solenoid is receiving current. • When solenoid output disconnection occurs while solenoid is not receiving current.	Turns off timing solenoid.

● **Diagnosis Code Chart**

Diagnosis code	Problem location	Judgement criterion	Fail-safe measure
54	Exhaust brake cut-off signal	Exhaust brake activates when exhaust brake cut-off signal is generated.	• Prohibits exhaust brake cut-off control • Allows lock-up only at high cruising speed.
58	PWM signal	Malfunction of engine electronic control unit (PWM signal fixed at 1 V or lower)	Shift-point is set at 0% throttle opening. Prohibits 2-3 shift timing control. Line pressure at maximum Prohibits throttle position learning function.
		Wire breakage or short-circuit	Prohibits throttle position learning function.

TROUBLESHOOTING

Procedure for servicing with MUT-II

Special tools

Location	Tool name and shape	Part No.	Application
—	MUT-II PLUS 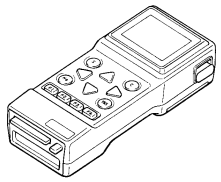 19492	MB991496-A	System inspection
—	MUT-II harness 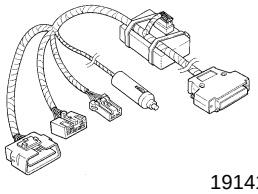 19141	MK327601	
—	ROM pack (MRT-E4) 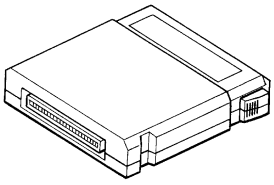 19493	MK327927	

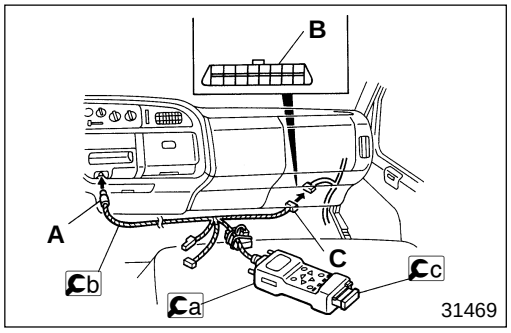

● **Connecting the MUT-II**

- Turn the starter switch to the LOCK position.
- Connect the b MUT Communication Harness to the a MUT-II, and insert the c ROM Pack.
- Plug connector **A** into the cigarette lighter socket.
- Fit connector **C** onto Mut connector **B** (16-pin) in the relay box.

NOTE

Instructions for operation of the MUT-II are given in the separate MUT-II Reference Manual.

● **Inspection using MUT-II**

①The MUT-II indicates diagnosis codes that provide information of malfunctioning items (devices that require inspection).

②The MUT-II indicates sensor signal conditions with numerical values (service data). Comparison of the service data with judgement criteria allows evaluation of the transmission operation. Diagnosis codes and service data codes can be effectively used for troubleshooting.

①		②				
Indicated by MUT-II		Indicated by MUT-II			Inspection procedure	
Diagno -sis code	Malfunctioning item (devices that require inspection)	Service data code	Signal name	Service data	Inspection condition	Judgement criterion
11	POWER VOLTAGE					
13	OIL TEMPSNSR	13	A/T OIL TEMP	□□□□.°F	When engine is cold	Equivalent to outside air temperature
					When engine is in warm-up operation	Gradual increase
					Non-operating engine after warm-up operation	Gradual decrease
15	ENG SPD SNSR	15	ENGINE SPEED	□□□□. RPM	Idle after warm-up operation	725 rpm
					Racing	Corresponds with tachometer
		17	ACCEL PERCENT	□□□.%	Full throttle	0 %
					Gradual pressing	Increases continuously
					Full throttle	100 %
		19	P POS. SW		Selector in P range	ON
					Selector in position other than P range	OFF
		20	R POS. SW		Selector in R range	ON
					Selector in position other than R range	OFF
		21	N POS. SW		Selector in N range	ON
					Selector in position other than N range	OFF
		22	D POS. SW		Selector in D range	ON
					Selector in position other than D range	OFF
24	ACCEL SNSR	24	ACCEL VOLT	□.□□□V	Full throttle	0.85±0.1 V
					Gradual pressing	Increases continuously
					Full throttle	4.15±0.1 V
25	VEH SPD SNSR	25	VEH SPEED	□□□.□ MPH	Vehicle stationary in position	0 mph
					Vehicle in operation	Correspond with speedometer
		26	2 POS. SW		Selector in 2 range	ON
					Selector in position other than 2 range	OFF
		27	L POS. SW		Selector in L range	ON
					Selector in position other than L range	OFF
		28	OD-OFF SW		Overdrive OFF SW ON	ON
					Overdrive OFF SW OFF	OFF
		29	POWER S/W		In power mode	ON
					In economy mode	OFF

①		②				
Indicated by MUT-II		Indicated by MUT-II			Inspection procedure	
Diagno -sis code	Malfunctioning item (devices that require inspection)	Service data code	Signal name	Service data	Inspection condition	Judgement criterion
31	SHIFT VALVE 1	31	SHIFT VALVE 1		Driving in 1st and 2nd gears	ON
					Driving in 3rd and 4th gears	OFF
32	SHIFT VALVE 2	32	SHIFT VALVE 2		Driving in 2nd and 3rd gears	ON
					Driving in 1st and 4th gears	OFF
34	LINE PRESS. V	34	LINE PRESS	□□□.□ lbf/in²	Idle	According to line pressure chart
					Stall	
35	LOCK UP VALVE	35	LOCK UP VALVE		Driving with consistent throttle opening	Turns ON according to lock-up vehicle speed chart during road test. 🕮 P 23-54
					Vehicle stationary in D range	OFF
		36	OIL TEMP SW		Abnormal oil temperature (ATF temperature lamp ON)	ON
					Normal oil temperature (ATF temperature lamp OFF)	OFF
		37	BRAKE SW		Brake pedal pressed	ON
					Brake not applied	OFF
		38	EXH. BRAKE SW		Exhaust brake activation during driving	ON
					Exhaust brake inactive	OFF
43	INHIBIT SIG					
		47	ABS SW		ABS activation	ON
					ABS inactive	OFF
		48	M CLEAR SW		Connector disconnected	OPEN
					Connector in connection	CLOSE
		49	DIAGNOSIS SW		Plug connector disconnected	OPEN
					Plug connector in connection	CLOSE
50	PTO VALVE	50	PTO VALVE		PTO operation	ON
					PTO non-operation	OFF
51	TIMING VALVE	51	TIMING VALVE		2→3 shifting when accelerator pedal is released	ON
					Vehicle stationary in position	OFF
		53	DIAG LAMP		System malfunction (warming lamp ON)	ON
					System normal (warning lamp OFF)	OFF
54	EXB CUT SIG	54	EXB CUT SIG		Exhaust brake activation during driving	OFF
					Stopping using exhaust brake	OFF→ ON
		55	SELECTOR POS.	□·RANGE	Operate range selector from P to L in order.	Changes as follows: P→R→N→D→2→L
		56	GEAR POS.	1ST 2ND 3RD 4TH	Driving at constant speed Accelerating gradually from 0 km/h	According to lock-up vehicle speed chart during road test. 🕮 P 23-54 (1ST → 2ND → 3RD → 4TH)
				N	Selector in N range	N
				REV	Selector in R range	REV

①		②				
Indicated by MUT-II		Indicated by MUT-II			Inspection procedure	
Diagno-sis code	Malfunctioning item (devices that require inspection)	Service data code	Signal name	Service data	Inspection condition	Judgement criterion
58	PWM SIG.	58	PWM PERCENT	□□□.□ %	Closed throttle	0 %
					Accelerator pedal pressed gradually	Continuous increase
					Accelerator pedal at full throttle	100% or more
		59	PTO SW		PTO SW ON	ON
					PTO SW OFF	OFF

Symptoms and problems

Malfunction / Suspected problem factor	Abnormal movement						Abnormal shift operation												
	Vehicle runs in N range	Parking position is still engaged when selector is moved from P range	Vehicle moves in P range	Vehicle does not move in any range	Vehicle does not move in R range	Vehicle does not move in D, 2 or L range	Lock-up point extremely high or low	Does not lock up	No engine brake in 2 range	No engine brake in L range	Kick-down does not operate	Shift point extremely high or low	Engine revs up in 2-3 shift	Does not shift down from 2nd to 1st	Does not shift down from 3rd to 2nd	Does not shift down from 4th to 3rd	Does not shift up from 3rd to 4th	Does not shift up from 2nd to 3rd	Does not shift up from 1st to 2nd
Automatic transmission fluid level and condition				○															
Control linkage	○	○	○	○														○	○
Inhibitor switch																	○	○	○
Accelerator sensor							○	○			○	○	○						
Vehicle speed sensor							○				○	○		○	○	○	○	○	○
Engine speed sensor								○					○						
Engine idle speed																			
Line pressure				○				○											
Shift solenoid 1					○			○	○		○				○			○	
Shift solenoid 2					○			○	○	○	○			○		○	○		○
Timing solenoid													○						
Lock-up solenoid							○	○											
Starter circuit																			
Overdrive OFF switch																	○		
Exhaust brake switch								○											
Automatic transmission fluid temperature sensor								○									○		
Automatic transmission electronic control unit					○		○	○	○	○	○	○	○	○	○	○	○	○	○
Torque converter				○				○											
Automatic transmission unit malfunction	○	○	○	○	○	○	○	○	○	○	○		○	○	○	○	○	○	○

Malfunction / Suspected problem factor	Excess shock during shifting										Slippage						Others			
	During lock-up operation	When shifting from 3rd to 2nd	When shifting from 4th to 3rd	When shifting from 1st to 2nd, to 3rd, to 4th	When shifting from 3rd to 4th	When shifting from 2nd to 3rd	When shifting from 1st to 2nd	When shifting from N to D and from N to R	When shifting from N to D	When shifting from N to R	In 4th gear	In 3rd gear	In 2nd gear	In 1st gear	In reverse gear	In forward and backward	Transmission overheat and oil blow-off from breather	Engine stalls when range selector is moved to R, D, 2 or L, or when vehicle is stationary	Engine starts with range selector in position other than N or P range	Engine cannot be started with range selector in N or P range
Automatic transmission fluid level and condition																○	○			
Control linkage																			○	○
Inhibitor switch																			○	○
Accelerator sensor	○	○	○	○	○	○	○	○			○	○	○	○	○	○	○			
Vehicle speed sensor	○																			
Engine speed sensor						○														
Engine idle speed								○										○		
Line pressure								○								○	○			
Shift solenoid 1																				
Shift solenoid 2																				
Timing solenoid		○				○	○													
Lock-up solenoid																	○	○		
Starter circuit																				○
Overdrive OFF switch																				
Exhaust brake switch																				
Automatic transmission fluid temperature sensor				○																
Automatic transmission electronic control unit		○				○	○										○			
Torque converter	○															○	○	○		
Automatic transmission unit malfunction	○	○	○	○	○	○	○	○	○	○	○	○	○	○	○	○	○	○		

Stall Test

● **Purpose**

To check wearing of gears, slippage of one-way clutches, operation of torque converter and overall performance of the engine.

● **Measuring procedure**

Before the test, inspect the engine coolant, engine oil and automatic transmission fluid. Run the engine until the engine coolant temperature reaches an appropriate level. Also conduct a warm-up operation for the automatic transmission and bring the automatic transmission fluid temperature to an appropriate level.

- Place wheel chocks in front and back of all wheels, and apply the parking brake. When operating the accelerator pedal, be sure to press down firmly on the foot brake pedal.
- Shift the range selector lever to the D range.
- Press down on the accelerator pedal gradually to full throttle. When the engine speed stabilizes, quickly read the engine rpm (stall speed) and remove foot from the accelerator pedal.

CAUTION ⚠

- **Limit each measuring operation to five seconds. Extended testing causes automatic transmission fluid degradation and adverse effects to the internal parts.**
- **If the engine speed does not stabilize but continues to increase or suddenly jumps, stop the test immediately.**

- Shift the range selector lever to the N range, and let the engine run at approximately 1200 rpm for one minute or longer for cooling.
- Conduct tests in the same way with the range selector lever in each of the 2, L and R ranges.
- Stall speed

FE 639	1810±150 rpm
FE 649	1890±150 rpm

● **Diagnosis of test result**

Measuring result	Suspected abnormality
Lower than standard value in all ranges	Insufficient engine output power
	Faulty operation of one-way clutch in torque converter
Higher than standard value in D range	Slippage of front clutch
	Faulty operation of No. 2 one-way clutch
	Low line pressure
Higher than standard value in R range	Slippage of rear clutch
	Slippage of 1st and reverse brake
	Low line pressure
Higher than standard value in all range	Low line pressure
	Inappropriate automatic transmission fluid level
	Slippage of overdrive direct clutch
	Faulty operation of overdrive one-way clutch

Time Lag Test

● **Purpose**

To check the conditions of overdrive direct clutch, front clutch, rear clutch and 1st and reverse brake.

● **Measuring procedure**

- Bring the oil temperature to normal operating level of between 50 and 80°C {122 and 176°F}.
- Start the engine and check the idle speed.
- Shift the range selector lever from the N range to the D range and use a stopwatch to measure the time it takes for shock to be felt.
- In the same way, measure the time lag by shifting the range selector lever from the N range to the R range.

	Standard value
N→D shifting	0.7 sec or less
N→R shifting	1.2 sec or less

● **Diagnosis of test result**

Measuring result	Suspected abnormality
Large time lag in N→D shift	Low line pressure
	Slippage of front clutch
	Faulty operation of overdrive one-way clutch
Large time lag in N→R shift	Low line pressure
	Slippage of rear clutch
	Slippage of 1st and reverse brake
	Faulty operation of overdrive one-way clutch

Line Pressure Test

● **Purpose**

To check the oil pump capacity, control valve functions and leaks in hydraulic circuit.

● **Measuring procedure**

CAUTION ⚠

The line pressure test requires two persons. One person must observe tire movement and wheel chocks from outside the vehicle, while the other person conducts the test.

- Apply the parking brake firmly.
- Place wheel chocks.

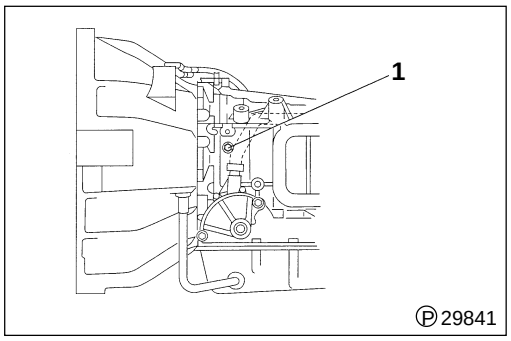

- Remove pressure detecting plug **1**, and mount the oil pressure gauge.
- Start the engine, and operate it until the automatic transmission fluid temperature reaches between 50 and 80°C {122 and 176°F}. Then, check the idle speed.
- While pressing the brake pedal firmly with the left foot, shift the range selector lever to the D range and measure the oil pressure while the engine is idling.
- Press the accelerator pedal all the way, and quickly measure the oil pressure at stall speed.

CAUTION ⚠

If the engine RPM's do not reach stall speed and the rear wheels start rotating, release the accelerator pedal and stop the test.

- Measure the oil pressure with the range selector lever in the R range by following the above procedure.
- After the measurement, re-install pressure detecting plug **1** and tighten to the specified torque.

Pressure detecting plug	Bolt size	1/2-20UNF
	Tightening torque	7.5 N·m {5.5 lbf.ft, 0.76 kgf·m}

● **Line pressure** kPa {lbf/in^2, kgf/cm^2}

Idle oil pressure	FE639	D range	529 to 784 {77 to 115, 5.4 to 8.0}
	FE649	R range	755 to 1127 {110 to 165, 7.7 to 11.5}
Stall oil pressure	FE639	D range	990 to 1480 {145 to 215, 10.1 to 15.1}
	FE649	R range	1401 to 2107 {205 to 305, 14.3 to 21.5}

● **Diagnosis of test result**

Measuring result	Suspected abnormality
Higher than standard value in all ranges	Faulty adjustment of throttle cable
	Sticking of regulator valve
	Sticking of throttle valve
Lower than standard value in all ranges	Faulty adjustment of throttle cable
	Sticking of regulator valve
	Sticking of throttle valve
	Excessive wear of oil pump
	Faulty overdrive direct clutch
Lower than standard value only in D range	Oil leak in D range system
	Faulty front clutch
Lower than standard value only in R range	Oil leak in R range system
	Faulty rear clutch
	Faulty 1st and reverse brake

Road Test

● **Measuring procedure**

Before the road test, check the level and condition of the automatic transmission fluid. Also make sure that the range selector cable and the accelerator control cable are properly adjusted.
Operate the automatic transmission in every range position during the road test and check slippage and other operating conditions during shifting of gears.
Check to see if the shift feels too tight or too loose.
Check the shift points of up-shifting and downshifting.
Check shift-point vehicle speeds under various driving conditions.

● **Shift-point vehicle speeds**

Unit : km/h {mph}

Throttle opening	Shifting	Economy mode	Power mode
Half throttle	D1→D2	8.63 to 11.1 {5.36 to 6.9}	9.37 to 11.84 {5.82 to 7.36}
	D2→D3	19.73 to 22.2 {12.3 to13.8}	20.96 to 23.43 {13.0 to 14.6}
	D3→D4	48.83 to 51.3 {30.3 to 31.9}	38.72 to 41.19 {24.1 to 25.6}
Full throttle	D1→D2	17.26 to 19.73 {10.7 to 12.3}	19.48 to 21.95 {12.1 to13.6}
	D2→D3	34.53 to 36.99 {21.5 to 23.0}	41.93 to 44.39 {26.1 to 27.6}
	D3→D4	63.14 to 65.6 {39.2 to 40.8}	73.99 to 78.92 {46.0 to 49.0}
Closed throttle	L2→L1	22.94 to 25.4 {14.3 to 15.8}	22.94 to 25.4 {14.3 to 15.8}
	23→22	51.79 to 54.26 {32.2 to 33.7}	51.79 to 54.26 {32.2 to 33.7}

● **Lock-up vehicle speeds**

Unit : km/h {mph}

Throttle opening	Shifting	Economy mode	Power mode
Half throttle	3rd gear ON (Overdrive ON)	48.09 to 50.56 {29.9 to 31.4}	
	3rd gear ON (Overdrive OFF)	53.03 to 55.49 {33.0 to 34.5}	
	4th gear ON	56.38 to 58.85 {35.0 to 36.6}	
Full throttle	3rd gear ON	53.03 to 55.49 {33.0 to 34.5}	
	4th gear ON	73.99 to 78.92 {46.0 to 49.0}	
Closed throttle	3rd gear OFF	43.16 to 45.63 {26.8 to 28.4}	
	4th gear OFF		

The above standard values are based on the following conditions.
5.714 differential gear ratio, 0.374 m tire radius (215/85R16)
If the differential gear ratio and/or the tire radius are different from the above, proper standard values must be calculated based on the ratios of the differences and the above figures.

Inspection of Automatic Transmission Fluid (ATF)

If the automatic transmission has insufficient ATF, the pump draws air together with ATF. Air bubbles mixed in the ATF cause a “sponge” effect and lower the pressure. This can cause slipping of internal clutches.
On the other hand, if the ATF level is too high, excess air bubbles also result when rotating parts agitate the ATF, thus causing the same effect as when the ATF level is low.
In both cases, excess air bubbles lead to overheat, oxidation of oil and varnish generation, thereby hindering proper operation of the valves and clutches.
Excess air bubbles in the ATF also cause ATF to overflow from the vent hole and filler tube, which may be mistakenly diagnosed as an ATF leak.
To prevent these problems, read the ATF level accurately by following the procedure described below.

(1) Inspection of ATF condition

If ATF has a burned odor and contains metal shavings or particles, the automatic transmission needs an overhaul. Closely inspect the ATF adhered on level gauge **A**.
If ATF is suspected to be in poor condition, take out a sample and inspect closely.

(2) Inspection of ATF level

CAUTION ⚠

- **Inspection is conducted while the engine is running. Be careful of moving parts and hot areas to prevent personal injuries and burns.**
- **Before inspection, check the idle speed.**
- **Place the vehicle on level ground.**
- **Bring the transmission to normal operating temperature (70 to 80°C {158 to 176°F}) before inspection.**
- **Before pulling out level gauge A, clean the protective cap and the upper part of the filler tube.**

- Apply the parking brake firmly, and place wheel chocks.
- With the engine idling, press down on the brake pedal and shift the range selector lever slowly from the P range to the L range, stopping at each position in between. Then return the range selector lever to the P range.
- With the engine idling, pull out level gauge **A**. Wipe the ATF from the level gauge and blow compressed air to remove lint and other particles. Insert the level gauge, and pull it out. Check to make sure that the ATF level is in the range marked “HOT.”

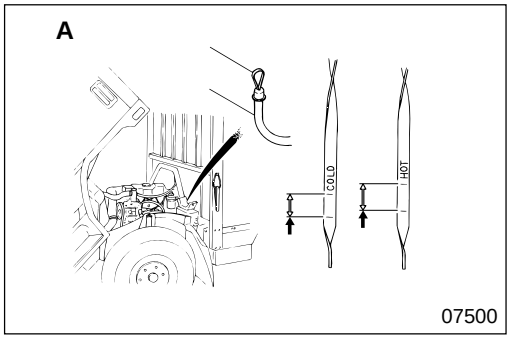

CAUTION ⚠

- **If the ATF temperature is low (20 to 30°C {68 to 86°F}), such as after an ATF change, bring the ATF level to the area on the level gauge marked “COLD.” Then, after the transmission temperature rises to normal operating level (70 to 80°C {158 to 176°F}), check to make sure that the ATF level is in the area on the level gauge marked “HOT.”**
- **If the markings on the front and back sides of the level gauge show different level indications, use the line that indicates the lower ATF level.**

- If the ATF level is low, add ATF from the filler tube to the specified level on level gauge **A**.

Changing Automatic Transmission Fluid (ATF)

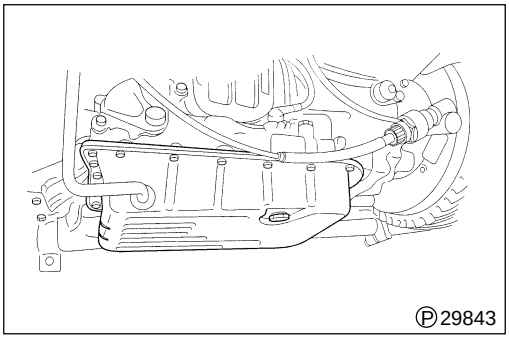

(1) Drain

- Place an ATF receiving tray under the automatic transmission oil pan. Remove the drain plug located at the back side of the pan to drain ATF.
  Tightening torque: 27 N·m {20 lbt.ft, 2.8 kgf·m}

CAUTION ⚠

- **ATF is very hot immediately after the engine is turned off. Wait until the ATF temperature lowers sufficiently.**
- **For faster ATF drainage, warm up the engine.**
- **ATF in the hydraulic circuit, torque converter and oil cooler cannot be drained in the above process.**
- **Inspect the drained ATF for dirtiness and contamination such as metal shavings and particles.**

- After the above process, approximately 1 L {1.1 qts} of ATF remains in the oil pan. If you wish to drain this remaining ATF, remove the oil pan. 🕮 P23-76

Amount of drained ATF

ATF drained by removing oil pan : Approximately 4.5 L {4.8 qts}
ATF drained by removing drain plug : Approximately 3.5 L {3.7 qts}

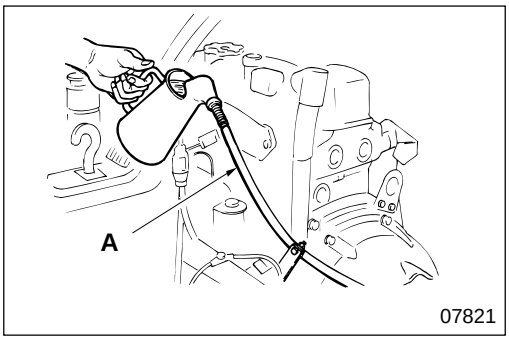

(2) Adding ATF

- Prepare new ATF.
- Re-install the oil pan drain plug and gasket.
- From filler tube **A**, add the same amount of ATF as drained.

CAUTION ⚠

Be careful not to let dust and other particles mix with ATF.

- Start the engine and let it idle for at least two minutes.
- Shift the range selector lever into every position, then back to the P range.

CAUTION ⚠

Do not rev up the engine in the above process.

- Check the ATF level. 🕮 P23-56

(3) ATF leaks

- Torque converter housing of the automatic transmission unit
- Check for leaking locations
  Since the torque converter and the surrounding area can be soiled with oil that leaks from the engine, inspect those areas carefully. ATF is red, so that it can be easily distinguished from engine oil.
- Before dismounting the automatic transmission, carefully examine if ATF leaks from the torque converter or the automatic transmission unit (oil seal of oil pump housing or connection of oil pump housing and case).

REMOVAL AND INSTALLATION OF AUTOMATIC TRANSMISSION ASSEMBLY

Preparation

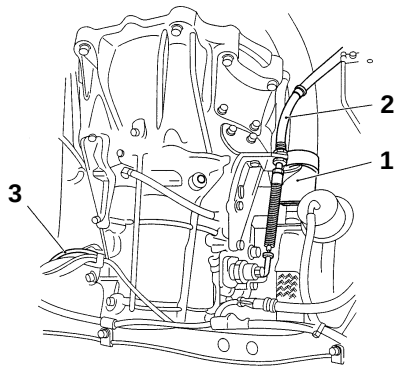

Ⓟ31515

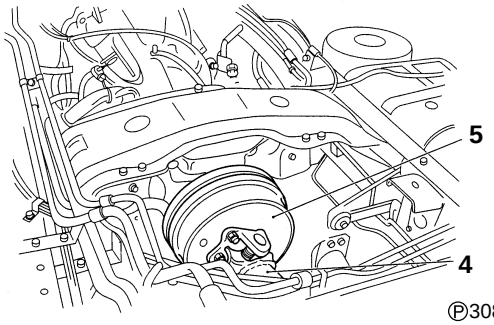

Ⓟ30821

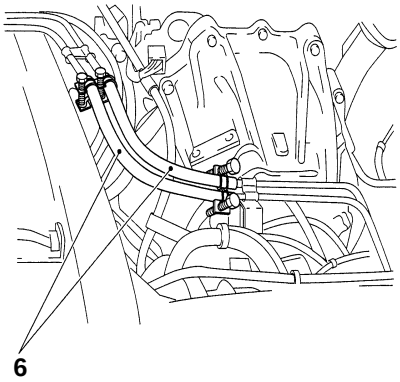

Ⓟ30920

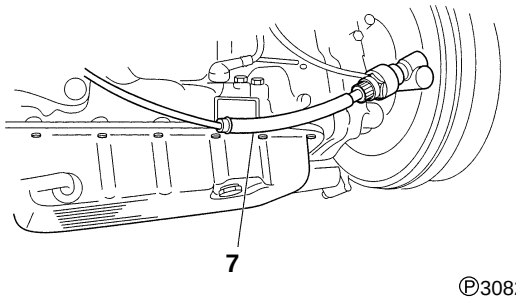

Ⓟ30822

● **Removal sequence**

1	Exhaust pipe	Gr 15
2	Selector cable	P23-72
3	Electrical harness	
4	Propeller shaft	Gr 25
5	Parking brake	Gr 36
6	Oil cooler hose	P23-63
7	Speedometer cable	

CAUTION

After removing propeller shaft 5, suspend the shaft at the same height as the installation position by securing it to the frame with a rope.

● **Installation sequence**

Follow the removal sequence in reverse.

CAUTION

If the automatic transmission unit is replaced due to a malfunction and if the automatic transmission fluid contains a large amount of impurities, conduct flushing of the oil cooler system. P23-63

Removal

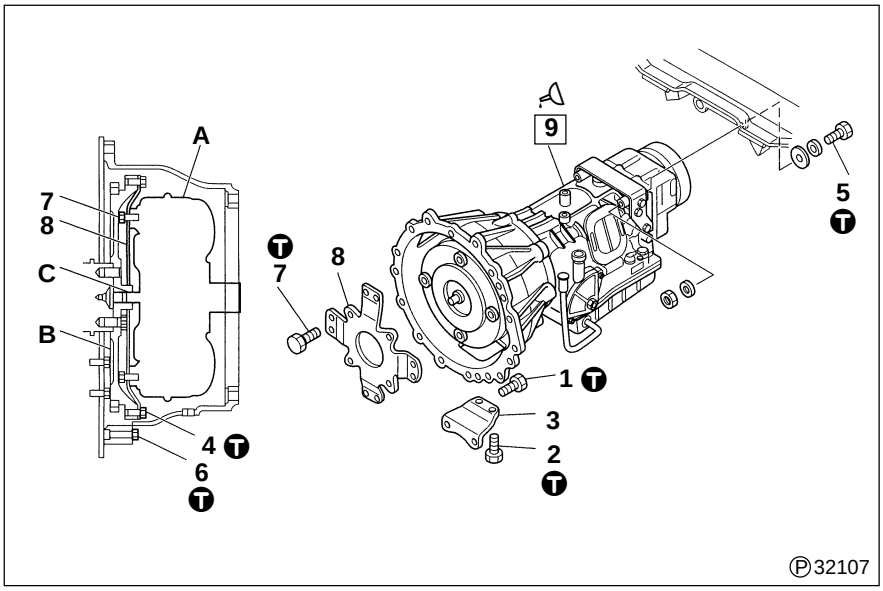

● **Removal sequence**

1 Bolt
2 Bolt
3 Dust cover
4 Bolt (8)
5 Bolt
6 Bolt
7 Bolt (4)
8 Drive plate
9 Automatic transmission assembly

A: Torque converter
B: Flywheel
C: Pilot section

● **Installation sequence**

Follow the removal sequence in reverse.

CAUTION ⚠

Remove the automatic transmission assembly with drive plate 8 attached to torque converter A.

T Tightening torque

Unit : N·m {lbf.ft, kgf·m}

Location	Parts to be tightened	Tightening torque	Remarks
1	Bolt (Automatic transmission assembly mounting and dust cover mounting)	47 {35, 4.8}	—
2	Bolt (Dust cover mounting)	13 {9.4, 1.3}	—
4	Bolt (Flywheel and drive plate coupling)	32 {24, 3.3}	—
5	Bolt (Rear mounting)	83 to 105 {61 to 80, 8.5 to 11}	—
6	Bolt (Automatic transmission assembly mounting)	82 {61, 8.4}	M12
		47 {35, 4.8}	M10
	Bolt (Bracket mounting)	40 {30, 4.1}	—
7	Bolt (Drive plate mounting)	79±12 {59±8.7, 8.1±1.2}	—

Lubricant

Location	Points of application	Specified lubricant	Quantity
9	Pilot section C on torque converter A in automatic transmission assembly	Molybdenum disultide grease [NLGI No.2 (Li soap)]	As required

◆ Service procedure

9 Automatic transmission assembly

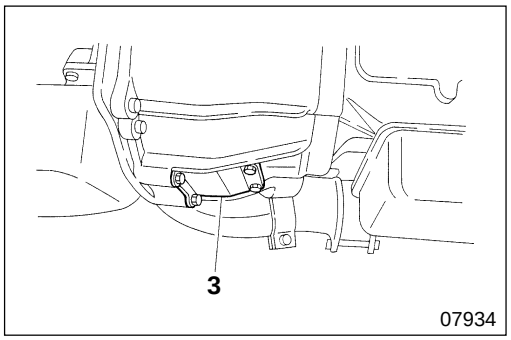

[Removal]

- Remove dust cover **3**.

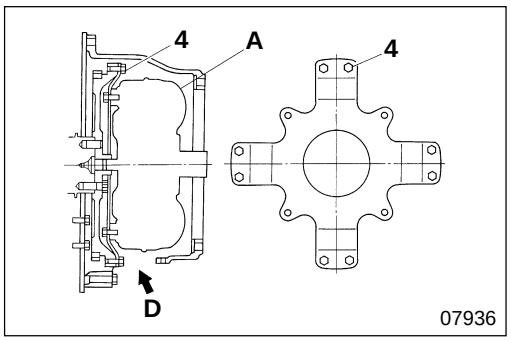

- Turn the engine so that bolt **4** is positioned at service window **D**.
- Remove eight bolts **4**. Remove two bolts at each of the four locations by turning the engine and stopping at the proper position.

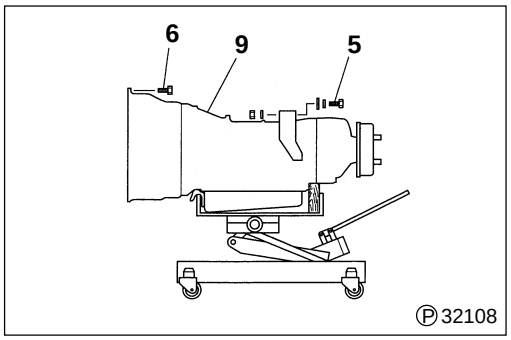

- Support automatic transmission assembly **9** with a jack, then remove automatic transmission assembly mounting bolts **5**, **6**.
- Remove automatic transmission assembly **9** by pulling towards the back of the vehicle.

CAUTION ⚠

- **Do not support the automatic transmission by the oil pan, since it causes shape deformation of the oil pan and oil pan gasket.**
- **Since torque converter A can easily separate from the automatic transmission assembly, be careful not to drop the torque converter.**
- **Mounting bolts 6 are different in length. Record the length of each bolt when removing, so that bolts can be re-installed in the original locations.**

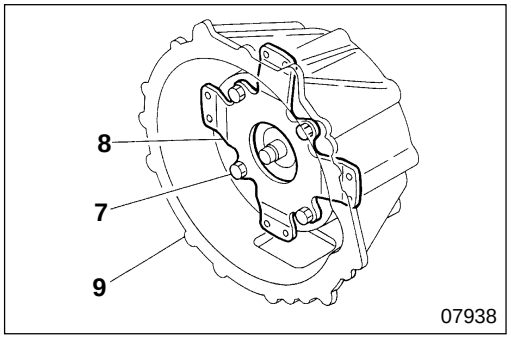

[Installation]

- Install drive plate **8** to torque converter **A** before installing the torque converter into automatic transmission assembly **9**.
  Tighten bolts **7** to the specified torque.

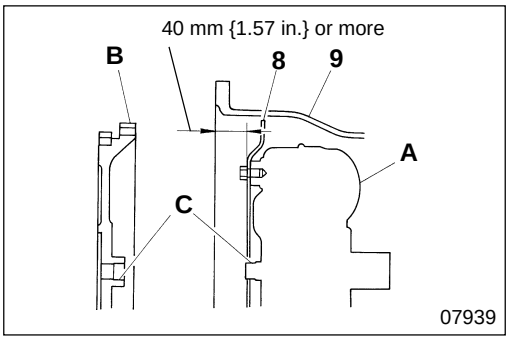

- Check to make sure that torque converter **A** is properly mounted in automatic transmission assembly **9**.
  When the torque converter is properly installed, the distance between the surface of drive plate **8** and the case mounting surface is as indicated in the diagram.
- Apply grease on pilot sections **C** of flywheel **B** and torque converter **A**.

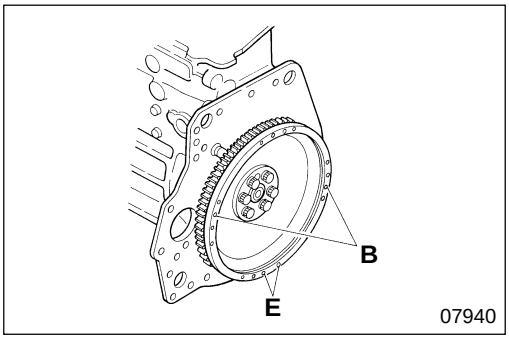

- Turn flywheel **B** so that one of bolt holes **E** on the flywheel is located at the lowest position. Bolt holes are used to connect drive plate **8** to the flywheel.

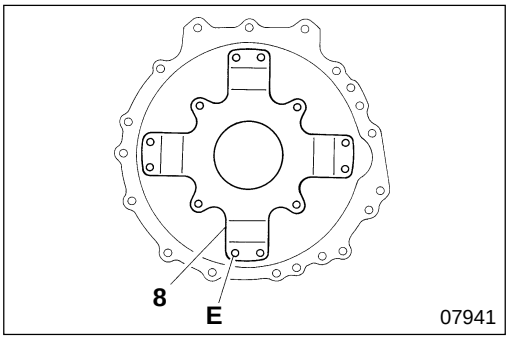

- Turn drive plate **8** so that one of bolt holes **E** is located at the lowest position.

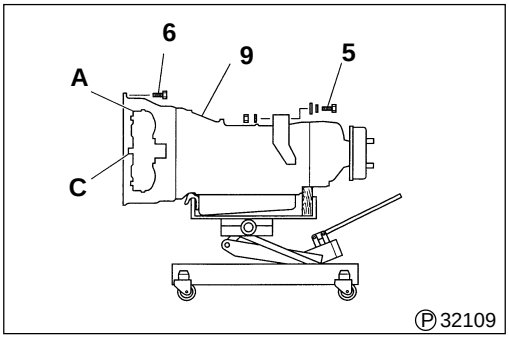

- Install automatic transmission assembly **9** into position slowly and carefully while aligning pilot section **C** and the dowel pin of the rear plate.
- Tighten several mounting bolts **6** on automatic transmission assembly **9** for temporary holding. Tighten bolts **5** to the specified torque to mount the automatic transmission assembly to the rear support.

CAUTION ⚠

- **Torque converter A can easily separate from the automatic transmission assembly 9. To keep the torque converter in place, set the back side of automatic transmission assembly slightly lower than the front part.**
- **Before mounting the automatic transmission assembly 9, wipe oil adhered on the internal wall of the torque converter housing.**

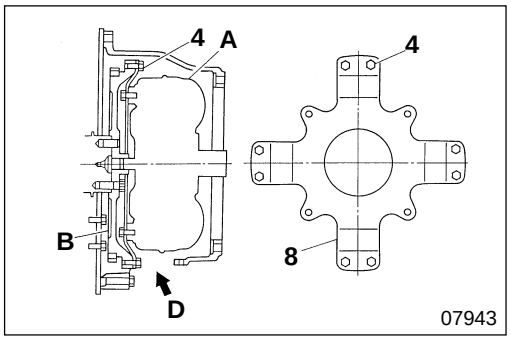

- Align the bolt holes of drive plate **8** and flywheel **B** by looking through service hole **D**, and mount bolts **4**.
- Temporarily tighten all eight bolts, two bolts at each of the four locations, by turning the engine and stopping at the proper position. Then, repeat the same process, and tighten the bolts to the specified torque.

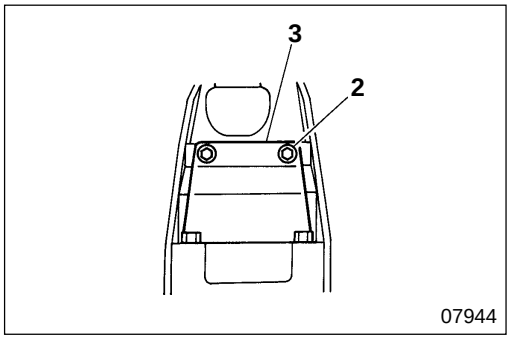

- Tighten all automatic transmission assembly mounting bolts **6** to the specified torque.
- Tighten bolts **2** to the specified torque to secure dust cover **3** in place.

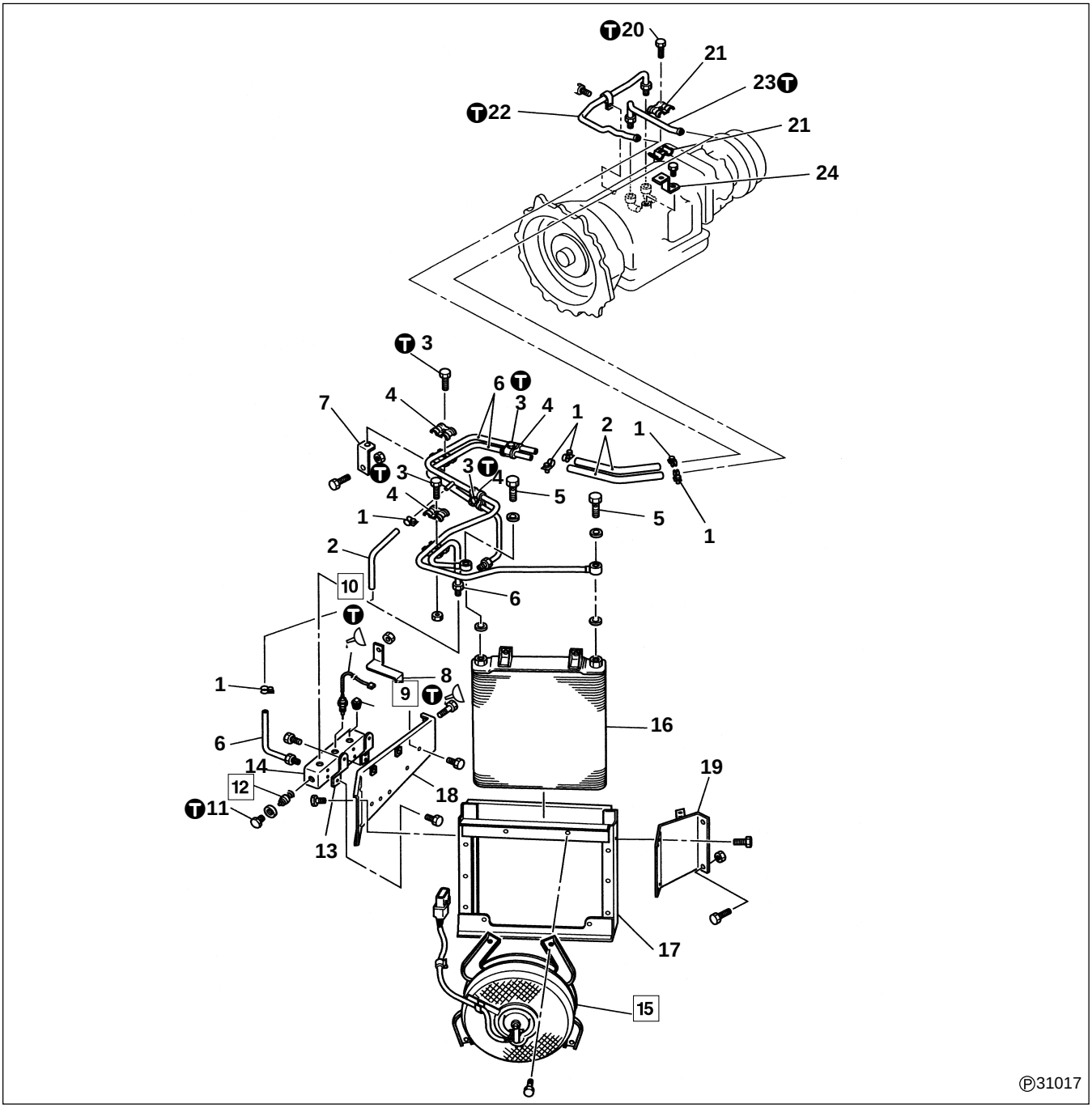

● **Removal sequence**

1 Hose clamp
2 Rubber hose
3 Bolt
4 Clamp
5 Eye bolt
6 Oil cooler tube
7 Bracket
8 Bracket
9 Plug
10 Automatic transmission fluid thermostat switch
11 Plug
12 Thermostat valve
13 Bracket
14 Connector
15 Blower assembly
16 Oil cooler assembly
17 Oil cooler mount frame
18 Oil cooler front support
19 Oil cooler rear support
20 Bolt
21 Clamp
22 Oil cooler pipe
23 Oil cooler pipe
24 Bracket

● **Installation sequence**

Follow the removal sequence in reverse.

OIL COOLER

Service standards

Unit : mm {in.}

Location	Maintenance item		Standard value	Limit	Remedy
10	Operating temperature of automatic transmission fluid thermostat switch	When rising (OFF→ON)	97±3°C {207±5.4°F}	—	Replace
		When falling (ON→OFF)	90°C {194°F} MIN		
12	Thermostat valve	Starting operation temperature	76.5±3°C {170±5.4°F}	—	Replace
		Bypass opening temperature	83±2°C {181±3.6°F}	—	Replace

Tightening torque

Unit : N·m {lbf.ft, kgf·m}

Location	Parts to be tightened	Tightening torque	Remarks
3	Bolt (Clamp mounting)	3.0 to 4.4 {2.2 to 3.3, 0.3 to 0.45}	—
9	Plug	29 to 39 {22 to 29, 3 to 4}	—
10	Automatic transmission fluid thermostat switch	29 to 39 {22 to 29, 3 to 4}	—
11	Plug	147 to 186 {110 to 139, 15 to 19}	Wet
20	Bolt (Clamp mounting)	3.0 to 4.4 {2.2 to 3.3, 0.3 to 0.45}	—
22, 23	Oil cooler pipe	29 to 30 {22 to 29, 3 to 4}	—

Sealant

Location	Points of application	Specified sealant	Quantity
9	Thread area of plug	THREEBOND 1110B	As required
10	Thread area of automatic transmission fluid thermostat switch	THREEBOND 1110B	As required

◆ Service procedure

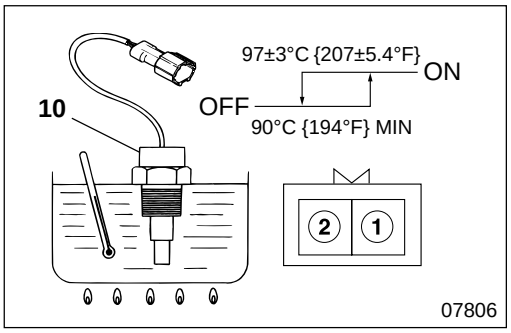

10 **Inspection of automatic transmission fluid thermostat switch**

Carry out the following inspection and replace automatic transmission fluid thermostat switch **10** if there are any faults.

- Check that there is no continuity between terminals ① and ② at ambient temperature of 20±5°C {68±9°F}.
- Place automatic transmission fluid thermostat switch **10** in a container filled with automatic transmission fluid, and raise the temperature while stirring well.
  Measure the temperature when continuity has been achieved between terminals ① and ②, and check that the measured value conforms to the standard value.
- Lower and measure the temperature when continuity is lost between terminals ① and ②, and check that the measured value conforms to the standard value.

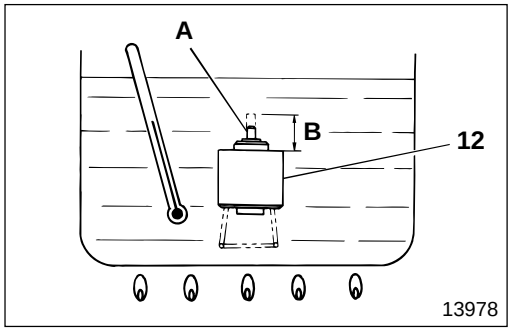

12 **Inspection of thermostat valve**

Carry out the following inspection. If any fault is found, replace thermostat valve **12**.

- Place thermostat valve **12** in a container filled with automatic transmission fluid and raise the fluid temperature while stirring the fluid.
  Make sure that end **A** starts stroking at a temperature of 76.5±3°C {170±5.4°F}.
- Raise the fluid temperature further and make sure that end **A** expands by 4.5 mm {1.18 in.} and dimension **B** in the illustration is 13.4 mm {0.53 in.} at a temperature of 83±2°C {181±3.6°F}.

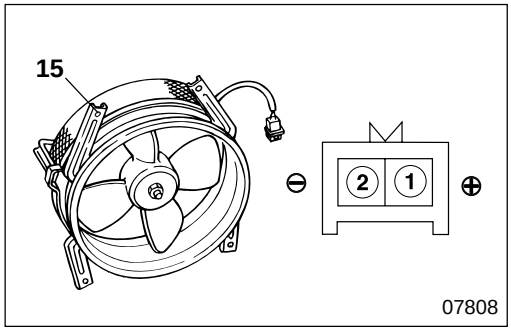

15 **Inspection of blower assembly**

Check blower assembly **15** and make sure it operates when battery voltage is loaded between terminals ① and ②. If any fault is found, replace the blower assembly.

Range Selector Lever

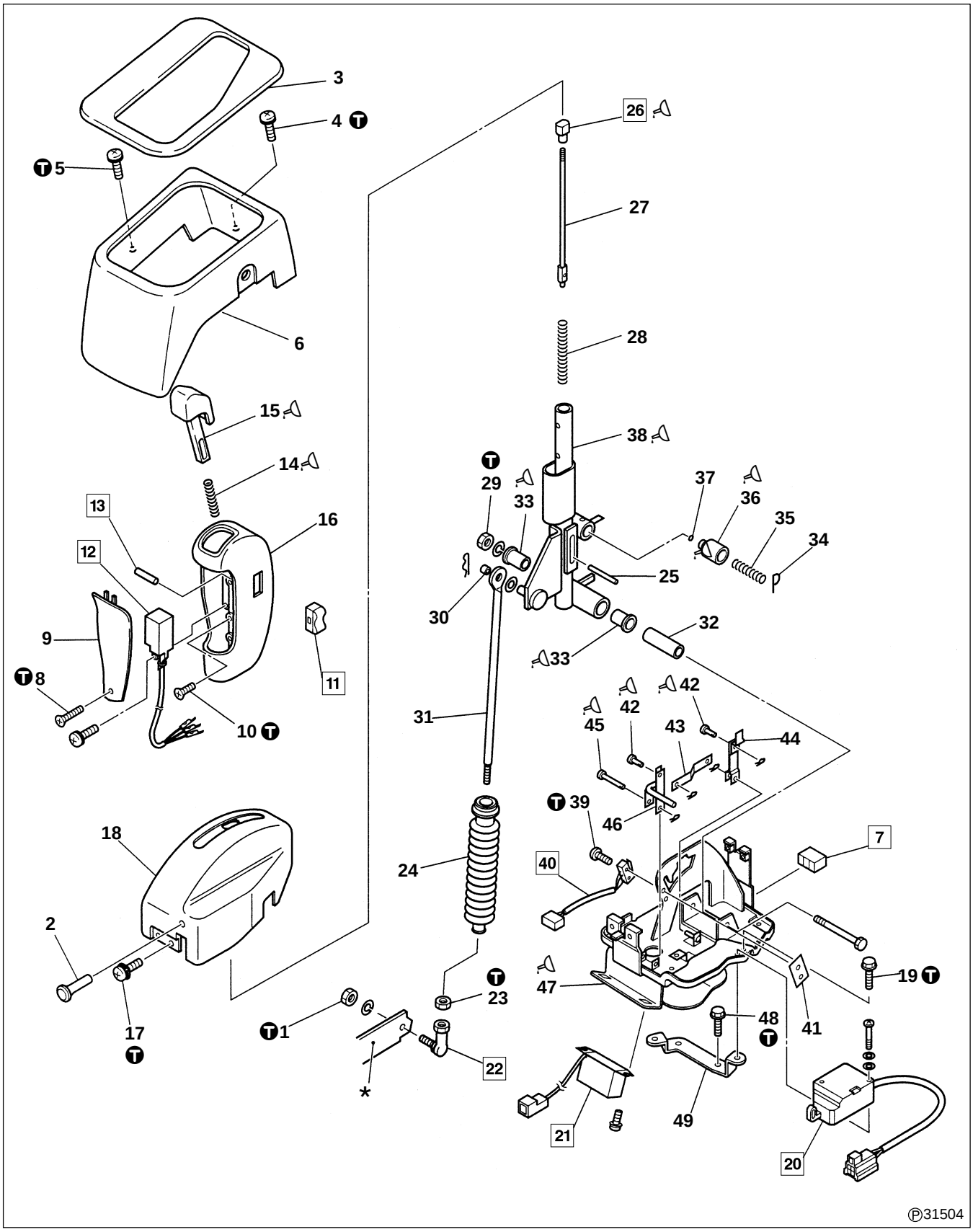

● **Disassembly sequence**

1 Nut
2 Shift lock release knob
3 Adapter
4 Screw
5 Screw
6 Range selector lever cover
7 Connector
8 Screw
9 Cover
10 Screw
11 Switch button
12 Overdrive OFF switch
13 Pin
14 Spring
15 Shift button
16 Automatic transmission knob
17 Screw
18 Indicator panel
19 Bolt
20 Shift lock actuator
21 Automatic transmission reverse buzzer
22 Ball joint
23 Lock nut
24 Grommet
25 Pin
26 Sleeve
27 Rod
28 Spring
29 Nut
30 Bushing
31 Rod
32 Pipe
33 Bushing
34 Pin
35 Ball spring
36 Ball support
37 Steel ball
38 Selector lever
39 Screw
40 P-range switch
41 Plate
42 Clevis pin
43 Shift lock link
44 Shift lock link
45 Clevis pin
46 Shift lock link
47 Lever bracket
48 Bolt
49 Base plate

***** : Lever assembly P23-71

● **Assembly sequence**

Follow the disassembly sequence in reverse.

Tightening torque

Unit : N·m {lbf.ft, kgf·m}

Location	Parts to be tightened	Tightening torque	Remarks
1	Nut (Lever assembly mounting)	17 to 22 {12 to 16, 1.7 to 2.2}	—
4	Screw (Range selector lever cover mounting)	3.9 to 5.9 {2.9 to 4.3, 0.4 to 0.6}	—
5	Screw (Range selector lever cover mounting)	3.9 to 5.9 {2.9 to 4.3, 0.4 to 0.6}	—
8	Screw (Cover mounting)	2.0 {1.4, 0.2}	—
10	Screw (Automatic transmission knob mounting)	2.0 {1.4, 0.2}	—
17	Screw (Indicator panel mounting)	1 to 2 {0.7 to 1.4, 0.1 to 0.2}	—
19	Bolt (Lever bracket mounting)	9.8 to 15.0 {7.2 to 11.0, 1.0 to 1.5}	—
23	Lock nut (Ball joint mounting)	16 to 24 {12 to 17, 1.6 to 2.4}	—
29	Nut (Lever mounting)	9.8 to 14.0 {7.2 to 10.0, 1.0 to 1.4}	—
39	Screw (P-range switch mounting)	0.2 to 0.3 {0.1 to 0.2, 0.02 to 0.03}	—
48	Bolt (Base plate mounting)	9.8 to 15.0 {7.2 to 11.0, 1.0 to 1.5}	—

Lubricant

Location	Points of application	Specified lubricant	Quantity
14	Outside surface of spring	Multipurpose grease [NLGI No.2 (Li soap)]	As required
15	Sliding area of shift button	Multipurpose grease [NLGI No.2 (Li soap)]	As required
26	Sliding area of sleeve	Wheel bearing grease [NLGI No.2 (Li soap)]	As required
33	Interior of bushing	Chassis grease [NLGI No.1 (Ca soap)]	As required
36	Sliding area of ball support	Chassis grease [NLGI No.1 (Ca soap)]	As required
38	Sliding area of selector lever	Wheel bearing grease [NLGI No.2 (Li soap)]	As required
42, 45	Sliding area of clevis pin	Chassis grease [NLGI No.1 (Ca soap)]	As required
47	Sliding area of lever bracket	Chassis grease [NLGI No.1 (Ca soap)]	As required

◆ Service procedure

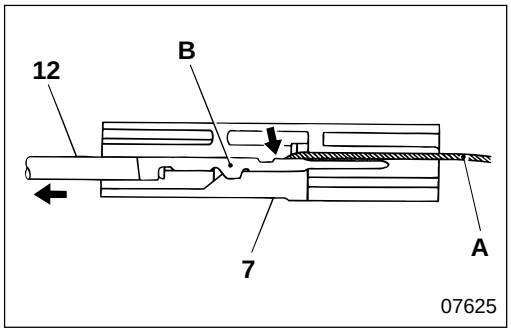

7 **Removal of connector**

Using screwdriver **A**, pull out terminal **B** of overdrive OFF switch **12** from the inside of connector **7** and remove the connector.

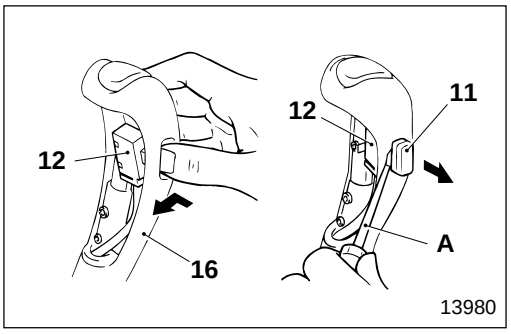

11 **12** **Switch button, overdrive OFF switch**

[Removal]

- Using screwdriver **A**, remove switch button **11** from overdrive OFF switch **12**.
- Remove overdrive OFF switch **12** from automatic transmission knob **16** by pushing the switch out.

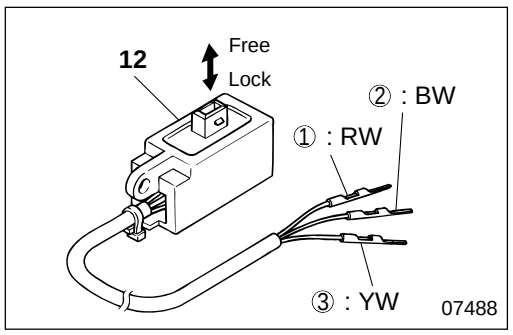

[Inspection of overdrive OFF switch **12**]

	① : RW	② : BW	③ : YW
Free	○		○
Lock	○	○	

○——○ : There is continuity between terminals ○ and ○.

Replace overdrive OFF switch **12** if it is faulty.

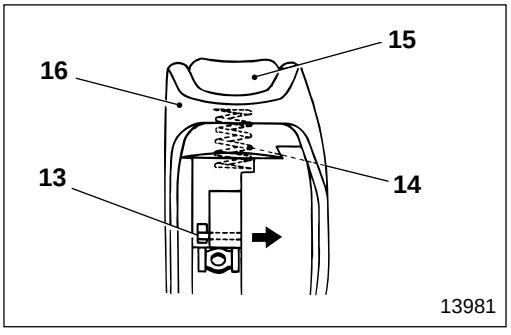

13 **Removal of pin**

While keeping shift button **15** and spring **14** pressed down, remove pin **13** towards the inside (arrow direction) of automatic transmission knob **16**.

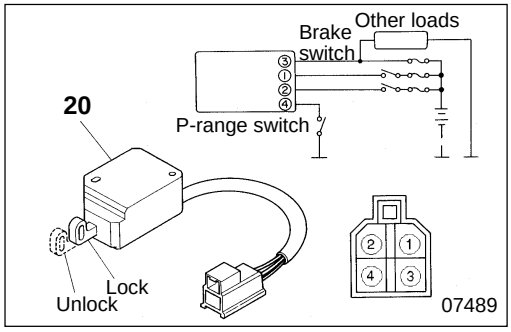

20 **Inspection of shift lock actuator**

Power supply		Switch		Operating mode	
IG	+B	Brake	P range	Unlock	Lock
○	○	○	○	○←	
○	○		○		→○
○	○	○		○	
○	○			○	
	○	○	○		→○
	○		○		→○
	○	○		○	
	○			○	

Check to make sure that shift lock actuator **20** is in operating mode under the above power supply and switch position.
Replace the shift lock actuator if it is faulty.

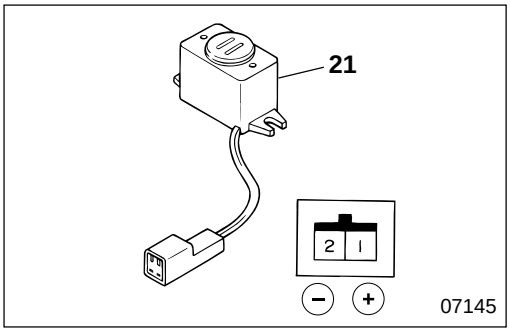

21 **Inspection of automatic transmission reverse buzzer**

- Check to make sure that the automatic transmission reverse buzzer sounds when 12 volts DC is loaded between terminals ① and ②.
- Replace automatic transmission reverse buzzer **21** if it is faulty.

NOTE

- **Automatic transmission reverse buzzer 21 sounds continuously when you apply voltage.**
- **If you want to make automatic transmission reverse buzzer 21 sound intermittently, use the automatic transmission reverse buzzer and the back buzzer in combination.**

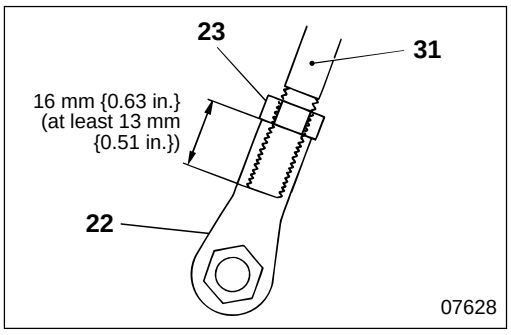

22 **Installation of ball joint**

Using ball joint **22** adjust rod **31** so that its thread ridge conforms to the dimensions as illustrated, then tighten with lock nut **23**.

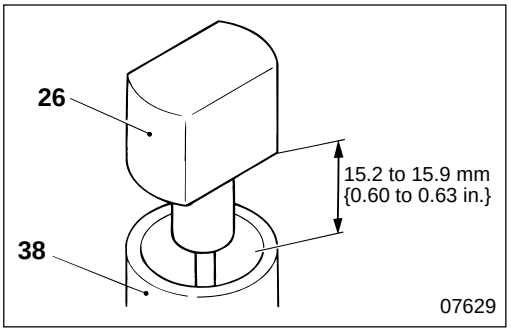

26 **Installation of sleeve**

Shift range selector lever **38** to the P range. Install sleeve **26** by rotating it so that the dimension between the sleeve and the upper part of the lever conforms to the value as illustrated.

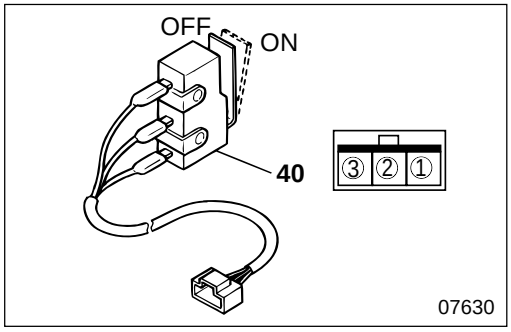

40 **P-range switch**

[Inspection]

	①	②	③
ON	○———		———○
OFF		○———	———○

○——○ : There is continuity between terminals ○ and ○.
Replace P-range switch **40** if it is faulty.

[Installation]
Install P-range switch **40** so that it is OFF when the range selector lever is in the P range.

Lever Assembly

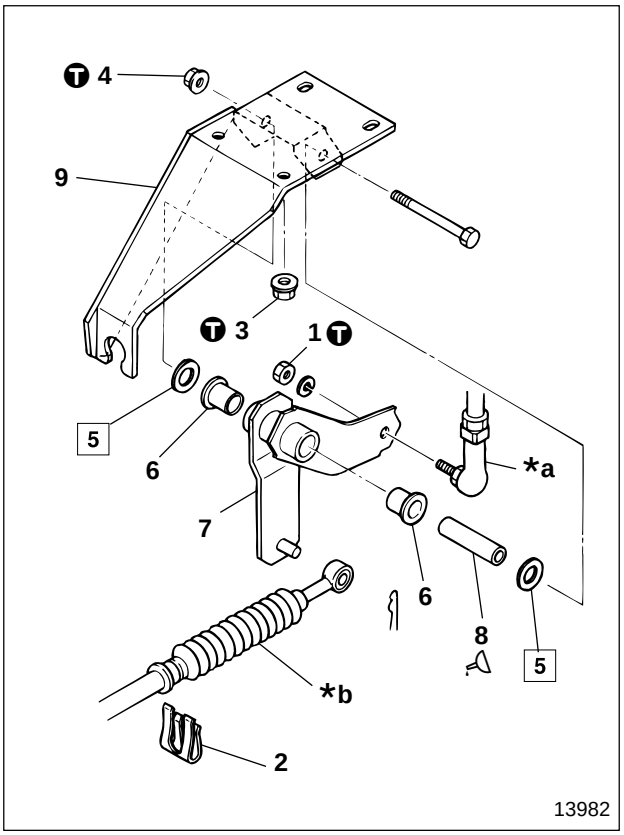

● **Disassembly sequence**

1 Nut
2 Clip
3 Nut
4 Nut
5 Spacer (for adjustment)
6 Bushing
7 Lever
8 Collar
9 Lever bracket

***a** : Range selector lever 🕮 P23-66
***b** : Selector cable 🕮 P23-72

● **Assembly sequence**

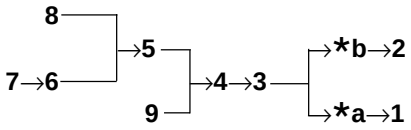

Tightening torque

Unit : N·m {lbf.ft, kgf·m}

Location	Parts to be tightened	Tightening torque	Remarks
1	Nut (Range selector lever mounting)	17 to 22 {12 to 16, 1.7 to 2.2}	—
3	Nut (Bracket mounting)	9.8 to 15.0 {7.2 to 11.0, 1.0 to 1.5}	—
4	Nut (Lever mounting)	17 to 22 {12 to 16, 1.7 to 2.2}	—

Lubricant

Location	Points of application	Specified lubricant	Quantity
8	Outside surface of collar	Chassis grease [NLGI No.1 (Ca soap)]	As required

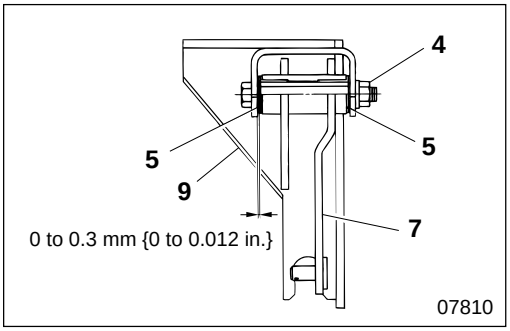

◆ Service procedure

5 **Selection of spacer**

- Select the spacer so that when nut **4** is tightened at specified torque the clearance between lever bracket **9** and spacer **5** conforms to the dimensions as illustrated.
  There are two spacer thicknesses available : 0.3, 0.5 mm {0.012, 0.020 in.}
- After installation make sure lever **7** can be operated smoothly.

AUTOMATIC TRANSMISSION CONTROL

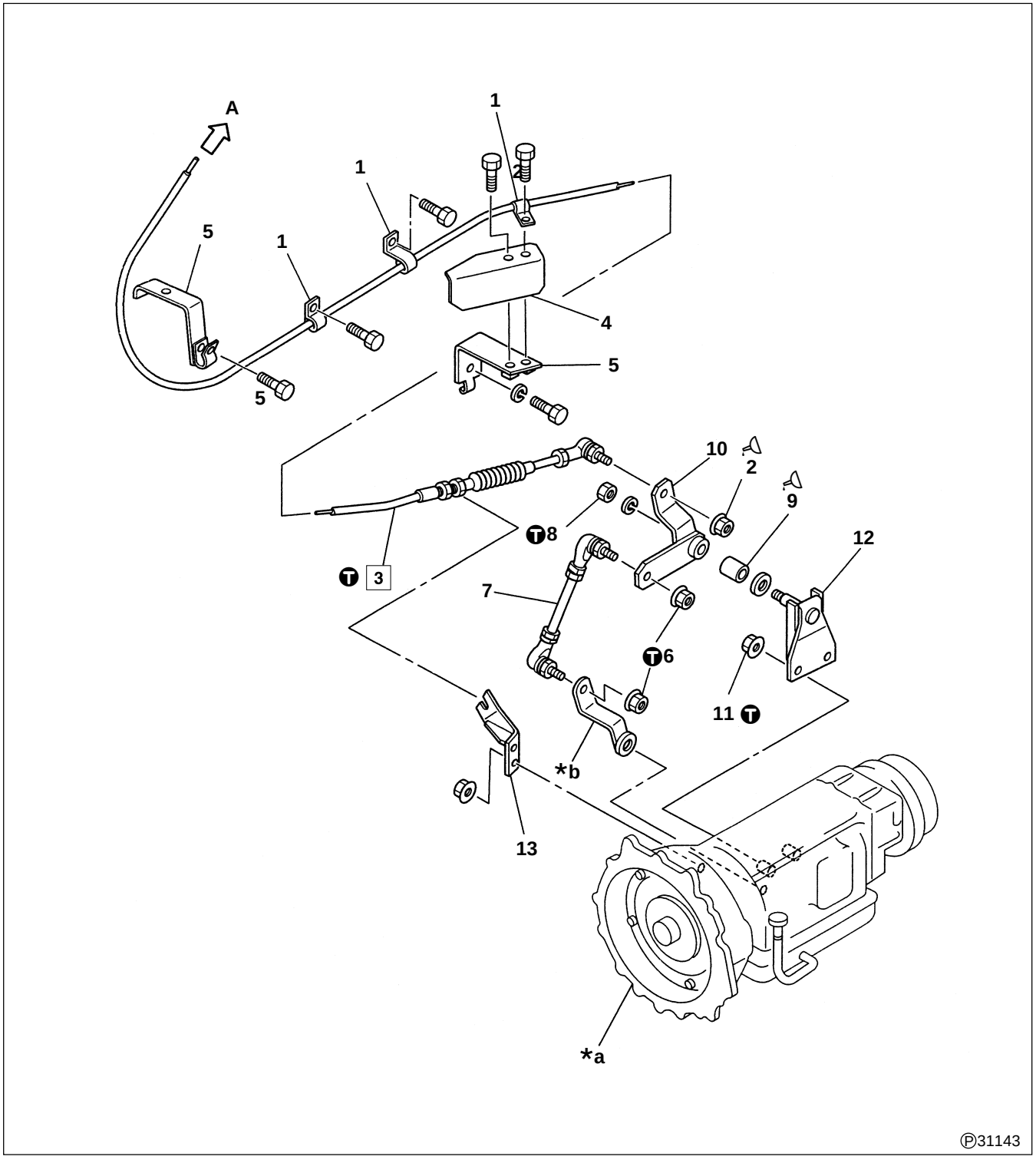

● **Removal sequence**

1 Clip
2 Nut
3 Selector cable
4 Insulator
5 Bracket
6 Nut
7 Rod
8 Nut
9 Bushing
10 Lever
11 Nut
12 Bracket
13 Bracket

A : To range selector lever

***a** : Automatic transmission unit
***b** : Transmission control shift lever
🕮 P23-76

● **Installation sequence**

Follow the removal sequence in reverse.

Ⓣ Tightening torque

Unit : N·m {lbf.ft, kgf·m}

Location	Parts to be tightened	Tightening torque	Remarks
2	Nut (Selector cable mounting)	3.9 to 5.9 {2.9 to 4.3, 0.4 to 0.6}	—
3	Selector cable (For mounting on bracket)	60 to 85 {6.0 to 8.5}	—
6	Nut (Rod mounting)	9.8 to 15 {7.2 to 11, 1.0 to 1.5}	—
8	Nut (Lever mounting)	28 to 35.7 {2.8 to 3.5}	—
11	Nut (Bracket mounting)	38 to 54 {28 to 40, 3.9 to 5.5}	—

Lubricant

Location	Points of application	Specified lubricant	Quantity
9	Inside bushings	Chassis grease [NLGI No.1 (Ca soap)]	As required

◆ Service procedure

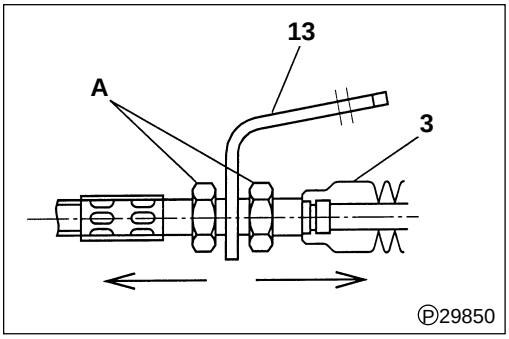

3 **Selector cable**

- Loosen nuts **A** on the selector cable **3** all the way to the ridges.

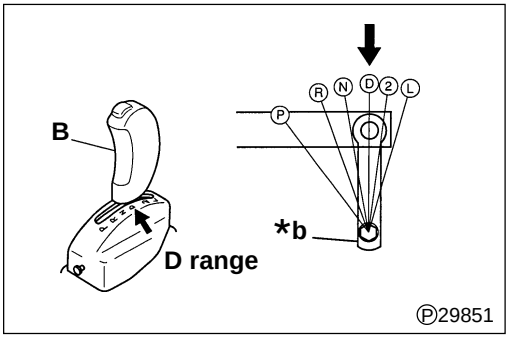

- Set automatic transmission lever knob **B** (located inside the cabin) and transmission control lever ***b** to the D range position.

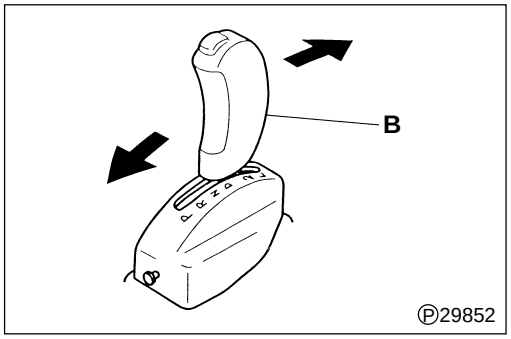

- Shake automatic transmission lever knob **B** back and forth.

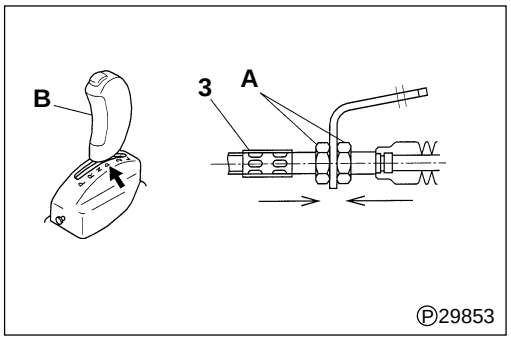

- Check to make sure that automatic transmission lever knob **B** is in the D range, and tighten nuts **A** on selector cable **3** to the specified torque.

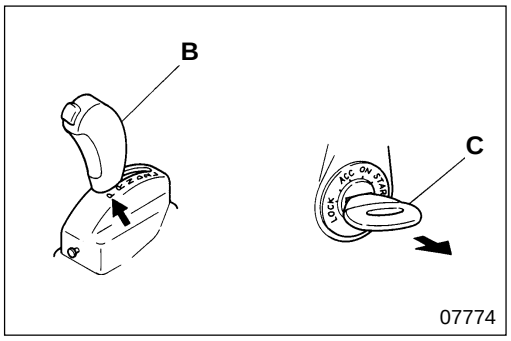

- Make sure that starter key **C** can be removed with automatic transmission lever knob **B** in the P range.

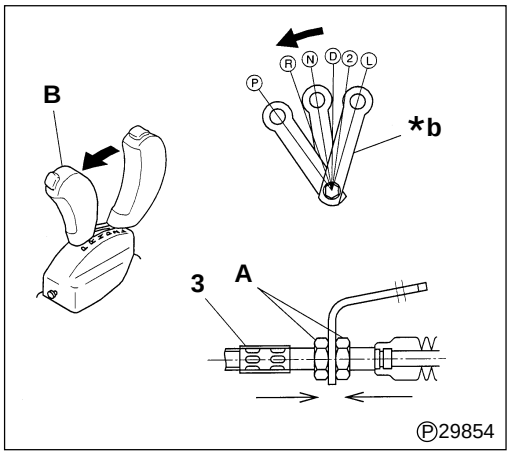

[Adjustment]

Adjust nuts **A** on selector cable **3** so that transmission control lever ***b** moves smoothly in the entire range when automatic transmission lever knob **B** is moved from the L range to P range.

CAUTION ⚠

If the adjustment of nuts A is improper, automatic transmission lever knob B produces resistance when it is moved to the L or P range. In some cases, the starter key cannot be removed with the automatic transmission lever knob in the P range.

M E M O

REPLACEMENT OF AUTOMATIC TRANSMISSION PARTS

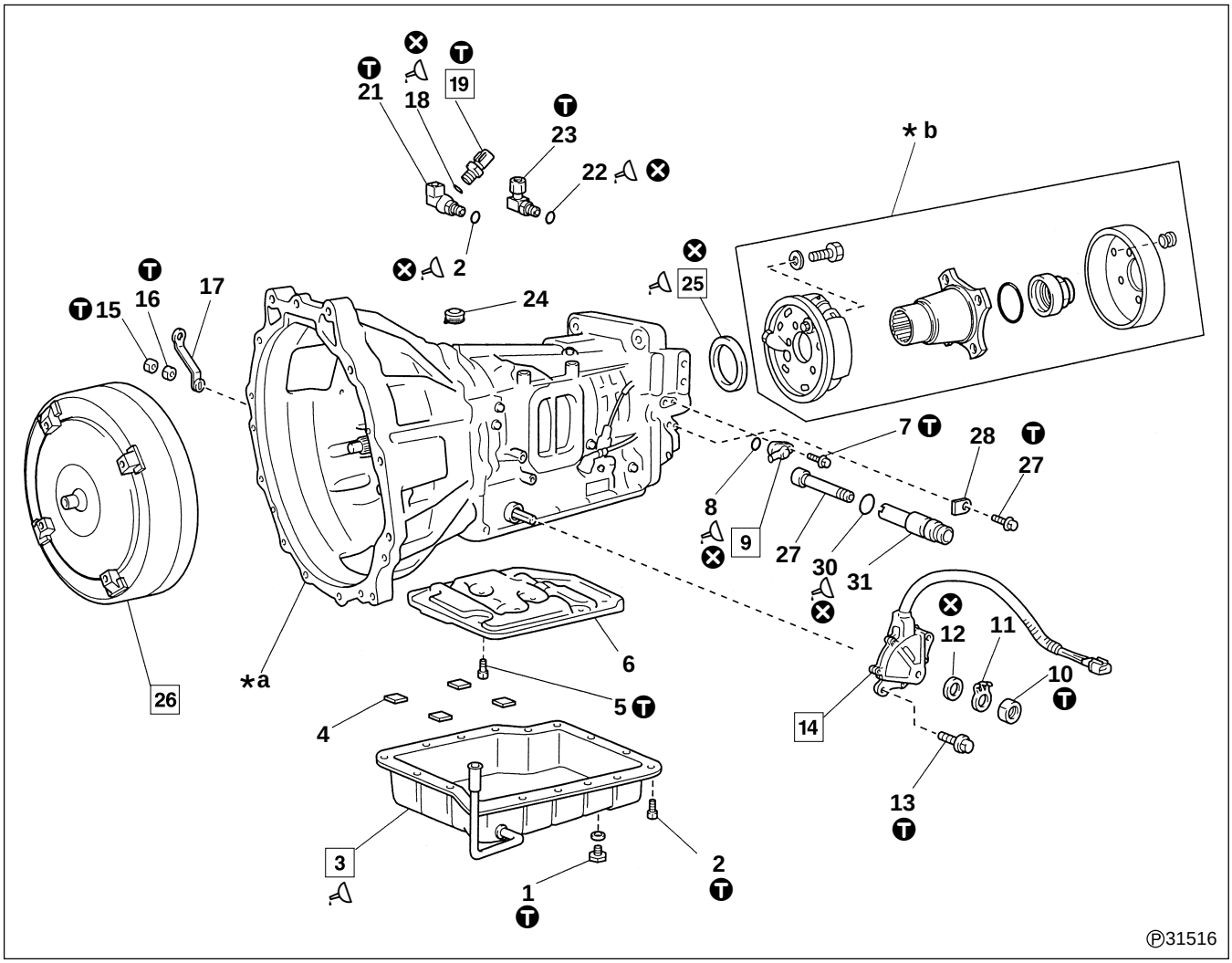

● **Removal sequence**

1 Drain plug
2 Bolt
3 Oil pan
4 Oil cleaner magnet
5 Bolt
6 Oil strainer
7 Bolt
8 O-ring
9 Speed sensor
10 Nut
11 Lock washer
12 Gasket
13 Bolt
14 Inhibitor switch
15 Nut
16 Nut
17 Transmission control shift lever
18 O-ring
19 Oil temperature switch
20 O-ring
21 Elbow
22 O-ring
23 Elbow
24 Breather cap
25 Rear oil seal
26 Torque converter
27 Bolt
28 Speedometer sleeve lock plate
29 Speedometer driven gear
30 O-ring
31 Speedometer sleeve

***a** : Automatic transmission unit
***b** : Parking brake assembly
Gr 36
⊗ : Non-reusable parts

● **Installation sequence**

Follow the removal sequence in reverse.

Service standards

Location	Maintenance item		Standard value	Limit	Remedy
9	Speed sensor resistance (at normal temperature)		560 to 680 Ω	—	Replace
19	Oil temperature switch activating temperature	OFF→ON	143 to 151°C {289 to 304°F}	—	Replace
		ON→OFF	Approximately 125°C {257°F}		

Tightening torque

Unit : N·m {lbf.ft, kgf·m}

Location	Parts to be tightened	Tightening torque	Remarks
1	Drain plug	27 {21,2.8}	With magnets
2	Bolt (Oil pan mounting)	7 {5.1,0.7}	—
5	Bolt (Strainer mounting)	10 {7.2,1.0}	—
7	Bolt (Speed sensor mounting)	8 {5.8,0.8}	—
10	Nut (Inhibitor switch mounting)	7 {5.1,0.7}	—
13	Bolt (Inhibitor switch mounting)	12.5 {9.4,1.3}	—
15	Nut (Transmission control shift lever mounting)	12.5 {9.4,1.3}	—
16	Nut (Transmission control shift lever mounting)	12.5 {9.4,1.3}	—
19	Automatic transmission fluid temperature switch	24.5 {18,2.5}	—
21	Elbow	32 {24,3.3}	—
23	Elbow	32 {24,3.3}	—
27	Bolt (Speedometer sleeve lock plate mounting)	12.5 {9.4,1.3}	—

Lubricant and/or sealant

Location	Parts of application	Specified lubricant and/or sealant	Quantity
—	O-rings	Automatic transmission fluid	As required
3	Mounting surfaces of oil pan and automatic transmission unit	THREEBOND 1281B	As required
25	Lip section of oil seal	Wheel bearing grease [NLGI NO.2 (Li soap)]	As required

Special tools

Location	Tool name and shape	Part No.	Application
3	Oil pan remover 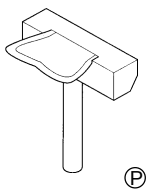 Ⓟ29856	MD998727	Removal of oil pan

REPLACEMENT OF AUTOMATIC TRANSMISSION PARTS

Special tools

Location	Tool name and shape	Part No.	Application
25	Oil seal installer 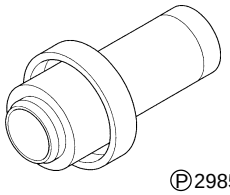 Ⓟ29857	MH063608	Installation of oil seal

◆ Service procedure

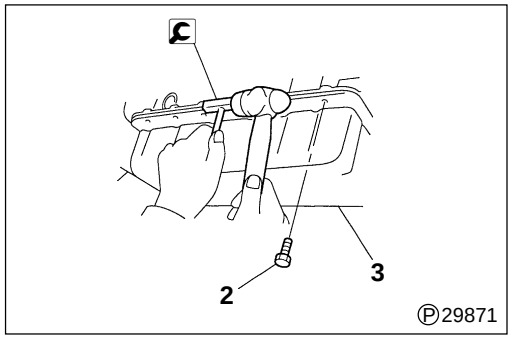

Ⓟ29871

3 Oil pan

[Removal]

- Remove bolts **2**.

CAUTION

To prevent oil pan 3 from dropping when separating the sealant from the oil pan, keep several bolts (not tightened) mounted at intervals of three bolt holes.

- Insert oil pan remover at a corner of oil pan **3**, and separate the oil pan from the automatic transmission unit.

CAUTION

- **Be careful not to deform the shape of oil pan 3 when inserting oil pan remover.**
- **Do not tilt the oil pan during removal since the oil pan 3 contains oil.**

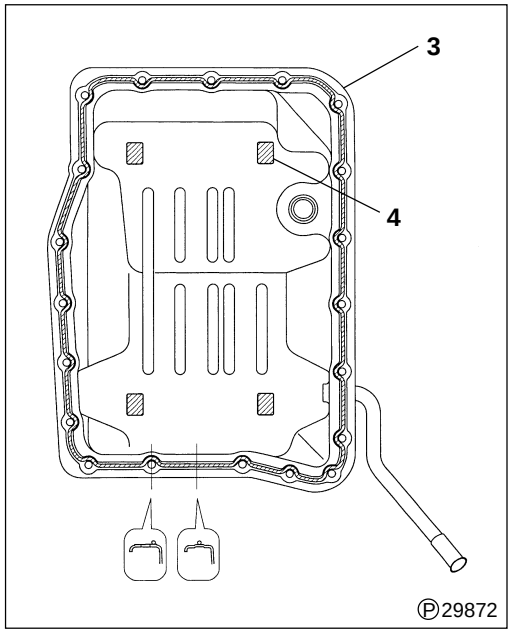

Ⓟ29872

[Installation]

- Remove the sealant from the mounting surfaces of the automatic transmission unit and oil pan **3**.
- Clean oil cleaner magnets **4**, and mount them in the oil pan.
- Apply sealant on oil pan **3**, and mount the oil pan on the automatic transmission unit.
- Tighten bolts **2** to the specified torque.

CAUTION

- **Do not allow automatic transmission fluid on the contact surfaces of oil pan 3 and the automatic transmission unit.**
- **Apply sealant continuously with a diameter of 2 or 3 mm {0.079 to 0.12 in.}, as shown in the diagram.**
- **Install the oil pan within 10 minutes after the application of the sealant.**
- **Tighten bolts 2 evenly by conducting the tightening operation for each bolt several times.**

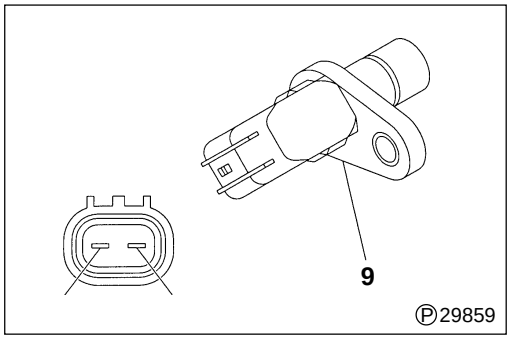

9 Inspection of speed sensor

- Measure the resistance between the connector terminals shown in the diagram. If the measured value deviates from the standard value, the connector is defective.
- Standard resistance between terminals: 560 to 680 Ω (at normal temperature)

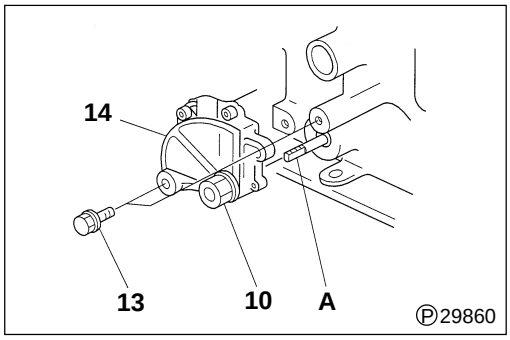

14 Inhibitor switch

[Installation]

- Set control shaft **A** to the N position.
- Mount inhibitor switch **14** on control shaft **A**.
- Tighten two bolts **13**.
- Tighten nut **10**.

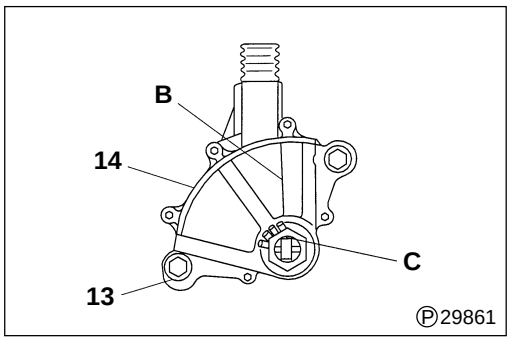

- Loosen two bolts **13**, and position inhibitor switch **14** so that reference line **B** on the inhibitor switch aligns with groove **C**.
- While holding inhibitor switch **14** with one hand, tighten two bolts **13** to the specified torque with the other hand.
- Bend the two lock tabs on the nut of inhibitor switch **14**.

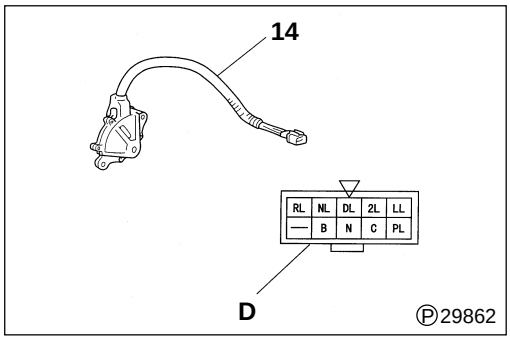

[Inspection]

Check the electric conduction at wire connector **D** of inhibitor switch **14** using a tester.

< Connection chart >

	B	N	C	PL	RL	NL	DL	2L	LL
P	○	○	○	○					
R			○		○				
N	○	○	○			○			
D			○				○		
2			○					○	
L			○						○

○——○ : Electric conduction between terminals

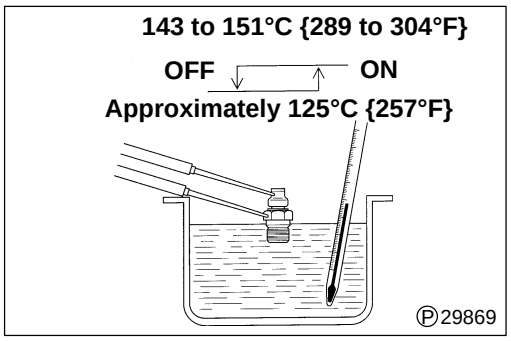

19 **Oil temperature switch**

Place oil temperature switch assembly **19** in a container filled with glycerin. Vary the temperature of the oil, and check to make sure that the switch operates (ON and OFF) at the specified temperatures.

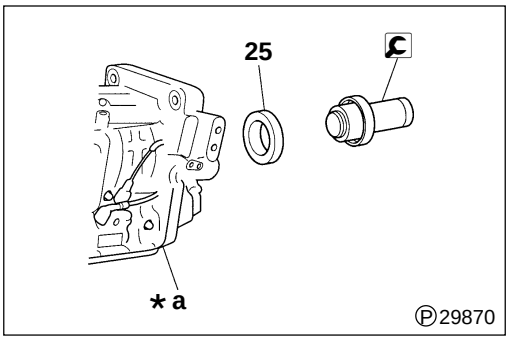

25 Installation of oil seal

CAUTION

After the oil seal 25 is removed, clean the surface of the extension housing of automatic transmission unit *a to which oil seal is mounted.

- Apply grease on the lip section of oil seal **25**.
- Use oil seal installer to insert oil seal **25** all the way into the extension housing of automatic transmission unit ***a**.

CAUTION

- **Insert oil seal 25 evenly.**
- **Do not damage or deform the shape of oil seal 25.**

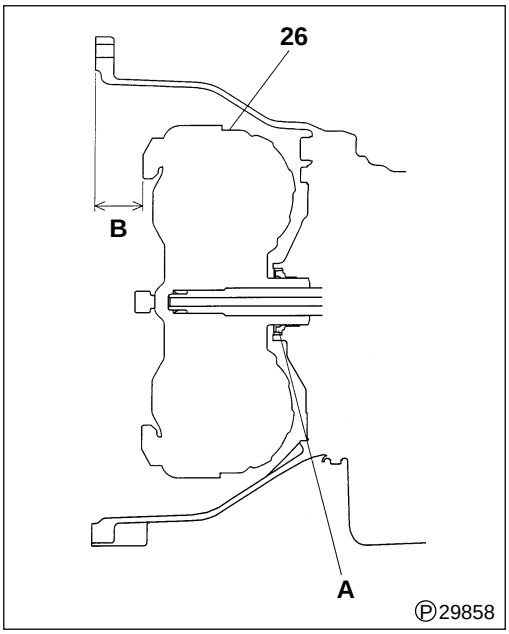

26 Installation of torque converter

- Pour new automatic transmission fluid into torque converter **26** when the torque converter to be installed is new.
  Automatic transmission fluid quantity : Approximately 2 L {2.1 qts}
- Apply automatic transmission fluid on front oil seal **A**, and mount torque converter **26** on the oil pump.

CAUTION

Be careful not to damage oil seal A when mounting torque converter 26.

- Measure dimension **B** between the torque converter housing and the set block of torque converter **26** to make sure that the torque converter is inserted into the proper position.
  Dimension **B** : 44 mm {1.73 in.} or more

INSPECTION AND ADJUSTMENT OF OTHER DEVICES

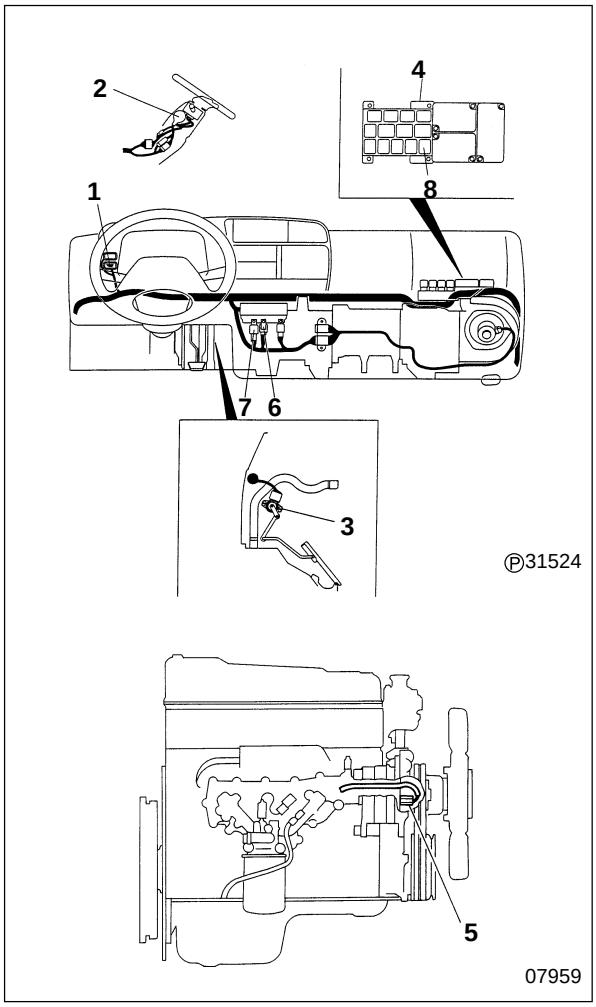

1 Power mode switch
2 Starter switch
3 Accelerator sensor
4 Relay box
5 Engine speed sensor
6 Automatic transmission fluid cooler fan relay
7 Neutral start relay
8 Backup lamp relay

Service standards

Location	Maintenance item	Standard value	Limit	Remedy
6, 7, 8	Minimum relay operating voltage	16 V or lower	—	Replace

◆ Service procedure

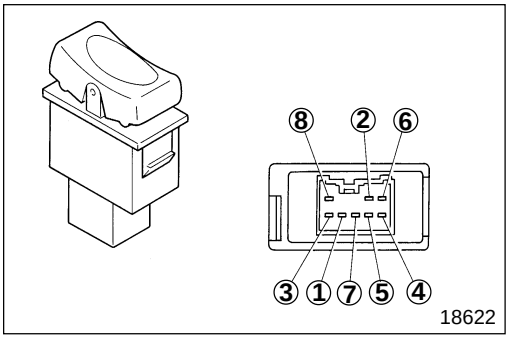

1 Inspection of power mode switch

	①	②	③	④	LED (activation indication)	⑥	LED (night time illumination)	⑦
PWR	○	—	○	○	—⋀⋀⋀—	○		
ECO	○	○				○	—⋀⋀⋀—	○

○—○ : Electric conduction between terminals
If an abnormality is found, replace power mode switch **1**.

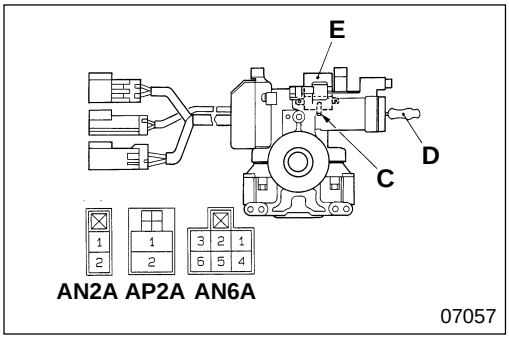

2 **Starter switch**

[Removal and installation] Electrical (210)

[Inspection]

Conduct the following inspection. If an abnormality is found, replace starter switch **2**.

(1) Inspection of electric conduction

		AP2A		AN6A				
		①	②	③	④	②	⑥	⑤
LOCK	Without key							
	With key						○—○	○—○
• (OFF)							○—○	○—○
ACC		○——	——○				○—○	○—○
ON		○—	—○—	○—	—○		○—○	○—○
START		○—	—○—	○—	—○—	○	○—○	○—○
		B	M	A	F/M	S	K1	K2

○—○ : Electric conduction between terminals

(2) Inspection of key interlock solenoid

	AN2A		LOCK	ACC	ON	START	Remarks
	①	②					
Turning range of key **D**	⊖	⊕		←		→	Plunger **C** is engaged, and key **D** cannot be removed.
			←			→	Plunger **C** is disengaged, and key **D** can be removed.

⊖---⊕ : Terminals applied with battery voltage

E : Key interlock solenoid

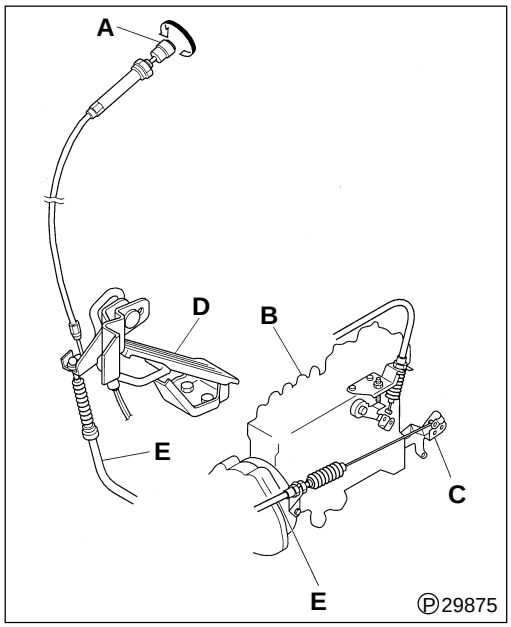

3 Accelerator sensor

(1) Initial voltage data storage

When accelerator sensor **3** is dismounted or replaced, it is necessary to save the initial voltage value (full throttle) in the automatic transmission electronic control unit memory.

Check items

- Idle adjustment knob is appropriate.
- Accelerator sensor **3** are properly mounted. 4D3 Gr 13
- Idle adjustment knob **A** is fully pushed in.

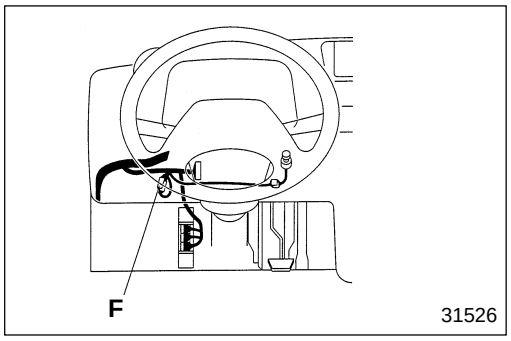

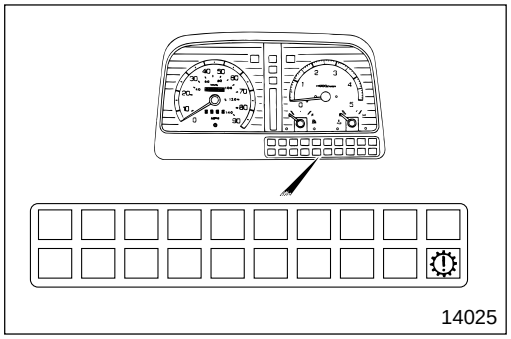

Initial full-throttle voltage data storage

- Turn the starter switch to the ON position.
- Delete the data in the automatic transmission electronic control unit memory by keeping the following conditions for five seconds.
  Turn the starter switch to the ON position.
  Stop the vehicle (engine OFF).
  Shift the range selector lever to the L range.
  Turn off the overdrive OFF switch. (Overdrive OFF)
  Disconnect diagnosis switch (plug connector) **F**.
  Press on the brake pedal.
  Press on the accelerator pedal to full throttle.
  When data deletion is complete, the warning lamp ⚠ flashes.
- Remove feet from the accelerator and brake pedals, and shift the range selector lever to the P range and connect diagnosis switch **F**.
- Hold the accelerator pedal at full throttle, and press down on the brake pedal for more than three seconds.
  During this process, the warning lamp ⚠ lights for three seconds. After the full throttle position data is stored in the electronic control unit, the warning lamp turns off.
- After confirming that the warning lamp ⚠ has turned off, remove feet from the brake and accelerator pedals. Then turn off the starter switch.
- If the warning lamp does not light, repeat the procedure from the beginning.

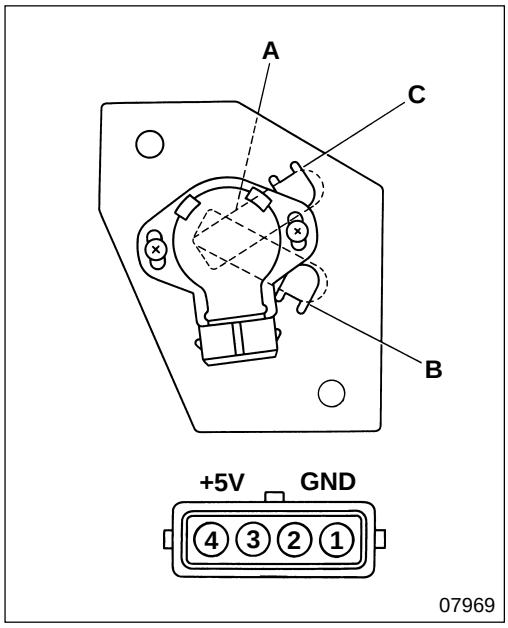

(2) Inspection of accelerator sensor

Apply a voltage of 5 V to terminal ④, and ground terminal ①.
Measure the output voltage that generates at terminal ③ when lever **A** is moved to each position.
If the measured values deviate from the standard value, replace the accelerator sensor.
Regarding the removal and installation of the sensor, refer to 4D3 Gr 13
B : Idle position
C : Maximum lever stroke position

Accelerator sensor output voltage at idle (V)	Connector terminals	
	③	①
0.85±0.1	⊕	⊖

Accelerator sensor output voltage at full throttle (V)	Connector terminal	
	③	①
4.15±0.1	⊕	⊖

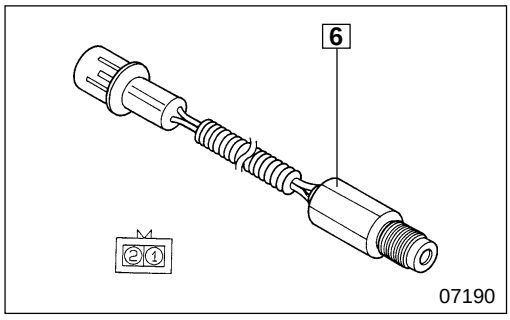

6 Inspection of engine speed sensor

(1) Inspection of engine speed sensor mounting condition 4D3 Gr 11

(2) Inspection of engine speed sensor unit

Standard value (kΩ)	Connector terminals	
	①	②
1.4±0.2	○	○

If the measured value deviates from the standard value, replace the engine speed sensor.

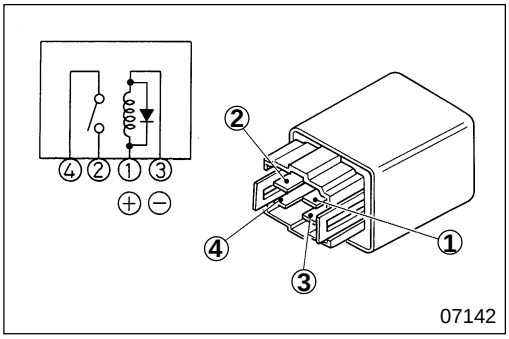

7 8 9 Inspection of relay (constant-open type, 4-pin)

	①	②	③	④	Remarks
Electric current supplied	○		○		—
Electric current not supplied	⊕	○	⊖	○	Measure the voltage of electric current.

○——○ : Electric conduction between terminals
⊕ – – – ⊖ : Terminals applied with battery voltage
If an abnormality is found, replace the relay.

MITSUBISHI
FUSO

FE

Service Manual

Group 23
Automatic Transmission

Table of Contents

BACK

HOME

MITSUBISHI FUSO TRUCK OF AMERICA, Inc.

Pub No. TWSE9501-23

GROUP 23 AUTOMATIC TRANSMISSION

SPECIFICATIONS 2

STRUCTURE AND OPERATION 3

TROUBLESHOOTING PROCEDURE 50

ELECTRIC CIRCUIT AND PARTS INSTALLATION POSITION 62

INSPECTION BY INDIVIDUAL DIAGNOSIS CODE 65

INSPECTION BY SYMPTOM 92

INSPECTION OF TEMPORARY FAULT 107

INSPECTION USING THE CHECK BOX (HARNESS CHECKER) 108

INSPECTION AND ADJUSTMENT MOUNTED IN VEHICLE
- Stall Test 112
- Line Pressure Test 113
- Road Test 115
- Inspection of Automatic Transmission Fluid 117
- Replacement of Automatic Transmission Fluid 118

WORK BEFORE REMOVAL AND INSTALLATION OF AUTOMATIC TRANSMISSION ASSEMBLY 120

REMOVAL AND INSTALLATION OF AUTOMATIC TRANSMISSION ASSEMBLY 121

OIL COOLER 126

AUTOMATIC TRANSMISSION CONTROL 130

REPLACEMENT OF RELATIVE PARTS OF AUTOMATIC TRANSMISSION BODY 142

SPECIFICATIONS

Item			Specifications	
Manufacturer			JATCO	
Transmission model			M030A4	
Torque converter	Type		Symmetrical 3-element, 1-stage, 2-phase type	
	Stall torque ratio		2.0	
Automatic transmission	Type		Planetary gear type, 4 forward speeds, 1 reverse speed	
			FE639	FE649
	Gear ratio	1st	3.028	2.784
		2nd	1.570	1.544
		3rd	1.000	1.000
		4th	0.724	0.694
		Reverse	2.625	2.275
Range selection pattern			Ⓟ – R – Ⓝ D – 2 – L (Engine is started in Ⓝ and Ⓟ ranges only)	
Automatic transmission fluid	Recommended fluid		Automatic transmission fluid DEXRON II type	
	Fluid quantity	L {qts}	12 {12.7}	
	When fluid is replaced	L {qts}	Approximately 6.7 {7.1}	

Automatic Transmission Assembly

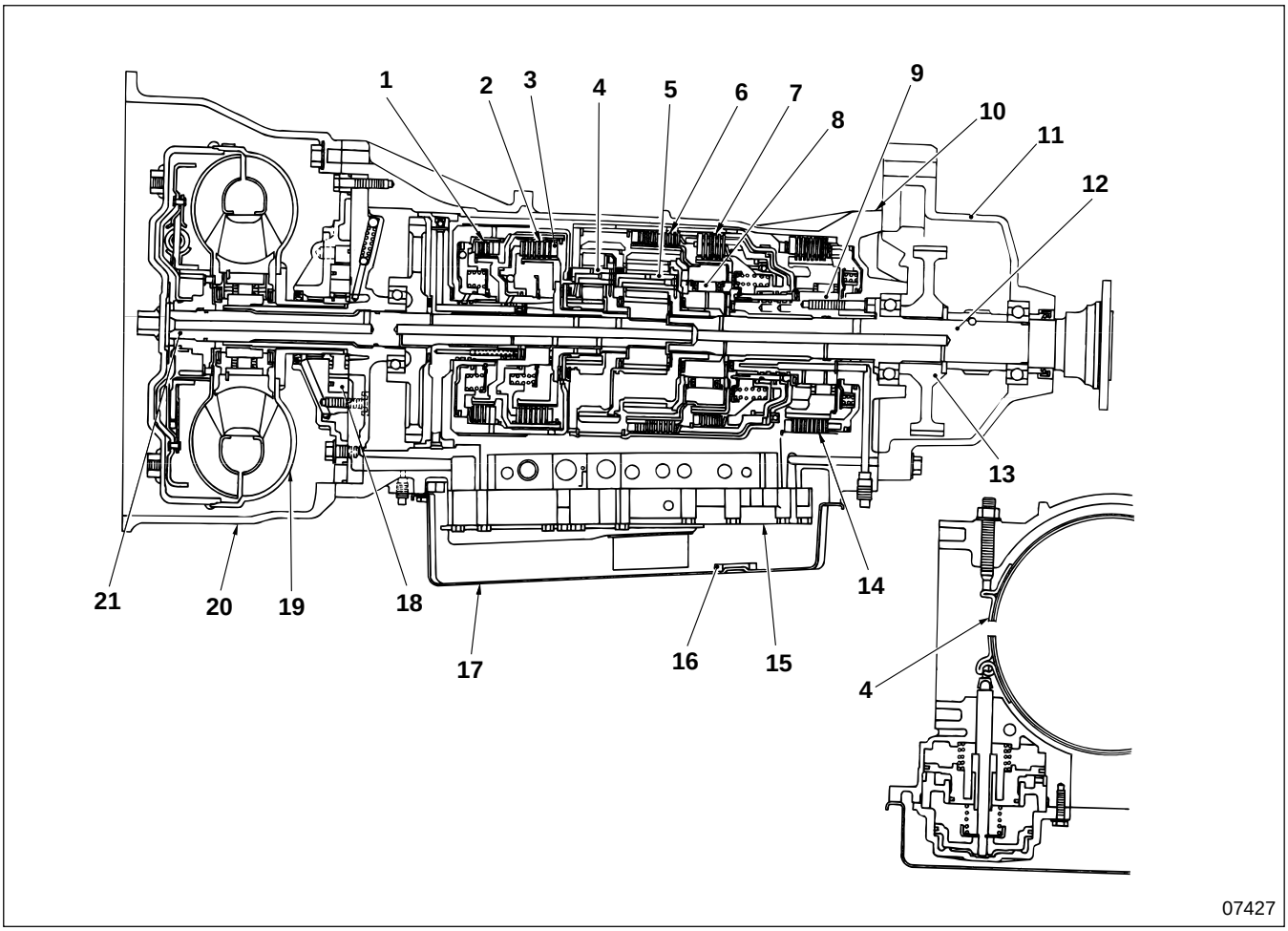

1	Reverse clutch	**8**	Forward one-way clutch	**15**	Control valve
2	High clutch	**9**	Low one-way clutch	**16**	Magnet
3	Brake band	**10**	Transmission case	**17**	Oil pan
4	Front planetary gear	**11**	Extension housing	**18**	Oil pump
5	Rear planetary gear	**12**	Output shaft	**19**	Torque converter
6	Forward clutch	**13**	Parking gear	**20**	Converter housing
7	Overrunning clutch	**14**	Low and reverse brake	**21**	Input shaft

The automatic transmission consists of a torque converter with a lock-up system and a fully automatic 4-speed gear system.

● Torque converter

The transmission input system of the torque converter increases the torque transmitted from the engine to a maximum of twice the input torque. The torque converter also acts as a fluid coupling which absorbs shock during engine start up and gear shifting. Above a specified speed level, the lock-up system is activated to prevent slippage and to improve transmission efficiency.

● Transmission

The transmission has four forward speeds and one reverse speed. Transmission is accomplished by two sets of planetary gears, and four sets of hydraulically operated, wet-type multiplate brakes and brake bands.

● Hydraulic control

Precise gearshift control is achieved by the incorporation of various electronic controls that are handled by a microcomputer which has entire control of the system.

Control Mechanism

Control system

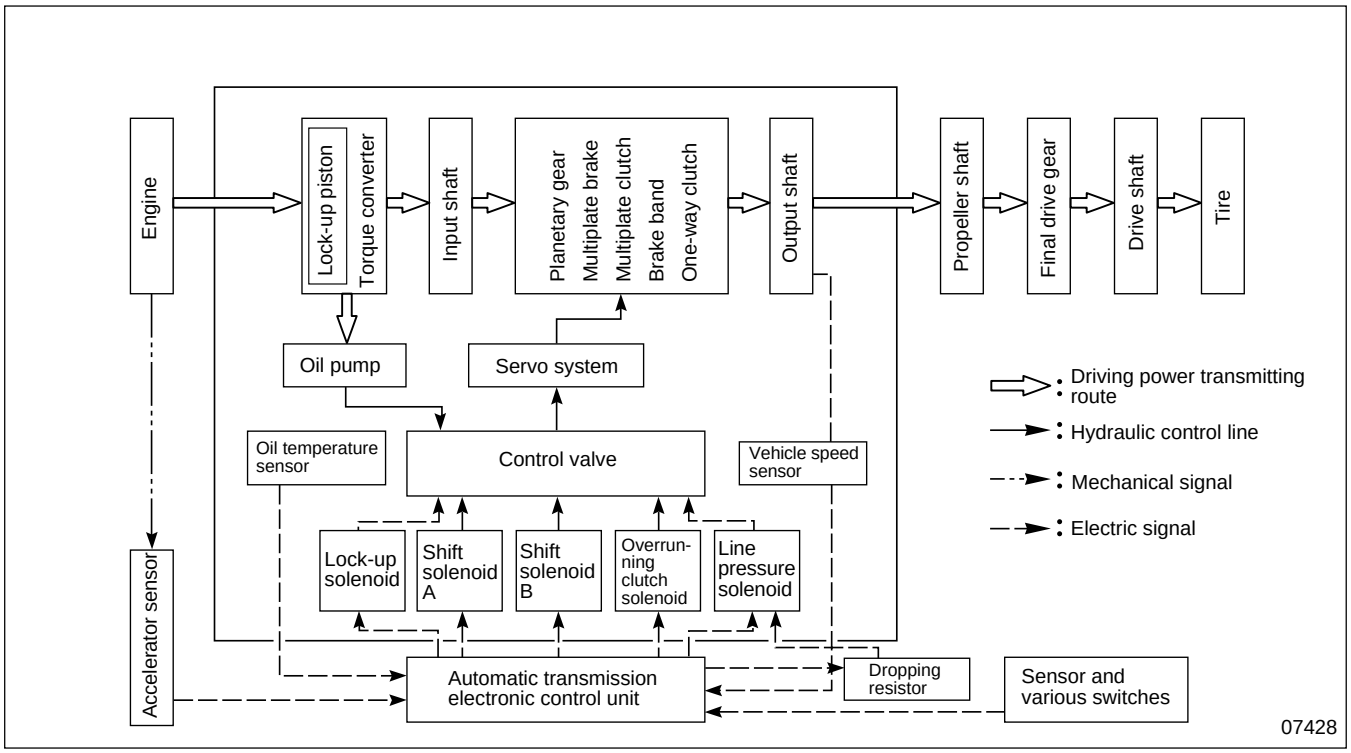

Control block diagram

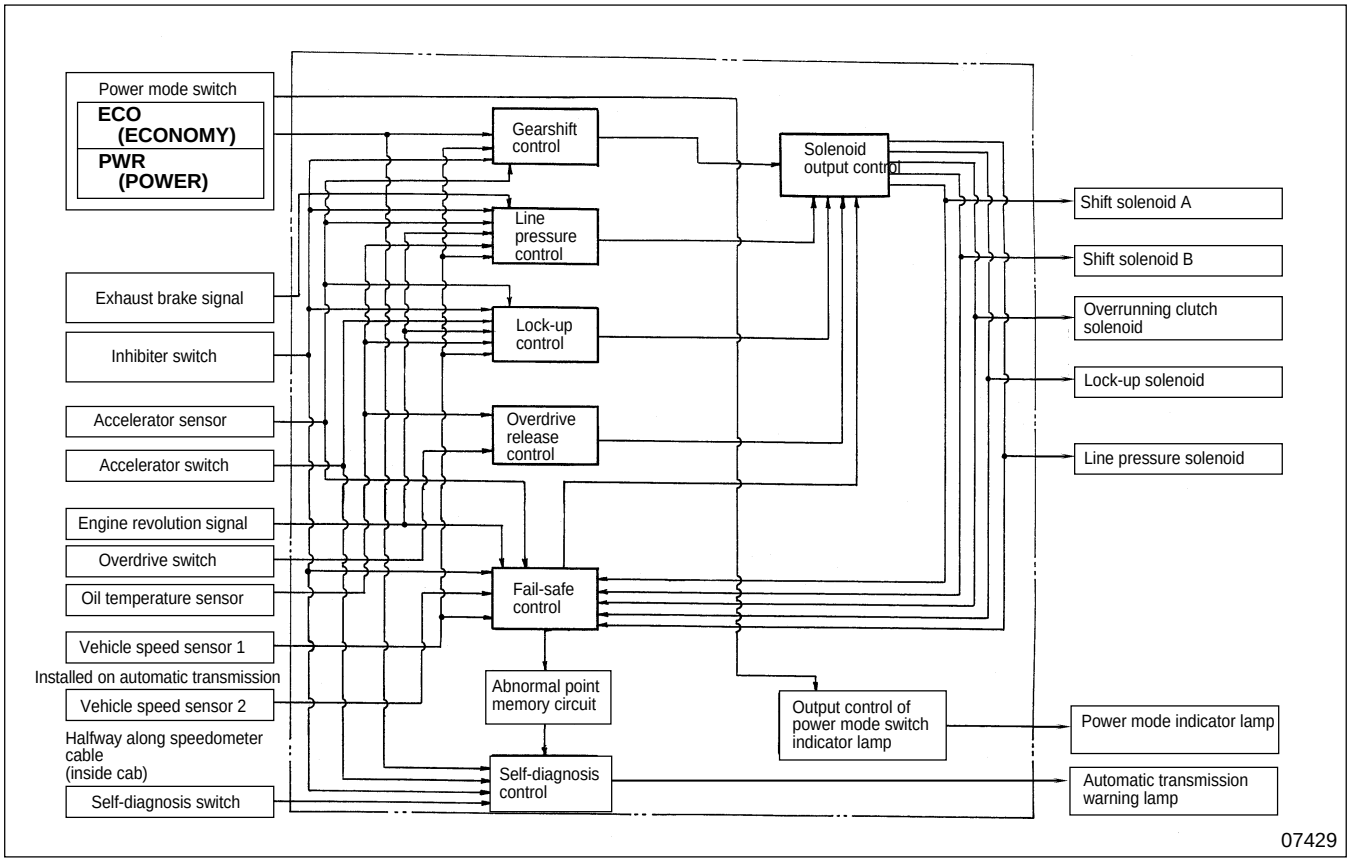

The control method basically consists of: gearshift control, line pressure control, lock-up control and overrunning clutch control; and issues electronic commands for control, all of which are controlled by the electronic control unit depending on the driving conditions of the vehicle.

Table of control item and input/output

	Item \ Control item		Line pressure control	Gearshift control (includes overdrive gearshift control)	Shift pattern selection control	Lock-up control	Engine brake control	Fail-safe control	Self-diagnosis function
Input	Power mode switch			○	○	○			
	Accelerator sensor		○	○	○	○	○	(Note 3) ○	○
	Vehicle speed sensor 1	Installed on transmission (power shaft revolution sensor)	○	○	○	○		(Note 3) ○	○
	Vehicle speed sensor 2	Installed halfway along speedometer cable (inside cab)	(Note 1) ○	(Note 1) ○	(Note 1) ○	(Note 1) ○			○
	Engine revolution signal					○			○
	Inhibiter switch		○	○	○	○	○	(Note 3) ○	(Note 4) ○
	Overdrive switch			○	○	○	○		
	Oil temperature sensor		○	○		○		○	○
	Exhaust brake signal						○		
	Accelerator switch		(Note 2) ○	(Note 2) ○					(Note 4) ○
	Voltage signal from electronic control unit power source		○						○
Output	Diagnosis switch								(Note 5) ○
	Shift solenoid A			○				(Note 3) ○	○
	Shift solenoid B			○				(Note 3) ○	○
	Line pressure solenoid		○					(Note 3) ○	○
	Lock-up solenoid					○		(Note 3) ○	○
	Overrunning clutch solenoid			○			○	(Note 3) ○	○
	Power mode indicator lamp				○				
	Automatic transmission warning lamp								○

Note 1 : Backup vehicle speed sensor 1 (installed on the transmission)
Note 2 : Backup accelerator sensor
Note 3 : When these input/output signals become abnormal, the automatic transmission electronic control unit activates the fail-safe function.
Note 4 : This is used as a the basis for the start of self-diagnosis, and if self-diagnosis is not initiated, it judges that either one is faulty.
Note 5 : Activates self-diagnosis function.

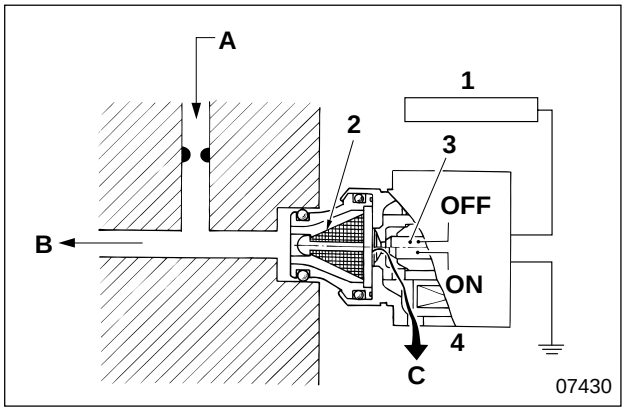

● **Line pressure control**

• **Line pressure solenoid**

1 Automatic transmission electronic control unit
2 Filter
3 Needle valve
4 Line pressure solenoid

A : Pilot pressure
B : Throttle pressure (to pressure modifier valve)
C : Drain

The accelerator sensor monitors the amount of the accelerator opening, and by controlling line pressure solenoid **4**, pilot pressure **A** from the oil pump is regulated, via the pressure regulator valve, into the optimum hydraulic pressure (throttle pressure **B**) for driving.

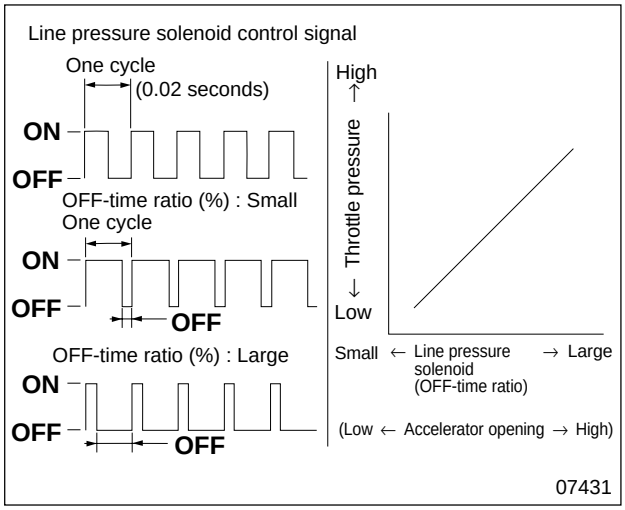

The line pressure solenoid is controlled by the ON-OFF operation activated by signals transmitted from automatic transmission electronic control unit **1**.
The ON-OFF signals are transmitted to line pressure solenoid **4** at 50 Hz (0.02 cycles per second). However, the ratio of ON and OFF signal time coming from the accelerator sensor, in conjunction with accelerator opening, is determined by automatic transmission electronic control unit **1**.
When line pressure solenoid **4** is switched OFF, needle valve **3** closes the pilot pressure (*1) drain line. When the line pressure solenoid is switched ON, the drain line opens. Accordingly, the larger the OFF-time ratio in the ON-OFF signals at 50 Hz, the longer the closing time of the drain line, and the higher the throttle pressure **B** (*2).
On the contrary, the smaller the OFF-time ratio, the shorter the closing time of the drain line, and throttle pressure **B** does not increase.

*1 : The pilot pressure is the pressure for use in the control mechanism, obtained after the line pressure has been adjusted by the pilot valve. In line pressure control, pilot pressure is supplied as a signal pressure to the pressure modifier valve and as a hydraulic pressure source.

*2 : The throttle pressure is the pressure obtained after pilot pressure has been adjusted by the activation of the line pressure solenoid.

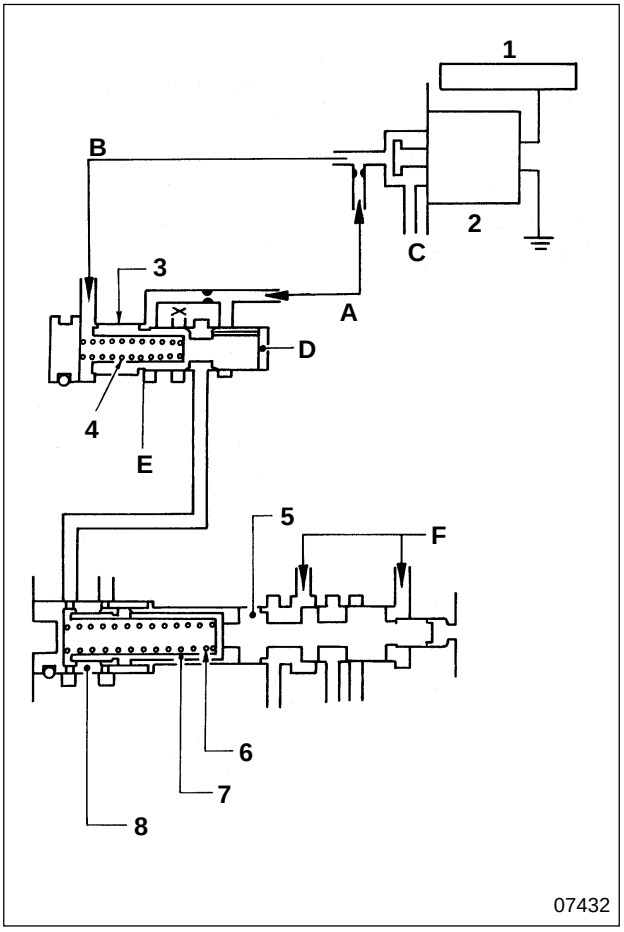

- **Pressure modifier valve**

1 Automatic transmission electronic control unit
2 Line pressure solenoid
3 Pressure modifier valve
4 Spring
5 Pressure regulator valve
6 Spring
7 Pressure regulator plug
8 Pressure regulator sleeve

A : Pilot pressure
B : Throttle pressure
C : Drain
E : Pressure reception area difference
F : Oil pump delivery pressure

The activation of line pressure solenoid **2** regulates throttle pressure **B**. This regulated pressure in turn acts as an input signal to convert pilot pressure **A** into a signal pressure that activates pressure regulator valve **5**.
As illustrated, the pilot pressure line and the throttle pressure line are connected to pressure modifier valve **3**.
By this design, the pilot pressure acts on chamber **D** and pressure reception area difference **E**, and is regulated to equalize with the repercussive force of spring **6** and the throttle pressure.
When the pressure that has been adjusted by the pressure modifier valve is delivered to pressure modifier plug **7**, it is added to the repercussive force of the spring and adjusts the line pressure. In this fashion, the line pressure is controlled by signals from electronic control unit **1**.

● **Gearshift control**

Based on the signals it receives from the accelerator sensor (corresponding to the accelerator opening), and from the vehicle speed sensor (corresponding to the vehicle speed), the automatic transmission electronic control unit sends signals to solenoids A, B, installed on the control valve, to shift gears automatically into the optimum gear position.

Gearshift control under normal conditions

The accelerator sensor evaluates the engine load, and the vehicle speed sensor evaluates the vehicle speed. After evaluating this data, the optimum converter gear position is determined according to the gearshift diagram. At standstill in the drive range, the gears are shifted into 2nd to reduce creep. (When starting by depressing the accelerator pedal, down shifting takes place immediately to shift the gears into 1st.)

Gearshift control under cold conditions

The design of the system is such that 4th gear cannot be selected if the temperature of the automatic transmission fluid is below the specified level, or the vehicle speed is below the specified rate.

Operating conditions for overdrive (D_4 position)

Overdrive switch	ON
Range selector lever	D range
Vehicle speed	The specified minimum or more
Oil temperature sensor	Approximately 10˚C {50˚F} or more

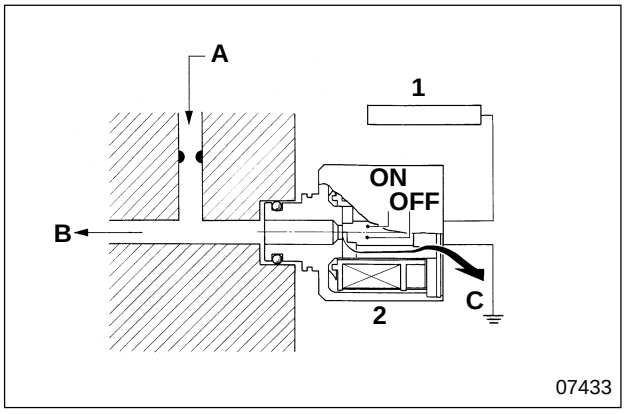

- **Solenoids A, B**

1 Automatic transmission electronic control unit
2 Shift solenoids A, B

A : Pilot pressure
B : Shift valve operation pressure
C : Drain

Solenoids A **2**, B **2** are ON-OFF solenoids controlled by signals received from automatic transmission electronic control unit **1**.
The ON signal of solenoids A, B generates oil pressure by closing the drain line, and this oil pressure acts on the gear shifting valve, switching the valve operations.

- Solenoid A controls the operation of shift valve A (shifting valve)
- Solenoid B controls the operation of shift valve B (shifting valve)

When solenoids A, B are switched OFF, the drain line is opened and no oil pressure acts on the valve, so it is inactive.

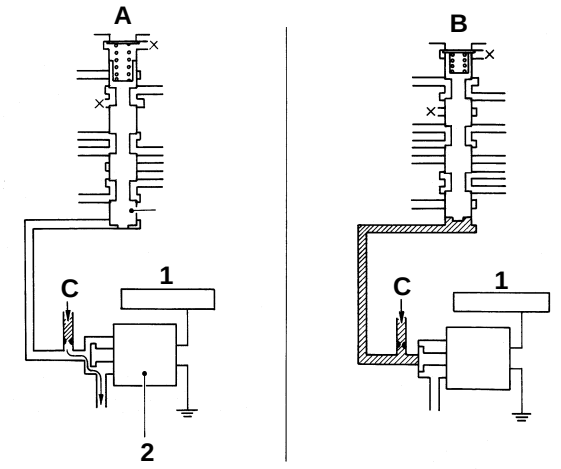

This illustration shows the example of shift valve A

07434

- **Shift valves A, B**
  - **1** Automatic transmission electronic control unit
  - **2** Shift solenoid

A : Inactive condition
B : Operating state
C : Pilot pressure

Shift valves A, B are gear shifting valves that change the operating pressure applied to the friction parts (clutch, brakes, etc.) by making the oil pressure generated by solenoids A, B act on the end surfaces of the valves.
Combining the ON and OFF states of shift valves A, B causes the operating pressure to shift gears into 1st, 2nd, 3rd and 4th.
A solenoid ON signal, causes the oil pressure to act on the end surfaces of the valves to overcome the repercussive force (spring force) coming from the reverse direction, opening the valves.
When the solenoid is OFF, no operation occurs as no oil pressure is applied to the end surfaces of the valves. If the valves are operating, they are pushed back by the repercussive force of the spring.

● Lock-up control

The lock-up control improves the efficiency of the transmission by eliminating slippage of the torque converter. Control of the operation of the lock-up control valve is done by signals transmitted from the automatic transmission electronic control unit via the lock-up solenoid.

Lock-up control under normal conditions

The accelerator sensor monitors the engine load, and the vehicle speed sensor monitors the vehicle speed. On the basis of these monitored data, the lock-up ON-OFF operation is controlled according to the specified gearshift diagram.

Lock-up control under cold conditions

The lock-up control improves the efficiency of heat-up by not operating until the temperature of the automatic transmission fluid reaches 40˚C {104˚F}. After the temperature reaches 40˚C {104˚F} or more, lock-up operation is possible until the temperature drops below 20˚C {68˚F}, this prevents hunting.

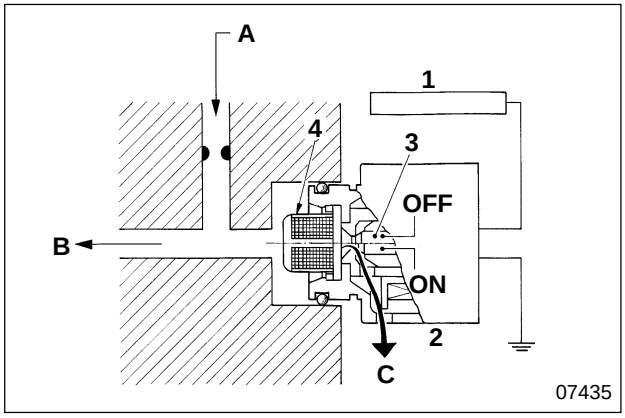

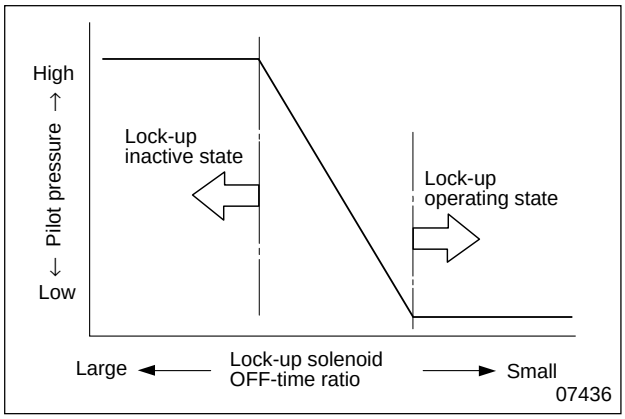

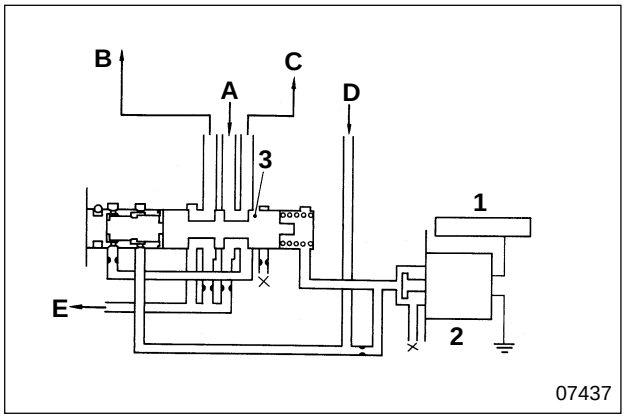

- **Lock-up solenoid**
  - **1** Automatic transmission electronic control unit
  - **2** Lock-up solenoid
  - **3** Needle valve
  - **4** Filter

  A : Pilot pressure
  B : To lock-up control valve
  C : Drain

Lock-up solenoid **2** is controlled by the ON-OFF operation according to the lock-up range established by automatic transmission electronic control unit **1**.
The ON-OFF signals are transmitted to lock-up solenoid **2** at 50 Hz (0.02 cycles per second) and the time ratio of the ON signal is determined by automatic transmission electronic control unit **1**.
When lock-up solenoid **2** is switched OFF, needle valve **3** closes pilot pressure **A** (*1) drain line. When the lock-up solenoid is switched ON, the drain line opens.
Accordingly, the larger the OFF-time ratio in the ON-OFF signals at 50 Hz, the longer the closing time of the drain line, which maintains the pilot pressure.
On the contrary, the smaller the OFF-time ratio, the longer the opening time of the drain line, which reduces the pilot pressure.
(*1) : The pilot pressure is the pressure for use in the control mechanism, obtained after the line pressure has been adjusted by the pilot valve.

- **Lock-up control valve**
  - **1** Automatic transmission electronic control unit
  - **2** Lock-up solenoid
  - **3** Lock-up control valve

  A : Converter pressure
  B : Converter pressure (Lock-up piston operating side)
  C : Converter pressure (Lock-up piston release side)
  D : Pilot pressure
  E : To oil cooler

As illustrated, the converter pressure line is connected to lock-up control valve **3**. Changeover of the lock-up control valve is made by lock-up solenoid **2**, based on signals received from automatic transmission electronic control unit **1**. This operation changes over the line of hydraulic oil to be supplied to the torque converter to either the lock-up piston release side or the lock-up piston operating side.

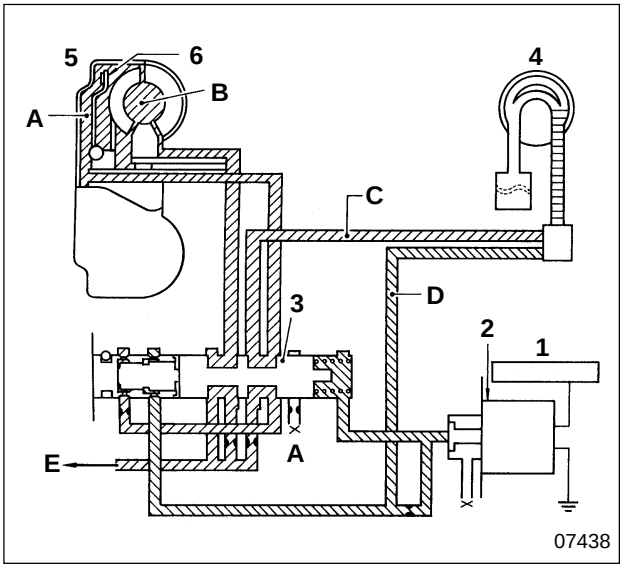

< Lock-up inactive state >

1 Automatic transmission electronic control unit
2 Lock-up solenoid
3 Lock-up control valve
4 Oil pump
5 Torque converter
6 Lock-up clutch

C : Torque converter pressure
D : Pilot pressure
E : To oil cooler

When the lock-up is inactive, the OFF-time ratio of lock-up solenoid **2** is long and the closing time of the drain line is long, which maintains pilot pressure **D**. Accordingly, the lock-up solenoid outlet pressure, combined with the repercussive force of the spring, acts on lock-up control valve **3** end surface, pushing it to the left. This operation causes torque converter pressure **C** to act on chamber **A**, and lock-up clutch **6** is not connected as the oil flows from chamber **A** into chamber **B**.

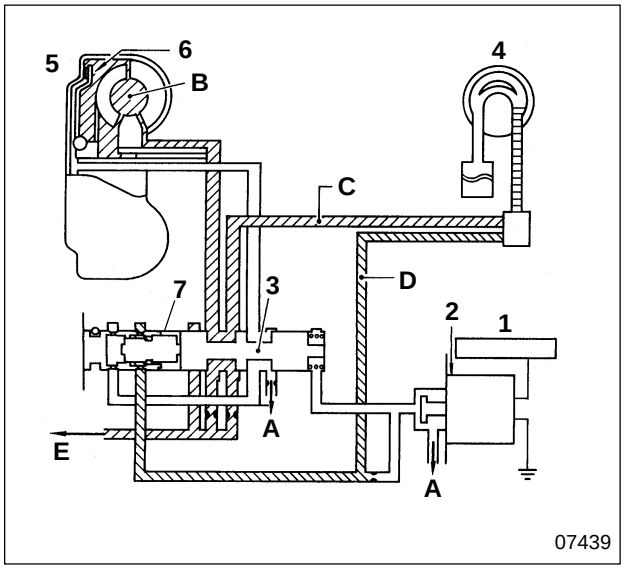

< Lock-up operating state >

1 Automatic transmission electronic control unit
2 Lock-up solenoid
3 Lock-up control valve
4 Oil pump
5 Torque converter
6 Lock-up clutch
7 Lock-up control plug

A : Drain
C : Torque converter pressure
D : Pilot pressure
E : To oil cooler

When the lock-up is operating, the OFF-time ratio of lock-up solenoid **2** is short and the opening time of the drain line is long, which reduces pilot pressure **D**. Accordingly, torque converter pressure **C** and the pilot pressure act on lock-up control plug **7**, pushing lock-up control valve **3** to the right. This operation causes the torque converter pressure to act on chamber **B**, connecting lock-up clutch **6** directly.

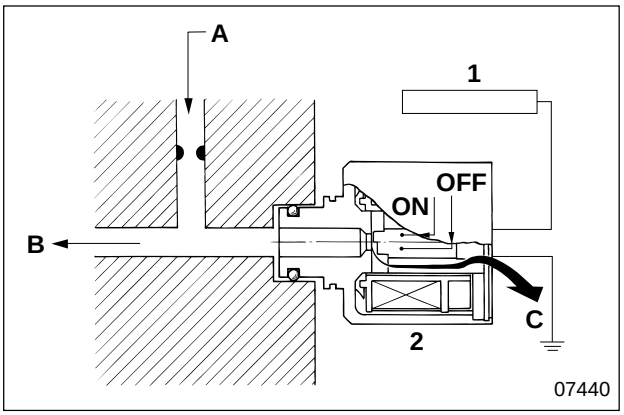

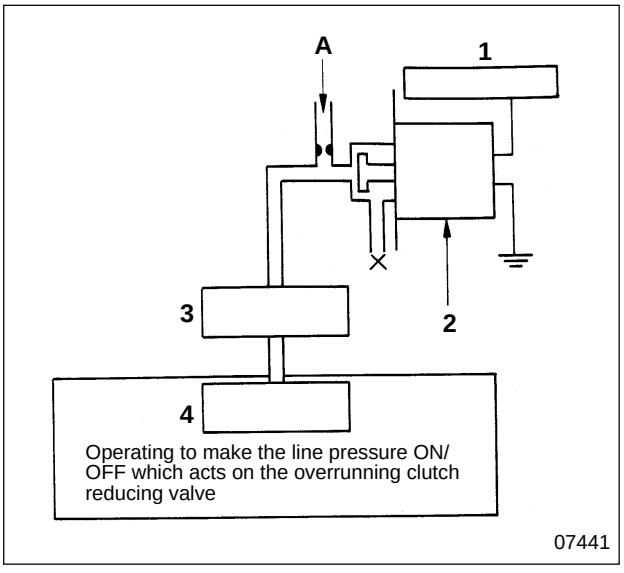

● **Overrunning clutch control**

The automatic transmission power train uses a forward one-way clutch to buffer shocks from gear shifting which are likely to occur when shifting down.
When the vehicle is coasting, and when the engine brake is applied from D to 2nd, and D to L during range selection, the forward one-way clutch freewheels so that no opposite driving force is transmitted to the engine. To deal with this situation, the operation of the overrunning clutch prevents freewheeling of the forward one-way clutch, so that the engine brake takes effect.

• **Overrunning clutch solenoid**

1 Automatic transmission electronic control unit
2 Overrunning clutch solenoid
3 Shuttle shift valve S
4 Overrunning clutch control valve

A : Pilot pressure
B : Overrunning clutch control valve operating pressure
C : Drain

Overrunning clutch solenoid **2** is controlled by the ON-OFF operation activated by signals transmitted from automatic transmission electronic control unit **1**. The ON signal is determined by the automatic transmission electronic control unit, based on data received from various sensors.
When the overrunning clutch solenoid is switched ON, the needle valve closes the drain line. When the overrunning clutch solenoid is switched OFF, the drain line opens. Accordingly, when the overrunning clutch solenoid is switched ON, the hydraulic pressure generated by the operation of the overrunning clutch solenoid acts on overrunning clutch control valve **4** end surface, via shuttle shift valve S **3**.

• **Shuttle shift valve S**

Shuttle shift valve S **3** is a fixed valve that is part of the hydraulic line and makes the pilot pressure, generated when overrunning clutch solenoid **2** is switched ON, act on overrunning clutch control valve **4**.

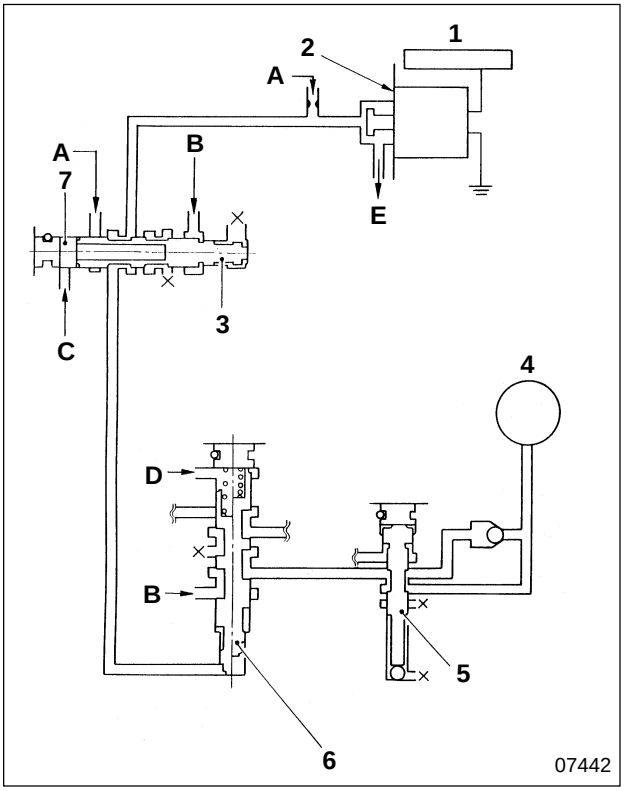

- **Overrunning clutch control**

1 Automatic transmission electronic control unit
2 Overrunning clutch solenoid
3 Shuttle shift valve S
4 Overrunning clutch
5 Overrunning clutch reducing valve
6 Overrunning clutch control valve
7 Plug

A : Pilot pressure
B : Line pressure (D, 2, L range)
C : Line pressure (2, L range)
D : L range 1st reducing valve pressure
E : Drain

The line pressure is controlled by the ON-OFF operation of the overrunning clutch control. The line pressure acts on overrunning clutch reducing valve **5** using the operation of overrunning clutch solenoid **2**.

< Overrunning clutch solenoid ON >
Overrunning clutch control valve **6** comes into operation when the hydraulic pressure generated by the operation of overrunning clutch solenoid **2** acts on the overrunning clutch control valve end surface via shuttle shift valve S **3**. By this operation, the line pressure does not act on overrunning clutch reducing valve **5**.

< Overrunning clutch solenoid OFF >
Overrunning clutch control valve **6** becomes inactive due to the repercussive force of the spring. By this operation, the line pressure reduced by overrunning clutch reducing valve **5** acts on overrunning clutch **4**. In the L range, the overrunning clutch control valve is fixed in its inactive state by 1st reducing valve pressure **D**.

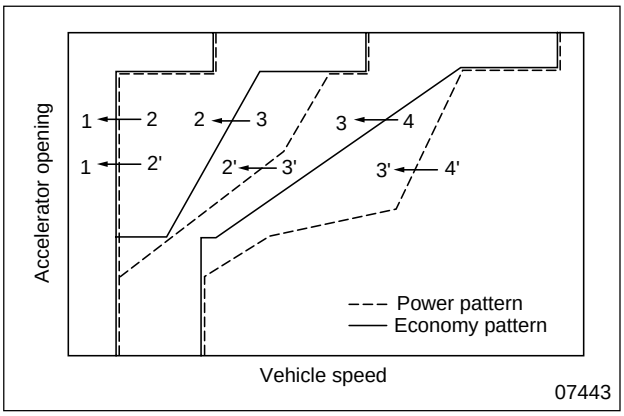

- **Shift pattern selection control**

Two kinds of driving mode can be selected: the economy mode suitable for driving with a light load; or the power mode suitable for driving with the maximum load, for climbing, and for accelerating.
When the power mode is PWR, the power mode is fixed. When the power mode is ECO, either the economy mode or the power mode is automatically selected depending on the driving conditions of the vehicle.
In the power mode, the vehicle speed at the time of gear shifting is set to a higher side than in the economy mode.
The diagram on the left shows a model of gear shifting characteristics.

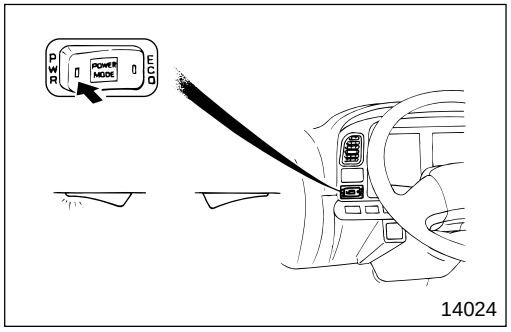

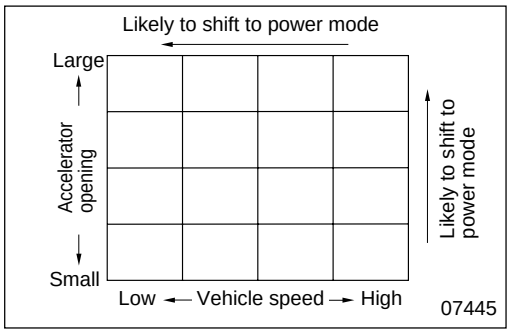

Shift pattern shifting conditions

< Economy mode to power mode >

Range selector lever	D range
Accelerator depression angle	Higher than the standard value (Note)
Power mode switch	ECO

Note : Sixteen ranges are established, as shown in the diagram on the left, depending on the accelerator opening and the vehicle speed. Each range determines the power mode shift and the accelerator opening rate.

Shift from the economy mode to the power mode occurs when the accelerator opening exceeds a specified value.

The lower the vehicle speed and the larger the accelerator opening, the more likely the shift to the power mode.

< Power mode to economy mode >

Power mode switch	ECO
Accelerator opening	Low
Operating time lag	Maximum of three seconds depending on the vehicle speed

< Power mode fixed >

Power mode switch	PWR

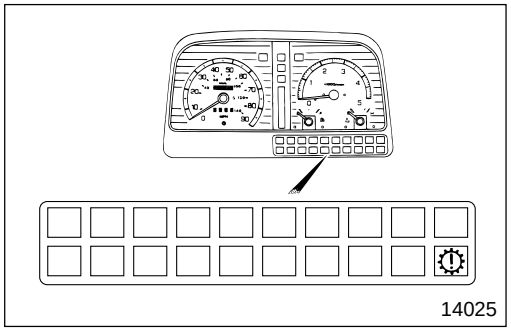

● **Self-diagnosis function**

Warning lamp indication with key turned to ON

- If an abnormality occurs sometime during the day-to-day operation of the vehicle, the warning lamp within the meter cluster alerts the driver by flashing for eight seconds at 2 Hz, as shown by **B** in the diagram, when the key is turned to ON.
- If no abnormality is found, the lamp lights for two seconds, and self-checking is carried out to see if the bulb has burnt-out, as shown by **A** in the diagram.

NOTE

Abnormalities are notified only when they were detected during the immediate preceding operation (duration of key ON to OFF time).

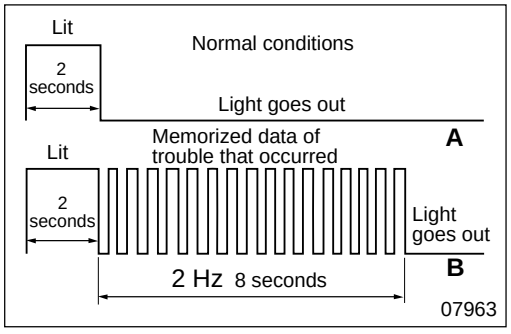

Warning lamp lighting when an abnormality occurs while the vehicle is being driven

- The warning lamp does not light when a minor abnormality occurs that would have a slight affect on the driving performance.
- When any of the troubles listed below occur that would greatly impair the driving performance, the warning lamp lights to alert the driver to the trouble.

  Both speed sensors **1**, **2** faulty
  Shift solenoid A faulty
  Shift solenoid B faulty
  Line pressure solenoid faulty
  Lock-up solenoid faulty
  Overrunning clutch solenoid faulty
  Accelerator sensor faulty
  Inhibiter switch faulty

NOTE

Warning of an abnormality occurring is limited to such troubles that would greatly impair the driving performance.

Indicator lamp lighting at self-diagnosis

- To facilitate an easy search for causes of troubles that have a low possibility of recurrence, the automatic transmission electronic control unit memorizes the data on trouble while the vehicle is being driven.
- By entering the signal for the start of self-diagnosis, the memorized data are recalled and the automatic transmission warning lamp flashes.

NOTE

The automatic transmission electronic control unit stores all the data on the troubles that have occurred since the immediate previous self-diagnosis.

● **Fail-safe function**

The fail-safe function controls the operation of the vehicle in as safe a way as possible so that the operating performance is not hindered when an abnormality occurs in the vehicle speed sensor, the accelerator sensor, the inhibiter switch or in the control mechanism solenoids.

- Vehicle speed sensor
  The vehicle speed sensor has two ways of sending signals: using the sensor installed on the transmission (output shaft revolution sensor); and using the sensor installed halfway along the speedometer cable. Therefore, it is possible to continue operating the vehicle even if one of them fails.
- Accelerator sensor
  If the accelerator sensor fails, the idling switch detects the accelerator opening and controls the line pressure in accordance with the table below so that it is possible to continue operating the vehicle.

Idling switch	Line pressure	Vehicle speed at time of shift
OFF	Pressure at maximum	Throttle opening at 8/8 equivalent
ON	Pressure at minimum	Throttle opening at 0/8 equivalent

- Inhibiter switch
  If the inhibiter switch fails and multiple signals are input by the automatic transmission electronic control unit while the vehicle is either travelling or at standstill, the selection position is set in the order: D > N > R > 2 > L, so it is possible to continue operating the vehicle. However, depending on the range selection position, the hydraulic circuit line inside the control valve is changed over by the manual valve, and the actual vehicle travelling state is as shown in the table below.

Range selector lever position / Item	P	R	N	D	2		L	
Input signal from inhibiter switch	P and other selection range signals	R and other selection range signals	N and other selection range signals	D and other selection range signals	2 and other selection range signals (except L range signal)	2 and L range signals	L and other selection range signals (except 2 range signal)	L and 2 range signals
Vehicle travelling state	P	R	N	$D_1 \leftrightarrow D_2 \leftrightarrow D_3$	$2_1 \leftrightarrow 2_2 \leftrightarrow 2_3$	$2_1 \leftrightarrow 2_2$	$L_1 \leftrightarrow L_2 \leftrightarrow L_3$	$L_1 \leftrightarrow L_2$

- **Shift solenoids A, B**

If one of the solenoids fails while the range is in D, 2 or L, the other solenoid is switched to OFF (in the gear position as shown in the table) and it is possible to continue operating the vehicle. If both solenoids fail, the mechanically controlled hydraulic circuit takes over.

Shift position	Normal			Solenoid A faulty			Solenoid B faulty			Solenoids A, B faulty		
	A	B	Gear	A	B	Gear	A	B	Gear	A	B	Gear
D range	○	○	1st	—	○→×	3rd	○→×	—	3rd	—	—	3rd
	×	○	2nd	—	○→×	3rd	×	—	3rd	—	—	3rd
	×	×	3rd	—	×	3rd	×	—	3rd	—	—	3rd
	○	×	4th	—	×	3rd	○→×	—	3rd	—	—	3rd
2 range	○	○	1st	—	○→×	3rd	○→×	—	3rd	—	—	3rd
	×	○	2nd	—	○→×	3rd	×	—	3rd	—	—	3rd
	×	×	3rd	—	×	3rd	×	—	3rd	—	—	3rd
	○	×	4th	—	×	3rd	○→×	—	3rd	—	—	3rd
L range	○	○	1st	—	○→×	3rd	○→×	—	3rd	—	—	3rd
	×	○	2nd	—	○→×	3rd	×	—	3rd	—	—	3rd
	×	×	3rd	—	×	3rd	×	—	3rd	—	—	3rd
	○	×	4th	—	×	3rd	○→×	—	3rd	—	—	3rd

○ : Continuity × : No continuity — : Faulty

- Line pressure solenoid
  If the line pressure solenoid fails, it is switched to OFF and the line pressure is maximized so it is possible to continue operating the vehicle.
- Lock-up solenoid
  If the lock-up solenoid fails, it is switched to OFF and the lock-up is released.
- Overrunning clutch solenoid
  If the overrunning clutch solenoid fails, it is switched to OFF and the overrunning clutch is engaged so that the engine brake takes effect all the time the vehicle speed is reduced.

Electronic Control Mechanism

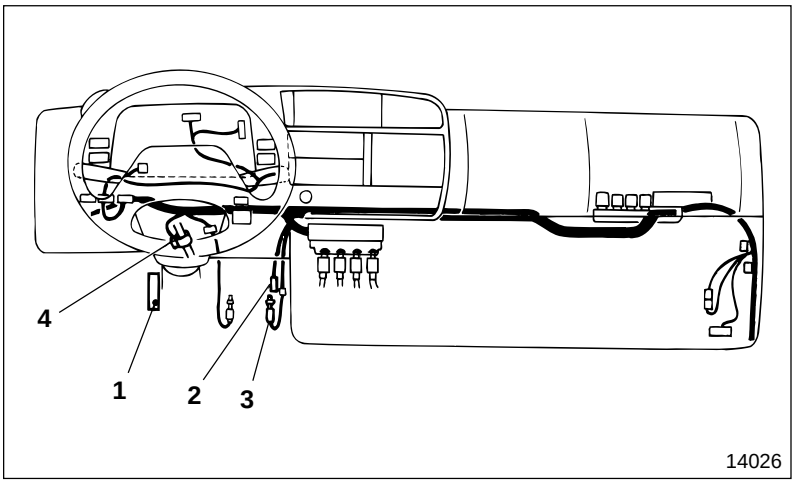

1 Automatic transmission electronic control unit
2 Accelerator sensor
3 Accelerator switch
4 Vehicle speed sensor 2

● **Automatic transmission electronic control unit**

The automatic transmission electronic control unit is installed at the master vac area by the driver's seat and processes data to judge the vehicle travelling state based on the signals received from the sensors, and transmits its own signals to the solenoids to perform gear shifting control, lock-up control, and the automatic transmission control needed to keep the vehicle operating.
The automatic transmission electronic control unit also carries out self-diagnosis of the major sensor solenoids.

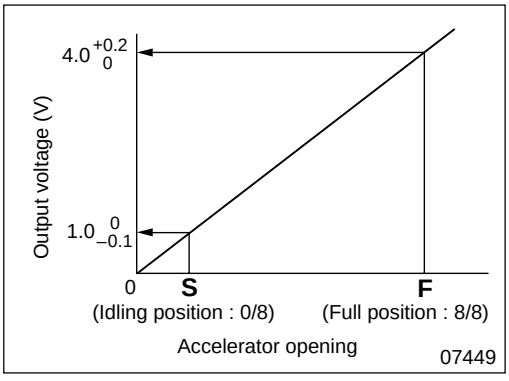

● **Accelerator sensor**

The accelerator sensor is installed on the accelerator lever and converts the accelerator opening data into voltage signals, then transmits them to the automatic transmission electronic control unit.
The electric signals of the accelerator sensor have the output characteristics as shown in the diagram on the left and, using these output features the accelerator sensor monitors the accelerator pedal angle and the accelerator opening rate.

● **Accelerator switch**

The accelerator switch is installed on the accelerator lever and detects when the accelerator is fully closed, then transmits this signal to the automatic transmission electronic control unit.

NOTE

The accelerator switch is also used for exhaust brake control.

● **Vehicle speed sensor 2**

Vehicle speed sensor **2** is installed halfway along the speedometer cable (inside the cab) and converts the vehicle speed into pulse signals, then transmits them to the automatic transmission electronic control unit.

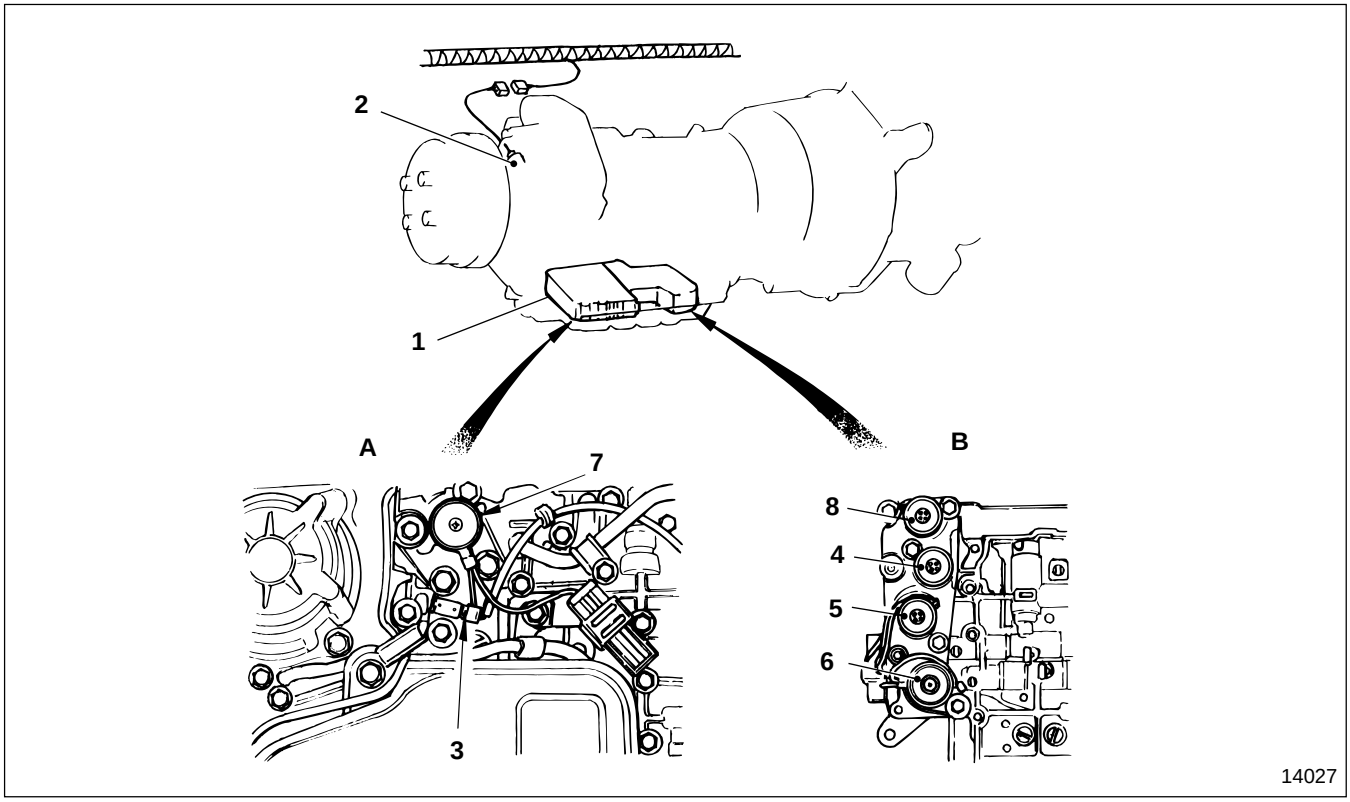

1 Control valve
2 Vehicle speed sensor 1
3 Oil temperature sensor
4 Shift solenoid A
5 Shift solenoid B
6 Line pressure solenoid
7 Lock-up solenoid
8 Overrunning clutch solenoid

A : Lower body side
B : Upper body side

● **Vehicle speed sensor 1**

Vehicle speed sensor **1** is installed on the parking gear located at the output shaft side, inside the transmission case, and converts the vehicle speed into pulse signals, then transmits them to the automatic transmission electronic control unit.

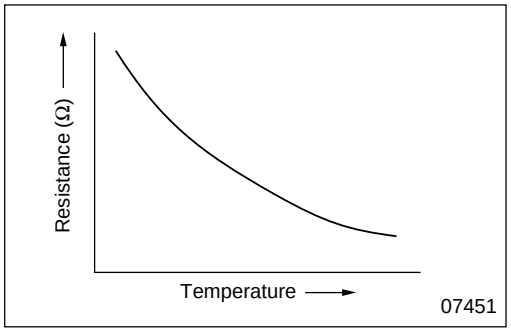

● **Oil temperature sensor**

The oil temperature sensor is installed in the control valve inside the transmission case and converts data on the change in oil temperature into continuous electric signals, then transmits them to the automatic transmission electronic control unit.

The electric signals of the oil temperature sensor have the output characteristics as shown in the diagram on the left, and after receiving these output signals, the automatic transmission electronic control unit exerts control to prevent shifting up to D_4 (overdrive), to prevent lock-up, and to make partial modification to the line pressure control, etc.

● **Shift solenoids A, B**

Shift solenoids A, B are installed in the control valve. They control shifting using the ON-OFF operation after receiving signals from the automatic transmission electronic control unit.
Combining the ON and OFF states of the two solenoids, controls gear shift positioning as shown in the table below.

Shift solenoid A	ON	OFF	OFF	ON
Shift solenoid B	ON	ON	OFF	OFF
Gear position	1st	2nd	3rd	4th

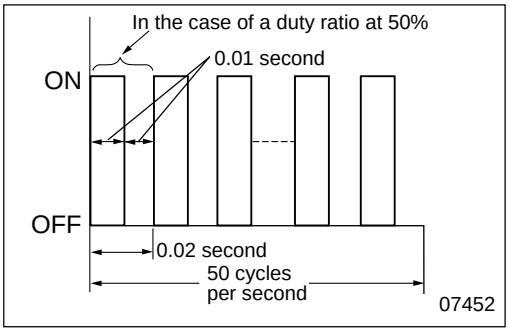

● **Line pressure solenoid and lock-up solenoid**

The line pressure and lock-up solenoids are installed in the control valve. They maintain the specified pressure by opening or closing the drain line by repeating the ON and OFF operation at 50 Hz (0.02 cycles per second) corresponding to the signals received from the automatic transmission electronic control unit.
A duty cycle type solenoid is used which makes it possible to alter and control the ON-time and OFF-time ratios within one cycle from 0% to 100%.
At a duty ratio of 50%, the ON-time is 0.01 seconds and the OFF-time is 0.01 second within the cycle of 0.02 seconds.

● **Overrunning clutch solenoid**

The overrunning clutch solenoid is installed in the control valve and receives signals from the automatic transmission electronic control unit to carry out the ON and OFF operations by which the overrunning clutch is either engaged or disengaged.

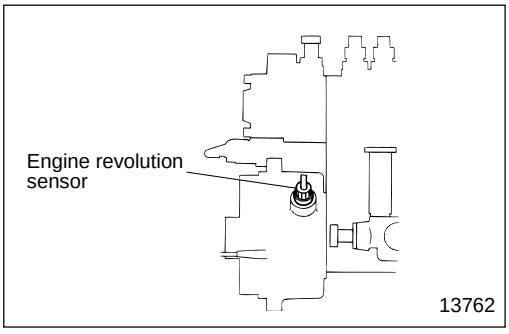

● **Engine revolution signal**

Signals from the engine revolution sensor for control of the engine operation are first sent to the pre-stroke control unit, then they are transmitted to the automatic transmission electronic control unit.

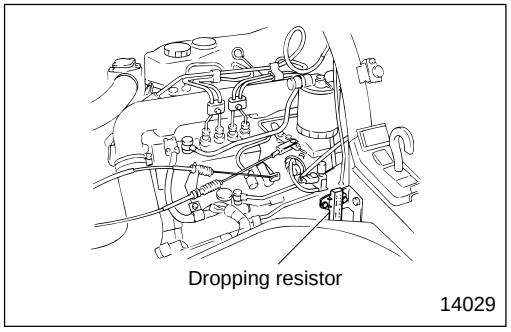

● **Dropping resistor**

The dropping resistor is installed at the rear cab mount. Electric current to the line pressure solenoid is re-routed through the dropping resistor after activating the needle valve.

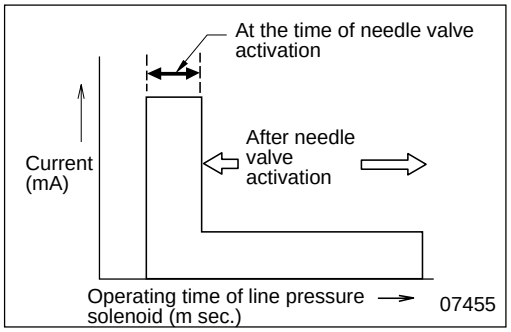

The line pressure solenoid draws a great amount of electric current when the needle valve is activated and, for that reason, the current from the automatic transmission electronic control unit is routed to the line pressure solenoid, bypassing the dropping resistor.
However, once the needle valve of the line pressure solenoid has started operating, the ON-OFF operation can be maintained with a relatively small amount of current and the current is routed through the dropping resistor to the line pressure solenoid.

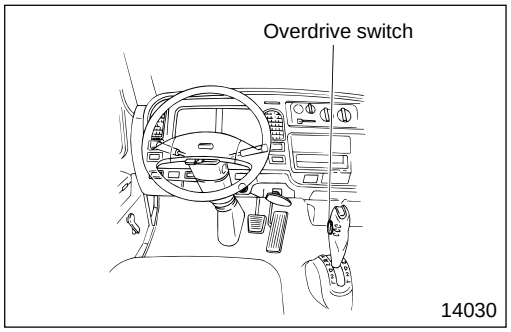

● **Overdrive switch**

The overdrive switch, installed on the range selector lever, is operated by the driver to shift from 3rd to 4th gear.

ON : Shifts up into 4th gear, increasing fuel consumption

OFF : Does not shift up into 4th, making the engine brake effective, and improving climbing performance.

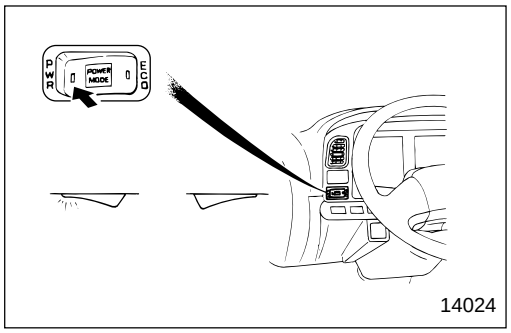

● **Power mode switch**

The power mode switch, installed on the instrument panel, is operated by the driver to change the vehicle speed setting when shifting gears.

PWR (Power mode) : Fixes the power mode which increases the vehicle speed when shifting gears.

ECO (Economy mode) : Automatically selects either the power mode which increases the vehicle speed when shifting gears, or the economy mode which decreases vehicle speed when shifting gears depending on the travelling conditions of the vehicle.

Hydraulic Control Mechanism

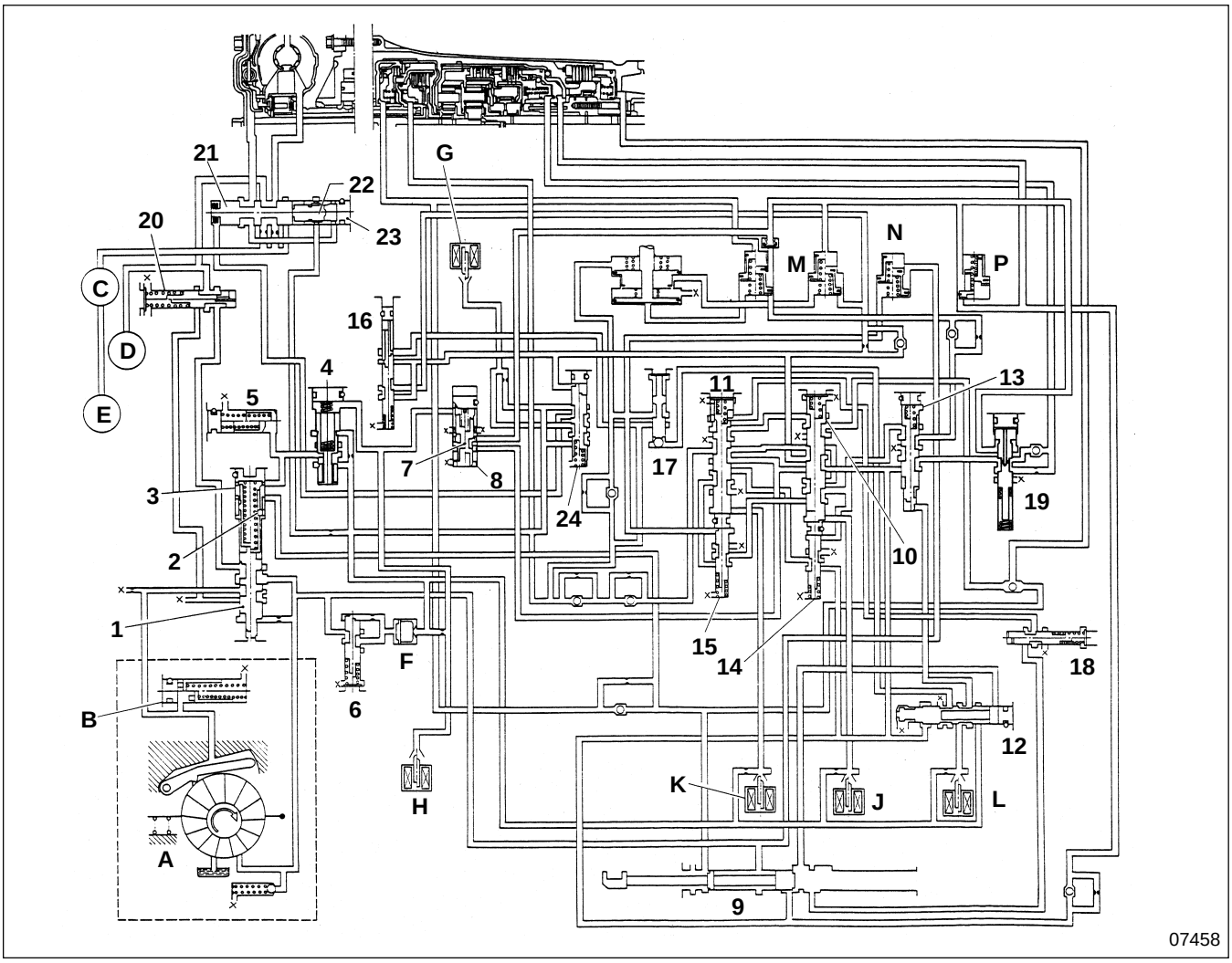

1 Pressure regulator valve
2 Pressure regulator plug
3 Pressure regulator sleeve
4 Pressure modifier valve
5 Modifier accumulator valve
6 Pilot valve
7 Accumulator control valve
8 Accumulator control sleeve
9 Manual valve
10 Shift valve A
11 Shift valve B
12 Shuttle shift valve S
13 Overrunning clutch control valve
14 4 – 2 relay valve
15 4 – 2 sequence valve
16 Servo charger valve
17 3 – 2 timing valve
18 1st reducing valve
19 Overrunning clutch reducing valve
20 Torque converter relief valve
21 Lock-up control valve
22 Lock-up control plug
23 Lock-up control sleeve
24 Shuttle shift valve D

A : Oil pump
B : Feed back accumulator piston
C : Oil cooler
D : Front part lubrication
E : Rear part lubrication
F : Filter
G : Lock-up solenoid
H : Line pressure solenoid
J : Shift solenoid A
K : Shift solenoid B
L : Overrunning clutch solenoid
M : 4th gear accumulator
N : 3rd gear accumulator
P : N – D accumulator

● **Function of various valves**

<table>
<tr><th colspan="2">Name</th><th>Function</th></tr>
<tr><td>1</td><td>Pressure regulator valve</td><td rowspan="3">Adjusts the hydraulic pressure that is discharged from oil pump A to the optimum level (line pressure) suitable for the travelling state of the vehicle</td></tr>
<tr><td>2</td><td>Pressure regulator plug</td></tr>
<tr><td>3</td><td>Pressure regulator sleeve</td></tr>
<tr><td>4</td><td>Pressure modifier valve</td><td>Adjusts the signal pressure (pressure modifier pressure), using the auxiliary valve signal of pressure regulator valve 1, to make the line pressure the optimum level suitable for the driving conditions</td></tr>
<tr><td>5</td><td>Modifier accumulator valve</td><td>Prevents line pressure vibration by evening out the pressure modifier pressure that has been adjusted by pressure modifier valve 4</td></tr>
<tr><td>6</td><td>Pilot valve</td><td>Generates pressure (pilot pressure) at a consistent level, by adjusting the line pressure, which is needed for the operation of the line pressure, lock-up, overrunning clutch, and gear shifting controls</td></tr>
<tr><td>7</td><td>Accumulator control valve</td><td rowspan="2">Adjusts the accumulator back pressure to a suitable level to match the travelling state of the vehicle</td></tr>
<tr><td>8</td><td>Accumulator control sleeve</td></tr>
<tr><td>9</td><td>Manual valve</td><td>Delivers the line pressure to the various circuits corresponding to the selected position
<table>
<tr><th>Range/Line</th><th>①</th><th>②</th><th>③</th><th>④</th></tr>
<tr><td>P</td><td></td><td></td><td></td><td></td></tr>
<tr><td>R</td><td></td><td></td><td></td><td>○</td></tr>
<tr><td>N</td><td></td><td></td><td></td><td></td></tr>
<tr><td>D</td><td>○</td><td></td><td></td><td></td></tr>
<tr><td>2</td><td>○</td><td>○</td><td></td><td></td></tr>
<tr><td>L</td><td>○</td><td>○</td><td>○</td><td></td></tr>
</table>
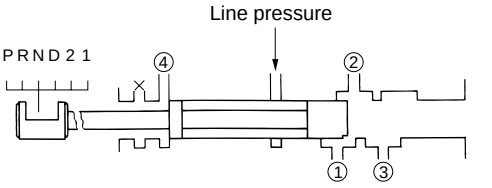

07459
When the line pressure reaches a position where no delivery of the pressure is made, the pressure is drained</td></tr>
<tr><td>10</td><td>Shift valve A</td><td>Depending on the driving conditions of the vehicle such as speed and accelerator opening, this shift valve controls the output pressure of shift solenoid A and the three hydraulic lines for gear shifting simultaneously, and in combination with the operation of shift valve B, causes automatic shifting into 1st⇄2nd⇄3rd⇄4th gears</td></tr>
<tr><td>11</td><td>Shift valve B</td><td>Depending on the driving conditions of the vehicle such as speed and accelerator opening, this valve controls the output pressure of shift solenoid B and the three hydraulic lines for gear shifting simultaneously, and in combination with the operation of shift valve A, causes automatic shifting into 1st⇄2nd⇄3rd⇄4th gears</td></tr>
<tr><td>12</td><td>Shuttle shift valve S</td><td>This is a fixed valve that is part of the hydraulic line between overrunning clutch solenoid L and overrunning clutch control valve 13</td></tr>
<tr><td>13</td><td>Overrunning clutch control valve</td><td>Prevents the concurrent operation of the brake band in the 4th gear position and the overrunning clutch. This valve changes over the lines for the 4th gear operating pressure and the overrunning clutch operating pressure. (If the overrunning clutch were to operate while in the 4th gear position in the D range, interlocking would result)</td></tr>
<tr><td>14</td><td>4 – 2 relay valve</td><td>At shift-down from 4th gear to 2nd gear, while the 4th gear operation is being memorized, the operation of 4 – 2 sequence valve 15, shift valve A 10 and shift valve B 11 prevent shift-down from 4th gear to 2nd gear through 3rd gear</td></tr>
<tr><td>15</td><td>4 – 2 sequence valve</td><td>This prevents draining of the band servo pressure that acts when shifting into 4th gear.
It continues operating until the clutch high-operating pressure and servo release pressure (in the same hydraulic line) drain out at the time of shifting down from 4th gear to 2nd gear</td></tr>
<tr><td>16</td><td>Servo charger valve</td><td>An accumulator and a one-way orifice are fitted to the hydraulic line of 2nd gear band servo operating pressure to buffer the shifting shock caused at shift-up from 1st gear to 2nd gear. Accordingly, to ensure a sufficient flow of oil at the time of shift-down from 4th gear to 2nd gear, and 3rd gear to 2nd gear, servo charger valve 16 operates at 3rd gear and higher, so that the 2nd gear band servo operating pressure is supplied without going through the one-way orifice</td></tr>
</table>

Name		Function
17	3 – 2 Timing valve	This is a fixed valve that is part of the hydraulic line between shift valve B 11 and the band servo release side
18	1st reducing valve	To buffer the shock of engine brake caused at the time of shift-down from 2nd gear to 1st gear in the L range, it reduces the operating pressure for the low and reverse brake
19	Overrunning clutch reducing valve	To buffer the shock of the engine brake, this valve reduces the operating pressure to the overrunning clutch. The hydraulic pressure that has been adjusted by the accumulator control valve is applied to the valve, and regulated to equalize the overrunning clutch operating pressure corresponding to the engine brake capacity
20	Torque converter relief valve	This prevents the torque converter pressure from becoming excessive
21	Lock-up control valve	Makes the lock-up operate or not operate. By making the lock-up release operation transitional, the lock-up can be made smoothly
22	Lock-up control plug	
23	Lock-up control sleeve	
24	Shuttle shift valve D	This changes over the hydraulic lines so that the output pressure of the lock-up solenoid acts on the lock-up valve in 2nd, 3rd or 4th gear in the D range. (The lock-up operation is prevented in 1st gear and in the P, R and N ranges) * When no output pressure is generated from lock-up solenoid G by the signals received from the automatic transmission electronic control unit, the lock-up control does not operate even in 2nd, 3rd, or 4th gear in the D range

Gearshift function

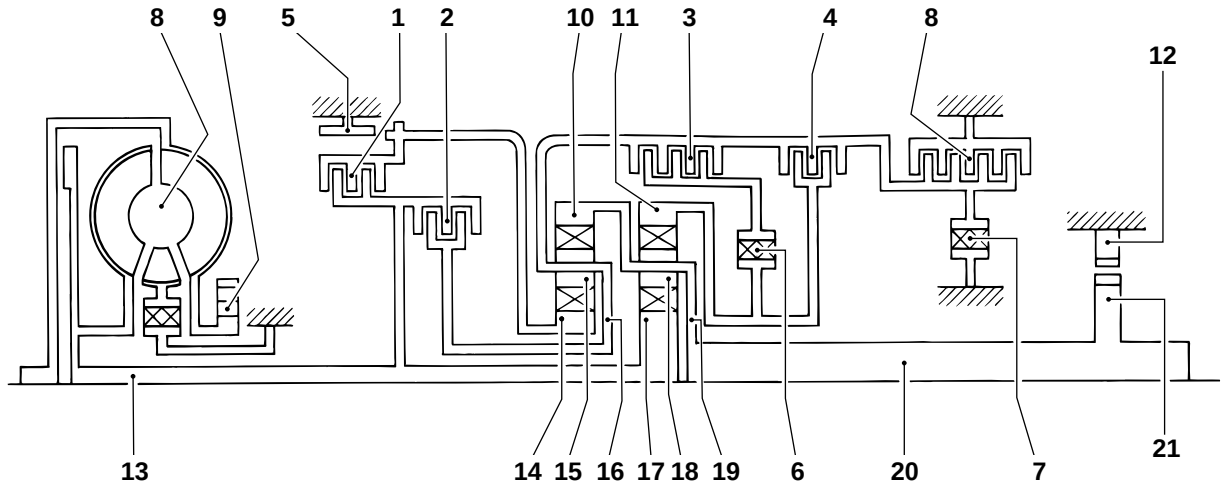

1 Reverse clutch
2 High clutch
3 Forward clutch
4 Overrunning clutch
5 Brake band
6 Forward one-way clutch
7 Low one-way clutch
8 Low and reverse brake
9 Oil pump
10 Front internal gear
11 Rear internal gear
12 Parking pawl
13 Input shaft
14 Front sun gear
15 Front pinion gear
16 Front planetary gear carrier
17 Rear sun gear
18 Rear pinion gear
19 Rear planetary gear carrier
20 Output shaft
21 Parking gear

● **Clutch and brake function**

Name		Function
1	Reverse clutch (Reverse/C)	Connection of input shaft 13 and front sun gear 14
2	High clutch (HI/C)	Connection of input shaft 13 and front planetary gear carrier 16
3	Forward clutch (FWD/C)	Connection of front planetary gear carrier 16 and forward one-way clutch 6
4	Overrunning clutch (OVR/C)	Connection of front planetary gear carrier 16 and rear internal gear 11
5	Brake band (B/B)	Fixing of front sun gear 14
6	Forward one-way clutch (FWD, O.W.C)	Frees the forward rotation (same rotational direction as the torque converter) of rear internal gear 11, and fixes the reverse rotation compared to front planetary gear carrier 16 and low one-way clutch 7 outer race
7	Low one-way clutch (Low, O.W.C)	Fixes the reverse rotation of front planetary gear carrier 16, and frees the forward rotation (same rotational direction as the torque converter)
8	Low and reverse brake (L & R/B)	Fixes front planetary gear carrier 16

● **Operating periods of clutch and brake**

Shift position		Reverse/C	HI/C	FWD/C	OVR/C	Band servo			FWD, O.W.C.	LOW, O.W.C.	L&R/B	Remarks
						2nd gear engaged	3rd gear released	4th gear engaged				
P												Parking
R		○									○	Reverse
N												Neutral
D	1st			○	◎				●	●		Automatic shifting 1↔2↔3↔4
	2nd			○	◎	○			●			
	3rd		○	○	◎	*1 ⊗	⊗		●			
	4th		○	⊗		*2 ⊗	⊗	○				
2	1st			○	○				●	●		Automatic shifting 1↔2←3←4
	2nd			○	○	○			●			
	3rd		○	○	○	*1 ⊗	⊗		●			
	4th		○	⊗		*2 ⊗	⊗	○				
L	1st			○	○				●		○	1st fixed 1↔2←3←4
	2nd			○	○	○			●			
	3rd		○	○	○	*1 ⊗	⊗		●			
	4th		○	⊗		*2 ⊗	⊗	○				

*1 : Hydraulic pressure acts on both sides of the band servo piston of the 2nd gear engaged position and the 3rd gear released position. But as the pressure reception area at the release side is largest, the brake band does not bind up.
*2 : In the above *1 state, hydraulic pressure acts on the 4th gear engaged position and the brake band is engaged.
○ : Always engaged
◎ : Engaged at vehicle speeds of 10 km/h {6.21 mph} or more
● : Operates during acceleration
⊗ : Engaged but does not transmit power

● Reverse Clutch (Multiplate type)

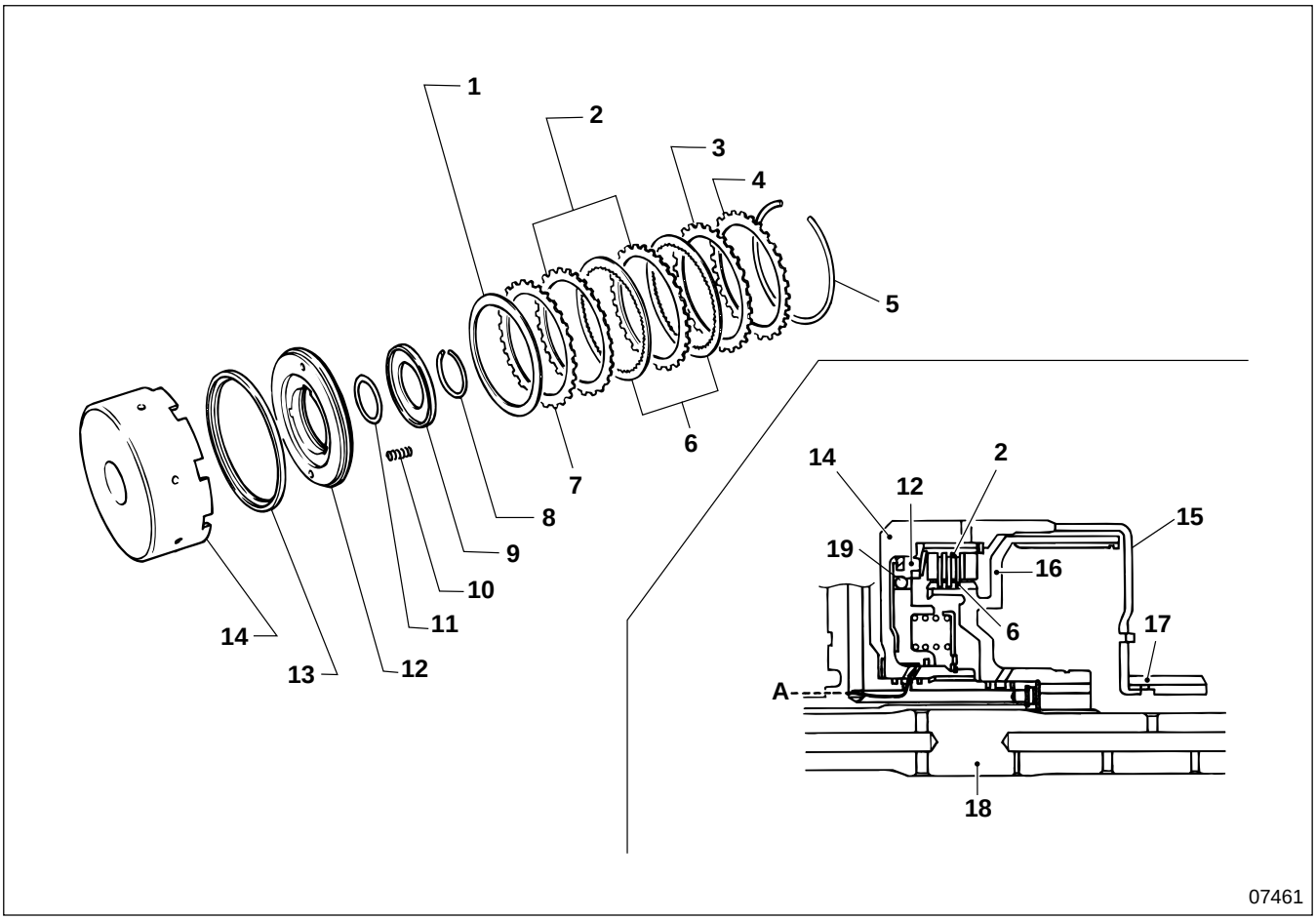

1	Dish plate	**8**	Snap ring	**15**	Connecting shell
2	Driven plate	**9**	Spring retainer	**16**	High clutch drum
3	Spacer	**10**	Return spring	**17**	Front sun gear
4	Retaining plate	**11**	D-ring	**18**	Input shaft
5	Snap ring	**12**	Reverse clutch piston	**19**	Check ball
6	Driving plate	**13**	Oil seal		
7	Spacer	**14**	Reverse clutch drum	**A** :	Clutch operating pressure

< When operating >
The hydraulic pressure from the control valve, that has been changed over by the manual valve, is delivered only during reversing and pushes reverse clutch piston **12**. This operation brings driving plate **6** and driven plate **2** into contact with each other, so that the power transmitted from high clutch drum **16** is transmitted to front sun gear **17** via connecting shell **15**.

< When not operating >
As no pressure is delivered except during reversing, reverse clutch piston **12** is pushed back by the repercussive force of return spring **10**. This operation separates driving plate **6** and driven plate **2** and no power transmission takes place.
Check ball **19**, which is built into the reverse clutch piston, releases oil when reverse clutch drum **14** is freewheeling so that the residual oil within the drum does not build up pressure and cause partial clutch operation. (The check ball is also fitted to other multiplate type clutches.)

● High Clutch (Multiplate type)

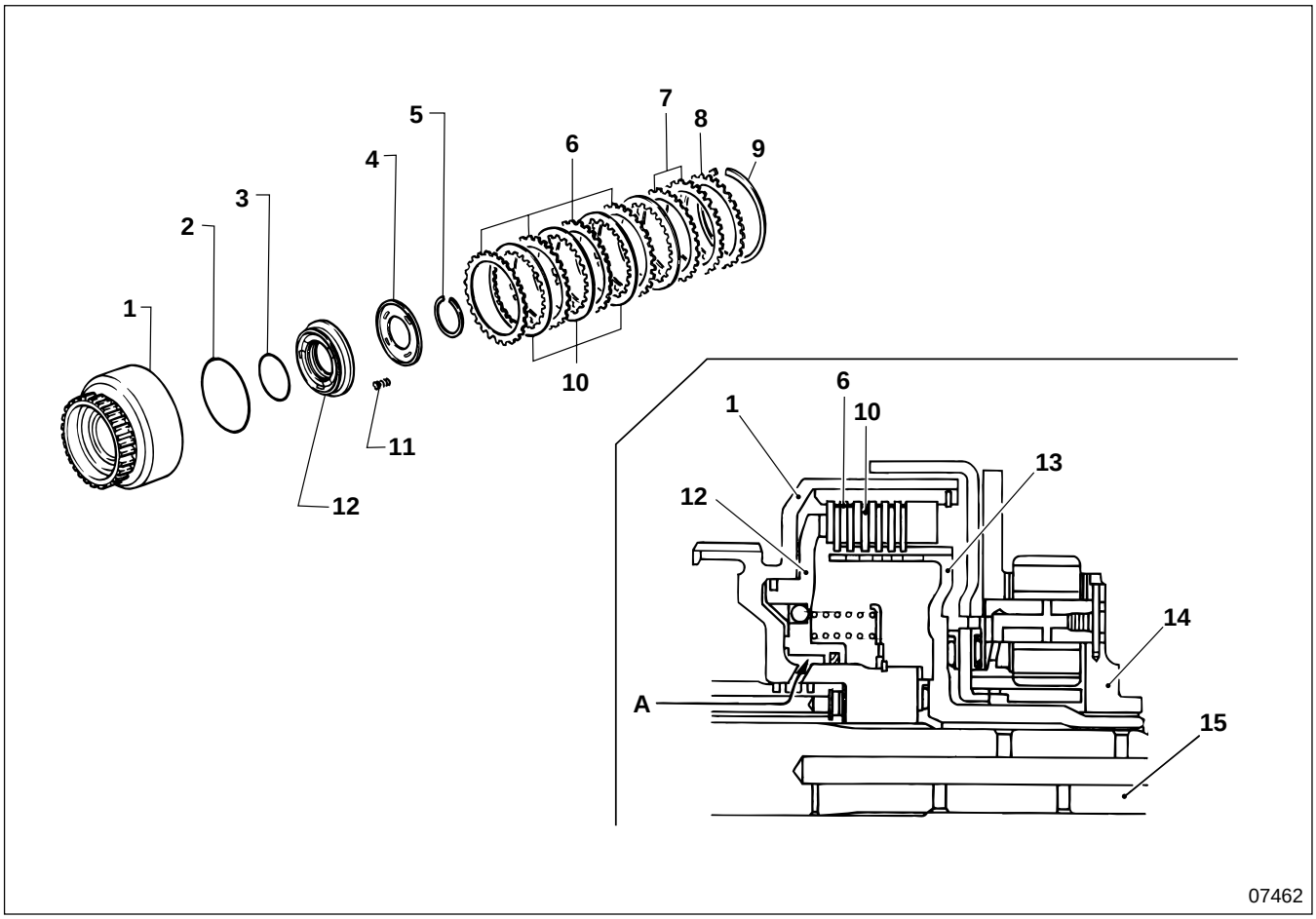

1 High clutch drum
2 D-ring
3 D-ring
4 Spring retainer
5 Snap ring
6 Driven plate
7 Spacer
8 Retaining plate
9 Snap ring
10 Driving plate
11 Return spring
12 High clutch piston
13 High clutch hub
14 Front planetary gear carrier
15 Input shaft

A : Clutch operating pressure

In the 3rd or 4th (overdrive) gear positions, the control valve (hydraulic control mechanism) makes hydraulic pressure act on high clutch piston **12**, so that the clutch plates (driving plate **10** and driven plate **6**) come into contact with each other and the power transmitted from input shaft **15** is transmitted to front planetary gear carrier **14** via high clutch hub **13**.

● Brake Band

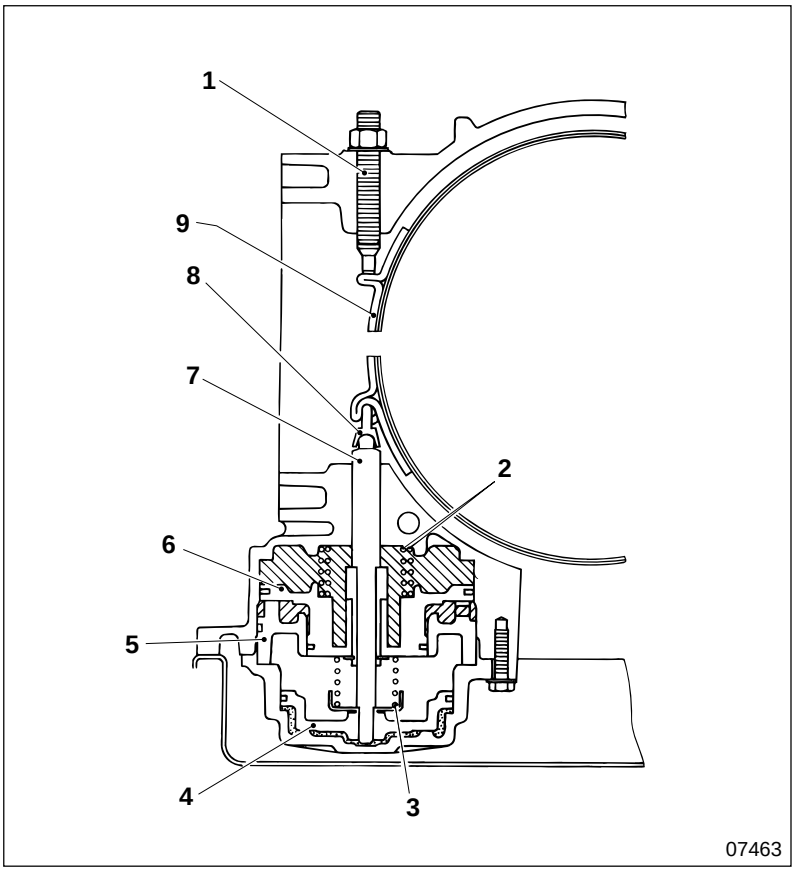

1 Anchor end bolt
2 Return spring
3 Return spring
4 Overdrive servo piston
5 Servo piston retainer
6 Servo piston
7 Piston stem
8 Band strut
9 Brake band

2nd gear shift operating chamber
3rd gear shift operating chamber
4th gear shift operating chamber

One end of brake band **9** is fixed to the transmission case by anchor end bolt **1**.
The servo piston assembly has three chambers each of which corresponds to a certain gear position, to which hydraulic pressure is supplied. Operating pressure is transmitted from the control valve to act on the piston for each gear shift position, and piston stem **7** is pushed up to make the brake band fix the reverse clutch drum. This operation fixes the front sun gear.

1st gear : As there is no delivery of hydraulic pressure to the servo piston assembly, the brake band does not act due to the repercussive force of the return spring.
2nd gear : Hydraulic pressure is delivered to the 2nd gear shift operating chamber, pushing up the piston stem to make the brake band fix the reverse clutch drum.
3rd gear : Hydraulic pressure is delivered to the 2nd gear shift operating chamber and the 3rd gear shift operating chamber. The force acting on the pressure reception area difference of the piston with the repercussive force of return spring **2**, pushes the piston stem down to release the brake band.
4th gear : The pressure acting on the 2nd and 3rd gear shift operating chambers releases the piston. But pressure delivered to the 4th gear shift operating chamber acts on drive servo piston **4** to push up the piston stem, and this operation causes the brake band to fix the reverse clutch drum.

	2nd gear shift operating chamber	3rd gear shift operating chamber	4th gear shift operating chamber
1st gear			
2nd gear	○		
3rd gear	○	○	
4th gear	○	○	○

○ : Pressure acting

● Forward Clutch (Multiplate type) and Overrunning Clutch (Multiplate type)

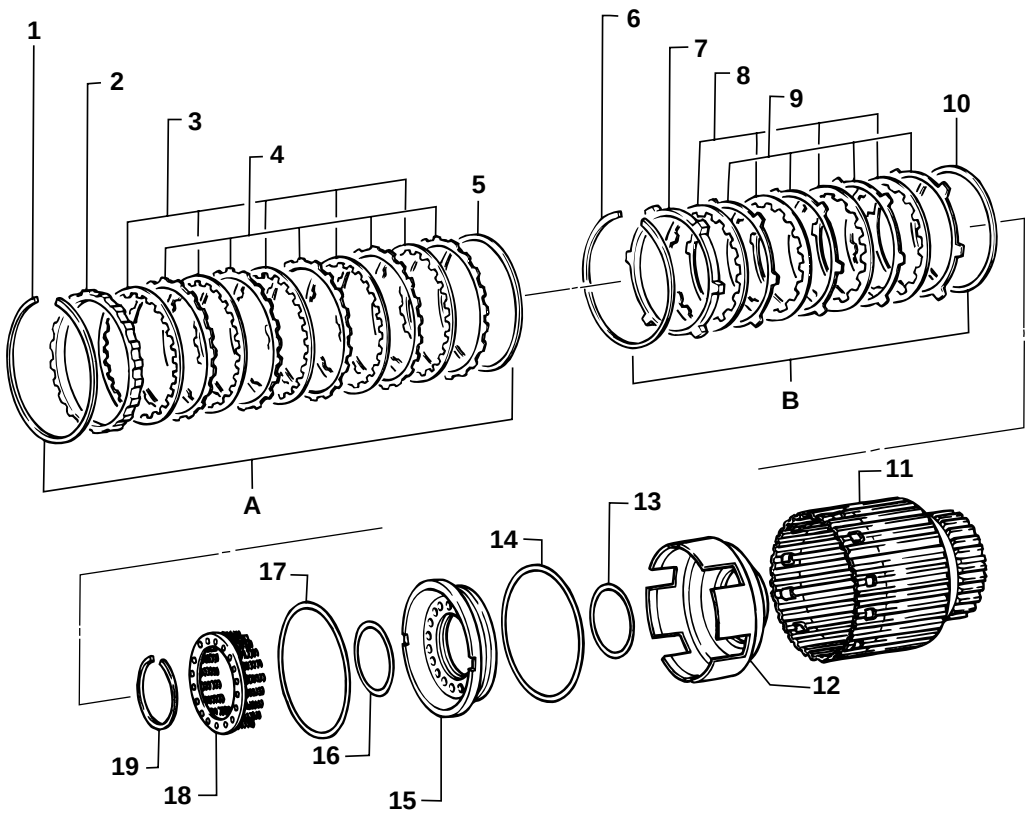

07464

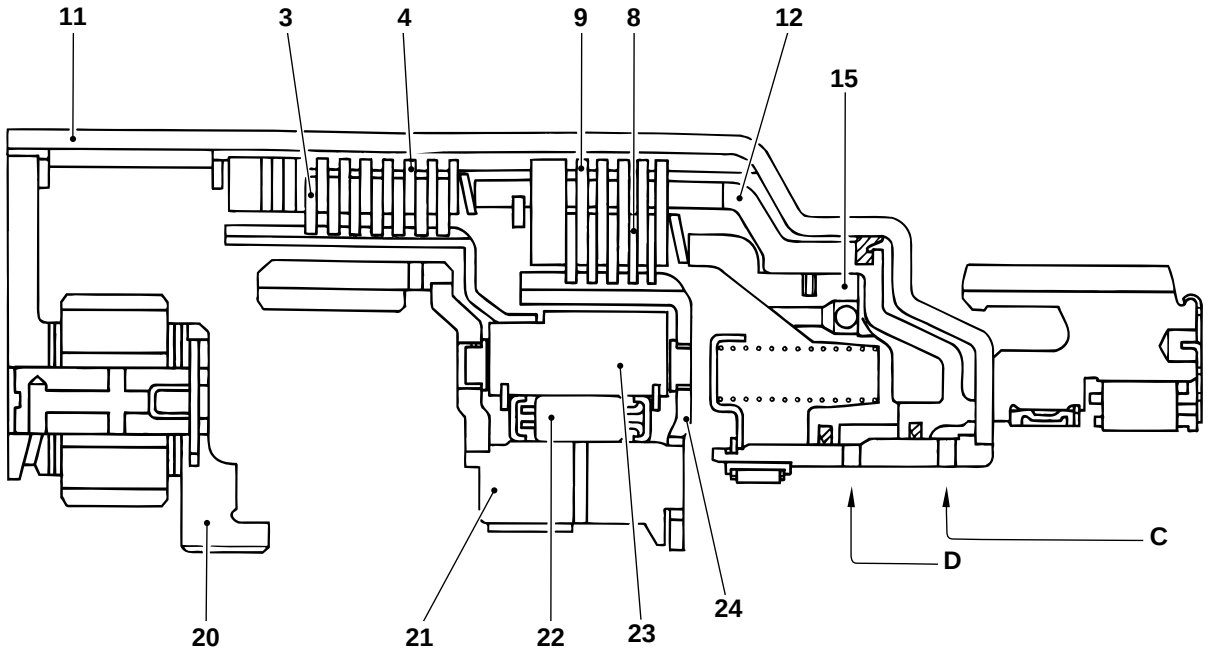

07465

1 Snap ring
2 Retaining plate
3 Driving plate
4 Driven plate
5 Dish plate
6 Snap ring
7 Retaining plate
8 Driving plate
9 Driven plate
10 Dish plate
11 Forward clutch drum
12 Forward clutch piston
13 D-ring
14 Oil seal
15 Overrunning clutch piston
16 D-ring
17 Oil seal
18 Spring retainer
19 Snap ring
20 Front planetary gear carrier
21 Rear internal gear and forward one-way clutch inner race
22 Forward one-way clutch
23 Forward clutch hub and forward one-way clutch outer race
24 Overrunning clutch hub

A : Forward clutch related parts
B : Overrunning clutch related parts
C : Forward clutch operating pressure
D : Overrunning clutch operating pressure

- Forward clutch
  In the 1st, 2nd, 3rd, or 4th (overdrive) gear positions of any of the forward ranges (D, 2, L), the control valve (hydraulic control mechanism) makes hydraulic pressure act on forward clutch piston **12**, so that the clutch plates (driving plate **3** and driven plate **4**) come into contact with each other and connect forward clutch drum **11**, front planetary gear carrier **20**, and the forward one-way clutch outer race.
- Overrunning clutch
  In the case of the D range, overdrive switch OFF and 2, and the L ranges, the control valve (hydraulic control mechanism) makes hydraulic pressure act on overrunning clutch piston **15** to operate the engine brake, so that the clutch plates (driving plate **8** and driven plate **9**) come into contact with each other and connect forward clutch drum **11**, front planetary gear carrier **20**, and the rear internal gear without connecting with forward one-way clutch **22**.

● Low and Reverse Brake (Multiplate type)

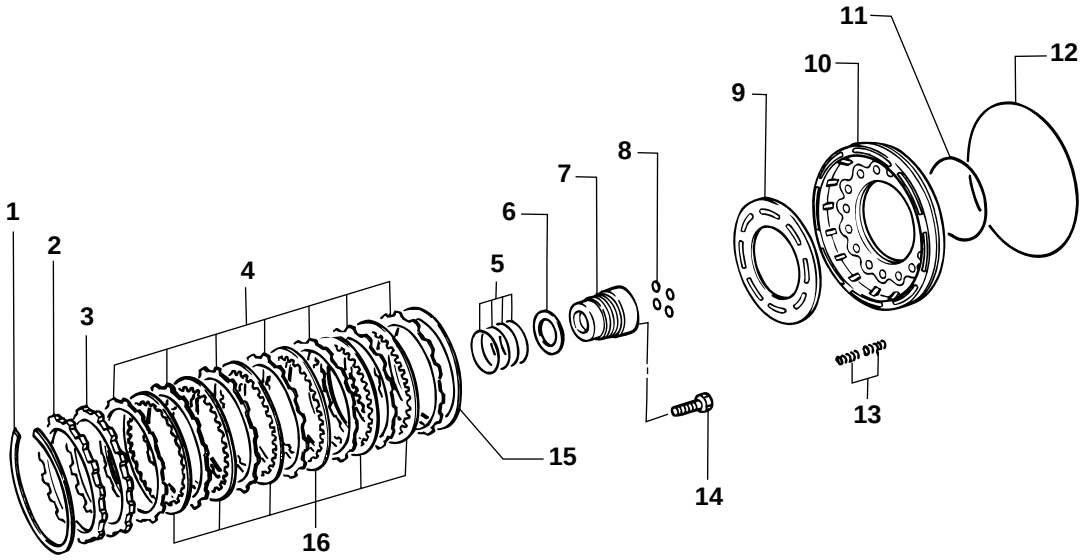

07466

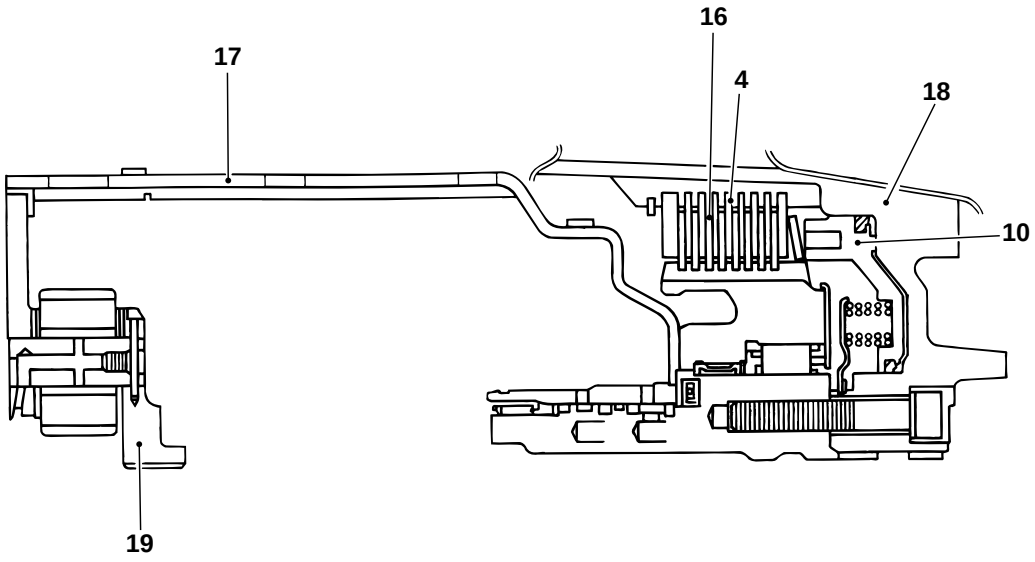

07467

1 Snap ring
2 Retaining plate
3 Spacer
4 Driven plate
5 Seal ring
6 Needle bearing
7 Low one-way clutch inner race
8 O-ring
9 Spring retainer
10 Low and reverse brake piston
11 D-ring
12 Oil seal
13 Return spring
14 Bolt
15 Dish plate
16 Driving plate
17 Forward clutch drum
18 Transmission case
19 Front planetary gear carrier

In the 1st gear position in the L range and in the R range, the control valve (hydraulic control mechanism) makes hydraulic pressure act on low and reverse brake piston **10**, so that the clutch plates (driving plate **16** and driven plate **4**) come into contact with each other and fix transmission case **18** and forward clutch drum **17**, fixing front planetary gear carrier **19**.

● Planetary Gear

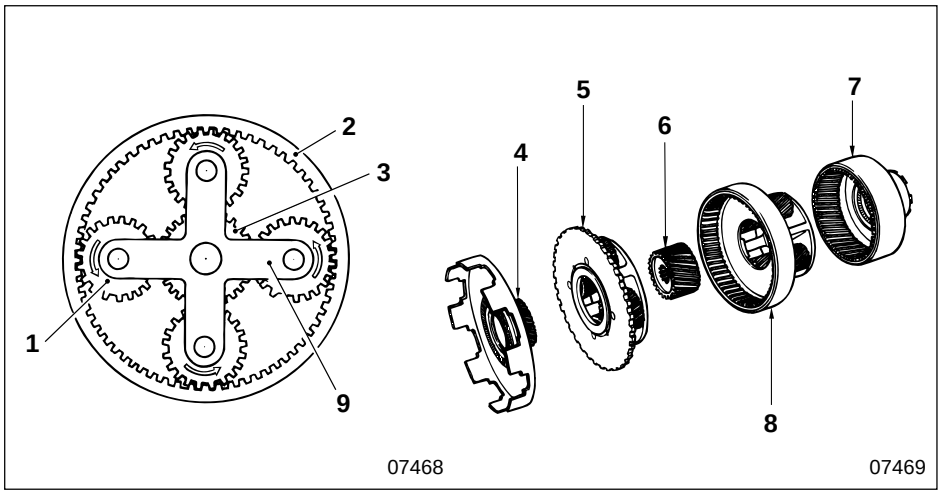

1 Pinion gear
2 Internal gear
3 Sun gear
4 Front sun gear
5 Front planetary carrier
6 Rear sun gear
7 Rear internal gear
8 Front internal gear and rear planetary carrier
9 Planetary carrier

- Two sets of Simpson type planetary gears are used so that five gear ratios, four forward speeds and one reverse speed are possible.
- The planetary gear is constructed so that sun gear **3** is in the center and pinion gears **1** revolve within internal gear **2**, enclosing them. The pinion gears are supported by planetary gear carrier **9** so that all the pinion gears make identical rotations, in the same direction, simultaneously. Thus, the planetary gear consists of four elements: the sun gear, the pinion gear, the internal gear, and the planetary gear carrier. If the necessary conditions are met by any two of the following: the sun gear, the internal gear or the planetary gear carrier; gear ratio is changed. The clutch and the brake give conditions to the planetary gear in conjunction with gear shifting.

● Forward one-way clutch

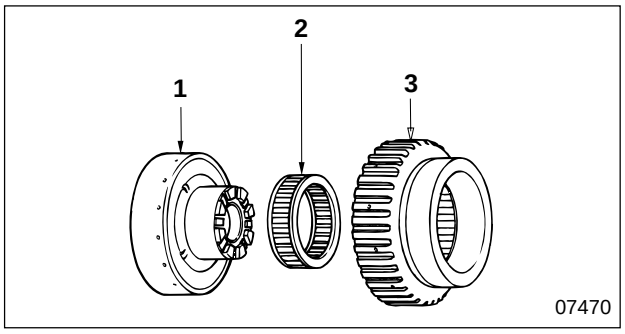

1 Rear internal gear and forward one-way clutch inner race
2 Forward one-way clutch
3 Forward clutch hub and forward one-way clutch outer race

The forward one-way clutch, being fixed on the accelerating side of the 1st, 2nd, and 3rd gears, contributes to the power transmission. In the 4th gear, however, although the forward one-way clutch is making the forward clutch operate, it does not transmit power to forward one-way clutch **2** because the forward clutch remains free. (Inner race revolution > outer race revolution)
Accordingly, at shift-down from 4th gear to 3rd gear, and 4th gear to 2nd gear positions, gear shifting is possible by controlling only one set of friction elements so that the shift timing is maintained correctly with the shifting shock buffered.

Friction elements	Forward clutch	High clutch	Brake band
N			
D1	○		
D2	○		○
D3	○	○	
D4 (Overdrive)	⊗	○	○

○ : Friction element set is connected
⊗ : Friction element set is connected but not transmitting power

● Low one-way clutch

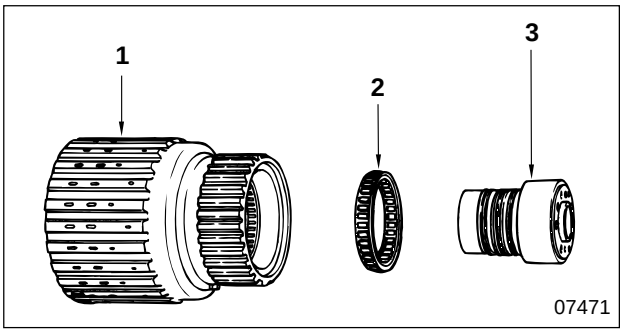

1 Forward clutch drum and low one-way clutch outer race
2 Low one-way clutch
3 Low one-way clutch inner race

The low one-way clutch fixes the rear internal gear via the forward clutch and the forward one-way clutch on the accelerating side in the 1st gear position of the D, 2 ranges. In the 2nd, 3rd or 4th gears it freewheels.

● Torque transmitting route

N range, P range

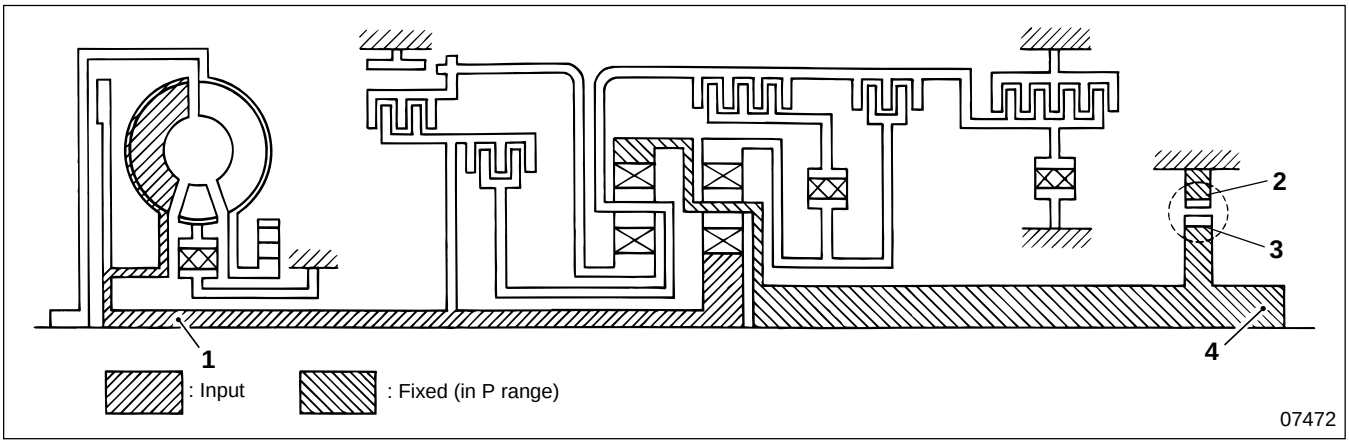

1 Input shaft
2 Parking pawl
3 Parking gear
4 Output shaft

< N range >
None of the control systems work. The power of input shaft **1** is not transmitted to output shaft **4** because the clutch is not engaged.

< P range >
The control systems are in the same state as in the N range. Parking pawl **2**, which is linked to the range selector lever, is engaged with parking gear **3** and output shaft **4** is fixed mechanically. (The area encircled in a dotted line, as illustrated.)

R range

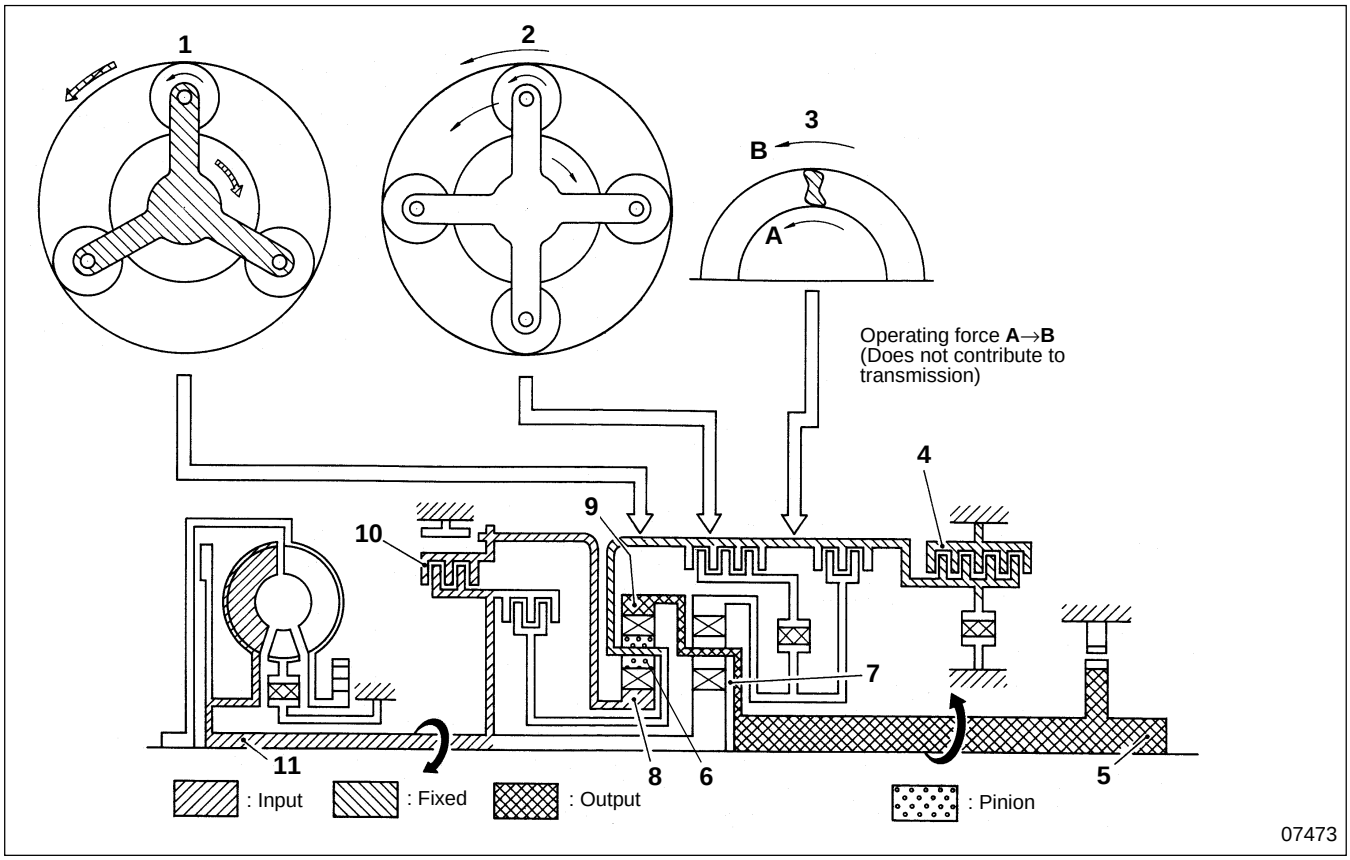

1 Front planetary gear
2 Rear planetary gear
3 Forward one-way clutch
4 Low and reverse brake
5 Output shaft
6 Front pinion gear
7 Rear planetary carrier
8 Front sun gear
9 Front internal gear
10 Reverse clutch
11 Input shaft

Reverse clutch **10** is engaged and power is transmitted from input shaft **11** to front sun gear **8** via the reverse clutch drum. Also low and reverse brake **4** engages to fix the front planetary carrier. By this operation, the clockwise rotation of front sun gear **8** makes front internal gear **9** (connected to output shaft **5**) rotate counterclockwise at a reduced rate.
(Direction of rotation is as seen from the torque converter side.)

Conditions
- Reverse clutch **10** engaged
- Low and reverse brake **4** engaged

Power transmitting route
Input shaft **11** → Reverse clutch **10** → Front sun gear **8** → Front pinion gear **6** →
→ Front internal gear **9** → Output shaft **5**

D and 2 Ranges (1st gear)

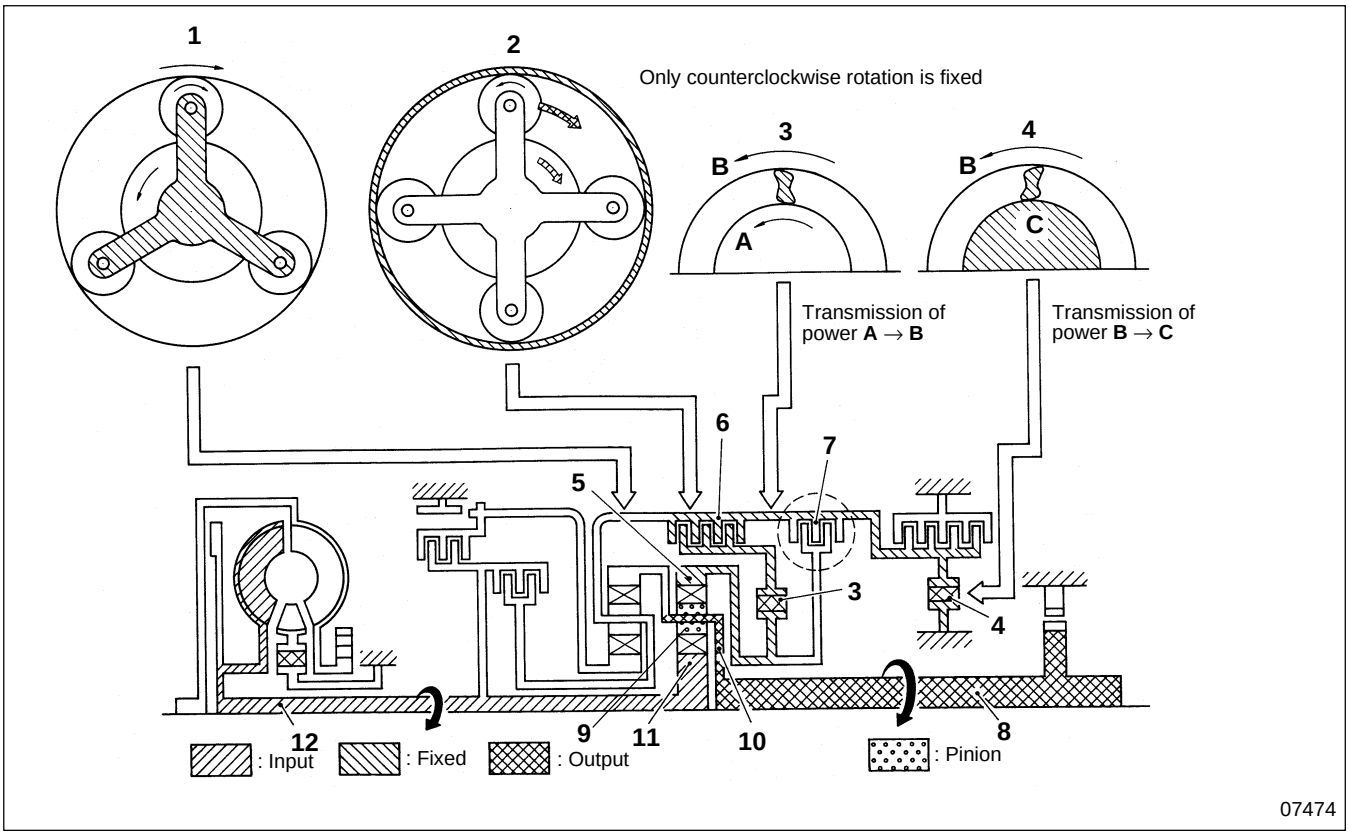

1 Front planetary gear
2 Rear planetary gear
3 Forward one-way clutch
4 Low one-way clutch
5 Rear internal gear
6 Forward clutch
7 Overrunning clutch
8 Output shaft
9 Rear pinion gear
10 Rear planetary carrier
11 Rear sun gear
12 Input shaft

Forward clutch **6** engages, and forward one-way clutch **3** and low one-way clutch **4** operate to prevent rear internal gear **5** from rotating counterclockwise.
Power is transmitted from input shaft **12** to rear sun gear **11** causing it to rotate clockwise. When this happens, rear pinion gear **9** rotates counterclockwise, and tries to force rear internal gear **5** to rotate in the same direction. However, counterclockwise rotation of the rear internal gear is prevented, therefore rear planetary carrier **10** (engaged with output shaft **8**) rotates at a reduced speed clockwise. When the vehicle is coasting, the rear internal gear rotates clockwise so the forward one-way clutch freewheels. When this happens, the engine brake is not effective because low one-way clutch **4** is freewheeling, and opposite driving power is not transmitted to the engine even if overrunning clutch **7** is engaged.
(Direction of rotation is as seen from the torque converter side.)

Conditions
- Forward clutch **6** engaged
- Forward one-way clutch **3** operating
- Low one-way clutch **4** operating
- Overrunning clutch **7** engaged
  D : Vehicle speeds of 10 km/h {6.21 mph} or more
  2 : Accelerator opening for the entire range

Power transmitting route
Input shaft **12** → Rear sun gear **11** → Rear pinion gear **9** → Rear planetary carrier **10** → Output shaft **8**

D, 2 and L Ranges (2nd gear)

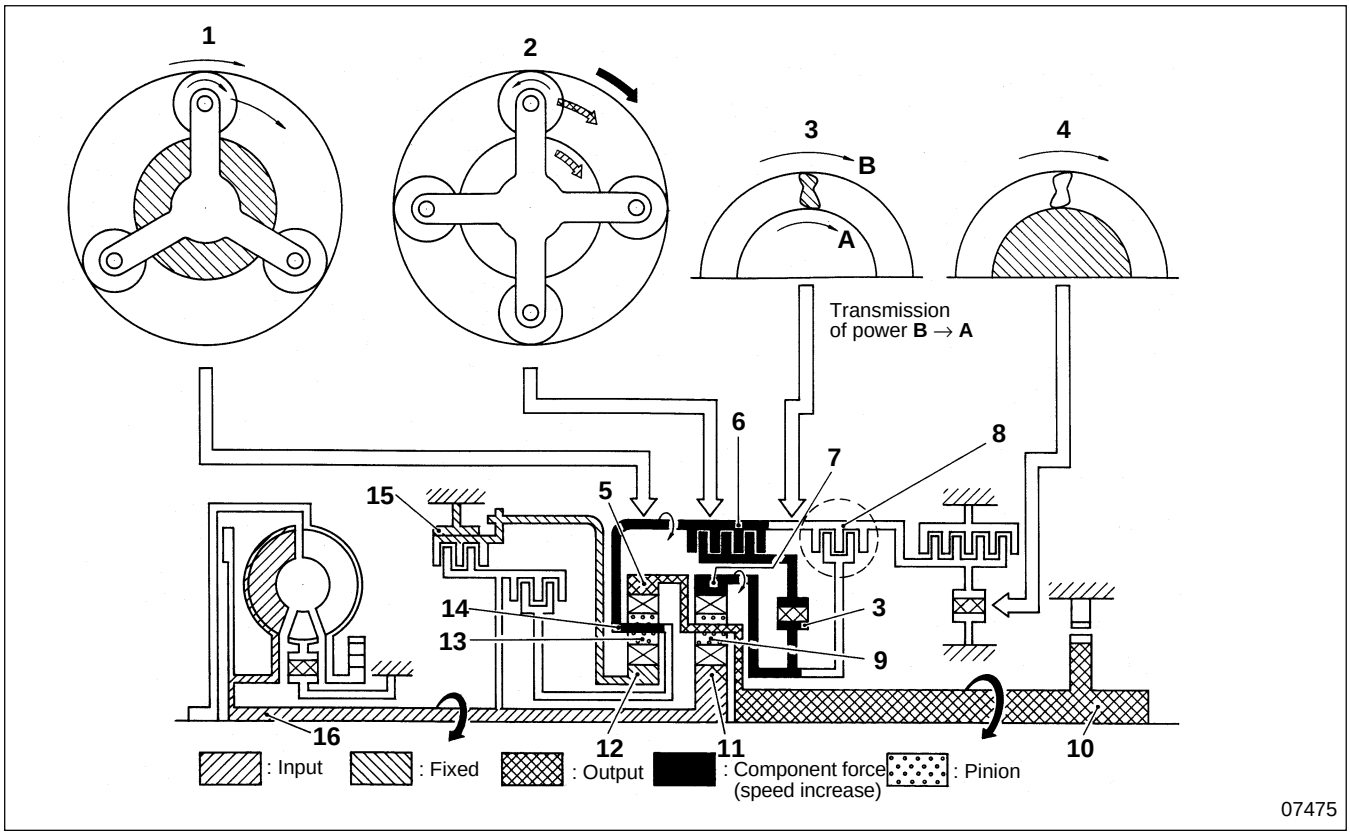

1 Front planetary gear
2 Rear planetary gear
3 Forward one-way clutch
4 Low one-way clutch
5 Front internal gear
6 Forward clutch
7 Rear internal gear
8 Overrunning clutch
9 Rear pinion gear
10 Output shaft
11 Rear sun gear
12 Front sun gear
13 Front pinion gear
14 Front planetary carrier
15 Brake band
16 Input shaft

Forward clutch **6** engages, and front planetary carrier **14** and rear internal gear **7** are connected by forward one-way clutch **3**, causing brake band **15** to fix front sun gear **12**. Power is transmitted from input shaft **16** to rear sun gear **11**, making the rear planetary carrier rotate clockwise together with front internal gear **5**, which rotates in the same direction and at the same speed because it is connected to the rear planetary carrier. When this happens, with the front sun gear fixed by the operation of the brake band, the front planetary carrier, the forward clutch, and the forward one-way clutch causes the rear internal gear to rotate clockwise. Therefore, the speed becomes faster, in proportion to the rate of rotation of the rear internal gear, than in 1st gear position. When the vehicle is coasting, the rear internal gear rotates clockwise and the forward one-way clutch freewheels so opposite power is not transmitted to the engine. (No engine braking takes place.) For this reason, overrunning clutch **8** (the area enclosed in a dotted line, as illustrated) is engaged to prevent the forward one-way clutch from freewheeling so that the opposite driving power is transmitted to the engine, making engine braking effective.
(Direction of rotation is as seen from the torque converter side.)

Conditions
- Forward clutch **6** engaged
- Forward one-way clutch **3** operating
- Brake band **16** engaged
- Overrunning clutch **8** engaged
  D : Vehicle speeds of 10 km/h {6.21 mph} or more
  2 : Accelerator opening for the entire range
  L : Accelerator opening for the entire range

Power transmitting route

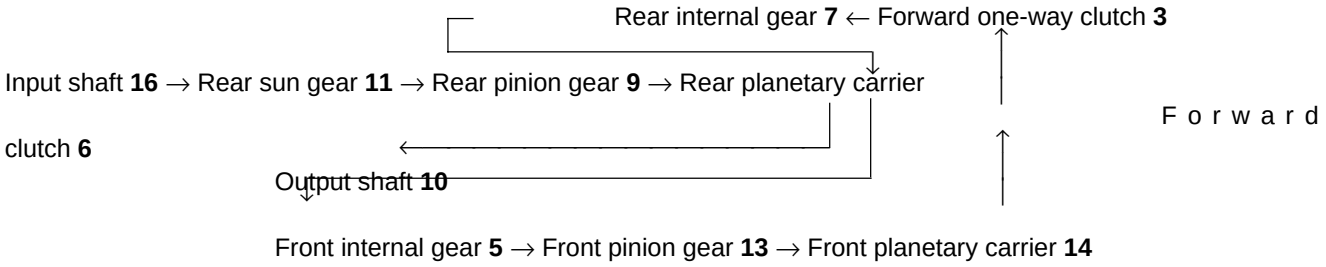

D, 2 and L Ranges (3rd gear)

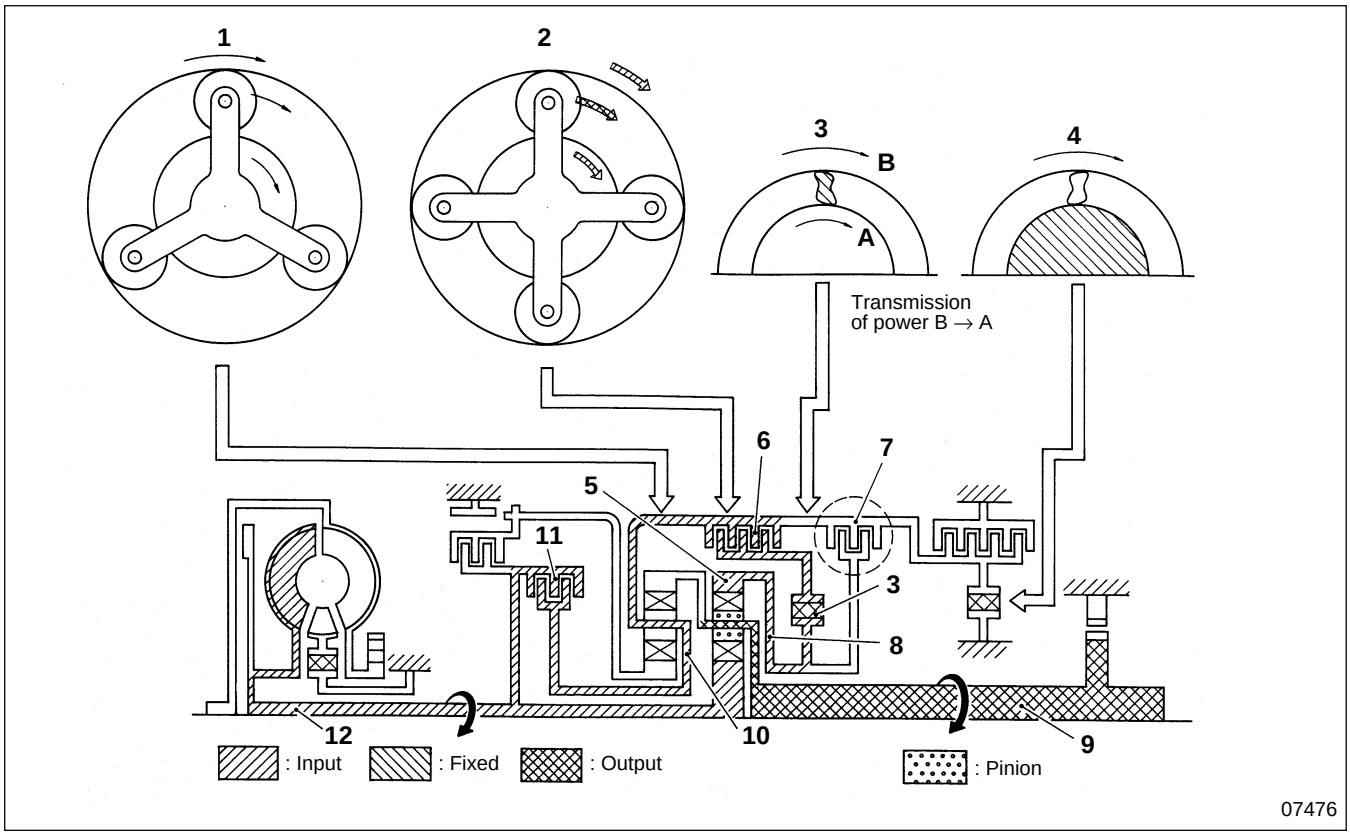

1 Front planetary gear
2 Rear planetary gear
3 Forward one-way clutch
4 Low one-way clutch
5 Rear internal gear
6 Forward clutch
7 Overrunning clutch
8 Rear planetary carrier
9 Output shaft
10 Front planetary carrier
11 High clutch
12 Input shaft

High clutch **11** engages to connect input shaft **12** and front planetary carrier **10**. Also, forward clutch **6** engages and forward one-way clutch **3** operates to connect the front planetary carrier and rear internal gear **5**. Power is transmitted from the input shaft to the rear sun gear, as well as to the rear internal gear by the operation of the high clutch. This transmission of power causes the rear sun gear and the rear internal gear to rotate clockwise simultaneously. This makes rear planetary carrier **8** (connected to output shaft **9**) rotate together with the rear sun gear and the rear internal gear as one set. When the vehicle is coasting, the rear internal gear is rotating clockwise so that the forward one-way clutch is allowed to freewheel, therefore, opposite driving power is not transmitted to the engine (no engine brake taking effect). For this reason, overrunning clutch **7** (the area enclosed in a dotted line, as illustrated) is engaged, preventing forward one-way clutch **3** from freewheeling, so the opposite driving power is transmitted to the engine to make engine braking effective.
(Direction of rotation is as seen from the torque converter side.)

Conditions
- High clutch **11** engaged
- Forward clutch **6** engaged
- Forward one-way clutch **3** operating
- Overrunning clutch **7** engaged
  D : Vehicle speeds of 10 km/h {6.21 mph} or more
  2 : Accelerator opening for the entire range
  L : Accelerator opening for the entire range

Power transmitting route

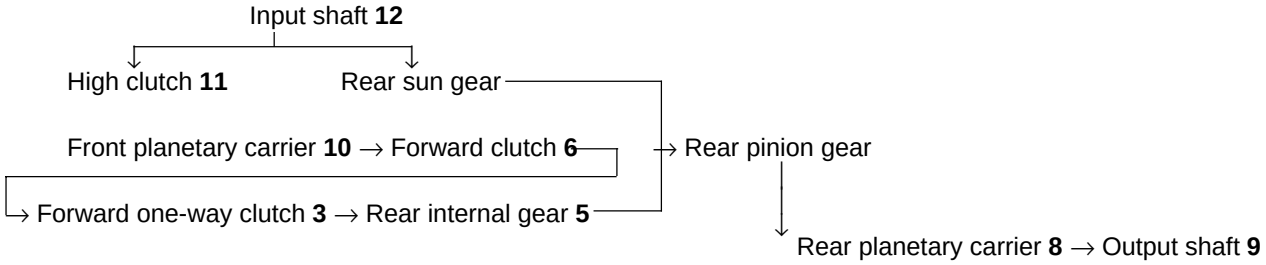

D, 2 and L Ranges (4th gear)

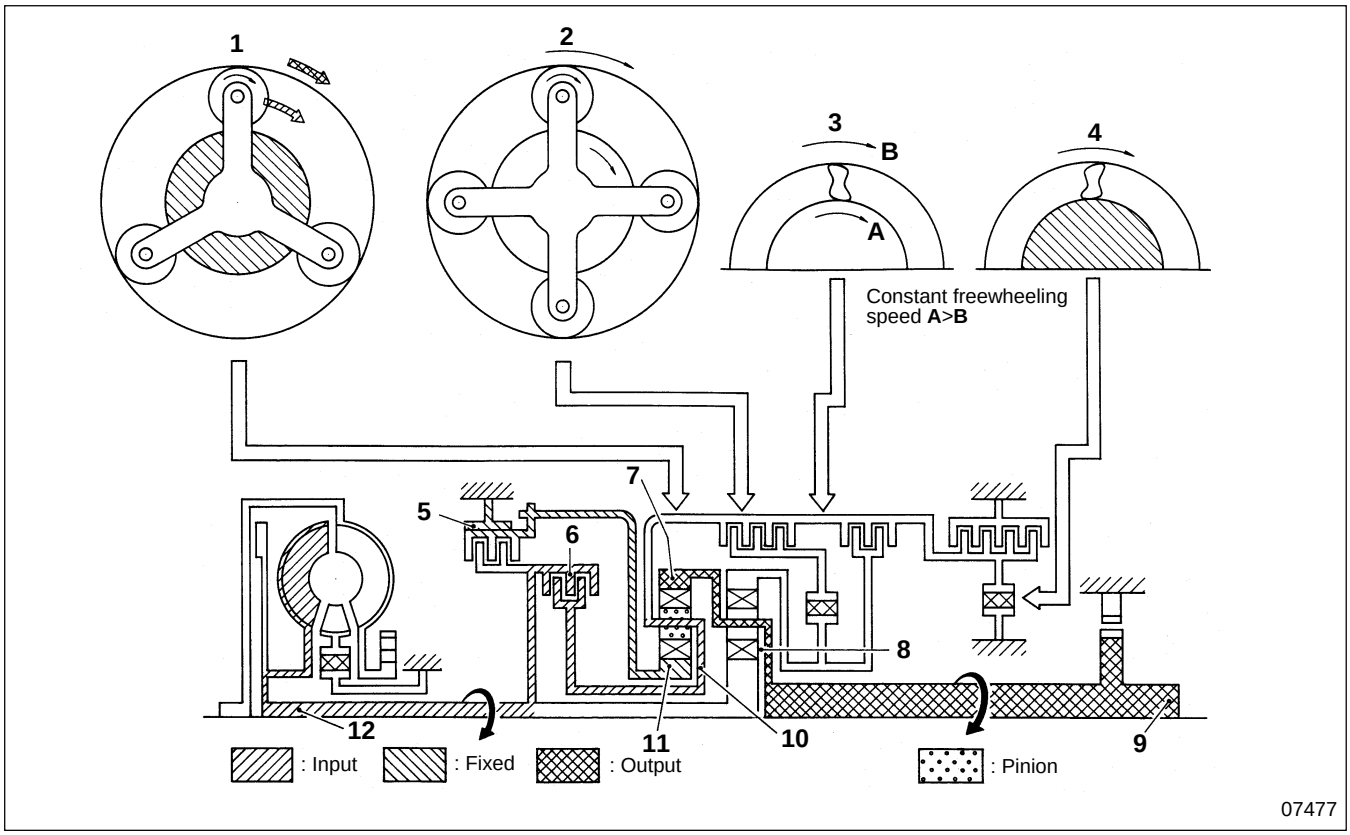

1 Front planetary gear
2 Rear planetary gear
3 Forward one-way clutch
4 Low one-way clutch
5 Brake band
6 High clutch
7 Front internal gear
8 Rear planetary carrier
9 Output shaft
10 Front planetary carrier
11 Front sun gear
12 Input shaft

High clutch **6** engages to connect input shaft **12** and front planetary carrier **10**.
Also, brake band **5** operates to fix front sun gear **11**. The operation of high clutch **6** transmits power from the input shaft to the front planetary carrier, making the front planetary carrier rotate clockwise. This makes front internal gear **7** (connected to output shaft **9**) rotate clockwise at an increased speed as the front sun gear is fixed by the brake band. When the vehicle is coasting, opposite driving power is transmitted to the engine making engine braking effective. In operation in the 4th gear position in the D range, because forward one-way clutch **4** freewheels, driving power is not transmitted although the forward clutch is engaged.
(Direction of rotation is as seen from the torque converter side.)

Conditions
- High clutch **6** engaged
- Brake band **5** engaged
- Forward clutch engaged (not transmitting power)

Power transmitting route
Input shaft **12** → High clutch **6** → Front planetary carrier **10** → Front pinion gear
→ Front internal gear **7** → Rear planetary carrier **8** → Output shaft **9**

L Range (1st gear)

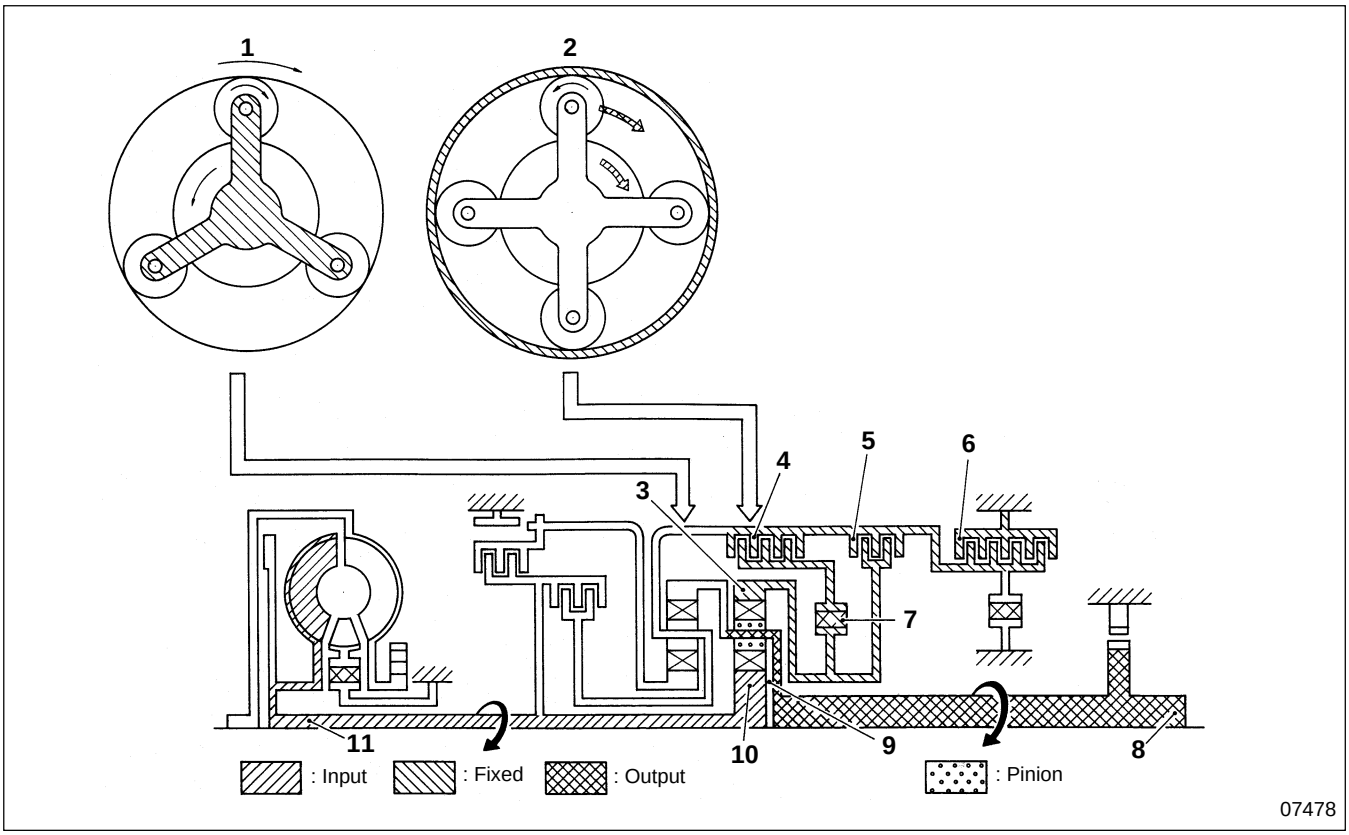

1 Front planetary gear
2 Rear planetary gear
3 Rear internal gear
4 Forward clutch
5 Overrunning clutch
6 Low and reverse brake
7 Forward one-way clutch
8 Output shaft
9 Rear planetary carrier
10 Rear sun gear
11 Input shaft

Forward clutch **4** and overrunning clutch **5** engage to connect the front planetary carrier and rear internal gear **3**. Also, low and reverse brake **6** engages to fix the front planetary carrier and the rear internal gear. In contrast to the operation in 1st gear position in the D, 2 ranges, in 1st gear position in the L range, forward one-way clutch **7** is fixed by overrunning clutch **5**, and the rear internal gear is fixed by the low and reverse brake instead of by the low one-way clutch. This operation prevents freewheeling of the forward one-way clutch and the low one-way clutch when the vehicle is coasting or when shifting down from 2nd to 1st gear in the L range, so that opposite driving power is transmitted to the engine to make engine braking effective.
(Direction of rotation is as seen from the torque converter side.)

Conditions
- Forward clutch **4** engaged
- Forward one-way clutch **7** operating (when accelerating)
- Overrunning clutch **5** engaged
- Low and reverse brake engaged

Power transmitting route
Input shaft **11** → Rear sun gear **10** → Rear pinion gear → Rear planetary carrier **9** → Output shaft **8**

● Torque Converter (with lock-up clutch)

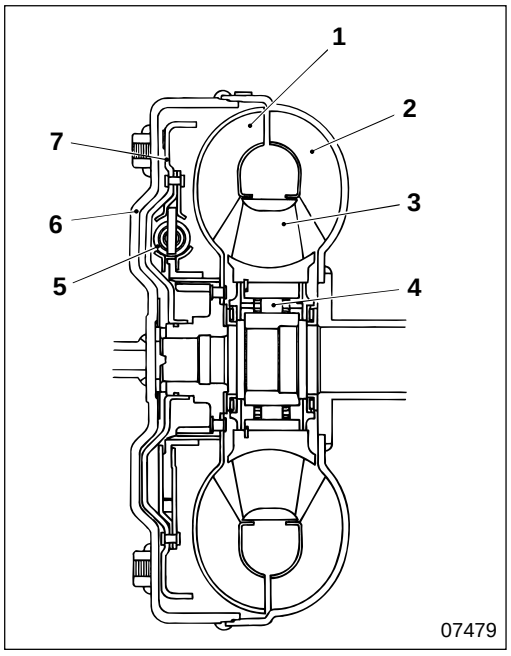

1 Turbine runner
2 Pump impeller
3 Stator
4 One-way clutch
5 Torsional damper
6 Converter cover
7 Lock-up piston

The torque converter transmits the engine torque to the transmission. When the lock-up clutch is not operating, power is transmitted by oil, and when the lock-up clutch is operating, power is transmitted by lock-up piston **7**. The torque converter is a symmetrical 3-element, 1-stage, 2-phase type. Symmetrical 3-element means that the three elements: pump impeller **2**, turbine runner **1** and stator **3**; are arranged symmetrically. 1-stage means that there is only one turbine runner (output element). 2-phase means that when the speed of the turbine is relatively low compared to that of the pump impeller, the torque converter operates as a torque converter, and while at high speed, it acts as a fluid coupling.

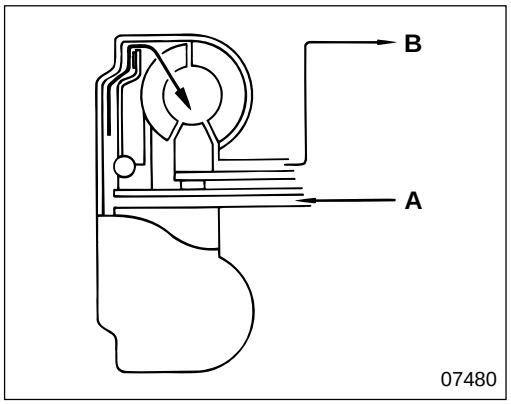

< When lock-up is not operating >
The torque converter operating pressure is delivered from the lock-up valve and supplied to the space between converter cover **6** and lock-up piston **7** through oil passage **A**, and separates the clutch facing of the lock-up piston from the converter cover. By this operation, the torque converter operating pressure fed through oil passage **A** is released through oil passage **B** to the oil cooler.

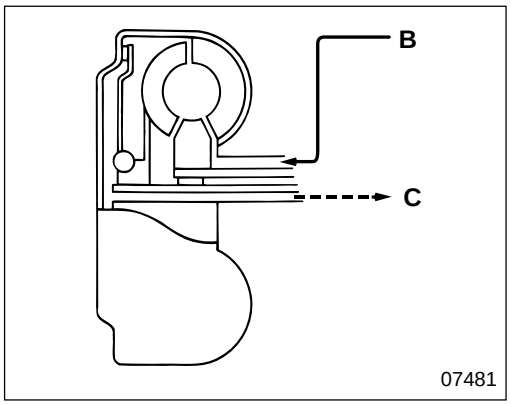

< When lock-up is operating >
The pressure line is changed over by the lock-up valve to feed the torque converter operating pressure to pump impeller **2**, turbine runner **1**, and stator **3** side through oil passage **B**.
By this operation, the lock-up piston receives hydraulic pressure to make the facing of lock-up piston **7** make contact with converter cover **6** so that the efficiency of the power transmission is improved.
C : Drain

M E M O

● Oil Pump (Variable displacement vane pump)

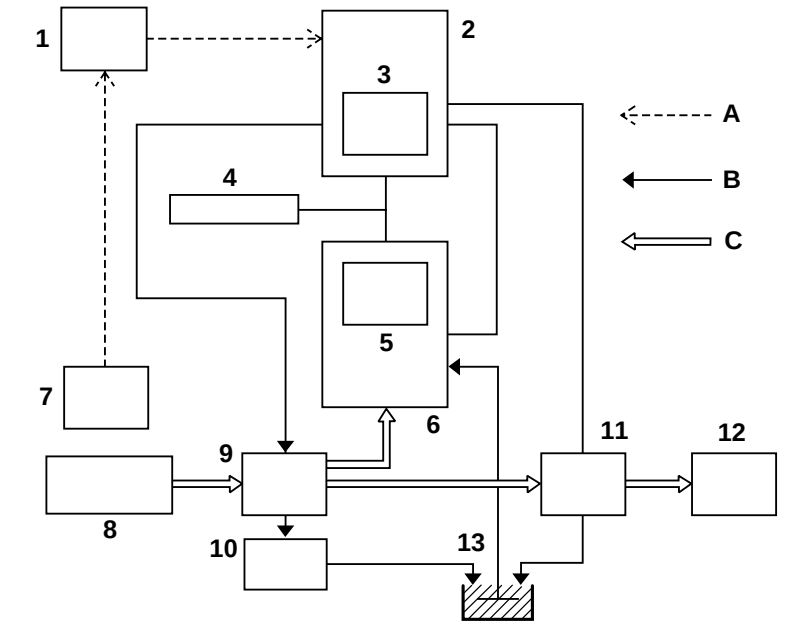

07482

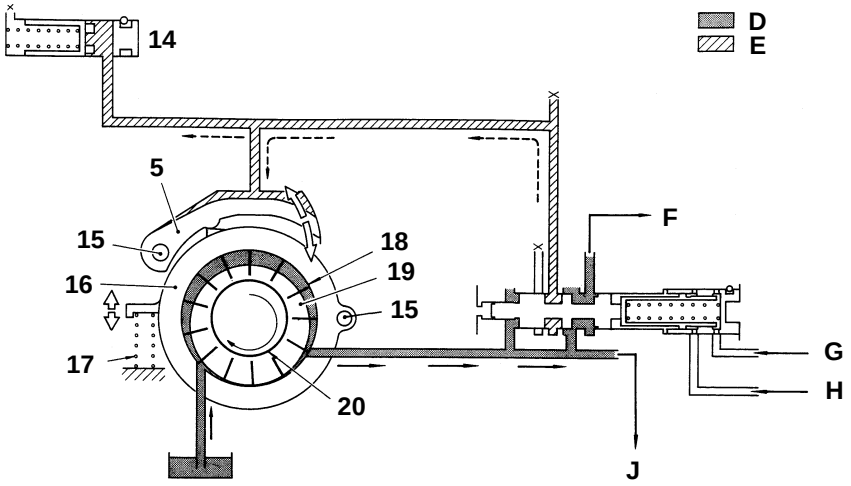

07483

1 Automatic transmission electronic control unit
2 Control valve
3 Pressure regulator valve
4 Accumulator piston
5 Control piston
6 Oil pump
7 Accelerator sensor
8 Engine
9 Torque converter
10 Oil cooler
11 Transmission system
12 Tire
13 Oil pan
14 Feedback accumulator piston
15 Pivot pin
16 Cam ring
17 Return spring
18 Vane
19 Rotor
20 Vane ring

A : Electric signal
B : Flow of oil
C : Power transmission
D : Line pressure
E : Feedback pressure
F : Torque converter operating pressure
G : Pressure modifier pressure (D, 2, L and R ranges)
H : Line pressure (R range)
J : Line pressure (operating oil and lubricant for other devices)

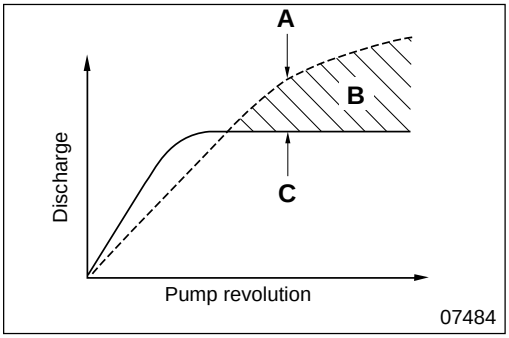

A : Gear pump
B : Unnecessary flow
C : Variable displacement vane pump

This pump makes it possible to control the oil pump discharge to the minimum necessary throughout the operation from low revolution to high revolution. It suppresses the increase in the driving torque in comparison to the gear pump that discharges an excessive amount of oil at high revolutions. Also, in comparison to the gear pump: it has less variation in discharge pressure, less pressure loss due to friction, less noise, etc.

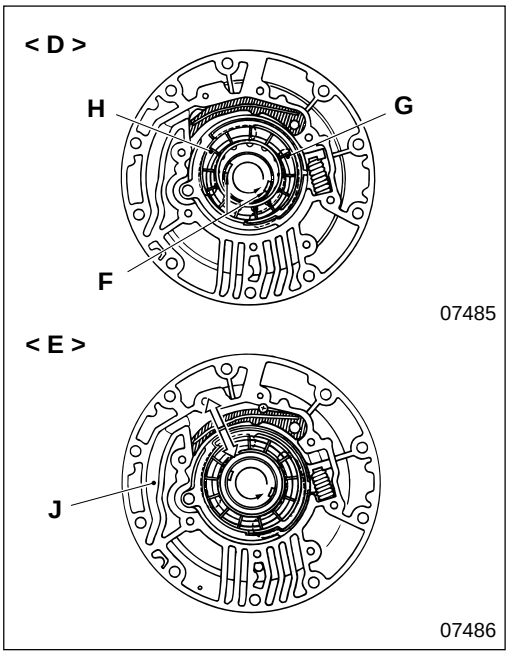

D : When control piston is not operating
E : When control piston is operating
F : Engagement part of the torque converter drive sleeve

(1) The rotor is fitted to the drive sleeve of the torque converter, and rotates in the same direction as the engine (in the arrow direction), and the oil sucked into chamber **G** is discharged at **H**. (Direction of rotation when seen from the rear side of the oil pump is counterclockwise.)

(2) The discharged oil functions as the operating pressure and lubricant for the torque converter, the control valve, the clutch, and the brake.

(3) The discharge increases in accordance with the increase in the rate of revolution of the oil pump.

(4) Feedback pressure from the control valve works in area **J** and adjusts the cam ring position (amount of eccentricity) relative to the center axis of revolution of the rotor by the movement of the control piston (in the arrow direction). This operation increases or decreases the intake volume of area **G** to control the pump discharge.

Fail-safe system

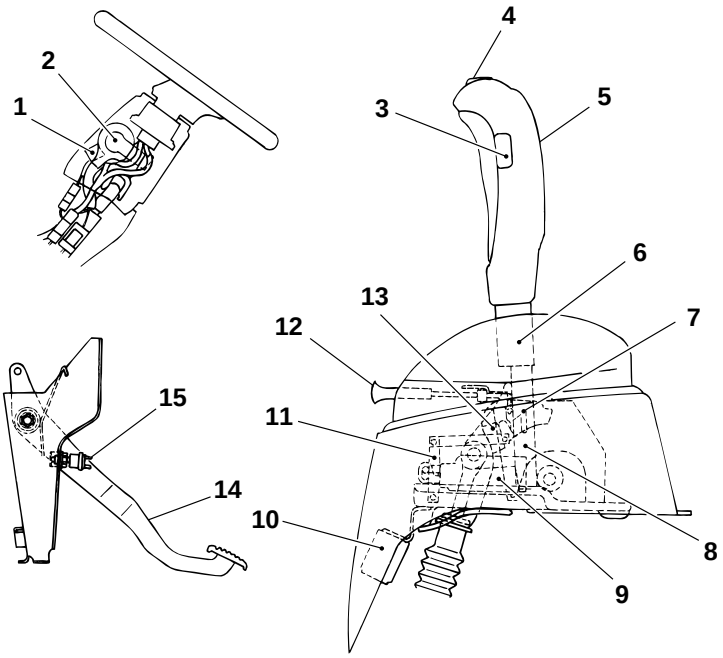

13990

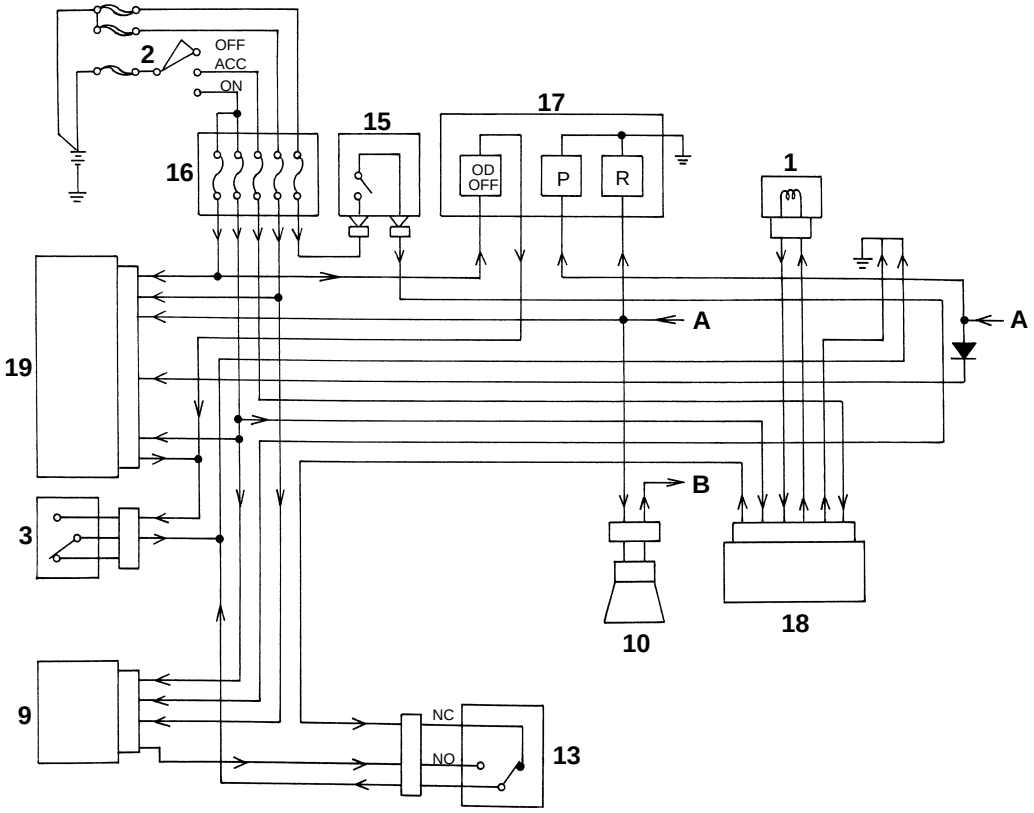

13991

1 Key interlock solenoid
2 Starter switch
3 Overdrive OFF switch
4 Shift button
5 Automatic transmission knob
6 Selector lever
7 Pin
8 Lever bracket
9 Shift lock actuator
10 Automatic transmission reverse buzzer
11 Shift lock link
12 Shift lock release knob
13 Parking range switch
14 Brake pedal
15 Stop lamp switch
16 Fuse box
17 Meter cluster
18 Key interlock electronic control unit
19 Automatic transmission electronic control unit

A : To inhibiter switch
B : To back buzzer

● **Parking shift locking with key interlocking system**

The key interlocking device is a system that makes it impossible for the key to be pulled out when selector lever **6** is in any position other than the P (parking) range. The shift locking safety device is a system that makes it impossible for the vehicle to move when the selector lever is locked in the P range unless brake pedal **14** is depressed.

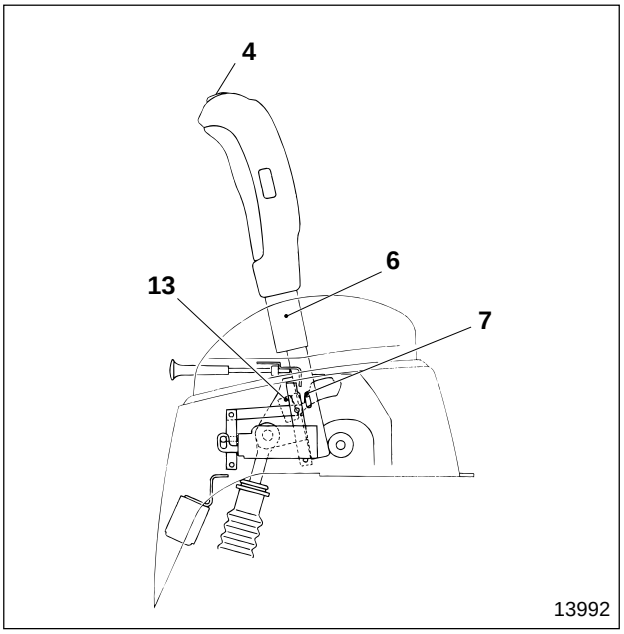

Key interlocking system

< When locked >
Conditions : When selector lever **6** is in any position other than in the P range, or in the P range but shift button **4** is depressed, pin **7** moves away from P range switch **13** (so the switch is free from any contact), therefore the switch is ON.

↓

Current flows from key interlock electronic control unit **18** to key interlock solenoid **1**, switching the key interlock solenoid ON.

↓

Activation of key interlock solenoid **1** means starter switch **2** cannot be turned to the LOCK position, therefore the key cannot be pulled out.

< When not locked >
Conditions : When selector lever **6** is in the P range and shift button **4** is not depressed, pin **7** presses down P range switch **13** (the switch is operating), therefore the switch is OFF.

↓

No current flows from key interlock electronic control unit **18** to key interlock solenoid **1**, switching the key interlock solenoid OFF.

↓

Key interlock solenoid **1** is not operating and starter switch **2** is released so that the starter switch is turned to the LOCK position, and the key can be pulled out.

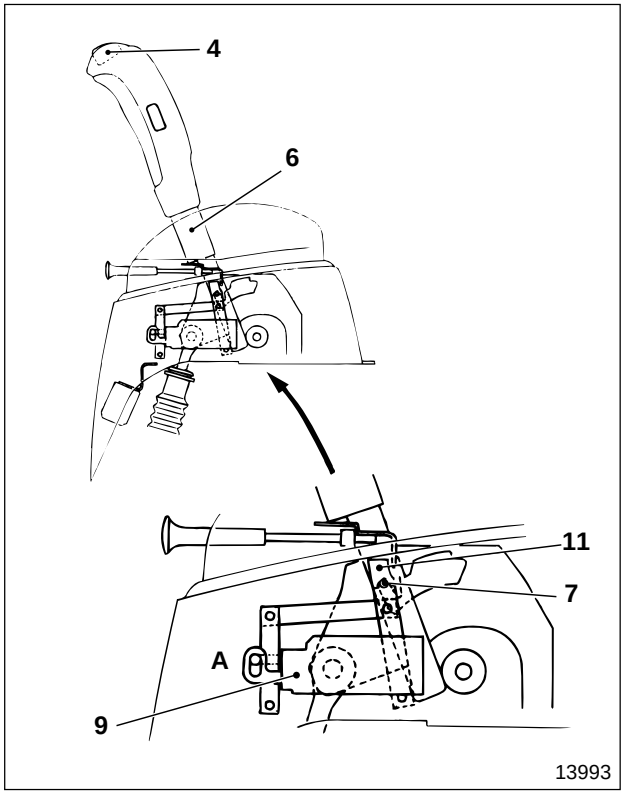

Parking shift locking system

- When selector lever **6** is in the P range and shift lock actuator **9** is locked (state **A**) depending on the state of the power supply (refer to the table below) to the shift lock actuator, pin **7** is restrained by shift lock link **11** and cannot push shift button **4**, and the selector lever cannot be shifted to any position other than the P range.

Power supply		Switch		Operating mode	
IG	+B	Brake	P range	Unlock	Lock
○	○	○	○	○←	
○	○		○		→○
○	○	○		○	
○	○			○	
	○	○	○		→○
	○		○		→○
	○	○		○	
	○			○	

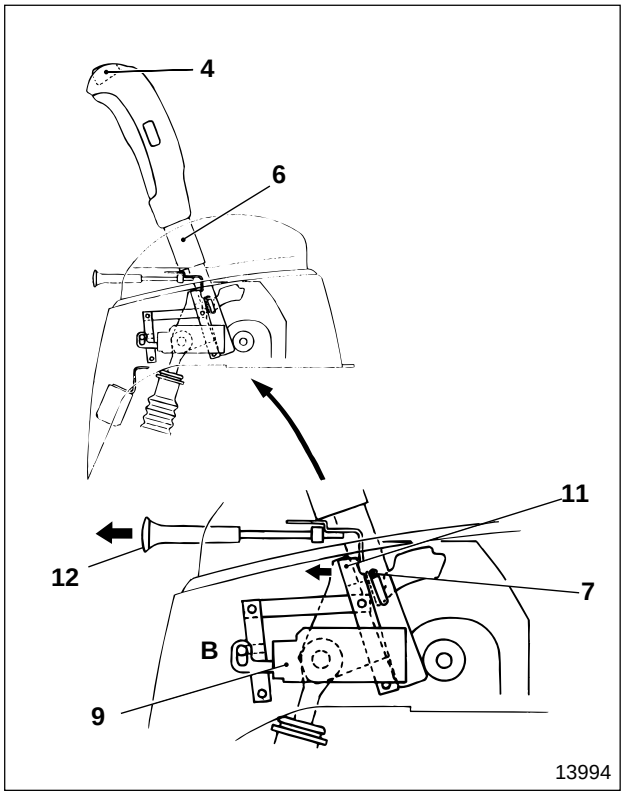

- When selector lever **6** is in the P range and shift lock actuator **9** is unlocked (state **B**) depending on the state of the power supply (refer to the table above) to the shift lock actuator, shift lock link **11** falls forward freeing pin **7** so that shift button **4** is pressed down, allowing the selector lever to move to positions other than the P range.

- In the event of any electrical troubles, P shift locking can be released by pulling shift lock release knob **12**.

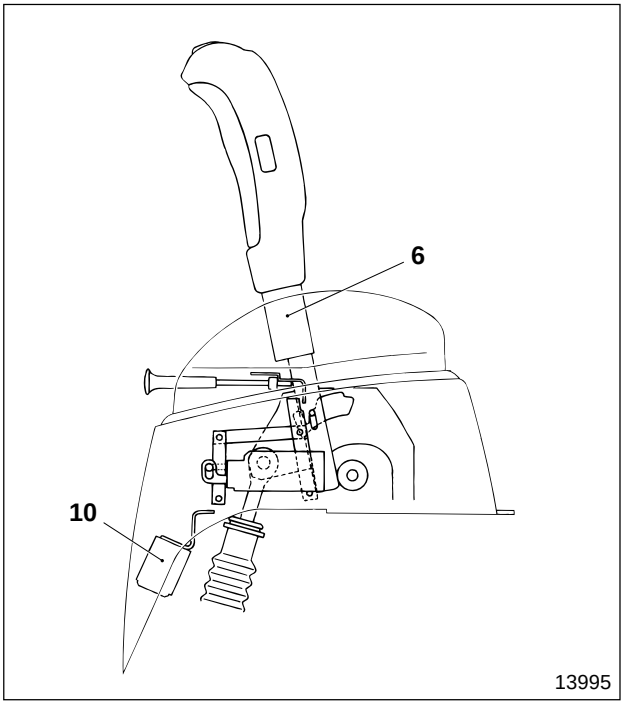

● **Warning system for selector lever reverse position**

When starter switch **2** is ON, if selector lever **6** is put into the R (reverse) range, the reverse position detector switch (inhibiter switch built into the automatic transmission) operates to turn automatic transmission reverse buzzer **10** ON, and alerts the driver that the lever is in the reverse position.

TROUBLESHOOTING PROCEDURE

Possible causes for automatic transmission troubles are as follows:
- Engine performance faulty
- Incorrect adjustment of components
- Hydraulic system faulty
- Mechanical function faulty
- Electrical system faulty

In carrying out a diagnosis of the above items, elementary inspections must be made on the following matters.
- Condition of the engine Gr 13
- Adjustment of accelerator control cable Gr 13
- Automatic transmission fluid quantity and deterioration P23-117
- Adjustment of selector cable P23-136

At the same time, use the self-diagnosis function to search for and study the causes of the troubles and take proper measures to deal with the cause.
After this is done, carry out a road test to see if the trouble has been solved and to judge if any further diagnosis is required.
When causes cannot be located or the trouble cannot be solved even after repair, carry out a stall test and a line pressure test. P23-112, 113
Repair and replacement of parts inside the automatic transmission body cannot be carried out yourself. Therefore, after evaluating the condition in the service works, if there is trouble inside the automatic transmission body, or any of the interior parts need to be inspected, replace the automatic transmission body as a unit.

For inspection of the automatic transmission system, it is recommended that you use the multi-use tester for more efficient testing.
System inspections are classified into the following categories according to symptoms and recognition of the diagnosis codes.
- Inspection by individual diagnosis code memorized by the electronic control unit
- Inspection by symptoms
- Inspection of temporary troubles

Self-diagnosis Procedure

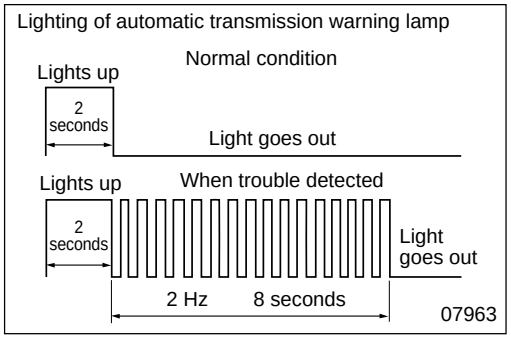

Note 1 : If a trouble was detected during the last trip (i. e. sometime between the key being turned ON and OFF), the automatic transmission warning lamp will flash when the starter switch is turned ON, as illustrated in the diagram on the left.
Also if any of the troubles listed below occur while driving that would reduce the driving performance considerably, the automatic transmission warning lamp will light up.
- Both vehicle speed sensors 1, 2 faulty
- Any solenoid faulty
- Accelerator sensor faulty
- Inhibiter switch faulty

Note 2 : Troubles that occurred during vehicle use are inspected and recorded.

Note 3 :
- Detecting the fault.
- You must carry out a road test at a speed lower than 50 km/h {31.1 mph} and operate the accelerator from fully closed to fully opened.

Note 4 : Troubles that occurred during the road test are inspected and recorded.

Self-diagnosis methods

You can select a self-diagnosis method from the three alternatives below.

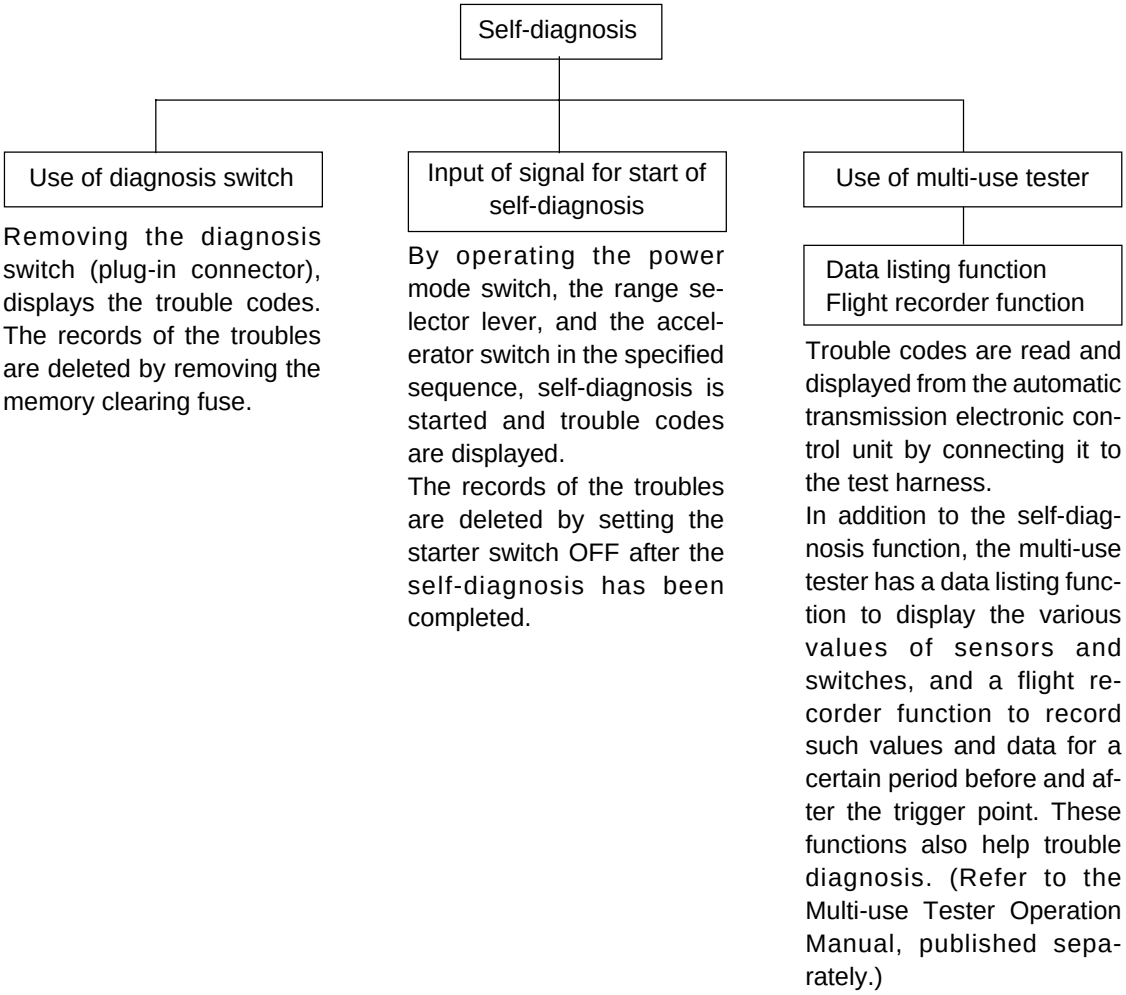

Characteristic features of each method

Item \ Self-diagnosis method	Use of diagnosis switch	Input of signal for start of self-diagnosis	Use of multi-use tester
Convenient	○	△	◎
Items to be self-diagnosed	◎	○	◎
Ease of reading	○	△	◎
Scope of application	×	×	◎

◎ : Excellent
○ : Good
△ : Fair
× : Bad

TROUBLESHOOTING PROCEDURE

Reading of diagnosis codes
< When Using Diagnosis Switch >

Reading of the diagnosis codes using the diagnosis switch is to be carried out in accordance with the following flow chart:

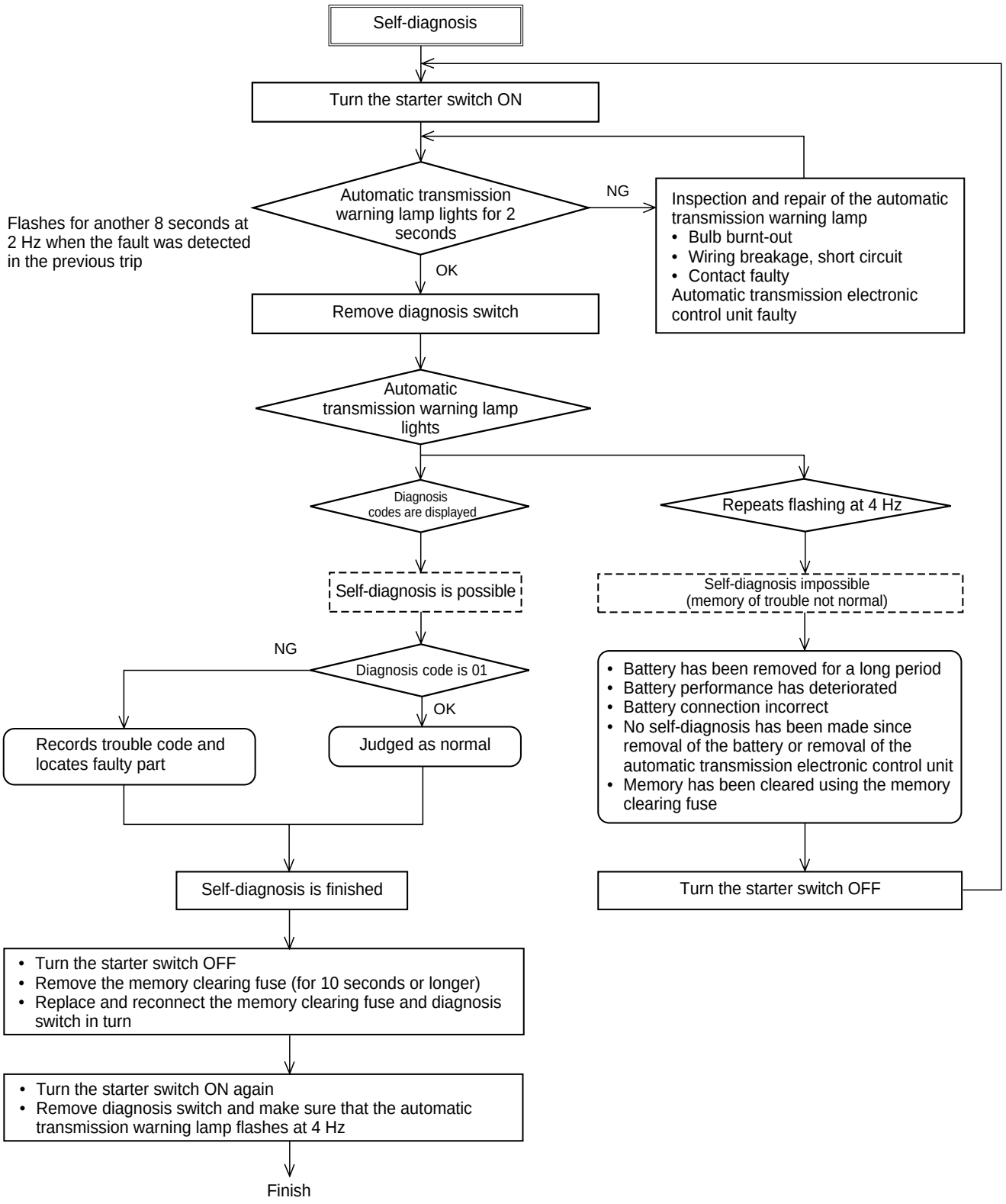

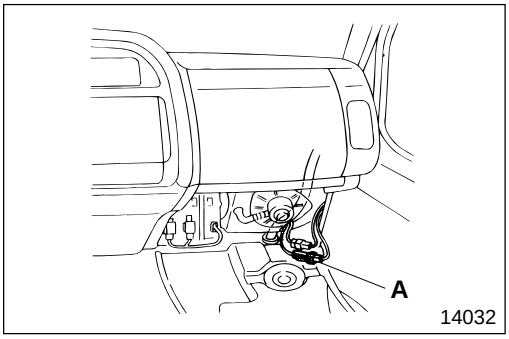

Diagnosis switch

When carrying out a self-diagnosis, turn the starter switch ON and let the power mode indicator flash by removing diagnosis switch **A** (plug-in connector).
This flashing pattern denotes the trouble codes.

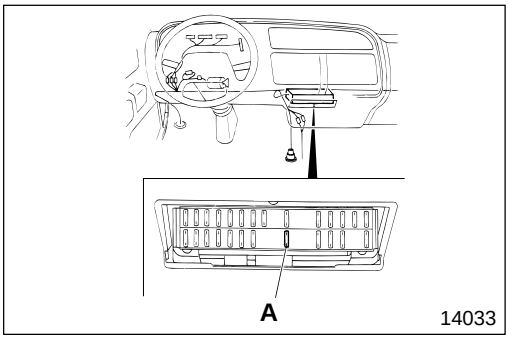

Memory clearing fuse

In normal cases, the trouble codes recorded in the automatic transmission electronic control unit are not deleted automatically. You must delete them yourself after reading the codes or after repairs have been completed.
To delete the memories, turn the starter switch OFF and remove memory clearing fuse **A** for longer than 10 seconds.

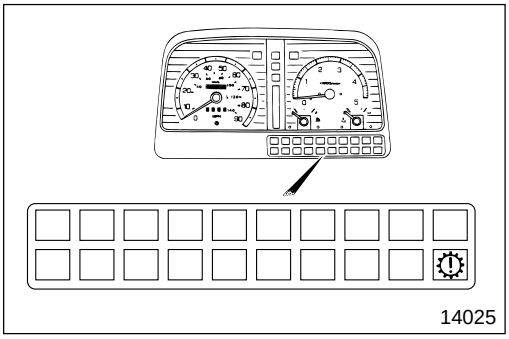

Indication of automatic transmission warning lamp

● Indication at the time the trouble occurs while driving
It lights up when a trouble occurs that would reduce driving performance considerably.
- Both vehicle speed sensors 1, 2 faulty
- Shift solenoid **A** develops a fault
- Shift solenoid **B** develops a fault
- Line pressure solenoid develops a fault
- Lock-up solenoid develops a fault
- Overrunning clutch solenoid develops a fault
- Accelerator sensor develops a fault
- Inhibiter switch develops a fault

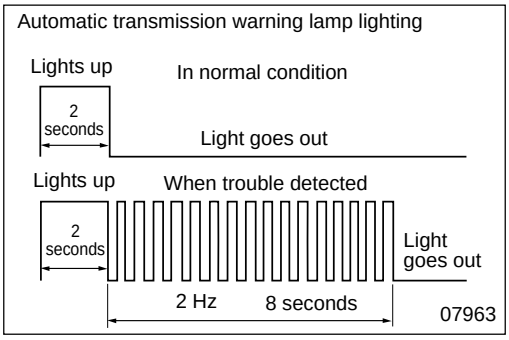

● Indication at the time starter switch was turned ON
- If any trouble has occurred during operation by the user, the indicator lamp within the meter cluster flashes for 8 seconds at 2 Hz to alert the user of the fault, when the key is turned ON as shown in **B**.
- When there is no trouble the lamp lights for 2 seconds, as shown in **A**, to tell the user that things are normal. This also indicates that the bulb has not burnt-out.

NOTE

The indicator lamp flashes only when a trouble occurred in the previous trip. Any trouble that happened prior to that will not cause the indicator lamp to flash.

TROUBLESHOOTING PROCEDURE

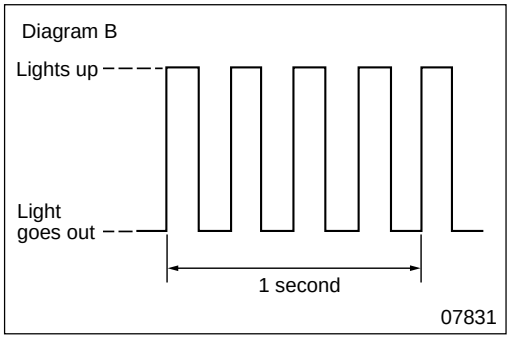

● Indication when self-diagnosis is impossible
- The indicator lamp flashes constantly at 4 Hz when self-diagnosis cannot function, even when the starter switch is turned ON and the diagnosis switch is removed.

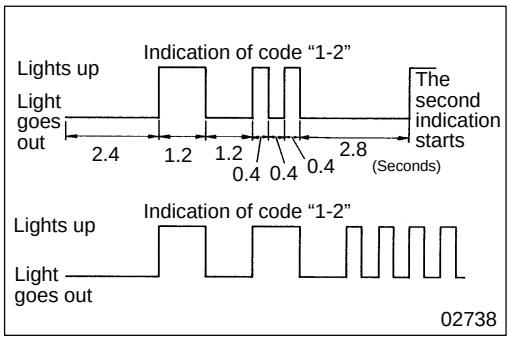

● Trouble codes indication
- The automatic transmission electronic control unit records the data of all the troubles that have occurred since the last self-diagnosis.
- When trouble diagnosis is started, the light goes out for 2.4 seconds then the code indication starts.
  - The "tens" digit is indicated by the number of flashes of 1.2 seconds duration, followed by 1.2 seconds unlit
  - The "ones" digit is indicated by the number of flashes of 0.4 seconds duration, followed by 0.4 seconds unlit
  - Interval between codes is indicated by 2.8 seconds unlit
- When several codes are to be output, the output order is by time of occurrence, and each trouble code is output three times, then the automatic transmission electronic control unit moves on to the next data output.
- After all the trouble codes have been output, the output is repeated from the first code.
- Any fault newly detected while a current trouble code is being output will not be reflected in the on-going indication.

● Items to be self-diagnosed

Diagnosis code	Trouble point	Pattern of flashing of automatic transmission warning lamp
01	(Normal)	Light goes out
11	Voltage at power supply	Lights up Light goes out
12	Vehicle speed sensor 1	
13	Oil temperature sensor	
15	Engine revolution signal	
24	Accelerator sensor	
25	Vehicle speed sensor 2	
31	Shift solenoid A	
32	Shift solenoid B	
34	Line pressure solenoid	
35	Lock-up solenoid	
41	Overrunning clutch solenoid	
43	Inhibiter switch	

12071

< When Using Multi-use Tester >

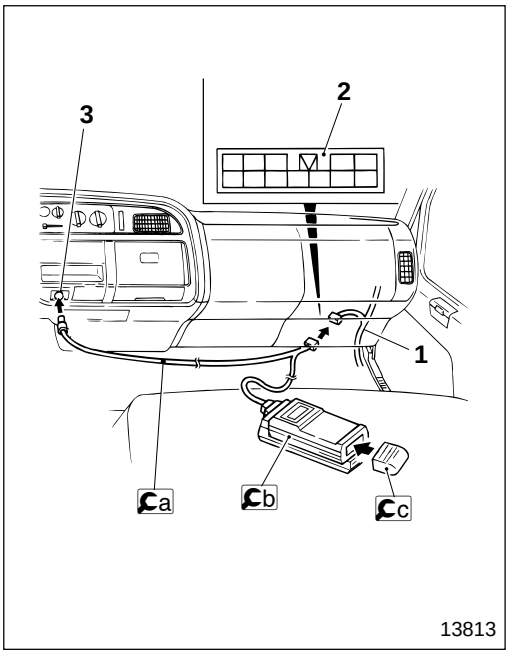

● **Connection of multi-use tester and electronic control unit**

- Turn the starter switch to LOCK.
- Connect the ends of a multi-use tester harness to multi-use tester connector **2** of cab harness **1** and cigarette lighter socket **3** respectively.

NOTE

Multi-use tester connector 2 is fastened to cab harness 1 with adhesive tape.

- Connect c ROM pack to b multi-use tester sub-assembly.
- Carry out trouble diagnosis using diagnosis codes and service data using the multi-use tester.

NOTE

Refer to the Multi-use Tester Operation Manual, published separately, for details regarding the operation of the multi-use tester.

Special tools

Tool name and shape	Part No.	Application
Multi-use tester harness 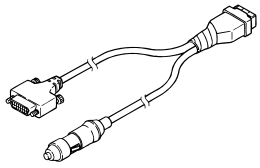 02804	MB991231	Inspection of system
Multi-use tester sub-assembly 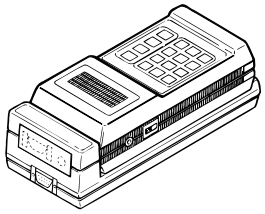 02803	MC858999	
ROM pack 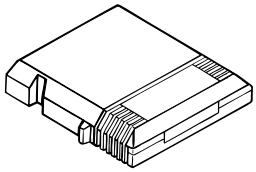 02805	MC885250	

Inspection with Multi-use Tester

① The multi-use tester indicates diagnosis codes and faulty items, identifying the devices to be inspected.

② Information signals from various sensors are indicated in certain values (service data). The multi-use tester compares the values with the judgement standards to make sure of the conditions of the sensors. Service data codes are also indicated as well as diagnosis codes.

①			②					
Indication on MUT		Inspection procedure	Indication on MUT			Inspection procedure	
No.	Item name		No.	Item name	Unit	Conditions at inspection	Judgement standard
11	POWER VOLTAGE	Carry out an inspection according to the inspection procedure specified in the individual diagnosis code					
12	VEH SPD SNSR1		12	VEH SPEED1	□□□.□ MPH	At standstill	0 mph
						Travelling	Synchronized to speedometer
13	OIL TEMP SNSR		13	A/T OIL TEMP	□□□.□ °F	Engine cold	Equivalent to ambient temperature
						Engine warmed-up	Gradual increase
						Engine stop after warming-up	Gradual decrease
15	NE SNSR		15	ENGINE SPEED	□□□□. RPM	Idling after warming-up	750 rpm
						Racing	Synchronized to tachometer
			16	PATTERN SW		Power mode selected	POWER
						Economy mode selected	ECONOMY
			17	OD-OFF SW		ON	OD · OFF
						OFF	OD
			18	N POS.SW		Selector N	ON
						Selector other than N	OFF
			19	D POS.SW		Selector D	ON
						Selector other than D	OFF
			20	2 POS.SW		Selector 2	ON
						Selector other than 2	OFF
			21	1 POS.SW		Selector L	ON
						Selector other than L	OFF
			22	ACCEL SW		Accelerator fully closed	ON
						Gradual depressing	ON→OFF
			23	EXH BRK CTRL		Starter switch ON	ON
24	ACCEL SNSR		24	ACCEL VOLT	□.□□□ V	Accelerator fully closed	1.0 V
						Gradual depressing	Continuous increase
						Accelerator fully opened	4.0 to 4.2 V
25	VEH SPD SNSR2		25	VEH SPEED2	□□□.□ MPH	At standstill	0 mph
						While travelling	Synchronized to speedometer

①			②				
Indication on MUT		Inspection procedure	Indication on MUT			Inspection procedure	
No.	Item name		No.	Item name	Unit	Conditions at inspection	Judgement standard
			26	POWER LAMP		Power mode selected	PWR
						Economy mode selected	ECO
			27	EXH CUT RELAY		Exhaust brake ON while travelling	OFF
						Stopping with exhaust brake ON	OFF→ON
			28	R POS.SW		Selector R	ON
						Selector other than R	OFF
			29	VALVE POS.		At standstill in the D range	2nd gear position
						Acceleration from 0→80 km/h {49.7 mph} with accelerator at half throttle	Changes as follows: 2nd→1st→ 2nd→3rd→ 4th
			30	SELECTOR POS.		Shift selector from P to L in sequence	Changes as follows: N→R→N →D→2→L
31	SHIFT VALVE A		31	SHIFT VALVE A		Travel in 1st and 4th gear	ON
						Travel in 2nd and 3rd gear	OFF
32	SHIFT VALVE B		32	SHIFT VALVE B		Travel in 1st and 2nd gear	ON
						Travel in 3rd and 4th gear	OFF
34	LINE PRESS. V		34	LINE PRESS. V			
35	LOCKUP VALVE		35	LOCKUP VALVE		Oil temperature warmed up to 40°C {104°F} at standstill in D range position	OFF
						Acceleration at half throttle and OD-OFF	FE639 51 to 57 km/h {31.69 to 35.42 mph} FE649 53 to 59 km/h {32.93 to 36.66 mph} Turns ON at the above vehicle speeds
						Speed reduction with accelerator fully closed	FE639, FE649 35 to 42 km/h {22.75 to 26.10 mph} Turns ON at the above vehicle speeds
41	OVERRUN VALVE		41	OVERRUN VALVE			
43	INHIBIT SIG.						

TROUBLESHOOTING PROCEDURE

< When Using the Signal Input for Start of Self-diagnosis >

The trouble diagnosis is started under the conditions determined using the accelerator switch. Therefore, all the switches that function with the idling up system, such as the air-conditioner switch, must be turned OFF. After fully warming up the engine, input start signal of self-diagnosis in accordance with the following flow chart.

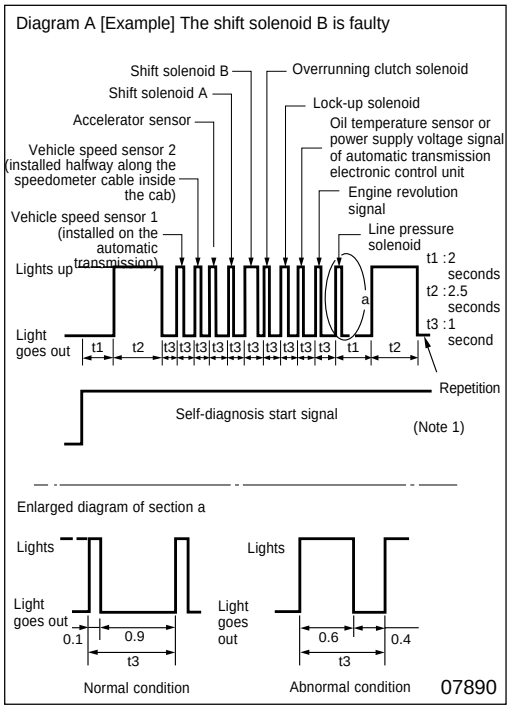

Note 1 : Flashing as shown in diagram A takes place in sequence as shown in the table below. Make sure of the sequence of flashing so that no mistake is made in reading the code.
However, when vehicle speed sensors 1, 2 are both faulty at the same time, both will show normal flashing. Therefore, if troubles such as “gear does not shift” occur, measure the voltage between the terminals of the automatic transmission electronic control unit.

Sequence	Inspection point
1	Vehicle speed sensor 1 (Installed on automatic transmission)
2	Vehicle speed sensor 2 (Installed on meter)
3	Accelerator sensor
4	Shift solenoid A
5	Shift solenoid B
6	Overrunning clutch solenoid
7	Lock-up solenoid
8	Oil temperature sensor, power supply voltage signal of automatic transmission electronic control unit
9	Engine revolution signal
10	Line pressure solenoid

Note 2 : Turn idling switch ON
Note 3 : Turn idling switch OFF
Note 4 : • Refer to diagram A to read the self-diagnosis code.
• If the key is turned OFF after indication of self-diagnosis is started, the self-diagnosis finishes. As turning the key OFF also deletes the troubles stored in memory, be sure to record the troubles before turning OFF.

Note 6 : When abnormal flashing occurs for signal 8 (in Note 1), inspect the output voltage of the automatic transmission electronic control unit at terminals 12 (+) and 15 (-) (oil temperature sensor circuit). Measure the output voltage when the oil temperature is 40°C {104°F}. If the voltage is approximately 1.1 volts, it is normal; if approximately 2.4 volts, it is faulty.
Also, inspect the output voltage of the automatic transmission electronic control unit at terminals 29 (+) and 31 (-) (power supply voltage signal). Measure during travelling at a speed of 15 km/h {9.32 mph}. If the voltage is within 12 to 13 volts, it is normal; if less than 12 volts, it is faulty.

● **Trouble Diagnosis Item**

Sequence	Pattern of flashing of automatic transmission warning lamp	Trouble point	Trouble code
1		Vehicle speed sensor 1	12
2		Vehicle speed sensor 2	25
3		Accelerator sensor	24
4		Shift solenoid A	31
5		Shift solenoid B	32
6	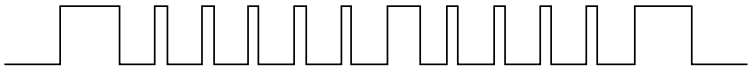	Overrunning clutch solenoid	41
7		Lock-up solenoid	35
8	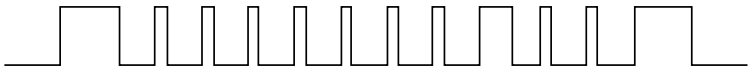	Oil temperature sensor, automatic transmission electronic control unit power supply voltage signal	13 11
9		Engine revolution signal	15
10		Line pressure solenoid	34

12072

TROUBLESHOOTING PROCEDURE

● **Measures to be taken when self-diagnosis does not work**

Carry out an inspection in the following sequence when self-diagnosis does not function after the input of a self-diagnosis start signal.

Stop the vehicle

↓

Turn the starter switch to ON (Engine is not operating)

↓

Is D range input signal to the automatic transmission electronic control unit terminal 20 normal?

Abnormal → Inhibiter switch or wiring is faulty

Normal (12 to 13 volts in D range)

↓

Is 2 range input signal to the automatic transmission electronic control unit terminal 1 normal?

Abnormal → Inhibiter switch or wiring is faulty

Normal (12 to 13 volts at 2 range)

↓

Is L range input signal to the automatic transmission electronic control unit terminal 2 normal?

Abnormal → Inhibiter switch or wiring is faulty

Normal (12 to 13 volts in L range)

↓

Is power mode switch input signal both in PWR and ECO conditions to the automatic transmission electronic control unit terminal 9 normal?

Abnormal → Power mode switch or wiring is faulty

Normal (With power mode switch ECO, 4.5 to 5.5 volts, with ON, 1 volt or less)

↓

Is idling switch input signal in ON condition to the automatic transmission electronic control unit terminal 4 normal?

Abnormal → Accelerator switch or wiring is faulty

Normal (At idling, 12 to 13 volts)

↓

Automatic transmission electronic control unit is faulty

Note : When automatic transmission warning lamp is normal.

Automatic transmission electronic control unit

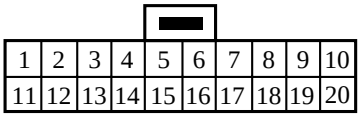

14035

ELECTRIC CIRCUIT AND PARTS INSTALLATION POSITION

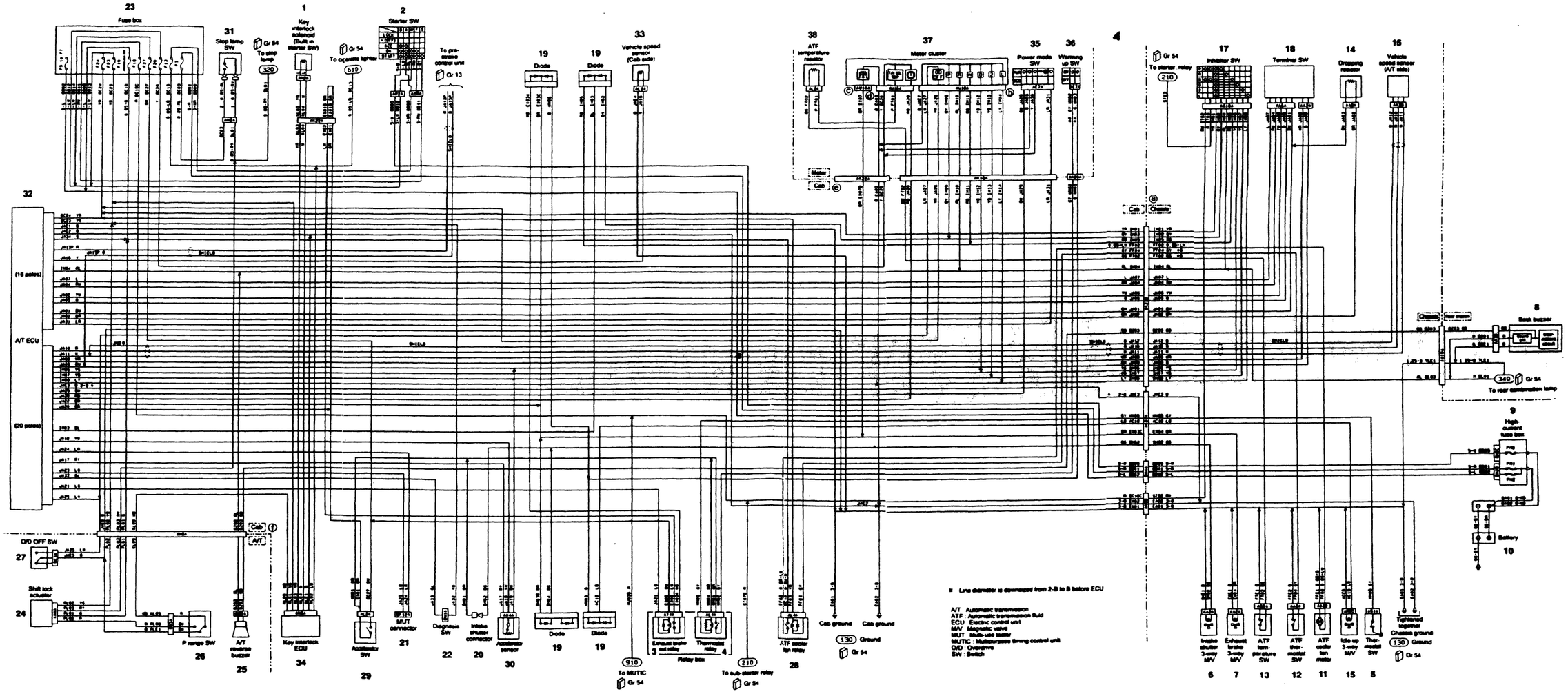

13972

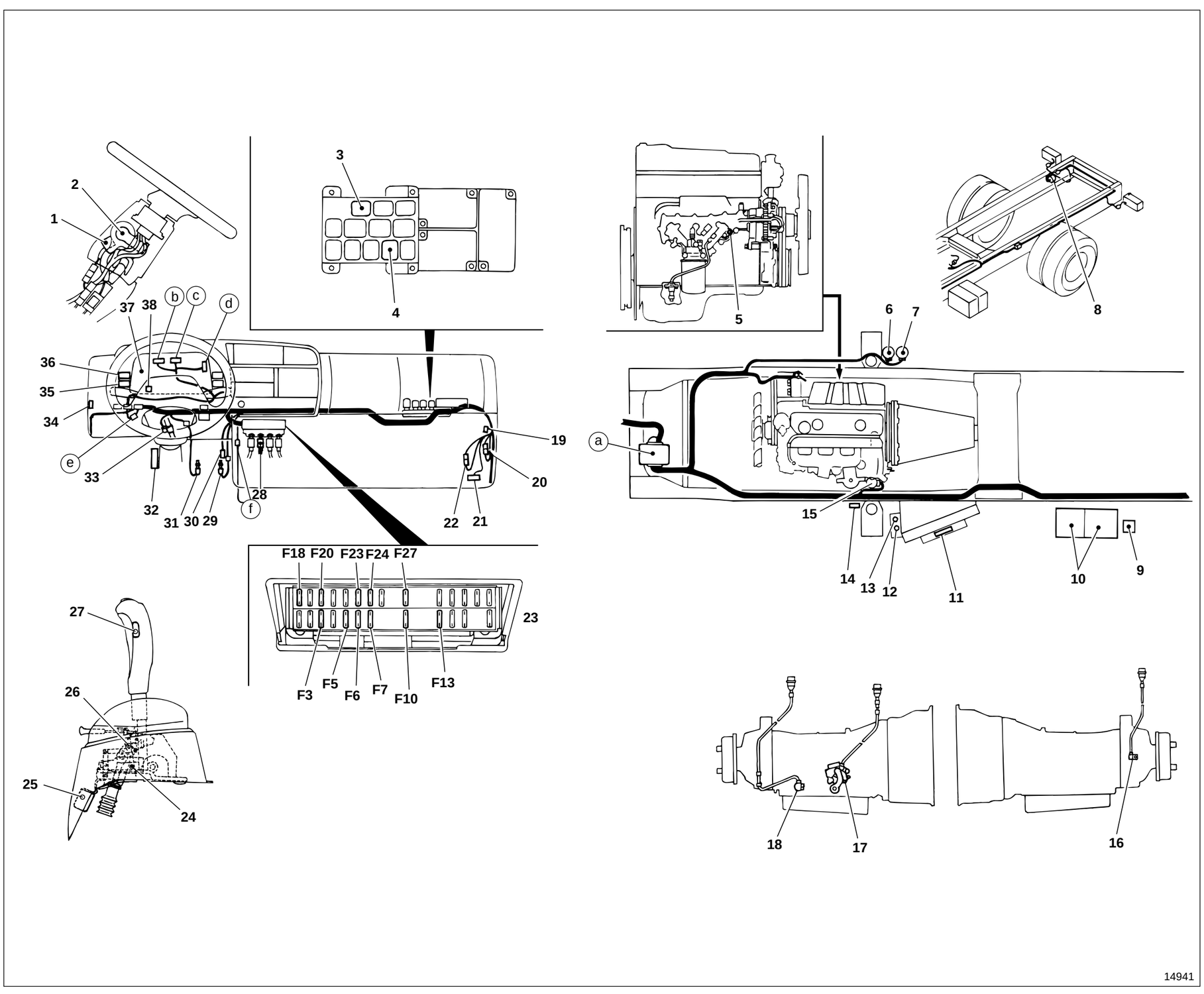

14941

1 Key interlock solenoid (Built in starter SW)
2 Starter SW
3 Exhaust brake cut relay
4 Thermostat relay
5 Thermostat SW
6 Intake shutter 3-way M/V
7 Exhaust brake 3-way M/V
8 Back buzzer
9 High-current fuse box
10 Battery
11 ATF cooler fan motor
12 ATF thermostat SW
13 ATF temperature SW
14 Dropping resistor
15 Idle up 3-way M/V
16 Vehicle speed sensor (A/T side)
17 Inhibitor SW
18 Terminal SW
19 Diode
20 Intake shutter connector
21 MUT connector
22 Diagnosis SW
23 Fuse box
24 Shift lock actuator
25 A/T reverse buzzer
26 P range SW
27 O/D OFF SW
28 ATF cooler fan relay
29 Accelerator SW
30 Accelerator sensor
31 Stop lamp SW
32 A/T ECU
33 Vehicle speed sensor (Cab side)
34 Key interlock ECU
35 Power mode SW
36 Warming up SW
37 Meter cluster
38 ATF temperature resistor

A/T : Automatic transmission
ATF : Automatic transmission fluid
ECU : Electronic control unit
M/V : Magnetic valve
MUT : Multi-use tester
MUTIC : Multipurpose timing control unit
O/D : Overdrive
SW : Switch

List of diagnosis codes

Diagnosis code	Trouble point	Judgement standard	Countermeasures for troubles using A/T ECU (Backup mode)
11	Power supply voltage	10 volts or less (At vehicle speed of 10 km/h {6.21 mph} or more)	None
12	Vehicle speed sensor 1	(Note)	Control in accordance with vehicle speed sensor 2
13	Oil temperature sensor	Indication of –20°C {–4°F} or less (At vehicle speed of 10 km/h {6.21 mph} or more)	None (Oil temperature : Judged as extremely low temperature)
15	Engine revolution sensor	Indication of 500 rpm or less (At vehicle speed of 10 km/h {6.21 mph} or more)	None
24	Accelerator sensor	Accelerator sensor voltage 0.1 volt or less, or 4.7 volts or more	Set accelerator opening using accelerator switch and control shifting and line pressure
25	Vehicle speed sensor 2	(Note)	Control in accordance with vehicle speed sensor 1
31	Shift solenoid A	Wiring breakage or short circuit for 30 ms or more	Shift solenoids A, B OFF (3rd gear fixed)
32	Shift solenoid B	Wiring breakage or short circuit for 30 ms or more	↑
34	Line pressure solenoid	Wiring breakage or short circuit for 140 ms or more	Line pressure solenoid OFF
35	Lock-up solenoid	Wiring breakage or short circuit for 140 ms or more	Lock-up solenoid OFF
41	Overrunning clutch solenoid	Wiring breakage or short circuit for 30 ms or more	Overrunning clutch solenoid OFF and line pressure maximum at 4th gear
43	Inhibiter switch	No signal or duplicate signals	• Put in the D range and do not shift to 4th gear • Select the range following the priority order and do not shift to 4th gear. Priority order D>N>R>2>1

A/T ECU : Automatic transmission electronic control unit

(Note) Detection of faulty vehicle speed sensors 1, 2

Compare the indications of vehicle speed sensors 1, 2. When either one of them shows 20 km/h {12.4 mph} or more while the other remains at 0, the one that shows “0” is faulty.

When travelling at vehicle speeds of 20 km/h {12.4 mph} or more and either sensor indicates an unusually drastic fall (10 km/h {6.21 mph} per 0.1 second), the sensor is faulty.

11. Abnormal voltage at power supply

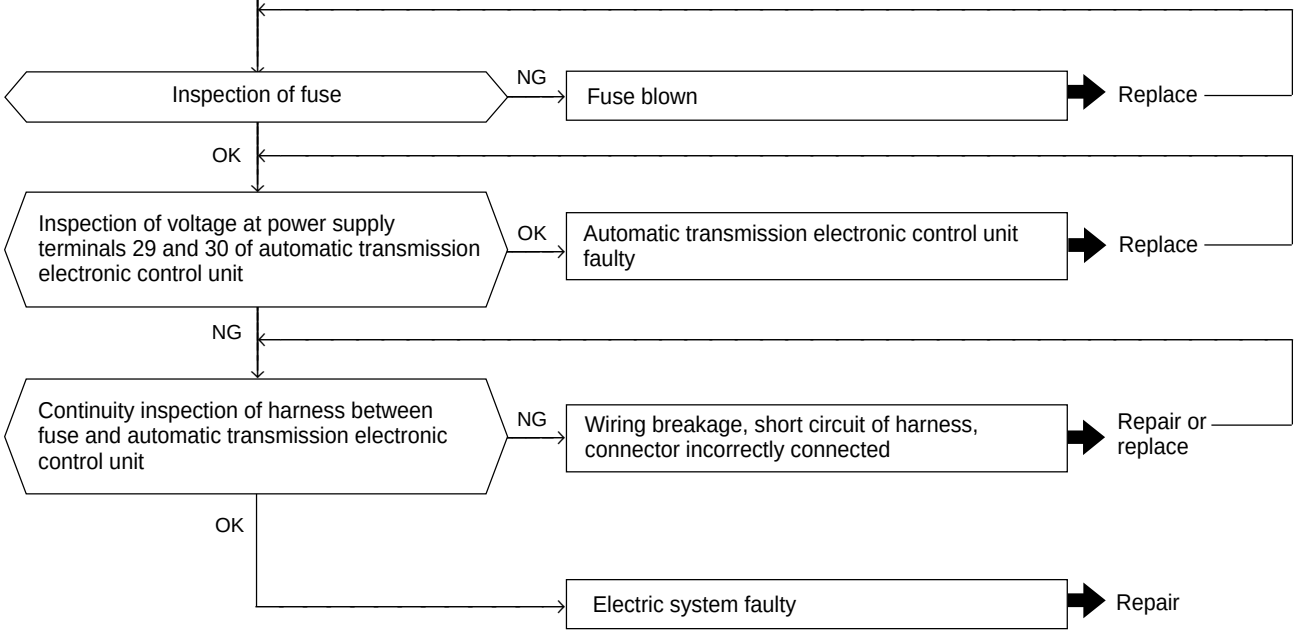

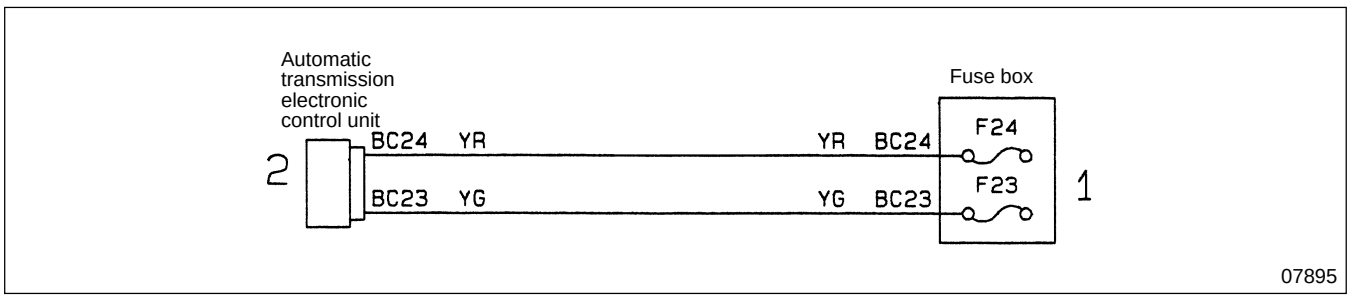

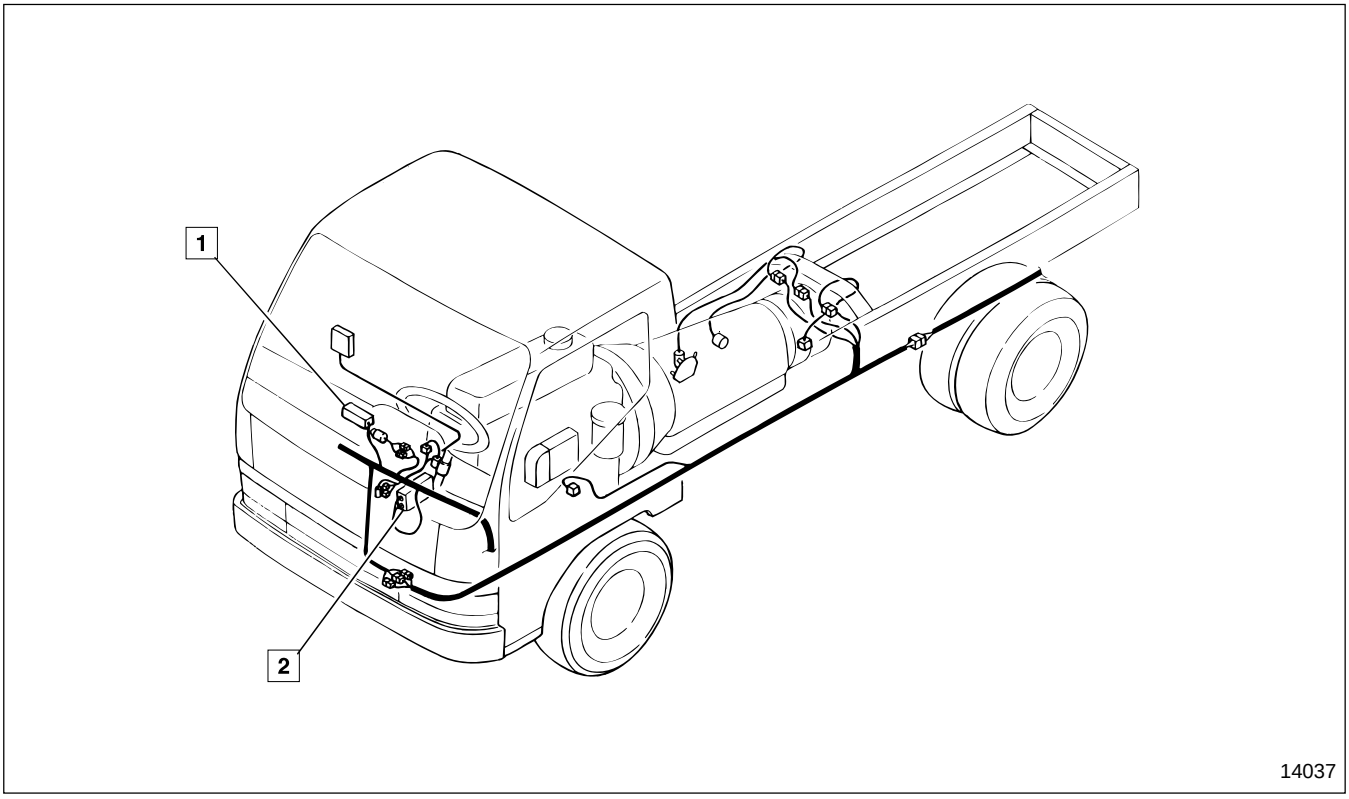

1 Fuse box
2 Automatic transmission electronic control unit

◆ Service procedure

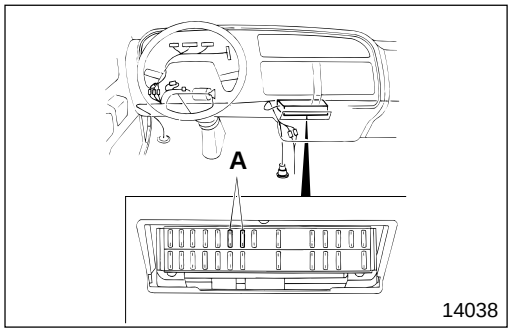

1 **Inspection of fuse**

A : Automatic transmission fuse

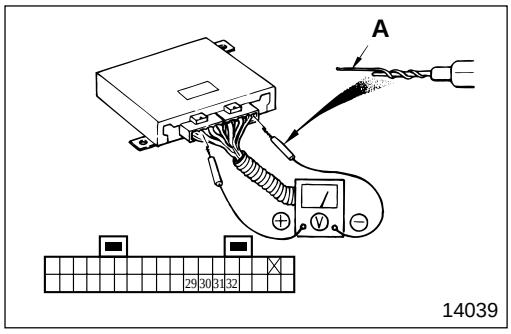

2 **Inspection of voltage at power supply terminals of automatic transmission electronic control unit**

With the starter switch ON, inspect to see that battery voltage is applied to terminals **29** and **30** respectively.
Terminals **31** and **32** are ground terminals.

A : Twist wire

12. Vehicle speed sensor 1 signal faulty

- Inspection of installation condition of vehicle speed sensor 1
  - NG → Vehicle speed sensor 1 installation faulty → Repair
  - OK
- Inspection of vehicle speed sensor 1 body
  - NG → Vehicle speed sensor 1 body faulty → Replace
  - OK
- Continuity inspection of harness between vehicle speed sensor 1 and automatic transmission electronic control unit
  - NG → Wiring breakage, short circuit of harness, connector incorrectly connected → Repair or replace
  - OK
- Inspection of parking gear (sensor plate)
  - NG → Parking gear (sensor plate) faulty → Replace automatic transmission body
  - OK
- Automatic transmission electronic control unit faulty → Replace

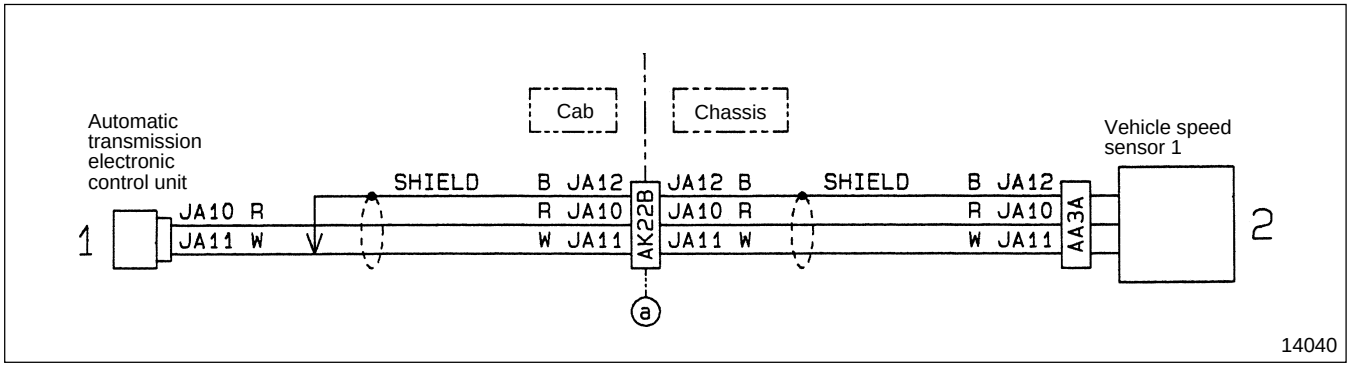

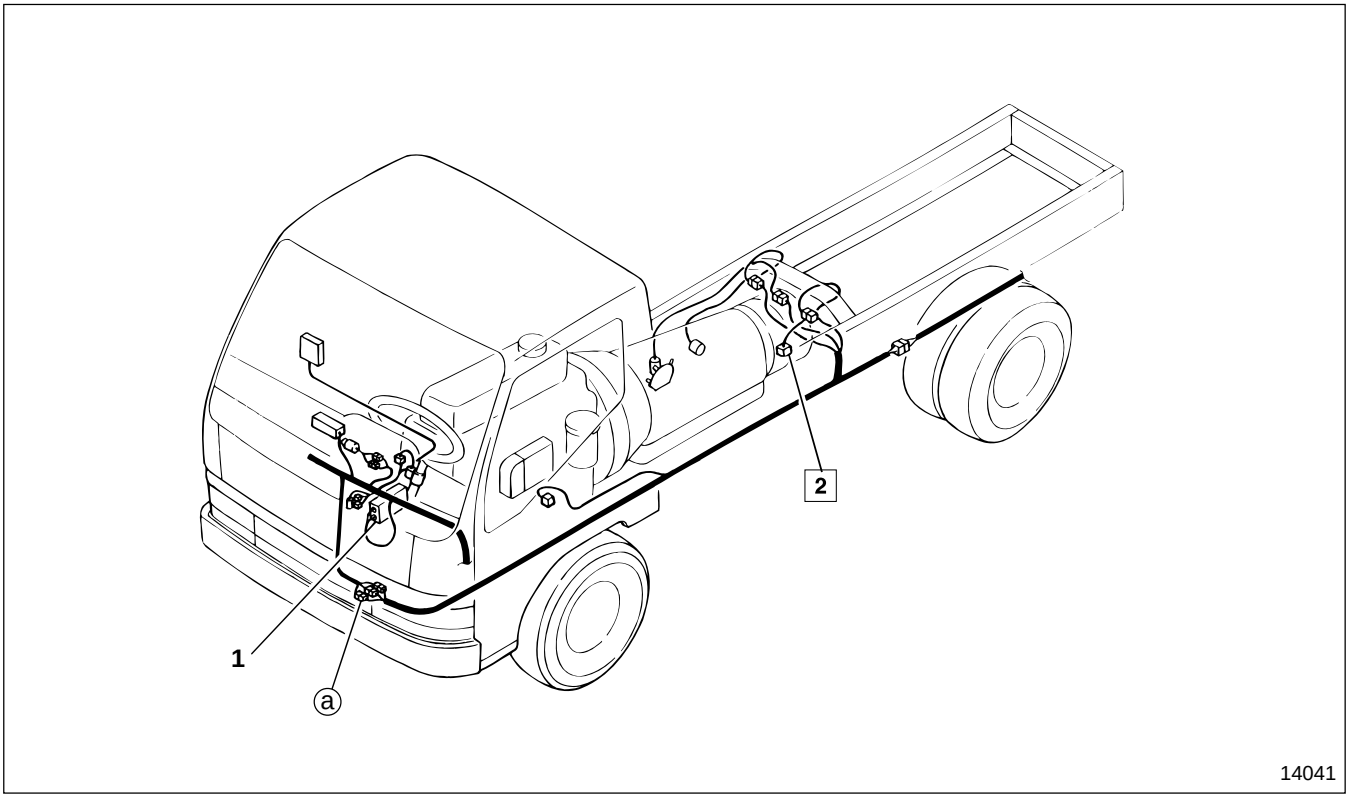

1 Automatic transmission electronic control unit
2 Vehicle speed sensor 1

Service standards

Location	Maintenance item		Standard value	Limit	Remedy
2	Resistance of vehicle speed sensor 1 (At connector) 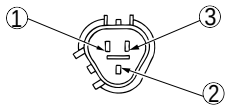 14042	① - ②	500 to 650 Ω	—	Replace
		② - ③	∞	—	
		① - ③	∞	—	

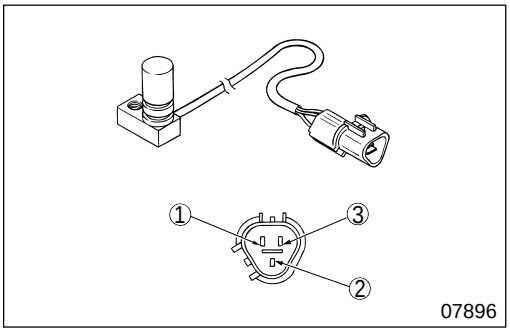

◆ Service procedure

2 **Inspection of vehicle speed sensor 1**

Standard value	Connector terminals		
	① : Output	② : GND	③ : Shield
500 to 650 Ω	○	○	
∞		○	○
∞	○		○

If the measured value deviates from the standard value, replace vehicle speed sensor 1 **2**.

INSPECTION BY INDIVIDUAL DIAGNOSIS CODE

13. Oil temperature sensor signal faulty

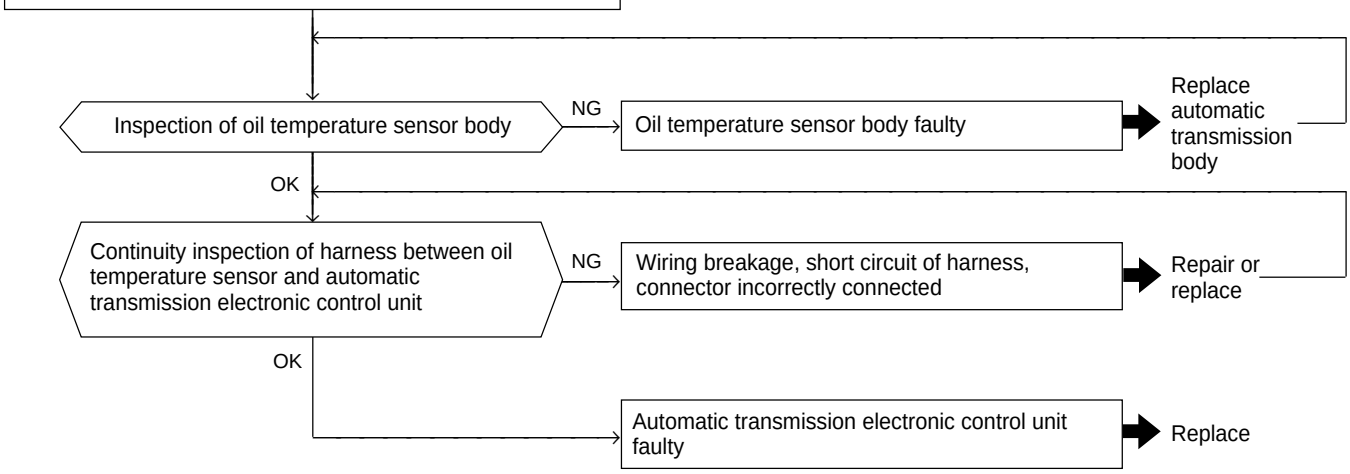

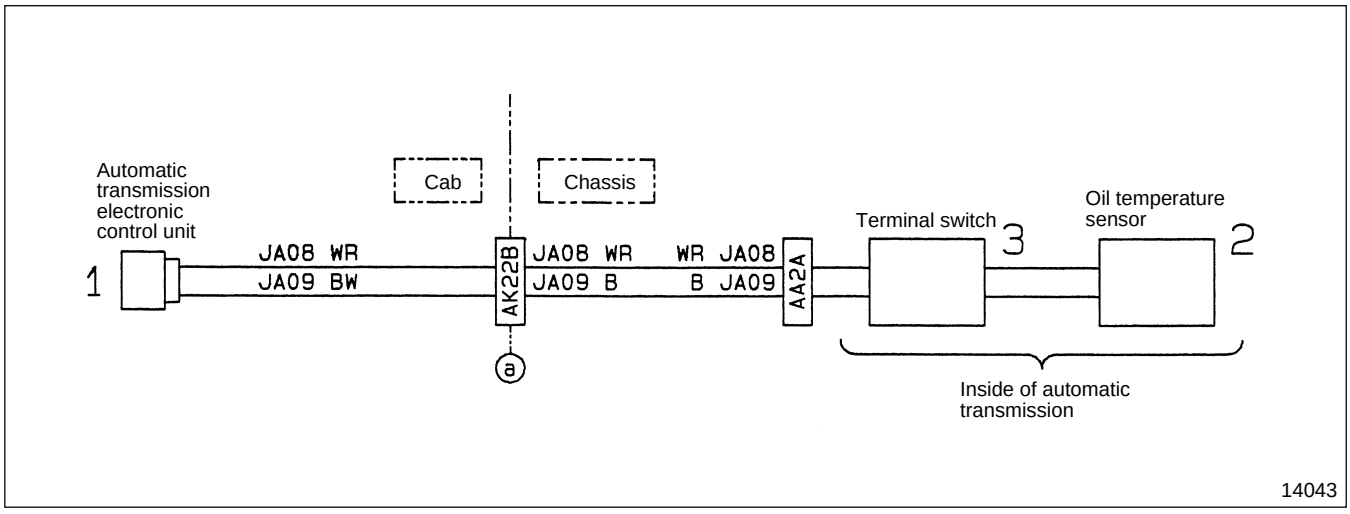

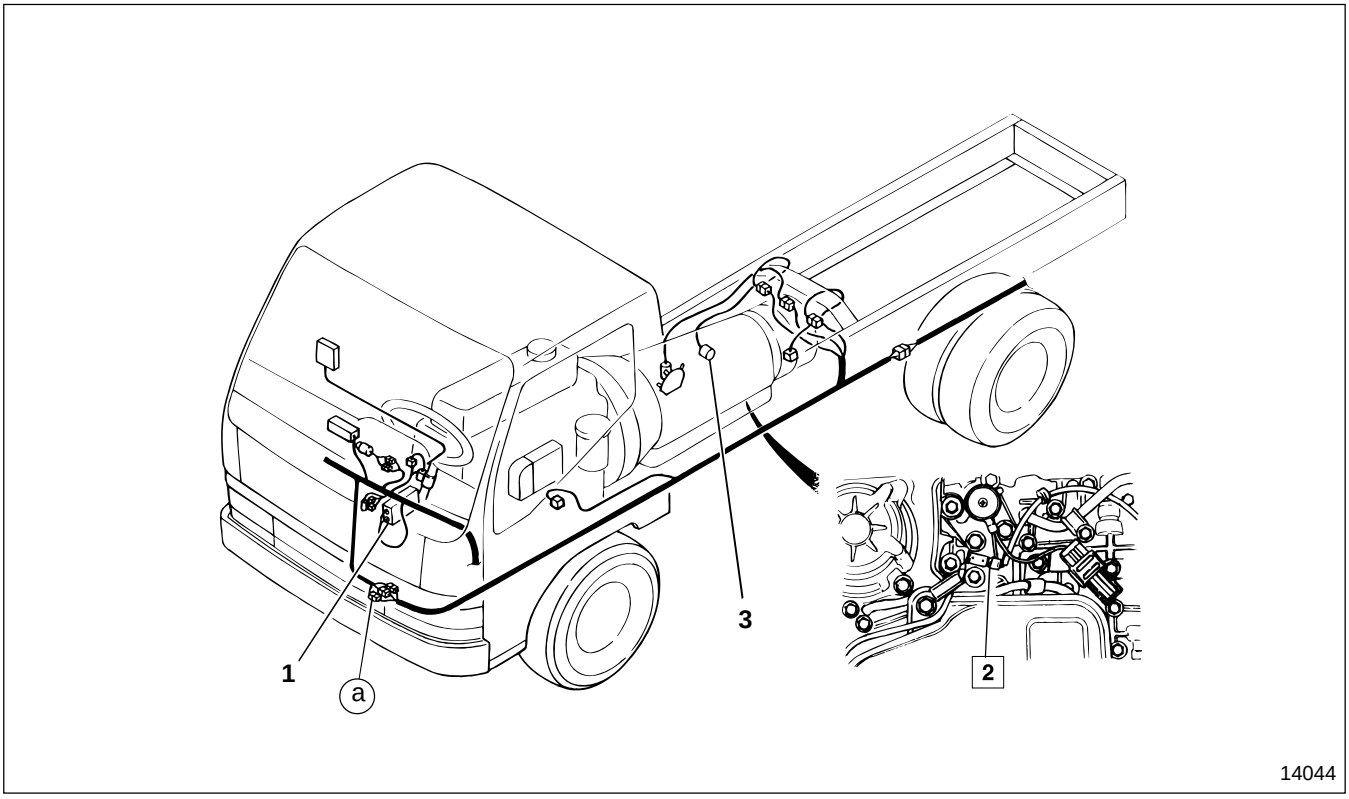

1 Automatic transmission electronic control unit
2 Oil temperature sensor
3 Terminal switch

Service standards

Location	Maintenance item		Standard value	Limit	Remedy
2	Resistance of oil temperature sensor (At terminal switch connector)	20°C {68°F}	Approximately 2.5 kΩ	—	Replace
		40°C {104°F}	Approximately 1.2 kΩ	—	
		60°C {140°F}	Approximately 0.6 kΩ	—	
		80°C {176°F}	Approximately 0.3 kΩ	—	

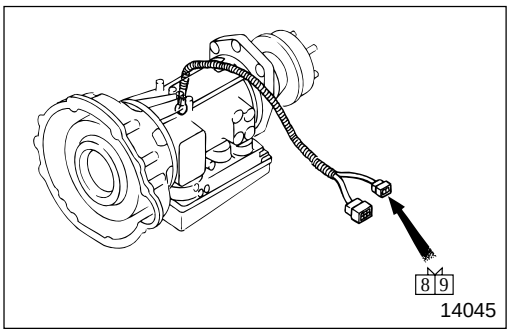

◆ Service procedure

2 **Inspection of oil temperature sensor body**

Standard value	Connector terminal		Oil temperature
	8	9	
Approximately 2.5 kΩ	○	○	20°C {68°F}
Approximately 1.2 kΩ			40°C {104°F}
Approximately 0.6 kΩ			60°C {140°F}
Approximately 0.3 kΩ			80°C {176°F}

When the measured value deviates extremely from the standard value or when the resistance value does not change in spite of the change in the fluid temperature, replace the oil temperature sensor body.

15. Engine revolution sensor signal faulty

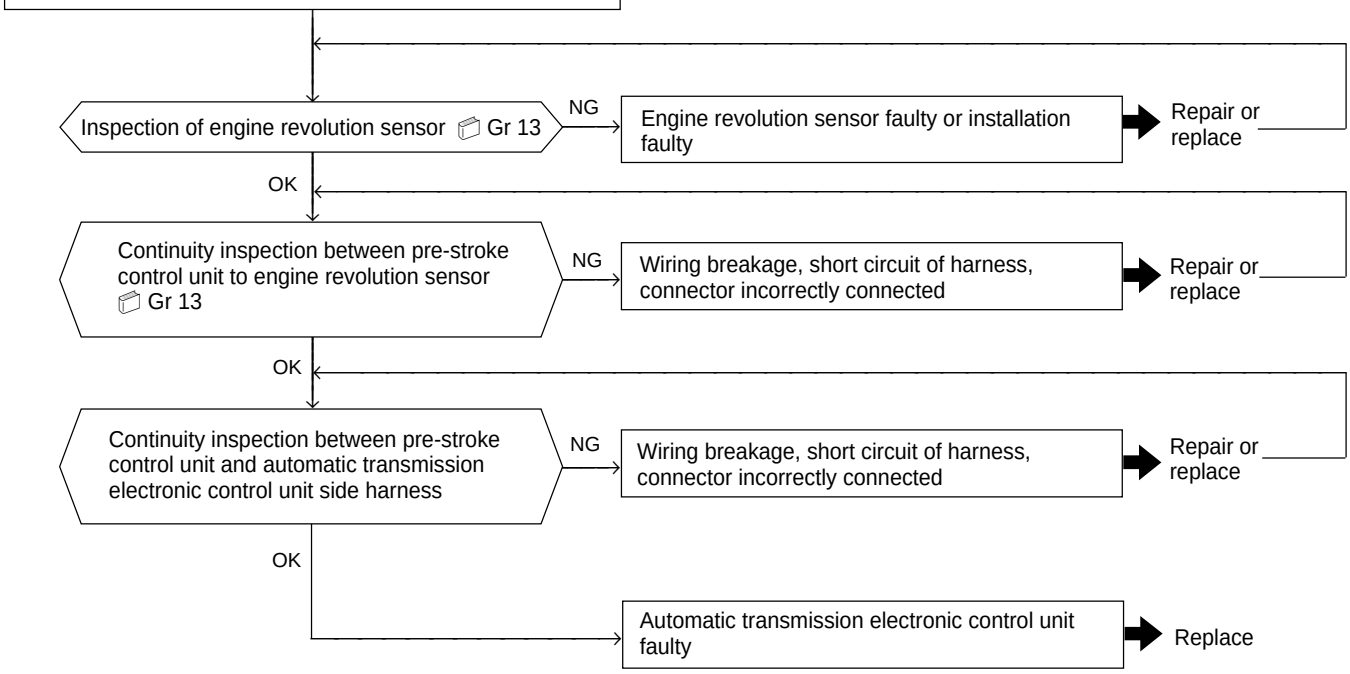

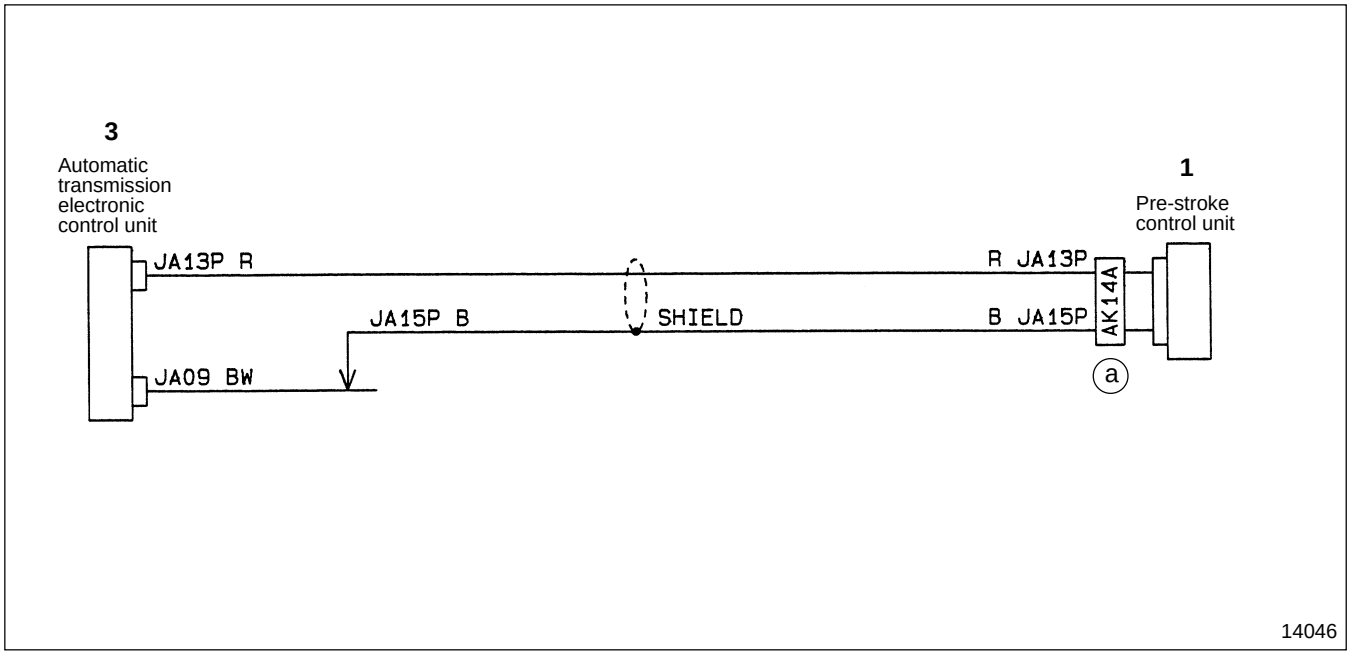

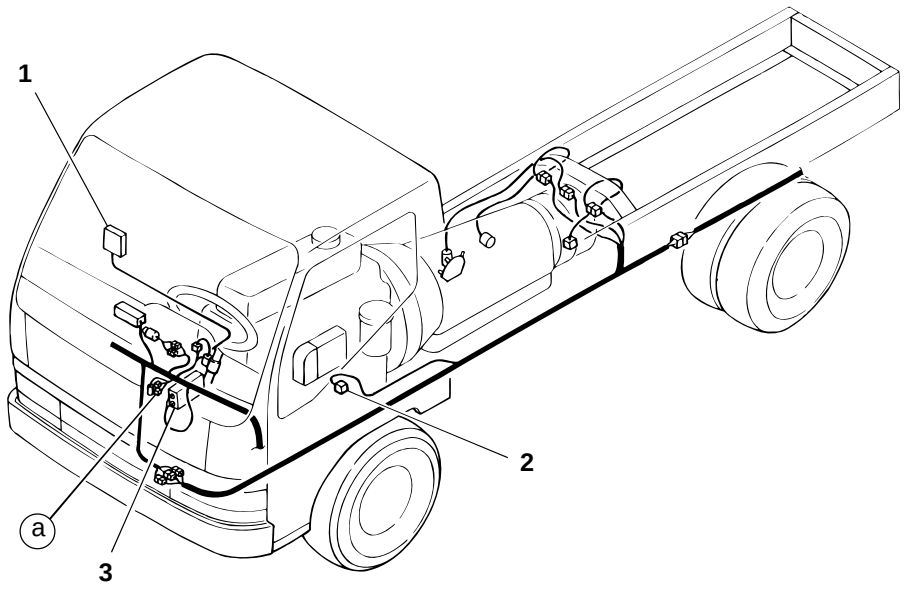

14047

1 Pre-stroke control unit Gr 13
2 Engine revolution sensor Gr 13
3 Automatic transmission electronic control unit

24. Accelerator sensor signal faulty

Inspection of power supply voltage of accelerator sensor at automatic transmission electronic control unit terminal
→ Power supply system faulty → Repair or replace

Inspection of input voltage at automatic transmission electronic control unit terminal
OK → Automatic transmission electronic control unit faulty → Replace

NG

Inspection of voltage at connector of accelerator sensor
NG → Inspection of accelerator sensor
NG → Accelerator sensor faulty → Replace
OK → Automatic transmission electronic control unit faulty → Replace

OK

Continuity inspection of harness between accelerator sensor and automatic transmission electronic control unit
NG → Wiring breakage, short circuit of harness, connector incorrectly connected → Repair or replace

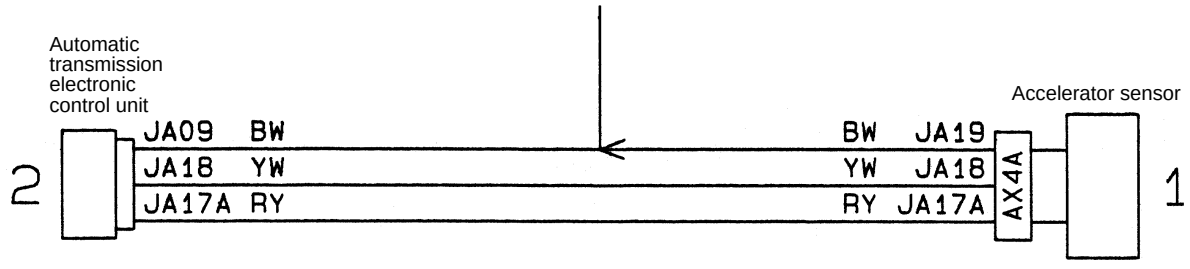

14048

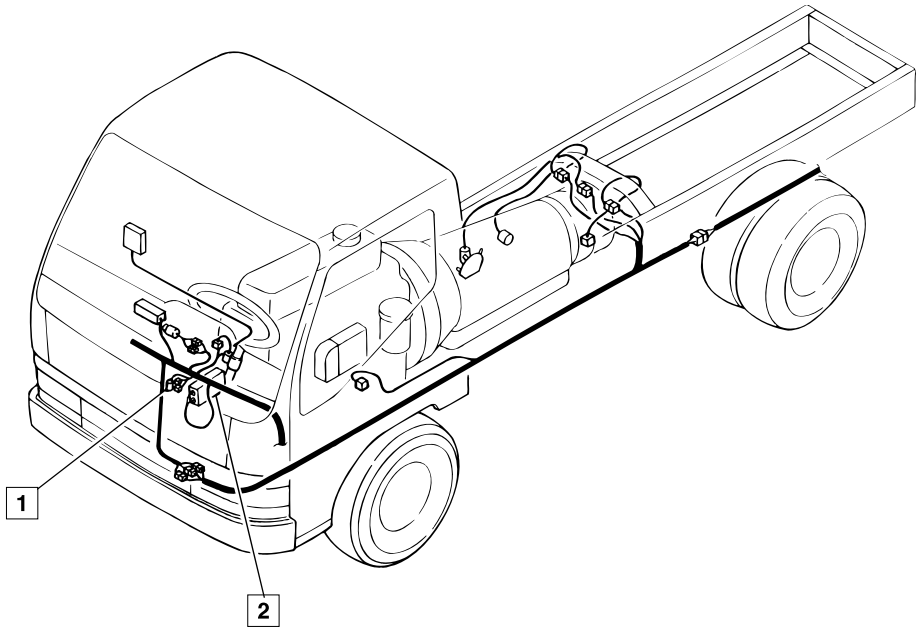

14049

1 Accelerator sensor
2 Automatic transmission electronic control unit

Service standards

Location	Maintenance item		Standard value	Limit	Remedy
1	Output voltage of accelerator sensor 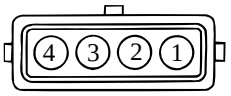 14050 ① : Ground ③ : Output ④ : Input (5 volts)	Idling position	$1.0\,^{0}_{-0.1}$ V	—	Replace
		Accelerator at full throttle	$4\,^{+0.2}_{0}$ V	—	
2	Input/output voltage of connector of automatic transmission electronic control unit (With starter switch ON) 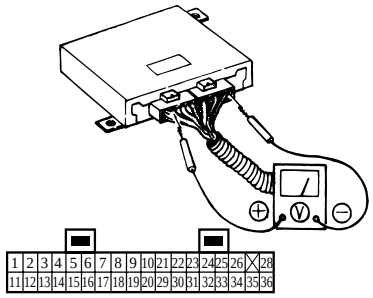 14051	Power supply voltage of accelerator sensor 10 – 15	4.5 to 5.5 V	—	Repair or replace
		Output voltage of accelerator sensor (At idling) 11 – 15	$1.0\,^{0}_{-0.1}$ V	—	
		Output voltage of accelerator sensor (With accelerator at full throttle) 11 – 15	$4\,^{+0.2}_{0}$ V	—	

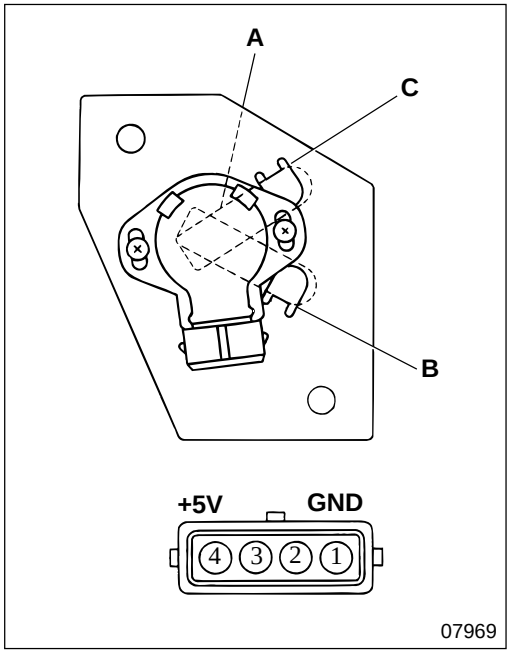

◆ Service procedure

1 **Inspection of accelerator sensor**

Load 5 volts to terminal ④, and ground terminal ①.
Measure output voltage from terminal ③ at each position of lever **A**.
If the measured value deviates from the standard value, replace accelerator sensor **1**.
Removal and installation of sensor : Gr 13

B : Idling position
C : Maximum stroke position of lever

Output voltage of accelerator sensor at idling	Connector terminal	
	③	①
$1.0^{0}_{-0.1}$ V	⊕	⊖

Output voltage of accelerator sensor with accelerator at full throttle	Connector terminal	
	③	①
$4^{+0.2}_{0}$ V	⊕	⊖

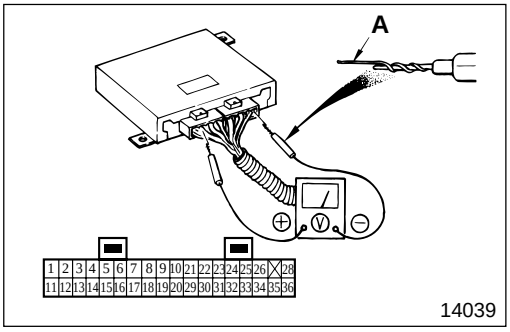

2 **Inspection of voltage of automatic transmission electronic control unit terminals**

[Inspection of power supply voltage of accelerator sensor]

- Loosen the accelerator control button as much as possible.
- With the key turned ON, measure power supply voltage between terminals 10 (+) and 15 (–) of the automatic transmission electronic control unit and check if the measured value conforms to the standard value.

  A : Twist wire.

Power supply voltage of accelerator sensor	Connector terminal	
	10	15
4.5 to 5.5 V	⊕	⊖

[Inspection of output voltage of accelerator sensor]

- With the key turned ON and at idling (accelerator pedal released), measure output voltage of the accelerator sensor between terminals 11 (+) and 15 (–) of the automatic transmission electronic control unit, and check if the measured value conforms to the standard value.

Output voltage of accelerator sensor at idling	Connector terminal	
	11	15
1.0±0.1 V	⊕	⊖

- With the key turned ON and the accelerator at full throttle (accelerator pedal depressed fully), measure output voltage of the accelerator sensor between terminals 11 (+) and 15 (–) of the automatic transmission electronic control unit, and check if the measured value conforms to the standard value.

Output voltage of accelerator sensor with accelerator at full throttle	Connector terminal	
	11	15
$4^{+0.2}_{0}$ V	⊕	⊖

- With the key turned ON and while depressing the accelerator pedal slowly and smoothly from idling to full throttle, measure output voltage of the accelerator sensor between terminals 11 (+) and 15 (–) of the automatic transmission electronic control unit, and check to see if the measured value conforms to the standard value.

Output voltage of accelerator sensor at pedal depression	Connector terminal	
	11	15
To change continuously in accordance with the movement of the accelerator pedal	⊕	⊖

25. Vehicle speed sensor 2 faulty

- Inspection of speedometer cable
  - NG → Speedometer cable installation faulty, wiring breakage → Repair
  - OK ↓
- Inspection of vehicle speed sensor 2 body
  - NG → Vehicle speed sensor 2 body faulty → Replace
  - OK ↓
- Continuity inspection of harness between vehicle speed sensor 2 and automatic transmission electronic control unit
  - NG → Wiring breakage, short circuit of harness, connector incorrectly connected → Repair or replace
  - OK ↓
- Continuity inspection between vehicle speed sensor 2 and body ground
  - NG → Ground faulty → Repair
  - OK ↓
- Automatic transmission electronic control unit faulty → Replace

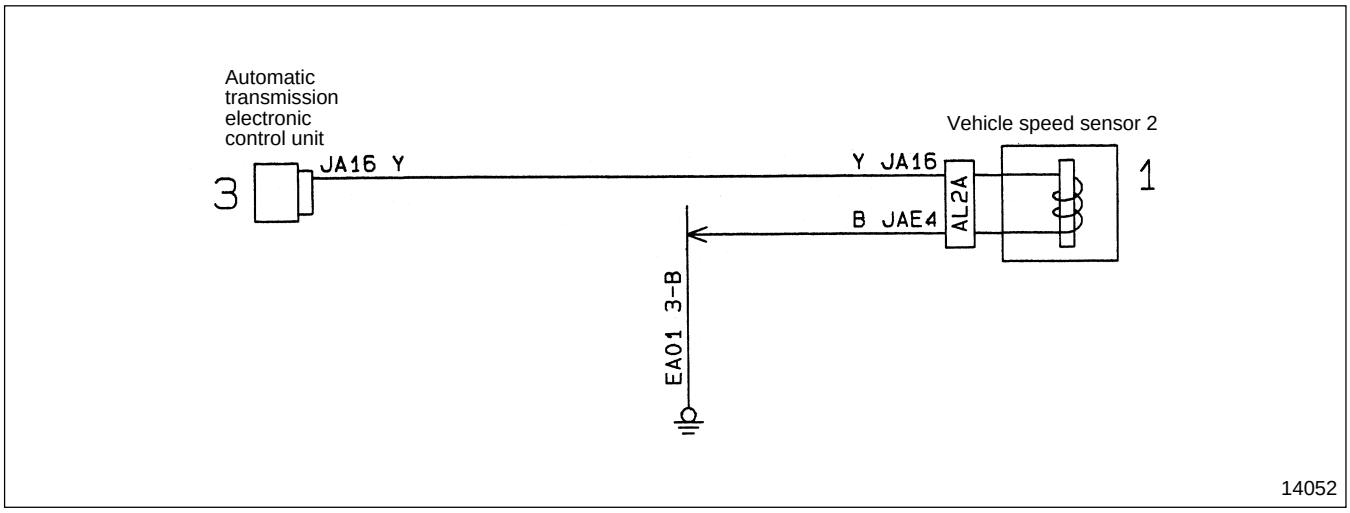

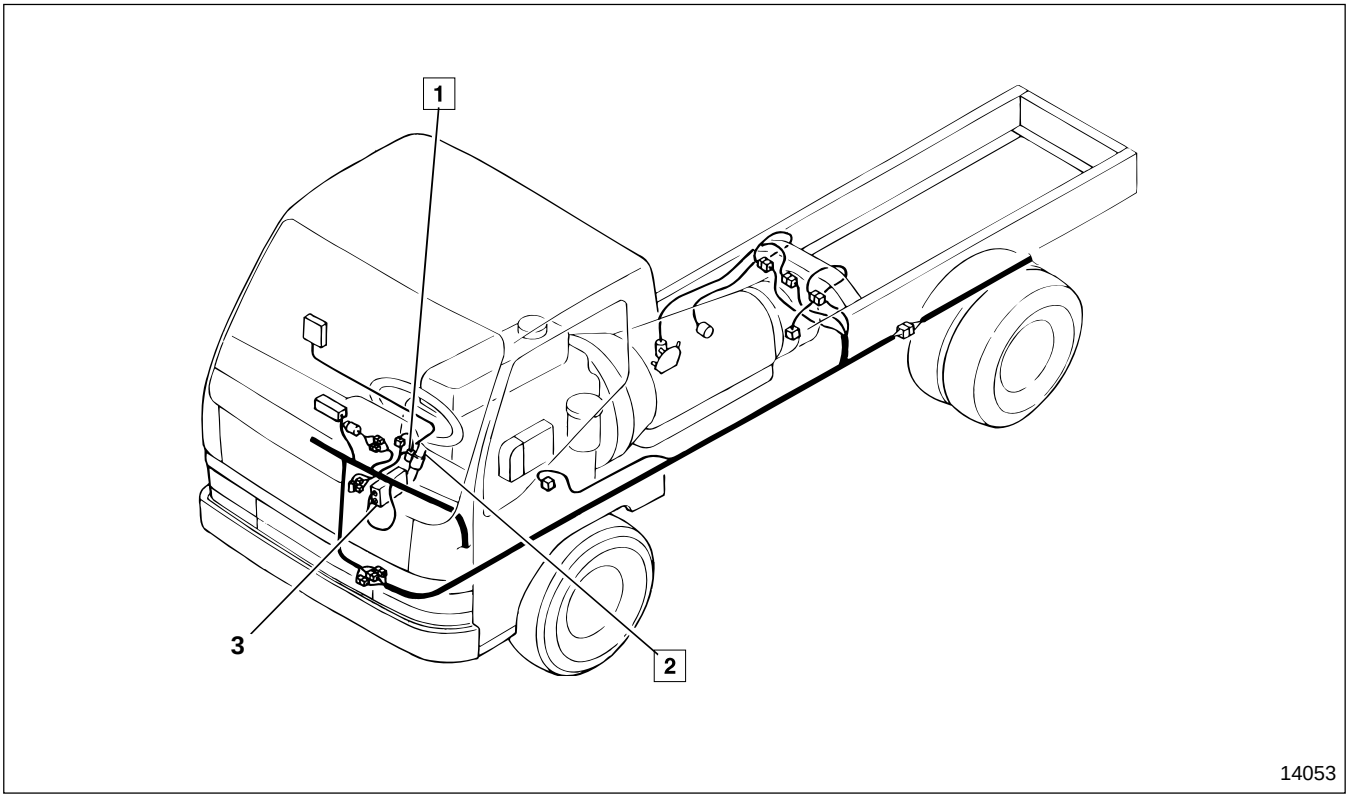

1 Vehicle speed sensor 2
2 Speedometer cable
3 Automatic transmission electronic control unit

◆ Service procedure

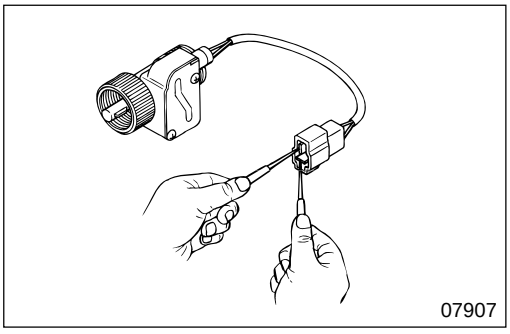

1 **Inspection of vehicle speed sensor 2 body**

Inspect continuity between terminals while manually rotating the revolving shaft of vehicle speed sensor 2 **1**. When continuity is found and lost alternately four times in one rotation of the revolving shaft, the vehicle speed sensor 2 is normal. If any fault is found, replace the vehicle speed sensor 2.

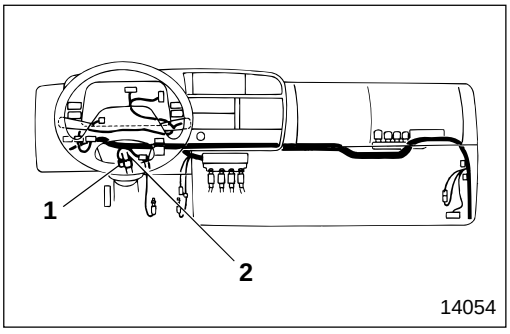

2 **Inspection of speedometer cable**

Inspect speedometer cable **2** for any fracture of the cable and check the way it rotates, also inspect the mounting area of vehicle speed sensor 2 **3**. If any fault is found, repair or replace the speedometer cable.

31. Shift solenoid A faulty

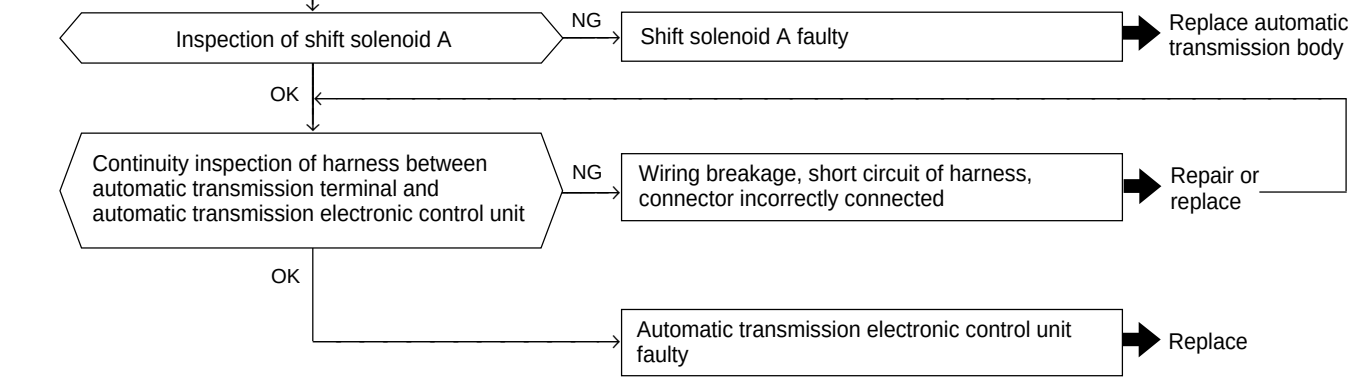

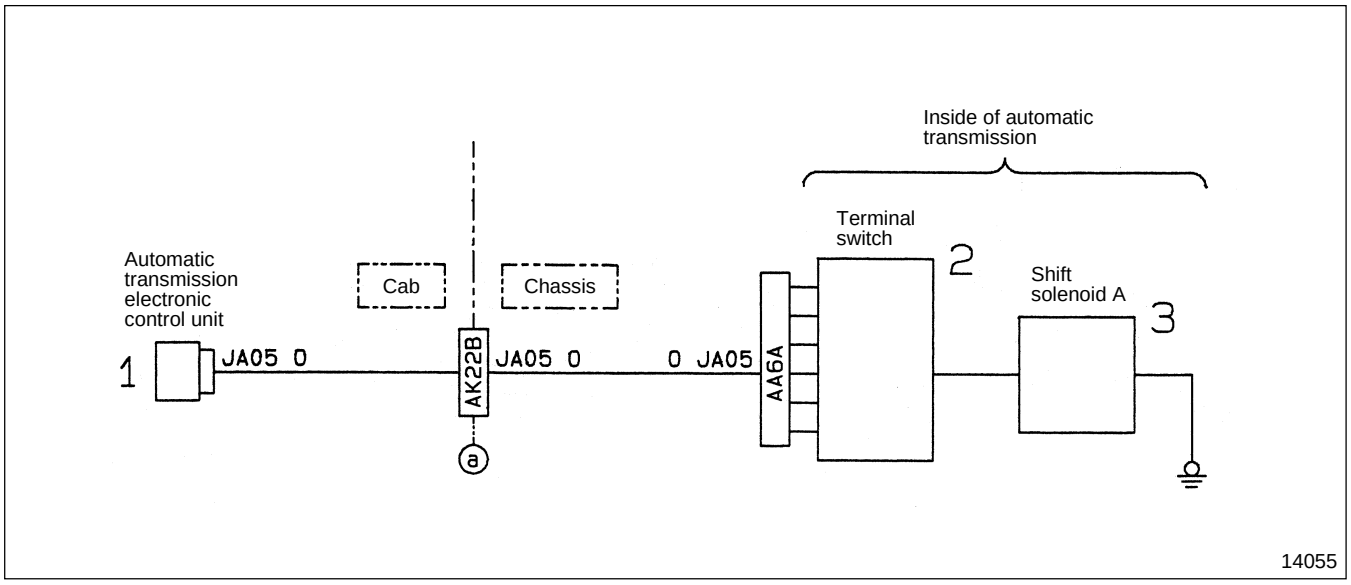

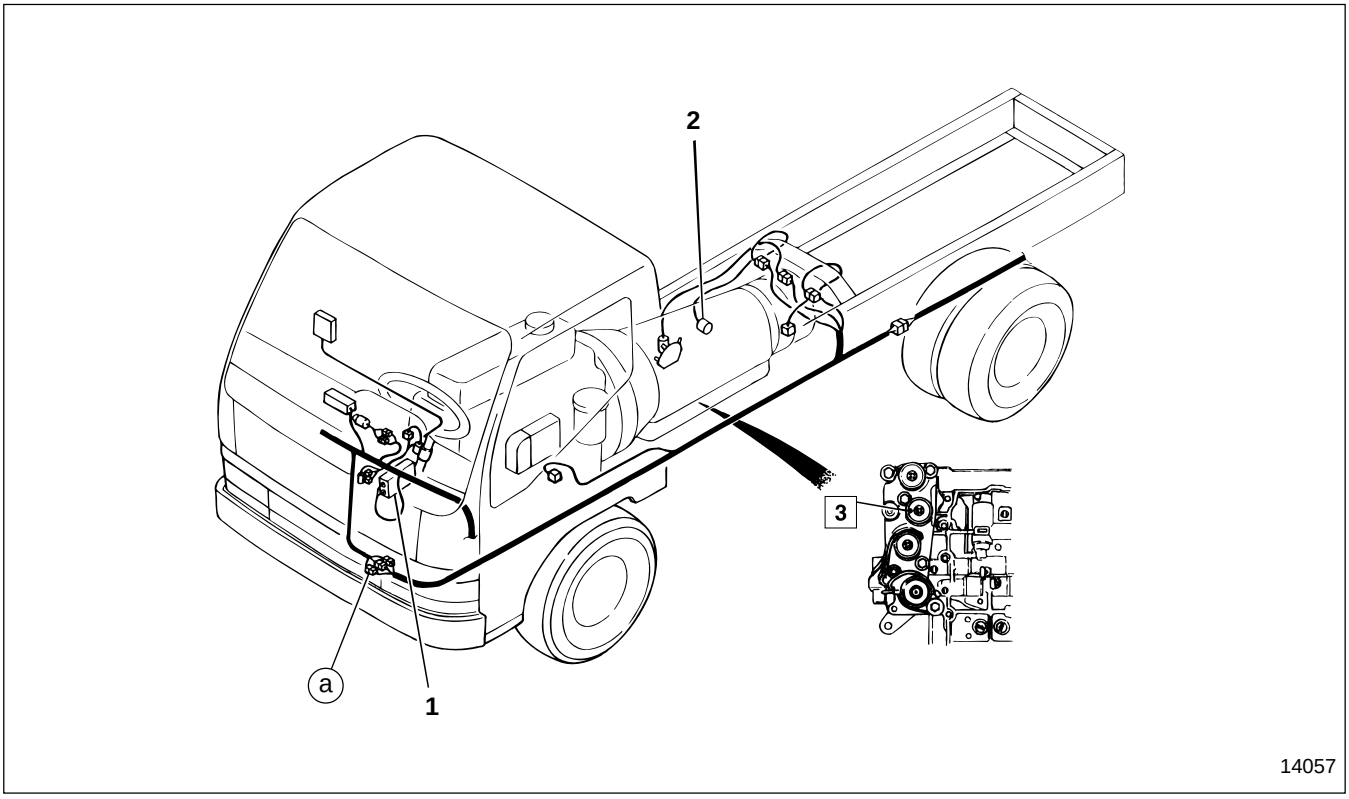

1 Automatic transmission electronic control unit
2 Terminal switch
3 Shift solenoid A

Service standards

Location	Maintenance item	Standard value	Limit	Remedy
3	Resistance of shift solenoid A (At fluid temperature 20°C {68°F}) Measure the resistance between terminal 3 of the connector of the terminal switch side and the automatic transmission case 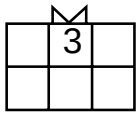 14056	25.0 Ω	—	—

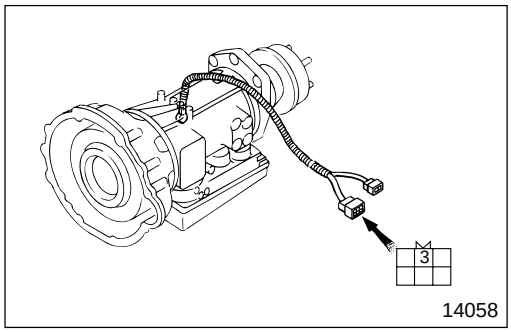

◆ Service procedure

3 **Inspection of shift solenoid A**

Measure the resistance between terminal 3 of the connector of automatic transmission terminal switch **2** side and the automatic transmission case (near the automatic transmission terminal).

Standard value	Connector terminal		Fluid temperature
	3	Automatic transmission case	
25.0 Ω	○	○	20°C {68°F}

If the measured value deviates from the standard value, replace shift solenoid A **3**.

32. Shift solenoid B faulty

Inspection of shift solenoid B
NG → Shift solenoid B faulty → Replace automatic transmission body
OK

Continuity inspection of harness between automatic transmission terminal and automatic transmission electronic control unit
NG → Wiring breakage, short circuit of harness, connector incorrectly connected → Repair or replace
OK

Automatic transmission electronic control unit faulty → Replace

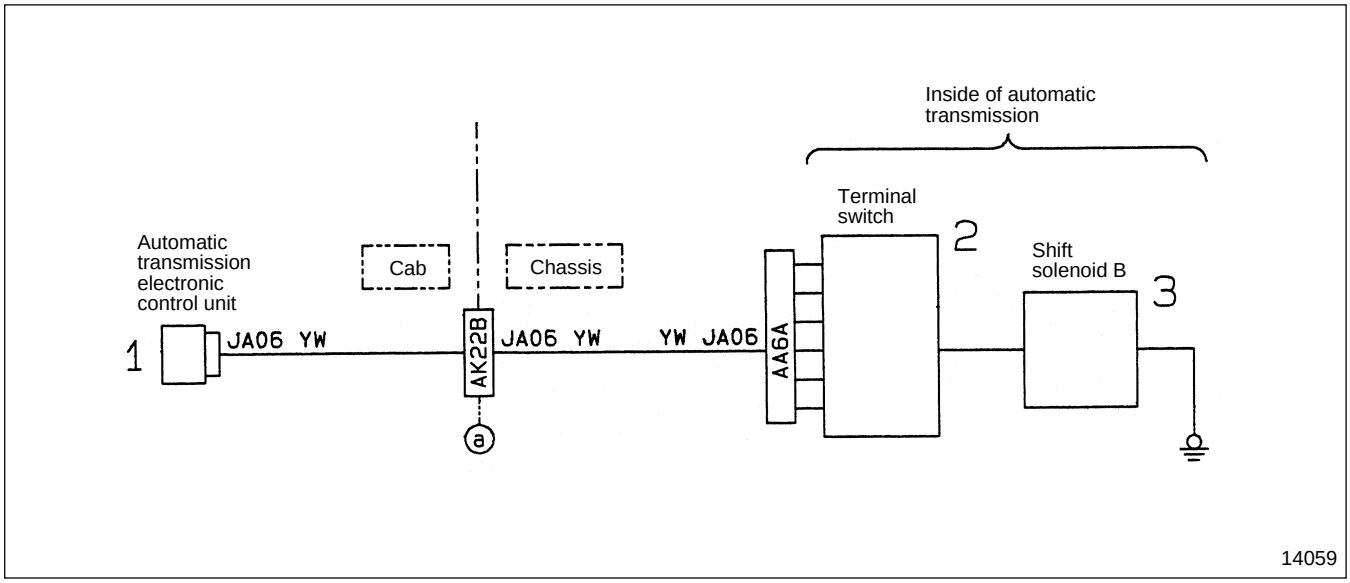

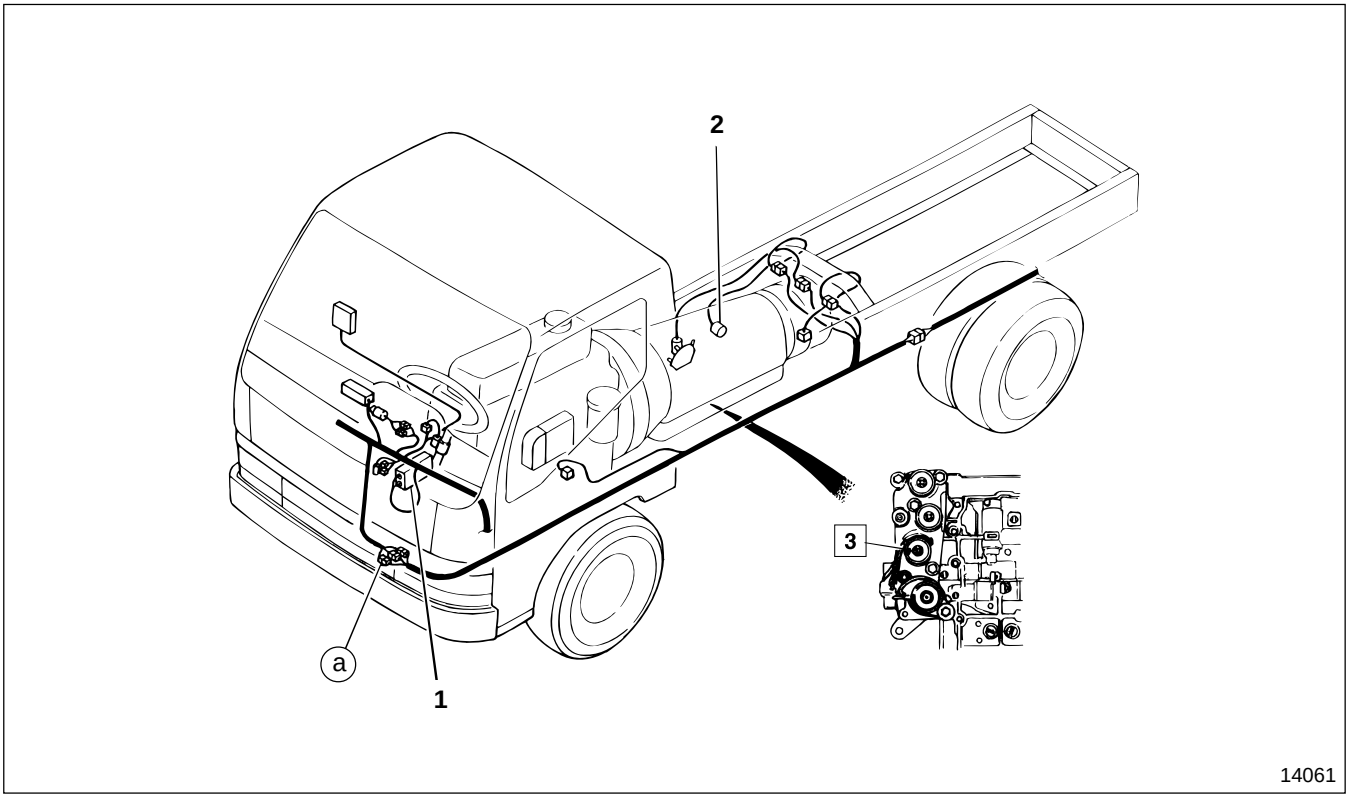

1 Automatic transmission electronic control unit
2 Terminal switch
3 Shift solenoid B

Service standards

Location	Maintenance item	Standard value	Limit	Remedy
3	Resistance of shift solenoid B (At fluid temperature 20°C {68°F}) Measure resistance between terminal 2 of the connector of the terminal switch side and the automatic transmission case 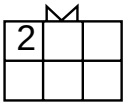 14056	25.0 Ω	—	—

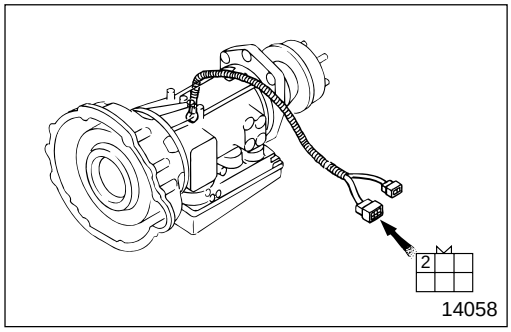

◆ Service procedure

3 **Inspection of shift solenoid B**

Measure the resistance between terminal 2 of the connector of automatic transmission terminal switch **2** side and the automatic transmission case (near the automatic transmission terminal).

Standard value	Connector terminal		Fluid temperature
	2	Automatic transmission case	
25.0 Ω	○	○	20°C {68°F}

If the measured value deviates from the standard value, replace shift solenoid B **3**.

34. Line pressure solenoid faulty

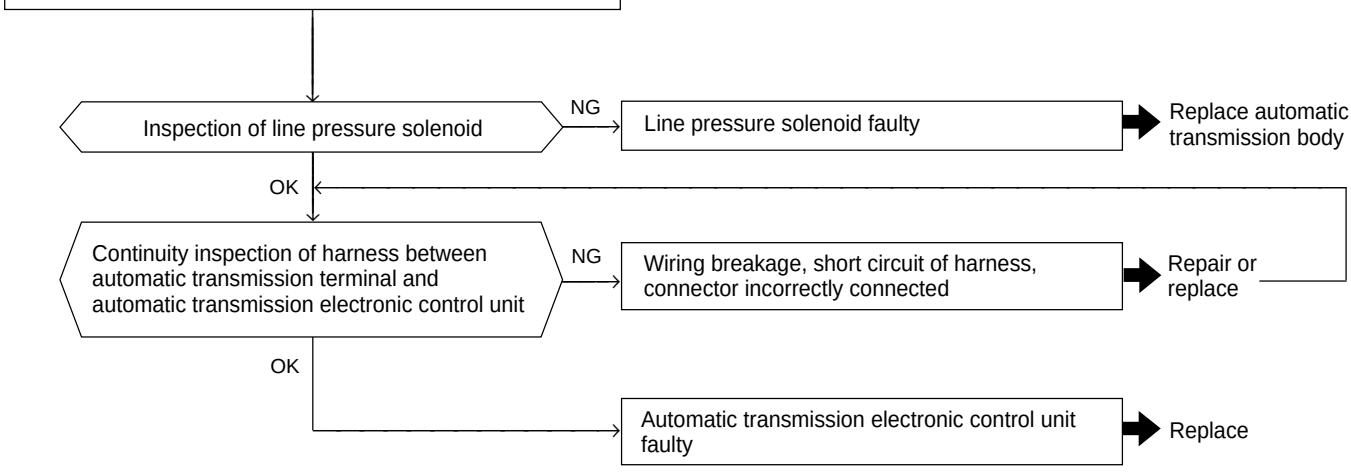

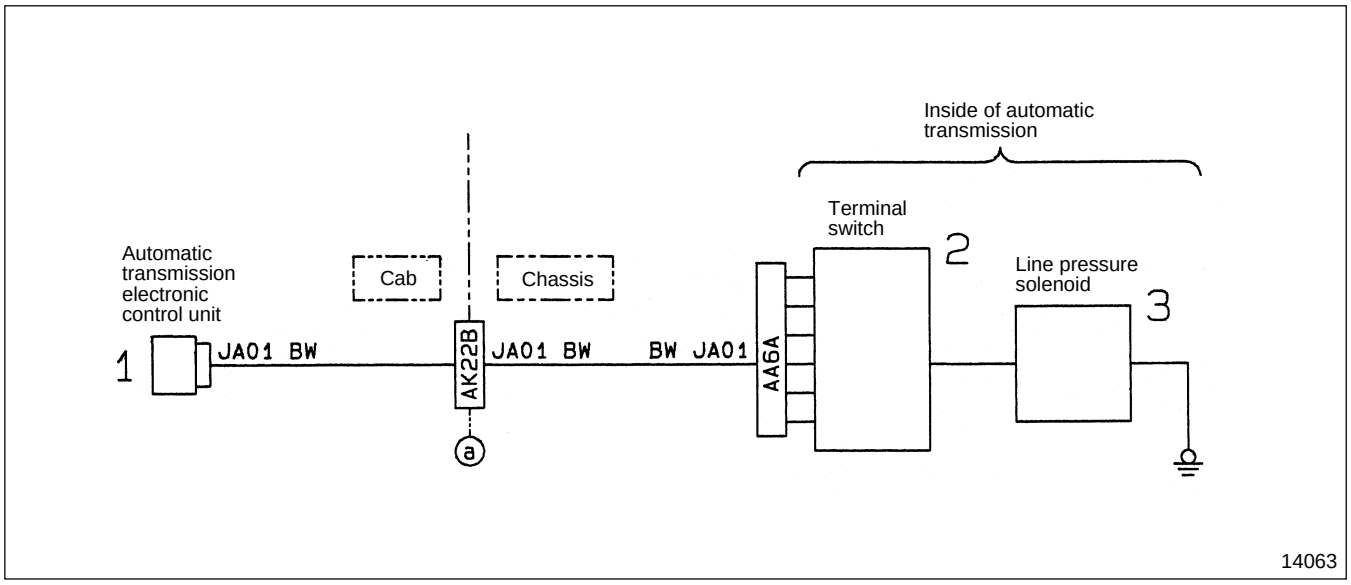

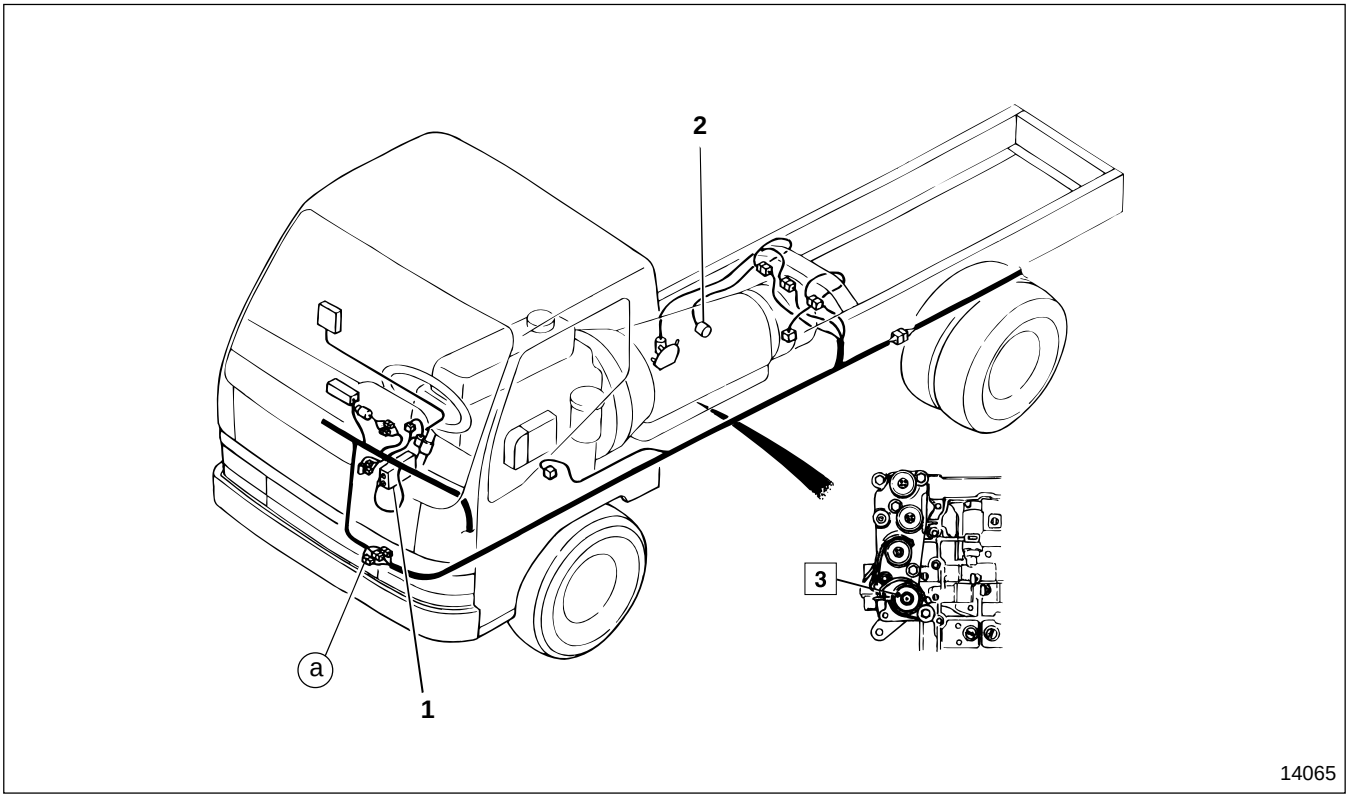

1 Automatic transmission electronic control unit
2 Terminal switch
3 Line pressure solenoid

Service standards

Location	Maintenance item	Standard value	Limit	Remedy
3	Resistance of line pressure solenoid (At fluid temperature 20°C {68°F}) Measure resistance between terminal 6 of the connector of the terminal switch side and the automatic transmission case 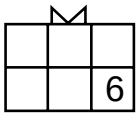 14056	3.2 Ω	—	—

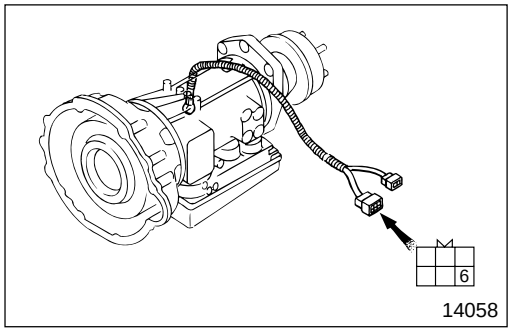

◆ Service procedure

3 **Inspection of line pressure solenoid**

Measure the resistance between terminal 6 of the connector of automatic transmission terminal switch **2** side and the automatic transmission case (near automatic transmission terminal).

Standard value	Connector terminal		Fluid temperature
	6	Automatic transmission case	
3.2 Ω	○	○	20°C {68°F}

If the measured value deviates from the standard value, replace line pressure solenoid **3**.

35. Lock-up solenoid faulty

Inspection of lock-up solenoid
NG → Lock-up solenoid faulty → Replace automatic transmission body

OK

Continuity inspection of harness between automatic transmission terminal and automatic transmission electronic control unit
NG → Wiring breakage, short circuit of harness, connector incorrectly connected → Repair or replace

OK → Automatic transmission electronic control unit faulty → Replace

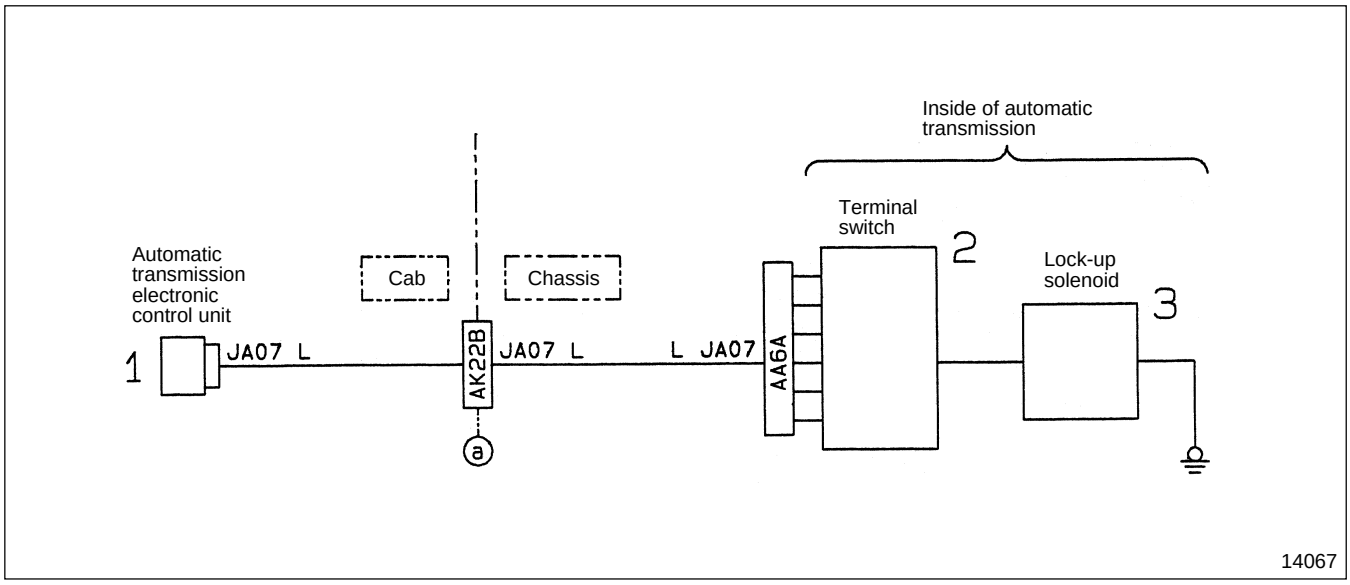

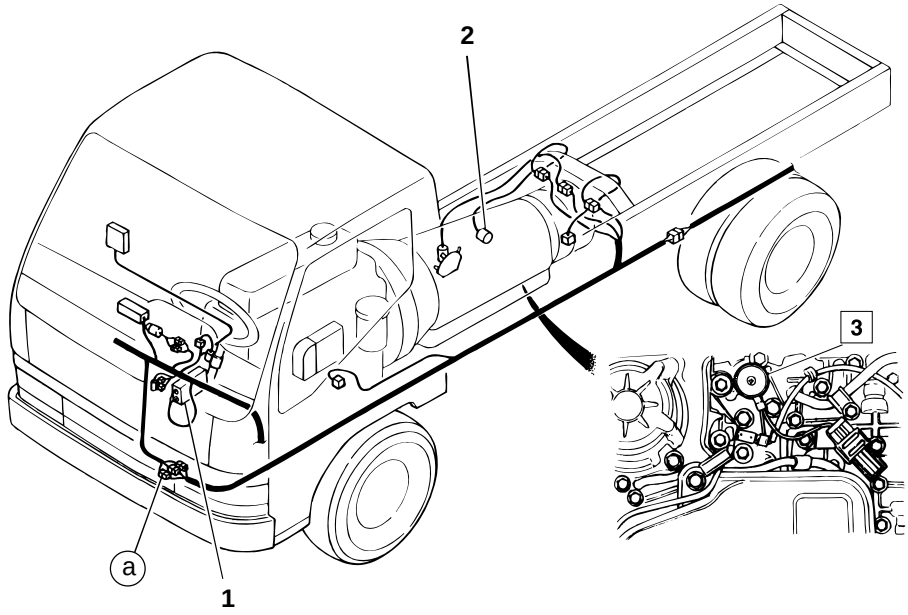

14069

1 Automatic transmission electronic control unit
2 Terminal switch
3 Lock-up solenoid

Service standards

Location	Maintenance item	Standard value	Limit	Remedy
3	Resistance of lock-up solenoid (At fluid temperature 20°C {68°F}) Measure resistance between terminal 7 of the connector of the terminal switch side and the automatic transmission case 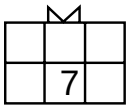 14056	13.4 Ω	—	—

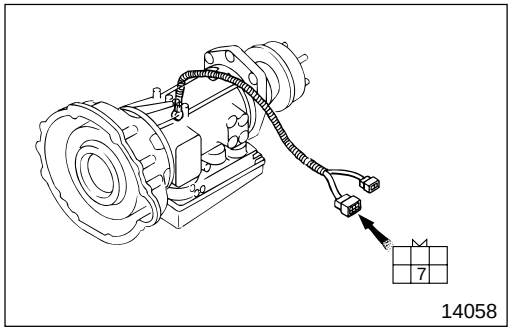

14058

◆ Service procedure

3 **Inspection of lock-up solenoid**

Measure the resistance between terminal 7 of the connector of automatic transmission terminal switch **2** side and the automatic transmission case (near automatic transmission terminal).

Standard value	Connector terminal		Fluid temperature
	7	Automatic transmission case	
13.4 Ω	○	○	20°C {68°F}

If the measured value deviates from the standard value, replace lock-up solenoid **3**.

41. Overrunning clutch solenoid faulty

- Inspection of overrunning clutch solenoid
  - NG → Overrunning clutch solenoid faulty → Replace automatic transmission body
  - OK ↓
- Continuity inspection of harness between automatic transmission terminal and automatic transmission electronic control unit
  - NG → Wiring breakage, short circuit of harness, connector incorrectly connected → Repair or replace
  - OK ↓
- Automatic transmission electronic control unit faulty → Replace

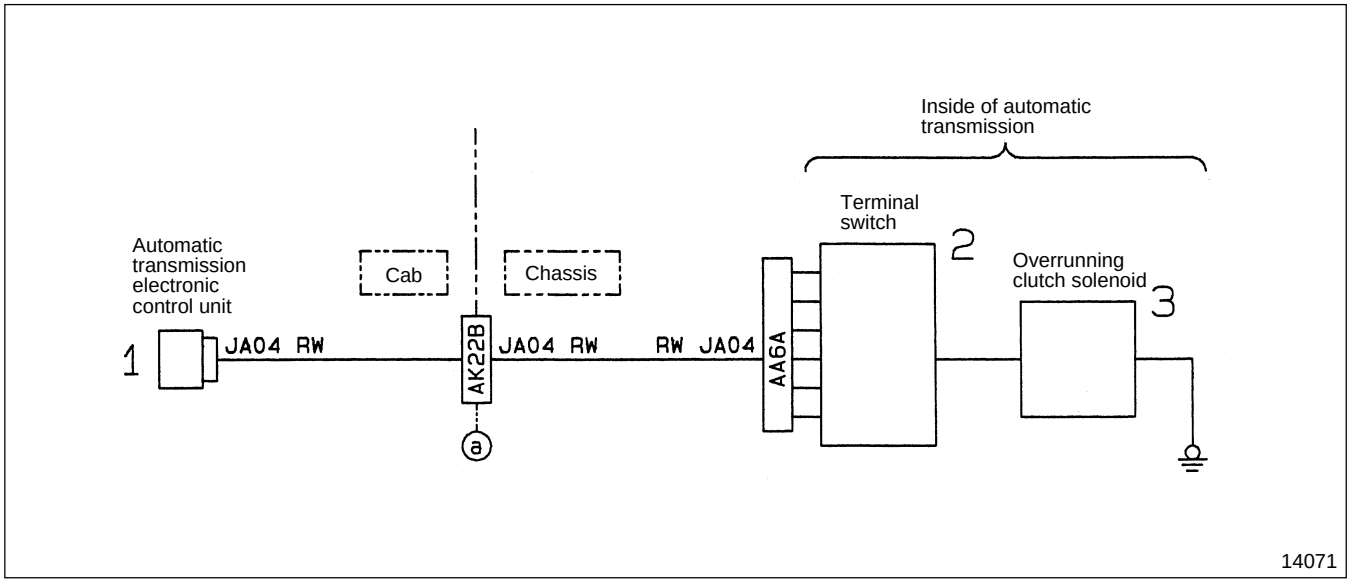

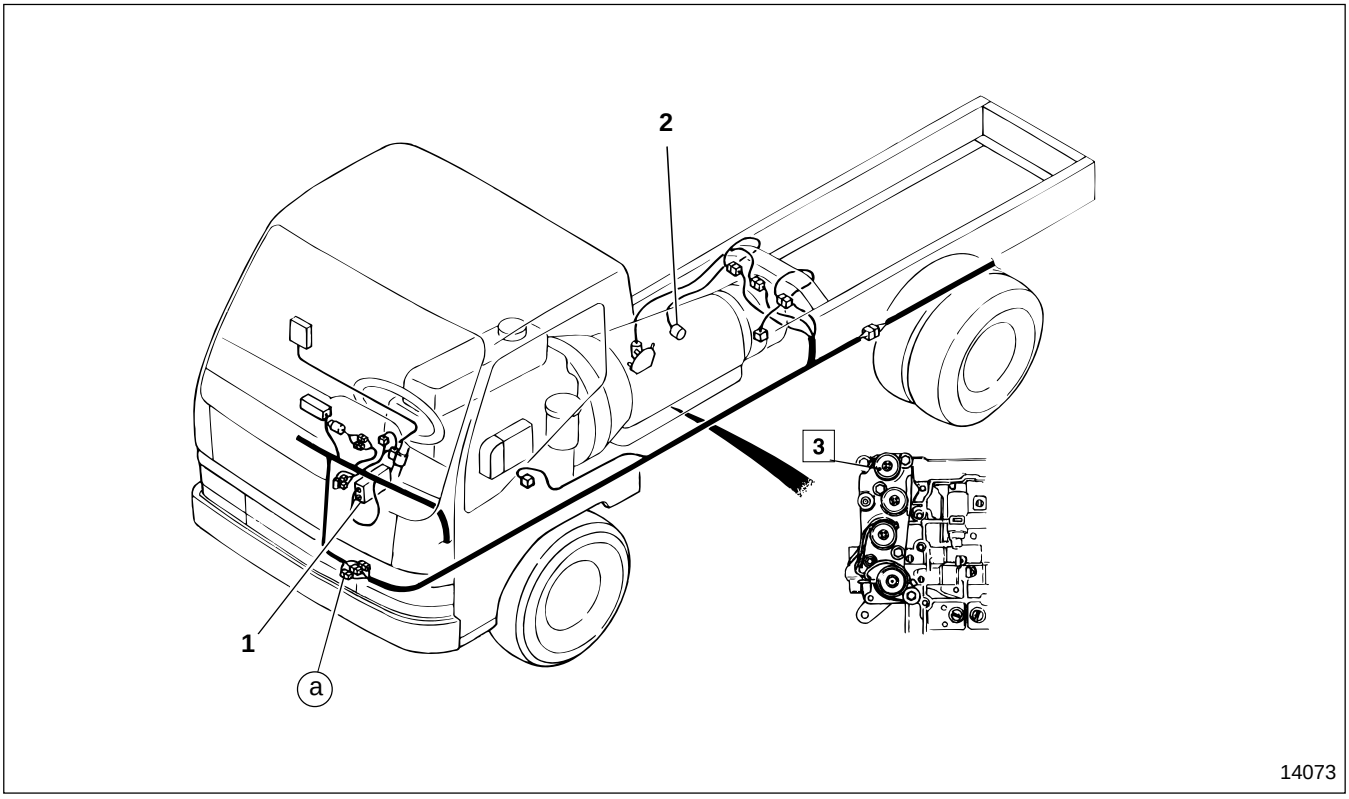

1 Automatic transmission electronic control unit
2 Terminal switch
3 Overrunning clutch solenoid

Service standards

Location	Maintenance item	Standard value	Limit	Remedy
3	Resistance of overrunning clutch solenoid (At fluid temperature 20°C {68°F}) Measure resistance between terminal 4 of the connector of the terminal switch side and the automatic transmission case 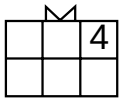 14056	25.0 Ω	—	—

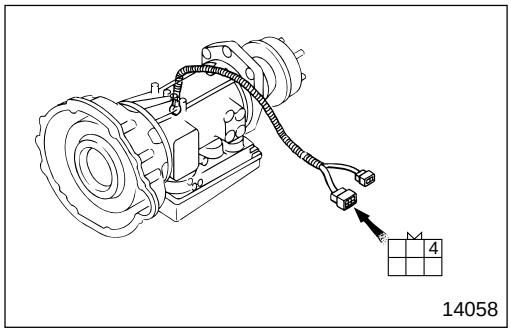

◆ Service procedure

3 **Inspection of overrunning clutch solenoid**

Measure the resistance between terminal 4 of the connector of automatic transmission terminal switch **2** side and the automatic transmission case (near automatic transmission terminal).

Standard value	Connector terminal		Fluid temperature
	4	Automatic transmission case	
25.0 Ω	○	○	20°C {68°F}

If the measured value deviates from the standard value, replace overrunning clutch solenoid **3**.

43. Inhibiter signal faulty

- Inspection and adjustment of inhibiter switch
  - NG → Inhibiter switch faulty → Replace
  - OK ↓
- Power supply inspection of inhibiter switch power supply terminal (terminal 3)
  - NG → Inspection of fuse
    - NG → Fuse blown → Replace
    - OK ↓
  - OK ↓
- Continuity inspection of harness between inhibiter switch and automatic transmission electronic control unit
  - NG → Wiring breakage, short circuit of harness, connector incorrectly connected → Repair or replace
  - OK ↓
- Automatic transmission electronic control unit faulty → Replace
- Continuity inspection of harness between inhibiter switch and fuse
  - NG → Wiring breakage, short circuit of harness, connector incorrectly connected → Repair or replace
  - OK ↓
- Power supply system faulty → Repair

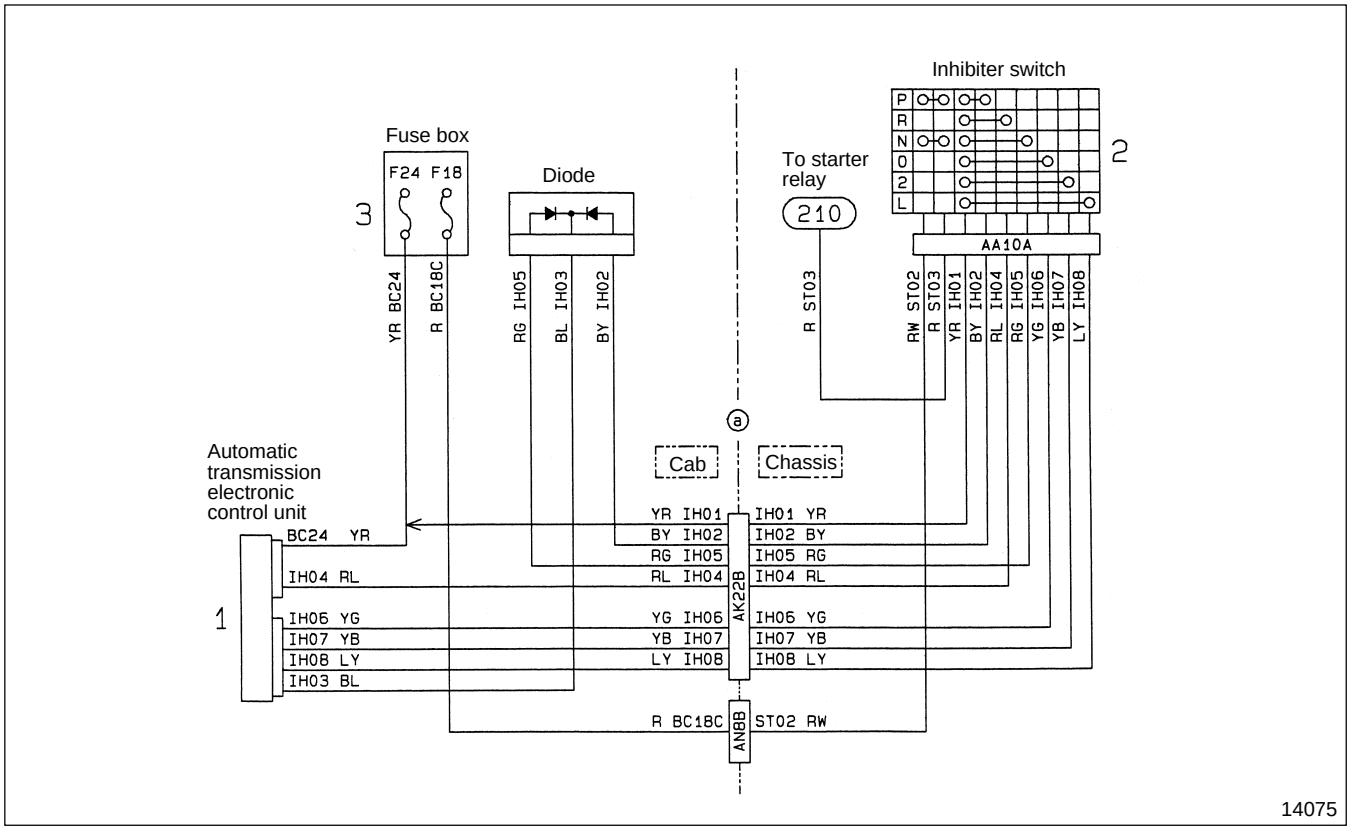

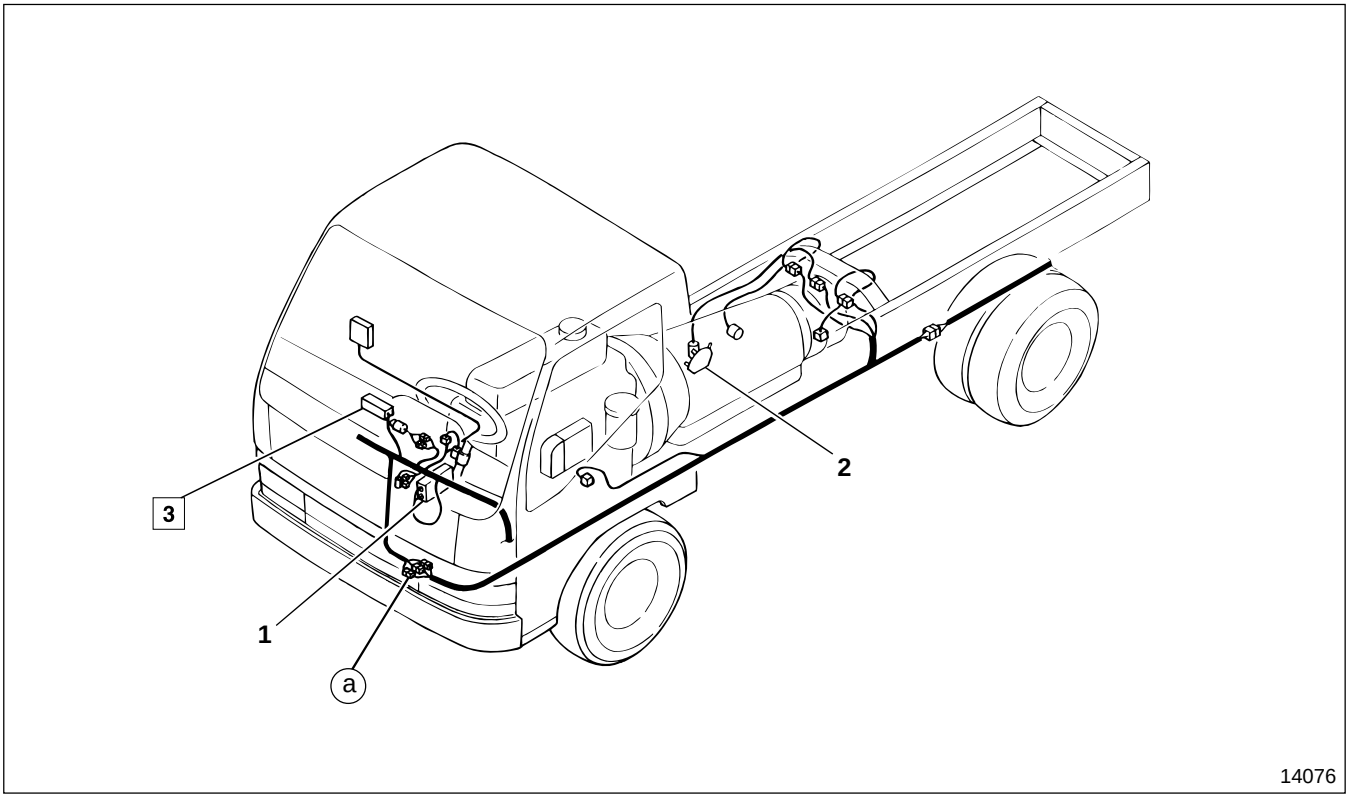

1 Automatic transmission electronic control unit
2 Inhibiter switch P23-136
3 Fuse box

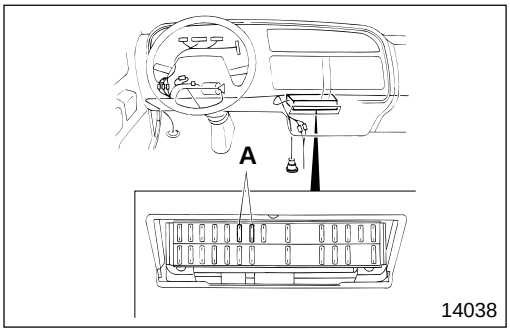

◆ Service procedure

3 **Inspection of fuse**

A : Fuse for automatic transmission

● Shift Control Faulty

Note 1 : • Make sure you carry out the inspection in strict accordance with the self-diagnosis procedures on vehicles that are brought in for service on account of troubles. 🕮 P23-50
• Inspect for accelerator sensor faults.
• Keep written records on note pads of faulty points.

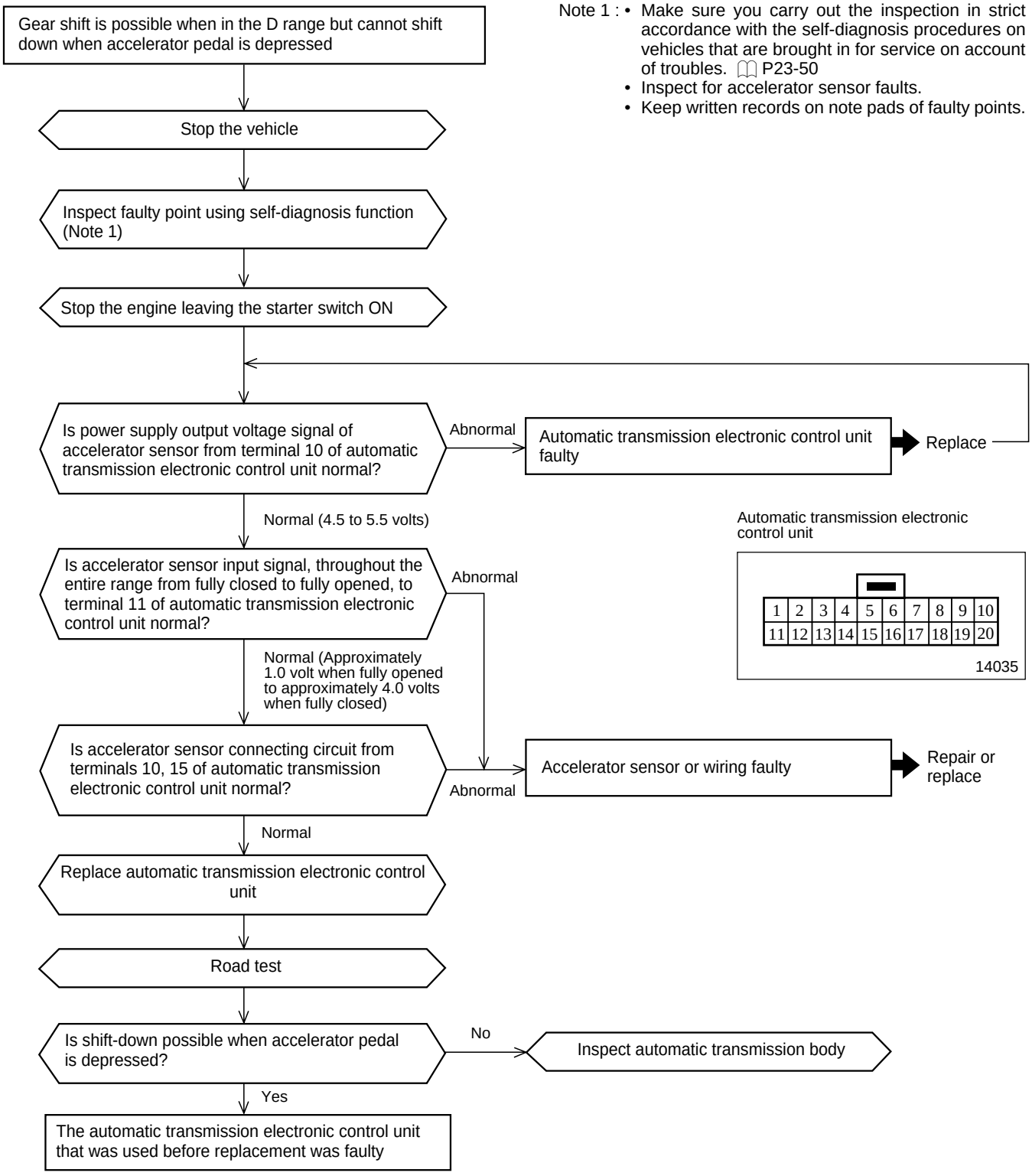

Does not shift up when accelerator pedal is depressed slowly while travelling in the D range. (Does not shift up from D_1 to D_2, from D_2 to D_3, or from D_3 to D_4)

Stop the vehicle

Inspect faulty point using self-diagnosis function (Note 1)

Warm up the engine and raise the fluid temperature to 40°C {104°F} or more (Note 2)

Stop the engine leaving the key ON.
Put the range selector lever into the D range.
Set the overdrive switch to ON

Is input signal to terminal 6 of automatic transmission electronic control unit with overdrive switch ON normal?

Abnormal → Overdrive switch or wiring faulty → Repair or replace

Normal (4.5 to 5.5 volts with overdrive switch ON)

Is input signal to terminals 20, 19, 1, 2 of automatic transmission electronic control unit when inhibiter switch in the respective range normal?

Abnormal → Inhibiter switch or wiring faulty → Repair or replace

Normal (In the respective range: 12 to 13 volts)

Is oil temperature sensor input signal to terminal 12 of automatic transmission electronic control unit normal?

Abnormal → Oil temperature sensor or wiring faulty → Repair or replace

Normal (1.1 volts or less)

Is vehicle speed sensor 2 (built into meter) input signal to terminal 24 of automatic transmission electronic control unit normal? (Note 3)

Abnormal → Vehicle speed sensor 2 (built into meter) or wiring faulty → Repair or replace

Normal (Intermittent at 1 volt or less and at 4 volts or more)

Turn starter switch OFF and raise the vehicle

(A)

Note 1 : • Make sure you carry out the inspection in strict accordance with the self-diagnosis procedures on vehicles that are brought in for service on account of troubles. P23-50
• Inspect for faults in vehicle speed sensor and the various solenoids (except lock-up solenoid).
• Keep written records on note pads of faulty points.

Note 2 : When the fluid temperature is 40°C {104°F} or more, output voltage of terminal 12 of automatic transmission electronic control unit becomes 1.1 volts or less.

Note 3 : If the connector of the vehicle speed sensor is almost disconnected, self-diagnosis might misjudge the situation as normal because the connector will be disconnected while the vehicle is travelling and connected while it is standing still. Therefore, make sure that the connector is securely connected.

Automatic transmission electronic control unit

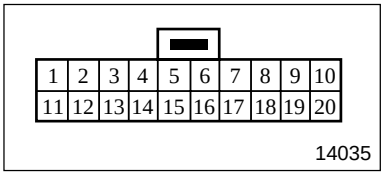

Note 4 : Take precautions to prevent the vehicle from moving of its own accord.

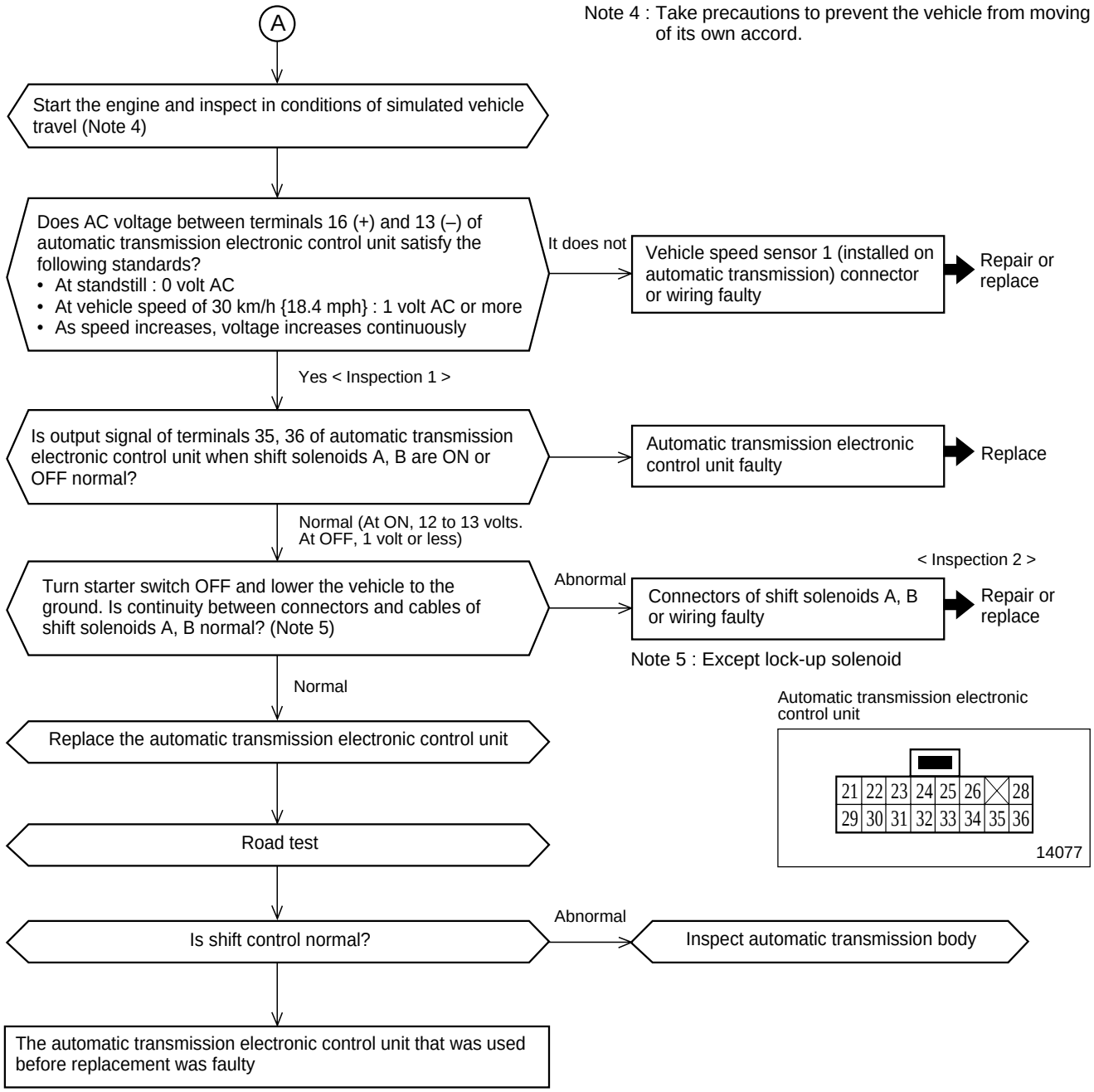

< Inspection 1 >

Inspection of output voltage to various solenoids

- Inspect and see if the ON and OFF operation of the various solenoids are normal while increasing vehicle speed.

Automatic transmission electronic control unit terminal / Solenoid \ Gear position		D1	D2	D3	D4
35	Shift solenoid A	ON	OFF	OFF	ON
36	Shift solenoid B	ON	ON	OFF	OFF

< Inspection 2 >

Inspection of various solenoids, connectors and wiring

- Remove the connector of the automatic transmission electronic control unit. Then inspect and see if the resistance between the terminals of the solenoids (terminals to be connected to 35 and 36) and the vehicle ground conforms to the standard value.

Resistance between terminals	Connector terminals		
	35	36	Vehicle ground
20 to 40 Ω	○——		——○
		○——	——○

● Shift pattern selection control faulty

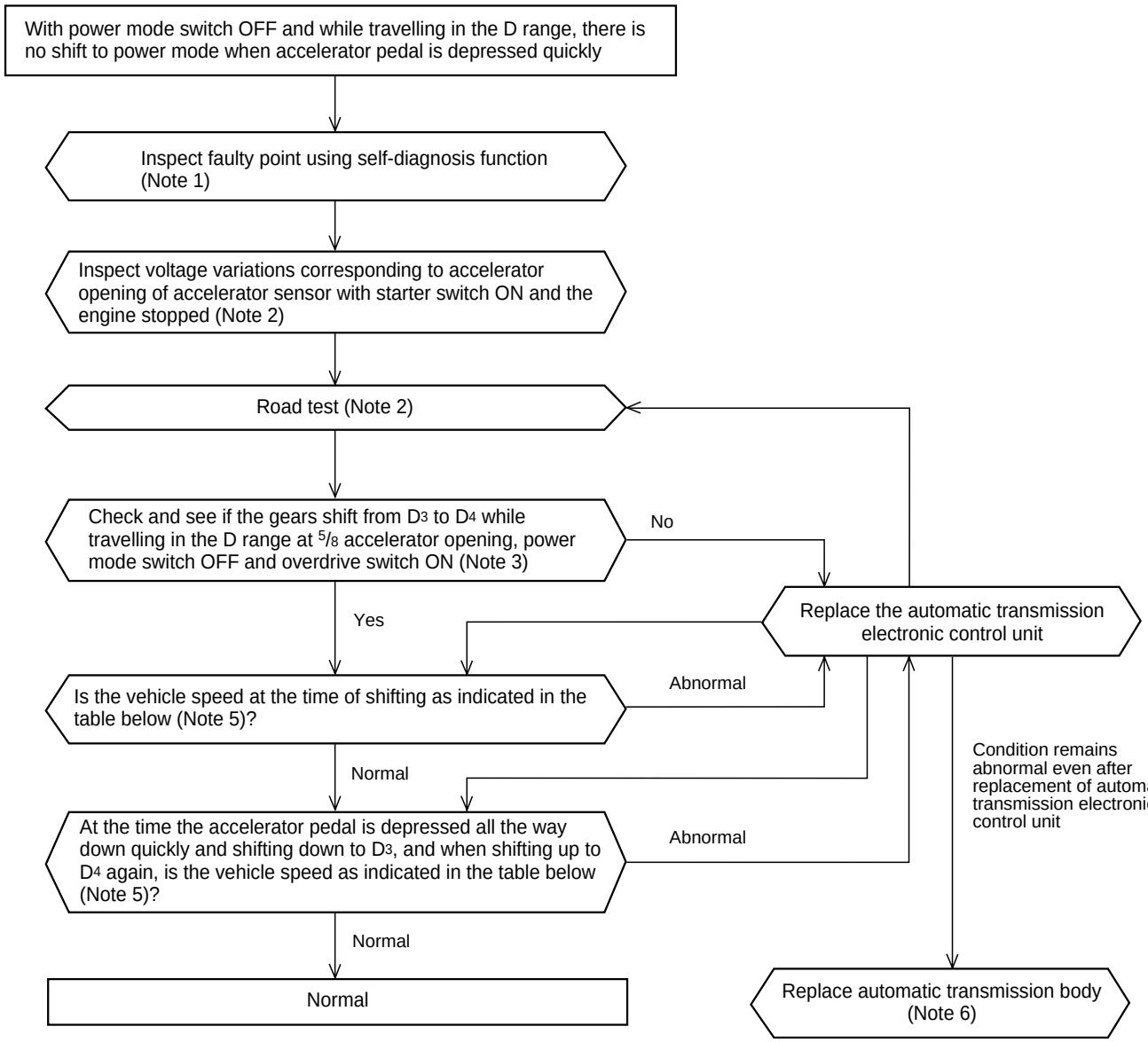

Note 1 : • Make sure you carry out the inspection in strict accordance with the self-diagnosis procedures on vehicles that are brought in for service on account of troubles. 🕮 P23-50
• Inspect abnormality of accelerator sensor, vehicle speed sensors and overdrive switch.
• Keep written records on note pads of faulty points.

Note 2 : Mount check box, and check voltage at time of 5/8 accelerator opening. When road testing, depress the accelerator pedal and use a tester to see if the voltage conforms to the voltage at time of 5/8 accelerator opening. 🕮 P23-108

Voltage at 5/8 accelerator opening
Approximately 2.8 to 2.9 V

Note 3 : Shift point can be detected using the light-emitting diode, installed in the check box, which reflects the operation of shift solenoids A, B.

D_3 position	Neither shift solenoids A, B are lit
D_4 position	Shift solenoid A is lit. B is not lit

Note 4 :

FE639	Approximately 32 Km/h {19.88 mph}
FE649	Approximately 34 Km/h {21.13 mph}

The vehicle speed at the time of shifting must be within the specified range ± approximately 5 km/h {3.1 mph}.

Note 5 :

FE639	Approximately 80 Km/h {49.71 mph}
FE649	Approximately 79 Km/h {49.09 mph}

The vehicle speed at the time of shifting must be within the specified range ± approximately 5 km/h {3.1 mph}.

Note 6 : When any fault is found by reinspection after replacement of automatic transmission electronic control unit.

● Lock-up control faulty

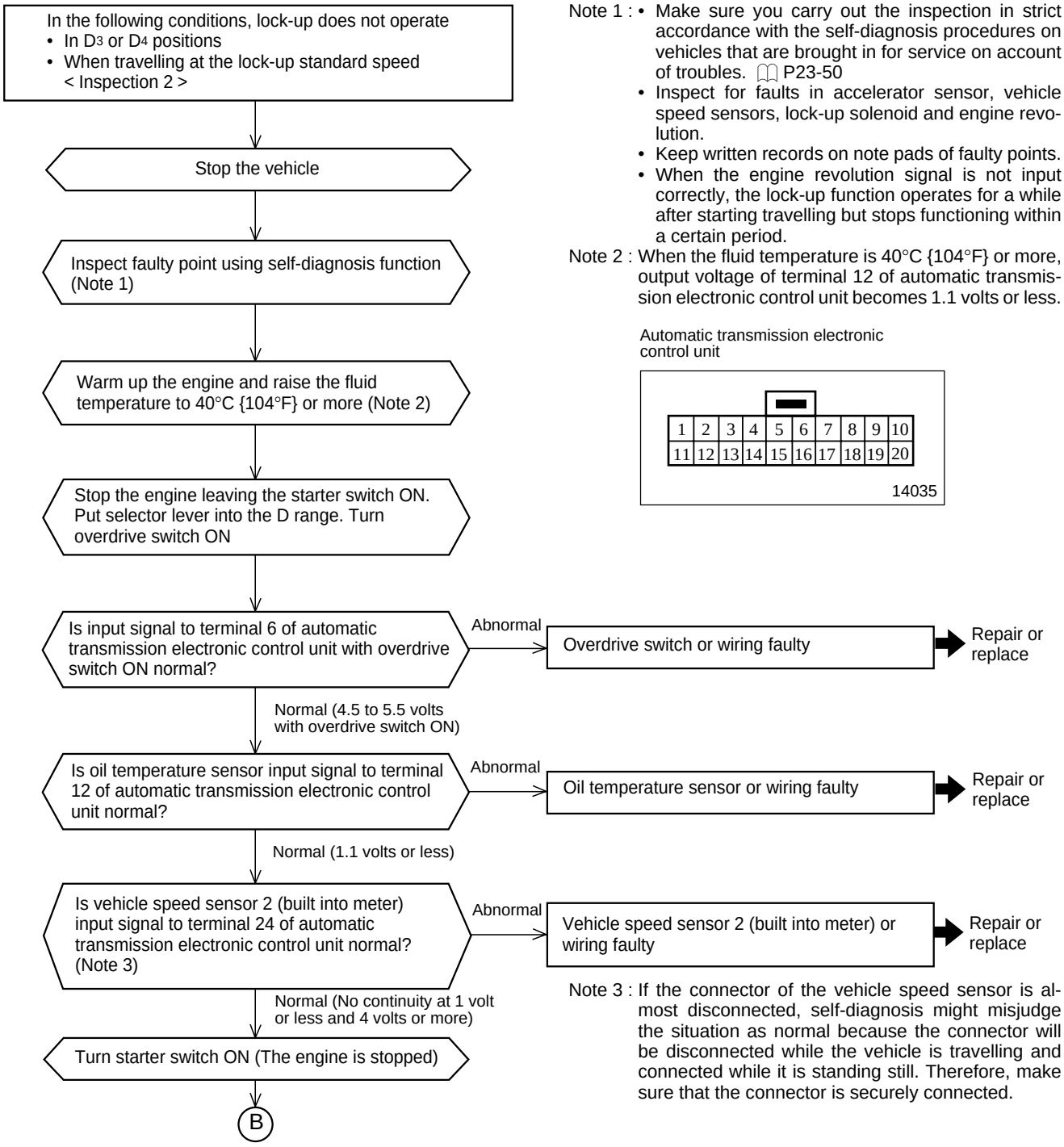

Note 1 : • Make sure you carry out the inspection in strict accordance with the self-diagnosis procedures on vehicles that are brought in for service on account of troubles. 📖 P23-50
• Inspect for faults in accelerator sensor, vehicle speed sensors, lock-up solenoid and engine revolution.
• Keep written records on note pads of faulty points.
• When the engine revolution signal is not input correctly, the lock-up function operates for a while after starting travelling but stops functioning within a certain period.

Note 2 : When the fluid temperature is 40°C {104°F} or more, output voltage of terminal 12 of automatic transmission electronic control unit becomes 1.1 volts or less.

Automatic transmission electronic control unit

Note 3 : If the connector of the vehicle speed sensor is almost disconnected, self-diagnosis might misjudge the situation as normal because the connector will be disconnected while the vehicle is travelling and connected while it is standing still. Therefore, make sure that the connector is securely connected.

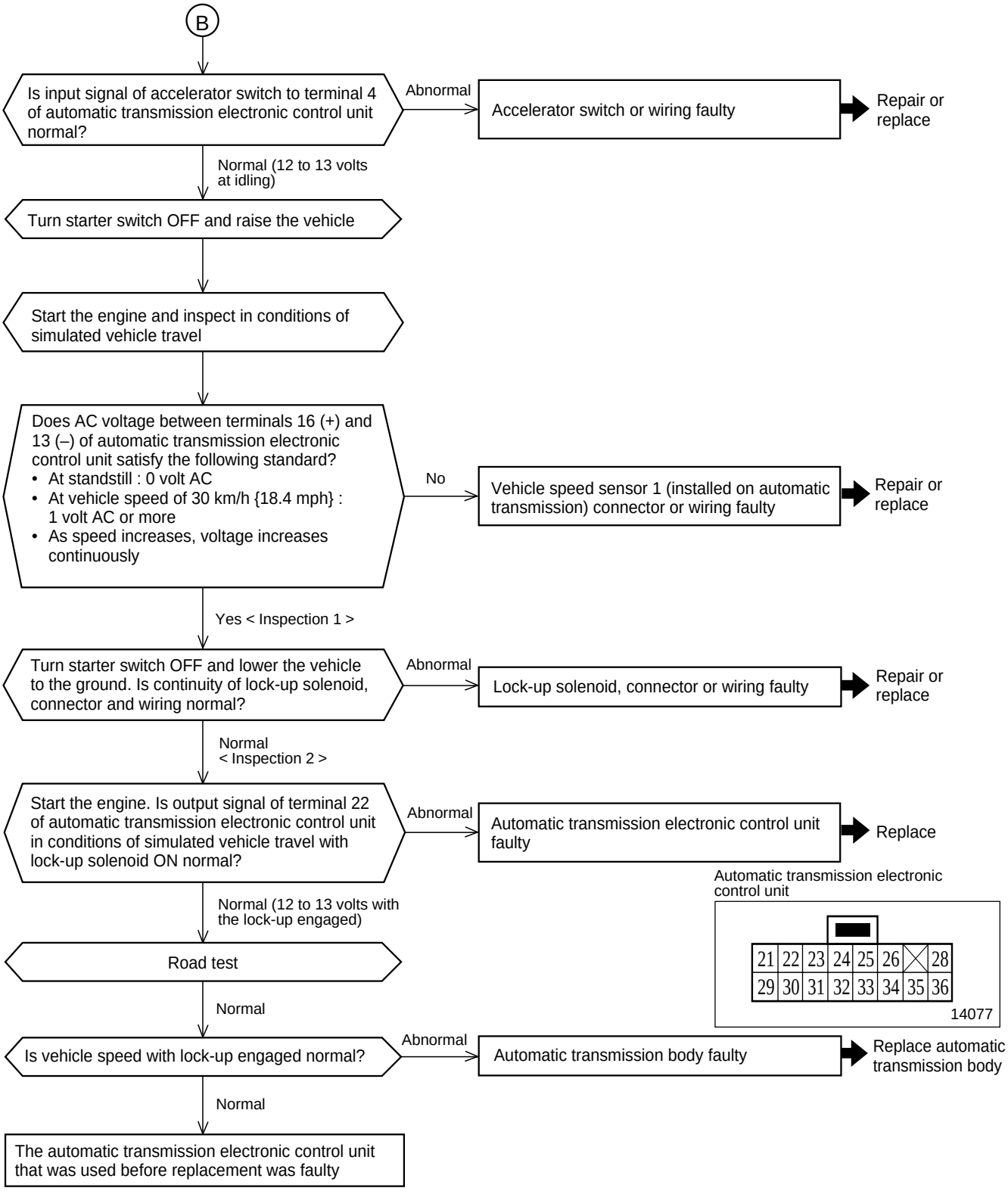
B
Is input signal of accelerator switch to terminal 4 of automatic transmission electronic control unit normal?
Abnormal
Accelerator switch or wiring faulty
Repair or replace
Normal (12 to 13 volts at idling)
Turn starter switch OFF and raise the vehicle
Start the engine and inspect in conditions of simulated vehicle travel
Does AC voltage between terminals 16 (+) and 13 (–) of automatic transmission electronic control unit satisfy the following standard?
• At standstill : 0 volt AC
• At vehicle speed of 30 km/h {18.4 mph} : 1 volt AC or more
• As speed increases, voltage increases continuously
No
Vehicle speed sensor 1 (installed on automatic transmission) connector or wiring faulty
Repair or replace
Yes < Inspection 1 >
Turn starter switch OFF and lower the vehicle to the ground. Is continuity of lock-up solenoid, connector and wiring normal?
Abnormal
Lock-up solenoid, connector or wiring faulty
Repair or replace
Normal
< Inspection 2 >
Start the engine. Is output signal of terminal 22 of automatic transmission electronic control unit in conditions of simulated vehicle travel with lock-up solenoid ON normal?
Abnormal
Automatic transmission electronic control unit faulty
Replace
Automatic transmission electronic control unit
21 22 23 24 25 26 28
29 30 31 32 33 34 35 36
14077
Normal (12 to 13 volts with the lock-up engaged)
Road test
Normal
Is vehicle speed with lock-up engaged normal?
Abnormal
Automatic transmission body faulty
Replace automatic transmission body
Normal
The automatic transmission electronic control unit that was used before replacement was faulty

< Inspection 1 >
Inspection of lock-up solenoid, connector and wiring
- Remove the connector of the automatic transmission electronic control unit. Then inspect and see if voltage between terminal 22 and the vehicle ground conforms to the standard value.

Standard value

Resistance between terminals	Connector terminal	
	22	Ground
10 to 20 Ω	○	○

<Inspection 2>
Inspection of vehicle speed with lock-up engaged
- Inspect and see if the vehicle speed at the time when the output signal to the lock-up solenoid is changed over from OFF to ON with 4/8 accelerator opening conforms to the standard value.

Standard value

Shift gear position	Vehicle model	Vehicle speed with lock-up engaged
D3	FE639	51 to 57 Km/h {31.69 to 35.42 mph}
	FE649	53 to 59 Km/h {32.93 to 36.66 mph}
D4	FE639	70 to 76 Km/h {43.50 to 47.23 mph}
	FE649	74 to 80 Km/h {45.98 to 49.71 mph}

● Others

Symptoms / Possible causes	Starter does not turn when in N or P ranges	Starter turns when in other than N or P ranges	Engine idling noise excessive when vehicle at standstill	Vehicle moves even when in P range or parking gear remains engaged even in other than P range	Vehicle moves even when in N range	Vehicle does not move when in R range (moves when in D, 2 and L ranges), slips, acceleration extremely slow	Brakes engage suddenly when R range selected	Excessive shock when changing from N to D range	Vehicle does not move when in D range (moves when in 2, L and R ranges)	Vehicle does not move when in D or 2 ranges (moves when in L and R ranges), slips, acceleration extremely slow
Automatic transmission fluid condition and level			1			1	1			1
Control linkage	2	1		1	1		2		1	
Engine idling revolution								1		
Inhibiter switch	3	2								
Accelerator sensor			3					2		
Vehicle speed sensor			4							
Engine revolution sensor			5							
Starter switch and starter	1									
Overdrive switch										
Line pressure			2			2	3	3		2
Control valve assembly						4	5	7		4
Shift solenoid A										
Shift solenoid B										
Line pressure solenoid						3	4	6		3
Lock-up solenoid										
Overrunning clutch solenoid								4		
N - D accumulator								8		5
1 - 2 accumulator										
2 - 3 accumulator										
3 - 4 (N - R) accumulator					2					
Oil temperature sensor								5		

Numbers in the chart indicate the order of priority in which relevant locations are to be inspected.

INSPECTION BY SYMPTOM

Symptoms / Possible causes	Slippage tends to occur at engine start-up	Excessive creep	No creep at all	Does not change from 1st to 2nd gear	Does not change from 2nd to 3rd gear	Does not change from 3rd to 4th gear	Gear change shift point too high	Engine stops when R, D, 2 or L ranges selected	Slips from 1st to 3rd gear	Excessive shock when changing from 1st to 2nd gear	Excessive shock when changing from 2nd to 3rd gear	Excessive shock when changing from 3rd to 4th gear
Automatic transmission fluid condition and level	1		1						1			
Control linkage	2			2	2	3						
Engine idling revolution		1						1				
Inhibiter switch				1	1	1						
Accelerator sensor	3						1			1	1	1
Vehicle speed sensor				5	5	5	2					
Engine revolution sensor												
Starter switch and starter												
Overdrive switch						2						
Line pressure	4		2				3			2	2	2
Control valve assembly	6		3	4	4		4	3		4	4	4
Shift solenoid A				3		4						
Shift solenoid B					3							
Line pressure solenoid	5											
Lock-up solenoid								2				
Overrunning clutch solenoid												
N - D accumulator	7											
1 - 2 accumulator									2	3		
2 - 3 accumulator											3	
3 - 4 (N - R) accumulator	8											3
Oil temperature sensor						6				5		

Numbers in the chart indicate the order of priority in which relevant locations are to be inspected.

Symptoms / Possible causes	Slippage when changing from 1st to 2nd gear	Slippage when changing from 2nd to 3rd gear	Slippage when changing from 3rd to 4th gear	Brakes engage when changing from 1st to 2nd gear	Brakes engage when changing from 2nd to 3rd gear	Brakes engage when changing from 3rd to 4th gear	Maximum speed point too low, acceleration too slow	Does not change from 4th to 3rd gear	Does not change from 4th to 2nd or from 3rd to 2nd gear	Does not change from 3rd to 1st or from 2nd to 1st gear	Shock from gear change felt when accelerator released and speed decreases	High shift point when changing from 4th to 3rd, from 3rd to 2nd, and from 2nd to 1st gear
Automatic transmission fluid condition and level	1	1	1	1	1	1	1	1	1	1		
Control linkage												
Engine idling revolution												
Inhibiter switch							2					
Accelerator sensor	2	2	2					2	2	2	1	1
Vehicle speed sensor												2
Engine revolution sensor												
Starter switch and starter												
Overdrive switch												
Line pressure	3	3	3								2	
Control valve assembly	5	5	5				5	6	5	5	4	
Shift solenoid A							3	4	3	3		
Shift solenoid B							4		4	4		
Line pressure solenoid								5				
Lock-up solenoid												
Overrunning clutch solenoid								3			3	
N - D accumulator												
1 - 2 accumulator	4											
2 - 3 accumulator		4										
3 - 4 (N - R) accumulator			4									
Oil temperature sensor												

Numbers in the chart indicate the order of priority in which relevant locations are to be inspected.

INSPECTION BY SYMPTOM

Symptoms / Possible causes	No down-shift when operating from 4th gear (when vehicle speed within kick-down limit)	Down-shift or engine overrunning when operating from 4th gear (when vehicle speed over kick-down limit)	Engine races, slips when changing from 4th to 3rd gear	Engine races, slips when changing from 4th to 2nd gear	Engine races, slips when changing from 3rd to 2nd gear	Engine races, slips when changing from 4th or 3rd to 1st gear	Vehicle does not move in any range
Automatic transmission fluid condition and level			1	1	1	1	1
Control linkage							2
Engine idling revolution							
Inhibiter switch							
Accelerator sensor	1	2	2	2	2	2	
Vehicle speed sensor	2	1					
Engine revolution sensor							
Starter switch and starter							
Overdrive switch							
Line pressure			3	3	3	3	3
Control valve assembly			5	6	5	5	
Shift solenoid A	3	3		5			
Shift solenoid B	4	4					
Line pressure solenoid			4	4	4	4	4
Lock-up solenoid							
Overrunning clutch solenoid							
N - D accumulator							
1 - 2 accumulator							
2 - 3 accumulator							
3 - 4 (N - R) accumulator							
Oil temperature sensor							

Numbers in the chart indicate the order of priority in which relevant locations are to be inspected.

Symptoms / Possible causes	Excessive noise when in D, 2, L, or R ranges	Changes from 2nd to 3rd gear while in 2 range	Engine brake not effective while in L range	Changes from 1st to 2nd gear while in L range	Does not change from 2nd to 1st gear while in L range	Excessive shock when changing from 2nd to 1st gear while in L range	Overheating of automatic transmission	Automatic transmission fluid ejected through air breathers while cruising	Abnormal smell from automatic transmission fluid filler pipe	Does not lock up	Lock-up piston slips	Lock-up point extremely high or extremely low	Engine stalls
Automatic transmission fluid condition and level	1						1	1	1		1		1
Control linkage			2										
Engine idling revolution							2						
Inhibiter switch		1	1	1	1					3			
Accelerator sensor			3				3			1	2	1	
Vehicle speed sensor			4		2					2		2	
Engine revolution sensor										4			
Starter switch and starter													
Overdrive switch													
Line pressure							4			6	3		
Control valve assembly			6		4	1	6			8	6	4	
Shift solenoid A			5		3								
Shift solenoid B													
Line pressure solenoid							5				5		
Lock-up solenoid										7	4	3	
Overrunning clutch solenoid			7										
N - D accumulator													
1 - 2 accumulator													
2 - 3 accumulator													
3 - 4 (N - R) accumulator													
Oil temperature sensor										5			

Numbers in the chart indicate the order of priority in which relevant locations are to be inspected.

INSPECTION BY SYMPTOM

Possible causes \ Symptoms		Starter switch cannot be turned to LOCK position (Key cannot be pulled out even when range selector lever in P range)	Starter switch turns to LOCK position even when range selector lever in other than P range	Range selector lever cannot be shifted from P range even when brake pedal depressed (when starter switch in ACC to START position)	Range selector lever can be shifted from P range even when brake pedal not depressed (when starter switch in LOCK position)	Shift lock cannot be released using shift lock lever	Back buzzer does not sound
Wiring faulty, breakage		○		○			
Range selector lever	P range switch faulty						
	Shift lock actuator faulty			○	○		
	Overdrive OFF switch faulty			○			
	Automatic transmission reverse buzzer faulty						○
	Mechanical fault of range selector lever	○	○	○	○	○	
Key interlock solenoid faulty		○	○				
Inhibiter switch faulty							○
Stop lamp switch faulty or adjusted incorrectly				○	○		
Electronic control unit	Automatic transmission electronic control unit abnormal			○	○		
	Key interlock electronic control unit abnormal	○	○				
Starter switch faulty		○	○				

Numbers in the chart indicate the order of priority in which relevant locations are to be inspected.

Temporary Faults

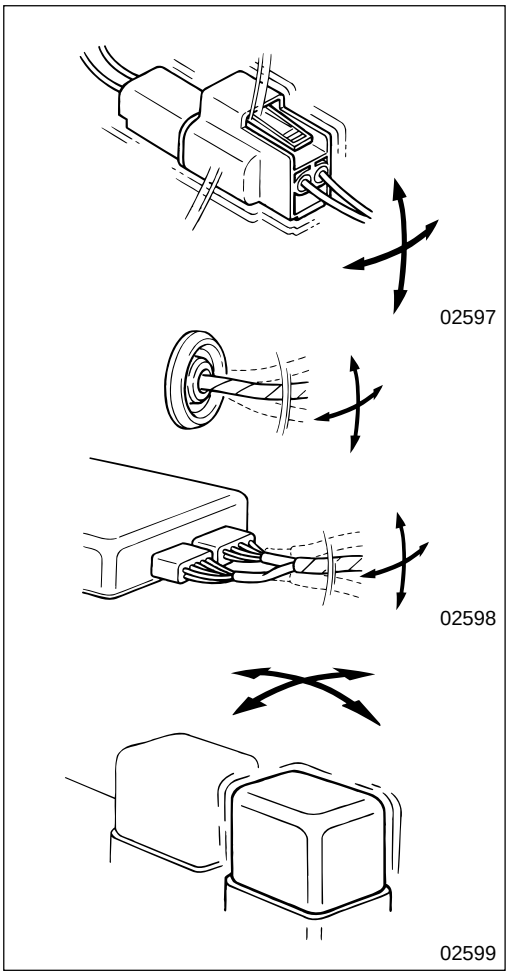

Temporary faults often occur under certain conditions. So identifying those conditions helps to find possible causes. To find the conditions under which temporary faults occurred, you need to reproduce the faults after interviewing customers in detail about actual driving conditions, weather, frequency of occurence and fault phenomena.
Then determine if the faults were caused by vibration, temperature or other possible elements depending on the actual conditions identified. If vibration is suspected as a possible cause, inspect individual connectors as follows to check if the fault will occur:

- Shake the connector gently in all four directions of the arrows as illustrated.
- Shake the wiring harness gently in all four directions of the arrows as illustrated.
- Wiggle each sensor or piece of equipment by hand.
- Gently shake the wiring harnesses near movable parts such as suspensions.

INSPECTION USING THE CHECK BOX (HARNESS CHECKER)

A simple method for checking the electrical system is to use the harness checker and the check box.

NOTE

In this method, to connect the check harness, the connection between the cab harness and the automatic transmission electronic control unit is cut off. This erases the trouble related signals recorded in the automatic transmission electronic control unit. Therefore, if you carry out both this method and self-diagnosis for a trouble, you must carry out self-diagnosis and keep written records of the diagnosis preceding this method.

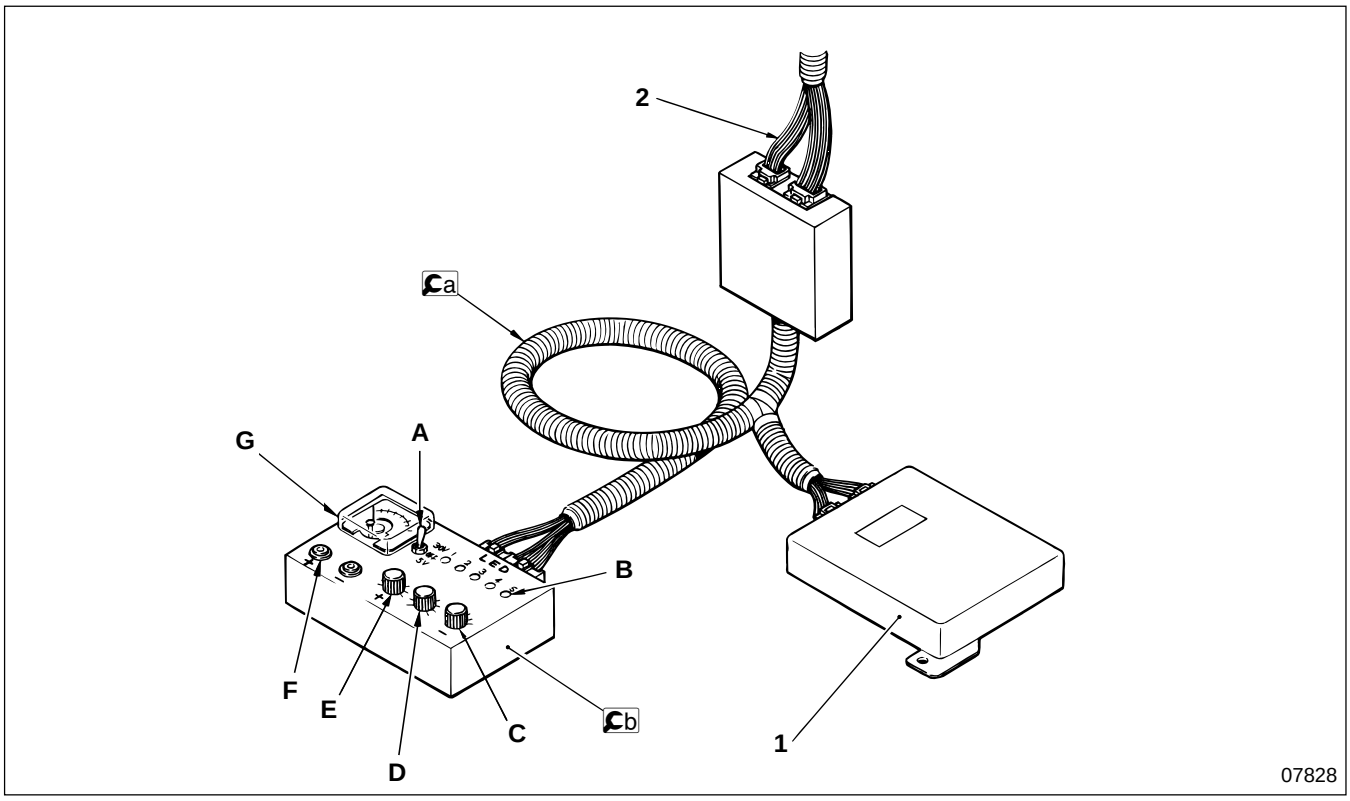

● **Preparatory work before inspection**

- Turn the starter switch to ACC and cut off the power.
- Disconnect automatic transmission electronic control unit **1** and cab harness **2**.
- Connect a check harness (MC134298) and b check box (MC134299) between cab harness **2** and automatic electronic control unit **1**.

A : Voltmeter changeover switch between 5 and 30 volts
B : Light-emitting diode
C : Right channel ⊖
D : Center channel ⊕ 8 to 17
E : Left channel ⊕ 1 to 7, or 8 to 17 (changeover)
F : Output terminal for external voltmeter (tester) or oscilloscope
G : Voltmeter

● **Inspection of sensor, harness and switch**

- Inspection is performed by operating channels **C**, **D** and **E** of b check box. For the changeover of ⊕ channels from 1 to 7 use left channel **E**. To change over from 8 onward turn the left channel from 8 to 17, then use center channel **D** in the proper order.

CAUTION ⚠

Turn the voltmeter changeover switch to OFF, before changing over channels.

No.	Name	Key switch	⊕ channel	⊖ channel	Normal condition
1	Accelerator switch	ON (Engine stopped)	1	4	12 to 13 volts when the accelerator pedal is released, 1 volt or less when the accelerator pedal is lightly depressed
2	Overdrive switch	↑	2	↑	12 to 13 volts when the switch is ON, 1 volt or less when the switch is OFF
3	Power mode switch	↑	3	↑	10.5 to 11.5 volts when the switch is ECO, 1 volt or less when the switch is PWR
4	Automatic transmission fluid temperature sensor	↑	4	2	1.8 volts when the automatic transmission fluid temperature is 10°C {50°F}, 1.1 volts when the automatic transmission fluid temperature is 40°C {104°F}
5	Ground	ACC	5	—	Resistance between check box ⊖ terminal and metal parts of the vehicle is 100 Ω or less
6	↑	↑	6	—	↑
7	VBATT (Power supply from battery)	ACC or ON (Engine stopped)	7	4	12 to 13 volts
8	VIG (Power supply from starter switch)	ON (Engine stopped)	8	↑	↑
9	↑	↑	9	↑	↑
10	VOUT (Accelerator sensor power)	↑	10	2	4.5 to 5.5 volts
11	Accelerator sensor	↑	11	↑	0.9 to 1.0 volt when the accelerator is fully closed, 4.0 to 4.2 volts when the accelerator is fully opened
12	Exhaust brake	↑	12	4	11.5 to 12.5 volts when the exhaust brake is operating, 1 volt or less when the exhaust brake is not operating
For the inspection of items 13, 14 and 15 below, use an external voltmeter (tester) or oscilloscope					
13	Vehicle speed sensor 1	ON (While travelling)	13	1	0 volt when the vehicle is stopped, 1 volt or more when the vehicle is cruising at 30 km/h {18.6 mph}
14	Vehicle speed sensor 2	↑	14	4	637×4 pulses/km square wave VL : 1 volt or less, VH : 4.5 to 5.5 volts
15	Engine revolution signal	ON (Engine revolving)	15	3	4 pulses/Rev 0 V↔5 V square wave

INSPECTION USING THE CHECK BOX (HARNESS CHECKER)

● **Inspection of Automatic Transmission Electronic Control Unit**

- Connect the vehicle to a chassis dynamo, etc.
- Inspect the various parts by monitoring whether ☇b check box light-emitting diode **B** lights up.

No.	Name	Light-emitting diode	Normal Condition
1	Overrunning clutch solenoid	1	Lights up in 1st and 4th gear shift ranges (Overrunning clutch OFF)
2	Lock-up solenoid	2	Lights up when the lock-up mechanism is operating
3	Line pressure solenoid	3	Brightest when the accelerator is fully closed, the more the accelerator is opened the dimmer it gets
4	Shift solenoid A	4	Lights up in the 1st and 4th gear shift ranges
5	Shift solenoid B	5	Lights up in the 1st and 2nd gear shift ranges

NOTE

Gear shift range refers to the range into which each gear is shifted.

● **Work after inspection**

- Turn the starter switch to LOCK and cut off the power.
- Disconnect ☇a check harness from between the automatic transmission electronic control unit and the cab harness.
- Connect the automatic transmission electronic control unit and the cab harness.

M E M O

INSPECTION AND ADJUSTMENT MOUNTED IN VEHICLE

Stall Test

● **Aim**

The stall test is carried out to check the friction-prone elements inside the automatic transmission, the sliding of the one-way clutch, the operation of the torque converter and the overall performance of the engine.

● **Measurement procedure**

Be sure to inspect the engine coolant, engine oil and the automatic transmission fluid, before the test. Warm up the engine and the automatic transmission to raise the temperatures of the coolant and the automatic transmission fluid to an appropriate level.
Also make sure, in advance, that the accelerator sensor voltage is within the specified limit. Replace the accelerator sensor if it is faulty.

CAUTION⚠

Performing the stall test when the accelerator sensor voltage is low might damage the transmission.

- Chock the front and rear wheels, and apply the parking brake. Be sure to keep the foot brake fully depressed while operating the accelerator pedal.
- Shift the range selector lever into the D range.
- Slowly depress the accelerator pedal until it is fully depressed. When the engine has reached a point at which it revolves at a steady rate (stall revolution), write down the number of revolutions quickly and release the accelerator pedal.

CAUTION⚠

- **Each measurement should be completed within 10 seconds. If continued for a longer time it might cause the deterioration of the automatic transmission fluid or have an adverse effect on internal parts.**
- **Stop the test immediately if the engine revolution does not stabilize and keeps increasing gradually or if it suddenly increases as if the engine were racing.**

- Shift the range selector lever into the N range, and cool the engine by stabilizing its revolution at approximately 1200 rpm for one minute or more.
- Repeat the test for selector lever ranges 2, L and R.
- Stall revolution

FE639	1720±150 rpm
FE649	1820±150 rpm

● **Diagnosis of results**

Measurement results	Possible faults
High at any selector lever range	• Line pressure is low
High when in the D range	• Forward clutch or forward one-way clutch is weakened .....*
High when in the D and 2 ranges	• Low one-way clutch slips .....*
High when in the R range	• Reverse clutch or low and reverse brake slips .....*
Within the limits	• One-way clutch stuck inside torque converter, or a fault in the high clutch or the brake band. Other parts are normal .....*
Lower than the standard value	• Engine fault or one-way clutch inside torque converter slips .....*

* : To determine the cause precisely, carry out a road test.

Line Pressure Test

Ⓣ Tightening torque

Unit : N·m {lbf.ft, kgf·m}

Location	Parts to be tightened	Tightening torque	Remarks
1	Pressure detector plug	4.9 to 9.8 {3.6 to 7.2, 0.5 to 1.0}	—

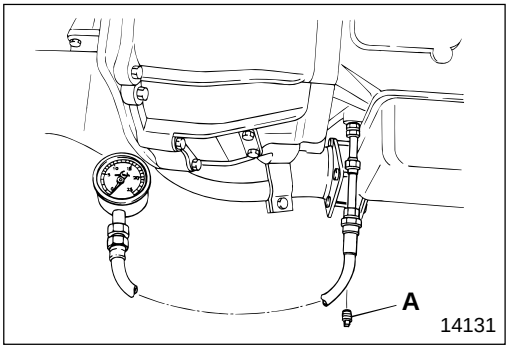

● **Aim**

The line pressure test is carried out to check the oil pump performance, the control valve functions and to check the hydraulic circuit for leakage.

● **Measurement procedure**

- Remove pressure detector plug **1** and install the pressure gauge in the bottom front part of the automatic transmission case.
- Measurement procedure is the same as for the stall test. Measure as you gradually open the accelerator from engine idling.
- Read the line pressure.
- After measurement is completed, tighten pressure detector plug **1** at specified torque.

NOTE

- **Since pressure detector plug 1 has sealant on its threads it cannot be reused.**
- **Measure line pressure when the engine idling revolution is the standard value.**

Thread size for pressure detector plug **1**

Automatic transmission case female screw (parallel pipe thread)	Plug, pressure gauge fitting male screw (taper pipe thread)
PS $^1/_8$	PT $^1/_8$

● **Line pressure**

Unit : kPa {lbf/in^2, kgf/cm^2}

Oil pressure when engine is idling	FE639 FE649	R	470 to 745 {68 to 108, 4.8 to 7.6}
		D, 2, L	295 to 470 {43 to 68, 3.0 to 4.8}
Oil pressure when engine is stalled	FE639 FE649	R	1225 to 1520 {178 to 220, 12.5 to 15.5}
		D, 2, L	920 to 1100 {134 to 159, 9.4 to 11.2}

● **Diagnosis of results**

Measurement results		Possible faults
When engine is idling	Measured value is low in all shift ranges (P, R, N, D, 2, and L)	Abnormality might exist in the pressure supply system or output from the oil pump is low. For example: • Oil pump worn • Control piston abnormal • Pressure regulator valve or plug stuck, spring fatigued • Hydraulic pressure leaks along the hydraulic line via the oil strainer → oil pump → pressure regulator valve • Engine idling revolution low
	Measured value is low at particular selector lever range	Hydraulic pressure delivered from manual valve might be leaking from the related devices or lines. For example: • When there are hydraulic pressure leaks in the low and reverse brake systems, line pressure will decrease in shift ranges R and L but will stay normal in ranges P, N, D and 2
	Measured value is high	Abnormality might exist in sensors or in pressure adjustment functions. For example: • Accelerator sensor adjusted incorrectly • Oil temperature sensor broken • Line pressure solenoid malfunction (stuck in OFF, filter clogged, disconnection) • Pressure modifier valve stuck • Pressure regulator valve or plug stuck
Hydraulic pressure does not rise from engine idling level		Abnormality might exist in sensors or in pressure adjustment functions. For example: • Accelerator sensor adjusted incorrectly • Automatic transmission electronic control unit broken • Line pressure solenoid malfunction (stuck in ON) • Pressure regulator valve or plug stuck • Pressure modifier valve stuck • Pilot valve stuck or pilot filter clogged
Pressure rises but does not reach standard value		Abnormality might exist in sensors or in pressure adjustment functions. For example: • Accelerator sensor adjusted incorrectly • Control piston abnormal • Line pressure solenoid malfunction (stuck, filter clogged) • Pressure regulator valve or plug stuck • Pressure modifier valve stuck • Pilot valve stuck or pilot filter clogged

Road Test

● **Measurement procedure**

Check, before the test, the level and state of the automatic transmission fluid, and make sure that the range selector and accelerator control cables are adjusted correctly.
During the road test, shift gears into every range to check for slippage and other abnormalities.
Check if the lever is easy or hard to shift.
Check the shift points for both shift-up and shift-down.
Under various driving conditions, check the vehicle speeds at shifting.

● **Vehicle speeds at shifting**

Unit : km/h {mph}

Item / Power mode switch			OFF (Economy mode)	ON (Power mode)
Half throttle Accelerator opening : 4/8	FE639	$D_1 \rightarrow D_2$	6 to 10 {3.73 to 6.21}	7 to 11 {4.35 to 6.84}
		$D_2 \rightarrow D_3$	14 to 20 {8.70 to 12.43}	16 to 22 {9.94 to 13.67}
		$D_3 \rightarrow D_4$	22 to 28 {13.67 to 17.40}	29 to 35 {18.02 to 21.75}
	FE649	$D_1 \rightarrow D_2$	5 to 9 {3.11 to 5.59}	5 to 9 {3.11 to 5.59}
		$D_2 \rightarrow D_3$	14 to 20 {8.70 to 12.43}	17 to 23 {10.56 to 14.29}
		$D_3 \rightarrow D_4$	24 to 30 {14.91 to 18.64}	29 to 35 {18.02 to 21.75}
Full throttle Accelerator opening : 8/8 (kickdown range)	FE639	$D_1 \rightarrow D_2$	15 to 21 {9.32 to 13.05}	21 to 27 {13.05 to 16.78}
		$D_2 \rightarrow D_3$	36 to 42 {22.37 to 26.10}	43 to 49 {26.72 to 30.45}
		$D_3 \rightarrow D_4$	63 to 69 {39.15 to 42.88}	77 to 83 {47.85 to 51.58}
	FE649	$D_1 \rightarrow D_2$	15 to 21 {9.32 to 13.05}	19 to 25 {11.81 to 15.54}
		$D_2 \rightarrow D_3$	32 to 38 {19.88 to 23.61}	40 to 46 {24.86 to 28.58}
		$D_3 \rightarrow D_4$	56 to 62 {34.80 to 38.53}	76 to 82 {47.23 to 50.95}

Unit : km/h {mph}

Item \ Power mode switch			OFF (Economy mode)	ON (Power mode)
Accelerator fully closed : 0/8	FE639	$L^2 \rightarrow L^1$	22 to 28 {13.67 to 17.40}	
		$2^3 \rightarrow 2^2$	50 to 56 {31.07 to 34.80}	
		$2^4 \rightarrow 2^3$	81 to 87 {50.33 to 54.06}	
	FE649	$L^2 \rightarrow L^1$	24 to 30 {14.91 to 18.64}	
		$2^3 \rightarrow 2^2$	51 to 57 {31.69 to 35.42}	
		$2^4 \rightarrow 2^3$	81 to 87 {50.33 to 54.06}	

Unit : km/h {mph}

Overdrive switch ON→OFF	FE639 FE649	D4→D3	81 to 87 {50.33 to 54.06}

Unit : km/h {mph}

Lock-up speed	Half throttle Accelerator opening : 4/8	FE639	2nd gear OFF (in the 2 range only)	35 to 42 {21.75 to 26.10}
			3rd gear ON	51 to 57 {31.69 to 35.42}
			4th gear ON	70 to 76 {43.50 to 47.23}
		FE649	2nd gear ON (in the 2 range only)	35 to 41 {21.75 to 25.48}
			3rd gear ON	53 to 59 {32.93 to 36.66}
			4th gear ON	74 to 80 {45.98 to 49.71}
	Accelerator opening Fully closed : 0/8	FE639 FE649	2nd gear ON (in the 2 range only)	34 to 40 {21.13 to 24.86}
			3rd gear OFF	35 to 42 {21.75 to 26.10}
			4th gear OFF	35 to 42 {21.75 to 26.10}

When the automatic transmission fluid level is too low, air is sucked in along with the fluid from the pump. The air bubbles turn the fluid spongy and can lead to a decline in pressure and slippage of the internal clutch.
If, on the other hand, the fluid level is too high due to an incorrect top up, the fluid is whipped up by the revolving parts and the air bubbles thus created can lead to the same adverse conditions as when the level is too low.
In both cases the presence of air bubbles will lead to overheating, oxidation of the fluid or creation of varnish and will prevent the valves and clutches from operating correctly.
Furthermore, the presence of air bubbles will cause the fluid to be discharged through the automatic transmission vents or filler tubes, and can be mistaken for fluid leakage.
To prevent these from happening use the following procedure to correctly inspect the fluid level.

Inspection of Automatic Transmission Fluid

(1) Inspection of characteristics

If the automatic transmission fluid smells burnt or if it contains metal particles or sludge as a result of internal friction and wear of metal or other material, the transmission assembly must be completely overhauled. Make sure you carefully examine the fluid on dipstick **1**. If you find the quality questionable, take a sample and examine it more closely.

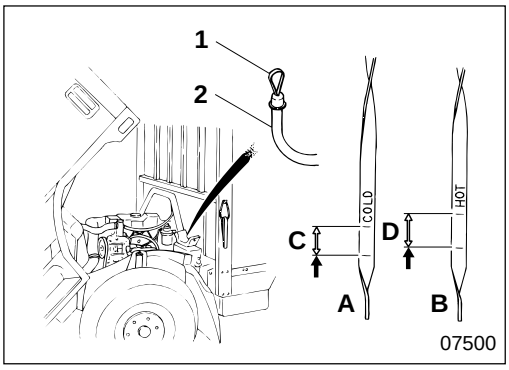

(2) Inspection of automatic transmission fluid level

- Park the vehicle on level ground, make sure that the parking brake is fully activated and chock the wheels to keep them from rolling.
- Start the engine and let it idle. To fill the hydraulic circuit with automatic transmission fluid, slowly shift the range selector lever once through the P to L ranges and finally shift into the N range.
- While the engine is still idling, pull out dipstick **1** and wipe off the fluid sticking to it. Reinsert the dipstick, then pull it out again and check the fluid level.
- If the fluid level is inspected right after the engine is started and the fluid temperature is still low (40±15°C {104±27°F}) the level should be within area **C** marked COLD on dipstick **1** as illustrated in **A**.
- If the fluid level is inspected after the vehicle has been driven and the fluid temperature is high (65±15°C {149±27°F}) the level should be within area **D** marked HOT on dipstick **1** as illustrated in **B**.

WARNING⚠

Take care during the inspection because the engine will be running. Take sufficient care to avoid burns or injuries resulting from contact with moving parts.

CAUTION⚠

Be sure to wipe off the dust from the safety cap and the upper part of filler tube 2 before you pull out dipstick 1.

NOTE

- **Make sure the vehicle is parked on level ground when you are checking the fluid level.**
- **Make sure the range selector lever is in the N range and the engine is idling when you are checking the fluid level. When the engine is at standstill, the fluid level appears higher than it actually is.**
- **To ensure the fluid is correct, reinspect the fluid level after an actual drive.**

- If the fluid level is low, top it up to the specified level by supplying automatic transmission fluid (DEXRON II type) through filler tube **2**.

Replacement of Automatic Transmission Fluid

Tightening torque

Unit : N·m {lbf.ft, kgf·m}

Location	Parts to be tightened	Tightening torque	Remarks
1	Drain plug	29 to 39 {22 to 29, 3.0 to 4.0}	—

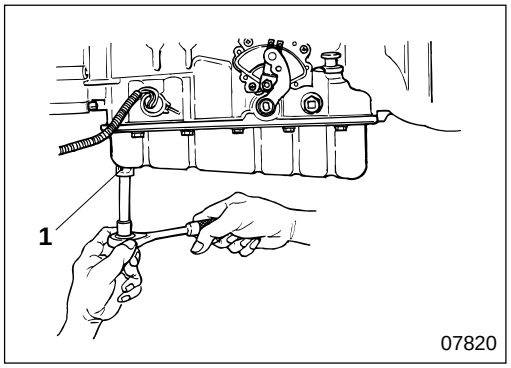

(1) Draining

- Place a container under the oil pan, remove drain plug **1** in the front of the oil pan and drain the fluid.

WARNING

Take care because the automatic transmission fluid temperature immediately after the engine has stopped is very high. To avoid scalds, wait until a safe temperature has been reached before draining the fluid.

NOTE

- **The fluid will drain faster if the engine is first run to raise the fluid temperature.**
- **The fluid cannot be drained from the hydraulic circuit, the torque converter or the oil cooler.**
- **Check the drained fluid for dirt, metal particles and metal fragments.**

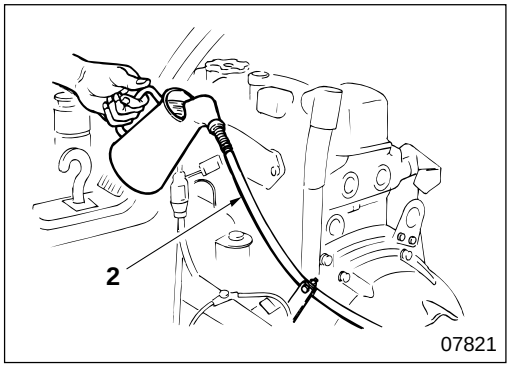

(2) Supply

- Reinstall the gasket, and oil pan drain plug **1**.
- Add approximately 6.7 L {7.1 qts} of automatic transmission fluid (DEXRON II type) through filler tube **2**.

CAUTION

Make sure that dirt and foreign particles do not become mixed in with the fluid when it is added.

- Shift the range selector lever into the N range, start the engine and let it idle for at least two minutes.
- After shifting the lever through all ranges once, shift it back into N.

CAUTION

To prevent burning out the interior of the automatic transmission assembly, make sure that the engine is not allowed to race when you do the above.

- Supply fluid until the fluid level is at the lower limit of the specified area on dipstick **1**. Next, check the fluid level to make sure it is within the specified limit.

NOTE

- **Determining the fluid level immediately after supplying the fluid might be difficult due to the fluid stuck in the inside of the filler tube. Therefore, check the fluid level a few times between intervals.**
- **If the fluid is oversupplied, it will overflow and can be mistaken for leakage.**
- **Let the engine idle and, while paying attention to the fluid level, pour in the fluid slowly.**

(3) Fluid leakage

- Automatic transmission converter housing area
- Checking for the source of leakage
  When checking for leaks keep in mind that leaks in the converter and the surrounding areas can be the result of oil leaking from the engine.
  The color of the fluid is red and can be distinguished from engine oil.
- Carry out the following inspection before removing the automatic transmission.
  Check carefully to find out whether the leaking is from the torque converter or from the automatic transmission side (the oil seal area of the oil pump housing or the area where the oil pump housing is engaging with the case).

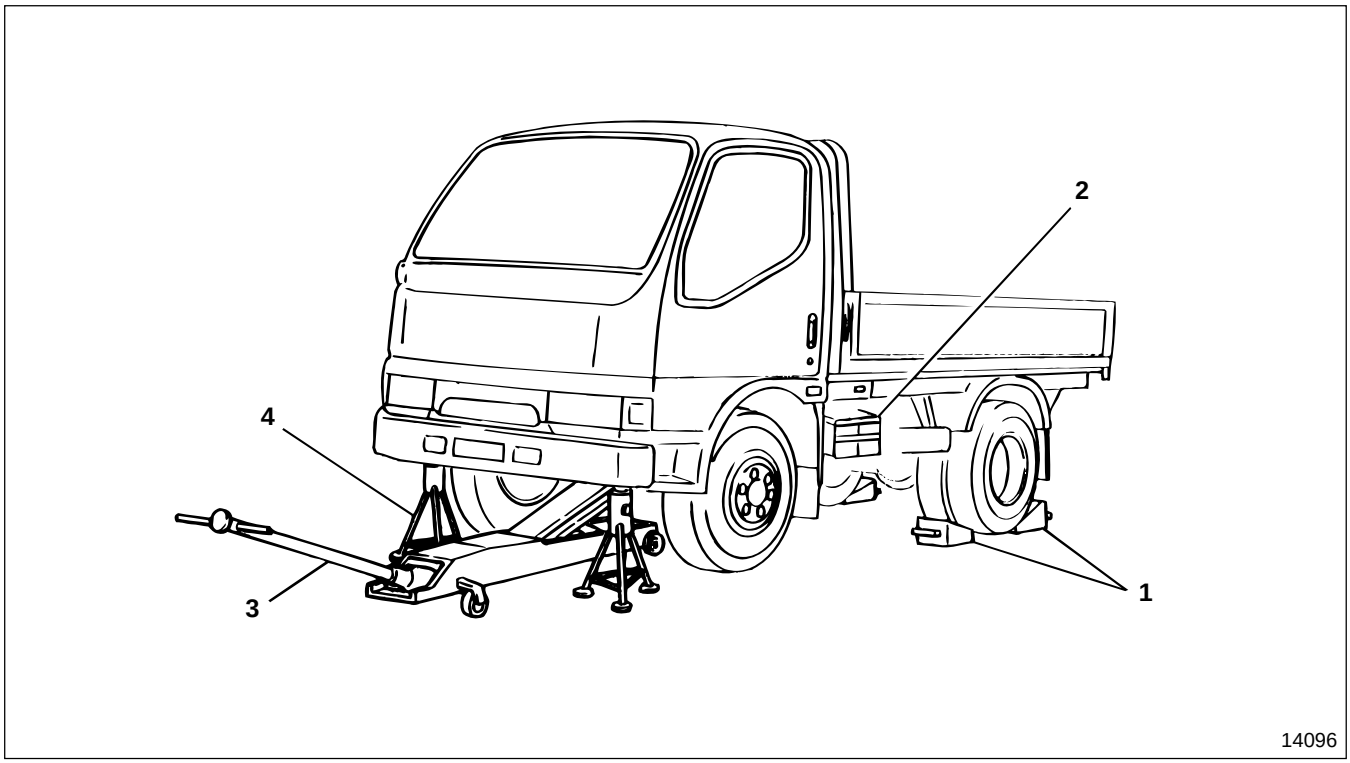

● **Work sequence before removal**

1 Place wheel chocks.
2 Disconnect negative battery cable. Gr 54
3 Jack up the front axle on a garage jack.
4 Support the front frame on rigid racks.

WARNING

- **Since the parking brake will be removed, naturally it cannot be used. Therefore, you must chock the wheels securely so the vehicle does not move.**
- **Do not remove the chocks until the entire operation is completed.**
- **Supporting a vehicle on a garage jack only is extremely dangerous, so always support the frame on rigid racks.**
- **Leave the garage jack and rigid racks in place until the entire operation is completed. Never remove them during the operation.**

CAUTION

Keep the automatic transmission in neutral throughout the operation.

● **Work sequence after installation**

Follow the work sequence before removal in reverse.

Preparatory Work

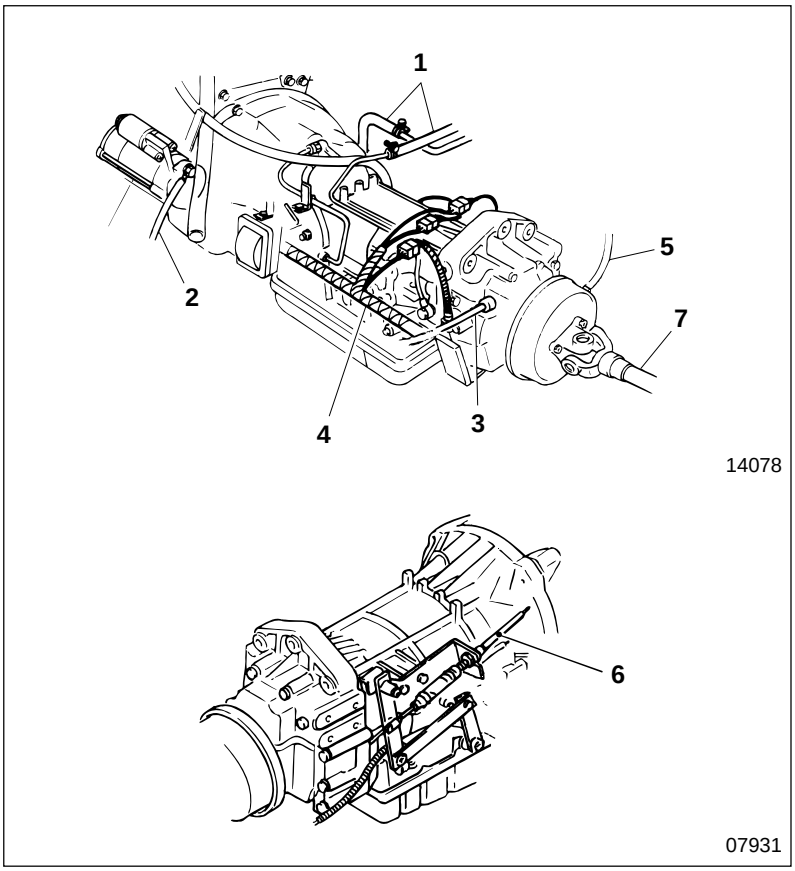

14078

07931

● **Removal sequence**

1 Oil cooler hose P23-126
2 Harness (ground)
3 Speedometer cable
4 Chassis harness
5 Parking brake cable Gr 36
6 Selector cable P23-136
7 Propeller shaft Gr 25

NOTE

After removing propeller shaft 7, tie it to the frame at the height of installation assembly using a piece of rope, etc.

● **Installation sequence**

Follow the removal sequence in reverse.

REMOVAL AND INSTALLATION OF AUTOMATIC TRANSMISSION ASSEMBLY

Removal and Installation

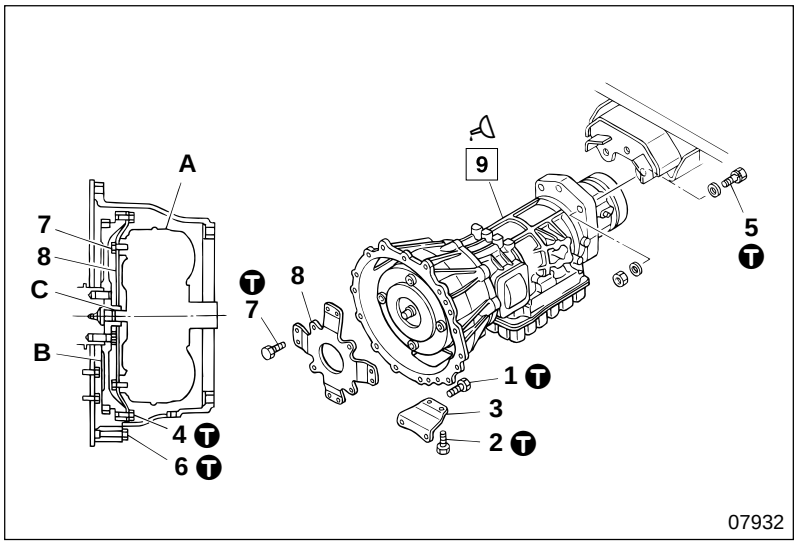

● **Removal sequence**

1 Bolt
2 Bolt
3 Dust cover
4 Bolt (×8)
5 Bolt
6 Bolt
7 Bolt (×4)
8 Driving plate
9 Automatic transmission assembly

A : Torque converter
B : Flywheel
C : Pilot area

● **Installation sequence**

Follow the removal sequence in reverse.

NOTE

Remove the automatic transmission assembly with driving plate 8 attached to torque converter A.

T Tightening torque

Unit : N·m {lbf.ft, kgf·m}

Location	Parts to be tightened	Tightening torque	Remarks
1	Bolt (Automatic transmission assembly and dust cover, common mounting)	47 {35, 4.8}	—
2	Bolt (Dust cover mounting)	13 {9.4, 1.3}	—
4	Bolt (Flywheel and driving plate connecting)	32 {24, 3.3}	—
5	Bolt (Rear mounting)	83 to 105 {61 to 80, 8.5 to 11}	—
6	Bolt (Automatic transmission assembly mounting)	82 {61, 8.4}	M12
		47 {35, 4.8}	M10
	Bolt (Bracket mounting)	40 {30, 4.1}	—
7	Bolt (Driving plate mounting)	79±12 {59±8.7, 8.1±1.2}	—

Lubricant

Location	Points of application	Kinds	Quantity
9	Pilot area C of torque converter A inside the automatic transmission assembly	Molybdenum disulfide grease [NLGI No.2 (Li soap)]	As required

Special tools

Unit : mm {in.}

Location	Tool name and shape	Part No.	Application
9	Cranking handle 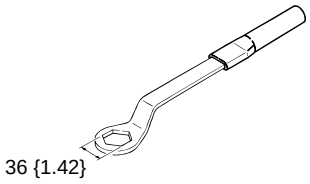	MH061289	Cranking of engine

◆ Service procedure

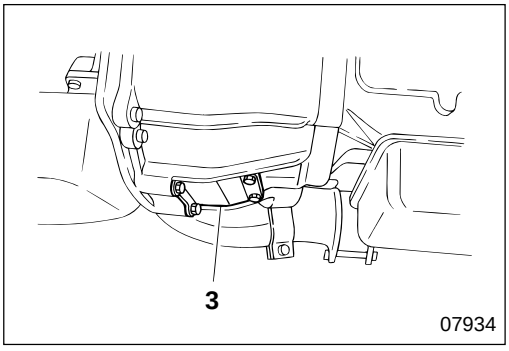

9 **Automatic transmission assembly**

[Removal]

- Remove dust cover **3**.

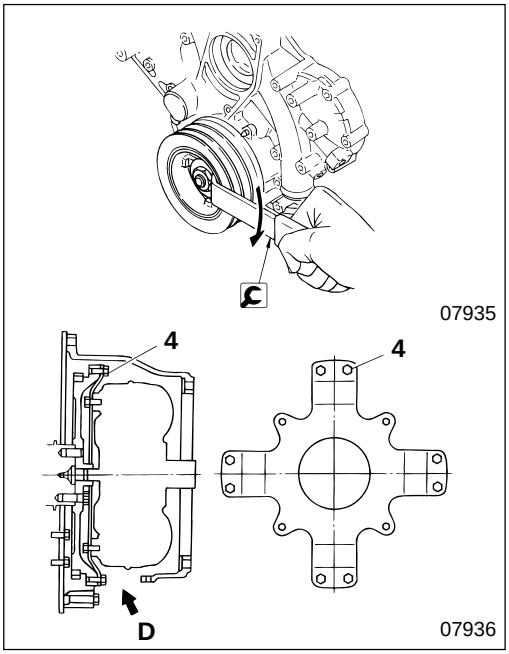

- Put cranking handle on the engine crankshaft pulley mounting nut, and crank until bolt **4** can be reached through working hole **D**.
- Continue cranking and remove eight bolts **4**, two each at four points, one by one.

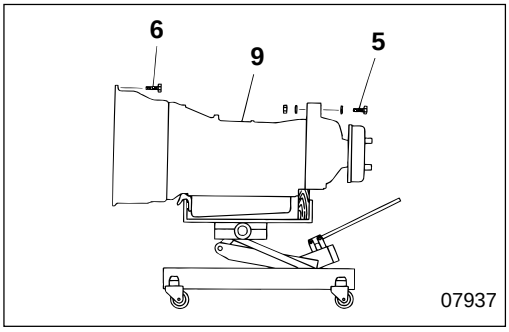

- Use a jack to support automatic transmission assembly **9** and remove automatic transmission installation bolts **5**, **6**.
- Remove automatic transmission assembly **9** by pulling it backward.

CAUTION

- **Be careful not to apply force to any part of the oil pan.**
- **Since as a single unit torque converter A can come loose easily, be careful not to drop it.**

NOTE

Installation bolts 6 differ in length, write down the location of each before removing.

[Installation]

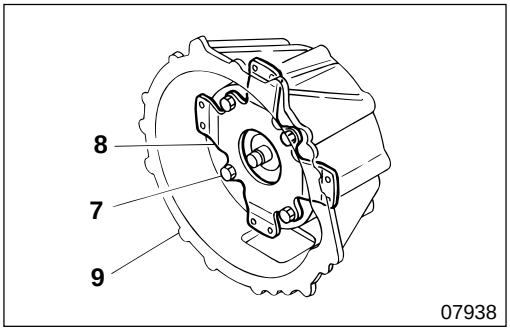

- Install in advance driving plate **8** to torque converter **A** of automatic transmission assembly **9**.
  Tighten bolts **7** at specified torque.

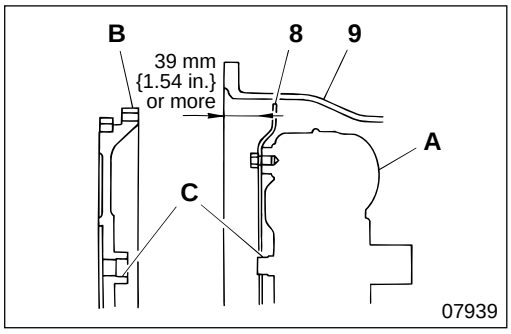

- Make sure that torque converter **A** is installed onto automatic transmission assembly **9** correctly.
  When the torque converter is correctly installed, the distance between the surface of driving plate **8** and the mounting surface of the case conforms to the dimension as illustrated.
- Apply grease to pilot area **C**.

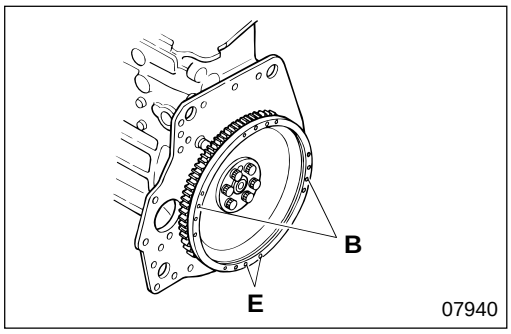

- One of bolt holes **E** of flywheel **B**, for connection with driving plate **8**, should be at the bottom.

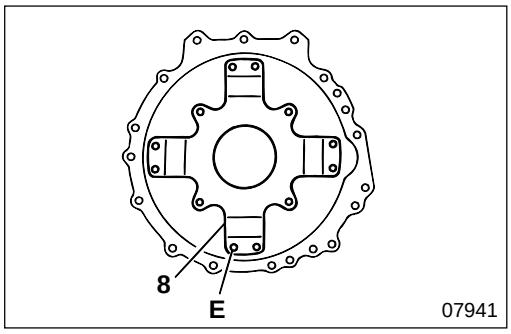

- One of bolt holes **E**, of driving plate **8**, should be at the bottom.

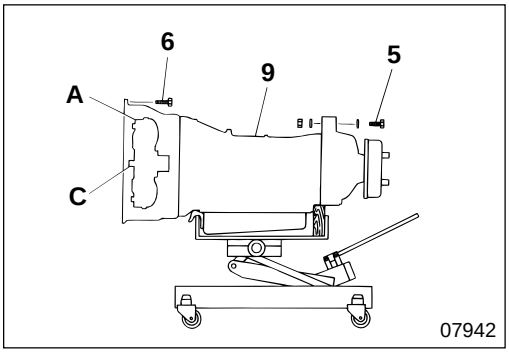

- While aligning pilot area **C** with the dwell pin of the rear plate, slowly insert automatic transmission assembly **9**.
- After temporarily tightening several installation bolts **6** of automatic transmission assembly **9**, tighten installation bolt **5** into the rear support at specified torque.

NOTE

- **Since as a single unit torque converter A can come loose easily, make sure that it is correctly positioned by slightly lowering the rear part of automatic transmission assembly 9.**
- **Before connecting the parts together remove the oil sticking to the interior walls of the torque converter housing.**

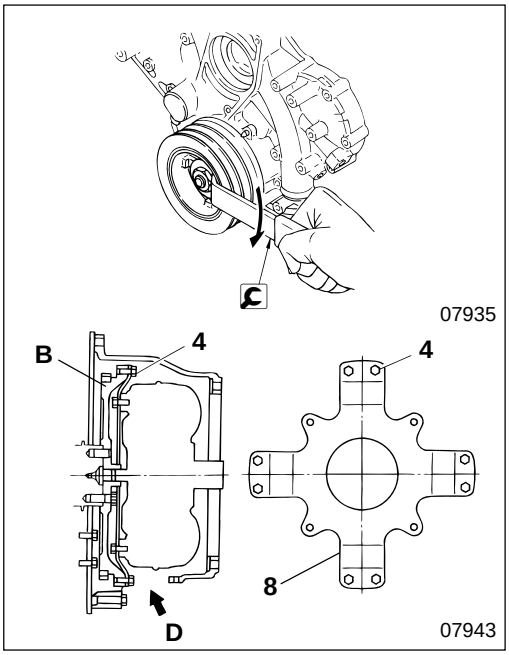

- Through working hole **D** align the connecting holes on driving plate **8** and flywheel **B** and temporarily tighten bolts **4**.
- Use [C] cranking handle to crank the engine and temporarily tighten the eight bolts, two each at four points. Then, tighten all the bolts in the same order, at specified torque.

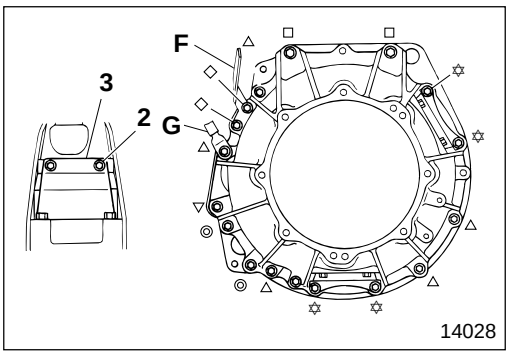

While simultaneously tightening ground strap **G** and dust cover **3**, tighten all of the automatic transmission installation bolts **6** at specified torque.

- △ : M10×1.25-40
- ✡ : M10×1.25-60
- □ : M12×1.75-60
- ◇ : M10×1.5-20 (bracket F installation)
- ◎ : M10×1.25-50+flange nut
- ▽ : Starter installation bolt, nut

- Tighten bolts **2** at specified torque and fix dust cover **3**.

OIL COOLER

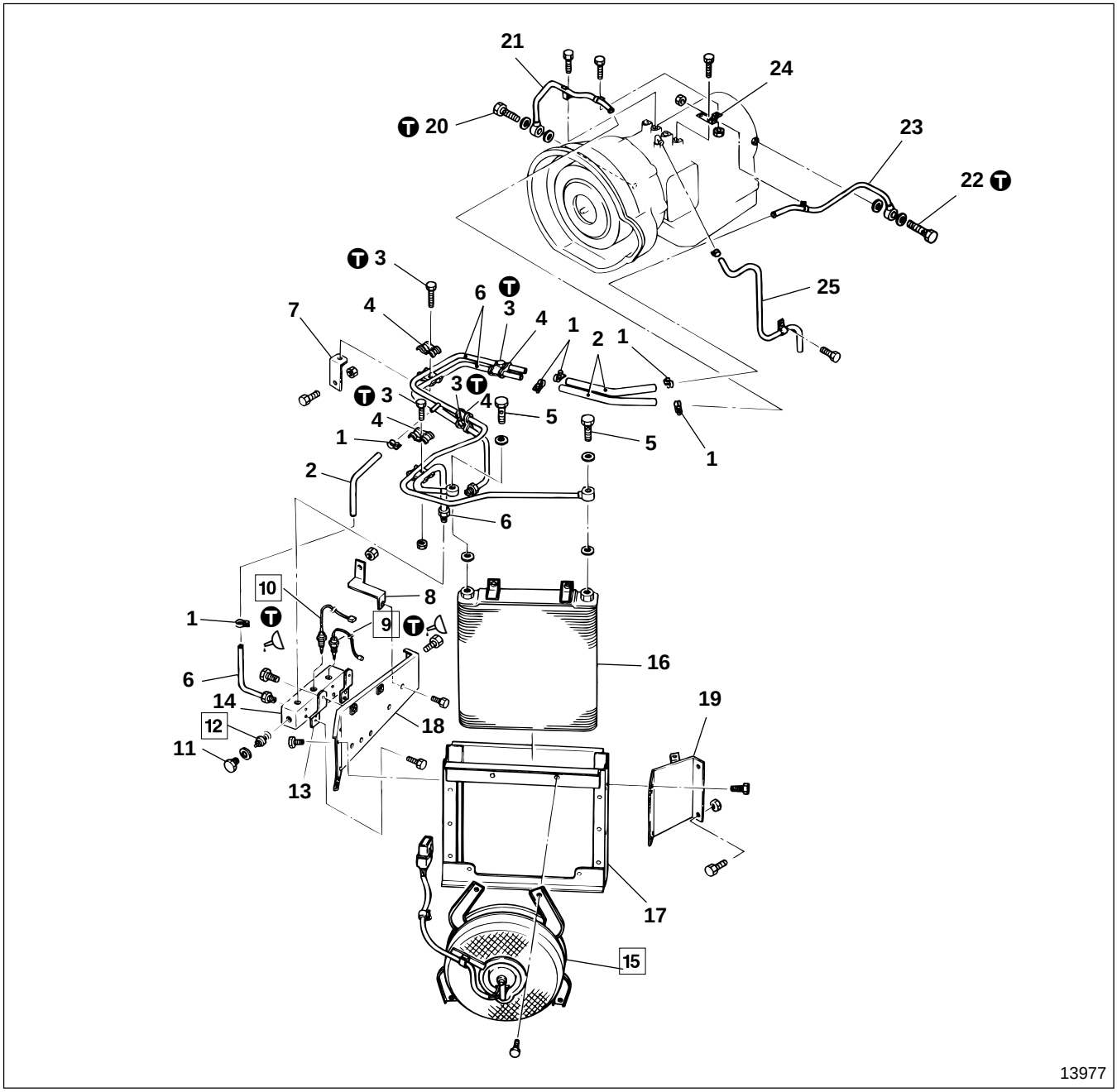

● **Removal sequence**

1 Hose clamp
2 Rubber hose
3 Bolt
4 Clamp
5 Eye bolt
6 Oil cooler tube
7 Bracket
8 Bracket
9 Automatic transmission fluid temperature switch
10 Automatic transmission fluid thermostat switch
11 Plug
12 Thermostat valve
13 Bracket
14 Connector
15 Blower assembly
16 Oil cooler assembly
17 Oil cooler mount frame
18 Oil cooler front support
19 Oil cooler rear support
20 Eye bolt
21 Oil cooler pipe
22 Eye bolt
23 Oil cooler pipe
24 Bracket
25 Vinyl tube

● **Installation sequence**

Follow the removal sequence in reverse

Service standards

Unit : mm {in.}

Location	Maintenance item		Standard value	Limit	Remedy
9	Operating temperature of automatic transmission fluid temperature switch	When rising (OFF→ON)	140±3°C {284±5.4°F}	—	Replace
		When falling (ON→OFF)	133°C {271°F} MIN		
10	Operating temperature of automatic transmission fluid thermostat switch	When rising (OFF→ON)	97±3°C {207±5.4°F}	—	Replace
		When falling (ON→OFF)	90°C {194°F} MIN		
12	Thermostat valve	Starting operation temperature	76.5±3°C {170±5.4°F}	—	Replace
		Bypass opening temperature	83±2°C {181±3.6°F}	—	Replace

Tightening torque

Unit : N·m {lbf.ft, kgf·m}

Location	Parts to be tightened	Tightening torque	Remarks
3	Bolt (Clamp mounting)	3.0 to 4.4 {2.2 to 3.3, 0.3 to 0.45}	—
9	Automatic transmission fluid temperature switch	29 to 39 {22 to 29, 3 to 4}	—
10	Automatic transmission fluid thermostat switch	29 to 39 {22 to 29, 3 to 4}	—
20	Eye bolt	25 to 34 {18 to 25, 2.5 to 3.5}	—
22	Eye bolt	25 to 34 {18 to 25, 2.5 to 3.5}	—

Sealant

Location	Points of application	Kinds	Quantity
9	Thread area of automatic transmission fluid temperature switch	THREEBOND 1110B	As required
10	Thread area of automatic transmission fluid thermostat switch	THREEBOND 1110B	As required

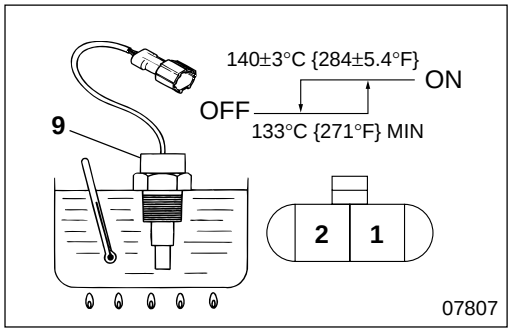

◆ Service procedure

9 **Inspection of automatic transmission fluid temperature switch**

Carry out the following inspection and replace automatic transmission fluid temperature switch **9** if there are any faults.

- Check that there is no continuity between terminals ① and ② at ambient temperature of 20±5°C {68±9°F}.
- Place automatic transmission fluid temperature switch **9** in a container filled with automatic transmission fluid, and raise the temperature while stirring well.
  Measure the temperature when continuity has been achieved between terminals ① and ②, and check that the measured value conforms to the standard value.
- Lower and measure the temperature when continuity is lost between terminals ① and ②, and check that the measured value conforms to the standard value.

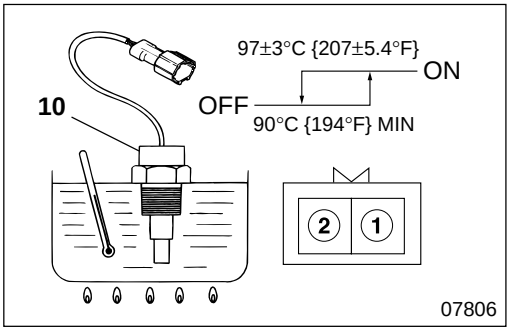

10 **Inspection of automatic transmission fluid thermostat switch**

Carry out the following inspection and replace automatic transmission fluid thermostat switch **10** if there are any faults.

- Check that there is no continuity between terminals ① and ② at ambient temperature of 20±5°C {68±9°F}.
- Place automatic transmission fluid thermostat switch **10** in a container filled with automatic transmission fluid, and raise the temperature while stirring well.
  Measure the temperature when continuity has been achieved between terminals ① and ②, and check that the measured value conforms to the standard value.
- Lower and measure the temperature when continuity is lost between terminals ① and ②, and check that the measured value conforms to the standard value.

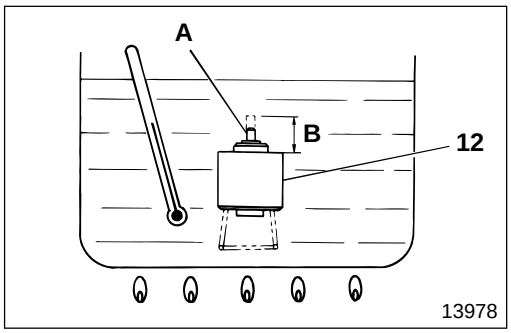

12 **Inspection of thermostat valve**

Carry out the following inspection. If any fault is found, replace thermostat valve **12**.

- Place thermostat valve **12** in a container filled with automatic transmission fluid and raise the fluid temperature while stirring the fluid.
  Make sure that end **A** starts stroking at a temperature of 76.5±3°C {170±5.4°F}.
- Raise the fluid temperature further and make sure that end **A** expands by 4.5 mm {1.18 in.} and dimension **B** in the illustration is 13.4 mm {0.53 in.} at a temperature of 83±2°C {181±3.6°F}.

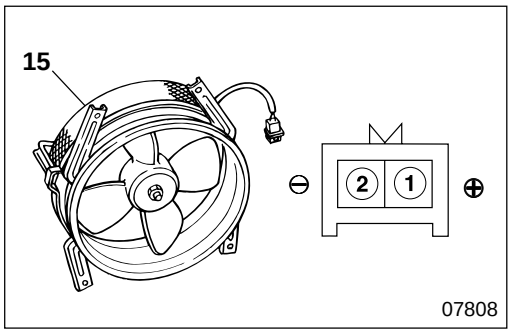

15 **Inspection of blower assembly**

Check blower assembly **15** and make sure it operates when battery voltage is loaded between terminals ① and ②. If any fault is found, replace the blower assembly.

M E M O

AUTOMATIC TRANSMISSION CONTROL

Range Selector Lever

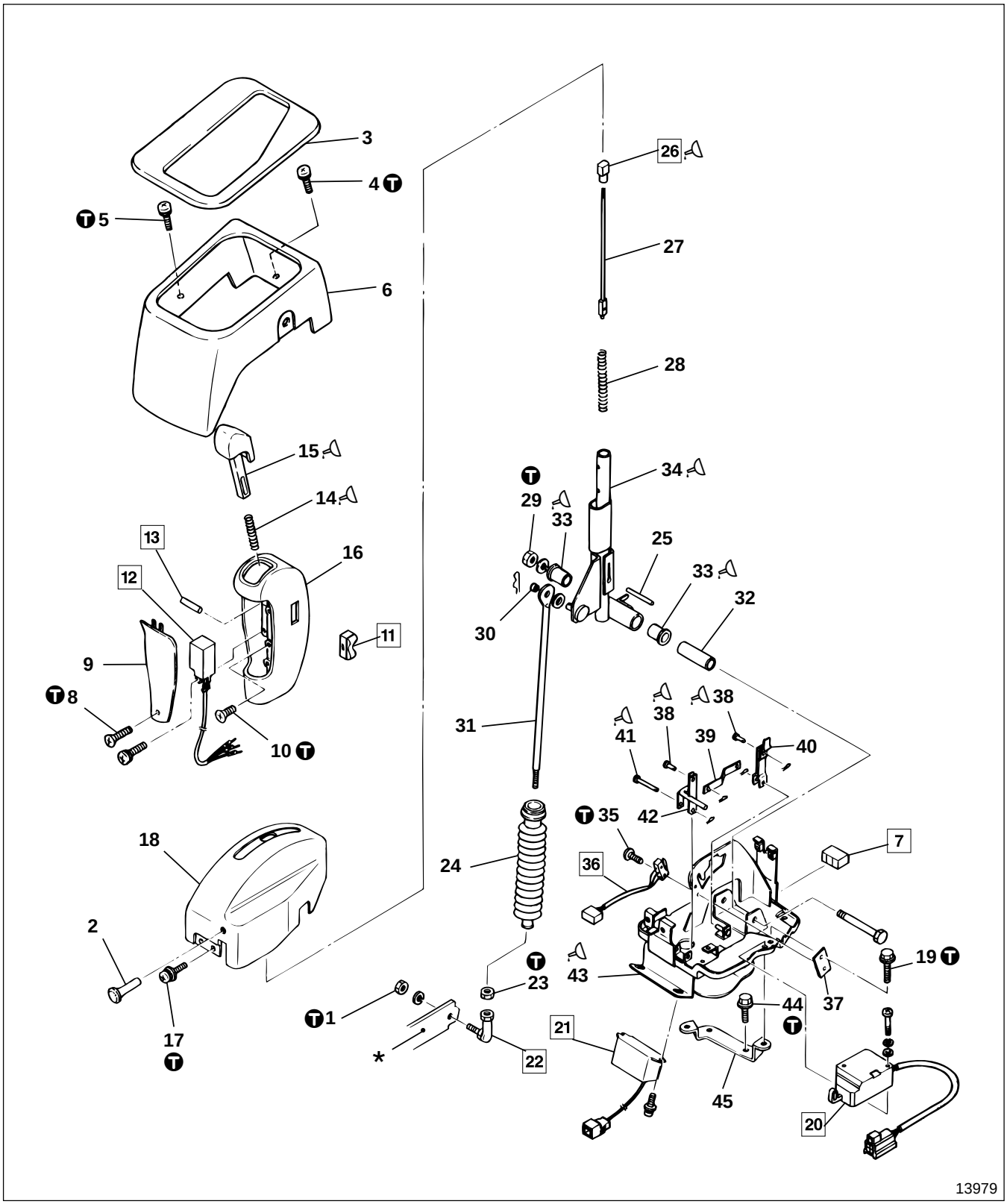

● **Disassembly sequence**

1 Nut
2 Shift lock release knob
3 Adapter
4 Screw
5 Screw
6 Range selector lever cover
7 Connector
8 Screw
9 Cover
10 Screw
11 Switch button
12 Overdrive OFF switch
13 Pin
14 Spring
15 Shift button
16 Automatic transmission knob
17 Screw
18 Indicator panel
19 Bolt
20 Shift lock actuator
21 Automatic transmission reverse buzzer
22 Ball joint
23 Lock nut
24 Grommet
25 Pin
26 Sleeve
27 Rod
28 Spring
29 Nut
30 Bushing
31 Rod
32 Pipe
33 Bushing
34 Selector lever
35 Screw
36 P-range switch
37 Plate
38 Clevis pin
39 Shift lock link
40 Shift lock link
41 Clevis pin
42 Shift lock link
43 Lever bracket
44 Bolt
45 Base plate

***** : Lever assembly P23-135

● **Assembly sequence**

Follow the disassembly sequence in reverse.

Tightening torque

Unit : N·m {lbf.ft, kgf·m}

Location	Parts to be tightened	Tightening torque	Remarks
1	Nut (Lever assembly mounting)	17 to 22 {12 to 16, 1.7 to 2.2}	—
4	Screw (Range selector lever cover mounting)	3.9 to 5.9 {2.9 to 4.3, 0.4 to 0.6}	—
5	Screw (Range selector lever cover mounting)	3.9 to 5.9 {2.9 to 4.3, 0.4 to 0.6}	—
8	Screw (Cover mounting)	2.0 {1.4, 0.2}	—
10	Screw (Automatic transmission knob mounting)	2.0 {1.4, 0.2}	—
17	Screw (Indicator panel mounting)	0.98 to 1.96 {0.72 to 1.45, 0.1 to 0.2}	—
19	Bolt (Lever bracket mounting)	9.8 to 15.0 {7.2 to 11.0, 1.0 to 1.5}	—
23	Lock nut (Ball joint mounting)	16 to 24 {12 to 17, 1.6 to 2.4}	—
29	Nut (Lever mounting)	9.8 to 14.0 {7.2 to 10.0, 1.0 to 1.4}	—
35	Screw (P-range switch mounting)	0.2 to 0.3 {0.14 to 0.22, 0.02 to 0.03}	—
44	Bolt (Base plate mounting)	9.8 to 15.0 {7.2 to 11.0, 1.0 to 1.5}	—

Lubricant

Location	Points of application	Kinds	Quantity
14	Periphery of spring	Multipurpose grease [NLGI No.2 (Li soap)]	As required
15	Sliding area of shift button	Multipurpose grease [NLGI No.2 (Li soap)]	As required
26	Sliding area of sleeve	Wheel bearing grease [NLGI No.2 (Li soap)]	As required
33	Interior of bushing	Chassis grease [NLGI No.1 (Ca soap)]	As required
34	Sliding area of selector lever	Wheel bearing grease [NLGI No.2 (Li soap)]	As required
38, 41	Sliding area of clevis pin	Chassis grease [NLGI No.1 (Ca soap)]	As required
43	Sliding area of lever bracket	Chassis grease [NLGI No.1 (Ca soap)]	As required

◆ Service procedure

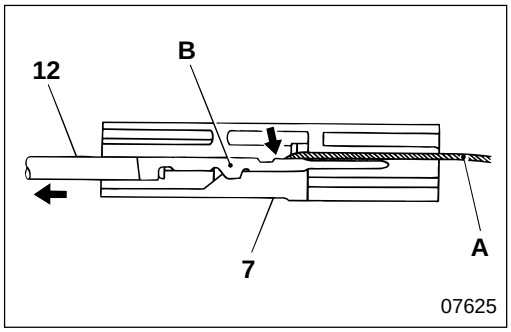

7 **Removal of connector**

Using screwdriver **A**, pull out terminal **B** of overdrive OFF switch **12** from the inside of connector **7** and remove the connector.

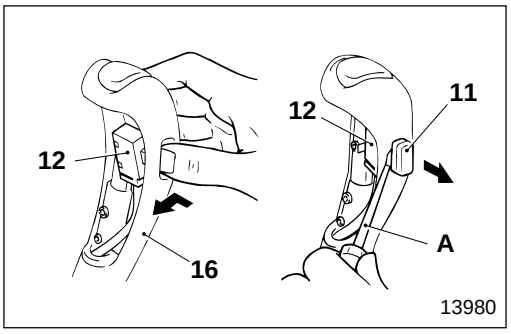

11 **12** **Switch button, overdrive OFF switch**

[Removal]

- Using screwdriver **A**, remove switch button **11** from overdrive OFF switch **12**.
- Remove overdrive OFF switch **12** from automatic transmission knob **16** by pushing the switch out.

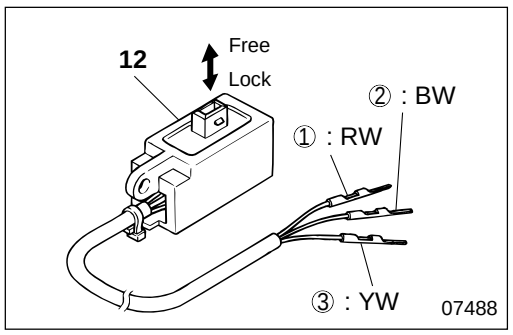

[Inspection of overdrive OFF switch **12**]

	① : RW	② : BW	③ : YW
Free	○		○
Lock	○	○	

○——○ : There is continuity between terminals ○ and ○.

Replace overdrive OFF switch **12** if it is faulty.

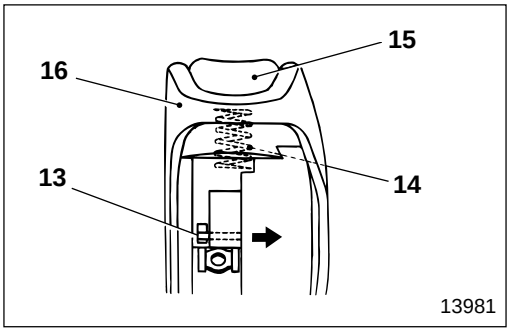

13 **Removal of pin**

While keeping shift button **15** and spring **14** pressed down, remove pin **13** towards the inside (arrow direction) of automatic transmission knob **16**.

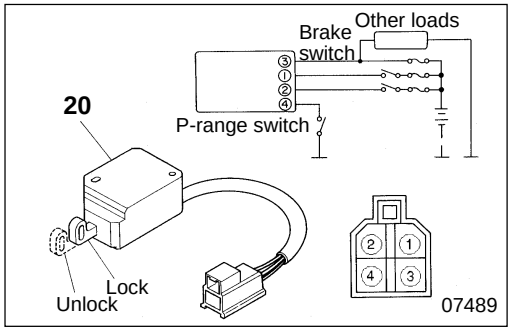

20 **Inspection of shift lock actuator**

Power supply		Switch		Operating mode	
IG	+B	Brake	P range	Unlock	Lock
○	○	○	○	○←	
○	○		○		→○
○	○	○		○	
○	○			○	
	○	○	○		→○
	○		○		→○
	○	○		○	
	○			○	

Check to make sure that shift lock actuator **20** is in operating mode under the above power supply and switch position.
Replace the shift lock actuator if it is faulty.

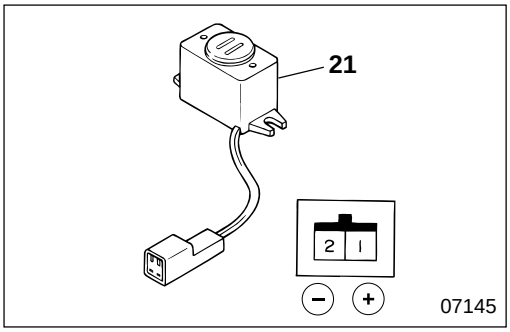

21 **Inspection of automatic transmission reverse buzzer**

- Check to make sure that the automatic transmission reverse buzzer sounds when 12 volts DC is loaded between terminals ① and ②.
- Replace automatic transmission reverse buzzer **21** if it is faulty.

NOTE

- **Automatic transmission reverse buzzer 21 sounds continuously when you apply voltage.**
- **If you want to make automatic transmission reverse buzzer 21 sound intermittently, use the automatic transmission reverse buzzer and the back buzzer in combination.**

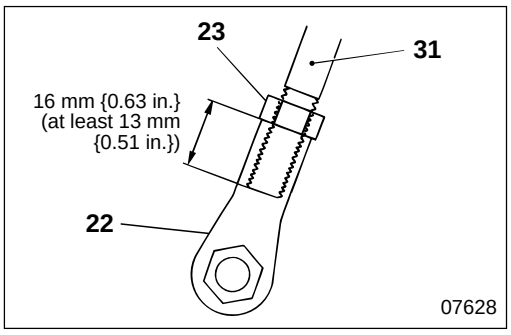

22 **Installation of ball joint**

Using ball joint **22** adjust rod **31** so that its thread ridge conforms to the dimensions as illustrated, then tighten with lock nut **23**.

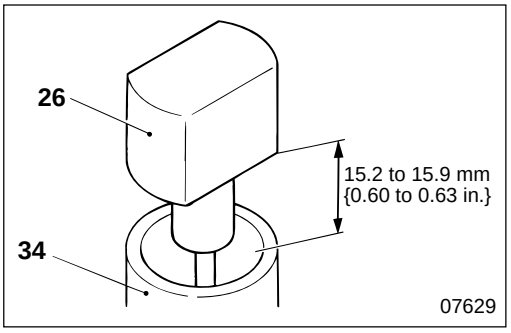

26 **Installation of sleeve**

Shift range selector lever **34** to the P range. Install sleeve **26** by rotating it so that the dimension between the sleeve and the upper part of the lever conforms to the value as illustrated.

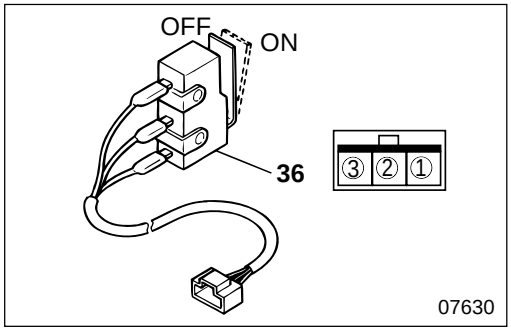

36 **P-range switch**

[Inspection]

	①	②	③
ON	○———		———○
OFF		○———	———○

○——○ : There is continuity between terminals ○ and ○.
Replace P-range switch **36** if it is faulty.

[Installation]
Install P-range switch **36** so that it is OFF when the range selector lever is in the P range.

Lever Assembly

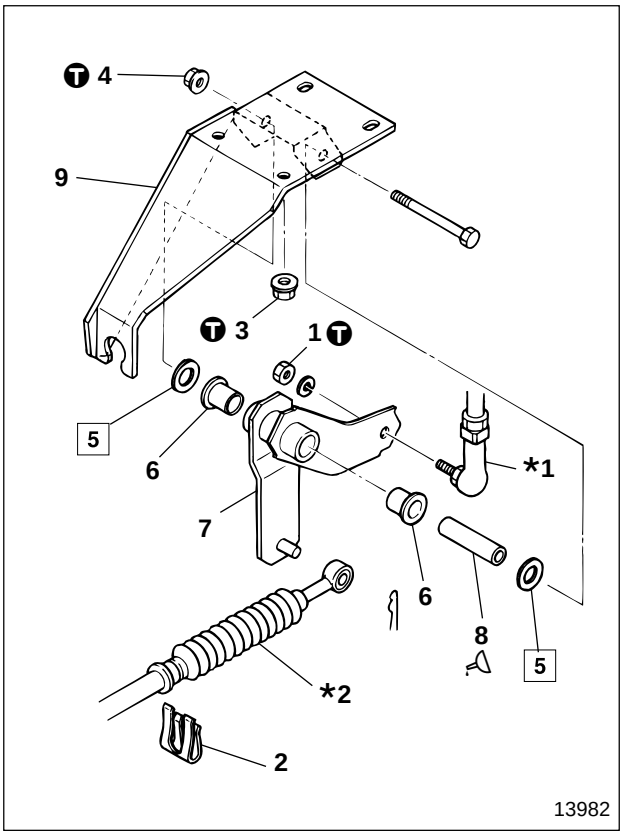

● **Disassembly sequence**

1 Nut
2 Clip
3 Nut
4 Nut
5 Spacer (for adjustment)
6 Bushing
7 Lever
8 Collar
9 Lever bracket

***1** : Range selector lever 🕮 P23-130
***2** : Selector cable 🕮 P23-136

● **Assembly sequence**

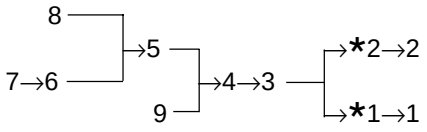

Tightening torque

Unit : N·m {lbf.ft, kgf·m}

Location	Parts to be tightened	Tightening torque	Remarks
1	Nut (Range selector lever mounting)	17 to 22 {12 to 16, 1.7 to 2.2}	—
3	Nut (Bracket mounting)	9.8 to 15.0 {7.2 to 11.0, 1.0 to 1.5}	—
4	Nut (Lever mounting)	17 to 22 {12 to 16, 1.7 to 2.2}	—

Lubricant

Location	Points of application	Kinds	Quantity
8	Periphery of collar	Chassis grease [NLGI No.1 (Ca soap)]	As required

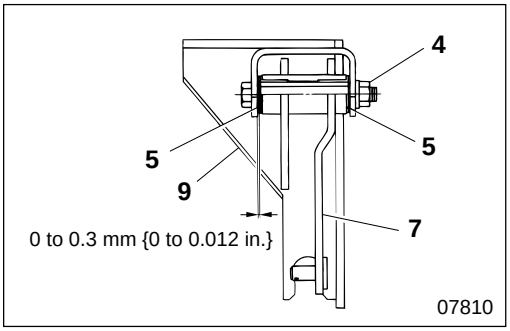

◆ Service procedure

5 **Selection of spacer**

- Select the spacer so that when nut **4** is tightened at specified torque the clearance between lever bracket **9** and spacer **5** conforms to the dimensions as illustrated.
  There are two spacer thicknesses available : 0.3, 0.5 mm {0.012, 0.020 in.}
- After installation make sure lever **7** can be operated smoothly.

AUTOMATIC TRANSMISSION CONTROL

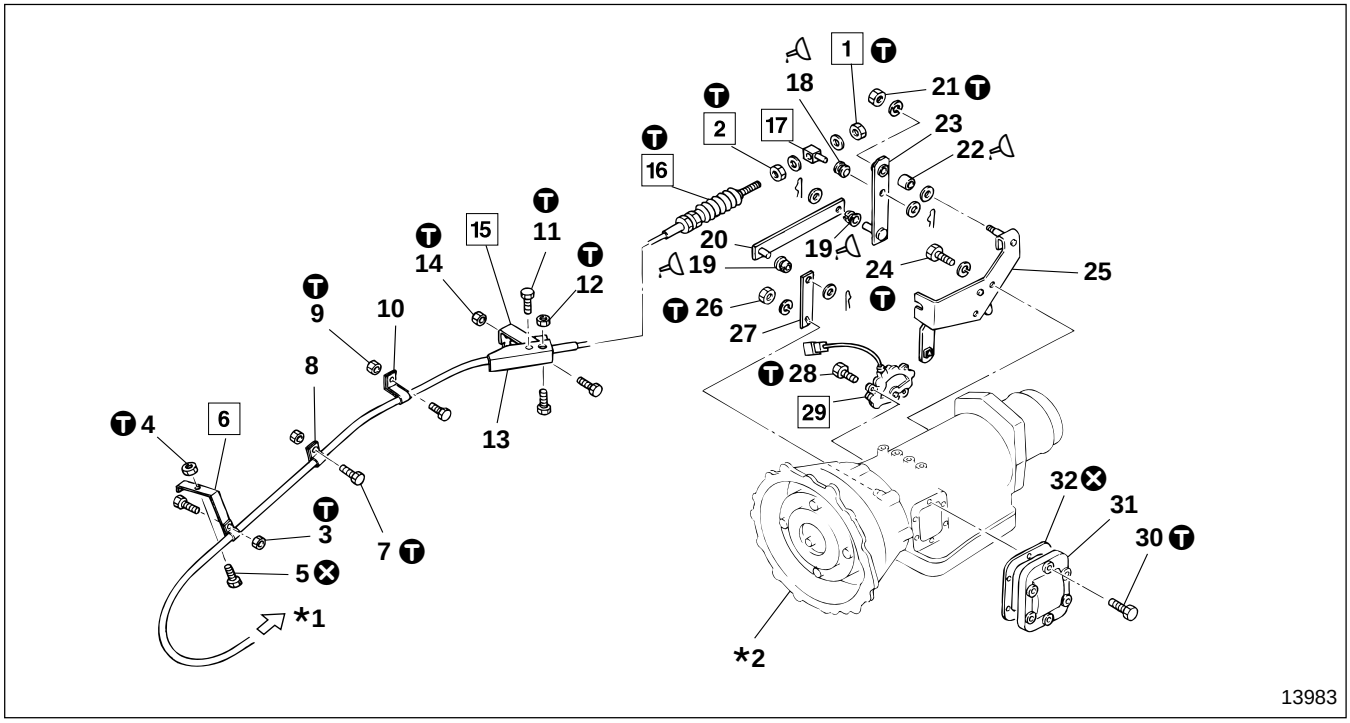

● **Removal sequence**

1 Nut
2 Nut
3 Nut
4 Nut
5 Bolt
6 Bracket
7 Bolt
8 Clip
9 Nut
10 Clip
11 Bolt
12 Nut
13 Insulator
14 Nut
15 Bracket
16 Selector cable
17 Adjuster
18 Bushing
19 Bushing
20 Rod
21 Nut
22 Bushing
23 Lever
24 Bolt
25 Bracket
26 Nut
27 Lever
28 Bolt
29 Inhibiter switch
30 Bolt
31 Power take-off cover
32 Gasket

***1** : To lever assembly 📖 P23-135
***2** : Automatic transmission body
⊗ : Non-reusable parts

● **Installation sequence**

Follow the removal sequence in reverse.

Ⓣ Tightening torque

Unit : N·m {lbf.ft, kgf·m}

Location	Parts to be tightened	Tightening torque	Remarks
1, 2	Nut (Selector cable mounting)	3.9 to 5.9 {2.9 to 4.3, 0.4 to 0.6}	—
3, 9, 12, 14	Nut (Bracket and clip mounting)	9.8 to 15.0 {7.2 to 11.0, 1.0 to 1.5}	—
4	Nut (Bracket mounting)	59 to 78 {43 to 58, 6.0 to 8.0}	—
7, 11	Bolt (Clip and insulator mounting)	9.8 to 15.0 {7.2 to 11.0, 1.0 to 1.5}	—
16	Selector cable (Installed on bracket)	59 to 83 {43 to 61, 6.0 to 8.5}	—
21	Nut (Lever mounting)	27 to 34 {20 to 25, 2.8 to 3.5}	—
24	Bolt (Bracket mounting)	69 to 93 {51 to 69, 7.0 to 9.5}	—
26	Nut (Lever mounting)	43 {32, 4.4}	—
28	Bolt (Inhibiter switch mounting)	1.96 to 2.55 {1.45 to 1.88, 0.20 to 0.26}	—
30	Bolt (Power take-off cover mounting)	32 to 42 {24 to 31, 3.3 to 4.3}	—

Lubricant

Location	Points of application	Kinds	Quantity
18, 19, 22	Interior of bushing	Chassis grease [NLGI No.1 (Ca soap)]	As required

Special tools

Unit : mm {in.}

Location	Tool name and shape	Part No.	Application
29	Inhibiter switch set pin 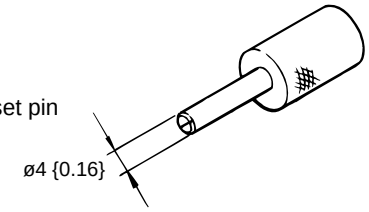 03727	MH062063	Adjustment of inhibiter switch

◆ Service procedure

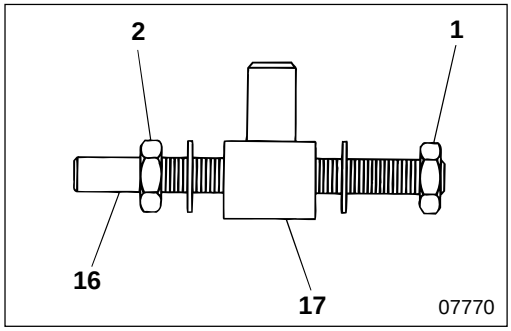

07770

1 **2** **6** **15** **to** **17** **Nut, bracket, selector cable and adjuster**

[Installation]

- Loosen nuts **1**, **2** all the way to the two ends of the screw as illustrated.

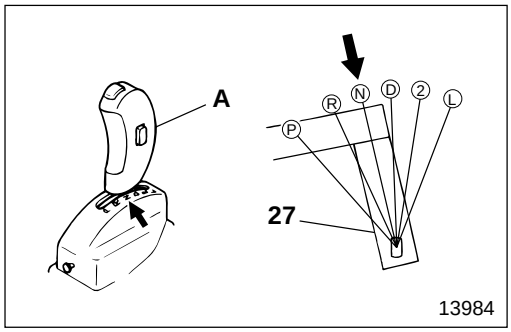

13984

- Put in-cab automatic transmission lever knob **A** and automatic transmission lever **27** into the N range.

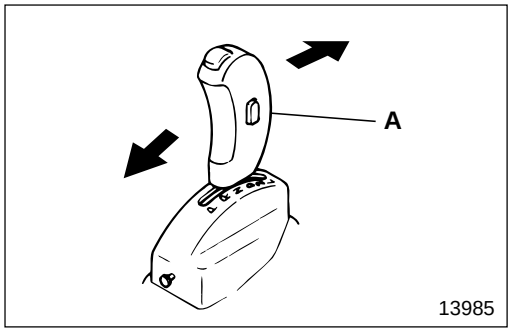

13985

- Jiggle in-cab automatic transmission lever knob **A** back and forth.

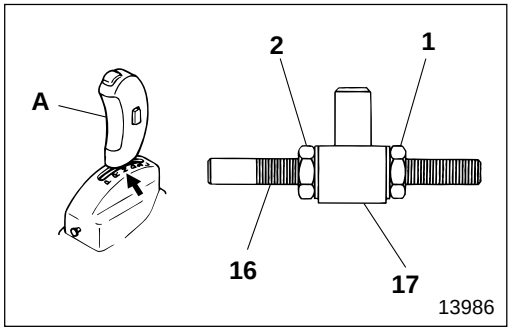

- After making sure that in-cab automatic transmission lever knob **A** is in the N range, tighten nuts **1**, **2** at specified torque.

CAUTION

When tightening nuts 1, 2 make sure that adjuster 17 does not move from its position.

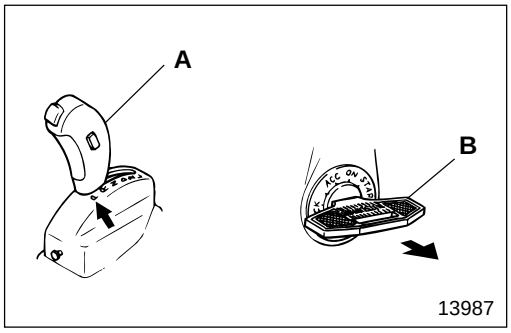

- Make sure that starter key **B** can be pulled out when in-cab automatic transmission lever knob **A** is in the N range.

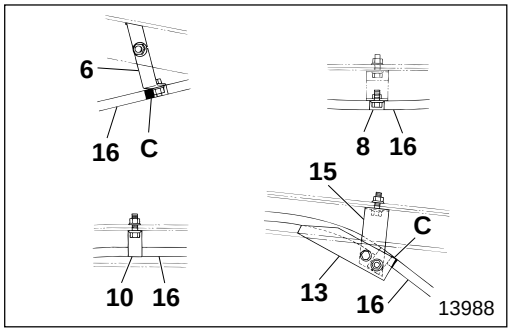

- Install brackets **6**, **15** to marking area **C** of selector cable **16** as illustrated. Install clips **8**, **10** and insulator **13** in that order.

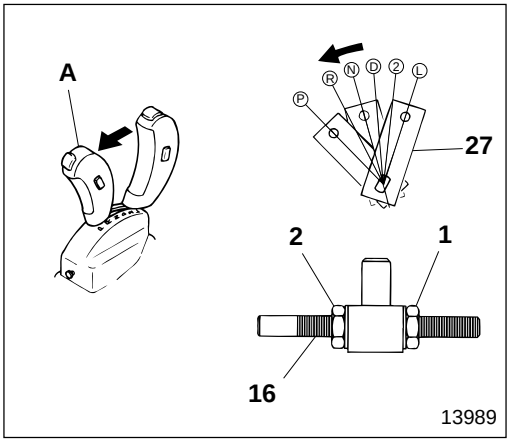

[Adjustment]

While shifting the in-cab automatic transmission lever knob **A** through all the ranges from L to P, use nuts **1**, **2** to adjust selector cable **16** so that automatic transmission lever **27** can move smoothly through ranges L to P.

CAUTION

If nuts 1, 2 are adjusted incorrectly, in-cab automatic transmission lever knob A will not move smoothly around ranges L or P. Incorrect adjustment can also prevent the starter key from being pulled out when the range selector lever is in the P range.

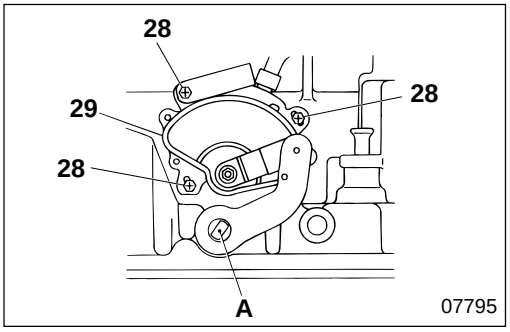

29 Inhibiter switch

[Removal]
After moving manual shaft **A** to the L range as illustrated, loosen bolt **28** and remove inhibiter switch **29**.

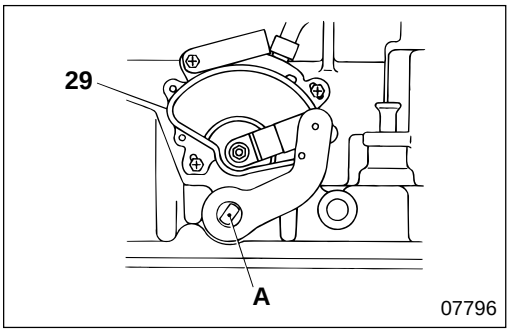

[Installation]
Move manual shaft **A** to the L range as illustrated and install inhibiter switch **29** temporarily.

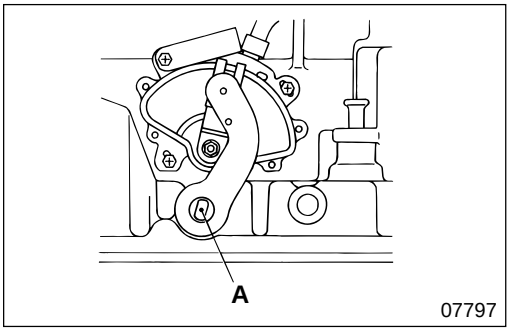

- Move manual shaft **A** to the N range as illustrated.

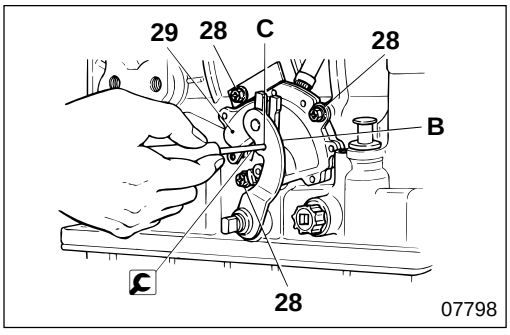

- Insert 🔧 inhibiter switch set pin or a ø4 mm pin through positioning holes **C** of inhibiter switch **29** and range selector lever **B** at right angles, tighten bolt **28** at specified torque and pull out the pin.

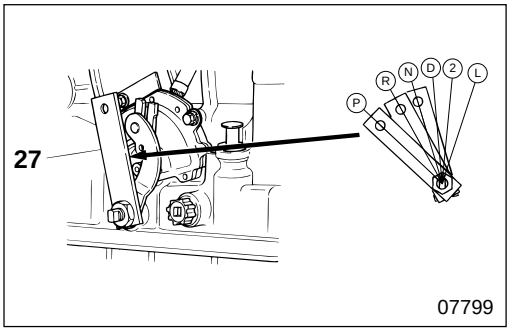

[Inspection]
- Check to make sure that when lever **27** is moved to the R range, the back lamp lights and the back buzzers (inside and outside the cab) sound. Also check to see that the starter operates when the lever is in the N and P ranges.

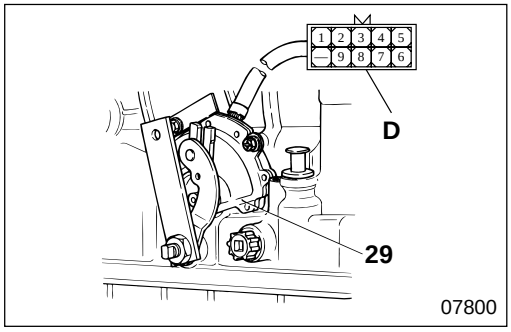

- Use a tester and check wiring connector **D** leading out from inhibiter switch **29** for continuity.
  < Connection chart >

	1	2	3	4	5	6	7	8	9
P	○	○	○				○		
R			○					○	
N	○	○	○						○
D			○			○			
2			○		○				
L			○	○					

○——○ : There is continuity between terminals ○ and ○.

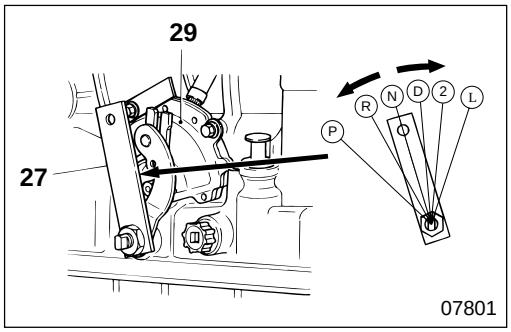

- Check to make sure that when lever **27** is in the N range and is rotated in both directions from a fixed position, continuity exists within (almost) the same range in both other directions. (Continuity within approximately 1.5° from the fixed position in each of the other two directions is considered normal.)
  Adjust inhibiter switch **29** as required, depending on whether there is continuity and whether continuity is in the correct range.

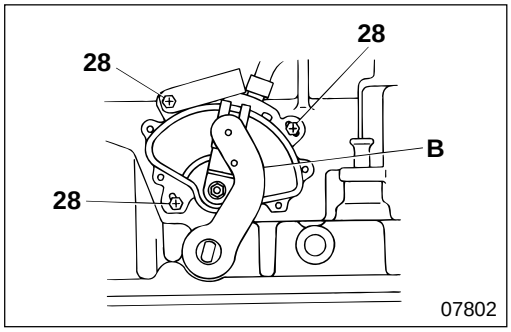

[Adjustment]

- Loosen bolts **28** and move range selector lever **B** into the N range as illustrated.

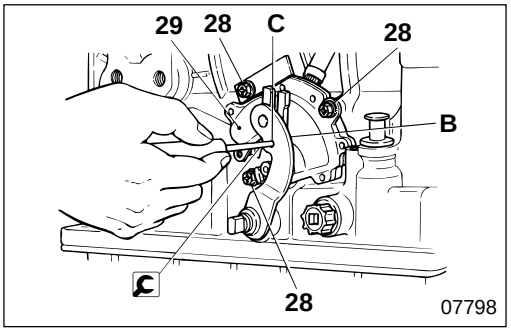

- Insert 🔧 inhibiter switch set pin or a ø4 mm pin through positioning holes **C** of inhibiter switch **29** and range selector lever **B** at right angles, tighten bolt **28** at specified torque and pull out the pin.

- Repeat the inspection procedure mentioned above and replace inhibiter switch **29** if it is faulty.

M E M O

REPLACEMENT OF RELATIVE PARTS OF AUTOMATIC TRANSMISSION BODY

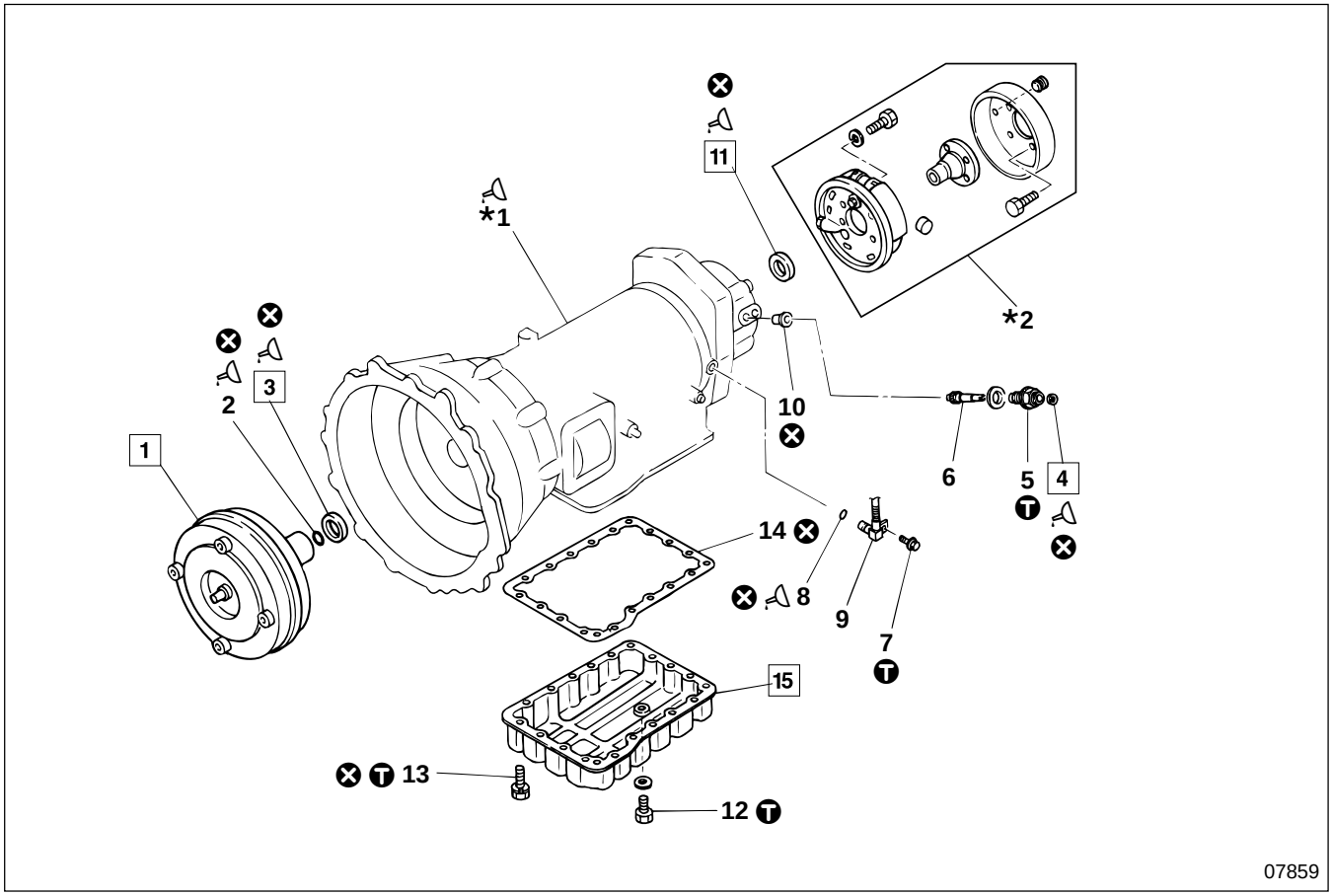

● **Disassembly sequence**

1 Torque converter
2 O-ring
3 Front oil seal
4 Oil seal
5 Speedometer gear bushing
6 Speedometer gear
7 Bolt
8 O-ring
9 Vehicle speed sensor 1
10 Speedometer gear bushing
11 Rear oil seal
12 Drain plug
13 Bolt
14 Gasket
15 Oil pan

***1** : Automatic transmission body
***2** : Parking brake assembly Gr 36
⊗ : Non-reusable parts

● **Assembly sequence**

Follow the disassembly sequence in reverse.

Tightening torque

Unit : N·m {lbf.ft, kgf·m}

Location	Parts to be tightened	Tightening torque	Remarks
5	Speedometer gear bushing	78 to 88 {58 to 65, 8 to 9}	—
7	Bolt (Vehicle speed sensor 1 mounting)	4.9 to 6.9 {3.6 to 5.1, 0.5 to 0.7}	—
12	Drain plug	29 to 39 {22 to 29, 3.0 to 4.0}	—
13	Bolt (Oil pan mounting)	6.9 to 8.8 {5.1 to 6.5, 0.7 to 0.9}	—

Sealant

Location	Points of application	Kinds	Quantity
2	O-ring	Automatic transmission fluid (DEXRON II type)	As required
3	Outer periphery of front oil seal	Automatic transmission fluid (DEXRON II type)	As required
	Lip area of front oil seal	Wheel bearing grease [NLGI No.2 (Li soap)]	As required
4	Lip and packing areas of oil seal	Wheel bearing grease [NLGI No.2 (Li soap)]	As required
8	O-ring	Automatic transmission fluid (DEXRON II type)	As required
11	Outer periphery of rear oil seal	Automatic transmission fluid (DEXRON II type)	As required
	Lip area of rear oil seal	Wheel bearing grease [NLGI No.2 (Li soap)]	As required
***1**	Installation surface of front and rear oil seals	Automatic transmission fluid (DEXRON II type)	As required

Special tools

Unit : mm {in.}

Location	Tool name and shape	Part No.	Application
3	Oil seal installer 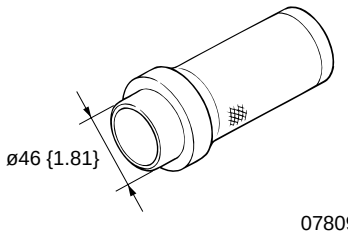 07809	MH062061	Installation of front oil seal
11	Oil seal installer 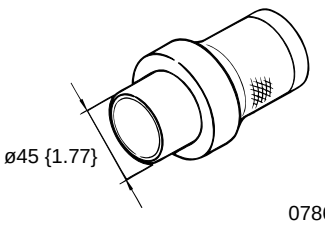 07860	MH062062	Installation of rear oil seal

◆ Service procedure

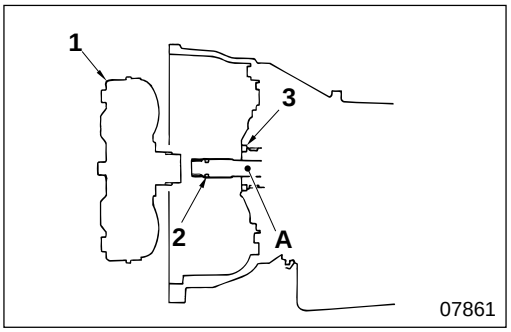

1 Installation of torque converter

- After applying automatic transmission fluid (DEXRON II type) to O-ring **2** and front oil seal **3**, assemble torque converter 1 by rotating and pushing it in.
  A : Input shaft

CAUTION
Be careful not to damage front oil seal 3

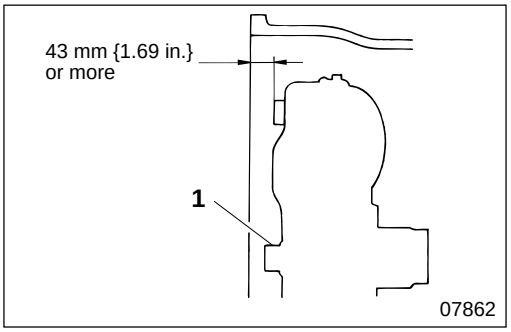

- When torque converter **1** is correctly assembled, the distance between the lug and case surfaces conforms to the dimension as illustrated.

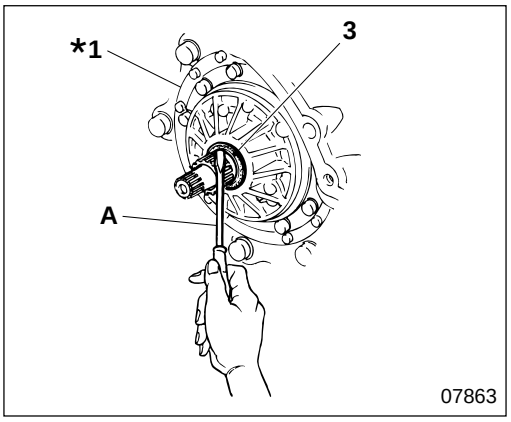

3 Front oil seal

[Removal]

- Using screwdriver **A** or a similar instrument as a lever, remove front oil seal **3** from automatic transmission body ***1**.
- After removing front oil seal **3**, be sure to clean the area on automatic transmission body ***1** where it was installed.

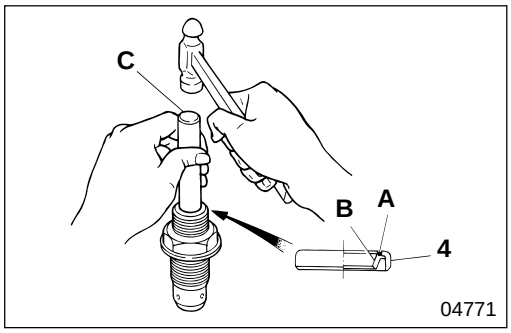

4 Installation of oil seal

- Apply grease to packing area **A** and lip area **B** of oil seal **4**.
- Using a round bar **C** of approximately ø15 mm {0.59 in.}, drive in oil seal **4** evenly in the direction as illustrated.

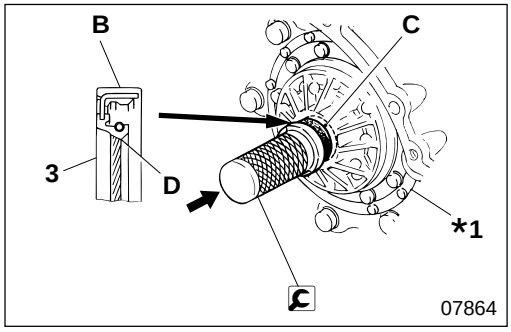

[Installation]
- Apply automatic transmission fluid (DEXRON II type) to periphery **B** of front oil seal **3** and to oil seal installation surface **C** on automatic transmission body ***1**.
- Apply grease to lip area **D** of front oil seal **3**, and use 🔧 oil seal installer to press-fit the oil seal into automatic transmission body ***1**.

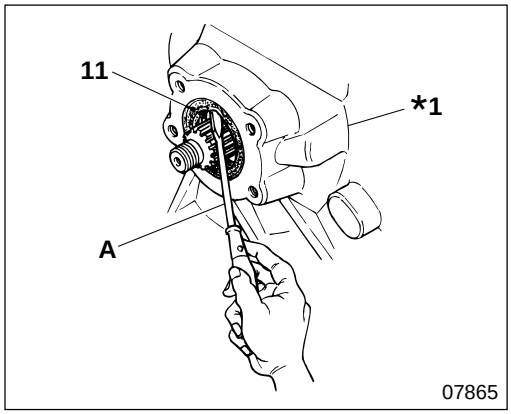

11 **Rear oil seal**

[Removal]
- Using screwdriver **A** or a similar instrument as a lever, remove rear oil seal **11** from automatic transmission body ***1**.
- After removing rear oil seal **11**, be sure to clean the area on automatic transmission body ***1** where it was installed.

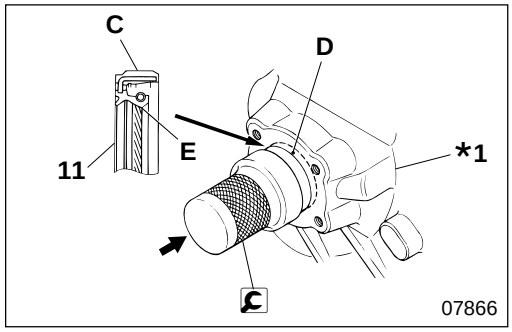

[Installation]
- Apply automatic transmission fluid (DEXRON II type) to periphery **C** of rear oil seal **11** and to oil seal installation surface **D** on automatic transmission body ***1**.
- Apply grease to lip area **E** of rear oil seal **11**, and use 🔧 oil seal installer to press-fit the oil seal into automatic transmission body ***1**.

15 **Installation of oil pan**

- Be sure to wipe off sealant sticking to the thread area on automatic transmission body ***1**.
- Be sure to clean the area on automatic transmission body ***1** where gasket **14** is to be installed.
- Install magnet **A** as illustrated, when using new oil pan **15** or when the magnet has been removed.
  B : Front of the vehicle

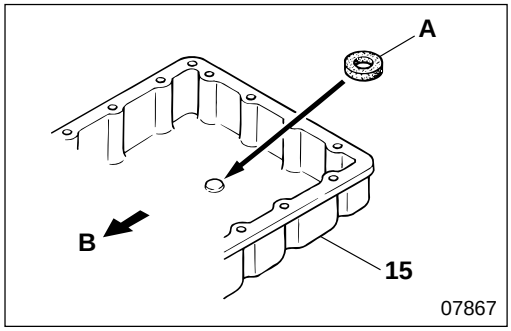

REPLACEMENT OF RELATIVE PARTS OF AUTOMATIC TRANSMISSION BODY

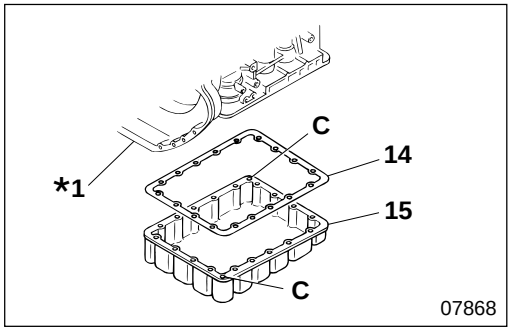

- After installing a new gasket **14** in oil pan **15**, align illustrated holes **C** with automatic transmission body ***1** and install the oil pan.
- When installing gasket **14**, be sure to clean the surface on oil pan **15** where the gasket is to be installed.

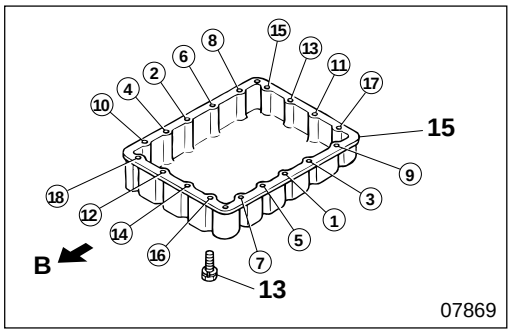

- Install bolts **13** to oil pan **15** and tighten at specified torque in the numbered order as illustrated.
  B : Front of the vehicle

MITSUBISHI
FUSO

FG

Service Manual

Group 24
Transfer

'98 Minor Change

Table of Contents

MITSUBISHI FUSO TRUCK OF AMERICA, Inc.

BACK HOME

Pub No. TWSE9501-224

GROUP 24 TRANSFER < FG >

SPECIFICATIONS 24- 2
STRUCTURE AND OPERATION 24- 2
TROUBLESHOOTING 24- 4
REMOVAL AND INSTALLATION OF TRANSFER ASSEMBLY 24- 6
FRONT DRIVE 24- 10
IDLER GEAR AND REAR DRIVE 24- 16
TRANSFER CONTROL 24- 22

SPECIFICATIONS/STRUCTURE AND OPERATION

SPECIFICATIONS

Item		Specifications
Model		TF3
Gear ratio	HIGH	1.090
	LOW	1.987
Gear oil	Oil quantity L {qts.}	3.0 {3.2}
Dry mass (including transmission body) kg {lb}		Approximately 190 {420}
Control		Front drive and HIGH-LOW switching floor change remote control

STRUCTURE AND OPERATION

Transfer Body

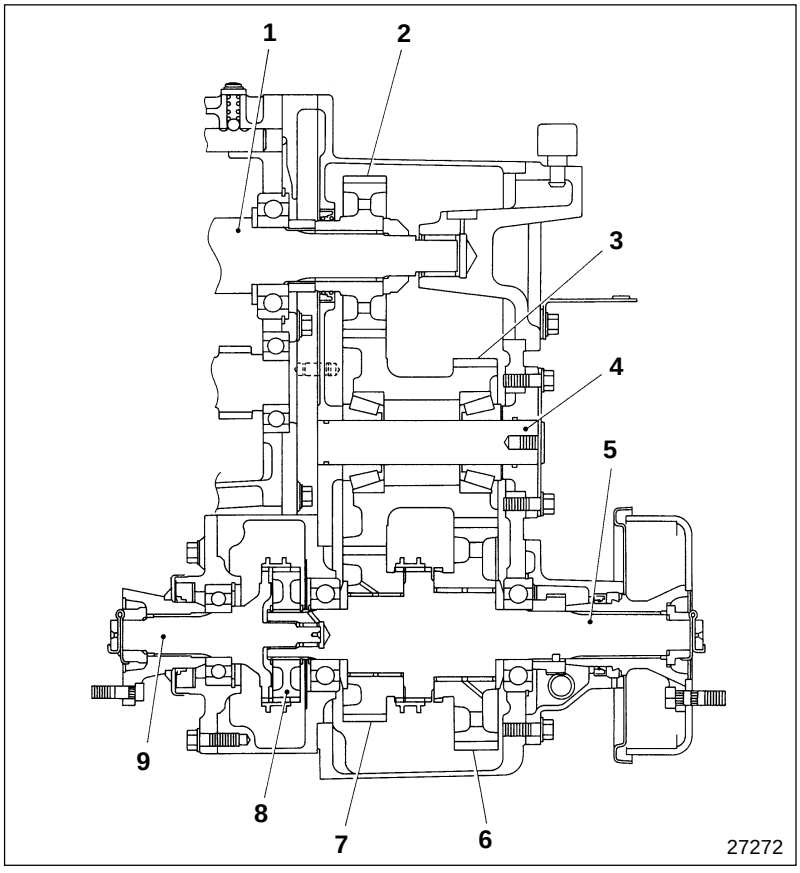

1 Transmission main shaft
2 Drive shaft gear
3 Transfer idler gear
4 Transfer idler shaft
5 Output shaft
6 Output shaft LOW gear
7 Output shaft HIGH gear
8 Front drive hub and sleeve
9 Front drive shaft

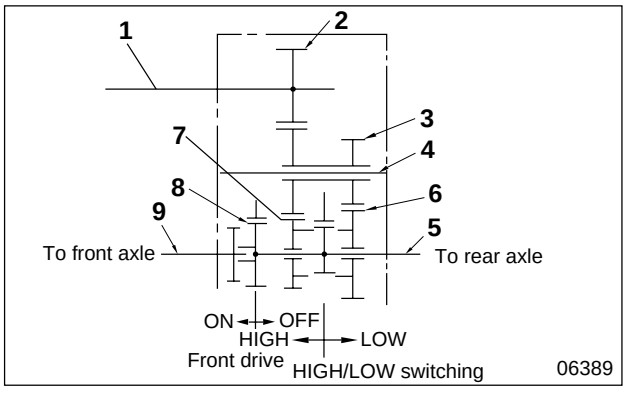

The transfer functions as both the distributer for four-wheel drive and as the sub-transmission with a reduction device. This transfer is a three-shaft constant-mesh type.
HIGH/LOW changeover and front drive ON/OFF are controlled by a transfer control lever in the cab.

Transfer Control

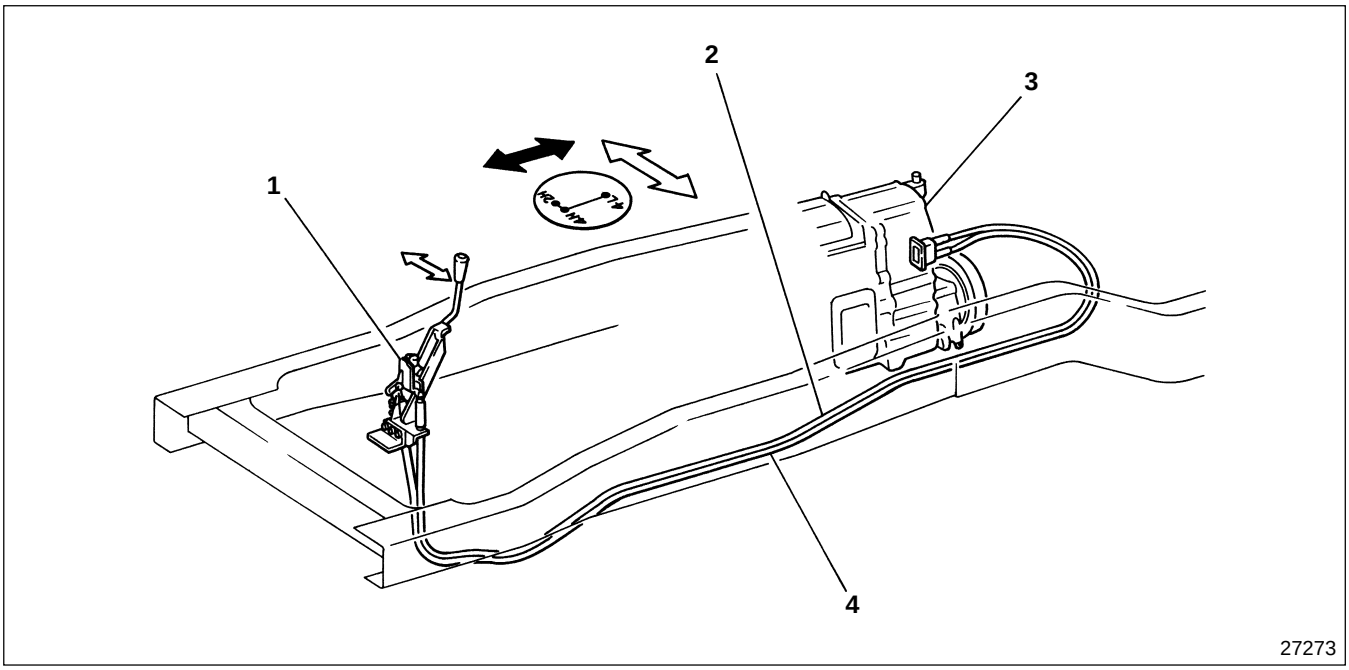

1 Transfer control lever
2 2H/4H control cable
3 Transfer
4 HIGH/LOW control cable

Move the transfer control lever **1** from left to right to change-over between two-wheel drive and four-wheel drive. Forward and backward movement changes between HIGH and LOW.

Transfer Control Electric Circuit

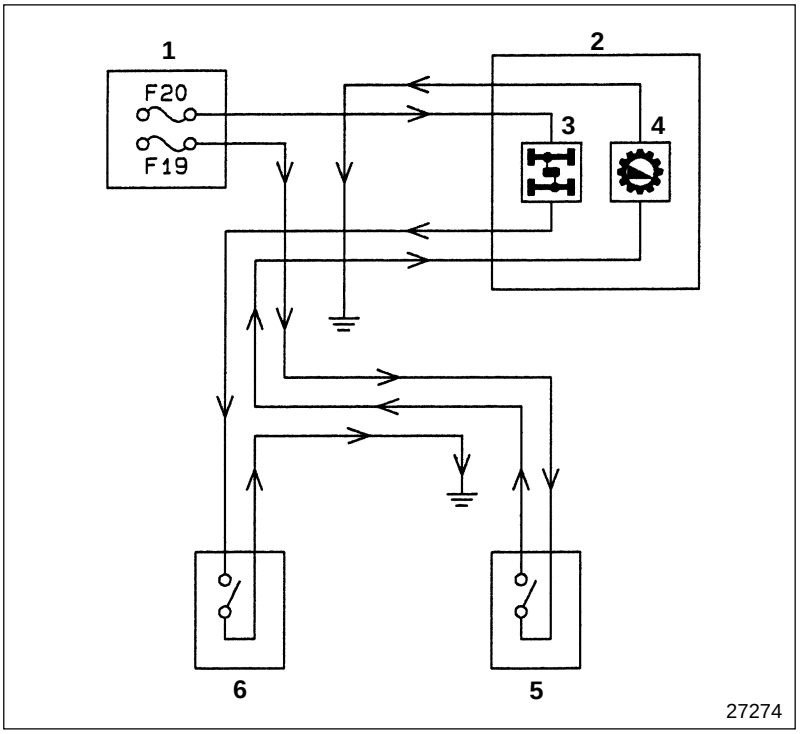

1 Fuse box
2 Meter cluster
3 Transfer four-wheel drive indicator lamp
4 Transfer LOW indicator lamp
5 Transfer LOW switch
6 Transfer four-wheel drive switch

Shift transfer control lever to 4L and transfer LOW switch **5** comes ON and transfer LOW indicator lamp **4** in the meter cluster **2** lights up. Shift transfer control lever to 4H and transfer four-wheel drive switch **6** comes ON and transfer four-wheel drive indicator lamp **3** lights up.

TROUBLESHOOTING

Possible causes	Symptoms	Noise while cruising	Gears fail to engage at front drive changeover	Gears fail to engage at HIGH/LOW changeover	Gears slip out while cruising in front drive	Gears slip out while cruising	Gears fail to disengage on front drive changeover	Gears fail to disengage on HIGH/LOW changeover	Front drive is engaged, but indicator is not lit	LOW is selected, but indicator is not lit	Front drive is not engaged, but indicator is lit	LOW is not selected, but indicator is lit
Transfer body faulty	Front drive shaft and constant sleeve splines worn				○							
	Hub and HIGH/LOW constant sleeve splines worn					○						
	Idler shaft bearing worn or damaged	○										
	Output shaft bearing worn or damaged	○										
	Drive shaft needle bearing worn or damaged	○										
	Gears damaged	○										
	Output shaft LOW gear and HIGH gear backlash excessive	○										
	Gear oil insufficient	○										
	Gear oil viscosity unsuitable	○										
	Constant sleeve and dog clutch cracked		○		○							
	HIGH/LOW constant sleeve and hub cracked			○		○						
Control mechanism faulty	Shift rail bent		○	○								
	Shift rail friction movement poor				○	○						
	Shift fork bent		○	○								
	Shift fork claw worn		○	○								
	Steel ball and shift rail poppet groove worn					○						
	Poppet spring fatigued or cracked							○				
Transfer control system faulty	Control cable faulty		○	○			○	○				
	LOW switch faulty									○		○
	Transfer four-wheel drive switch faulty								○		○	
	Wiring broken or connection poor								○	○		

M E M O

REMOVAL AND INSTALLATION OF TRANSFER ASSEMBLY

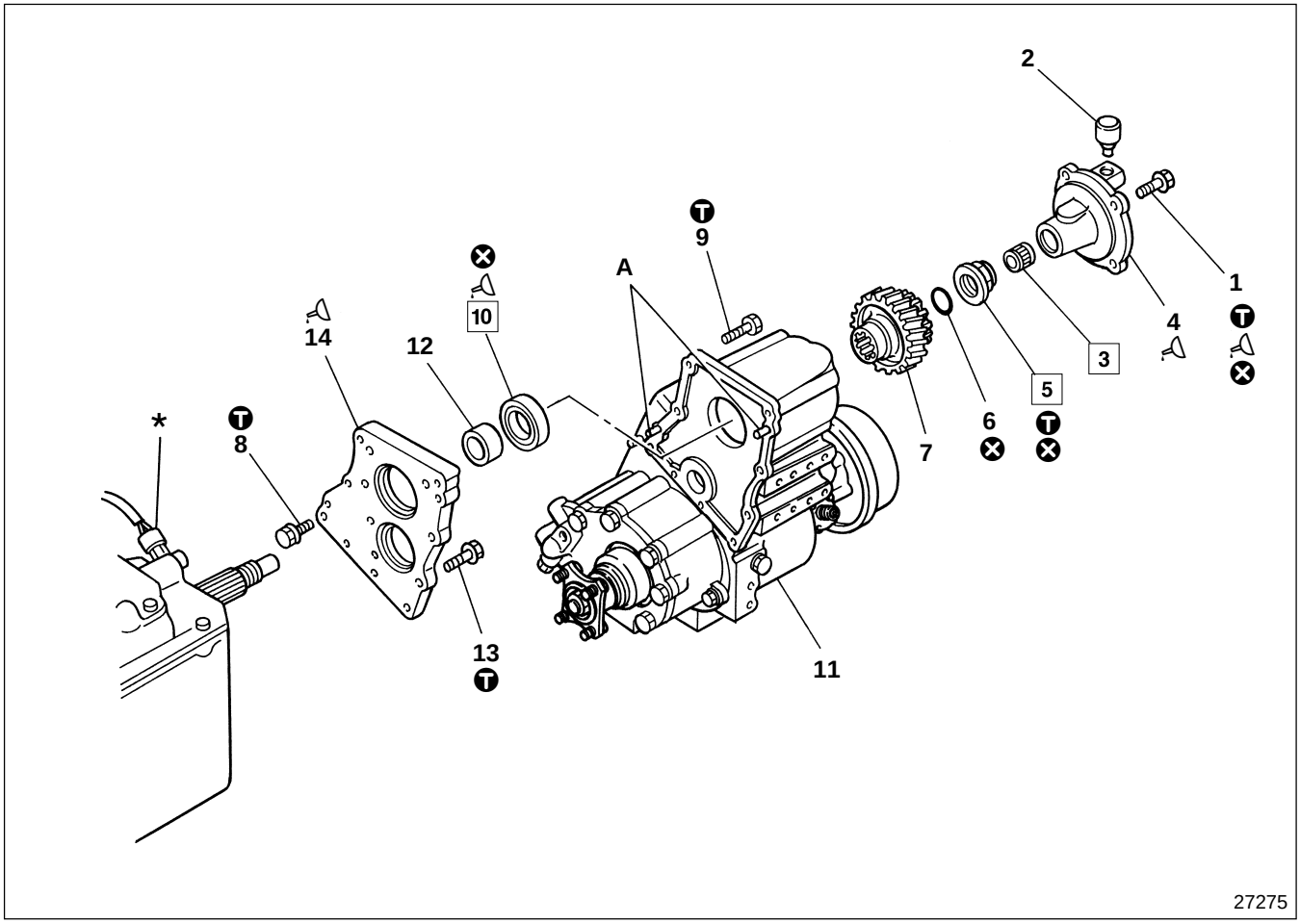

● **Disassembly sequence**

1 Bolt
2 Air breather
3 Needle bearing
4 Transfer input rear cover
5 Lock nut
6 O-ring
7 Drive shaft gear
8 Bolt
9 Bolt
10 Oil seal
11 Transfer assembly P24-10, 16
12 Distance pipe
13 Bolt
14 Extension spacer

A : Positioning pin
***** : Transmission assembly
⊗ : Non-reusable parts

NOTE

- **For removal from vehicle, see Gr 10.**
- **Check backlash of drive shaft gear 7 before disassembly.**
- **Do not remove needle bearing 3 from transfer input rear cover 4 unless it is faulty.**

● **Assembly sequence**

Follow the disassembly sequence in reverse.

NOTE

Check backlash when assembling parts.

Service standards

Unit : mm {in.}

Location	Maintenance item	Standard value	Limit	Remedy
7, 11	Drive shaft gear and transfer idler gear backlash	0.08 to 0.22 {0.0031 to 0.0087}	0.50 {0.020}	—

Tightening torque

Unit : N·m {lbf.ft, kgf·m}

Location	Parts to be tightened	Tightening torque	Remarks
1	Bolt (Transfer input rear cover mounting)	44 {33, 4.5}	—
5	Lock nut tightening torque	490±49 {360±36, 50±5}	—
8	Bolt (Transfer assembly mounting)	44 {33, 4.5}	—
9	Bolt (Transfer assembly mounting)	44 {33, 4.5}	—
13	Bolt (Extension spacer mounting)	44 {33, 4.5}	—

Lubricant and/or sealant

Location	Points of application	Specified lubricant and/or sealant	Quantity
*****	Mounting surface of extension spacer transmission assembly	THREEBOND 1215	As required
1	Thread area of pierce bolt	THREEBOND 1104J	As required
4	Mounting surface of transfer assembly transfer input rear cover	THREEBOND 1215	As required
10	Lip area of oil seal and transfer assembly	Wheel bearing grease [NLGI No.2 (Li soap)]	As required
14	Mounting surface of transfer assembly extension spacer	THREEBOND 1215	As required

Special tools

Unit : mm {in.}

Location	Tool name and shape	Part No.	Application
3	Needle roller bearing installer 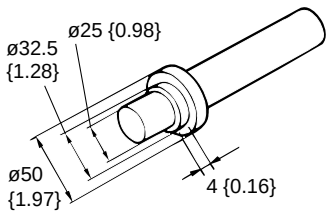	MH061926	Installation of input rear cover needle bearing
5	Socket wrench 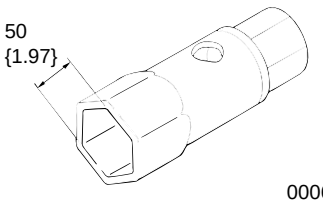	44490-44101	Removal and installation of transmission main shaft lock nut
10	Oil seal installer 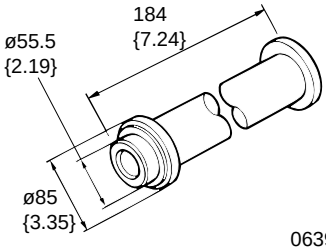	MH061924	Installation of oil seal

REMOVAL AND INSTALLATION OF TRANSFER ASSEMBLY

◆ Service procedure

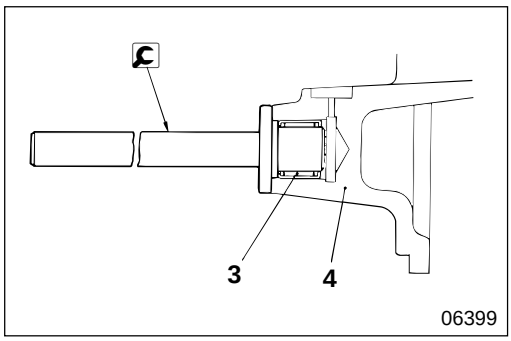

3 **Installation of needle bearing**

: Needle roller bearing installer

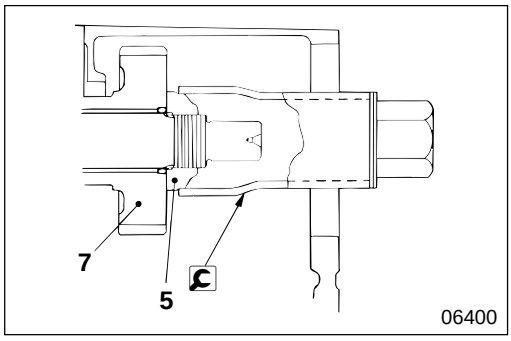

5 **Removal and installation of lock nut**

: Socket wrench

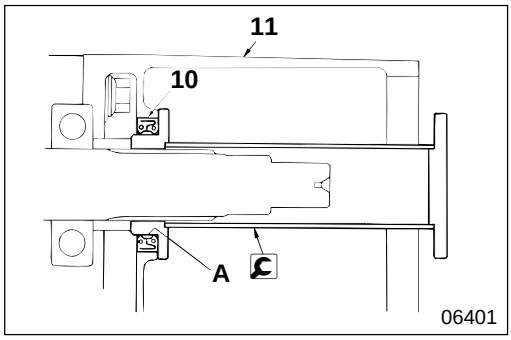

10 **Installation of oil seal**

Apply grease to lip area **A** of oil seal **10**, and press-fit it.

: Oil seal installer

M E M O

FRONT DRIVE

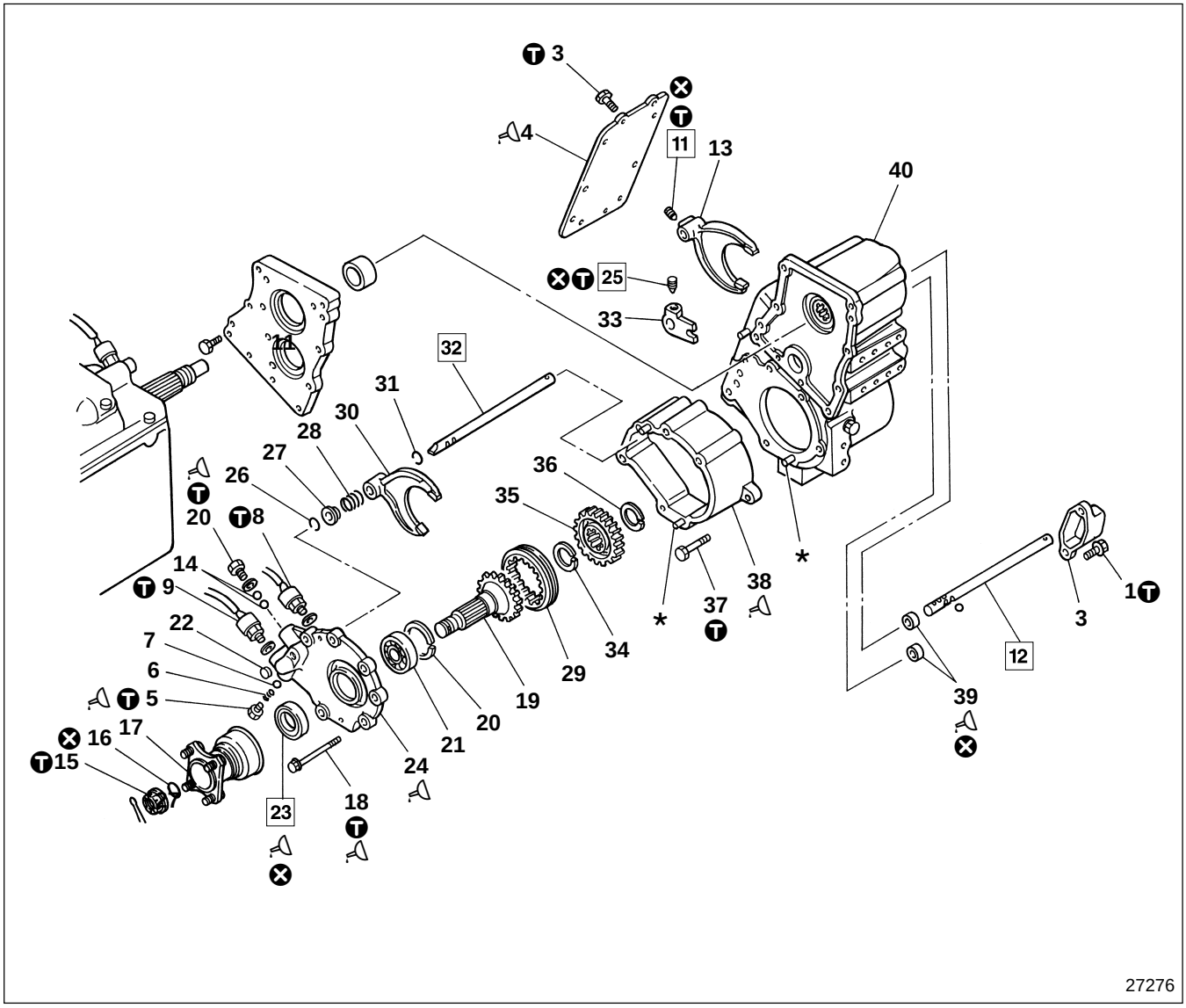

27276

● **Disassembly sequence**

1 Bolt
2 Shift rail cover
3 Bolt
4 Transfer case side cover
5 Screw plug
6 Poppet spring
7 Steel ball
8 Transfer LOW switch
Gr54
9 Transfer four-wheel drive switch Gr54
10 Screw plug
11 Set bolt
12 HIGH/LOW shift rail
13 HIGH/LOW shift fork
14 Interlock ball
15 Lock nut
16 O-ring
17 Companion flange
18 Bolt
19 Front drive shaft
20 Snap ring
21 Bearing
22 Dust cap
23 Oil seal
24 Front drive case cover
25 Set bolt
26 Snap ring
27 Retainer
28 Spring
29 Synchronizer sleeve
30 Front drive shift fork
31 Snap ring
32 Front drive shift rail
33 Shift rail stopper
34 Snap ring
35 Front drive hub
36 Snap ring
37 Bolt
38 Front drive case
39 Oil seal
40 Transfer assembly

*: Dowel pin
⊗: Non-reusable parts

NOTE

HIGH and LOW shift rail 12 cannot be disassembled unless front drive shift rail 32 is set to front drive ON.

● **Assembly sequence**

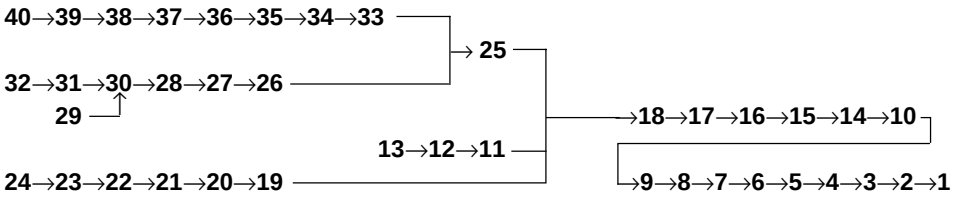

Service standards

Unit : mm {in.}

Location	Maintenance item	Standard value (Basic diameter in [ ])	Limit	Remedy
6	Poppet spring free length	24.85 {0.98}	24.00 {0.94}	Replace
12	Deflection of HIGH/LOW shift rail	0.02 {0.00079} or less	0.03 {0.0012}	Correct or replace
12, 40	Clearance between HIGH/LOW shift rail and transfer assembly rail hole	[16 {0.63}] 0.05 to 0.09 {0.0020 to 0.0035}	0.2 {0.0079}	Replace faulty parts
13	Tilt of claw against HIGH/LOW shift fork hole	0.1 {0.0039} or less	0.2 {0.0079}	Replace
13, 29	Clearance between HIGH/LOW shift fork and synchronizer sleeve	0.3 to 0.5 {0.012 to 0.020}	1.0 {0.039}	Replace faulty parts
29, 30	Clearance between front drive shift fork and synchronizer sleeve	0.3 to 0.5 {0.012 to 0.020}	1.0 {0.039}	Replace faulty parts
30	Tilt of claw against front drive shift fork hole	0.1 {0.0039} or less	0.2 {0.0079}	Replace faulty parts
32	Front drive shift rail deflection	0.02 {0.00079} or less	0.03 {0.0012}	Correct or replace
32, 40	Clearance between front drive shift rail and transfer assembly rail hole	[16 {0.63}] 0.05 to 0.09 {0.0020 to 0.0035}	0.2 {0.0079}	Replace faulty parts

Ⓣ Tightening torque

Unit : N·m {lbf.ft, kgf·m}

Location	Parts to be tightened	Tightening torque	Remarks
1	Bolt (Shift rail cover mounting)	44 {33,4.5}	—
3	Bolt (Transfer case side cover mounting)	24 {17, 2.4}	—
5	Screw plug tightening	39 {29, 4}	—
8	Transfer LOW switch tightening	34±4.9 {25±3.6, 3.5±0.5}	—
9	Transfer four-wheel drive switch tightening	34±4.9 {25±3.6, 3.5±0.5}	—
10	Screw plug tightening	39 {29, 4}	—
11	Set bolt (Shift fork mounting)	29 {22, 3}	Caulk at three points after tightening
15	Lock nut tightening	295±49 {215±36, 30±5}	—
18	Bolt (Front drive case cover mounting)	44 {33, 4.5}	—
37	Bolt (Front drive case mounting)	44 {33, 4.5}	—

Lubricant and/or sealant

Location	Points of application	Specified lubricant and/or sealant	Quantity
4	Mounting surface of transfer assembly transfer case side cover	THREEBOND 1215	As required
5	Thread area of screw plug	THREEBOND 1215	As required
10	Thread area of screw plug	THREEBOND 1215	As required
18	Thread area of pierce bolt	THREEBOND 1104J	As required
23	Pack between lips of oil seal	Wheel bearing grease [NLGI No.2 (Li soap)]	As required
24	Mounting surface of front drive case front drive case cover	THREEBOND 1215	As required
38	Mounting surface of transfer assembly front drive case	THREEBOND 1215	As required
39	Lip area of oil seal	Wheel bearing grease [NLGI No.2 (Li soap)]	As required

Special tools

Unit : mm {in.}

Location	Tool name and shape	Part No.	Application
20, 26, 34	Snap ring expander 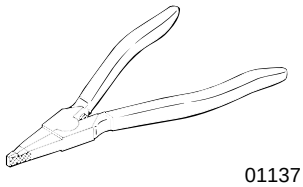 01137	MH061268	Removal and installation of snap ring
23	Bearing installer 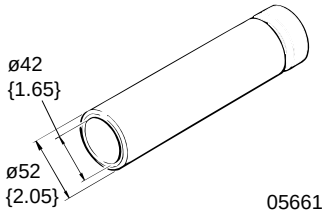 05661	MB999104	Installation of front drive case cover oil seal
	Differential bearing inner race installer adapter 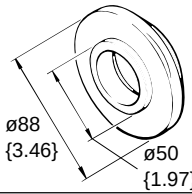 05667	MB999105	
39	Oil seal installer 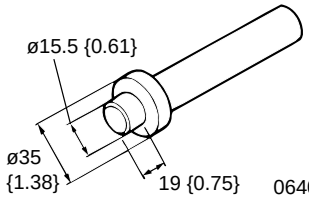 06404	MH061923	Installation of shift rail oil seal

◆ Service procedure

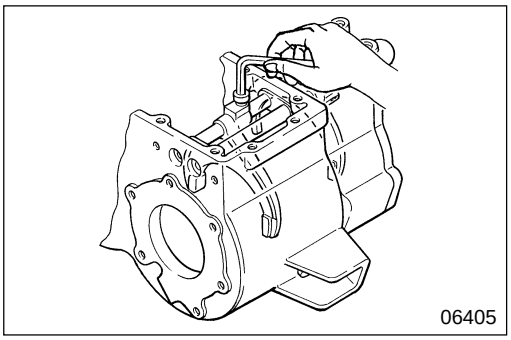

11 **25** **Removal and installation of set bolt**

Tighten shift fork mounting set bolt **11, 25** at specified torque, and stake the thread area at three points using a punch.

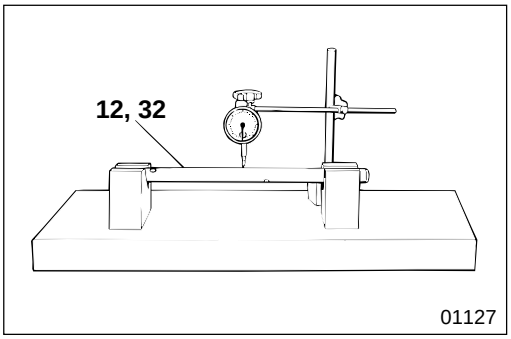

12 **32** **Inspection of shift rail**

If the measured value is higher than the limit, correct or replace shift rails **12**, **32**.

NOTE

To measure the deflection of shift rails 12, 32, turn them one full revolution and read the dial gauge indicator. The deflection is one half of the indicated value.

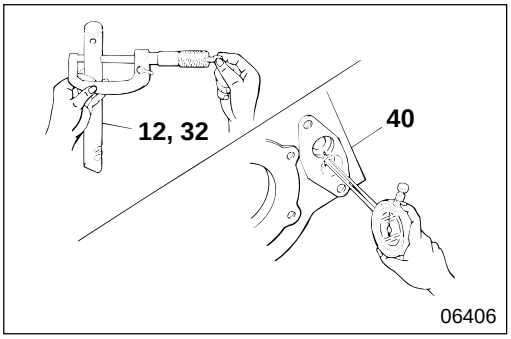

12 **32** **40** **Clearance between shift rail and transfer assembly rail hole**

Measure the outer diameter of shift rail **12**, **32** and the inner diameter of transfer assembly hole **40**. If the clearance is higher than the limit, replace faulty parts.

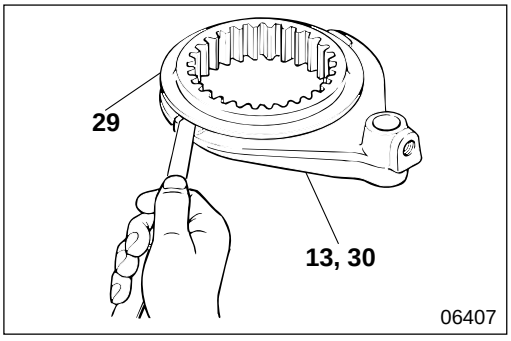

13 **29** **30** **Clearance between shift fork and synchronizer sleeve**

If the measured value is higher than the limit, replace faulty parts.

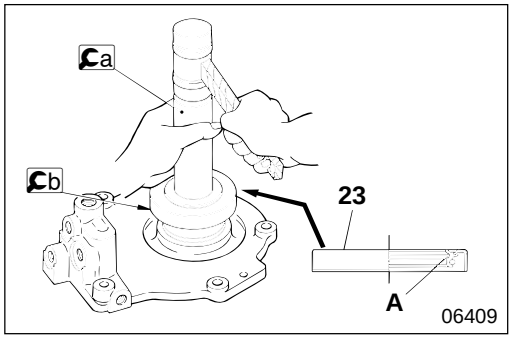

23 **Installation of oil seal**

Apply grease to lip area **A** of oil seal **23**, and press-fit it.

a : Bearing installer

b : Differential bearing inner race installer adapter

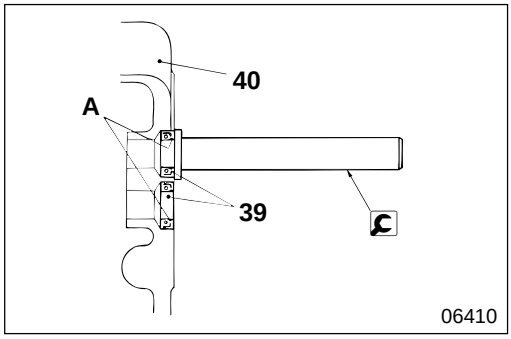

39 **Installation of oil seal**

Apply grease to lip area **A** of oil seal **39** and press-fit it into transfer assembly **40**.

: Oil seal installer

M E M O

IDLER GEAR AND REAR DRIVE

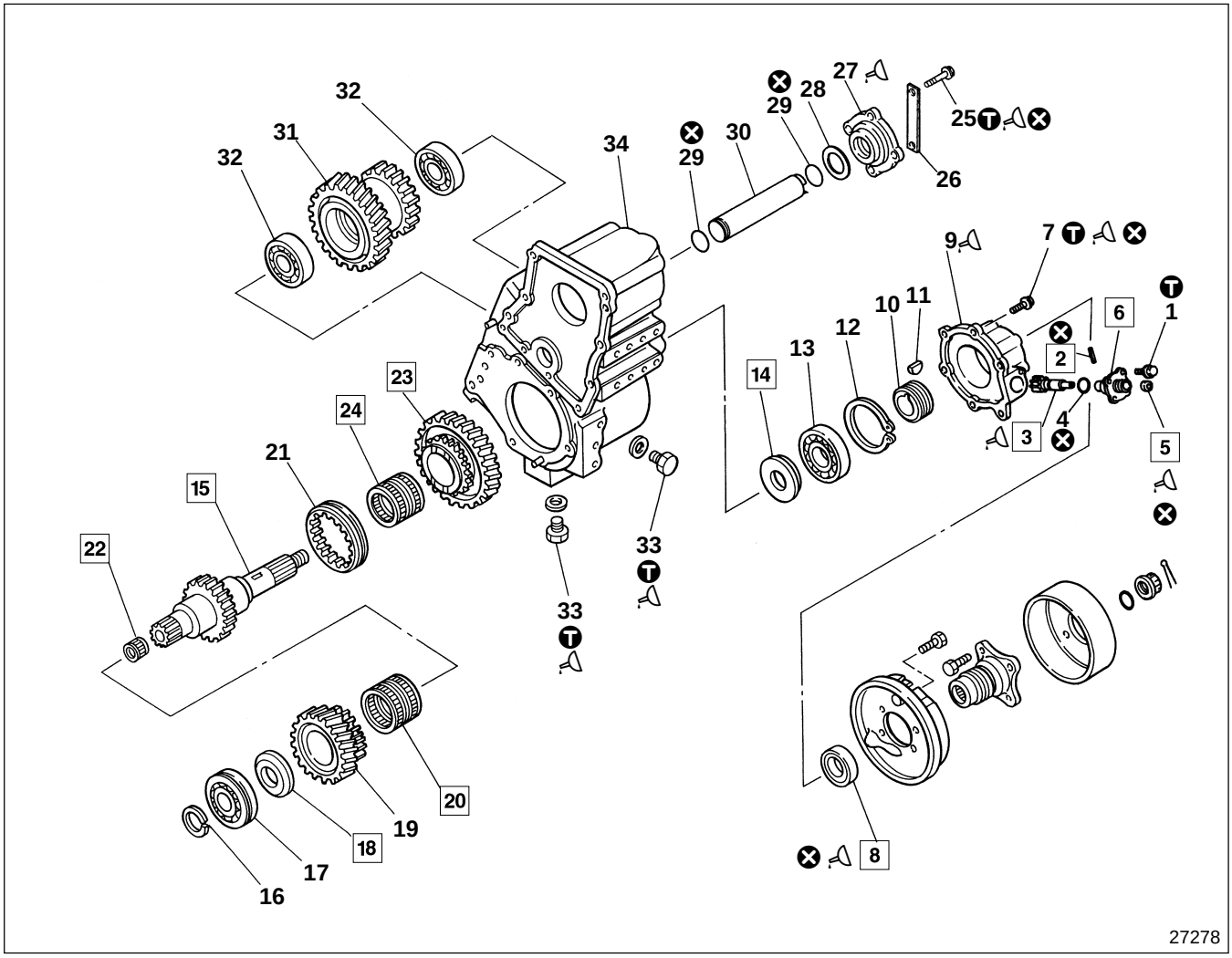

● **Disassembly sequence**

1 Bolt
2 Spring pin
3 Speedometer gear
4 O-ring
5 Oil seal
6 Speedometer gear bushing
7 Bolt
8 Oil seal
9 Output rear cover
10 Speedometer worm
11 Key
12 Snap ring
13 Bearing
14 Thrust washer
15 Rear drive shaft
16 Snap ring
17 Bearing
18 Thrust washer
19 Rear drive shaft HIGH gear
20 Needle bearing
21 Synchronizer sleeve
22 Needle bearing
23 Rear drive shaft LOW gear
24 Needle bearing
25 Bolt
26 Plate
27 Idler rear cover
28 Shim
29 O-ring
30 Transfer idler shaft
31 Transfer idler gear
32 Bearing
33 Drain plug, inspection plug
34 Transfer case

⊗ : Non-reusable parts

NOTE

- **Check backlash and end play of gears before disassembly.**
- **Do not remove needle bearing 22 from rear drive shaft 15 unless it is faulty.**

● **Assembly sequence**

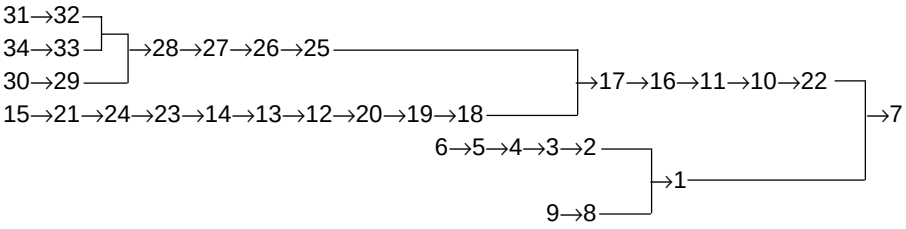

NOTE

- **Check backlash and end play when assembling parts.**
- **Check friction and rotation movements when assembling rotating parts.**

Service standards

Unit : mm {in.}

Location	Maintenance item	Standard value (Basic diameter in [ ])	Limit	Remedy
—	Starting torque of transfer idler gear	0 to 2 {0 to 1.45, 0 to 0.2}	—	Adjust shim
3, 6	Clearance between speedometer gear and speedometer gear bushing	[12] 0.04 to 0.09 {[0.47] 0.0016 to 0.0035}	0.15 {0.0059}	Replace
15, 19, 20	Play of rear drive shaft HIGH gear in diameter direction after assembly	0.02 to 0.06 {0.00079 to 0.0024}	0.12 {0.0047}	Replace faulty parts
15, 23, 24	Play of rear drive shaft LOW gear in diameter direction after assembly	0.02 to 0.06 {0.00079 to 0.0024}	0.12 {0.0047}	Replace faulty parts
19	End play of rear drive shaft HIGH gear	0.25 to 0.40 {0.0098 to 0.0016}	0.60 {0.024}	Replace thrust washer or gear
19, 31	Backlash between rear drive shaft HIGH gear and transfer idler gear	0.08 to 0.22 {0.0031 to 0.0087}	0.50 {0.020}	Replace
21	Clearance between synchronizer sleeve groove and HIGH/LOW shift fork	0.3 to 0.5 {0.012 to 0.020}	1.0 {0.039}	Replace faulty parts
23	End play of rear drive shaft LOW gear	0.25 to 0.40 {0.0098 to 0.016}	0.60 {0.024}	Replace thrust washer or gear
23, 31	Backlash between rear drive shaft LOW gear and transfer idler gear	0.08 to 0.24 {0.0031 to 0.0094}	0.50 {0.020}	Replace

Tightening torque

Unit : N·m {lbf.ft, kgf·m}

Location	Parts to be tightened	Tightening torque	Remarks
1	Bolt (Speedometer gear bushing mounting)	24 {17, 2.4}	—
7	Bolt (Output rear cover mounting)	44 {33, 4.5}	—
25	Bolt (Plate and idler rear cover mounting)	44 {33, 4.5}	—
33	Drain plug and inspection plug tightening	69±15 {51±11, 7.0±1.5}	—

IDLER GEAR AND REAR DRIVE

Lublicant and/or sealant

Location	Points of application	Specified lublicant and/or sealant	Quantity
3	Friction surfaces between speedometer gear and speedometer gear bushing	Molybdenum disulfide grease	As required
5	Lip area of oil seal	Wheel bearing grease [NLGI No.2 (Li soap)]	As required
7	Thread area of bolt	THREEBOND 1104J	As required
8	Pack between lips of oil seal	Wheel bearing grease [NLGI No.2 (Li soap)]	As required
9	Mounting surface of transfer case output rear cover	THREEBOND 1215	As required
25	Thread area of bolt	THREEBOND 1104J	As required
27	Mounting surface of transfer case idler rear cover	THREEBOND 1215	As required
33	Thread area of drain plug and inspection plug	THREEBOND 1105D	As required

Special tools

Unit : mm {in.}

Location	Tool name and shape	Part No.	Application
8	Oil seal installer 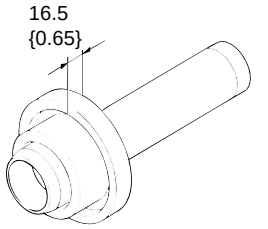 06252	MH062691	Installation of output rear cover oil seal
12	Snap ring expander 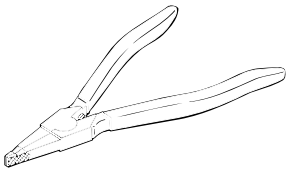 01137	MH061268	Removal and installation of snap rings
22	Needle roller bearing installer 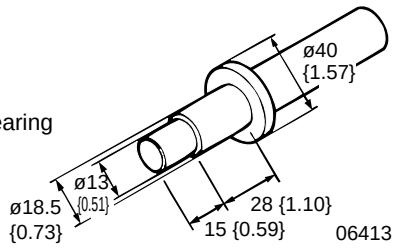 06413	MH061927	Installation of rear drive shaft needle bearing

◆ Service procedure

Inspection before service

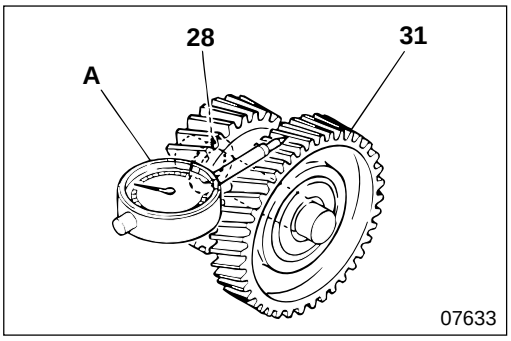

● **Starting torque of transfer idler gear**

- Disassemble parts, and measure the torque with push gauge **A** leaving only transfer idler gear **31** in transfer case.
  If the value deviates from the standard value, adjust it using shim **28**.
- On assembly, also check that starting torque is within the standard value range using the same method.
- Shim **28** is available in four thicknesses : 0.01 mm {0.00039 in.}, 0.02 mm {0.00079 in.}, 0.03 mm {0.0012 in.}, 0.06 mm {0.0024 in.}.

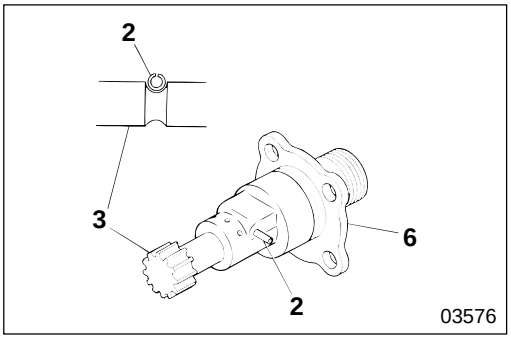

2 **Driving-in spring pin**

Drive spring pin **2** into speedometer gear bushing **6** with the opening in the opposite direction to speedometer gear **3**.

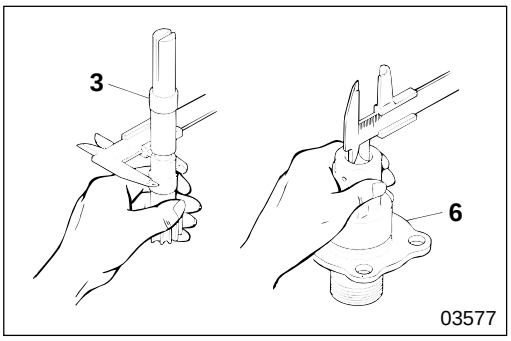

3 **6** **Clearance between speedometer gear and speedometer gear bushing**

If the clearance is higher than the limit, replace the faulty parts.

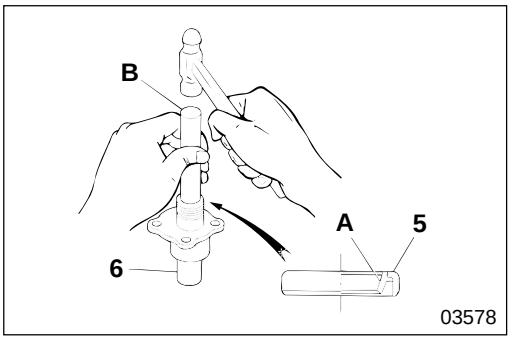

5 **Installation of oil seal**

Apply grease to lip area **A** of the inner rim of the oil seal, and press-fit oil seal evenly into speedometer gear bushing **6** in the direction as illustrated using bar **B** (approximately ø15 mm {0.59 in.}).

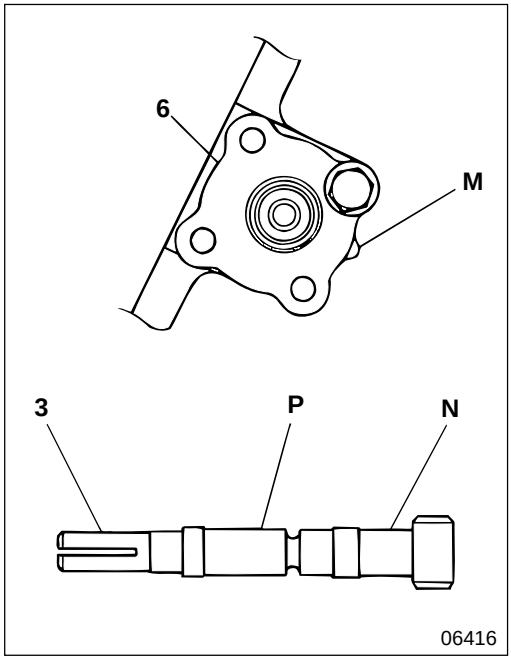

6 Installation of speedometer gear bushing

Due to its eccentric center arrangement, speedometer gear bushing **6** allows replacement of speedometer gear **3** with gears having a different number of teeth by changing only the installation direction, the worm gear does not have to be changed.
When installing the bushing, align the stamped number, identical to the number of speedometer gear teeth, with alignment mark **M** of output rear cover **9**.
The number of speedometer gear teeth can be identified by the identification marks stamped on **N** or **P**.

Identification mark and number of speedometer gear teeth

Identification mark	A	B	C	D	L	E	F	G	H	I	J	K
Number of teeth	15	16	17	18	19	20	21	22	23	24	25	26
Gear ratio	3.0	3.2	3.4	3.6	3.8	4.0	4.2	4.4	4.6	4.8	5.0	5.2

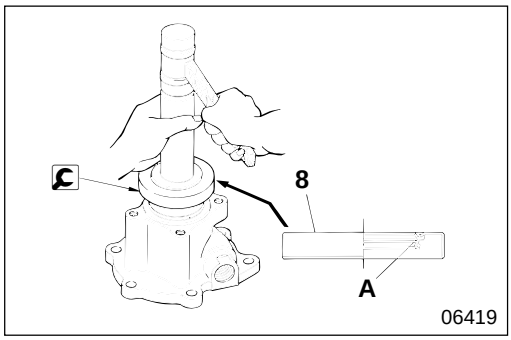

8 Installation of oil seal

Apply grease to lip area **A** of oil seal **8** and press-fit it into output rear cover **9**.

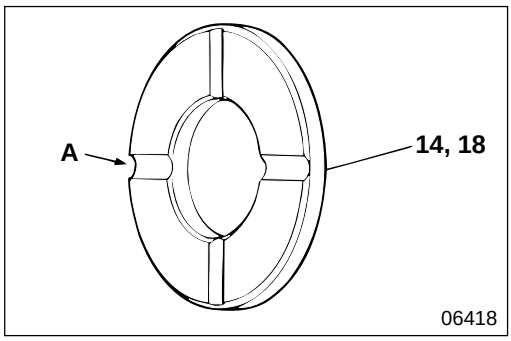

14 18 Installation of thrust washer

Install thrust washer **14**, **18** with oil groove **A** facing gear side.

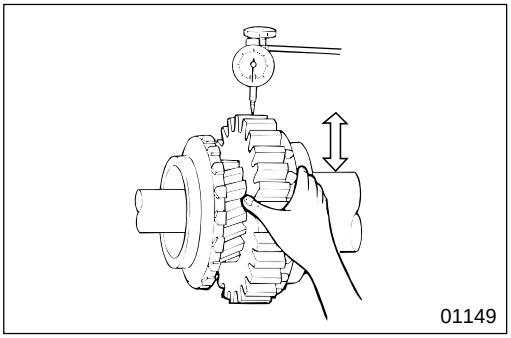

15 **18** **20** **23** **24** **Play of rear drive shaft gear in diameter direction after assembly**

If the measured value is higher than the limit, replace faulty parts.

NOTE

When replacing needle bearing 20, 24, use bearings from the same color package.

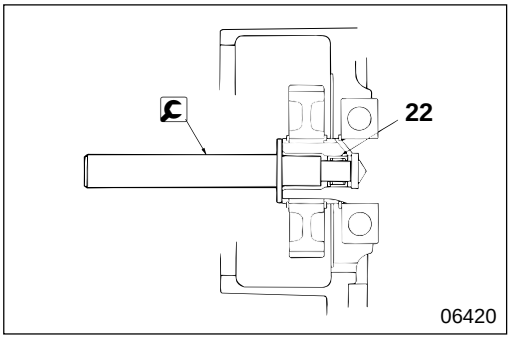

22 **Installation of needle bearing**

: Needle roller bearing installer

Control Cable < Removal from the transfer side >

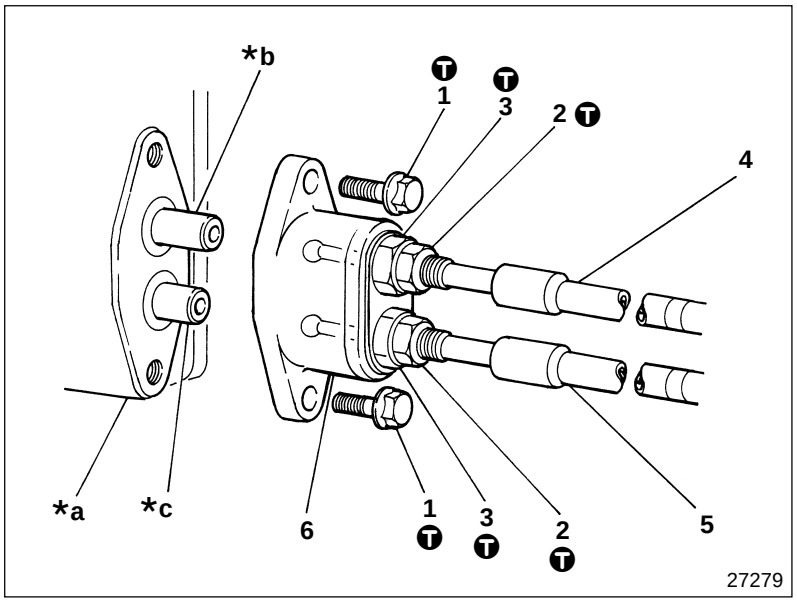

● **Work before removal**

P24-22

● **Removal sequence**

1 Bolt
2 Nut
3 Nut
4 HIGH/LOW control cable
5 2H/4H control cable
6 Shift rail cover

***a** : Transfer body
***b** : HIGH/LOW shift rail
***c** : Front drive shift rail

● **Installation sequence**

Follow the removal sequence in reverse.

Ⓣ Tightening torque

Unit : N·m {lbf.ft, kgf·m}

Location	Parts to be tightened	Tightening torque	Remarks
1	Bolt (Shift rail cover mounting)	44 {33, 4.5}	—
2, 3	Nut (HIGH/LOW and 2H/4H control cable mounting)	44 to 59 {33 to 43, 4.5 to 6.0}	—

◆ Service procedure

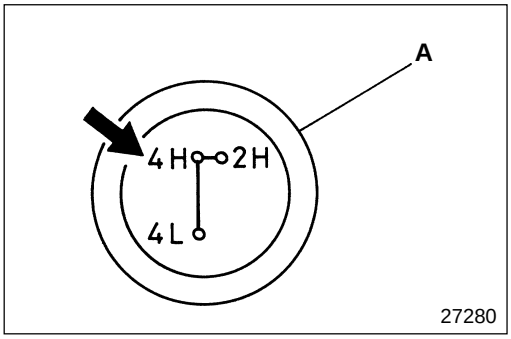

● **Work before removal**

When removing, move shift lever knob **A** of the transfer control bar to the position 4H.

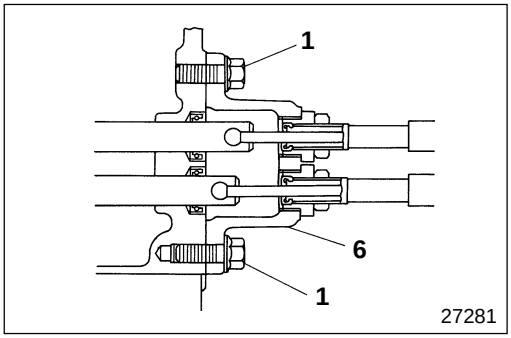

4 **5** **HIGH/LOW, 2H/4H Control Cable**

[Removal]

- Remove bolt **1** securing shift rail cover **6**.

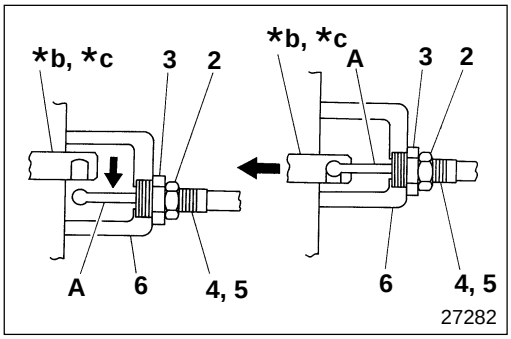

- Remove shift rail cover **6**, and then remove inner cable **A** of HIGH/LOW and 2H/4H control cables **4** and **5**, from HIGH/LOW shift rail ***b**, and front drive shift rail ***c**. Loosen nuts **2** and **3** to their end of their threads.

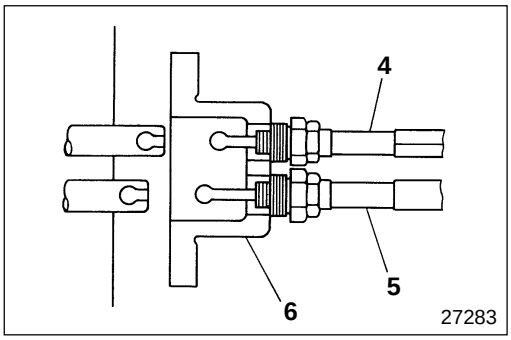

- Remove HIGH/LOW and 2H/4H control cables **4** and **5** from shift rail cover **6**.

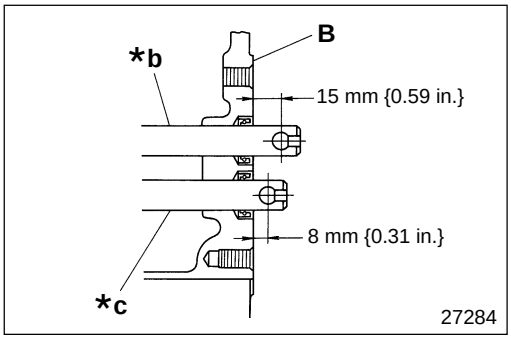

[Installation]

- Position HIGH/LOW shift rail ***b** and front drive shift rail ***c** as shown.
  B : Transfer end face

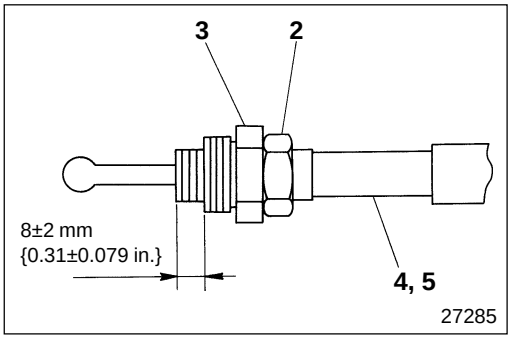

- Adjust nuts **2** and **3** to the end of the thread to align the end of HIGH/LOW and 2H/4H control cables **4** and **5** as shown.

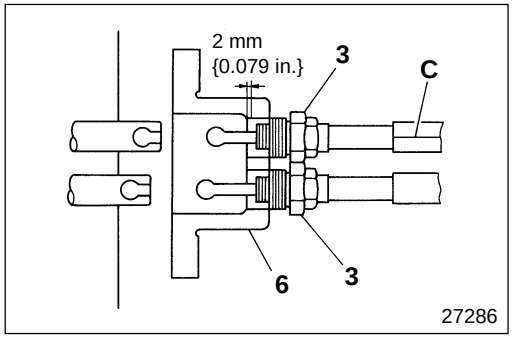

•Screw nut **3** into shift rail cover **6** and tighten it to the specified torque.

CAUTION

- **Ensure that the HIGH/LOW and four-wheel / two-wheel drive control cables are not positioned incorrectly.**
  The cable with the white line C is for HIGH/LOW.
- **After installation, the end of nut 3 should be located 2 mm{0.079 in.} from the front face of shift rail cover 6.**

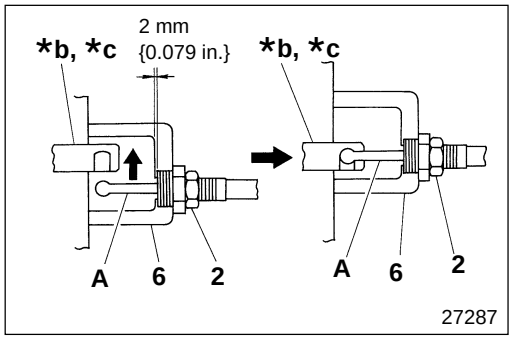

- Tighten the nut with its specified torque and lock it with nut **3**. Then slide the shift rail cover **6** and install the inner cable **A** to HIGH/LOW shift rail ***b** and front drive shift rail ***c**.

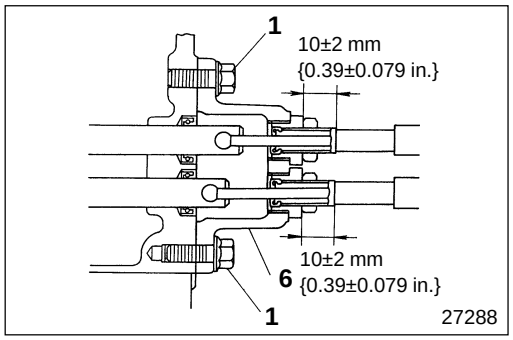

- Tighten shift rail cover **6** installation bolt **1** at the specified torque.

M E M O

Control cable < Removal from the transfer control cable side >

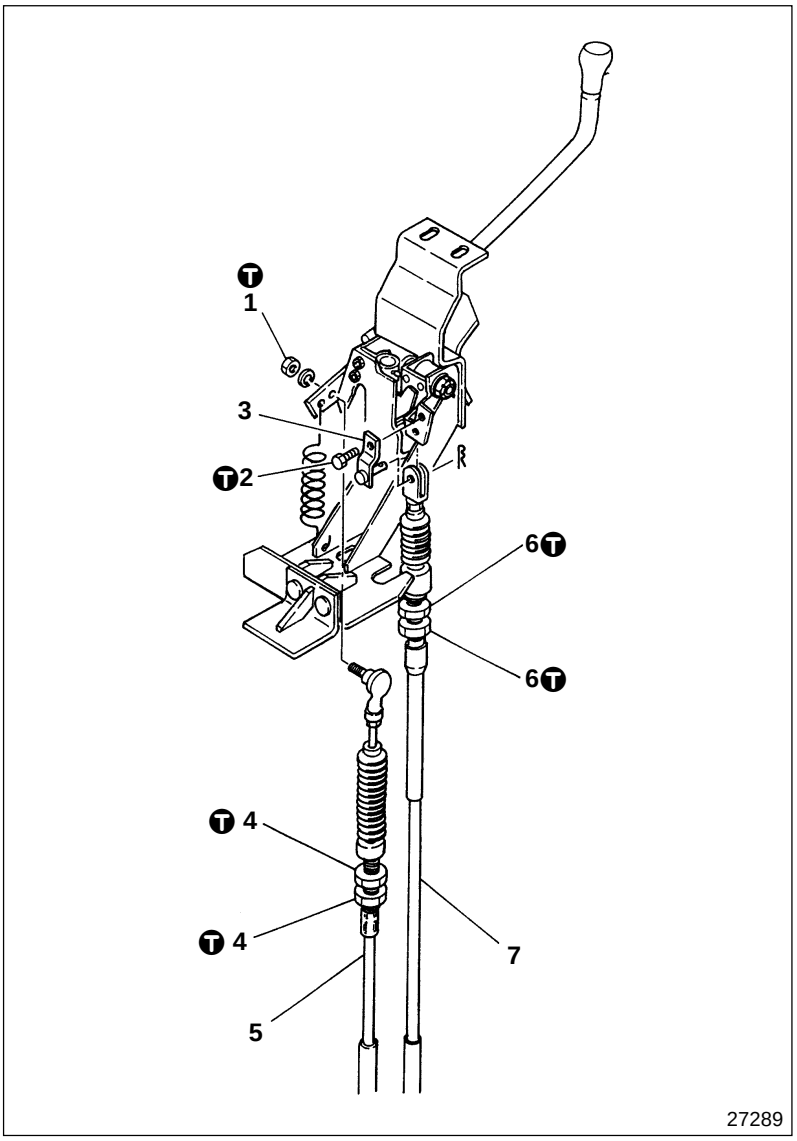

● **Removal Sequence**

1 Nut
2 Bolt
3 Lock pin
4 Nut
5 HIGH/LOW control cable
6 Nut
7 2H/4H control cable

● **Installation sequence**

Follow the removal sequence in reverse.

Ⓣ Tightening torque

Unit : N·m {lbf.ft, kgf·m}

Location	Parts to be tightened	Tightening torque	Remarks
1	Nut (HIGH/LOW control cable mounting)	3.9 to 5.9 {2.9 to 4.3, 0.4 to 0.6}	—
2	Bolt (2H/4H control cable mounting)	3.9 to 5.9 {2.9 to 4.3, 0.4 to 0.6}	—
4, 6	Nut (HIGH/LOW control cable and 2H/4H control cable mounting)	44 to 59 {33 to 43, 4.5 to 6.0}	—

◆ Service procedure

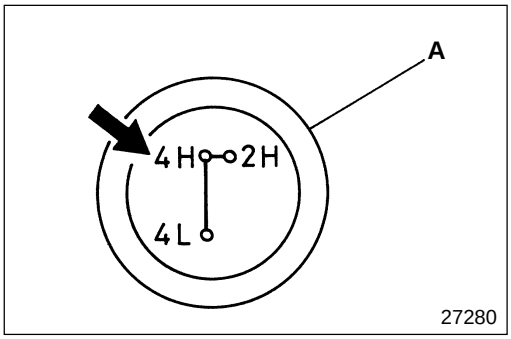

● Adjustment after installation

- Position shift lever **A** on position 4H.

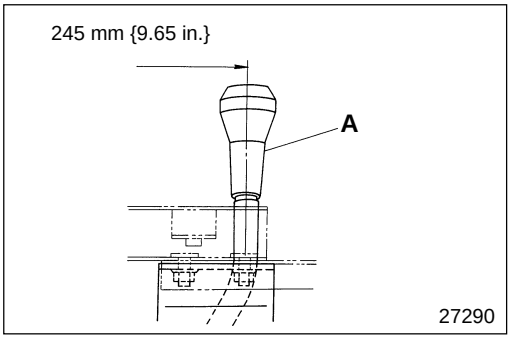

- Adjust the distance between the center of the steering wheel and center of the shift lever knob **A** using the nut **6**.

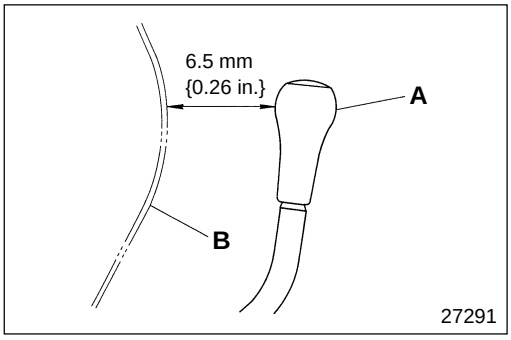

- Adjust nut **4** until the distance between shift lever **A** and the front face of inner panel **B** is equal to distance illustrated.

TRANSFER CONTROL

Transfer Control Level

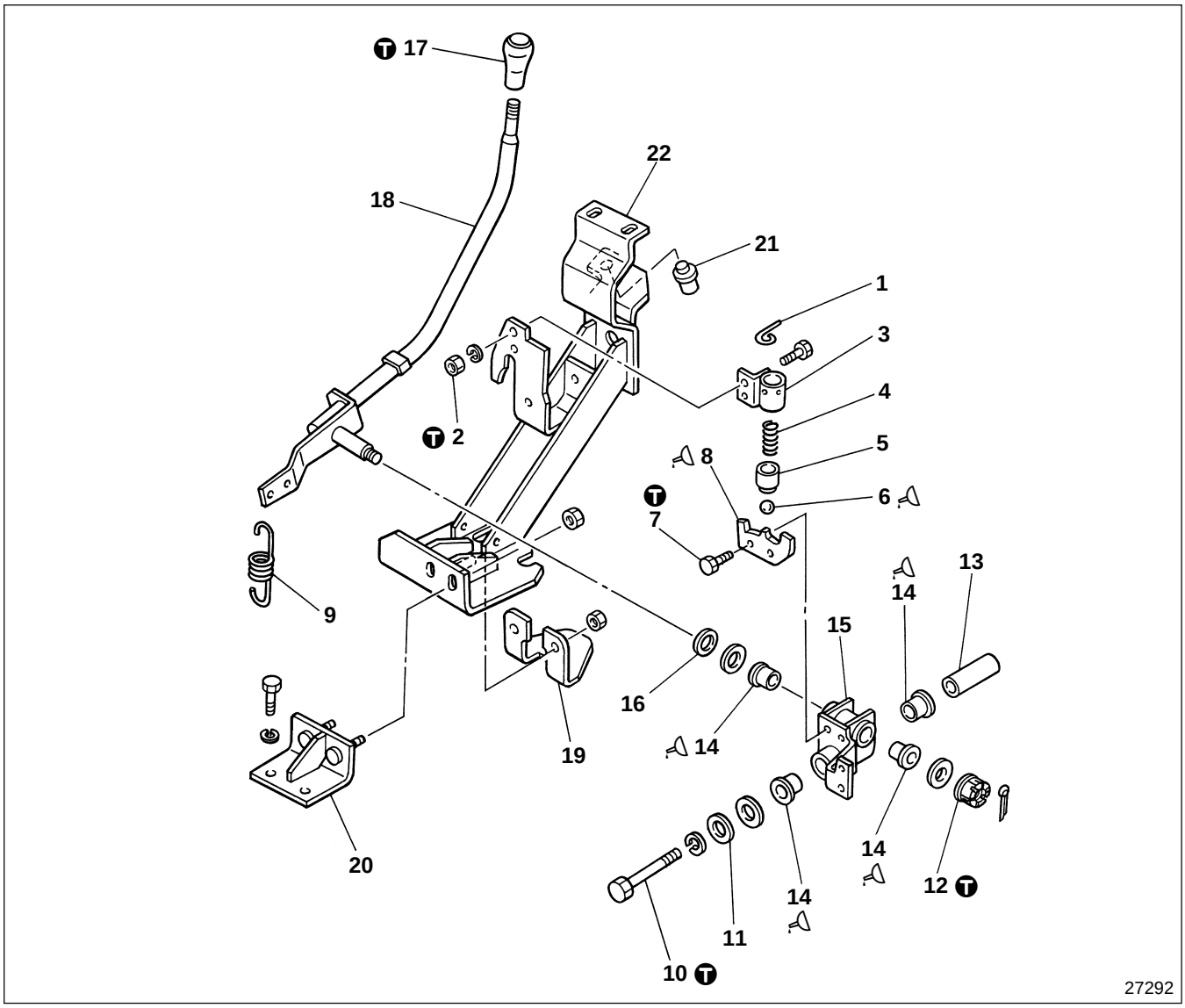

● **Disassembly sequence**

1	Pin	**9**	Spring	**17**	Shift lever knob
2	Nut	**10**	Bolt	**18**	Change lever assembly
3	Support holder	**11**	Conical spring	**19**	Bracket
4	Spring	**12**	Nut	**20**	Bracket
5	Ball supporter	**13**	Collar	**21**	Stopper
6	Steel ball	**14**	Bushing	**22**	Lever bracket
7	Bolt	**15**	Cross sleeve		
8	Detent plate	**16**	Conical spring		

CAUTION⚠

- **When removing pin 1, be careful that spring 4 does not fly out.**
- **When removing support holder 3, ensure that steel ball 6 is not dropped.**

● **Assembly sequence**

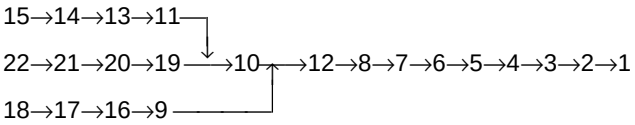

Service standards

Unit : mm {in.}

Location	Maintenance item	Standard value	Limit	Remedy
9	Spring load (installation 133 {5.24})	46 N {10 lbf, 4.7 kgf}	41 N {9 lbf,4.2 kgf}	Replace

Tightening torque

Unit : N·m {lbf.ft, kgf·m}

Location	Parts to be tightened	Tightening torque	Remarks
2	Nut (Support holder mounting)	3.9 to 5.9 {2.9 to 4.3, 0.4 to 0.6}	—
7	Bolt (Detent plate mounting)	3.9 to 5.9 {2.9 to 4.3, 0.4 to 0.6}	—
10	Bolt (Cross sleeve mounting)	8.8 to 13.7 {6.5 to 10.0, 0.9 to 1.4}	—
12	Nut (Change lever assembly mounting)	8.8 to 13.7 {6.5 to 10.1, 0.9 to 1.4}	—
17	Shift lever knob mounting	5.9±1.5 {4.3±1.08, 0.6±0.15}	—

Lubricant

Location	Points of application	Specified lubricant	Quantity
6	Apply grease all over the steel ball	Multipurpose type grease [NLGI No.2 (Li soap)]	As required
8	Apply grease all over detent plate	Multipurpose type grease [NLGI No.2 (Li soap)]	As required
14	Grease inside surface of bushing	Multipurpose type grease [NLGI No.2 (Li soap)]	As required

MITSUBISHI FUSO

FE

Service Manual

Group 25 - Propeller Shaft

Group 25 - Propeller Shaft
1998 Minor Change

BACK HOME

MITSUBISHI FUSO TRUCK OF AMERICA, Inc.

Pub No. TWSE9501-00

MITSUBISHI
FUSO

FG

Service Manual

Group 25
Propeller Shaft

'98 Minor Change

Table of Contents

MITSUBISHI FUSO TRUCK OF AMERICA, Inc.

BACK HOME

Pub No. TWSE9501-225

GROUP 25 PROPELLER SHAFT

< P2: FG (FRONT AXLE TO TRANSFER) >

SPECIFICATIONS 25- 2

STRUCTURE AND OPERATION 25- 2

TROUBLESHOOTING 25- 3

REMOVAL AND INSTALLATION OF PROPELLER SHAFT 25- 4

REAR PROPELLER SHAFT 25- 6

BALANCING PROPELLER SHAFT 25-10

SPECIFICATIONS/STRUCTURE AND OPERATION

SPECIFICATIONS

Item \ Vehicle model		FG639
Propeller shaft	Model	P2
Pipe	Outer diameter×Wall thickness mm {in.}	63.5×2.6 {2.50×0.10}
Universal joint	Spider outer diameter mm {in.}	19 {0.75}
Needle bearing	Outer diameter mm {in.}	2.5 {0.098}
	Length of needle roller mm {in.}	13 {0.51}
	Quantity of needle rollers	27
Slip yoke joint	Spline diameter mm {in.}	39 {1.54}

STRUCTURE AND OPERATION

Swing of Propeller Shaft

< Universal joint >

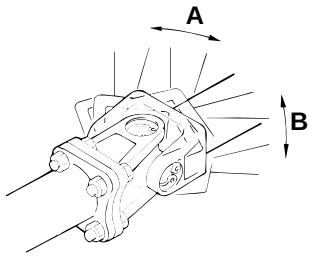

< Slip yoke joint >

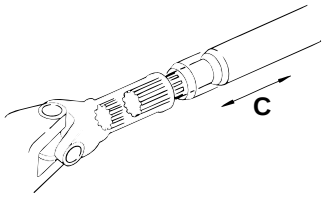

00815

A : Lateral swing
B : Longitudinal swing
C : Fore-and-aft movement

Relative positions of transmission and rear axle vary depending on the fluctuation of the road surface and load carried when operating the vehicle.
The universal joint and the slip yoke joint are provided to absorb these influences.

Configuration of Propeller Shaft Connection

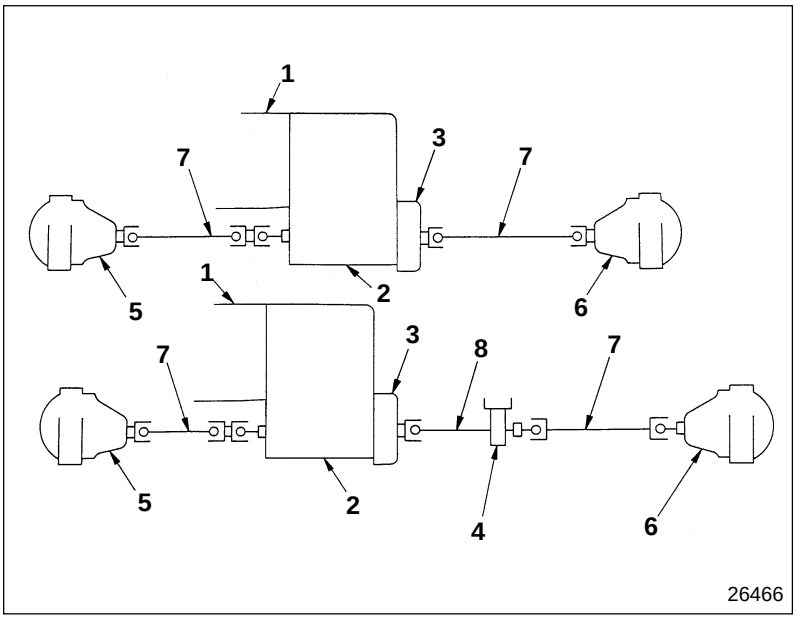

1 Transmission
2 Transfer
3 Parking brake drum
4 Center bearing
5 Front axle
6 Rear axle
7 Rear propeller shaft
8 Front propeller shaft

A : Single-shaft connection at rear
B : Twin-shaft connection at rear

TROUBLESHOOTING

Symptoms / Possible causes		Propeller shaft vibrating		Noise from propeller shaft		
		Vibration at high speed	Vibration at low speed	Noise when starting or while coasting	Noise while cruising	Clicking noise
Flange yoke assembly direction incorrect		○				
Companion flange tightening torque excessive						○
Slip yoke joint	Lubrication insufficient				○	
	Spline play excessive		○	○		
Universal joint	Clearance in spider axial direction excessive		○		○	
	Needle bearing lubricated insufficiently				○	
	Needle bearing worn	○		○	○	
Propeller shaft	Mounting bolt loose	○		○		
	Bent	○				
	Dynamic balance adjusted incorrectly	○				
Transmission gear selection too high			○			

REMOVAL AND INSTALLATION OF PROPELLER SHAFT

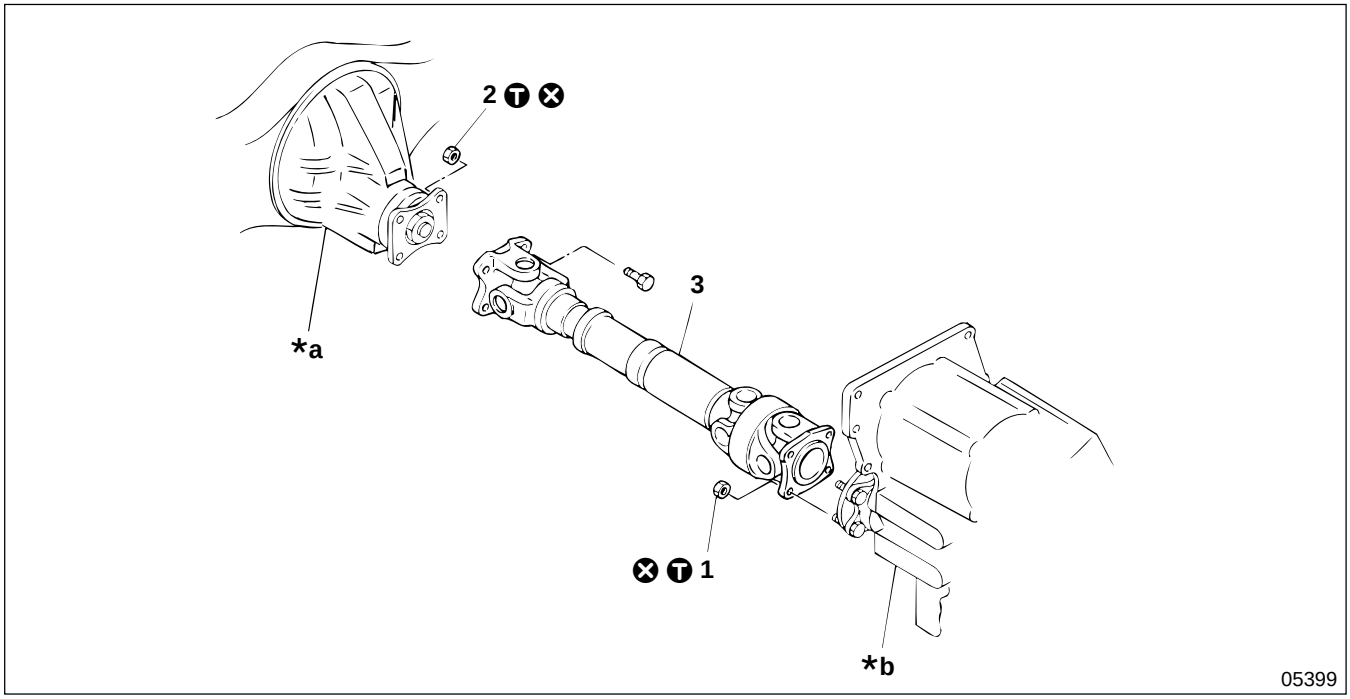

● **Work before removal**
P25-4

● **Removal sequence**

1 Nut
2 Nut
3 Rear propeller shaft
P25-6

***a** : Front axle
***b** : Transfer

⊗ : Non-reusable parts

● **Installation sequence**

Follow the removal sequence in reverse.

Ⓣ Tightening torque

Unit : N·m {lbf.ft, kgf·m}

Location	Parts to be tightened	Tightening torque	Remarks
1	Nut (Transfer side propeller shaft mounting)	59 to 74 {43 to 54, 6.0 to 7.5}	—
2	Nut (Front axle side propeller shaft mounting)	59 to 74 {43 to 54, 6.0 to 7.5}	—

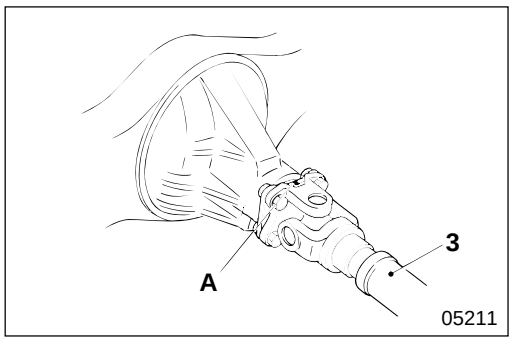

◆ Service procedure

● **Work before removal**

WARNING⚠

- **Since the propeller shaft will be removed, the parking brake cannot be used. Therefore, you must chock the wheels securely so the vehicle does not move.**
- **Do not remove the chocks until the entire operation is completed.**

Remember to make alignment marks **A** before removal.

M E M O

REAR PROPELLER SHAFT

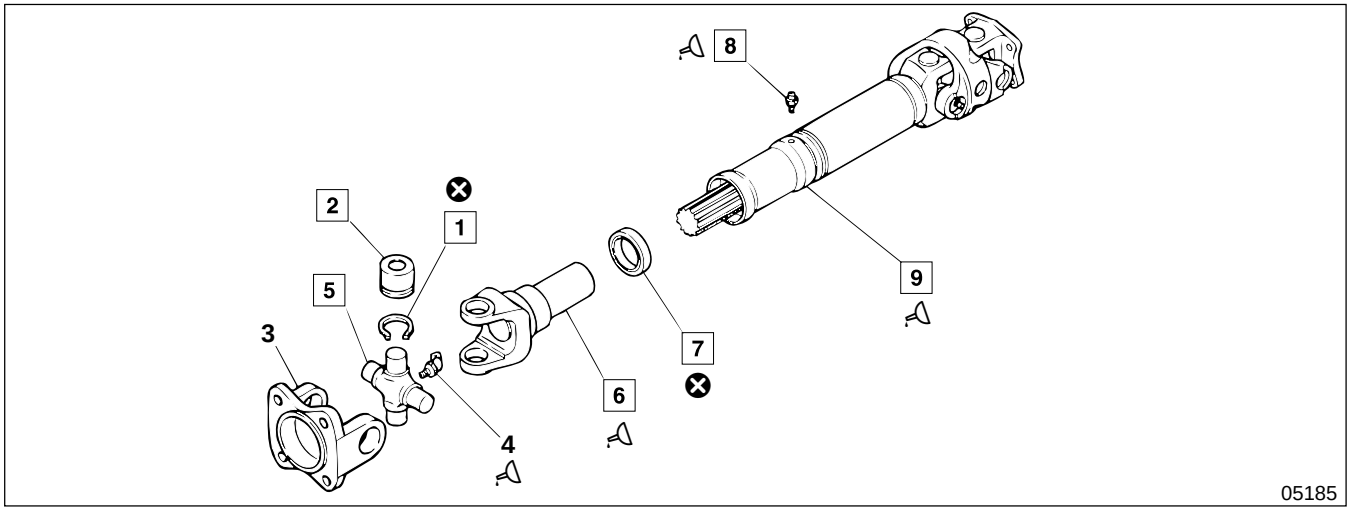

● **Inspection before disassembly**

P25-7

● **Disassembly sequence**

1 Snap ring
2 Needle bearing
3 Flange yoke
4 Grease nipple
5 Spider
6 Slip yoke joint
7 Sealed packing
8 Grease nipple
9 Rear propeller shaft

⊗ : Non-reusable parts

● **Assembly sequence**

Follow the disassembly sequence in reverse.

Repair kit : Universal joint spider kit

Service standards

Unit : mm {in.}

Location	Maintenance item		Standard value (Basic diameter in [ ])	Limit	Remedy
1 to 5	Clearance of spider in axial direction		0 to 0.06 {0 to 0.0024}	—	Adjust
2, 5	Clearance between needle bearing and spider		[19] 0.02 to 0.05 {[0.75] 0.00079 to 0.0020}	0.1 {0.0039}	Replace
6, 9	End play of slip yoke joint and rear propeller shaft splines	In rotation direction	0.01 to 0.09 {0.00039 to 0.0035}	0.3 {0.012}	Replace
		In diameter direction	0.02 to 0.16 {0.00079 to 0.0063}	0.3 {0.012}	Replace
9	Deflection of rear propeller shaft (Center)		—	0.4 {0.016}	Correct or replace

Lubricant

Location	Points of application	Specified lubricant	Quantity
4	Supply via grease nipple	Wheel bearing grease [NLGI No.2 (Li soap)]	Pack until grease overflows from needle bearing oil seal
6	Friction surface of slip yoke joint sealed packing	Wheel bearing grease [NLGI No.2 (Li soap)]	—
8	Supply via grease nipple	Wheel bearing grease [NLGI No.2 (Li soap)]	Pack until grease overflows from dust plug
9	Spline of rear propeller shaft	Wheel bearing grease [NLGI No.2 (Li soap)]	—

Special tools

Unit : mm {in.}

Location	Tool name and shape	Part No.	Application
2	Universal joint tool set **A** : Yoke assembly **B** : Push rod **C** : Guide 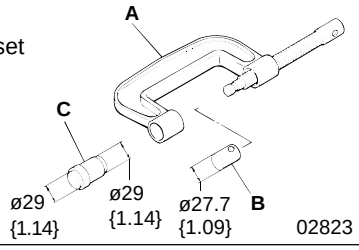	MB999024 **A** : MB999025 **B** : MB999026 **C** : MB999010	Removal and installation of needle bearing

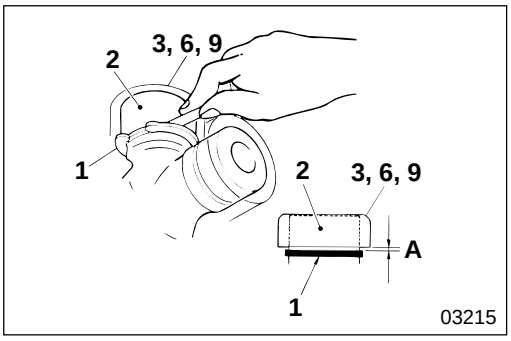

◆ Service procedure

● Inspection before disassembly

Clearance in axial direction for spider

Press needle bearing **2** downward firmly, and measure clearance **A** between snap ring **1** and flange yoke **3**, slip yoke joint **6**, and rear propeller shaft **9**. If the measured value is higher than the limit, adjust it by changing the thickness of the snap ring.

< Available snap ring thicknesses and their combination : Combination indicated by solid line is preferred >

Part name	Thickness	Color identification mark	Combination	Thickness	Color identification mark
Snap ring	1.5 mm {0.059 in.}	None		1.5 mm {0.059 in.}	None
Snap ring	1.55 mm {0.061 in.}	Yellow		1.55 mm {0.061 in.}	Yellow
Snap ring	1.6 mm {0.063 in.}	Blue		1.6 mm {0.063 in.}	Blue
Snap ring	1.65 mm {0.065 in.}	Purple		1.65 mm {0.065 in.}	Purple

NOTE

For snap ring 1, it is recommend that you use rings with the same thickness on both ends.

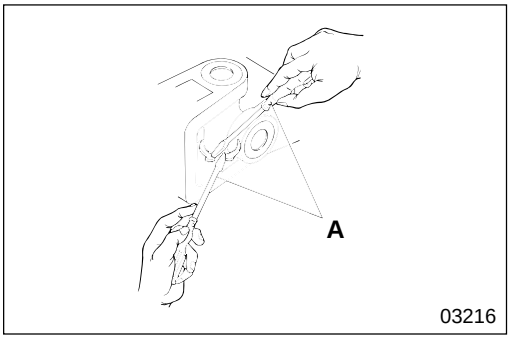

1 **Snap ring**

[Removal]

A : Flat-blade screwdriver

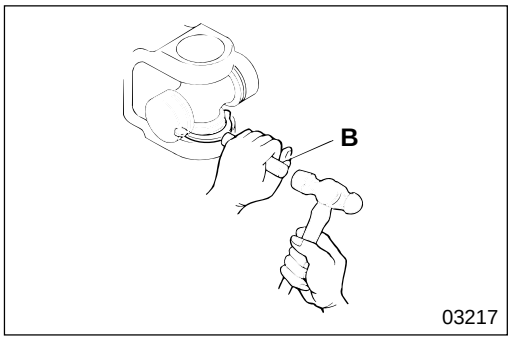

[Installation]
B : Drift

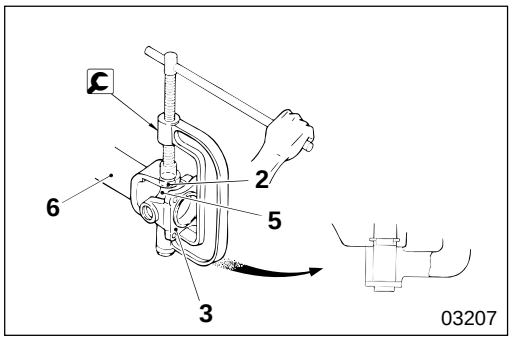

2 **Needle bearing**

[Removal]
- Put alignment marks on needle bearing **2** and spider **5**.
- Put alignment marks on flange yoke **3** and slip yoke joint **6**.

: Universal joint tool set

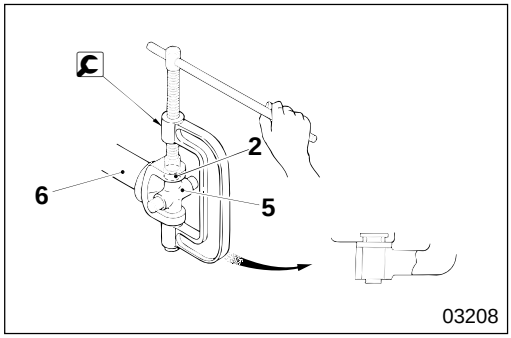

[Press-fitting]
: Universal joint tool set

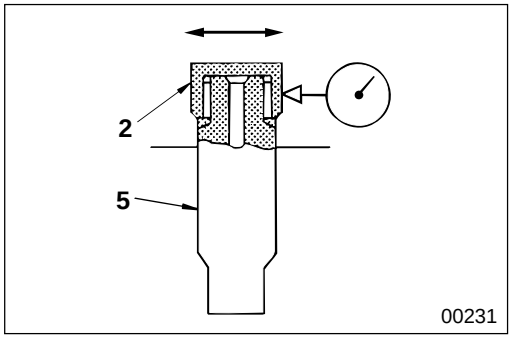

2 **5** **Clearance between needle bearing and spider**

Measure the play towards the diameter direction between needle bearing **2** and spider **5**. If the measured value is higher than the limit, replace with universal joint spider kit.

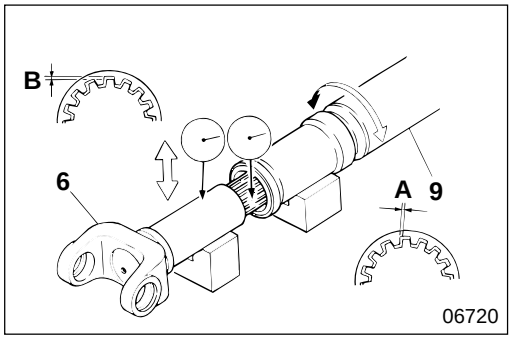

6 **9** **Play between slip yoke joint and rear propeller shaft spline**

- Measure play **A** in the rotation direction between slip yoke joint **6** and rear propeller shaft **9** at the spline area. If the measured value is higher than the limit, replace the faulty parts.
- Measure play **B** in the diameter direction between slip yoke joint **6** and rear propeller shaft **9** at the spline area. If the measured value is higher than the limit, replace the faulty parts.

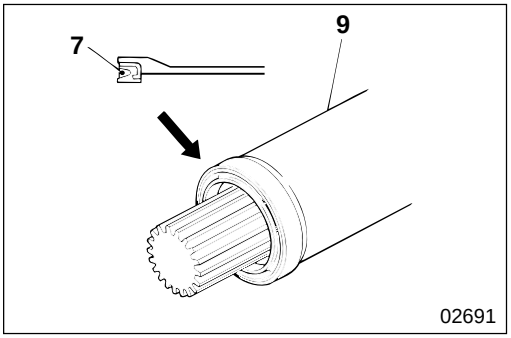

7 **Installation of sealed packing**

Install sealed packing **7** onto propeller shaft **9** in the direction illustrated until it is flush with the propeller shaft.

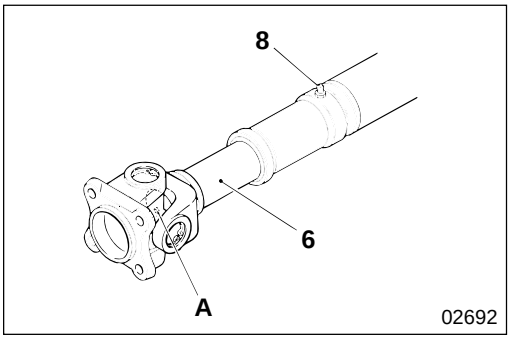

8 **Supply of grease via grease nipple**

Pack grease via grease nipple **8** until grease starts overflowing from dust plug **A** of slip yoke joint **6**.

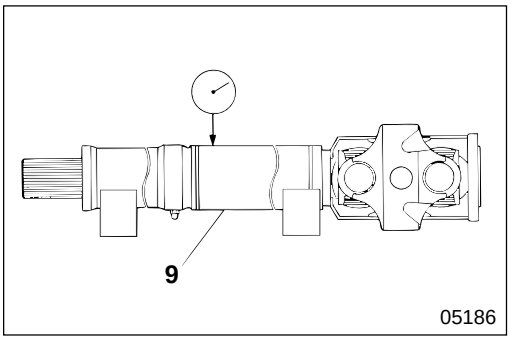

9 **Deflection of rear propeller shaft**

Measure the deflection of rear propeller shaft **9** at the center. If the measured value is higher than the limit, correct or replace it.

CAUTION

Be sure to check for cracks at the welded area after straightening has been done by means of a press.

NOTE

To measure the deflection of rear propeller shaft 9, turn it one full revolution and read the dial gauge indicator. The deflection is one half of the indicated value.

BALANCING PROPELLER SHAFT

(1) After correcting propeller shaft deflection or replacing the flange yoke, universal joint, or related parts, measure the balance of the completed propeller shaft assembly on a balancing machine and attach balance weights as required to correct amount of imbalance to within the permissible range.

(2) Use the polar coordination method to correct dynamic balance.

(3) Permissible amount of imbalance for propeller shaft circumference
10 g {0.35 oz} or less/3,000 rpm

(4) Correction procedure
- Balance weight attachment point

< Rear propeller shaft >

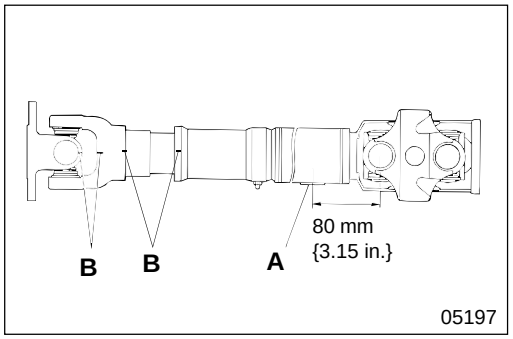

A : Balance weight attachment point
B : Alignment marks

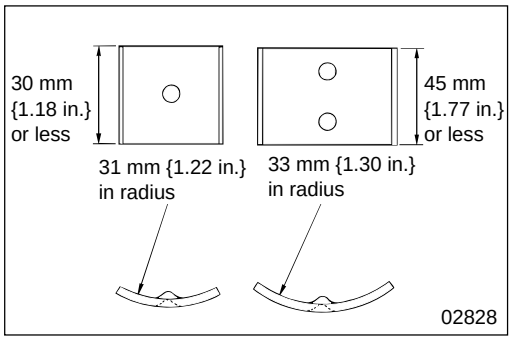

- Available balance weights

Mass (g {oz})	Radius (mm {in.})
2 {0.071}	31 {1.22}
4 {0.14}	31 {1.22}
6 {0.21}	31 {1.22}
8 {0.28}	31 {1.22}
10 {0.35}	31 {1.22}
30 {1.06}	33 {1.30}
35 {1.23}	33 {1.30}
40 {1.41}	33 {1.30}
45 {1.59}	33 {1.30}
50 {1.76}	33 {1.30}

NOTE
- **Maximum balance weight allowed for one point is 100 g {3.53 oz}.**
- **Use a combination that keeps number of balance weights to the minimum.**

MITSUBISHI
FUSO

FE

Service Manual

Group 25
Propeller Shaft

Table of Contents

BACK

HOME

MITSUBISHI FUSO TRUCK OF AMERICA, Inc.

Pub No. TWSE9501-25

GROUP 25 PROPELLER SHAFT

SPECIFICATIONS 2
STRUCTURE AND OPERATION 2
TROUBLESHOOTING 3
REMOVAL AND INSTALLATION OF PROPELLER SHAFT 4
REAR PROPELLER SHAFT 6
FRONT PROPELLER SHAFT 10
BALANCING PROPELLER SHAFT 14

SPECIFICATIONS/STRUCTURE AND OPERATION

SPECIFICATIONS

Item \ Vehicle model		FE639E FE649E	FE639C, F FE649C, F
Propeller shaft	Model	P3	
Pipe	Outer diameter×Wall thickness mm {in.}	63.5×3.5 {2.50×0.14}	*82.6×2.3 {3.25×0.091}
Universal joint	Spider outer diameter mm {in.}	21 {0.83}	
Needle bearing	Outer diameter mm {in.}	3 {0.12}	
	Length of needle roller mm {in.}	15.3 {0.60}	
	Quantity of needle rollers	25	
Slip yoke joint	Spline diameter mm {in.}	39 {1.54}	
Center bearing	Model No.	83A910CC3	
	Inner diameter×Outer diameter mm {in.}	40×72 {1.57×2.83}	

*** Swage type**

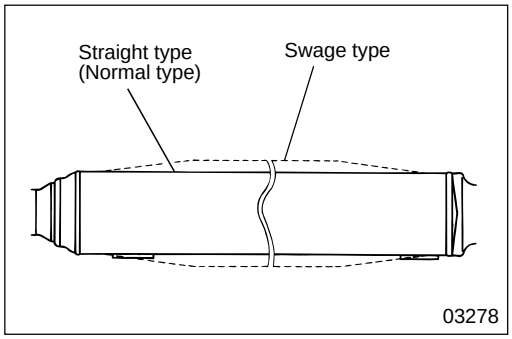

STRUCTURE AND OPERATION
Swing of Propeller Shaft

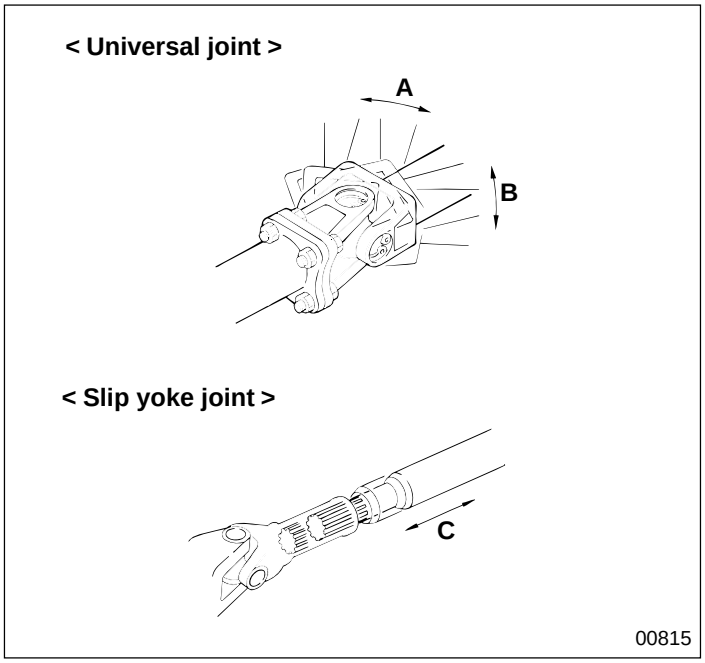

A : Lateral swing
B : Longitudinal swing
C : Fore-and-aft movement

Relative positions of transmission and rear axle vary depending on the fluctuation of the road surface and load carried when operating the vehicle.
The universal joint and the slip yoke joint are provided to absorb these influences.

Configuration of Propeller Shaft Connection

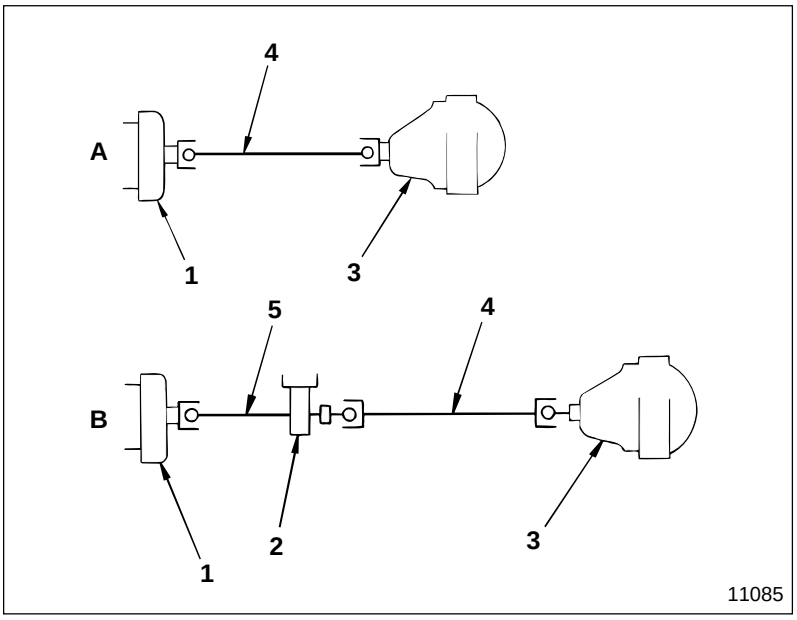

1 Parking brake drum
2 Center bearing
3 Rear axle
4 Rear propeller shaft
5 Front propeller shaft

A : Single-shaft connection
B : Twin-shaft connection

TROUBLESHOOTING

Symptoms / Possible causes		Propeller shaft vibrating		Noise from propeller shaft		
		Vibration at high speed	Vibration at low speed	Noise when starting or while coasting	Noise while cruising	Clicking noise
Flange yoke assembly direction incorrect		○				
Companion flange tightening torque excessive						○
Slip yoke joint	Lubrication insufficient				○	
	Spline play excessive		○	○		
Universal joint	Clearance in spider axial direction excessive		○		○	
	Needle bearing lubricated insufficiently				○	
	Needle bearing worn	○		○	○	
Center bearing < Twin-shaft connection >	Lubrication insufficient				○	
	Seized, worn, or rotation faulty	○			○	
	Cushion rubber deteriorating or deformed			○		
	Hanger mounting bolt loose			○		
Propeller shaft	Mounting bolt loose	○		○		
	Bent	○				
	Dynamic balance adjusted incorrectly	○				
Transmission gear selection too high			○			

REMOVAL AND INSTALLATION OF PROPELLER SHAFT

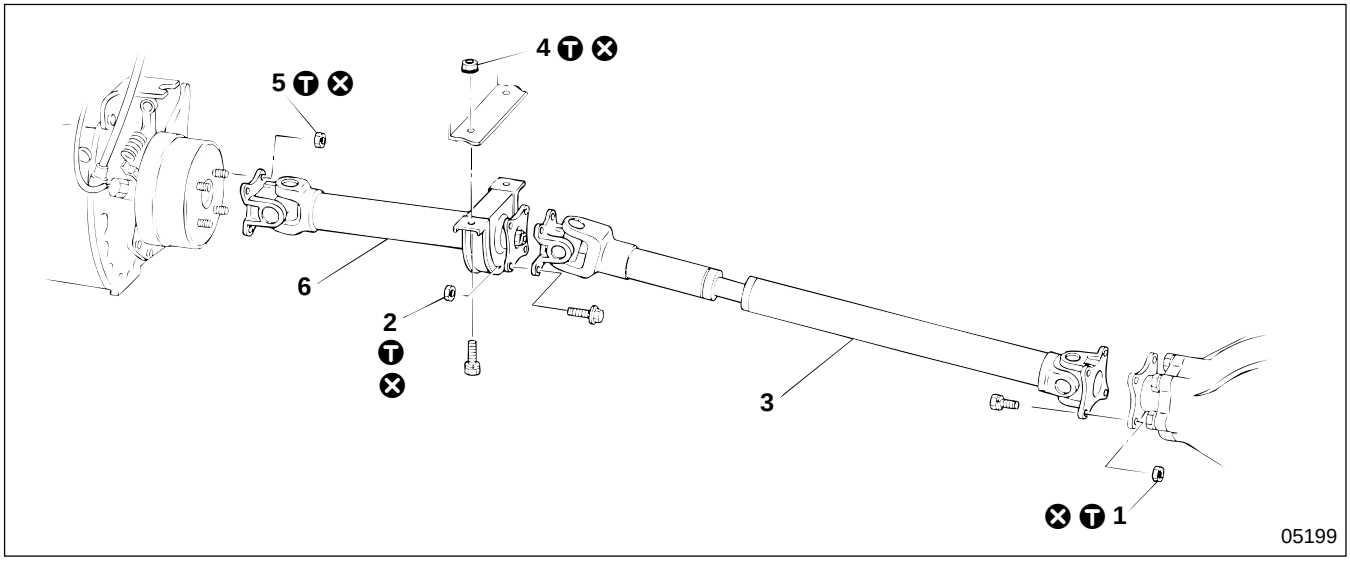

● **Work before removal**
P25-4

● **Removal sequence**

1 Nut
2 Nut
3 Rear propeller shaft
P25-6
4 Nut
5 Nut
6 Front propeller shaft
P25-10

⊗ : Non-reusable parts

● **Installation sequence**

Follow the removal sequence in reverse.

T Tightening torque

Unit : N·m {lbf.ft, kgf·m}

Location	Parts to be tightened	Tightening torque	Remarks
1	Nut (Rear axle side propeller shaft mounting)	98 to 120 {72 to 87, 10 to 12}	—
2	Nut (Center bearing side propeller shaft mounting)	98 to 120 {72 to 87, 10 to 12}	—
4	Nut (Front propeller shaft hanger mounting)	47 to 65 {35 to 48, 4.8 to 6.6}	—
5	Nut (Transmission side propeller shaft mounting)	98 to 120 {72 to 87, 10 to 12}	—

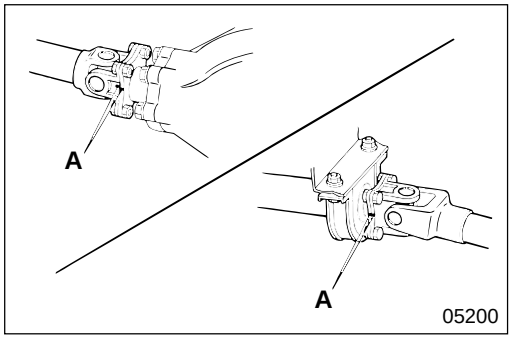

◆ Service procedure

● **Work before removal**

WARNING ⚠

- **Since the propeller shaft will be removed, the parking brake cannot be used. Therefore, you must chock the wheels securely so the vehicle does not move.**
- **Do not remove the chocks until the entire operation is completed.**

Remember to make alignment marks **A** before removal.

M E M O

REAR PROPELLER SHAFT

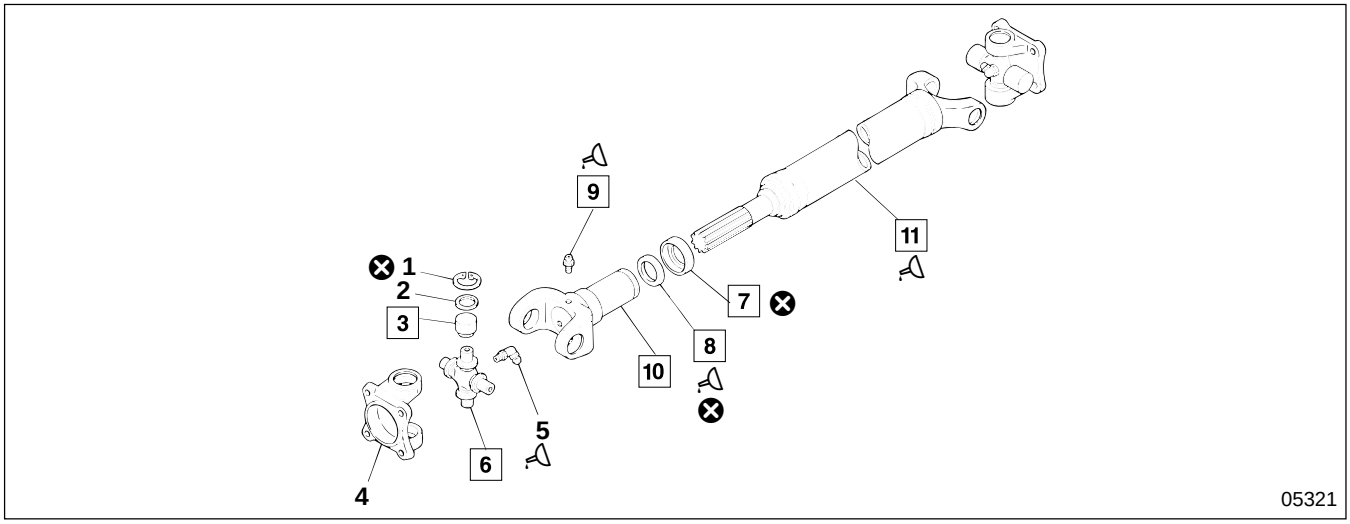

● **Inspection before disassembly**

P25-7

● **Disassembly sequence**

1 Snap ring
2 Shim
3 Needle bearing
4 Flange yoke
5 Grease nipple
6 Spider
7 Retainer packing
8 Sealed packing
9 Grease nipple
10 Slip yoke joint
11 Rear propeller shaft

⊗ : Non-reusable parts

● **Assembly sequence**

Follow the disassembly sequence in reverse.

Repair kit : Universal joint spider kit

Service standards

Unit : mm {in.}

Location	Maintenance item		Standard value (Basic diameter in [ ])	Limit	Remedy
1 to 6	Clearance of spider in axial direction		0 to 0.06 {0 to 0.0024}	—	Adjust
3, 6	Clearance between needle bearing and spider		[21] 0.01 to 0.06 {[0.83] 0.00039 to 0.0024}	0.1 {0.0039}	Replace
10, 11	End play of slip yoke joint and rear propeller shaft splines	In rotation direction	0.01 to 0.09 {0.00039 to 0.0035}	0.3 {0.012}	Replace
		In diameter direction	0.02 to 0.16 {0.00079 to 0.0063}	0.3 {0.012}	Replace
11	Deflection of rear propeller shaft (Center)		—	0.4 {0.016}	Correct or replace

Lubricant

Location	Points of application	Kinds	Quantity
5	Supply via grease nipple	Wheel bearing grease [NLGI No.2 (Li soap)]	Pack until grease overflows from needle bearing oil seal
8	Sealed packing lip	Wheel bearing grease [NLGI No.2 (Li soap)]	As required
9	Supply via grease nipple	Wheel bearing grease [NLGI No.2 (Li soap)]	Pack until grease overflows from dust plug
11	Spline of rear propeller shaft	Wheel bearing grease [NLGI No.2 (Li soap)]	As required

Special tools

Unit : mm {in.}

Location	Tool name and shape	Part No.	Application
3	Universal joint tool set **A** : Yoke assembly **B** : Push rod **C** : Guide 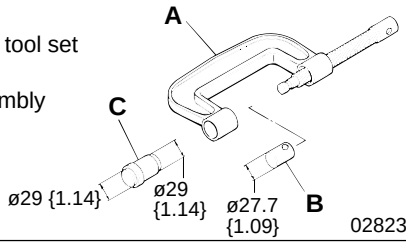	MB999024 **A** : MB999025 **B** : MB999026 **C** : MB999010	Removal and installation of needle bearing

◆ Service procedure

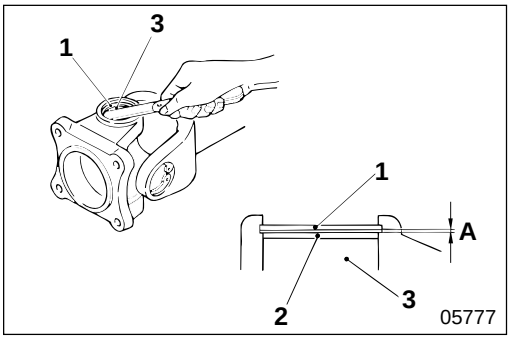

● Inspection before disassembly

Clearance in axial direction for spider

Press needle bearing **3** downward firmly, and measure clearance **A** between snap ring **1** and shim **2**. If the measured value is higher than the standard value, adjust it by changing the thickness of the shim.

Available shim thicknesses :

0.1 to 0.7 mm {0.0039 to 0.028 in.} (7 thicknesses available in 0.1 mm {0.0039 in.} increments)

NOTE

For shim 2, it is recommended that you use shims with the same thickness on both ends to ensure balanced revolution.

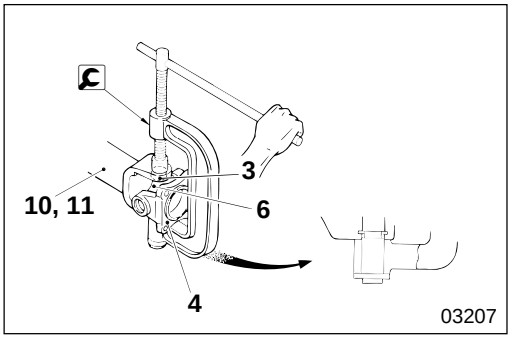

3 **Needle bearing**

[Removal]

- Put alignment marks on needle bearing **3** and spider **6**.
- Put alignment marks on flange yoke **4**, slip yoke joint **10** and rear propeller shaft **11**.

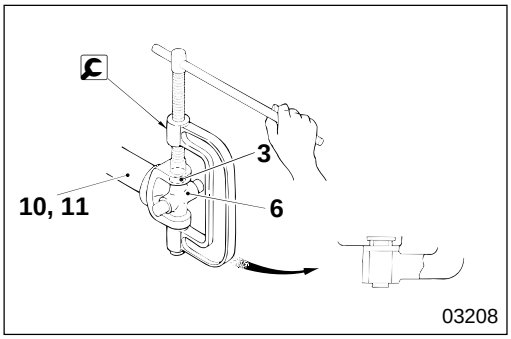

[Press-fitting]

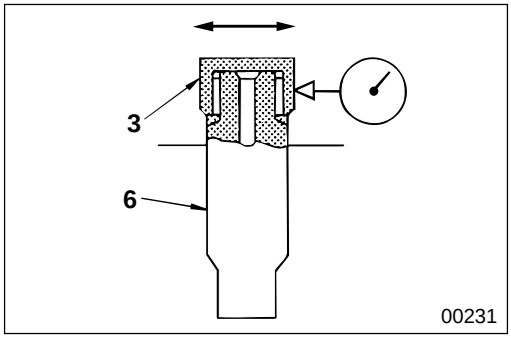

3 **6** **Clearance between needle bearing and spider**

Measure the play towards the diameter direction between needle bearing **3** and spider **6**. If the measured value is higher than the limit, replace with universal joint spider kit.

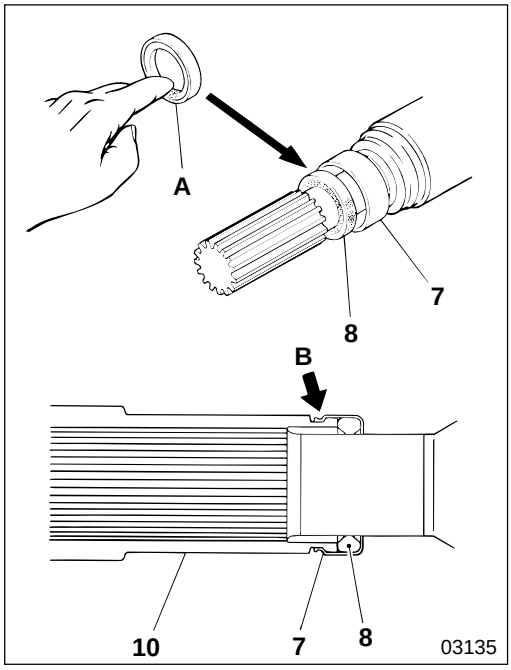

7 **8** **Installation of retainer packing and sealed packing**

- Apply grease to inner periphery **A** of sealed packing **8** and install it as illustrated.
- Press retainer packing **7** onto slip yoke joint **10**, and caulk claw **B** at eight points.

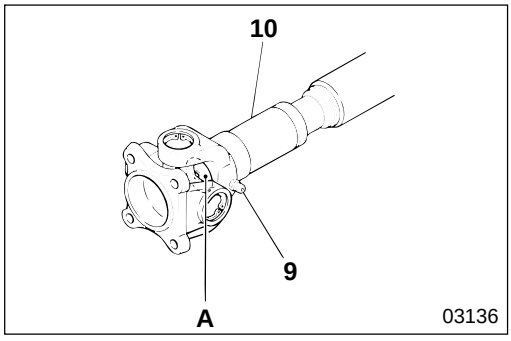

9 **Supply of grease via grease nipple**

Pack grease via grease nipple **9** until grease starts overflowing from dust plug **A** of slip yoke joint **10**.

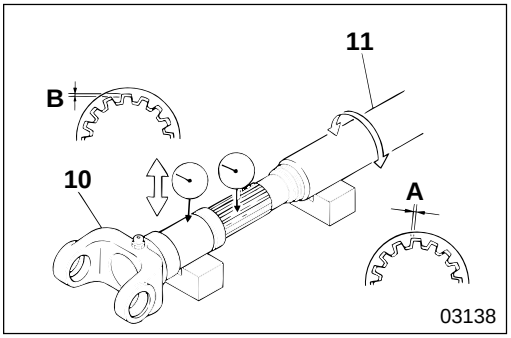

10 **11** **Play between slip yoke joint and rear propeller shaft spline**

- Measure play **A** in the rotation direction between slip yoke joint **10** and rear propeller shaft **11** at the spline area. If the measured value is higher than the limit, replace the faulty parts.
- Measure play **B** in the diameter direction between slip yoke joint **10** and rear propeller shaft **11** at the spline area. If the measured value is higher than the limit, replace the faulty parts.

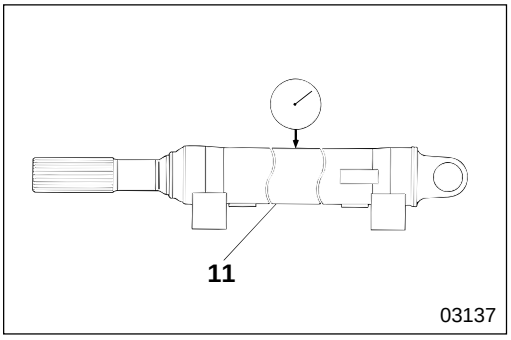

11 **Deflection of rear propeller shaft**

Measure the deflection of rear propeller shaft **11** at the center. If the measured value is higher than the limit, correct or replace it.

CAUTION⚠

Be sure to check for cracks at the welded area after straightening has been done by means of a press.

NOTE

To measure the deflection of rear propeller shaft 11, turn it one full revolution and read the dial gauge indicator. The deflection is one half of the indicated value.

FRONT PROPELLER SHAFT

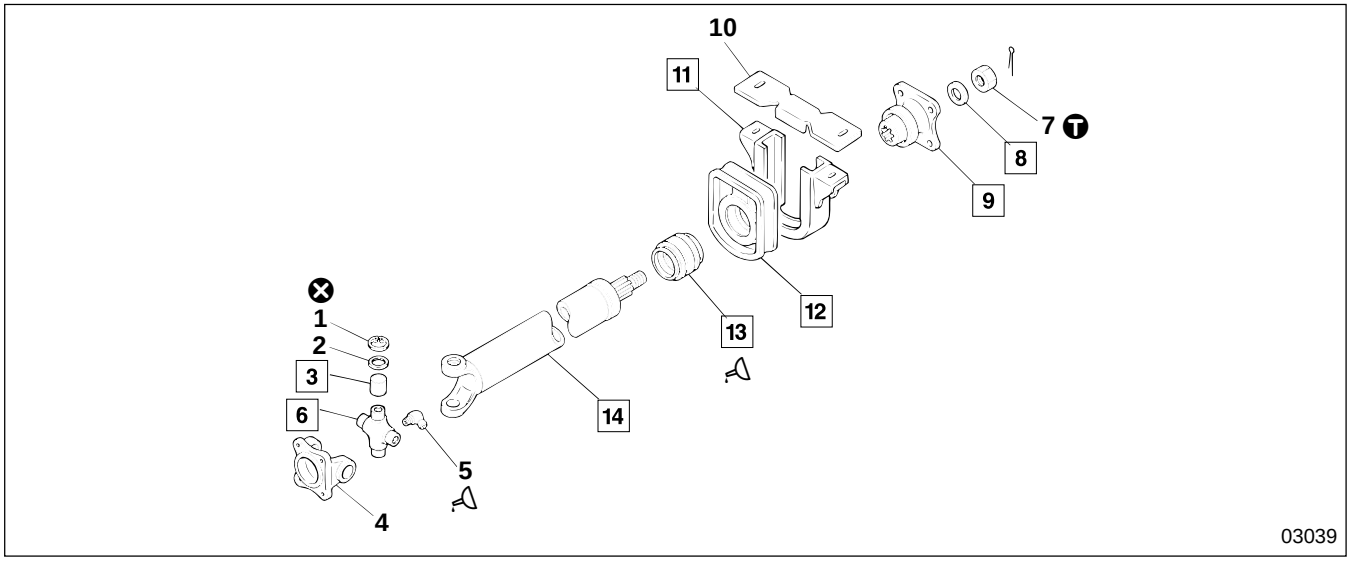

● **Inspection before disassembly**

P25-11

● **Disassembly sequence**

1 Snap ring
2 Shim
3 Needle bearing
4 Flange yoke
5 Grease nipple
6 Spider
7 Nut
8 Disc spring
9 Companion flange
10 Holder
11 Hanger
12 Cushion rubber
13 Center bearing assembly
14 Front propeller shaft

⊗ : Non-reusable parts

● **Assembly sequence**

Follow the disassembly sequence in reverse.

Repair kit : Universal joint spider kit

Service standards

Unit : mm {in.}

Location	Maintenance item	Standard value (Basic diameter in [ ])	Limit	Remedy
1 to 6	Clearance of spider in axial direction	0 to 0.06 {0 to 0.0024}	—	Adjust
3, 6	Clearance between needle bearing and spider	[21] 0.01 to 0.06 {[0.83] 0.00039 to 0.0024}	0.1 {0.0039}	Replace
14	Deflection of front propeller shaft (Center)	—	0.4 {0.016}	Correct or replace

T Tightening torque

Unit : N·m {lbf.ft, kgf·m}

Location	Parts to be tightened	Tightening torque	Remarks
7	Nut (Companion flange mounting)	290 to 390 {215 to 290, 30 to 40}	—

Lubricant

Location	Points of application	Kinds	Quantity
5	Supply via grease nipple	Wheel bearing grease [NLGI No.2 (Li soap)]	Pack until grease overflows from needle bearing oil seal
13	Pack interior of center bearing assembly	Bearing grease [NLGI No.3 (Li soap)]	70 to 100% of capacity (20 to 29 g) {0.71 to 1.02 oz}
	Center bearing assembly seal lip area	Bearing grease [NLGI No.3 (Li soap)]	As required

Special tools

Unit : mm {in.}

Location	Tool name and shape	Part No.	Application
3	Universal joint tool set **A** : Yoke assembly **B** : Push rod **C** : Guide 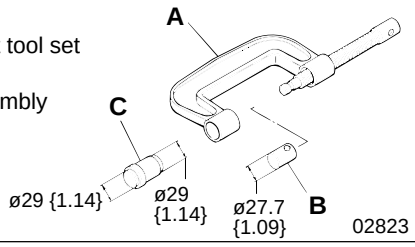	MB999024 **A** : MB999025 **B** : MB999026 **C** : MB999010	Removal and installation of needle bearing

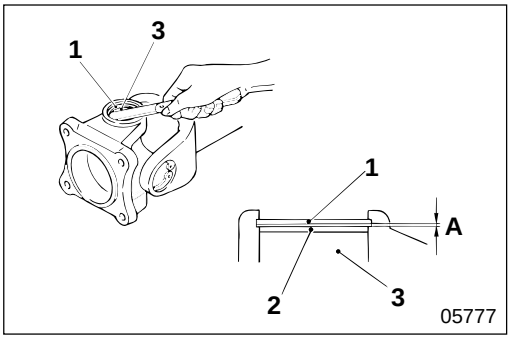

◆ Service procedure

● Inspection before disassembly

Clearance in the axial direction for spider

Press needle bearing **3** downward firmly, and measure clearance **A** between snap ring **1** and shim **2**. If the measured value is higher than the standard value, adjust it by changing the thickness of the shim.

Available shim thicknesses :

0.1 to 0.7 mm {0.0039 to 0.028 in.} (7 thicknesses available in 0.1 mm {0.0039 in.} increments)

NOTE

For shim 2, it is recommended that you use shims with the same thickness on both ends to ensure balanced revolution.

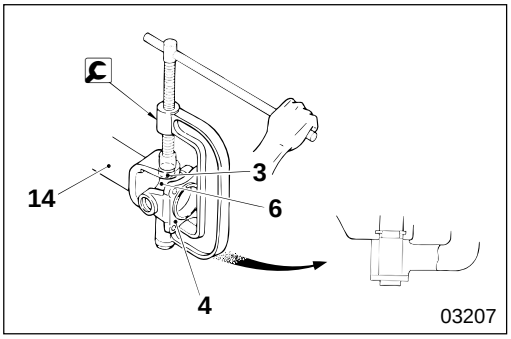

3 **Needle bearing**

[Removal]

- Put alignment marks on needle bearing **3** and spider **6**.
- Put alignment marks on flange yoke **4** and front propeller shaft **14**.

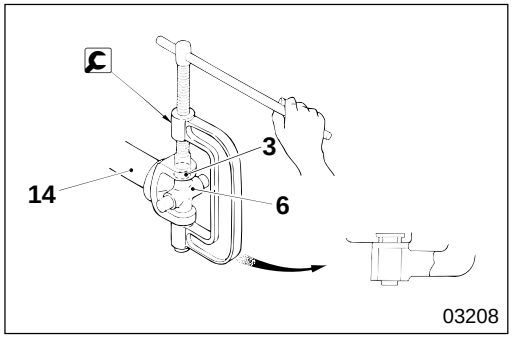

[Press-fitting]

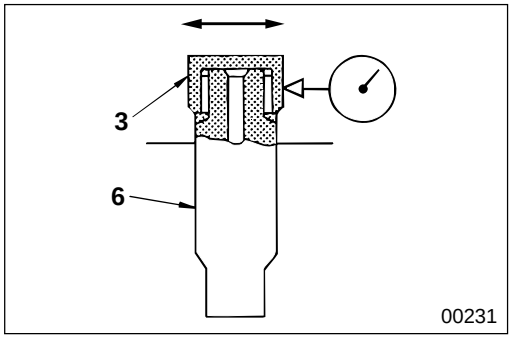

3 **6** **Clearance between needle bearing and spider**

Measure the play towards the diameter direction between needle bearing **3** and spider **6**. If the measured value is higher than the limit, replace with universal joint spider kit.

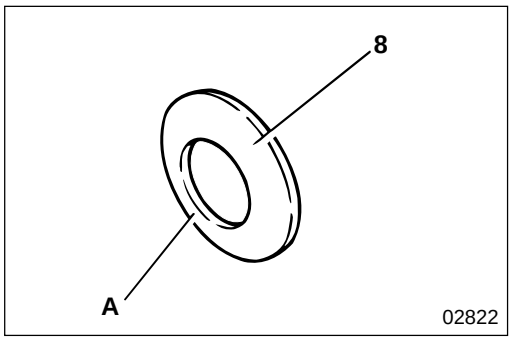

8 **Installation of disc spring**

Install disc spring **8** with its convex side facing nut **A**.

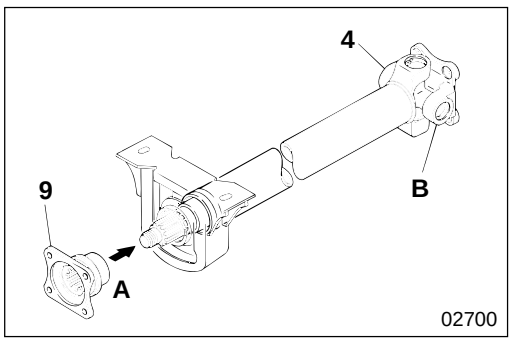

9 **Installation of companion flange**

When installing, position concave side **A** of companion flange **9** and convex side **B** of flange yoke **4** as illustrated.

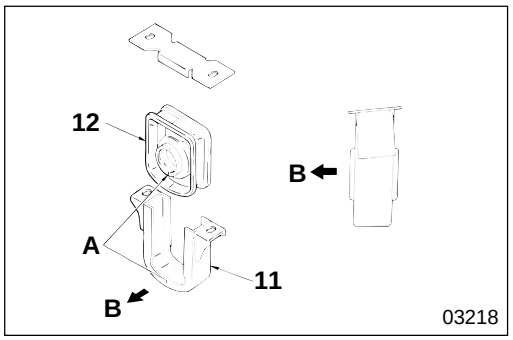

11 **12** **Hanger and cushion rubber**

[Removal]
Make alignment marks **A** before removal.

[Installation]
Install hanger **11** and cushion rubber **12** aligning alignment marks **A**.
The relative position to the front of vehicle **B** is as illustrated.

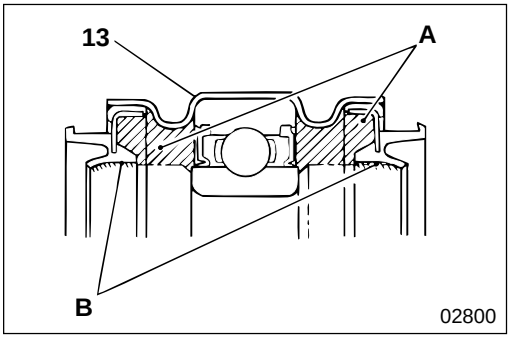

13 **Greasing center bearing assembly**

- Inspect the center bearing assembly for leaking grease every 50000 km {31000 miles} or at regular safety inspection. If a substantial grease leak is found, pack grease into housing **A**.
- Apply grease to seal lip area **B**.

NOTE

Bearing does not require greasing because it is sealed.

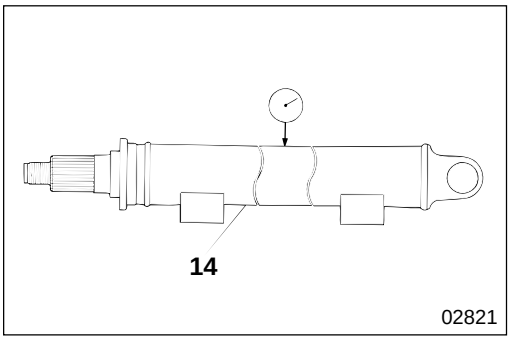

14 **Deflection of front propeller shaft**

Measure the deflection of front propeller shaft **14** at the center. If the measured value is higher than the limit, correct or replace it.

CAUTION

Be sure to check for cracks at the welded area after straightening has been done by means of a press.

NOTE

To measure the deflection of front propeller shaft 14, turn it one full revolution and read the dial gauge indicator. The deflection is one half of the indicated value.

BALANCING PROPELLER SHAFT

(1) After correcting propeller shaft deflection or replacing the flange yoke, universal joint, or related parts, measure the balance of the completed propeller shaft assembly on a balancing machine and attach balance weights as required to correct amount of imbalance to within the permissible range.

(2) Use the polar coordination method to correct dynamic balance.

(3) Permissible amount of imbalance for propeller shaft circumference

10 g {0.35 oz} or less/3000 rpm < Rear propeller shaft >
5 g {0.18 oz} or less/3000 rpm < Front propeller shaft >

(4) Correction procedure

- Balance weight attachment point

< Rear propeller shaft >

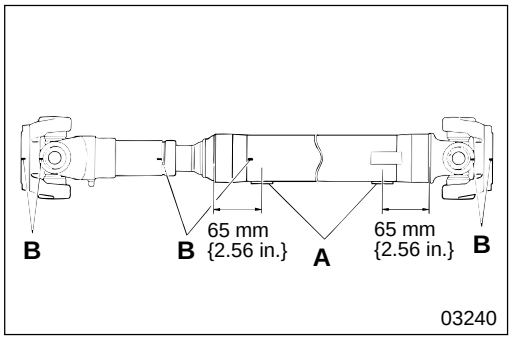

< Front propeller shaft >

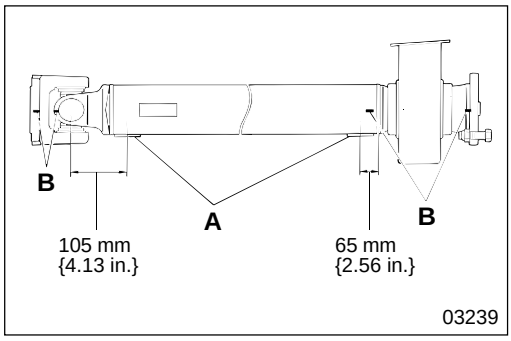

A : Balance weight attachment point
B : Alignment marks

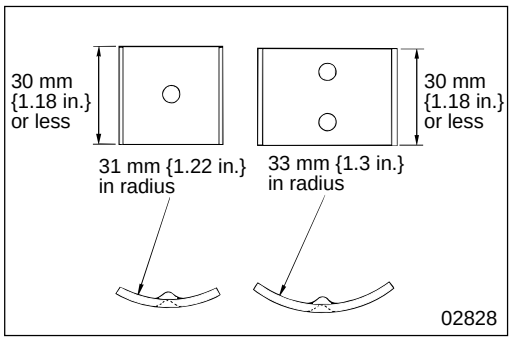

- Available balance weights

Mass (g {oz})	Radius (mm {in.})
2 {0.071}	31 {1.22}
4 {0.14}	31 {1.22}
6 {0.21}	31 {1.22}
8 {0.28}	31 {1.22}
10 {0.35}	31 {1.22}
12 {0.42}	31 {1.22}
16 {0.56}	31 {1.22}
24 {0.85}	33 {1.30}

NOTE

- **Maximum balance weight allowed for one point is 100 g {3.53 oz}.**
- **Use a combination that keeps number of balance weights to the minimum.**

MITSUBISHI FUSO

FE

Service Manual

Group 26 - Front Axle

Group 26B - Front Axle
1998 Minor Change

BACK HOME

MITSUBISHI FUSO TRUCK OF AMERICA, Inc.

Pub No. TWSE9501-00

MITSUBISHI
FUSO

FE

Service Manual

Group 26
Front Axle

Table of Contents

BACK

HOME

MITSUBISHI FUSO TRUCK OF AMERICA, Inc.

Pub No. TWSE9501-26

GROUP 26 FRONT AXLE

SPECIFICATIONS 2

STRUCTURE AND OPERATION 2

INSPECTION AND ADJUSTMENT MOUNTED IN VEHICLE
- Adjustment of Wheel Alignment 4
- Adjustment of Steering Angle 7
- Measurement of Side Slip 7

WORK BEFORE REMOVAL AND INSTALLATION OF FRONT AXLE . 8

WHEEL HUB AND ROTOR 10

FRONT AXLE, KNUCKLE AND KINGPIN 16

SPECIFICATIONS/STRUCTURE AND OPERATION

SPECIFICATIONS

Item \ Vehicle model		FE639	FE649
Front axle	Model	F020T	F035T
	Type	I section, reverse Elliot type	
Kingpin	Outer diameter × Length mm {in.}	28×180 {1.10×7.09}	
Tread	mm {in.}	1665 {65.6}	
Mass	kg {lb}	Approximately 125 {275}	Approximately 155 {340}

STRUCTURE AND OPERATION

Front Axle, Knuckle and Kingpin

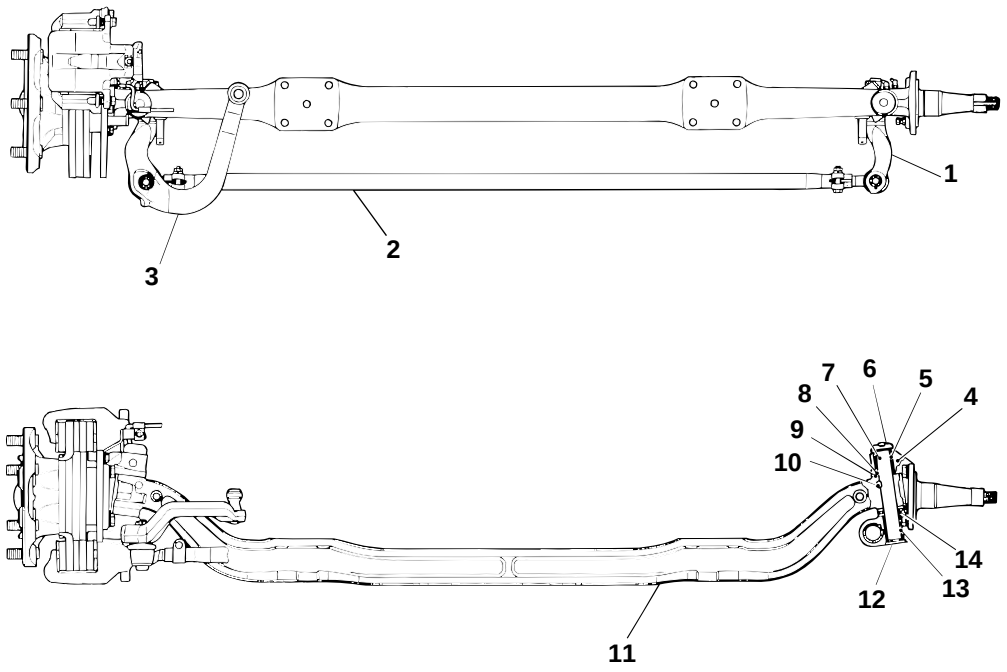

1 Tie rod arm
2 Tie rod assembly
3 Knuckle arm
4 Knuckle
5 Bushing
6 Dust cap
7 Kingpin
8 Dust seal
9 Kingpin shim
10 Lock pin
11 Front axle
12 Plug
13 Kingpin bushing
14 Thrust bearing

Wheel Hub and Rotor

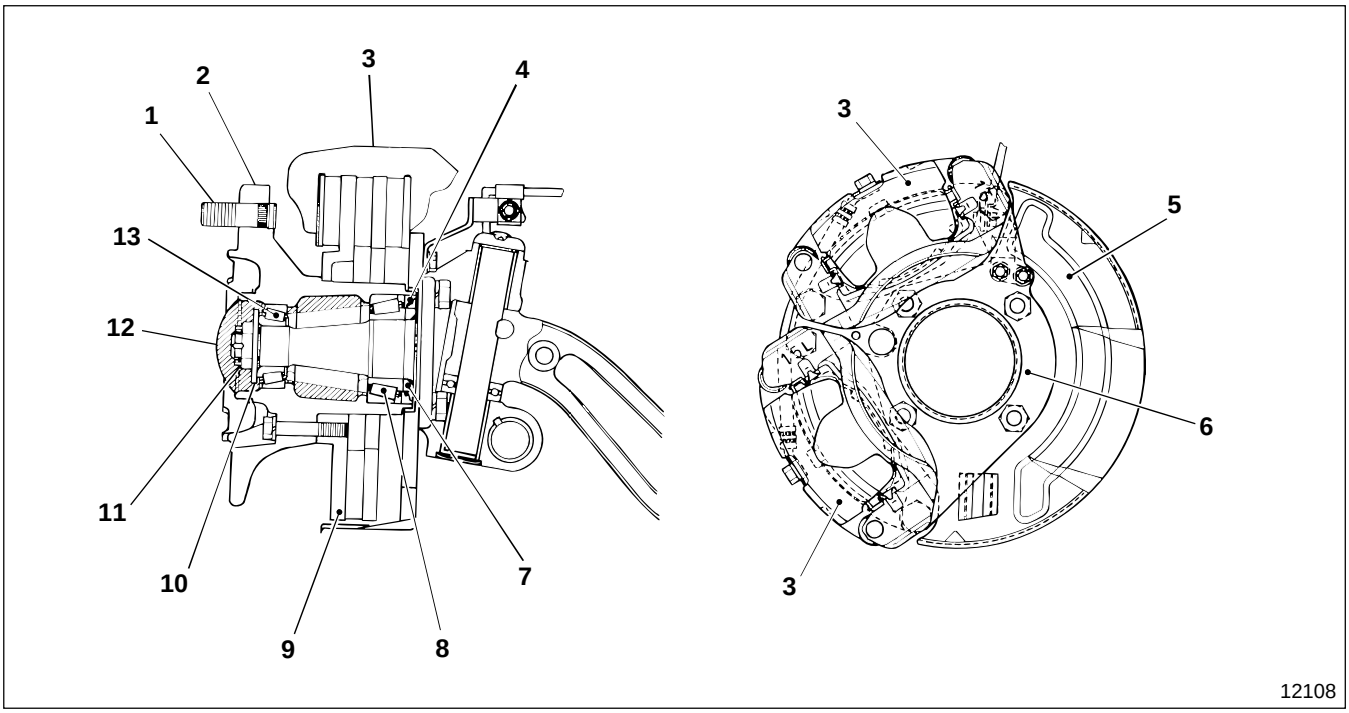

1 Hub bolt
2 Wheel hub
3 Disc brake assembly
4 Oil seal
5 Mud shield
6 Adapter
7 Spacer
8 Inner bearing
9 Rotor
10 Washer
11 Lock nut
12 Hub cap
13 Outer bearing

INSPECTION AND ADJUSTMENT MOUNTED IN VEHICLE

Adjustment of Wheel Alignment

Service standards

Unit : mm {in.}

Location	Maintenance item		Standard value	Limit	Remedy
—	Wheel alignment	Toe-in (with tires on the ground)	0 to 6 {0 to 0.24}	—	—
		Camber	1°00'±30'	—	—
		Caster	2°30'±1°00'	—	—
		Kingpin inclination angle	8°	8°±10'	—

Tightening torque

Unit : N·m {lbf.ft, kgf·m}

Location	Parts to be tightened	Tightening torque	Remarks
1	Clamp bolt (Tie rod end clamp fastening)	25±5 {18±3.6, 2.5±0.5}	—

NOTE

- **Measure the wheel alignment when the vehicle is empty and level.**
- **Be sure that each part of the front axle has been serviced perfectly before adjusting the wheel alignment.**

Before adjusting the wheel alignment, check for the following faults:

- Play in front wheel hub
- Play or looseness in kingpin
- Play or looseness in the joint between the tie rod and the knuckle arm
- Looseness of any fasteners
- Fatigued or damaged leaf springs
- Incorrect tire pressure
- Incorrect power steering booster backlash

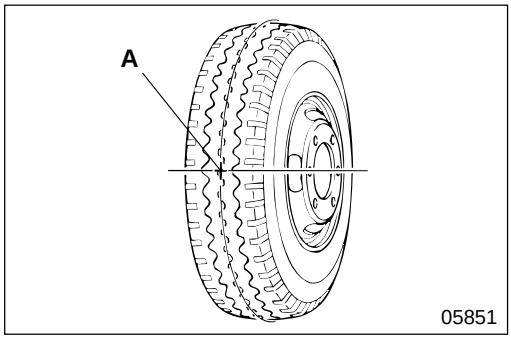

(1) Measurement and adjustment of toe-in

- Point the front wheels exactly forward.
- Put mark **A** on the left and right front tires at the height of front wheel axis and in the middle of the tire width.

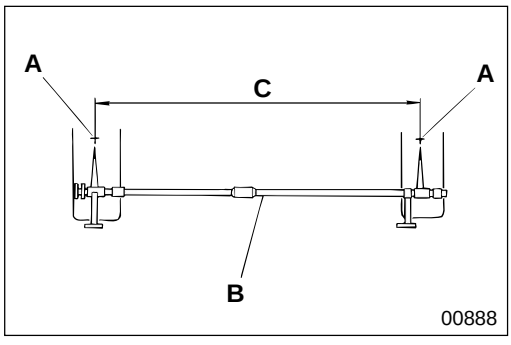

- Align the two points of toe-in gauge **B** to the respective marks **A** on the front tires. Measure the distance **C** between the marks at the front of the vehicle.

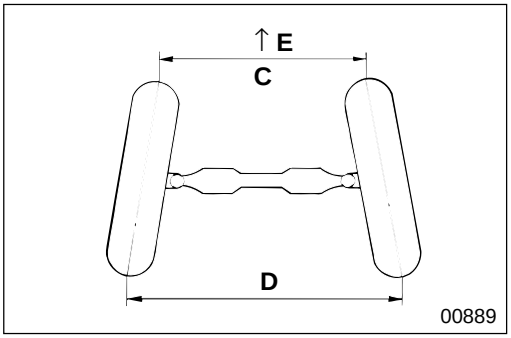

- Rotate the tires 180° and measure the distance **D** between the marks at the rear of the vehicle with the tires on the ground.
- Check if the difference between distances **C** and **D** is within the standard value.

E : Front of the vehicle

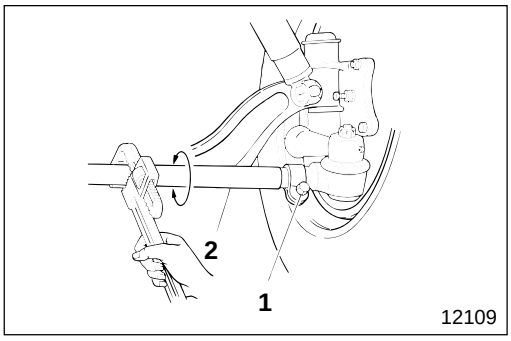

- If the measured value deviates from the standard value, with the tires pointed forward, loosen left and right clamp bolts **1** and adjust the toe-in to the standard value by turning tie rod **2** with a pipe wrench.

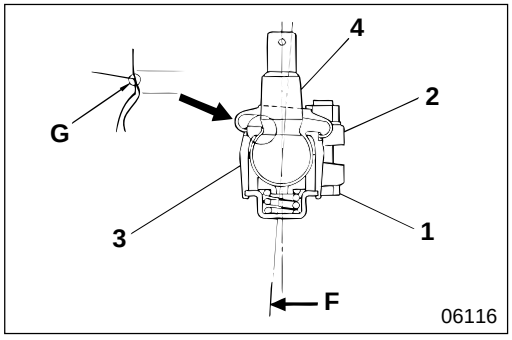

- Move the vehicle forward and turn tie rod **2** towards the front, with the tires pointed forward (**F** as illustrated). Make sure when adjusting toe-in to the standard value, that both left and right tie rod ends **3** are in contact with ball stud **4** (**G** as illustrated) at the same time. After adjustment, tighten clamp bolt **1** to secure the tie rod.

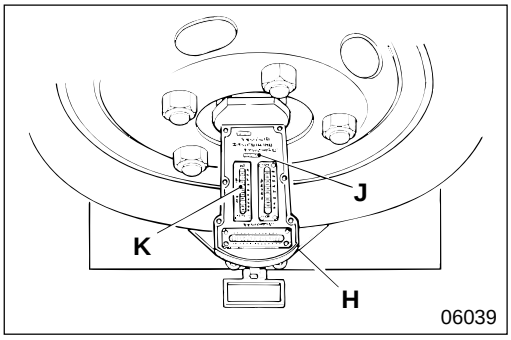

(2) Measurement of camber

- Point the front wheels exactly forward.
- Remove the hub caps.
- Wipe off grease from the knuckle end, and attach camber/caster/kingpin gauge **H** to the knuckle.
- While keeping the bubble in level **J** centered, measure the camber angle by reading the scale mark at the center of the bubble on camber scale **K**. Follow this procedure to measure the camber angles on the left and right sides.

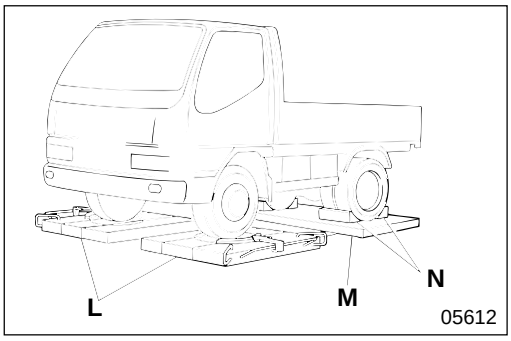

(3) Measurement of caster and kingpin inclination angle

- Align turning radius gauges **L**. Prepare a platform **M** having the same height as the turning radius gauges and place the platform under the rear wheels so that the vehicle is kept level.
- Keep turning radius gauges **L** locked.
- Jack up the vehicle and set the left and right front wheels so that the ground contact area of both front tires and the turntables of turning radius gauge **L** meet at their respective centers.

WARNING⚠

- **After jacking up the vehicle, chock the rear wheels securely with chocks N.**
- **Do not remove chocks N until the entire operation is completed.**

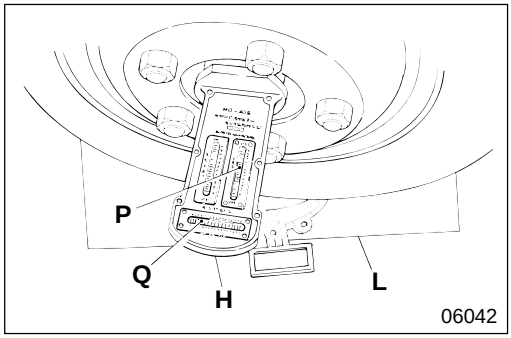

- Unlock turning radius gauge **L**, and set the scale to 0°.
- As in measuring camber explained previously, attach camber/caster kingpin gauge **H** tightly to the front wheel hub and keep the bubble centered.
- Apply the brake to the front wheels and turn the steering wheel slowly from the 0° point on the scale of turning radius gauge **L**, until direction changes 20° to the left for the left front wheel and 20° to the right for the right front wheel.

NOTE

It is not possible to obtain an exact reading of camber unless the brake is applied to the front wheels because the tires might rotate slightly.

- At the 20° point, align the bubbles in caster scale **P** and kingpin scale **Q** to 0° by turning the adjuster.

NOTE

Kingpin scale Q has scales for left and right; use the left scale when adjusting the left wheel, and the right scale when adjusting the right wheel.

- Turn the steering wheel slowly until the left front wheel changes its direction 20° to the right, or until the right front wheel changes its direction 20° to the left, past the 0° point of turning radius gauge **L** scale. At this point read the scale marks at the center of the bubbles on caster scale **P** and kingpin scale **Q**. The scale marks indicate the caster and kingpin inclination angles.

Adjustment of Steering Angle

Service standards

Location	Maintenance item		Standard value	Limit	Remedy
—	Steering angle	Inside (Outside : reference)	42° (33°)	—	Adjust

Tightening torque

Unit : N·m {lbf.ft, kgf·m}

Location	Parts to be tightened	Tightening torque	Remarks
2	Lock nut (Knuckle stopper bolt fastening)	46.5±7 {34±5.4, 4.75±0.75}	—

NOTE

Be sure that wheel alignment is adjusted perfectly before adjusting the steering angle.

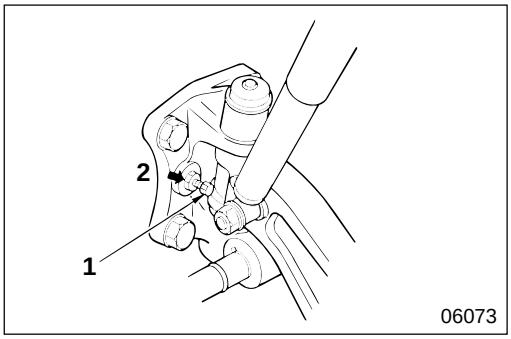

- To adjust the steering angle, set the turning radius gauges and platform in the same way as for caster and kingpin inclination angle measurement.
- Turn the steering wheel to the left or right completely, and from the position where the turning radius gauge is aligned to 0°, adjust knuckle stopper bolt **1**. Adjust so that the steering angle is within the standard inside steering angle value, to the left for the left front wheel, and to the right for the right front wheel. Then, tighten lock nut **2** at specified torque.

NOTE

Be sure when working on the vehicle, to adjust both stopper bolts 1 at the front and back of the knuckle arm side.

Measurement of Side Slip

NOTE

Be sure that wheel alignment is adjusted fully before measuring side slip.

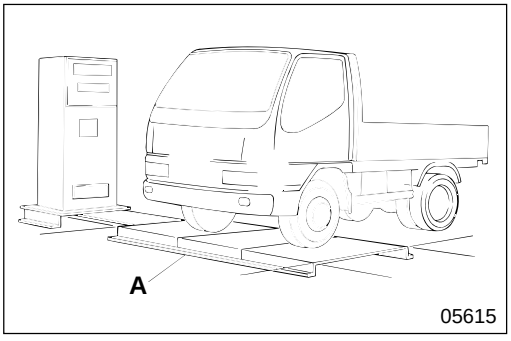

- Point the front wheels exactly forward.
- Maintain this position and slowly move vehicle forward, over side slip tester **A**, as slowly as possible.

NOTE

Make sure, when measuring side slip, that the wheels point exactly forward when the vehicle passes over side slip tester A. Do not allow the wheels to veer from side-to-side.

- The side slip is indicated by side slip tester **A** after the vehicle has passed through the tester. Readjust wheel alignment if slippage is 3 mm {0.12 in.} or more per meter {3.28 ft.}.

WORK BEFORE REMOVAL AND INSTALLATION OF FRONT AXLE

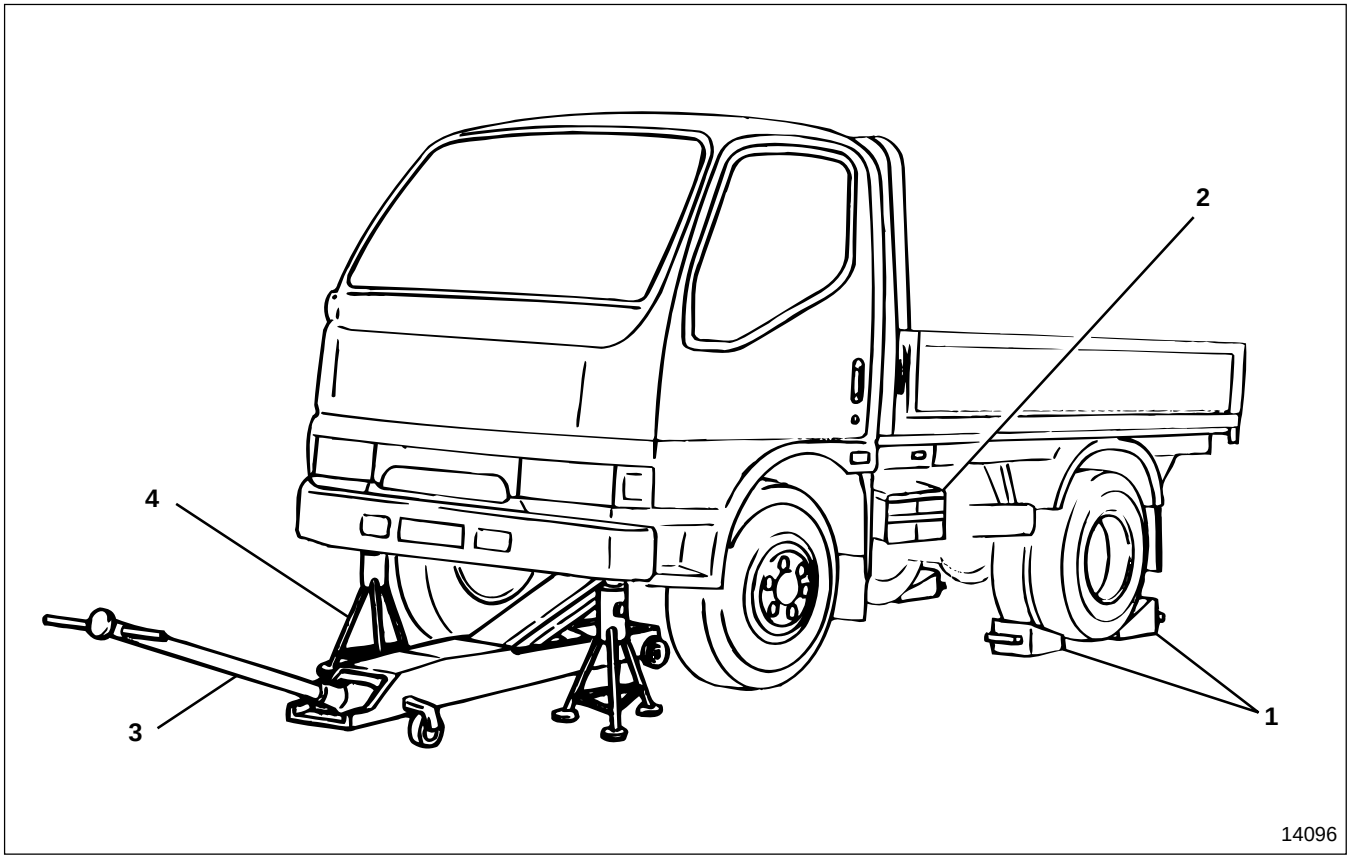

● **Work sequence before removal**

1 Place wheel chocks.
2 Disconnect the negative battery cable. Gr 54
3 Jack up the front axle with a garage jack.
4 Support the front frame on rigid racks.

WARNING

- **Chock the wheels securely so the vehicle does not move.**
- **Do not remove the chocks until the entire operation is completed.**
- **Supporting a vehicle on a garage jack only is extremely dangerous, so always support the frame on rigid racks.**
- **Leave the garage jack and rigid racks in place until the entire operation is completed. Never remove them during the operation.**

● **Work sequence after installation**

Follow the work sequence before removal in reverse.

M E M O

WHEEL HUB AND ROTOR

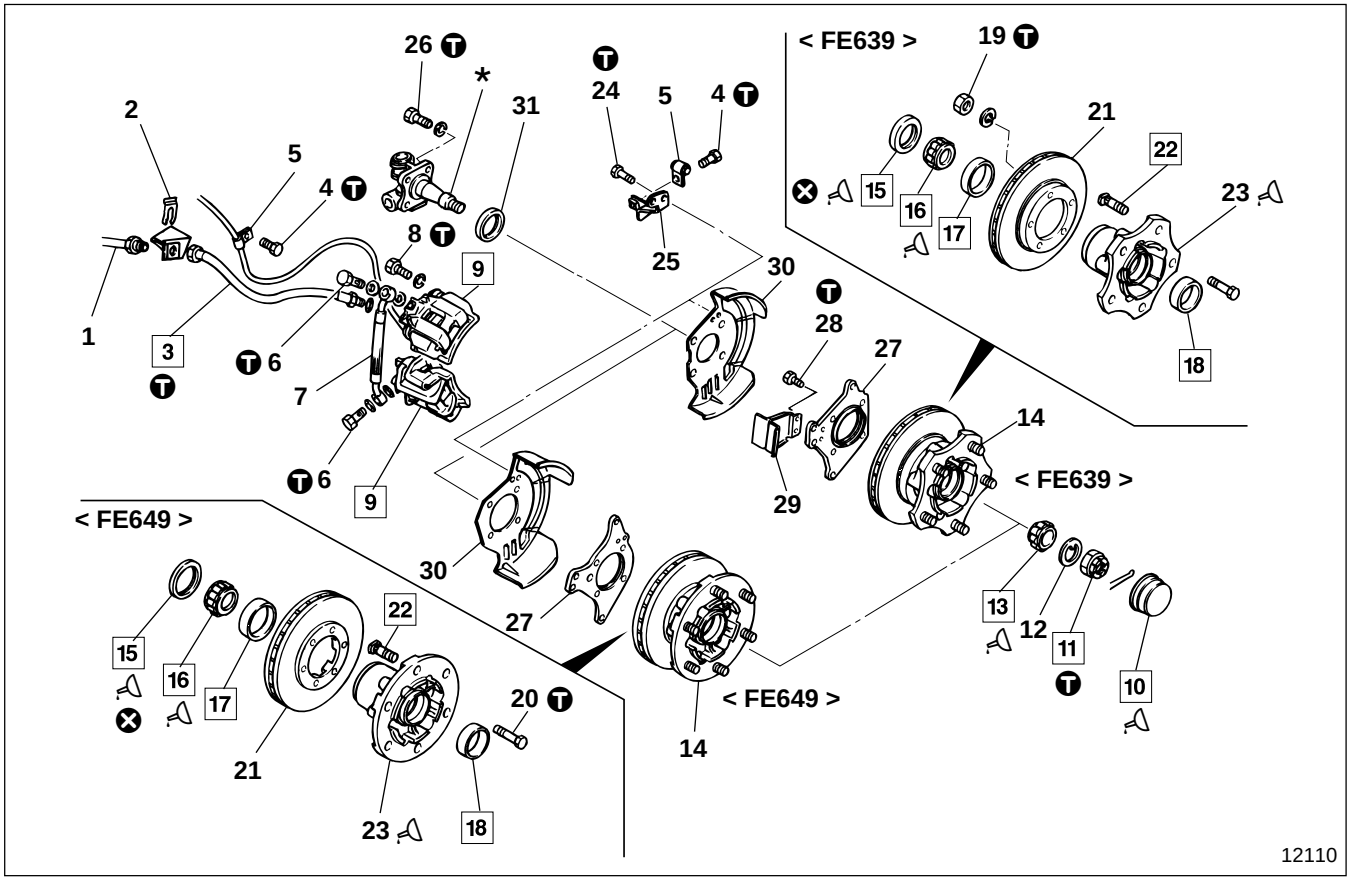

● **Disassembly sequence**

1 Brake pipe
2 Clip
3 Brake hose
4 Bolt
5 Clip
6 Eye bolt
7 Brake hose
8 Bolt
9 Disc brake assembly Gr 35
10 Hub cap
11 Lock nut
12 Lock washer
13 Outer bearing inner race
14 Wheel hub and rotor assembly
15 Oil seal
16 Inner bearing inner race
17 Inner bearing outer race
18 Outer bearing outer race
19 Nut < FE639 >
20 Bolt < FE649 >
21 Disc rotor Gr 35
22 Hub bolt
23 Wheel hub
24 Bolt
25 Bracket
26 Bolt
27 Adapter
28 Bolt < FE639 >
29 Dust cover < FE639 >
30 Mud shield
31 Spacer

*: Knuckle P26-16
⊗: Non-reusable parts

WARNING

When you work, take care not to burn yourself because disc brake assembly 9 and disc rotor 21 are hot immediately after the vehicle has been driven.

CAUTION

Be sure to protect brake hoses 3, 7 from dust by fitting blanking plugs after removal.

NOTE

Do not disassemble disc rotor 21 and wheel hub 23 except for replacement.

● **Assembly sequence**

Follow the disassembly sequence inreverse.

WARNING⚠

You must bleed air from the brake system after installing the brake hose, failure to do so would cause the brake to malfunction. Gr 35

CAUTION⚠

Be careful not to damage oil seal 15 when installing wheel hub and rotor assembly 14 onto knuckle *.

Service standards

Location	Maintenance item		Standard value	Limit	Remedy
13, 16 to 18	Starting torque of wheel hub bearing	FE639	1.5 N·m {1.08 lbf.ft, 0.15 kgf·m}	—	Tangential force at hub bolt: 14 N {3.1 lbf, 1.4 kgf}
		FE649	2 N·m {1.45 lbf.ft, 0.2 kgf·m}	—	Tangential force at hub bolt: 18 N {4.0 lbf, 1.8 kgf}

Tightening torque

Unit : N·m {lbf.ft, kgf·m}

Location	Parts to be tightened		Tightening torque	Remarks
3	Brake hose tightening (Axle side)		13 to 17 {9.4 to 12, 1.3 to 1.7}	—
4, 24	Bolt (Clip and bracket mounting)		12.3±2.5 {9±1.8, 1.25±0.25}	—
6	Eye bolt (Brake hose mounting)		22±2 {16±1.8, 2.25±0.25}	—
8	Disc brake mounting	FE639	95.6±12 {71±9, 9.75±1.25}	—
		FE649	152±25 {110±18, 15.5±2.5}	—
11	Lock nut	Primary tightening	113±15 {83±11, 11.5±1.5}	Slackening off angle: Approximately 45° (one eighth of a turn)
		Secondary tightening, after slackening	59 {43, 6}	
19	Nut (Disc rotor and wheel hub mounting)	FE639	95.6±12 {71±9, 9.75±1.25}	—
20	Bolt (Disc rotor and wheel hub mounting)	FE649	85.8±12 {63±9, 8.75±1.25}	—
26	Bolt (Adapter and mud shield mounting)		118±20 {87±14, 12±2}	—
28	Bolt (Dust cover mounting)	FE639	12.3±2.5 {9±1.8, 1.25±0.25}	—

WHEEL HUB AND ROTOR

Lubricant

Location	Points of application		Kinds	Quantity
10	Pack wheel hub cap	FE639	Wheel bearing grease [NLGI No.2 (Li soap)]	65±10 g {2.29±0.35 oz}
		FE649	Wheel bearing grease [NLGI No.2 (Li soap)]	90±10 g {3.17±0.35 oz}
13, 16	Pack the space between rollers of outer bearing inner race and inner bearing inner race		Wheel bearing grease [NLGI No.2 (Li soap)]	As required
15	Lip area of oil seal		Wheel bearing grease [NLGI No.2 (Li soap)]	As required
23	Pack interior space of wheel hub	FE639	Wheel bearing grease [NLGI No.2 (Li soap)]	210±20 g {7.41±0.71 oz}
		FE649	Wheel bearing grease [NLGI No.2 (Li soap)]	130±10 g {4.59±0.35 oz}

Special tools

Unit : mm {in.}

<table>
<tr><th>Location</th><th>Tool name and shape</th><th>Part No.</th><th>Application</th></tr>
<tr><td>10</td><td>Hub cap wrench
 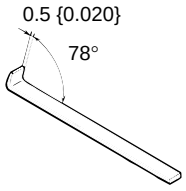

06046</td><td>MB999108</td><td>Removal of hub cap</td></tr>
<tr><td rowspan="2">15</td><td>Oil seal installer
 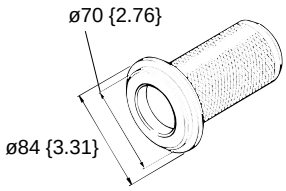

05619</td><td>MB999097</td><td rowspan="2">Press-fitting of oil seal (Use in combination)</td></tr>
<tr><td>Bearing installer
<table>
<tr><th>Model</th><th>Part No.</th><th>A</th><th>B</th><th>C</th></tr>
<tr><td>EF 639</td><td>MB999099</td><td>ø88.5 {3.48}</td><td>ø71 {2.80}</td><td>ø51 {2.01}</td></tr>
<tr><td>EF 649</td><td>MB999069</td><td>ø94.5 {3.72}</td><td>ø92.5 {3.64}</td><td>ø60 {2.36}</td></tr>
</table>
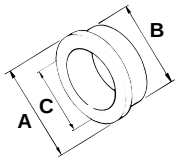

05621</td><td>MB999099
MB999069</td></tr>
<tr><td rowspan="2">13, 16</td><td>Bearing installer
 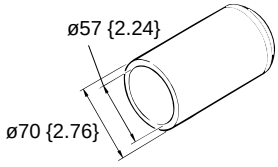

05668</td><td>MB999100</td><td rowspan="2">Press-fitting of inner and outer bearing outer races (Use in combination)</td></tr>
<tr><td>Bearing installer
<table>
<tr><th>Model</th><th>Part No.</th><th>A</th><th>B</th><th>C</th></tr>
<tr><td>EF 639</td><td>MB999099</td><td>ø88.5 {3.48}</td><td>ø71 {2.80}</td><td>ø51 {2.01}</td></tr>
<tr><td>EF 649 (Inner side)</td><td>MB999069</td><td>ø94.5 {3.72}</td><td>ø92.5 {3.64}</td><td>ø60 {2.36}</td></tr>
<tr><td>EF 649 (Outer side)</td><td>MB999099</td><td>ø88.5 {3.48}</td><td>ø71 {2.80}</td><td>ø51 {2.01}</td></tr>
</table>
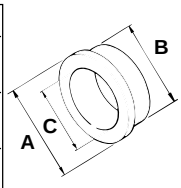

05621</td><td>MB999099
MB999069</td></tr>
</table>

◆ Service procedure

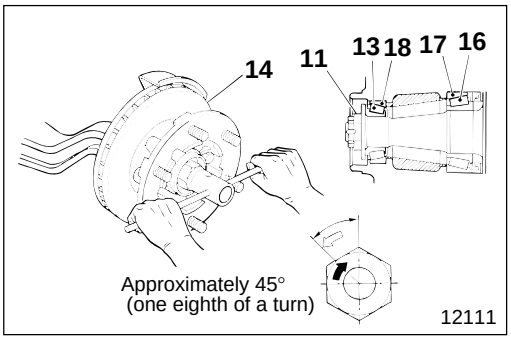

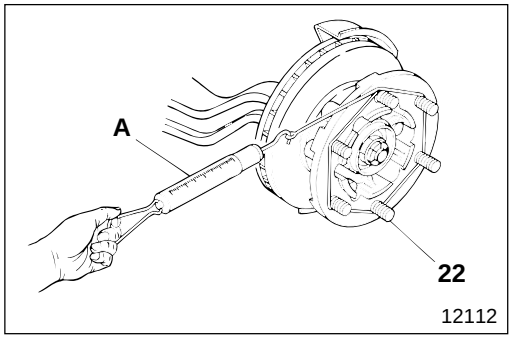

● Starting torque of wheel hub bearing

[Adjustment]

- Tighten lock nut **11** at specified torque (primary tightening) while turning wheel hub and rotor assembly **14**. Then, slacken off.
- Turn wheel hub and rotor assembly **14** several times to smooth operation of outer bearings **13** and **18**, and inner bearings **16** and **17**, and retighten lock nut **11** at specified torque (secondary tightening).
- Slacken off lock nut **11** by approximately 45° (one eighth of a turn), and lock it with a split pin. If the split pin and the pin hole do not align, slacken off the lock nut slightly, making sure that there is no play in the axial direction.

[Measurement]

- Fasten spring balance **A** to hub bolt **22** and measure the tangential force.
- If the measured tangential force is the standard value, the starting torque conforms to the standard value.
- Make sure that the starting torque is smaller than the tangential force.
- If the tangential force deviates from the specified value, adjust the starting torque again.
- If the measured value deviates from the standard value, adjust the starting torque of the wheel hub bearing according to the procedure described above.
- If any fault is found after adjustment, replace outer and inner bearings **13**, **16** to **18**.

NOTE

- **Measure the starting torque when oil seal 15 has been installed.**

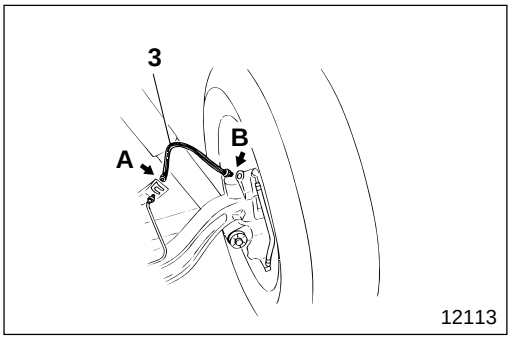

3 Removal and installation of brake hose

First remove brake hose **3** from bracket **A** (on the frame), then remove the brake hose from wheel brake **B**. For installation, follow this procedure in reverse.

CAUTION ⚠

Make sure that brake hose 3 is not twisted when you install it.

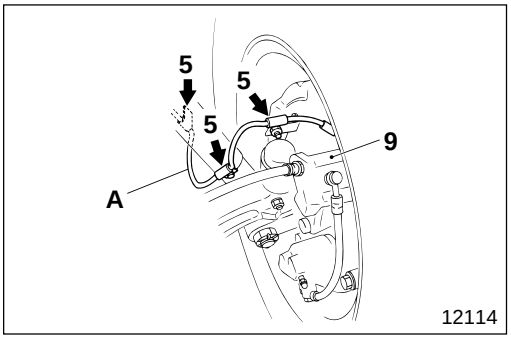

9 Installation of brake pad wear indicator harness of disc brake assembly

Fix the taping position for brake pad wear indicator harness **A** on disc brake assembly **9** using clip **5**.

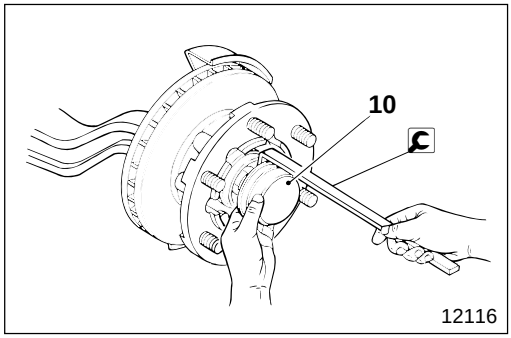

10 **Removal of hub cap**

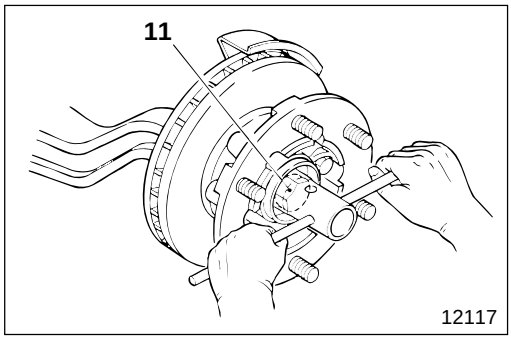

11 **Removal and installation of lock nut**

Refer to adjustment of the starting torque of the wheel hub bearing.
P26-13

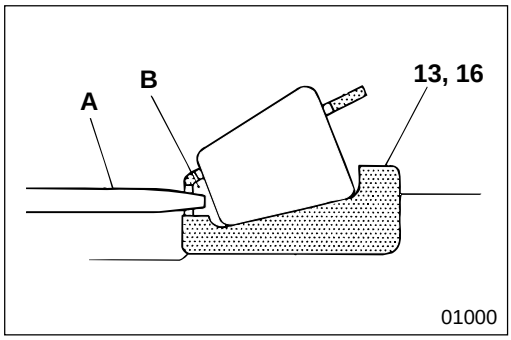

13 **16** **Packing grease in outer bearing inner race and inner bearing inner race**

A : Grease pump nozzle
B : Between rollers

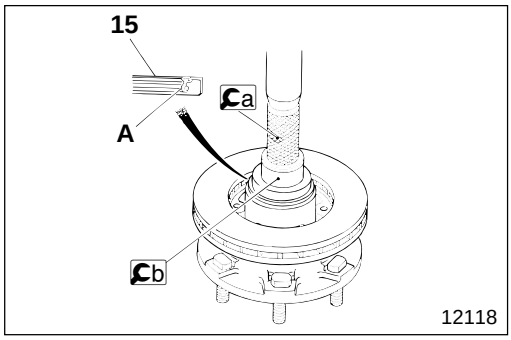

15 **Installation of oil seal**

Apply grease to lip area **A** of oil seal **15** and press-fit it.

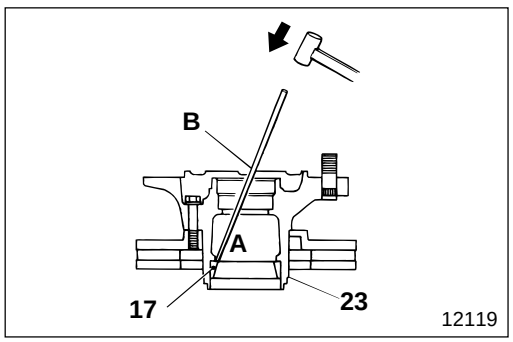

17 **Inner bearing outer race**

[Removal]
Drive out inner bearing outer race **17** from the two indented parts **A** in wheel hub **23**.

B : Pin-punch

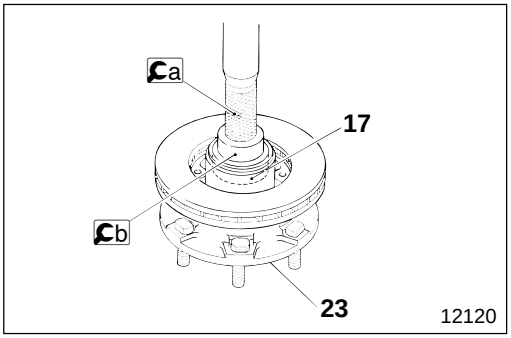

[Installation]

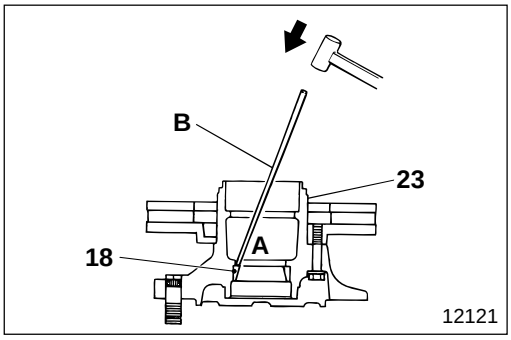

18 **Outer bearing outer race**

[Removal]
Drive out outer bearing outer race **18** from the two indented parts **A** in wheel hub **23**.
B : Pin-punch

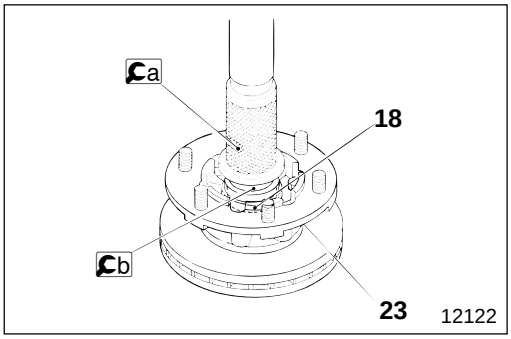

[Installation]

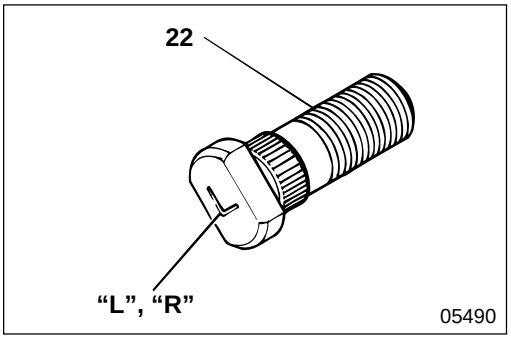

22 **Installation of hub bolt**

Hub bolt **22** is marked with "**L**" (left) or "**R**" (right) to indicate the side it is to be installed on. Check this symbol before installing the bolt.

FRONT AXLE, KNUCKLE AND KINGPIN

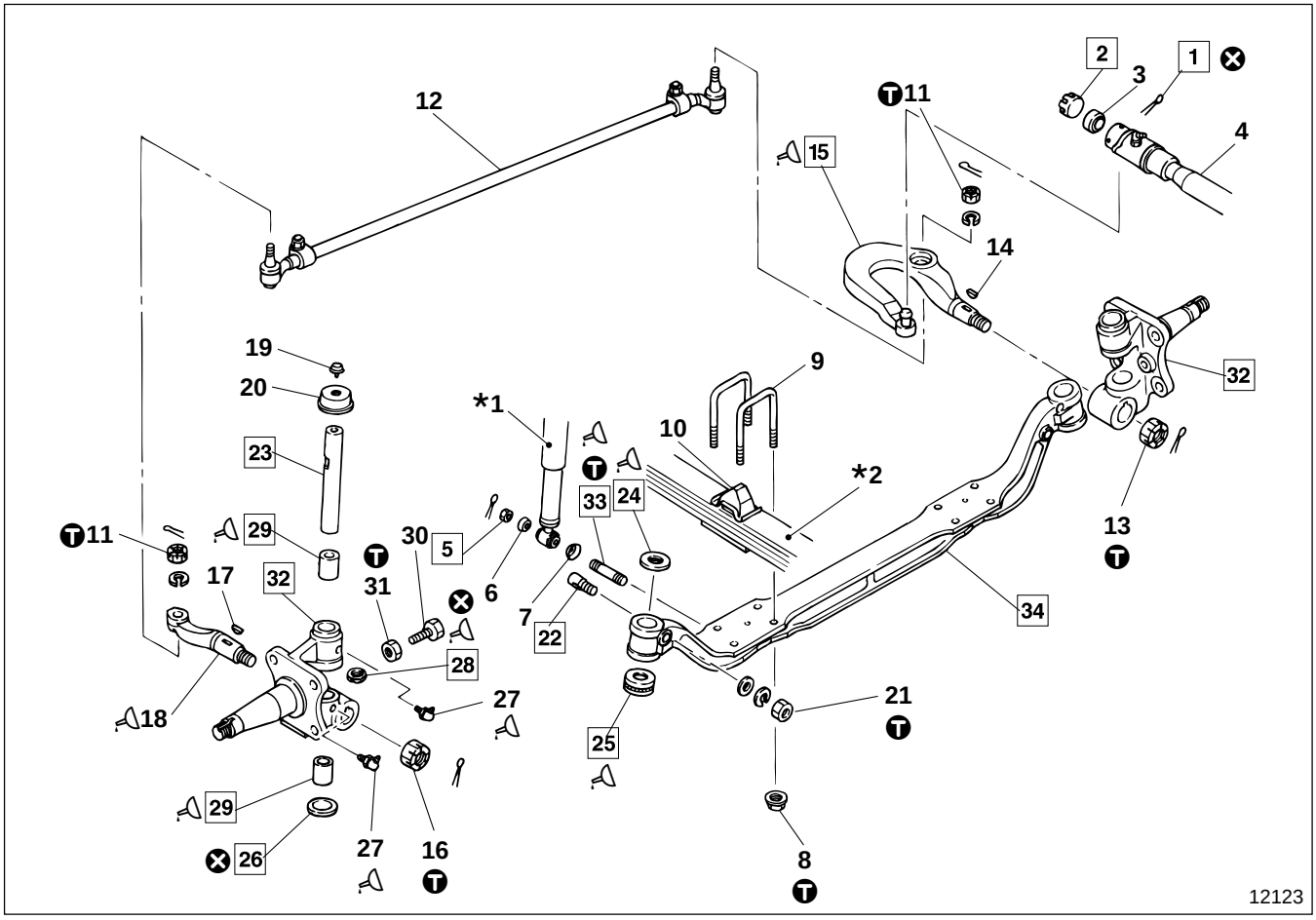

● **Disassembly sequence**

1 Split pin
2 End plug
3 Ball seat
4 Drag link Gr 37
5 Nut
6 Eye washer
7 Washer
8 U-bolt nut
9 U-bolt
10 Front axle bumper
11 Nut
12 Tie rod assembly Gr 37
13 Nut
14 Key
15 Knuckle arm
16 Nut
17 Key
18 Tie rod arm
19 Dust plug
20 Dust cap
21 Nut
22 Lock pin
23 Kingpin
24 Kingpin shim
25 Thrust bearing
26 Plug
27 Grease nipple
28 Dust seal
29 Kingpin bushing
30 Knuckle stopper bolt
31 Lock nut
32 Knuckle
33 Stud bolt
34 Front axle

***1** : Shock absorber Gr 33
***2** : Leaf spring Gr 33
⊗ : Non-reusable parts

● **Assembly sequence**

31 → 30 → 32 → 29 → 28 → 27 → 26 —┐
34 → 33 → 25 → 24 —┘
19 ¬ 17 ¬ 14 ¬
⟶ 23 → 22 → 21 → 20 → 18 → 16 → 15 → 13 → 12 —┐
→ 11 → 10 → 9 → 8 → 7 → 6 → 5 → 4 →
3 → 2 → 1

Repair kit : Kingpin kit

Service standards

Unit : mm {in.}

Location	Maintenance item	Standard value	Limit	Remedy
23	Kingpin outer diameter	$[28]^{-0.020}_{-0.053}$ $\left\{[1.102]^{-0.00079}_{-0.0021}\right\}$	27.9 {1.098}	Replace
29	Inner diameter of kingpin bushing (After press-fitting into knuckle)	$[28]^{+0.033}_{0}$ $\left\{[1.102]^{+0.0013}_{0}\right\}$	—	Replace
	Clearance between kingpin and kingpin bushing	0.020 to 0.086 {0.00079 to 0.0034}	0.15 {0.0059}	
32, 34	Vertical clearance between knuckle and front axle	0.02 to 0.10 {0.00079 to 0.0039}	0.20 {0.0079}	Adjust using kingpin shim
34	Bend in front axle, longitudinal direction	2 {0.079} or less	2 {0.079}	Replace
	Bend in front axle, vertical direction	2 {0.079} or less	2 {0.079}	
	Front axle kingpin inclination angle	8°	8°±10'	

Tightening torque

Unit : N·m {lbf.ft, kgf·m}

Location	Parts to be tightened		Tightening torque	Remarks
8	U-bolt nut (U-bolt mounting)		162±15 {120±11, 16.5±1.5}	—
11	Nut (Tie rod mounting)		93±25 {69±18, 9.5±2.5}	—
13	Nut (Knuckle arm mounting)		245±49 {180±36, 25±5}	—
16	Nut (Tie rod mounting)		245±49 {180±36, 25±5}	—
21	Nut (Lock pin mounting)		33±5 {25±3.6, 3.4±0.5}	—
31	Lock nut (Knuckle stopper bolt fastening)		46.5±7 {34±5.4, 4.75±0.75}	—
33	Stud bolt	Inserting	88 {65, 9}	—
		Removing	137 {100, 14}	—

Lubricant and sealant

Location	Points of application	Kinds	Quantity
15, 18	Thread areas of knuckle arm and tie rod arm	Chassis grease [NLGI No. 1 (Ca soap)]	As required when reused
24	Both surfaces of kingpin shim	Chassis grease [NLGI No. 1 (Ca soap)]	As required
25	Upper surface of thrust bearing	Chassis grease [NLGI No. 1 (Ca soap)]	As required
27	Supply via grease nipple	Chassis grease [NLGI No. 1 (Ca soap)]	Pack until grease overflows from dust plug
28	Lip area of dust seal	Chassis grease [NLGI No. 1 (Ca soap)]	As required
29	Inner surface of kingpin bushing	Chassis grease [NLGI No. 1 (Ca soap)]	As required
33	Thread area of stud bolt	LOCTITE 271	As required

Special tools

Unit : mm {in.}

Location	Tool name and shape	Part No.	Application
23	Kingpin puller **A** : Pipe **B** : Bolt **C** : Cap **D** : Nut 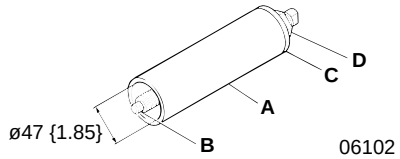	MB999013 **A**: MB999014 **B**: MB999015 **C**: MB999016 **D**: MB999017	Removal of kingpin
29	Bushing installer **A** : Bushing installer A **B** : Bushing installer B 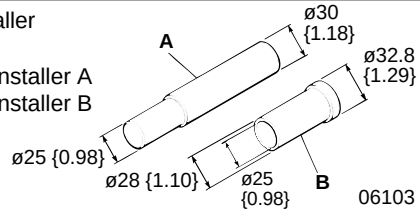	MB999066 **A**: MB999067 **B**: MB999068	Removal and installation of kingpin bushing

◆ Service procedure

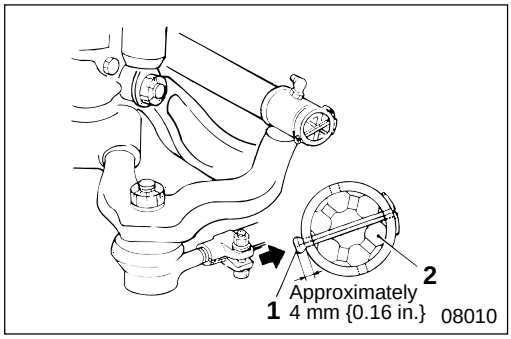

1 **2** **Mounting of split pin and end plug**

- Tighten end plug **2** fully and slacken off by one half of a turn, then turn the plug so that the head of split pin **1** faces the outside of the body.
- Caulk the head of split pin **1** until it is approximately 4 mm {0.16 in.} thick.

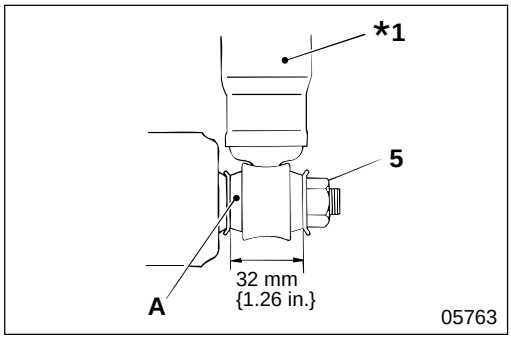

5 **Mounting of nut**

Mount and tighten nut **5** so that the dimensions of rubber bushing **A** of shock absorber ***1** are as illustrated.

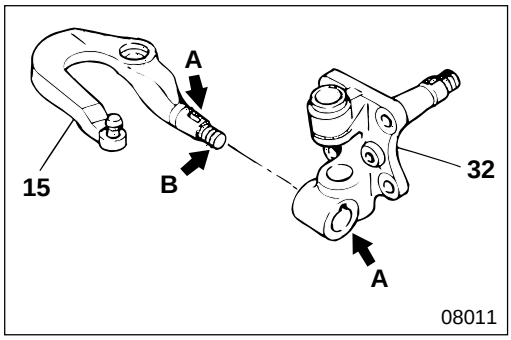

15 **32** **Installation of knuckle arm and knuckle**

(1) Reassembly of existing knuckle arm 15 and/or knuckle 32

- Polish taper surfaces **A** of knuckle arm **15** and knuckle **32** with emery paper (120 grit or finer) uniformly, until abrasion traces left by the emery paper are only just visible. For new parts, polishing is not required.
- Clean taper surfaces **A** of knuckle arm **15** and knuckle **32**, and thread area **B** of the knuckle arm. (Use a cleaning solvent for acetone color checking or other solvent.)

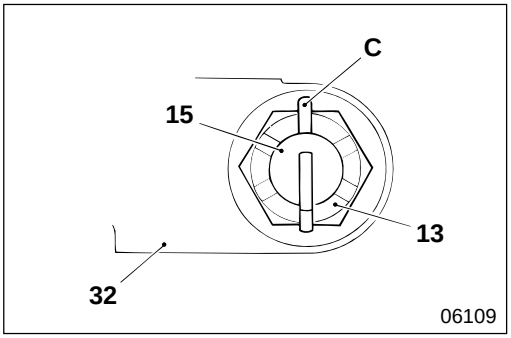

- Install knuckle arm **15** after applying grease to thread area **B**. (Do not grease the taper surface of knuckle arm and knuckle **32**.)
- Tighten new nut **13** at specified torque. Without loosening the nut, insert split pin **C** into the pin hole to lock the nut.

(2) Installation of new knuckle arm 15 and new knuckle 32

- Clean taper surfaces **A**, or thread area **B**, of knuckle arm **15** and knuckle **32**, and install them without greasing.
- Tighten new nut **13** at specified torque. Without loosening the nut, insert split pin **C** into the pin hole to lock the nut.

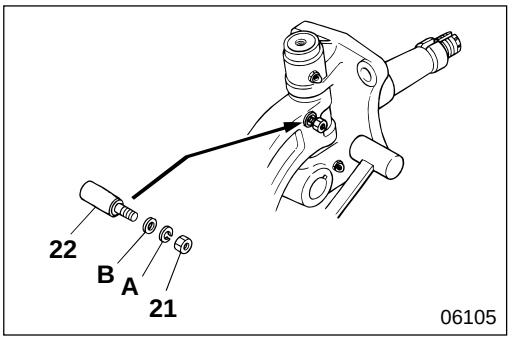

22 Removal of lock pin

- Remove nut **21**, spring washer **A**, and washer **B**. Screw the nut into lock pin **22** again until they are almost level with each other. Then, tap the nut lightly to loosen the lock pin.

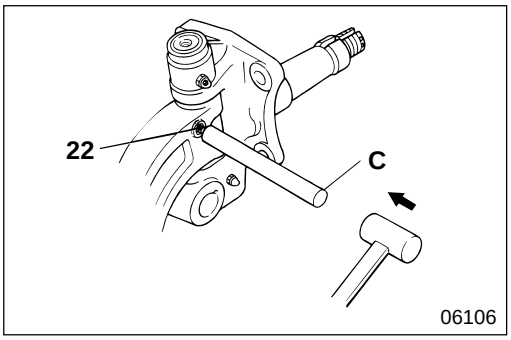

- Remove nut **21**. While holding drift **C** against lock pin **22**, tap the lock pin lightly to extract it.

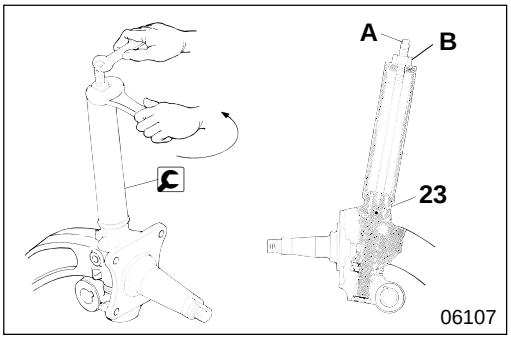

23 Removal of kingpin

- Screw bolt **A** of the kingpin puller into the thread area of kingpin **23**.
- Fasten bolt **A** with nut **B**, and remove kingpin **23**.

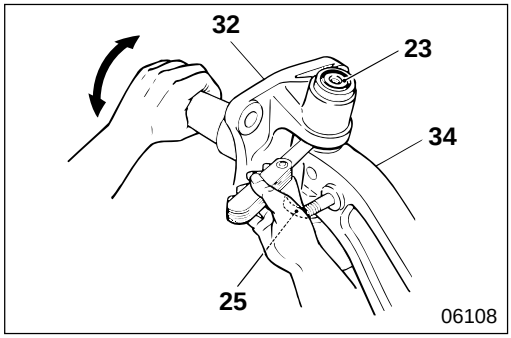

24 **32** **34** **Kingpin shim, knuckle, and front axle**

[Inspection]

- Assemble kingpin **23** and thrust bearing **25** temporarily, and turn knuckle **32** a couple of times to smooth its operation.
- Measure the clearance between the upper surface of front axle **34** and the lower part of knuckle **32**.
- If the measured value is higher than the limit, adjust the clearance.

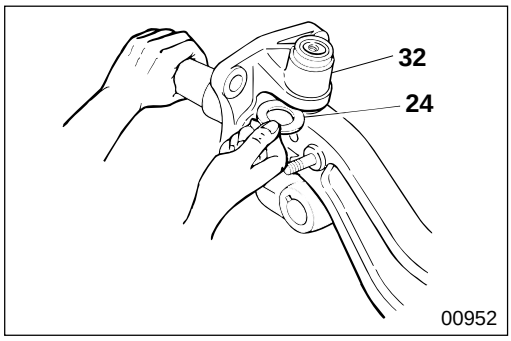

[Adjustment]

- Adjusting kingpin shim **24** is available in four thickness: 0.10 mm {0.0039 in.}, 0.15mm {0.0059 in.} 0.20 mm {0.0079 in.} and 0.30 mm {0.012 in.}
- Be sure to minimize the clearance by selecting appropriate kingpin shim **24**.
- Make sure that knuckle **32** turns smoothly after assembly.

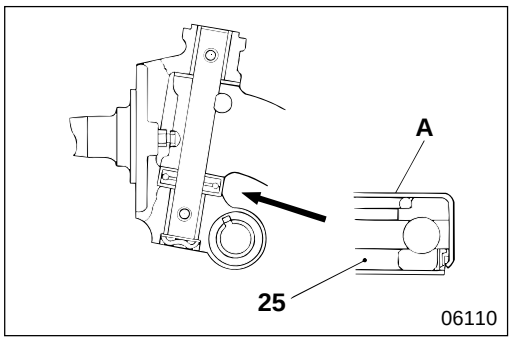

25 **Installation of thrust bearing**

Install thrust bearing **25** with case **A** facing upwards.

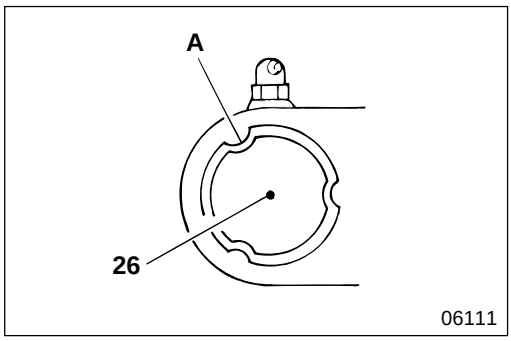

26 **Mounting of plug**

Drift in plug **26**, and caulk it securely at three equidistant points around the circumference.

A : When caulked

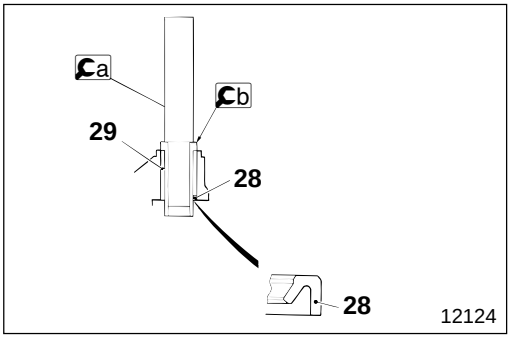

28 **29** **Dust seal and kingpin bushing**

[Removal]
When removing the upper part of kingpin bushing **29**, remove dust seal **28** at the same time.

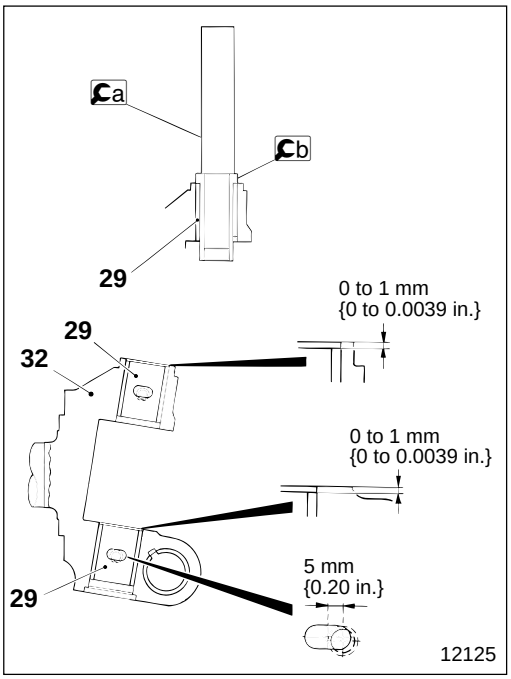

[Installation]

- Press-fit kingpin bushing **29** so that gap **A** between kingpin bushing **29** and knuckle **32** is within 0 to 1 mm {0 to 0.039 in.}.
- Oil hole of kingpin bushing **29** and tapped hole of knuckle **32** should not deviate from each other by more than 5 mm {0.20 in.}.
- Apply grease to lip area **C** of dust seal **28** and press-fit in the direction as illustrated in the upper figure.

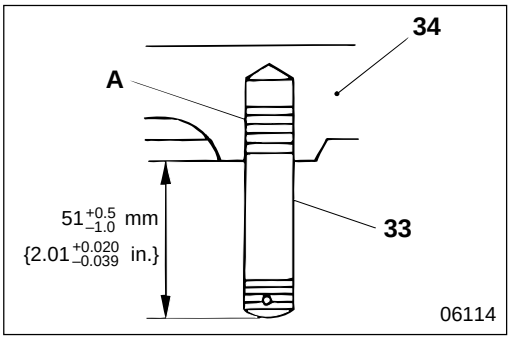

33 **34** **Stud bolt and front axle**

- Coat thread area **A** of stud bolt **33** in front axle **34** with lock paint.
- Mount stud bolt **33** maintaining a mounting dimension within $51^{+0.5}_{-1.0}$ mm {$2.01^{+0.020}_{-0.039}$ in.}.

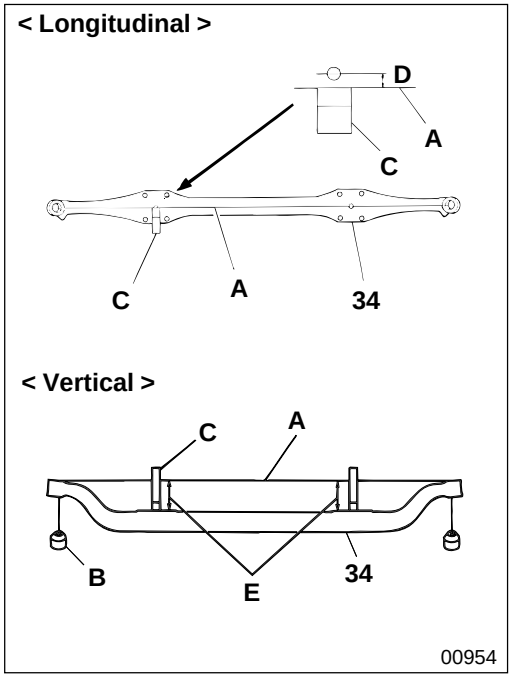

34 Inspection of front axle

(1) Measurement of bend in front axle in longitudinal and vertical directions

- Pass a piece of thread **A** through the kingpin hole of front axle **34** and hang weights **B** on both ends.
- Use square **C** to find the degree of bend in both the longitudinal direction **D** and the vertical direction **E**.
- If the measured value is higher than the limit, replace front axle **34**.

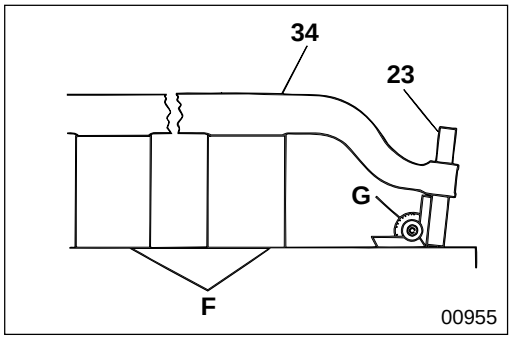

(2) Measurement of kingpin inclination angle

Mount kingpin **23** in front axle **34** as illustrated, and measure the kingpin inclination angle. If the measured value is higher the limit, replace the front axle.

F : Block gauge

G : Bevel square

MITSUBISHI
FUSO

FG

Service Manual

Group 26B
Front Axle

'98 Minor Change

Table of Contents

MITSUBISHI FUSO TRUCK OF AMERICA, Inc.

BACK HOME

Pub No. TWSE9501-226B

GROUP 26B FRONT AXLE < FG >

SPECIFICATIONS 26B- 2

STRUCTURE AND OPERATION 26B- 2

TROUBLESHOOTING 26B- 5

ON-VEHICLE INSPECTION AND ADJUSTMENT
- Adjustment of Wheel Alignment 26B- 7
- Adjustment of Steering Angle 26B- 10
- Measurement of Side Slip 26B- 11

WORK BEFORE REMOVAL AND INSTALLATION OF FRONT AXLE 26B- 12

WHEEL HUB AND BRAKE DRUM 26B- 14

KNUCKLE AND DRIVE SHAFT 26B- 22

AXLE HOUSING 26B- 28

REDUCTION AND DIFFERENTIAL 26B- 30

SPECIFICATIONS / STRUCTURE AND OPERATION

SPECIFICATIONS

Item \ Vehicle model		FG639
Front axle	Model	F020TW
	Type	Full floating type with birfield joint
Tread	mm {in.}	1665 {65.6}
Reduction	Model	D1H modified
	Type	Single-reduction gear
	Tooth shape	Hypoid gear
	Speed reduction ratio	5.714
Differential	Tooth shape	Straight bevel gear
Gear oil	Grade	* Normal : Maximum air temperature during operation below 40°C {104°F} API GL-5 SAE 90 Hot area : Maximum air temperature during operation above 40°C {104°F} API GL-5 SAE 140
	Oil volume L {qts.}	3.0 {3.2}
Mass (reference)	kg {lb}	Approximately 230 {505}

* When used under heavily-loaded, severe conditions such as continuous driving on uphill grades, it is recommended that you use gear oil with a SAE viscosity grade of 140. However, the air temperature must be above 10°C {50°F}.

STRUCTURE AND OPERATION

Wheel Hub and Brake Drum

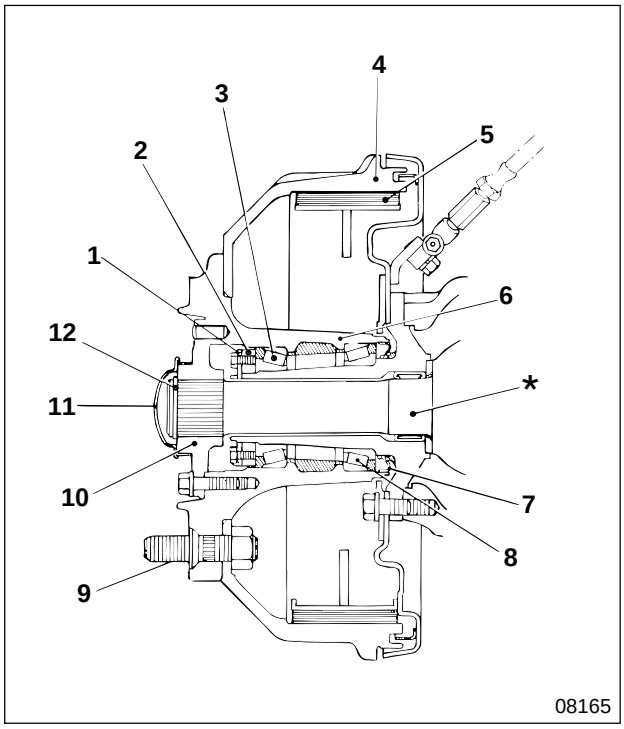

1 Lock washer
2 Lock nut
3 Outer bearing
4 Brake drum
5 Brake assembly
6 Wheel hub
7 Oil seal
8 Inner bearing
9 Hub bolt
10 Drive flange
11 Hub cap
12 Snap ring

***** : Drive shaft

Axle, Knuckle, and Drive Shaft

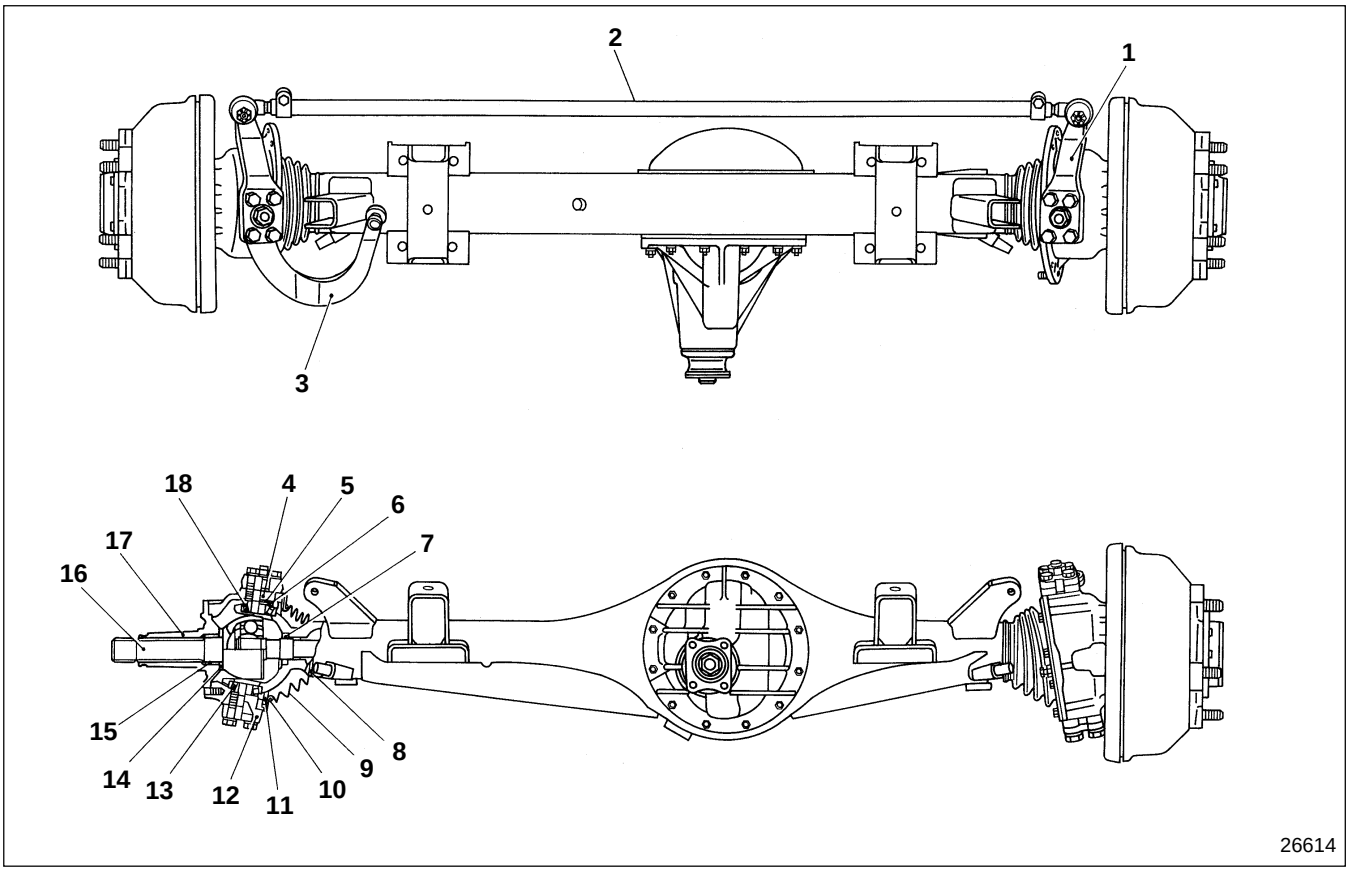

1 Tie rod arm
2 Tie rod assembly
3 Knuckle arm
4 Kingpin, upper
5 Conical spring
6 Spacer
7 Oil seal
8 Boot band
9 Dust boot
10 Retainer
11 Dust seal
12 Kingpin, lower
13 Trunnion bearing
14 Spacer
15 Needle bearing
16 Drive shaft assembly
17 Knuckle spindle
18 Trunnion bearing

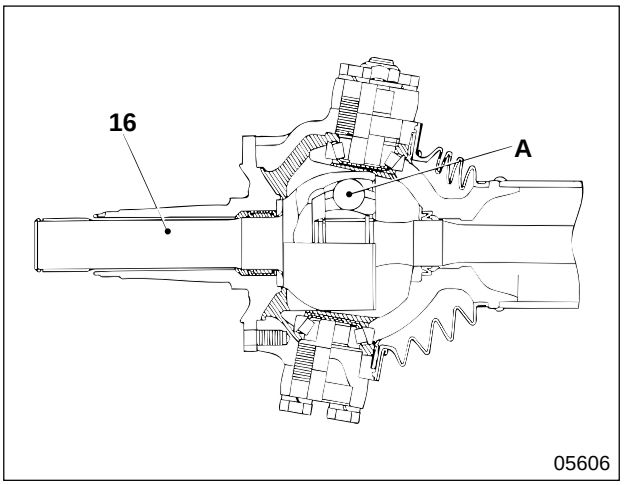

Drive shaft assembly **16** should transmit power in response to the variations in rotation speed that occur due to variations in steering angle, etc. when steering the vehicle.
To support this function, Birfield joint assembly area **A** in drive shaft assembly **16** uses a constant speed joint that transmits power evenly, eliminating variations in rotation speed between the driving shaft and the driven shaft.

Reduction and Differential

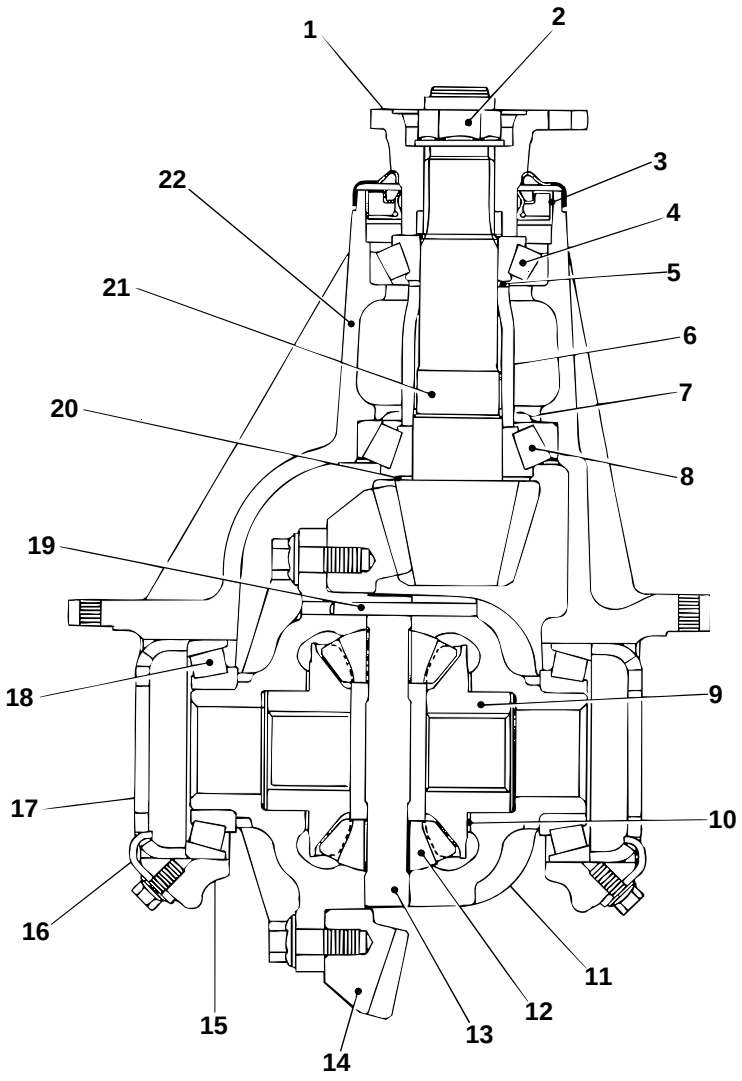

1 Companion flange assembly
2 Lock nut
3 Oil seal
4 Front bearing
5 Front bearing shim
6 Pinion spacer
7 Oil stopper
8 Rear bearing
9 Differential gear
10 Differential gear spacer
11 Differential case
12 Differential pinion
13 Pinion shaft
14 Final drive gear
15 Bearing cap
16 Lock plate
17 Side bearing nut
18 Side bearing
19 Lock pin
20 Rear bearing shim
21 Final drive pinion
22 Differential carrier

Possible causes	Symptoms	Oil leaking from companion flange assembly	Oil leaking from differential carrier and front axle housing	Oil leaking from drive shaft assembly	Power transmission incorrect: Propeller shaft turns but front wheels do not turn (at bench test)	Power transmission incorrect: Noise when starting and when changing gear	Power transmission incorrect: Continuous noise while cruising	Power transmission incorrect: Intermittent noise while cruising	Power transmission incorrect: Noise while steering into a bend	Tires drag while steering into a bend
Wheel hub, knuckle and drive shaft, and axle housing	Front axle housing bent						○			
	Drive shaft assembly bent						○			
	Drive shaft assembly damaged				○					
	Drive shaft assembly disengaged from differential gear spline				○					
	Birfield joint in drive shaft assembly faulty				○	○	○			
	Kingpin bearing loose								○	
	Knuckle bearing worn						○			
	Oil seal faulty			○						
	Wheel hub bearing seized, worn, or rotation faulty						○			
	Wheel hub bearing damaged							○		
Reduction and differential	Gear oil excessive	○								
	Gear oil insufficient					○	○			
	Oil seal faulty	○								
	Vent plug clogged	○		○						
	Sealant faulty		○							
	Side bearing seized, worn, or rotation faulty						○		○	
	Side bearing broken							○		
	Side bearing preload adjusted incorrectly						○			
	Reduction and differential assembly mounting nut loose		○					○		
	Differential carrier cracked or damaged		○							
	Final drive gear and differential case tightening bolt loose					○		○		
	Final drive gear or final drive pinion broken				○	○		○	○	
	Final drive gear or final drive pinion worn						○		○	
	Final drive gear or final drive pinion damaged						○			

TROUBLESHOOTING

Possible causes \ Symptoms		Oil leaking from companion flange assembly	Oil leaking from differential carrier and front axle housing	Oil leaking from drive shaft assembly	Power transmission incorrect					
					Propeller shaft turns but front wheels do not turn (at bench test)	Noise when starting and when changing gear	Continuous noise while cruising	Intermittent noise while cruising	Noise while steering into a bend	Tires drag while steering into a bend
Reduction and differential	Final drive gear backlash excessive					○				
	Final drive gear backlash or tooth contact adjusted incorrectly						○			
	Final drive pinion starting torque adjusted incorrectly					○	○			
	Lock nut loose					○	○			
	Differential gear backlash excessive					○				
	Front or rear bearing seized				○		○			
	Front or rear bearing worn						○			
	Front or rear bearing broken							○		
	Differential gear or differential pinion broken				○			○	○	○
	Differential gear or differential pinion seized				○					○
	Differential gear or differential pinion worn								○	○
	Spacer worn or damaged							○	○	○
	Differential gear spline worn					○				

Adjustment of Wheel Alignment

Service standards

Unit : mm {in.}

Location	Maintenance item		Standard value	Limit	Remedy
—	Wheel alignment	Toe-in (with tires on the ground)	0 to 6 {0 to 0.24}	—	—
		Camber	1°00'±30'	—	—
		Caster	0°30'±1°00'	—	—
		Kingpin inclination angle	9°30'	9°30'±30'	—

Tightening torque

Unit : N·m {lbf.ft, kgf·m}

Location	Parts to be tightened	Tightening torque	Remarks
1	Clamp bolt (Tie rod end clamp fastening)	25±5 {18±3.6, 2.5±0.5}	—

NOTE

- **Measure the wheel alignment when the vehicle is empty and level.**
- **Be sure that each part of the front axle has been serviced perfectly before adjusting the wheel alignment.**

Before adjusting the wheel alignment, check for the following faults :

- Play in front wheel hub
- Play or looseness in kingpin
- Play or looseness in the joint between the tie rod and the knuckle arm
- Looseness of any fasteners
- Fatigued or damaged leaf springs
- Incorrect tire pressure
- Incorrect steering gear backlash

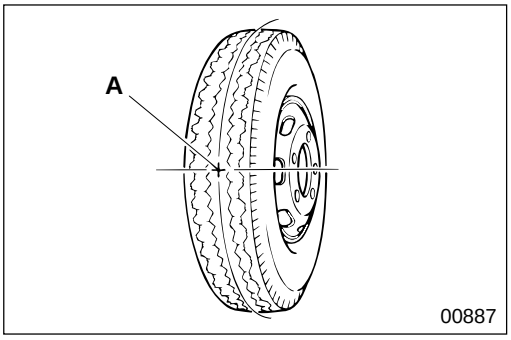

(1) Measurement and adjustment of toe-in

- Point the front wheels exactly forward.
- Put mark **A** on the left and right front tires at the height of front wheel axis and in the middle of the tire width.

ON-VEHICLE INSPECTION AND ADJUSTMENT

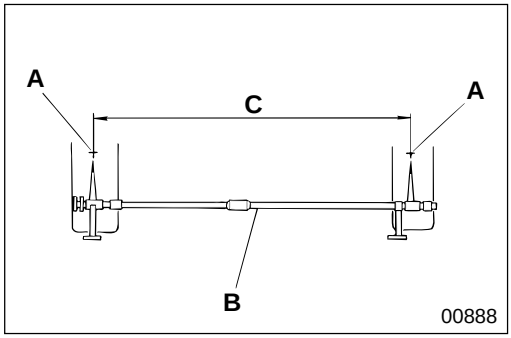

- Align the two points of toe-in gauge **B** to the respective marks **A** on the front tires. Measure the distance **C** between the marks at the front of the vehicle.

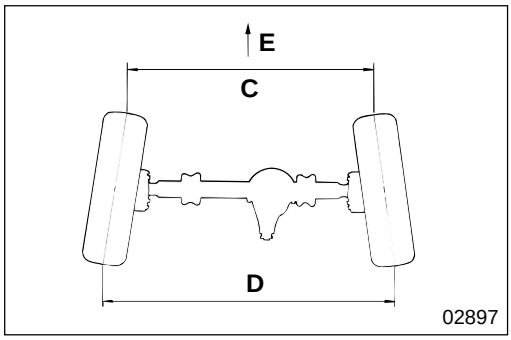

- Rotate the tires 180° and measure the distance **D** between the marks at the rear of the vehicle with the tires on the ground.
- Check if the difference between distances **C** and **D** is within the standard value.

E : Front of the vehicle

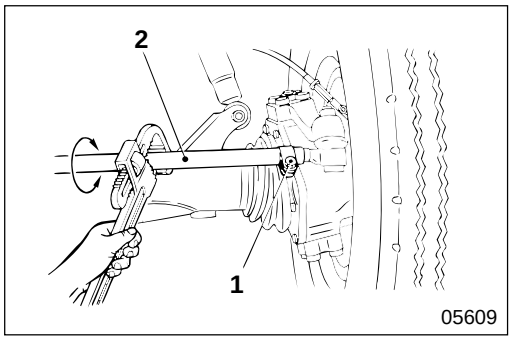

- If the measured value deviates from the standard value, with the tires pointed forward, loosen left and right clamp bolts **1** and adjust the toe-in to the standard value by turning tie rod **2** with a pipe wrench.

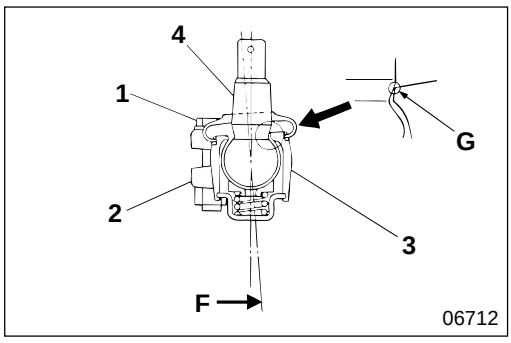

- Move the vehicle forward and turn tie rod **2** towards the front, with the tires pointed forward (**F** as illustated). Make sure when adjusting toe-in to the standard value, that both left and right tie rod ends **3** are in contact with ball stud **4** (**G** as illustrated) at the same time.
  After adjustment, tighten clamp bolt **1** to secure the tie rod.
- In order to keep the end of clamp bolts **1** away from the vehicle, mount tie rod **2** so that clamp center **H** is placed in the range as illustrated.

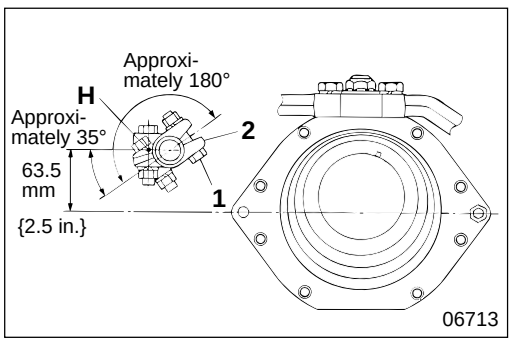

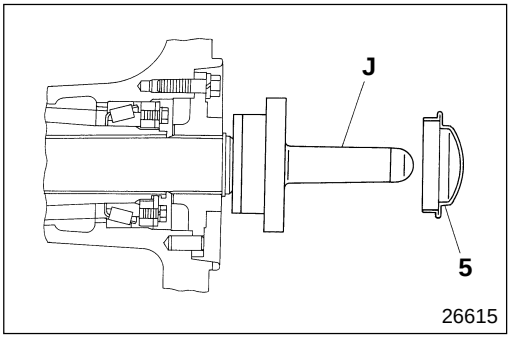

(2) Measurement of camber

- Point the front wheels exactly forward.
- Remove hub cap **5**, and attach camber caster kingpin gauge **J**.

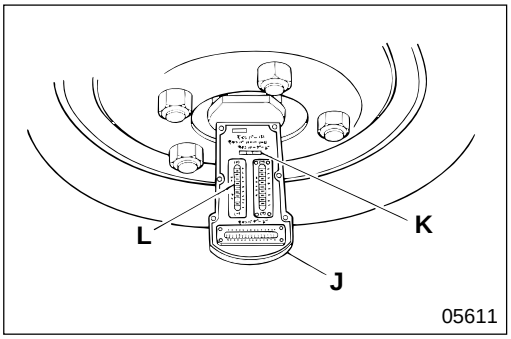

- While keeping the bubble in level **K** centered, measure the camber angle by reading the scale mark at the center of the bubble on camber scale **L**. Follow this procedure to measure the camber angles on the left and right sides.

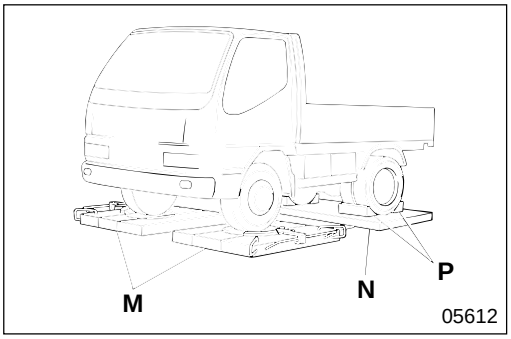

(3) Measurement of caster and kingpin inclination angle

- Align turning radius gauges **M**. Prepare a platform **N** having the same height as the turning radius gauges and place the platform under the rear wheels so that the vehicle is kept level.
- Keep turning radius gauges **M** locked.
- Jack up the vehicle and set the left and right front wheels so that the ground contact area of both front tires and the turntables of turning radius gauges **M** meet at their respective centers.

WARNING⚠

- **After jacking up the vehicle, chock the rear wheels securely with chocks P.**
- **Do not remove chocks P until the entire operation is completed.**

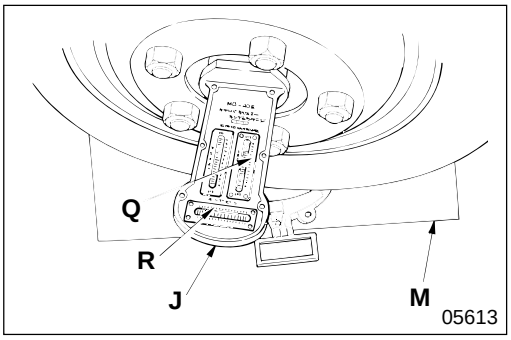

- Unlock turning radius gauges **M**, and set the scale at 0°.
- As in measuring camber explained previously, attach camber/caster kingpin gauge **J** tightly to the front wheel hub and keep the bubble centered.
- Apply the brake to the front wheels and turn the steering wheel slowly from the 0° point on the scale of turning radius gauges **M**, until direction changes 20° to the left for the left front wheel and 20° to the right for the right front wheel.

NOTE

It is not possible to obtain an exact reading of camber unless the brake is applied to the front wheels because the tires might rotate slightly.

- At the 20° point, align the bubbles in caster scale **Q** and kingpin scale **R** to 0° by turning the adjuster.

NOTE

Kingpin scale R has scales for left and right; use the left scale when adjusting the left wheel, and the right scale when adjusting the right wheel.

- Turn the steering wheel slowly until the left front wheel changes its direction 20° to the right, or until the right front wheel changes its direction 20° to the left, past the 0° point of turning radius gauge **M** scale. At this point read the scale marks at the center of the bubbles on caster scale **Q** and kingpin scale **R**. The scale marks indicate the caster and kingpin inclination angles.

Adjustment of Steering Angle

Service standards

Location	Maintenance item		Standard value	Limit	Remedy
—	Steering angle	Inside (Outside : reference)	30° (29°)	—	Adjust

Tightening torque

Unit : N·m {lbf.ft, kgf·m}

Location	Parts to be tightened	Tightening torque	Remarks
2	Lock nut (Knuckle stopper bolt tightening)	96±12 {71±9, 9.75±1.25}	—

NOTE

Be sure that wheel alignment is adjusted perfectly before adjusting the steering angle.

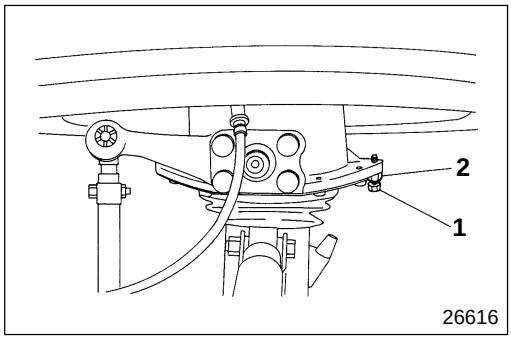

- To adjust the steering angle, set the turning radius gauges and platform in the same way as for caster and kingpin inclination angle measurement.
- Turn the steering wheel to the left or right completely, and from the position where the turning radius gauge is aligned to 0°, adjust knuckle stopper bolt **1**. Adjust so that the steering angle is within the standard inside steering angle value, to the left for the left front wheel, and to the right for the right front wheel. Then, tighten lock nut **2** at specified torque.

NOTE

Be sure when working on the vehicle, to adjust both stoper bolts 1 at the front and back of the knouckle arm side.

Measurement of Side Slip

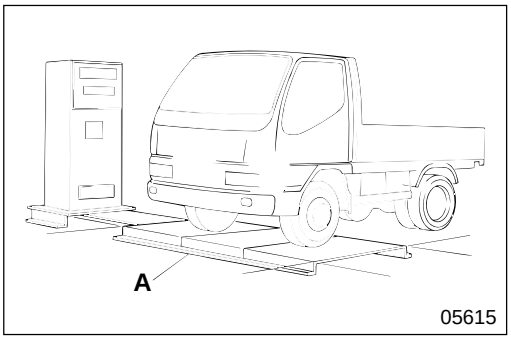

NOTE

Be sure that wheel alignment is adjusted perfectly before measuring side slip.

- Point the front wheels exactly forward.
- Maintain this position and slowly move vehicle forward, over side slip tester **A**, as slowly as possible.

NOTE

Make sure, when measuring side slip, that the wheels point exactly forward when the vehicle passes over side slip tester A. Do not allow the wheels to veer from side-to-side.

- The side slip is indicated by side slip tester **A** after the vehicle has passed through the tester. Readjust wheel alignment if slippage is 3 mm {0.12 in.} or more per meter {3.28 ft.}.

WORK BEFORE REMOVAL AND INSTALLATION OF FRONT AXLE

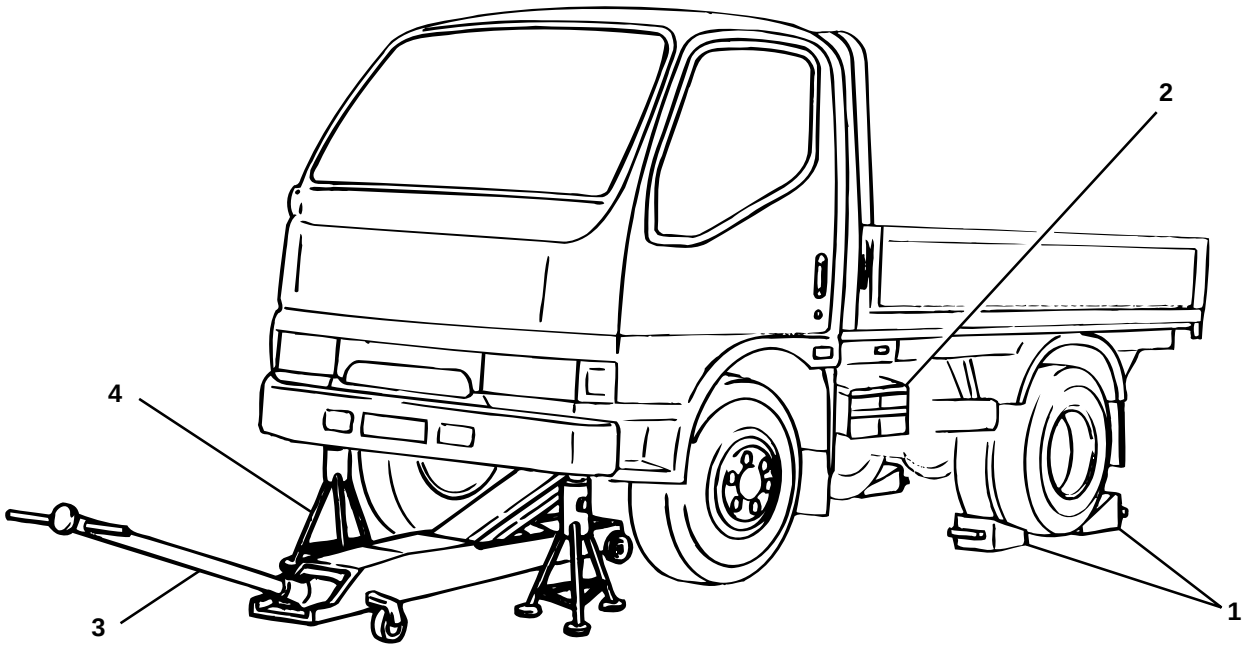

● **Work sequence before removal**

1 Place wheel chocks.
2 Disconnect the negative battery cable. Gr 54
3 Jack up the front axle with a garage jack.
4 Support the front frame on rigid racks.

WARNING

- **Chock the wheels securely so the vehicle does not move.**
- **Do not remove the chocks until the entire operation is completed.**
- **Supporting a vehicle on a garage jack only is extremely dangerous, so always support the frame on rigid racks.**
- **Leave the garage jack and rigid racks in place until the entire operation is completed. Never remove them during the operation.**

● **Work sequence after installation**

Follow the work sequence before removal in reverse.

M E M O

WHEEL HUB AND BRAKE DRUM

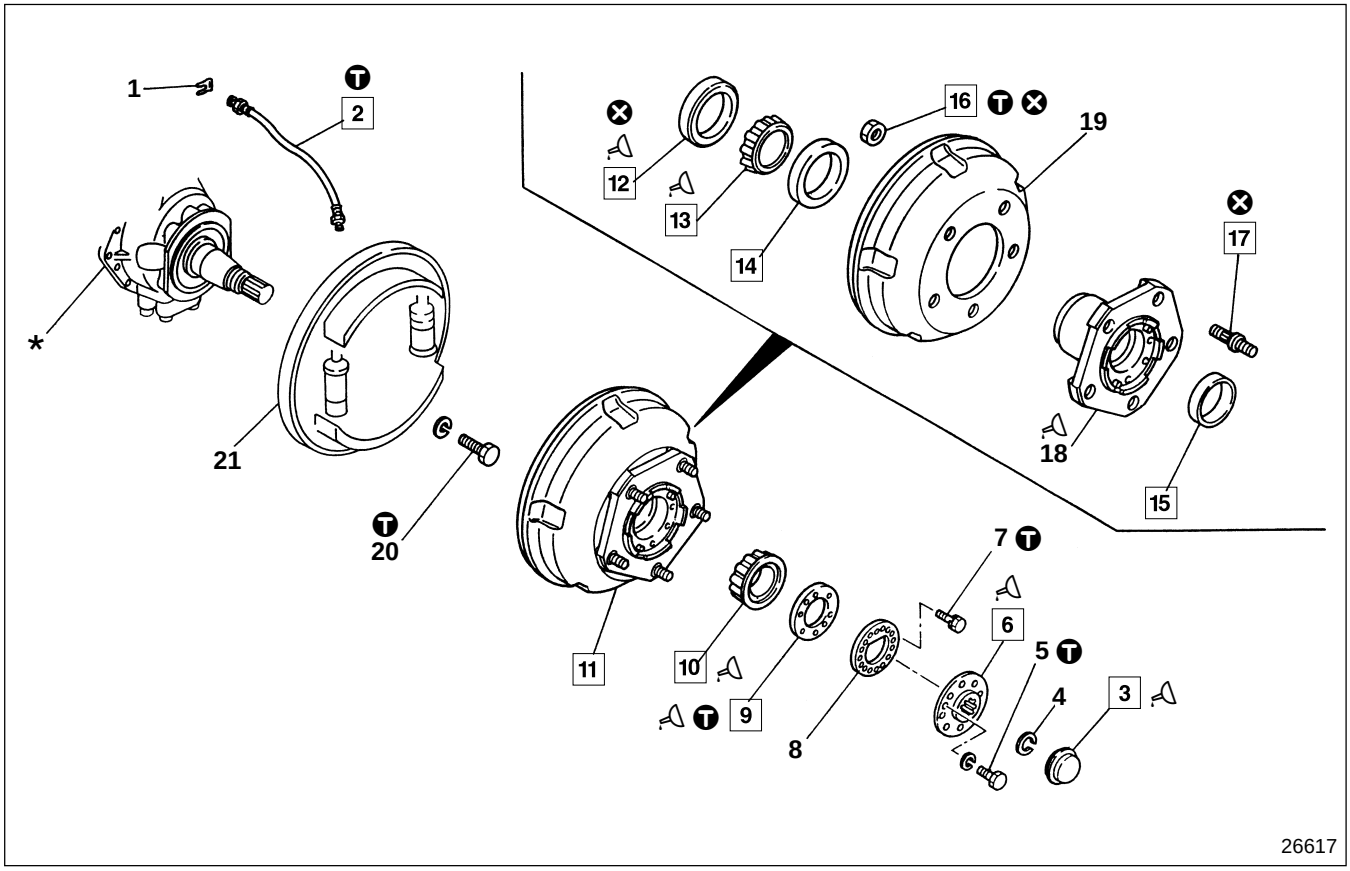

● **Disassembly sequence**

1 Clip
2 Brake hose
3 Hub cap
4 Snap ring
5 Bolt
6 Drive flange
7 Bolt
8 Lock washer
9 Lock nut
10 Outer bearing inner race
11 Wheel hub and brake drum assembly
12 Oil seal
13 Inner bearing inner race
14 Inner bearing outer race
15 Outer bearing outer race
16 Nut
17 Hub bolt
18 Wheel hub
19 Brake drum
20 Bolt
21 Brake assembly Gr 35

* : Knuckle and drive shaft P26B-22
⊗ : Non-reusable parts

CAUTION ⚠

Be sure to protect brake hose 2 from dust by fitting plugs after removal.

NOTE

Do not disassemble wheel hub 18 and brake drum 19 except for replacement.

● **Assembly sequence**

*→21→20→11→10→9→8→7 →6→5→4→3→2→1

11 : 19→18→17→16→15→14→13→12

WARNING⚠

You must bleed air from the brake system after installing the brake hose, failure to do so would cause the brake to malfunction. Gr 35

CAUTION⚠

Be careful not to damage oil seal 12, press-fitted into the top of wheel hub 18, when installing wheel hub and brake drum assembly 11 into the knuckle and drive shaft.

Service standards

Location	Maintenance item	Standard value	Limit	Remedy
10, 12, 13, 15	Starting torque of wheel hub bearing	3±1 N·m {2.2±0.7 lbf.ft, 0.3±0.1 kgf·m}	—	Tangential force at hub bolt 18 to 34 N {4.0 to 7.7 lbf., 1.8 to 3.5 kgf}

Tightening torque

Unit : N·m {lbf.ft, kgf·m}

Location	Parts to be tightened		Tightening torque	Remarks
2	Brake hose tightening		13 to 17 {9.4 to 12, 1.3 to 1.7}	—
5	Bolt (Drive flange mounting)		68.6±4.9 {51±3.6, 7±0.5}	—
7	Bolt (Lock washer mounting)		9±2 {6.5±1.4, 0.9±0.2}	—
9	Lock nut (Wheel hub bearing mounting : wheel hub bearing pre-pressure adjusting)	Primary tightening	113±15 {83±11, 11.5±1.5}	—
		After primary tightening, carry-out secondary tightening	25±5 {18±3.6, 2.5±0.5}	—
16	Nut (Wheel hub and brake drum mounting)		343±39 {253±29, 35±4}	—
20	Bolt (Brake assembly mounting)		123±5 {90±3.6, 12.5±0.5}	—

Lubricant and/or sealant

Location	Points of application	Specified lubricant and/or sealant	Quantity
3	Contact surfaces of hub cap and wheel hub	THREEBOND 1104	As required
6	Contact surfaces of drive flange and wheel hub	THREEBOND 1104	As required
9	Thread area of lock nut	Wheel bearing grease [NLGI No.2 (Li soap)]	As required
10, 13	Pack the space between rollers of outer and inner bearing inner races	Wheel bearing grease [NLGI No.2 (Li soap)]	As required
12	Lip area of oil seal	Wheel bearing grease [NLGI No.2 (Li soap)]	As required
18	Pack interior space of wheel hub	Wheel bearing grease [NLGI No.2 (Li soap)]	65±10 g {2.3±0.3oz}

WHEEL HUB AND BRAKE DRUM

Special tools

Unit : mm {in.}

Location	Tool name and shape	Part No.	Application
3	Hub cap wrench 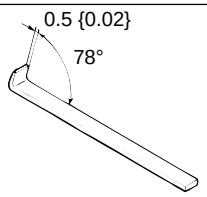	MB999108	Removal of hub cap
9	Lock nut adjustment tool 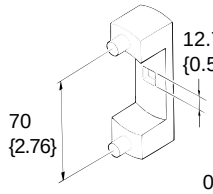	MB999151	Removal and installation of lock nut
11	Hub puller A : Hub puller body B : Attachment C : Bolt 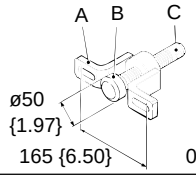	MB999070 A : MB999071 B : MB999072 C : MB999073	Removal of wheel hub and brake drum assembly
12, 14, 15	Bearing installer 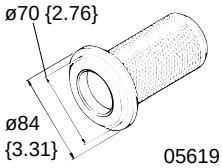	MB999097 (T90ST30)	Press-fitting of oil seal (Use in combination with *1) Press-fitting of inner bearing outer race (Use in combination with *2) Press-fitting of outer bearing outer race (Use in combination with *3)
12	*1 Oil seal installer 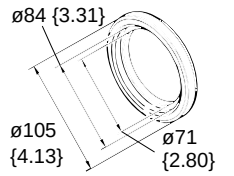	MB999153	Press-fitting of oil seal (Use in combination)
14	*2 Bearing installer 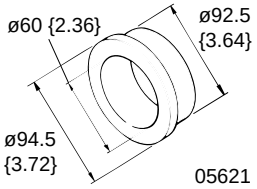	MB999069	Press-fitting of inner bearing outer race (Use in combination)
15	*3 Bearing installer 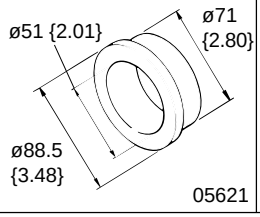	MB999099 (T90ST26)	Press-fitting of outer bearing outer race (Use in combination)

◆ Service procedure

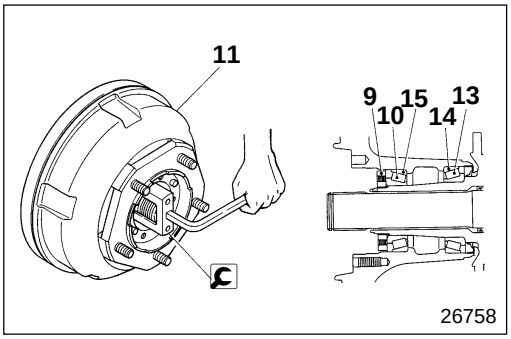

● Starting torque of wheel hub bearing

[Adjustment]

- Tighten lock nut **9** at specified torque (primary tightening) while turning wheel hub and brake drum assembly **11**, then slacken off.
- Turn wheel hub and brake drum assembly **11** several times to smooth operation of outer bearings **10**, **15**, and inner bearings **13**, **14** and retighten lock nut **9** at specified torque (secondary tightening).
- After adjustment, make sure that there is no play in the axial direction.

: Lock nut adjustment tool

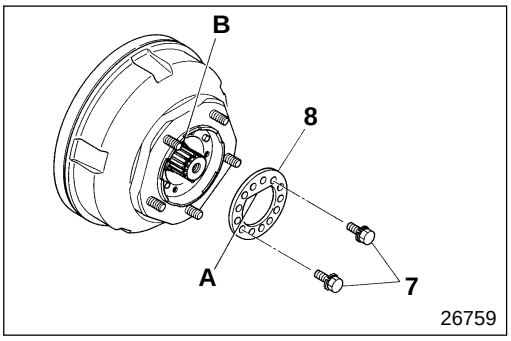

- Insert lock washer **8** so that flat area **A** fits onto notch **B** of the knuckle spindle. Mount two bolts **7** (diagonally opposite each other) to lock nut **9**, and tighten them at specified torque.
- If lock nut **9** and the hole of lock washer **8** do not align, slacken off the lock nut slightly.

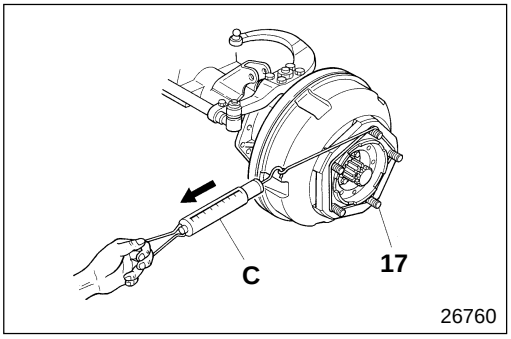

[Measurement]

- Fasten spring balance **C** to hub bolt **17** and measure the tangential force.
- If the measured tangential force is the standard value, the starting torque conforms to the standard value.
- If the measured value deviates from the standard value, adjust the starting torque of the wheel hub bearing according to the procedure described above.
  If any fault is found after adjustment, replace outer bearings **10**, **15**, or inner bearings **13**, **14**.

NOTE

- **Make sure that there is no drag in the brake lining and brake drum 19 before you measure the tangential force.**
- **Make sure that you install oil seal 12.**
- **Do not install drive flange 6.**

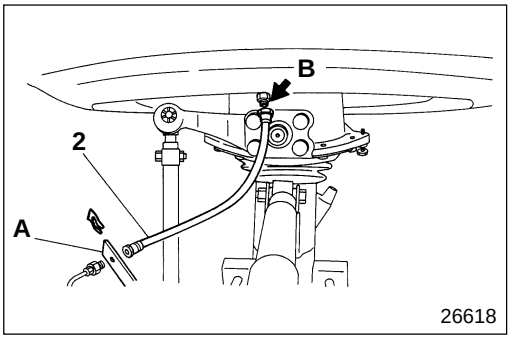

2 Removal and installation of brake hose

First remove brake hose **2** from bracket **A** (on the frame), then remove the brake hose from wheel brake **B**. For installation, follow this procedure in reverse.

CAUTION⚠

Make sure that brake hose 2 is not twisted when you install it.

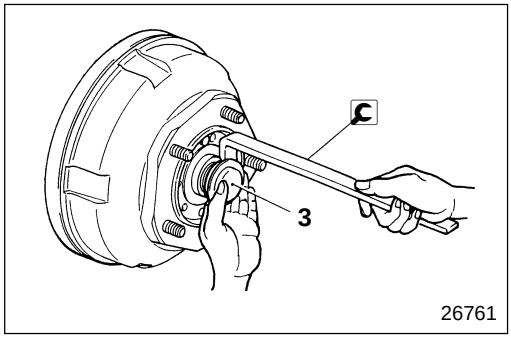

3 **Removal of hub cap**

: Hub cap wrench

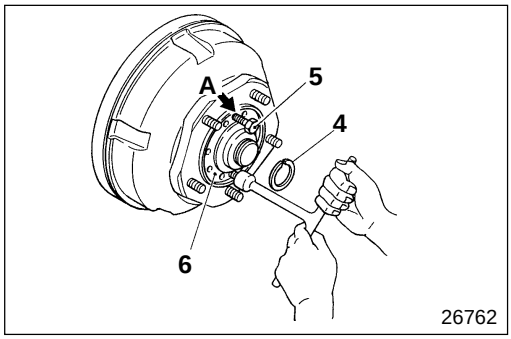

6 **Removal of drive flange**

Remove snap ring **4**, and insert bolts **5** (to the same depth) into two tapped holes **A** provided for disassembly. Then, remove drive flange **6**.

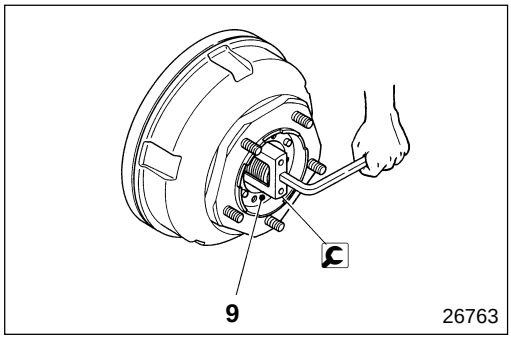

9 **Removal and installation of lock nut**

When mounting lock nut **9** see 🕮 P26B-17 : adjustment procedure for starting torque of the wheel hub bearing.

: Lock nut adjustment tool

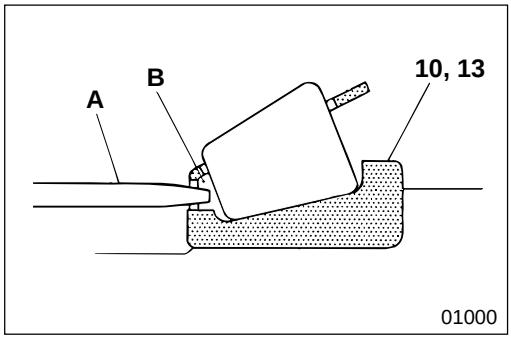

10 **13** **Packing grease in outer bearing inner race and inner bearing inner race**

A : Grease pump nozzle
B : Between roller

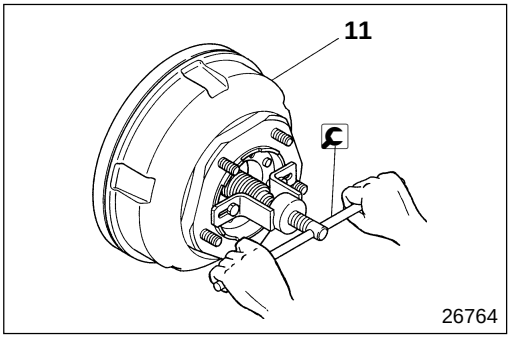

11 Wheel hub and brake drum assembly

[Removal]

: hub puller

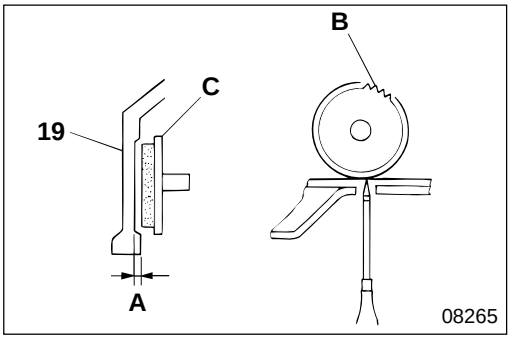

- If wheel hub and brake drum assembly **11** cannot be removed because of stepped wear **A** in brake drum **19**, remove the backing plate cover. Turn adjuster **B** in the opposite direction to the arrow on the backing plate to increase the clearance between the brake drum and brake shoe assembly **C**. Then, remove the wheel hub and brake drum assembly.
- Correct brake drum **19** if any fault is found. Gr 35

[Installation]

After installing wheel hub and brake drum assembly **11**, adjust the clearance between brake drum **19** and brake shoe assembly **C**. Gr 35

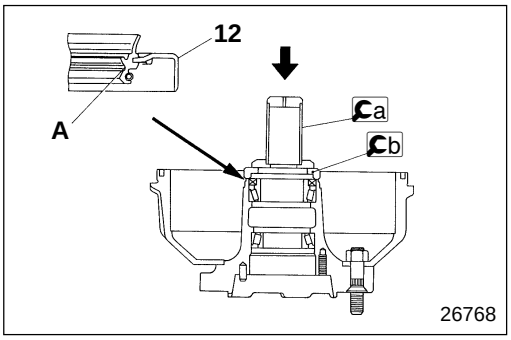

12 Installation of oil seal

Apply grease to lip area **A** of oil seal **12** and press-fit it.

a : Bearing installer

b : Oil seal installer

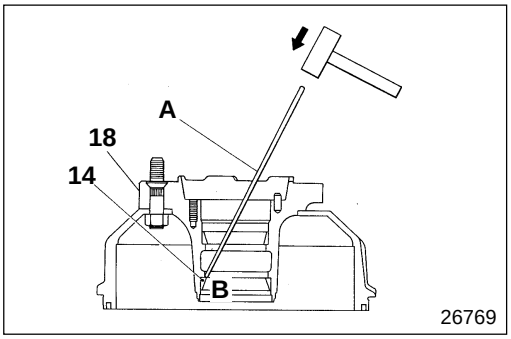

14 Inner bearing outer race

[Removal]

Drive out inner bearing outer race **14** evenly from three indented parts **B** in wheel hub **18**.

A : Pin-punch

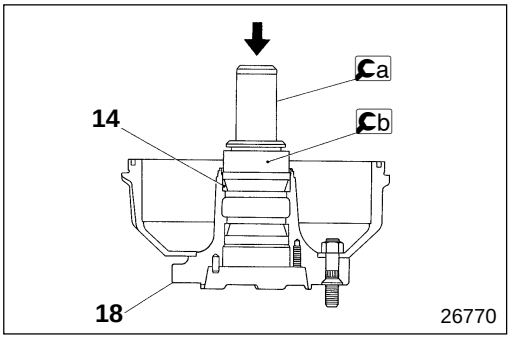

[Press-fitting]

a : Bearing installer

b : Bearing installer

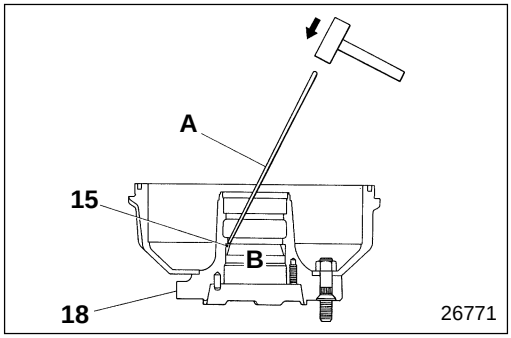

15 **Outer bearing outer race**

[Removal]
Drive out outer bearing outer race **15** evenly from three indented parts **B** in wheel hub **18**.
A : Pin-punch

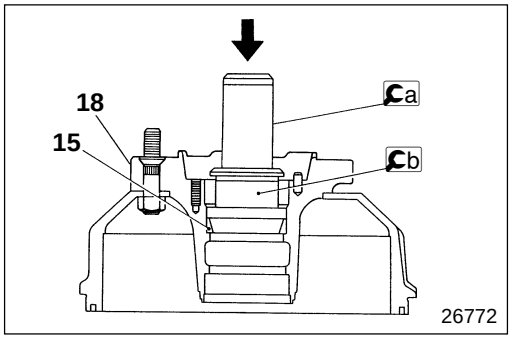

[Press-fitting]
Ca : Bearing installer
Cb : Bearing installer

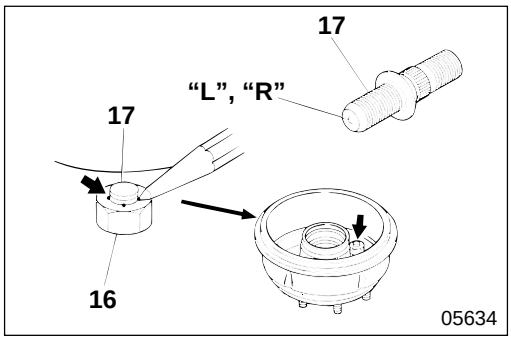

16 **17** **Installation of nut and hub bolt**

- Hub bolt **17** is marked with **"L"** (left) or **"R"** (right) to indicate the side it is to be mounted on. Check this symbol before mounting the bolt.
- Screw nut **16** onto hub bolt **17** and tighten at specified torque. Then, stake the hub bolt to keep it from turning.

M E M O

KNUCKLE AND DRIVE SHAFT

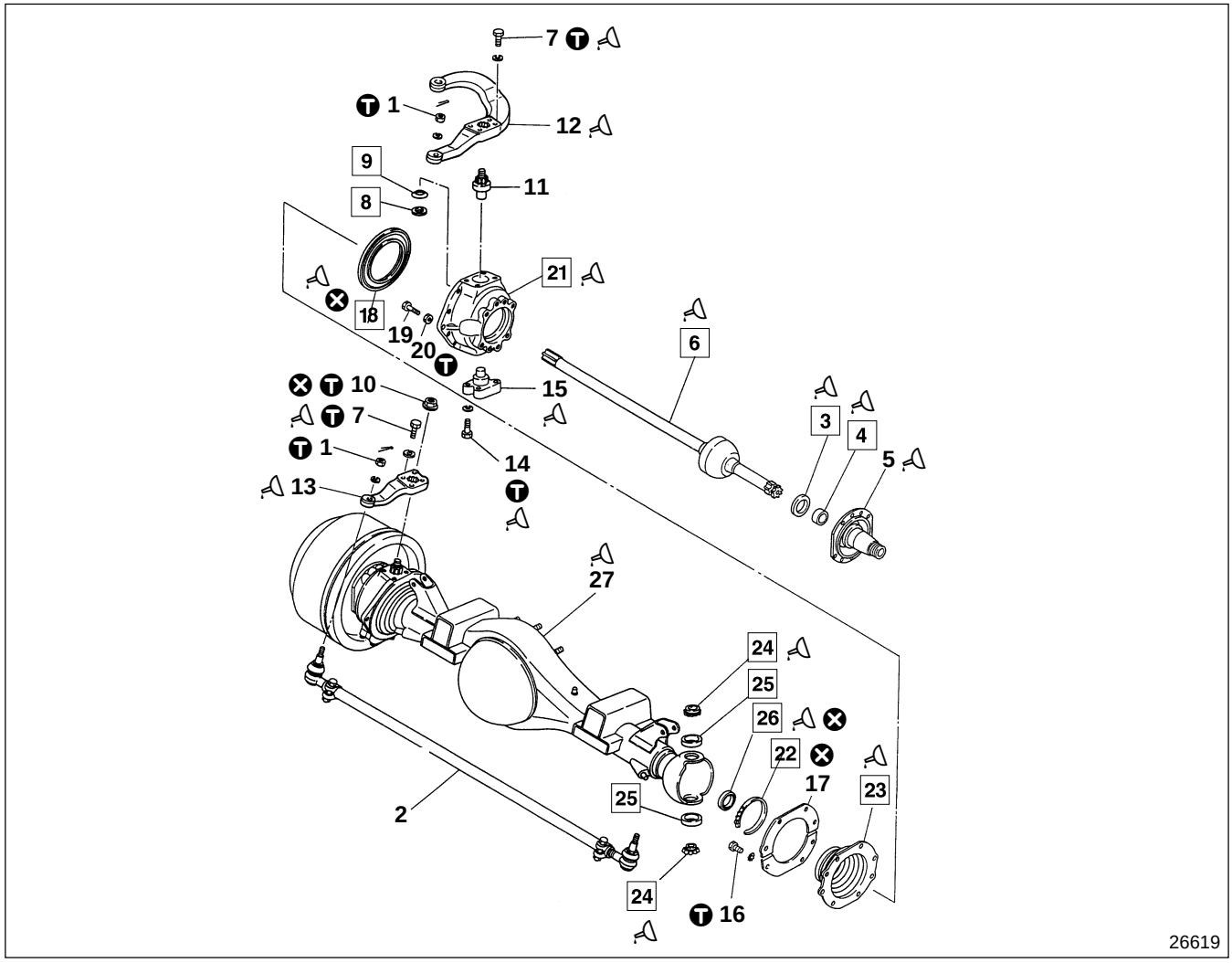

● **Disassembly sequence**

1 Nut
2 Tie rod assembly Gr 37
3 Spacer
4 Needle bearing
5 Knuckle spindle
6 Drive shaft assembly
7 Bolt
8 Spacer
9 Conical spring
10 Lock nut
11 Kingpin, upper
12 Knuckle arm
13 Tie rod arm
14 Bolt
15 Kingpin, lower
16 Bolt
17 Retainer
18 Dust seal
19 Knuckle stopper bolt
20 Lock nut
21 Steering knuckle
22 Boot band
23 Dust boot
24 Trunnion bearing inner race
25 Trunnion bearing outer race
26 Oil seal
27 Axle housing P26B-28

⊗ : Non-reusable parts

NOTE

Do not disassemble drive shaft assembly 6.

● **Assembly sequence**

27 → 26 → 23 → 18 → 25 → 24 → 20 → 19 → 21 → 17 → 16 → 8 → 9 → 11 → 12 → 13 → 7 → 10 → 6 → 15 → 14 → 5 → 4 → 3 → 2 → 1 → 22

Service standards

Unit : mm {in.}

Location	Maintenance item	Standard value	Limit	Remedy
6	Deflection in drive shaft assembly (Inner shaft)	0.75 {0.030} or less	1.5 {0.059}	Replace
	Play in axial direction of drive shaft assembly Birfield joint	0.4 {0.016} or less	—	Replace
21	Starting torque of steering knuckle	4.8±1.3 N·m {3.57±0.98lbf.ft, 49.4±13.6 kgf·cm}	—	Adjust end of arm at tie rod side with a spacer to tangential strength} of 28±7.8N {6.4 ±1.8 lbf. 2.9±0.8 kgf}

Tightening torque

Unit : N·m {lbf.ft, kgf·m}

Location	Parts to be tightened	Tightening torque	Remarks
1	Nut (Tie rod assembly mounting)	93.2±24.5 {69±18, 9.5±2.5}	—
7	Bolt (Tie rod arm and knuckle arm mounting)	162±15 {119±11, 16.5±1.5}	—
10	Lock nut	333±39 {246±29, 34±4}	—
14	Bolt (Kingpin, lower mounting)	162±15 {119±11, 16.5±1.5}	—
16	Bolt (Retainer and dust boot mounting)	4±1 {2.9±0.7,0.4±0.1}	—
20	Lock nut (Knuckle stopper bolt tightening)	96±12 {71±9, 9.75±1.25}	—

Lubricant and/or sealant

Location	Points of application	Specified lubricant and/or sealant	Quantity
3	Chamfered side of spacer inner rim	Wheel bearing grease [NLGI No.2 (Li soap)]	As required
4	Pack the space between rollers of needle bearing	Wheel bearing grease [NLGI No.2 (Li soap)]	As required
5	Mounting surface of steering knuckle spindle	THREEBOND 1104	As required
6	Pack the interior of Birfield joint of drive shaft assembly	Wheel bearing grease [NLGI No.2 (Li soap)]	90±10 g {3.17±0.35 oz}
7, 14	Thread area of bolt	THREEBOND 1104	As required
12	Mounting surface of steering knuckle knuckle arm	THREEBOND 1104	As required
13	Mounting surface of steering tie rod arm	THREEBOND 1104	As required
15	Mounting surface of steering knuckle kingpin, lower	THREEBOND 1104	As required
18	Lip area of dust seal	Wheel bearing grease [NLGI No.2 (Li soap)]	As required
21	Pack the interior of steering knuckle	Wheel bearing grease [NLGI No.2 (Li soap)]	400±30 g {14.1±1.06 oz}
23	Mounting surface of steering knuckle dust boot	THREEBOND 1104	As required
24	Pack the space between rollers of trunnion bearing inner race	Wheel bearing grease [NLGI No.2 (Li soap)]	As required
26	Lip area of oil seal	Wheel bearing grease [NLGI No.2 (Li soap)]	As required
27	Trunnion bearing mounting surface of axle housing ball yoke and outside surface of ball	Wheel bearing grease [NLGI No.2 (Li soap)]	As required

Special tools

Unit : mm {in.}

Location	Tool name and shape	Part No.	Application
25	Bearing installer 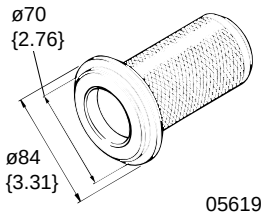	MB999097 (T90ST30)	Press-fitting of trunnion bearing outer race (Use in combination)
	Bearing installer 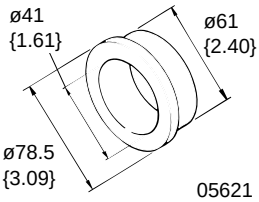	MB999101 (T90ST25)	
26	Oil seal installer 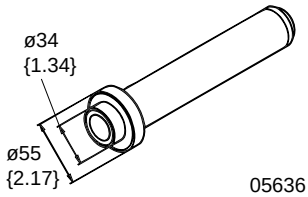	MB999152	Press-fitting of oil seal

◆ Service procedure

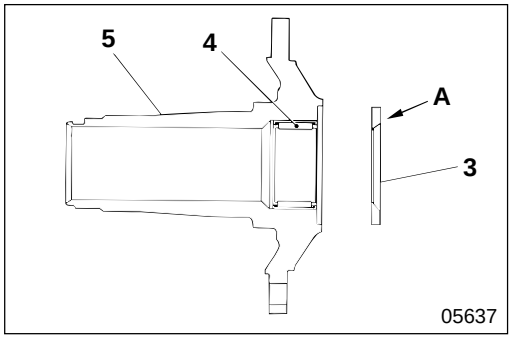

3 **4** **Installation of spacer and needle bearing**

- Pack the space between rollers of needle bearing **4** with grease and press-fit the needle bearing until it is level with the end of knuckle spindle **5**.
- Install spacer **3** on knuckle spindle **5** as illustrated.
- After installing spacer **3**, coat the chamfered side **A** of the inner diameter of the spacer with grease.

CAUTION

Take care not to use too much force when installing needle bearing 4.

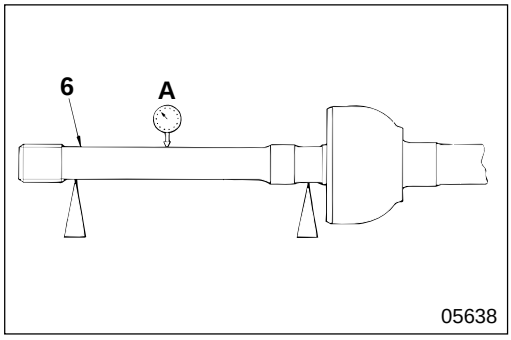

6 **Drive shaft assembly**

[Inspection]

Measure deflection **A** of drive shaft assembly **6** at the center of the inner shaft. If the measured value is higher than the limit, replace the drive shaft assembly.

NOTE

To measure the deflection of drive shaft assembly 6, turn it one full revolution and read the dial gauge indicator. The deflection is one half of the indicated value.

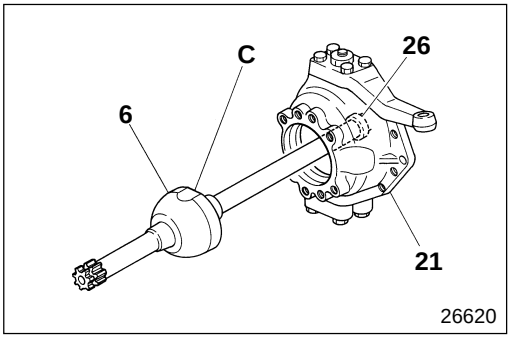

[Installation]
Insert drive shaft assembly **6** into steering knuckle **21** with flat part **C** of the Birfield joint facing upwards.

CAUTION

Be careful not to damage oil seal 26, when installing drive shaft assembly 6.

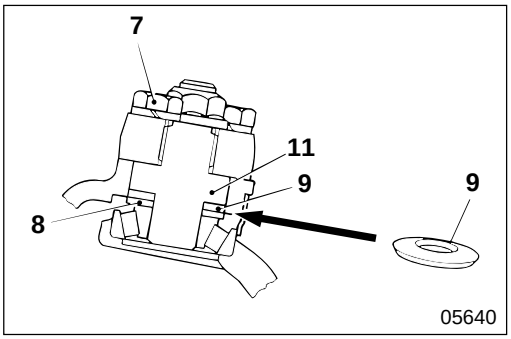

8 **9** **Spacer and conical spring**

[Adjustment of pre-pressure in trunnion bearing]
Assemble conical spring **9** and spacer **8** (thickness=3.2 mm {0.13 in.}) and temporarily tighten kingpin, upper **11** with assembly bolt **7** as illustrated.

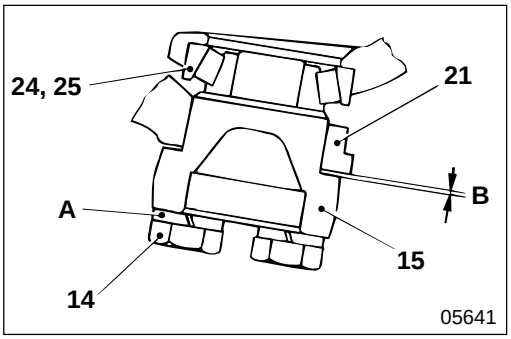

- Install kingpin, lower **15** into steering knuckle **21**. Screw bolt **14** into spring washer **A**, and tighten sufficiently but without applying tension to the spring washer.
- Offer up kingpin, lower **15** until it fits snugly into trunnion bearings **24**, **25** in the lower part.
- Measure clearance **B** between steering knuckle **21** and kingpin, lower **15**. Select spacer **8** based on the measured clearance.

Clearance B	Thickness of spacer
0.6 mm {0.024 in.} or more	3.2 mm {0.13 in.}
Less than 0.6 mm {0.024 in.}	3.6 mm {0.14 in.}

- If clearance **B** is 0.6 mm {0.024 in.} or more, tighten bolt **14** at specified torque.
  If clearance **B** is less than 0.6 mm {0.024 in.}, replace with spacer **8** (thickness=3.6 mm {0.14 in.}) and remeasure the clearance.

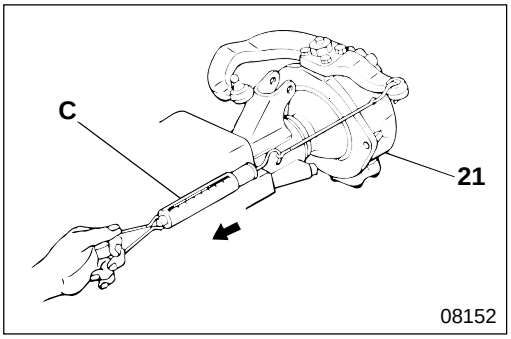

[Starting torque of steering knuckle]
- Fasten spring balancer **C** to steering knuckle **21** and measure whether the starting torque of the steering knuckle conforms to the standard value.
- If the measured value deviates from the standard value, adjust the starting torque of the steering knuckle according to the procedure described above. If any fault is found after adjustment, replace trunnion bearings **24**, **25**.

NOTE

Be sure to measure the starting torque before installing dust seal 18 and dust boot 23.

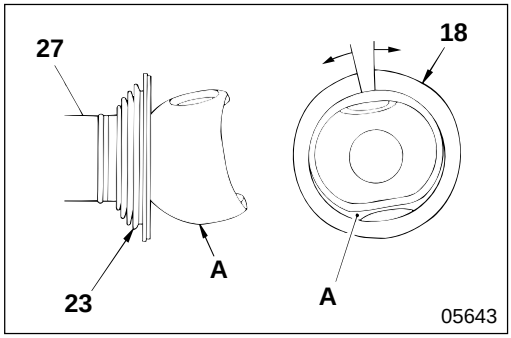

18 **23** **Installation of dust seal and dust boot**

Install dust boot **23** on kingpin ball yoke area **A** in axle housing **27**. Then, mount dust seal **18** while widening its end part.

CAUTION

Do not widen dust seal 18 too much.

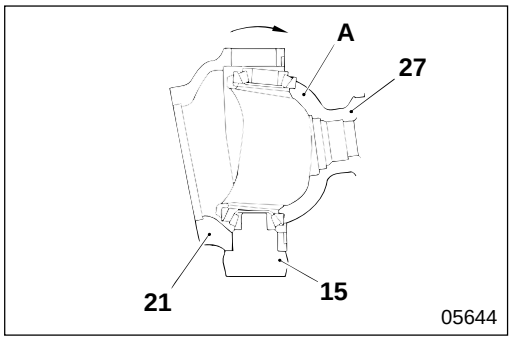

21 **Assembly of steering knuckle**

Install kingpin, lower **15** into steering knuckle **21**.
While turning the steering knuckle, install it into kingpin ball yoke area **A** in axle housing **27**.

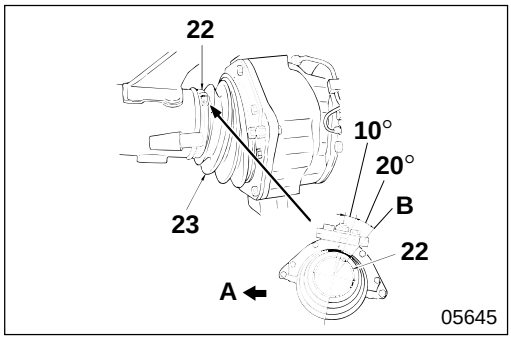

22 **Tightening of boot band**

Install boot band **22** at an angle within 20° as illustrated. Then, tighten and caulk it.
A : Front of the vehicle

CAUTION

Be careful not to overtighten dust boot 23, and make sure that the rubber does not protrude too much from the joint surface.

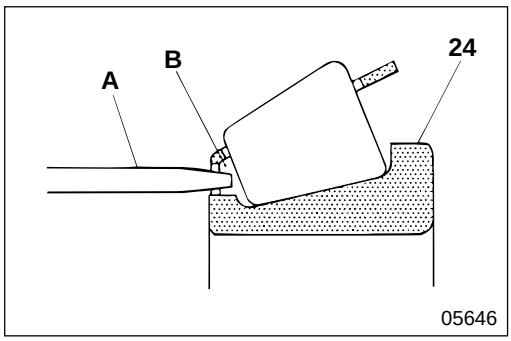

24 **Packing grease in trunnion bearing inner race**

A : Grease pump nozzle
B : Between rollers

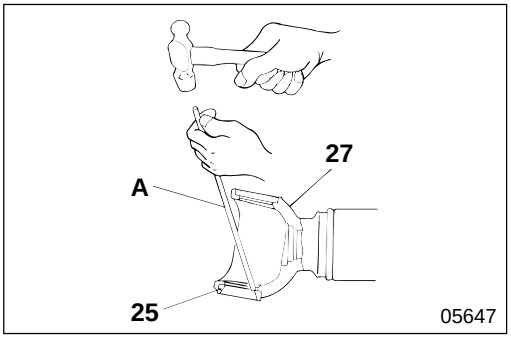

25 **Trunnion bearing outer race**

[Removal]

A : Pin-punch

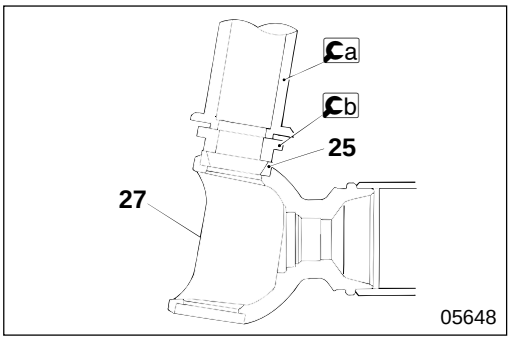

[Press-fitting]

a : Bearing installer

b : Bearing installer

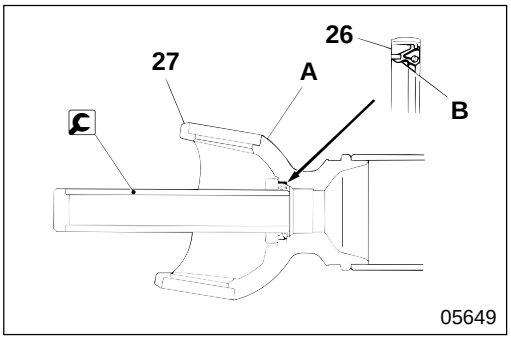

26 **Press-fitting of oil seal**

- Apply grease to lip area **B** of oil seal **26**.
- Press-fit oil seal **26** in the direction as illustrated so that the oil seal is level with the end of kingpin ball yoke **A** of axle housing **27**.

: Oil seal installer

AXLE HOUSING

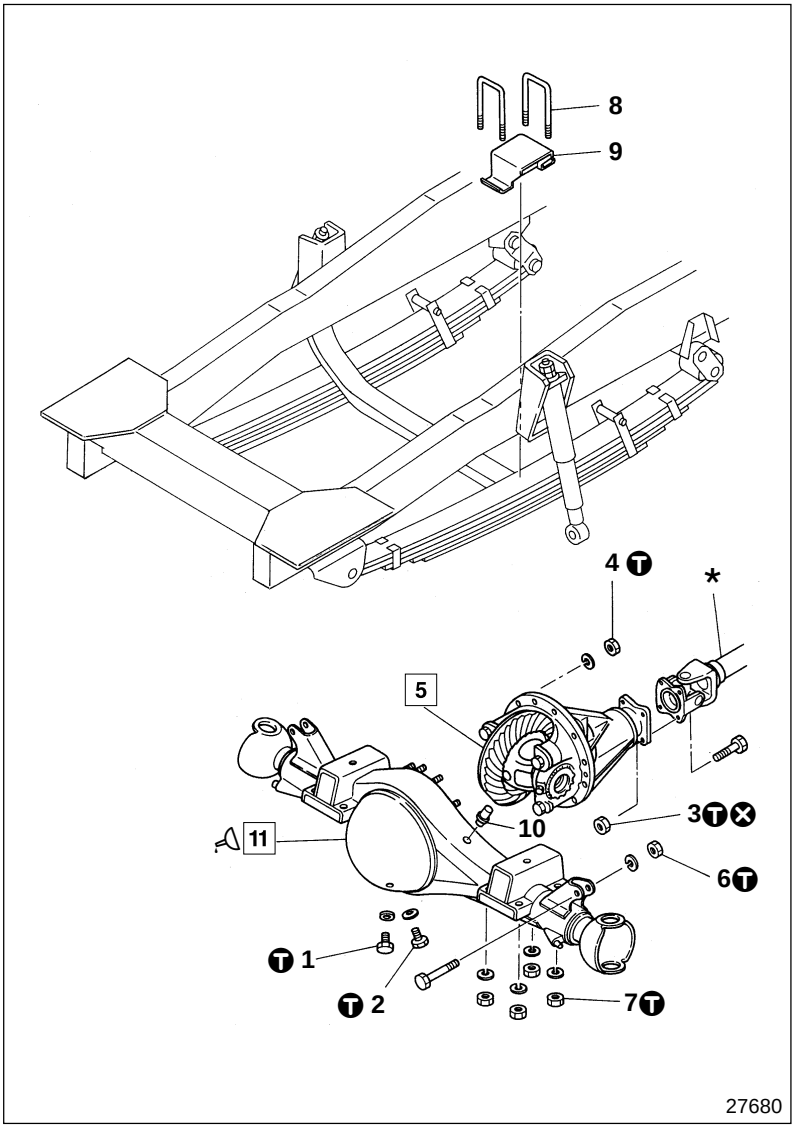

● **Disassembly sequence**

1 Inspection plug
2 Drain plug
3 Nut
4 Nut
5 Reduction and differential assembly
📖 P26B-30
6 Nut
7 U-bolt nut
8 U-bolt
9 Front spring pad
10 Vent plug
11 Axle housing

* : Propeller shaft Gr 25
⊗ : Non-reusable parts

● **Assembly sequence**

Follow the disassembly sequence in reverse.

NOTE

Do not remove axle housing 11 unless it is faulty.

Service standards

Unit : mm {in.}

Location	Maintenance item	Standard value	Limit	Remedy
11	Deflection in axle housing	within 1.6 {0.063}	5 {0.2}	—

T Tightening torque

Unit : N·m {lbf.ft, kgf·m}

Location	Parts to be tightened	Tightening torque	Remarks
1	Inspection plug	98 to 115 {72 to 87, 10 to 12}}	—
2	Drain plug	98 to 115 {72 to 87, 10 to 12}	—
3	Nut (Propeller shaft mounting)	59 to 74 {43 to 54, 6.0 to 7.5}	—
4	Nut (Reduction and differential assembly mounting)	34 to 44 {25 to 33, 3.5 to 4.5}	—
6	Nut (Lower part of shock absorber mounting)	33 to 49 {25 to 36, 3.4 to 5.0}	—
7	U-bolt nut (U-bolt mounting)	105±7.8 {78±5.8, 10.8±0.8}	—

Sealant

Location	Points of application	Specified sealant	Quantity
11	Reduction and differential assembly mounting surface of axle housing	THREEBOND 1215	As required

◆ Service procedure

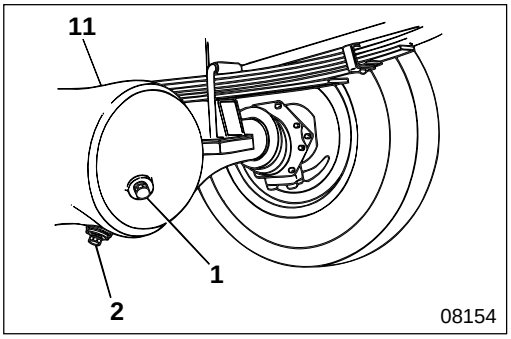

● Service operations before removal and after installation

(1) Before removing any part, remove inspection plug **1** and drain plug **2** and drain the gear oil from axle housing **11**.

(2) After installing all parts, fill axle housing **11** with the specified amount of gear oil.

(3) Tighten drain plug **2** and inspection plug **1** at specified torque.

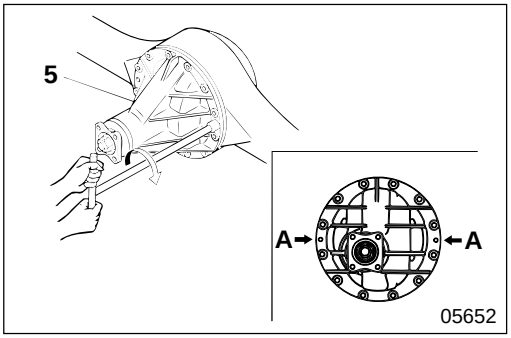

5 Removal of reduction and differential assembly

Tighten M10×1.25 mm bolts evenly into two screw holes **A** provided for removing reduction and differential assembly **5**.

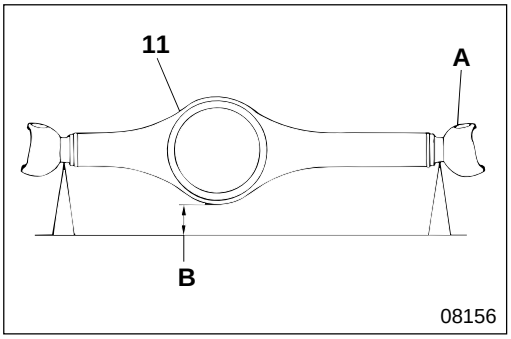

11 Axle housing

[Inspection for deflection]

- Support both ends of kingpin ball yoke part **A** of axle housing **11** horizontally and measure axle housing height **B**.
- Turn axle housing **11** through 180° to measure height **B**.
- If the height difference is higher than the limit, replace axle housing **11**.

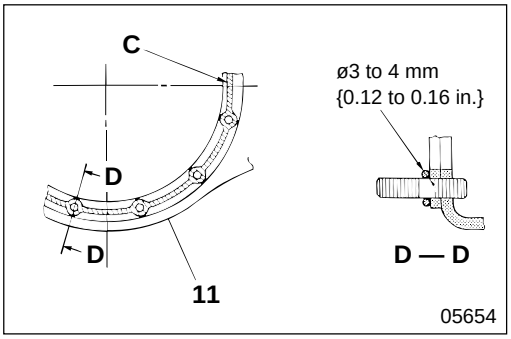

[Applying sealant]

- Apply sealant to reduction and differential assembly **5** mounting surface of axle housing **11**.
- Apply sealant linearly for part **C** and for the position that is symmetrical to an imaginary center line.

CAUTION⚠

Make sure that sealant does not ooze from the mating surface after installing reduction and differential assembly 5.

REDUCTION AND DIFFERENTIAL

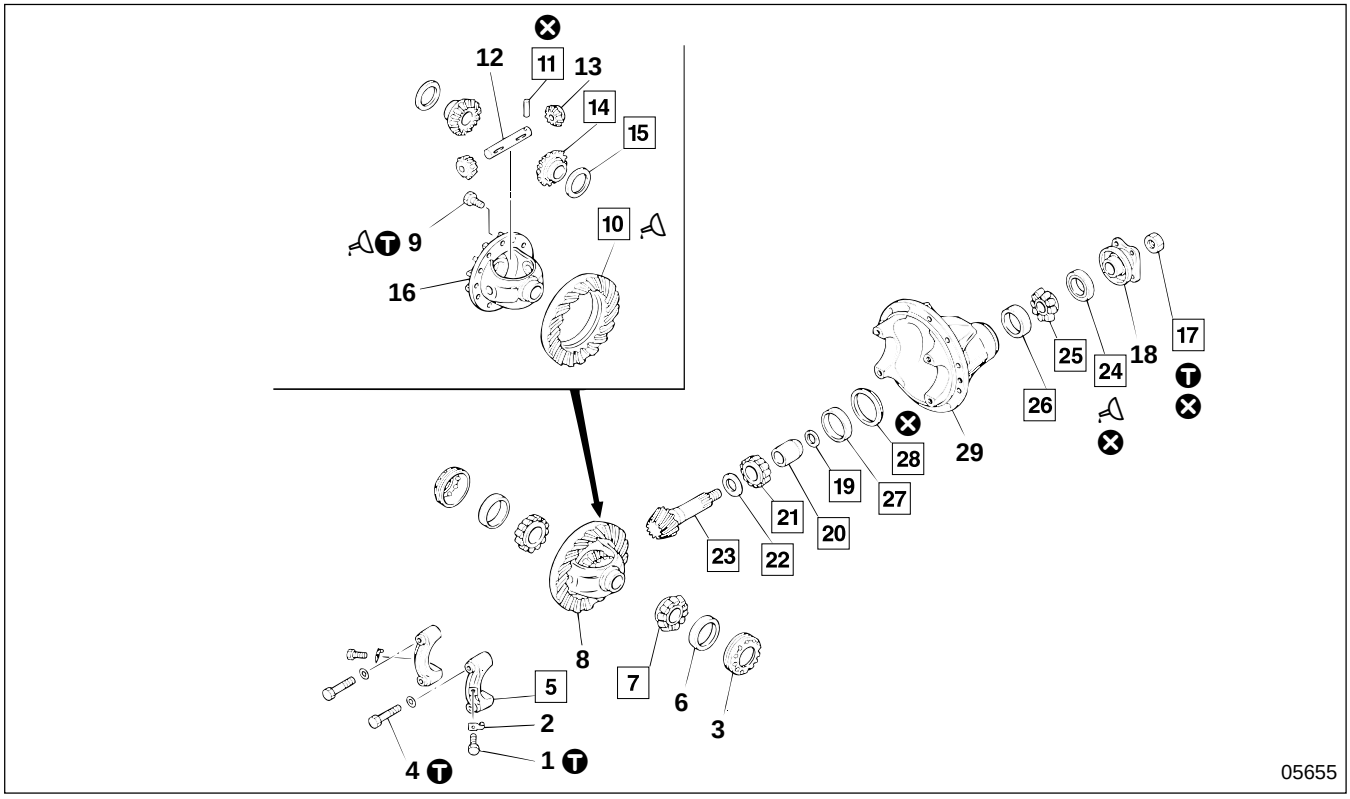

- **Work before disassembly** P26B-33
- **Inspection before disassembly** P26B-33
- **Disassembly sequence**

1	Bolt	**12**	Pinion shaft	**22**	Rear bearing shim
2	Lock plate	**13**	Differential pinion	**23**	Final drive pinion
3	Side bearing nut	**14**	Differential gear	**24**	Oil seal
4	Bolt	**15**	Spacer	**25**	Front bearing inner race
5	Bearing cap	**16**	Differential case	**26**	Front bearing outer race
6	Side bearing outer race	**17**	Lock nut	**27**	Rear bearing outer race
7	Side bearing inner race	**18**	Companion flange assembly	**28**	Oil stopper
8	Differential assembly			**29**	Differential carrier
9	Bolt	**19**	Front bearing shim		
10	Final drive gear	**20**	Pinion spacer	⊗	: Non-reusable parts
11	Lock pin	**21**	Rear bearing inner race		

- **Assembly sequence**

  Follow the disassembly sequence in reverse.

- **Inspection and adjustment after assembly** P26B-34

CAUTION

Be sure when replacing any of the following parts, to replace both it and its associated parts as a set :

- **For bolt 4, bearing cap 5 or differential carrier 29, replace the carrier assembly.**
- **For final drive gear 10 or final drive pinion 23, replace the gear set.**
- **Make sure you keep left and right side bearings 6, 7 separate after remove, and be careful not to mix then up when installing them.**

NOTE

Write down the thickness of front bearing shim 19, pinion spacer 20 and rear bearing shim 22 when disassembling to use it as reference when assembly.

Service standards

Unit : mm {in.}

Location	Maintenance item	Standard value	Limit	Remedy
10	Deflection of rear of final drive gear	within 0.05 {0.0020}	—	—
10, 23	Backlash between final drive gear and final drive pinion	0.15 to 0.20 {0.0059 to 0.0078}	—	Adjust or replace along with the gear set
13, 14	Backlash between differential pinion and differential gear	0.15 to 0.20 {0.0059 to 0.0078}	—	Adjust using the spacer or replace
14	Play in the rotating direction between drive shaft and differential gear spline part	0.07 to 0.16 {0.0028 to 0.0063}	—	Replace
23	Starting torque of final drive pinion	1 to 2 {0.7 to 1.4, 0.1 to 0.2}	—	Adjust

Tightening torque

Unit : N·m {lbf.ft, kgf·m}

Location	Parts to be tightened	Tightening torque	Remarks
1	Bolt (Lock plate mounting)	19.6 to 26.5 {14 to 20, 2.0 to 2.7}	—
4	Bolt (Bearing cap mounting)	68.6 to 78.4 {51 to 58, 7 to 8}	—
9	Bolt (Final drive gear mounting)	137.2 to 166.6 {101 to 122, 14 to 17}	—
17	Lock nut (Companion flange assembly installation)	313.6 to 411.6 {231 to 303, 32 to 42}	—

Lubricant and/or sealant

Location	Points of application	Specified lubricant and/or sealant	Quantity
10	Thread area of final drive gear	LOCTITE 271	As required
24	Lip area of oil seal	Wheel bearing grease [NLGI No. 2 (Li soap)]	As required

Special tools

Unit : mm {in.}

Location	Tool name and shape	Part No.	Application
—	Differential working base assembly **A** : Attachment **B** : Holder **C** : Holder **D** : Working base **E** : Flange stopper 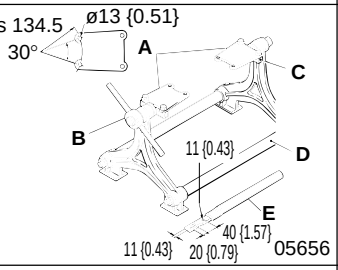	MB999034 **A** : MB999074 **B** : MB999036 **C** : MB999037 **D** : MB999035 **E** : MB999096	• Maintenance work bench for reduction and differential • Flange stopper is used for installation and removal of the companion flange assembly
3	Differential side bearing adjustment tool 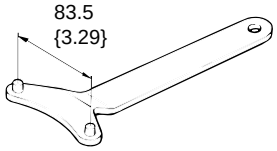	MB999012	Tightening of side bearing nut
7	Adapter 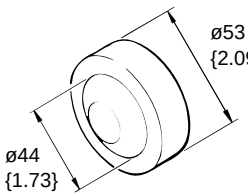	MB999077	Removal of side bearing inner race (Use in combination with available bearing puller)

Unit : mm {in.}

Location	Tool name and shape	Part No.	Application
7	Bearing installer 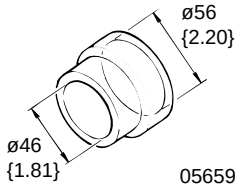	MB999079	Press-fitting of side bearing inner race
21	Pinion rear bearing remover 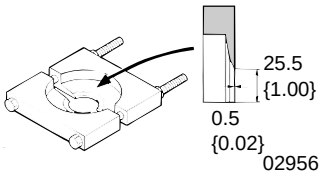	MB999045	Removal of rear bearing inner race
21, 24, 25	Bearing installer 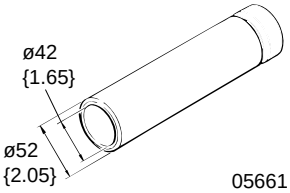	MB999104 (T90ST13)	Press-fitting of rear bearing inner race (Use in combination with *1) Press-fitting of oil seal (Use in combination with *2) Press-fitting of front bearing inner race
21	*1 bearing installer 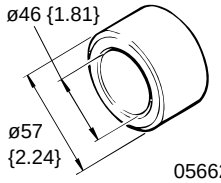	MB999044	Press-fitting of rear bearing inner race (Use in combination)
23	Drive pinion setting gauge set **A** : Tool box **B** : Pinion gauge **C** : Cylinder gauge 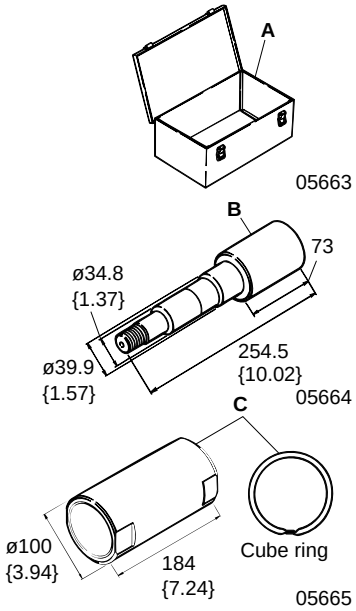	MB999084 **A** : MB990824 **B** : MB999086 **C** : MB999087	Adjustment of starting torque and pinion height of final drive pinion
	Socket 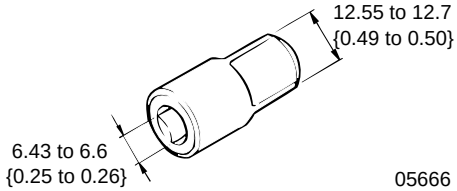	MB999054	Measurement of starting torque of final drive pinion

Unit : mm {in.}

Location	Tool name and shape	Part No.	Application
24	*2 Bearing installer adapter 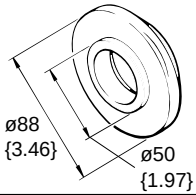	MB999105 (T90ST07)	Press-fitting of oil seal (Use in combination)
26, 27	Bearing installer 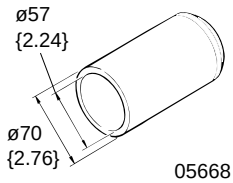	MB999100 (T90ST31)	Press-fitting of front and rear bearing outer race (Press-fit in combination)
	Bearing installer 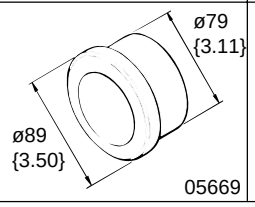	MB999089	

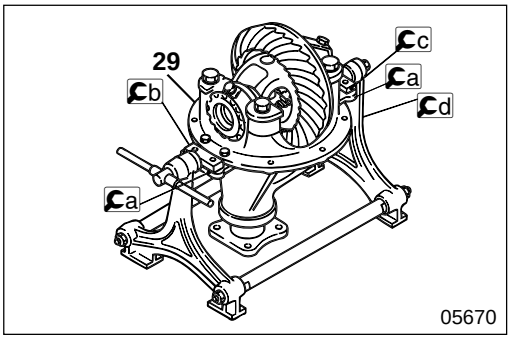

● **Work before disassembly**

Mount differential carrier **29** on Ⓒ differential working base assembly.

Ⓒa : Attachment
Ⓒb : Holder
Ⓒc : Holder
Ⓒd : Working base

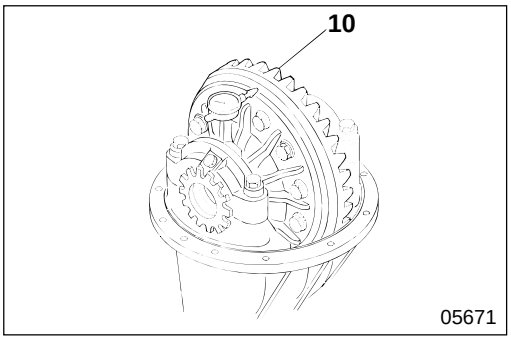

● **Inspection before disassembly**

(1) Deflection of rear surface of final drive gear

Measure at the point of maximum diameter of final drive gear **10**.

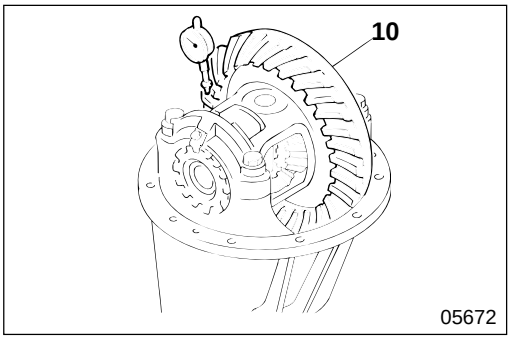

(2) Backlash between final drive gear and final drive pinion

Measure at three points on the circumference of final drive gear **10**.

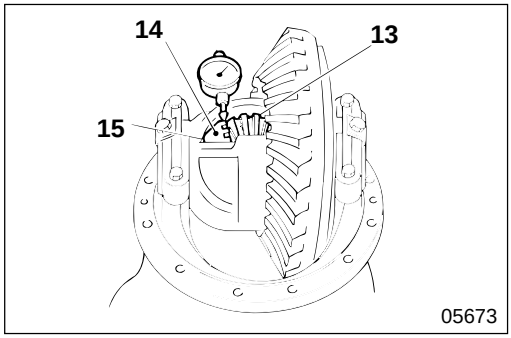

(3) Backlash between differential pinion and differential gear

Measure backlash between differential pinion **13** and differential gear **14**.

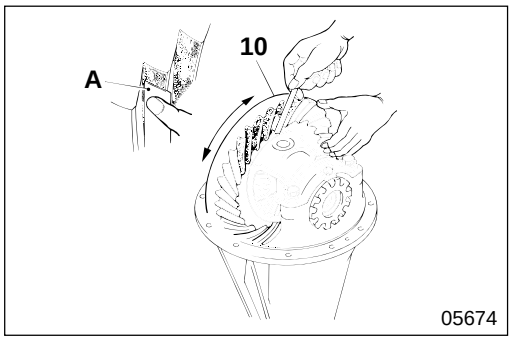

(4) Tooth contact of final drive gear

Apply red lead primer to the surfaces of three or four teeth of final drive gear **10**, examine tooth contact by turning the gears a few times.
A : Examine tooth contact using paper.

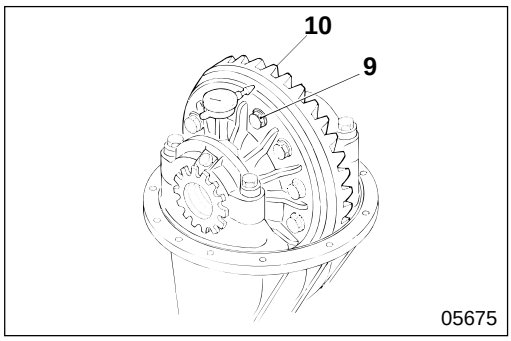

● **Inspection and adjustment after assembly**

(1) Deflection of rear surface of final drive gear

- Measure at the point of maximum diameter of final drive gear **10**.
- If the measured value deviates from the standard value, check tightening torque of bolt **9** or replace along with the gear set.

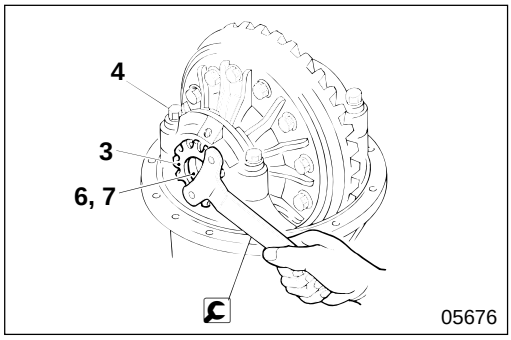

(2) Backlash of final drive gear

[Adjustment]
Before adjusting, tighten bolt **4** temporarily. Then, tighten side bearing nut **3** using 🔧 differential side bearing adjustment tool until just before pre-pressure is exerted on side bearings **6**, **7**.

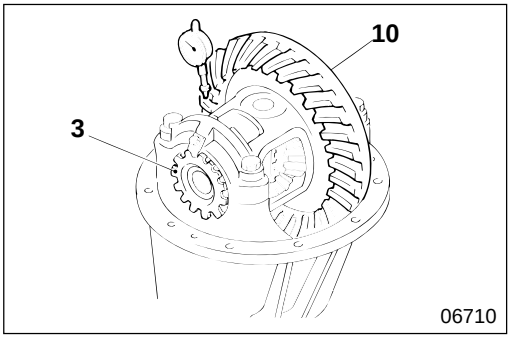

[Measurement]

- Measure final drive gear **10** backlash at three points on the circumference of the final drive gear.

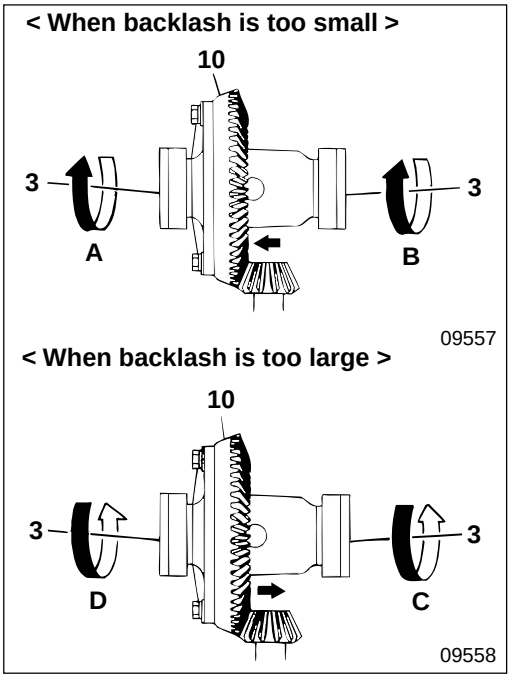

- If backlash deviates from the standard value, rotate left and right side bearing nuts **3** and move final drive gear **10** as illustrated using 🔧 side bearing adjusting tool to adjust backlash.

  < When backlash is too small >

  Adjust in order of **A** to **B**.

  A : Loosen

  B : Tighten

  < When backlash is too great >

  Adjust in order of **C** to **D**.

  C : Loosen

  D : Tighten

CAUTION⚠

Be sure, when side bearing nut 3 on one side is loosened, to tighten the other side by the same amount.

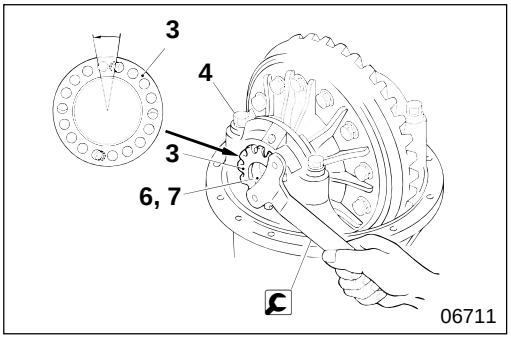

- Tighten right and left side bearing nuts **3**, by half the pitch between the centers of adjacent holes, using 🔧 differential side bearing adjustment tool to add pre-pressure to side bearings **6**, **7**.
- Tighten bolt **4** at specified torque.

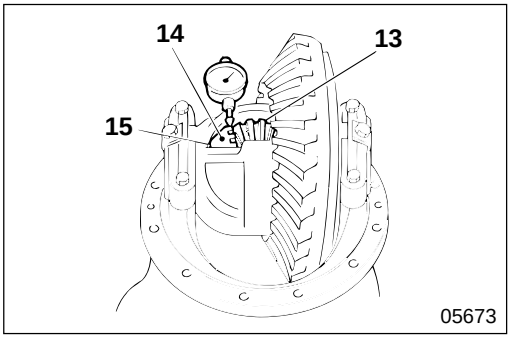

(3) Backlash between differential pinion and differential gear

Measure backlash between differential pinion **13** and differential gear **14**. If the measured value deviates from the standard value, adjust with spacer **15**.

CAUTION⚠

Make sure that the thickness of right spacer 15 is identical to that of the left spacer.

Spacer thicknesses :

1.4 to 1.6 mm {0.055 to 0.063 in.} (three thicknesses available in 0.1 mm {0.0039 in.} increments)

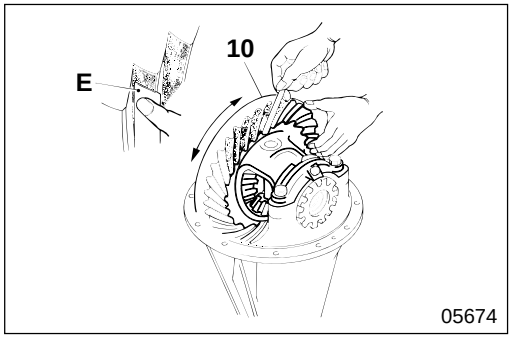

(4) Tooth contact of final drive gear

[Inspection]
Apply red lead primer to the surfaces of three or four teeth of final drive gear **10**, examine tooth contact by turning the gears a few times.
E : Examine tooth contact using paper.

[Adjustment]
If tooth contact deviates excessively from the standard value, adjust by increasing or decreasing backlash and rear bearing shim **22**.

CAUTION

Be sure when replacing the gear because of abnormally worn teeth to replace the gear set of final drive gear 10 and final drive pinion 23 together.

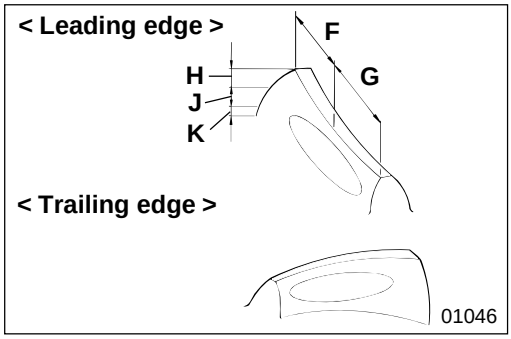

● **Normal tooth contact at no load**

< Final drive gear >
F : Heel
G : Toe
H : Face
J : Flank
K : Clearance

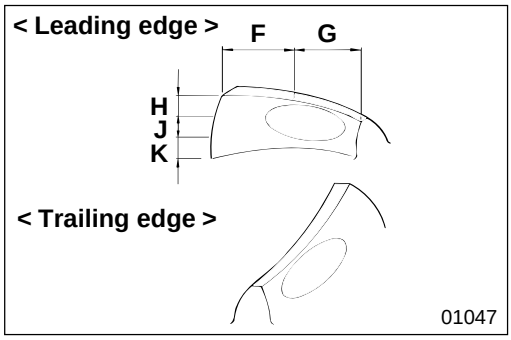

< Final drive pinion >
F : Heel
G : Toe
H : Face
J : Flank
K : Clearance

Maintenance item			Assembly standards
At no load	Tooth contact position	Lengthwise direction of tooth	From center towards edge
		Vertical direction	From center towards top of tooth for final drive gear and center for final drive pinion
	Tooth contact shape	Length	Approximately 50 to 70% of tooth width
		Width	Approximately 50 to 70% of tooth depth
	Degree of tooth contact		It becomes weaker as it nears tooth root or tooth tip

NOTE

When tooth contact is near the toe at no load it becomes middle area contact at load.

Adjustment of tooth contact

	Method of adjustment	Moving direction
Adjustment by adding or reducing shims	Advance final drive pinion to final drive gear (Shims are added) 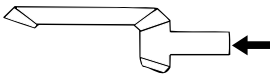	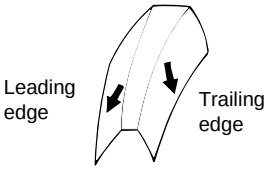 Tooth contact moves towards tooth root
	Retard final drive pinion from final drive gear (Shims are reduced) 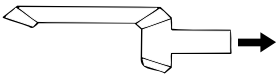	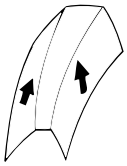 Tooth contact moves towards tooth tip
Adjustment using side bearing nut	Advance final drive gear to final drive pinion center (Less backlash) 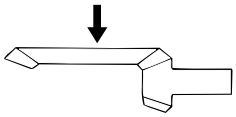	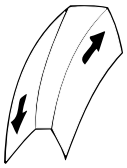 Tooth contact moves in lengthwise direction of tooth Leading edge: Nearer to toe and slightly nearer to root of tooth Trailing edge: Nearer to heel and slightly nearer to top of tooth
	Retard final drive gear from final drive pinion center (More backlash) 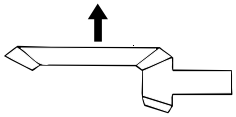	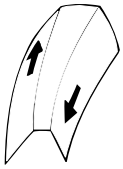 Tooth contact moves in lengthwise direction of tooth Leading edge: Nearer to heel and slightly nearer to top of tooth Trailing edge: Nearer to toe and slightly nearer to root of tooth

01048

◆ Service procedure

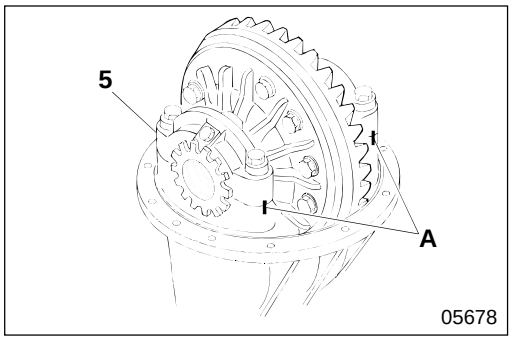

5 **Removal of bearing cap**

Put alignment marks **A** on bearing cap **5** to distinguish left and right.

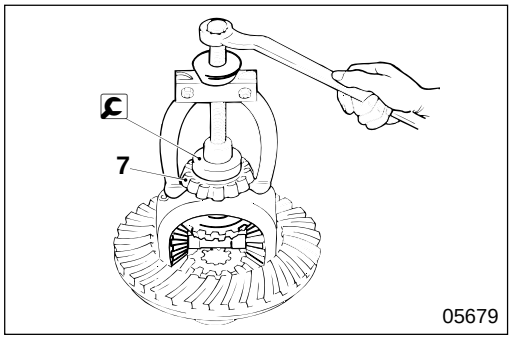

7 **Side bearing inner race**

[Removal]
: Adapter

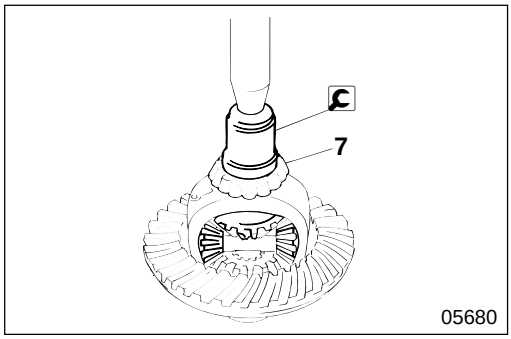

[Press-fitting]
: Bearing installer

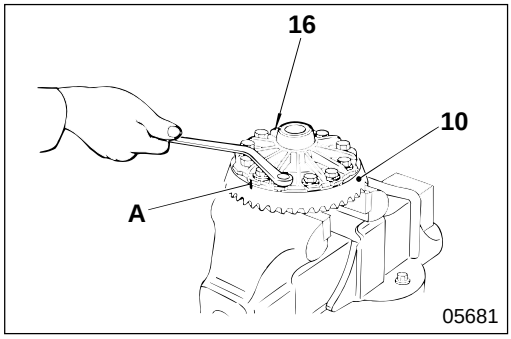

10 **Final drive gear**

[Removal]
Put alignment marks **A** on final drive gear **10** and differential case **16**.

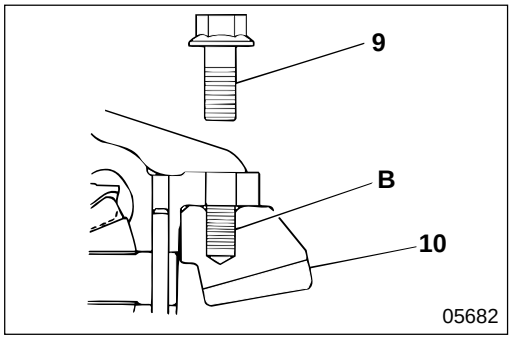

[Installation]
Apply LOCTITE to thread area of all bolt holes **B** of final drive gear **10** and tighten bolts **9** at specified torque.

CAUTION
- **Be sure to let bolts 9 harden for at least an hour, after installation, before driving.**
- **Furthermore, be sure to let bolts 9 harden for at least four hours before running at full torque.**

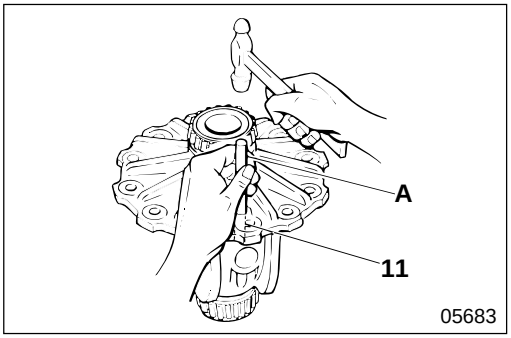

11 **Lock pin**

[Removal]
A : Punch

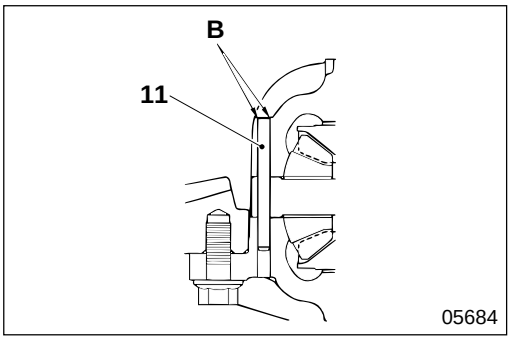

[Press-fitting]
After press-fitting lock pin **11**, stake part **B** at two points.

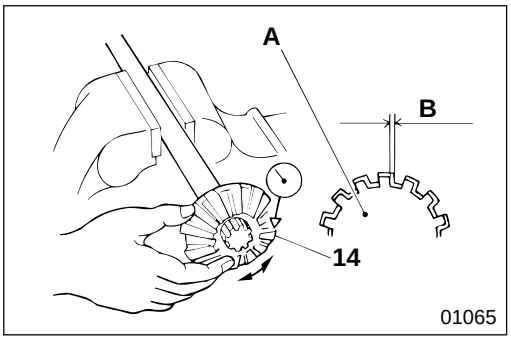

14 **Play between differential gear and drive shaft spline in the rotating direction**

If the measured value is higher than the limit, replace faulty parts.
A : Rear axle shaft
B : Play

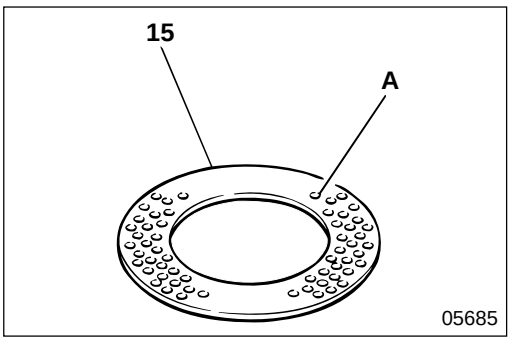

15 **Installation of spacer**

Install spacer **15** with oil grooves **A** side facing the differential gear.

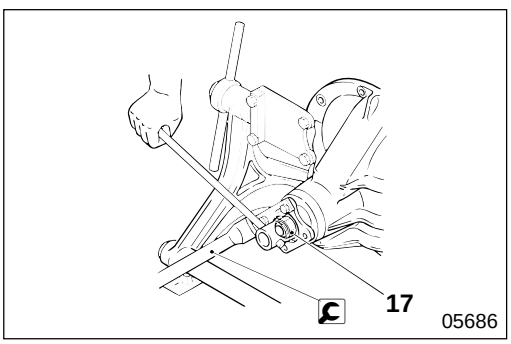

17 **Removal and installation of lock nut**

: Flange stopper

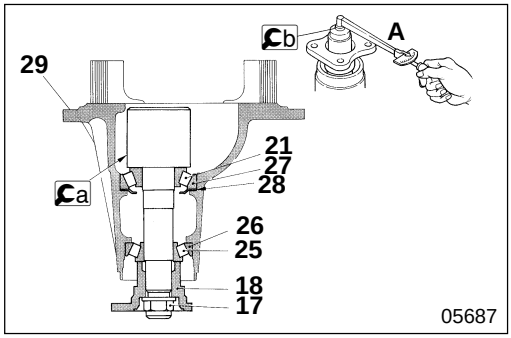

19 to 23 25 to 28 Final drive pinion assembly

[Selection of rear bearing shim]

- Install Ca pinion gauge temporarily in differential carrier **29** together with the parts illustrated.
- Tighten lock nut **17** using Cb socket to adjust starting torque **A** of the pinion gauge to the standard value.

CAUTION

Do not assemble parts other than those illustrated.

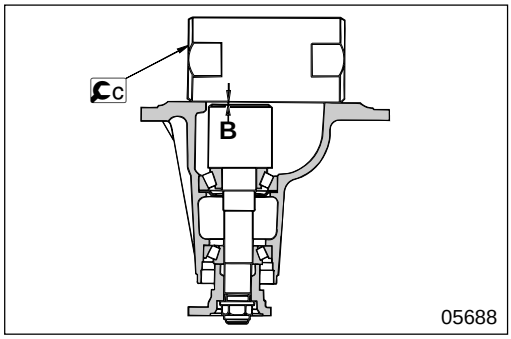

- Set Cc cylinder gauge to standard starting torque to measure gap **B** as illustrated.
  Select rear bearing shim **22** using the calculation given below.
  < Calculation of rear bearing shim thickness C >
  C=B–1.5 mm {0.059 in.}
  Rear bearing shim thicknesses :
  0.3 mm {0.012 in.} and 1.38 to 1.65 mm {0.054 to 0.065 in.}
  (10 thicknesses available in 0.03 {0.0012 in.} mm increments)

CAUTION

Be sure to keep the number of rear bearing shims 22 to the minimum and keep them as close to the standard value as possible.

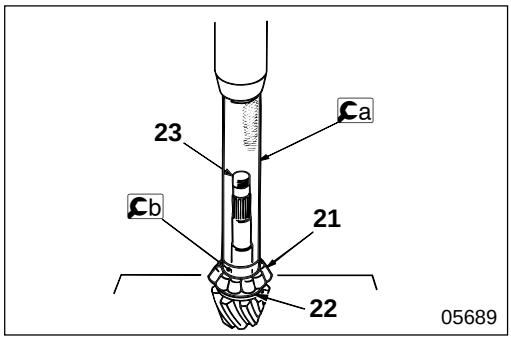

[Installation of rear bearing shim]
Install selected rear bearing shim **22** onto final drive pinion **23** and press-fit rear bearing inner race **21** using Ca Cb bearing installer.

CAUTION

Be sure, when installing rear bearing shim 22 comprised of a 0.3 mm {0.012 in.} shim and another shim, that the 0.3 mm {0.012 in.} shim is installed next to the bearing.

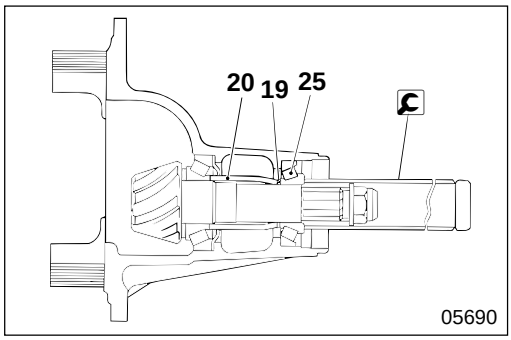

[Press-fitting of front bearing inner race]
Assemble pinion spacer **20** and front bearing shim **19** for press-fitting of front bearing inner race **25** using C bearing installer.

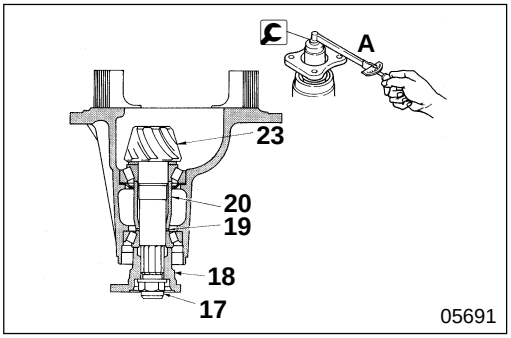

[Measurement of starting torque]

- After installing companion flange assembly **18**, tighten lock nut **17** at specified torque.
  Measure starting torque **A** of final drive pinion **23** using [C] socket.
- If the measured value deviates from the standard value, select pinion spacer **20** and front bearing shim **19** to adjust the starting torque to the standard value.

CAUTION

- **Do not install the oil seal before measuring the starting torque.**
- **Be sure to keep the number of shims to the minimum when selecting pinion spacers 20.**

Pinion spacer heights:
64.07 mm {2.52 in.} and 64.40 mm {2.54 in.} (Painted white)
Front bearing shim thicknesses:
0.30 mm {0.012 in.} and 2.00 to 2.33 mm {0.079 to 0.092 in.}, (12 thicknesses available in 0.03 mm {0.0012 in.} increments)

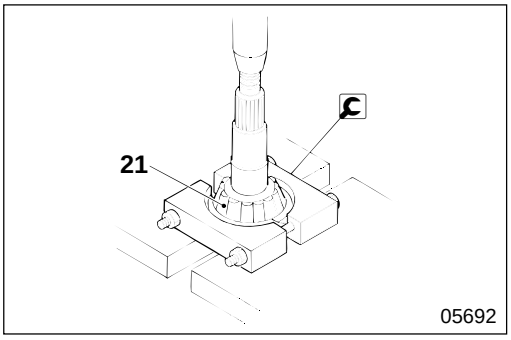

21 Rear bearing inner race

[Removal]
[C] : Pinion rear bearing remover

[Press-fitting]
P26B-40

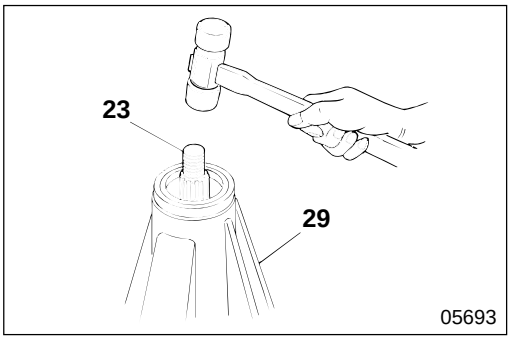

23 Removal of final drive pinion

CAUTION

Be sure to use a plastic mallet when driving out final drive pinion 23, and prevent it from dropping to the ground by holding it.

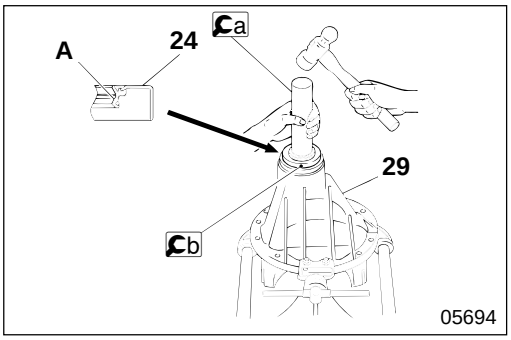

24 Press-fitting of oil seal

Apply grease to lip area **A** of oil seal **24** and press-fit the oil seal into differential carrier **29**.

[Ca] : Bearing installer
[Cb] : Bearing installer adapter

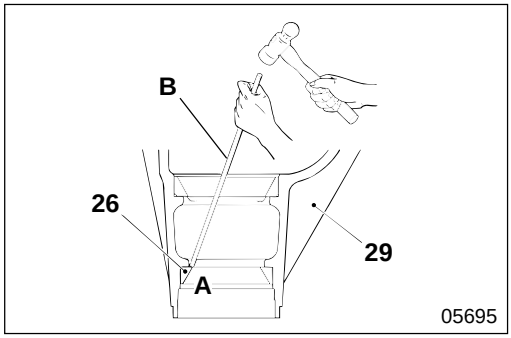

26 **Front bearing outer race**

[Removal]
Drive out front bearing outer race **26** evenly from three indented parts **A** of differential carrier **29**.
B : Pin-punch

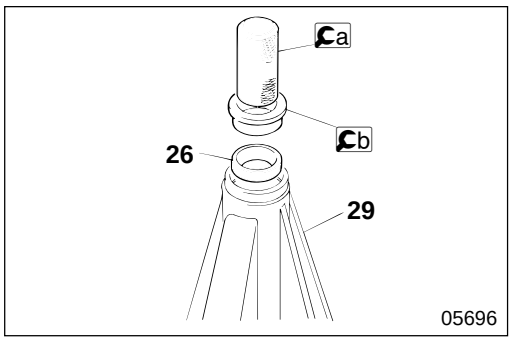

[Press-fitting]
a : Bearing installer
b : Bearing installer

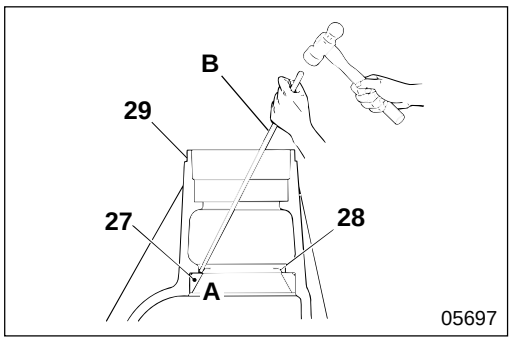

27 **28** **Rear bearing outer race and oil stopper**

[Removal]
Drive out rear bearing outer race **27** and oil stopper **28** evenly from three indented parts **A** of differential carrier **29**.
B : Pin-punch

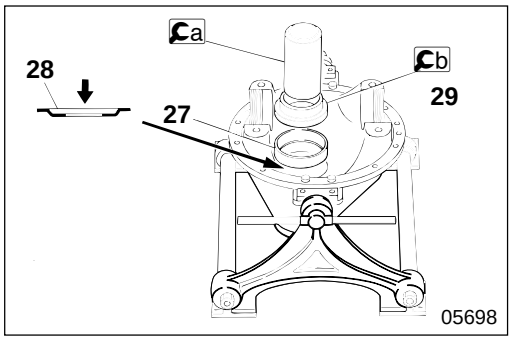

[Press-fitting]
Insert oil stopper **28** in the direction of the arrow as illustrated.
a : Bearing installer
b : Bearing installer

MITSUBISHI
FUSO

FE

Service Manual

Group 27
Rear Axle

Table of Contents

BACK

HOME

MITSUBISHI FUSO TRUCK OF AMERICA, Inc.

Pub No. TWSE9501-27

GROUP 27 REAR AXLE

SPECIFICATIONS 2
STRUCTURE AND OPERATION 3
TROUBLESHOOTING 5
WORK BEFORE REMOVAL AND INSTALLATION OF REAR AXLE 7
WHEEL HUB AND BRAKE DRUM < FE639 > 8
WHEEL HUB AND ROTOR < FE649 > 16
AXLE HOUSING 24
REDUCTION AND DIFFERENTIAL 28

SPECIFICATIONS

Item \ Vehicle model		FE639	FE649
Rear axle	Model	R033T	
	Type	Full floating shaft tube system	
Reduction	Model	D033H	
	Type	Single-reduction gear	
	Tooth shape	Hypoid gear	
	Speed reduction ratio	5.714	
Differential	Tooth shape	Straight bevel gear	
Gear oil	Grade	* Normal : Maximum air temperature during operation below 40°C {104°F} API GL-5 SAE 90 Hot area : Maximum air temperature during operation above 40°C {104°F} API GL-5 SAE 140	
	Oil volume L {qts.}	4.5 {4.8}	
Mass (reference) kg {lb}		Approximately 210 {460}	Approximately 230 {505}

* When used under heavily-loaded, severe conditions such as continuous driving on uphill grades, it is recommended that you use gear oil with a SAE viscosity grade of 140. However, the air temperature must be above 10°C {50°F}.

Wheel Hub and Brake Drum < FE639 >

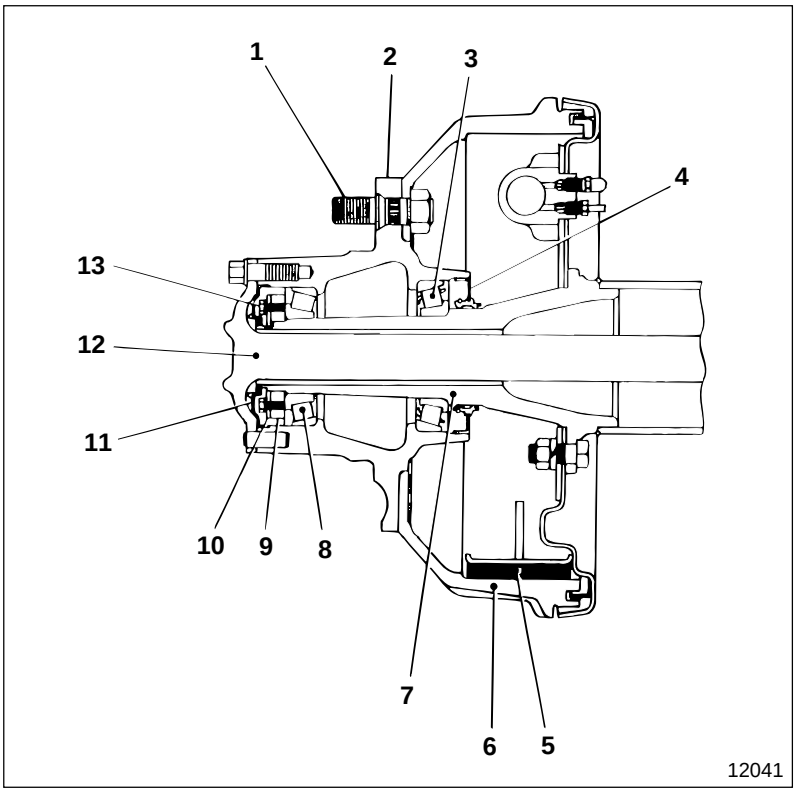

1 Hub bolt
2 Wheel hub
3 Inner bearing
4 Inner oil seal
5 Brake assembly
6 Brake drum
7 Axle housing
8 Outer bearing
9 Lock nut
10 Lock washer
11 Outer oil seal
12 Axle shaft
13 Lock bolt

Wheel Hub and Rotor < FE649 >

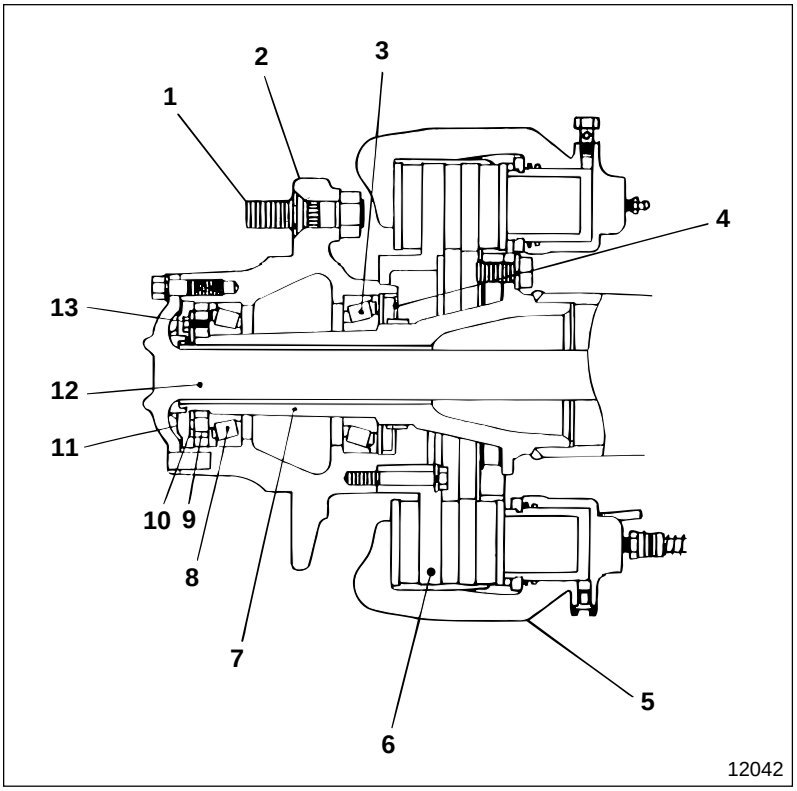

1 Hub bolt
2 Wheel hub
3 Inner bearing
4 Inner oil seal
5 Disc brake assembly
6 Disc rotor
7 Axle housing
8 Outer bearing
9 Lock nut
10 Lock washer
11 Outer oil seal
12 Axle shaft
13 Lock bolt

Reduction and Differential

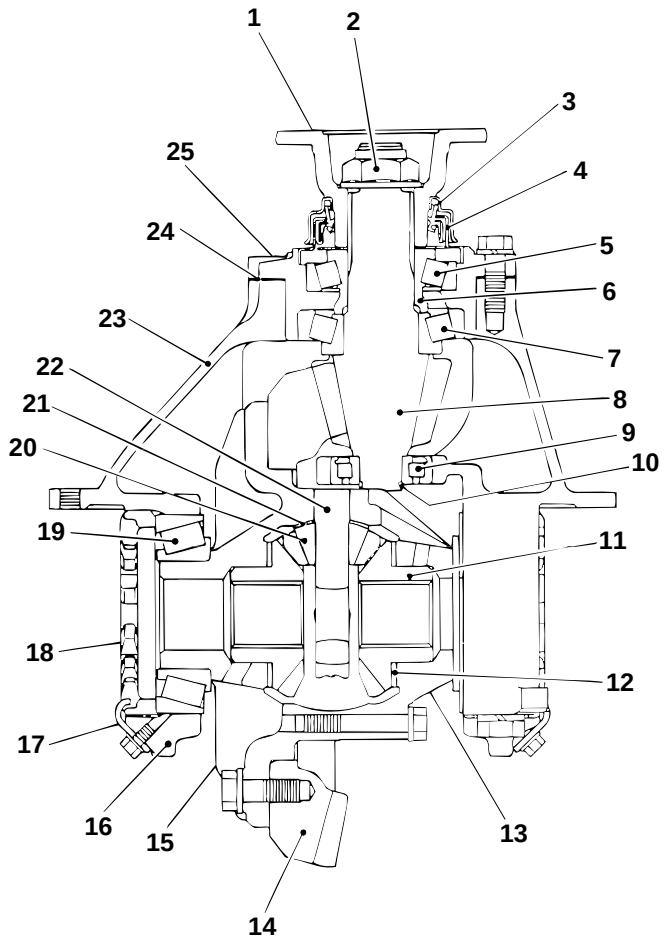

1 Companion flange
2 Lock nut
3 Dust cover
4 Oil seal
5 Front bearing
6 Collar
7 Rear bearing
8 Final drive pinion
9 Pinion pilot bearing
10 Lock ring
11 Differential gear
12 Differential gear washer
13 Differential case, RH
14 Final drive gear
15 Differential case, LH
16 Bearing cap
17 Lock plate
18 Adjusting screw
19 Side bearing
20 Differential pinion
21 Differential pinion washer
22 Pinion spider
23 Differential carrier
24 Shim
25 Bearing retainer

Possible causes \ Symptoms		Oil leaking from companion flange assembly	Oil leaking from differential carrier and axle housing	Oil leaking from axle shaft	Power transmission insufficient: Propeller shaft turns but vehicle does not move	Power transmission insufficient: Noise when starting and when changing gear	Power transmission insufficient: Continuous noise while cruising	Power transmission insufficient: Intermittent noise while cruising	Power transmission insufficient: Noise while cornering	Tires drag while cornering
Wheel hub, brake drum, disc rotor, or axle housing	Axle shaft mounting bolt loose			○				○		
	Axle shaft fractured				○					
	Axle shaft slips out of engagement				○					
	Oil seal faulty	○		○						
	Air breather clogged			○						
	Wheel hub bearing seized						○			
	Wheel hub bearing worn						○			
	Wheel hub bearing rotation faulty						○			
	Wheel hub bearing broken							○		
	Gear oil excessive	○								
	Sealant faulty		○							
	Inspection plug and drain plug loose		○							
Reduction and differential	Side bearing seized						○		○	
	Side bearing worn						○		○	
	Side bearing rotation faulty						○		○	
	Side bearing broken							○		
	Side bearing preload adjusted incorrectly						○			
	Reduction and differential assembly mounting bolt and nut loose		○					○		
	Differential carrier cracked or damaged		○							
	Final drive gear and differential case tightening bolts loose					○		○		
	Final drive gear or final drive pinion broken				○	○		○	○	
	Final drive gear or final drive pinion worn						○		○	
	Final drive gear or final drive pinion damaged						○			
	Final drive gear backlash excessive					○				
	Final drive gear backlash or tooth contact faulty						○			
	Final drive pinion starting torque faulty					○	○			
	Lock nut loose					○	○			

TROUBLESHOOTING

Possible causes	Symptoms	Oil leaking from companion flange assembly	Oil leaking from differential carrier and axle housing	Oil leaking from axle shaft	Power transmission insufficient					
					Propeller shaft turns but vehicle does not move	Noise when starting and when changing gear	Continuous noise while cruising	Intermittent noise while cruising	Noise while cornering	Tires drag while cornering
Reduction and differential	Front and rear bearings seized				○		○			
	Front and rear bearings worn						○			
	Front and rear bearings broken							○		
	Pinion pilot bearing worn						○			
	Pinion pilot bearing seized or broken							○		
	Pinion spider broken				○					
	Differential gear or differential pinion broken				○			○	○	○
	Differential gear or differential pinion seized				○					○
	Differential gear or differential pinion worn								○	○
	Differential gear washer worn or damaged							○	○	○
	Differential gear spline worn					○				

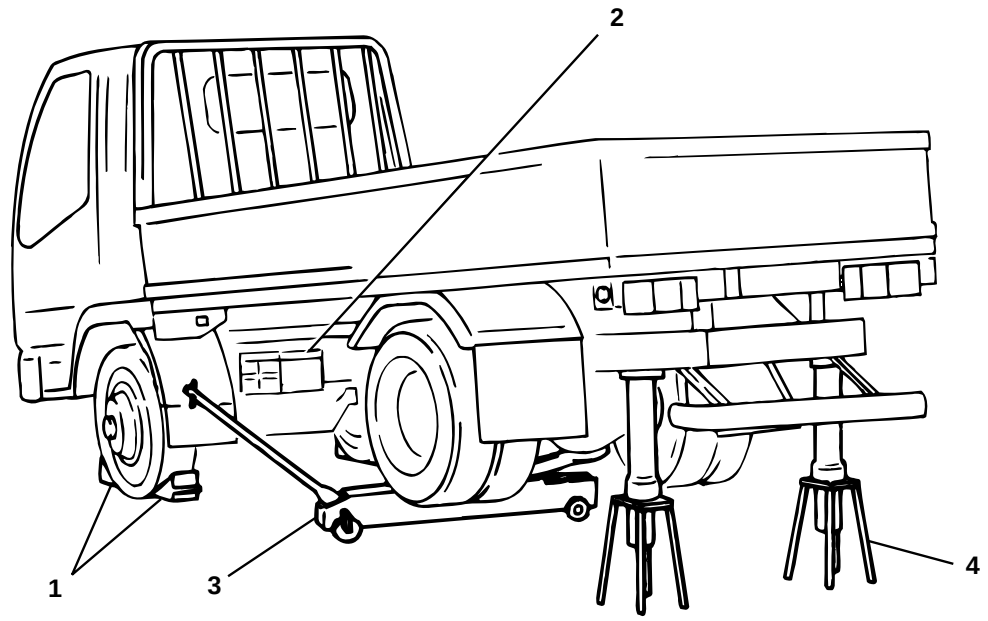

14177

● **Work sequence before removal**

1 Place wheel chocks.
2 Disconnect the negative terminal of the battery cable. Gr 54
3 Jack up the rear axle using a garage jack.
4 Support the rear frame on rigid racks.

WARNING

- **Chock the wheels securely so the vehicle does not move.**
- **Do not remove the chocks until the entire operation is completed.**
- **Supporting a vehicle on a garage jack only is extremely dangerous, so always support the frame on rigid racks.**
- **Leave the garage jack and rigid racks in place until the entire operation is completed. Never remove them during the operation.**

● **Work sequence after installation**

Follow the work sequence before removal in reverse.

WHEEL HUB AND BRAKE DRUM < FE639 >

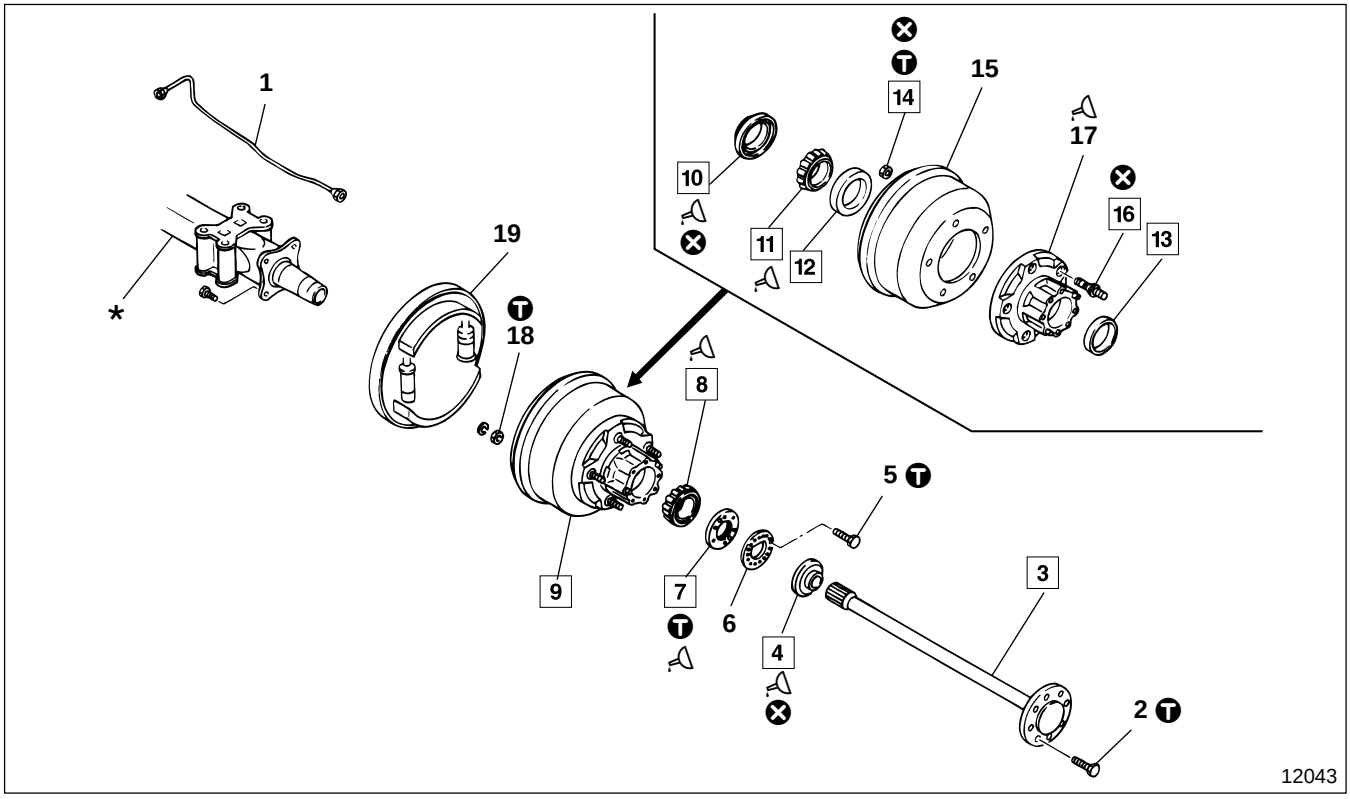

● **Disassembly sequence**

1 Brake pipe
2 Bolt
3 Axle shaft
4 Outer oil seal
5 Bolt
6 Lock washer
7 Lock nut
8 Outer bearing inner race
9 Wheel hub and brake drum assembly
10 Inner oil seal
11 Inner bearing inner race
12 Inner bearing outer race
13 Outer bearing outer race
14 Nut
15 Brake drum
16 Hub bolt
17 Wheel hub
18 Nut
19 Brake assembly Gr 35

*: Axle housing P27-24
⊗: Non-reusable parts

CAUTION
Be sure to protect brake pipe 1 from dust by fitting blanking plugs after removal.

NOTE
Do not disassemble brake drum 15 and wheel hub 17 unless they are faulty.

● **Assembly sequence**

Follow the disassembly sequence in reverse.

WARNING
You must bleed air from the brake system after assembly, failure to do so would cause the brake to malfunction. Gr 35

CAUTION
Be careful not to damage inner oil seal 10, when installing wheel hub and brake drum assembly 9 into axle housing *.

Service standards

Unit : mm {in.}

Location	Maintenance item		Standard value	Limit	Remedy
3	Axle shaft	Bend of shaft center	1 {0.039} or less	2 {0.079}	Replace
		Wobble of flange face	0.03 {0.0012} or less	0.05 {0.0020}	
—	Starting torque of wheel hub bearing		2.0 to 3.9 N·m {1.4 to 2.9 lbf.ft, 0.20 to 0.40 kgf·m}	—	Tangential force at the hub bolt : 20 to 38 N {4.4 to 8.6 lbf, 2.0 to 3.9 kgf}

Tightening torque

Unit : N·m {lbf.ft, kgf·m}

Location	Parts to be tightened		Tightening torque	Remarks
2	Bolt (Axle shaft mounting)		98 to 115 {72 to 87, 10 to 12}	—
5	Bolt (Lock washer mounting)		6.9 to 11 {5.1 to 8.0, 0.7 to 1.1}	—
7	Lock nut (Wheel hub bearing mounting : wheel hub bearing preload adjustment)	Primary tightening	98 to 125 {72 to 94, 10 to 13}	—
		After slackening off completely, carry out secondary tightening	29 to 39 {22 to 29, 3 to 4}	—
14	Nut (Wheel hub and brake drum mounting)		345±39 {255±29, 35±4}	—
18	Nut (Brake assembly mounting)		98 to 135 {72 to 100, 10 to 14}	—

Lubricant

Location	Points of application	Kinds	Quantity
4, 10	Lip area of outer and inner oil seals	Wheel bearing grease [NLGI No. 2 (Li soap)]	As required
7	Thread area of lock nut	Wheel bearing grease [NLGI No. 2 (Li soap)]	As required
8, 11	Pack the space between rollers of outer and inner bearing inner races	Wheel bearing grease [NLGI No. 2 (Li soap)]	As required
17	Pack interior of wheel hub	Wheel bearing grease [NLGI No. 2 (Li soap)]	370±35 g {13.1±1.23 oz}

Special tools

Unit : mm {in.}

Location	Tool name and shape	Part No.	Application
7	Lock nut adjustment tool 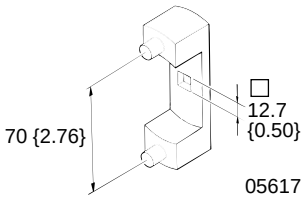	MB999150	Removal and installation of lock nut
9	Hub puller components **A** : Hub puller body **B** : Bolt **C** : Attachment 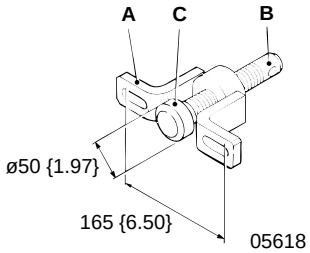	MB999070 **A** : MB999071 **B** : MB999072 **C** : MB999073	Removal of wheel hub and brake drum assembly
10	Oil seal installer 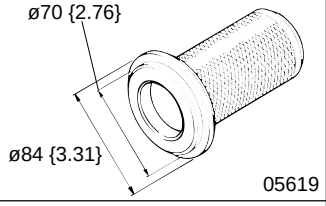	MB999097 (T90ST30)	Press-fitting of inner oil seal: Use in combination
	Oil seal installer 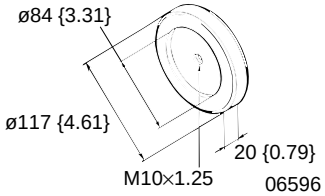	MH062607	
12	Oil seal installer 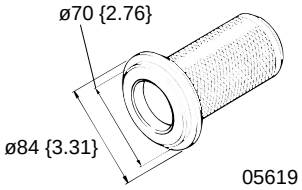	MB999097 (T90ST30)	Press-fitting of outer bearing outer race: Use in combination
	Bearing installer 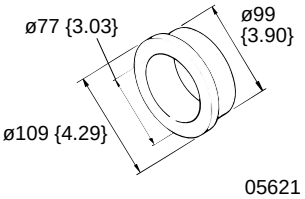	MB999098 (T90ST05)	
13	Oil seal installer 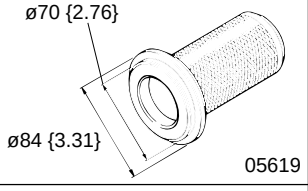	MB999097 (T90ST30)	Press-fitting of inner bearing outer race: Use in combination
	Bearing installer 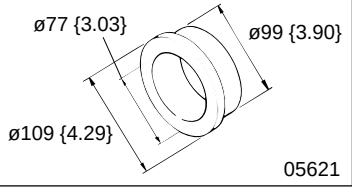	MB999098 (T90ST05)	

◆ Service procedure

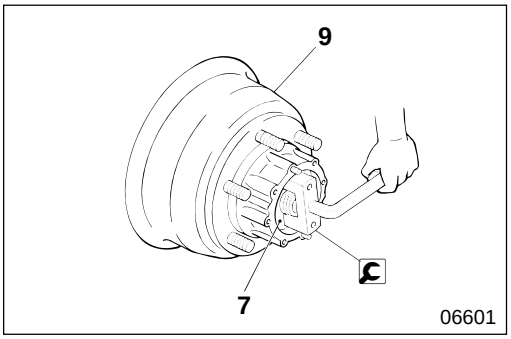

● Starting torque of wheel hub bearing

[Adjustment]

- Tighten lock nut **7** at specified torque for primary tightening, while turning wheel hub and brake drum assembly **9**.
- Slacken off lock nut **7** completely.
- Turn wheel hub and brake drum assembly **9** several times to smooth operation of outer bearings **8**, **13** and inner bearings **11**, **12.**
- Retighten lock nut **7** at specified torque for secondary tightening.

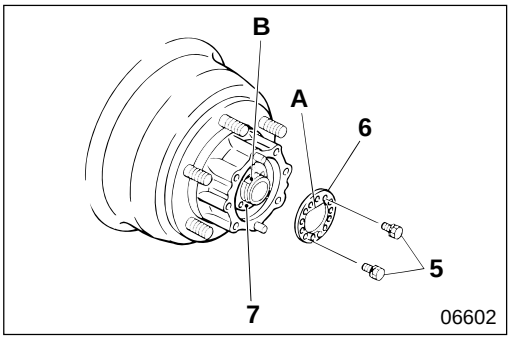

- Align flat area **A** with notch **B** to install lock washer **6**.
- Make sure that the mounting holes of lock washer **6** and lock nut **7** align. If they do not, slacken off the lock nut and align them.
- Install bolts **5** at the position as illustrated, aligning lock nut **7**.
- Tighten bolts **5** at specified torque.

CAUTION⚠

After adjustment, make sure that there is no play in the axial direction of wheel hub and brake drum assembly 9.

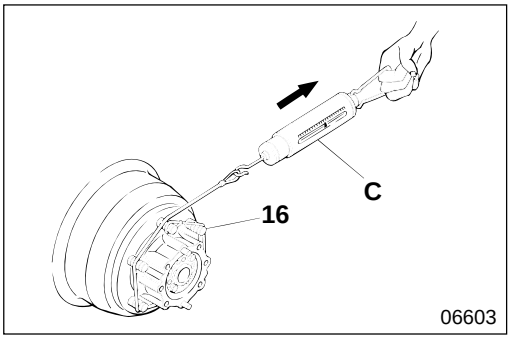

[Measurement]

- Install spring balance **C** on hub bolt **16**.
- Measure the tangential force.
- If the measured tangential force is within the specified value, the starting torque conforms to the standard value.
- Do not allow the starting torque to become higher than the tangential force.
- If the measured value deviates from the specified value, readjust.
- If any fault is found after readjustment, replace outer bearings **8**, **13** and inner bearings **11**, **12**.

NOTE

- **Measure the starting torque with inner oil seal 10 installed.**
- **Measure the starting torque with rear axle shaft 3 and outer oil seal 4 removed.**
- **Make sure that there is no drag in brake lining and brake drum 15 before you measure the tangential force.**

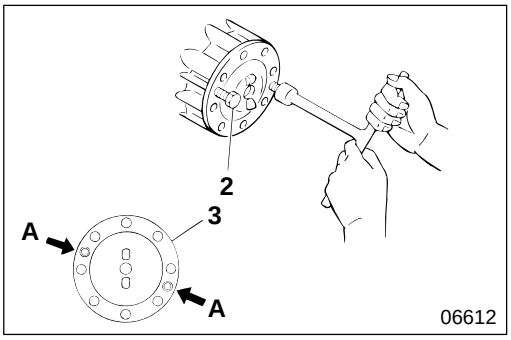

3 Axle shaft

[Removal]

Insert two mounting bolts **2** of axle shaft **3** into two screw holes **A**, provided for disassembly, of the flange. Then, remove the rear shaft.

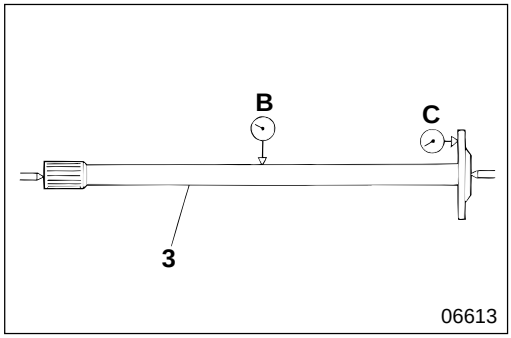

[Inspection]

B : Bend at the shaft center

NOTE

To measure the bend of axle shaft 3, turn it one full revolution and read the dial gauge indicator. The bend is one half of the indicated value.

C : Bend of flange surface

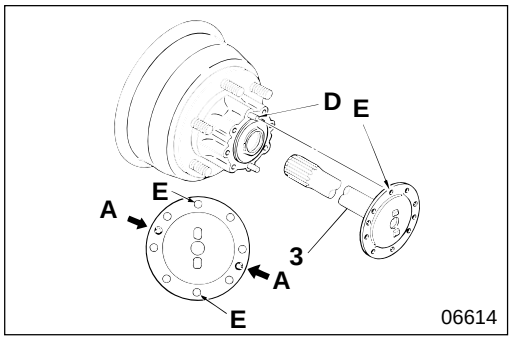

[Installation]

- Knock pin hole **E** of axle shaft **3** is the second hole clockwise from disassembly screw hole **A**.
- To mount axle shaft **3**, align knock pin **D** with knock pin hole **E**.

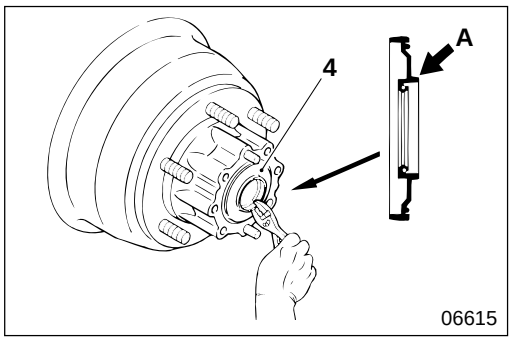

4 **Outer oil seal**

[Removal]

To remove outer oil seal **4**, use a pair of pliers and pull protrusion **A** of the outer oil seal circumference evenly.

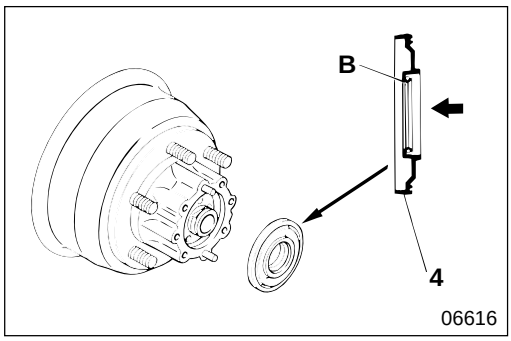

[Installation]

Apply grease to lip area **B** of outer oil seal **4** and press-fit the outer oil seal in the direction as illustrated.

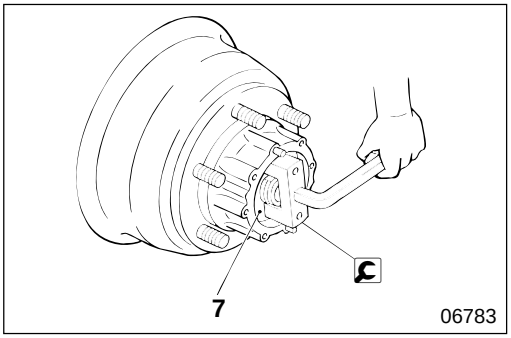

7 **Removal and installation of lock nut**

Adjust and measure the starting torque of wheel hub bearing during installation. P27-11

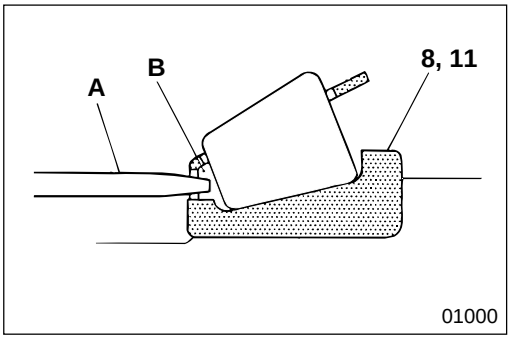

8 **11** **Packing grease in outer bearing inner race and inner bearing inner race**

A : Grease pump nozzle
B : Space between rollers

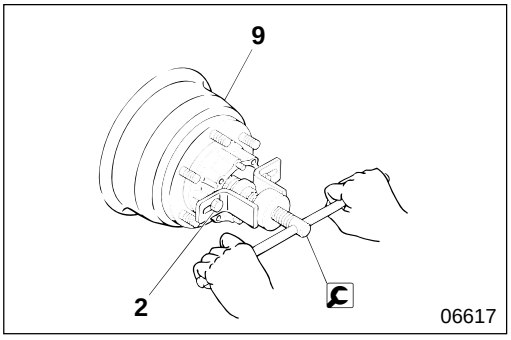

9 **Wheel hub and brake drum assembly**

[Removal]

- Remove wheel hub and brake drum assembly **9** using mounting bolt **2** of axle shaft **3**.

CAUTION

Make sure you remove wheel hub and brake drum assembly 9 in a straight line to prevent damage to oil seal 10.

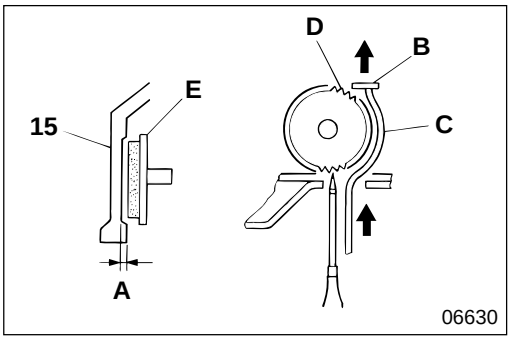

- If wheel hub and brake drum assembly **9** cannot be removed because of stepped wear **A** in brake drum **15**, do the following:
- Remove the backing plate cover.
- Lift lever **B**.
  C : Wire approximately ø2 mm {0.079 in.}
- Turn adjuster **D** in the opposite direction to the arrow on the backing plate to retract brake shoe assembly **E**.
- Remove wheel hub and brake drum assembly **9**.

CAUTION

Correct brake drum 15 if any fault is found. **Gr 35**

[Installation]

After installing wheel hub and brake drum assembly **9**, adjust the brake shoe clearance. Gr 35

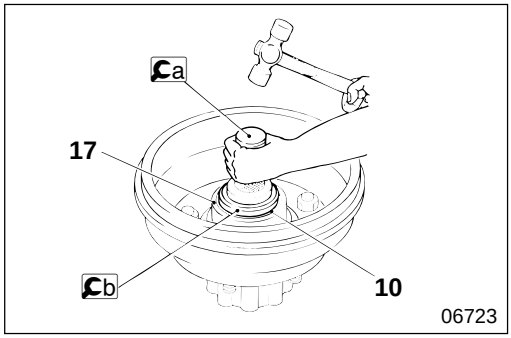

10 **Installation of inner oil seal**

Press-fit inner oil seal **10** until it is flush with the end of wheel hub **17**.

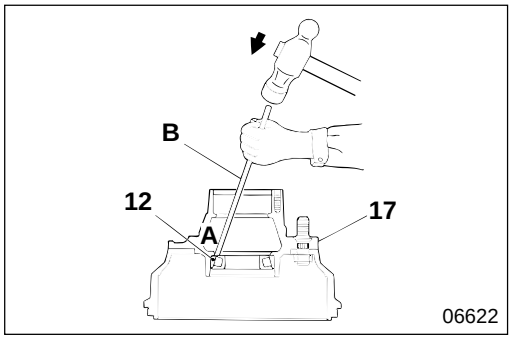

12 **Inner bearing outer race**

[Removal]
Drive out inner bearing outer race **12** evenly from three indented parts **A** in wheel hub **17**.

B : Pin-punch

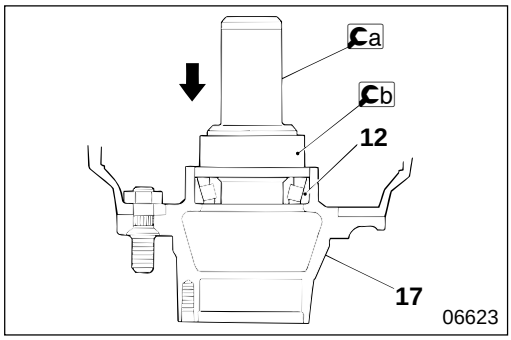

[Installation]

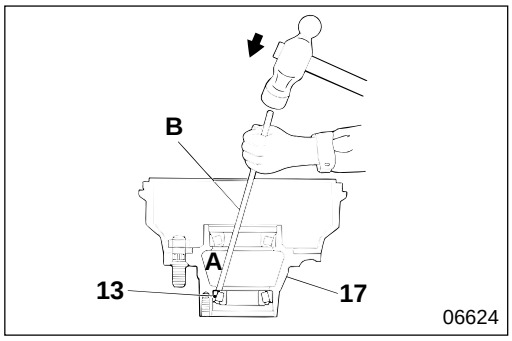

13 **Outer bearing outer race**

[Removal]
Drive out outer bearing outer race **13** evenly from three indented parts **A** in wheel hub **17**.

B : Pin-punch

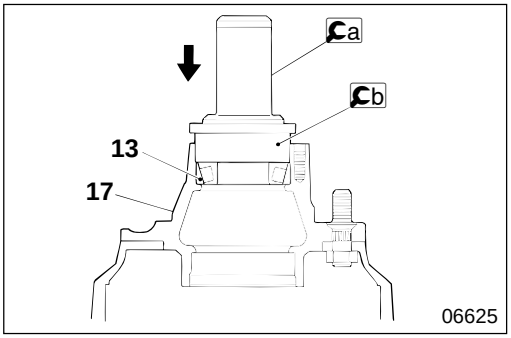

[Installation]

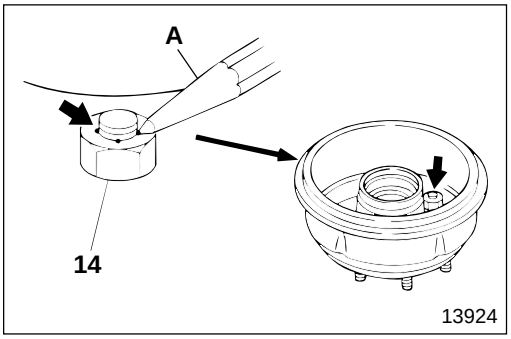

14 **Installation of nut**

Tighten nut **14** at specified torque, then caulk the nut to keep it from turning.

A : Punch

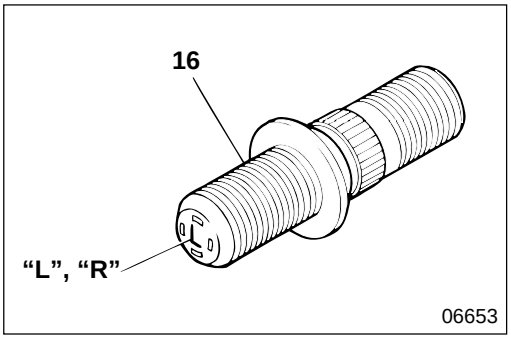

16 **Installation of hub bolt**

Hub bolt **16** is marked with **L** (left) or **R** (right) to indicate the side it is to be mounted on. Check this symbol before press-fitting the bolt.

WHEEL HUB AND ROTOR < FE649 >

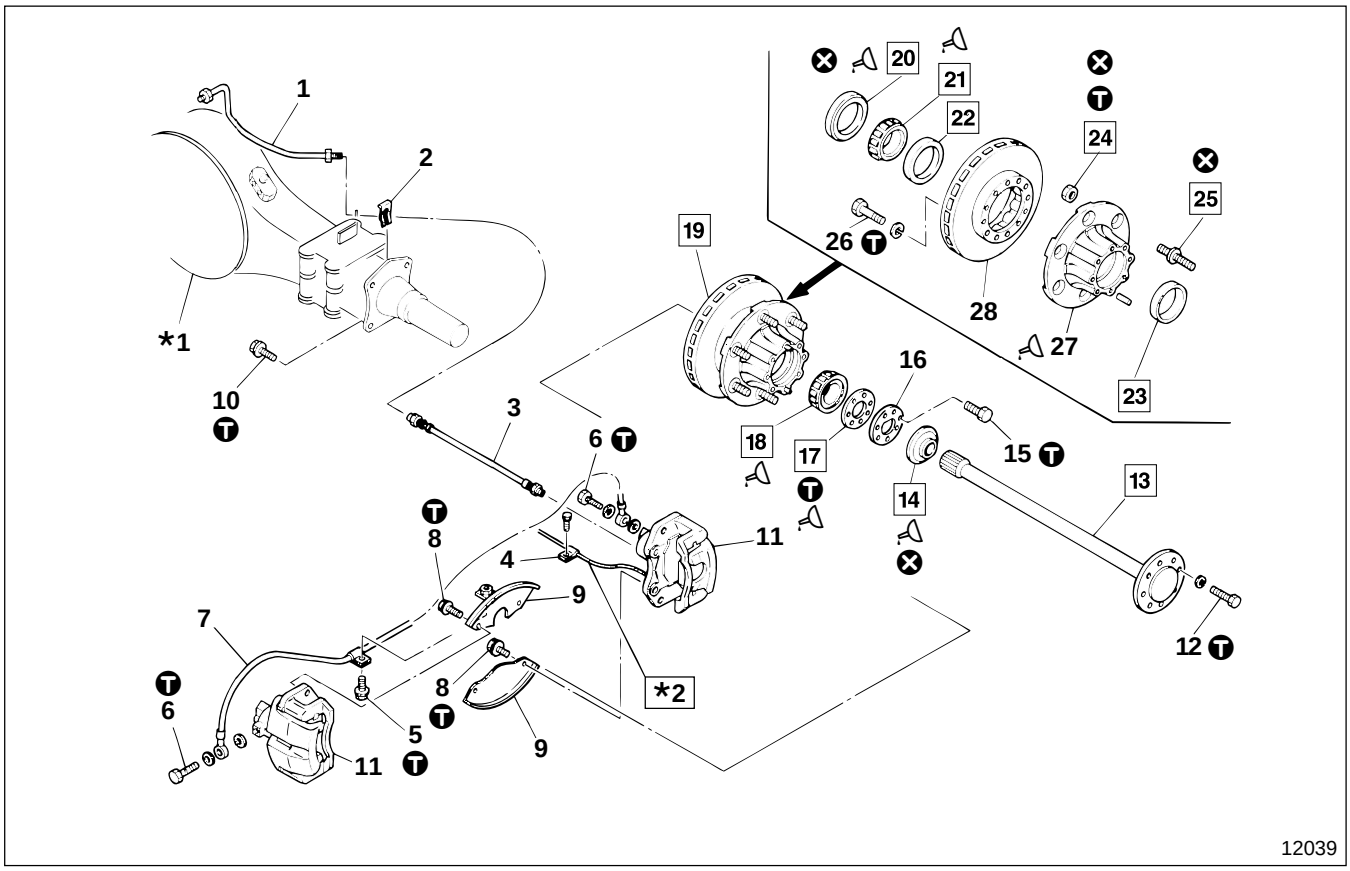

12039

● **Disassembly sequence**

1 Brake pipe
2 Clip
3 Brake hose
4 Clip
5 Bolt
6 Eye bolt
7 Brake hose
8 Bolt
9 Dust shield
10 Bolt
11 Disc brake assembly
Gr 35
12 Bolt
13 Axle shaft
14 Outer oil seal
15 Bolt
16 Lock washer
17 Lock nut
18 Outer bearing inner race
19 Wheel hub and rotor assembly
20 Inner oil seal
21 Inner bearing inner race
22 Inner bearing outer race
23 Outer bearing outer race
24 Nut
25 Hub bolt
26 Bolt
27 Wheel hub
28 Disc rotor

*1 : Axle housing P27-24
*2 : Brake pad wear indicator
Gr 54
⊗ : Non-reusable parts

WARNING

Disc brake assembly 11 and disc rotor 28 are hot immediately after the vehicle has stopped, so take care not to burn yourself.

CAUTION

Be sure to protect brake pipe 1 and brake hoses 3, 7 from dust by fitting blanking plugs after removal.

NOTE

Do not disassemble wheel hub 27 and disc rotor 28 unless they are faulty.

● **Assembly sequence**

Follow the disassembly sequence in reverse.

WARNING⚠

You must bleed air from the brake system after assembly, failure to do so would cause the brake to malfunction. Gr 35

CAUTION⚠

Be careful not to damage inner oil seal 20 when installing wheel hub and rotor assembly 19 in axle housing *1.

Service standards

Unit : mm {in.}

Location	Maintenance item		Standard value	Limit	Remedy
13	Rear axle shaft	Bend of shaft center	1 {0.039} or less	2 {0.079}	Replace
		Wobble of flange face	0.03 {0.0012} or less	0.05 {0.0020}	Replace
—	Starting torque of wheel hub bearing		2.0 to 3.9 N·m {1.4 to 2.9 lbf.ft, 0.20 to 0.40 kgf·m}	—	Tangential force at hub bolt : 18 to 35 N {4.0 to 7.9 lbf, 1.8 to 3.6 kgf}

Tightening torque

Unit : N·m {lbf.ft, kgf·m}

Location	Parts to be tightened		Tightening torque	Remarks
5	Bolt (Clip mounting)		4 to 6 {2.9 to 4.3, 0.4 to 0.6}	—
6	Eye bolt (Brake hose mounting)		19.6 to 24.6 {14 to 18, 2 to 2.5}	—
8	Bolt (Dust shield mounting)		39 to 58 {28 to 43, 3.9 to 6.0}	—
10	Bolt (Disc brake assembly mounting)		125 to 175 {94 to 130, 13 to 18}	—
12	Bolt (Axle shaft mounting)		98 to 120 {72 to 87, 10 to 12}	—
15	Bolt (Lock washer mounting)		6.9 to 11 {5.1 to 8.0, 0.7 to 1.1}	—
17	Lock nut (Wheel hub bearing mounting : wheel hub bearing preload adjustment)	Primary tightening	98 to 130 {72 to 125, 10 to 13}	—
		After slacking off completely, carry out secondary tightening	30 to 40 {22 to 29, 3 to 4}	—
24	Nut (Hub bolt mounting)		340±40 {255±29, 35±4}	—
26	Bolt (Wheel nub and disc rotor mounting)		34 to 54 {25 to 40, 3.5 to 5.5}	—

Lubricant

Location	Points of application	Kinds	Quantity
14, 20	Lip area of outer and inner oil seals	Wheel bearing grease [NLGI No. 2 (Li soap)]	As required
17	Thread area of lock nut	Wheel bearing grease [NLGI No. 2 (Li soap)]	As required
18, 21	Pack the space between rollers of outer and inner bearing inner races	Wheel bearing grease [NLGI No. 2 (Li soap)]	As required
27	Pack interior space of wheel hub	Wheel bearing grease [NLGI No. 2 (Li soap)]	370±37 g {13.1±1.31 oz}

Special tools

Unit : mm {in.}

Location	Tool name and shape	Part No.	Application
17	Lock nut adjustment tool 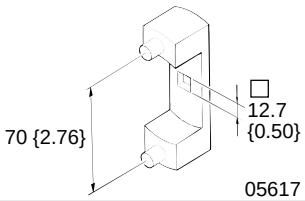	M B999150	Removal and installation of lock nut
19	Hub puller components **A** : Hub puller body **B** : Bolt **C** : Attachment 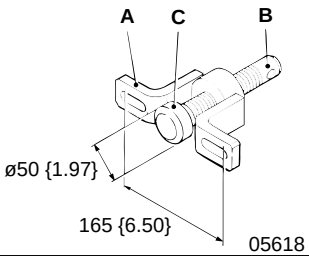	M B999070 **A** : MB999071 **B** : MB999072 **C** : MB999073	Removal of wheel hub and rotor assembly
20	Oil seal installer 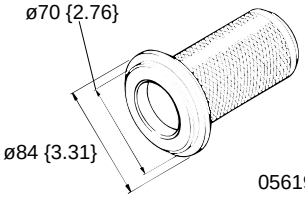	MB999097 (T90ST30)	Press-fitting of inner oil seal : Use in combination
	Oil seal installer 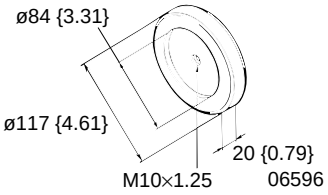	MH062607	
22	Oil seal installer 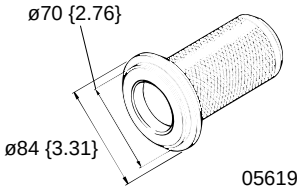	MB999097 (T90ST30)	Press-fitting of inner bearing outer race : Use in combination
	Bearing installer 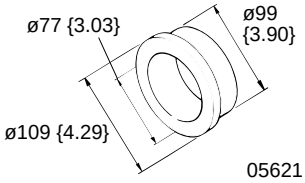	MB999098 (T90ST05)	
23	Oil seal installer 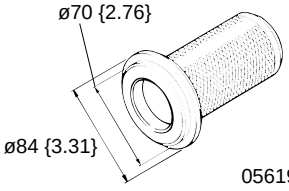	MB999097 (T90ST30)	Press-fitting of outer bearing outer race : Use in combination
	Bearing installer 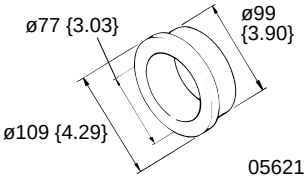	MB999098 (T90ST05)	

◆ Service procedure

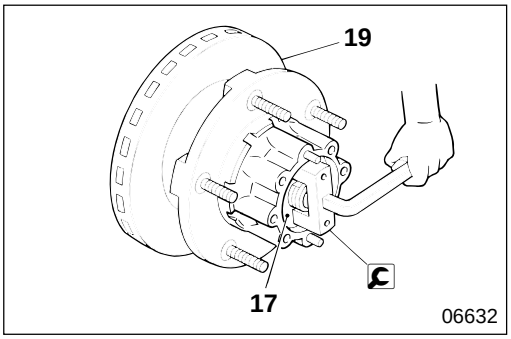

● Starting torque of wheel hub bearing

[Adjustment]

- Tighten lock nut **17** at specified torque for primary tightening, while turning wheel hub and rotor assembly **19**.
- Slacken off lock nut **17** completely.
- Turn wheel hub and rotor assembly **19** several times to smooth operation of outer bearings **18**, **23** and inner bearings **21, 22**.
- Tighten lock nut **17** at specified torque for secondary tightening.

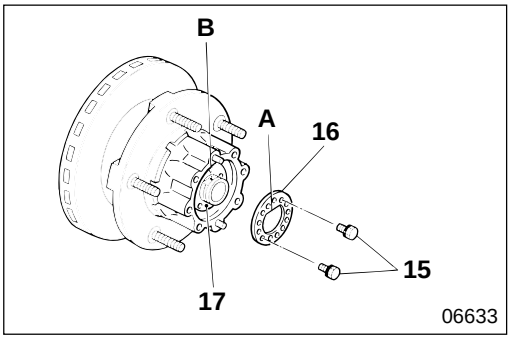

- Insert lock washer **16** so that flat area **A** fits onto notch **B**.
- Make sure that the mounting holes of lock washer **16** and lock nut **17** align. If they do not, slacken off the lock nut and align them.
- Install bolts **15** at the positions as illustrated, aligning lock nut **17**.
- Tighten bolts **15** at specified torque.

CAUTION

After adjustment, make sure that there is no play in the axial direction of wheel hub and rotor assembly 19.

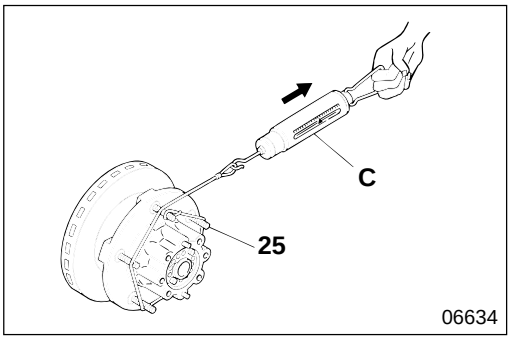

[Measurement]

- Install spring balance **C** on hub bolt **25**.
- Measure the tangential force.
- If the measured tangential force is within the specified value, the starting torque conforms to the standard value.
- Do not allow the starting torque to become higher than the tangential force.
- If the measured value deviates from the specified value, readjust.
- If any fault is found after readjustment, replace outer bearings **18, 23** and inner bearings **21, 22**.

NOTE

- **Measure the starting torque with inner oil seal 20 installed.**
- **Measure the starting torque with disc brake assembly 11, outer oil seal 14 and axle shaft 13 removed.**

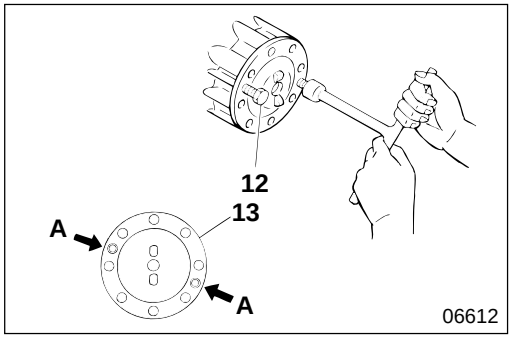

13 **Axle shaft**

[Removal]
Insert bolts **12** into screw holes **A** of axle shaft **13**. Then, remove the axle shaft.

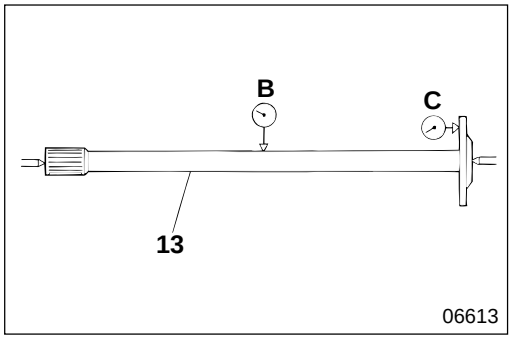

[Inspection]
B : Bend of shaft center

NOTE
To measure the bend of axle shaft 13, turn it one full revolution and read the dial gauge indicator. The bend is one half of the indicated value.

C : Wobble of flange face

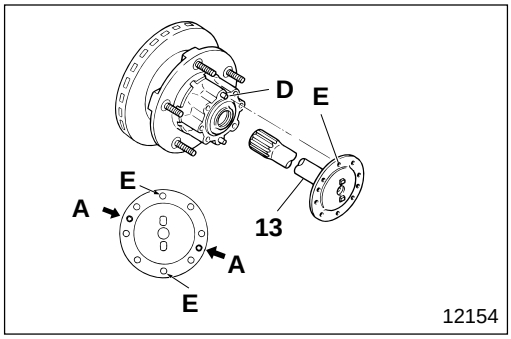

[Installation]
- Knock pin hole **E** of axle shaft **13** is the second hole clockwise from disassembly screw hole **A**.
- To mount axle shaft **13**, align knock pin **D** with knock pin hole **E**.

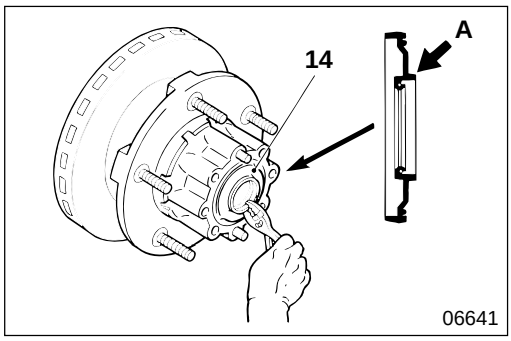

14 **Outer oil seal**

[Removal]
To remove outer oil seal **14**, use pliers and pull protrusion **A** of the outer oil seal circumference evenly.

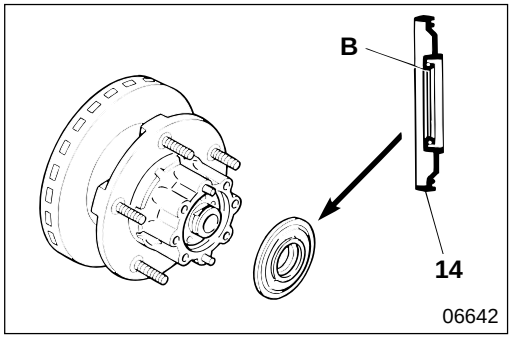

[Installation]
- Apply grease to lip area **B** of outer oil seal **14**.
- Press-fit outer oil seal **14** in the direction as illustrated.

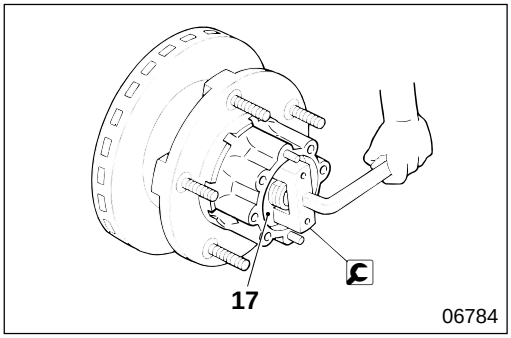

17 **Removal and installation of lock nut**

Adjust starting torque of wheel hub bearing during installation.
P27-19

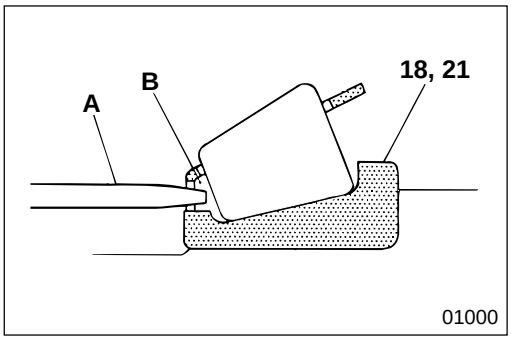

18 **21** **Packing grease in outer bearing inner race and inner bearing inner race**

A : Grease pump nozzle
B : Space between rollers

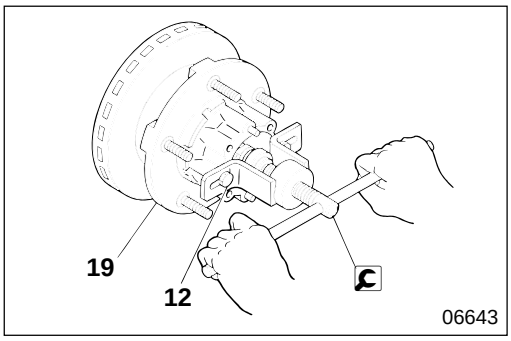

19 **Removal of wheel hub and rotor assembly**

Remove wheel hub and rotor assembly **19** using mounting bolt **12** of axle shaft **13**.

CAUTION
Make sure you remove wheel hub and rotor assembly 19 in a straight line to prevent damage to inner oil seal 20.

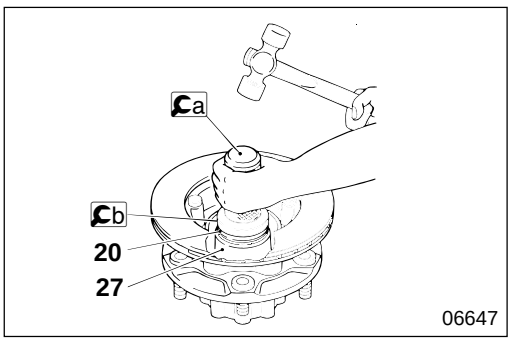

20 **Installation of inner oil seal**

Press-fit inner oil seal **20** so that it is flush with the end of wheel hub **27**.

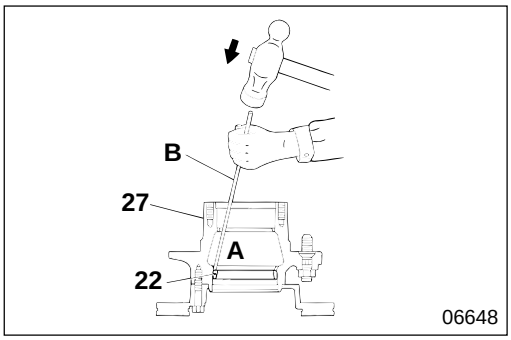

22 **Inner bearing outer race**

[Removal]
Drive out inner bearing outer race **22** evenly from three indented parts **A** in wheel hub **27**.

B : Pin-punch

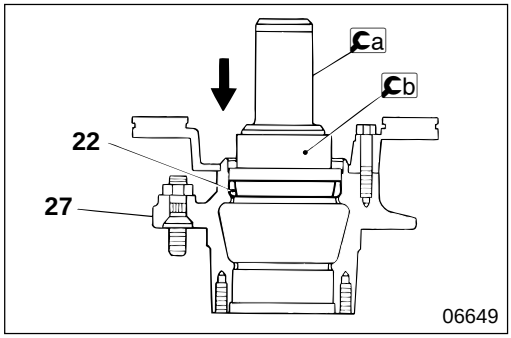

[Installation]

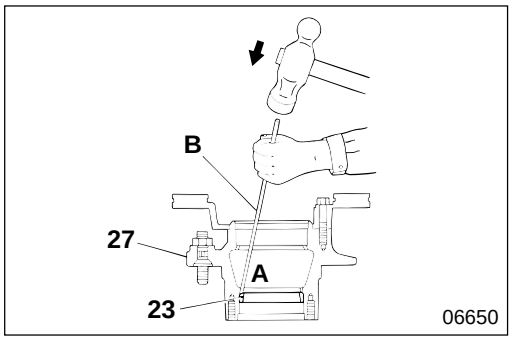

23 **Outer bearing outer race**

[Removal]
Drive out outer bearing outer race **23** evenly from three indented parts **A** in wheel hub **27**.

B : Pin-punch

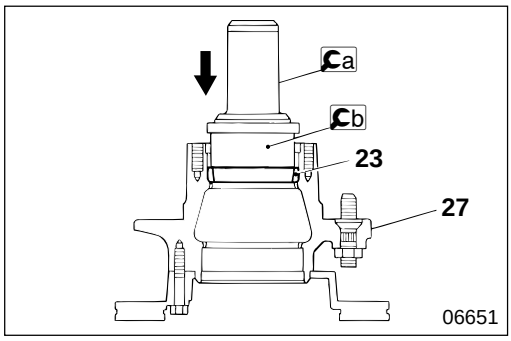

[Installation]

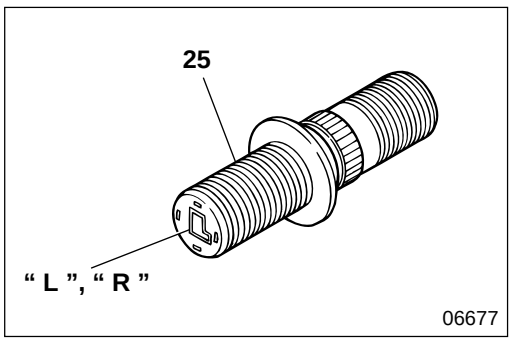

24 **25** **Installation of nut, hub bolt**

- Hub bolt **25** is marked with **L** (left) or **R** (right) to indicate the side it is to be mounted on. Check this symbol before press-fitting the bolt.

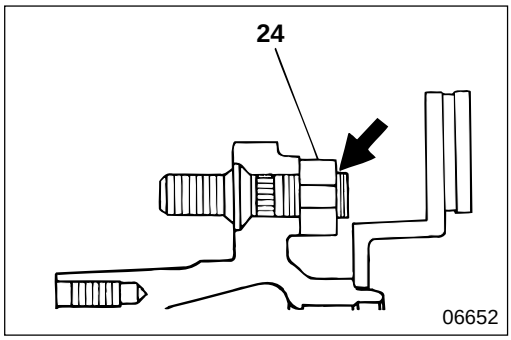

- Tighten nut **24** at specified torque.
- Drive nut **24** in using a punch to lock the nut.

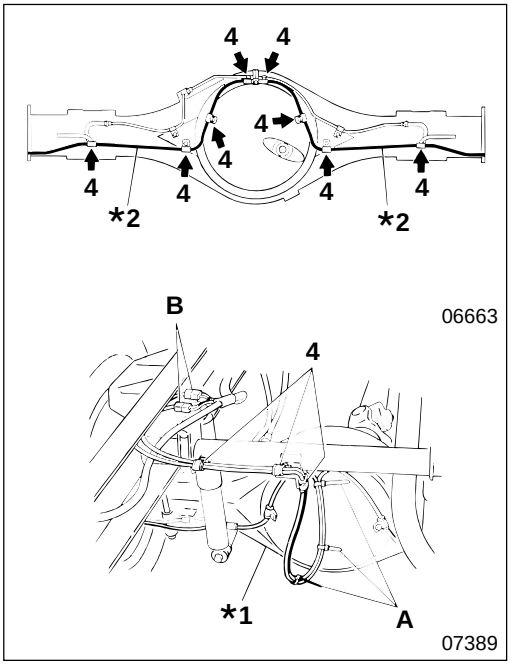

[*2] Installation of brake pad wear indicator

- Wire brake pad wear indicator ***2** from disc brake assembly **11** in the direction as illustrated and install using clips **4**.

- Wire brake pad wear indicator ***2** from axle housing ***1** to the frame in the direction as illustrated and install using clips **4**.
  A : Tie-wrap
  B : Connector

CAUTION⚠

Make sure that brake pad wear indicator *2 is not twisted or unnecessarily slack when you install it.

AXLE HOUSING

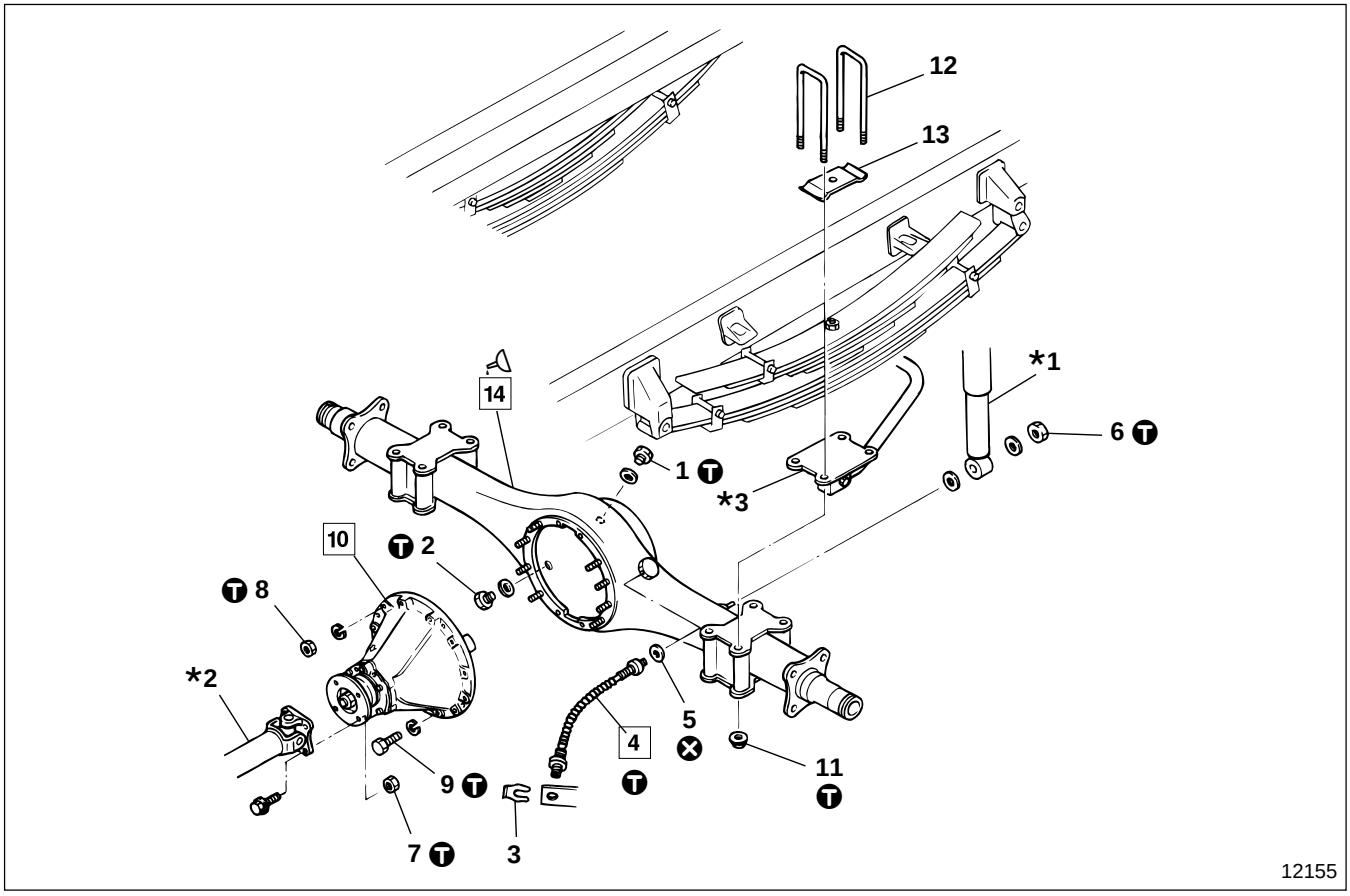

● **Work before disassembly**

P27-26

● **Disassembly sequence**

1 Inspection plug
2 Drain plug
3 Clip
4 Brake hose
5 Packing
6 Nut
7 Nut
8 Nut
9 Bolt
10 Reduction and differential assembly P27-28
11 U-bolt nut
12 U-bolt
13 Spring pad
14 Axle housing

***1** : Shock absorber Gr 34
***2** : Propeller shaft Gr 25
***3** : Stabilizer Gr 34

⊗ : Non-reusable parts

CAUTION

Be sure to protect brake hose 4 from dust by fitting blanking plugs after removal.

NOTE

Do not remove axle housing 14 unless it is faulty.

● **Assembly sequence**

Follow the disassembly sequence in reverse.

CAUTION

Make sure that brake hose 4 is not twisted when you install it.

● **Work after assembly**

P27-26

Service standards

Unit : mm {in.}

Location	Maintenance item		Standard value	Limit	Remedy
14	Axle housing	Runout of outer bearing mating area	0.5 {0.020} or less	1 {0.039}	Replace
		Difference of center area before and after turning	1 {0.039} or less	5 {0.20}	Replace

Tightening torque

Unit : N·m {lbf.ft, kgf·m}

Location	Parts to be tightened	Tightening torque	Remarks
1	Inspection plug	98 to 115 {72 to 87, 10 to 12}	—
2	Drain plug	98 to 115 {72 to 87, 10 to 12}	—
4	Brake hose mounting (on the axle housing)	13 to 17 {9.4 to 12, 1.3 to 1.7}	—
6	Nut (Shock absorber mounting)	26.4 to 33.3 {20 to 25, 2.7 to 3.4}	—
7	Nut (Propeller shaft mounting)	98 to 120 {72 to 87, 10 to 12}	—
8	Nut (Reduction and differential assembly mounting)	69 to 93 {51 to 69, 7.0 to 9.5}	—
9	Bolt (Reduction and differential assembly mounting)	83 to 108 {61 to 80, 8.5 to 11.0}	—
11	U-bolt nut (U-bolt mounting)	339±24.5 {250±18, 34.6±2.5}	—

Sealant

Location	Points of application	Kinds	Quantity
14	Reduction and differential assembly mounting surfaces of axle housing	THREEBOND 1215	As required

Special tools

Unit : mm {in.}

Location	Tool name and shape	Part No.	Application
10	Differential carrier base 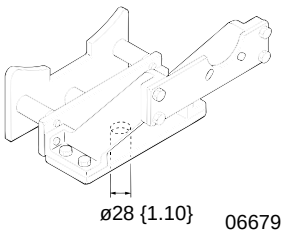 06679	MB999102	Removal and installation of reduction and differential assembly

◆ Service procedure

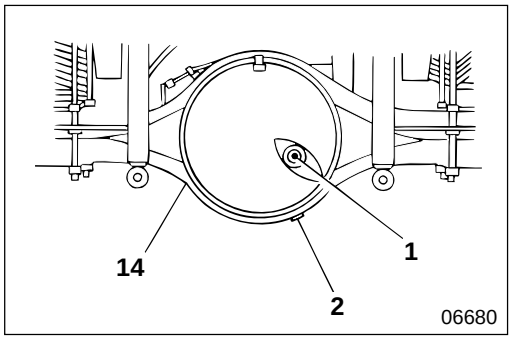

● **Work before disassembly**

Remove inspection plug **1** and drain plug **2**, then drain the gear oil from axle housing **14**.

WARNING⚠

The oil temperature is high immediately after the vehicle has stopped, so take care not to scald yourself.

● **Work after assembly**

Fill axle housing **14** with the specified amount of gear oil via inspection plug **1**.

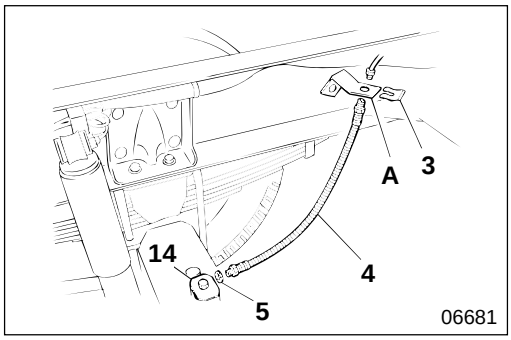

4 **Removal and installation of brake hose**

Remove brake hose **4** from bracket **A** (on the frame) first, then remove the brake hose from axle housing **14**. To assemble the brake hose follow the disassembly sequence in reverse.

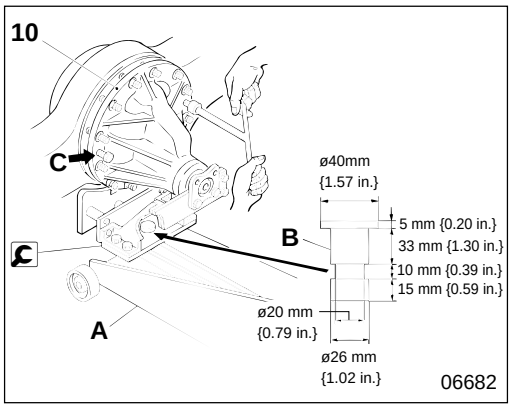

10 **Removal and installation of reduction and differential assembly**

- Remove the lift pad from garage jack **A** and mount 🔧 differential carrier base, after turning pin **B** to the dimensions as illustrated insert it and secure it with the bolt which secured the lift pad.
- Tighten two bolts in screw holes **C** used for removing reduction and differential assembly **10** evenly, and remove the reduction and differential assembly.
  Bolt size : M12×1.25 mm

NOTE

Be sure to completely remove adhered sealant from the mounting surface of the axle housing and carrier.

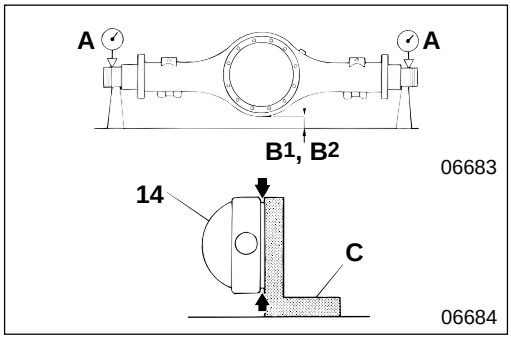

14 **Axle housing**

[Inspection]

- Support the inner bearing mating parts at both ends of the housing spindle of axle housing **14** horizontally.
- Set the dial gauge against outer bearing mating part **A** and turn it 360° to measure bend.
- Set axle housing **14** vertical using square **C**. After measuring B_1, turn the axle housing 180° and measure B_2 to find the difference.
- If the measured value is higher than the limit, replace axle housing **14**.

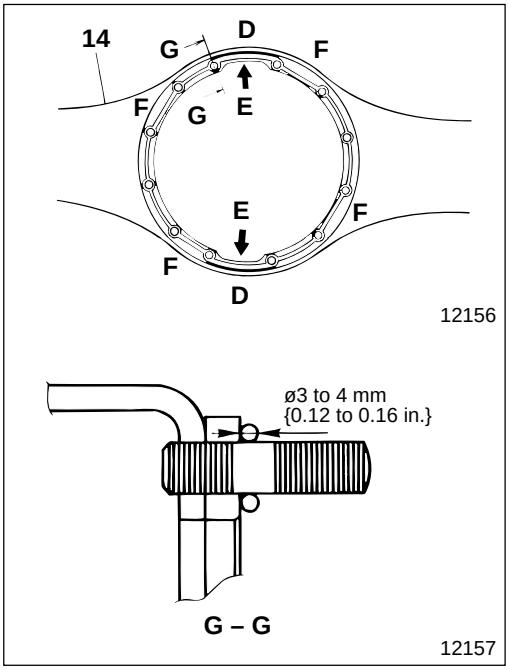

[Application of sealant]

- Apply sealant to reduction and differential assembly **10** mounting surface of axle housing **14**.
- Apply sealant around the periphery of indented area **E** for part **D**.
- Apply sealant linearly to part **F**.

NOTE

Make sure that sealant does not ooze from the mounting surface after installing reduction and differential assembly 10.

REDUCTION AND DIFFERENTIAL

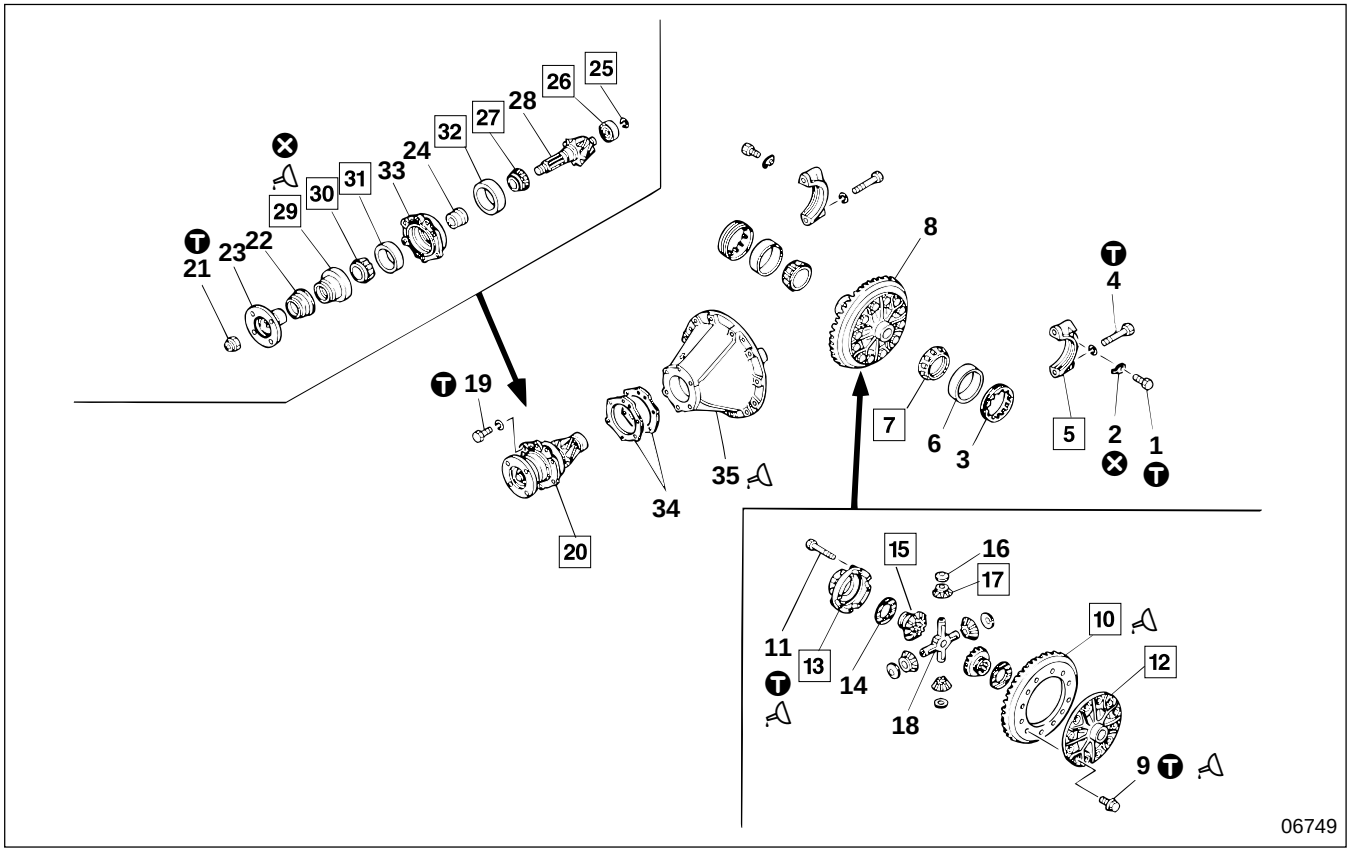

● **Work before disassembly** P27-32

● **Inspection before disassembly** P27-32

● **Disassembly sequence**

1 Bolt
2 Lock plate
3 Adjusting screw
4 Bolt
5 Bearing cap
6 Side bearing outer race
7 Side bearing inner race
8 Differential assembly
9 Bolt
10 Final drive gear
11 Bolt
12 Differential case, LH
13 Differential case, RH
14 Differential gear washer
15 Differential gear
16 Differential pinion washer
17 Differential pinion
18 Pinion spider
19 Bolt
20 Pinion assembly
21 Lock nut
22 Dust cover
23 Companion flange
24 Collar
25 Lock ring
26 Pinion pilot bearing
27 Rear bearing inner race
28 Final drive pinion
29 Oil seal
30 Front bearing inner race
31 Front bearing outer race
32 Rear bearing outer race
33 Bearing retainer
34 Shim
35 Differential carrier

⊗ : Non-reusable parts

● **Assembly sequence**

Follow the disassembly sequence in reverse.

● **Inspection and adjustment after assembly** P27-33

CAUTION

- **Be sure when replacing any of the following parts to replace both it and its associated parts as a set :**
  - **For bolt 4, bearing cap 5 or differential carrier 35, replace the differential carrier set.**
  - **For final drive gear 10 or final drive pinion 28, replace the reduction gear set.**
  - **For differential case RH 13 and differential case LH 12, replace the differential case set.**
- **Make sure you keep left and right side bearings 6, 7 separate after removal, and be careful not to mix them up when installing them.**

NOTE

Write down the thickness of shim 34 and collar 24 when disassembling to use it as reference when assembly.

Service standards

Unit : mm {in.}

Location	Maintenance item		Standard value (Basic diameter in [ ])	Limit	Remedy
6, 7	Starting torque of side bearing		1.96 to 2.94 N·m {1.4 to 2.2 lbf.ft, 0.20 to 0.30 kgf·m}	—	• Adjust using adjusting screw • Tangential force at 152 mm {5.98 in.} point around outer periphery of differential case: 25.5 to 38.2 N {5.7 to 8.6 lbf, 2.6 to 3.9 kgf}
10	Wobble of rear surface of final drive gear		0.1 {0.0039} or less	—	• Adjust or replace along with the gear set • Measure the wobble at a point 132 mm {5.20 in.} (on the radius) away from the center of the final drive gear
10, 28	Backlash between final drive gear and final drive pinion		0.20 to 0.28 {0.0079 to 0.011}	0.50 {0.020}	Adjust or replace along with the gear set
15	Play in the rotating direction between axle shaft and differential gear spline		0.05 to 0.15 {0.0020 to 0.0059}	0.50 {0.020}	Replace
15, 17	Backlash between differential gear and differential pinion		0.15 to 0.20 {0.0059 to 0.0079}	0.50 {0.020}	Replace
17, 18	Clearance between differential pinion and pinion spider		[22] 0.17 to 0.27 {[0.87] 0.0067 to 0.011}	0.50 {0.020}	Replace
20	Starting torque of pinion bearing	New parts	1.96 to 2.94 N·m {1.4 to 2.2 lbf.ft, 0.20 to 0.30 kgf·m}	—	• Adjust using collar • Tangential force at 114 mm {4.49 in.} point around outer periphery of bearing retainer: 34.3 to 51.9 N {7.7 to 12 lbf, 3.5 to 5.3 kgf}
		Reused parts	1.6 to 2.4 N·m {1.2 to 1.7 lbf.ft, 0.16 to 0.24 kgf·m}	—	• Adjust using collar • Tangential force at 114 mm {4.49 in.} point around outer periphery of bearing retainer: 27 to 41 N {6.2 to 9.3 lbf, 2.8 to 4.2 kgf}

Ⓣ Tightening torque

Unit : N·m {lbf.ft, kgf·m}

Location	Parts to be tightened	Tightening torque	Remarks
1	Bolt (Lock plate mounting)	19.6 to 26.5 {14 to 20, 2.0 to 2.7}	—
4	Bolt (Bearing cap mounting)	201.00 {150, 20.50}	—
9	Bolt (Final drive gear and differential case LH mounting)	166.6 to 225.4 {120 to 165, 17 to 23}	—
11	Bolt (Differential case RH and differential case LH mounting)	83.3 to 112.7 {61 to 83, 8.5 to 11.5}	—
19	Bolt (Pinion assembly mounting)	66.6 to 90.2 {49 to 67, 6.8 to 9.2}	—
21	Lock nut (Companion flange mounting)	372.4 to 470.4 {275 to 345, 38 to 48}	—

REDUCTION AND DIFFERENTIAL

Lubricant and sealant

Location	Points of application	Kinds	Quantity
9, 11	Entire surface of bolt	Rust preventive	As required
10	Thread area of final drive gear	LOCTITE 271	As required
11	Thread area of bolt	LOCTITE 271	As required
29	Lip area of oil seal	Wheel bearing grease [NLG1 No.2 (Li soap)]	As required
35	Pinion pilot bearing mounting surface of differential carrier	LOCTITE 601	As required

Special tools

Unit : mm {in.}

Location	Tool name and shape	Part No.	Application
—	Differential working base assembly **A** : Attachment **B** : Holder **C** : Holder **D** : Working base **E** : Flange stopper 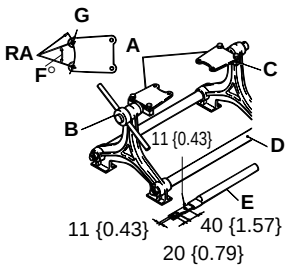 05656	MB999034 **A** : MB999040 **B** : MB999036 **C** : MB999037 **D** : MB999035 **E** : MB999096	• Maintenance work bench for reduction and differential assembly • Flange stopper is used for installation and removal of the companion flange
7	Adaptor 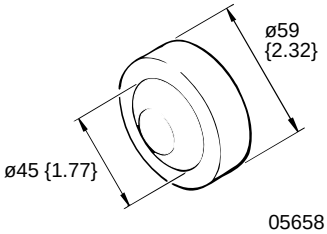 05658	MB999076	Removal of side bearing inner race: Use in combination with available gear puller (General tool)
	Bearing installer 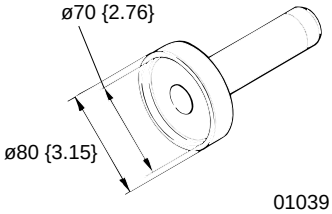 01039	MH061748	Press-fitting of side bearing inner race
20	Bearing retainer guide pin 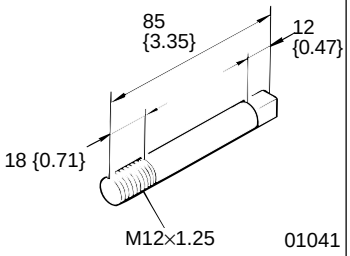 01041	MH061745	Installation of pinion assembly: Use two
26	Pinion pilot bearing installer 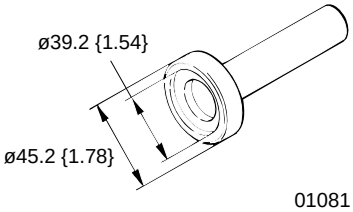 01081	MH061976	Press-fitting of pinion pilot bearing

Unit : mm {in.}

Location	Tool name and shape	Part No.	Application
27	Pinion rear bearing remover 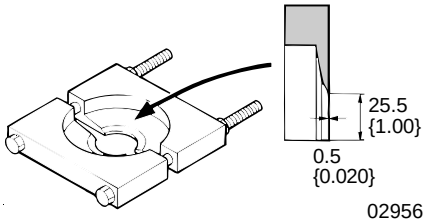	MB999045	Removal of rear bearing inner race
	Pinion bearing installer 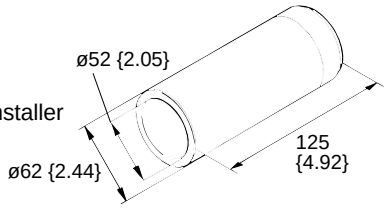	MH061005	Press-fitting of rear bearing inner race
29	Oil seal installer 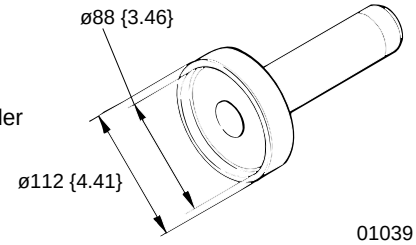	MH061750	Press-fitting of oil seal
30	Pinion bearing installer 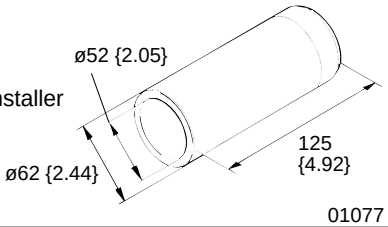	MH061005	Press-fitting of front bearing inner race
31	Pinion bearing installer 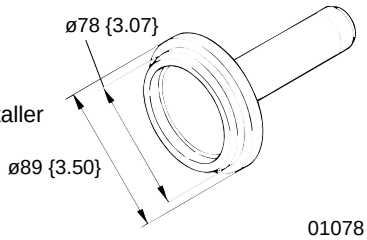	MH061977	Press-fitting of front bearing outer race
32	Pinion bearing installer 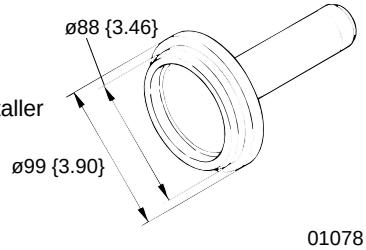	MH061264	Press-fitting of rear bearing outer race

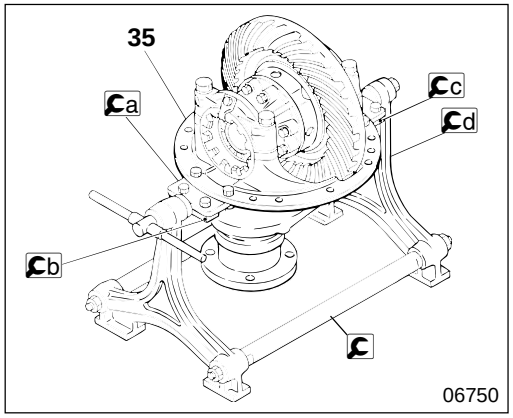

◆ Service procedure

● **Work before disassembly**

Mount differential carrier **35** on a differential working base assembly.

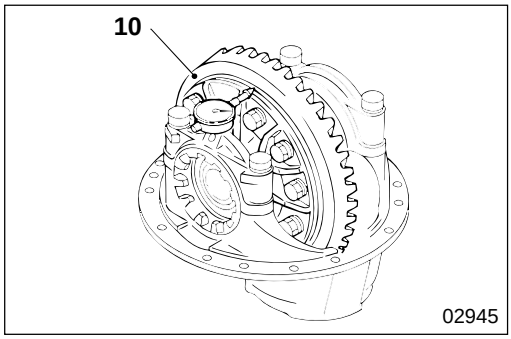

● **Inspection before disassembly**

Inspect for faulty parts before disassembly.

(1) Wobble of rear face of final drive gear

Measure wobble at a point 132 mm {5.20 in.} (on the radius) from the center of final drive gear **10**.

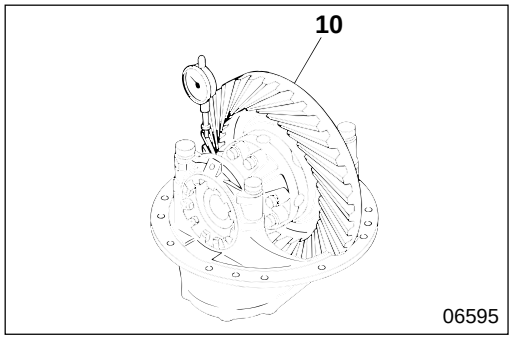

(2) Backlash of final drive gear and final drive pinion

Measure at three points on the circumference of final drive gear **10**.

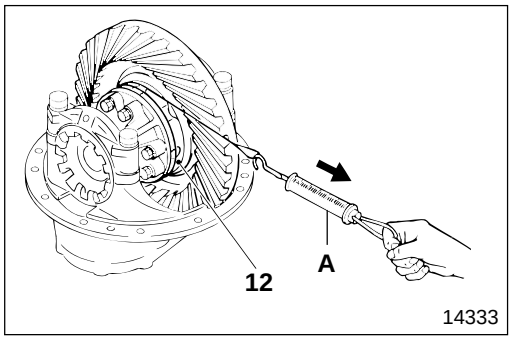

(3) Starting torque of side bearing

- Install spring balance **A** at 152 mm {5.98 in.} outer periphery point of differential case LH **12**.
- Measure the tangential force.
- If the measured tangential force is within the specified value, the starting torque conforms to the standard value.

NOTE

Measure the starting torque within final drive gear 10 and final drive pinion 28 backlash range.

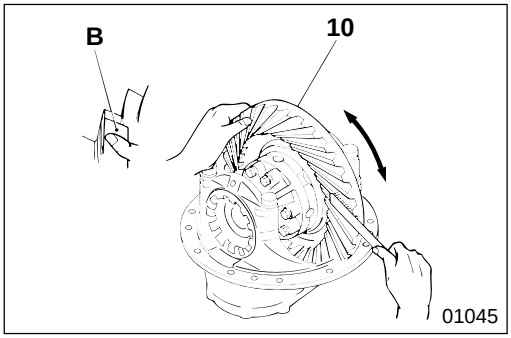

(4) Tooth contact of final drive gear

Apply red lead to three or four teeth of final drive gear **10**, examine tooth contact by turning the gears a few times.
B : Examine tooth contact using paper.

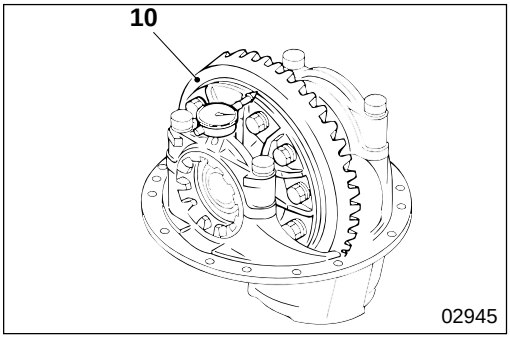

● **Inspection and adjustment after assembly**

(1) Inspection of wobble of back face of final drive gear

Measure wobble at a point 132 mm {5.20 in.} (on the radius) from the center of final drive gear **10**.

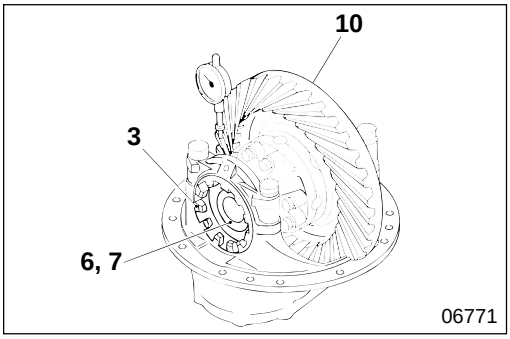

(2) Backlash of final drive gear and final drive pinion

[Adjustment]

- Adjust backlash using left and right adjusting screws **3** with the adjusted starting torques of side bearings **6**, **7** unchanged.
- Measure backlash at three points around the circumference of final drive gear **10**.

CAUTION

Make sure when you loosen one adjusting screw 3 that you tighten the other adjusting screw by the same amount, because the starting torque of the side bearings 6, 7 changes.

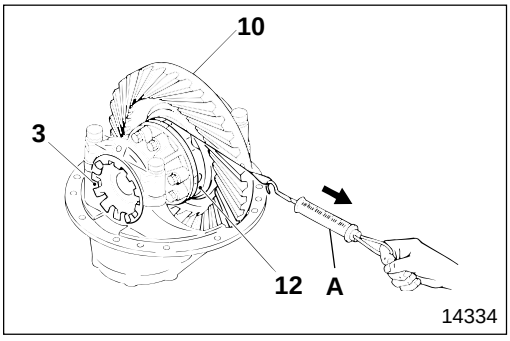

(3) Starting torque of side bearing

[Inspection]

- Install spring balance **A** at 152 mm {5.98 in.} outer periphery point of differential case LH **12**.
- Measure the tangential force.
- If the measured tangential force is within the specified value, the starting torque conforms to the standard value.
- If the measured value deviates from the specified value, adjust.

[Adjustment]

If the measured value deviates from the specified value, adjust it using left and right adjusting screws **3**.

CAUTION

Be sure to tighten left and right adjusting screws 3 by the same amount of pitch.

NOTE

Adjust the backlash to within the standard backlash of final drive gear 10 and final drive pinion 28.

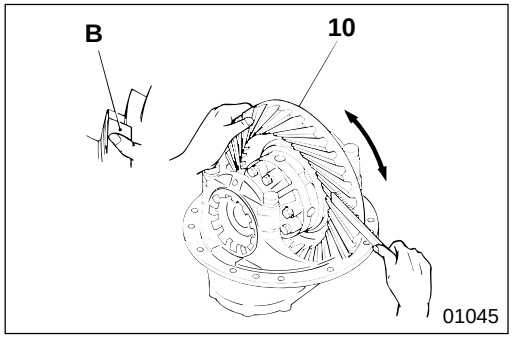

(4) Tooth contact of final drive gear

[Inspection]

Apply red lead to three or four teeth of final drive gear **10**, examine tooth contact by turning the gears a few times.

B : Examine tooth contact using paper.

[Adjustment]

If tooth contact has deteriorated, adjust by increasing or decreasing backlash and shim **34**.

CAUTION

Be sure when replacing the gear because of abnormally worn teeth to replace the reduction gear set of final drive gear 10 and final drive pinion 28.

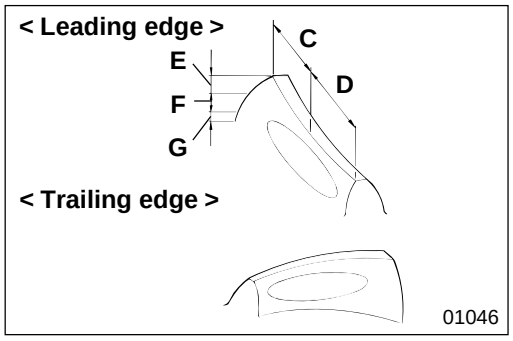

● **Normal tooth contact at no load**

< Final drive gear >

C : Heel
D : Toe
E : Face
F : Flank
G : Clearance

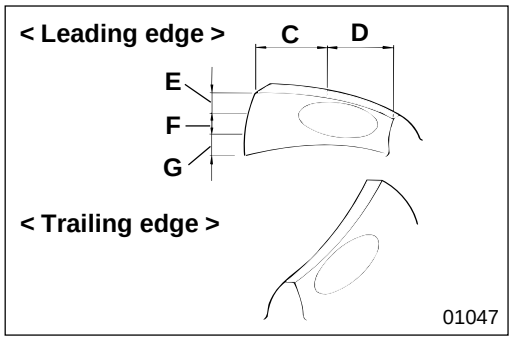

< Final drive pinion >

C : Heel
D : Toe
E : Face
F : Flank
G : Clearance

Maintenance item			Assembly standards
At no load pinion	Tooth contact position	Lengthwise direction of tooth	From center towards edge
		Vertical direction	From center towards top of tooth for final drive gear and center for final drive
	Tooth contact shape	Length	Approximately 50 to 70% of tooth width
		Width	Approximately 50 to 70% of tooth depth
	Degree of tooth contact		It becomes weaker as it nears tooth root or tooth tip

NOTE

When tooth contact is near the toe at no load it becomes middle area contact at load.

Adjustment of tooth contact

	Method of adjustment	Moving direction
Adjustment by adding or reducing shims	Advance final drive pinion to final drive gear (Shims are reduced) 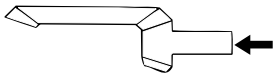	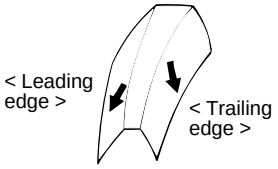 Tooth contact moves towards tooth root
	Retard final drive pinion from final drive gear (Shims are added) 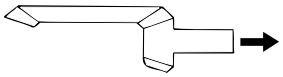	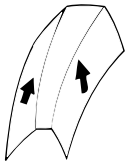 Tooth contact moves towards tooth tip
Adjustment using adjusting screw	Advance final drive gear to final drive pinion center (Less backlash) 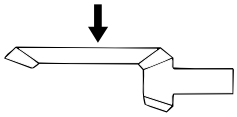	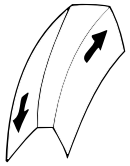 Tooth contact moves in lengthwise direction of tooth Leading edge : Nearer to toe and slightly nearer to root of tooth Trailing edge : Nearer to heel and slightly nearer to top of tooth
	Retard final drive gear from final drive pinion center (More backlash) 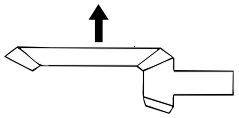	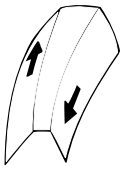 Tooth contact moves in lengthwise direction of tooth Leading edge : Nearer to heel and slightly nearer to top of tooth Trailing edge : Nearer to toe and slightly nearer to root of tooth

01048

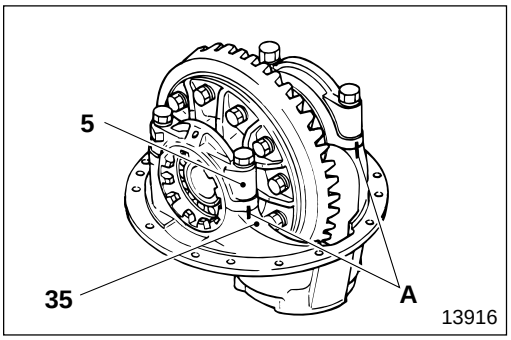

13916

5 Removal of bearing cap

Put alignment marks **A** on bearing cap **5** and differential carrier **35** to distinguish left and right.

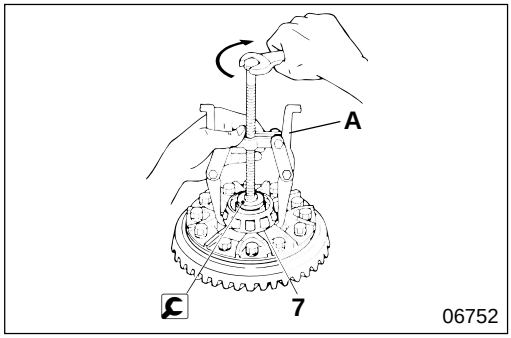

7 **Side bearing inner race**

[Removal]

A : Gear puller (General tool)

NOTE

Make sure you keep left and right side bearings 6, 7 separate after removal, and be careful not to mix them up when installing them.

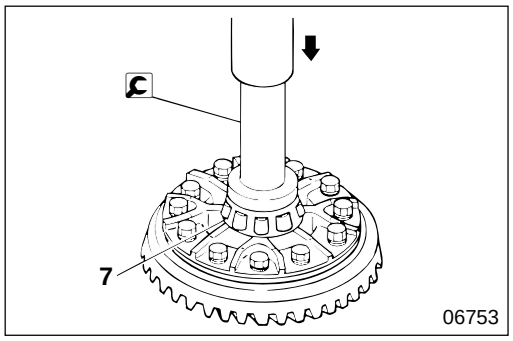

[Installation]

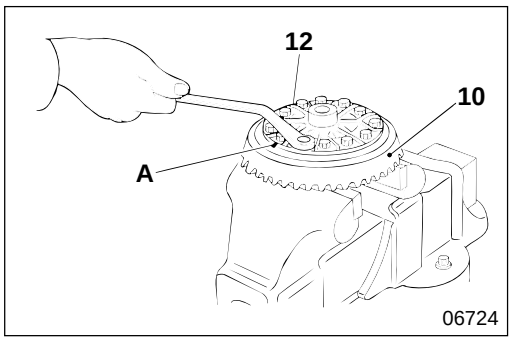

10 **12** **Final drive gear and differential case LH**

[Removal]

Put alignment marks **A** on final drive gear **10** and differential case LH **12**.

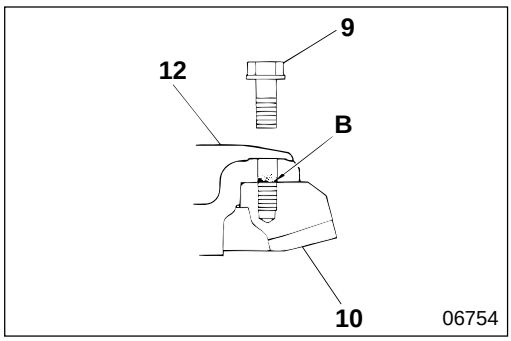

[Installation]

- Apply rust preventive to the entire surface of bolts **9**.
- Apply lock paint to the threads of all bolt holes **B** of final drive gear **10**.
- Tighten bolts **9** at specified torque.

CAUTION

- **Be sure to apply rust preventive because of the need to tighten bolt 9 at specified torque.**
- **Be sure not to operate the vehicle for at least one hour after installation in order to let the lock paint harden.**
- **Be sure not to operate the vehicle at full torque for at least four hours after installation in order to let the lock paint harden.**

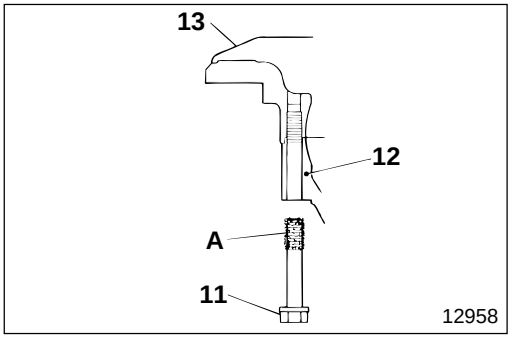

12 **13** **Installation of differential case RH and differential case LH**

- Apply rust preventive to the entire surface of bolts **11**.
- Apply lock paint to thread area **A** of bolts **11**.
- Tighten bolts **11** at specified torque.

CAUTION

- **Be sure to apply rust preventive because of the need to tighten bolts 11 at specified torque.**
- **Be sure not to operate the vehicle for at least one hour after installation in order to let the lock paint harden.**
- **Be sure not to operate the vehicle at full torque for at least four hours after installation in order to let the lock paint harden.**

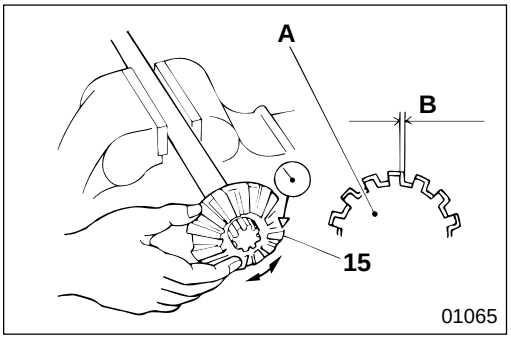

15 **Play between differential gear and axle shaft spline area in the rotating direction**

If the measured value is higher than the limit, replace the faulty parts.
A : Axle shaft
B : Play

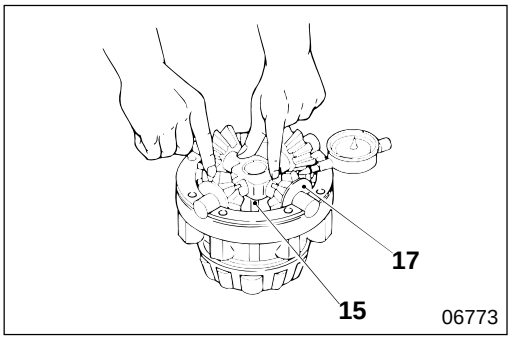

15 **17** **Backlash between differential gear and differential pinion**

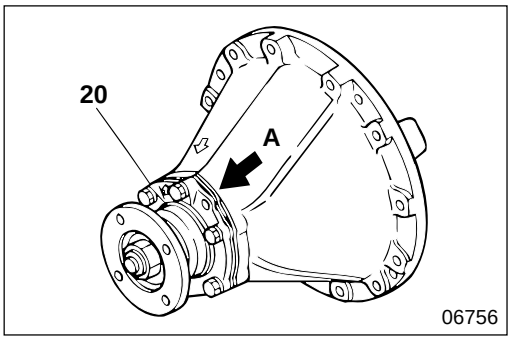

20 **Pinion assembly**

[Removal]
Screw M12×1.25 mm bolts into two holes **A** provided for removing pinion assembly **20**, then tighten bolts uniformly until the pinion assembly is removed.

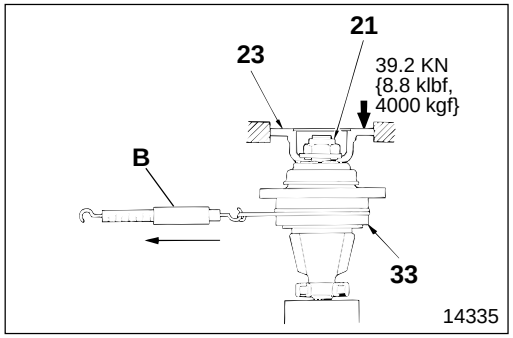

[Inspection of starting torque after installation]
- Apply load of approximately 39.2 kN {8.8 klbf, 4000 kgf} to companion flange **3** or tighten lock nut **21** at specified torque.
- Install spring balance **B** at 114 mm {4.49 in.} outer periphery point of bearing retainer **33**.
- Measure the tangential force.
- If the measured tangential force is within the specified value, the starting torque conforms to the standard value.
- If the measured value deviates from the specified value, adjust.

NOTE
- **Be sure to secure companion flange 23 before measurement.**
- **Be sure to remove oil seal 29 before measurement.**

[Adjustment of starting torque]
If the measured value deviates from the specified value, replace collar **24** so that the tangential force conforms to the standard value.
Collar thicknesses :
15.600 to 16.200 mm {0.61 to 0.64 in.} (25 thicknesses available in 0.025 mm {0.00098 in.} increments)

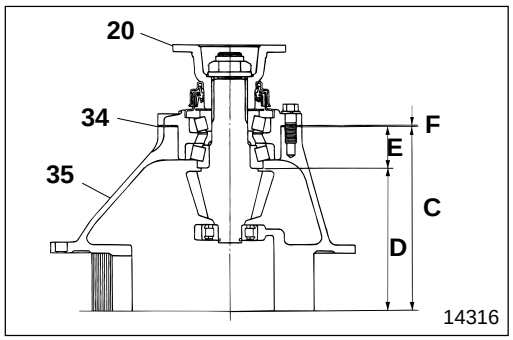

[Adjustment when installing]
- Carry out the following procedure so that **C**, **D** and **E** conform to the standard dimension.
- Calculate shim thickness **F** according to the following formula based upon the machining error data stamped on pinion assembly **20** and differential carrier **35**.
  Formula for calculation:
  F = 0.5 {0.020}–b+c+d

  c : Deviation from basic dimension **C**
  d : Deviation from basic dimension **D**
  e : Deviation from basic dimension **E**

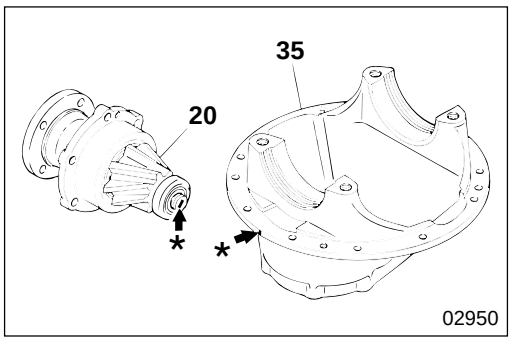

Unit : mm {in.}

Location	Standard dimension	How to calculate deviation
Shim thickness	0.5 {0.020}	—
C	203 {7.99}	The basic dimension, multiplied by 100, is stamped on the periphery of differential carrier **35** flange
D	157 {0.18}	The basic dimension is stamped on the top of pinion assembly **20**
E	46.5 {1.8}	Measure the deviation from **E** using a dial gauge. However, if it is difficult to measure the actual deviation, assume a value from 0 to 0.2 {0 to 0.0079}

***** : Stamped number position

NOTE
Thickness is stamped in millimeters.

- Select shim **34** from shim thickness **F**.
  Available thicknesses of shim **34** : 0.1 mm {0.0039 in.} and 0.2 mm {0.0079 in.}

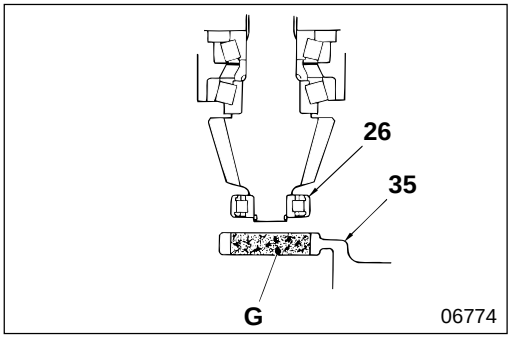

[Installation]

- Apply lock paint to entire mounting surface **G** of pinion pilot bearing **26** of differential carrier **35**.

CAUTION

- **Be sure to let the lock paint harden undisturbed for 30 minutes to two hours after installation.**
- **Be sure to wait at least three hours before running the vehicle, and if possible wait 24 hours to let the lock paint harden.**

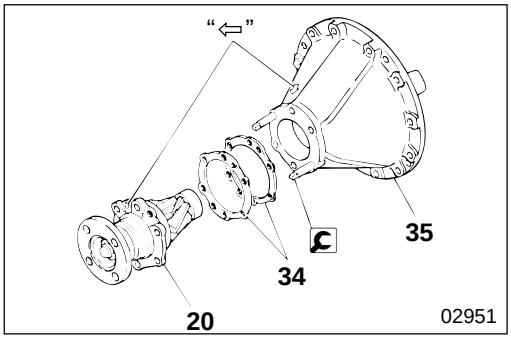

- Assemble differential carrier **35** and pinion assembly **20** with their alignment marks "⇦" aligned.

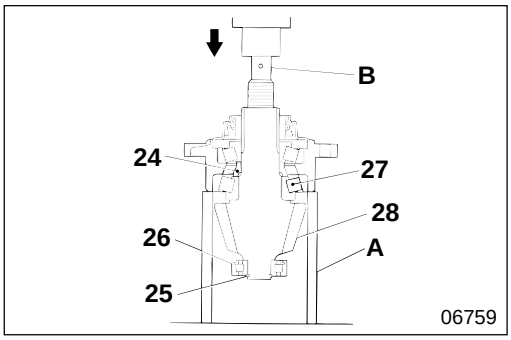

20 **Removal of pinion assembly**

Using an appropriate cylinder **A** and press **B**, remove collar **24**, lock ring **25**, pinion pilot bearing **26**, rear bearing inner race **27**, and final drive pinion **28** together.

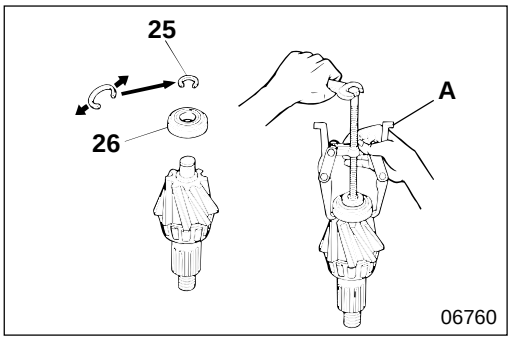

25 **26** **Lock ring and pinion pilot bearing**

[Removal]

A : Gear puller (General tool)

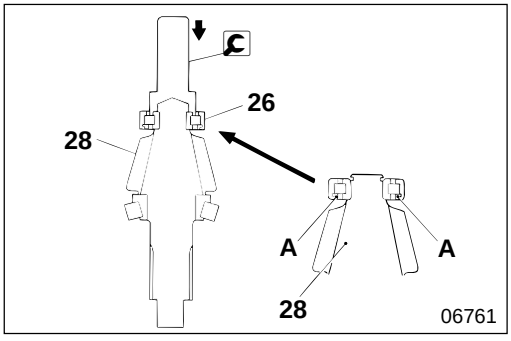

[Installation]

Press-fit pinion pilot bearing **26** in the direction as illustrated.

A : Lock ring

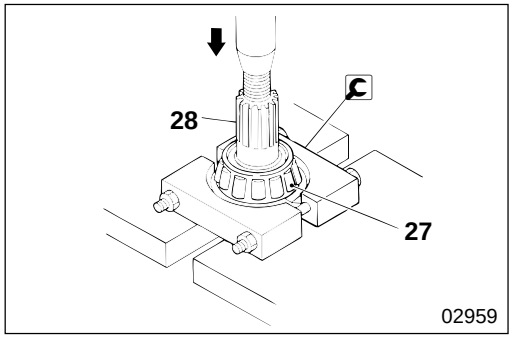

27 **Rear bearing inner race**

[Removal]

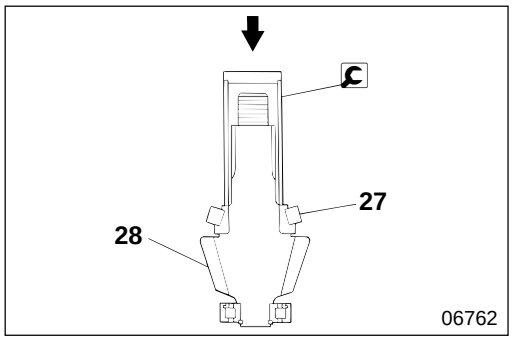

[Installation]

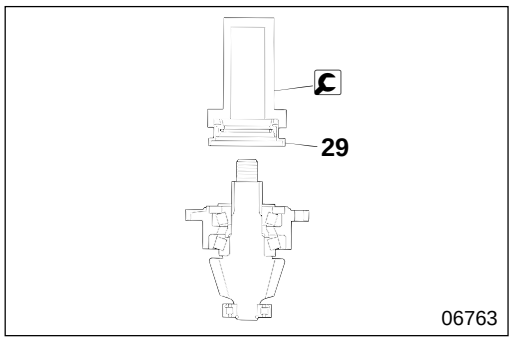

29 **Installation of oil seal**

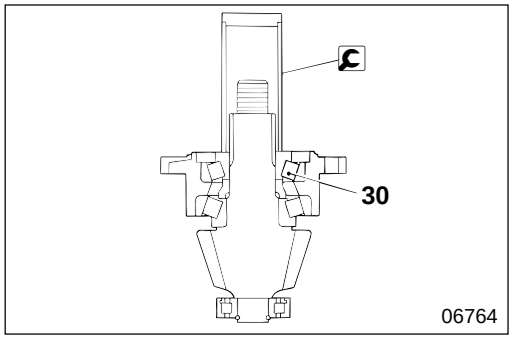

30 **Installation of front bearing inner race**

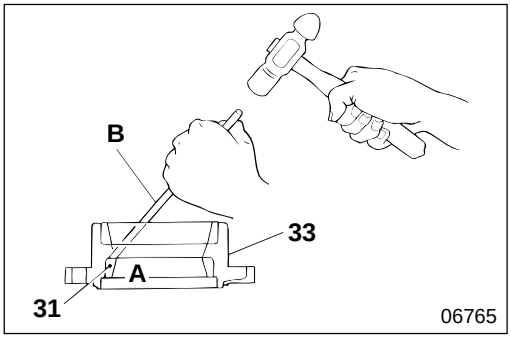

31 **Front bearing outer race**

[Removal]
Drive out front bearing outer race **31** evenly from three indented parts **A** in bearing retainer **33**.
B : Pin-punch

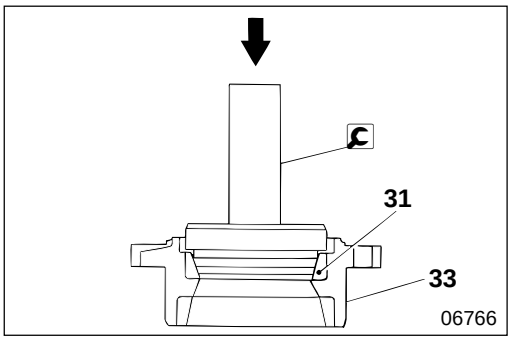

[Installation]

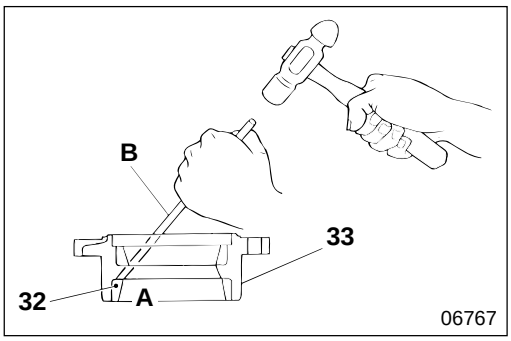

32 **Rear bearing outer race**

[Removal]
Drive out rear bearing outer race **32** evenly from three indented parts **A** in bearing retainer **33**.
B : Pin-punch

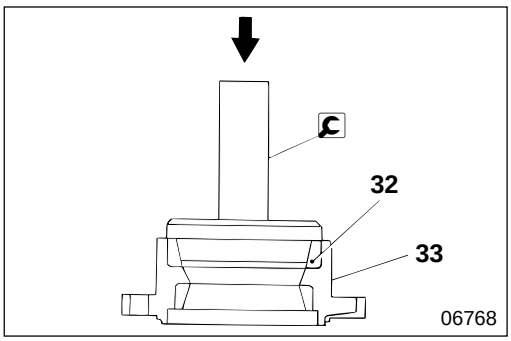

[Installation]

MITSUBISHI
FUSO

FE

Service Manual

Group 31
Wheel and Tire

Table of Contents

BACK

HOME

MITSUBISHI FUSO TRUCK OF AMERICA, Inc.

Pub No. TWSE9501-31

GROUP 31 WHEEL AND TIRE

SPECIFICATIONS 2

TROUBLESHOOTING 2

WHEEL AND TIRE 3

SPECIFICATIONS/TROUBLESHOOTING

SPECIFICATIONS

Item / Vehicle model	Tire size	Air pressure kPa {Psi, kgf/cm²}		Application wheel
		Front	Rear	
FE639 (GVWR : 11600 lb, 5260 kg)	215/85R16(D)	450 {65, 4.50}	450 {65, 4.50}	16×6K-127-9 (wheel with 5 studs)
FE639 (GVWR : 13500 lb, 6120 kg)	215/85R16(E)	550 {80, 5.50}	550 {80, 5.50}	16×6K-127-9 (Wheel with 6 studs)
FE649 (GVWR : 14500 lb, 6580 kg)	215/85R16(E)	550 {80, 5.50}	550 {80, 5.50}	16×6K-127-9 (wheel with 6 studs)

GVWR : Gross vehicle weight rating

TROUBLESHOOTING

Possible causes / Symptoms			Tire tread worn										Remarks
			Both shoulders worn	Center worn	Outside worn	Inside worn	Feather-edged wear from outside to inside	Feather-edged wear from inside to outside	Wavy wear	Dished wear (one or more spots)	Pitted wear (dented) all around	Jagged wear	
Overloading			○										
Tire air pressure		Insufficient	○						○	○	○	○	
		Excessive		○									
Wheel alignment Gr 26	Toe-in	Excessive			○		○						
		Insufficient				○							
	Camber	Excessive			○								
		Insufficient				○							
	Toe-out excessive					○		○					
	Overall misalignment		○		○	○	○	○	○	○	○		
Knuckle arm bent					○	○	○	○					Gr 26
Left and right tie rod lengths different							○						Gr 26
Wheel balance incorrect									○	○	○	○	
Wheel bearing loose									○	○	○	○	Gr 26, 27
Ball joint loose										○			Gr 26
Tie rod end loose										○			Gr 37
Brake drum eccentric										○	○		Gr 35
Axle bent									○	○			Gr 26, 27
Sudden starting, sudden braking or sharp turn										○	○		
Left and right front wheel turning radius incorrect												○	Gr 26
Road surface influence					○	○							

Work for Removal and Installation of Wheel and Tire

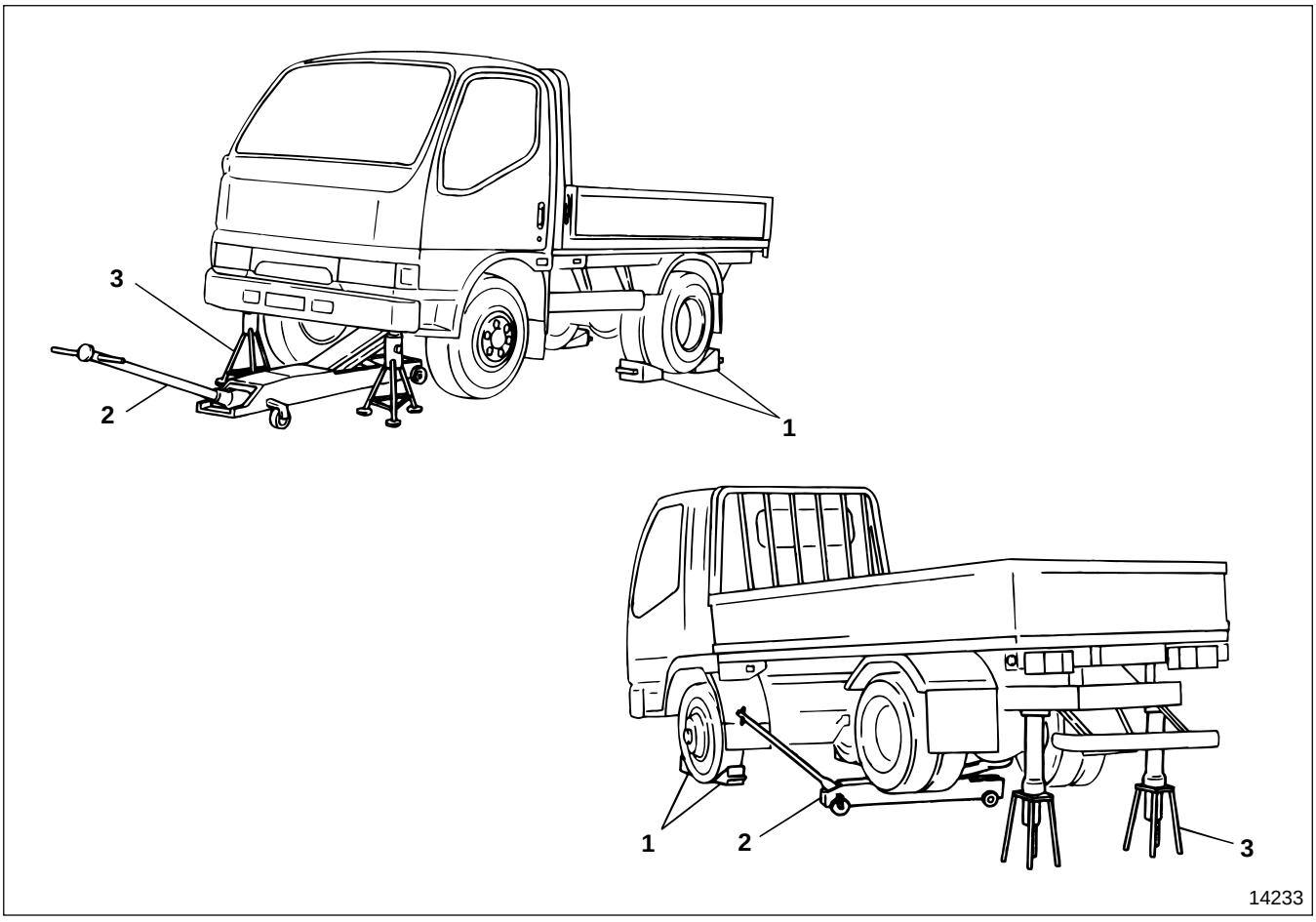

● **Work sequence**

1 Place wheel chocks.
2 Jack up the front or rear axle using a garage jack placed under the center of the axle.
3 Support the frame on rigid racks.

WARNING⚠

- **Chock the wheels securely so the vehicle does not move.**
- **Do not remove the chocks until the entire operation is completed.**
- **Supporting a vehicle on a garage jack only is extremely dangerous, so always support the frame on rigid racks.**
- **Leave the garage jack and rigid racks in place until the entire operation is completed. Never remove them during the operation.**

● **Work sequence after removal and installation**

Follow the work sequence in reverse.

WHEEL AND TIRE

NOTE

Use right-hand threaded wheel nuts marked “R” for right side wheel and left-hand threaded wheel nuts marked “L” for left side wheel.

< Single tire >

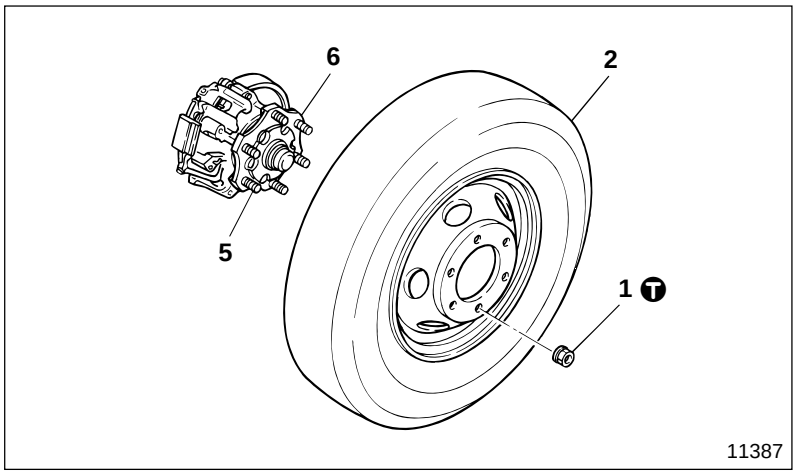

● **Removal sequence**

1 Wheel nut
2 Tire assembly 🕮 P31-5
5 Hub bolt
6 Hub

● **Cleaning before installation**

🕮 P31-4

● **Installation sequence**

Follow the removal sequence in reverse.

< Double tire >

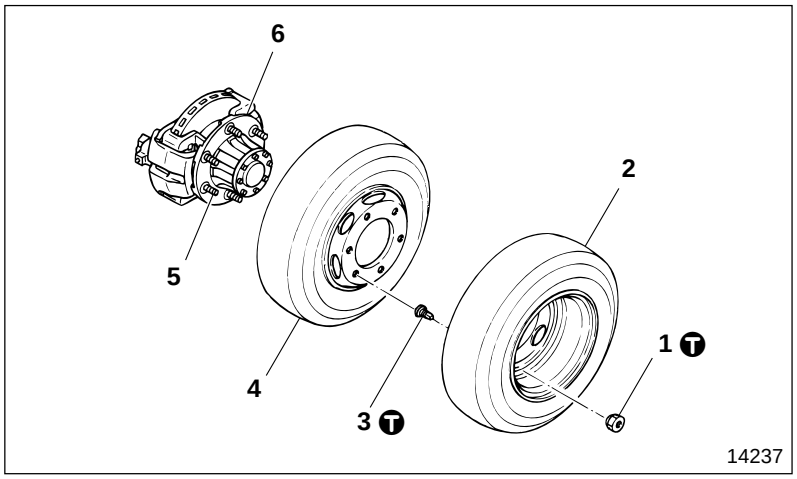

● **Removal sequence**

1 Wheel nut (outer)
2 Tire assembly 🕮 P31-5
3 Wheel nut (inner)
4 Tire assembly 🕮 P31-5
5 Hub bolt
6 Hub

● **Cleaning before installation**

🕮 P31-4

● **Installation sequence**

Follow the removal sequence in reverse.

T Tightening torque

Unit : N·m {lbf.ft, kgf·m}

Location	Parts to be tightened	Tightening torque	Remarks
1, 3	Wheel nut	490±49 {360±36, 50±5}	—

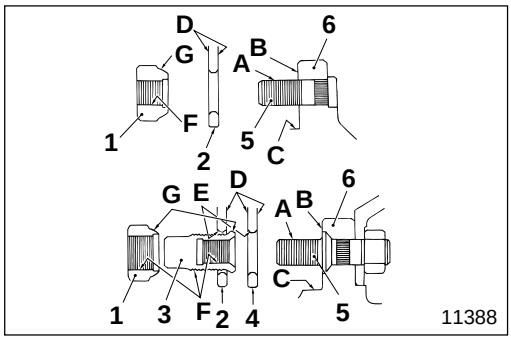

◆ Service procedure

● **Cleaning before installation**

To prevent wheel nuts **1** and **3** and hub bolt **5** from becoming loose and to prevent mounting parts (tire assemblies **2** and **4** and hub **6**) from being damaged, remove rust, dust, additional coatings of paint, and foreign particles from the following areas:

A : Hub bolt thread area
B : Wheel mounting surface of hub
C : Wheel alignment area of hub
D : Disc wheel mating surface
E : Disc wheel nut mounting surface
F : Wheel nut thread area
G : Wheel nut spherical area

Tire Assembly

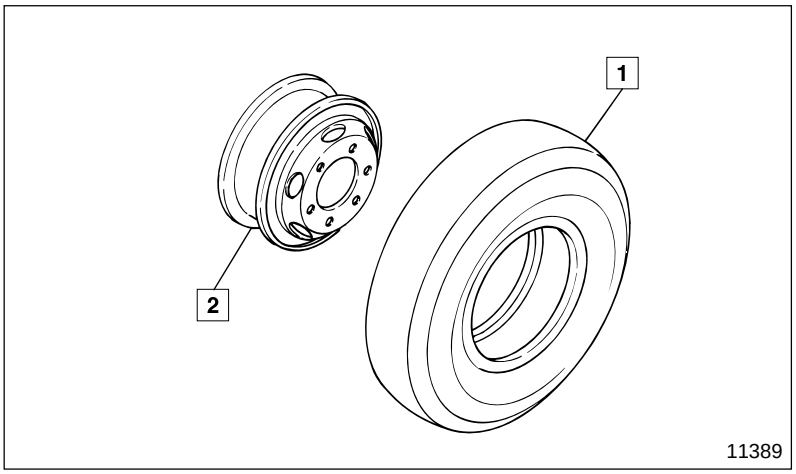

● **Disassembly sequence**

1 Tire
2 Disc wheel

● **Assembly sequence**

Follow the disassembly sequence in reverse.

Service standards

Unit : mm {in.}

Location	Maintenance item		Standard value	Limit	Remedy
1	Horizontal deflection of tire (When assembled)		3.5 {0.14} or less	—	—
2	Disc wheel (wheel with 5 studs)	Flatness	0.4 {0.016} or less	—	—
		Horizontal deflection	1.5 {0.059} or less	—	—
		Vertical deflection	1.5 {0.059} or less	—	—
	Disc wheel (wheel with 6 studs)	Flatness	0.3 {0.012} or less	—	—
		Horizontal deflection	1.5 {0.059} or less	—	—
		Vertical deflection	1.5 {0.059} or less	—	—

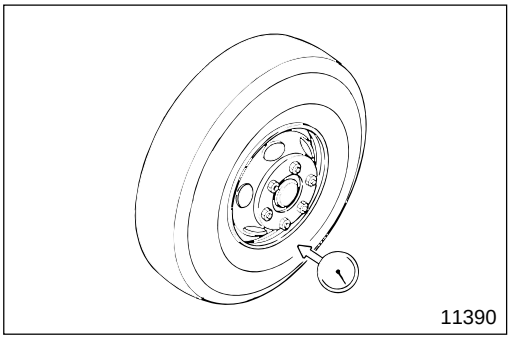

◆ Service procedure

1 **Deflection of tire**

[Inspection]
If the measured value is higher than the limit, make corrections as follows.

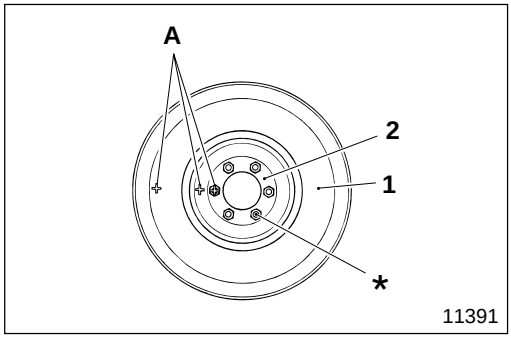

[Correction]
- Put chalk marks on tire **1**, disc wheel **2**, and hub bolt * (positions **A** as illustrated).
- Remove tire **1** from disc wheel **2**.

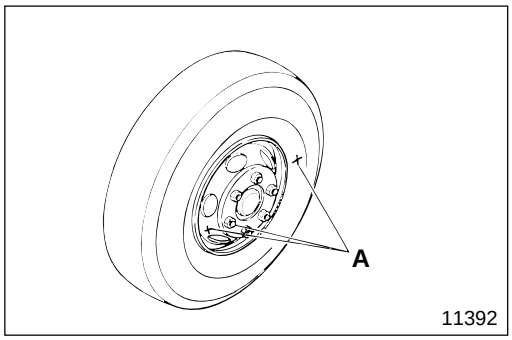

- Measure deflection of disc wheel **2**. If the most deflective position is near the chalk mark, reinstall tire **1** rotating it half a turn from the chalk mark and tighten nuts.
- Remeasure deflection of tire **1**.
- If the measured value is still higher than the limit, replace tire **1** and disc wheel **2** together as an assembly.

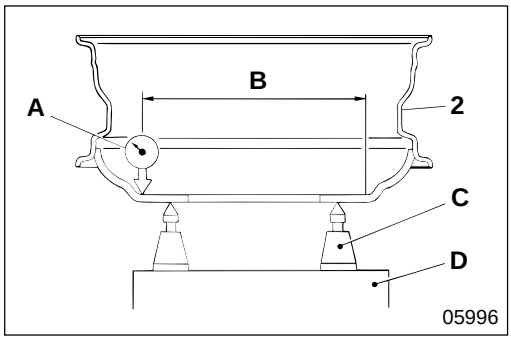

2 Inspection of disc wheel

(1) Flatness

- Measure flatness at specified position **B** from the center of disc wheel **2**.
  Measure flatness at five equidistant points (wheel with 5 studs) or six equidistant points (wheel with 6 studs) on the wheel.
  A : Dial gauge
  B : ø165 to 250 mm {6.50 to 9.84 in.}
  (wheel with 5 studs)
  ø170 to 270 mm {6.69 to 10.6 in.}
  (wheel with 6 studs)
  C : Portable screw jacks (x 4)
  D : Surface plate
- Replace disc wheel **2** if the measured value is higher than the limit.

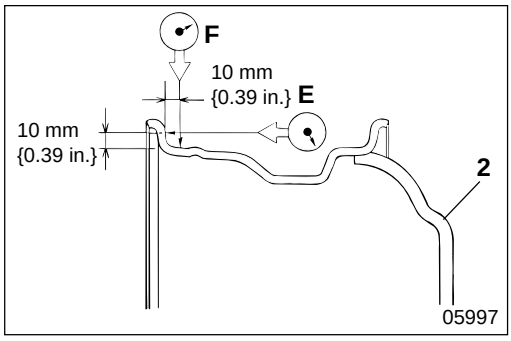

(2) Deflection

Replace disc wheel **2** if the measured value is higher than the limit.
E : Horizontal deflection measuring point
F : Vertical deflection measuring point

BACK HOME

MITSUBISHI FUSO

FE

Service Manual

Group 33 - Front Suspension

Group 33 - Front Suspension 1998 Minor Change <FG>

MITSUBISHI FUSO TRUCK OF AMERICA, Inc.

Pub No. TWSE9501-00

MITSUBISHI
FUSO

FE.FG
Service Manual

Group 33
Front Suspension

'98 Minor Change

Table of Contents

MITSUBISHI FUSO TRUCK OF AMERICA, Inc.

BACK HOME

Pub No. TWSE9501-233

GROUP 33 FRONT SUSPENSION

STRUCTURE AND OPERATION 33- 2

TROUBLESHOOTING 33- 3

WORK BEFORE REMOVAL AND INSTALLATION OF FRONT SUSPENSION 33- 4

REMOVAL AND INSTALLATION OF LEAF SPRING ASSEMBLY
< FE > 33- 6
< FG > 33- 8

LEAF SPRING ASSEMBLY
< FE > 33- 12
< FG > 33- 14

SHOCK ABSORBER
< FE > 33- 16
< FG > 33- 17

STABILIZER < FE > 33- 18

< FE >

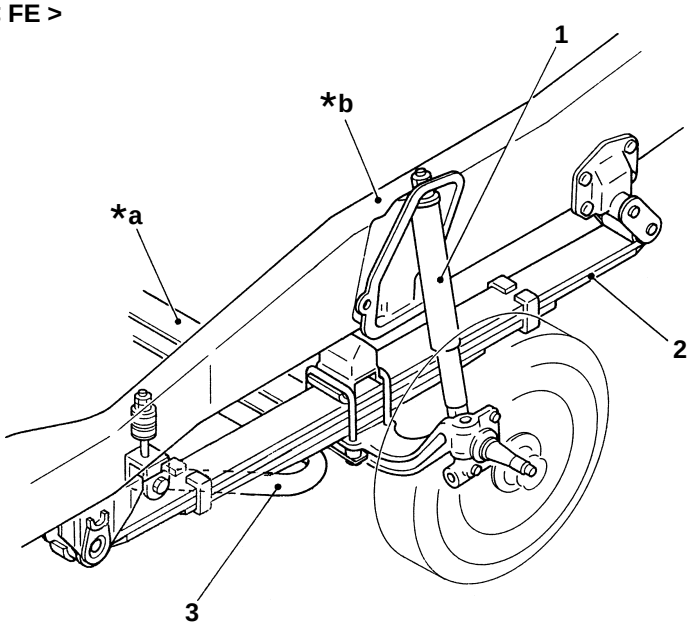

27078

< FG >

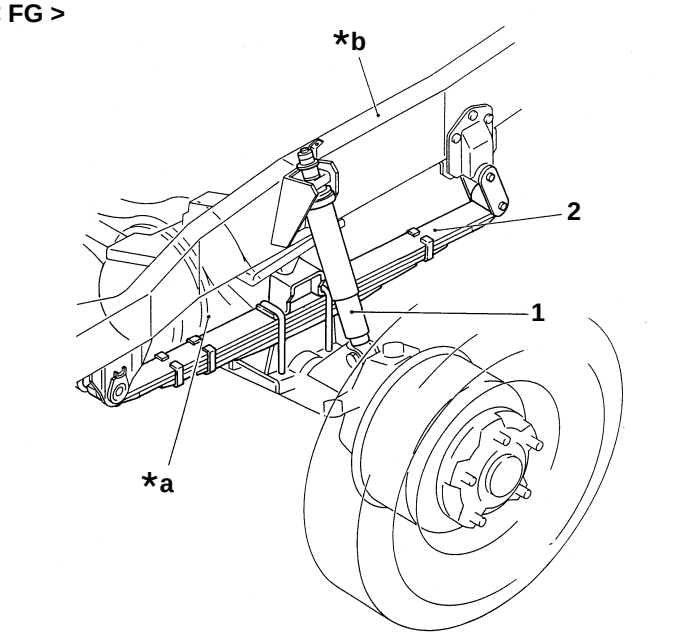

27079

1 Shock absorber
2 Leaf spring assembly
3 Stabilizer < FE >

***a** : Front axle
***b** : Frame

Leaf spring assembly **2**, shock absorber **1**, and stabilizer **3** < FE > are installed between frame ***b** and front axle ***a** to support the vehicle body mass and absorb vibration and shock from the road surface to prevent them from being directly transmitted to the vehicle body thereby protecting the crew, the vehicle body, and the cargo. In addition, irregular vibration from the wheels is restrained, ensuring driving stability.

Possible causes	Symptoms	Ride spongy	Noise generated when vehicle is unloaded	Impact transmitted from uneven road surface	Noise generated when vehicle is loaded	Excessive rolling while cruising	Periodic jolts received from the road surface	Remarks
Leaf spring	Cracked or damaged			○				
	Fractured		○					
	Spring hanger damaged				○			
	U-bolts loose				○			
	Spring bushing worn		○					
Front axle bumper	Damaged or broken				○			
Front spring pad < FG >	Damaged or broken				○			
Shock absorber	Noticeable oil leaking or damping force decreased	○						
	Rubber bushing worn		○					
	Installation loose		○					
Stabilizer < FE >	Stabilizer deformed or bushing worn					○		
Tire	Tires worn unevenly						○	
	Tires and wheels unbalanced						○	Gr 31
	Air pressure excessive			○				

WORK BEFORE REMOVAL AND INSTALLATION OF FRONT SUSPENSION

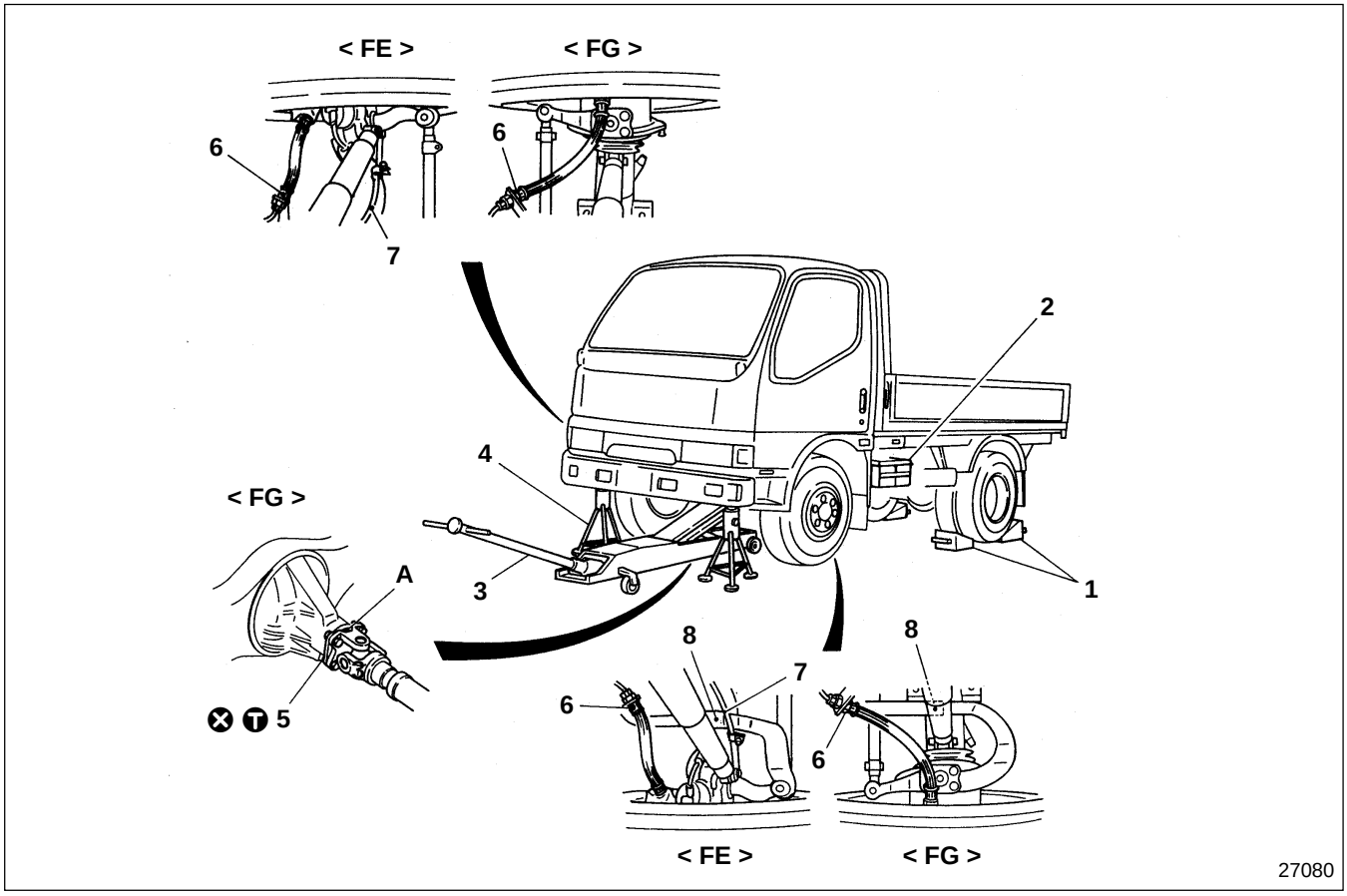

● **Removal sequence**

1 Place wheel chocks.
2 Disconnect the negative battery cable. Gr 54
3 Jack up the front axle with a garage jack.
4 Support the frame on rigid racks.
5 Put alignment marks **A** on the front axle companion flange and the propeller shaft flange yoke, then remove the nuts (on the joint between the front axle and the propeller shaft). < FG >
6 Remove the brake hose joint (on the frame).
7 Remove the clamp of the brake pad wear indicator harness and disconnect the connector on the frame side. < FE >
8 Remove the drag link. Gr 37

⊗ : Non-reusable parts

WARNING

- **Chock the wheels securely so the vehicle does not move.**
- **Do not remove the chocks until the entire operation is completed.**
- **Supporting a vehicle on a garage jack only is extremely dangerous, so always support the frame on rigid racks.**
- **Leave the garage jack and rigid racks in place until the entire operation is completed. Never remove them during the operation.**

CAUTION

Be sure to protect the brake hose from dust by fitting plugs.

● **Installation sequence**

Follow the removal sequence in reverse.

WARNING⚠

You must bleed air from the brake system after installing the brake hose, failure to do so would cause the brake to malfunction. Gr 35

CAUTION⚠

Be sure that the brake hose is not twisted when you install it.

Tightening torque

Unit : N·m {lbf.ft, kgf·m}

Location	Parts to be tightened	Tightening torque	Remarks
5	Nut (Front axle and properller shaft connecting) < FG >	59 to 74 {43 to 54, 6.0 to 7.5}	—

REMOVAL AND INSTALLATION OF LEAF SPRING ASSEMBLY < FE >

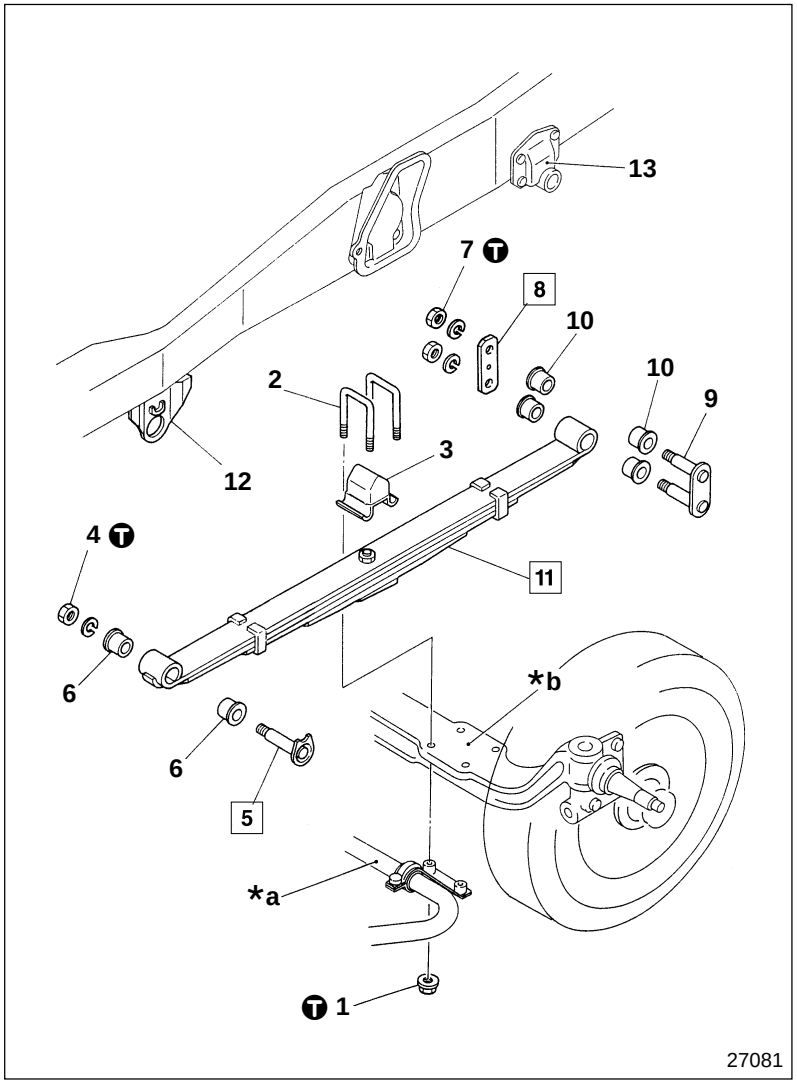

● **Removal sequence**

1 U-bolt nut
2 U-bolt
3 Front axle bumper
4 Nut
5 Spring pin
6 Rubber bushing
7 Nut
8 Shackle plate
9 Spring shackle
10 Rubber bushing
11 Leaf spring assembly P33-12
12 Front spring hanger
13 Front shackle hanger

***a** : Stabilizer P33-18
***b** : Front axle Gr 26

NOTE

Do not remove front spring hanger 12 or front shackle hanger 13 unless they are faulty. Gr 41

● **Installation sequence**

Follow the removal sequence in reverse.

T Tightening torque

Unit : N·m {lbf.ft, kgf·m}

Location	Parts to be tightened	Tightening torque	Remarks
1	U-bolt nut (U-bolt mounting)	162±15 {120±11, 16.5±1.5}	—
4	Nut (Spring pin mounting)	93 to 127 {69 to 94, 9.5 to 13.0}	—
7	Nut (Spring shackle mounting)	93 to 127 {69 to 94, 9.5 to 13.0}	—

◆ Service procedure

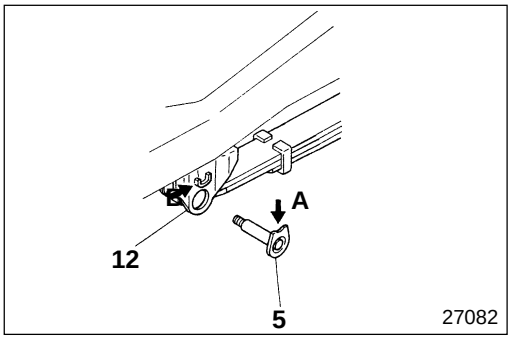

5 **Installation of spring pin**

Install spring pin **5** to front spring hanger **12** with indent **A** of the spring pin fitted to protrusion **B** of the front spring hanger.

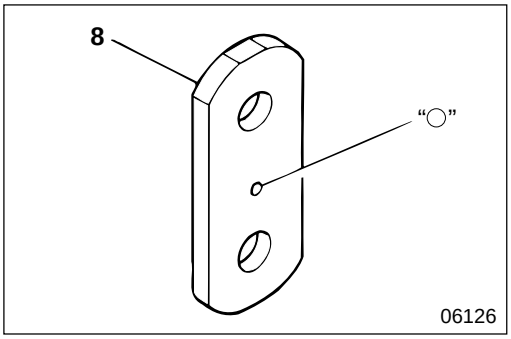

8 **Installation of shackle plate**

Install shackle plate **8** with stamped mark "○" facing the leaf spring.

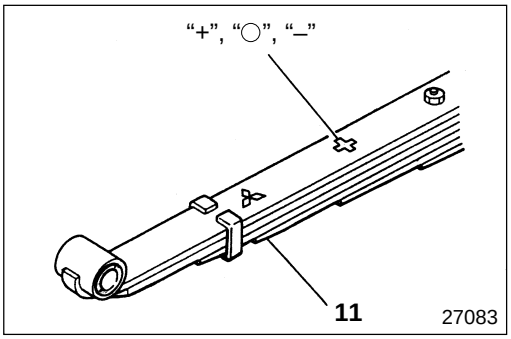

11 **Leaf spring assembly left/right height combinations**

When replacing leaf spring assembly **11**, select the members so that the left and right height marks "+", "○" and "–" are combined as shown below.

Item	Combination				
	1	2	3	4	5
Right leaf spring assembly, assistant driver's seat side	–	–	○	○	+
Left leaf spring assembly, driver's seat side	–	○	○	+	+

CAUTION⚠

Passenger's side leaf spring assembly 11 differs from the driver's side leaf spring assembly in camber (arch). Do not mix them up when mounting, or this would cause vehicle tilt.

REMOVAL AND INSTALLATION OF LEAF SPRING ASSEMBLY < FG >

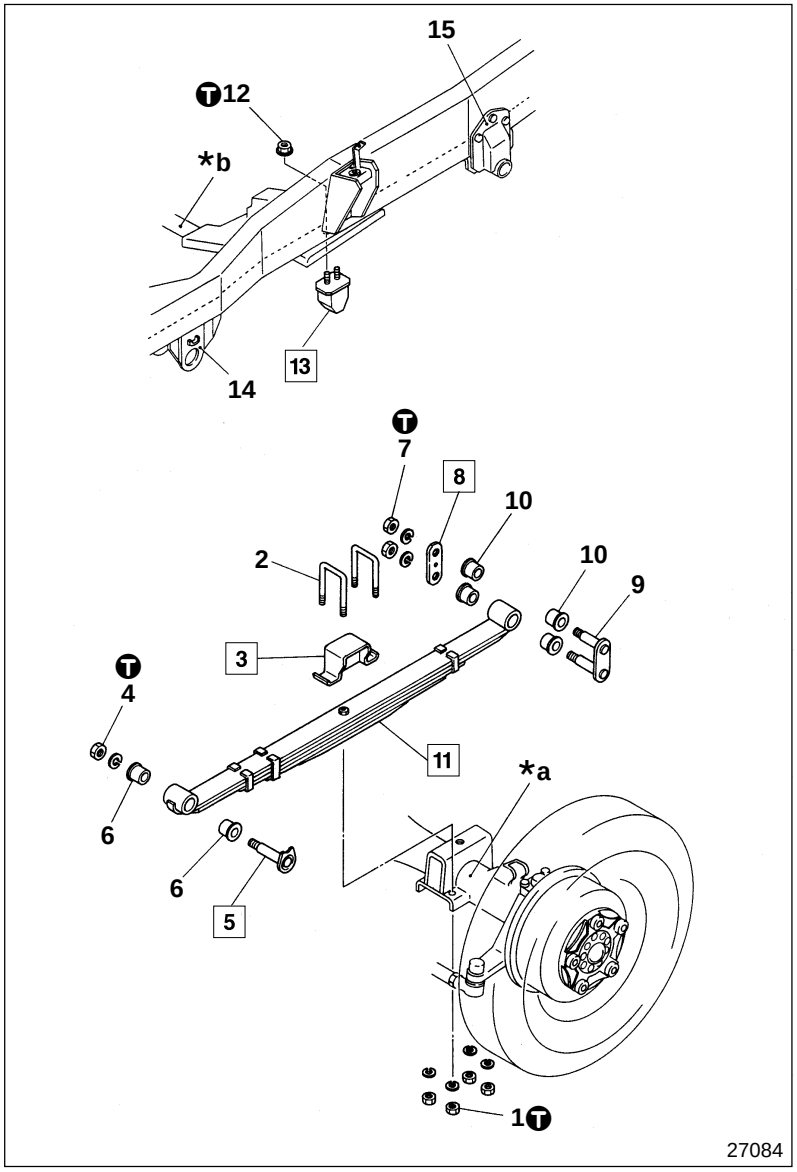

● **Removal sequence**

1 U-bolt nut
2 U-bolt
3 Front spring pad
4 Nut
5 Spring pin
6 Rubber bushing
7 Nut
8 Shackle plate
9 Spring shackle
10 Rubber bushing
11 Leaf spring assembly P33-14
12 Nut
13 Front axle bumper
14 Front spring hanger
15 Front shackle hanger

***a** : Front axle Gr 26B
***b** : Engine mounting support Gr 41

NOTE

Do not remove front spring hanger 14 or front shackle hanger 15 unless they are faulty. Gr 41

● **Installation sequence**

Follow the disassembly sequence in reverse.

T Tightening torque

Unit : N·m {lbf.ft, kgf·m}

Location	Parts to be tightened	Tightening torque	Remarks
1	U-bolt nut (U-bolt mounting)	106±7.8 {78±5.8, 10.8±0,8}	—
4	Nut (Spring pin mounting)	93 to 127 {69 to 94, 9.5 to 13.0}	—
7	Nut (Spring shackle mounting)	93 to 127 {69 to 94, 9.5 to 13.0}	—
12	Nut (Front axle bumper mounting)	21 to 30 {15 to 22, 2.1 to 3.1}	—

◆ Service procedure

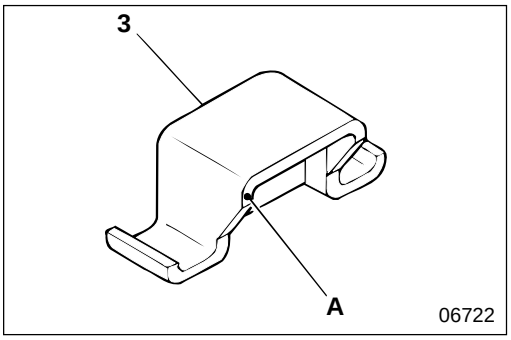

3 **Front spring pad**

Mount front spring pad **3** with protrusion **A** facing the outside of the vehicle.

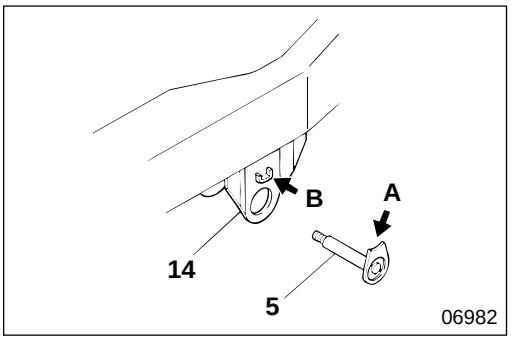

5 **Installation of spring pin**

Install spring pin **5** to front spring hanger **14** with indent **A** of the spring pin fitted to protrusion **B** of the front spring hanger.

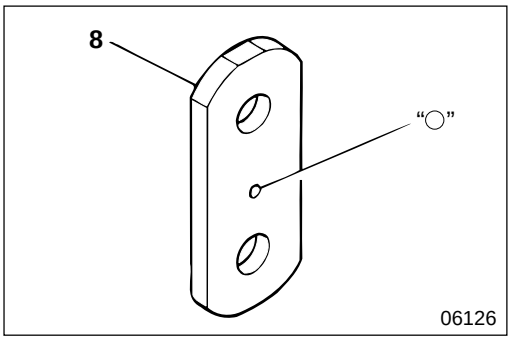

8 **Installation of shackle plate**

Install shackle plate **8** with stamped mark "○" facing the leaf spring.

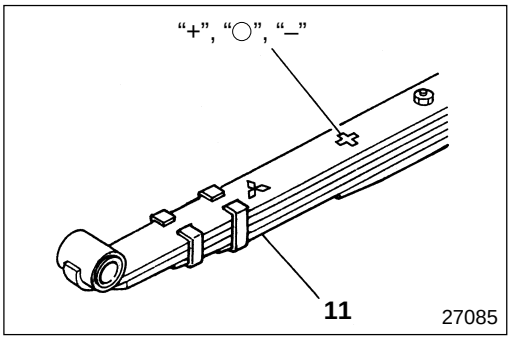

11 **Leaf spring assembly left/right height combinations**

When replacing leaf spring assembly **11**, select the members so that the left and right height marks "+", "○" and "–" are combined as shown below.

Item	Combination				
	1	2	3	4	5
Right leaf spring assembly, assistant driver's seat side	–	–	○	○	+
Left leaf spring assembly, driver's seat side	–	○	○	+	+

CAUTION⚠

Passenger's side leaf spring assembly 11 differs from the driver's side leaf spring assembly in camber (arch). Do not mix them up when mounting, or this world couse vehicle tilt.

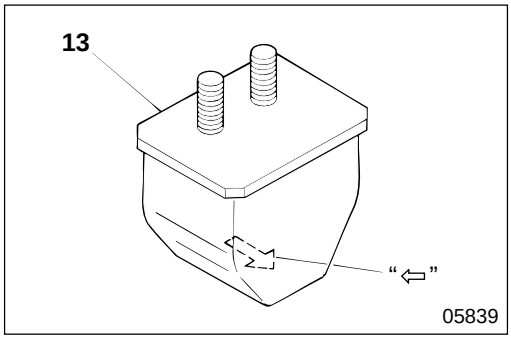

13 **Front axle bumper**

Mount front axle bumper **13** with arrow mark “⇦” facing the outside of the vehicle.

M E M O

LEAF SPRING ASSEMBLY < FE >

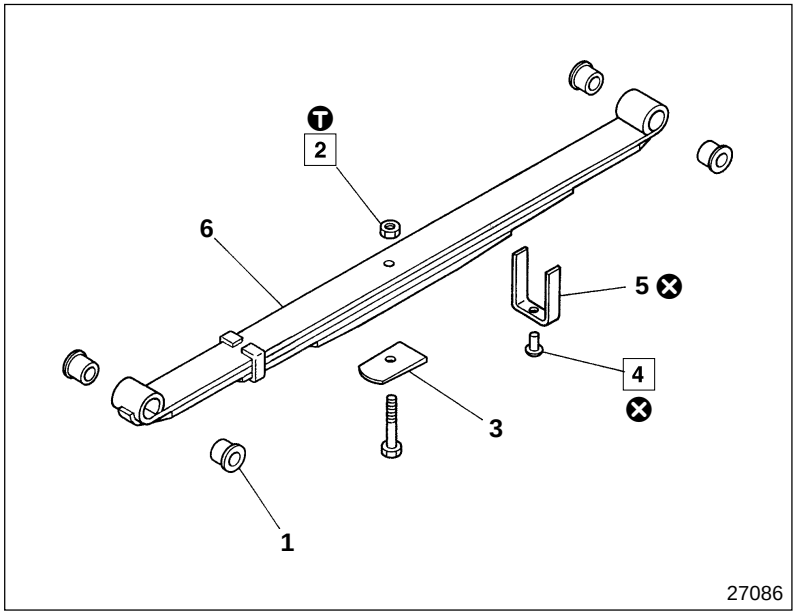

● **Disassembly sequence**

1 Collar
2 Center nut
3 Caster shim
4 Rivet
5 Clip
6 Leaf spring

⊗ : Non-reusable parts

● **Assembly sequence**

Follow the disassembly sequence in reverse.

ⓣ Tightening torque

Unit : N·m {lbf.ft, kgf·m}

Location	Parts to be tightened	Tightening torque	Remarks
2	Center nut (Leaf spring mounting)	34 to 54 {25 to 40, 3.5 to 5.5}	—

◆ Service procedure

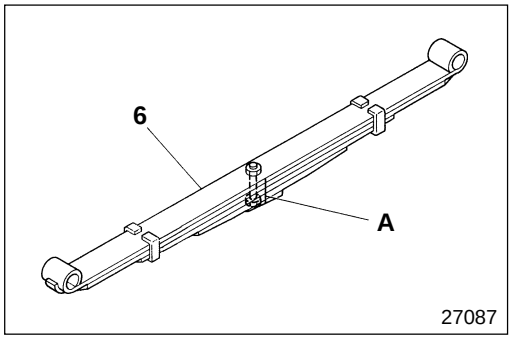

2 **Center nut**

[Removal]

- Put alignment marks **A** on the side of leaf springs **6**.

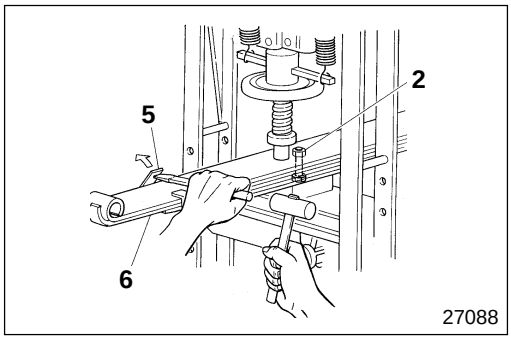

- Compress leaf springs **6** using a press, lever up the bent parts of clips **5** using a cold chisel, then remove center nut **2**.

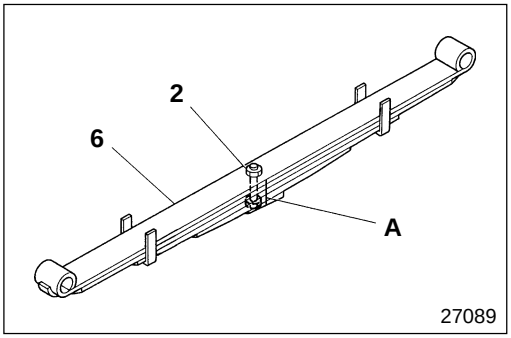

[Installation]
- Align alignment marks **A** on the side of leaf springs **6**, assemble the component leaf springs, then tighten center nut **2** temporarily.

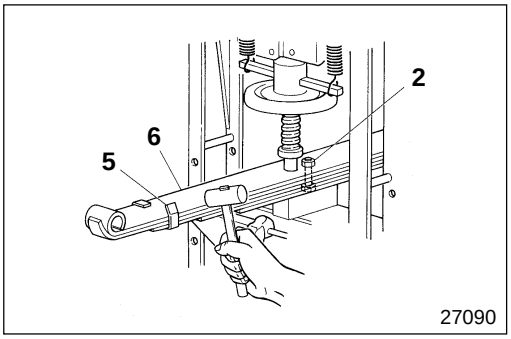

- Compress leaf springs **6** using a press, tighten center nut **2** at specified torque, then bend over clips **5**.

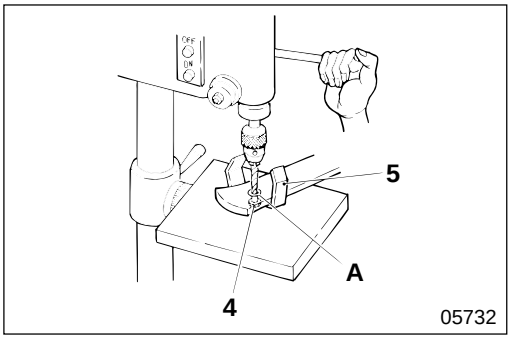

4 **Rivet**

[Removal]
- Drill out staked end **A** of rivet **4** on a drill press, then remove clip **5**.

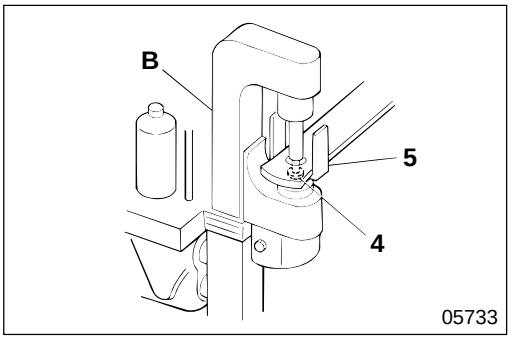

[Installation]
- Using riveting machine **B**, mount inner clip **5** by staking rivet **4**.

LEAF SPRING ASSEMBLY < FG >

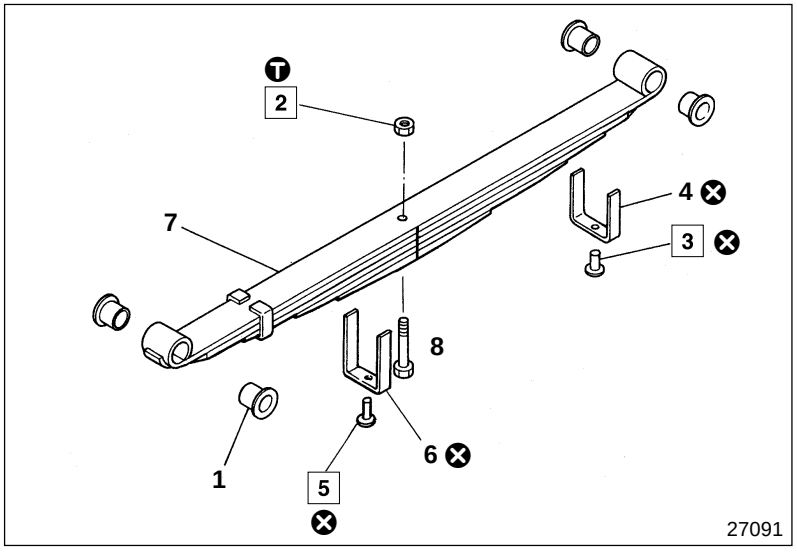

● **Disassembly sequence**

1 Collar
2 Center nut
3 Rivet
4 Clip
5 Rivet
6 Clip
7 Leaf spring

⊗ : Non-reusable parts

● **Assembly sequence**

Follow the disassembly sequence in reverse.

Ⓣ Tightening torque

Unit : N·m {lbf.ft, kgf·m}

Location	Parts to be tightened	Tightening torque	Remarks
2	Center nut (Leaf spring mounting)	34 to 54 {25 to 40, 3.5 to 5.5}	—

◆ Service procedure

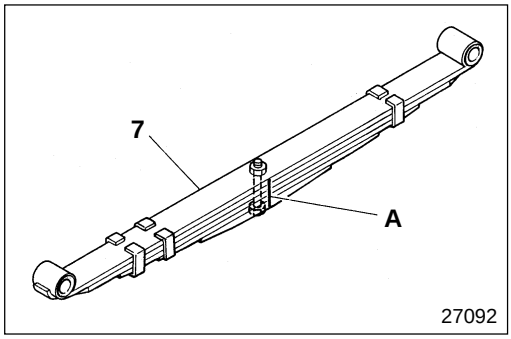

2 **Center nut**

[Removal]

- Put alignment marks **A** on the side of leaf springs **7**.

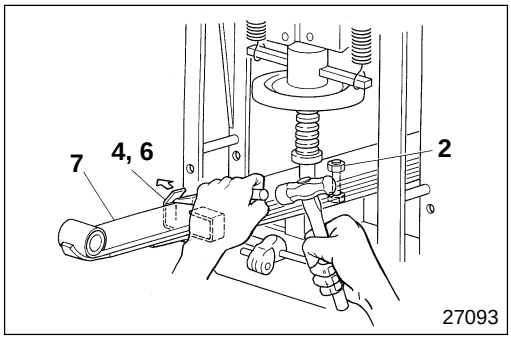

- Compress leaf springs **7** using a press, lever up the bent parts of clip **4, 6** using a cold chisel, then remove center nut **2**.

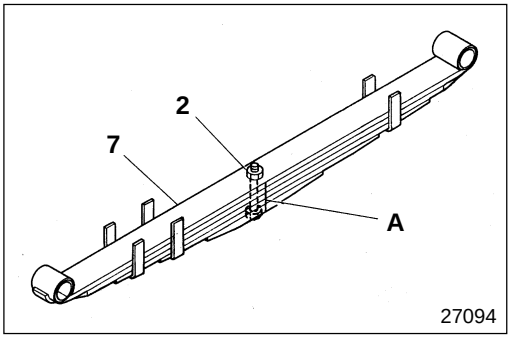

[Installation]

- Align alignment marks **A** on the side of leaf springs **7**, assemble the component leaf springs, then tighten center nut **2** temporarily.

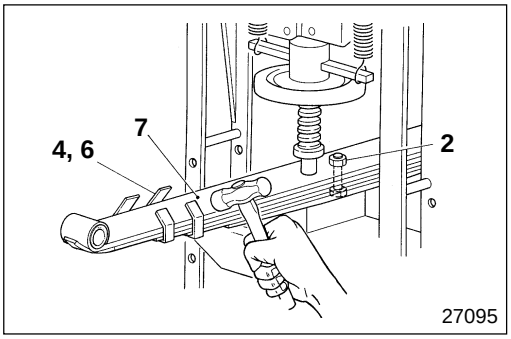

- Compress leaf springs **7** using a press, tighten center nut **2** at specified torque, then bend over clips **4, 6** using a hammer.

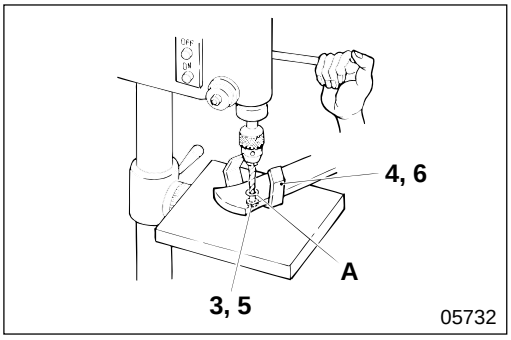

3 **5** **Rivet**

[Removal]

Drill out staked ends **A** of rivets **3**, **5** on a drill press, then remove clip **4** and inner clip **6**.

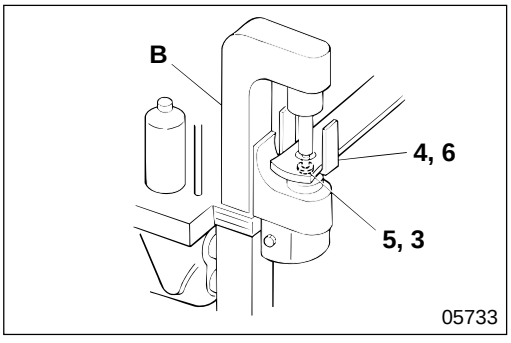

[Installation]

Using riveting machine **B**, mount inner clip **6** and clip **4** by staking rivets **5**, **3**.

SHOCK ABSORBER < FE >

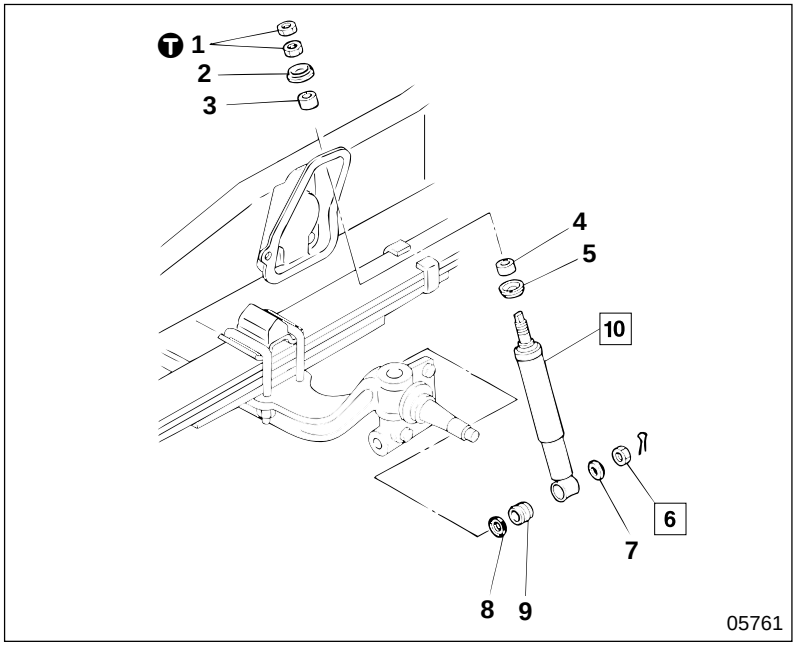

● **Removal sequence**

1 Lock nut
2 Upper side washer
3 Rubber bushing
4 Rubber bushing
5 Upper side washer
6 Nut
7 Eye washer
8 Washer
9 Rubber bushing
10 Shock absorber

● **Installation sequence**

Follow the removal sequence in reverse.

Tightening torque

Unit : N·m {lbf.ft, kgf·m}

Location	Parts to be tightened	Tightening torque	Remarks
1	Lock nut (Shock absorber top mounting)	13 to 17 {9.4 to 12.3, 1.3 to 1.7}	—

◆ Service procedure

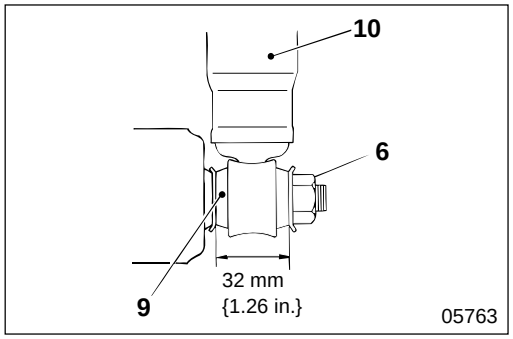

6 **Nut mounting**

Tighten nut **6** so that the length of rubber bushing **9** for shock absorber **10** is as illustrated.

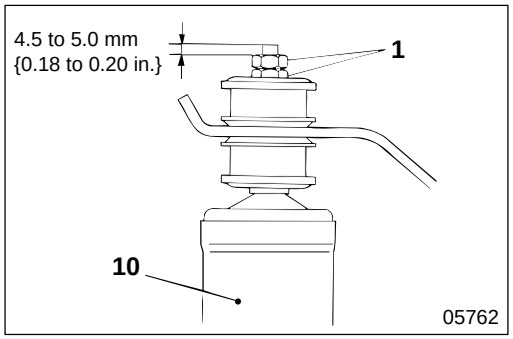

10 **Shock absorber mounting**

Tighten lock nut **1** so that the top of shock absorber **10** protrudes from the lock nut by the amount as illustrated.

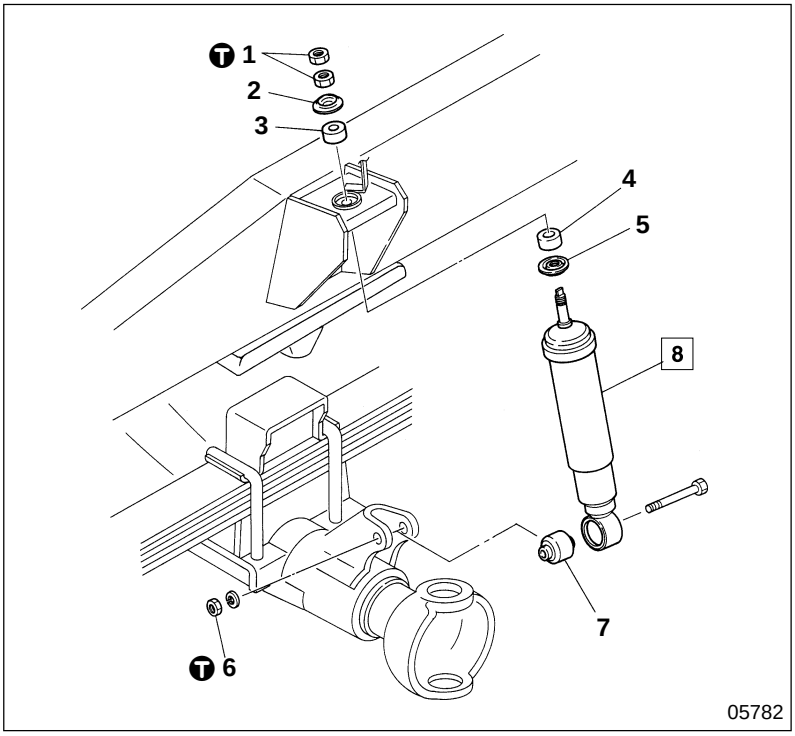

● **Removal sequence**

1 Lock nut
2 Upper side washer
3 Rubber bushing
4 Rubber bushing
5 Upper side washer
6 Nut
7 Rubber bushing
8 Shock absorber

● **Installation sequence**

Follow the removal sequence in reverse.

Ⓣ Tightening torque

Unit : N·m {lbf.ft, kgf·m}

Location	Parts to be tightened	Tightening torque	Remarks
1	Lock nut (Shock absorber top mounting)	13 to 17 {9.4 to 12.3, 1.3 to 1.7}	—
6	Nut (Shock absorber bottom eye mounting)	33 to 49 {25 to 36, 3.4 to 5.0}	—

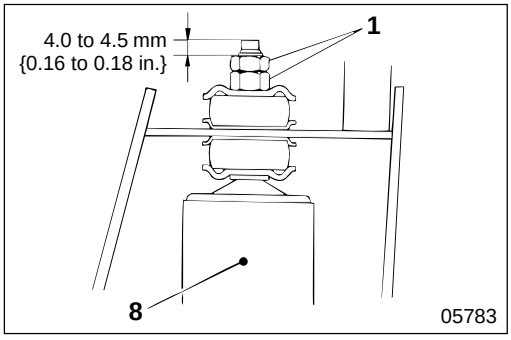

◆ Service procedure

8 **Shock absorber mounting**

Tighten lock nut **1** so that the top of shock absorber **8** protrudes from the lock nut by the amount as illustrated.

STABILIZER < FE >

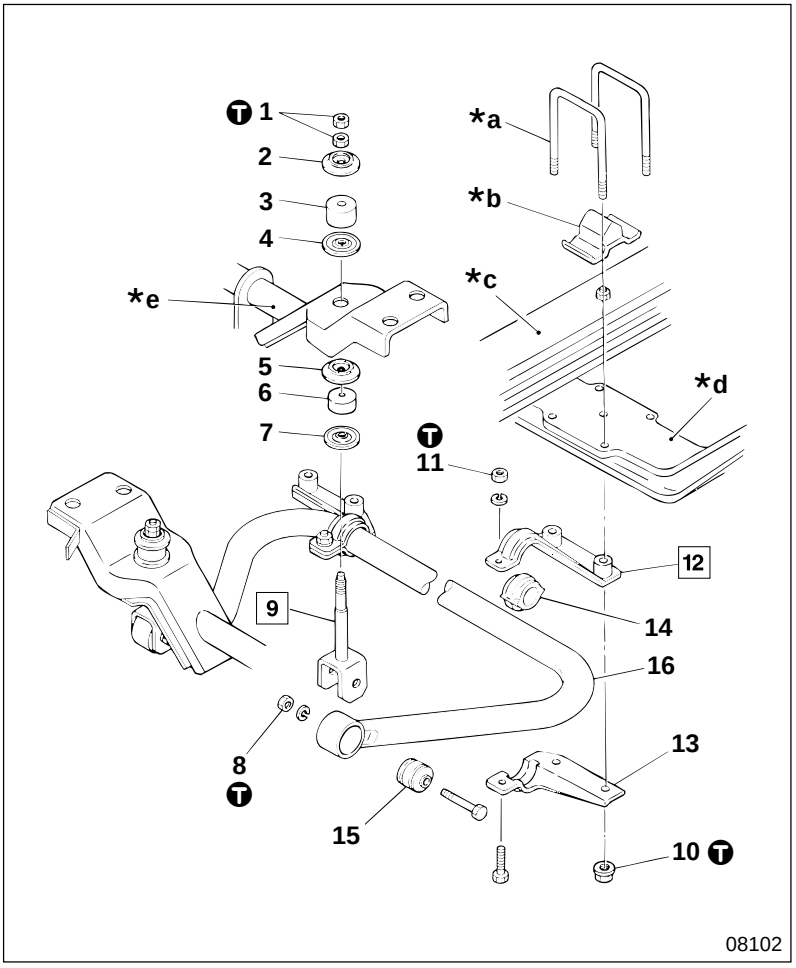

● **Removal sequence**

1 Lock nut
2 Upper side washer
3 Rubber bushing
4 Centering washer
5 Centering washer
6 Rubber bushing
7 Upper side washer
8 Nut
9 Stabilizer hanger
10 U-bolt nut
11 Nut
12 Stabilizer upper bracket
13 Stabilizer lower bracket
14 Stabilizer bushing
15 Stabilizer rubber bushing
16 Stabilizer bar

***a** : U-bolt
***b** : Front axle bumper
***c** : Leaf spring assembly
***d** : Front axle Gr 26
***e** : Radiator support Gr 14

● **Installation sequence**

Follow the removal sequence in reverse.

Ⓣ Tightening torque

Unit : N·m {lbf.ft, kgf·m}

Location	Parts to be tightened	Tightening torque	Remarks
1	Lock nut (Stabilizer hanger top mounting)	13 to 17 {9.4 to 12.3, 1.3 to 1.7}	—
8	Nut (Stabilizer hanger bottom eye mounting)	70 to 95 {51 to 69, 7.0 to 9.5}	—
10	U-bolt nut	162±15 {120±11, 16.5±1.5}	—
11	Nut (Stabilizer upper bracket and lower bracket mounting)	35 to 55 {25 to 40, 3.5 to 5.5}	—

◆ Service procedure

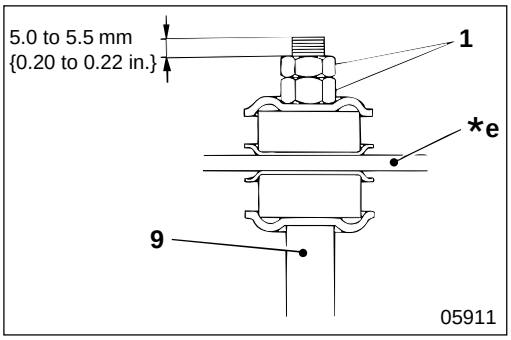

9 **Stabilizer hanger mounting**

- Mount stabilizer hanger **9** to radiator support ***e** perpendicularly.
- Tighten lock nut **1** so that the top of stabilizer hanger **9** protrudes from the lock nut by the amount as illustrated.

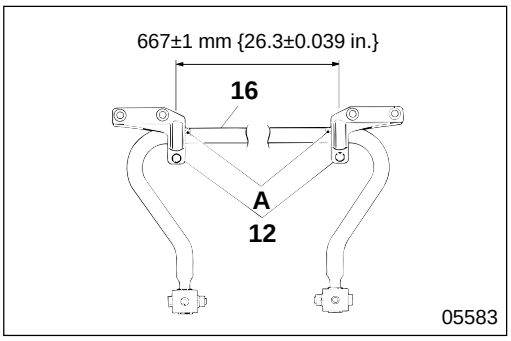

12 **Stabilizer upper bracket mounting**

Mount stabilizer upper brackets **12** with their end faces aligned with mark **A** on stabilizer bar **16**.

MITSUBISHI
FUSO

FE

Service Manual

Group 33
Front Suspension

Table of Contents

BACK

HOME

MITSUBISHI FUSO TRUCK OF AMERICA, Inc.

Pub No. TWSE9501-33

GROUP 33 FRONT SUSPENSION

STRUCTURE AND OPERATION 2

TROUBLESHOOTING 3

WORK BEFORE REMOVAL AND INSTALLATION OF FRONT SUSPENSION 4

REMOVAL AND INSTALLATION OF LEAF SPRING ASSEMBLY 6

LEAF SPRING ASSEMBLY 8

SHOCK ABSORBER 10

STABILIZER 12

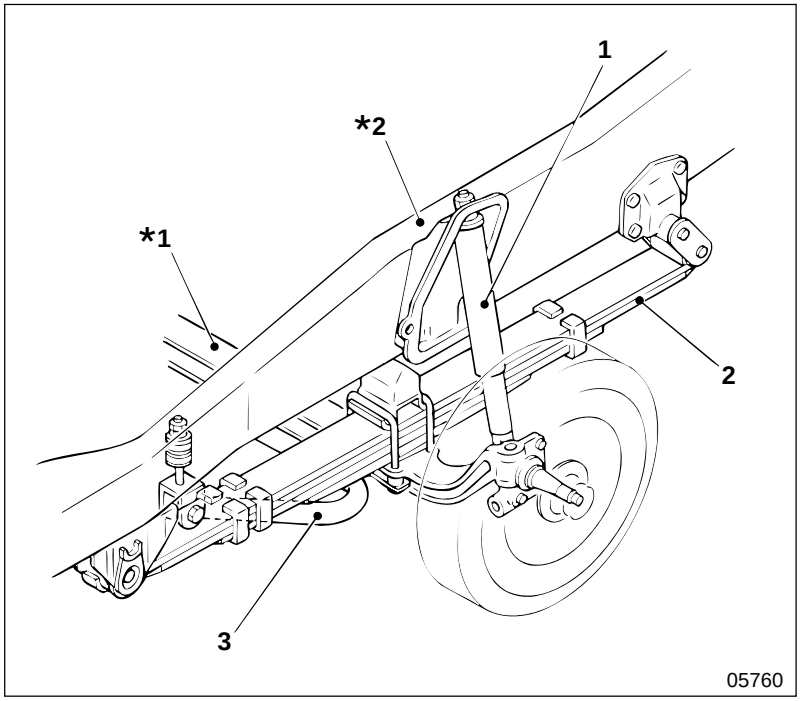

1 Shock absorber
2 Leaf spring assembly
3 Stabilizer

***1** : Front axle
***2** : Frame

Leaf spring assembly **2**, shock absorber **1**, and stabilizer **3** are installed between frame ***2** and front axle ***1** to support the vehicle body mass and absorb vibration and shock from the road surface to prevent them from being directly transmitted to the vehicle body thereby protecting the crew, the vehicle body, and the cargo. In addition, irregular vibration from the wheels is restrained, ensuring driving stability.

Possible causes / Symptoms		Ride spongy	Noise generated when vehicle is unloaded	Impact transmitted from uneven road surface	Noise generated when vehicle is loaded	Excessive rolling while cruising	Periodic jolts received from the road surface	Remarks
Leaf spring	Cracked or damaged			○				
	Fractured		○					
	Spring hanger damaged				○			
	U-bolts loose				○			
	Spring bushing worn		○					
Front axle bumper	Damaged or broken				○			
Shock absorber	Oil leaking noticeable or damping force decreased	○						
	Rubber bushing worn		○					
	Installation loose		○					
Stabilizer	Stabilizer deformed or bushing worn					○		
Tire	Tires worn unevenly						○	
	Tires and wheels unbalanced						○	Gr 31
	Air pressure excessive			○				

WORK BEFORE REMOVAL AND INSTALLATION OF FRONT SUSPENSION

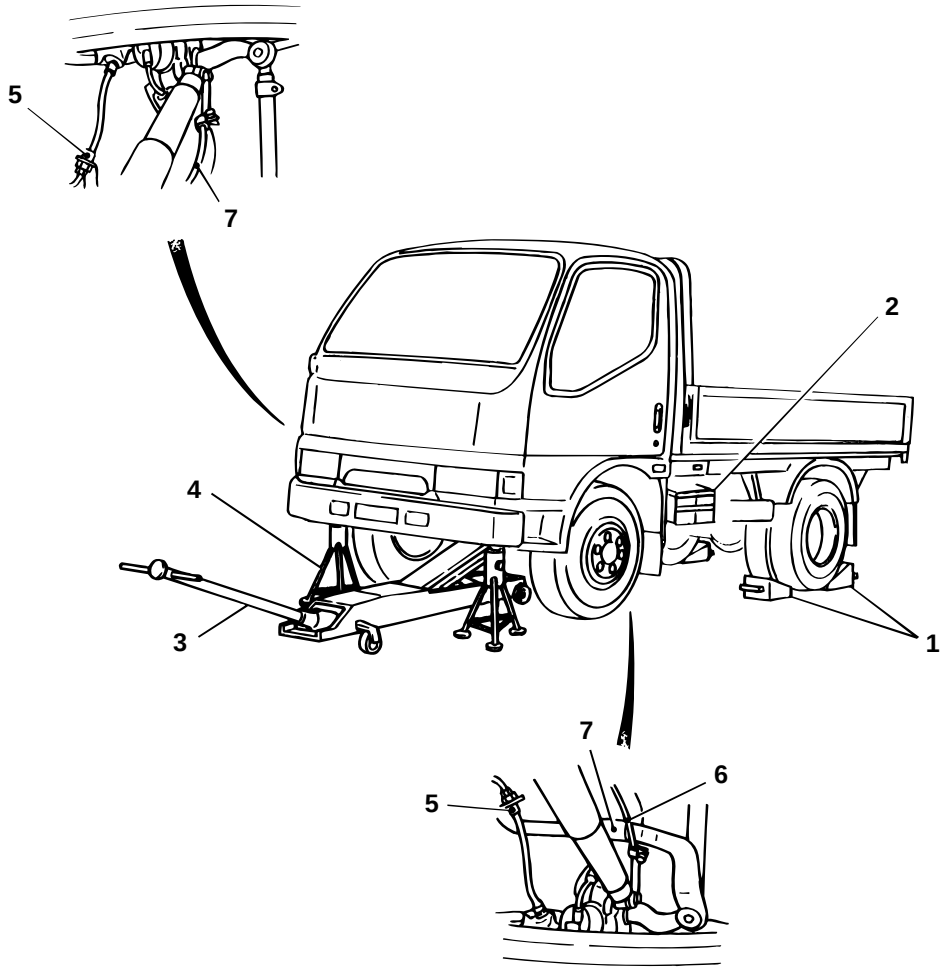

● **Removal sequence**

1. Place wheel chocks.
2. Disconnect the negative battery cable. Gr 54
3. Jack up the front axle with a garage jack.
4. Support the frame on rigid racks.
5. Remove the brake hose joint (on the frame).
6. Remove the clamp of the brake pad wear indicator harness and disconnect the connector on the frame side.
7. Remove the drag link. Gr 37

WARNING

- **Chock the wheels securely so the vehicle does not move.**
- **Do not remove the chocks until the entire operation is completed.**
- **Supporting a vehicle on a garage jack only is extremely dangerous, so always support the frame on rigid racks.**
- **Leave the garage jack and rigid racks in place until the entire operation is completed. Never remove them during the operation.**

CAUTION

Be sure to protect the brake hose from dust by fitting blanking plugs.

● **Installation sequence**

Follow the removal sequence in reverse.

WARNING ⚠

You must bleed air from the brake system after installing the brake hose, failure to do so would cause the brake to malfunction. Gr 35

CAUTION ⚠

Be sure that the brake hose is not twisted when you install it.

REMOVAL AND INSTALLATION OF LEAF SPRING ASSEMBLY

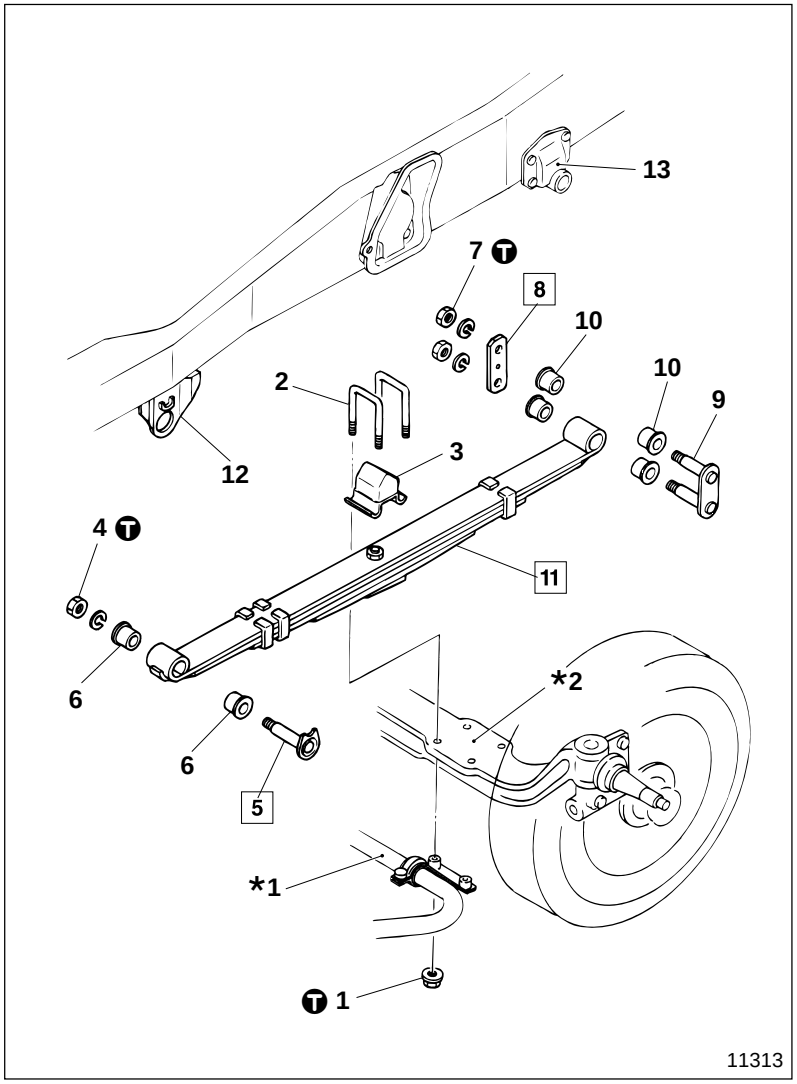

● **Removal sequence**

1 U-bolt nut
2 U-bolt
3 Front axle bumper
4 Nut
5 Spring pin
6 Rubber bushing
7 Nut
8 Shackle plate
9 Spring shackle
10 Rubber bushing
11 Leaf spring assembly P33-8
12 Front spring hanger
13 Front shackle hanger

***1** : Stabilizer P33-12
***2** : Front axle Gr 26

NOTE

Do not remove front spring hanger 12 or front shackle hanger 13 unless they are faulty. Gr 41

● **Installation sequence**

Follow the removal sequence in reverse.

T Tightening torque

Unit : N·m {lbf.ft, kgf·m}

Location	Parts to be tightened	Tightening torque	Remarks
1	U-bolt nut (U-bolt mounting)	162±15 {120±11, 16.5±1.5}	—
4	Nut (Spring pin mounting)	93 to 127 {69 to 94, 9.5 to 13.0}	—
7	Nut (Spring shakle mounting)	93 to 127 {69 to 94, 9.5 to 13.0}	—

◆ Service procedure

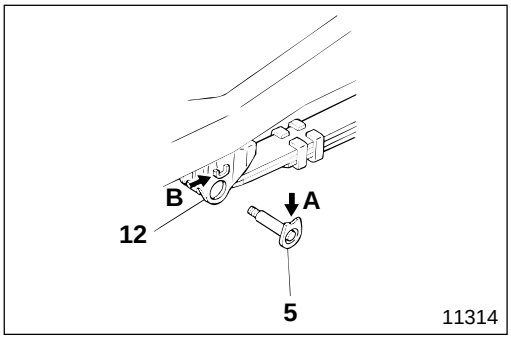

5 **Installation of spring pin**

Install spring pin **5** to front spring hanger **12** with indent **A** of the spring pin fitted to protrusion **B** of the front spring hanger.

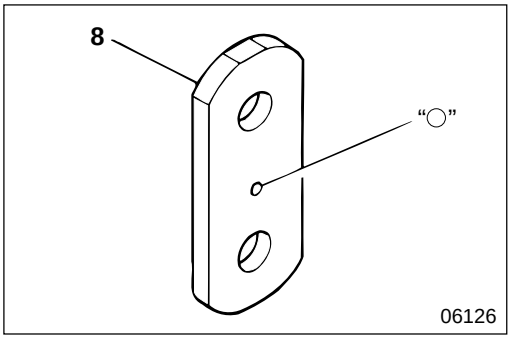

8 **Installation of shackle plate**

Install shackle plate **8** with stamped mark "○" facing the leaf spring.

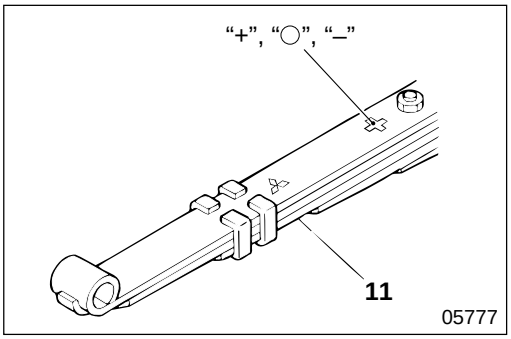

11 **Leaf spring assembly left/right height combinations**

When replacing leaf spring assembly **11**, select the members so that the left and right height marks "+", "○" and "–" are combined as shown below.

Item	Combination				
	1	2	3	4	5
Right leaf spring assembly, passenger's side	–	–	○	○	+
Left leaf spring assembly, driver's side	–	○	○	+	+

CAUTION⚠

Passenger's side leaf spring assembly 11 differs from the driver's side leaf spring assembly in camber (arch). Do not mix them up when mounting, or this would cause vehicle tilt.

LEAF SPRING ASSEMBLY

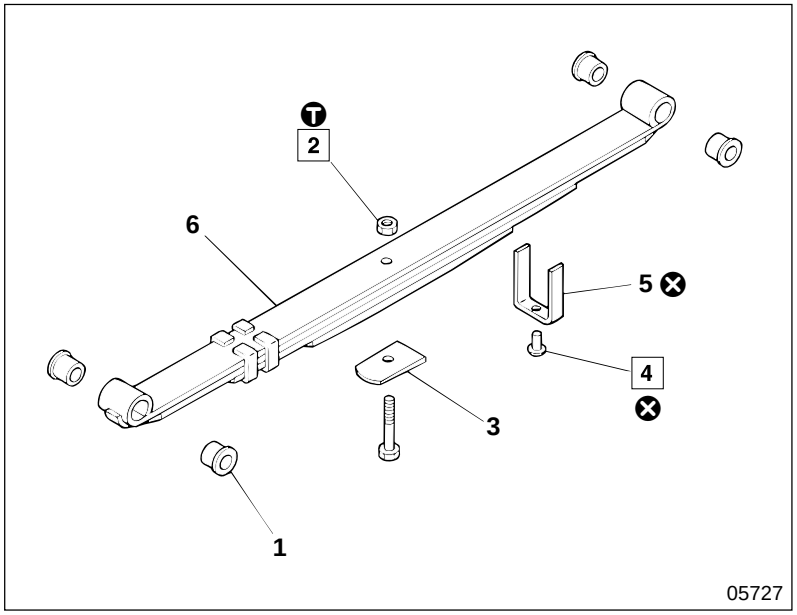

● **Disassembly sequence**

1 Collar
2 Center nut
3 Caster shim
4 Rivet
5 Clip
6 Leaf spring

⊗ : Non-reusable parts

● **Assembly sequence**

Follow the disassembly sequence in reverse.

ⓣ Tightening torque

Unit : N·m {lbf.ft, kgf·m}

Location	Parts to be tightened	Tightening torque	Remarks
2	Center nut (Leaf spring mounting)	34 to 54 {25 to 40, 3.5 to 5.5}	—

◆ Service procedure

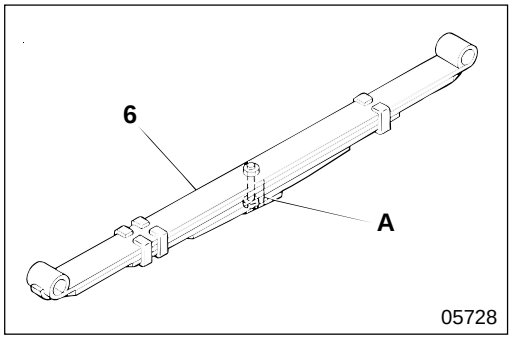

2 **Center nut**

[Removal]

- Put alignment marks **A** on the side of leaf springs **6**.

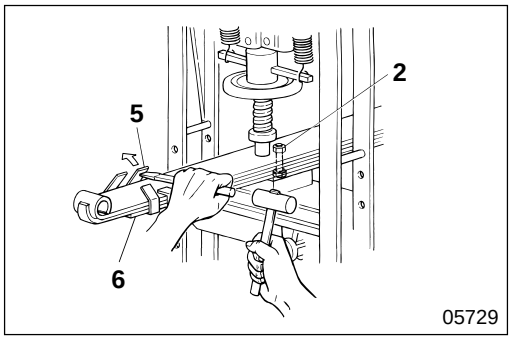

- Compress leaf springs **6** using a press, lever up the bent parts of clips **5** using a cold chisel, then remove center nut **2**.

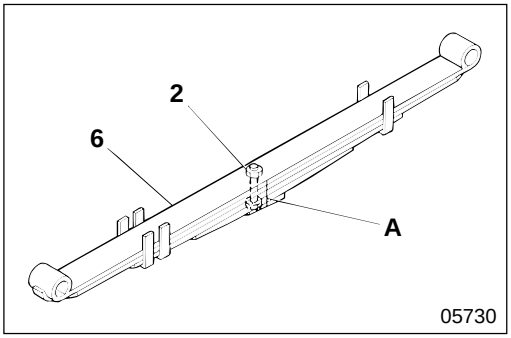

[Installation]
- Align alignment marks **A** on the side of leaf springs **6**, assemble the component leaf springs, then tighten center nut **2** temporarily.

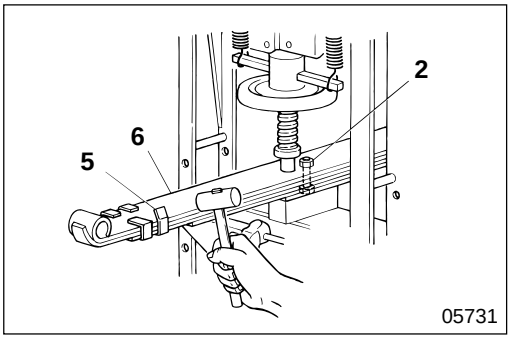

- Compress leaf springs **6** using a press, tighten center nut **2** at specified torque, then bend over clips **5**.

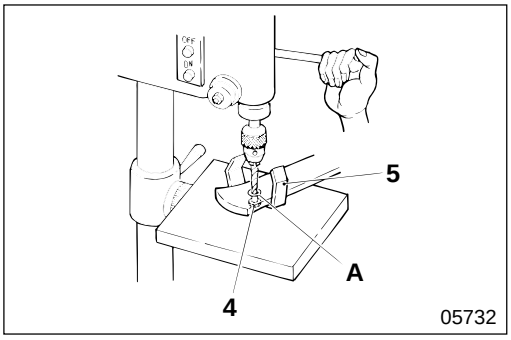

4 **Rivet**

[Removal]
- Drill out caulked end **A** of rivet **4** on a drill press, then remove clip **5**.

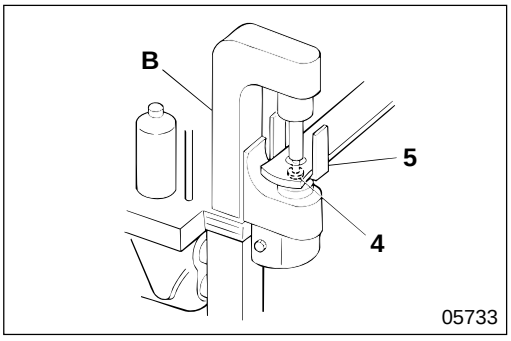

[Installation]
- Using riveting machine **B**, mount inner clip **5** by caulking rivet **4**.

SHOCK ABSORBER

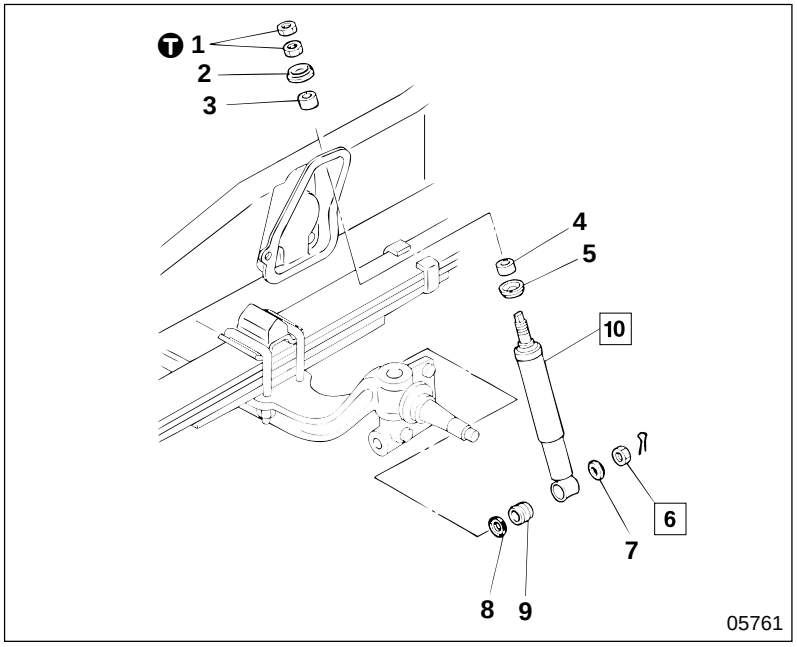

● **Removal sequence**

1 Lock nut
2 Upper side washer
3 Rubber bushing
4 Rubber bushing
5 Upper side washer
6 Nut
7 Eye washer
8 Washer
9 Rubber bushing
10 Shock absorber

● **Installation sequence**

Follow the removal sequence in reverse.

Tightening torque

Unit : N·m {lbf.ft, kgf·m}

Location	Parts to be tightened	Tightening torque	Remarks
1	Lock nut (Shock absorber top mounting)	13 to 17 {9.4 to 12.3, 1.3 to 1.7}	—

◆ Service procedure

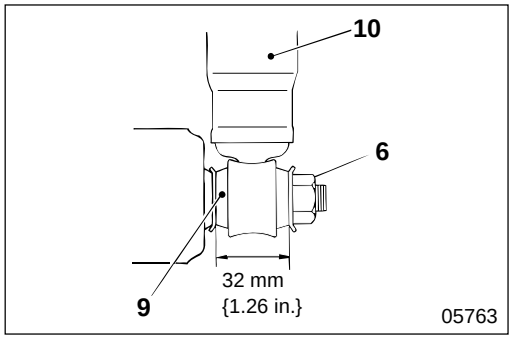

6 **Nut mounting**

Tighten nut **6** so that the length of rubber bushing **9** for shock absorber **10** is as illustrated.

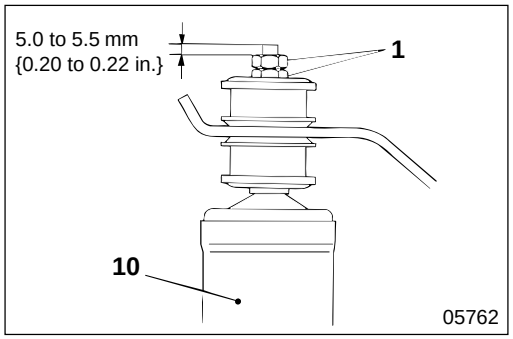

10 **Shock absorber mounting**

Tighten lock nut **1** so that the top of shock absorber **10** protrudes from the lock nut by the amount as illustrated.

M E M O

STABILIZER

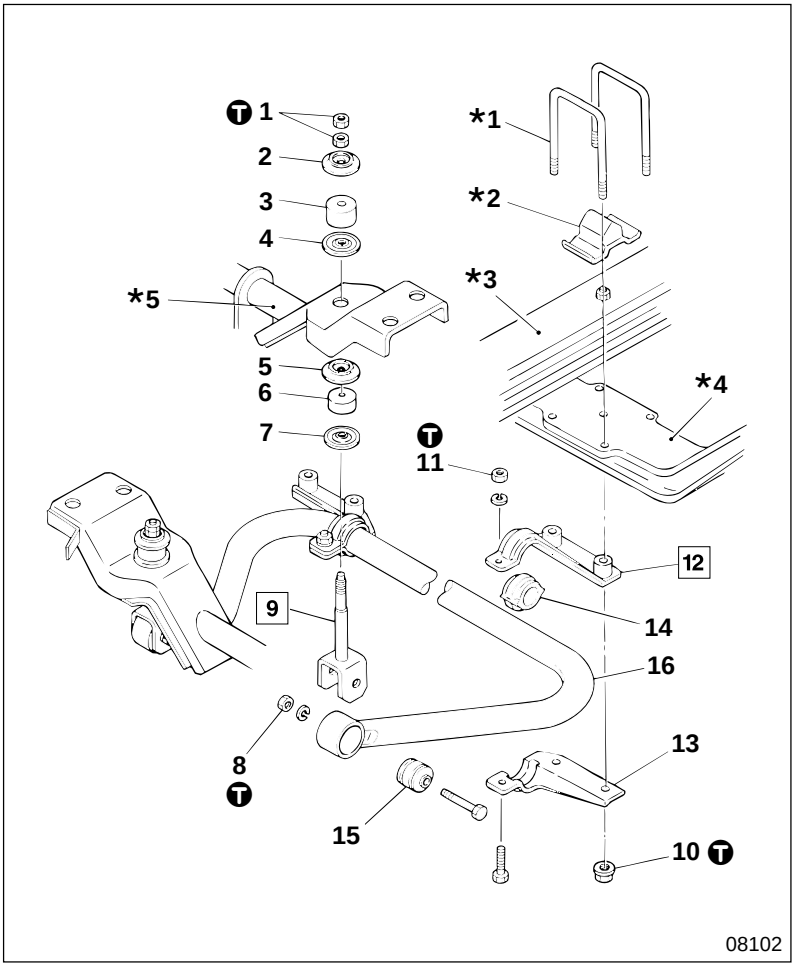

● **Removal sequence**

1 Lock nut
2 Upper side washer
3 Rubber bushing
4 Centering washer
5 Centering washer
6 Rubber bushing
7 Upper side washer
8 Nut
9 Stabilizer hanger
10 U-bolt nut
11 Nut
12 Stabilizer upper bracket
13 Stabilizer lower bracket
14 Stabilizer bushing
15 Stabilizer rubber bushing
16 Stabilizer bar

***1** : U-bolt
***2** : Front axle bumper
***3** : Leaf spring assembly
***4** : Front axle Gr 26
***5** : Radiator support Gr 14

● **Installation sequence**

Follow the removal sequence in reverse.

Ⓣ Tightening torque

Unit : N·m {lbf.ft, kgf·m}

Location	Parts to be tightened	Tightening torque	Remarks
1	Lock nut (Stabilizer hanger top mounting)	13 to 17 {9.4 to 12.3, 1.3 to 1.7}	—
8	Nut (Stabilizer hanger bottom eye mounting)	70 to 95 {51 to 69, 7.0 to 9.5}	—
10	U-bolt nut	162±15 {120±11, 16.5±1.5}	—
11	Nut (Stabilizer upper bracket and lower bracket mounting)	35 to 55 {25 to 40, 3.5 to 5.5}	—

◆ Service procedure

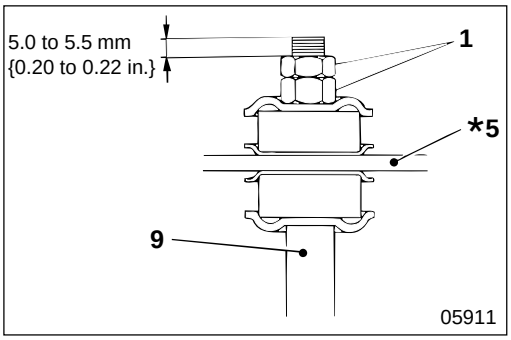

9 **Stabilizer hanger mounting**

- Mount stabilizer hanger **9** to radiator support ***5** perpendicularly.
- Tighten lock nut **1** so that the top of stabilizer hanger **9** protrudes from the lock nut by the amount as illustrated.

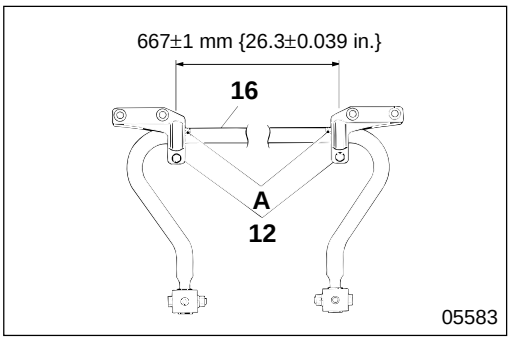

12 **Stabilizer upper bracket mounting**

Mount stabilizer upper brackets **12** with their end faces aligned with mark **A** on stabilizer bar **16**.

BACK HOME

FE

Service Manual

Group 34 - Rear Suspension

Group 34 - Rear Suspension 1998 Minor Change <FG>

MITSUBISHI FUSO TRUCK OF AMERICA, Inc.

Pub No. TWSE9501-00

MITSUBISHI
FUSO

FE.FG
Service Manual

Group 34
Rear Suspension

'98 Minor Change

Table of Contents

MITSUBISHI FUSO TRUCK OF AMERICA, Inc.

BACK HOME

Pub No. TWSE9501-234

GROUP 34 REAR SUSPENSION

STRUCTURE AND OPERATION 34- 2

TROUBLESHOOTING 34- 3

WORK BEFORE REMOVAL AND INSTALLATION OF REAR SUSPENSION 34- 4

REMOVAL AND INSTALLATION OF LEAF SPRING ASSEMBLY
< FE > 34- 6
< FG > 34- 10

LEAF SPRING ASSEMBLY 34- 14

SHOCK ABSORBER 34- 17

STABILIZER < FE > 34- 18

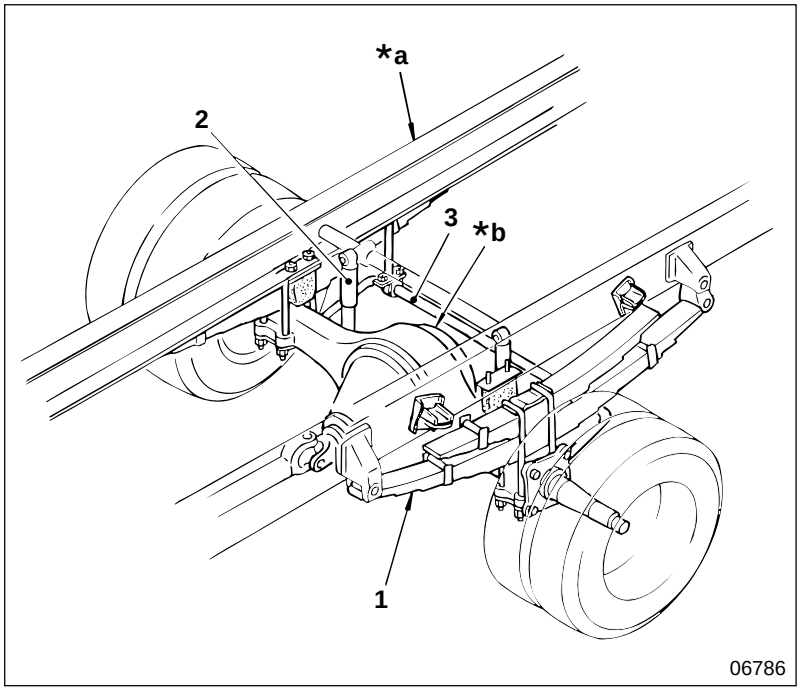

1 Leaf spring assembly
2 Shock absorber
3 Stabilizer < FE >

***a** : Frame
***b** : Rear axle

Leaf spring assembly **1** and shock absorber **2** are installed between frame ***a** and rear axle ***b** to support the vehicle body mass and absorb vibration and shock from the road surface to prevent them from being directly transmitted to the vehicle body thereby protecting the crew, the vehicle body, and the cargo. In addition, irregular vibration from the wheels is restrained, ensuring driving stability. Stabilizer **3** < FE > is installed to prevent sway.

Possible causes / Symptoms		Ride soft with gentle swaying	Noise generated when vehicle is unloaded	Impact transmitted from uneven road surface	Noise generated when vehicle is loaded	Excessive rolling while cruising	Periodic jolts received from the road surface	Remarks
Leaf spring	Cracked or damaged			○				
	Damaged		○					
	Spring hanger broken				○			
	U-bolts loose				○			
	Spring bushing worn		○					
Spring pins or shackle pins thrust play excessive			○					
Shackle pins tightening torque excessive					○			
Helper rubber or helper spring stopper damaged or broken					○			
Shock absorber	Noticeable oil leaking or damping force decreased	○						
	Rubber bushing worn		○					
	Bolt loose		○					
Stabilizer < FE >	Stabilizer deformed, bushing worn					○		
Tire	Tires worn unevenly						○	
	Tires and wheels unbalanced						○	Gr 31
	Air pressure excessive			○				

WORK BEFORE REMOVAL AND INSTALLATION OF REAR SUSPENSION

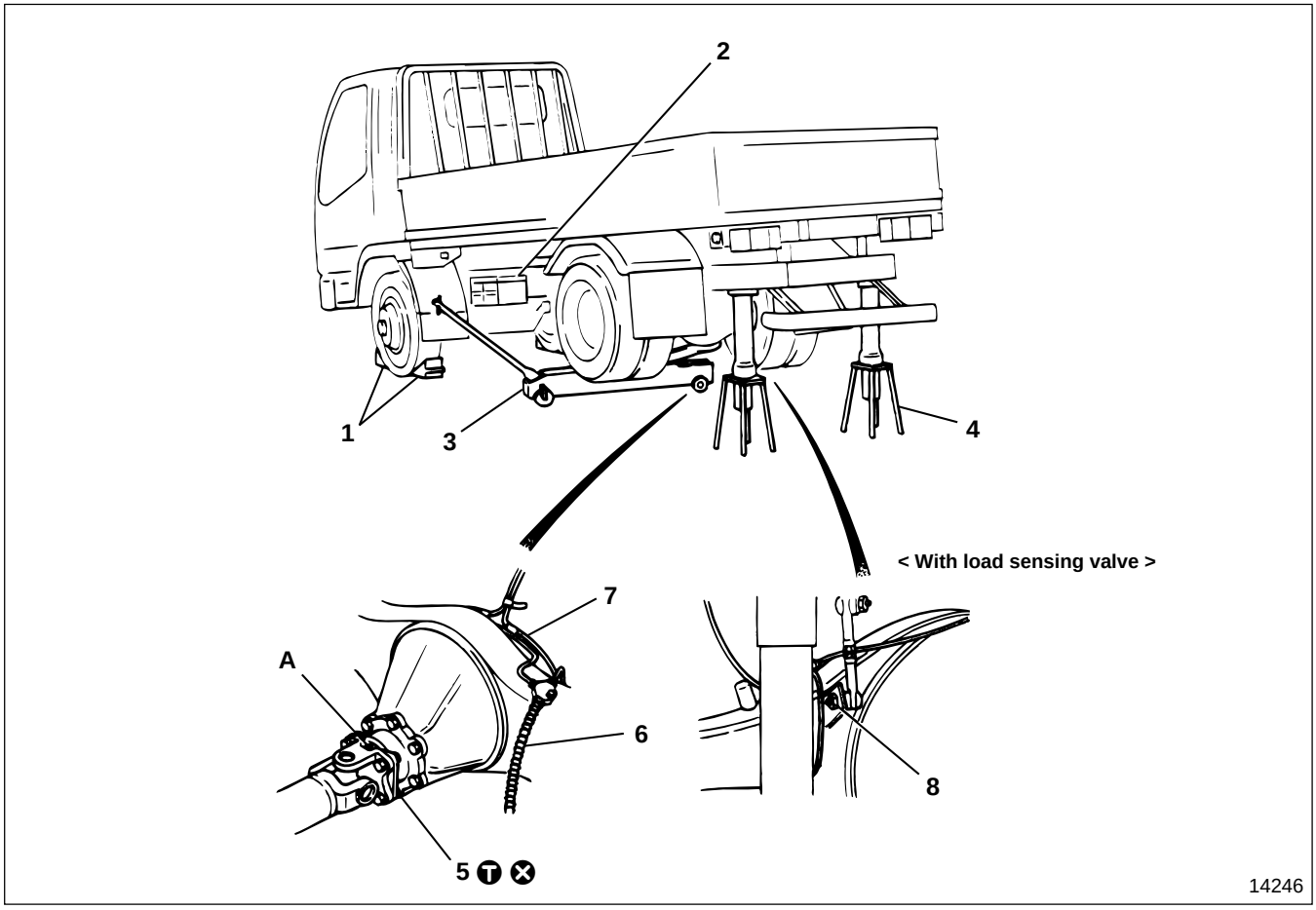

● **Removal sequence**

1. Place wheel chocks.
2. Disconnect the negative battery cable. Gr 54
3. Jack up the rear axle with a garage jack.
4. Support the rear frame on rigid racks.
5. Put alignment marks **A** on the rear axle companion flange and the propeller shaft flange yoke, then remove the nuts (on the joint between the rear axle and the propeller shaft).
6. Remove the brake hose joint (on the frame).
7. Remove the clamp of the brake pad wear indicator harness and disconnect the connector on the frame side. < with disc brake >
8. Remove the nut (joint part of rear axle housing and the load sensing valve). < with load sensing valve >

⊗ : Non-reusable parts

WARNING⚠

- **Chock the wheels securely so the vehicle does not move.**
- **Do not remove the chocks until the entire operation is completed.**
- **Supporting a vehicle on a garage jack only is extremely dangerous, so always support the frame on rigid racks.**
- **Leave the garage jack and rigid racks in place until the entire operation is completed. Never remove them during the operation.**

CAUTION⚠

Be sure to protect the brake hose from dust by fitting plugs.

● **Installation sequence**

Follow the removal sequence in reverse.

WARNING⚠

You must bleed air from the brake system and install the load sensing valve (with load sensing valve) after installing the brake hose, failure to do so would cause the brake to malfunction. Gr 35

CAUTION⚠

Be sure that the brake hose is not twisted when you install it.

Tightening torque

Unit : N·m {lbf.ft, kgf·m}

Location	Parts to be tightened	Tightening torque	Remarks
5	Nut (Rear axle and propeller shaft connecting)	98 to 120 {72 to 87, 10 to 12}	—

REMOVAL AND INSTALLATION OF LEAF SPRING ASSEMBLY < FE >

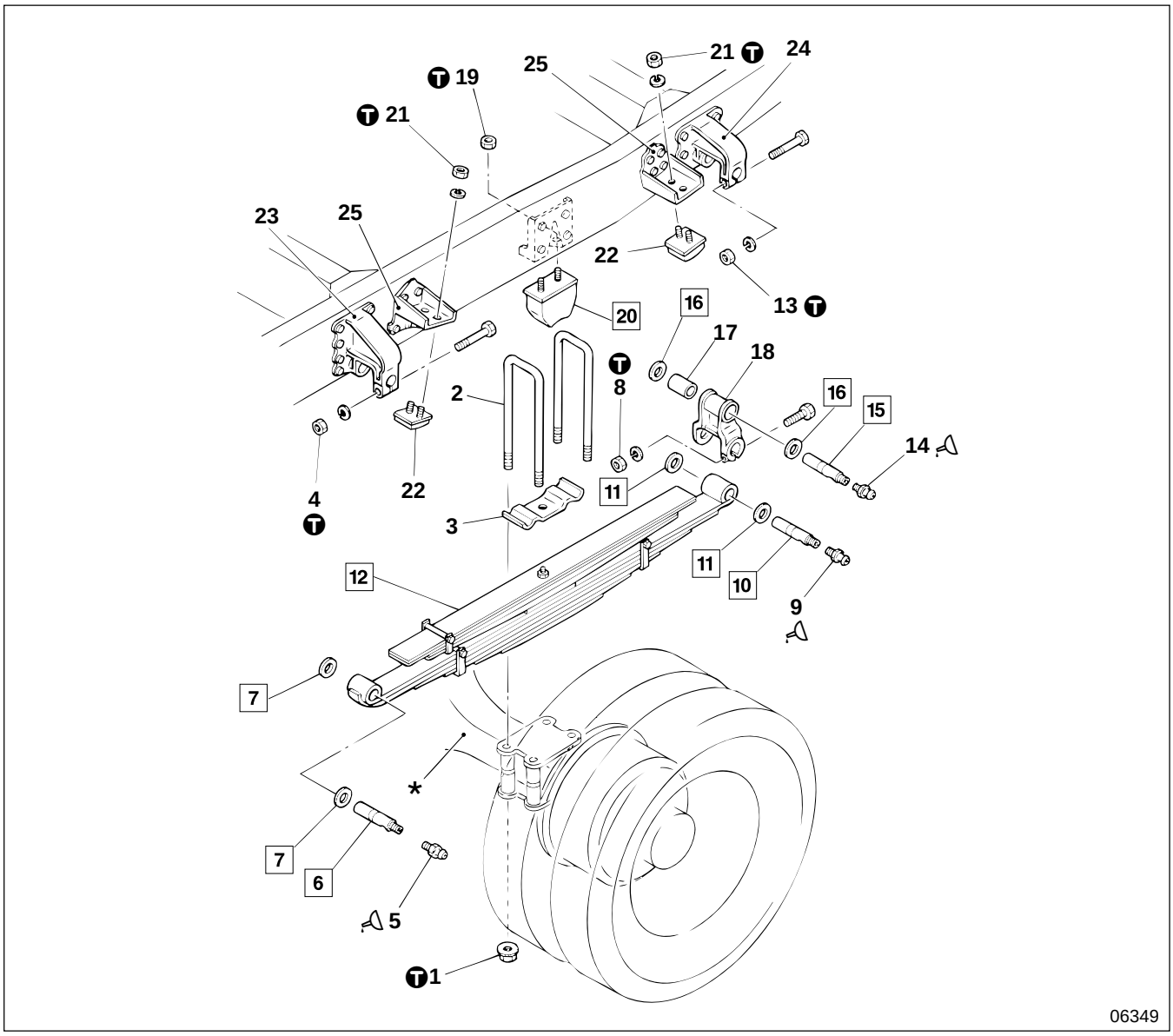

● **Removal sequence**

1 U-bolt nut
2 U-bolt
3 Spring pad
4 Nut
5 Grease nipple
6 Spring pin
7 Side washer
8 Nut
9 Grease nipple
10 Spring pin
11 Side washer
12 Leaf spring assembly P34-14
13 Nut
14 Grease nipple
15 Spring pin
16 Side washer
17 Bushing
18 Spring shackle
19 Nut
20 Helper rubber
21 Nut
22 Helper spring stopper
23 Rear spring hanger
24 Rear shackle hanger
25 Helper spring bracket

* : Rear axle Gr 27

NOTE

Do not remove rear spring hanger 23, rear shackle hanger 24, or helper spring bracket 25 unless they are faulty. Gr 41

● **Installation sequence**

Follow the removal sequence in reverse.

Service standards

Unit : mm {in.}

Location	Maintenance item	Standard value (Basic diameter in [ ])	Limit	Remedy
6, 10, 12	Clearance between spring pin and bushing of leaf spring assembly	[28] 0.04 to 0.14 {[1.10] 0.0016 to 0.0055}	0.5 {0.020}	—
6, 23	Clearance between spring pin and rear spring hanger	[28] 0.02 to 0.08 {[1.10] 0.00079 to 0.0031}	1.0 {0.039}	—
12, 18	Clearance between leaf spring assembly and spring shackle	0.5 to 1.2 {0.020 to 0.047}	1.5 {0.059}	Adjust side washer
12, 23	Clearance between leaf spring assembly and rear spring hanger	0.5 to 1.2 {0.020 to 0.047}	1.5 {0.059}	Adjust side washer
15, 17	Clearance between spring pin and bushing of spring shackle	[28] 0.04 to 0.14 {[1.10] 0.0016 to 0.0055}	0.5 {0.020}	—
18, 24	Clearance between spring shackle and rear shackle hanger	0.1 to 0.9 {0.0039 to 0.035}	1.0 {0.039}	Adjust side washer
10, 18	Clearance between spring pin and spring shackle	[28] 0.02 to 0.08 {[1.10] 0.00079 to 0.0031}	1.0 {0.039}	—
15, 24	Clearance between spring pin and rear shackle hanger	[28] 0.02 to 0.08 {[1.10] 0.00079 to 0.0031}	1.0 {0.039}	—

Tightening torque

Unit : N·m {lbf.ft, kgf·m}

Location	Parts to be tightened	Tightening torque	Remarks
1	U-bolt nut (U-bolt mounting)	339±51 {250±38, 34.6±5.2}	—
4	Nut (Spring pin mounting)	29.4 to 37.2 {22 to 27, 3.0 to 3.8}	—
8	Nut (Spring pin mounting)	29.4 to 37.2 {22 to 27, 3.0 to 3.8}	—
13	Nut (Spring pin mounting)	29.4 to 37.2 {22 to 27, 3.0 to 3.8}	—
19	Nut (Helper rubber mounting)	11.8 to 14.7 {8.7 to 11, 1.2 to 1.5}	—
21	Nut (Helper spring stopper mounting)	11.8 to 14.7 {8.7 to 11, 1.2 to 1.5}	—

Lubricant

Location	Points of application	Specified lubricant	Quantity
5, 9, 14	Supply via grease nipple	Chassis grease [NLGI No.1 (Ca soap)]	As required

Special tools

Unit : mm {in.}

Location	Tool name and shape	Part No.	Application
6, 10, 15	Spring pin remover 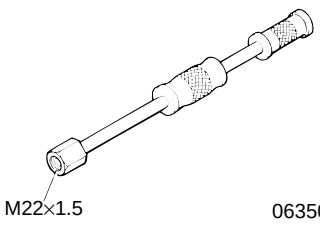	MB999112	Removal of spring pin

◆ Service procedure

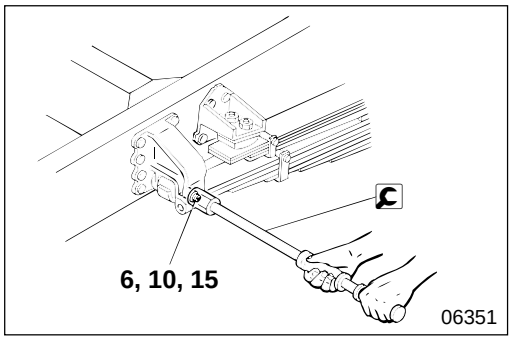

6 **10** **15** **Removal of spring pin**

Remove spring pins **6**, **10**, **15** using 🔧 spring pin remover.

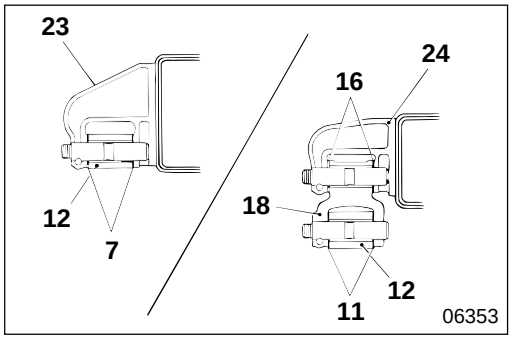

7 **11** **16** **Adjustment of side washer (for adjustment)**

- Using side washer **11**, adjust the clearance between leaf spring assembly **12** and spring shackle **18** to the standard value.
- Using side washer **7**, adjust the clearance between leaf spring assembly **12** and rear spring hanger **23** to the standard value.
- Using side washer **16**, adjust the clearance between spring shackle **18** and rear shackle hanger **24** to the standard value.
- Two different thicknesses are available for side washers **7**, **11**, **16** : 0.5 mm {0.020 in.} and 1.0 mm {0.039 in.}

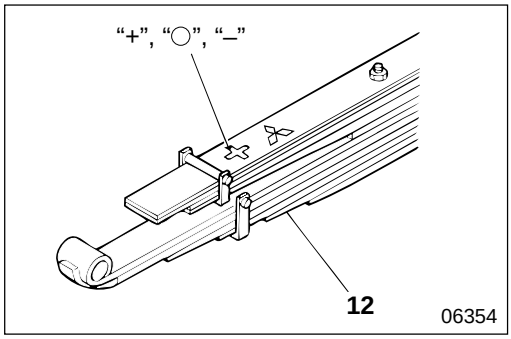

12 **Leaf spring assembly left/right height combinations**

When replacing leaf spring assembly **12**, select the members so that the left and right height marks "+", "○" and "–" are combined as shown below.

Item	Combination		
	1	2	3
Right leaf spring assembly, assistant driver's seat side	+	○	–
Left leaf spring assembly, driver's seat side	+	○	–

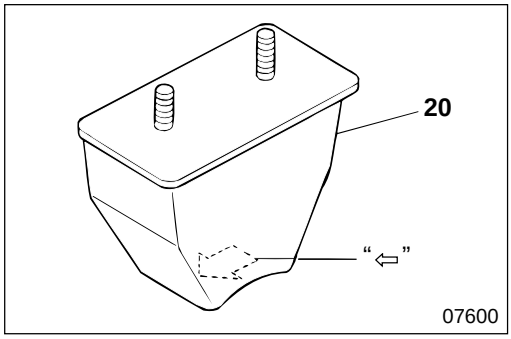

20 **Installation of helper rubber**

Install helper rubber **20** with installation mark "⇦" directed to the front of the vehicle.

M E M O

REMOVAL AND INSTALLATION OF LEAF SPRING ASSEMBLY < FG >

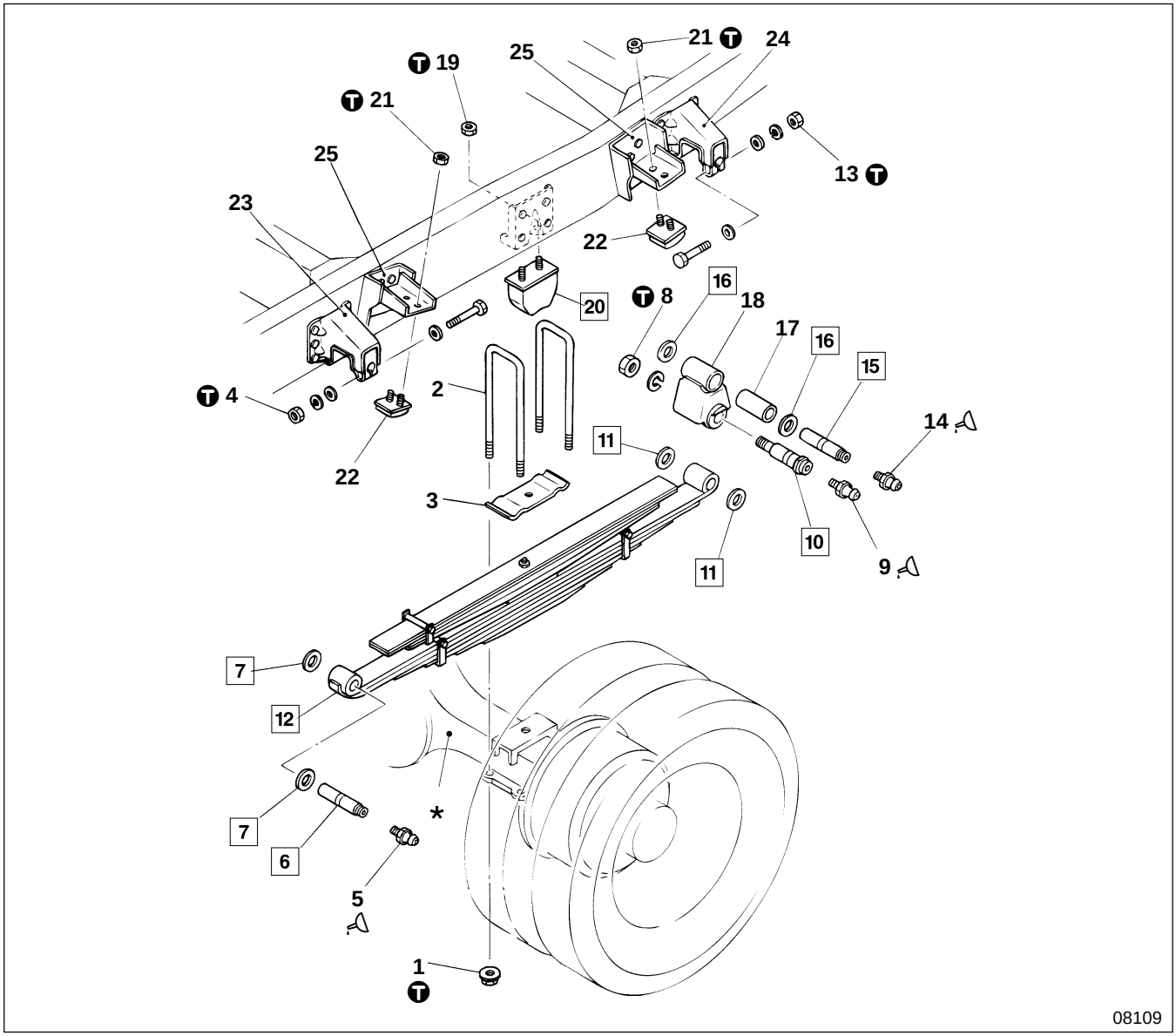

● **Removal sequence**

1 U-bolt nut
2 U-bolt
3 Spring pad
4 Nut
5 Grease nipple
6 Spring pin
7 Side washer (for adjustment)
8 Nut
9 Grease nipple
10 Shackle pin
11 Side washer (for adjustment)
12 Leaf spring assembly P34-14
13 Nut
14 Grease nipple
15 Spring pin
16 Side washer (for adjustment)
17 Bushing
18 Spring shackle
19 Nut
20 Helper rubber
21 Nut
22 Helper spring stopper
23 Rear spring hanger
24 Rear shackle hanger
25 Helper spring bracket

***** : Rear axle Gr 27

NOTE

Do not remove rear spring hanger 23, rear shackle hanger 24, or helper spring bracket 25 unless they are faulty. Gr 41

● **Installation sequence**

Follow the removal sequence in reverse.

Service standards

Unit : mm {in.}

Location	Maintenance item	Standard value (Basic diameter in [ ])	Limit	Remedy
6, 12	Clearance between spring pin and bushing of leaf spring assembly	[28] 0.04 to 0.14 {[1.10] 0.0016 to 0.0055}	0.5 {0.020}	—
6, 23	Clearance between spring pin and rear spring shackle	[28] 0.04 to 0.14 {[1.10] 0.0016 to 0.0055}	1.0 {0.039}	—
10, 12	Clearance between shackle pin and bushing of leaf spring assembly	[28] 0.04 to 0.14 {[1.10] 0.0016 to 0.0055}}	0.5 {0.020}	—
12, 18	Clearance between leaf spring assembly and spring shackle	0.1 to 0.7 {0.0039 to 0.028}	1.0 {0.039}	Adjust side washer
12, 23	Clearance between leaf spring assembly and rear spring hanger	0.1 to 1.0 {0.0039 to 0.039}	1.0 {0.039}	Adjust side washer
15, 17	Clearance between spring pin and bushing of spring shackle	[28] 0.04 to 0.14 {[1.10] 0.0016 to 0.0055}	0.5 {0.020}	—
15, 24	Clearance between spring pin and rear shackle hanger	[28] 0.02 to 0.08 {[1.10] 0.00079 to 0.0031}	1.0 {0.039}	—
18, 24	Clearance between spring shackle and rear shackle hanger	0.1 to 0.7 {0.0039 to 0.028}	1.0 {0.039}	Adjust side washer

Tightening torque

Unit : N·m {lbf.ft, kgf·m}

Location	Parts to be tightened	Tightening torque	Remarks
1	U-bolt nut (U-bolt mounting)	240±15 {175±11, 24.5±1.5}	—
4	Nut (Spring pin mounting)	29.4 to 37.2 {22 to 27, 3.0 to 3.8}	—
8	Nut (Spring pin mounting)	148 to 201 {110 to 150, 15.1 to 20.5}	—
13	Nut (Spring pin mounting)	29.4 to 37.2 {22 to 27, 3.0 to 3.8}	—
19	Nut (Helper rubber mounting)	11.8 to 14.7 {8.7 to 11, 1.2 to 1.5}	—
21	Nut (Helper spring stopper mounting)	11.8 to 14.7 {8.7 to 11, 1.2 to 1.5}	—

Lubricant

Location	Points of application	Specified lubricant	Quantity
5, 9, 14	Supply via grease nipple	Chassis grease [NLGI No.1 (Ca soap)]	As required

Special tools

Unit : mm {in.}

Location	Tool name and shape	Part No.	Application
6, 15	Spring pin remover 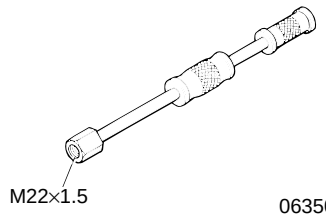 06350	MB999112	Removal of spring pin

◆ Service procedure

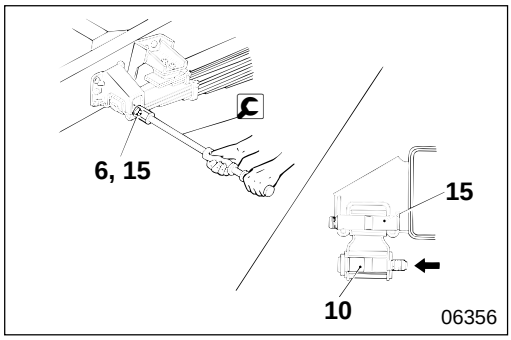

6 **10** **15** **Removal of spring pin and shackle pin**

- Remove spring pins **6**, **15** using 🔧 spring pin remover.
- Knock shackle pin **10** out from the inside of the vehicle using a hammer.

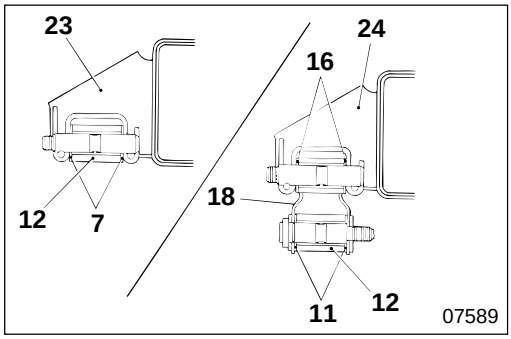

7 **11** **16** **Adjustment of side washer (for adjustment)**

- Using side washer **11**, adjust the clearance between leaf spring assembly **12** and spring shackle **18** to the standard value.
- Using side washer **7**, adjust the clearance between leaf spring assembly **12** and rear spring hanger **23** to the standard value.
- Using side washer **16**, adjust the clearance between spring shackle **18** and rear shackle hanger **24** to the standard value.
- Two different thicknesses are available for side washers **7**, **11**, **16** : 0.5 mm {0.020 in.} and 1.0 mm {0.039 in.}

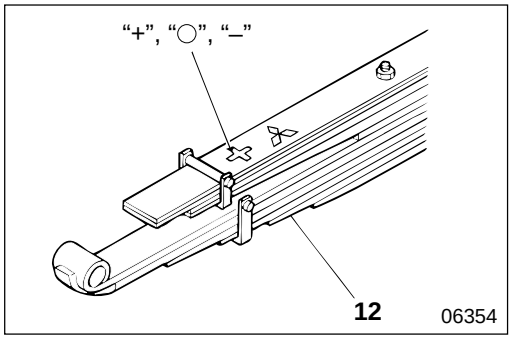

12 **Leaf spring assembly left/right height combinations**

When replacing leaf spring assembly **12**, select the members so that left and right height marks "+", "○" and "–" are combined as shown below.

Item	Combination		
	1	2	3
Right leaf spring assembly, assistant driver's seat side	+	○	–
Left leaf spring assembly, driver's seat side	+	○	–

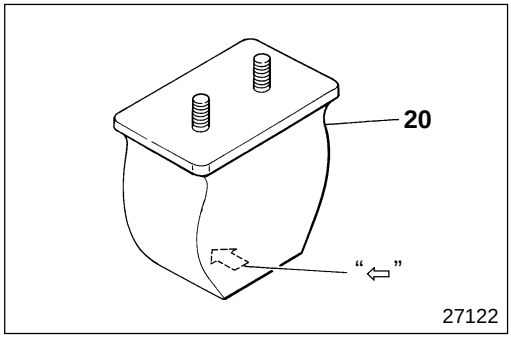

20 **Installation of helper rubber**

Install helper rubber **20** with installation mark "⇦" facing to the inside of the vehicle.

M E M O

LEAF SPRING ASSEMBLY

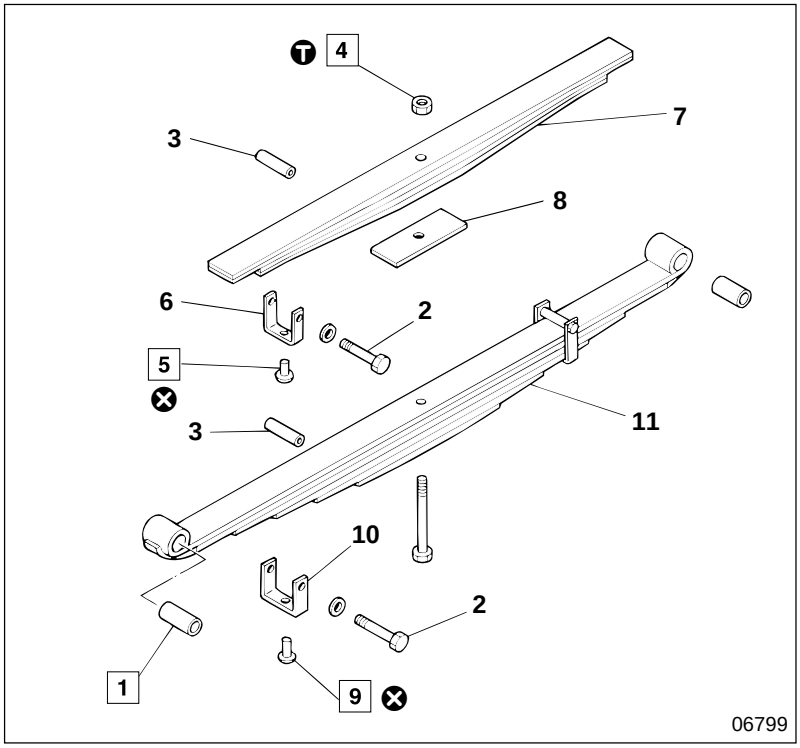

● **Disassembly sequence**

1 Bushing
2 Bolt
3 Pipe
4 Center nut
5 Rivet
6 Clip
7 Helper spring
8 Spacer
9 Rivet
10 Clip
11 Main spring

⊗ : Non-reusable parts

● **Assembly sequence**

Follow the disassembly sequence in reverse.

Tightening torque

Unit : N·m {lbf.ft, kgf·m}

Location	Parts to be tightened	Tightening torque	Remarks
4	Center nut	69 to 93 {51 to 69, 7.0 to 9.5}	—

Special tools

Unit : mm {in.}

Location	Tool name and shape	Part No.	Application
1	Bushing installer **A** : Bushing installer A **B** : Bushing installer B 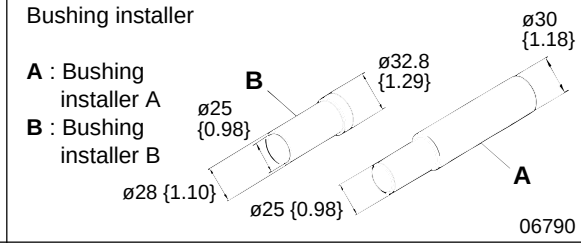	MB999066 **A** : MB999067 **B** : MB999068	Removal and installation of bushing

◆ Service procedure

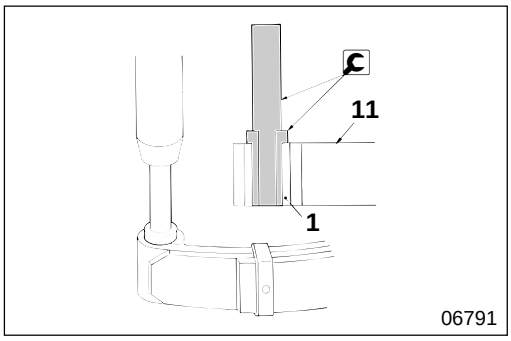

1 **Removal and installation of bushing**

: Bushing installer

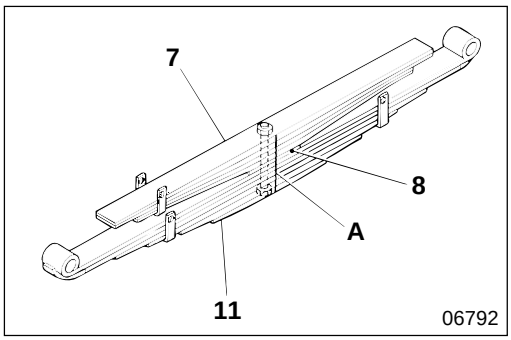

4 **Center nut**

[Removal]

- Put alignment marks **A** on the sides of helper springs **7**, spacer **8**, and main springs **11**.

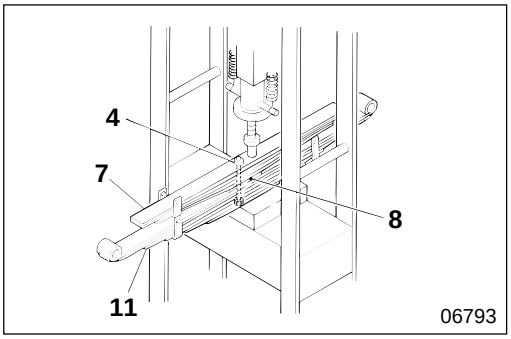

- Compress helper springs **7**, spacer **8**, and main springs **11**, then remove center nut **4**.

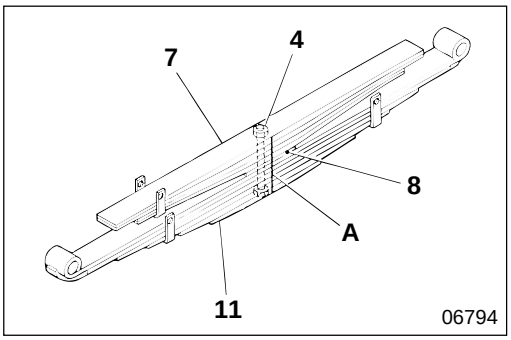

[Installation]

- Align alignment marks **A** on the sides of helper springs **7**, spacer **8**, and main springs **11**, assemble the springs, then tighten center nut **4** temporarily.

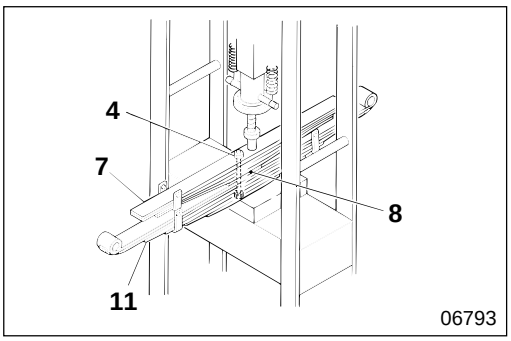

- Compress helper springs **7**, spacer **8**, and main springs **11**, then tighten center nut **4** at specified torque.

LEAF SPRING ASSEMBLY

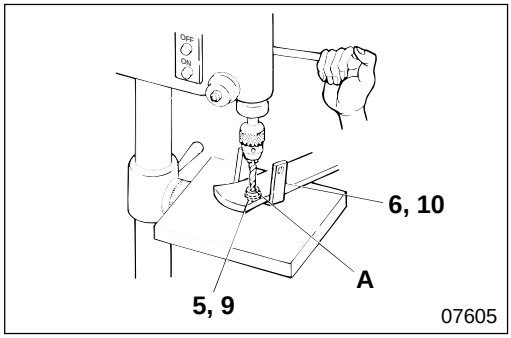

5 **9** **Rivet**

[Removal]
Drill out staked ends **A** of rivets **5**, **9** on a drill press, then remove clips **6**, **10**.

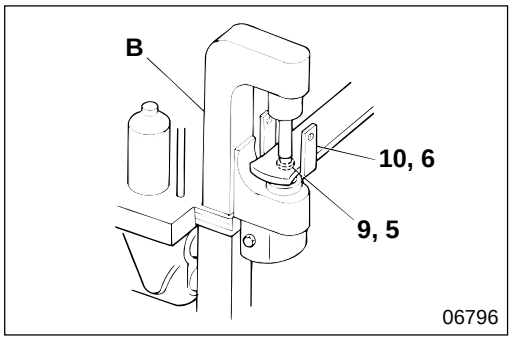

[Installation]
Using riveting machine **B**, mount clips **10**, **6** by staking rivets **9**, **5**.

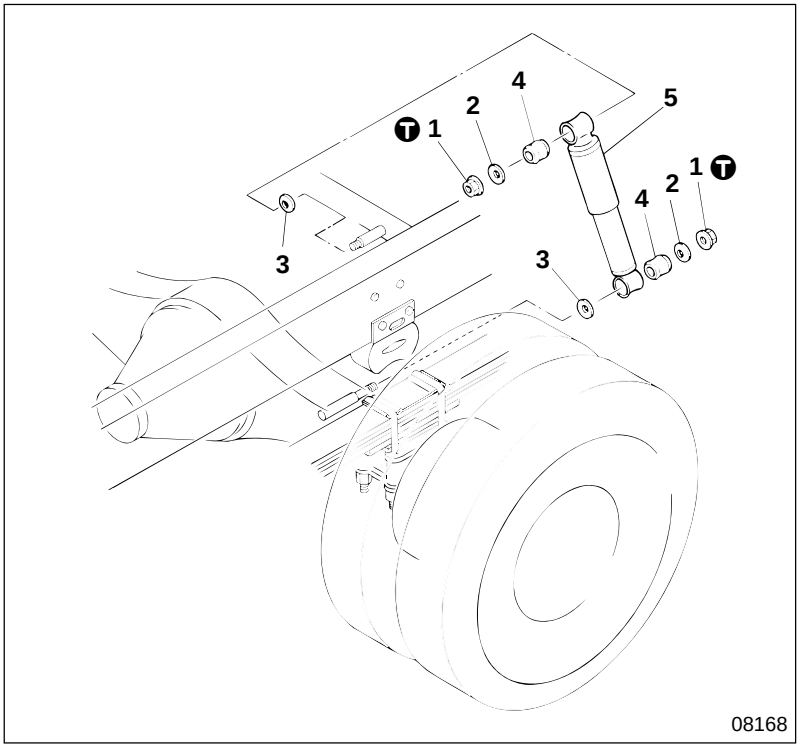

● **Removal sequence**

1 Nut
2 Washer
3 Washer
4 Rubber bushing
5 Shock absorber

● **Installation sequence**

Follow the removal sequence in reverse.

Ⓣ Tightening torque

Unit : N·m {lbf.ft, kgf·m}

Location	Parts to be tightened	Tightening torque	Remarks
1	Nut (Shock absorber mounting)	26.4 to 33.3 {20 to 25, 2.7 to 3.4}	—

STABILIZER < FE >

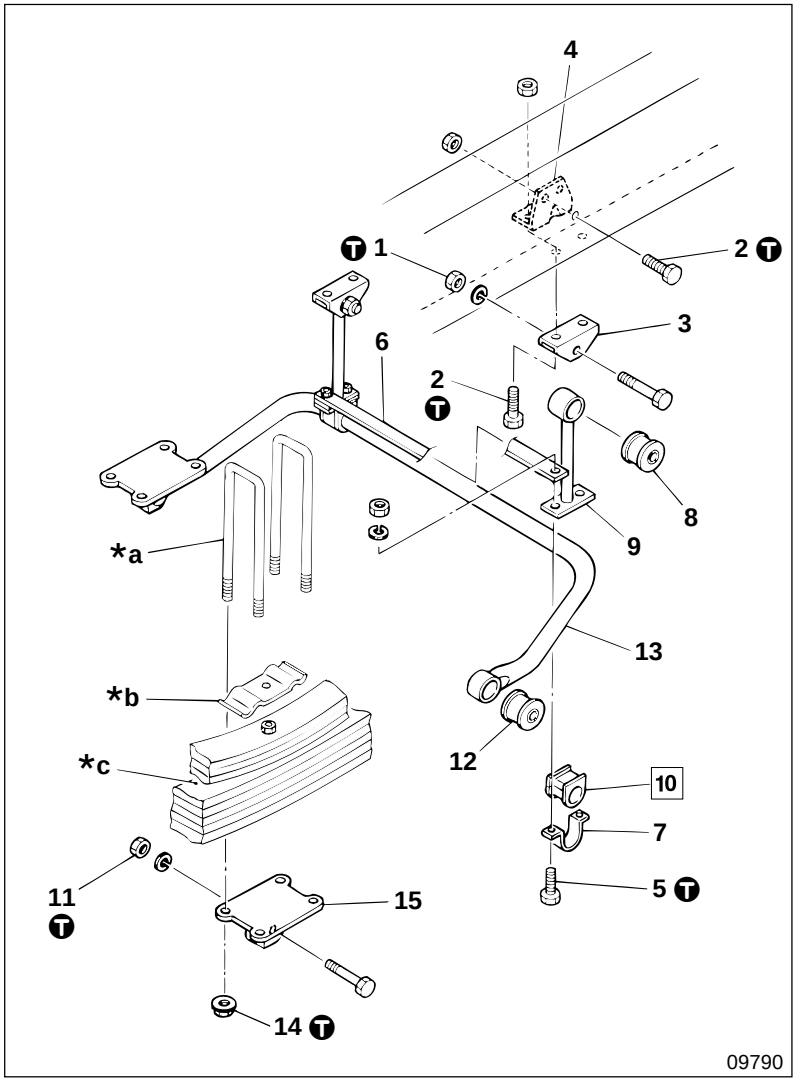

● **Removal sequence**

1 Nut
2 Bolt
3 Stabilizer bracket
4 Stabilizer reinforcement
5 Bolt
6 Plate
7 Clamp
8 Bushing
9 Stabilizer hanger
10 Stabilizer bushing
11 Nut
12 Bushing
13 Stabilizer bar
14 U-bolt nut
15 Stabilizer bracket

***a** : U-bolt
***b** : Spring pad
***c** : Leaf spring assembly

● **Installation sequence**

Follow the removal sequence in reverse.

Ⓣ Tightening torque

Unit : N·m {lbf.ft, kgf·m}

Location	Parts to be tightened	Tightening torque	Remarks
1	Nut (Stabilizer bracket mounting)	33 to 49 {25 to 36, 3.4 to 5.0}	—
2	Bolt (Stabilizer reinforcement mounting)	38 to 59 {28 to 43, 3.9 to 6.0}	—
5	Bolt (Clamp and stabilizer hanger mounting)	12 to 15 {8.7 to 11, 1.2 to 1.5}	—
11	Nut (Stabilizer bracket mounting)	33 to 49 {25 to 36, 3.4 to 5.0}	—
14	U-bolt nut (U-bolt mounting)	339±51 {250±38, 34.6±5.2}	—

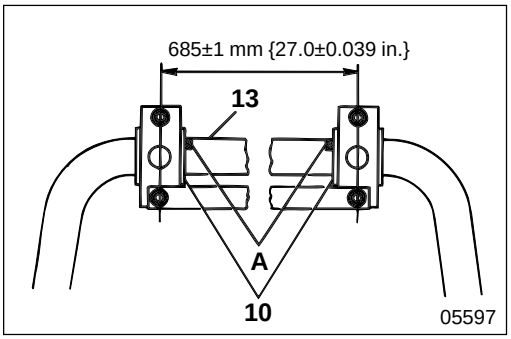

◆ Service procedure

10 **Stabilizer bushing**

Mount stabilizer bushings **10** with their end surfaces aligned with marks **A** on stabilizer bar **13**.

MITSUBISHI
FUSO

FE

Service Manual

Group 34
Rear Suspension

Table of Contents

BACK

HOME

MITSUBISHI FUSO TRUCK OF AMERICA, Inc.

Pub No. TWSE9501-34

GROUP 34 REAR SUSPENSION

STRUCTURE AND OPERATION 2

TROUBLESHOOTING 3

WORK BEFORE REMOVAL AND INSTALLATION OF REAR SUSPENSION 4

REMOVAL AND INSTALLATION OF LEAF SPRING ASSEMBLY 6

LEAF SPRING ASSEMBLY 10

SHOCK ABSORBER 13

STABILIZER 14

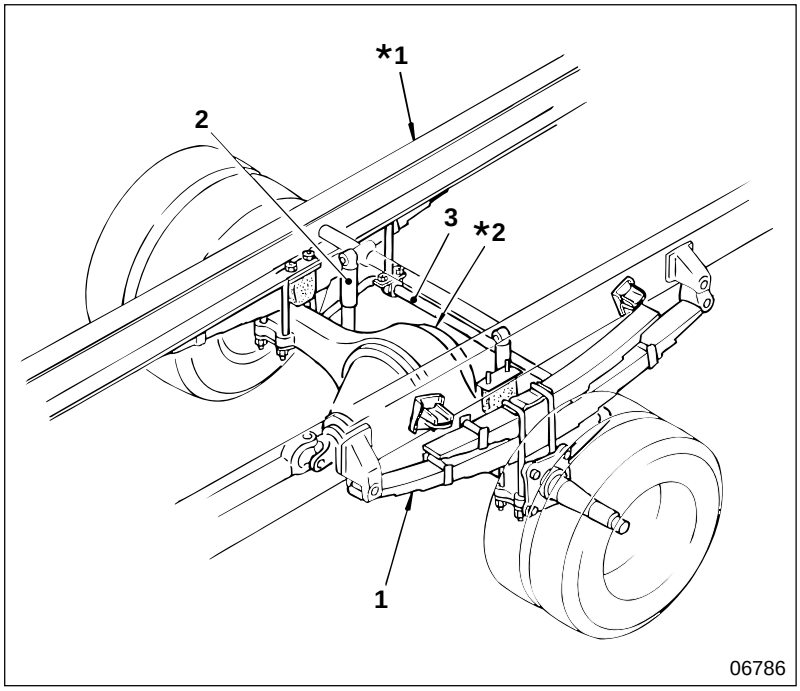

1 Leaf spring assembly
2 Shock absorber
3 Stabilizer

***1** : Frame
***2** : Rear axle

Leaf spring assembly **1** and shock absorber **2** are installed between frame ***1** and rear axle ***2** to support the vehicle body mass and absorb vibration and shock from the road surface to prevent them from being directly transmitted to the vehicle body thereby protecting the crew, the vehicle body, and the cargo. In addition, irregular vibration from the wheels is restrained, ensuring driving stability. Stabilizer **3** is installed to prevent rolling.

Possible causes \ Symptoms		Ride soft with gentle swaying	Noise generated when vehicle is unloaded	Impact transmitted from uneven road surface	Noise generated when vehicle is loaded	Excessive rolling while cruising	Periodic jolts received from the road surface	Remarks
Leaf spring	Cracked or damaged			○				
	Damaged		○					
	Spring hanger broken				○			
	U-bolts loose				○			
	Spring bushing worn		○					
Shackle pins thrust play excessive			○					
Helper rubber or helper stopper damaged or broken					○			
Shock absorber	Oil leaking noticeable or damping force decreased	○						
	Rubber bushing worn		○					
	Bolt loose		○					
Stabilizer	Stabilizer deformed, bushing worn					○		
Tire	Tires worn unevenly						○	
	Tires and wheels unbalanced						○	Gr 31
	Air pressure excessive			○				

WORK BEFORE REMOVAL AND INSTALLATION OF REAR SUSPENSION

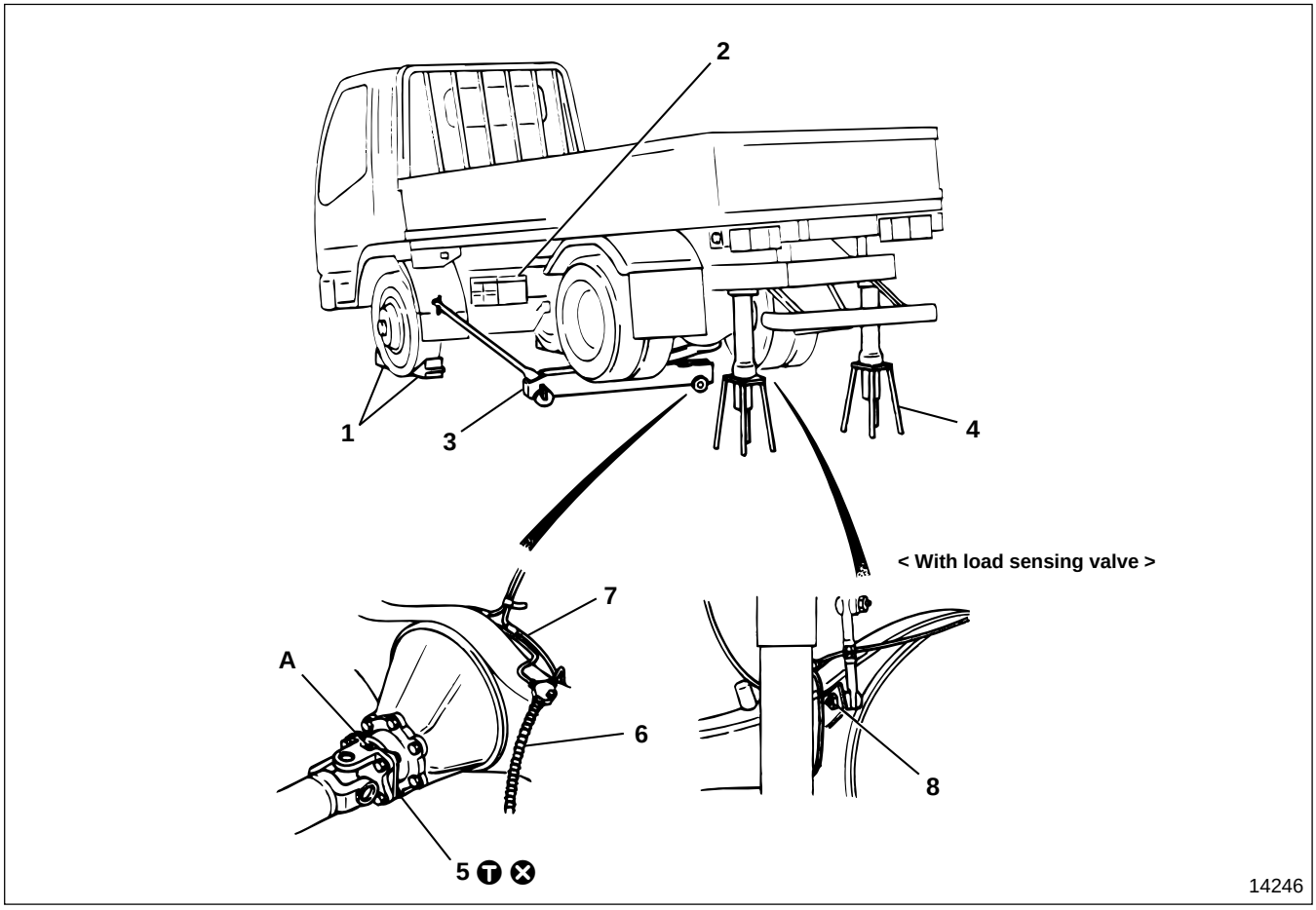

● **Removal sequence**

1 Place wheel chocks.
2 Disconnect the negative battery cable. Gr 54
3 Jack up the rear axle with a garage jack.
4 Support the rear frame on rigid racks.
5 Put alignment marks **A** on the rear axle companion flange and the propeller shaft flange yoke, then remove the nuts (on the joint between the rear axle and the propeller shaft).
6 Remove the brake hose joint (on the frame).
7 Remove the clamp of the brake pad wear indicator harness and disconnect the connector on the frame side. < with disc brake >
8 Remove the nut (joint part of rear axle housing and the load sensing valve). < with load sensing valve >

⊗ : Non-reusable parts

WARNING⚠

- **Chock the wheels securely so the vehicle does not move.**
- **Do not remove the chocks until the entire operation is completed.**
- **Supporting a vehicle on a garage jack only is extremely dangerous, so always support the frame on rigid racks.**
- **Leave the garage jack and rigid racks in place until the entire operation is completed. Never remove them during the operation.**

CAUTION⚠

Be sure to protect the brake hose from dust by fitting blanking plugs.

● **Installation sequence**

Follow the removal sequence in reverse.

WARNING⚠

You must bleed air from the brake system and install the load sensing valve (with load sensing valve) after installing the brake hose, failure to do so would cause the brake to malfunction. Gr 35

CAUTION⚠

Be sure that the brake hose is not twisted when you install it.

Tightening torque

Unit : N·m {lbf.ft, kgf·m}

Location	Parts to be tightened	Tightening torque	Remarks
5	Nut (Rear axle and propeller shaft connecting)	98 to 120 {72 to 87, 10 to 12}	—

REMOVAL AND INSTALLATION OF LEAF SPRING ASSEMBLY

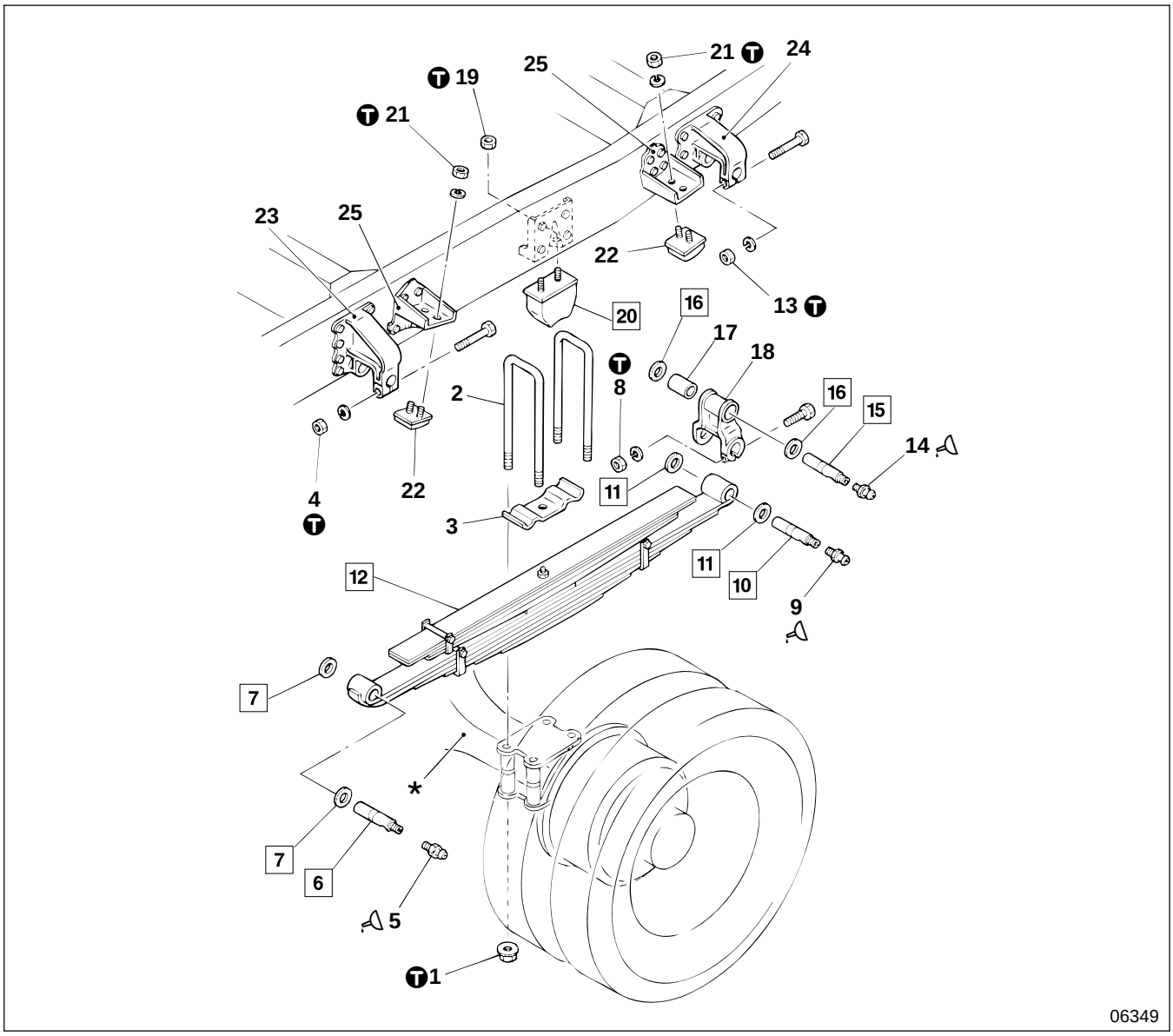

● **Removal sequence**

1	U-bolt nut	**10**	Spring pin	**19**	Nut
2	U-bolt	**11**	Side washer	**20**	Helper rubber
3	Spring pad	**12**	Leaf spring assembly P34-10	**21**	Nut
4	Nut	**13**	Nut	**22**	Helper spring stopper
5	Grease nipple	**14**	Grease nipple	**23**	Rear spring hanger
6	Spring pin	**15**	Spring pin	**24**	Rear shackle hanger
7	Side washer	**16**	Side washer	**25**	Helper spring bracket
8	Nut	**17**	Bushing		
9	Grease nipple	**18**	Spring shackle	*	: Rear axle Gr 27

NOTE

Do not remove rear spring hanger 23, rear shackle hanger 24, or helper spring bracket 25 unless they are faulty. Gr 41

● **Installation sequence**

Follow the removal sequence in reverse.

Service standards

Unit : mm {in.}

Location	Maintenance item	Standard value (Basic diameter in [ ])	Limit	Remedy
6, 10, 12	Clearance between spring pin and bushing of leaf spring assembly	[28] 0.04 to 0.14 {[1.10] 0.0016 to 0.0055}	0.5 {0.020}	—
6, 23	Clearance between spring pin and rear spring hanger	[28] 0.02 to 0.08 {[1.10] 0.00079 to 0.0031}	1.0 {0.039}	—
12, 18	Clearance between leaf spring assembly and spring shackle	0.5 to 1.2 {0.020 to 0.047}	1.5 {0.059}	Adjust side washer
12, 23	Clearance between leaf spring assembly and rear spring hanger	0.5 to 1.2 {0.020 to 0.047}	1.5 {0.059}	Adjust side washer
15, 17	Clearance between spring pin and bushing of spring shackle	[28] 0.04 to 0.14 {[1.10] 0.0016 to 0.0055}	0.5 {0.020}	—
18, 24	Clearance between spring shackle and rear shackle hanger	0.1 to 0.9 {0.0039 to 0.035}	1.0 {0.039}	Adjust side washer
10, 18	Clearance between spring pin and spring shackle	[28] 0.02 to 0.08 {[1.10] 0.00079 to 0.0031}	1.0 {0.039}	—
15, 24	Clearance between spring pin and rear shackle hanger	[28] 0.02 to 0.08 {[1.10] 0.00079 to 0.0031}	1.0 {0.039}	—

Tightening torque

Unit : N·m {lbf.ft, kgf·m}

Location	Parts to be tightened	Tightening torque	Remarks
1	U-bolt nut (U-bolt mounting)	339±24.5 {250±18, 34.6±2.5}	—
4	Nut (Spring pin mounting)	29.4 to 37.2 {22 to 27, 3.0 to 3.8}	—
8	Nut (Spring pin mounting)	29.4 to 37.2 {22 to 27, 3.0 to 3.8}	—
13	Nut (Spring pin mounting)	29.4 to 37.2 {22 to 27, 3.0 to 3.8}	—
19	Nut (Helper rubber mounting)	11.8 to 14.7 {8.7 to 11, 1.2 to 1.5}	—
21	Nut (Helper spring stopper mounting)	11.8 to 14.7 {8.7 to 11, 1.2 to 1.5}	—

Lubricant

Location	Points of application	Kinds	Quantity
5, 9, 14	Supply via grease nipple	Chassis grease [NLGI No.1 (Ca soap)]	As required

Special tools

Unit : mm {in.}

Location	Tool name and shape	Part No.	Application
6, 10, 15	Spring pin remover 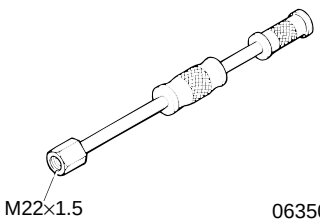	MB999112	Removal of spring pin

REMOVAL AND INSTALLATION OF LEAF SPRING ASSEMBLY

◆ Service procedure

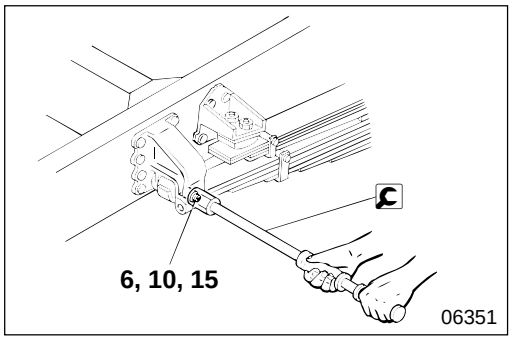

6 **10** **15** **Removal of spring pin**

Remove spring pins **6**, **10**, **15** using 🔧 spring pin remover.

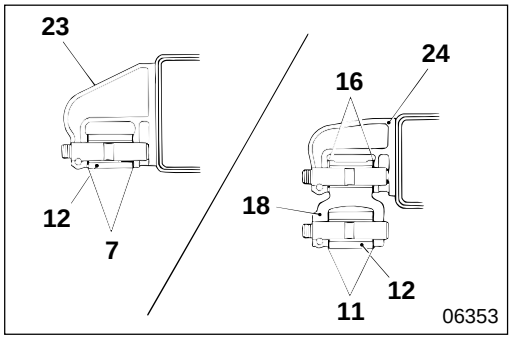

7 **11** **16** **Adjustment of side washer (for adjustment)**

- Using side washer **11**, adjust the clearance between leaf spring assembly **12** and spring shackle **18** to the standard value.
- Using side washer **7**, adjust the clearance between leaf spring assembly **12** and rear spring hanger **23** to the standard value.
- Using side washer **16**, adjust the clearance between spring shackle **18** and rear shackle hanger **24** to the standard value.
- Two different thicknesses are available for side washers **7**, **11**, **16** : 0.5 mm {0.020 in.} and 1.0 mm {0.039 in.}

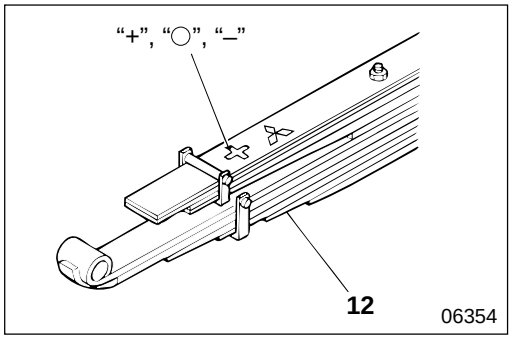

12 **Leaf spring assembly left/right height combinations**

When replacing leaf spring assembly **12**, select the members so that the left and right height marks "+", "○" and "–" are combined as shown below.

Item	Combination		
	1	2	3
Leaf spring assembly, left side	+	○	–
Leaf spring assembly, right side	+	○	–

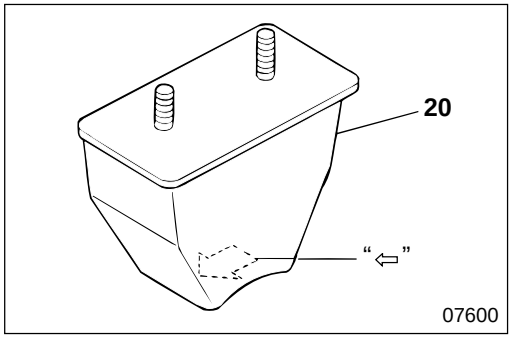

20 **Installation of helper rubber**

Install helper rubber **20** with installation mark "⇦" directed to the front of the vehicle.

M E M O

LEAF SPRING ASSEMBLY

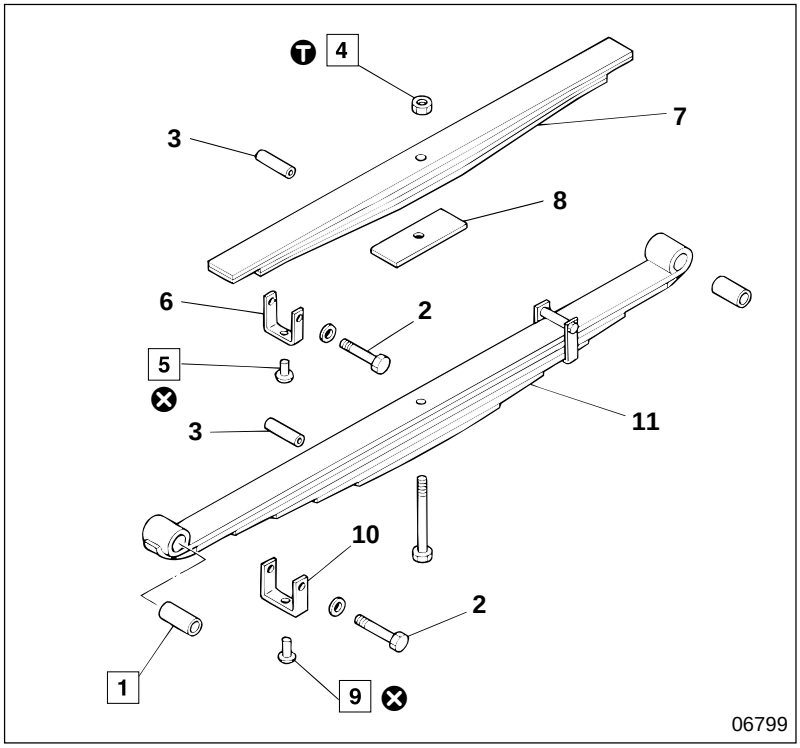

● **Disassembly sequence**

1 Bushing
2 Bolt
3 Pipe
4 Center nut
5 Rivet
6 Clip
7 Helper spring
8 Spacer
9 Rivet
10 Clip
11 Main spring

⊗ : Non-reusable parts

● **Assembly sequence**

Follow the disassembly sequence in reverse.

Tightening torque

Unit : N·m {lbf.ft, kgf·m}

Location	Parts to be tightened	Tightening torque	Remarks
4	Center nut	69 to 93 {51 to 69, 7.0 to 9.5}	—

Special tools

Unit : mm {in.}

Location	Tool name and shape	Part No.	Application
1	Bushing installer **A** : Bushing installer A **B** : Bushing installer B 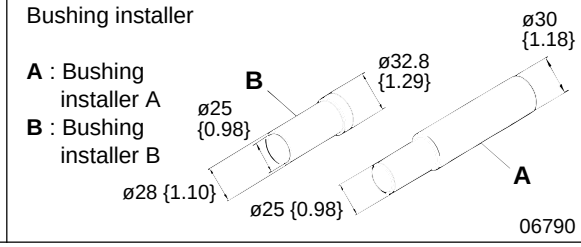	MB999066 **A** : MB999067 **B** : MB999068	Removal and installation of bushing

◆ Service procedure

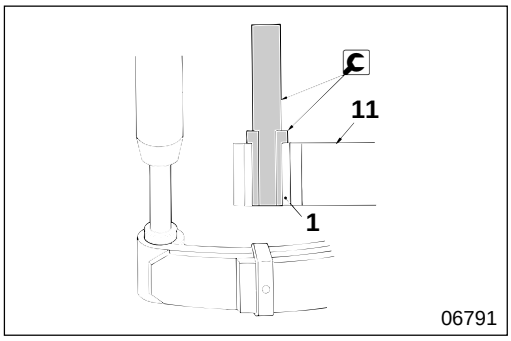

1 **Removal and installation of bushing**

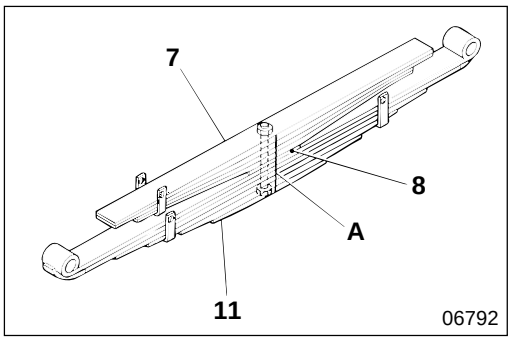

4 **Center nut**

[Removal]

- Put alignment marks **A** on the sides of helper springs **7**, spacer **8**, and main springs **11**.

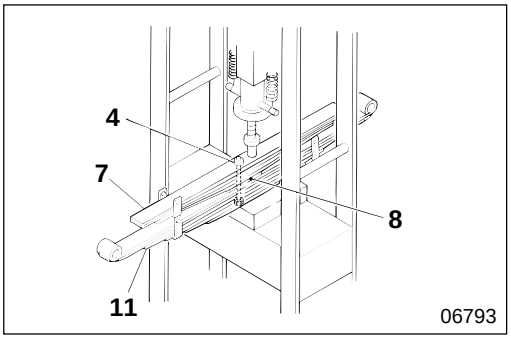

- Compress helper springs **7**, spacer **8**, and main springs **11**, then remove center nut **4**.

[Installation]

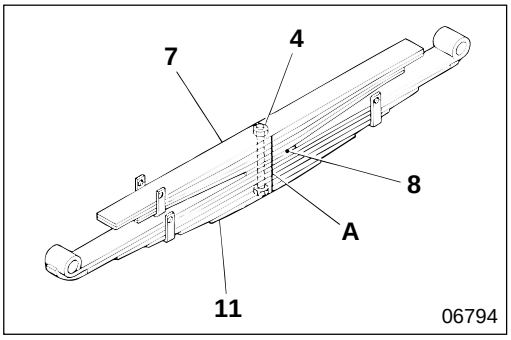

- Align alignment marks **A** on the sides of helper springs **7**, spacer **8**, and main springs **11**, assemble the springs, then tighten center nut **4** temporarily.

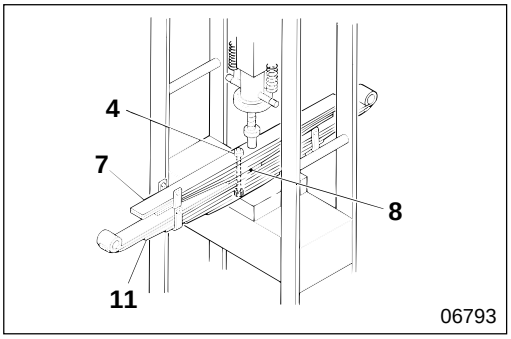

- Compress helper springs **7**, spacer **8**, and main springs **11**, then tighten center nut **4** at specified torque.

LEAF SPRING ASSEMBLY

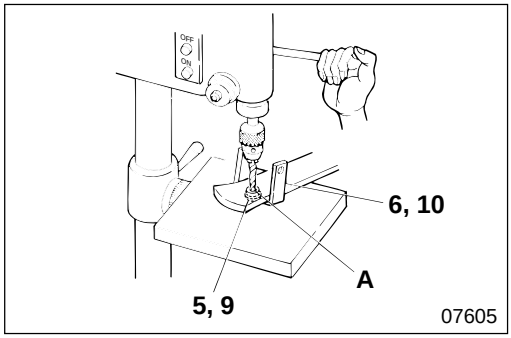

5 **9** **Rivet**

[Removal]
Drill out caulked ends **A** of rivets **5**, **9** on a drill press, then remove clips **6**, **10**.

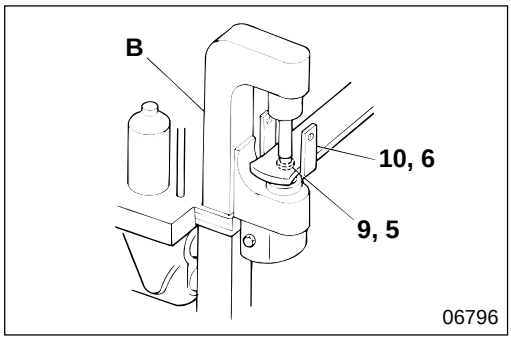

[Installation]
Using riveting machine **B**, mount clips **10**, **6** by caulking rivets **9**, **5**.

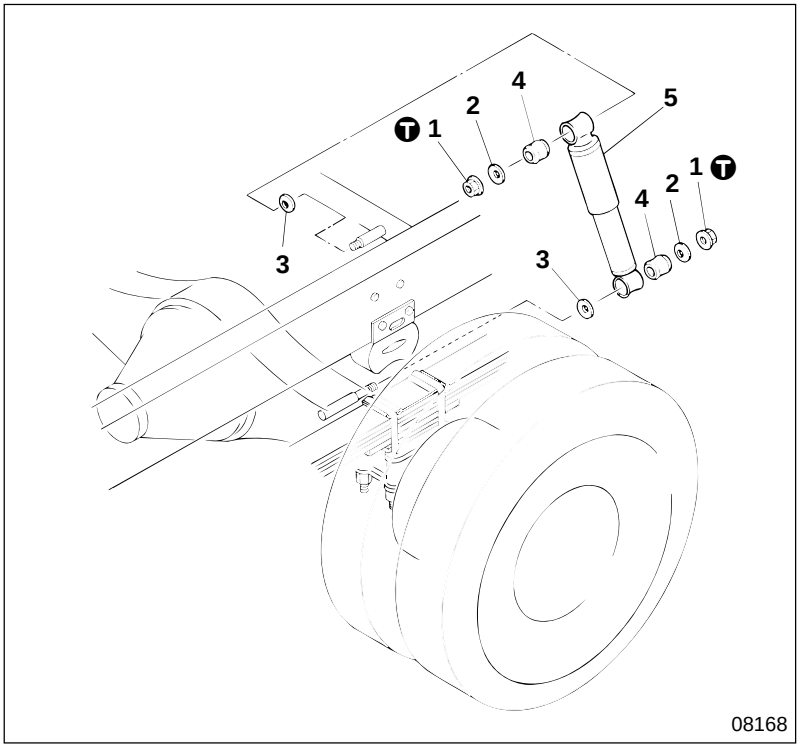

● **Removal sequence**

1 Nut
2 Washer
3 Washer
4 Rubber bushing
5 Shock absorber

● **Installation sequence**

Follow the removal sequence in reverse.

Ⓣ Tightening torque

Unit : N·m {lbf.ft, kgf·m}

Location	Parts to be tightened	Tightening torque	Remarks
1	Nut (Shock absorber mounting)	26.4 to 33.3 {20 to 25, 2.7 to 3.4}	—

STABILIZER

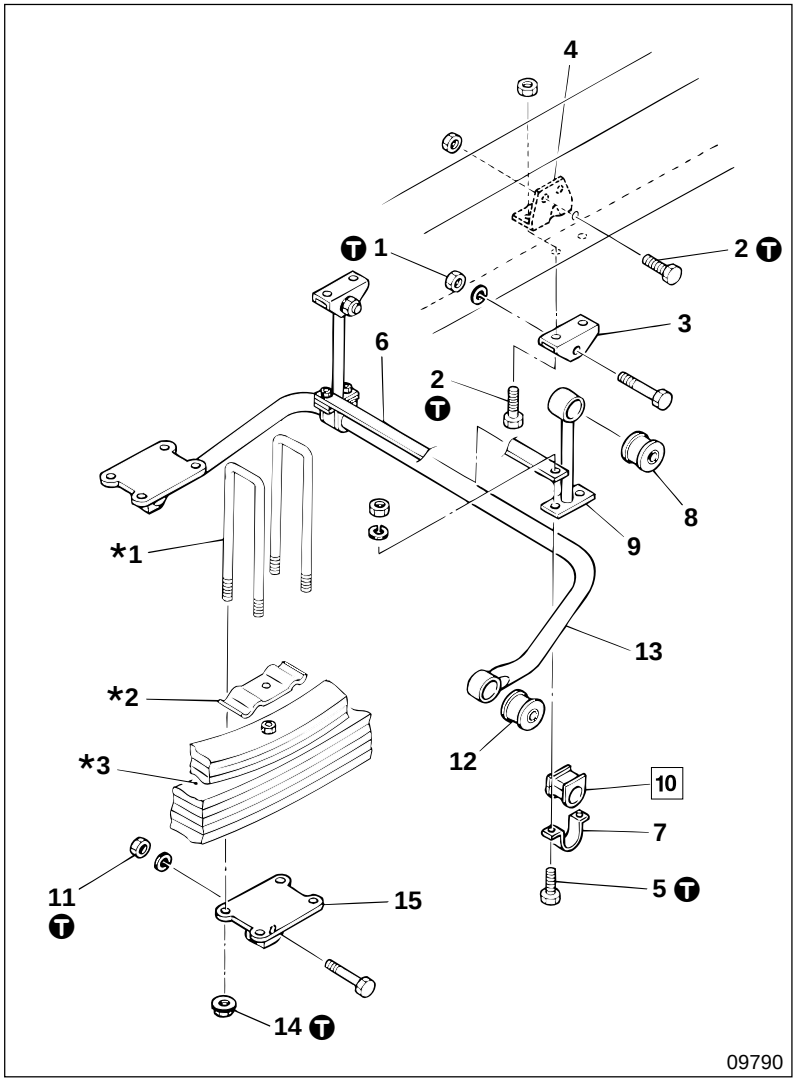

● **Removal sequence**

1 Nut
2 Bolt
3 Stabilizer bracket
4 Stabilizer reinforcement
5 Bolt
6 Plate
7 Clamp
8 Bushing
9 Stabilizer hanger
10 Stabilizer bushing
11 Nut
12 Bushing
13 Stabilizer bar
14 U-bolt nut
15 Stabilizer bracket

***1** : U-bolt
***2** : Spring pad
***3** : Leaf spring assembly

● **Installation sequence**

Follow the removal sequence in reverse.

Ⓣ Tightening torque

Unit : N·m {lbf.ft, kgf·m}

Location	Parts to be tightened	Tightening torque	Remarks
1	Nut (Stabilizer bracket mounting)	33 to 49 {25 to 36, 3.4 to 5.0}	—
2	Bolt (Stabilizer reinforcement mounting)	38 to 59 {28 to 43, 3.9 to 6.0}	—
5	Bolt (Clamp and stabilizer hanger mounting)	12 to 15 {8.7 to 11, 1.2 to 1.5}	—
11	Nut (Stabilizer bracket mounting)	33 to 49 {25 to 36, 3.4 to 5.0}	—
14	U-bolt nut (U-bolt mounting)	339±24.5 {250±18, 34.6±2.5}	—

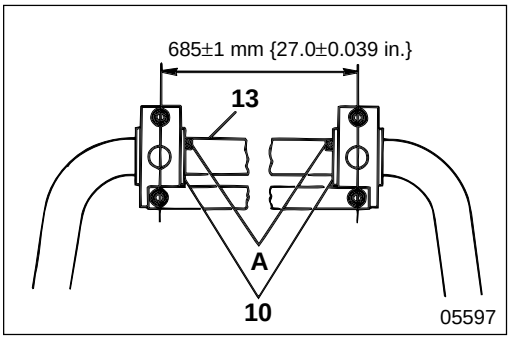

◆ Service procedure

10 **Stabilizer bushing**

Mount stabilizer bushings **10** with their end surfaces aligned with marks **A** on stabilizer bar **13**.

BACK HOME

FE

Service Manual

Group 35 - Brake

Group 35 - Brake
1998 Minor Change <FE/FG>

Group 35A - Anti-Lock Brake System (ABS)
2000 Minor Change <FE/FG>

MITSUBISHI FUSO TRUCK OF AMERICA, Inc.

Pub No. TWSE9501-00

MITSUBISHI
FUSO

FE/FG

Service Manual

Group 35A
Anti-Lock Brake System (ABS)

'00 Minor Change

Table of Contents

MITSUBISHI FUSO TRUCK OF AMERICA, Inc.

BACK HOME

Pub No. TWSE9501-435A

GROUP 35A ANTI-LOCK BRAKE SYSTEM (ABS)

SPECIFICATIONS 35A- 2

STRUCTURE AND OPERATION 35A- 2

ON-VEHICLE INSPECTION AND ADJUSTMENT
- Periodic Inspection Procedures 35A- 9
- Inspection of Wheel Speed Sensor Signal Waveform Using Oscilloscope 35A-10
- Hydraulic Unit Operation Check 35A-11

TROUBLESHOOTING
- Troubleshooting Procedures 35A-13
- Diagnosis Code Indication 35A-14
- Diagnosis Code Chart 35A-17
- Actuator Drive Chart 35A-17
- Service Data 35A-18

WHEEL SPEED SENSOR AND ROTOR
< FRONT AXLE : DISC BRAKE > 35A-20
< FRONT AXLE : DRUM BRAKE > 35A-24
< REAR AXLE : DISC BRAKE > 35A-30
< REAR AXLE : DRUM BRAKE > 35A-36

ELECTRIC CIRCUIT AND PART INSTALLATION LOCATIONS 35A-42

SPECIFICATIONS/STRUCTURE AND OPERATION

SPECIFICATIONS

Item	Specifications
Brake system	Vacuum servo
Anti-lock brake system (number of sensors/number of channels)	ABS (4S/4K)
Manufacturer	NIPPON ABS

STRUCTURE AND OPERATION
Anti-lock Brake System (ABS)

The anti-lock brake system (ABS) prevents tire slippage due to wheel lockup caused by sudden braking and braking on slippery road surfaces. The ABS provides a driver with vehicle controllability and directional stability in braking.

● Wheel lockup

Rotating tires of a moving vehicle have a tendency to continue traveling in the direction of tire rotation. Because of this characteristic, a driver can control the vehicle's traveling direction by moving the front wheels to a desired direction using the steering wheel.

In a vehicle not equipped with an anti-lock brake system, when a driver depresses the brake pedal with full force, the wheels can lock up under certain conditions. Tires in a wheel lockup condition lose the tendency to maintain directional characteristic, and the vehicle starts sliding in a direction of an externally applied force regardless of the tire direction. In other words, when wheel lockup occurs, the vehicle loses its directional stability, disallowing the driver to control the vehicle's movement.

The following shows how a vehicle without ABS loses its directional stability when different tires lock up on slippery road surfaces.

● Front wheel lockup (both front tires)

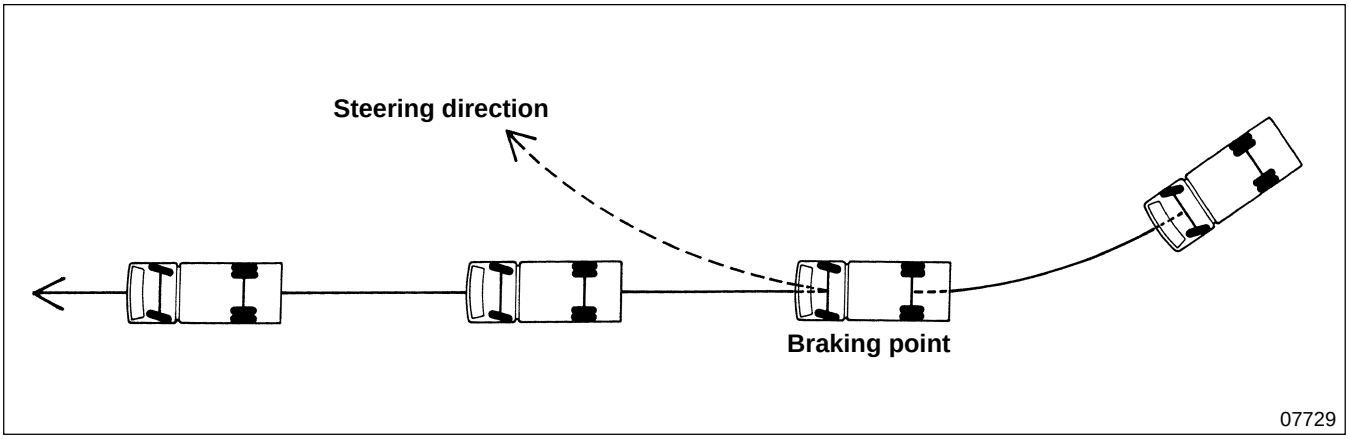

The front tires lose directional stability, but the rear tires try to travel in the direction of rotation since they are not locked up. Because of the front wheel lockup, a steering wheel operation does not change the vehicle's moving direction.

● **Rear wheel lockup (both rear tires)**

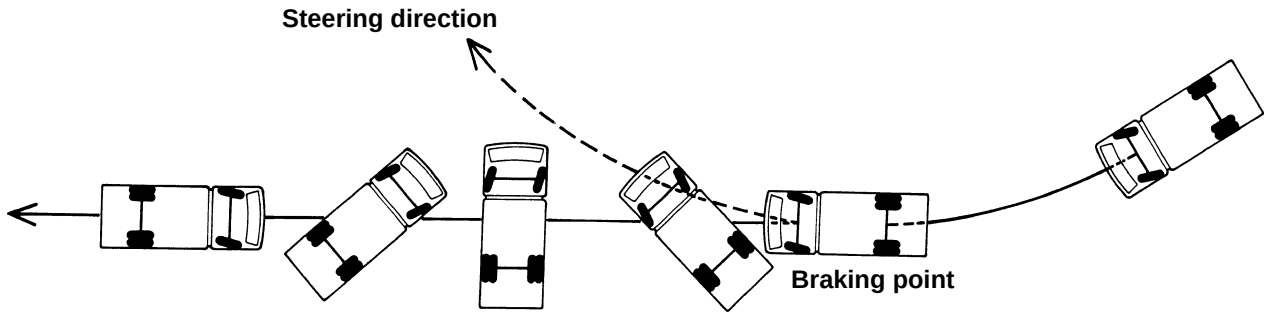

When the steering wheel is operated with the rear wheels in a lockup condition, the front tires try to change the vehicle's traveling direction, but the rear tires slide sideways, causing the vehicle to spin. If wheel lockup occurs in a vehicle traveling in a straight direction, the force of inertia continues to push the vehicle straight ahead from the back of the vehicle due to the lack of stopping force in the rear tires, and the vehicle can spin.

● **All wheel lock up (front and rear tires)**

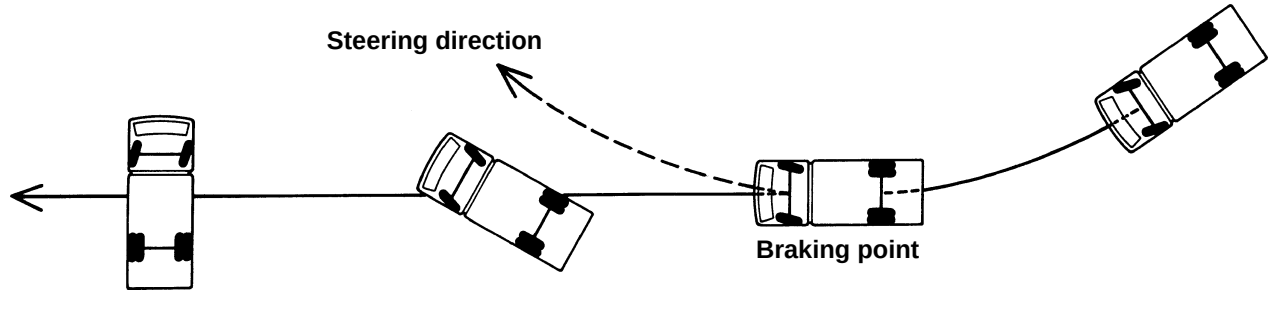

When wheel lockup occurs in both front and rear tires, all four tires lose directional stability. Therefore, the vehicle slips in the direction of inertia regardless of the steering direction.

● **Wheel lockup on surfaces with split μ factors (road surface with different friction coefficients for right and left tires)**

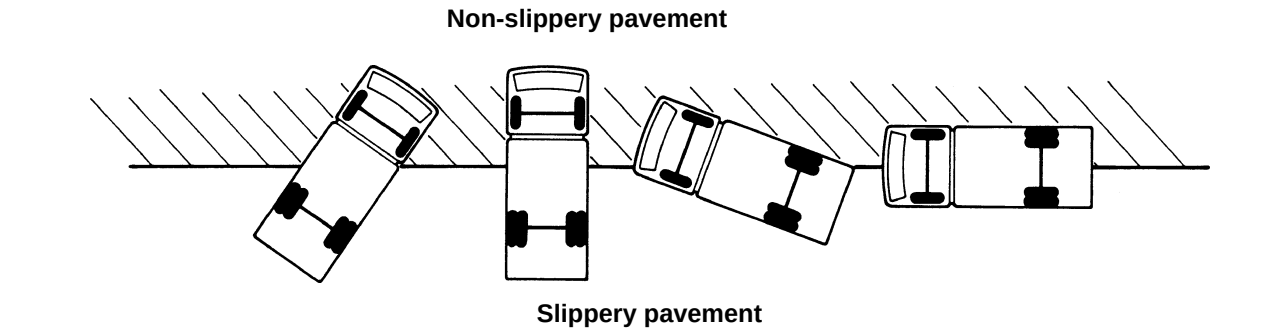

The tires on a surface with a lower friction coefficient lock up first. The tires in a lockup condition start sliding, thus failing to provide effective stopping force. Due to this imbalance in the stopping power between the right and left tires, one side of the vehicle slows down while the other side continues traveling, thus resulting in the loss of directional stability. When this happens during sudden braking, the vehicle spins.

Structure of ABS

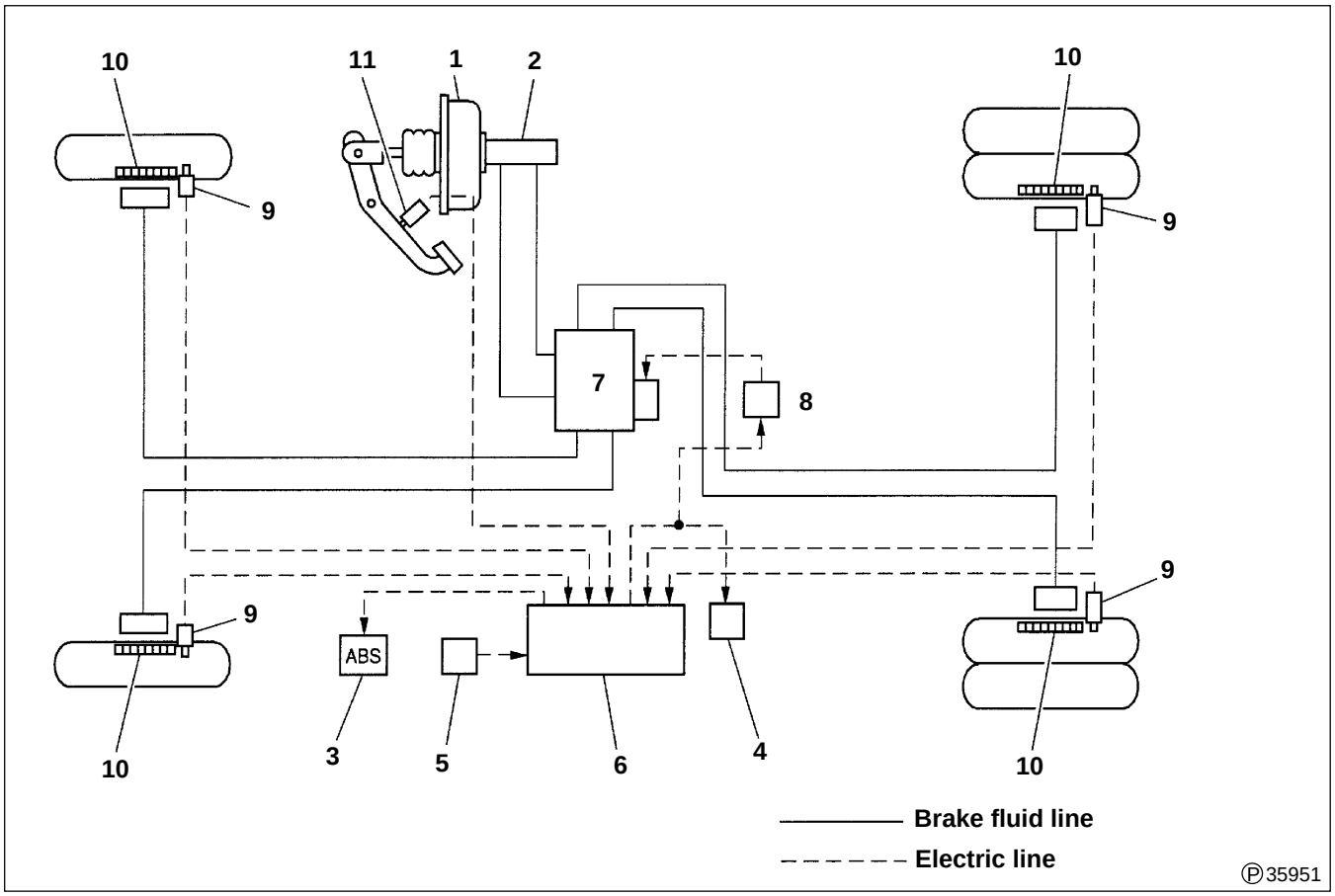

1 Brake booster (Mastervac)
2 Brake master cylinder
3 ABS warning lamp
4 Exhaust brake cut relay
5 G sensor < FG >
6 ECU
7 Hydraulic unit
8 Relay box
9 Wheel speed sensor
10 Rotor
11 Stop lamp switch

The ABS uses wheel speed sensors **9** and ECU **6** to monitor the rotating speed of each wheel. The FG models are also equipped with G sensor **5** for the detection of the degree of vehicle's forward and backward acceleration. When the wheel speed exceeds the preset deceleration speed or slip rate during braking, the ECU detects it as a tendency leading to wheel lockup, and sends control signals to hydraulic unit **7** and relay box **8**. The signals activate the solenoid valves to reduce the brake fluid pressure in the wheel brakes and ease the braking force to prevent wheel lockup. Then, when the wheel speed increases, wheel speed sensors **9** send signals to the solenoid valves in hydraulic unit **7** by way of ECU **6** to increase the brake fluid pressure in the wheel brakes to augment the braking force. This control cycle is repeated to prevent wheel lockup on slippery pavements and ensure the vehicle's directional stability during braking. The 4-sensor 4-channel anti-lock brake system uses four wheel speed sensors **9**, which are located at the front and rear wheels, to control each of the four wheels.

● **ABS function**

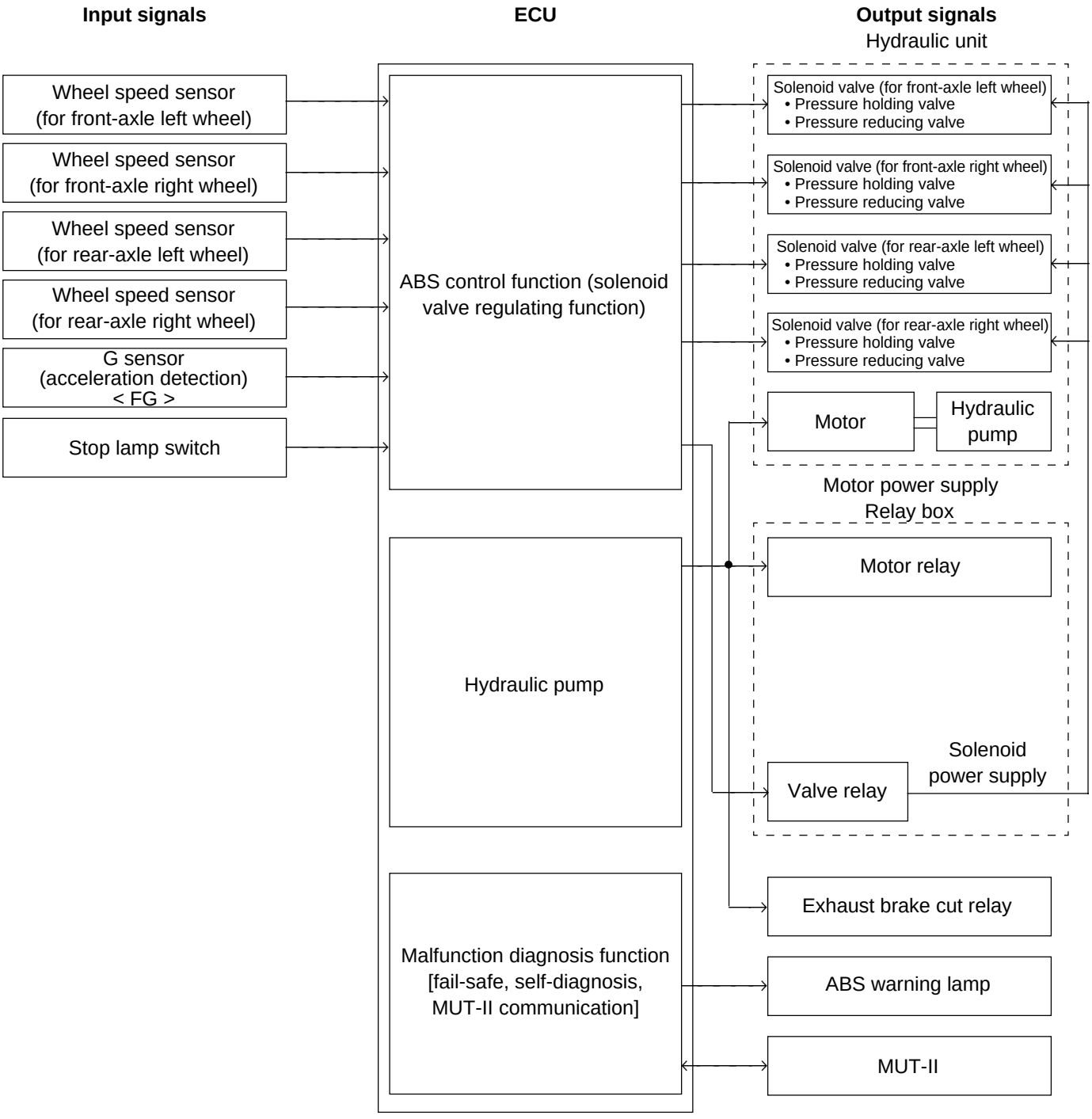

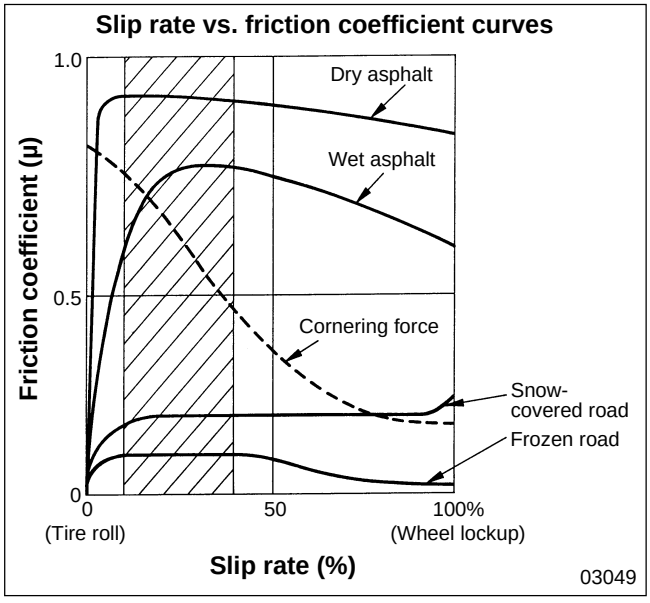

● ABS control function

To provide optimum stopping power, the ABS controls the braking force based on the slip rate determined by the relationship between the wheel speed and the vehicle speed. When the brake is applied, the resulting force slows down the wheel rotation, thus reducing the vehicle speed. However, inertia acts on the vehicle and tries to maintain the vehicle's forward movement despite the stopping force applied by the tires. When there is a difference between the wheel speed and vehicle speed, slipping occurs. The degree of slippage is expressed by a slip rate.

$$\text{Slip rate (\%)} = \frac{\text{Vehicle speed} - \text{Wheel speed}}{\text{Vehicle speed}} \times 100$$

When the slip rate is 0%, there is no slippage between the tires and pavement. The slip rate of 100% refers to a wheel lockup condition.

The graph shows the time-based changes in the friction coefficient of a rolling tire during the process of wheel lockup. When the brake is applied gradually while the tires are rotating on pavement, the tires begin to slip while in rotation.

When the brake is applied harder, the tires stop rotating and start to slide on the pavement. This condition is called wheel lockup.

The friction coefficient is highest when the slip rate is within the shaded area on the graph.

In other words, tires provide maximum friction when the braking force is appropriately controlled to maintain the slip rate in the range indicated by the shaded area on the graph, rather than when the brake is applied at full force.

In a vehicle equipped with ABS, the ECU and hydraulic unit adjust the braking force and maintain it within the shaded area on the graph where the friction coefficient is high, thus preventing tire slippage and ensuring braking stability.

ABS Operation

● **ABS control characteristic curve**

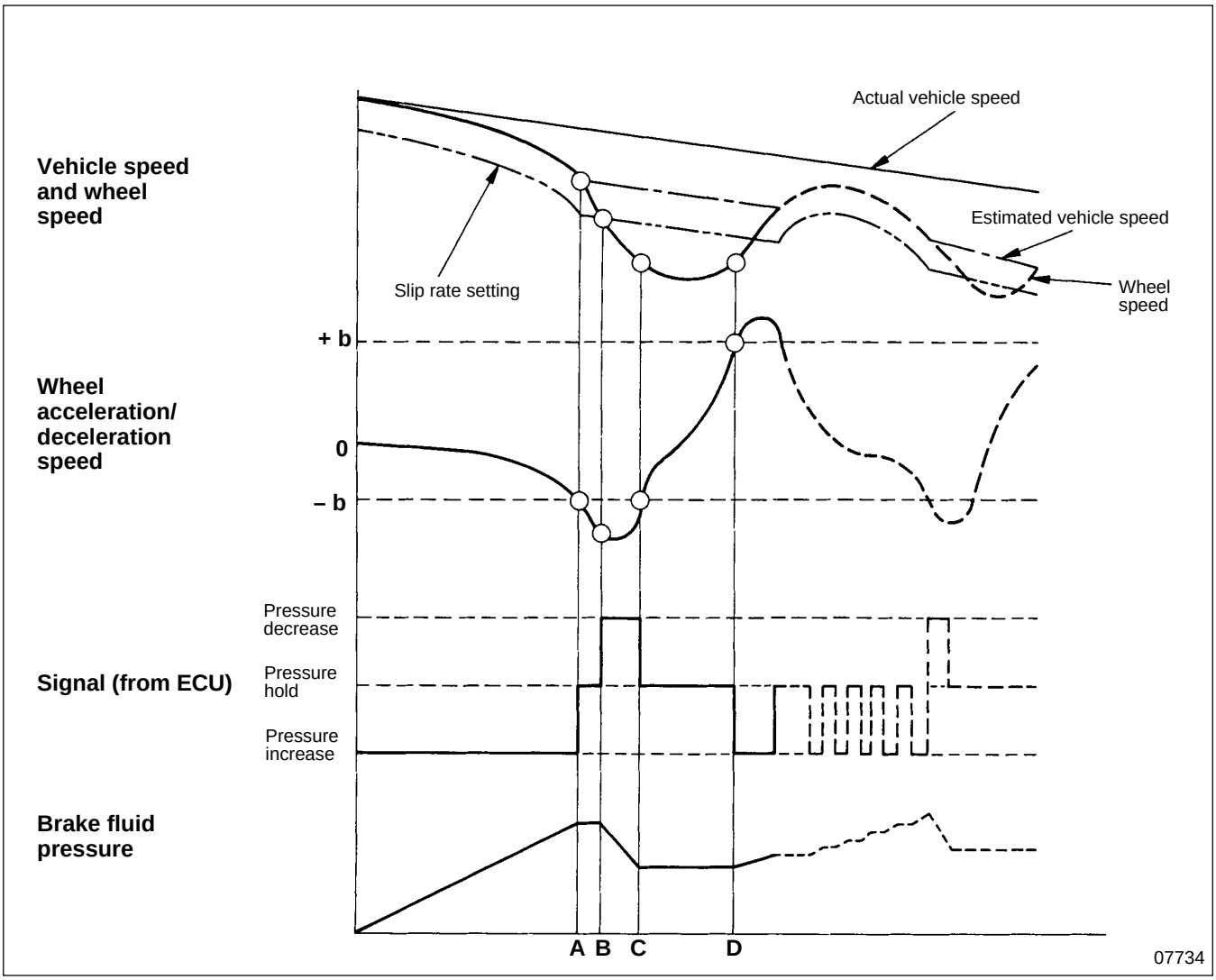

The above ABS control characteristic graph shows the time-based changes in vehicle speed, wheel acceleration/ deceleration speed and brake fluid pressure level during braking.

- When the wheel deceleration speed exceeds the speed setting **– b** at point **A**, the ECU sends a signal to maintain the brake fluid pressure at the same level.
  At the same time, the ECU estimates the vehicle speed according to a programmed calculation method.
- When the vehicle speed decreases further and the slip rate exceeds the setting at point **B**, the ECU detects it as a tendency leading to wheel lockup, and sends a signal to reduce the brake fluid pressure.
- When the wheel speed increases because of the reduced brake fluid pressure and the wheel speed exceeds the setting **– b** at point **C**, the ECU sends a signal to maintain the brake fluid pressure at the same level.
- When the wheel speed increases further and the wheel speed exceeds the setting **+ b** at point **D**, the ECU determines that there is no risk of wheel lockup and sends a signal to increase the brake fluid pressure.

By repeating the above control cycle, the ABS prevents wheel lockup and provides maximum friction between the tires and pavement to ensure high stability during braking.

● **ABS and exhaust brake system**

On slippery road surfaces, activation of the exhaust brake system can result in wheel lockup. If the exhaust brake activates during an ABS braking operation, proper braking function cannot be provided by the ABS.
To prevent this, the exhaust brake system is deactivated during ABS operation even when the exhaust brake switch is turned ON.
When the ABS stops providing its function, the exhaust brake system becomes operable if the exhaust brake switch is ON.

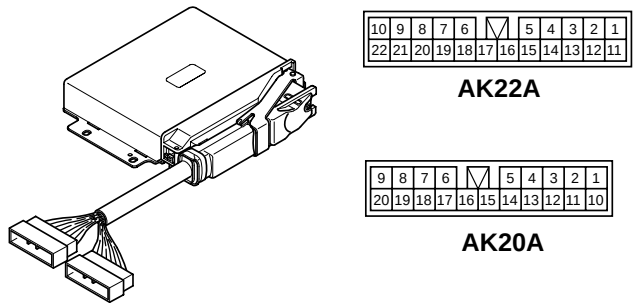

Ⓟ36208

● **ECU**

This component calculates the wheel speed and estimates the vehicle speed based on signals sent from the wheel speed sensors. Based on the calculation results, it determines the degree of wheel lockup tendency, and sends brake fluid pressure control signals to the solenoid valves of the hydraulic unit to regulate brake fluid pressure accordingly.

The ECU is equipped with a self-diagnosis function. Should an abnormality occur, the ECU turns on the warning lamp on the instrument panel to indicate the system malfunction and deactivates the ABS control to set the brake system in normal condition (without anti-lock brake system control).

	AK22A	AK20A
Terminal No.	Connection destination	
1	Ground	G sensor (ground) < FG >
2	Ground	G sensor (signal) < FG >
3	–	–
4	Hydraulic unit (motor drive)	Meter cluster (ABS warning lamp)
5	Hydraulic unit (motor drive monitor)	Starter switch terminal M (ECU power supply)
6	–	Wheel speed sensor (rear-axle right-wheel input)
7	Hydraulic unit (rear-axle right-wheel brake fluid pressure decrease)	Wheel speed sensor (rear-axle left-wheel input)
8	Hydraulic unit (rear-axle left-wheel brake fluid pressure decrease)	Wheel speed sensor (front-axle right-wheel input)
9	Hydraulic unit (front-axle right-wheel brake fluid pressure decrease)	Wheel speed sensor (front-axle left-wheel input) < FE >
10	Hydraulic unit (front-axle left-wheel brake fluid pressure decrease)	G sensor (power supply) < FG >
11	Ground	–
12	Ground	MUT-II connector
13	–	MUT-II connector
14	Relay box (valve relay drive)	Stop lamp switch
15	Relay box (valve relay and motor relay power supply)	–
16	Exhaust brake cut relay	Wheel speed sensor (front-axle left-wheel input) < FG >
17	Exhaust brake cut relay	Wheel speed sensor (rear-axle right-wheel grounding)
18	–	Wheel speed sensor (rear-axle left-wheel grounding)
19	Hydraulic unit (rear-axle right-wheel brake pressure hold)	Wheel speed sensor (front-axle right-wheel grounding)
20	Hydraulic unit (rear-axle left-wheel brake pressure hold)	Wheel speed sensor (front-axle left-wheel grounding)
21	Hydraulic unit (front-axle right-wheel brake pressure hold)	
22	Hydraulic unit (front-axle left-wheel brake pressure hold)	

Periodic Inspection Procedures

(1) Periodic inspection of Anti-lock brake system

- Inspect the vehicle's Anti-lock brake system following the procedure below.
- If an abnormality is found in this inspection, further inspect the Anti-lock brake system using MUT-II (multi-use tester) by referring to TROUBLESHOOTING section.
  P35A-14

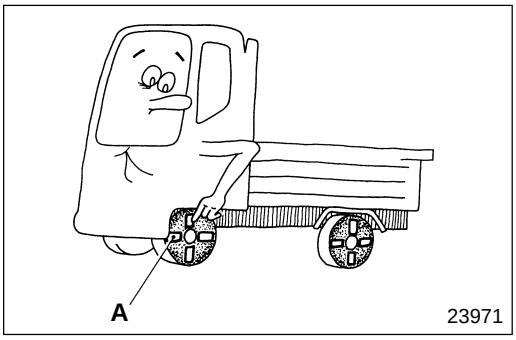

- Inspection procedure

① With the vehicle stationary, press the brake pedal and inspect the hydraulic unit for fluid leaks.
If fluid leaks from the hydraulic unit, replace the unit. If fluid leaks from the fluid pipe or connector, tighten the joint.

② Inspection using brake tester
Check the braking force at each wheel with a brake tester by following the inspection procedure for ordinary vehicles.
If an abnormality is found, inspect the wheel brake units, service brake system and hydraulic unit.

③ Drive the vehicle and check the operation of the Anti-lock brake system.
- Conduct a test drive at an open area to ensure safety.
- Conduct a test drive without cargo.

Attach white tape **A** on the sides of tires, so that it is easy to observe the rotation of the front and rear wheels.
- Turn the starter switch from the OFF position to the ON position, and make sure that the ABS warning lamp lights.
  Then, check that the ABS warning lamp turns off approximately two seconds after the starter switch is turned on.
- Drive the vehicle at a speed of 20 to 30 km/h {12 to 19 mph}, and apply a sudden brake. Make sure that wheel lockup does not occur in any of the tires.

Inspection of Wheel Speed Sensor Signal Waveform Using Oscilloscope

Inspect the rotor for dents using an oscilloscope, since the tester cannot be used for dent detection.

NOTE

Use an oscilloscope with a waveform recording function.

- Lift the wheel to be tested off the ground, and disconnect the connector at the wheel speed sensor.
- Connect the terminal of the oscilloscope to the terminal of the disconnected connector. Rotate the wheel at a constant speed. Check the waveform shown on the oscilloscope to check for dents on the rotor.

Normal waveform (no dent on rotor)

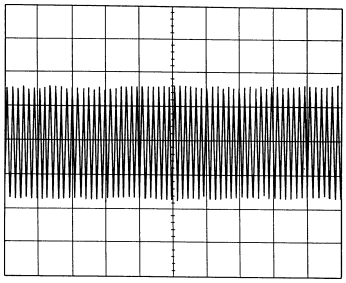

03122

- Rotor dents are often made by the rotor press-fit on the hub end contacting the axle during installation of the hub and brake drum assembly on the axle. When installing the hub & brake drum assembly, pay close attention to prevent the rotor from contacting other parts.
- If the wave is noticeably narrower in width than other observed waves, the rotor may be chipped. Visually inspect the rotor.

Hydraulic Unit Operation Check

Operation check using MUT-II

- Lift the vehicle using a jack and support it with rigid racks, or position the tires on brake tester rollers.

WARNING

- **The brake tester rollers and tires must be dry during inspection.**
- **To test the front brakes, apply the parking brake. To test the rear brakes, place wheel chocks at the front tires to secure them in position.**

- Disengage the parking brake, and feel the drag resistance of the brake on each wheel.
  When using a brake tester, record the indicated drag resistance of the brake.
- Set the starter switch to the OFF position, then connect the MUT-II.
- Set the testing equipment and system on the MUT-II.
- After making sure that the transmission is in the neutral position, start the engine.

NOTE

- **When the engine is turned on, the ABS switches to the MUT-II mode and the ABS warning lamp flashes.**
- **When the ABS function is deactivated due to the ECU's fail-safe function, the actuator test cannot be performed with the MUT-II.**

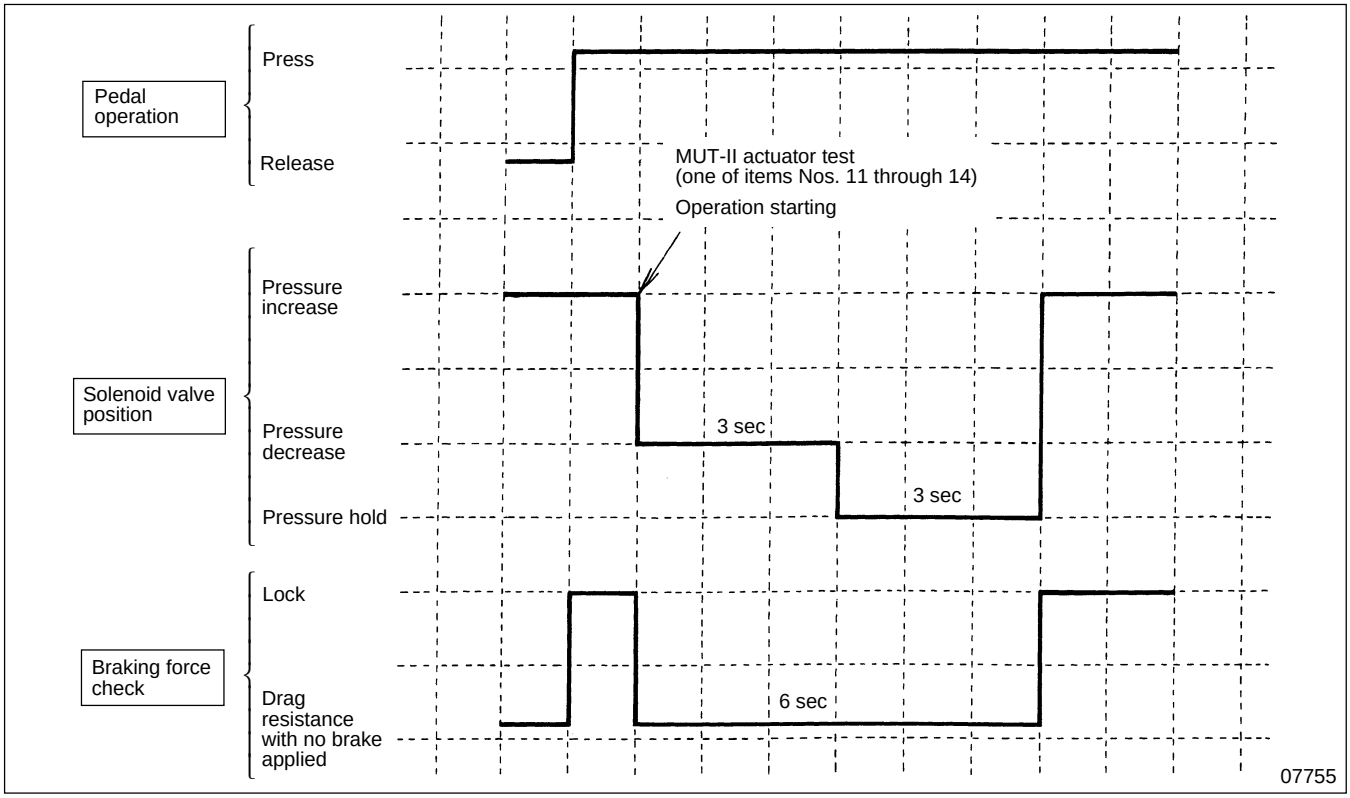

- If an abnormality is found during the inspection, take appropriate measures described in the following operating condition evaluation chart.

Operating condition evaluation chart

Item No.	MUT-II indication	Operation	Judgment		Cause	Remedy
			Normal	Malfunction		
11	FR ABS MV ON	(1) Depress the brake pedal to lock wheels. (2) On the MUT-II, select the wheel to be tested and forcibly drive the actuator. (3) Rotate the selected wheel using the brake tester or by hand, and check the change in braking power.	Braking force eases for 6 seconds from locked condition.	Wheel does not lock when brake pedal is depressed.	Clogging in brake line other than HU	Inspect and clean brake lines.
12	FL ABS MV ON				Clogging in hydraulic line inside HU	Replace HU assembly.
13	RR ABS MV ON			Braking force does not ease.	Erroneous HU brake tube connection	Correct tube connection.
14	RL ABS MV ON				Faulty HU solenoid valve	Replace HU assembly.

HU: Hydraulic unit

- After inspection, set the starter switch to OFF before disconnecting the MUT-II.

Troubleshooting Procedures

Inspection flow chart

The MUT-II allows efficient inspection of the ABS.
The types of system inspections can be roughly divided according to the malfunction condition and diagnosis code, as shown below.

- Inspection based on individual malfunction diagnosis codes stored in the ECU
- Inspection based on symptoms not indicated by diagnosis codes
- Correcting non-recurring problems

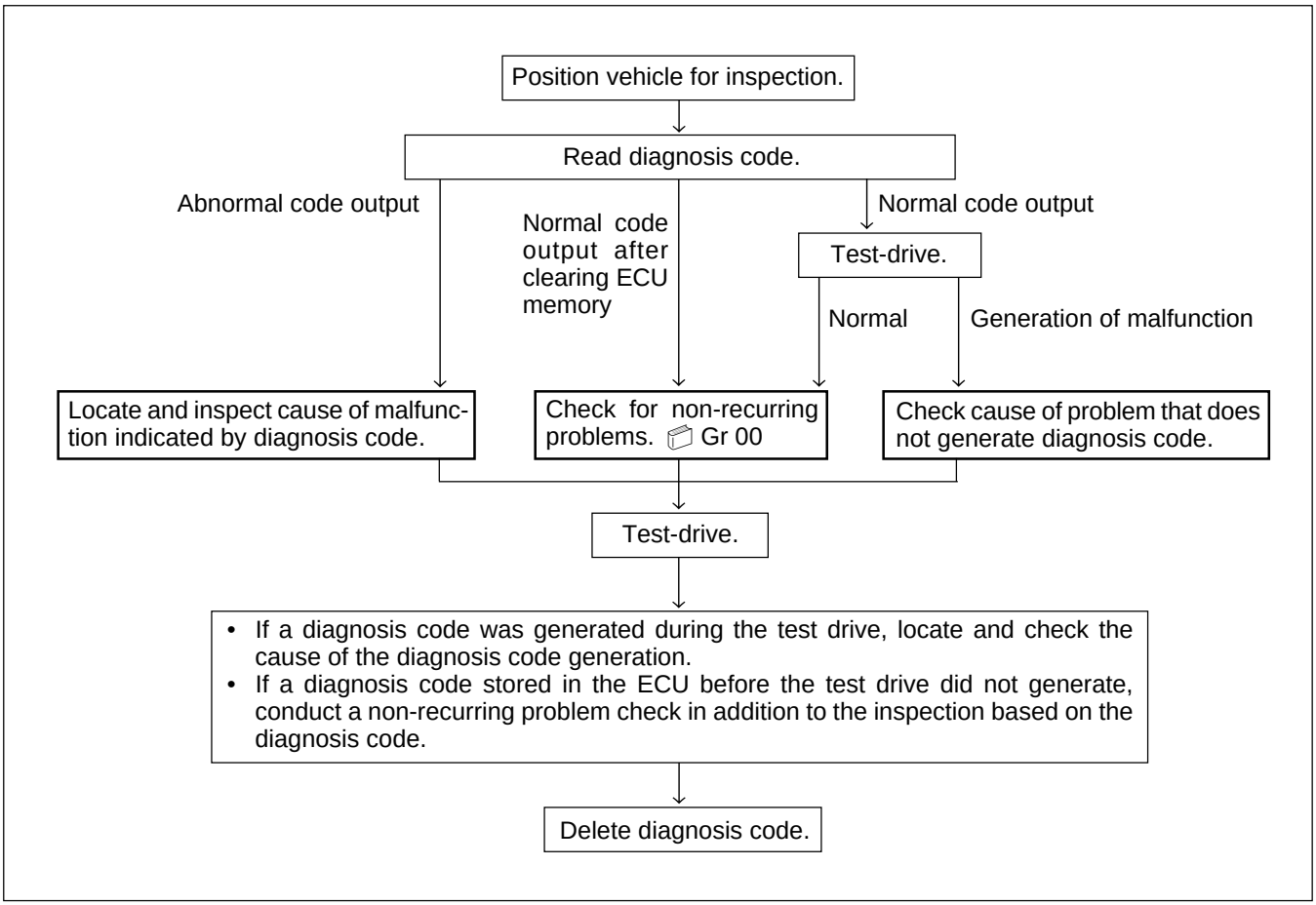

Cautions in malfunction diagnosis

- The ABS uses electronic control to regulate the braking system. The following phenomena may occur during normal ABS operation, but they do not denote a malfunction.

Phenomenon	Description
System checking sound	When the engine starts, a slight clunking sound may be generated in the left side of the frame near the cargo bed. This sound is produced by the system conducting an operation check, and does not denote a malfunction.
ABS operating sound	• Motor noise from the hydraulic unit (humming sound) • Noise generated as the brake pedal feel changes (grinding sound) • Noise from the chassis produced by repeated ON and OFF operations of the ABS (wheels: short squeak, suspension: slight thud)
ABS operation effect (longer stopping distance)	On snow-covered surfaces and gravel roads, a vehicle equipped with ABS may require a longer distance to come to a complete stop. Therefore, when driving on such road surfaces, reduce the speed sufficiently and drive carefully to minimize the use of brakes.

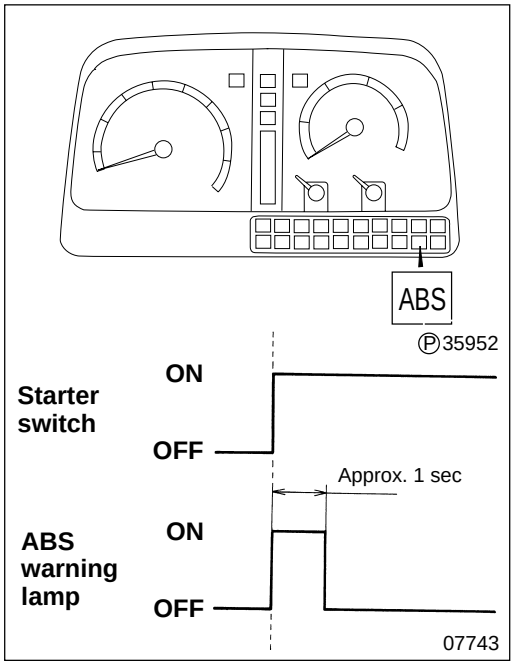

● **Inspection of ABS warning lamp**

Check the ABS warning lamp to make sure that the following operation turns on the lamp.

- Set the starter switch to the ON position, and check that the ABS warning lamp lights for about 1 second and turns off.
- If the lamp does not light as described above, check diagnosis codes stored in the ECU.

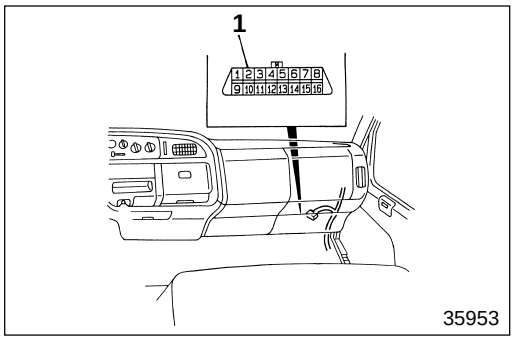

Diagnosis Code Indication

• Without MUT-II

- With the vehicle stationary, ground terminal No. 16 of MUT-II connector **1**, then turn the starter switch to the ON position. The ABS warning lamp will flash to indicate a diagnosis code.
- The ABS warning lamp starts flashing 3.0 seconds after the starter switch is turned ON. The flashing pattern of the warning lamp indicates a diagnosis code.

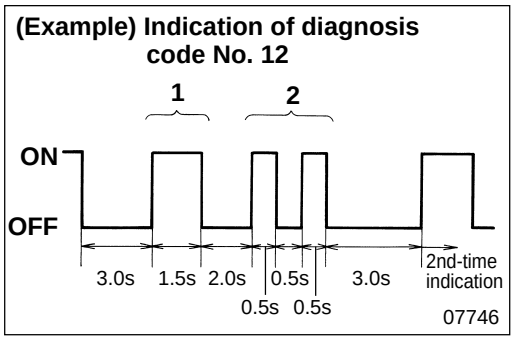

- A diagnosis code is indicated in the following manner.
  - To indicate the tens digit (left digit), the lamp remains ON for 1.5 seconds, then remains OFF for 0.5 seconds. To indicate the ones digit (right digit), the lamp remains ON for 0.5 second, then remains OFF for 0.5 second.
  - For multiple diagnosis codes, each code is indicated one time, insequence. When there is no other diagnosis code to indicate, the lamp repeats the diagnosis code indication from the beginning for 7 cycles.
  - When there is no diagnosis code stored in the memory (normal condition), the ABS warning lamp repeats On/Off in 0.25-second intervals.
  - When two or more diagnosis codes are stored in the ECU.

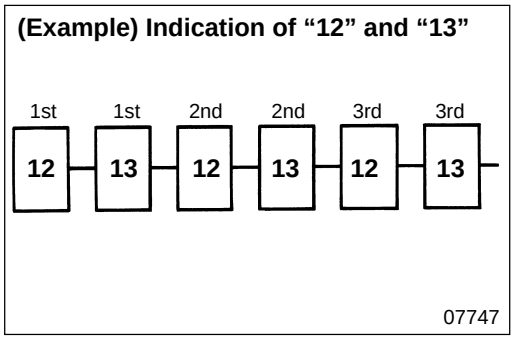

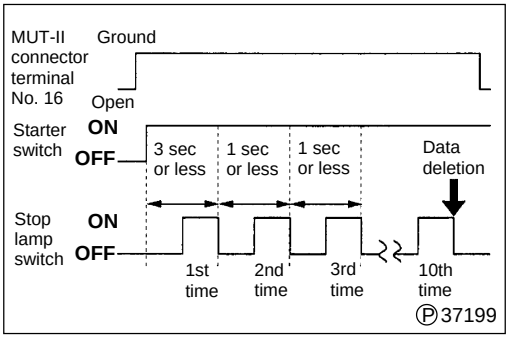

● **Deletion of diagnosis codes**

With key off, connect terminal No. 16 of the MUT-II connector to the chassis for grounding. Depress the brake pedal and turn on the starter switch and turn the stop lamp switch on and off ten times in intervals of 1 second or less by depressing the brake pedal. Turn the key off. disconnect the ground wire. This erases diagnosis codes from the memory.

● **Completion of diagnosis code check**

The diagnosis code check completes when diagnosis codes are erased from the ECU of terminal No. 16 of the MUT-II connector is disconnected.

NOTE

The diagnosis code check also ends when the vehicle moves from a stationary condition during the diagnosis code check.

With MUT-II

Special tools

Tool name and shape	Part No.	Application
MUT-II 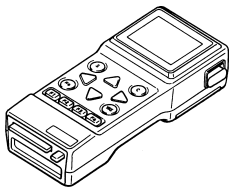 19492	MB991496	Inspection of Anti-lock brake system
MUT-II harness (for data communication) 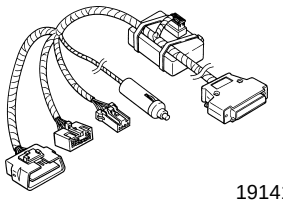 19141	MK327601	
ROM pack (MRT-E6) 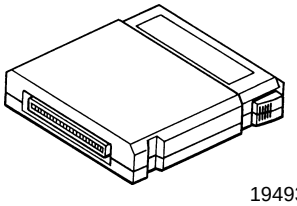 19493	MK344606	

Tool name and shape	Part No.	Application
MUT-II harness (for circuit tester) 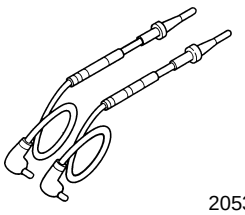 20536	MB991499	Inspection of Anti-lock brake system
Memory card (for MUT-II) 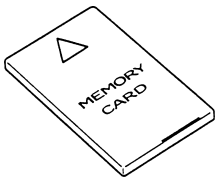 20538	MB991500	

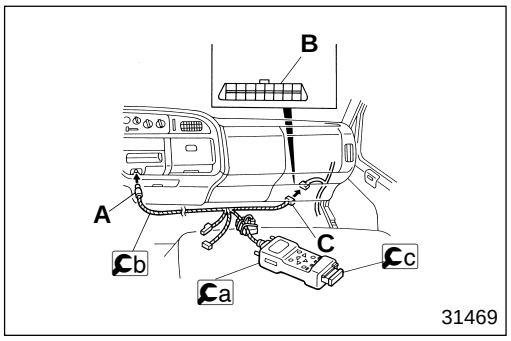

31469

Connecting the MUT-II
- Turn the starter switch to the LOCK position.
- Connect the b MUT Communication Harness to the a MUT-II, and insert the c ROM Pack.
- Plug connector **A** into the cigarette lighter socket.
- Fit connector **C** onto MUT connector **B** (16 pin) in the relay box.

NOTE

Instructions for operation of the MUT-II are given in the separate MUT-II Reference Manual.

Current diagnosis codes
- Turn the starter switch to the ON position.
- Determine the fault location(s) in accordance with the MUT-II diagnosis code(s).

Past diagnosis codes
- Turn the starter switch to the ON position.
- Determine the fault location(s) in accordance with the past MUT-II diagnosis code(s).

Diagnosis code erasure
- Turn the starter switch to the ON position.
- Using the MUT-II, erase all diagnosis codes stored in the control unit.

Diagnosis Code Chart

Diagnosis codes can be read by using the MUT-II or ABS warning lamp.

Diagnosis code	Malfunction location		
	MUT-II display	Description of malfunction	
11	FR-SNSR OPEN	Wheel speed sensor	Broken wire to front-axle right-wheel speed sensor
12	FL-SNSR OPEN		Broken wire to front-axle left-wheel speed sensor
13	RR-SNSR OPEN		Broken wire to rear-axle right-wheel speed sensor
14	RL-SNSR OPEN		Broken wire to rear-axle left-wheel speed sensor
*15	ROTA OR SNSR		Broken wire
16	ECU VOLTAGE	Drop in power supply voltage	
21	FR-SNSR SHORT	Wheel speed sensor	No broken wire to front-axle right-wheel speed sensor
22	FL-SNSR SHORT		No broken wire to front-axle left-wheel speed sensor
23	RR-SNSR SHORT		No broken wire to rear-axle right-wheel speed sensor
24	RL-SNSR SHORT		No broken wire to rear-axle left-wheel speed sensor
26	G SENSOR	G sensor	
35	EXB RLY	Exhaust brake cut relay	
38	STOP LAMP SW	Stop lamp switch	
41	FR-EV VALVE	Hydraulic unit	Front-axle right-wheel solenoid valve (pressure decrease)
42	FL-EV VALVE		Front-axle left-wheel solenoid valve (pressure decrease)
43	RR-EV VALVE		Rear-axle right-wheel solenoid valve (pressure decrease)
44	RL-EV VALVE		Rear-axle left-wheel solenoid valve (pressure decrease)
45	FR-AV VALVE		Front-axle right-wheel solenoid valve (pressure hold)
46	FL-AV VALVE		Front-axle left-wheel solenoid valve (pressure hold)
47	RR-AV VALVE		Rear-axle right-wheel solenoid valve (pressure hold)
48	RL-AV VALVE		Rear-axle left-wheel solenoid valve (pressure hold)
51	VALVE RLY	Relay box	Valve relay
53	MOTOR RLY		Motor relay or motor
			Motor monitor line
63	ECU ERR	ABS ECU	

Actuator Drive Chart

MUT-II display	
Item No.	Item name
11	FR ABS MV ON
12	FL ABS MV ON
13	RR ABS MV ON
14	RL ABS MV ON

Service Data

MUT-II display			Inspection condition	Criterion
11	FR SPEED	■■■. ■ MPH	Constant-speed driving	Same as speedometer indication
12	FL SPEED	■■■. ■ MPH		
13	RR SPEED	■■■. ■ MPH		
14	RL SPEED	■■■. ■ MPH		
15	ECU VOLTAGE	■■ . ■ V	Starter switch ON	Same as battery voltage
30	STOP LAMP SW	ON/OFF	Brake pedal depressed	ON
			Brake pedal released	OFF

M E M O

WHEEL SPEED SENSOR AND ROTOR < FRONT AXLE : DISC BRAKE >

The following section describes the service procedures for the wheel speed sensors and rotor. For the service procedures of related parts, refer to Gr 26A. The illustration below shows the front-axle left wheel.

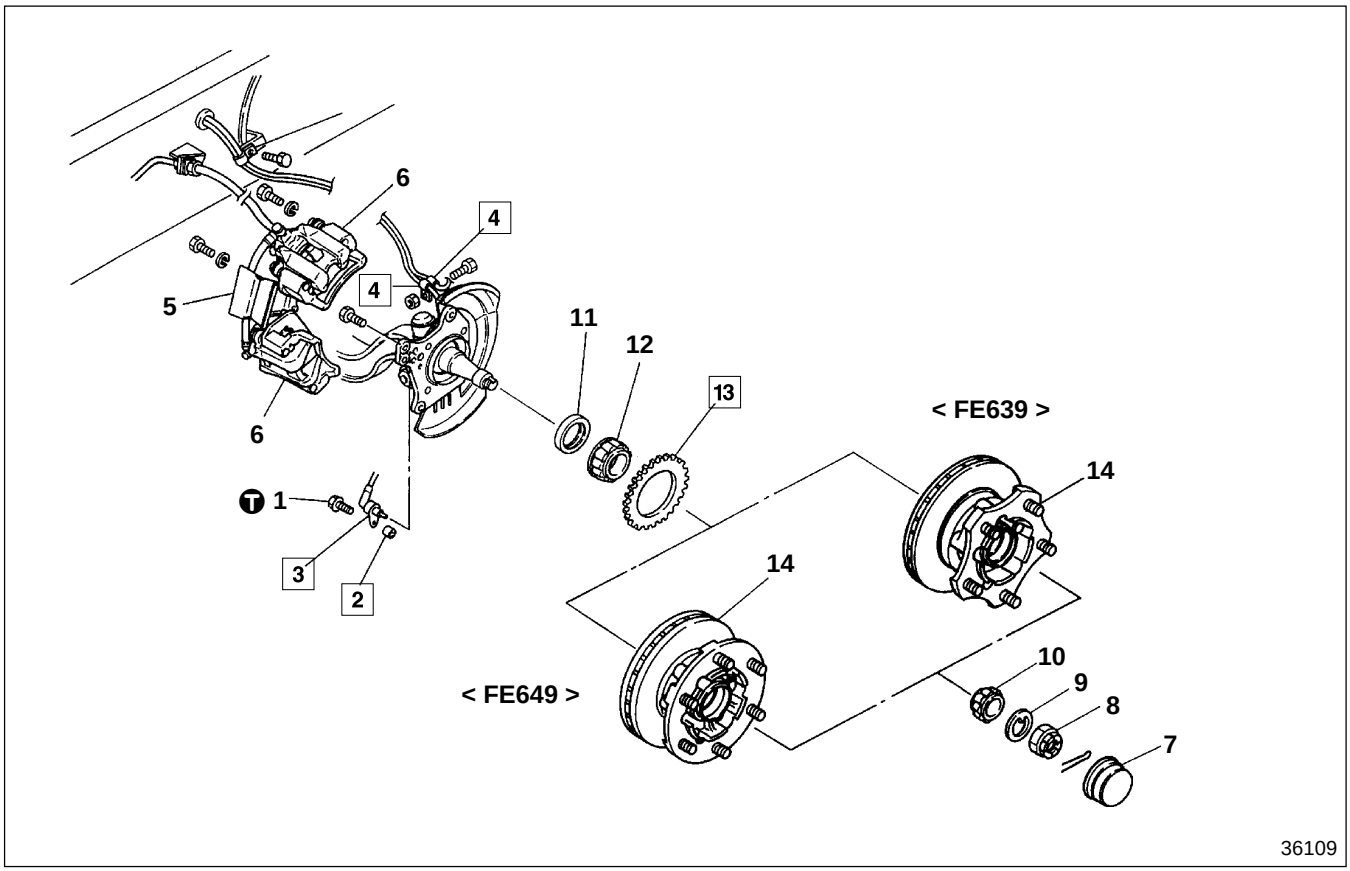

● **Removal sequence**

1 Bolt
2 Spacer
3 Wheel speed sensor
4 Clips
5 Dust cover < FE639■4 >
6 Disc brake assembly
7 Hub cap
8 Lock nut
9 Lock washer
10 Outer bearing inner race
11 Oil seal
12 Inner bearing inner race
13 Rotor (ABS)
14 Wheel hub & rotor assembly

CAUTION

Before removing disc brake assembly 6, secure the disc brake assembly to the frame using wires, and do not disconnect the brake hose. Never allow the weight of the disk brake caliper assembly to hang from the hydraulic brake hose. Be sure to remove the harness clips to prevent damaging the pad wear indicator harness during the removal process.

● **Installation sequence**

Follow the removal sequence in reverses.

WARNING

Do not allow oil or grease to adhere on the pad surface of disc brake assembly 6 or the rotor surface of wheel hub & rotor assembly 14.

CAUTION

When installing wheel hub & rotor assembly 14, be careful not to damage rotor 13 or oil seal 11.

Service standards

Location	Maintenance item		Standard value	Limit	Remedy
3	Wheel speed sensor	Resistance between terminals	1600 ± 10% Ω	—	—
		Insulation resistance	100 kΩ minimum	—	—

Tightening torque

Unit : N·m {lbf.ft, kgf·m}

Location	Parts to be tightened	Tightening torque	Remarks
1	Bolt (wheel speed sensor mounting)	9.8 to 14.8 {7.2 to 11, 1.0 to 1.5}	—

◆ Service procedure

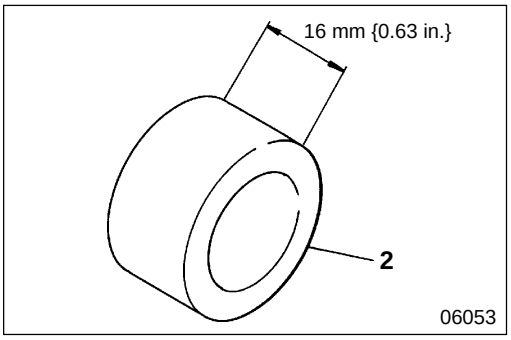

2 Installation of spacer

Check the thickness of spacer **2** before installation.

CAUTION ⚠

Installation of spacer 2 with an improper thickness results in inaccurate wheel speed detection, thus causing faulty ABS operation.

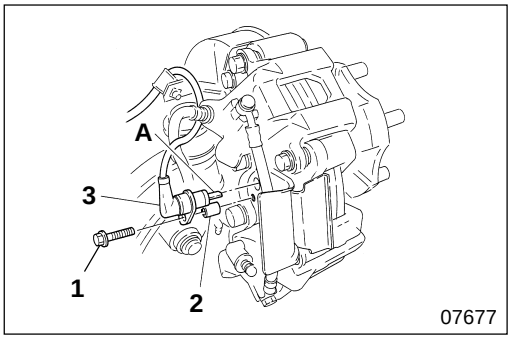

3 Wheel speed sensor

[Removal]

To prevent damaging pole piece **A** in wheel speed sensor **3**, remove the wheel speed sensor before removing wheel hub & rotor assembly **14**.

[Installation]

The connector of wheel speed sensor **3** is color-coded. Install the wheel speed sensors to the proper wheels according to the following table.

Installation location	Connector color
Left wheel	Gray
Right wheel	Black

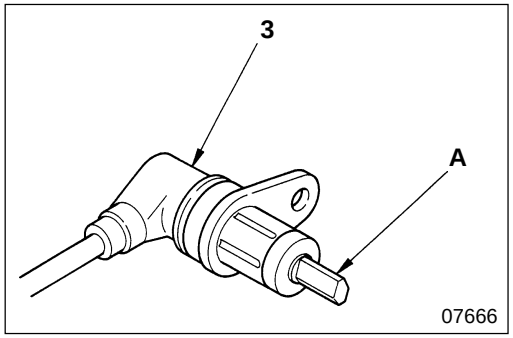

[Inspection]
Pole piece **A** in wheel speed sensor **3** is magnetized by a built-in magnet and attracts metals. Do not allow metal particles to stick to the pole piece.

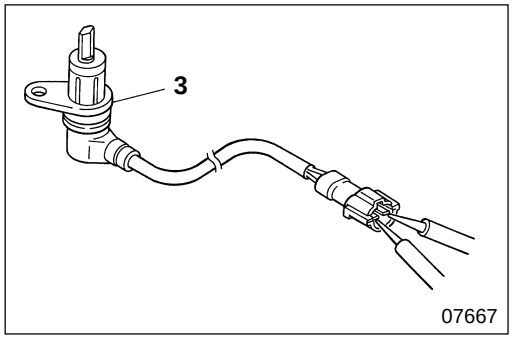

● **Measurement of resistance between terminals**

Measure resistance between the terminals of wheel speed sensor **3**.
If the measured value deviates from the standard value, replace the wheel speed sensor.

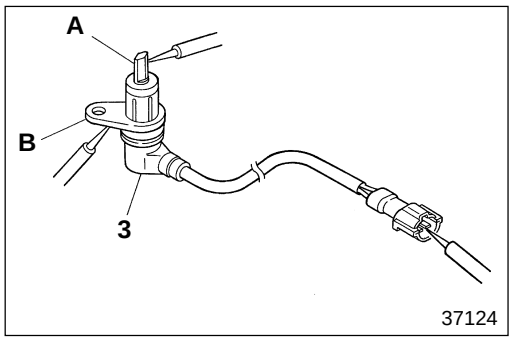

● **Measurement of insulation resistance**

Measure resistance between pole piece **A**, bracket **B** and each terminal of wheel speed sensor **3**.
If the measured value deviates from the standard value, replace the wheel speed sensor.

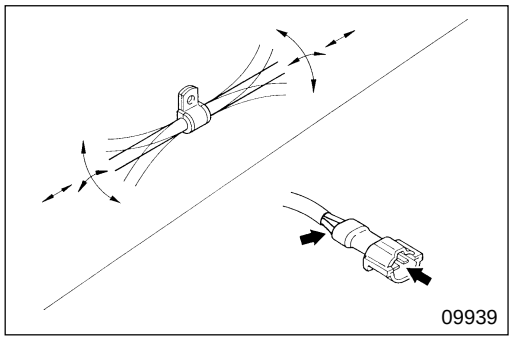

● **Inspection of open circuit in harness**

To check the harness for an open circuit, disconnect the harness clamp from the vehicle side, then bend and pull harness at the clamp to check if a momentary open circuit results. Also inspect the terminal contact conditions in the connector.
If an abnormality is found, replace wheel speed sensor **3**.

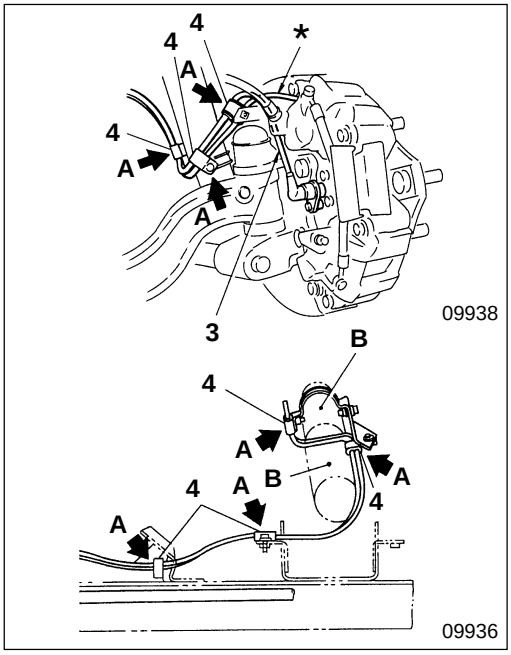

3 **4** **Installation of wheel speed sensor harness and clips**

Starting from the wheel brake side, secure the harness of wheel speed sensor **3** in place at white tape sections **A** using clips **4**, while making sure that there is no interference, twisting or excessive sagging of the harness.

B : Shock absorber
***** : Pad wear indicator harness

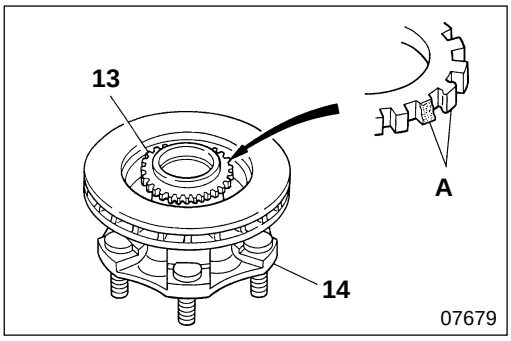

13 **Rotor**

[Inspection]
Check rotor **13** for chipped or crushed teeth (see section **A** in the diagram).
If an abnormality is found, replace the rotor.

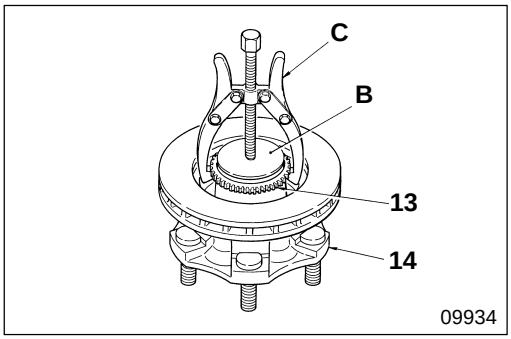

[Removal]

B : Iron plate
C : Gear puller

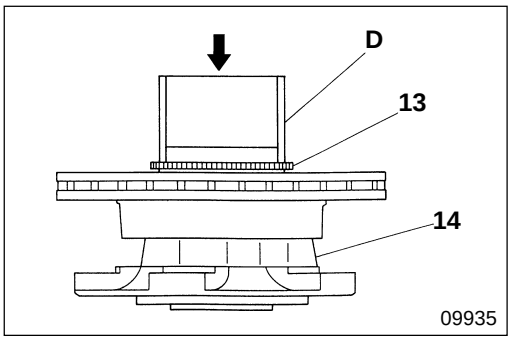

[Installation]
Before installing rotor **13** to wheel hub & rotor assembly **14**, heat the rotor to approximately 150°C {302°F}. Using pipe **D**, install the rotor to the wheel hub & rotor assembly by applying uniform pressure to prevent the rotor from tilting.

WHEEL SPEED SENSOR AND ROTOR < FRONT AXLE : DRUM BRAKE > FG

The following section describes the service procedures for the wheel speed sensors and rotor. For the service procedures of related parts, refer to Gr 26B. The illustration below shows the front-axle left wheel.

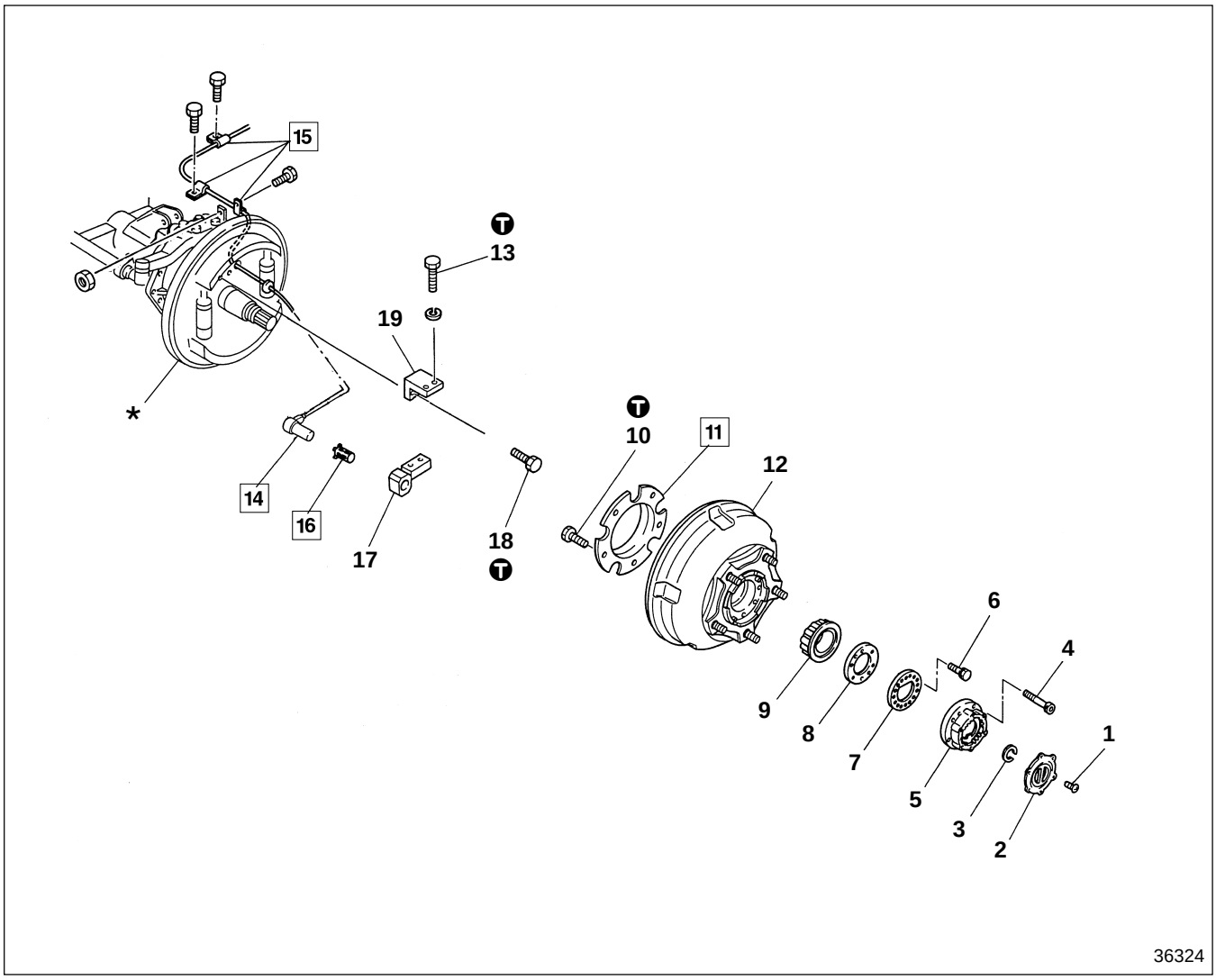

● **Removal sequence**

1	Screw	**8**	Lock nut	**15**	Clips
2	Cover assembly	**9**	Outer bearing	**16**	Spring spacer
3	Snap ring	**10**	Bolt	**17**	Sensor holder
4	Bolt	**11**	Rotor (ABS)	**18**	Bolt
5	Housing assembly	**12**	Wheel hub & brake drum assembly	**19**	Sensor bracket
6	Bolt	**13**	Bolt		
7	Lock washer	**14**	Wheel speed sensor	*	: Front brake assembly

● **Installation sequence**

*→19→18 →13→15 →9→8→7→6→5→4→3→2→1
17→16→14 →12→11→10

WARNING ⚠

Do not allow oil or grease to adhere on the lining surface of front brake assembly * or the inside surface of wheel hub & brake drum assembly 12.

CAUTION ⚠

When installing wheel hub & brake drum assembly 12, be careful not to damage rotor 11, wheel speed sensor 14 or oil seal in the wheel hub.

Service standards

Location	Maintenance item		Standard value	Limit	Remedy
14	Wheel speed sensor	Resistance between terminals	1750 ± 10% Ω	—	—
		Insulation resistance	1000 kΩ minimum	—	—

Tightening torque

Unit : N·m {lbf.ft, kgf·m}

Location	Parts to be tightened	Tightening torque	Remarks
10	Bolt (rotor mounting)	8.8 to 13.8 {6.5 to 10, 0.9 to 1.4}	—
13	Bolt (sensor holder mounting)	8.8 to 13.8 {6.5 to 10, 0.9 to 1.4}	—
18	Bolt (sensor bracket mounting)	11.8 to 12.8 {8.7 to 9.4, 1.2 to 1.3}	—

◆ Service procedure

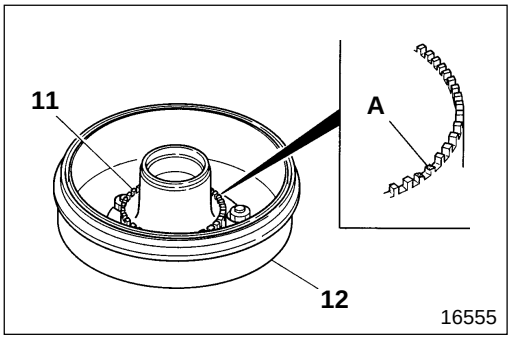

11 Rotor

[Inspection]
Check rotor **11** for chipped or crushed teeth (see section **A** in the diagram).
If an abnormality is found, replace the rotor.

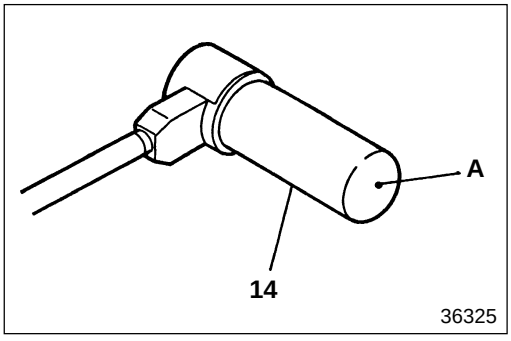

14 Wheel speed sensor

[Inspection]
Pole piece **A** in wheel speed sensor **14** is magnetized by a built-in magnet and attracts metals. Do not allow metal particles to stick to the pole piece.

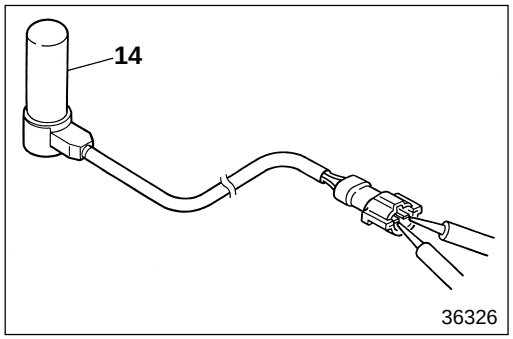

● **Measurement of resistance between terminals**

Measure resistance between the terminals of wheel speed sensor **14**. If the measured value deviates from the standard value, replace the wheel speed sensor.

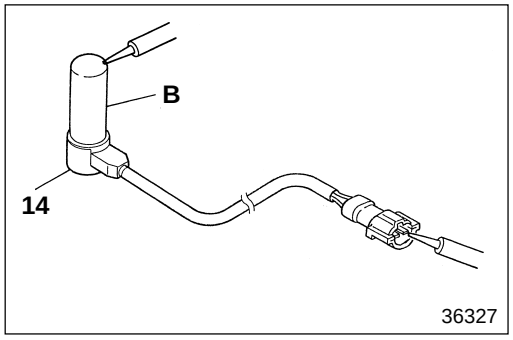

● **Measurement of insulation resistance**

Measure resistance between body **B** and each terminal of wheel speed sensor **14**.

If the measured value is lower than the standard value, replace the wheel speed sensor.

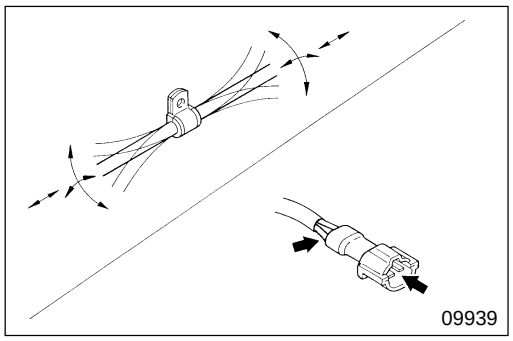

● **Inspection of open circuit in harness**

To check the harness for an open circuit, disconnect the harness clamp from the vehicle side, then bend and pull harness at the clamp to check if a momentary open circuit results. Also inspect the terminal contact conditions in the connector.

If an abnormality is found, replace wheel speed sensor **14**.

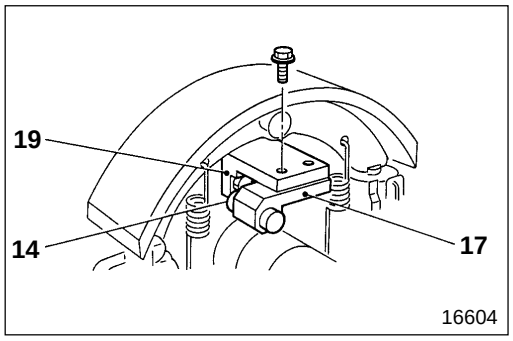

14 **16** **Wheel speed sensor and spring spacer**

The illustration shows the front-axle left wheel. The right wheel is symmetrical to the one shown in the diagram.

[Removal]

- Remove wheel speed sensor **14** and sensor holder **17** as an assembly.

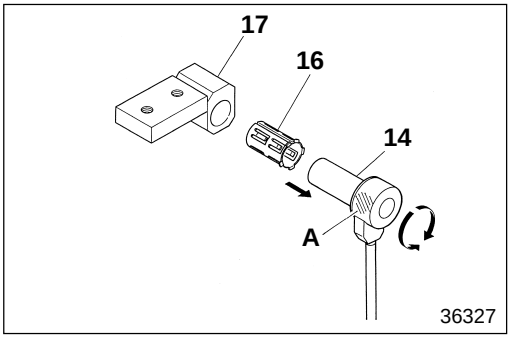

- Using pliers, hold wheel speed sensor **14** at shaded section **A** in the diagram, and remove it by turning it slightly.

CAUTION ⚠

- **Do not hold wheel speed sensor 14 with pliers at positions other than shaded section A shown in the diagram.**
- **Do not apply excessive force to remove wheel speed sensor 14, such as by striking with a hammer, prying with a screwdriver, and pulling the harness. Excessive force can break wires in the wheel speed sensor.**
- **If only slight force is necessary to remove wheel speed sensor 14, replace spring spacer 16.**

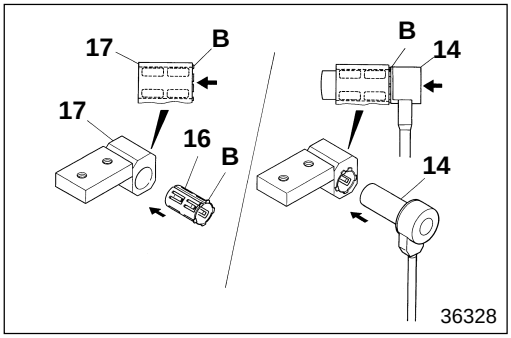

[Installation]

- Insert spring spacer **16** into sensor holder **17** until section **B** of the spring spacer contacts the sensor holder.
- Insert wheel speed sensor **14** until it contacts section **B**.

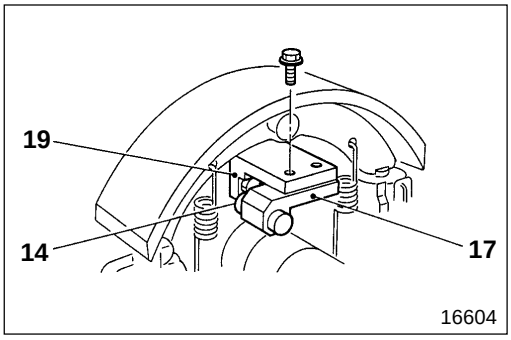

- Install wheel speed sensor **14** and sensor **17** as an assembly.

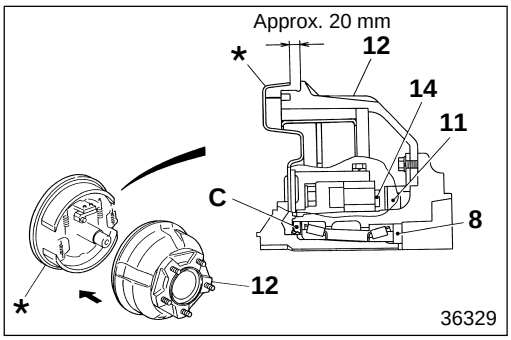

- Carefully install wheel hub & brake drum assembly **12** to avoid damaging oil seal **C**. Position the wheel hub & brake drum assembly at the location where the distance indicated in the illustration is approximately 20 mm (to prevent wheel speed sensor **14** from contacting rotor **11**).
- Slowly tighten lock nut **8** to the specified torque (primary tightening). Adjust and measure the starting torque of the wheel hub bearing.
  Gr 26B

CAUTION ⚠

Do not apply excessive force to install wheel speed sensor 14, such as by striking with a hammer, prying with a screwdriver, and pulling the harness. Excessive force can break wires in the wheel speed sensor.

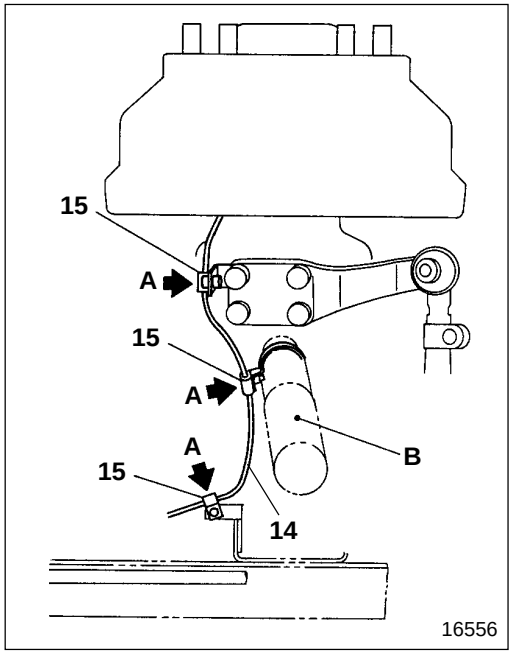

14 **15** **Installation of wheel speed sensor harness and clips**

Starting from the wheel brake side, secure the harness of wheel speed sensor **14** in place at white tape sections **A** using clips **15**, while making sure that there is no interference, twisting or excessive sagging of the harness.

B : Shock absorber

M E M O

WHEEL SPEED SENSOR AND ROTOR < REAR AXLE : DISC BRAKE >

The following section describes the service procedures for the wheel speed sensors and rotor. For the service procedures of related parts, refer to Gr 27. The illustration below shows the rear-axle left wheel.

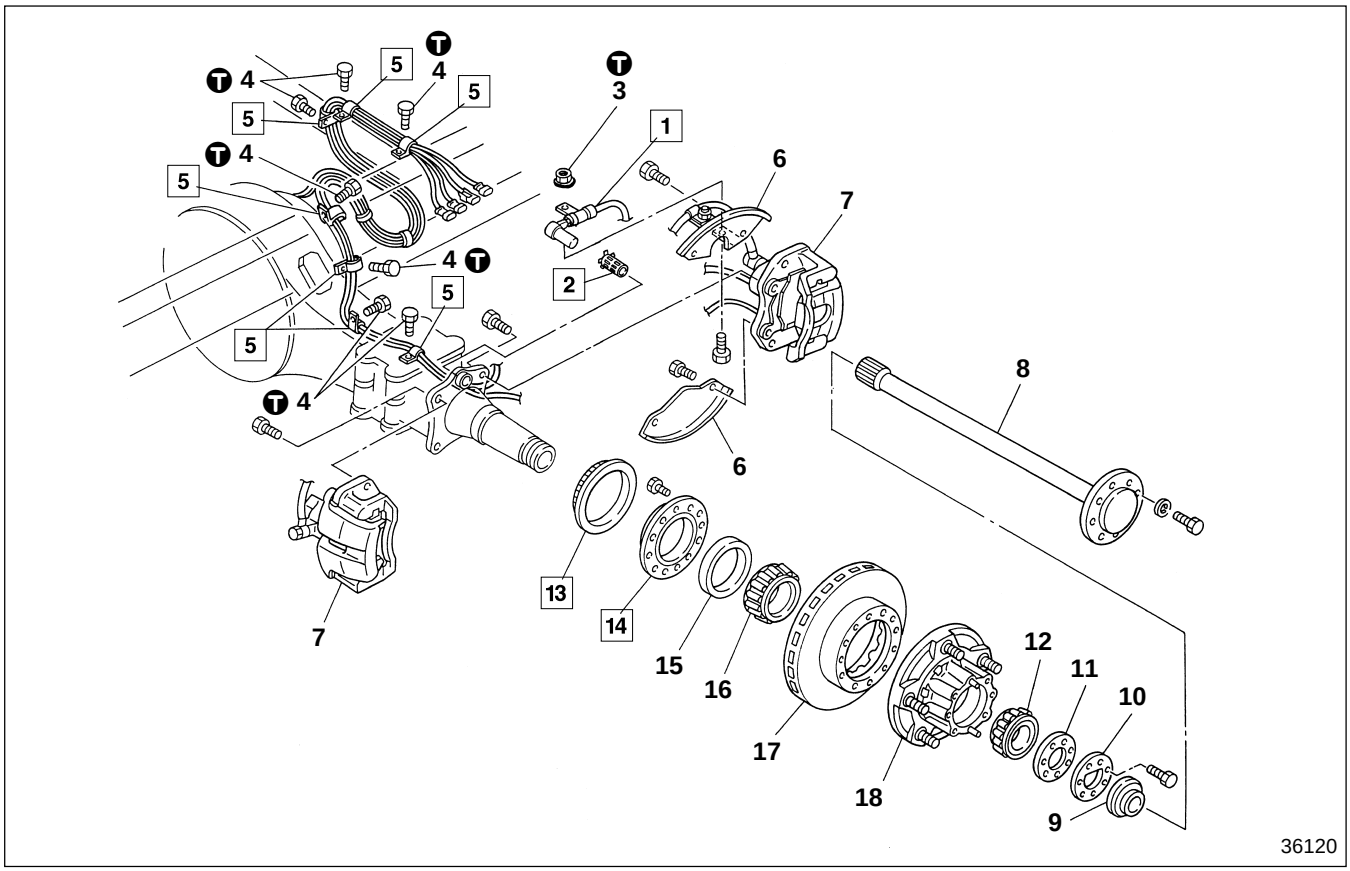

● **Removal sequence**

1 Wheel speed sensor
2 Spring spacer
3 Nut
4 Bolt
5 Clips
6 Dust shield
7 Disc brake assembly
8 Rear axle shaft
9 Outer oil seal
10 Lock washer
11 Lock nut
12 Outer bearing
13 Rotor (ABS)
14 Rotor flange
15 Inner oil seal
16 Inner bearing
17 Rotor (brake)
18 Rear wheel hub

CAUTION

Before removing disc brake assembly 7, secure the disc brake assembly to the frame using wires, and do not disconnect the brake hose. Never allow the weight of the disk brake caliper assembly to hang from the hydraulic brake hose. Be sure to remove the harness clips to prevent damaging the pad wear indicator harness during the removal process.

● **Installation sequence**

Follow the removal sequence in reverses.

WARNING

Do not allow oil or grease to adhere on the pad surface of disc brake assembly 7 or the surface of rotor 17.

CAUTION

When installing rear wheel hub 18 to the rear axle, be careful not to damage rotor 13 or inner oil seal 15.

Service standards

Unit : mm {in.}

Location	Maintenance item		Standard value	Limit	Remedy
1	Wheel speed sensor	Resistance between terminals	1750 ± 10% Ω	—	—
		Insulation resistance	1000 kΩ minimum	—	—
13	Rotor runout (ABS)		0.0039	—	—

Tightening torque

Unit : N·m {lbf.ft, kgf·m}

Location	Parts to be tightened	Tightening torque	Remarks
3	Nut (clip mounting)	10 to 15 {72 to 108, 1.0 to 1.5}	—
4	Bolt (clip mounting)	12 to 15 {87 to 108, 1.2 to 1.5}	—

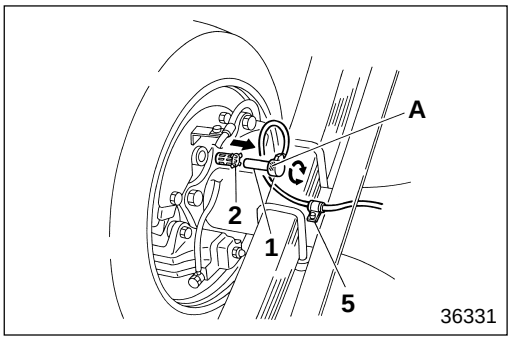

◆ Service procedure

1 **2** **Wheel speed sensor and spacer**

[Removal]

Using pliers, hold wheel speed sensor **1** at shaded section **A** in the diagram, and remove it by turning it slightly.

CAUTION ⚠

- **Do not hold wheel speed sensor 1 with pliers at positions other than shaded section A shown in the diagram.**
- **Do not apply excessive force to remove wheel speed sensor 1, such as by striking with a hammer, prying with a screwdriver, and pulling the harness. Excessive force can break wires in the wheel speed sensor.**
- **If only slight force is necessary to remove wheel speed sensor 1, replace spring spacer 2.**

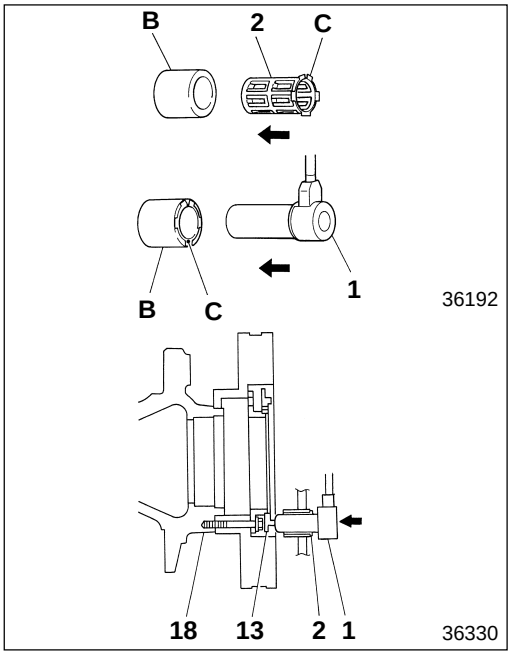

[Installation]

The connector of wheel speed sensor **1** is color-coded. Install the wheel speed sensors to the proper wheels according to the following table.

Installation location	Connector color	Connector shape	Right/left identification tape
Left wheel	Gray	Female	Yellow
Right wheel	Black	Male	None

- Insert spring spacer **2** into holder section **B** of the backplate until stopper section **C** contacts the holder section.
- Insert wheel speed sensor **1** until it firmly contacts rotor **13**.
- Slowly rotate rear wheel hub **18** two or three turns (1 rotation per 2 seconds) to make sure it rotates smoothly.

CAUTION ⚠

Do not apply excessive force to install wheel speed sensor 1, such as by striking with a hammer, prying with a screwdriver, and pulling the harness. Excessive force can break wires in the wheel speed sensor.

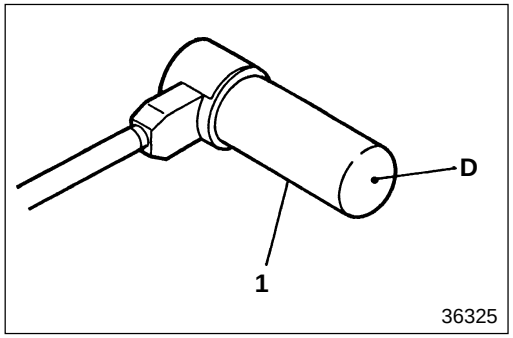

[Inspection]
Pole piece **D** in wheel speed sensor **1** is magnetized by a built-in magnet and attracts metals. Do not allow metal particles to stick to the pole piece.

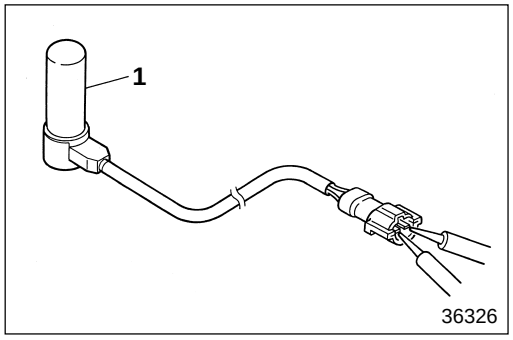

● **Measurement of resistance between terminals**

Measure resistance between the terminals of wheel speed sensor **1**.
If the measured value deviates from the standard value, replace the wheel speed sensor.

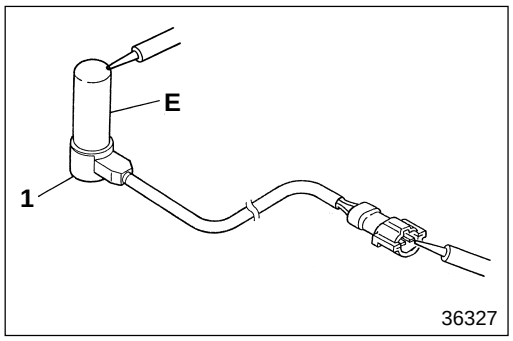

● **Measurement of insulation resistance**

Measure resistance between body **E** and each terminal of wheel speed sensor **1**.
If the measured value is lower than the standard value, replace the wheel speed sensor.

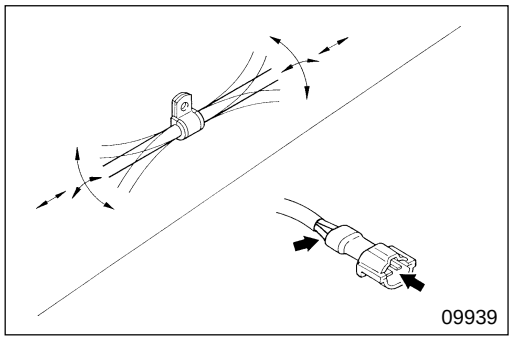

● **Inspection of open circuit in harness**

To check the harness for an open circuit, disconnect the harness clamp from the vehicle side, then bend and pull harness at the clamp to check if a momentary open circuit results. Also inspect the terminal contact conditions in the connector.
If an abnormality is found, replace wheel speed sensor **1**.

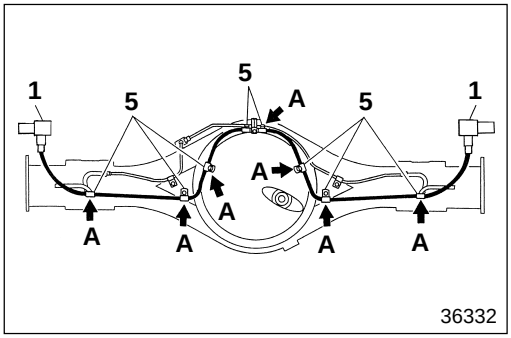

1 **5** **Installation of wheel speed sensor harness and clips**

- Starting from the wheel brake side, secure the harness of wheel speed sensor **1** and the pad wear indicator harness in place at tape sections **A** using clips **5**, while making sure that there is no interference, twisting or excessive sagging of the harnesses.

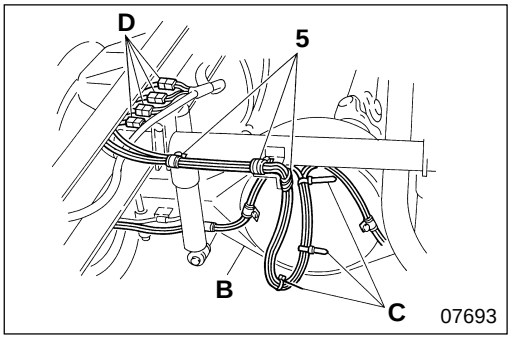

- As shown in the diagram, position the harness of speed sensor **1** and the pad wear indicator harness, starting from housing section **B** and moving toward the frame, making sure that there is no twisting or excessive sagging of the harnesses. Use clips **5** and cable ties **C** to secure the harnesses in place, then connect connectors **D**.

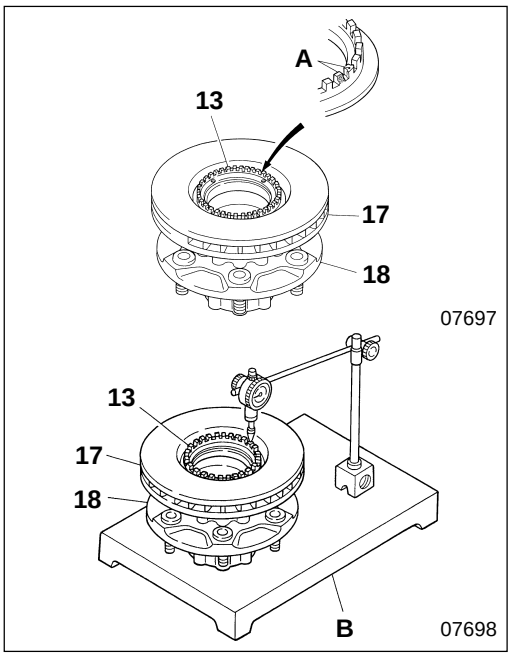

13 **Rotor**

[Inspection]

- Check rotor **13** for chipped or crushed teeth (see section **A** in the diagram).
  If an abnormality is found, replace the rotor.

- If the amount of runout of rotor **13** deviates from the standard value, repeat the disassembly and reassembly procedures. If the amount of runout still deviates from the standard value after the reassembly, replace faulty parts.

  B : Platform

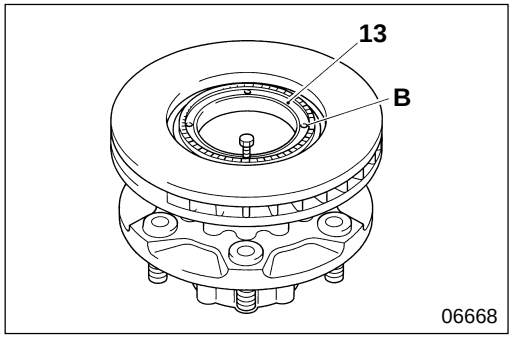

[Removal]
Install bolts (M6 × 1.0) in threaded holes **B** (holes for rotor removal) on rotor **13**, and tighten them evenly to remove the rotor.

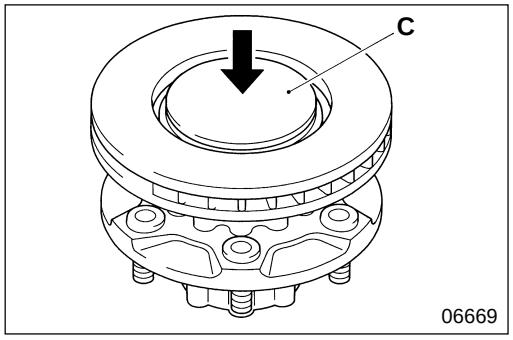

[Installation]
Before installing rotor **13** to rotor flange **14**, heat the rotor to approximately 150°C {302°F}. Using iron plate **C**, press-fit the rotor into the rotor flange by applying uniform pressure, making sure that there is no gap between the rotor and the rotor flange.

M E M O

WHEEL SPEED SENSOR AND ROTOR < REAR AXLE : DRUM BRAKE >

The following section describes the service procedures for the wheel speed sensors and rotor. For the service procedures of related parts, refer to Gr 27. The illustration below shows the rear-axle left wheel.

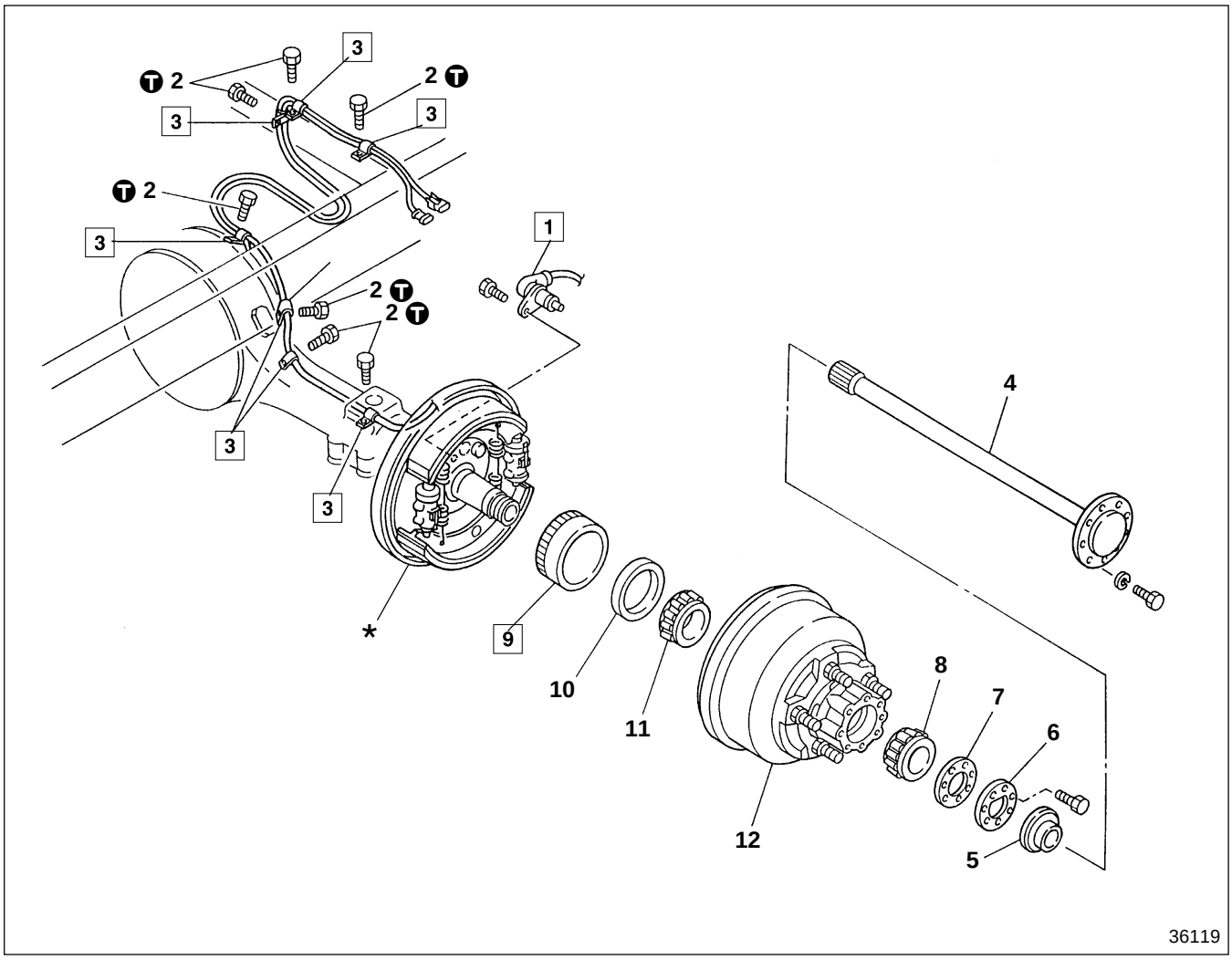

● **Removal sequence**

1 Wheel speed sensor
2 Bolt
3 Clips
4 Rear axle shaft
5 Outer oil seal
6 Lock washer
7 Lock nut
8 Outer bearing & race
9 Rotor (ABS)
10 Inner oil seal
11 Inner bearing & race
12 Wheel hub & drum assembly

***** : Rear brake assembly

● **Installation sequence**

Follow the removal sequence in reverse.

WARNING

Do not allow oil or grease to adhere on the lining surface of rear brake assembly * or the lining surface of wheel hub & drum assembly 12.

CAUTION

When installing wheel hub & drum assembly 12, be careful not to damage rotor 9 or inner oil seal 10.

Service standards

Location	Maintenance item		Standard value	Limit	Remedy
1	Wheel speed sensor	Resistance between terminals	1600 ± 10% Ω	—	—
		Insulation resistance	100 kΩ minimum	—	—

Tightening torque

Unit : N·m {lbf.ft, kgf·m}

Location	Parts to be tightened	Tightening torque	Remarks
2	Bolt (clip mounting)	12 to 15 {87 to 108, 1.2 to 1.5}	—

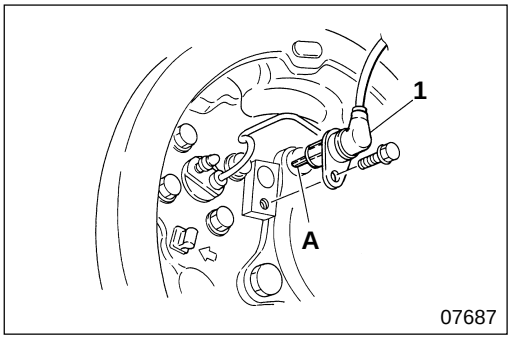

1 Wheel speed sensor

[Removal]
To prevent damaging pole piece **A** of wheel speed sensor **1**, remove the wheel speed sensor before removing wheel hub & drum assembly **12**.

[Installation]
The connector of wheel speed sensor **1** is color-coded. Install the wheel speed sensors to the proper wheels according to the following table.

Installation location	Connector color	Connector shape	Right/left identification tape
Left wheel	Gray	Female	Yellow
Right wheel	Black	Male	None

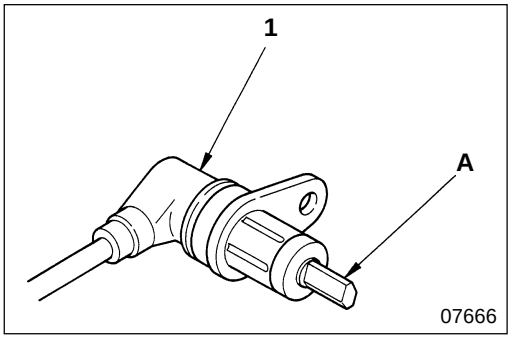

[Inspection]
Pole piece **A** in wheel speed sensor **1** is magnetized by a built-in magnet and attracts metals. Do not allow metal particles to stick to the pole piece.

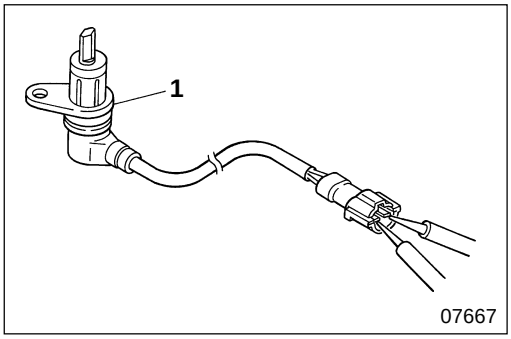

● **Measurement of resistance between terminals**

Measure resistance between the terminals of wheel speed sensor **1**. If the measured value deviates from the standard value, replace the wheel speed sensor.

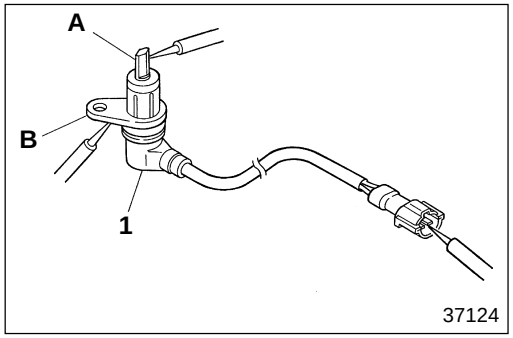

● **Measurement of insulation resistance**

Measure resistance between pole piece **A**, bracket **B** and each terminal of wheel speed sensor **1**.

If the measured value is lower than the standard value, replace the wheel speed sensor.

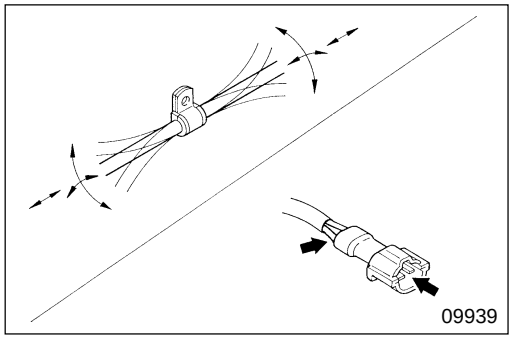

● **Inspection of open circuit in harness**

To check the harness for an open circuit, disconnect the harness clamp from the vehicle side, then bend and pull harness at the clamp to check if a momentary open circuit results. Also inspect the terminal contact conditions in the connector.

If an abnormality is found, replace wheel speed sensor **1**.

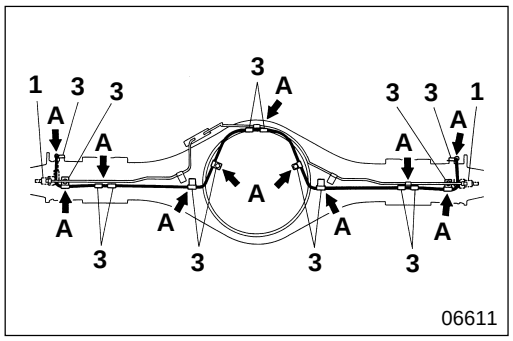

1 **3** **Installation of wheel speed sensor harness and clips**

Starting from the wheel brake side, secure the harness of wheel speed sensor **1** in place at tape sections **A** using clips **3**, while making sure that there is no interference, twisting or excessive sagging of the harness.

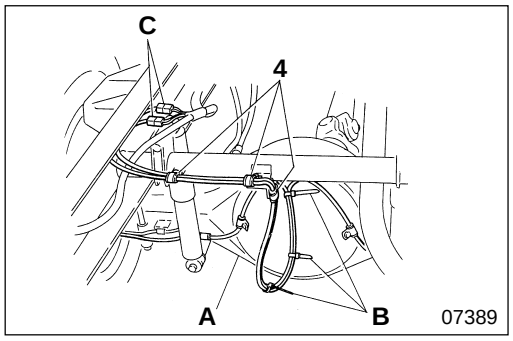

- As shown in the diagram, position the harness of speed sensor **2**, starting from rear axle housing section **A** and moving toward the frame, making sure that there is no twisting or unnecessary slack in the harness. Use clips **4** and cable ties **B** to secure the harness in place, then connect connectors **C**.

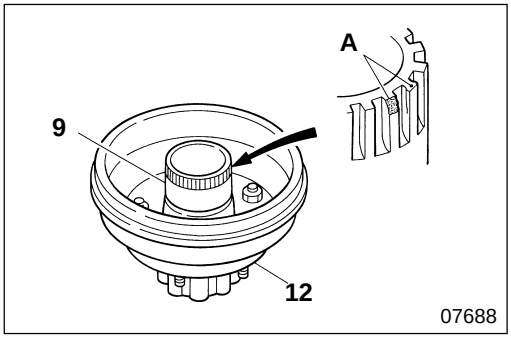

9 **Rotor**

[Inspection]
Check rotor **9** for chipped or crushed teeth (see section **A** in the diagram).
If an abnormality is found, replace the rotor.

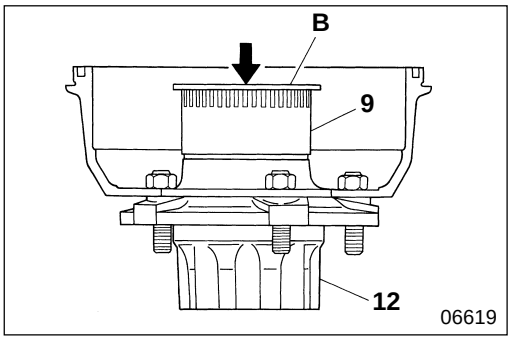

[Installation]
Before installing rotor **9** to wheel hub & drum assembly **12**, heat the rotor to approximately 150°C {302°F}. Using iron plate **B**, install the rotor to the wheel hub & drum assembly by applying uniform pressure, making sure that there is no gap between the rotor and the wheel hub & drum assembly.

ELECTRIC CIRCUIT AND PART INSTALLATION LOCATIONS

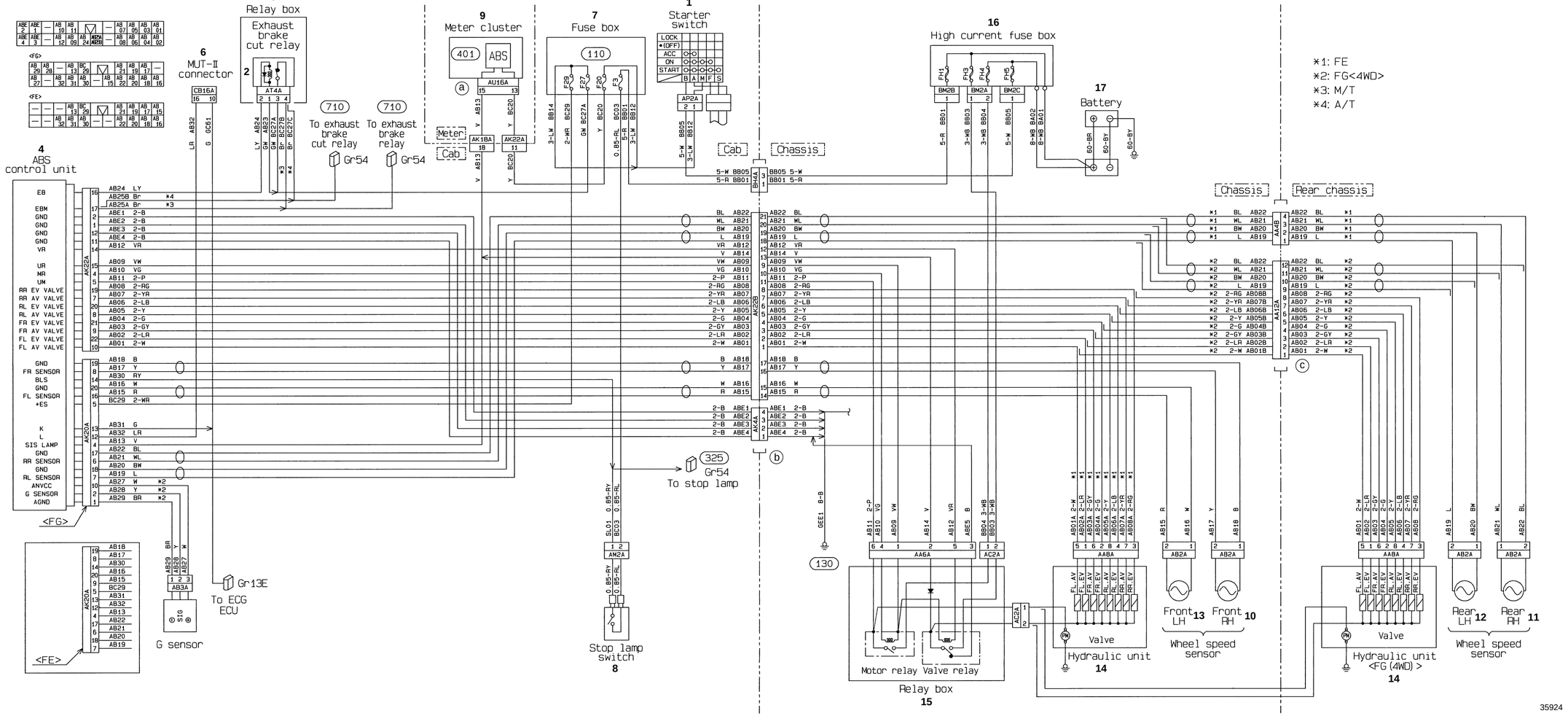

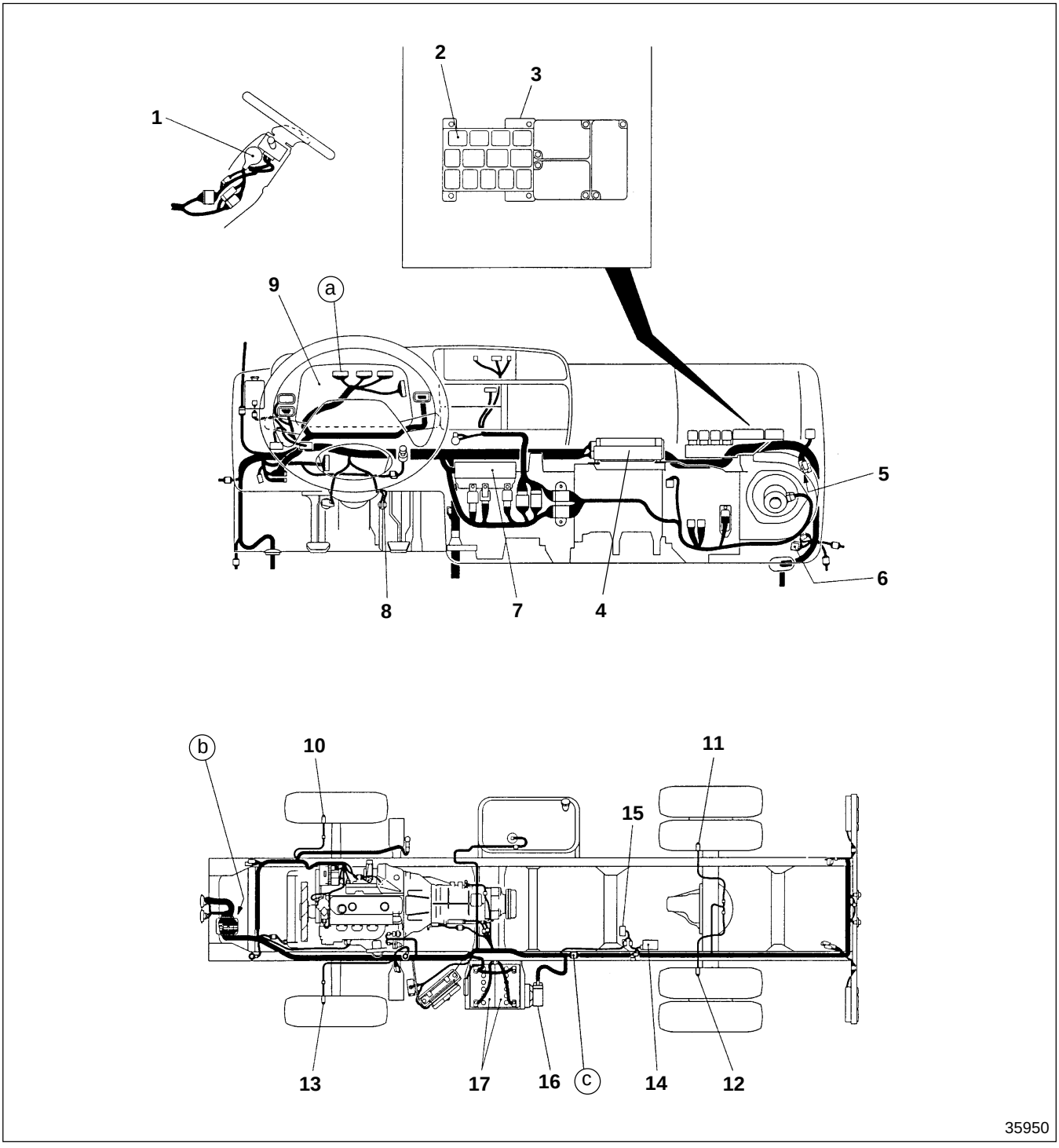

1 Starter switch
2 Exhaust brake cut-off relay
3 Relay box
4 Electric control unit
5 Diode unit
6 MUT-II connector
7 Fuse box
8 Stop lamp switch
9 Meter cluster
10 Wheel speed sensor (front-axle right wheel)
11 Wheel speed sensor (rear-axle right wheel)
12 Wheel speed sensor (rear-axle left wheel)
13 Wheel speed sensor (front-axle left wheel)
14 Hydraulic unit
15 Relay box
16 High-current fuse box
17 Battery
18 G sensor <FG>

MITSUBISHI
FUSO

FE.FG

Service Manual

Group 35
Brake

'98 Minor Change

Table of Contents

MITSUBISHI FUSO TRUCK OF AMERICA, Inc.

BACK HOME

Pub No. TWSE9501-235

GROUP 35 BRAKE

SPECIFICATIONS 35- 2

STRUCTURE AND OPERATION 35- 3

TROUBLESHOOTING 35- 32

ON-VEHICLE INSPECTION AND ADJUSTMENT
- Replacement of Brake Fluid 35- 38
- Air Bleeding of Brake System 35- 40
- Inspection and Adjustment of Brake Pedal Free Play 35- 42
- Inspection and Adjustment of Clearance between Brake Pedal and Floor Panel 35- 42
- Inspection and Replacement of Disc Brake Pad 35- 43
- Drum Brake Lining Thickness Inspection and Replacement 35- 46
- Inspection of Brake Shoe Clearance 35- 46
- Inspection of Brake Booster (Master Vac) 35- 47
- Inspection of Bypass Valve 35- 52

BRAKE MASTER CYLINDER 35- 54

BRAKE PEDAL AND BRAKE BOOSTER (MASTER VAC) 35- 56

FRONT WHEEL BRAKE
- < FE639 : DISC BRAKE > 35- 58
- < FE649 : DISC BRAKE > 35- 62
- < FG639 : DRUM BRAKE > 35- 66

REAR WHEEL BRAKE
- < FE639, FG639 : DRUM BRAKE > 35- 72
- < FE649 : DISC BRAKE > 35- 80

VACUUM PUMP 35- 84

LOAD SENSING VALVE 35- 85

EXHAUST BRAKE SYSTEM 35- 86

SPECIFICATIONS

< Service Brake Equipment >

Item \ Vehicle model			FE639, FG639	FE649
Brake booster (Master vac)	Type		Tandem type	
	Diaphragm diameter in.		ø8+ø9	ø9+ø10
	Manufacturer		JIDOSHA KIKI	
Brake master cylinder	Inner diameter mm {in.}		ø30.16 {1.19}	ø31.75 {1.25}
	Stroke	Front mm {in.}	17.4 {0.69}	16.0 {0.63}
		Rear mm {in.}	14.6 {0.57}	16.0 {0.63}
	Manufacturer		JIDOSHA KIKI	
Vacuum pump	Type		Vane type	
	Delivery cm^3 {cu. in.}		60 {3.66}	90 {5.49}
	Manufacturer		MITSUBISHI ELECTRIC	

< Wheel Brake >

Item \ Vehicle model			FE639
Front	Brake type		Disc brake (Full floating type)
	Cylinder inner diameter of caliper	mm {in.}	ø51.1 {2.01}
	Disc rotor outer diameter×Thickness	mm {in.}	ø288×24 {11.3×0.94}
	Brake pad thickness	mm {in.}	12 {0.47}
Rear	Brake type		Drum brake (Dual 2-leading type)
	Inner diameter of wheel cylinder	mm {in.}	ø28.57 {1.12}
	Inner diameter of brake drum	mm {in.}	ø320 {12.6}
	Brake lining width×Thickness	mm {in.}	75×9.3 {2.95×0.37}

Item \ Vehicle model			FE649
Front	Brake type		Disc brake (Full floating type)
	Cylinder inner diameter of caliper	mm {in.}	ø51.1 {2.01}
	Disc rotor outer diameter×Thickness	mm {in.}	ø293×40 {11.5×1.57}
	Brake pad thickness	mm {in.}	14 {0.55}
Rear	Brake type		Disc brake (Full floating type)
	Cylinder inner diameter of caliper	mm {in.}	ø51.1 {2.01}
	Disc rotor outer diameter×Thickness	mm {in.}	ø293×40 {11.5×1.57}
	Brake pad thickness	mm {in.}	14 {0.55}

Item \ Vehicle model			FG639
Front	Brake type		Drum brake (2-leading type)
	Inner diameter of wheel cylinder	mm {in.}	ø31.75 {1.25}
	Inner diameter of brake drum	mm {in.}	ø320 {12.6}
	Brake lining width × thickness	mm {in.}	75 × 9.3 {2.95 × 0.37}
Rear	Brake type		Drum brake (Dual 2-leading type)
	Inner diameter of wheel cylinder	mm {in.}	ø28.57 {1.12}
	Inner diameter of brake drum	mm {in.}	ø320 {12.6}
	Brake lining width × thickness	mm {in.}	75 × 9.3 {2.95 × 0.37}

< Exhaust Brake System >

Item	Specifications
Control system	Combined electric and vacuum
Valve type	Butterfly valve type

Brake System

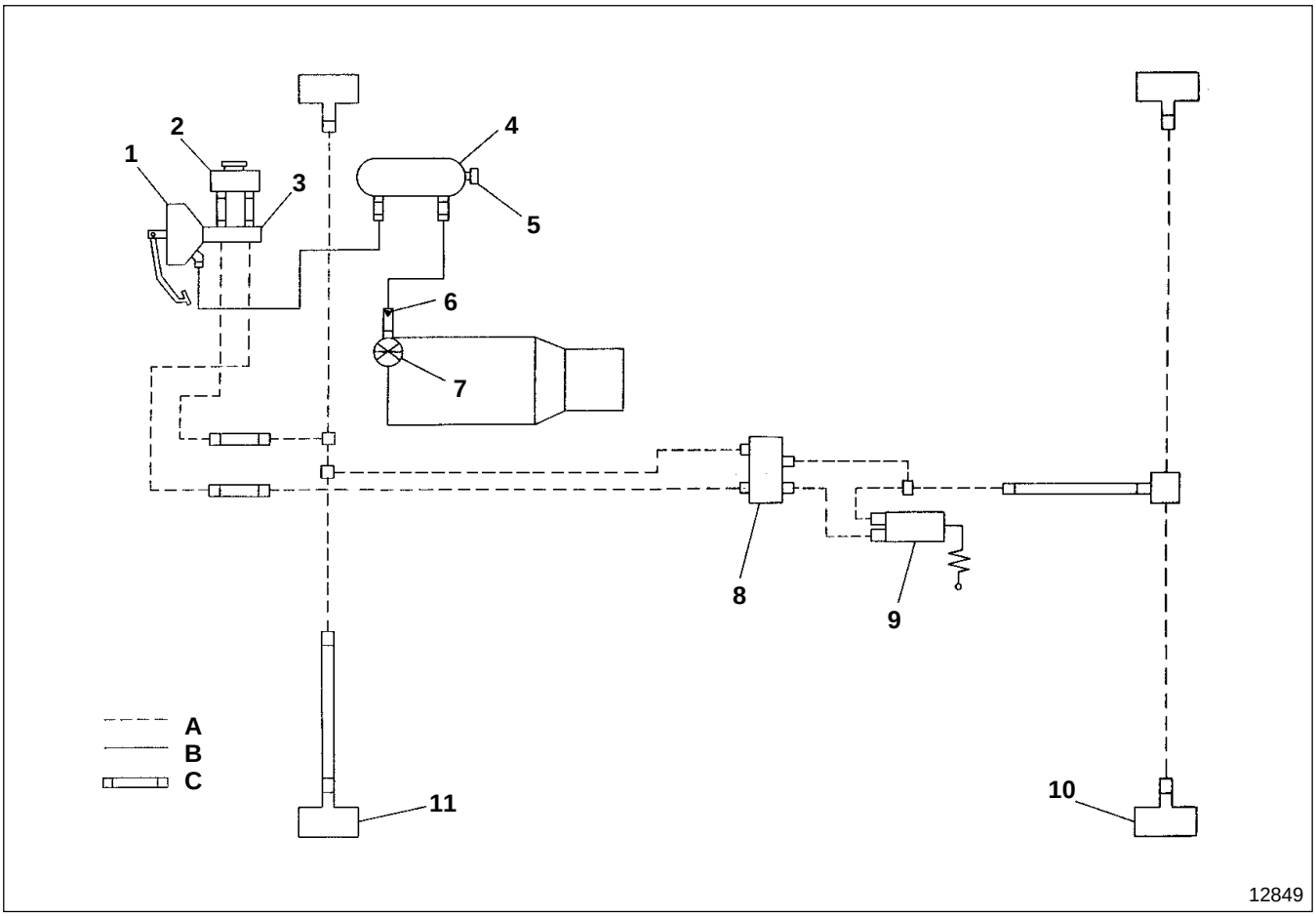

1 Brake booster (master vac)
2 Fluid tank
3 Brake master cylinder
4 Vacuum tank
5 Vacuum switch
6 Check valve
7 Vacuum pump
8 Bypass valve
9 Load sensing valve
10 Rear wheel brake
11 Front wheel brake

A : Fluid line
B : Air line
C : Hose

- The brake system is a vacuum servo all-wheel brake type, with brake booster (master vac) **1**.
- Load sensing valve **9** automatically changes the oil pressure of the rear wheel brakes according to the load changes, preventing the rear wheels from locking too early.
- Bypass valve **8** is fitted as a safety mechanism. It provides braking force if the front brake system is damaged and loses hydraulic pressure. The bypass valve does this by making the hydraulic pressure of the rear brake system bypass load sensing valve **9** and act directly on rear wheel brake **10**.

Brake Booster (Master Vac) and Brake Master Cylinder

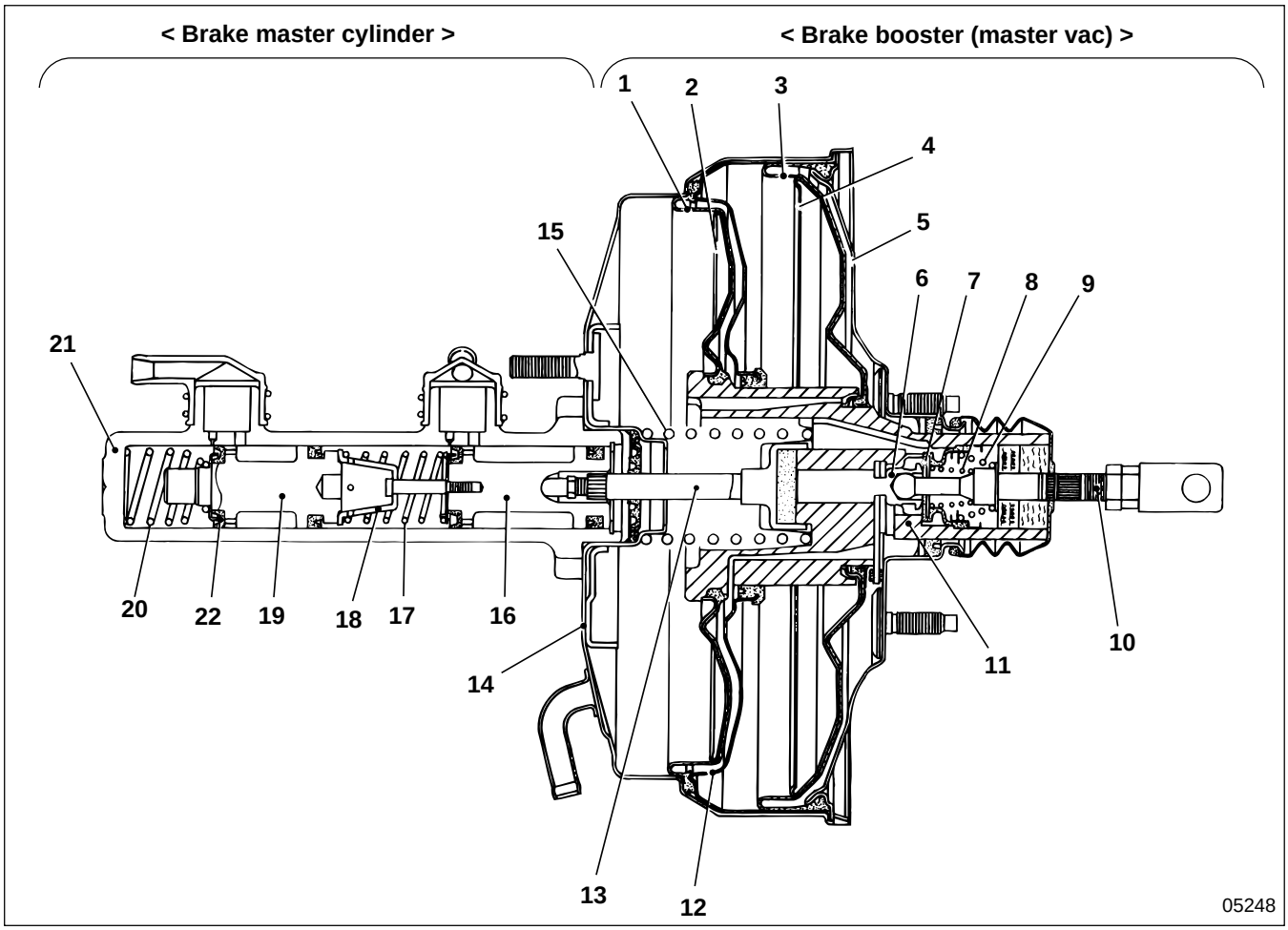

< Brake booster (master vac) >

- **1** Front diaphragm
- **2** Front diaphragm plate
- **3** Rear diaphragm
- **4** Rear diaphragm plate
- **5** Rear shell
- **6** Valve plunger
- **7** Poppet
- **8** Poppet spring
- **9** Valve return spring
- **10** Operating rod
- **11** Valve body
- **12** Center plate
- **13** Push rod
- **14** Front shell
- **15** Diaphragm plate spring

< Brake master cylinder >

- **16** Primary piston
- **17** Primary piston return spring
- **18** Retainer
- **19** Secondary piston
- **20** Secondary piston return spring
- **21** Cylinder body
- **22** Packing cup

● **When depressing brake pedal**

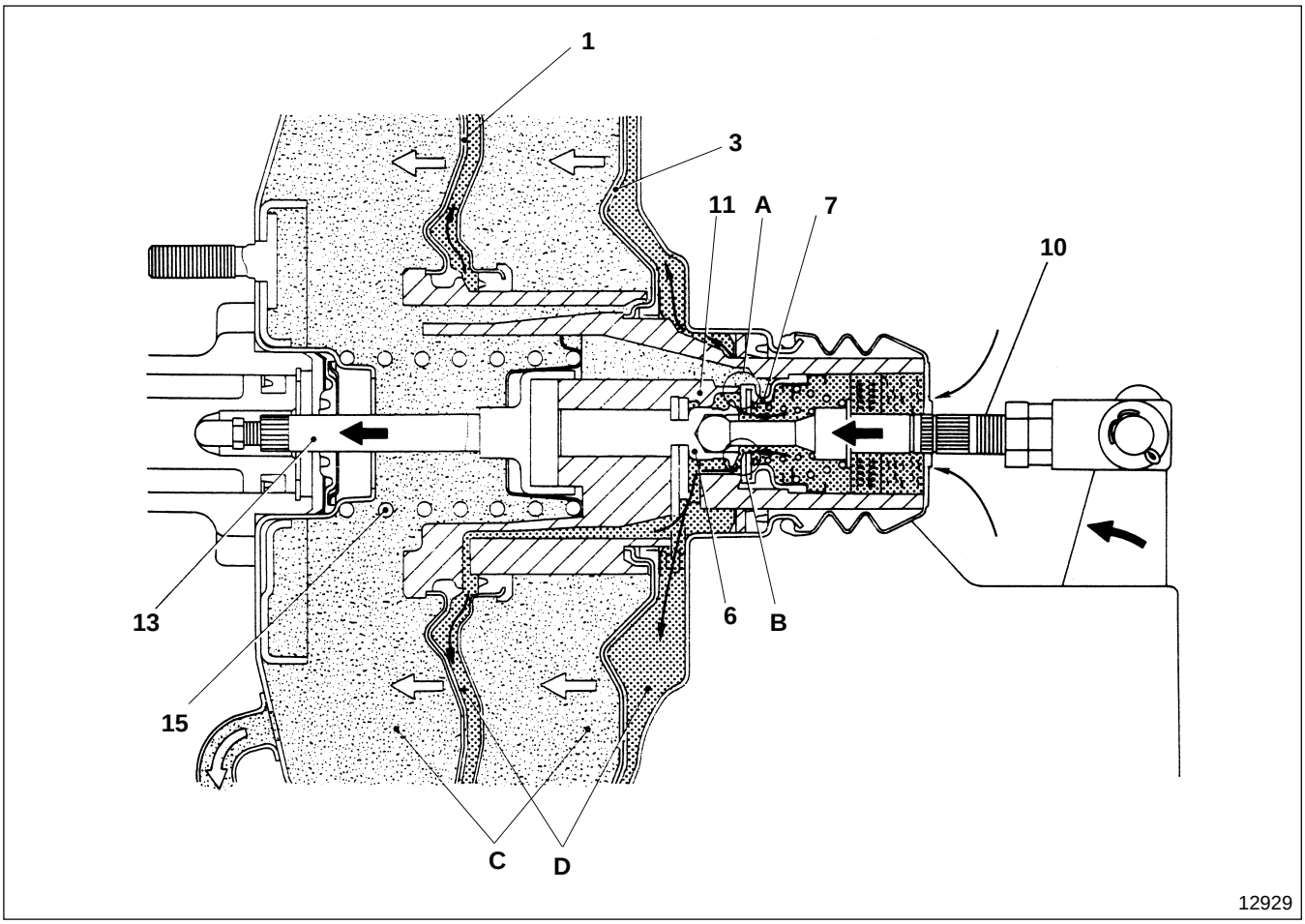

Action of brake booster (master vac)

- When the brake pedal is released, chambers **C** and **D** are subjected to the vacuum created by the vacuum pump.
- Depressing the brake pedal activates operating rod **10**, placing poppet **7** in tight contact with the seat of valve body **11**. This action closes vacuum valve **A**, cutting off the vacuum to chamber **D**.
- Depressing the brake pedal further separates valve plunger **6** from poppet **7**, opening breather valve **B** permitting atmospheric pressure to flow into chamber **D**, producing a pressure difference between chambers **C** and **D**.
- This pressure difference between chambers **C** and **D** presses front diaphragm **1** and rear diaphragm **3**, boosting the depressing force.
- This boosted pedal depression force overcomes the repercussive force of diaphragm plate spring **15**, presses push rod **13**, and actuates the brake master cylinder.

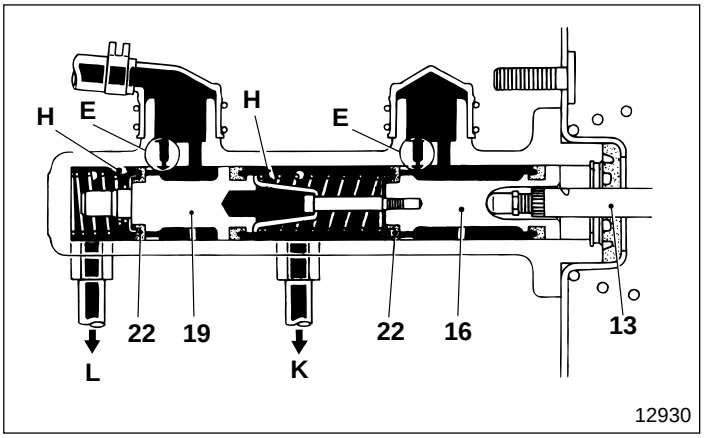

Action of brake master cylinder

- Push rod **13** pushes in primary piston **16** and secondary piston **19**, and packing cup **22** passes return port **E**, generating hydraulic pressure in chamber **H**, feeding the fluid to the respective brake systems.

  K : To the front brake system
  L : To the rear brake system

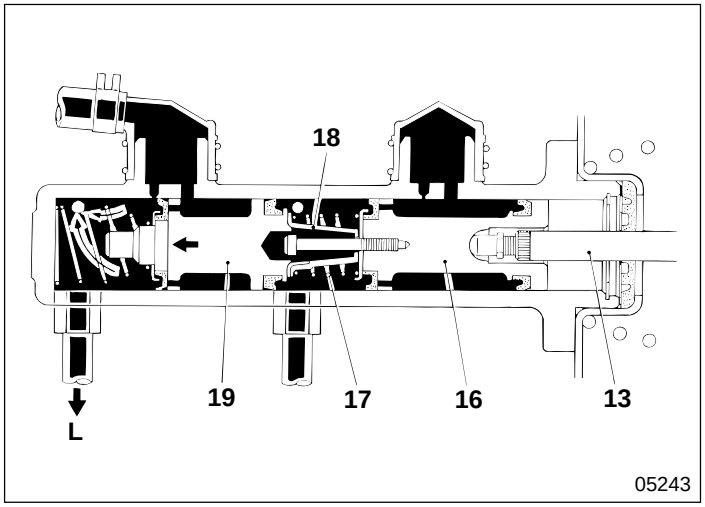

● **Fluid leakage in the front brake system**

- Depressing the brake pedal makes push rod **13** push in primary piston **16**. However, if the brake fluid in the front brake system leaks, hydraulic pressure is not generated in the front brake system.
- Depressing the brake pedal further makes primary piston **16** compress primary piston return spring **17**, causing retainer **18** to push secondary piston **19**, thus generating hydraulic pressure only in the rear brake system.

L : To the rear brake system

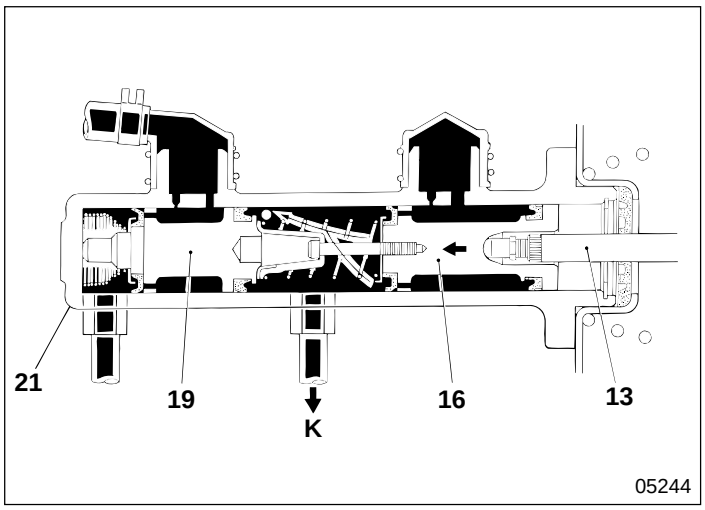

● **Fluid leakage in the rear brake system**

- Depressing the brake pedal makes push rod **13** push in primary piston **16** and secondary piston **19**. However, if the brake fluid in the rear brake system leaks, hydraulic pressure is not generated in the rear brake system.
- Depressing the brake pedal further makes the end of secondary piston **19** contact cylinder body **21**, pushing primary piston **16**, thus generating hydraulic pressure only in the front brake system.

K : To the front wheel brake system

● **When releasing brake pedal**

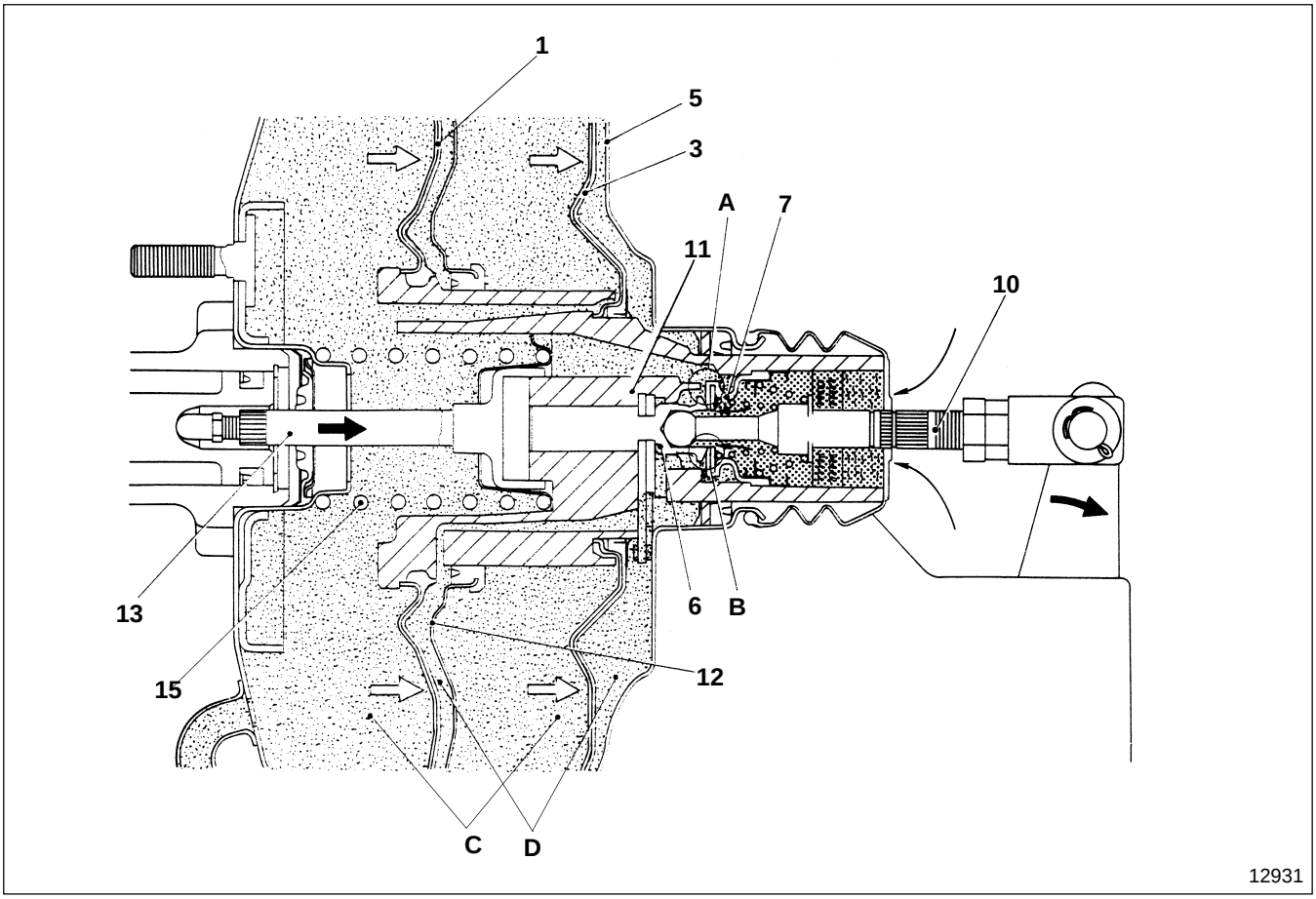

Action of brake booster (master vac)

- When the brake pedal is depressed, atmospheric air flows into chamber **D** as chamber **C** is subjected to negative pressure generated by the vacuum pump.
- When the brake pedal is released, since the pressing force acting on the operating rod **10** also is released, valve plunger **6** contacts poppet **7** tightly, closing breather valve **B** to cut off the flow of atmospheric air into chamber **D**. In addition, valve plunger separates from valve body **11** to open vacuum valve **A**. Then, the negative pressure generated by the vacuum pump creates a vacuum in chamber **D**, and the pressure difference between chambers **C** and **D** diminishes.
- This absence of a pressure difference between chambers **C** and **D**, allows rear diaphragm **3** to be pushed against the rear shell **5** by the repercussive force of diaphragm plate return spring **15**, and push rod **13** returns to its original position.

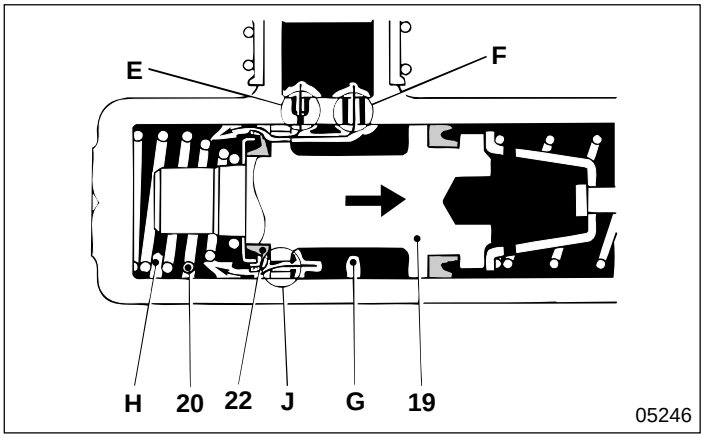

Action of brake master cylinder

- When push rod **13** returns to its original position, the repercussive force of the secondary piston return spring **20** immediately begins to return secondary piston **19**. However, the brake fluid delivered from the brake master cylinder cannot return quickly due to the absence of a pressure difference between chambers **H** and **G**.
- As secondary piston **19** begins to return, the pressure in chamber **H** becomes lower than that in chamber **G**, and this pressure difference deforms packing cup **22** to open a small passage **J**. Then, the brake fluid in chamber **G** is drawn into chamber **H**.

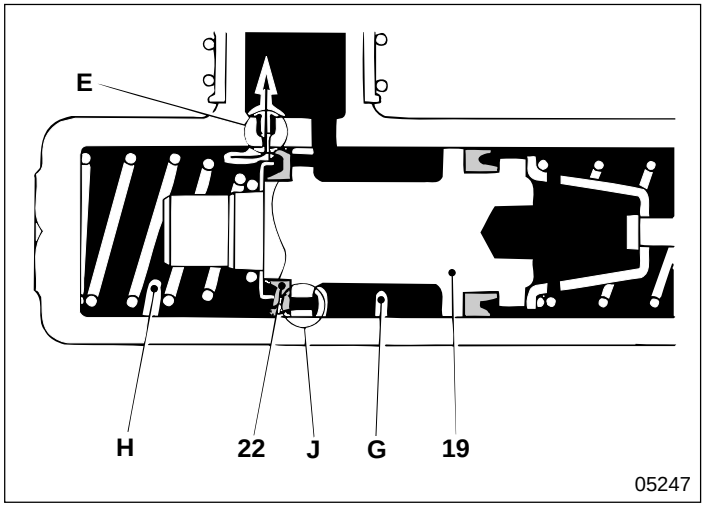

- When secondary piston **19** returns to its original position, the pressure difference between chambers **G** and **H** is diminished, and packing cup **22** closes the small passage **J**. The hydraulic oil in the brake pipe flows from chamber **H** to the fluid tank via return port **E**.
- The same operation takes place also on the primary side.

Front Drum Brake Assembly

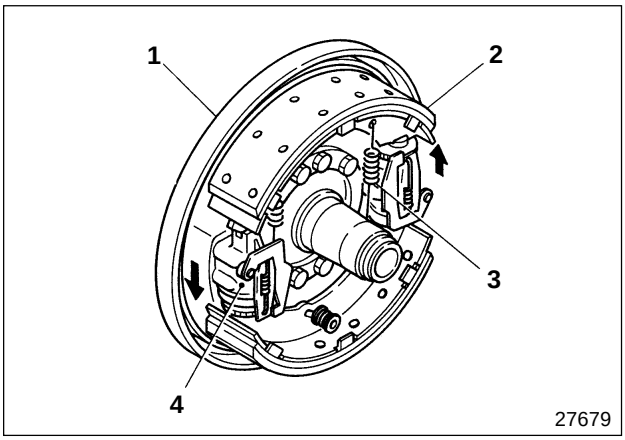

1 Back plate
2 Brake shoe assembly
3 Return spring
4 Wheel cylinder assembly

The front drum brake assembly has two-leading brakes installed, and with single action wheel cylinder assembly **4**, the action coming from leading shoes when brake shoe assembly **2** is forward provides increased braking force through its independent double action.

● **Wheel cylinder assembly**

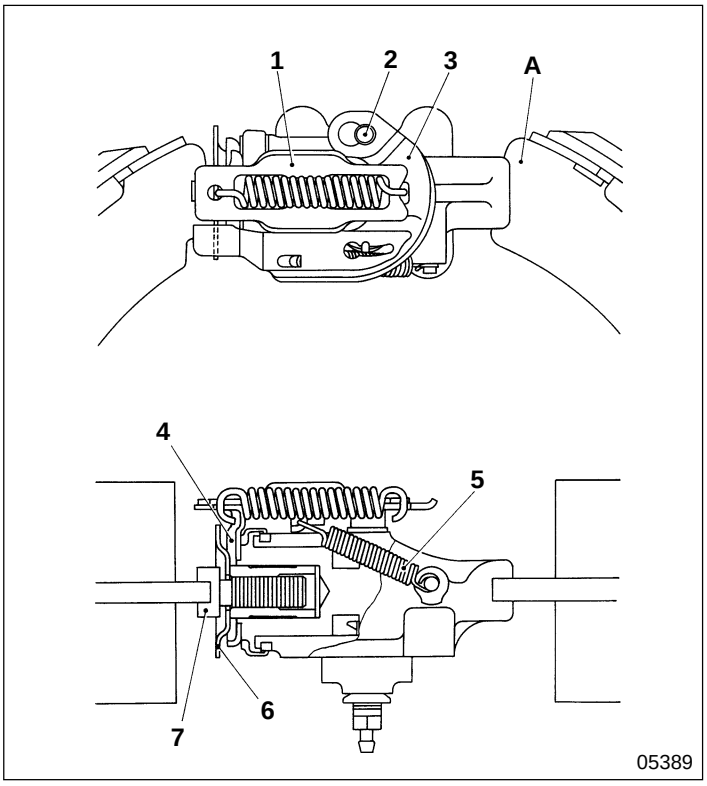

1 Spring and fitting
2 Pin
3 Lever
4 Piston assembly
5 Set spring
6 Adjuster assembly
7 Adjusting screw

A : Brake shoe assembly

The wheel cylinder assembly is equipped with an auto adjusting mechanism to adjust the gap resulting from wear between the break lining and brake drum, each time the brakes are applied.

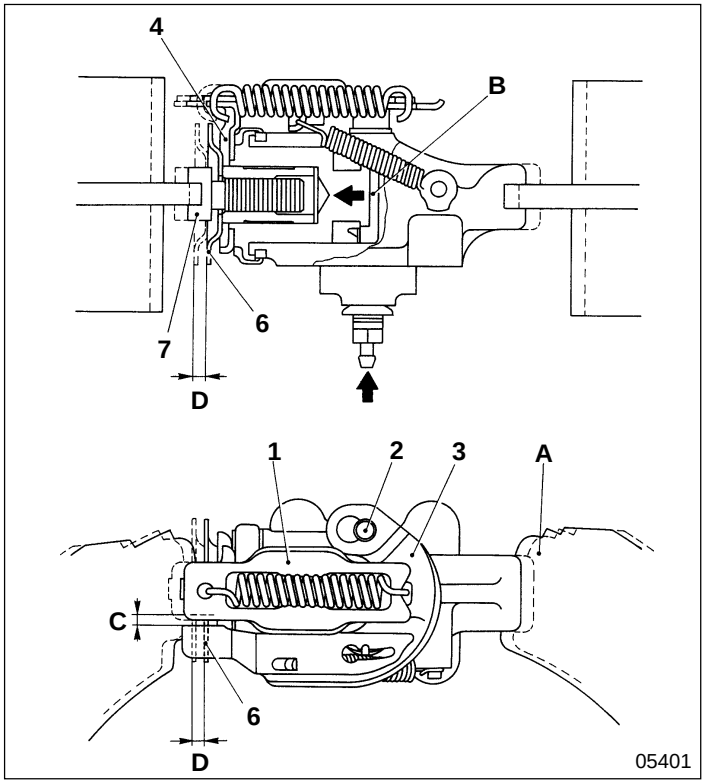

● **Automatic adjustment mechanism**

Operation

- When the brake pedal is pushed, hydraulic pressure from the brake master cylinder enters chamber **B**, driving out piston assembly **4** and pulling spring and fitting **1**. Lever **3** interlocks with spring and fitting **1**, rotating on pin **2**.
  C : Level travel
  D : Protrusion of piston assembly

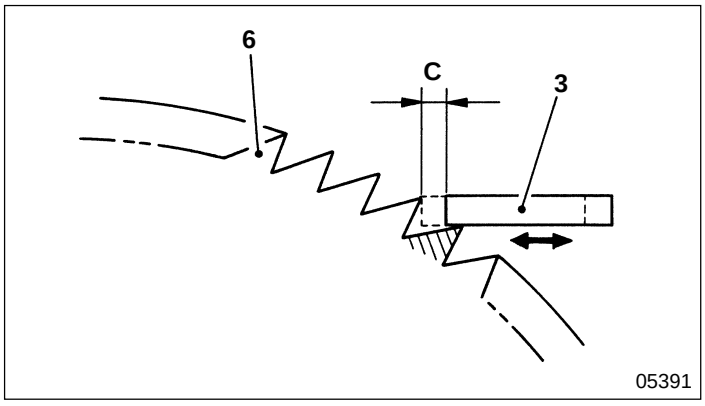

- When the clearance between the brake drum and brake lining is correct, adjuster assembly **6** does not rotate even when brakes are applied, as there is no action from lever **3**.
  C : Lever travel

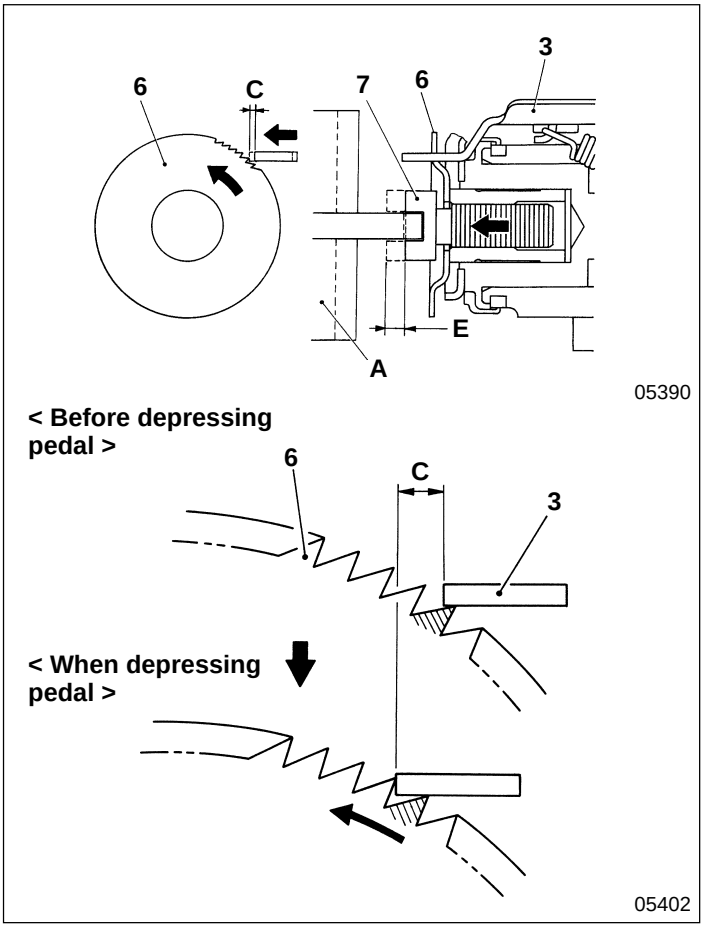

- When the clearance between the brake drum and brake lining increases, movement of piston assembly **4** and lever **3** increase.
  C : Lever travel
  E : portrusion of adjustor screw

- The force of lever **3** increases the rotation of adjuster assembly **6** and the force of screw of adjuster assembly ejects adjusting screw **7**, and brake shoe assembly **A** expands.

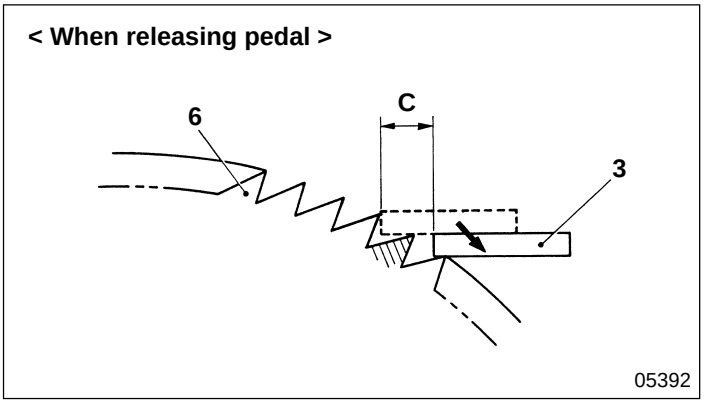

- By depressing break pedal adjuster assembly **6** keep its rotated position while lever **3** goes back to the position deviated one step, and adjust the gap between the brake drum and brake lining correctly.
  C : Lever travel

Front Disc Brake

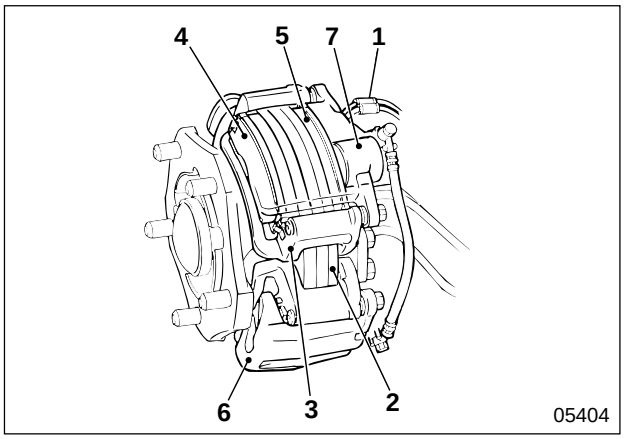

1 Brake pad wear indicator
2 Disc rotor
3 Torque member
4 Outer pad
5 Inner pad
6 Caliper
7 Piston

Inner pad **5** is fitted with brake pad wear indicator **1** that gives warning when it is time to replace outer pad **4** and the inner pad.

Rear Drum Brake Assembly

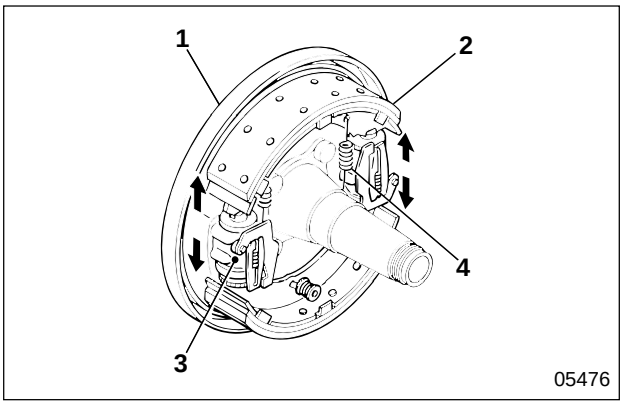

1 Backing plate
2 Brake shoe assembly
3 Wheel cylinder assembly
4 Return spring

The rear drum brake assembly is a dual 2-leading type brake and is fitted with wheel cylinder assembly **3**, the self-servo action of which produces a great braking force by using brake shoe assembly **2** as the leading shoe when the vehicle is travelling forwards.

● **Wheel cylinder assembly**

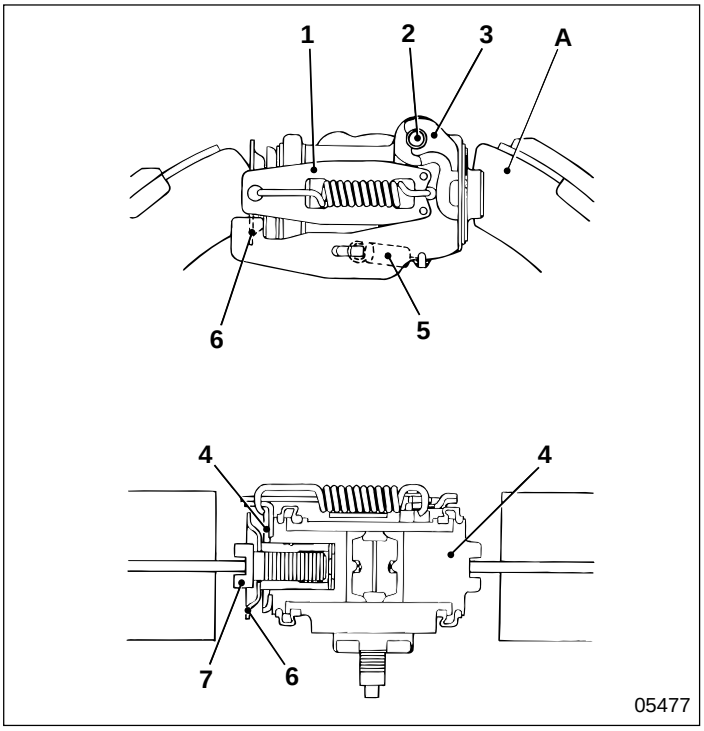

1 Spring and fitting
2 Pin
3 Lever
4 Piston assembly
5 Set spring
6 Adjuster assembly
7 Adjusting screw

A : Brake shoe assembly

The wheel cylinder assembly has an automatic adjuster that corrects the increase in clearance that occurs between the brake lining and the brake drum, an increase caused by the wear of the brake lining. This increase occurs whenever the brake pedal is depressed.

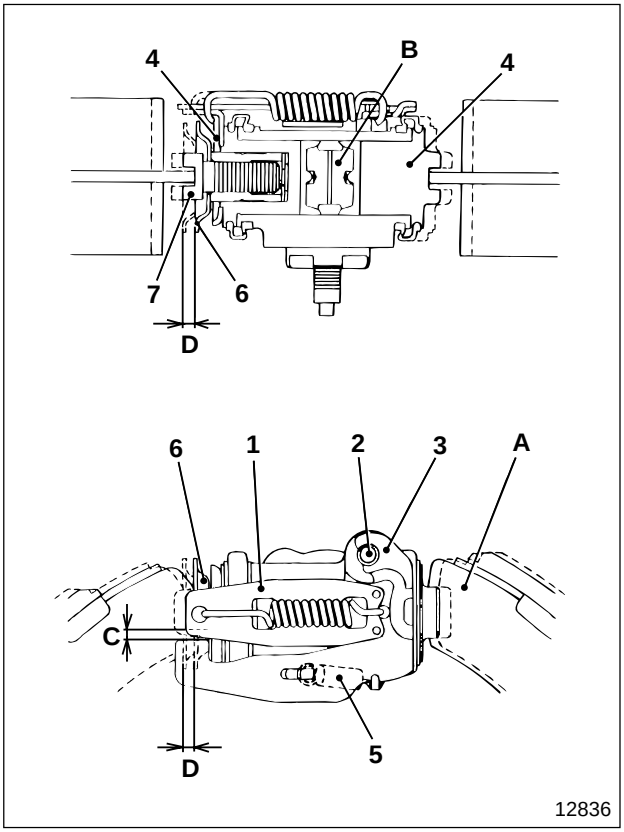

● **Automatic adjustment mechanism**

Operation

- When the brake pedal is pushed, hydraulic pressure from the brake master cylinder enters chamber **B**, driving out piston assembly **4** and pulling spring and fitting **1**. Lever **3** interlocks with spring and fitting **1**, rotating on pin **2**.
  C : Level travel
  D : Protrusion of piston assembly

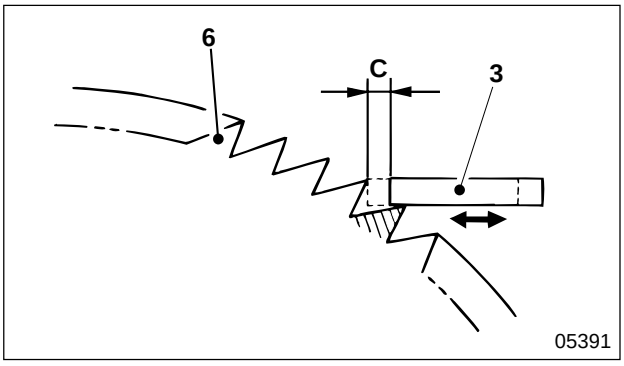

- When the clearance between the brake drum and brake lining is correct, adjuster assembly **6** does not rotate even when brakes are applied, as there is no action from lever **3**.
  C : Lever travel

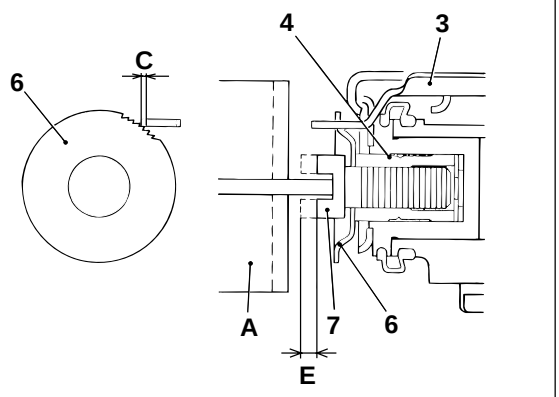

12837

< Before depressing pedal >

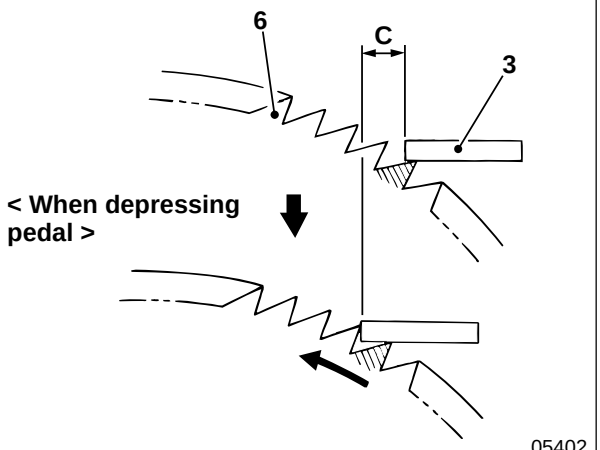

05402

- As the clearance between the brake drum and the brake lining increases, the amount of protrusion of piston assembly **4** also increases, as does the amount of travel of lever **3**.
  C : Lever travel
  E : Protrusion of adjuster screw

- The action of lever **3** increases the rotation of adjuster assembly **6**, the screw action pushes out adjuster screw **7**, expanding brake shoe assembly **A**.

< When releasing pedal >

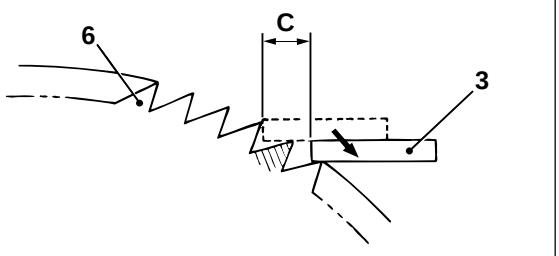

05392

- When the brake pedal is released, since adjuster assembly **6** remains in its new position after turning, returned lever **3** enters the next position, moved by one notch. This assures correct clearance between the brake drum and the brake lining.
  C : Lever travel

Rear Disc Brake

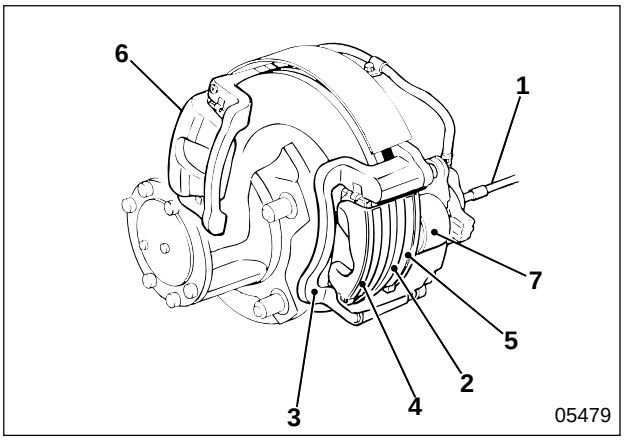

1 Brake pad wear indicator
2 Disc rotor
3 Torque member
4 Outer pad
5 Inner pad
6 Caliper
7 Piston

Inner pad **5** is fitted with brake pad wear indicator **1** that gives warning when it is time to replace outer pad **4** and the inner pad.

Vacuum Pump

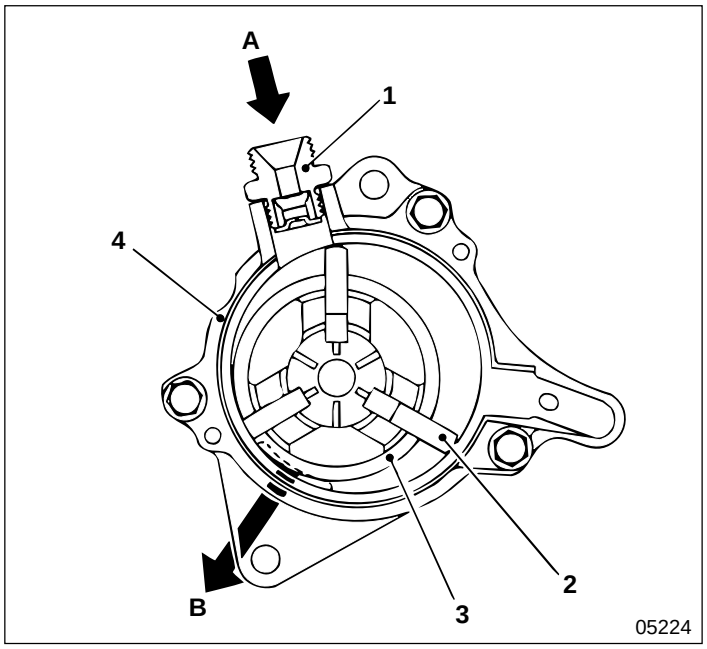

1 Check valve assembly
2 Vane
3 Rotor
4 Housing

A : Inlet
B : Outlet

- The vacuum pump is installed on the timing gear case and is rotated by the injection pump gear or camshaft gear.
- Check valve assembly **1** is fitted to prevent the atmospheric pressure and the lubricating oil from flowing in reverse from the vacuum pump to the vacuum tank when the engine is stopped.

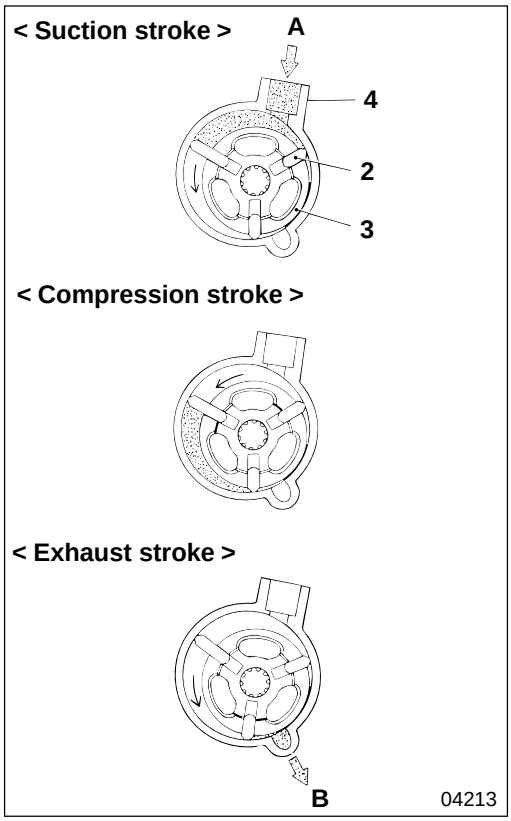

● **Operation**

- Inside cylindrical housing **4**, rotor **3** equipped with three vanes (movable blades) **2** rotates, pressing the vanes against the inside surface of the housing by centrifugal force.
- Since rotor **3** is eccentric with respect to housing **4**, as the rotor rotates, the atmospheric pressure of the vacuum tank is drawn in from inlet **A** and discharges from outlet **B** by the gradual compression of the air. This repetition of the suction, compression and exhaust strokes generates a vacuum, realizing a near-vacuum in the vacuum tank.
- The engine oil that lubricates and cools the inside of housing **4** is returned, along with air pressure, through outlet **B** to the oil pan.

Load Sensing Valve

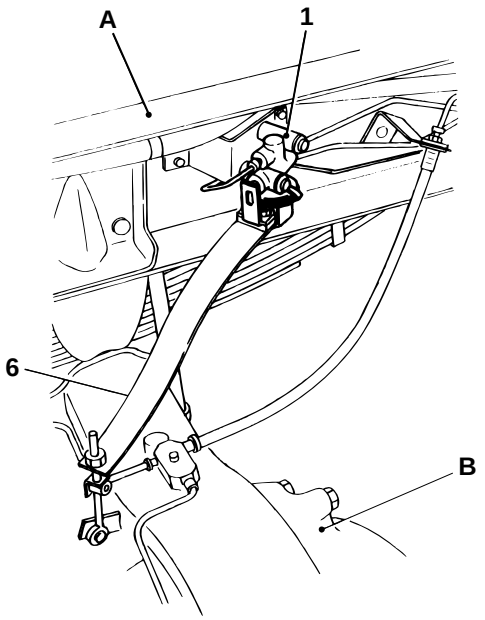

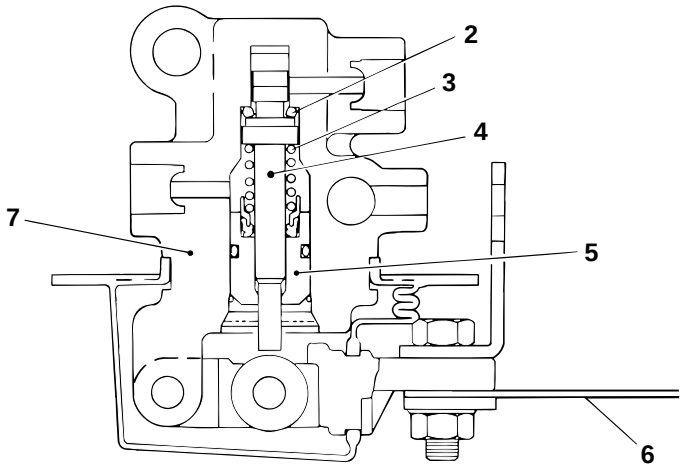

12932 05589

1 Load sensing valve
2 Packing cup
3 Spring
4 Plunger
5 Retainer
6 Leaf spring
7 Valve body

A : Frame
B : Rear axle

The deflection of leaf spring **6**, fixed on rear axle **B**, notifies load sensing valve **1** of any shifts in the load. This decreases hydraulic pressure to the rear wheel brakes compared to the front wheel brakes. This maintains adequate braking performance that corresponds to any shift in the load, preventing premature rear wheel lock.

● **Valve unit**

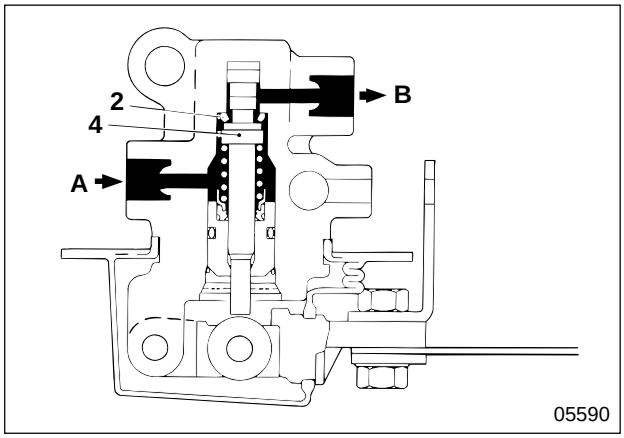

When depressing brake pedal

- Brake fluid is supplied from the brake master cylinder to the rear wheel brakes via chamber **A**, the clearance between packing cup **2** and plunger **4**, and chamber **B**.

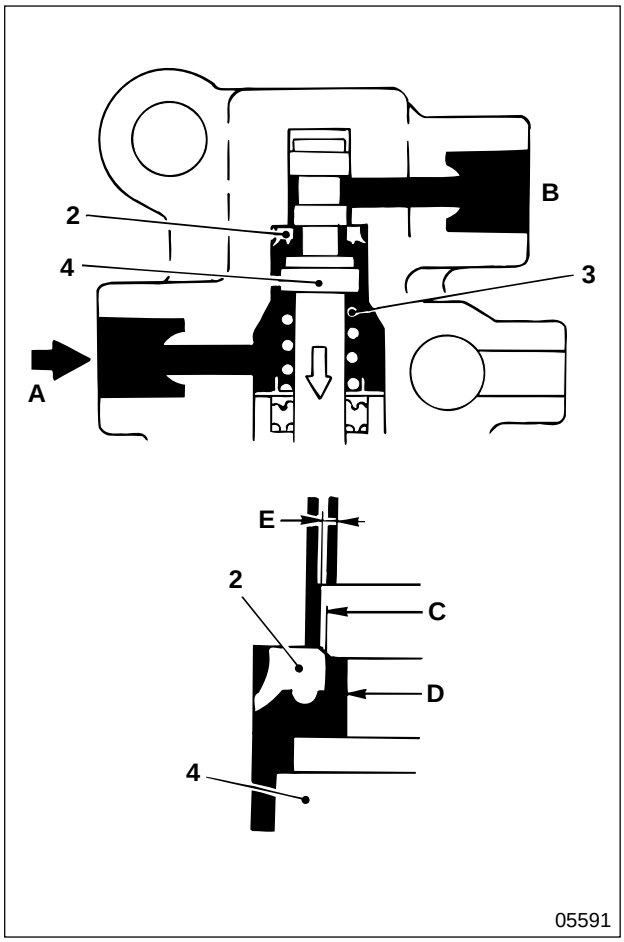

- Hydraulic pressure **A**, supplied by the brake master cylinder, gradually increases on seal cross-section **E** of plunger **4**. This increase depresses spring **3** pushing the plunger down onto packing cup **2** and cuts off the passage between chambers **A** and **B**. This is called the decompression point.
  🕮 P35-19 (Performance characteristics chart)
- Hydraulic pressure **A** at the brake master cylinder pushing plunger **4** up when the decompression point is passed. On the other hand, hydraulic pressure **B** at the rear wheel brakes works as a depressing force, so hydraulic pressure **A** and **B** balance, cutting off the passage between chambers **A** and **B**.
  At this time, hydraulic pressure at the brake master cylinder works at the donut-shaped cross-section (formed by the removal of cross-section **D** from cross-section **C** of plunger **4**). However, because hydraulic pressure **B** at the rear wheels works on the whole cross-section **E** of the plunger seal, and the rear wheel brake side remains at low hydraulic, balance is maintained.
- Therefore, hydraulic pressure **B** at the rear wheel brakes is lower than hydraulic pressure **A** at the brake master cylinder.
  The gradient of the performance characteristics of hydraulic pressure **B** is lower than that of hydraulic pressure **A**.
  🕮 P35-19 (Performance characteristics chart)

● **Sensor unit**

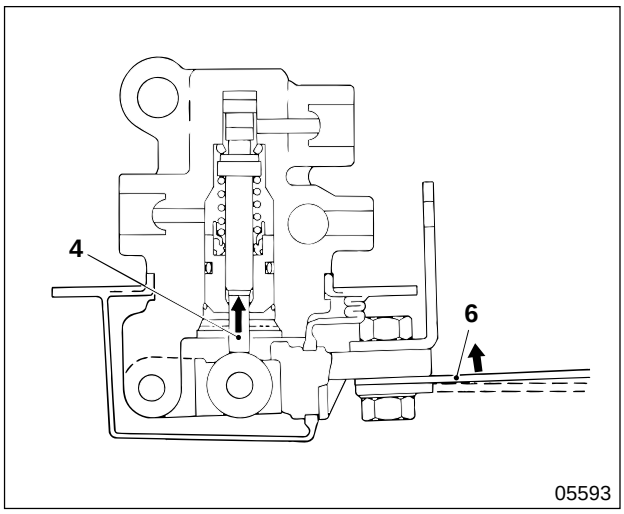

- **When the vehicle is loaded**
  When the vehicle is loaded, since the deflection of leaf spring **6** is large and the amount of upward travel of plunger **4** is also large, the amount of plunger downward travel is small. Therefore, the decompression point rises to supply higher brake pressure to the rear wheels, compared to the unloaded state.

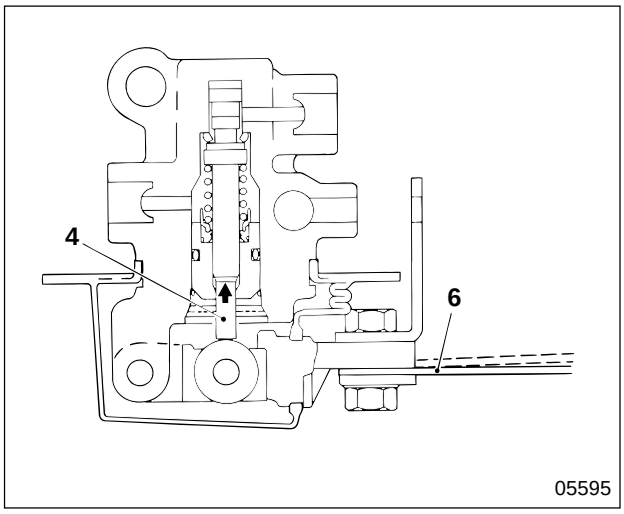

- **When the vehicle is unloaded**
  When the vehicle is unloaded, since the deflection of leaf spring **6** is small and the amount of upward travel of plunger **4** is also small, the amount of plunger downward travel is large. Therefore, the decompression point drops to supply lower brake pressure to the rear wheels, compared to the loaded state.

● **Performance characteristics**

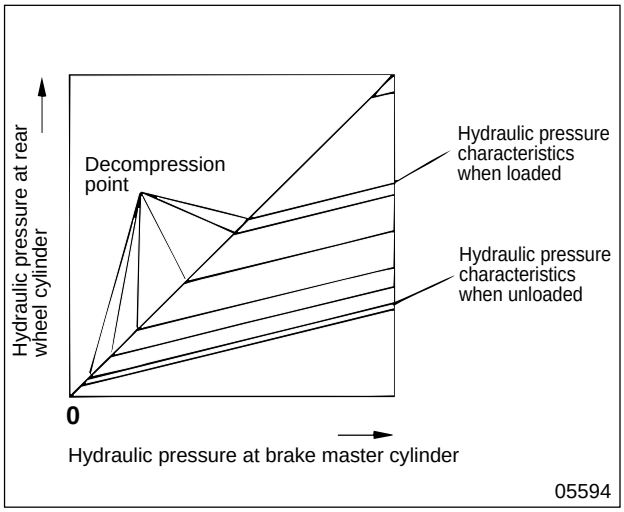

The figure on the left shows the changes in braking performance characteristics of the rear wheels. These changes depend on the vehicle load and any shifts in the load caused by sudden deceleration while cruising.

Bypass Valve

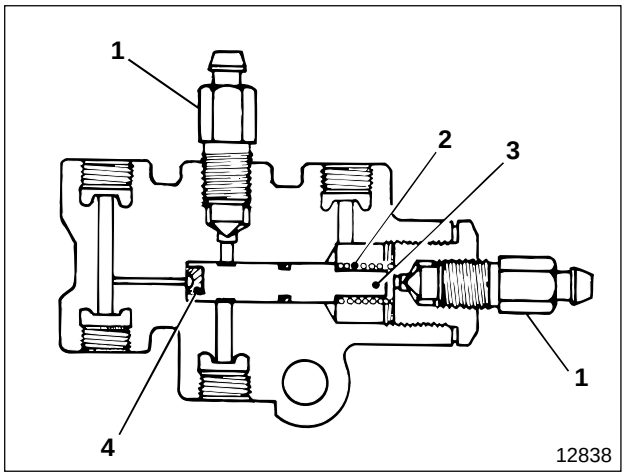

1 Bleeder screw
2 Spring
3 Piston
4 Seal

- If any failure occurred in the front brake system that decreased the hydraulic pressure, the decompression effect of the load sensing valve would affect the hydraulic pressure in the rear brake system. This would reduce the braking force of the rear brake system. The bypass valve is fitted to prevent this from happening.
- If the hydraulic pressure in the front brake system decreases, the hydraulic pressure in the rear brake system bypasses the load sensing valve and is fed directly to the rear wheel brake.

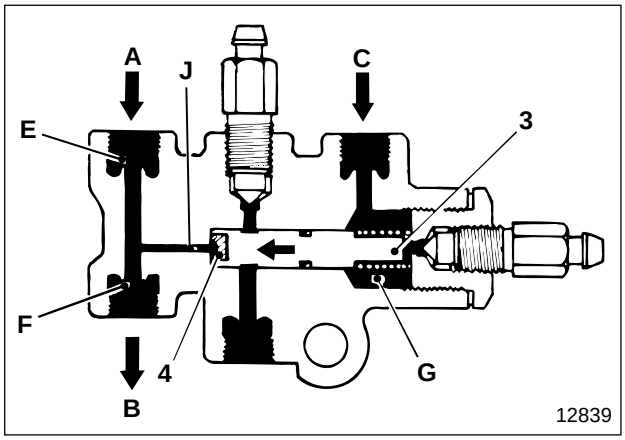

● **When the hydraulic pressure in the front brake system is normal**

- The hydraulic pressure flows through chamber **G**, pushes piston **3**, and cuts off bypass **J** with seal **4**.
  C : From front brake system
- The hydraulic pressure in the rear brake system flows from chamber **E** into chamber **F**.
  A : From the rear brake system of the brake master cylinder
  B : To the load sensing valve

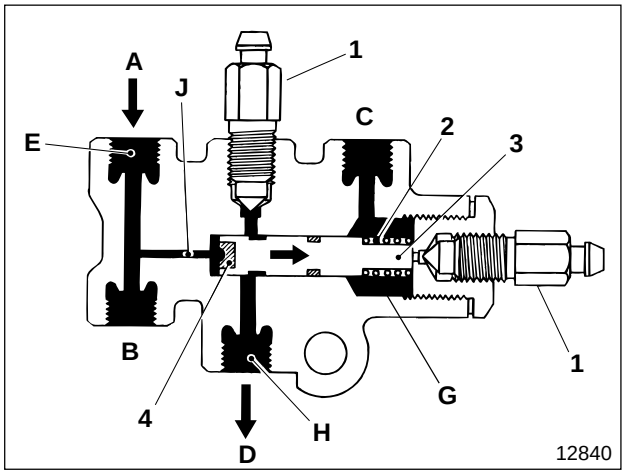

● **When the hydraulic pressure in the front brake system decreases abnormally.**

- The hydraulic pressure in chamber **G** decreases, reducing the force pushing piston **3**.
  C : From the front brake system
- The hydraulic pressure of the rear brake system pushes seal **4**, and overcomes the repercussive force of spring **2** to push piston **3**, opening bypass pass **J**.
- The hydraulic pressure of the rear brake system flows from chamber **E** into chamber **H**.
  A : From the rear brake system of the brake master cylinder
  D : To the rear wheel brake

M E M O

Exhaust Brake System

< Manual transmission >

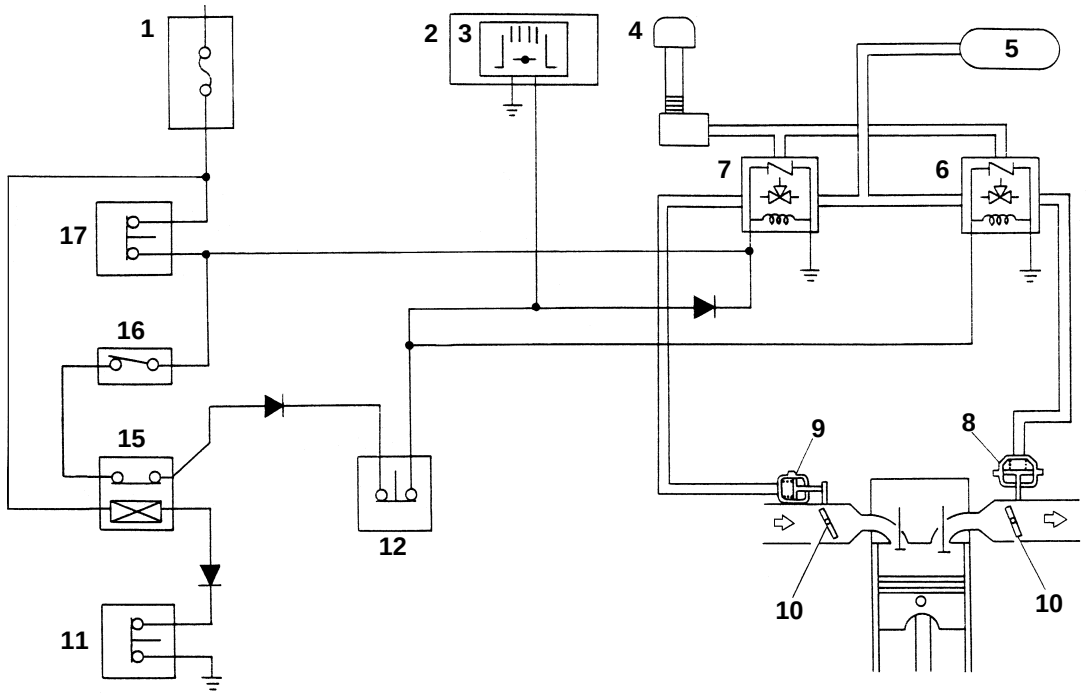

12841

< Automatic transmission >

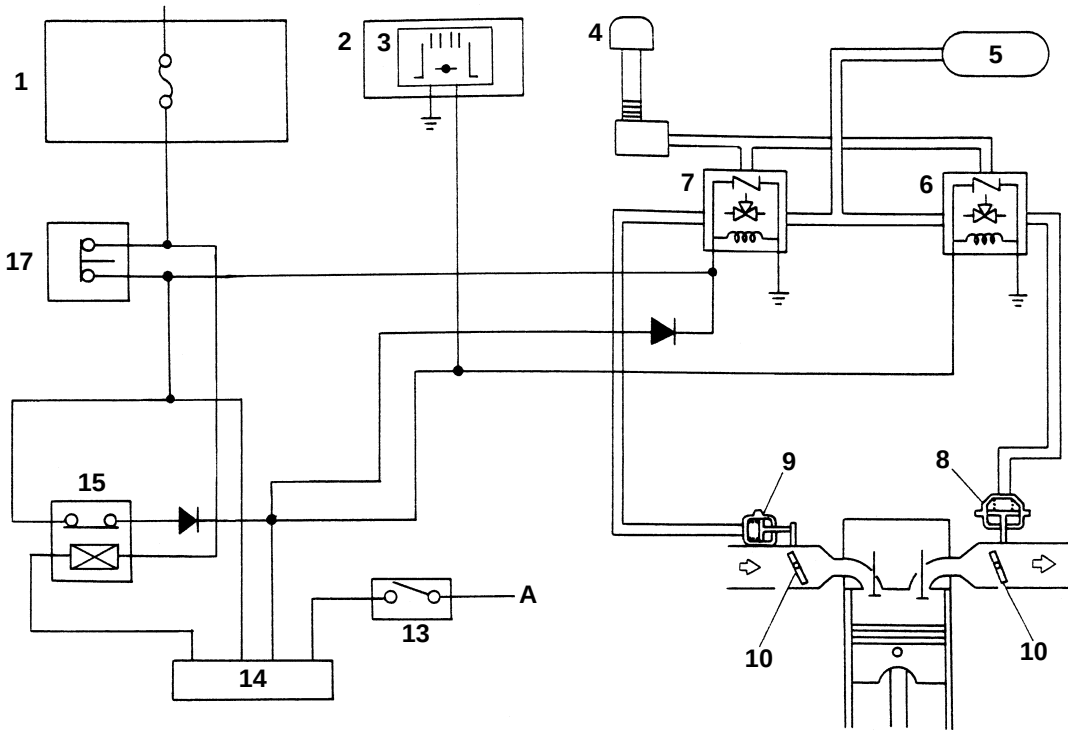

12842

1 Fuse box
2 Meter cluster
3 Exhaust brake indicator lamp
4 Air cleaner
5 Vacuum tank
6 Exhaust brake 3-way magnetic valve
7 Intake shutter 3-way magnetic valve
8 Exhaust brake unit
9 Intake shutter
10 Butterfly valve
11 Neutral switch < Manual transmission >
12 Clutch switch < Manual transmission >
13 Inhibiter switch < Automatic transmission >
14 Automatic transmission electric control unit < Automatic transmission >
15 Exhaust brake cut relay
16 Exhaust brake switch < Manual transmission >
17 Accelerator switch
18 Clutch switch < Manual transmission >

A : From starter switch

- The exhaust brake uses pressure to push and return the piston in the exhaust stroke. This pressure is generated when the exhaust pipe is shut and the pressure in the exhaust pipe increases.
- A butterfly valve type exhaust brake unit **8** is fitted as an auxiliary brake to assist the foot brake. Intake shutter **9** is fitted to reduce the suction noise generated when the exhaust brake is operated.
- When the exhaust brake switch **16** is turned ON, excitation of the coil of exhaust brake 3-way magnetic valve **6** closes the atmospheric valve and opens the vacuum valve. This makes the vacuum in the vacuum tank act on exhaust brake unit **8** which closes butterfly valve **10**, activating the exhaust brake.

● **Operation**

Electrical System

< Manual transmission >

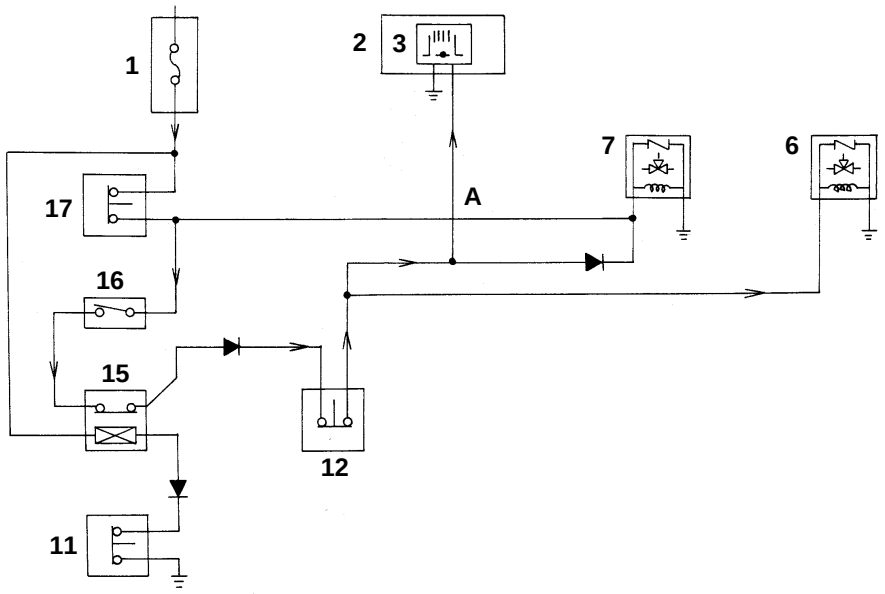

12843

< Automatic transmission >

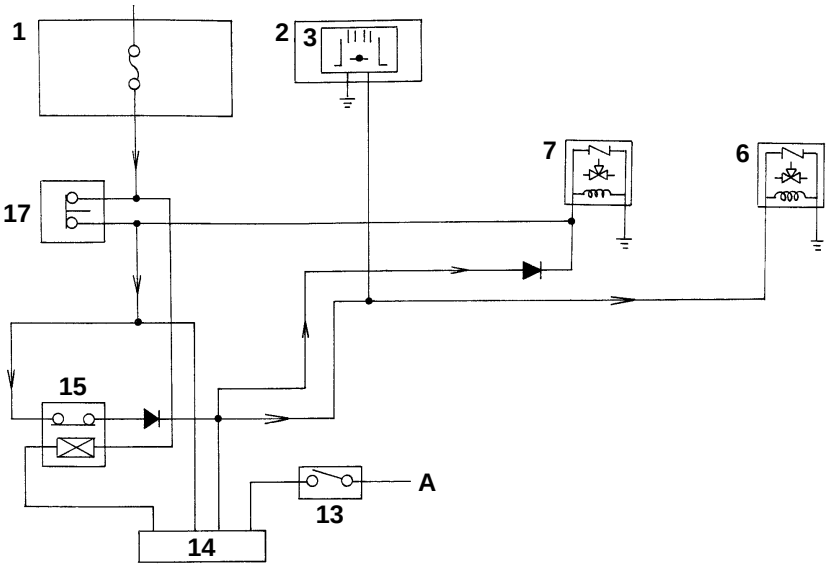

12844

When exhaust brake switch **16** is turned ON, exhaust brake indicator lamp **3** within meter cluster **2** lights up and the exhaust brake 3-way magnetic valve **6** operates.
At this time, depressing the clutch pedal (clutch switch **12** OFF) or the accelerator pedal (accelerator switch **17** OFF) temporarily releases the exhaust brake. When the transmission is in neutral (neutral switch **11** or inhibiter switch **13** ON) because the vehicle is stopped or for some other reason, exhaust brake cut relay **15** operates, releasing the exhaust brake after approximately 10 seconds.
If the accelerator pedal is depressed and released after the exhaust brake is released by the exhaust brake cut relay, the exhaust brake operates again, and after approximately 10 seconds is released.

Exhaust Brake Unit

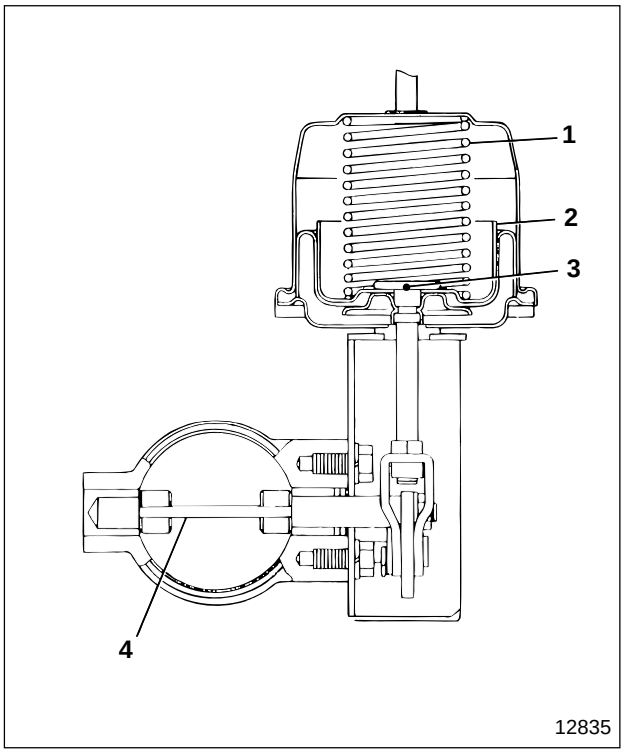

1 Spring
2 Diaphragm
3 Push rod
4 Butterfly valve

Intake Silencer

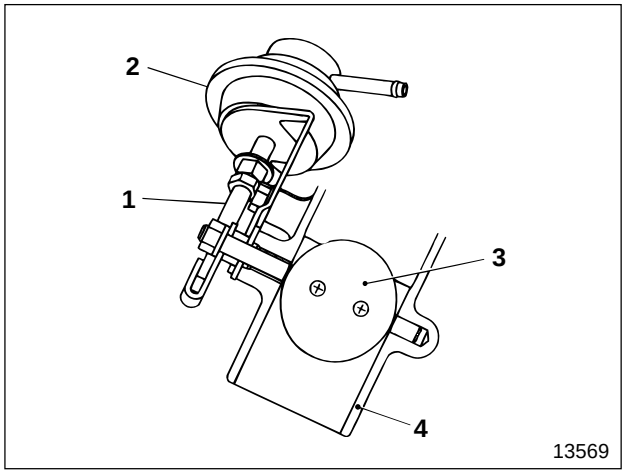

1 Push rod
2 Actuator assembly
3 Butterfly valve
4 Intake pipe

Brake Warning System

● **Vacuum system electric circuit, brake fluid level system electric circuit**

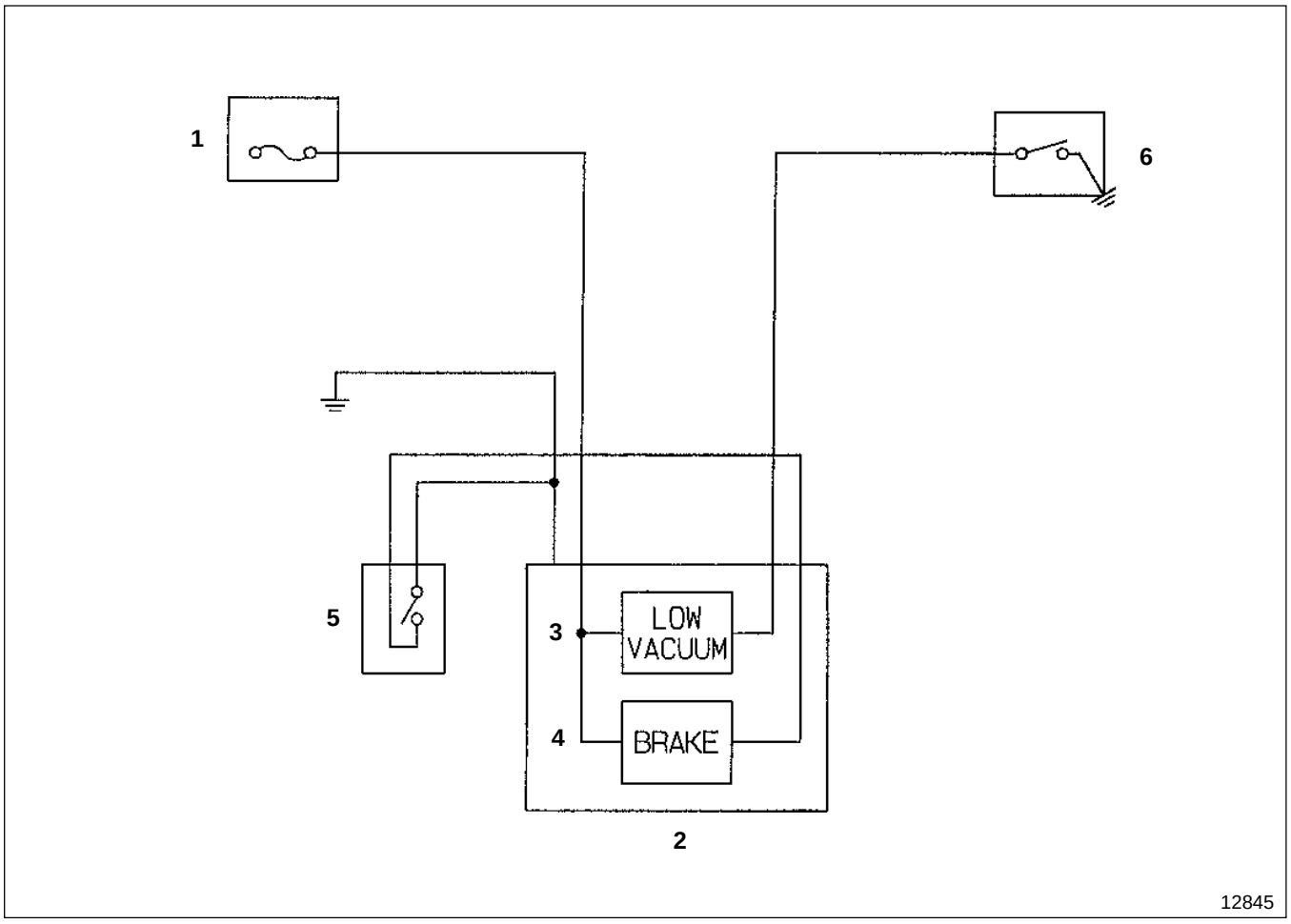

1 Fuse box
2 Meter cluster
3 Vacuum warning lamp
4 Brake warning lamp
5 Brake fluid level switch
6 Vacuum switch

The brake warning system consists of a vacuum system electric circuit which detects the drop in negative pressure inside the vacuum tank, and a brake fluid level system electric circuit which detects the drop in the level of brake fluid inside the fluid tank. In both cases a warning lamp lights up to give warning.

● **Vacuum system electric circuit**

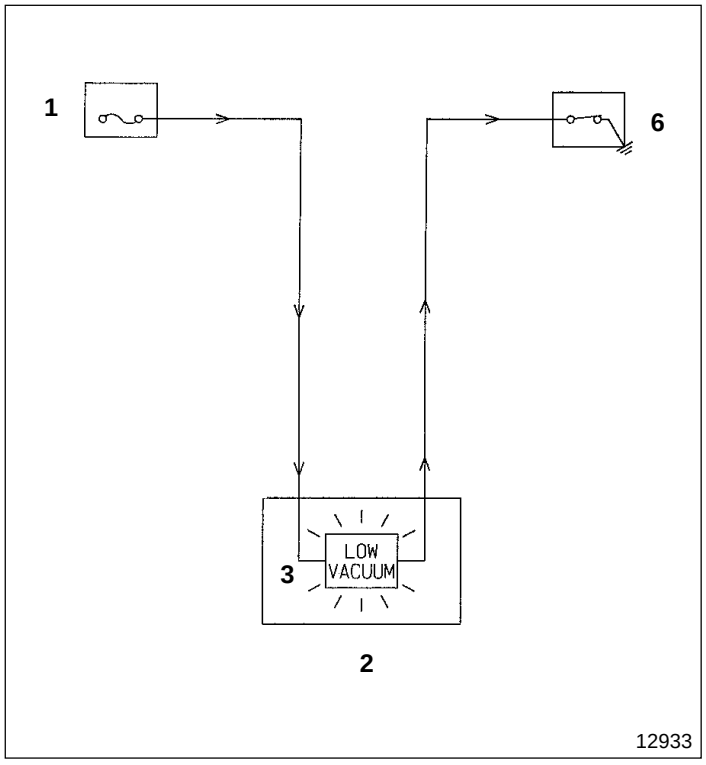

If the negative pressure in the vacuum tank drops below the specified pressure, vacuum switch **6** turns ON lighting vacuum warning lamp **3**. The flow of current at such time is as follows.

Fuse **1**→Vacuum warning lamp **3**→Vacuum switch **6**→Ground

● **Brake fluid level system electric circuit**

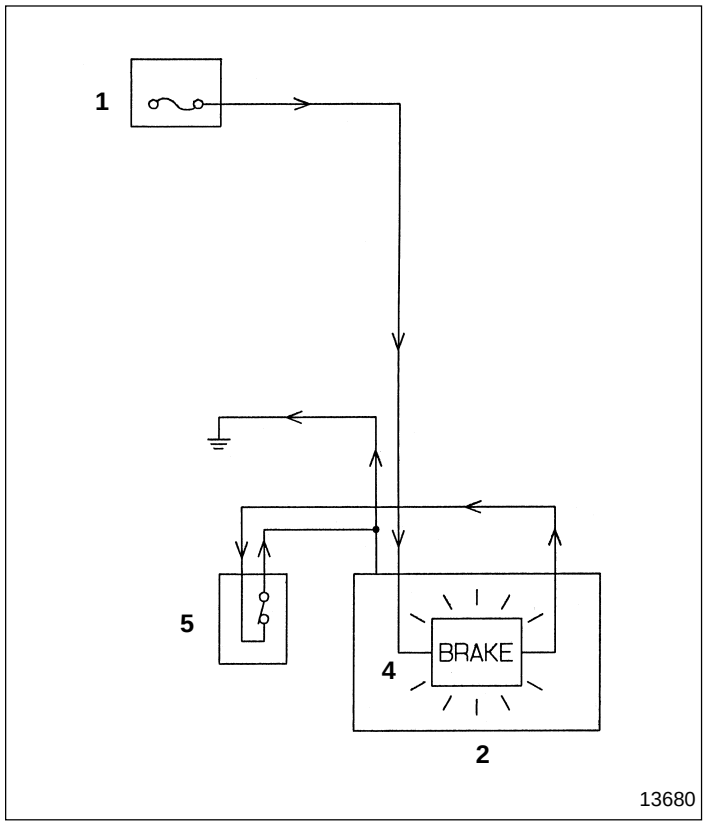

If the amount of brake fluid in the fluid tank drops below the specified amount, brake fluid level switch **5** turns ON lighting brake warning lamp **4**. The flow of current at such time is as follows.

Fuse **1**→Brake warning lamp **4**→Brake fluid level switch **5**→Ground

● **Brake fluid level switch**

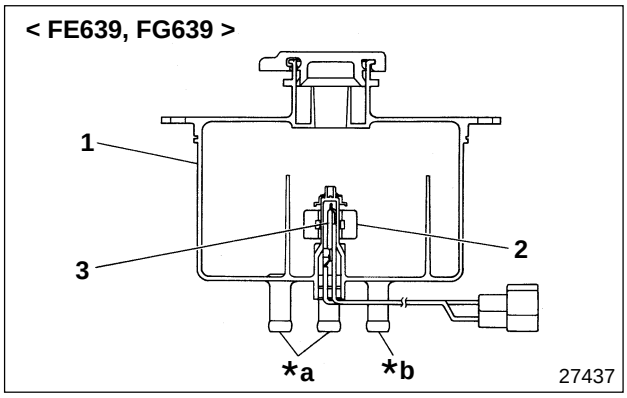

1 Fluid tank
2 Float
3 Brake fluid level switch

***a** : For brakes
***b** : For clutch

- Brake fluid level switch **3**, installed on fluid tank **1**, monitors the brake fluid level in the fluid tank. If the brake fluid level drops below the specified level, float **2** moves and lights up the warning lamp within the meter cluster to alert the driver.

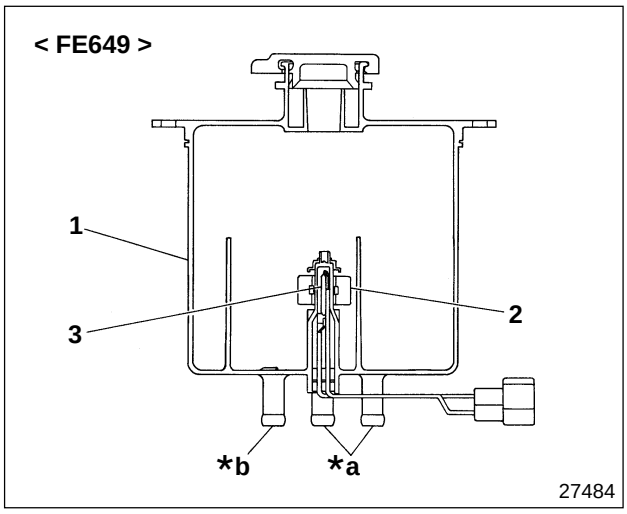

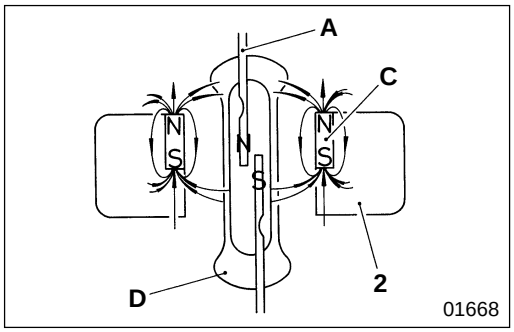

- If the brake fluid level in fluid tank **1** drops and float **2** drops lower than level **L**, magnetic force **B** that passes through the contact point (ferromagnetic body **A**), increases generating north and south poles at the ends of the contact points. Therefore, the contact points pull each other and overcome the repercussive force of the springs of the contact points, forming an electric circuit.
  C : Magnet
  D : Glass

Wear Indicator System Electric Circuit

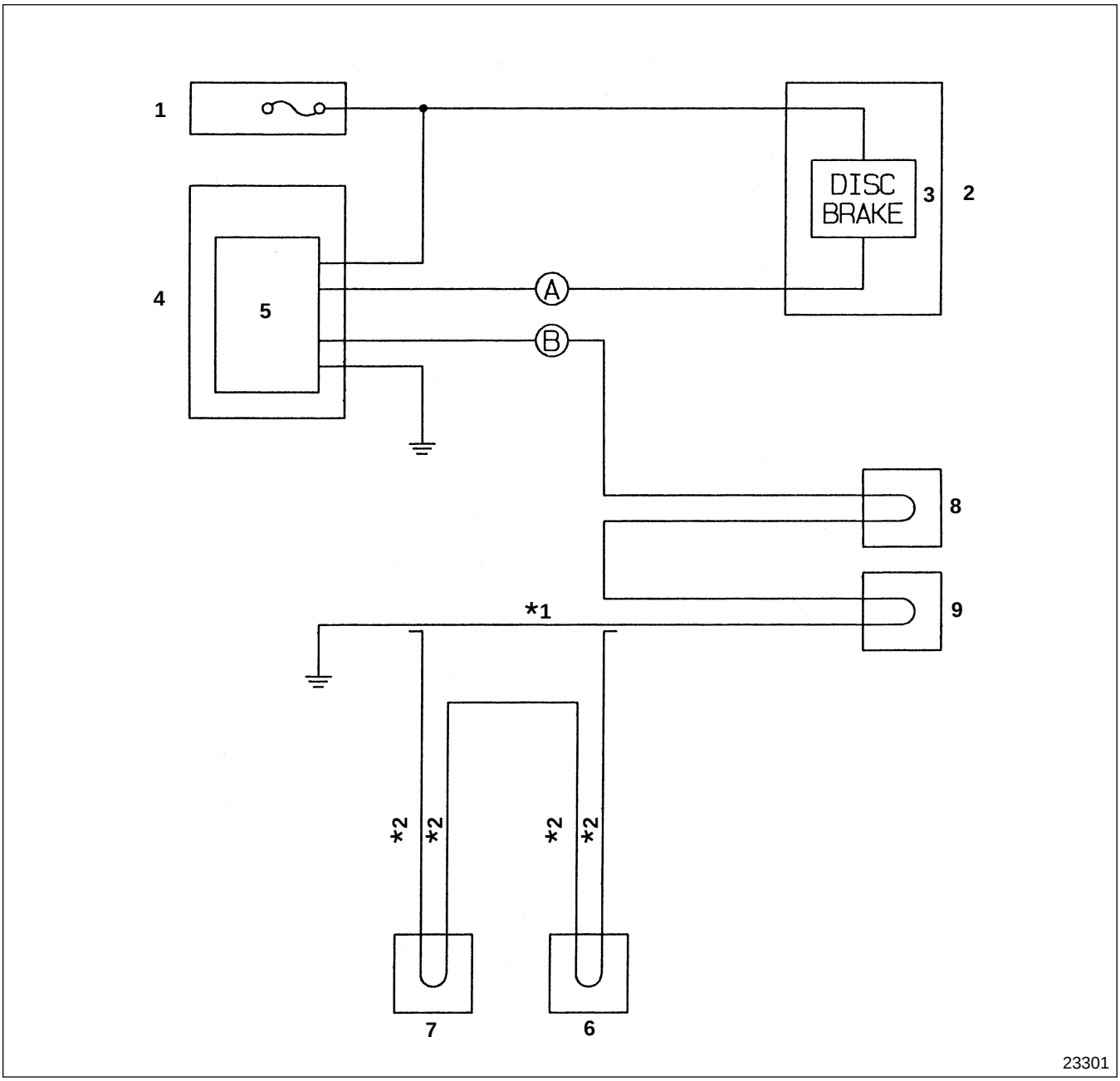

1 Fuse box
2 Meter cluster
3 Disc brake warning lamp
4 Relay box
5 Lighting and alarm control unit
6 Rear brake pad wear indicator, LH < FE649 >
7 Rear brake pad wear indicator, RH < FE649 >
8 Front brake pad wear indicator, LH
9 Front brake pad wear indicator, RH

***1** : < FE639 >
***2** : < FE649 >
Ⓐ : Warning signal
Ⓑ : Wear indicator signal

- The brake pad wear indicator system electrical circuit is provided for warning. When the brake pad is worn out, the disc rotor disconnects wear indicators **6** to **9**. Lighting and alarm control unit **5** detects this and gives a warning.
- If one of pad wear indicators **6** to **9** is disconnected, lighting and alarm control unit **5** operates, lighting disc brake warning lamp **3**.

● **When normal operating**

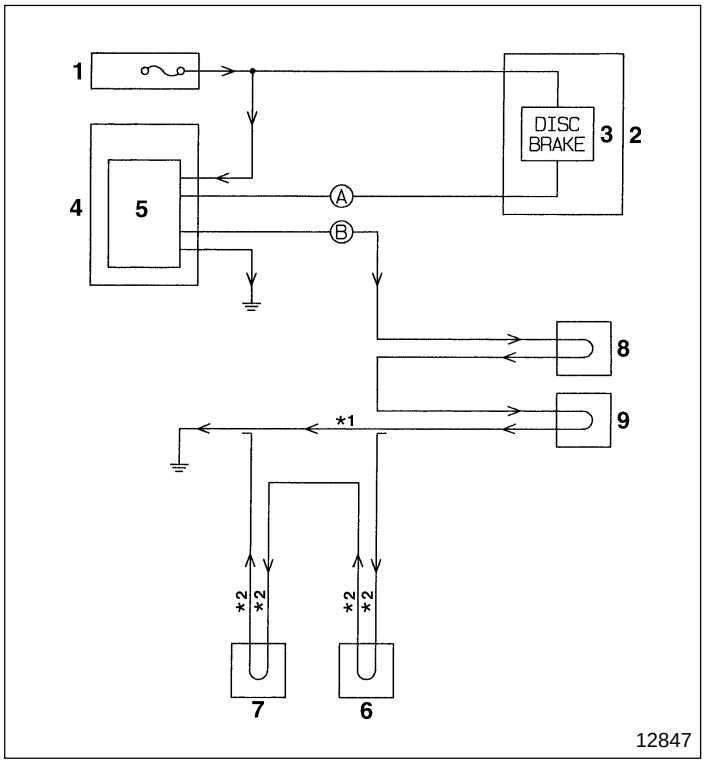

- While lighting alarm control unit **5** is sending out wear indicator signal Ⓐ, warning signal Ⓐ is not input.
- Since warning signal Ⓐ is not being input, disc brake warning lamp **3** will not light up.
- The flow of current at such time is as follows.

Fuse **1**→Lighting alarm control unit **5**→Ground
→Wear indicator signal Ⓑ→Brake pad wear indicator **6** to **9**→Ground

● **When brake pad wear indicator cut off**

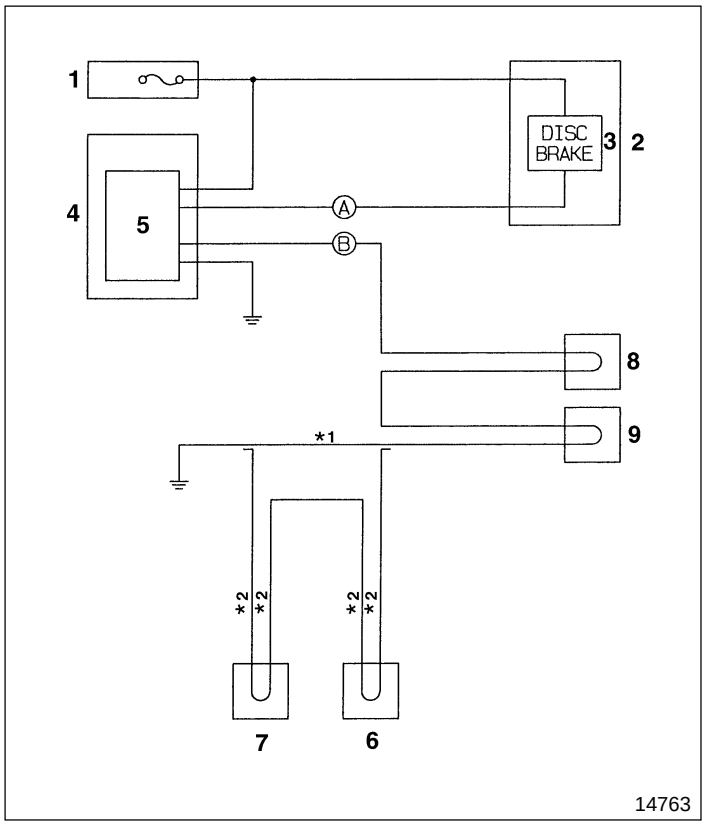

- When lighting alarm control unit **5** stops sending out wear indicator signal Ⓑ, warning signal Ⓐ is input.
- When warning signal Ⓐ is input, disc brake warning lamp **3** lights up.
- The flow of current at such time is as follows.

Fuse **1** →Lighting alarm control unit **5**→Ground
→Disc brake warning lamp **3**
→Warning signal Ⓐ

M E M O

● Wheel Brake

Possible causes / Symptoms		One-sided braking	One-sided braking							Noise and shock when brakes are applied	
		One-sided braking	Braking shoe return slow after releasing brake pedal	Braking force difference between left and right	Braking force unstable	Lock points difference	Braking force insufficient	Brake pedal stroke reduced	Noise and shock when brakes are applied	Noise generated when wheels are rotating, with vehicle jacked up	Continuous noise generated while braking (at low speed)
Tires	Air pressures uneven, etc. Gr 31	○									
	Left and right tire sizes different Gr 31	○									
Axle	Wheel hub bearing adjusted incorrectly Gr 26, 26B, 27	○									○
	Left and right wheelbase difference excessive Gr 26, 26B, 27	○									
	Wheel alignment incorrect Gr 26, 26B	○									
	Kingpin bushing worn Gr 26, 26B										
	Trunnion bearings worn Gr 26B										
Wheel brakes	Backing plate ledge surface rough		○		○						
	Backing plate ledge surface not smooth										
	Backing plate deformed, mounted incorrectly				○						
	Oil or water on brake lining or brake pad surfaces			○			○				
	Brake lining or brake pad changed in quality or wrong material used			○							
	Brake lining or brake pad unevenly worn or surface roughened			○							
	Brake lining or brake pad fading (surface change in material)						○				
	Brake lining or brake pad worn out completely										○
	Abrasive on brake lining or brake pad										
	Brake lining or brake pad worn										
	Brake lining or brake pad contact incorrect			○		○	○				
	Brake lining ground radius irregular					○					
	Wheel cylinder malfunctioning		○	○				○		○	
	Shoe return spring fatigued or broken		○							○	
	Brake drum or disc rotor worn unevenly			○							
	Brake drum or disc rotor warped				○						
	Brake drum or disc rotor worn					○					
	Brake drum or disc rotor surface roughened						○				
	Brake drum or disc rotor roughness excessive								○		

Possible causes / Symptoms		One-sided braking	One-sided braking							Noise and shock when brakes are applied	
		One-sided braking	Braking shoe return slow after releasing brake pedal	Braking force difference between left and right	Braking force unstable	Lock points difference	Braking force insufficient	Brake pedal stroke reduced	Noise and shock when brakes are applied	Noise generated when wheels are rotating, with vehicle jacked up	Continuous noise generated while braking (at low speed)
Wheel brakes	Brake drum or disc rotor glazed										
	Brake drum cracked								○		
	Brake drum clogged by foreign particles									○	
	Brake drum deformed or eccentric										
	Disc rotor thickness uneven										
	Brake shoe deformed or damaged							○			
	Brake shoe twisted or tilted										
	Shoe hold down cup broken									○	
	Moving parts greased insufficiently								○		
Brake pedal	Brake pedal stroke faulty (45 mm {1.77 in.} or more at 490 N {110 lbf, 50 kgf} foot pressure)						○				
	Brake pedal adjusted incorrectly, looseness excessive							○			
	Brake pedal return faulty										
	Brake pedal free play inadequate										
	Linkage rusted or deformed										
	Return spring fatigued or broken										
	Master vac operating rod pushing up										
Brake fluid system	Brake fluid insufficient							○			
	Brake fluid leaking							○			
	Air lock in system							○			
	Vapor lock							○			
	Brake fluid return insufficient because brake pipe tightened excessively										
Vacuum system	Degree of vacuum reduced						○				
Master vac	Master vac defective						○	○			
Brake master cylinder	Piston cup faulty							○			
	Return port clogged										

TROUBLESHOOTING

Symptoms / Possible causes		Brake drums overheating			Brakes squeaking						Remarks
		All wheels overheating	One wheel overheating	Brakes squeaking	Squeaking in new vehicle or after brake lining replacement	Action too severe	Brake pulsation/vibration	Brake pedal return faulty	Brake drags	
Tires	Air pressures uneven, etc.										Gr 31
	Left and right tire sizes different										Gr 31
Axle	Wheel hub bearing adjusted incorrectly		○	○			○				Gr26, 26B, 27
	Left and right wheelbase difference excessive										Gr26, 26B, 27
	Wheel alignment incorrect										Gr26, 26B
	Kingpin bushing worn						○				Gr26
	Trunnion bearings worn						○				Gr26B
Wheel brakes	Backing plate ledge surface rough								○		
	Backing plate ledge surface not smooth		○								
	Backing plate deformed, mounted incorrectly					○					
	Oil or water on brake lining or brake pad surfaces										
	Brake lining or brake pad changed in quality or wrong material used										
	Brake lining or brake pad unevenly worn or surface roughened										
	Brake lining or brake pad fading (surface change in material)					○					
	Brake lining or brake pad worn out completely										
	Abrasive on brake lining or brake pad			○							
	Brake lining or brake pad worn			○							
	Brake lining or brake pad contact incorrect				○						
	Brake lining ground radius irregular										
	Wheel cylinder malfunctioning		○						○		
	Shoe return spring fatigued or broken		○						○		
	Brake drum or disk rotor worn unevenly										
	Brake drum or disk rotor warped										
	Brake drum or disk rotor worn										
	Brake drum or disk rotor surface roughened										
	Brake drum or disk rotor roughness excessive										
	Brake drum or disk rotor glazed					○					

Possible causes / Symptoms		Brake drums overheating		Brakes squeaking	Brakes squeaking						Remarks
		All wheels overheating	One wheel overheating	Brakes squeaking	Squeaking in new vehicle or after brake lining replacement	Action too severe	Brake pulsation/vibration	Brake pedal return faulty	Brake drags		
Wheel brakes	Brake drum cracked										
	Brake drum clogged by foreign particle										
	Brake drum deformed or eccentric						○				
	Disc rotor thickness uneven						○				
	Brake shoe deformed or damaged					○					
	Brake shoe twisted or tilted		○								
	Shoe hold down cup broken										
	Moving parts greased insufficiently										
Brake pedal	Brake pedal stroke faulty (45 mm {1.77 in.} or more at 490 N {110 lbf, 50 kgf} foot pressure)										
	Brake pedal adjusted, looseness excessive										
	Brake pedal return faulty	○									
	Brake pedal free play inadequate								○		
	Linkage rusted or deformed							○			
	Return spring fatigued or broken							○			
	Master vac operating rod pushing up							○			
Brake fluid system	Brake fluid insufficient										
	Brake fluid leaking										
	Air lock in system										
	Vapor lock										
	Brake fluid return insufficient because brake pipe tightened excessively		○								
Vacuum system	Degree of vacuum reduced										
Master vac	Master vac defective	○							○		
Brake master cylinder	Piston cup faulty	○							○		
	Return port clogged	○							○		

● Exhaust Brake

Symptoms / Possible causes		Exhaust brake does not work	Exhaust brake does not release	Remarks
Vacuum system	Degree of vacuum insufficient	○		
	Pipe crushed	○		
3-way magnetic valve	Does not work	○	○	Gr 54
Exhaust brake unit	Valve assembly does not work	○	○	
	Valve assembly shaft stuck	○	○	
	Vacuum chamber does not work	○		
Electric system	Electric system faulty	○	○	Gr 54

M E M O

Replacement of Brake Fluid

Tightening torque

Unit : N·m {lbf.ft, kgf·m}

Location	Parts to be tightened		Tightening torque	Remarks
1	Air bleeder	Front disc brake < FE >	6.9 to 8.8 {5.1 to 6.5, 0.7 to 0.9}	—
		Front wheel cylinder < FG >	6.9 to 8.8 {5.1 to 6.5, 0.7 to 0.9}	—
		Rear wheel cylinder < FE639, FG639 >	6.9 to 8.8 {5.1 to 6.5, 0.7 to 0.9}	—
		Rear disc brake < FE649 >	6.9 to 8.8 {5.1 to 6.5, 0.7 to 0.9}	—
		Bypass valve	8.8 to 13.0 {6.5 to 9.4, 0.9 to 1.3}	—

Fluid

Location	Points of application	Specified fluid	Quantity
—	Fluid tank	Brake fluid (SAE J1703f or FMVSS No. 116 DOT3)	As required

WARNING

- **The clutch fluid system and the brake fluid system use the fluid tank in common. Therefore, replacement and air bleeding of the clutch fluid must be carried out simultaneously with that of the brake fluid. Gr 21**
- **You must use new brake fluid (SAE J1703f or FMVSS No. 116 DOT3). Do not add different quality fluid or mineral oil (gas oil, engine oil, gear oil, automatic transmission fluid, etc.) to the clutch system, because this will cause the rubber parts of the clutch system and brake system to swell, resulting in faulty clutch operation, as well as ineffective braking and brake dragging.**
- **Do not allow foreign particles or water to become mixed into the brake fluid when refilling, because this will result in ineffective clutch and brake operations.**
- **If you use a container for adding brake fluid, keep it solely for that purpose.**

CAUTION

- **Be careful not to splash brake fluid on related parts as this could damage the paintwork.**
- **Be sure to wipe off brake fluid immediately if you splash it on the paintwork.**

NOTE

Supply and maintain the brake fluid level to the “MAX” level of the fluid tank.

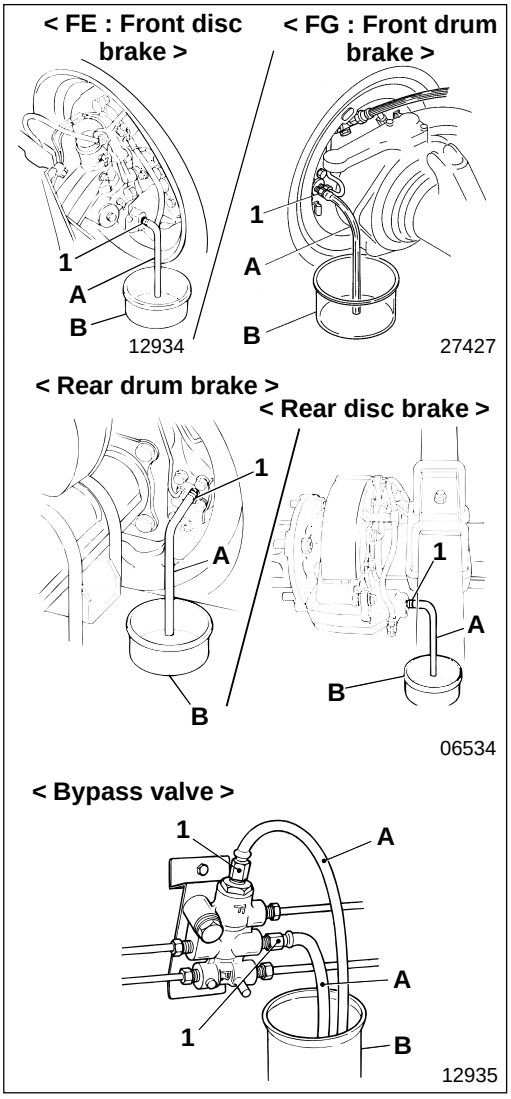

- Start the engine and let it idle until you complete brake fluid replacement.
- Connect vinyl pipes **A** : one to the front disc brake < FE >, the front drum brake < FG > one to the rear drum brake < FE639, FG639 > or the rear disc brake < FE649 >, and two to the bypass valve.
- Put the free ends of vinyl pipes **A** into containers **B**.

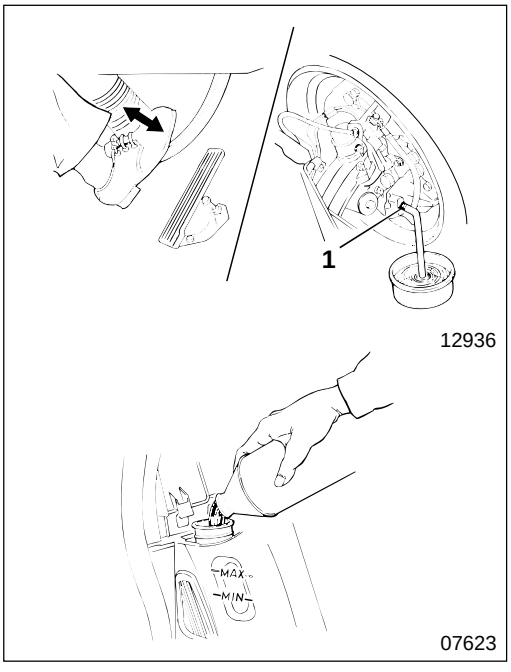

- Loosen air bleeders **1** and depress the brake pedal several times to drain brake fluid completely.
- Maintaining a supply of new brake fluid up to the “MAX” level of the fluid tank, depress the brake pedal repeatedly until the old brake fluid of the brake system is replaced with new fluid, and after you complete the work, tighten each air bleeder **1** at specified torque.
- Bleed air from the brake system.
P35-40

ON-VEHICLE INSPECTION AND ADJUSTMENT

Air Bleeding of Brake System

Tightening torque

Unit : N·m {lbf.ft, kgf·m}

Location	Parts to be tightened		Tightening torque	Remarks
1	Air bleeder	Front disc brake < FE >	6.9 to 8.8 {5.1 to 6.5, 0.7 to 0.9}	—
		Front wheel cylinder < FG >	6.9 to 8.8 {5.1 to 6.5, 0.7 to 0.9}	—
		Rear wheel cylinder < FE639, FG639 >	6.9 to 8.8 {5.1 to 6.5, 0.7 to 0.9}	—
		Rear disc brake < FE649 >	6.9 to 8.8 {5.1 to 6.5, 0.7 to 0.9}	—
		Bypass valve	8.8 to 13.0 {6.5 to 9.4, 0.9 to 1.3}	—

Fluid

Location	Points of application	Specified fluid	Quantity
—	Fluid tank	Brake fluid (SAE J1703f or FMVSS No. 116 DOT3)	As required

WARNING

- **The clutch fluid system and the brake fluid system use the fluid tank in common. Therefore, replacement and air bleeding of the clutch fluid must be carried out simultaneously with that of the brake fluid. Gr 21**
- **You must use new brake fluid (SAE J1703f or FMVSS No. 116 DOT3). Do not add different quality fluid or mineral oil (gas oil, engine oil, gear oil, automatic transmission fluid, etc.) to the clutch system, because this will cause the rubber parts of the clutch system and brake system to swell, resulting in faulty clutch operation, as well as ineffective braking and brake dragging.**
- **Do not allow foreign particles or water to become mixed into the brake fluid when refilling, because this will result in ineffective clutch and brake operations.**
- **If you use a container for adding brake fluid, keep it solely for that purpose.**

CAUTION

- **Be careful not to splash brake fluid on related parts as this could damage the paintwork.**
- **Be sure to wipe off brake fluid immediately if you splash it on the paintwork.**

NOTE

- **Supply and maintain the brake fluid level to the “MAX” level of the fluid tank.**
- **Make sure you maintain brake fluid at the “MAX” level of the fluid tank since the brake fluid level drops during air bleeding.**

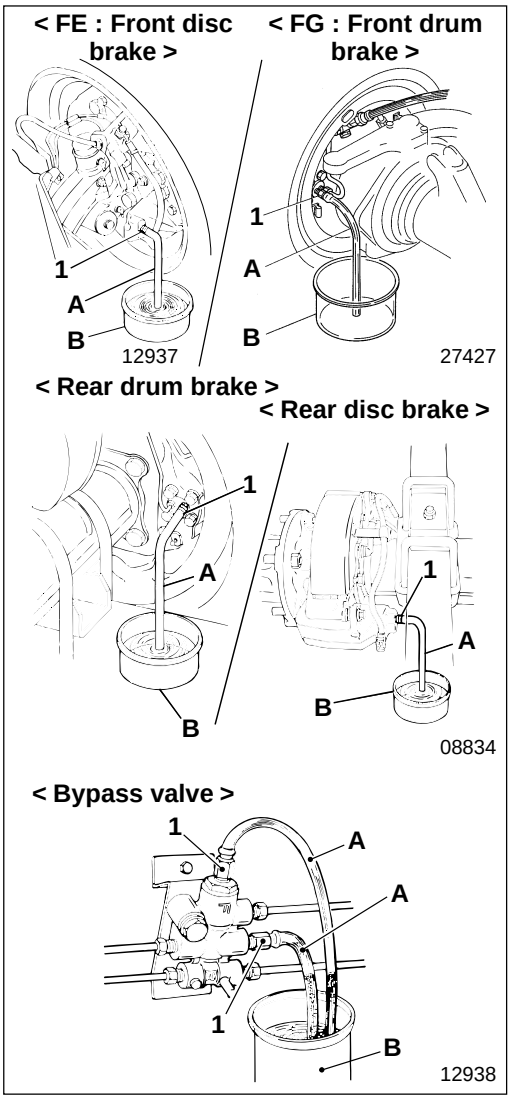

- Start the engine and let it idle until you complete air bleeding of the brake system.
- Connect vinyl pipes **A** : one to the front disc brake < FE >, the front drum brake < FG >, one to the rear drum brake < FE639, FG639 > or the rear disc brake < FE649 >, and two to the bypass valve.
- Put the free ends of vinyl pipes **A** into containers **B** and bleed the brake system as follows:

< Front brake system >

FG639	FE639, FE649
Drum brake, RH	Disc brake, RH
↓	↓
Drum brake, LH	Disc brake, LH

< Rear brake system >

FE639, FG639	FE649
Drum brake, RH	Disc brake, RH
↓	↓
Drum brake, LH	Disc brake, LH

< Bypass valve system >

Bypass valve

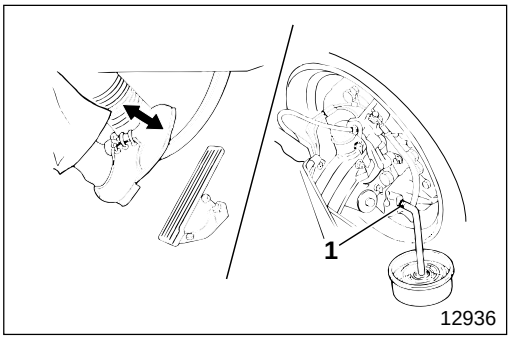

- Depress the brake pedal slowly several times, and with the brake pedal depressed, loosen air bleeder **1** to discharge air together with the brake fluid. After closing the air bleeder, release the brake pedal.
- Repeat the above operation until air bubbles are no longer present in the brake fluid discharged from air bleeder **1**.
- When the discharged fluid is free of air bubbles, tighten air bleeder **1** at specified torque.
- Make sure that the brake fluid level is at the “MAX” level of the fluid tank, and depress the brake pedal several times to ensure that the brake fluid does not leak from anywhere. Then, conduct a brake test.

ON-VEHICLE INSPECTION AND ADJUSTMENT

Inspection and Adjustment of Brake Pedal Free Play

Service standards

Unit : mm {in.}

Location	Maintenance item	Standard value	Limit	Remedy
—	Free play of brake pedal	10 to 15 {0.39 to 0.59}	—	Adjust

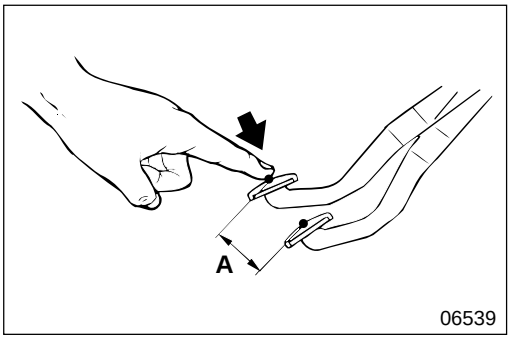

[Inspection]
Check if brake pedal free play **A** confirms to the standard valve with the engine stopped. If the measured value deviates from the standard value, adjust the position of the brake pedal.

[Adjustment]
P35-57

Inspection and Adjustment of Clearance between Brake Pedal and Floor Panel

Service standards

Unit : mm {in.}

Location	Maintenance item	Standard value	Limit	Remedy
—	Clearance between brake pedal and floor panel (with pedal depressed at 490 N {110 lbf, 50 kgf})	45 {1.77} or more	—	Adjust

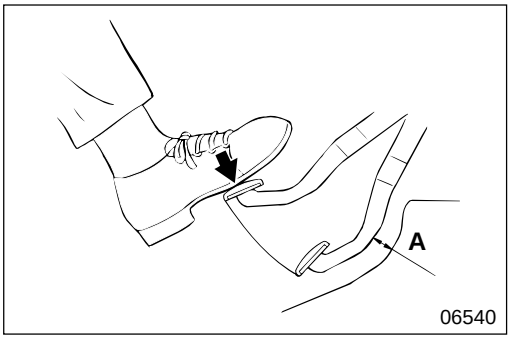

[Inspection]
Depress the brake pedal using 490 N {110 lbf, 50 kgf} when the engine is idling to check if clearance **A** between the brake pedal and the floor panel conforms to the standard value. If the measured value deviates from the standard value, adjust the position of the brake pedal.

[Adjustment]
P35-57

Inspection and Replacement of Disc Brake Pad

Service standards

Unit : mm {in.}

Location	Maintenance item			Standard value	Limit	Remedy
5, 6	Thickness of outer and inner pads	FE639	Front disc brake	12 {0.47}	4 {0.16}	Replace
		FE649	Front disc brake	14 {0.55}	4 {0.16}	Replace
			Rear disc brake	14 {0.55}	4 {0.16}	Replace

Tightening torque

Unit : N·m {lbf.ft, kgf·m}

Location	Parts to be tightened	Tightening torque	Remarks
3	Slide pin bolt tightening	83.3 to 93.1 {61 to 69, 8.5 to 9.5}	Wet

Fluid

Location	Points of application	Specified fluid	Quantity
3	Thread area of slide pin bolt	Brake fluid (SAE J1703f or FMVSS No.116 DOT3)	As required

Special tools

Unit : mm {in.}

Location	Tool name and shape	Part No.	Application
—	Piston expander 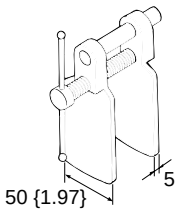	MB990520	Pushing back of piston when replacing brake pad

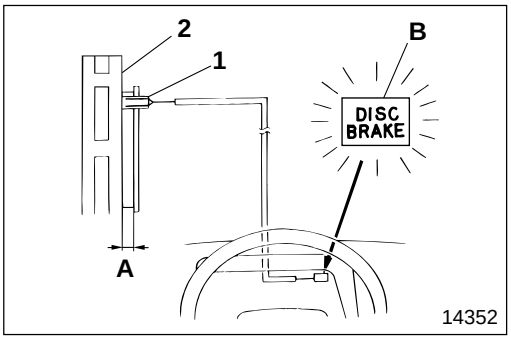

[Inspection]

- When brake pad thickness **A** decreases to approximately 4 mm {0.16 in.}, brake pad wear indicator **1** makes contact with disc rotor **2** and is disconnected. This lights up brake warning lamp **B** within the meter cluster, indicating that the brake pad should be replaced.

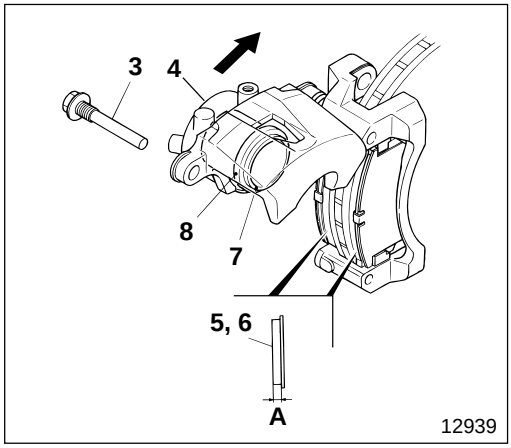

- Remove lower slide pin bolt **3**.
- Turn caliper **4** upward and secure it using wire.

CAUTION

- **Make sure that you do not smear, or get dust on, the grease applied to slide pin bolt 3.**
- **Be careful when you secure caliper 4 that you do not use excessive force on the brake hose or brake pad wear indicator 1.**
- **Make sure that you secure caliper 4 securely.**

- Check thickness **A** of outer pad **5** and inner pad **6** and if the thickness is lower than the limit, replace the pads on the same axle as a unit.
- Check if any fluid is leaking from piston **7**, and check if piston boot **8** is damaged. If any fault is found, replace the faulty parts.

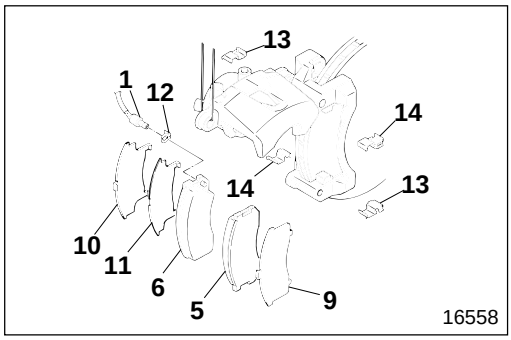

[Replacement]

- Remove the following parts:
  - **9** Outer shim
  - **5** Outer pad
  - **10** Inner shim A
  - **11** Inner shim B
  - **12** Clip
  - **1** Brake pad wear indicator
  - **6** Inner pad
  - **13** Pad liner A
  - **14** Pad liner B

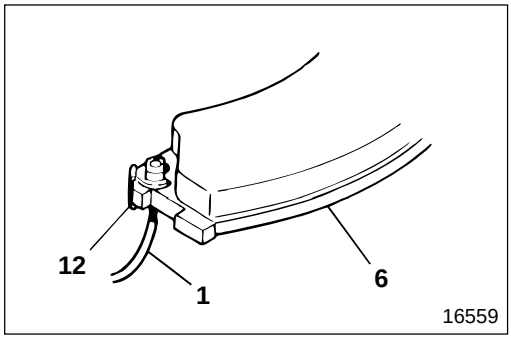

Install brake pad wear indicator **1** on inner pad **6** in the pad kit using clip **12**.

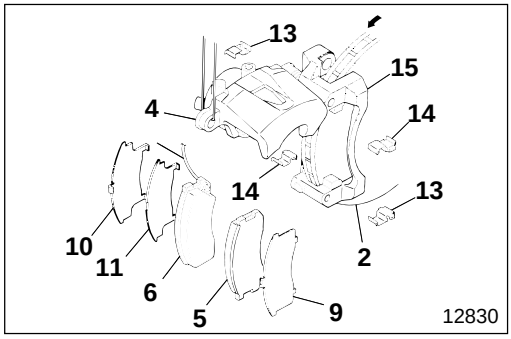

- Clean torque member **15**.
- Install the kit parts onto torque member **15** in the following order:
  - Install pad liner A **13** and pad liner B **14** on torque member **15**.
  - Install outer shim **9** on outer pad **5**.
  - Install inner shims **10**, **11** on inner pad **6**.
  - Install outer pad **5** on torque member **15**.
  - Install inner pad **6** on torque member **15**.
  - Install inner pad **6** so that brake pad wear indicator **1** faces the entrance side (when the vehicle is moving forwards) of disc rotor **2** of caliper **4**.

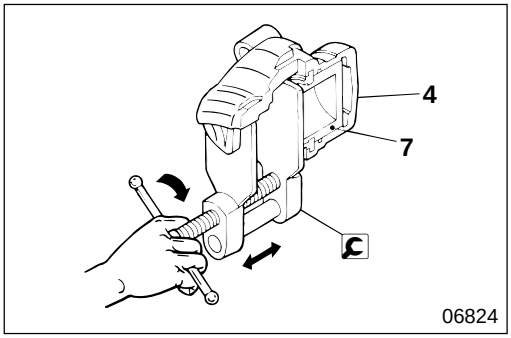

- Push piston **7** until it makes contact with the bottom of caliper **4**.
  : Piston expander

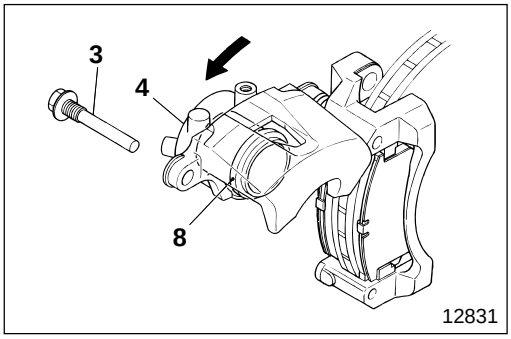

- Slacken off caliper **4**, taking care not to damage piston boot **8**.
- Bleed the bushing.
- Apply rubber grease thinly to the outer periphery of slide pin **3**. Apply brake fluid thinly to the thread area of slide pin bolt.
- Tighten slide pin bolt **3** at specified torque.
- Wire up the harness of brake pad wear indicator **1**. Gr 26, 27
- Inspect drag torque. P35-60, 64, 82
- Depress the brake pedal several times.
- Make sure that brake fluid is maintained at the “MAX” level of the fluid tank. If the level drops, add brake fluid. P35-38

ON-VEHICLE INSPECTION AND ADJUSTMENT

Drum Brake Lining Thickness Inspection and Replacement

Service standards

Unit : mm {in.}

Location	Maintenance item	Standard value	Limit	Remedy
—	Thickness of brake lining	—	4 {0.16} (Side shoulder means wear limit)	Replace

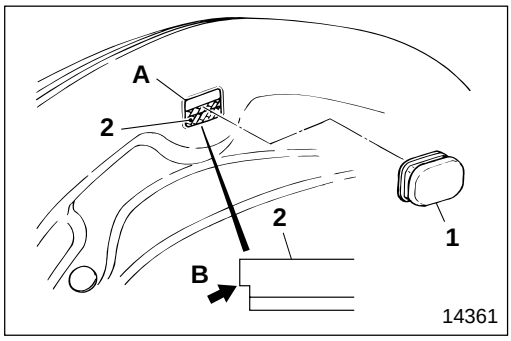

[Inspection]

NOTE

Be sure to inspect at two points for each wheel per side.

- Remove cover **1** from the backing plate.
- Inspect through check hole **A** whether brake lining **2** is worn to the point of side shoulder **B** of the brake lining (the limit).
- If the measured value is lower than the limit, replace brake lining **2** on the same axle as a unit.
- After inspection, be sure to reinstall cover **1**.

[Replacement]

P35-69, 75

Inspection of Brake Shoe Clearance

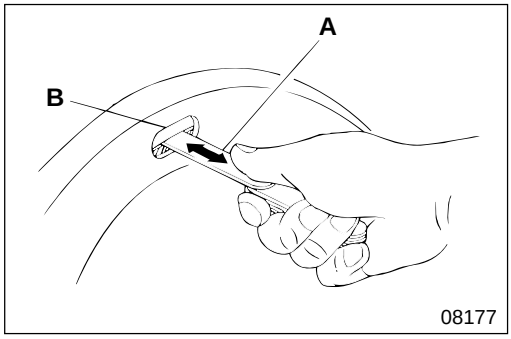

Insert 0.2 mm {0.0079 in.} feeler gauge **A** into inspection hole **B** of the backing plate, and make sure that you can move the gauge in and out feeling some resistance. After this inspection, adjust the clearance if any abnormality is found.

P35-67, 73

Inspection of Brake Booster (Master Vac)

Service standards

Location	Maintenance item		Standard value	Limit	Remedy
—	Air tightness with no load (with vacuum meter at 67 kPa {19.7 in. Hg, 500 mmHg} and engine stopped)		Vacuum drop after 15 seconds should be 3.3 kPa {0.98 in. Hg, 25 mmHg} or less	—	Replace
	Airtightness with load (with brake pedal slightly depressed, vacuum meter at 67 kPa {19.7 in. Hg, 500 mmHg} and engine stopped)				
—	Boosting action (Fluid pressure with vacuum meter at 67 kPa {19.7 in. Hg, 500 mmHg} and brake pedal depressed at specified foot pressure)	8 in.+9 in.	4410 kPa {640 lbf/in^2, 45 kgf/cm^2} (98 N {22 lbf, 10 kgf})	—	Replace
			8340 kPa {1210 lbf/in^2, 85 kgf/cm^2} (295 N {66 lbf, 30 kgf})		
		9 in.+10 in.	3920 kPa {570 lbf/in^2, 40 kgf/cm^2} (98 N {22 lbf, 10 kgf})		
			8830 kPa {1280 lbf/in^2, 90 kgf/cm^2} (295 N {66 lbf, 30 kgf})		
	No boosting action (Fluid pressure after vacuum meter falls to 0 kPa {0 in. Hg, 0 mmHg} and brake pedal depressed at specified foot pressure)	8 in.+9 in.	295 kPa {43 lbf/in^2, 3 kgf/cm^2} (98 N {22 lbf, 10 kgf})	—	Replace
			1670 kPa {240 lbf/in^2, 17 kgf/cm^2} (295 N {66 lbf, 30 kgf})		
		9 in.+10 in.	195 kPa {28 lbf/in^2, 2 kgf/cm^2} (98 N {22 lbf, 10 kgf})		
			1470 kPa {215 lbf/in^2, 15 kgf/cm^2} (295 N {66 lbf, 30 kgf})		

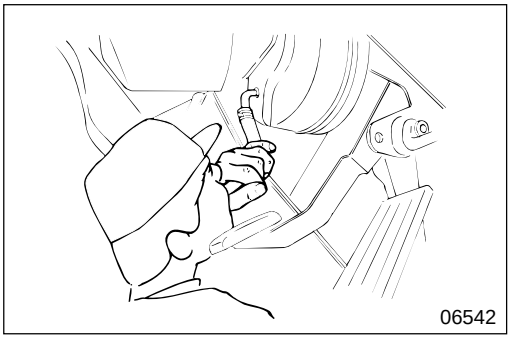
06542

[Inspection]
Two types of inspection are used to inspect the brake booster (master vac) operation, inspection without a tester and inspection with a simple tester. Make sure that there is no fluid leak or damage at the joints of the brake pipes and hoses before inspection.

(1) Inspection of check valve operation

Be sure to inspect the check valve both when opened and when closed.

CAUTION

Make sure that your saliva does not enter the check valve when blowing air through the vacuum hose as this would cause the check valve to malfunction.

NOTE

The check valve fitted to the vacuum hose cannot be removed.

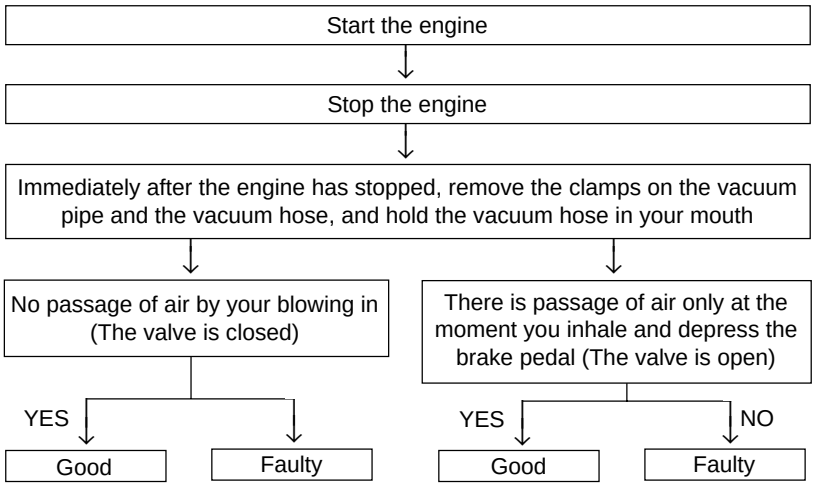

(2) Inspection of brake booster (master vac) operation

NOTE

If the brake booster (master vac) is faulty, determine the quality of the brake booster (master vac) as an independent device by means of a bench test specified by the maker's service station. This is because the above inspection of the brake booster (master vac) operation is merely a simplified inspection. If any fault is found, hand the device over to the service station without disassembling it, and replace the whole assembly. P35-56

● **Inspection method without a tester**

If the brake booster (master vac) is determined to be good by inspections 1 to 3 below, its operation is normal. If any fault is detected in any of the three inspections, the following parts are likely to be faulty.

- Check valve
- Vacuum hose
- Brake booster (master vac)
- Vacuum pump

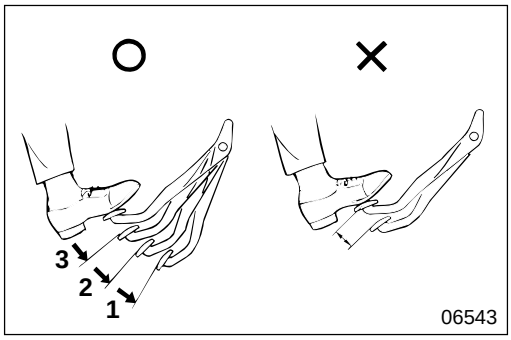

[Inspection 1]

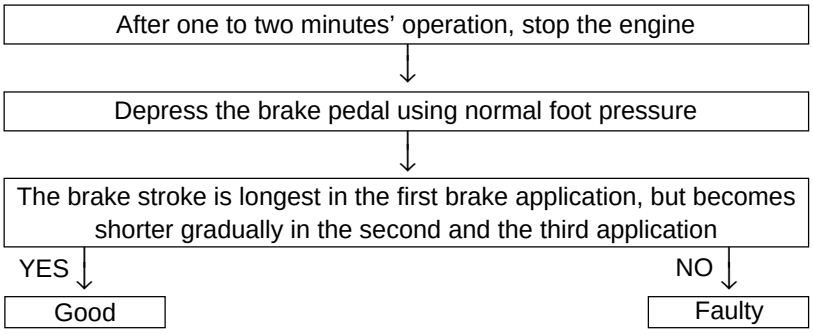

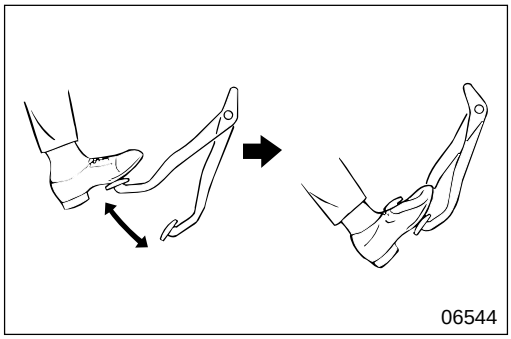

[Inspection 2]

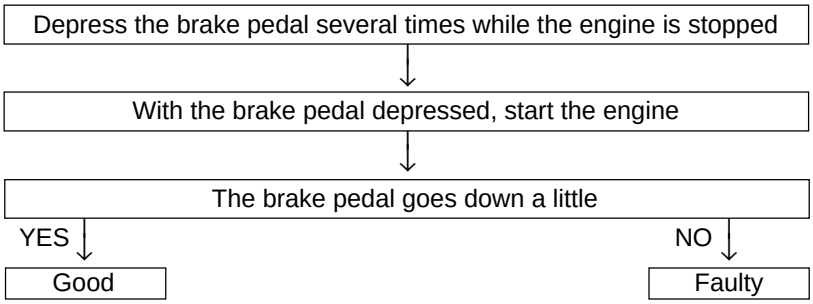

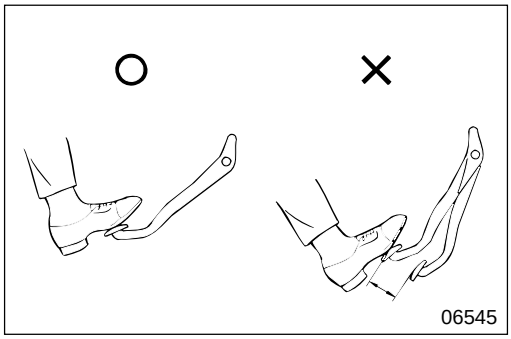

[Inspection 3]

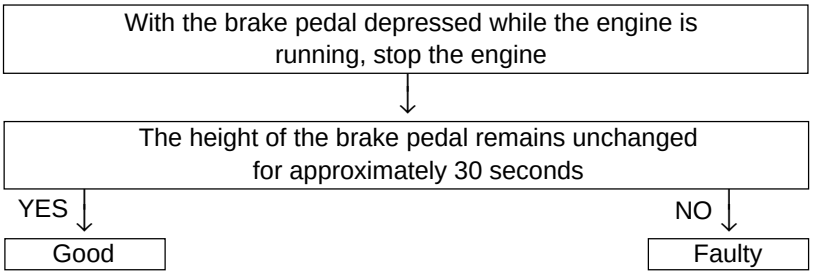

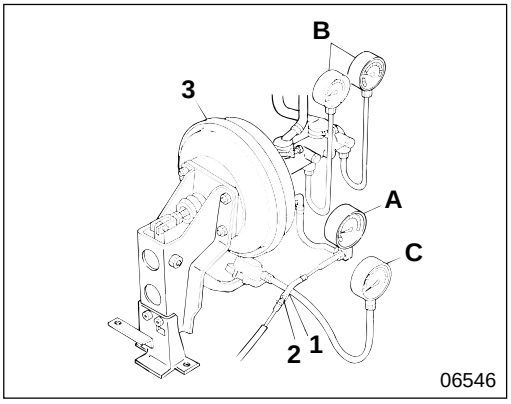

● Inspection with a simplified tester

● Airtightness inspection

- Before inspection, observe the operation of check valve **2** fitted to vacuum hose **1**. P35-47
- Remove vacuum hose **1** from brake booster (master vac) **3**, place the end without the white ○ mark on the brake booster (master vac) and connect it to vacuum meter **A**. Connect another vacuum hose (without a built-in check valve) between the vacuum meter and the brake booster (master vac).
  Connect pressure gauges **B** and foot pressure meter **C** as illustrated, and bleed the air from the pressure gauges.
- If the results of the following two airtightness inspections are satisfactory, the operation is normal. If any fault is found in any of the two inspections, the following parts are likely to be faulty.
  - Vacuum hose
  - Brake booster (master vac)

[No-load airtightness inspection]

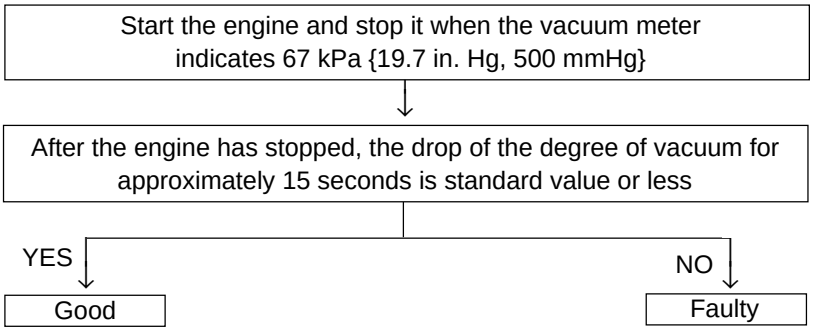

[At load airtightness inspection]

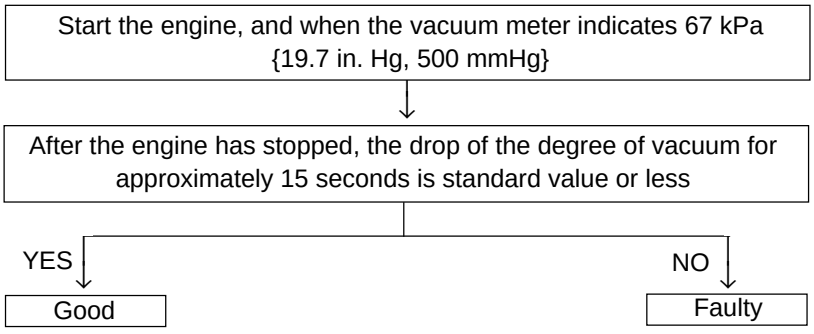

- Be sure when you attach vacuum hose **1** to brake booster (master vac) **3** after the inspection, that the end without the white ○ mark faces brake booster (master vac) **3**.

● **Inspection of characteristics**

- Inspect characteristics after the airtightness inspection is finished.
- If the results of the following two inspections are good, the operation is normal. If any fault is found in any of the two inspections, the following parts are likely to be faulty.
  - Vacuum hose
  - Brake booster (master vac)

[Boosting action inspection]

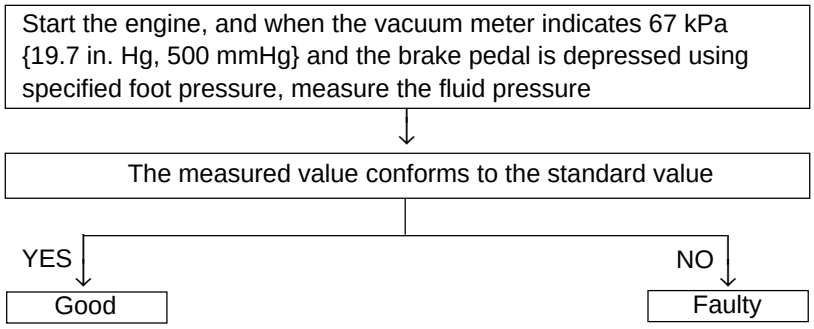

[No boosting action inspection]

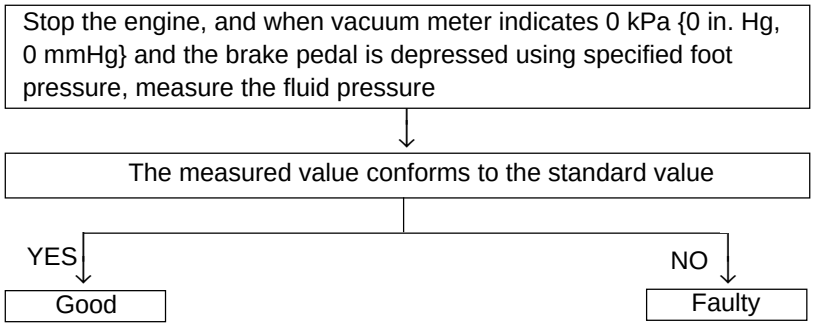

Be sure when you attach vacuum hose **1** to brake booster (master vac) **3** after the inspection, that the end without the white ○ mark faces brake booster (master vac) **3**.

< 8 inch+9 inch >

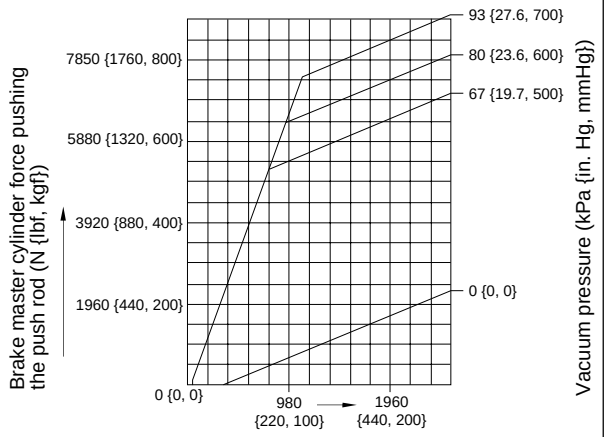

< 9 inch+10 inch >

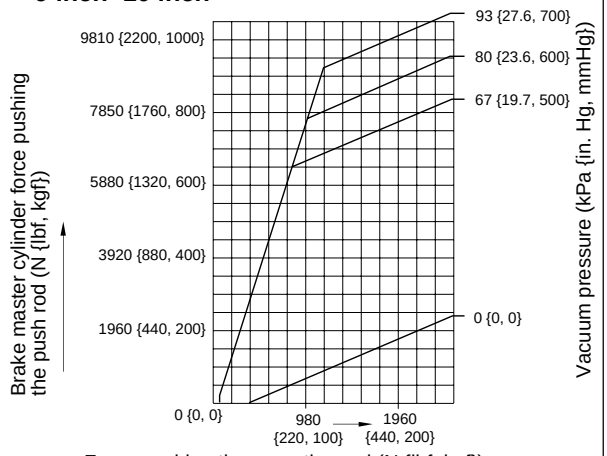

● **Brake booster (master vac) performance diagram**

Inspection of Bypass Valve

Service standards

Location	Maintenance item	Standard value	Limit	Remedy
—	Fluid pressure (when master cylinder and bypass outlet pressures balance) when the front brake system fails	3920 kPa {570 lbf/in^2, 40 kgf/cm^2} or less	—	Replace

Fluid

Location	Points of application	Specified fluid	Quantity
—	Fluid tank	Brake fluid (SAE J1703f or FMVSS No. 116 DOT3)	As required

WARNING

- **Before inspection do the following to prevent the vehicle from moving accidently.**
- **Carry out inspection on a level area.**
- **Place chocks securely in place at the left and right front wheels.**
- **Pull up the parking brake.**
- **The clutch fluid system and the brake fluid system use the fluid tank in common. Therefore, replacement and air bleeding of the clutch fluid must be carried out simultaneously with that of the brake fluid. Gr 21**
- **You must use new brake fluid (SAE J1703f or FMVSS No. 116 DOT3). Do not add different quality fluid or mineral oil (gas oil, engine oil, gear oil, automatic transmission fluid, etc.) to the clutch system, because this will cause the rubber parts of the clutch system and brake system to swell, resulting in faulty clutch operation, as well as ineffective braking and brake dragging.**
- **Do not allow foreign particles or water to become mixed into the brake fluid when refilling, because this will result in ineffective clutch and brake operations.**
- **If you use a container for adding brake fluid, keep it solely for that purpose.**

CAUTION

- **Be careful not to splash brake fluid on related parts as this could damage the paintwork.**
- **Be sure to wipe off brake fluid immediately if you splash it on the paintwork.**

NOTE

- **Supply and maintain the brake fluid level to the “MAX” level of the fluid tank.**
- **Make sure you maintain brake fluid at the “MAX” level of the fluid tank since the brake fluid level drops during inspection.**

- Make sure you maintain brake fluid at the “MAX” level of the fluid tank since the brake fluid level drops during replacement.

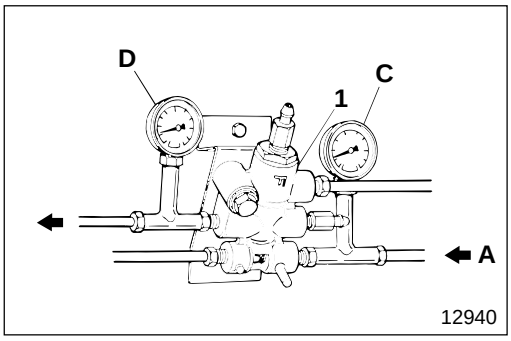

- Install oil pressure gauges **C**, **D** on inlet **A** of the master cylinder of the bypass valve, and outlet **B** of the bypass respectively.

- Bleed the brake system. P35-40

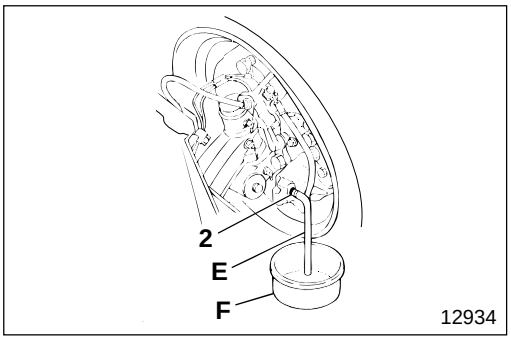

- Connect vinyl pipes **E** to air bleeders **2** on the left and right front disc brakes.
- Put the free ends of vinyl pipes **E** into containers **F**.
- Loosen air bleeder **2** by 90° to open the front brake system.

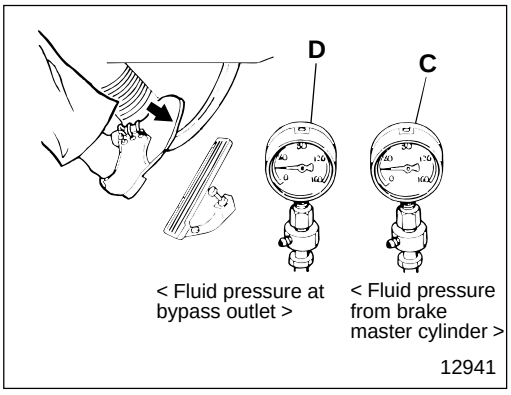

- Start the engine and let it idle.
- Depress the brake pedal gradually and read the gauges when the fluid pressure from the brake master cylinder equals that from the bypass outlet.
- If the measured value deviates from the standard value, replace bypass valve **1**.

BRAKE MASTER CYLINDER

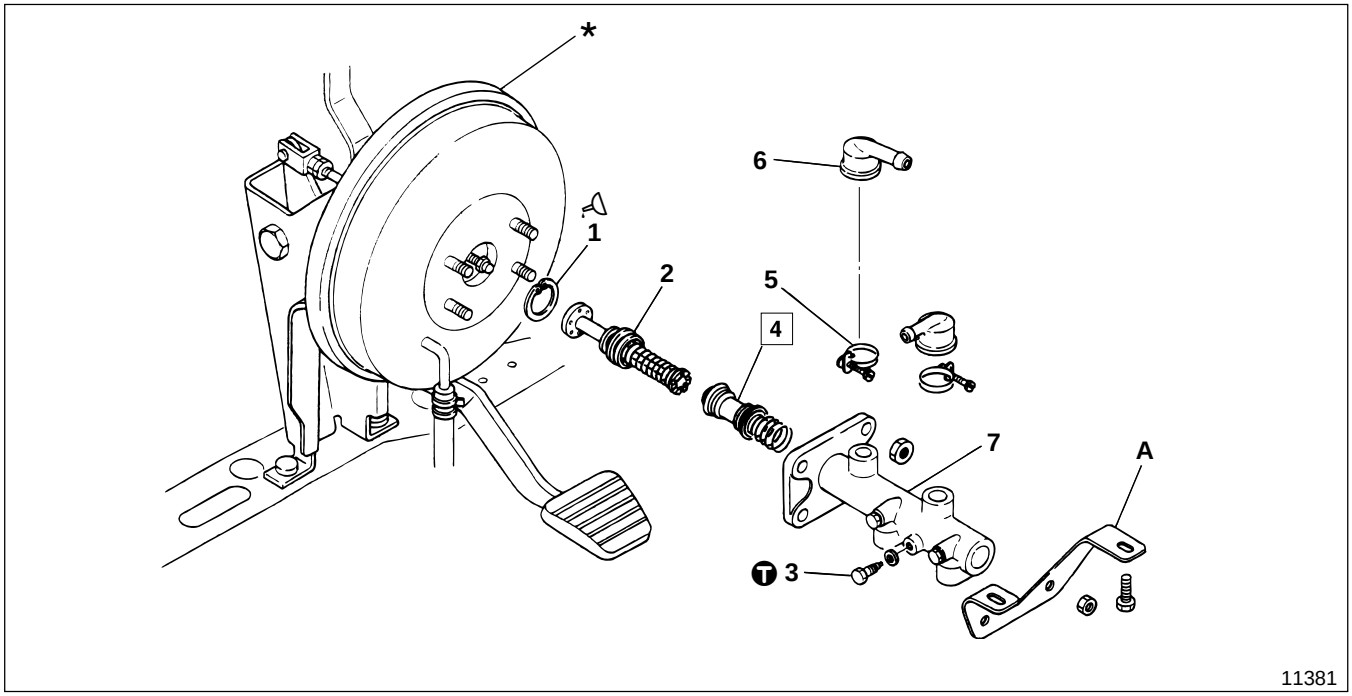

● **Disassembly sequence**

1 Retaining ring
2 Primary piston assembly
3 Set bolt
4 Secondary piston assembly
5 Clamp
6 Connector
7 Cylinder body
A : Master vac support
***** : Brake pedal and brake booster assembly 🕮 P35-56

WARNING⚠

Be sure not to damage the inner surface of cylinder body 7, since it will cause air to get mixed in or will result in brake fluid leakage during the removal and installation of primary piston assembly 2 and secondary piston assembly 4.

● **Assembly sequence**

Follow the disassembly sequence in reverse.

Service standards

Unit : mm {in.}

Location	Maintenance item			Standard value (Basic diameter in [ ])	Limit	Remedy
2	Primary piston assembly spring load	FE639, FG639 (Installed length 37.7 {1.48})		99 to 120 N {22 to 27 lbf, 10.1 to 12.3 kgf}	93 N {21 lbf, 9.5 kgf}	Replace
		FE649 (Installed length 36.3 {1.43})		100 to 125 N {23 to 28 lbf, 10.5 to 12.7 kgf}	97 N {22 lbf, 9.9 kgf}	Replace
2, 4, 7	Clearance between primary and secondary piston assemblies and cylinder body		FE639 FG639	[30.16] 0.02 to 0.10 {[1.19] 0.00079 to 0.0039}	0.2 {0.0079}	Replace
			FE649	[31.75] 0.02 to 0.10 {[1.25] 0.00079 to 0.0039}	0.2 {0.0079}	Replace
4	Secondary piston assembly spring load	FE639, FG639 (Installed length 30.7 {1.21})		76 to 92 N {17 to 21 lbf, 7.8 to 9.4 kgf}	72 N {16 lbf, 7.3 kgf}	Replace
		FE649 (Installed length 31.0 {1.22})		76 to 92 N {17 to 21 lbf, 7.8 to 9.4 kgf}	72 N {16 lbf, 7.3 kgf}	Replace

Tightening torque

Unit : N·m {lbf.ft, kgf·m}

Location	Parts to be tightened	Tightening torque	Remarks
3	Set bolt	6.86 to 8.82 {5.1 to 6.5, 0.7 to 0.9}	—

Lubricant

Location	Points of application	Specified lubricant	Quantity
1	Periphery of retaining ring	Rubber grease	As required

◆ Service procedure

4 Secondary piston assembly

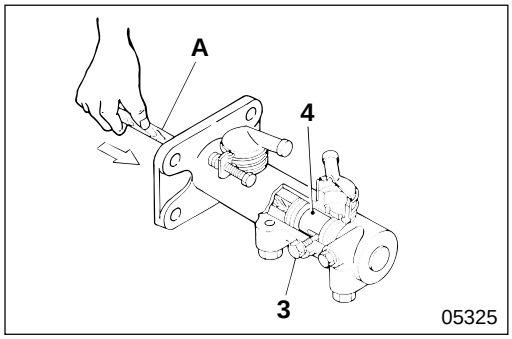

[Removal]

- Using rod **A**, push in secondary piston assembly **4**, then loosen set bolt **3**.

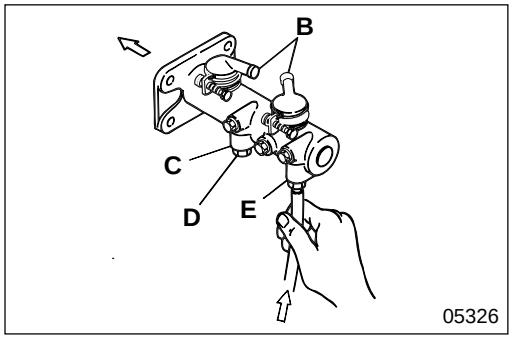

- Put plugs **D** into brake fluid filling port **B** and discharge port **C** that leads to the rear wheel brakes, then feed compressed air via discharge port **E** to the front wheel brakes to extract the secondary piston assembly.

WARNING⚠

You must apply compressed air gradually when you remove secondary piston assembly 4. If you applied compressed air strongly at one time, the secondary piston assembly would be violently ejected.

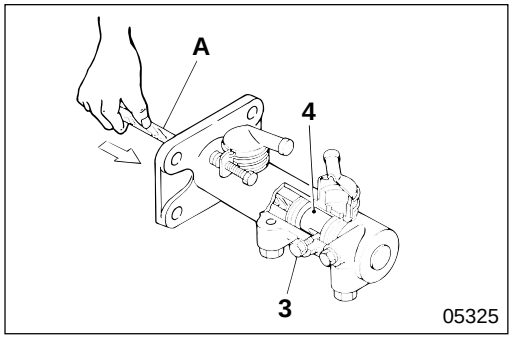

[Installation]

Using rod **A**, push in secondary piston assembly **4**, then tighten set bolt **3** at specified torque.

BRAKE PEDAL AND BRAKE BOOSTER (MASTER VAC)

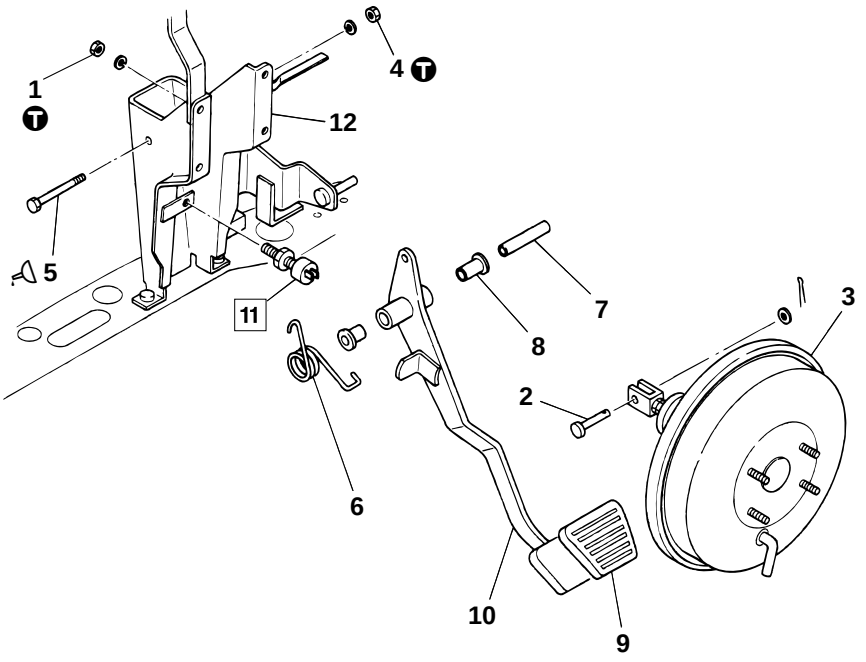

● **Disassembly sequence**

1 Nut
2 Clevis pin
3 Brake booster (master vac)
4 Nut
5 Bolt
6 Spring
7 Collar
8 Bushing
9 Pedal pad
10 Brake pedal
11 Stop lamp switch
Gr 54
12 Support assembly

NOTE

Do not disassemble brake booster (master vac) 3 because it is a non-disassemble type.

● **Assembly sequence**

Follow the disassembly sequence in reverse.

● **Adjustment after assembly** P35-57

Service standards

Unit : mm {in.}

Location	Maintenance item		Standard value (Basic diameter in [ ])	Limit	Remedy
7, 8	Clearance between collar and bushing		[16] 0.02 to 0.26 {0.00079 to 0.010}	0.5 {0.020}	Replace
10	Brake pedal	Height from pedal pad center to instrument panel underside	264 {10.4}	—	Adjust
		Full stroke	170 {6.69}	—	Adjust
10, 11	Clearance between brake pedal stopper and tip of stop lamp switch thread area		0 to 0.1 {0 to 0.0039}	—	Adjust

Tightening torque

Unit : N·m {lbf.ft, kgf·m}

Location	Parts to be tightened	Tightening torque	Remarks
1	Nut (Brake booster mounting)	8.8 to 14 {6.5 to 10, 0.9 to 1.4}	—
4	Nut (Brake pedal mounting)	34.3 to 53.9 {25 to 40, 3.5 to 5.5}	—

Lubricant

Location	Points of application	Specified lubricant	Quantity
5	Friction surface of bolt bushing	Chassis grease [NLGI No.1 (Ca soap)]	As required

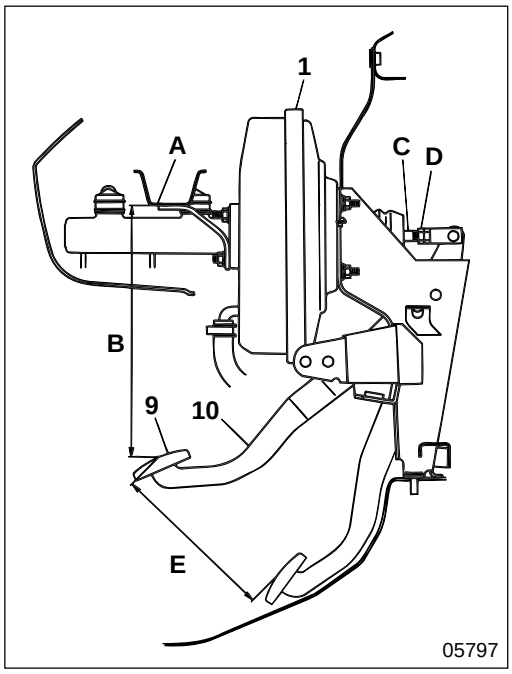

◆ Service procedure

● **Adjustment after assembly**

- Adjustment of brake pedal installation height
  By turning operating rod **C** of brake booster (master vac) **1**, adjust height **B** from the center of pedal pad **9** to the underside of instrument panel **A** to the standard value, then secure in place using nut **D**.

  WARNING

  Make sure, when brake pedal 10 is depressed fully, that operating rod C of brake booster (master vac) 1 functions as the stopper and the pedal does not come to a stop by hitting against the floor panel, since this will reduce brake effectiveness.

- Inspection of brake pedal full stroke
  Make sure that full stroke **E** when brake pedal **10** is depressed fully conforms to the standard value.
  If there is any fault, adjust the installation height of the brake pedal.

- Inspection of play towards brake pedal Ⓜ Gr 35-42

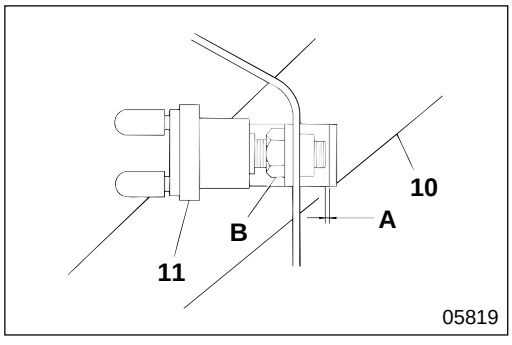

11 **Adjustment of stop lamp switch**

Turn stop lamp switch **11** to adjust clearance **A** between the top of the thread area of the stop lamp switch and the stopper of brake pedal **10** to the standard value, and fasten with lock nut **B**.

WARNING

Make sure, when brake pedal 10 is released, that stop lamp switch 11 does not stop the pedal, since this will cause the brake to drag.

FRONT WHEEL BRAKE < FE639 : DISC BRAKE >

This illustration shows the left side wheel disc brake viewed from the left front.

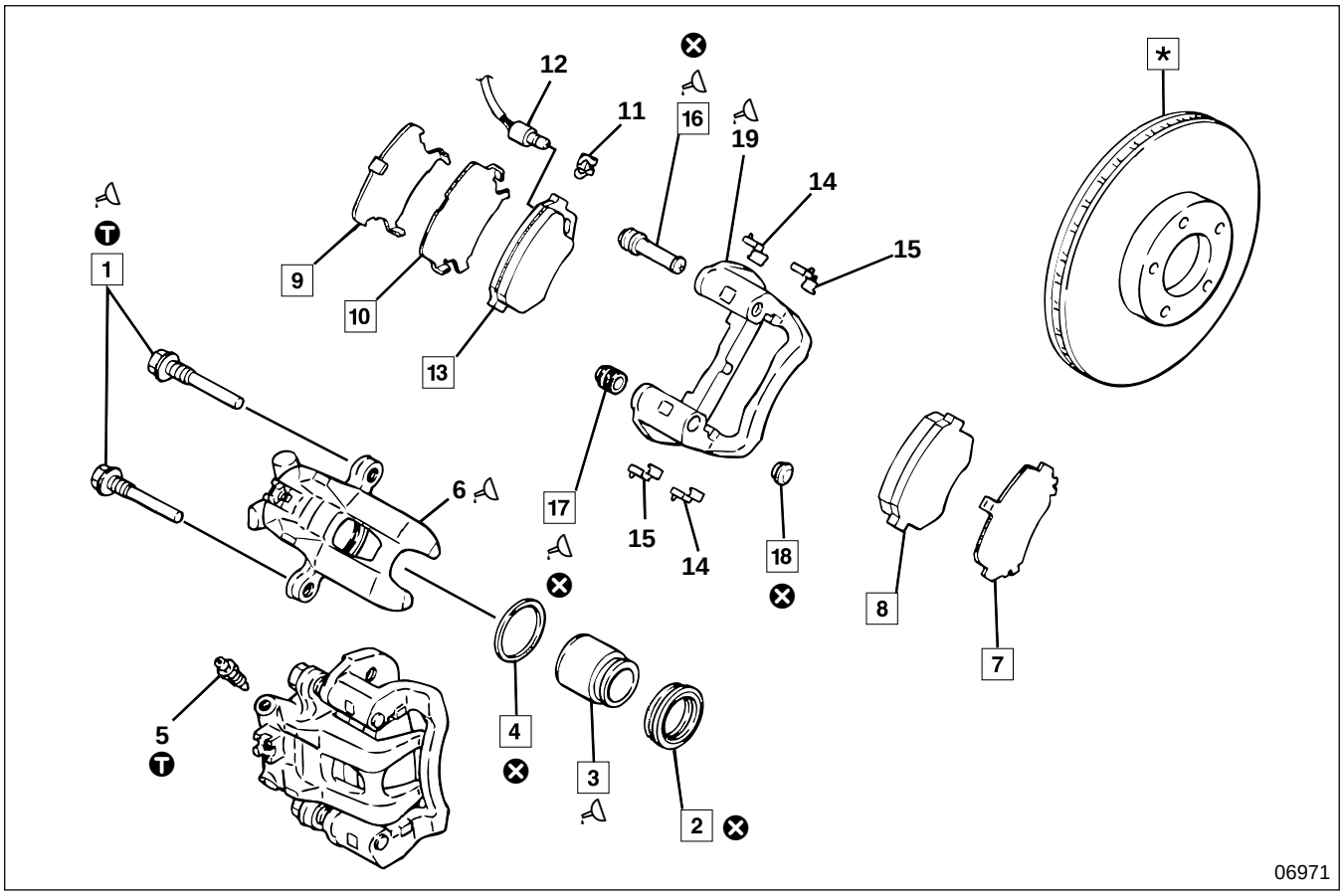

● **Disassembly sequence**

1 Slide pin bolt
2 Piston boot
3 Piston
4 Piston seal
5 Air bleeder (Lower)
6 Caliper
7 Outer shim
8 Outer pad
9 Inner shim A
10 Inner shim B
11 Clip (Upper)
12 Brake pad wear indicator (Upper)
13 Inner pad
14 Pad liner A
15 Pad liner B
16 Bushing
17 Pin boot
18 Cap
19 Torque member

*: Disc rotor Gr 26
⊗: Non-reusable parts

WARNING

Make sure that oil or grease does not stick to the surface of outer pad 8, inner pad 13 or disc rotor * since this will reduce brake effectiveness.

CAUTION

When assembling, use the grease contained in the seal kit.

● **Assembly sequence**

19→16→17→15→14
13→12→11→10→9
8→7
→1→18
6→5→4
3→2

Repair kit : Pad kit
Seal kit
Pad wear indicator kit

Service standards

Unit : mm {in.}

Location	Maintenance item		Standard value	Limit	Remedy
8, 13	Thickness of outer and inner pads		12 {0.47}	4 {0.16}	Replace
*	Disc rotor	Wobble (When installed on front axle)	0.07 {0.0028} or less	0.10 {0.0039}	Replace
		Thickness	20 {0.79}	18 {0.71}	Replace
—	Drag torque	Immediately after releasing brake pedal (Approximately 5 seconds later)	9.8 N·m {7.2 lbf.ft, 1.00 kgf·m}	—	Tangential force at hub bolt : 95 N {21 lbf, 9.7 kgf}
		After rotating disc rotor 10 turns	6.9 N·m {5.1 lbf.ft, 0.70 kgf·m}	—	Tangential force at hub bolt : 67 N {15 lbf, 6.8 kgf}

Tightening torque

Unit : N·m {lbf.ft, kgf·m}

Location	Parts to be tightened	Tightening torque	Remarks
1	Slide pin bolt	83.3 to 93.1 {61 to 69, 8.5 to 9.5}	Wet
5	Air bleeder	6.9 to 8.8 {5.1 to 8.8, 0.7 to 0.9}	Wet

Lubricant and/or fluid

Location		Points of application	Specified lubricant and/or fluid	Quantity
1	Slide pin bolt	Periphery of slide	*Rubber grease	As required
		Contact surfaces of bushing and pin boot	Rubber grease	As required
		Thread area	Brake fluid (SAE J1703f or FMVSS No.116 DOT3)	As required
3	Piston		Brake fluid (SAE J1703f or FMVSS No.116 DOT3)	As required
6	Cylinder lip of caliper		Rubber grease	As required
16	Bushing	Inner periphery	Rubber grease	As required
		Contact surface with slide pin bolt	Rubber grease	As required
17	Contact surfaces of pin boot and slide pin bolt		Rubber grease	As required
19	Torque member	Groove of pin boot	Rubber grease	As required
		Guide hole of main side	Rubber grease	As required
		Seat of cap	Rubber grease	As required

* : Rubber grease should be compatible with DOT3 brake fluid.

◆ Service procedure

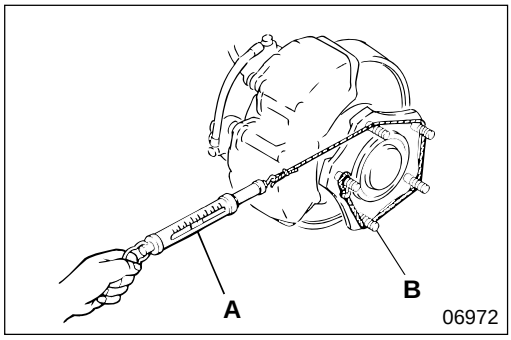

● Measurement of dragging torque

- Fasten spring balance **A** to hub bolt **B** and measure the tangential force.
- If the measured value is the specified value, the torque conforms to the standard value.
- If the measured value deviates from the specified value, inspect the friction surface between piston seal **4** and piston **3**.

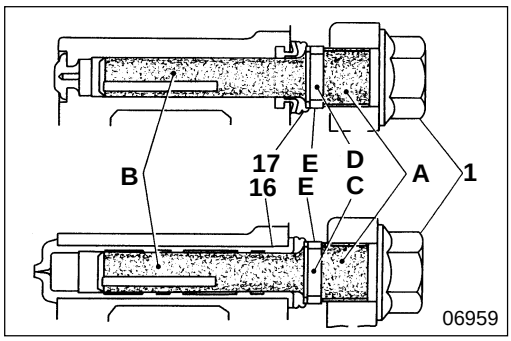

1 Installation of slide pin bolt

- Apply brake fluid to thread area **A** lightly, and apply grease to slide outer periphery **B**, bushing groove **C** or connecting surface **D** of pin boot **17**, then tighten slide pin bolt **1** at specified torque.
- Bleed bushing **16** or pin boot **17**.
- Check that seal **E** of bushing **16** or pin boot **17** is installed in bushing groove **C** of slide pin bolt **1** or connecting surface **D** of the pin boot.

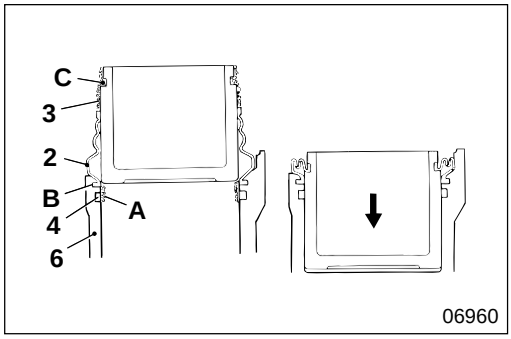

2 to 4 Installation of piston boot, piston and piston seal

- Apply brake fluid to the periphery of piston **3** to insert piston boot **2**.
- Spread the grease applied to piston seal **4** evenly and install it into the seal groove of caliper **6**.
- Apply grease to cylinder lip area **A** of caliper **6** evenly.
- Install the caliper side seal of piston boot **2** to the boot groove **B** of caliper **6**, then press in piston **3** slowly.
- Make sure that the piston side seal of piston boot **2** is installed in the boot groove **C** of piston **3**.

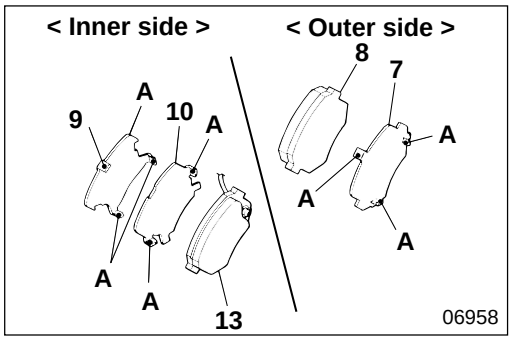

7 to 10 13 Installation of pad and shim

Make sure that you install the shims with pawls **A** facing the right way.

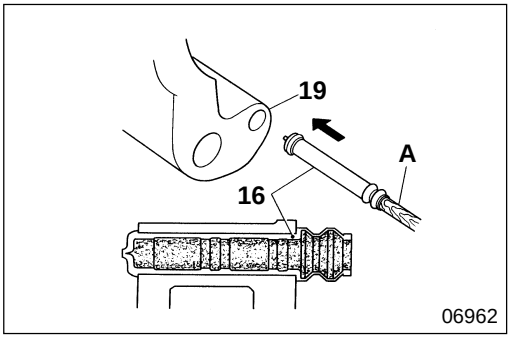

16 **Installation of bushing**

A : Push bar approximately ø8 mm {0.31 in.} long

After installation, apply grease to the whole inner periphery of bushing **16** and its contact surface with slide pin bolt **1**.

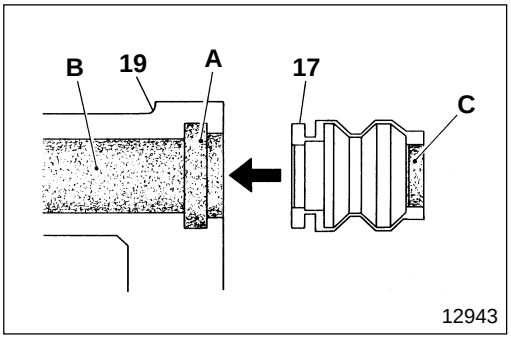

17 **Installation of pin boot**

- Apply grease to pin boot groove **A** of torque member **19**, the whole surface of guide hole **B**, and contact surface **C** between slide pin bolt **1** and pin boot **17**.
- Install pin boot **17**.

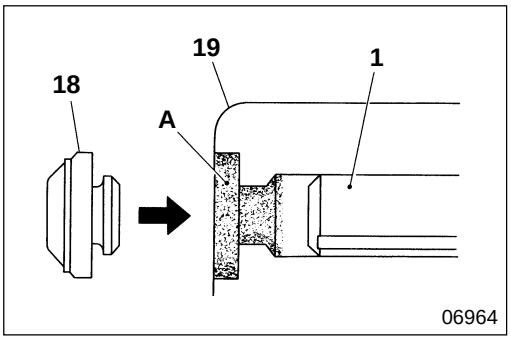

18 **Installation of cap**

- Apply grease to cap seat surface **A**.
- Install cap **18**.

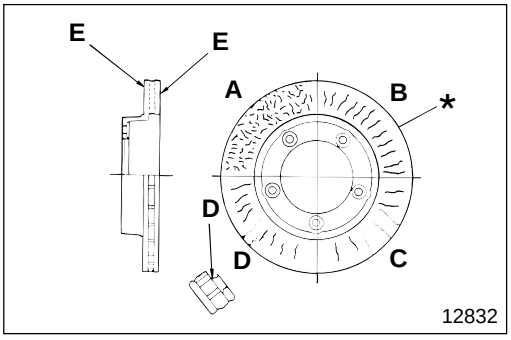

***** **Inspection of disc rotor**

- Inspect the friction surface **E** of disc rotor * visually.
- If any cracks are found, correct or replace disc rotor *.
  - **A** : Net pattern cracks (Correct or replace)
  - **B** : Radial cracks that do not reach the outer periphery (Correct or replace)
  - **C** : Radial cracks that have reached the outer periphery (Replace)
  - **D** : Through cracks (Replace)

FRONT WHEEL BRAKE < FE649 : DISC BRAKE >

This illustration shows the left side wheel disc brake viewed from the left front.

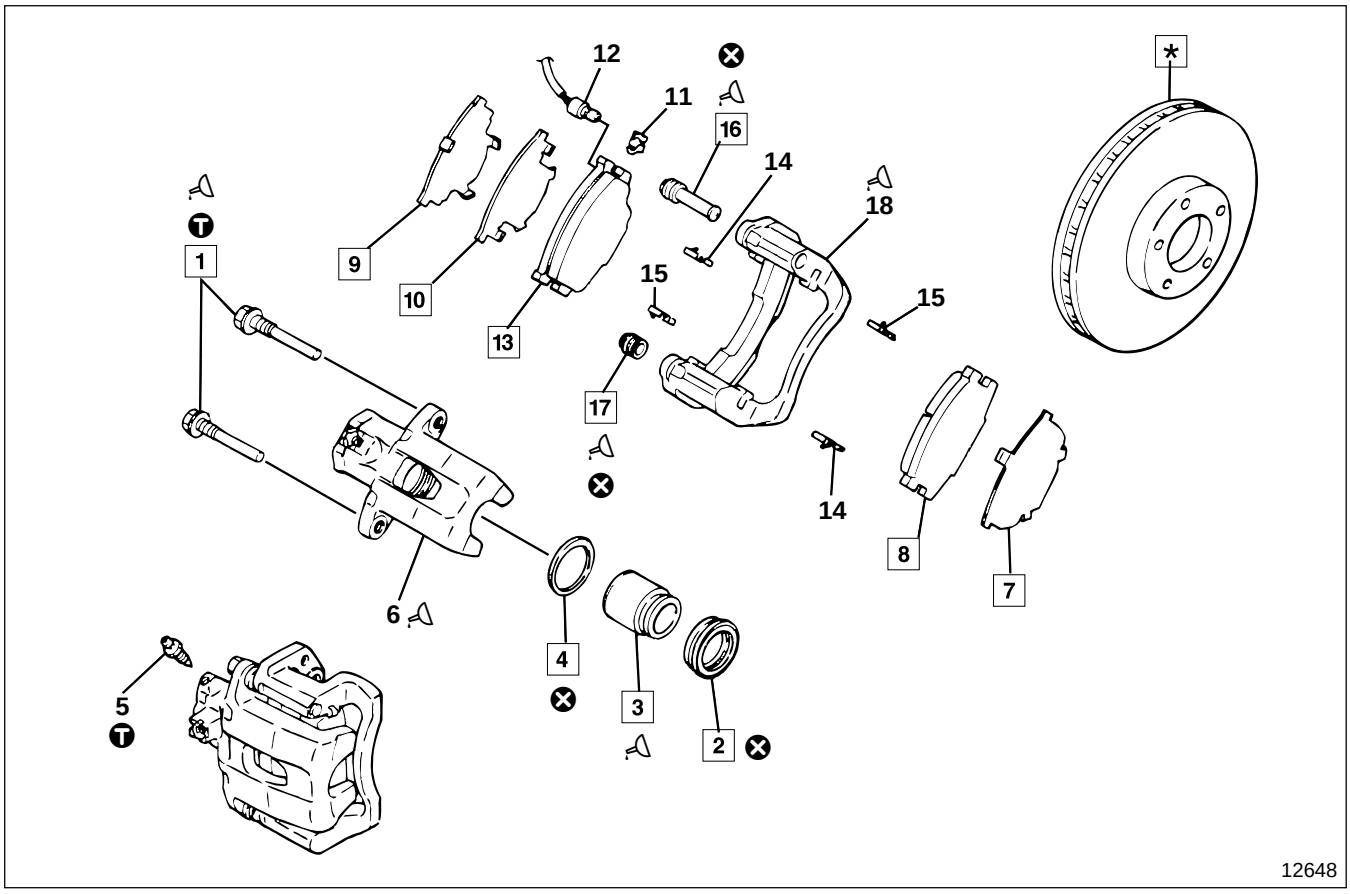

● **Disassembly sequence**

1 Slide pin bolt
2 Piston boot
3 Piston
4 Piston seal
5 Air bleeder (Lower)
6 Caliper
7 Outer shim
8 Outer pad
9 Inner shim A
10 Inner shim B
11 Clip (Upper)
12 Brake pad wear indicator (Upper)
13 Inner pad
14 Pad liner A
15 Pad liner B
16 Bushing
17 Pin boot
18 Torque member

***** : Disc rotor Gr 26
⊗ : Non-reusable parts

WARNING

Make sure that oil or grease does not stick to the surface of outer pad 8, inner pad 13 or disc rotor * since this will reduce brake effectiveness.

CAUTION

When assembling, use the grease contained in the seal kit.

● **Assembly sequence**

18→17→16→15→14
13→12→11→10→9
8→7
→1
6→5→4
3→2

Repair kit : Pad kit
Seal kit
Pad wear indicator kit

Service standards

Unit : mm {in.}

Location	Maintenance item		Standard value	Limit	Remedy
8, 13	Thickness of outer and inner pads		14 {0.55}	4 {0.16}	Replace
*	Disc rotor	Wobble (When installed on front axle)	0.07 {0.0028} or less	0.10 {0.0039}	Replace
		Thickness	40 {1.57}	38 {1.50}	Replace
—	Drag torque	Immediately after releasing brake pedal (Approximately 5 seconds later)	9.8 N·m {7.2 lbf.ft, 1.00 kgf·m}	—	Tangential force at hub bolt : 95 N {21 lbf, 9.7 kgf}
		After rotating disc rotor 10 turns	6.9 N·m {5.1 lbf.ft, 0.70 kgf·m}	—	Tangential force at hub bolt : 67 N {15 lbf, 6.8 kgf}

Tightening torque

Unit : N·m {lbf.ft, kgf·m}

Location	Parts to be tightened	Tightening torque	Remarks
1	Slide pin bolt	83.3 to 93.1 {61 to 69, 8.5 to 9.5}	Wet
5	Air bleeder	6.9 to 8.8 {5.1 to 8.8, 0.7 to 0.9}	Wet

Lubricant and/or fluid

Location	Points of application		Specified lubricant and/or fluid	Quantity
1	Slide pin bolt	Periphery of slide	*Rubber grease	As required
		Contact surfaces of bushing and pin boot	Rubber grease	As required
		Thread area	Brake fluid (SAE J1703f or FMVSS No.116 DOT3)	As required
3	Piston		Brake fluid (SAE J1703f or FMVSS No.116 DOT3)	As required
6	Cylinder lip of caliper		Rubber grease	As required
16	Bushing	Inner periphery	Rubber grease	As required
		Contact surface with slide pin bolt	Rubber grease	As required
17	Contact surfaces of pin boot and slide pin bolt		Rubber grease	As required
18	Torque member	Groove of pin boot	Rubber grease	As required
		Guide hole of main side	Rubber grease	As required

* : Rubber grease should be compatible with DOT3 brake fluid.

◆ Service procedure

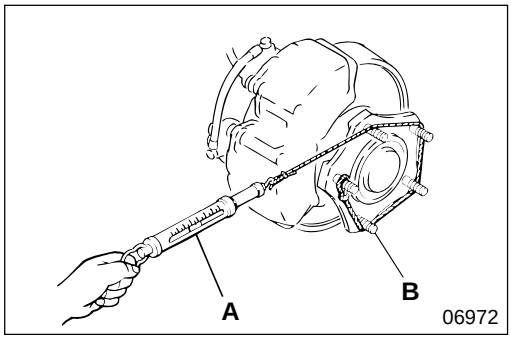

● Measurement of dragging torque

- Fasten spring balance **A** to hub bolt **B** and measure the tangential force.
- If the measured value is the specified value, the torque conforms to the standard value.
- If the measured value deviates from the specified value, inspect the friction surface between piston seal **4** and piston **3**.

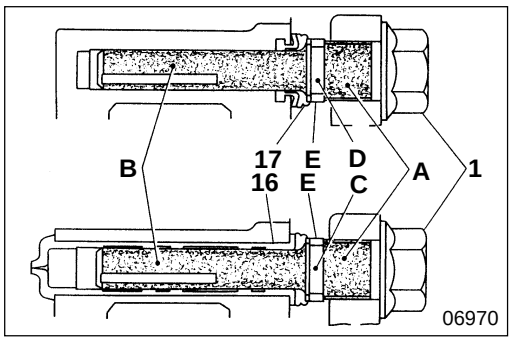

1 Installation of slide pin bolt

- Apply brake fluid to thread area **A** lightly, and apply grease to slide outer periphery **B**, bushing groove **C** or connecting surface **D** of pin boot **17**, then tighten slide pin bolt **1** at specified torque.
- Bleed bushing **16** or pin boot **17**.
- Check that seal **E** of bushing **16** or pin boot **17** is installed in bushing groove **C** of slide pin bolt **1** or connecting surface **D** of the pin boot.

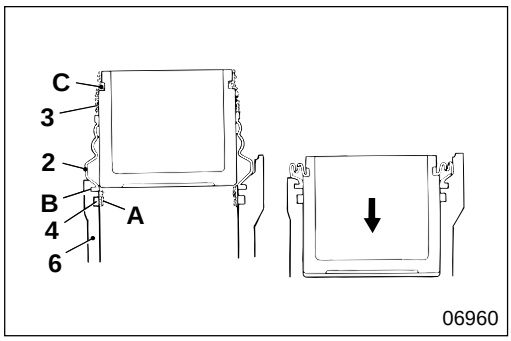

2 to 4 Installation of piston boot, piston and piston seal

- Apply brake fluid to the periphery of piston **3** to insert piston boot **2**.
- Spread the grease applied to piston seal **4** evenly and install it into the seal groove of caliper **6**.
- Apply grease to cylinder lip area **A** of caliper **6** evenly.
- Install the caliper side seal of piston boot **2** to the boot groove **B** of caliper **6**, then press in piston **3** slowly.
- Make sure that the piston side seal of piston boot **2** is installed in the boot groove **C** of piston **3**.

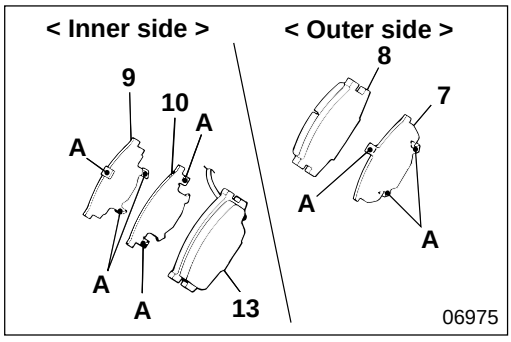

7 to 10 13 Installation of pad and shim

Make sure that you install the shims with pawls **A** facing the right way.

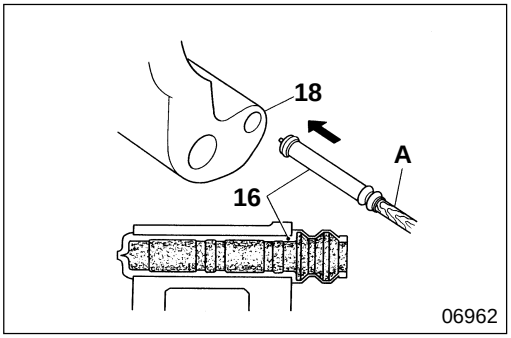

16 **Installation of bushing**

A : Push bar approximately ø8 mm {0.31 in.} long

After installation, apply grease to the whole inner periphery of bushing **16** and its contact surface with slide pin bolt **1**.

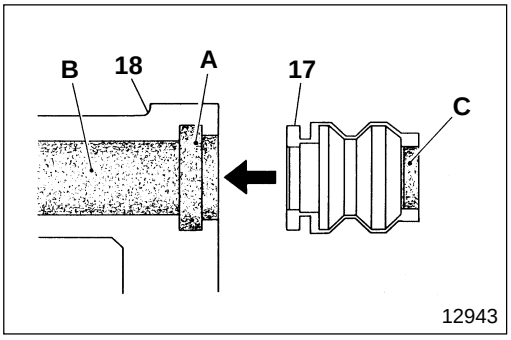

17 **Installation of pin boot**

- Apply grease to pin boot groove **A** of torque member **18**, the whole surface of guide hole **B**, and contact surface **C** between slide pin bolt **1** and pin boot **17**.
- Install pin boot **17**.

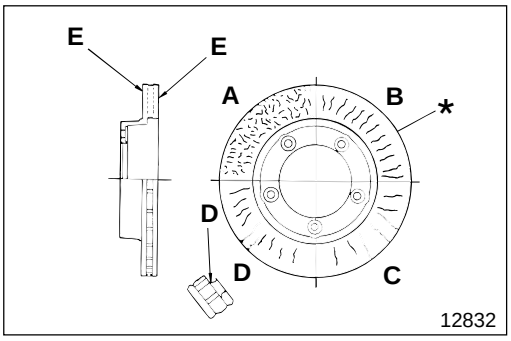

***** **Inspection of disc rotor**

- Inspect the friction surface **E** of disc rotor ***** visually.
- If any cracks are found, correct or replace disc rotor *****.
  - **A** : Net pattern cracks (Correct or replace)
  - **B** : Radial cracks that do not reach the outer periphery (Correct or replace)
  - **C** : Radial cracks that have reached the outer periphery (Replace)
  - **D** : Through cracks (Replace)

FRONT WHEEL BRAKE < FG639 : DRUM BRAKE >

Front Wheel Brake Assembly

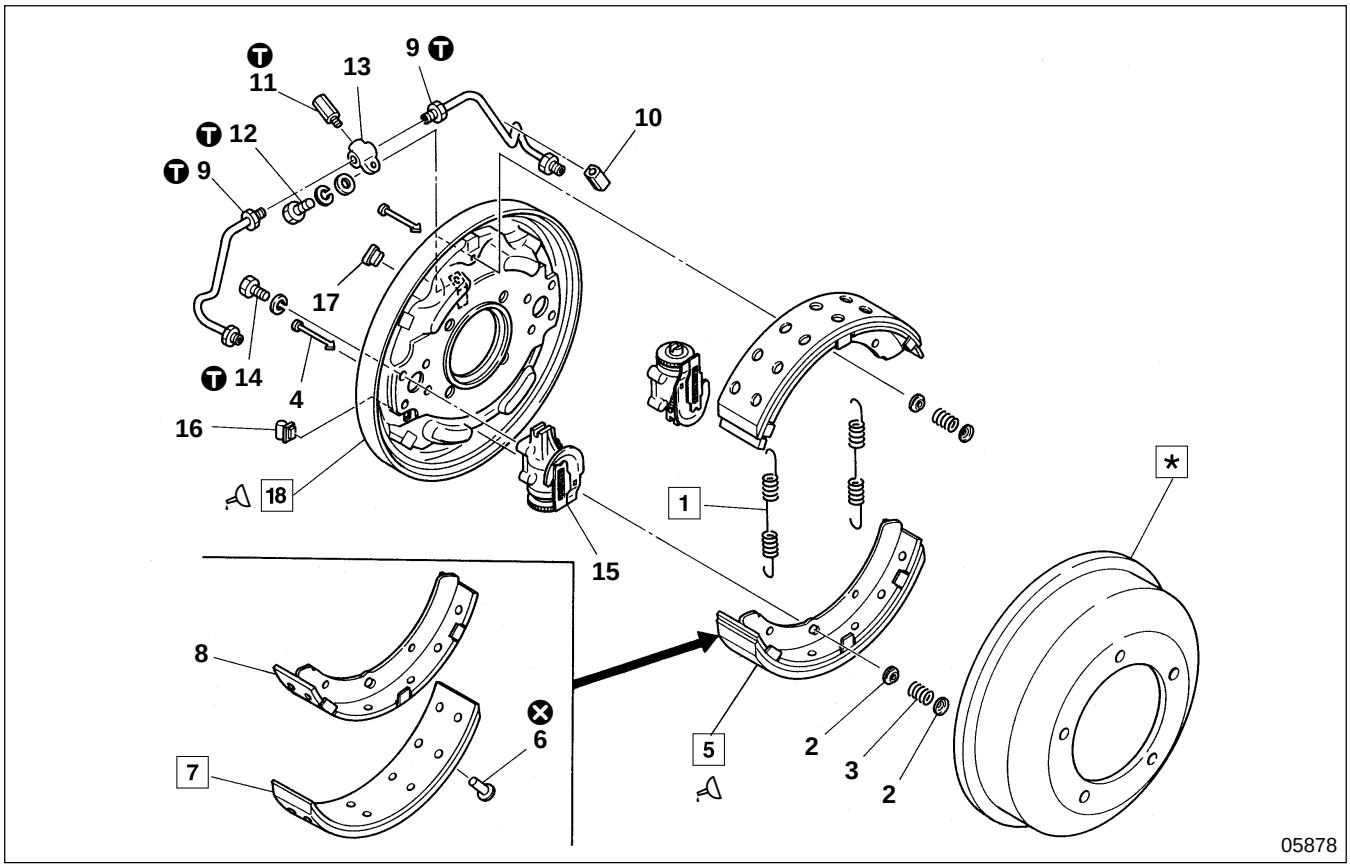

● **Disassembly sequence**

1 Return spring
2 Shoe hold down cup
3 Shoe hold down spring
4 Shoe hold down pin
5 Brake shoe assembly
6 Rivet
7 Brake lining
8 Brake shoe
9 Pipe assembly
10 Spacer
11 Extension
12 Bolt
13 Connector
14 Bolt
15 Wheel cylinder assembly 🕮 P35-71
16 Cover
17 Cover
18 Backing plate

*: Brake drum Gr 26B
⊗: Non-reusable parts

WARNING⚠

Make sure that oil or grease does not stick to the lining surface of brake shoe assembly 5 and the inner surface of brake drum * since this will reduce brake effectiveness.

CAUTION⚠

Be sure, when replacing brake shoe assembly 5, to wash and apply rubber grease to the adjuster and adjuster screw of wheel cylinder assembly 15 since particles of brake lining 7 may have accumulated on these parts. 🕮 P35-71

● **Assembly sequence**

Follow the disassembly sequence in reverse.

● **Initial adjustment of brake shoe clearance after installation 🕮 P35-67**

Service standards

Unit : mm {in.}

Location	Maintenance item		Standard value		Limit	Remedy
1	Return spring load (Installed length 190 {7.48})		195 to 235 N {44 to 53 lbf, 19.8 to 24.2 kgf}		175 N {40 lbf, 18 kgf}	Replace
5	Brake shoe assembly (Thickness of brake lining)		10.0 {0.39}		4.0 {0.16} (Side shoulder means wear limit)	Replace brake lining
*	Brake drum	Inner diameter	320 {12.60}	*321 {12.64}	322 {12.68} or replace	Correct
		Cylindrical accuracy	0.05 {0.0020}		0.2 {0.0079}	Correct or replace

*Refers to the correction limit.

Tightening torque

Unit : N·m {lbf.ft, kgf·m}

Location	Parts to be tightened	Tightening torque	Remarks
9	Pipe assembly	12.75 to 14.71 {9.4 to 11, 1.3 to 1.5}	—
11	Extension	12.75 to 14.71 {9.4 to 11, 1.3 to 1.5}	—
12	Bolt (Connector mounting)	7.85 to 11.77 {5.8 to 8.7, 0.8 to 1.2}	—
14	Bolt (Wheel cylinder assembly mounting)	37.27 to 49.03 {27 to 36, 3.8 to 5.0}	—

Lubricant

Location	Points of application	Specified lubricant	Quantity
5, 18	Contact surfaces between backing plate ledge and shoe rim, wheel cylinder assembly anchor area of shoe web, and adjusting screw contact point	Brake grease	As required

◆ Service procedure

● Initial adjustment of brake shoe clearance after installation

Turning the adjuster of wheel cylinder assembly **15** in arrow direction expands brake shoe assembly **5**, narrowing the clearance between brake drum * and brake lining **7**.

- Jack up the vehicle to make sure that the wheel hub bearing has no play. If there is any play, correct it. Gr 26B
- Remove covers **16** and **17**.

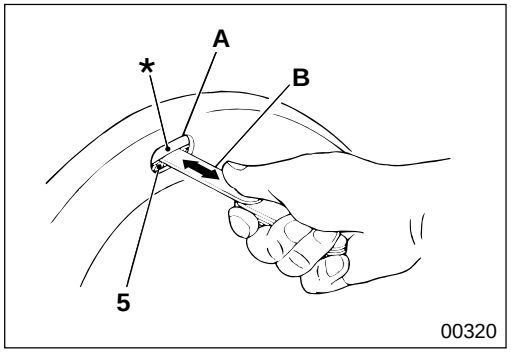

- Adjust the brake shoe clearance as follows, so that 0.3 mm {0.012 in.} feeler gauge **B** can be inserted or extracted through check hole **A**, between brake drum * and brake lining **7** with a little resistance.

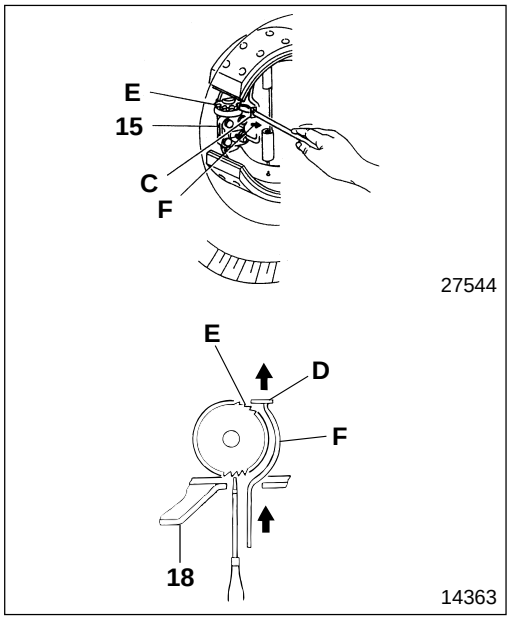

- To increase brake shoe clearance
  - Insert a wire (approximately ø2 mm {0.079 in.}) into the adjusting hole **C** and lift adjusting lever **D** of wheel cylinder assembly **15**.
  - Turn adjuster **E** of wheel cylinder assembly **15**, through adjusting hole **C**, in the opposite direction to arrow **F** on backing plate **15**.
- To decrease brake shoe clearance
  Turn adjuster **E** in the arrow **F** direction marked on backing plate **18** through adjusting hole **C**.
- Extract the feeler gauge and depress the brake pedal two or three times fully, then the specified value brake shoe clearance can be obtained.
- Insert a 0.2 mm {0.0079 in.} feeler gauge through check hole **A** and make sure that it can be inserted or extracted with a little resistance. If there is any fault, disassemble and inspect wheel cylinder assembly **15**. P35-71

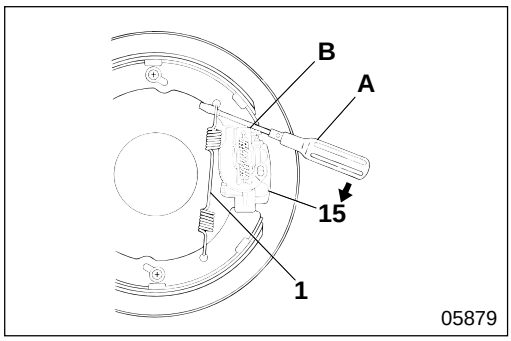

1 **Return spring**

[Removal]
To remove return spring **1**, place screwdriver **A** into the hook of the return spring, then pry and remove the return spring making use of wheel cylinder assembly **15** adjusting screw **B** as a fulcrum.

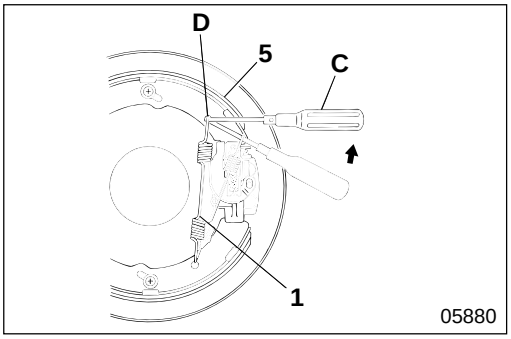

[Installation]
Insert a small cross-point screwdriver **C** into the hook of return spring **1**, insert the tip of the screwdriver into return spring installation hole **D** of brake shoe assembly **5** to pry on the return spring.

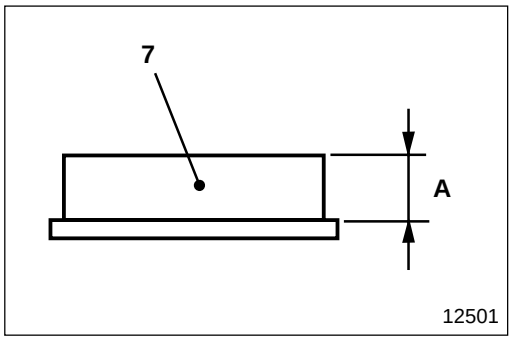

5 **Inspection of brake shoe assembly**

If thickness **A** of brake lining **7** is lower than the limit, replace the brake lining on the same axle as a unit.

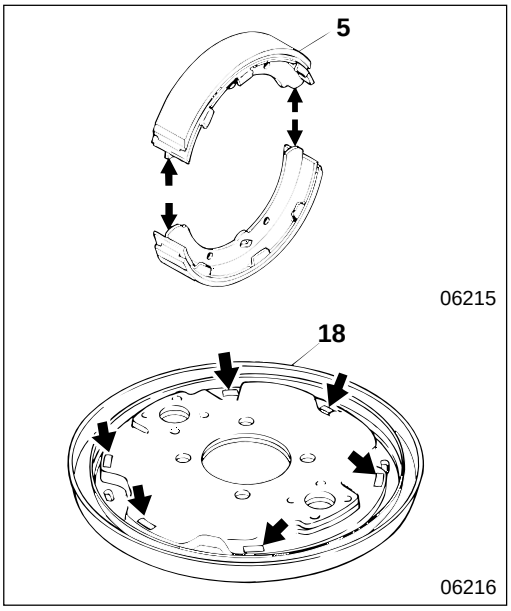

5 **18** **Installation of brake shoe assembly and backing plate**

Apply grease to the points as illustrated, and install brake shoe assembly **5** and backing plate **18**.

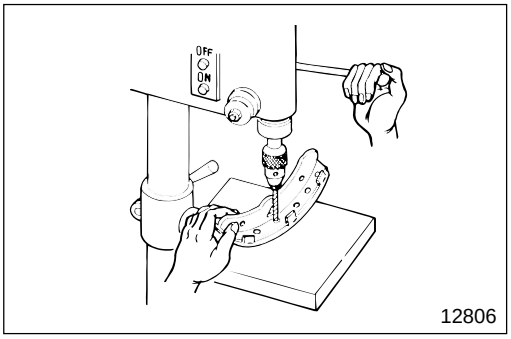

7 **Brake lining**

[Removal]

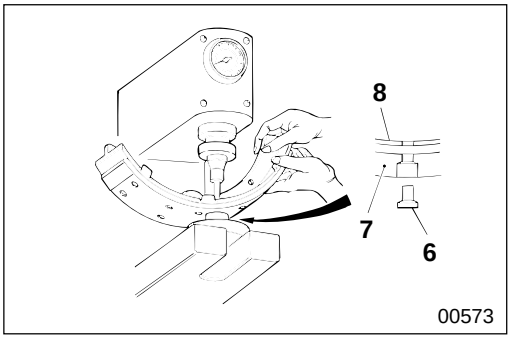

[Installation]

- Clean the mounting surfaces of brake lining **7** and brake shoe **8** with cleaning fluid and dry them.
- Insert rivets **6** from brake lining **7** side, and caulk the rivets at the specified load so that there is no clearance between brake shoe **8** and the brake lining.

  Staking load for rivets : 21±1 kN {4630±220 lbf, 2100±100 kgf}

- Make sure that you inspect contact with the inner surface of brake drum * after you replace brake linings **7**. If contact is incorrect, correct with the brake assembled.

WARNING⚠

Do not leave lubricant on the surface of brake lining 7 because this reduces braking performance.

CAUTION⚠

Make sure that the type of brake linings 7 you fit are suitable for the intended use of the vehicle. Make sure that you fit identical size and color coated linings on the left and right sides of one axle.

*** Correction of brake drum**

If the cylindrical accuracy of brake drum * is higher than the limit, or there are grooves, correct by machining to the correction limit. Machining of the brake drum should be done with the wheel hub attached as an integral part.

Wheel Cylinder Assembly

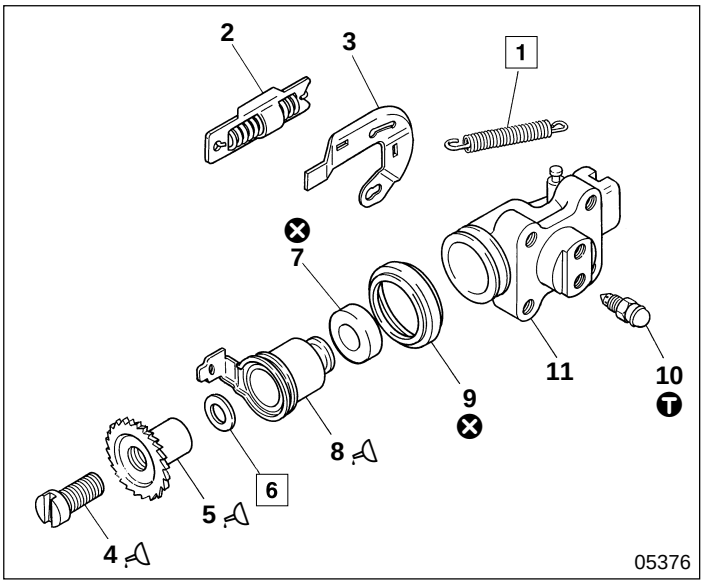

● **Disassembly sequence**

1 Spring
2 Spring and fitting
3 Lever
4 Adjusting screw
5 Adjuster
6 Washer
7 Piston cup
8 Piston
9 Boot
10 Bleeder screw
11 Body

⊗ : Non-reusable parts

● **Assembly sequence**

11→10→9 ┐
→6→5→4→3→2→1
8→7 ┘

Repair kit : Wheel cylinder kit

Service standards

Unit : mm {in.}

Location	Maintenance item	Standard value (Basic diameter in [ ])	Limit	Remedy
8, 11	Clearance between piston and body	[28.57 {1.12}] 0.02 to 0.08 {0.00079 to 0.0031}	0.2 {0.0079}	Replace piston

Ⓣ Tightening torque

Unit : N·m {lbf.ft, kgf·m}

Location	Parts to be tightened	Tightening torque	Remarks
10	Bleeder screw	6.9 to 8.8 {5.1 to 6.5, 0.7 to 0.9}	—

Lubricant

Location	Points of application	Specified lubricant	Quantity
4, 5, 8	Thread areas of adjusting screw and adjuster, friction area of piston, and friction area of adjuster	*Rubber grease	As required

* : Rubber grease should be compatible with DOT3 brake fluid.

◆ Service procedure

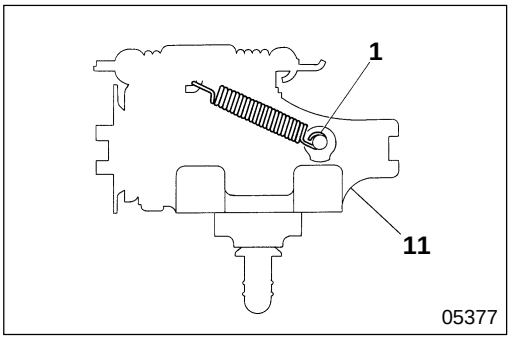

1 **Installation of spring**

Install the closed hook of spring **1** on body **11** side.

REAR WHEEL BRAKE < FE639, FG639 : DRUM BRAKE >

Rear Wheel Brake Assembly

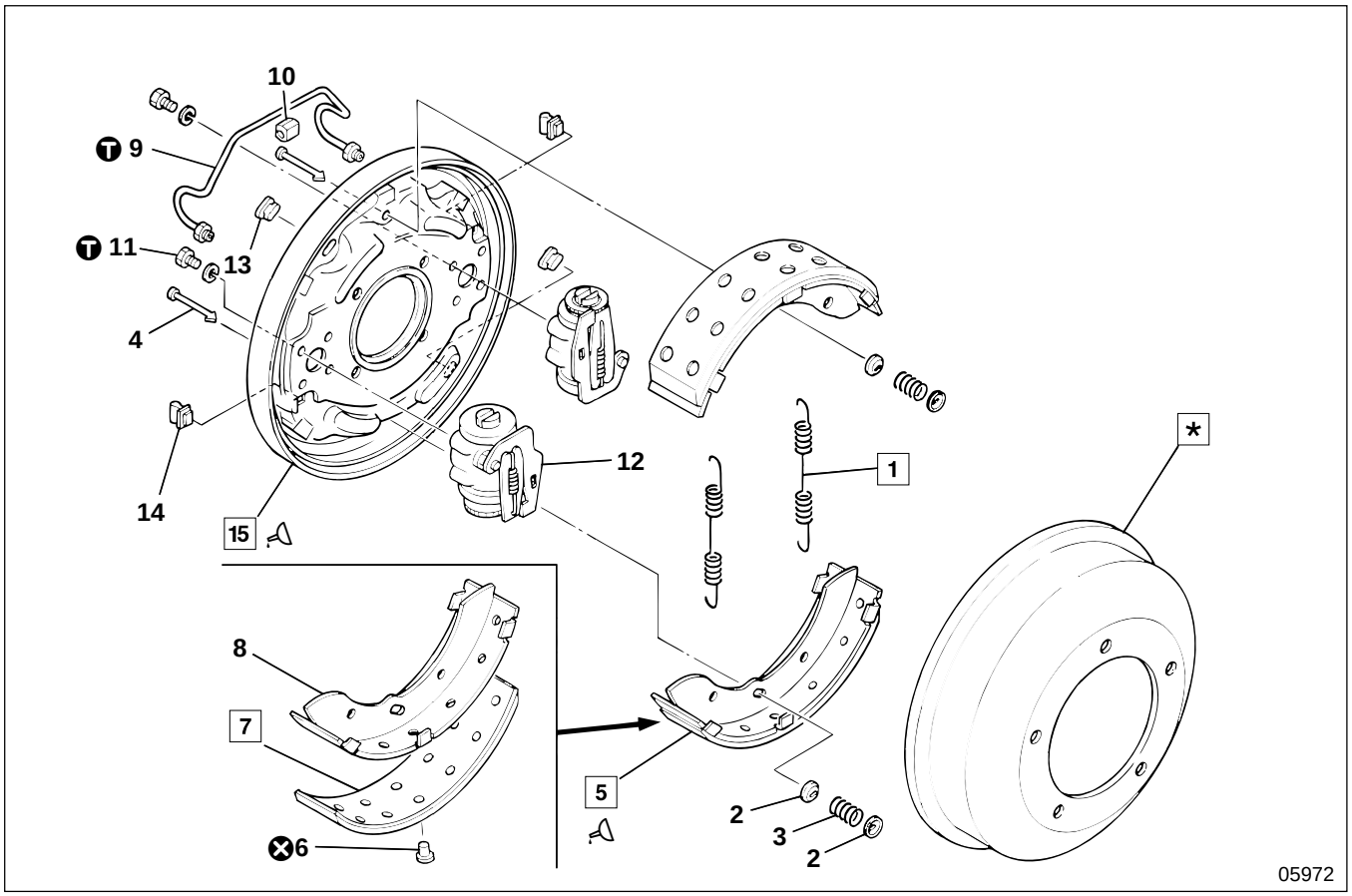

● **Disassembly sequence**

1 Return spring
2 Shoe hold down cup
3 Shoe hold down spring
4 Shoe hold down pin
5 Brake shoe assembly
6 Rivet
7 Brake lining
8 Brake shoe
9 Pipe assembly
10 Spacer
11 Bolt
12 Wheel cylinder assembly P35-78
13 Cover
14 Cover
15 Backing plate

* : Brake drum Gr 27
⊗ : Non-reusable parts

WARNING

Make sure that oil or grease does not stick to the lining surface of brake shoe assembly 5 and the inner surface of brake drum * since this will reduce brake effectiveness.

CAUTION

Be sure, when replacing brake shoe assembly 5, to wash and apply rubber grease to the adjuster and adjuster screw of wheel cylinder assembly 12 since particles of brake lining 7 may have accumulated on these parts. **P35-78**

● **Assembly sequence**

Follow the disassembly sequence in reverse.

● **Initial adjustment of brake shoe clearance after installation** P35-73

Service standards

Unit : mm {in.}

Location	Maintenance item		Standard value		Limit	Remedy
1	Return spring load (Installed length 190 {7.48})		195 to 235 N {44 to 53 lbf, 19.8 to 24.2 kgf}		175 N {40 lbf, 18 kgf}	Replace
5	Brake shoe assembly (Thickness of brake lining)		10.0 {0.39}		4.0 {0.16} (Side shoulder means wear limit)	Replace brake lining
*	Brake drum	Inner diameter	320 {12.60}	*321 {12.64}	322 {12.68} or replace	Correct
		Cylindrical accuracy	0.05 {0.0020}		0.2 {0.0079}	Correct or replace

*Refers to the correction limit.

Tightening torque

Unit : N·m {lbf.ft, kgf·m}

Location	Parts to be tightened	Tightening torque	Remarks
9	Pipe assembly	12.75 to 14.71 {9.4 to 11, 1.3 to 1.5}	—
11	Bolt (Wheel cylinder assembly mounting)	37.27 to 49.03 {27 to 36, 3.8 to 5.0}	—

Lubricant

Location	Points of application	Specified lubricant	Quantity
5, 15	Contact surfaces between backing plate ledge and shoe rim, wheel cylinder assembly anchor area of shoe web, and adjusting screw contact point	Brake grease	As required

◆ Service procedure

● **Initial adjustment of brake shoe clearance after installation**

Turning the adjuster of wheel cylinder assembly **12** in arrow direction expands brake shoe assembly **5**, narrowing the clearance between brake drum * and brake lining **7**.

- Jack up the vehicle to make sure that the wheel hub bearing has no play. If there is any play, correct it. Gr 27
- Remove covers **13** and **14**.

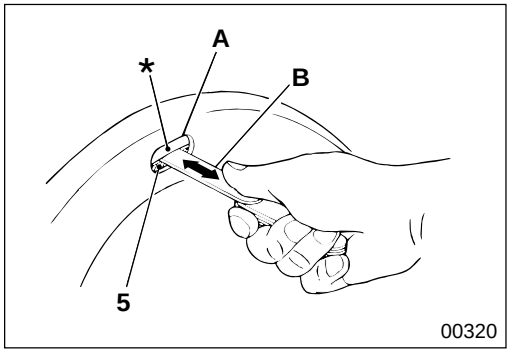

- Adjust the brake shoe clearance as follows, so that 0.3 mm {0.012 in.} feeler gauge **B** can be inserted or extracted through check hole **A**, between brake drum * and brake lining **7** with a little resistance.

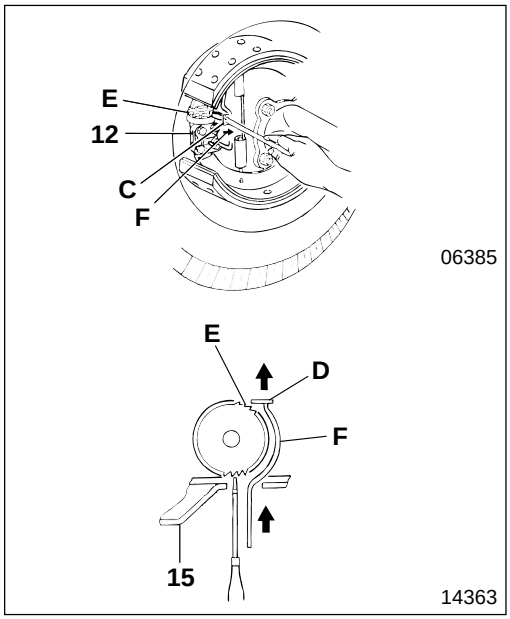

- To increase brake shoe clearance
  - Insert a wire (approximately ø2 mm {0.079 in.}) into the adjusting hole **C** and lift adjusting lever **D** of wheel cylinder assembly **12**.
  - Turn adjuster **E** of wheel cylinder assembly **12**, through adjusting hole **C**, in the opposite direction to arrow **F** on backing plate **15**.
- To decrease brake shoe clearance
  Turn adjuster **E** in the arrow **F** direction marked on backing plate **15** through adjusting hole **C**.
- Extract the feeler gauge and depress the brake pedal two or three times fully, then the specified value brake shoe clearance can be obtained.
- Insert a 0.2 mm {0.0079 in.} feeler gauge through check hole **A** and make sure that it can be inserted or extracted with a little resistance. If there is any fault, disassemble and inspect wheel cylinder assembly **12**. P35-78

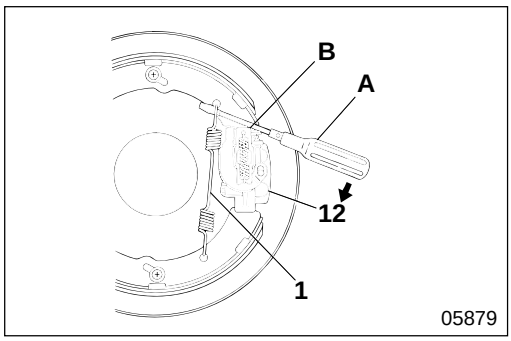

1 **Return spring**

[Removal]
To remove return spring **1**, place screwdriver **A** into the hook of the return spring, then pry and remove the return spring making use of wheel cylinder assembly **12** adjusting screw **B** as a fulcrum.

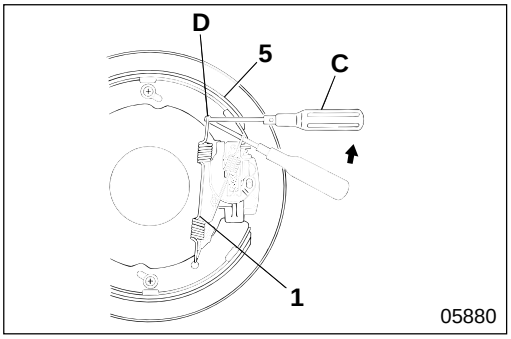

[Installation]
Insert a small cross-point screwdriver **C** into the hook of return spring **1**, insert the tip of the screwdriver into return spring installation hole **D** of brake shoe assembly **5** to pry on the return spring.

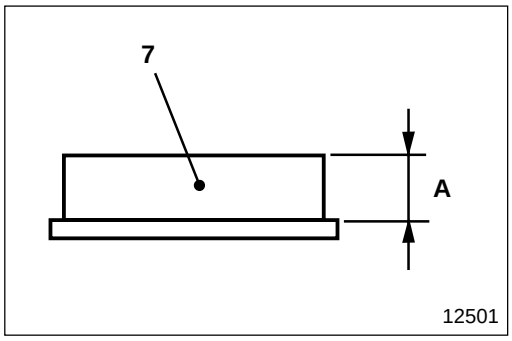

5 **Inspection of brake shoe assembly**

If thickness **A** of brake lining **7** is lower than the limit, replace the brake lining on the same axle as a unit.

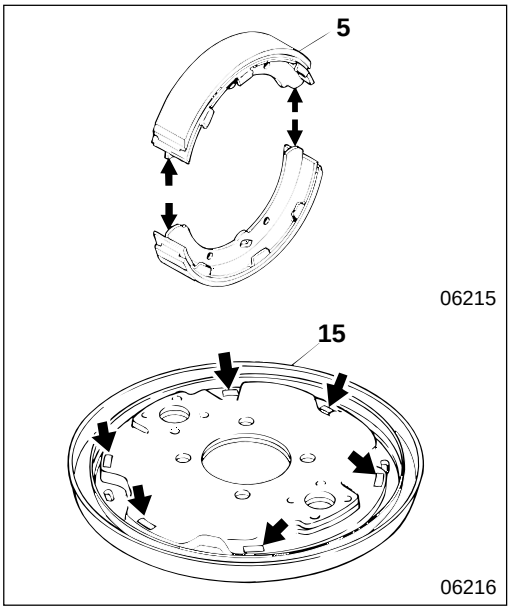

5 **15** **Installation of brake shoe assembly and backing plate**

Apply grease to the points as illustrated, and install brake shoe assembly **5** and backing plate **15**.

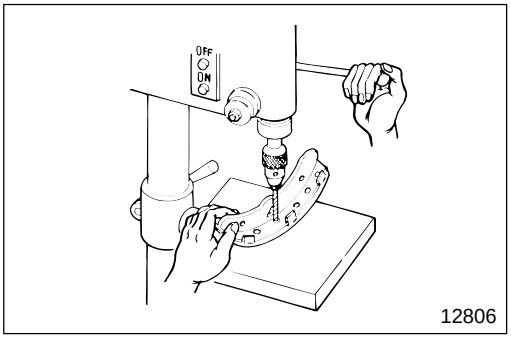

7 **Brake lining**

[Removal]

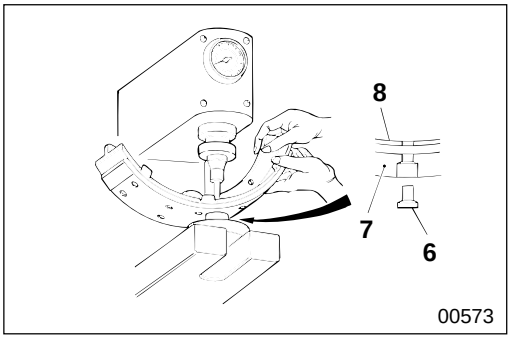

[Installation]

- Clean the mounting surfaces of brake lining **7** and brake shoe **8** with cleaning fluid and dry them.
- Insert rivets **6** from brake lining **7** side, and stake the rivets at the specified load so that there is no clearance between brake shoe **8** and the brake lining.

  Staking load for rivets : 21±1 kN {4630±220 lbf, 2100±100 kgf}

- Make sure that you inspect contact with the inner surface of brake drum * after you replace brake linings **7**. If contact is incorrect, correct with the brake assembled.

WARNING⚠

Do not leave lubricant on the surface of brake lining 7 because this reduces braking performance.

CAUTION⚠

Make sure that the type of brake linings 7 you fit are suitable for the intended use of the vehicle. Make sure that you fit identical size and color coated linings on the left and right sides of one axle.

*** Correction of brake drum**

If the cylindrical accuracy of brake drum * is higher than the limit, or there are grooves, correct by machining to the correction limit. Machining of the brake drum should be done with the wheel hub attached as an integral part.

M E M O

Wheel Cylinder Assembly

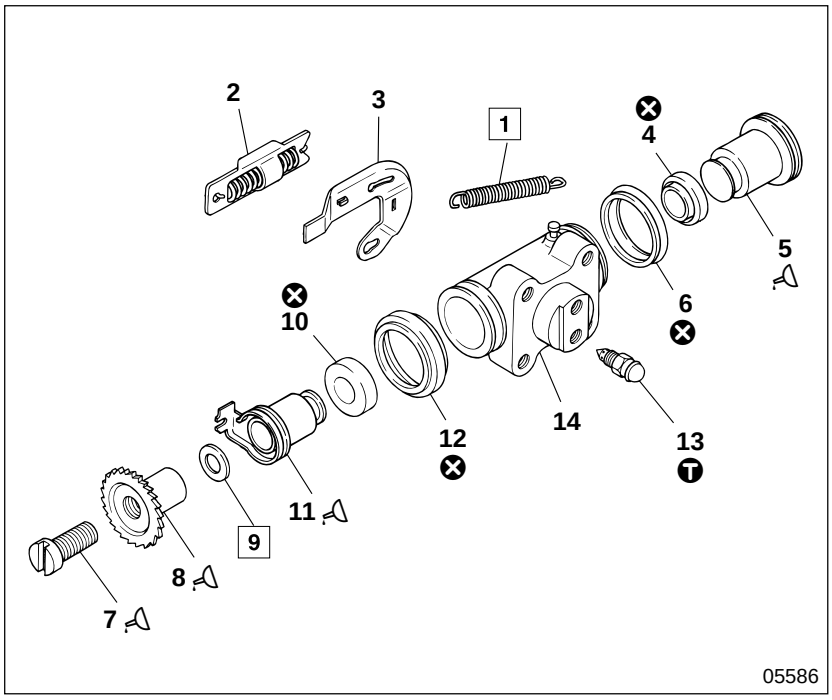

● **Disassembly sequence**

1 Spring
2 Spring and fitting
3 Lever
4 Piston cup
5 Piston
6 Boot
7 Adjusting screw
8 Adjuster
9 Washer
10 Piston cup
11 Piston
12 Boot
13 Bleeder screw
14 Body

⊗ : Non-reusable parts

● **Assembly sequence**

14→13→12→9→8→7→6→3→2→1
11→10→
5→4→

Repair kit : Wheel cylinder kit

Service standards

Unit : mm {in.}

Location	Maintenance item	Standard value (Basic diameter in [ ])	Limit	Remedy
5, 11, 14	Clearance between piston and body	[28.57 {1.12}] 0.02 to 0.08 {0.00079 to 0.0031}	0.2 {0.0079}	Replace piston

Ⓣ Tightening torque

Unit : N·m {lbf.ft, kgf·m}

Location	Parts to be tightened	Tightening torque	Remarks
13	Bleeder screw	6.9 to 8.8 {5.1 to 6.5, 0.7 to 0.9}	—

Lubricant

Location	Points of application	Specified lubricant	Quantity
5, 7, 8, 11	Thread areas of adjusting screw and adjuster, friction area of piston, and friction area of adjuster	*Rubber grease	As required

* : Rubber grease should be compatible with DOT3 brake fluid.

◆ Service procedure

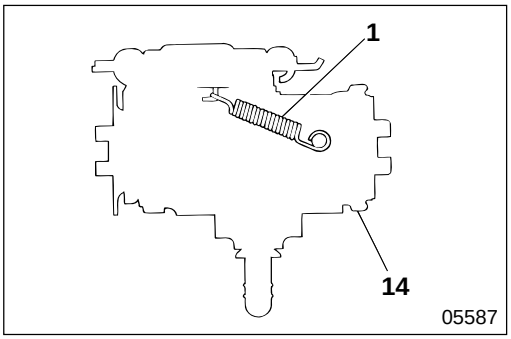

1 **Installation of spring**

Install the closed hook of spring **1** on body **14** side.

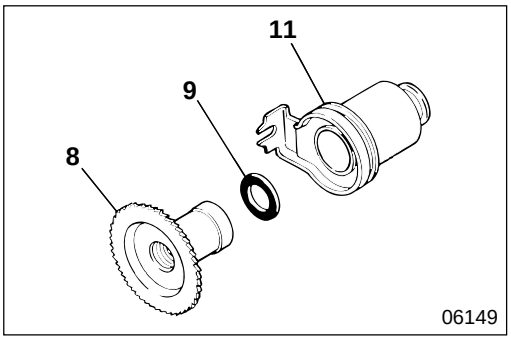

9 **Installation of washer**

Install the washer with its black side facing adjuster **8**.

REAR WHEEL BRAKE < FE649 : DISC BRAKE >

This illustration shows the left side wheel disc brake viewed from the left front.

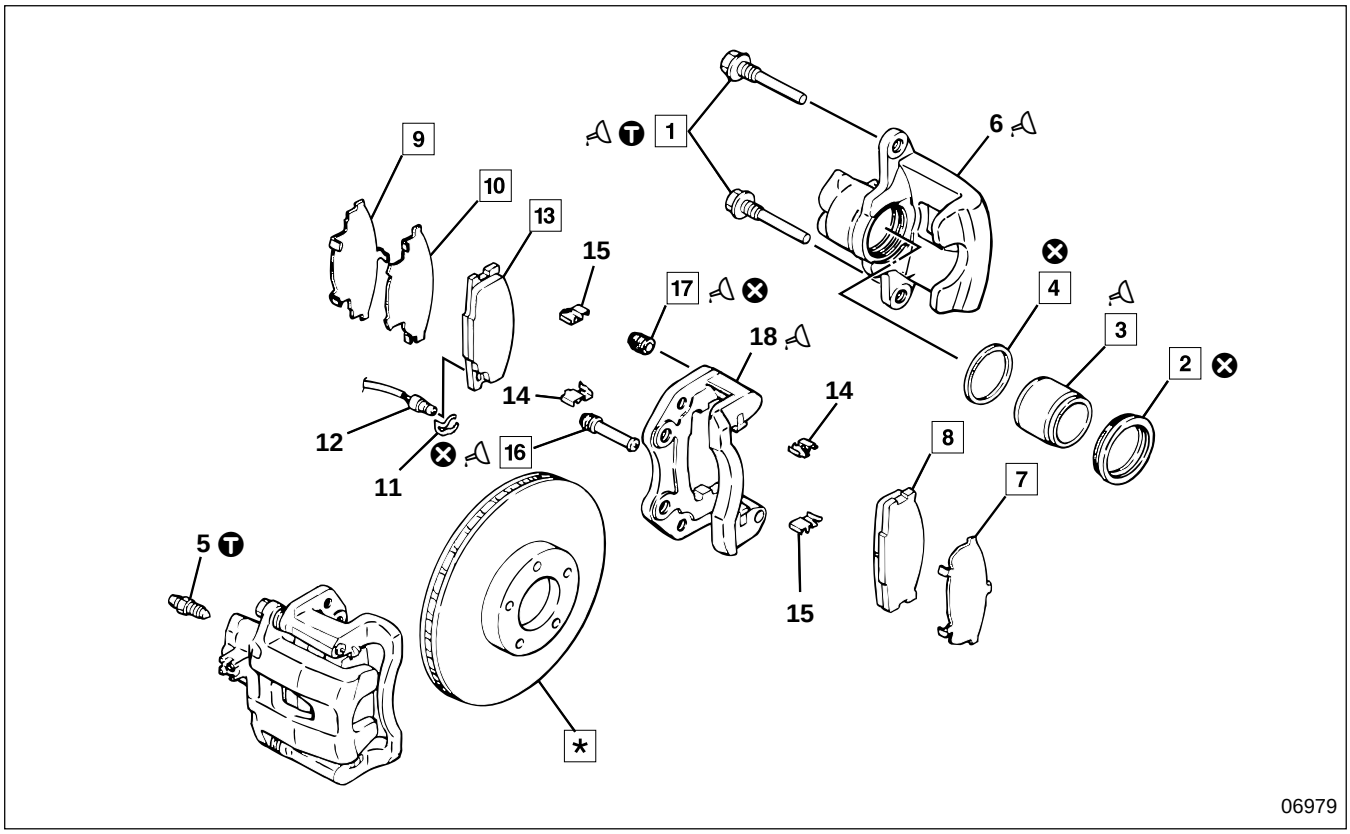

● **Disassembly sequence**

1 Slide pin bolt
2 Piston boot
3 Piston
4 Piston seal
5 Air bleeder
6 Caliper
7 Outer shim
8 Outer pad
9 Inner shim A
10 Inner shim B
11 Clip
12 Brake pad wear indicator
13 Inner pad
14 Pad liner A
15 Pad liner B
16 Bushing
17 Pin boot
18 Torque member

***** : Disc rotor Gr 27
⊗ : Non-reusable parts

WARNING

Make sure that oil or grease does not stick to the surface of outer pad 8, inner pad 13 or disc rotor * since this will reduce brake effectiveness.

CAUTION

When assembling, use the grease contained in the seal kit.

● **Assembly sequence**

18→17→16→15→14
13→12→11→10→9
8→7
6→5→4
3→2
→1

Repair kit : Pad kit
Seal kit
Pad wear indicator kit

Service standards

Unit : mm {in.}

Location	Maintenance item		Standard value	Limit	Remedy
8, 13	Thickness of outer and inner pads		14 {0.55}	4 {0.16}	Replace
*	Disc rotor	Wobble (When installed on rear axle)	0.07 {0.0028} or less	0.10 {0.0039}	Replace
		Thickness	40 {1.57}	38 {1.50}	Replace
—	Drag torque	Immediately after releasing brake pedal (Approximately 5 seconds later)	9.8 N·m {7.2 lbf.ft, 1.00 kgf·m}	—	Tangential force at hub bolt : 88 N {20 lbf, 9 kgf}
		After rotating disc rotor 10 turns	6.9 N·m {5.1 lbf.ft, 0.70 kgf·m}	—	Tangential force at hub bolt : 62 N {14 lbf, 6.3 kgf}

Tightening torque

Unit : N·m {lbf.ft, kgf·m}

Location	Parts to be tightened	Tightening torque	Remarks
1	Slide pin bolt	83.3 to 93.1 {61 to 69, 8.5 to 9.5}	Wet
5	Air bleeder	6.9 to 8.8 {5.1 to 8.8, 0.7 to 0.9}	Wet

Lubricant and/or fluid

Location	Points of application		Specified lubricant and/or fluid	Quantity
1	Slide pin bolt	Periphery of slide	*Rubber grease	As required
		Contact surfaces of bushing and pin boot	Rubber grease	As required
		Thread area	Brake fluid (SAE J1703f or FMVSS No.116 DOT3)	As required
3	Piston		Brake fluid (SAE J1703f or FMVSS No.116 DOT3)	As required
6	Cylinder lip of caliper		Rubber grease	As required
16	Bushing	Inner periphery	Rubber grease	As required
		Contact surface with slide pin bolt	Rubber grease	As required
17	Contact surfaces of pin boot and slide pin bolt		Rubber grease	As required
18	Torque member	Groove of pin boot	Rubber grease	As required
		Guide hole of main side	Rubber grease	As required

* : Rubber grease should be compatible with DOT3 brake fluid.

◆ Service procedure

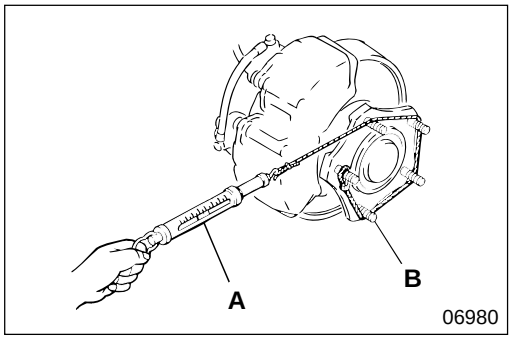

● Measurement of dragging torque

- Fasten spring balance **A** to hub bolt **B** and measure the tangential force.
- If the measured value is the specified value, the torque conforms to the standard value.
- If the measured value deviates from the specified value, inspect the friction surface between piston seal **4** and piston **3**.

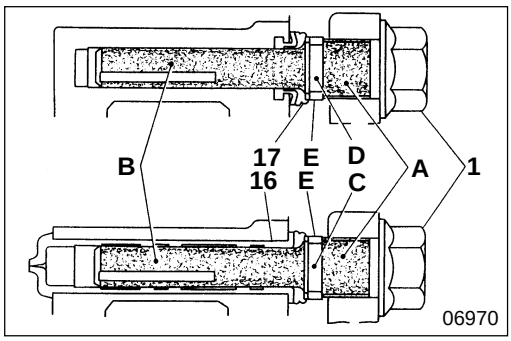

1 Installation of slide pin bolt

- Apply brake fluid to thread area **A** lightly, and apply grease to slide outer periphery **B**, bushing groove **C** or connecting surface **D** of pin boot **17**, then tighten slide pin bolt 1 at specified torque.
- Bleed bushing **16** or pin boot **17**.
- Check that seal **E** of bushing **16** or pin boot **17** is installed in bushing groove **C** of slide pin bolt **1** or connecting surface **D** of the pin boot.

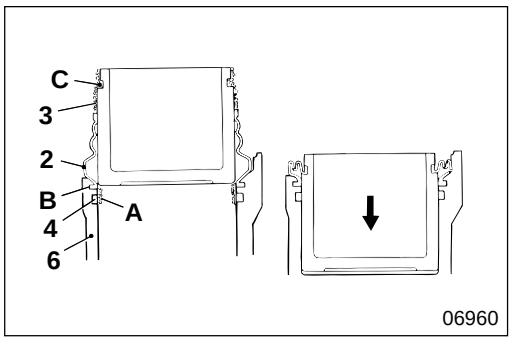

2 to 4 Installation of piston boot, piston and piston seal

- Apply brake fluid to the periphery of piston **3** to insert piston boot **2**.
- Spread the grease applied on piston seal **4** evenly to install it into the seal groove of caliper **6**.
- Apply grease to cylinder lip area **A** of caliper **6** evenly.
- Install the caliper side seal of piston boot **2** to the boot groove **B** of caliper **6**, then press in piston **3** slowly.
- Make sure that the piston side seal of piston boot **2** is installed in the boot groove **C** of piston **3**.

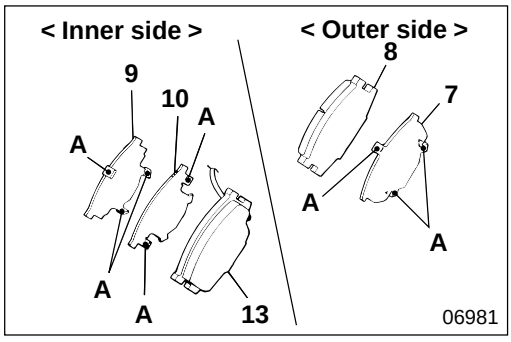

7 to 10 13 Installation of pad and shim

Make sure that you install the shims with pawls **A** facing the right way.

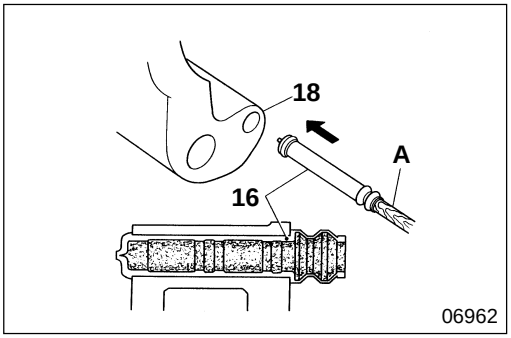

16 **Installation of bushing**

A : Push bar approximately ø8 mm {0.31 in.} long

After installation, apply grease to the whole inner periphery of bushing **16** and its contact surface with slide pin bolt **1**.

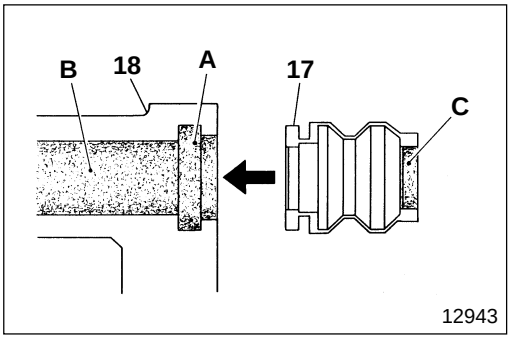

17 **Installation of pin boot**

- Apply grease to pin boot groove **A** of torque member **18**, the whole surface of guide hole **B**, and contact surface **C** between slide pin bolt **1** and pin boot **17**.
- Install pin boot **17**.

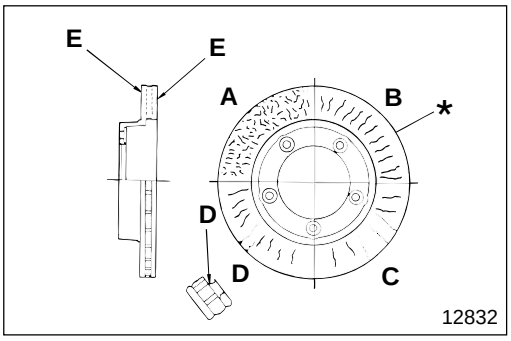

***** **Inspection of disc rotor**

- Inspect the friction surface **E** of disc rotor ***** visually.
- If any cracks are found, correct or replace disc rotor *****.
  - **A** : Net pattern cracks (Correct or replace)
  - **B** : Radial cracks that do not reach the outer periphery (Correct or replace)
  - **C** : Radial cracks that have reached the outer periphery (Replace)
  - **D** : Through cracks (Replace)

VACUUM PUMP

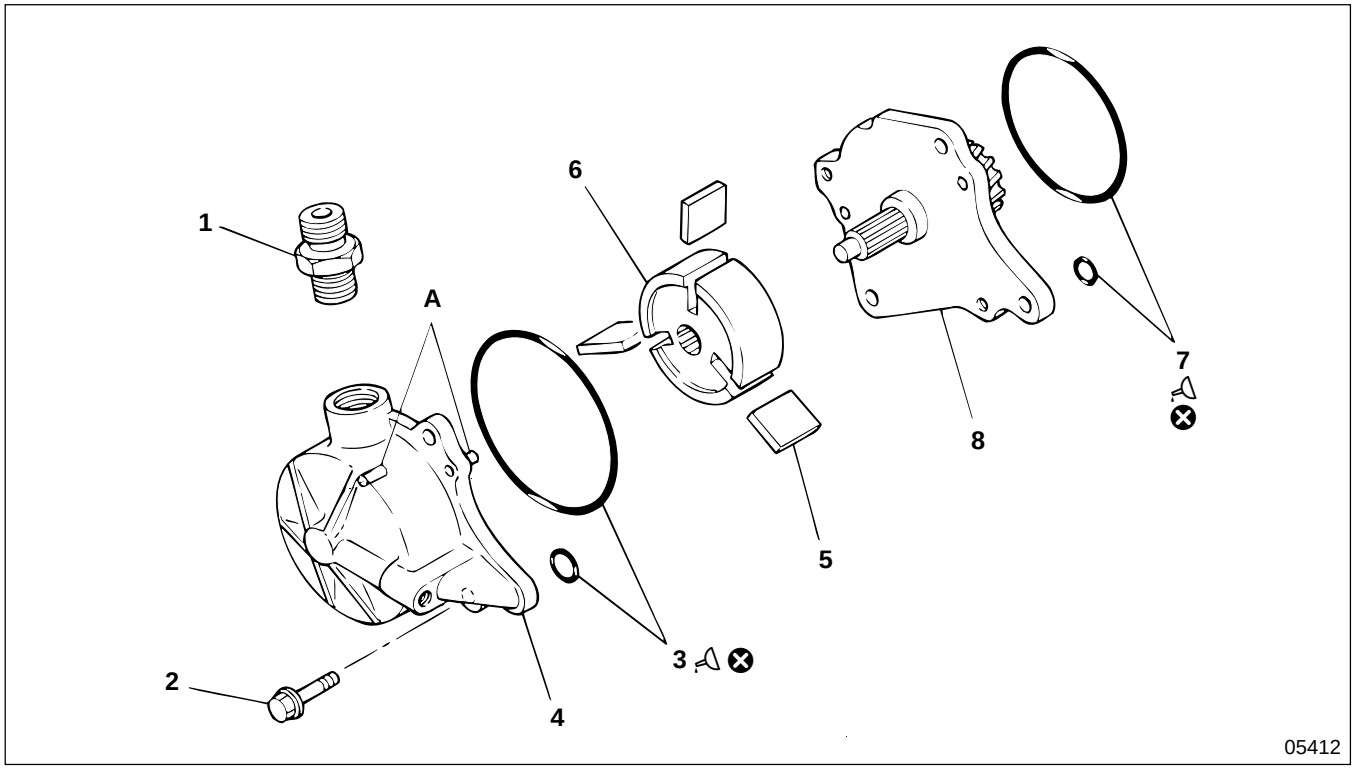

● **Disassembly sequence**

1 Check valve assembly
2 Bolt
3 O-ring
4 Cylinder
5 Vane
6 Rotor
7 O-ring
8 Flange

A : Positioning pin
⊗ : Non-reusable parts

● **Assembly sequence**

Follow the disassembly sequence in reverse.

Service standards

Location	Maintenance item		Standard value	Limit	Remedy
—	Degree of vacuum of pump	60 cm³ {3.66 cu. in.} : Engine speed 1500 rpm	93.3 kPa {27.6 in. Hg, 700 mmHg}	—	Replace
		90 cm³ {5.49 cu. in.} : Engine speed 3000 rpm	90.6 kPa {26.8 in. Hg, 680 mmHg} or more	—	Replace

Lubricant

Location	Points of application	Specified lubricant	Quantity
3, 7	Periphery of the O-ring	Engine oil	As required

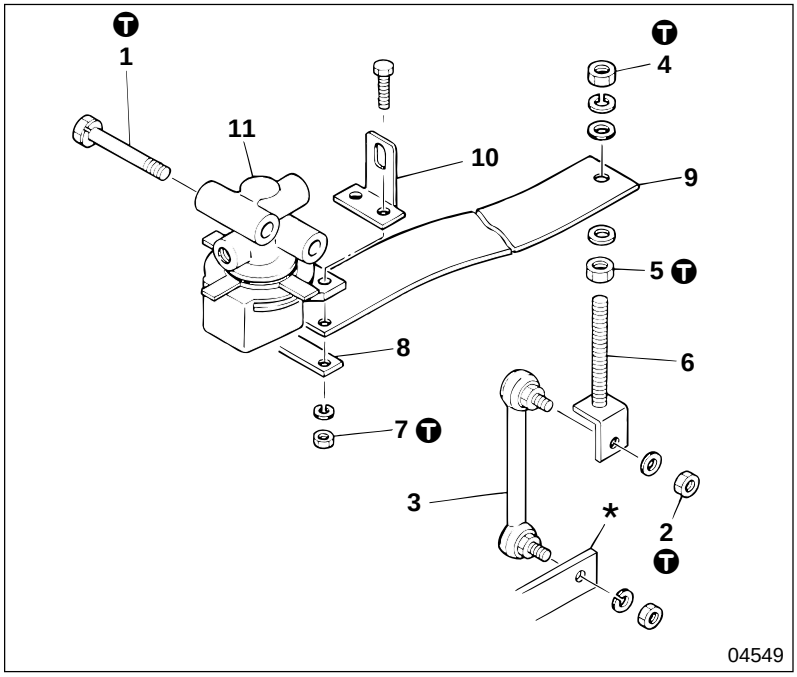

● **Disassembly sequence**

1 Bolt
2 Nut
3 Rod assembly
4 Nut
5 Nut
6 Bracket and bolt assembly
7 Nut
8 Plate
9 Leaf spring
10 Bracket
11 Load sensing valve

***** : Rear axle bracket

NOTE

Do not disassemble load sensing valve 11 because it is a non-disassemble type.

● **Assembly sequence**

Follow the disassembly sequence in reverse.

Ⓣ Tightening torque

Unit : N·m {lbf.ft, kgf·m}

Location	Parts to be tightened	Tightening torque	Remarks
1	Bolt (Load sensing valve mounting)	16 to 25 {12 to 18, 1.68 to 2.52}	—
2	Nut (Rod assembly mounting)	5.9 to 7.9 {4.3 to 5.8, 0.6 to 0.8}	—
4, 5	Nut (Leaf spring adjusting)	11.8 to 17.6 {8.7 to 13, 1.2 to 1.8}	—
7	Nut (Leaf spring mounting)	5.9 to 7.9 {4.3 to 5.8, 0.6 to 0.8}	—

◆ Service procedure

[Installation]

- Install load sensing valve **11** on the vehicle when it is unloaded and mount ball joint part **A** of rod assembly **3** to rear axle bracket *****.
- Loosen nut **4** and nut **5** and adjust as follows.

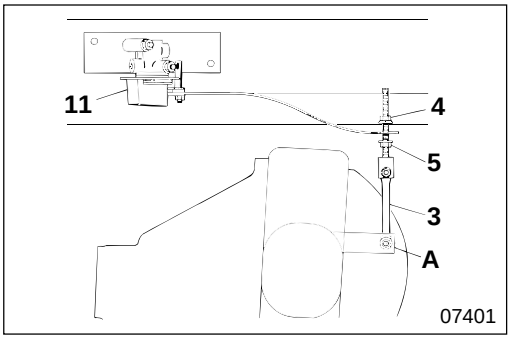

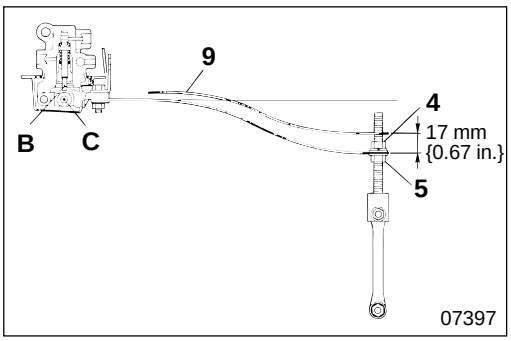

[Adjustment]

- Free leaf spring **9** to lift up the leaf spring and fit plunger **B** to roller **C**.
- In this condition, position nut **5** 17 mm {0.67 in.} below the tip of leaf spring **9**, then tighten nut **4** at specified torque.

EXHAUST BRAKE SYSTEM

Exhaust Brake Unit

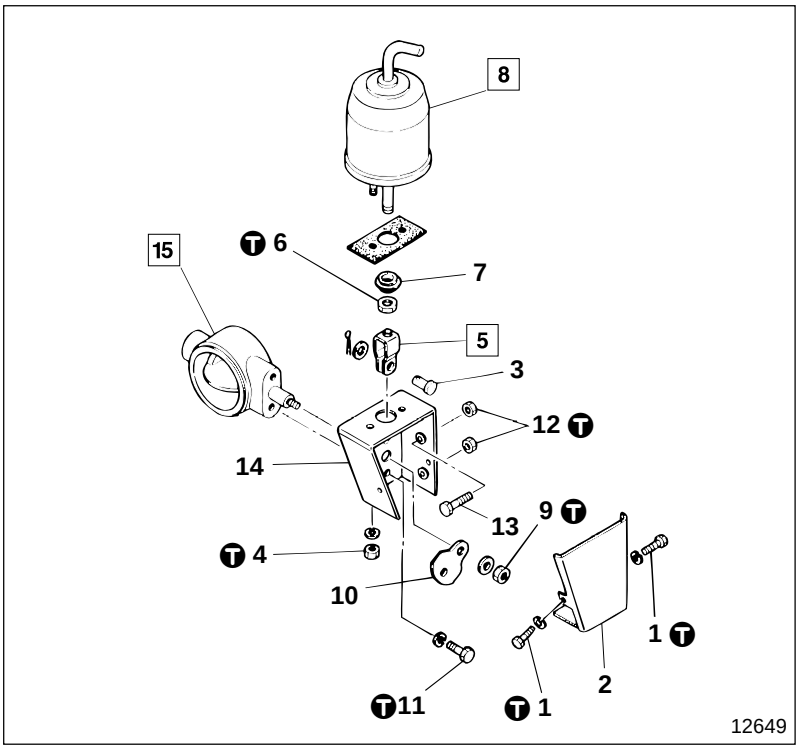

● **Disassembly sequence**

1 Bolt
2 Cover
3 Clevis pin
4 Nut
5 Clevis
6 Lock nut
7 Bearing
8 Vacuum chamber
9 Nut
10 Lever
11 Bolt
12 Nut
13 Adjusting bolt
14 Bracket
15 Valve assembly

● **Assembly sequence**

Follow the disassembly sequence in reverse.

Service standards

Unit : mm {in.}

Location	Maintenance item	Standard value	Limit	Remedy
8	Airtightness in vacuum chamber (Airtightness 15 seconds after applying negative pressure 67 kPa {19.7 in. Hg, 500 mmHg})	63 kPa {18.7 in. Hg, 475 mmHg} or more	—	Replace
14	Average value of upper and lower clearance between butterfly valve and body, when butterfly valve is totally closed (Degree of vacuum in vacuum chamber 86.7 to 93.3 kPa {25.6 to 27.6 in. Hg, 650 to 700 mmHg})	0.10 to 0.25 {0.0039 to 0.0098}	—	Adjust

Ⓣ Tightening torque

Unit : N·m {lbf.ft, kgf·m}

Location	Parts to be tightened	Tightening torque	Remarks
1	Bolt (Cover mounting)	4.9 to 6.9 {3.6 to 5.1, 0.5 to 0.7}	—
4	Nut (Vacuum chamber mounting)	9.8 to 15.7 {7.2 to 12, 1.0 to 1.6}	—
6	Lock nut (Clevis fixing)	9.8 to 15.7 {7.2 to 12, 1.0 to 1.6}	—
9	Nut (Lever mounting)	9.8 to 15.7 {7.2 to 12, 1.0 to 1.6}	—
11	Bolt (Bracket mounting)	9.8 to 15.7 {7.2 to 12, 1.0 to 1.6}	—
12	Nut (Adjusting bolt fixing)	4.9 to 6.9 {3.6 to 5.1, 0.5 to 0.7}	—

◆ Service procedure

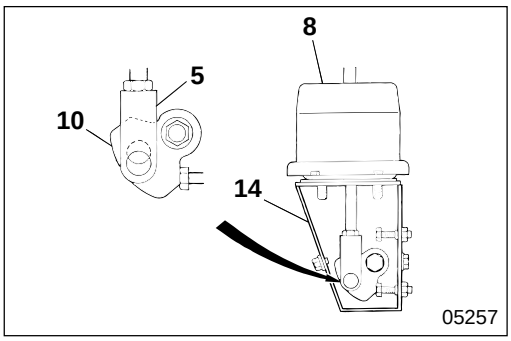

5 **Adjustment of clevis**

Install vacuum chamber **8** on bracket **14**, and adjust the position of clevis **5** so that the hole of the clevis is half the pitch of the hole of lever **10**.

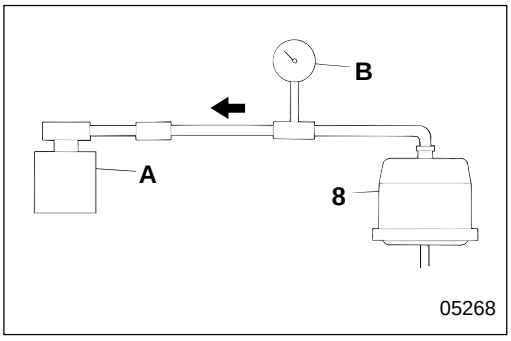

8 **Test of vacuum chamber airtightness**

Arrange piping as illustrated, and apply vacuum of 67 kPa {19.7 in. Hg, 500 mmHg} or more to vacuum chamber **8**, then stop vacuum pump **A**. After 15 seconds, ensure that the value of vacuum gauge **B** is the standard value. If the measured value deviates from the standard value, replace the vacuum chamber.

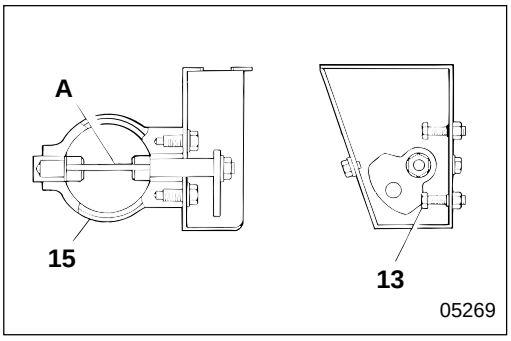

15 **Adjustment of valve assembly**

[Fully-opened adjustment]
Adjust using adjusting bolt **13** so that butterfly valve **A** of valve assembly **15** is fully opened.

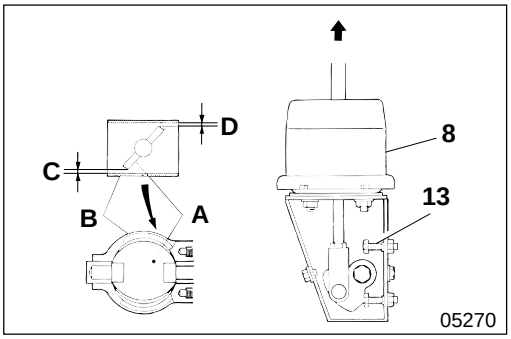

[Fully-closed adjustment]
While applying vacuum 87 to 93 kPa {25.6 to 27.6 in. Hg, 650 to 700 mmHg} to vacuum chamber **8**, adjust using adjusting bolt **13** so that the average value of clearance **C** and **D** between butterfly valve **A** and body **B** is within the standard value.

Clearance=(C+D)/2

Intake Silencer

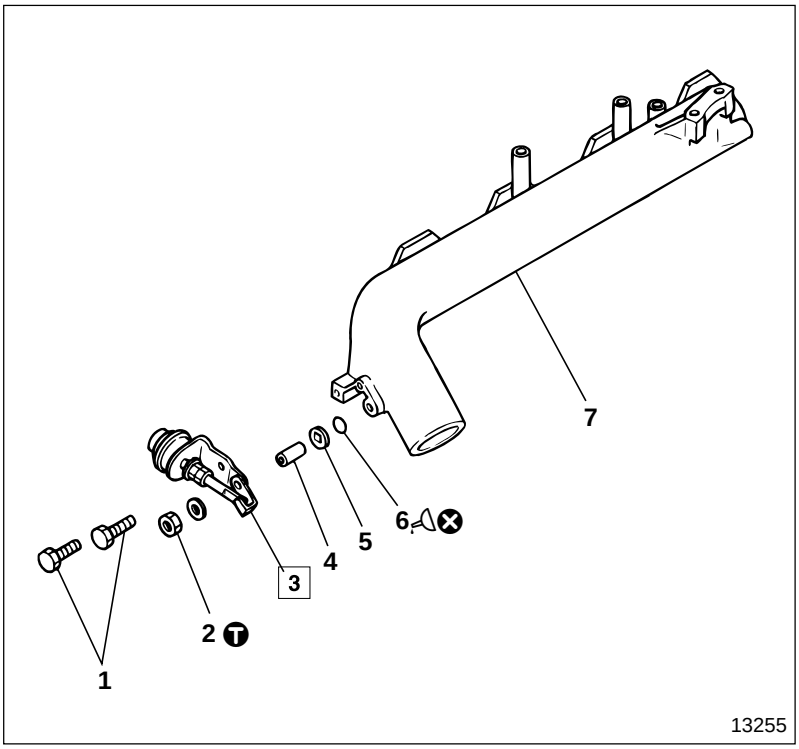

● **Disassembly sequence**

1 Bolt
2 Nut
3 Actuator
4 Spacer
5 Thrust plate
6 O-ring
7 Intake manifold

⊗ : Non-reusable parts

● **Assembly sequence**

Follow the disassembly sequence in reverse.

● **Adjustment after assembly** P35-89

Service standards

Unit : mm {in.}

Location	Maintenance item	Standard value	Limit	Remedy
3	Actuator (Push rod stroke when negative pressure of 40 kPa {11.8 in. Hg, 300 mmHg} applied)	15 {0.59} or more	—	Replace
—	Clearance between intake manifold and butterfly valve when fully closed	3.6 to 4.0 {0.14 to 0.16}	—	Adjust

Ⓣ Tightening torque

Unit : N·m {lbf.ft, kgf·m}

Location	Parts to be tightened	Tightening torque	Remarks
2	Nut	8 {5.7, 0.8}	—

Lubricant

Location	Points of application	Specified lubricant	Quantity
6	O-ring	Molybdenum disulfide grease [NLGI No.2 Li soap]	As required

◆ Service procedure

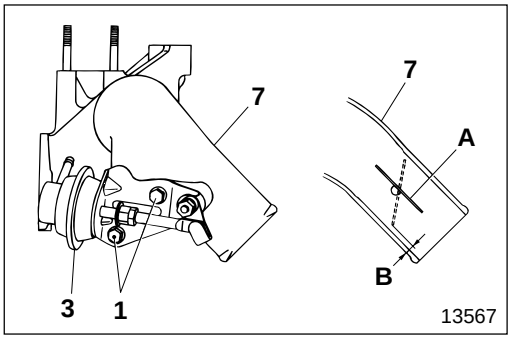

● **Adjustment after assembly**

- Loosen bolts **1**.
- While applying negative pressure of 67 kPa {19.7 in. Hg, 500 mmHg} to actuator **3**, adjust the position of the actuator so that clearance **B** between intake manifold **7** and butterfly valve **A** conforms to the standard value.
- Tighten bolts **1** and fix actuator **3**.

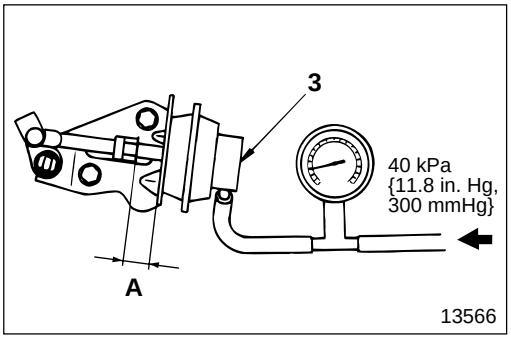

3 **Inspection of actuator**

- Apply negative pressure of 40 kPa {11.8 in. Hg, 300 mmHg} to actuator **3** and measure stroke **A** of the push rod.
- If the measured value deviates from the standard value, replace actuator **3**.

EXHAUST BRAKE SYSTEM

Exhaust Brake System Electric Equipment

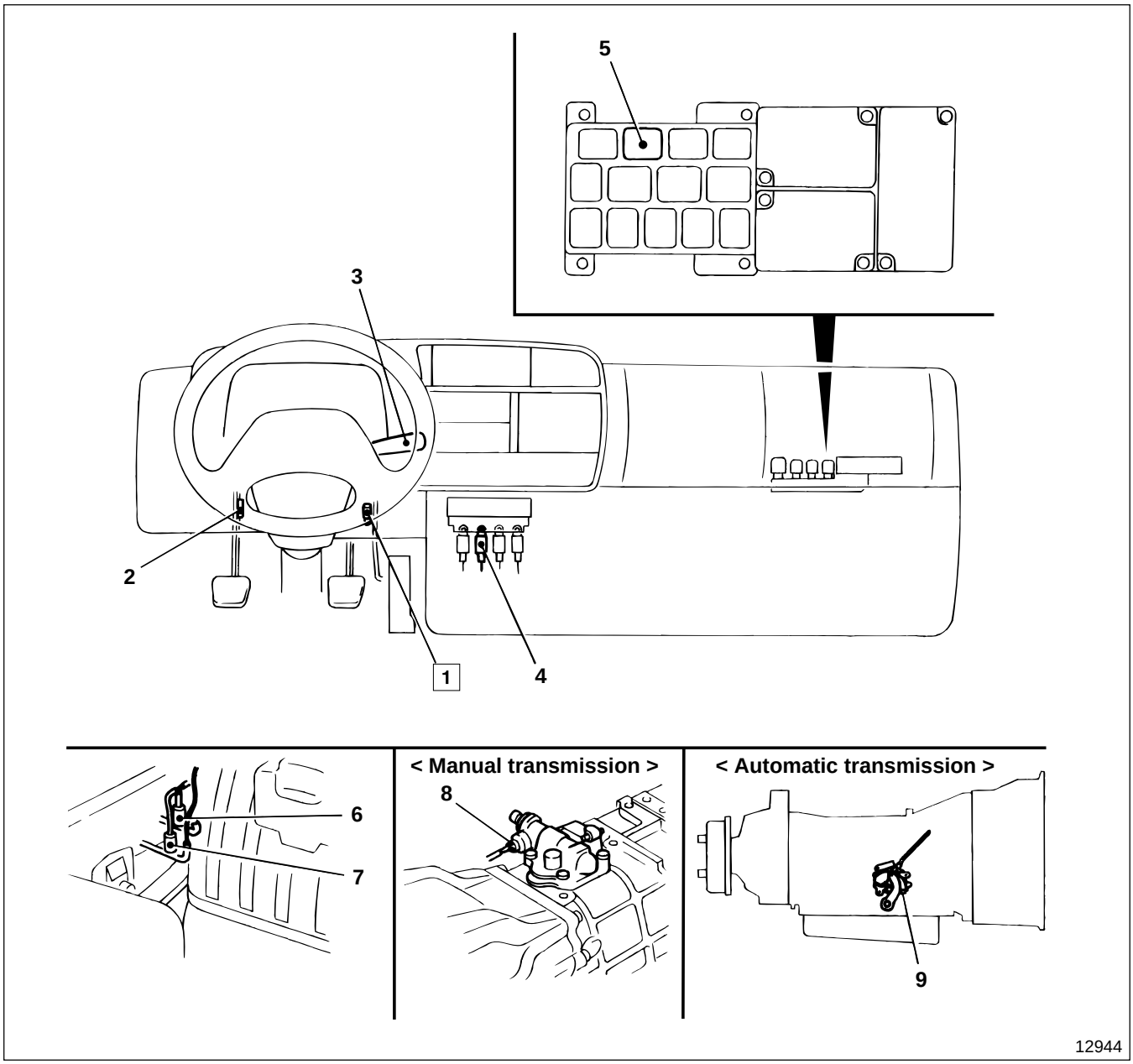

1 Accelerator switch Gr 13, Gr 54
2 Clutch switch < Manual transmission > Gr 21, Gr 54
3 Exhaust brake switch < Manual transmission > Gr 37, Gr 54
4 Exhaust brake cut relay < Manual transmission > Gr 54
5 Exhaust brake cut relay < Automatic transmission > Gr 54
6 3-way magnetic valve (For exhaust brake) Gr 54
7 3-way magnetic valve (For intake shutter) Gr 54
8 Neutral switch < Manual transmission > Gr 22, Gr 54
9 Inhibiter switch < Automatic transmission > Gr 23, Gr 54

◆ Service procedure

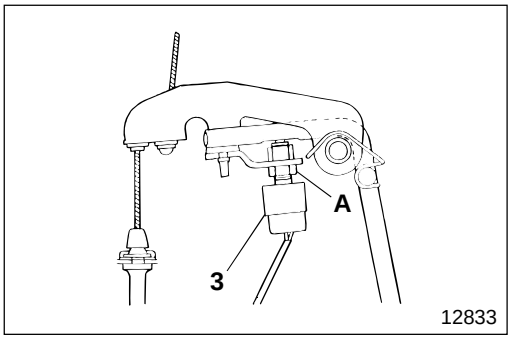

1 Adjustment of accelerator switch

- Turn exhaust brake switch **3** ON, depress the accelerator pedal gradually, and make sure that when the engine revolution reaches 800 to 950 rpm, the exhaust brake operation indicator lamp within the meter cluster goes OFF.
- If the indicator lamp goes OFF when the engine revolution is 800 rpm or less, adjust accelerator switch **1** by screwing it in.
- If the indicator lamp goes OFF when the engine revolution is 950 or more, adjust accelerator switch **1** by unscrewing it.
- After adjustment, fix accelerator switch **1** using lock nut **A**.

MITSUBISHI
FUSO

FE

Service Manual

Group 35
Brake

Table of Contents

BACK

HOME

MITSUBISHI FUSO TRUCK OF AMERICA, Inc.

Pub No. TWSE9501-35

GROUP 35 BRAKE

SPECIFICATIONS 2

STRUCTURE AND OPERATION 3

TROUBLESHOOTING 26

INSPECTION AND ADJUSTMENT MOUNTED IN VEHICLE

- Replacement of Brake Fluid 32
- Air Bleeding of Brake System 34
- Inspection and Adjustment of Brake Pedal Free Play 36
- Inspection and Adjustment of Clearance between Brake Pedal and Floor Panel 36
- Inspection and Replacement of Disc Brake Pad 37
- Drum Brake Lining Thickness Inspection and Replacement 40
- Inspection of Brake Shoe Clearance 40
- Inspection of Brake Booster (Master Vac) 41
- Inspection of Bypass Valve 46

BRAKE MASTER CYLINDER 48

BRAKE PEDAL AND BRAKE BOOSTER (MASTER VAC) 50

FRONT WHEEL BRAKE

< FE639 : DISC BRAKE > 52
< FE649 : DISC BRAKE > 56

REAR WHEEL BRAKE

< FE639 : DRUM BRAKE > 60
< FE649 : DISC BRAKE > 68

VACUUM PUMP 72

LOAD SENSING VALVE 74

EXHAUST BRAKE SYSTEM 76

SPECIFICATIONS

< Service Brake Equipment >

Item \ Vehicle model			FE639	FE649
Brake booster (Master vac)	Type		Tandem type	
	Diaphragm diameter in.		8+9	9+10
	Manufacturer		JIDOSHA KIKI	
Brake master cylinder	Inner diameter mm {in.}		30.16 {1.19}	31.75 {1.25}
	Stroke	Front mm {in.}	17.4 {0.69}	16.0 {0.63}
		Rear mm {in.}	14.6 {0.57}	16.0 {0.63}
	Manufacturer		JIDOSHA KIKI	
Vacuum pump	Type		Vane type	
	Delivery cm^3 {cu. in.}		60 {3.66}	90 {5.49}
	Manufacturer		MITSUBISHI ELECTRIC	

< Wheel Brake >

Item \ Vehicle model			FE639
Front	Brake type		Disc brake (Full floating type)
	Cylinder inner diameter of caliper	mm {in.}	ø51.1 {2.01}
	Disc rotor outer diameter×Thickness	mm {in.}	288×24 {11.3×0.94}
	Brake pad thickness	mm {in.}	12 {0.47}
Rear	Brake type		Drum brake (Dual 2-leading type)
	Inner diameter of wheel cylinder	mm {in.}	ø28.57 {1.12}
	Inner diameter of brake drum	mm {in.}	ø320 {12.6}
	Brake lining width×Thickness	mm {in.}	75×9.3 {2.95×0.37}

Item \ Vehicle model			FE649
Front	Brake type		Disc brake (Full floating type)
	Cylinder inner diameter of caliper	mm {in.}	ø51.1 {2.01}
	Disc rotor outer diameter×Thickness	mm {in.}	293×40 {11.5×1.57}
	Brake pad thickness	mm {in.}	14 {0.55}
Rear	Brake type		Disc brake (Full floating type)
	Cylinder inner diameter of caliper	mm {in.}	ø51.1 {2.01}
	Disc rotor outer diameter×Thickness	mm {in.}	293×40 {11.5×1.57}
	Brake pad thickness	mm {in.}	14 {0.55}

< Exhaust Brake System >

Item	Specifications
Control system	Combined electric and vacuum
Valve type	Butterfly valve type

Brake System

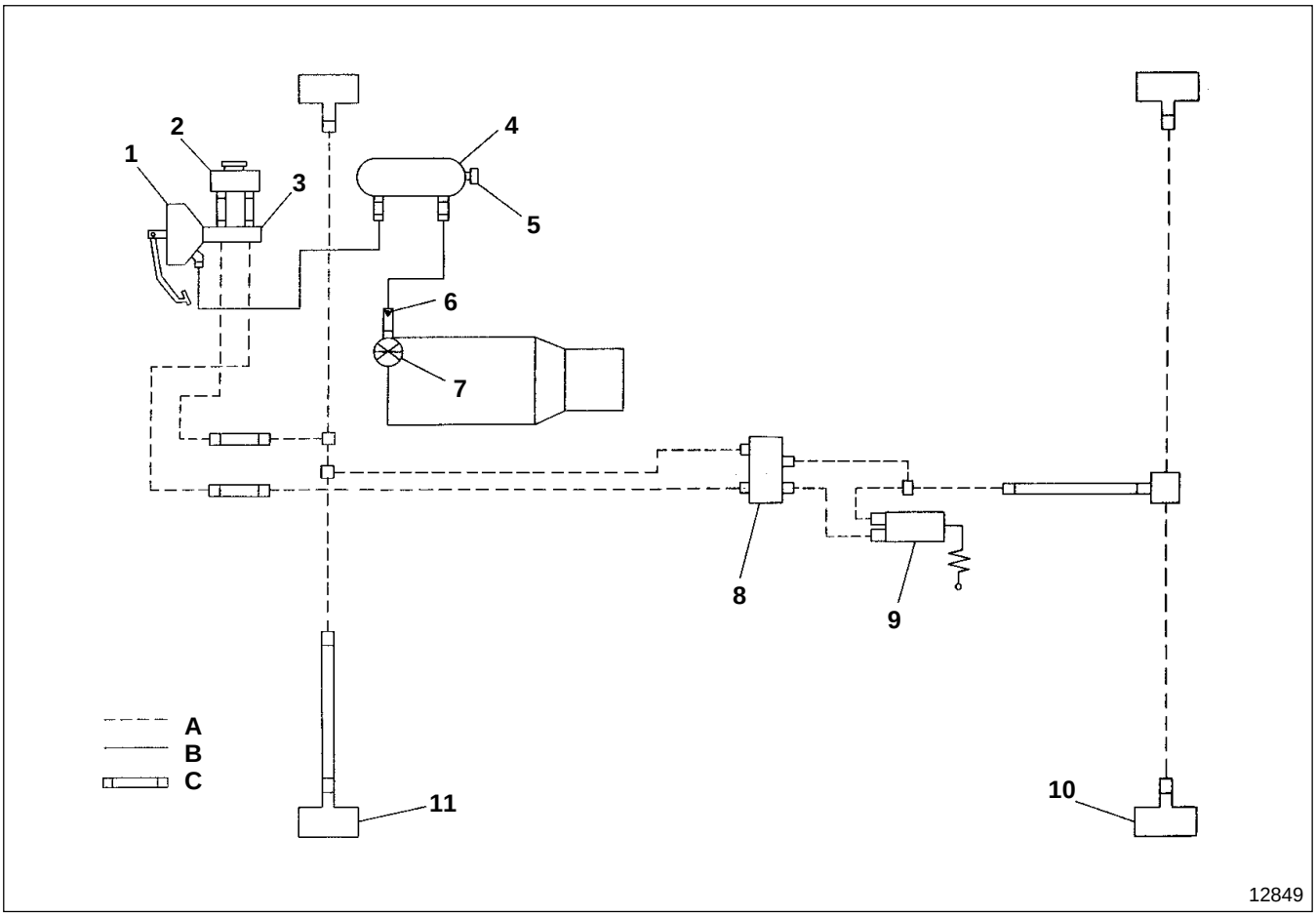

1 Master vac
2 Fluid tank
3 Brake master cylinder
4 Vacuum tank
5 Vacuum switch
6 Check valve
7 Vacuum pump
8 Bypass valve
9 Load sensing valve
10 Rear wheel brake
11 Front wheel brake

A : Fluid line
B : Air line
C : Hose

- The brake system is a vacuum servo all-wheel brake type, with master vac **1**.
- Load sensing valve **9** automatically changes the oil pressure of the rear wheel brakes according to the load changes, preventing the rear wheels from locking too early.
- Bypass valve **8** is fitted as a safety mechanism. It provides braking force if the front brake system is damaged and loses hydraulic pressure. The bypass valve does this by making the hydraulic pressure of the rear brake system bypass load sensing valve **9** and act directly on rear wheel brake **10**.

Brake Booster (Master Vac) and Brake Master Cylinder

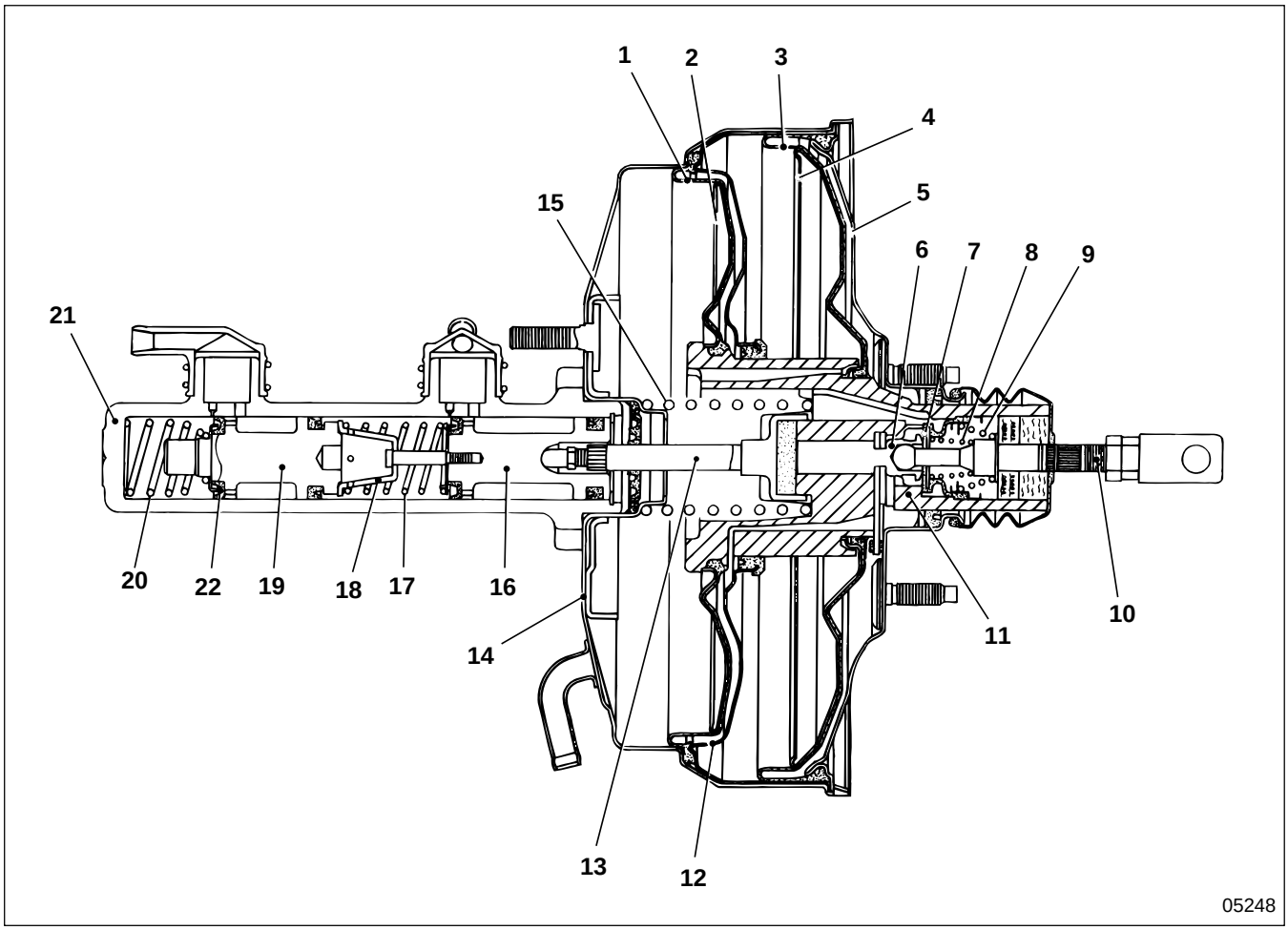

< Master vac >

- **1** Front diaphragm
- **2** Front diaphragm plate
- **3** Rear diaphragm
- **4** Rear diaphragm plate
- **5** Rear shell
- **6** Valve plunger
- **7** Poppet
- **8** Poppet spring
- **9** Valve return spring
- **10** Operating rod
- **11** Valve body
- **12** Center plate
- **13** Push rod
- **14** Front shell
- **15** Diaphragm plate spring

< Brake master cylinder >

- **16** Primary piston
- **17** Primary piston return spring
- **18** Retainer
- **19** Secondary piston
- **20** Secondary piston return spring
- **21** Cylinder body
- **22** Packing cup

● **When depressing brake pedal**

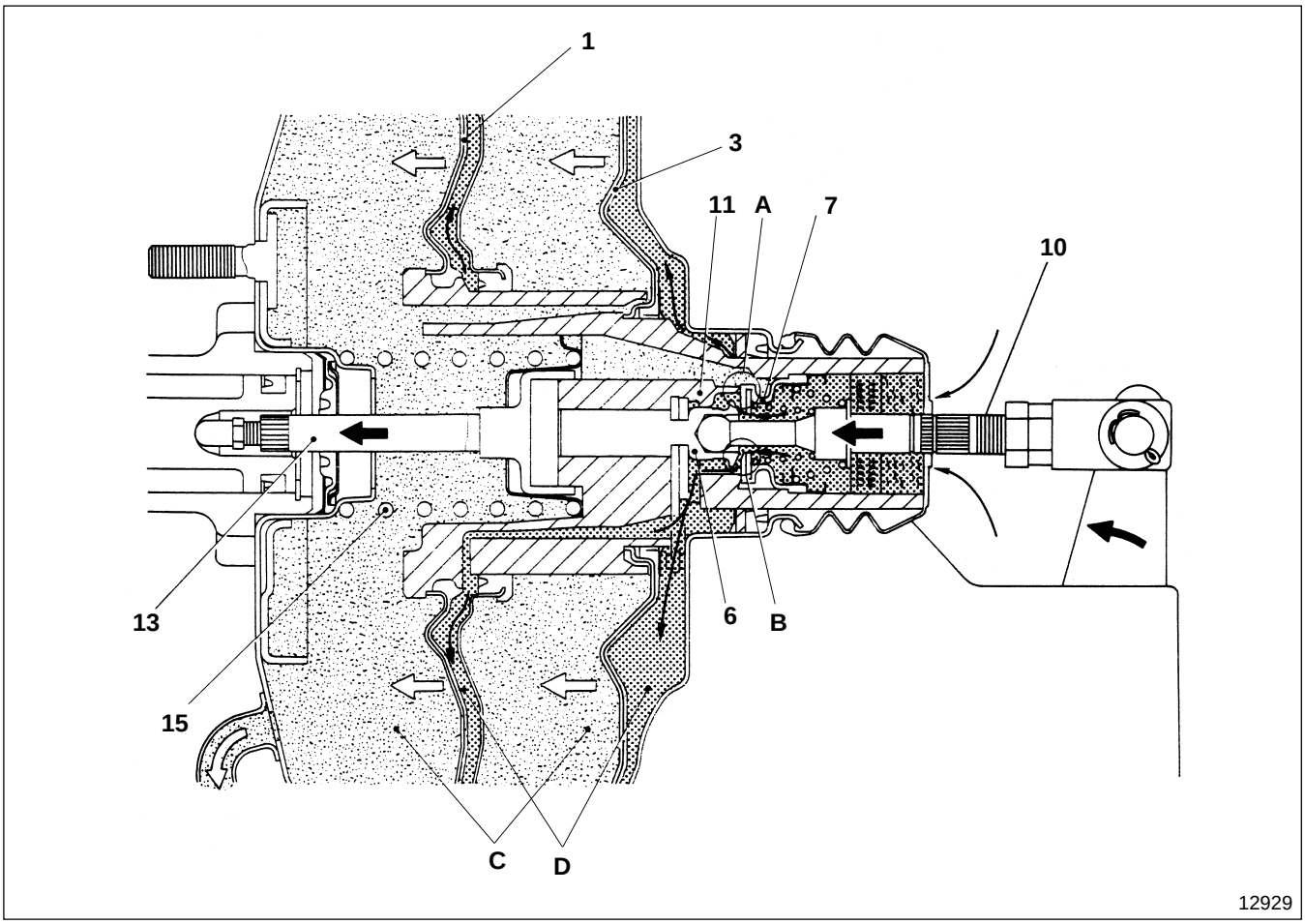

Action of master vac

- When the brake pedal is released, chambers **C** and **D** are subjected to the vacuum created by the vacuum pump.
- Depressing the brake pedal activates operating rod **10**, placing poppet **7** in tight contact with the seat of valve body **11**. This action closes vacuum valve **A**, cutting off the vacuum to chamber **D**.
- Depressing the brake pedal further separates valve plunger **6** from poppet **7**, opening breather valve **B** permitting atmospheric pressure to flow into chamber **D**, producing a pressure difference between chambers **C** and **D**.
- This pressure difference between chambers **C** and **D** presses front diaphragm **1** and rear diaphragm **3**, boosting the depressing force.
- This boosted pedal depression force overcomes the repercussive force of diaphragm plate spring **15**, presses push rod **13**, and actuates the brake master cylinder.

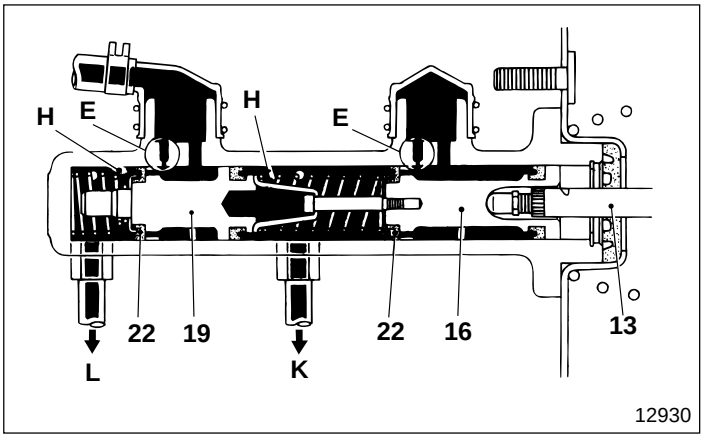

Action of brake master cylinder

- Push rod **13** pushes in primary piston **16** and secondary piston **19**, and packing cup **22** passes return port **E**, generating hydraulic pressure in chamber **H**, feeding the oil to the respective brake systems.

  K : To the front brake system
  L : To the rear brake system

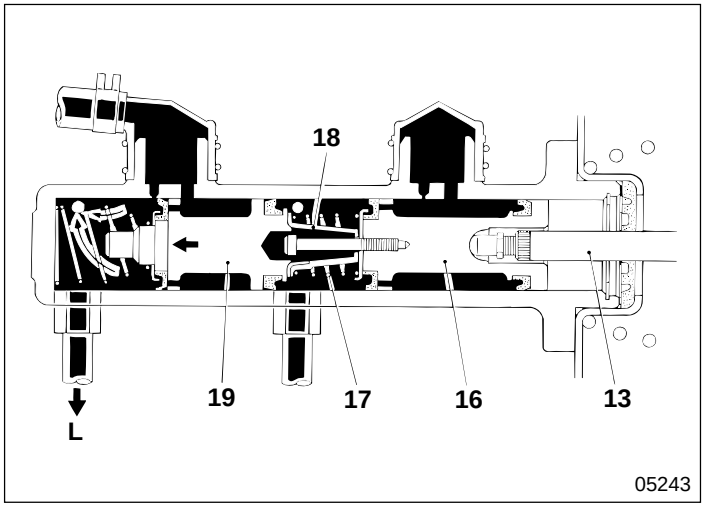

● **Oil leakage in the front brake system**

- Depressing the brake pedal makes push rod **13** push in primary piston **16**. However, if the brake fluid in the front brake system leaks, hydraulic pressure is not generated in the front brake system.
- Depressing the brake pedal further makes primary piston **16** compress primary piston return spring **17**, causing retainer **18** to push secondary piston **19**, thus generating hydraulic pressure only in the rear brake system.

L : To the rear brake system

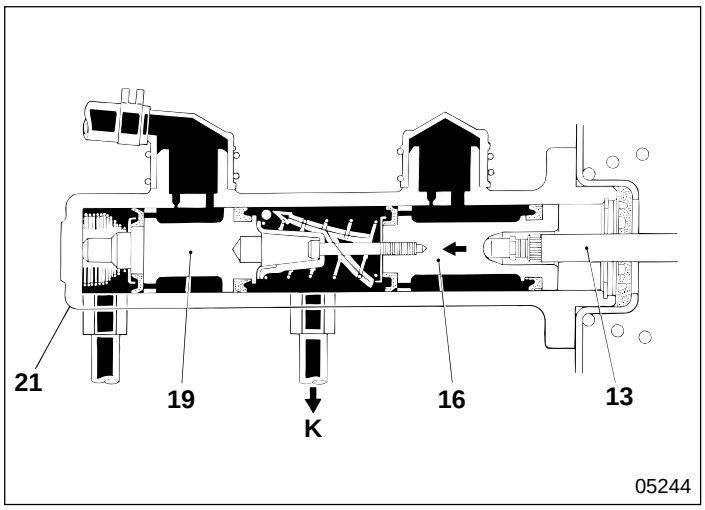

● **Oil leakage in the rear brake system**

- Depressing the brake pedal makes push rod **13** push in primary piston **16** and secondary piston **19**. However, if the brake fluid in the rear brake system leaks, hydraulic pressure is not generated in the rear brake system.
- Depressing the brake pedal further makes the end of secondary piston **19** contact cylinder body **21**, pushing primary piston **16**, thus generating hydraulic pressure only in the front brake system.

K : To the front wheel brake system

● **When releasing brake pedal**

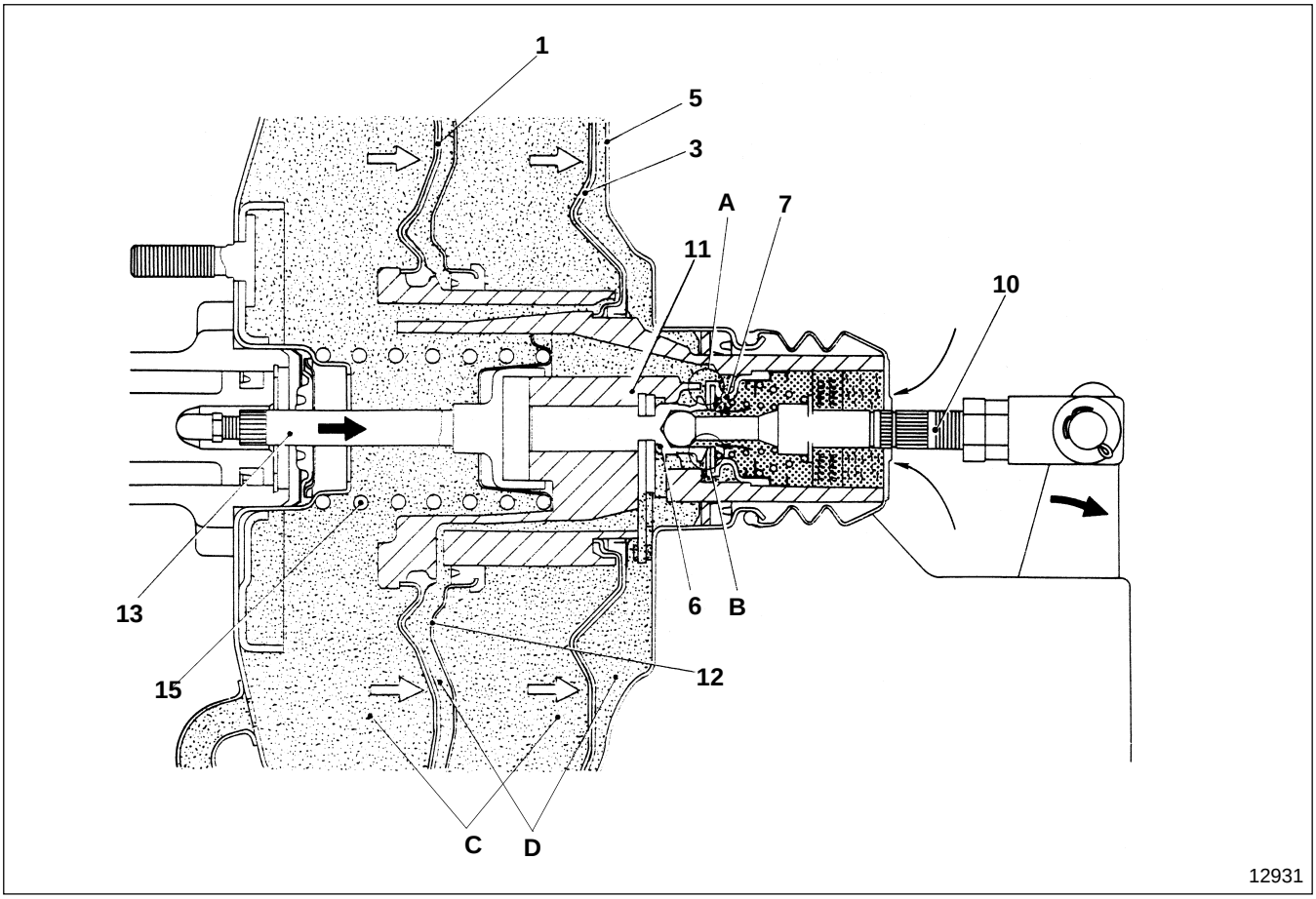

Action of master vac

- When the brake pedal is depressed, atmospheric air flows into chamber **D** as chamber **C** is subjected to negative pressure generated by the vacuum pump.
- When the brake pedal is released, since the pressing force acting on the operating rod **10** also is released, valve plunger **6** contacts poppet **7** tightly, closing breather valve **B** to cut off the flow of atmospheric air into chamber **D**. In addition, valve plunger separates from valve body **11** to open vacuum valve **A**. Then, the negative pressure generated by the vacuum pump creates a vacuum in chamber **D**, and the pressure difference between chambers **C** and **D** diminishes.
- This absence of a pressure difference between chambers **C** and **D**, allows rear diaphragm **3** to be pushed against the rear shell **5** by the repercussive force of diaphragm plate return spring **15**, and push rod **13** returns to its original position.

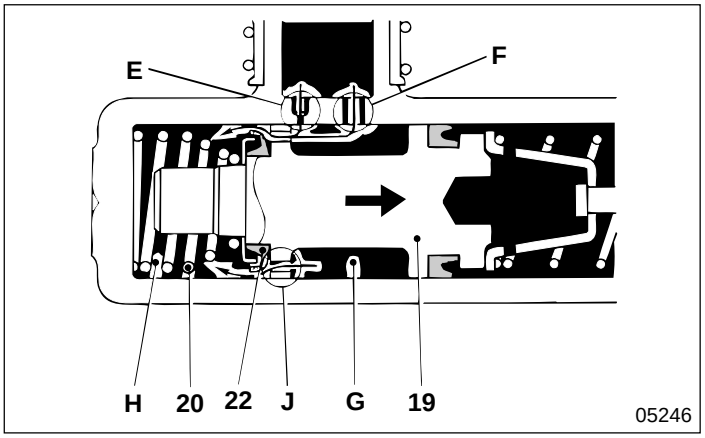

Action of brake master cylinder

- When push rod **13** returns to its original position, the repercussive force of the secondary piston return spring **20** immediately begins to return secondary piston **19**. However, the brake fluid delivered from the brake master cylinder cannot return quickly due to the absence of a pressure difference between chambers **H** and **G**.
- As secondary piston **19** begins to return, the pressure in chamber **H** becomes lower than that in chamber **G**, and this pressure difference deforms packing cup **22** to open a small passage **J**. Then, the brake fluid in chamber **G** is drawn into chamber **H**.

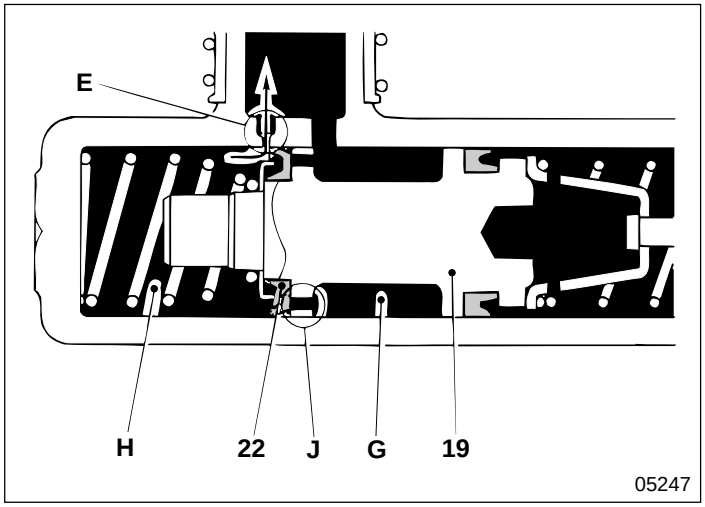

- When secondary piston **19** returns to its original position, the pressure difference between chambers **G** and **H** is diminished, and packing cup **22** closes the small passage **J**. The hydraulic oil in the brake pipe flows from chamber **H** to the fluid tank via return port **E**.
- The same operation takes place also on the primary side.

Front Disc Brake

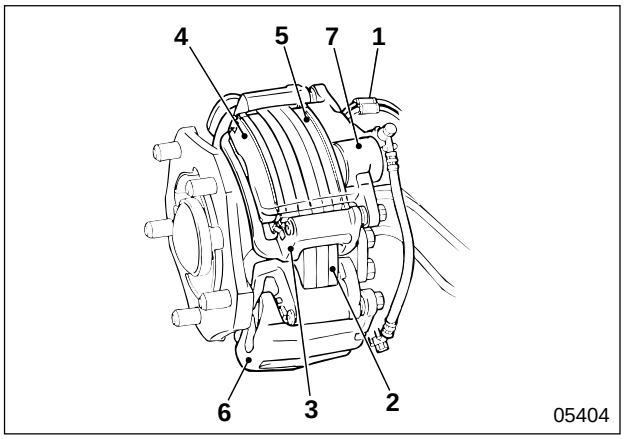

1 Brake pad wear indicator
2 Disc rotor
3 Torque member
4 Outer pad
5 Inner pad
6 Caliper
7 Piston

Inner pad **5** is fitted with brake pad wear indicator **1** that gives warning when it is time to replace outer pad **4** and the inner pad.

Rear Drum Brake Assembly

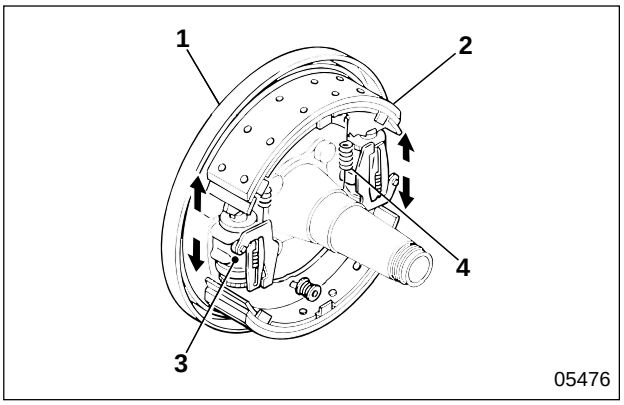

1 Backing plate
2 Brake shoe assembly
3 Wheel cylinder assembly
4 Return spring

The rear drum brake assembly is a dual 2-leading type brake and is fitted with wheel cylinder assembly **3**, the self-servo action of which produces a great braking force by using brake shoe assembly **2** as the leading shoe when the vehicle is travelling forwards.

● **Wheel cylinder assembly**

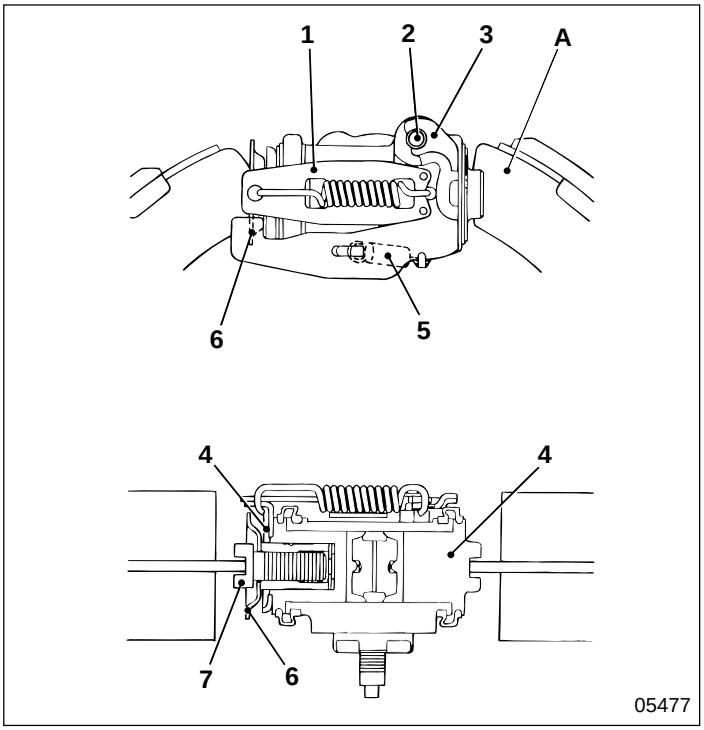

1 Spring and fitting
2 Pin
3 Lever
4 Piston assembly
5 Set spring
6 Adjuster assembly
7 Adjusting screw

A : Brake shoe assembly

The wheel cylinder assembly has an automatic adjuster that corrects the increase in clearance that occurs between the brake lining and the brake drum, an increase caused by the wear of the brake lining. This increase occurs whenever the brake pedal is depressed.

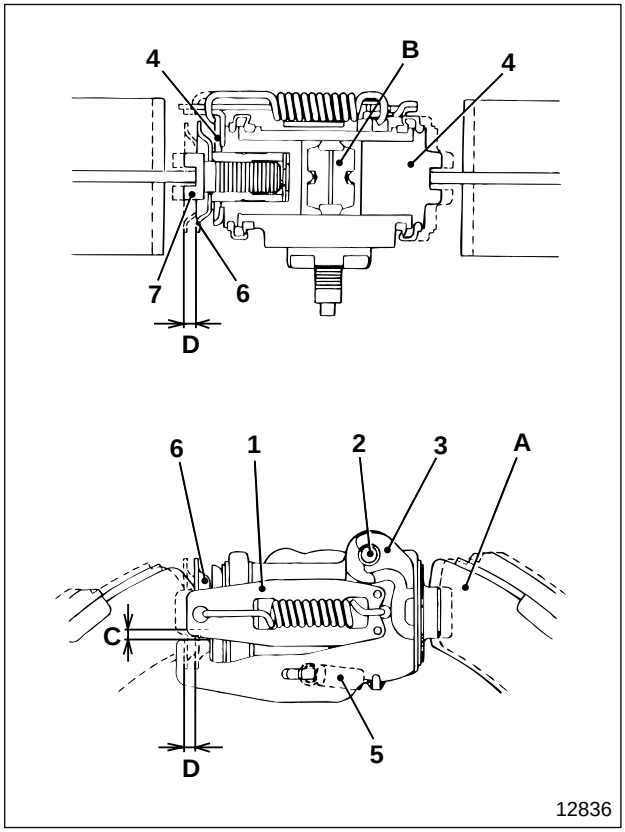

● **Automatic adjustment mechanism**

Operation

- When the brake pedal is depressed, the reduced pressure from the brake master cylinder enters chamber **B** and pushes out piston assembly **4**, which in turn pulls spring and fitting **1**.
- Therefore lever **3** turns around pin **2** that is linked to spring and fitting **1**.
  C : Lever travel
  D : Protrusion of piston assembly

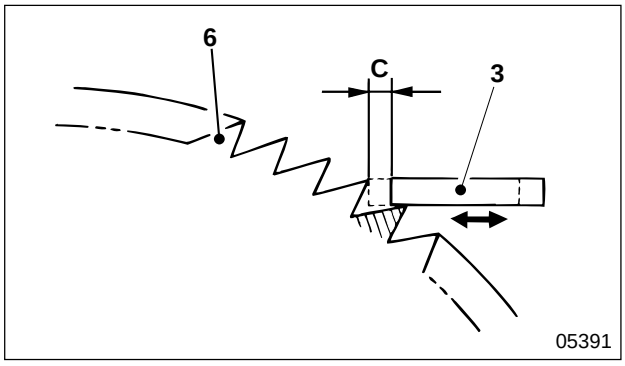

- When the clearance between the brake drum and the brake lining is correct, depression of the brake pedal does not affect lever **3**, so adjuster assembly **6** does not turn.
  C : Lever travel

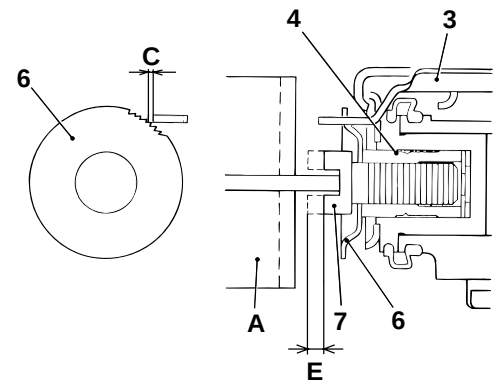

12837

< Before depressing pedal >

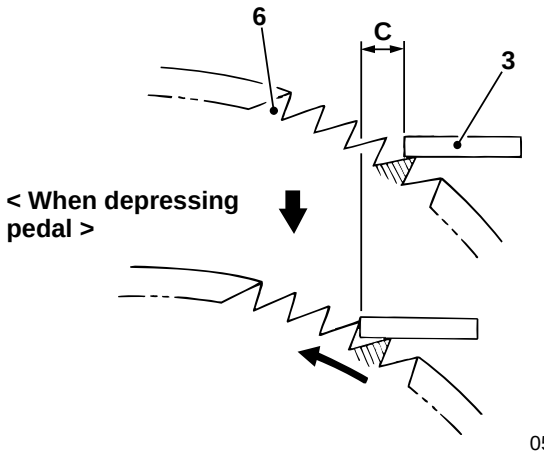

05402

- As the clearance between the brake drum and the brake lining increases, the amount of protrusion of piston assembly **4** also increases, as does the amount of travel of lever **3**.
  C : Lever travel
  E : Protrusion of adjuster screw

- The action of lever **3** increases the rotation of adjuster assembly **6**, the screw action pushes out adjuster screw **7**, expanding brake shoe assembly **A**.

< When releasing pedal >

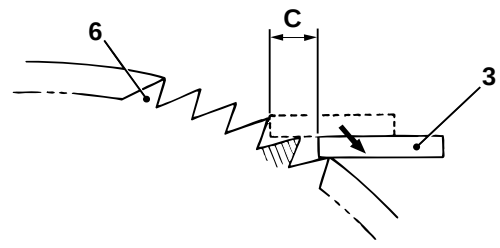

05392

- When the brake pedal is released, since adjuster assembly **6** remains in its new position after turning, returned lever **3** enters the next position, moved by one notch. This assures correct clearance between the brake drum and the brake lining.
  C : Lever travel

Rear Disc Brake

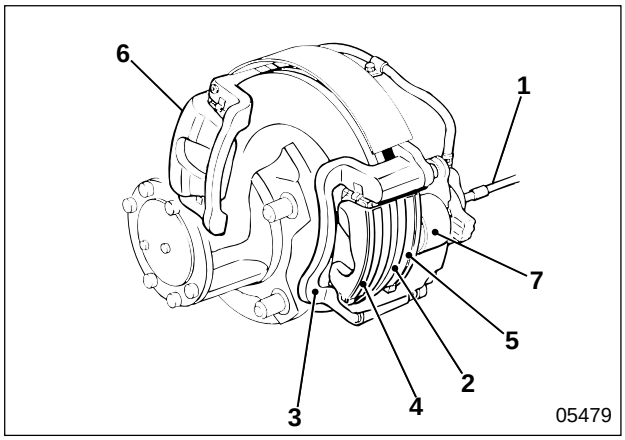

1 Brake pad wear indicator
2 Disc rotor
3 Torque member
4 Outer pad
5 Inner pad
6 Caliper
7 Piston

Inner pad **5** is fitted with brake pad wear indicator **1** that gives warning when it is time to replace outer pad **4** and the inner pad.

Vacuum Pump

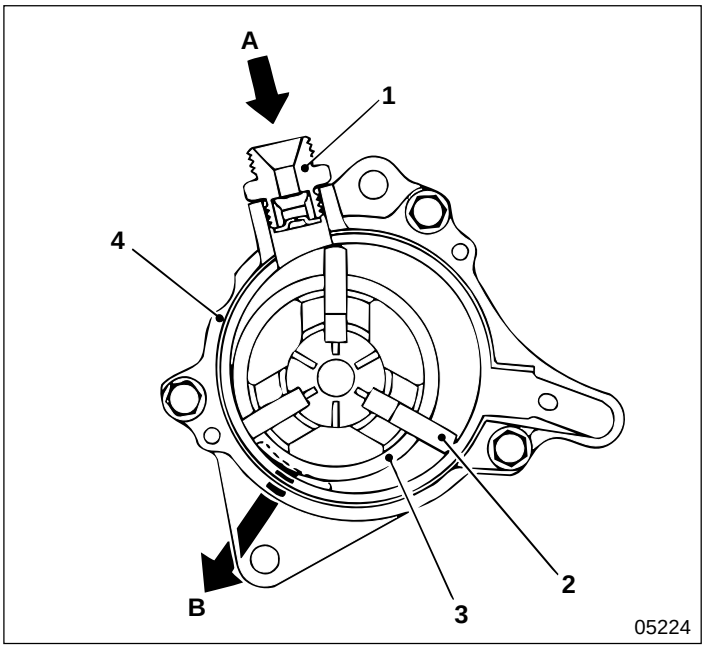

1 Check valve assembly
2 Vane
3 Rotor
4 Housing

A : Inlet
B : Outlet

- The vacuum pump is installed on the timing gear case and is rotated by the injection pump gear or camshaft gear.
- Check valve assembly **1** is fitted to prevent the atmospheric pressure and the lubricating oil from flowing in reverse from the vacuum pump to the vacuum tank when the engine is stopped.

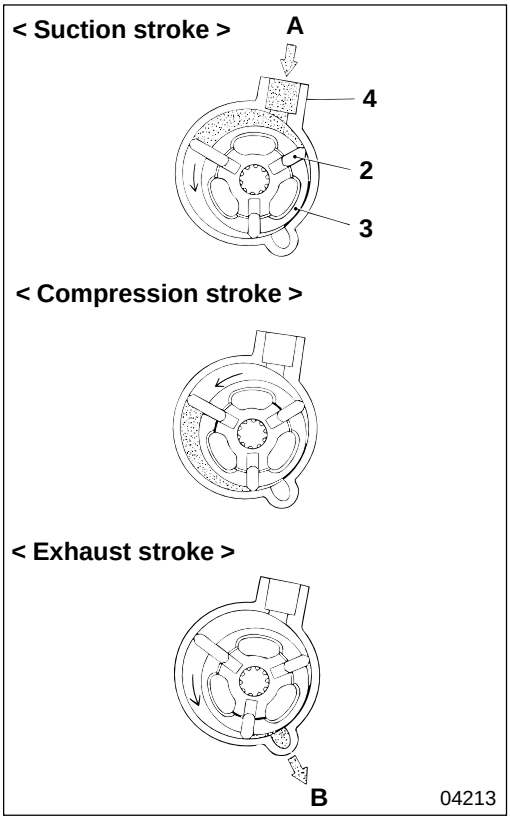

● **Operation**

- Inside cylindrical housing **4**, rotor **3** equipped with three vanes (movable blades) **2** rotates, pressing the vanes against the inside surface of the housing by centrifugal force.
- Since rotor **3** is eccentric with respect to housing **4**, as the rotor rotates, the atmospheric pressure of the vacuum tank is drawn in from inlet **A** and discharges from outlet **B** by the gradual compression of the air. This repetition of the suction, compression and exhaust strokes generates a vacuum, realizing a near-vacuum in the vacuum tank.
- The engine oil that lubricates and cools the inside of housing **4** is returned, along with air pressure, through outlet **B** to the oil pan.

Load Sensing Valve

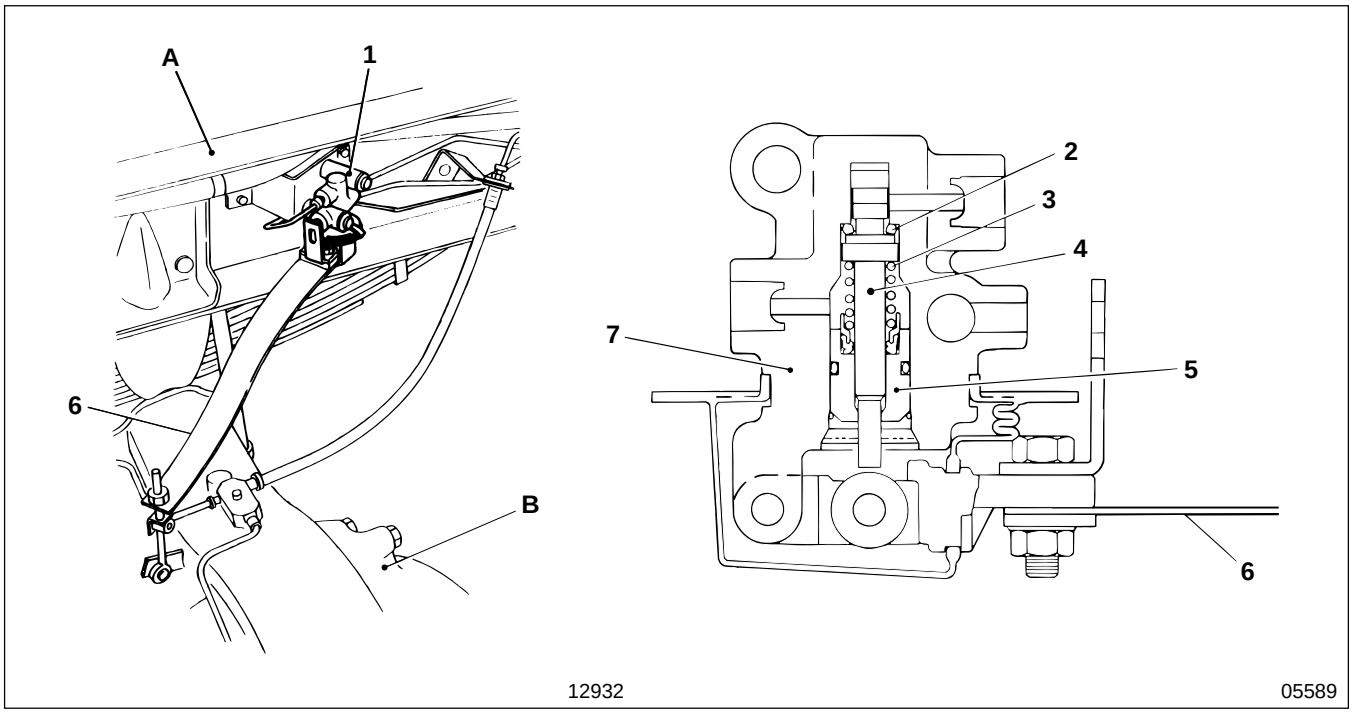

1 Load sensing valve
2 Packing cup
3 Spring
4 Plunger
5 Retainer
6 Leaf spring
7 Valve body

A : Frame
B : Rear axle

The deflection of leaf spring **6**, fixed on rear axle **B**, notifies load sensing valve **1** of any shifts in the load. This decreases hydraulic pressure to the rear wheel brakes compared to the front wheel brakes. This maintains adequate braking performance that corresponds to any shift in the load, preventing premature rear wheel lock.

● **Valve unit**

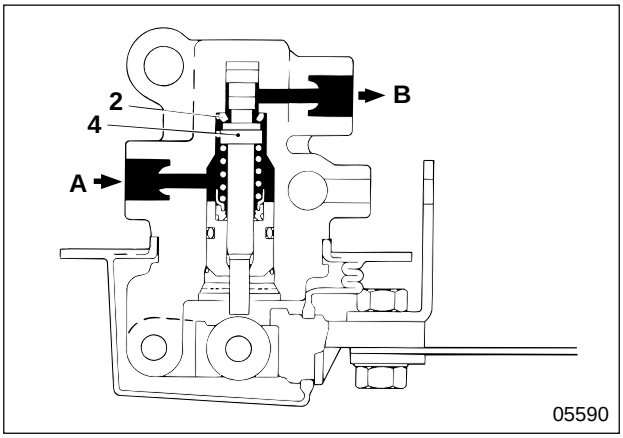

When depressing brake pedal

- Brake fluid is supplied from the brake master cylinder to the rear wheel brakes via chamber **A**, the clearance between packing cup **2** and plunger **4**, and chamber **B**.

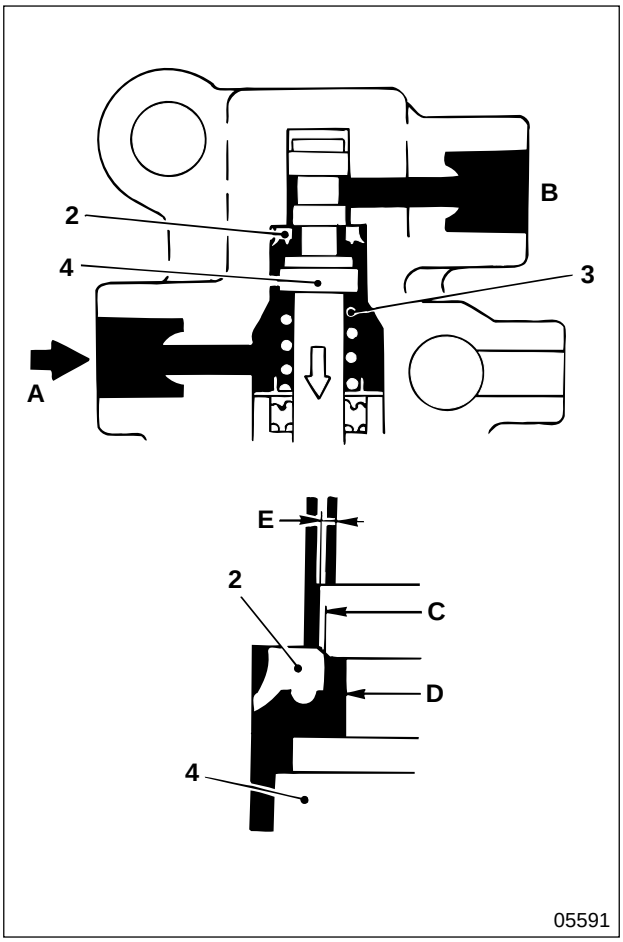

- Hydraulic pressure **A**, supplied by the brake master cylinder, gradually increases on seal cross-section **E** of plunger **4**. This increase depresses spring **3** pushing the plunger down onto packing cup **2** and cuts off the passage between chambers **A** and **B**. This is called the decompression point.
  🕮 P35-16 (Performance characteristics chart)
- Hydraulic pressure **A** at the brake master cylinder pushing plunger **4** up when the decompression point is passed. On the other hand, hydraulic pressure **B** at the rear wheel brakes works as a depressing force, so hydraulic pressure **A** and **B** balance, cutting off the passage between chambers **A** and **B**.
  At this time, hydraulic pressure at the brake master cylinder works at the donut-shaped cross-section (formed by the removal of cross-section **D** from cross-section **C** of plunger **4**). However, because hydraulic pressure **B** at the rear wheels works on the whole cross-section **E** of the plunger seal, and the rear wheel brake side remains at low hydraulic, balance is maintained.
- Therefore, hydraulic pressure **B** at the rear wheel brakes is lower than hydraulic pressure **A** at the brake master cylinder.
  The gradient of the performance characteristics of hydraulic pressure **B** is lower than that of hydraulic pressure **A**.
  🕮 P35-16 (Performance characteristics chart)

● **Sensor unit**

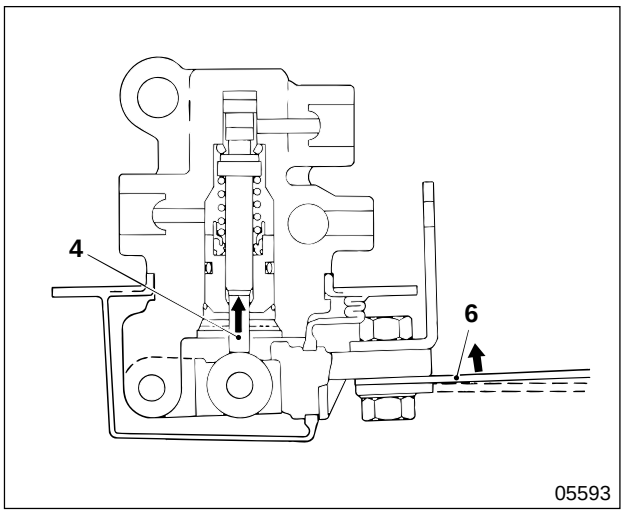

- **When the vehicle is loaded**
  When the vehicle is loaded, since the deflection of leaf spring **6** is large and the amount of upward travel of plunger **4** is also large, the amount of plunger downward travel is small. Therefore, the decompression point rises to supply higher brake pressure to the rear wheels, compared to the unloaded state.

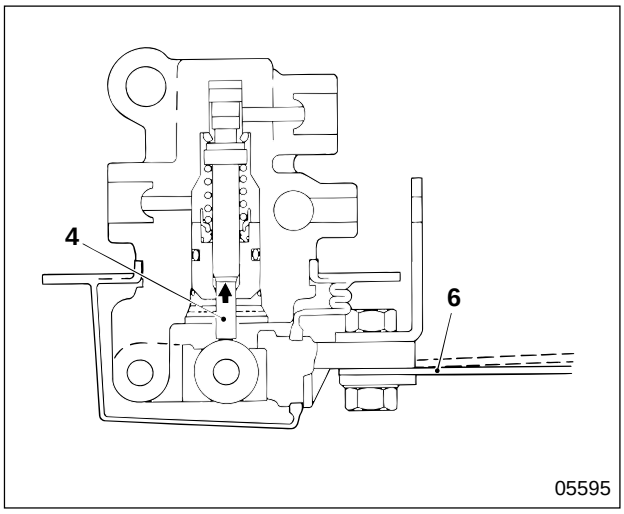

- **When the vehicle is unloaded**
  When the vehicle is unloaded, since the deflection of leaf spring **6** is small and the amount of upward travel of plunger **4** is also small, the amount of plunger downward travel is large. Therefore, the decompression point drops to supply lower brake pressure to the rear wheels, compared to the loaded state.

● **Performance characteristics**

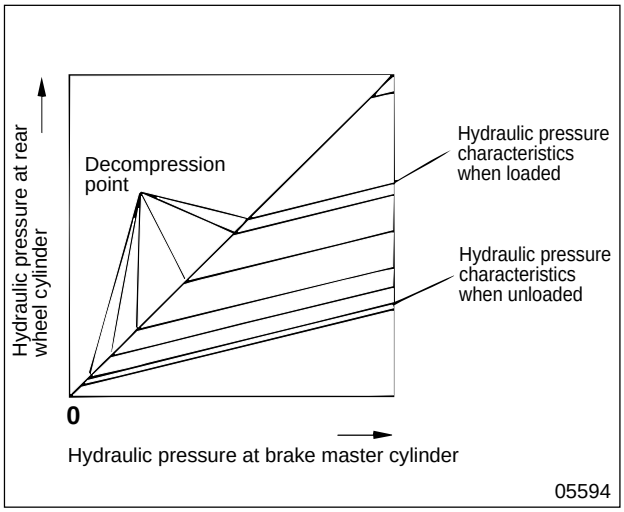

The figure on the left shows the changes in braking performance characteristics of the rear wheels. These changes depend on the vehicle load and any shifts in the load caused by sudden deceleration while cruising.

Bypass Valve

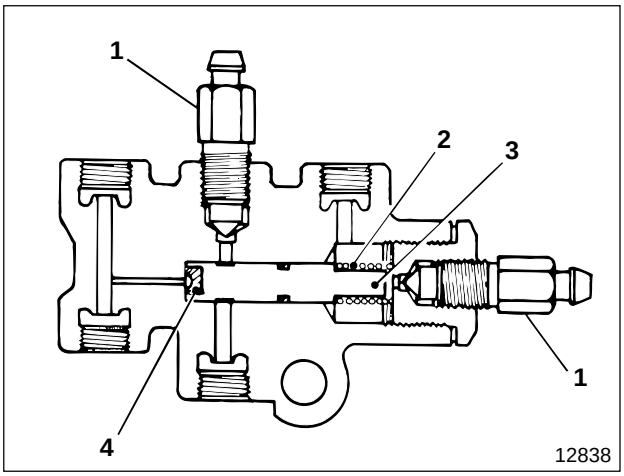

1 Bleeder screw
2 Spring
3 Piston
4 Seal

- If any failure occurred in the front brake system that decreased the hydraulic pressure, the decompression effect of the load sensing valve would affect the hydraulic pressure in the rear brake system. This would reduce the braking force of the rear brake system. The bypass valve is fitted to prevent this from happening.
- If the hydraulic pressure in the front brake system decreases, the hydraulic pressure in the rear brake system bypasses the load sensing valve and is fed directly to the rear wheel brake.

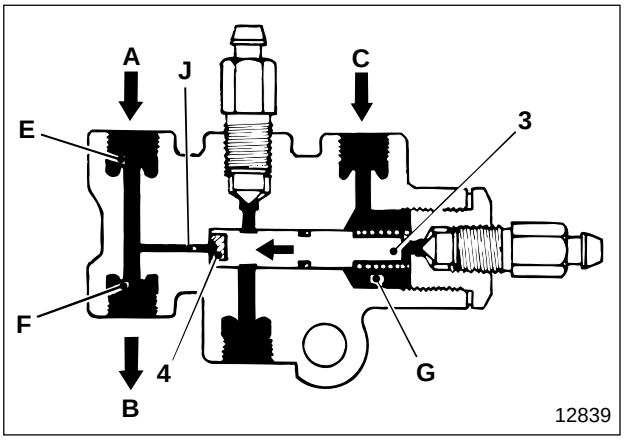

● **When the hydraulic pressure in the front brake system is normal**

- The hydraulic pressure flows through chamber **G**, pushes piston **3**, and cuts off bypass **J** with seal **4**.
  C : From front brake system
- The hydraulic pressure in the rear brake system flows from chamber **E** into chamber **F**.
  A : From the rear brake system of the brake master cylinder
  B : To the load sensing valve

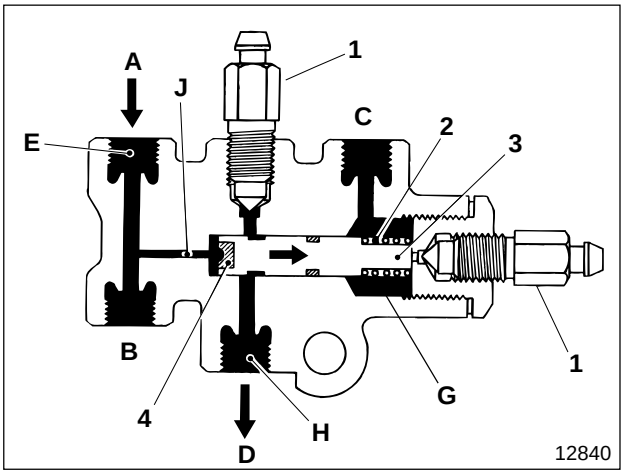

● **When the hydraulic pressure in the front brake system decreases abnormally.**

- The hydraulic pressure in chamber **G** decreases, reducing the force pushing piston **3**.
  C : From the front brake system
- The hydraulic pressure of the rear brake system pushes seal **4**, and overcomes the repercussive force of spring **2** to push piston **3**, opening bypass pass **J**.
- The hydraulic pressure of the rear brake system flows from chamber **E** into chamber **H**.
  A : From the rear brake system of the brake master cylinder
  D : To the rear wheel brake

Exhaust Brake System

< Manual transmission >

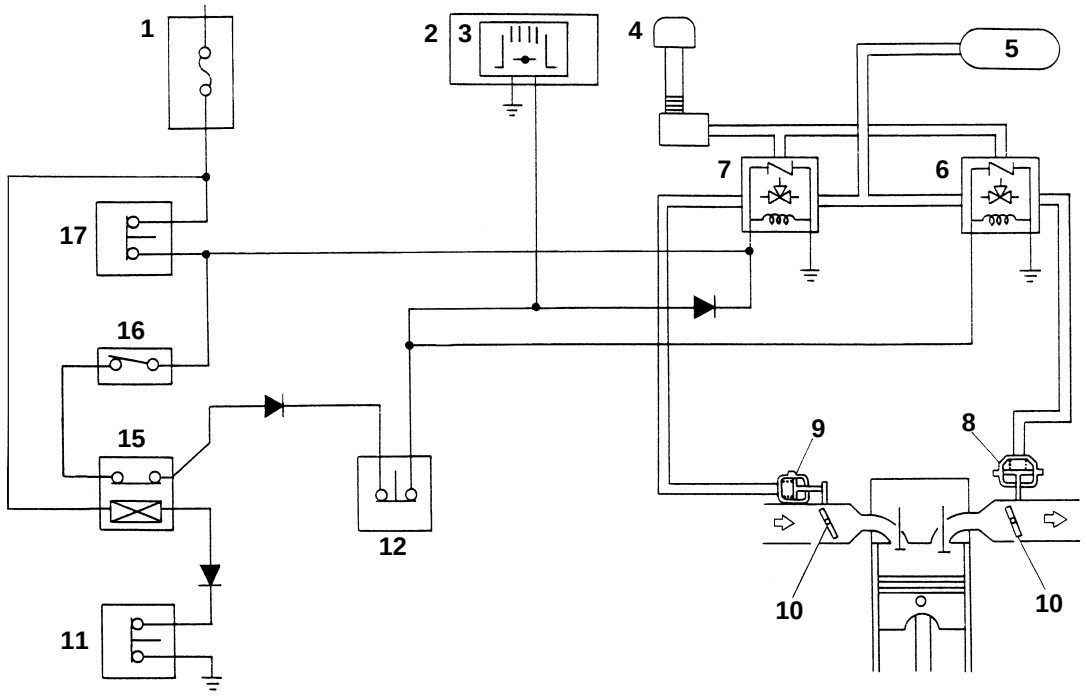

12841

< Automatic transmission >

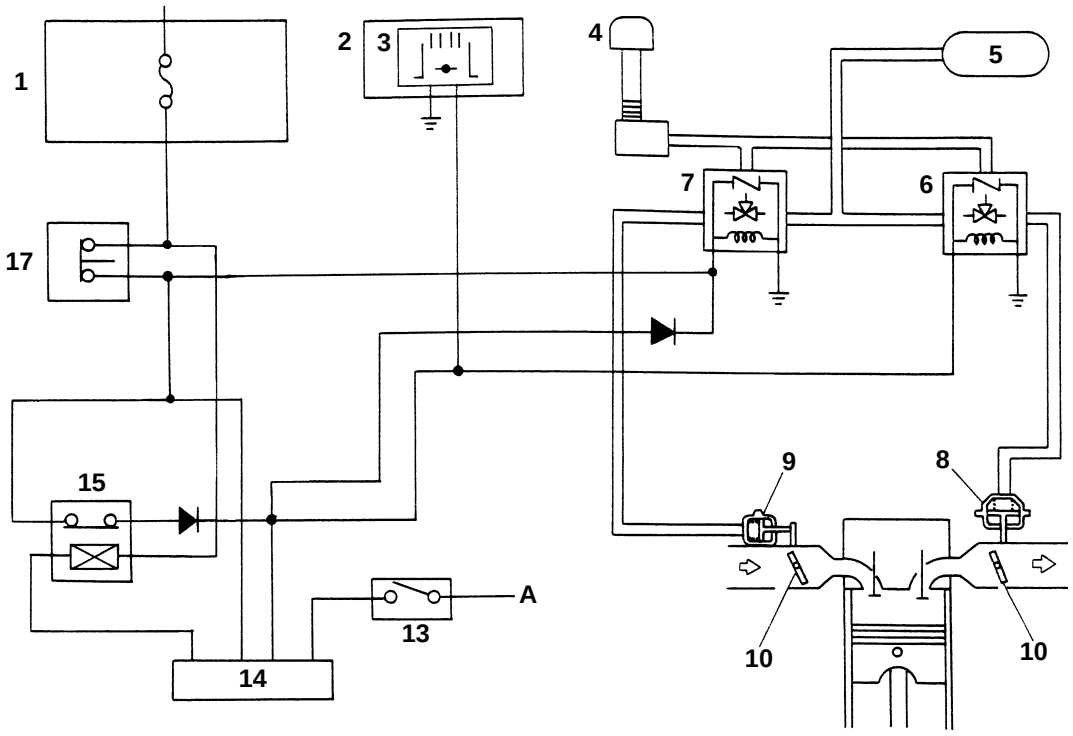

12842

1 Fuse box
2 Meter cluster
3 Exhaust brake indicator lamp
4 Air cleaner
5 Vacuum tank
6 Exhaust brake 3-way magnetic valve
7 Intake shutter 3-way magnetic valve
8 Exhaust brake unit
9 Intake shutter
10 Butterfly valve
11 Neutral switch < Manual transmission >
12 Clutch switch < Manual transmission >
13 Inhibiter switch < Automatic transmission >
14 Automatic transmission electric control unit < Automatic transmission >
15 Exhaust brake cut relay
16 Exhaust brake switch < Manual transmission >
17 Accelerator switch
18 Clutch switch < Manual transmission >

A : From starter switch

- The exhaust brake uses pressure to push and return the piston in the exhaust stroke. This pressure is generated when the exhaust pipe is shut and the pressure in the exhaust pipe increases.
- A butterfly valve type exhaust brake unit **8** is fitted as an auxiliary brake to assist the foot brake. Intake shutter **9** is fitted to reduce the suction noise generated when the exhaust brake is operated.
- When the exhaust brake switch **16** is turned ON, excitation of the coil of exhaust brake 3-way magnetic valve **6** closes the atmospheric valve and opens the vacuum valve. This makes the vacuum in the vacuum tank act on exhaust brake unit **8** which closes butterfly valve **10**, activating the exhaust brake.

● **Operation**

Electrical System

< Manual transmission >

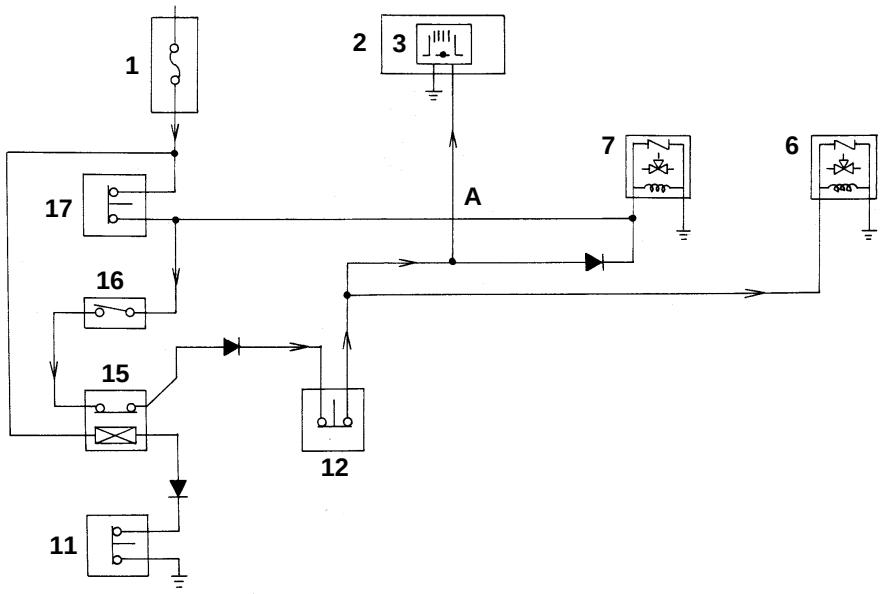

12843

< Automatic transmission >

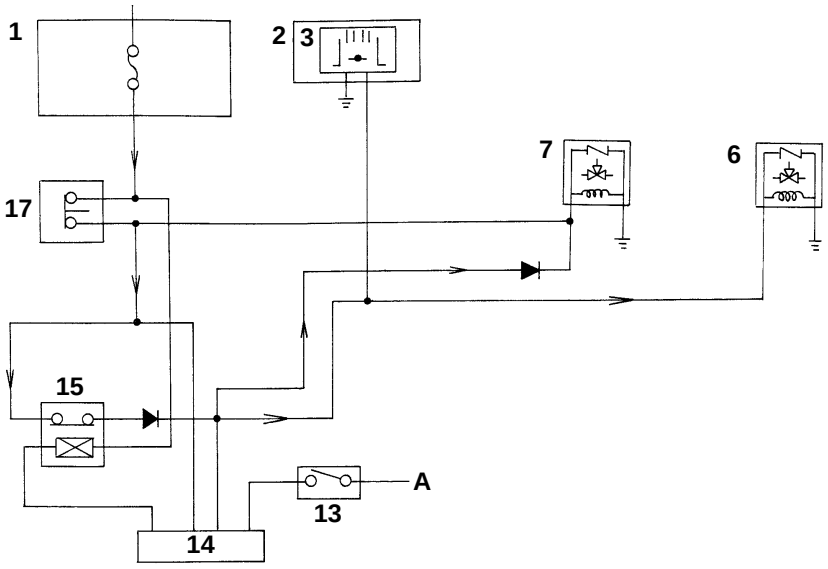

12844

When exhaust brake switch **16** is turned ON, exhaust brake indicator lamp **3** within meter cluster **2** lights up and the exhaust brake 3-way magnetic valve **6** operates.
At this time, depressing the clutch pedal (clutch switch **12** OFF) or the accelerator pedal (accelerator switch **17** OFF) temporarily releases the exhaust brake. When the transmission is in neutral (neutral switch **11** or inhibiter switch **13** ON) because the vehicle is stopped or for some other reason, exhaust brake cut relay **15** operates, releasing the exhaust brake after approximately 10 seconds.
If the accelerator pedal is depressed and released after the exhaust brake is released by the exhaust brake cut relay, the exhaust brake operates again, and after approximately 10 seconds is released.

Exhaust Brake Unit

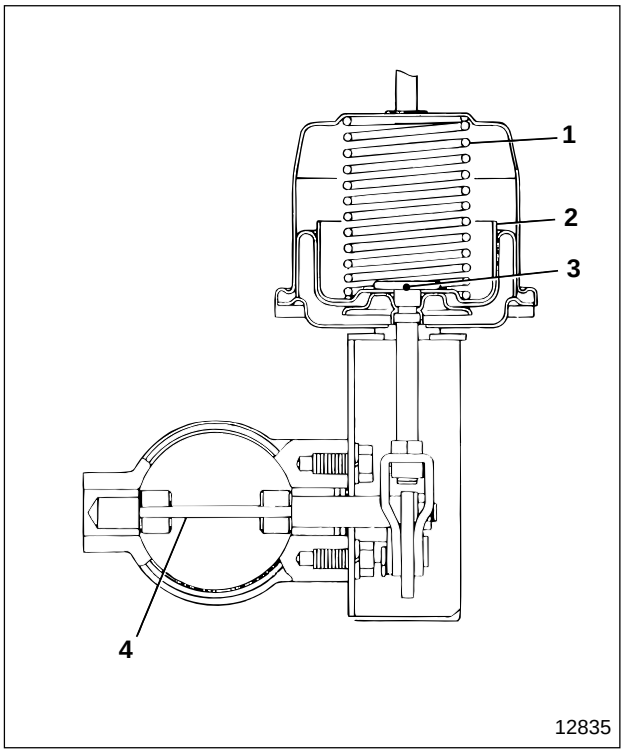

1 Spring
2 Diaphragm
3 Push rod
4 Butterfly valve

Intake Silencer

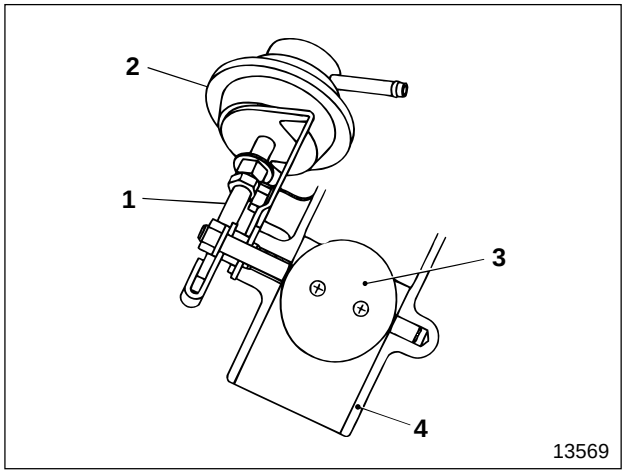

1 Push rod
2 Actuator assembly
3 Butterfly valve
4 Intake pipe

Brake Warning System

● **Vacuum system electric circuit, brake fluid level system electric circuit**

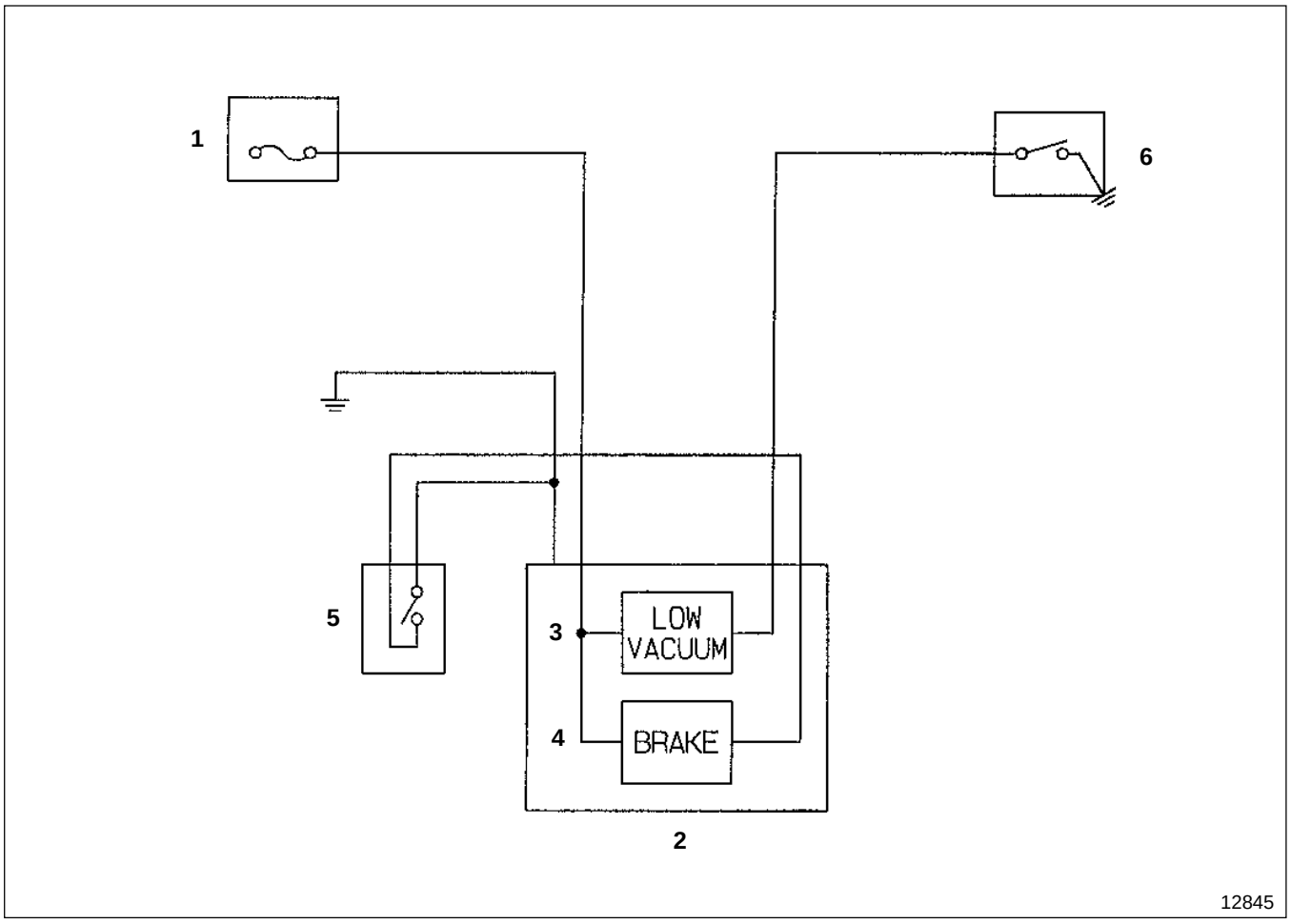

1 Fuse box
2 Meter cluster
3 Vacuum warning lamp
4 Brake warning lamp
5 Brake fluid level switch
6 Vacuum switch

The brake warning system consists of a vacuum system electric circuit which detects the drop in negative pressure inside the vacuum tank, and a brake fluid level system electric circuit which detects the drop in the level of brake fluid inside the fluid tank. In both cases a warning lamp lights up to give warning.

● **Vacuum system electric circuit**

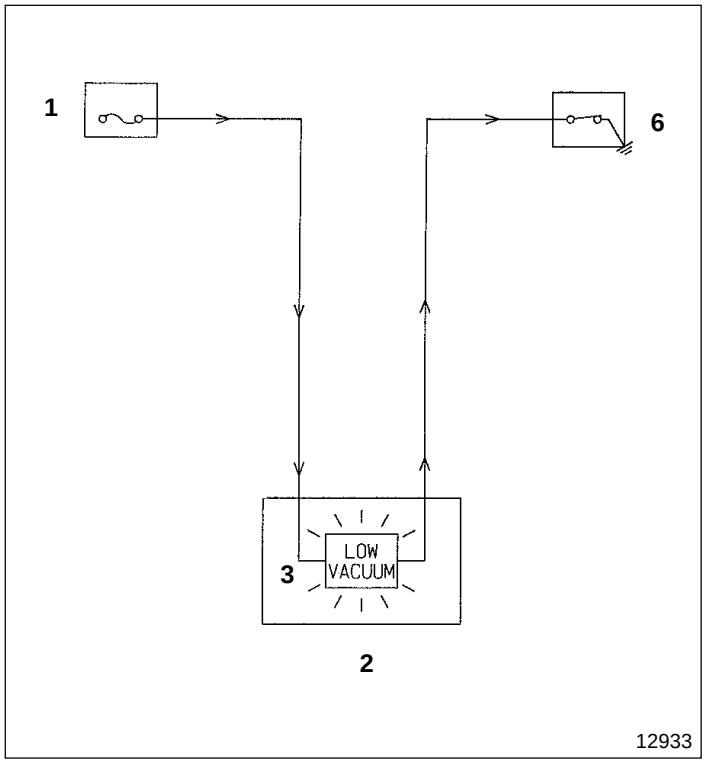

If the negative pressure in the vacuum tank drops below the specified pressure, vacuum switch **6** turns ON lighting vacuum warning lamp **3**. The flow of current at such time is as follows.

Fuse **1**→Vacuum warning lamp **3**→Vacuum switch **6**→Ground

● **Brake fluid level system electric circuit**

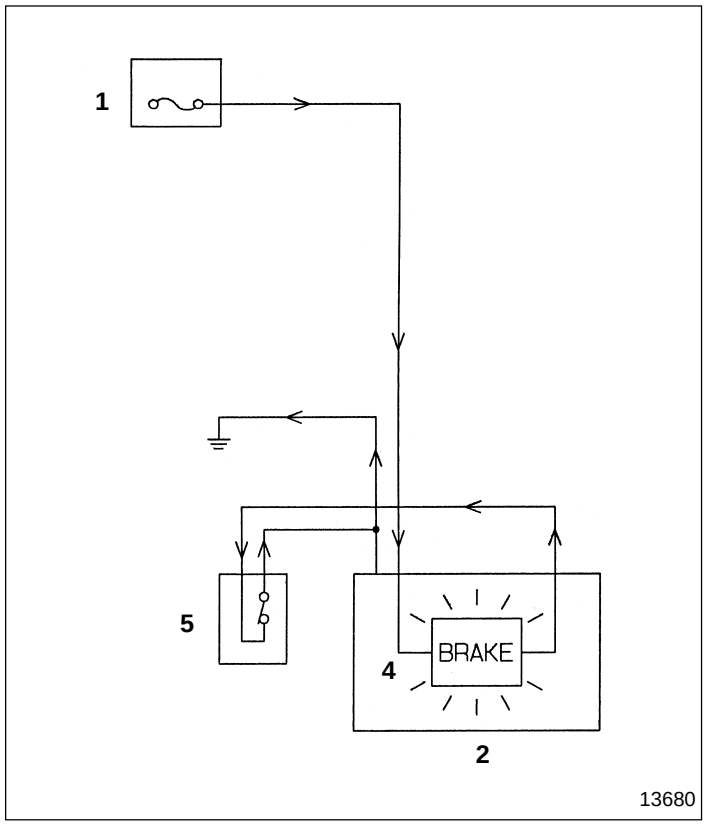

If the amount of brake fluid in the fluid tank drops below the specified amount, brake fluid level switch **5** turns ON lighting brake warning lamp **4**. The flow of current at such time is as follows.

Fuse **1**→Brake warning lamp **4**→Brake fluid level switch **5**→Ground

Wear Indicator System Electric Circuit

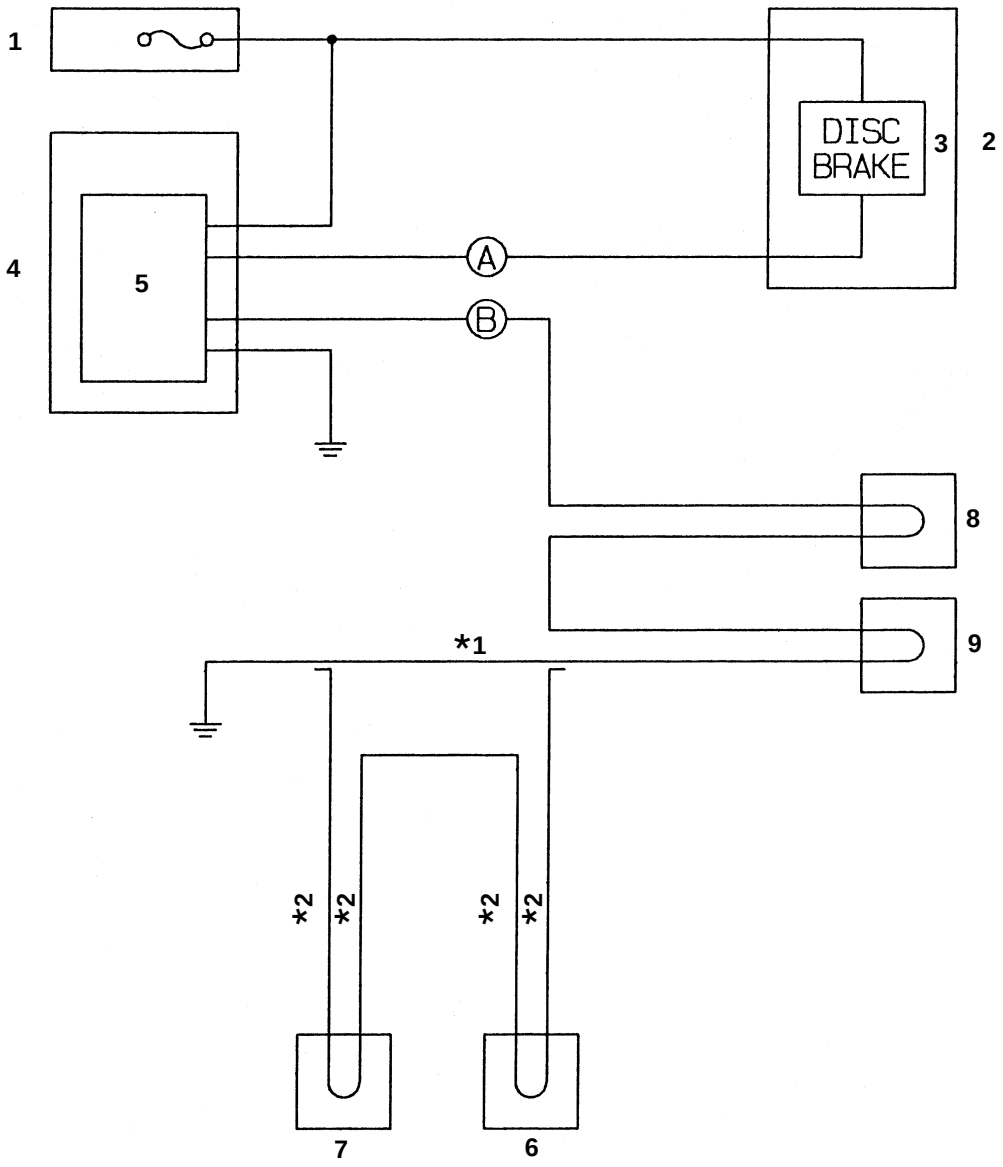

1 Fuse box
2 Meter cluster
3 Disc brake warning lamp
4 Relay box
5 Lighting and alarm control unit
6 Rear brake pad wear indicator, LH < FE649 >
7 Rear brake pad wear indicator, RH < FE649 >
8 Front brake pad wear indicator, LH
9 Front brake pad wear indicator, RH

***1** : < FE639 >
***2** : < FE649 >
Ⓐ : Warning signal
Ⓑ : Wear indicator signal

- The brake pad wear indicator system electrical circuit is provided for warning. When the brake pad is worn out, the disc rotor disconnects wear indicators **6** to **9**. Lighting and alarm control unit **5** detects this and gives a warning.
- If one of pad wear indicators **6** to **9** is disconnected, lighting and alarm control unit **5** operates, lighting disc brake warning lamp **3**.

● **When normal operating**

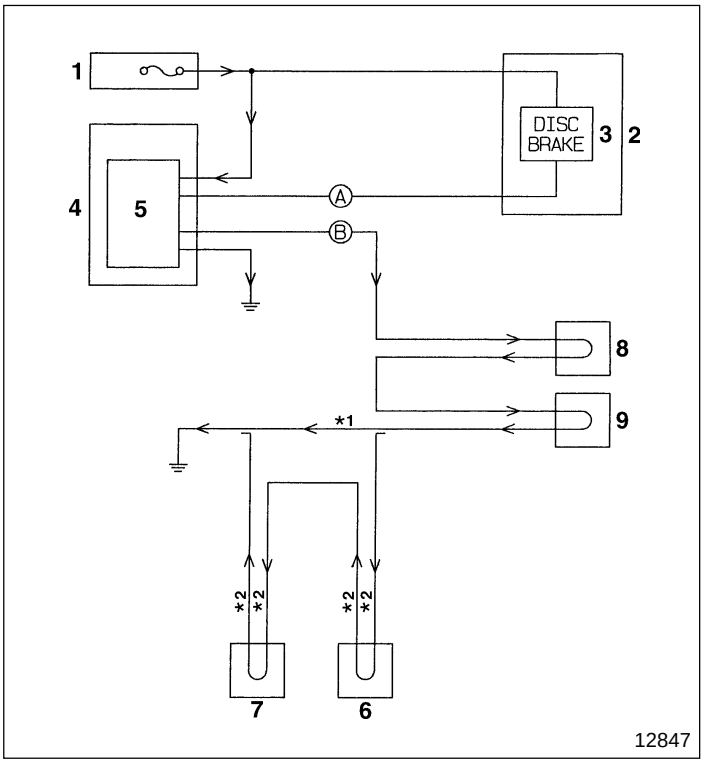

- While lighting alarm control unit **5** is sending out wear indicator signal Ⓐ, warning signal Ⓐ is not input.
- Since warning signal Ⓐ is not being input, disc brake warning lamp **3** will not light up.
- The flow of current at such time is as follows.

Fuse **1**→Lighting alarm control unit **5**→Ground
→Wear indicator signal Ⓑ→Brake pad wear indicator **6** to **9**→Ground

● **When brake pad wear indicator cut off**

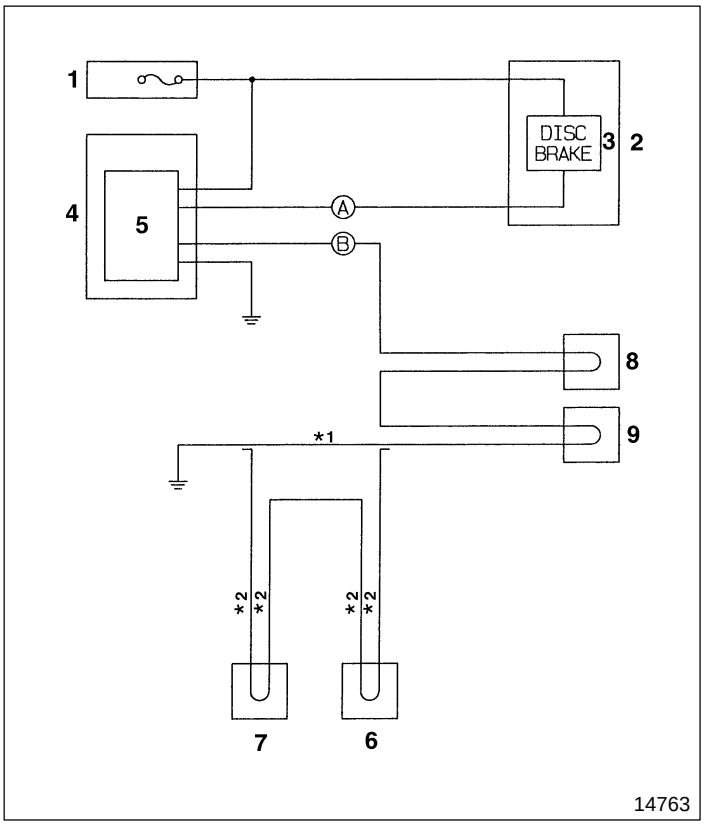

- When lighting alarm control unit 5 stops sending out wear indicator signal Ⓑ, warning signal Ⓐ is input.
- When warning signal Ⓐ is input, disc brake warning lamp **3** lights up.
- The flow of current at such time is as follows.

Fuse **1** → →Lighting alarm control unit **5**→Ground
→Disc brake warning lamp **3**
→Warning signal Ⓐ

● Wheel Brake

Possible causes	Symptoms	One-sided braking	One-sided braking: Braking shoe return slow after releasing brake pedal	One-sided braking: Braking force difference between left and right	One-sided braking: Braking force unstable	One-sided braking: Lock points difference	Braking force insufficient	Brake pedal stroke reduced	Noise and judder when brakes are applied	Noise and judder when brakes are applied: Noise generated when wheels are rotating, with vehicle jacked up	Noise and judder when brakes are applied: Continuous noise generated while braking (at low speed)
Tires	Air pressures uneven, etc. Gr 31	○									
	Left and right tire sizes different Gr 31	○									
Axle	Wheel hub bearing adjusted incorrectly Gr 26, 27	○									○
	Left and right wheelbase difference excessive Gr 26, 27	○									
	Wheel alignment incorrect Gr 26	○									
	Kingpin bushing worn Gr 26										
Wheel brakes	Backing plate ledge surface rough		○		○						
	Backing plate ledge surface not smooth										
	Backing plate deformed, mounted incorrectly				○						
	Oil or water on brake lining or brake pad surfaces			○			○				
	Brake lining or brake pad changed in quality or wrong material used			○							
	Brake lining or brake pad unevenly worn or surface roughened			○							
	Brake lining or brake pad fading (surface change in material)						○				
	Brake lining or brake pad worn out completely										○
	Abrasive on brake lining or brake pad										
	Brake lining or brake pad worn										
	Brake lining or brake pad contact incorrect			○		○	○				
	Brake lining ground radius irregular					○					
	Wheel cylinder malfunctioning		○	○				○		○	
	Shoe return spring fatigued or broken		○							○	
	Brake drum or disc rotor worn unevenly			○							
	Brake drum or disc rotor warped				○						
	Brake drum or disc rotor worn					○					
	Brake drum or disc rotor surface roughened						○				
	Brake drum or disc rotor roughness excessive								○		
	Brake drum or disc rotor glassy										

Symptoms / Possible causes		One-sided braking	One-sided braking							Noise and judder when brakes are applied	
		One-sided braking	Braking shoe return slow after releasing brake pedal	Braking force difference between left and right	Braking force unstable	Lock points difference	Braking force insufficient	Brake pedal stroke reduced	Noise and judder when brakes are applied	Noise generated when wheels are rotating, with vehicle jacked up	Continuous noise generated while braking (at low speed)
Wheel brakes	Brake drum cracked								○		
	Brake drum clogged by foreign particles									○	
	Brake drum deformed or eccentric										
	Disc rotor thickness uneven										
	Brake shoe deformed or damaged							○			
	Brake shoe twisted or tilted										
	Shoe hold down cup broken									○	
	Moving parts greased insufficiently								○		
Brake pedal	Brake pedal stroke faulty (45 mm {1.77 in.} or more at 490 N {110 lbf, 50 kgf} foot pressure)						○				
	Brake pedal adjusted incorrectly, looseness excessive							○			
	Brake pedal return faulty										
	Brake pedal free play inadequate										
	Linkage rusted or deformed										
	Return spring fatigued or broken										
	Master vac operating rod pushing up										
Brake fluid system	Brake fluid insufficient							○			
	Brake fluid leaking							○			
	Air lock in system							○			
	Vapor lock							○			
	Brake fluid return insufficient because brake pipe tightened excessively										
Vacuum system	Degree of vacuum reduced						○				
Master vac	Master vac defective						○	○			
Brake master cylinder	Piston cup faulty							○			
	Return port clogged										

TROUBLESHOOTING

Possible causes	Symptoms	Brake drums overheating			Brakes squeaking					Remarks
		All wheels overheating	One wheel overheating	Brakes squeaking	Squeaking in new vehicle or after brake lining replacement	Action too severe	Brake juddering	Brake pedal return faulty	Brake drags	
Tires	Air pressures uneven, etc.									Gr 31
	Left and right tire sizes different									Gr 31
Axle	Wheel hub bearing adjusted incorrectly		○	○			○			Gr26, 27
	Left and right wheelbase difference excessive									Gr26, 27
	Wheel alignment incorrect									Gr26
	Kingpin bushing worn						○			Gr26
Wheel brakes	Backing plate ledge surface rough								○	
	Backing plate ledge surface not smooth		○							
	Backing plate deformed, mounted incorrectly					○				
	Oil or water on brake lining or brake pad surfaces									
	Brake lining or brake pad changed in quality or wrong material used									
	Brake lining or brake pad unevenly worn or surface roughened									
	Brake lining or brake pad fading (surface change in material)					○				
	Brake lining or brake pad worn out completely									
	Abrasive on brake lining or brake pad			○						
	Brake lining or brake pad worn			○						
	Brake lining or brake pad contact incorrect				○					
	Brake lining ground radius irregular									
	Wheel cylinder malfunctioning		○						○	
	Shoe return spring fatigued or broken		○						○	
	Brake drum or disk rotor worn unevenly									
	Brake drum or disk rotor warped									
	Brake drum or disk rotor worn									
	Brake drum or disk rotor surface roughened									
	Brake drum or disk rotor roughness excessive									
	Brake drum or disk rotor glassy					○				

Possible causes / Symptoms		Brake drums overheating			Brakes squeaking						Remarks
		All wheels overheating	One wheel overheating	Brakes squeaking	Squeaking in new vehicle or after brake lining replacement	Action too severe	Brake juddering	Brake pedal return faulty	Brake drags	
Wheel brakes	Brake drum cracked										
	Brake drum clogged by foreign particle										
	Brake drum deformed or eccentric						○				
	Disc rotor thickness uneven						○				
	Brake shoe deformed or damaged					○					
	Brake shoe twisted or tilted		○								
	Shoe hold down cup broken										
	Moving parts greased insufficiently										
Brake pedal	Brake pedal stroke faulty (45 mm {1.77 in.} or more at 490 N {110 lbf, 50 kgf} foot pressure)										
	Brake pedal adjusted, looseness excessive										
	Brake pedal return faulty	○									
	Brake pedal free play inadequate								○		
	Linkage rusted or deformed							○			
	Return spring fatigued or broken							○			
	Master vac operating rod pushing up							○			
Brake fluid system	Brake fluid insufficient										
	Brake fluid leaking										
	Air lock in system										
	Vapor lock										
	Brake fluid return insufficient because brake pipe tightened excessively		○								
Vacuum system	Degree of vacuum reduced										
Master vac	Master vac defective	○							○		
Brake master cylinder	Piston cup faulty	○							○		
	Return port clogged	○							○		

● Exhaust Brake

Symptoms / Possible causes		Exhaust brake does not work	Exhaust brake does not release	Remarks
Vacuum system	Degree of vacuum insufficient	○		
	Pipe crushed	○		
3-way magnetic valve	Does not work	○	○	Gr 54
Exhaust brake unit	Valve assembly does not work	○	○	
	Valve assembly shaft stuck	○	○	
	Vacuum chamber does not work	○		
Electric system	Electric system faulty	○	○	Gr 54

M E M O

Replacement of Brake Fluid

Tightening torque

Unit : N·m {lbf.ft, kgf·m}

Location	Parts to be tightened		Tightening torque	Remarks
1	Air bleeder	Front disc brake	6.9 to 8.8 {5.1 to 6.5, 0.7 to 0.9}	—
		Rear wheel cylinder < FE639 >	6.9 to 8.8 {5.1 to 6.5, 0.7 to 0.9}	—
		Rear disc brake < FE649 >	6.9 to 8.8 {5.1 to 6.5, 0.7 to 0.9}	—
		Bypass valve	8.8 to 13 {6.5 to 9.4, 0.9 to 1.3}	—

Fluid

Location	Points of application	Kinds	Quantity
—	Fluid tank	Brake fluid (SAE J1703f or FMVSS No. 116 DOT3)	As required

WARNING

- **The clutch fluid system and the brake fluid system use the fluid tank in common. Therefore, replacement and air bleeding of the clutch fluid must be carried out simultaneously with that of the brake fluid. Gr 21**
- **You must use new brake fluid (SAE J1703f or FMVSS No. 116 DOT3). Do not add different quality fluid or mineral oil (gas oil, engine oil, gear oil, automatic transmission fluid, etc.) to the clutch system, because this will cause the rubber parts of the clutch system and brake system to swell, resulting in faulty clutch operation, as well as ineffective braking and brake dragging.**
- **Do not allow foreign particles or water to become mixed into the brake fluid when refilling, because this will result in ineffective clutch and brake operations.**
- **If you use a mug for adding brake fluid, keep it solely for that purpose.**

CAUTION

- **Be careful not to splash brake fluid on related parts as this could damage the paintwork.**
- **Be sure to wipe off brake fluid immediately if you splash it on the paintwork.**

NOTE

Supply and maintain the brake fluid level to the “MAX” level of the fluid tank.

< Front disc brake >

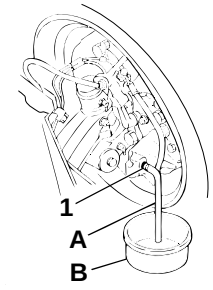

12934

< Rear drum brake >

< Rear disc brake >

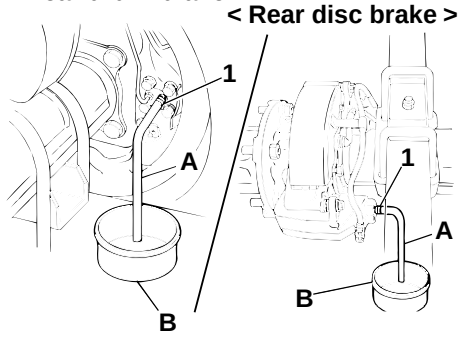

06534

< Bypass valve >

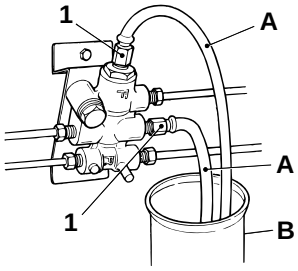

12935

- Start the engine and let it idle until you complete brake fluid replacement.
- Connect vinyl pipes **A** : one to the front disc brake, one to the rear drum brake < FE639 > or the rear disc brake < FE649 >, and two to the bypass valve.
- Put the free ends of vinyl pipes **A** into containers **B**.

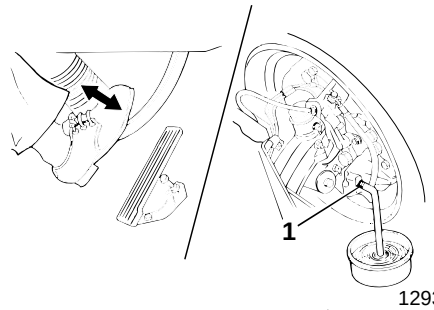

12936

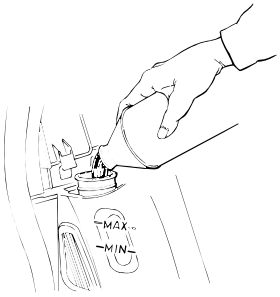

07623

- Loosen air bleeders **1** and depress the brake pedal several times to drain brake fluid completely.
- Maintaining a supply of new brake fluid up to the “MAX” level of the fluid tank, depress the brake pedal repeatedly until the old brake fluid of the brake system is replaced with new fluid, and after you complete the work, tighten each air bleeder **1** at specified torque.
- Bleed air from the brake system.
P35-34

Air Bleeding of Brake System

Tightening torque

Unit : N·m {lbf.ft, kgf·m}

Location	Parts to be tightened		Tightening torque	Remarks
1	Air bleeder	Front disc brake	6.9 to 8.8 {5.1 to 6.5, 0.7 to 0.9}	—
		Rear wheel cylinder < FE639 >	6.9 to 8.8 {5.1 to 6.5, 0.7 to 0.9}	—
		Rear disc brake < FE649 >	6.9 to 8.8 {5.1 to 6.5, 0.7 to 0.9}	—
		Bypass valve	8.8 to 13 {6.5 to 9.4, 0.9 to 1.3}	—

Fluid

Location	Points of application	Kinds	Quantity
—	Fluid tank	Brake fluid (SAE J1703f or FMVSS No. 116 DOT3)	As required

WARNING

- **The clutch fluid system and the brake fluid system use the fluid tank in common. Therefore, replacement and air bleeding of the clutch fluid must be carried out simultaneously with that of the brake fluid. Gr 21**
- **You must use new brake fluid (SAE J1703f or FMVSS No. 116 DOT3). Do not add different quality fluid or mineral oil (gas oil, engine oil, gear oil, automatic transmission fluid, etc.) to the clutch system, because this will cause the rubber parts of the clutch system and brake system to swell, resulting in faulty clutch operation, as well as ineffective braking and brake dragging.**
- **Do not allow foreign particles or water to become mixed into the brake fluid when refilling, because this will result in ineffective clutch and brake operations.**
- **If you use a mug for adding brake fluid, keep it solely for that purpose.**

CAUTION

- **Be careful not to splash brake fluid on related parts as this could damage the paintwork.**
- **Be sure to wipe off brake fluid immediately if you splash it on the paintwork.**

NOTE

- **Supply and maintain the brake fluid level to the “MAX” level of the fluid tank.**
- **Make sure you maintain brake fluid at the “MAX” level of the fluid tank since the brake fluid level drops during air bleeding.**

< Front disc brake >

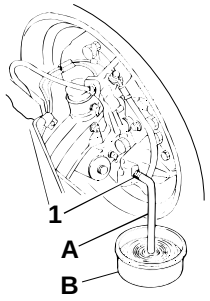

12937

< Rear drum brake >

< Rear disc brake >

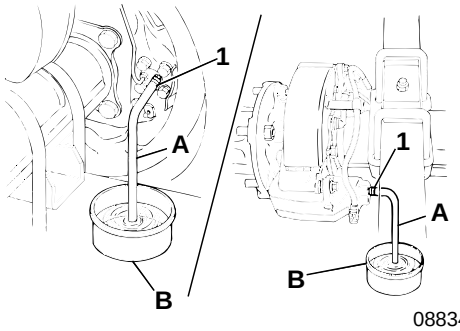

08834

< Bypass valve >

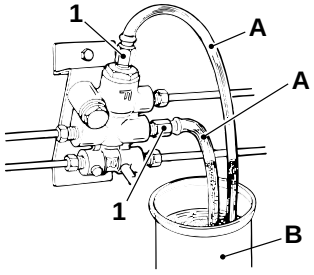

12938

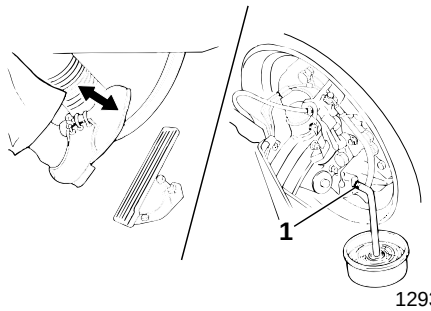

12936

- Start the engine and let it idle until you complete air bleeding of the brake system.
- Connect vinyl pipes **A** : one to the front disc brake, one to the rear drum brake < FE639 > or the rear disc brake < FE649 >, and two to the bypass valve.
- Put the free ends of vinyl pipes **A** into containers **B** and bleed the brake system as follows:

< Front brake system >

Disc brake, RH

↓

Disc brake, LH

< Rear brake system >

FE639	FE649
Rear drum brake, RH	Disc brake, RH
↓	↓
Rear drum brake, LH	Disc brake, LH

< Bypass valve system >

Bypass valve

- Depress the brake pedal slowly several times, and with the brake pedal depressed, loosen air bleeder **1** to discharge air together with the brake fluid. After closing the air bleeder, release the brake pedal.

- Repeat the above operation until air bubbles are no longer present in the brake fluid discharged from air bleeder **1**.
- When the discharged fluid is free of air bubbles, tighten air bleeder **1** at specified torque.

- Make sure that the brake fluid level is at the “MAX” level of the fluid tank, and depress the brake pedal several times to ensure that the brake fluid does not leak from anywhere. Then, conduct a brake test.

INSPECTION AND ADJUSTMENT MOUNTED IN VEHICLE

Inspection and Adjustment of Brake Pedal Free Play

Service standards

Unit : mm {in.}

Location	Maintenance item	Standard value	Limit	Remedy
—	Free play of brake pedal	10 to 15 {0.39 to 0.59}	—	Adjust

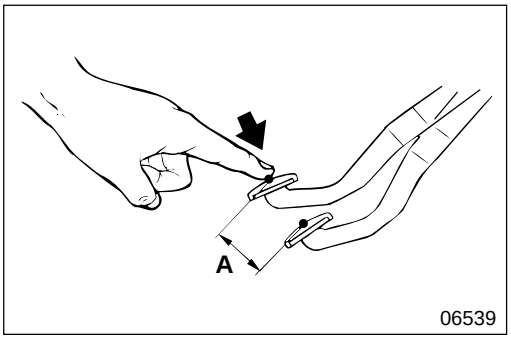

[Inspection]
Check if brake pedal free play **A** confirms to the standard valve with the engine stopped. If the measured value deviates from the standard value, adjust the position of the brake pedal.

[Adjustment]
P35-51

Inspection and Adjustment of Clearance between Brake Pedal and Floor Panel

Service standards

Unit : mm {in.}

Location	Maintenance item	Standard value	Limit	Remedy
—	Clearance between brake pedal and floor panel (with pedal depressed at 490 N {110 lbf, 50 kgf})	45 {1.77} or more	—	Adjust

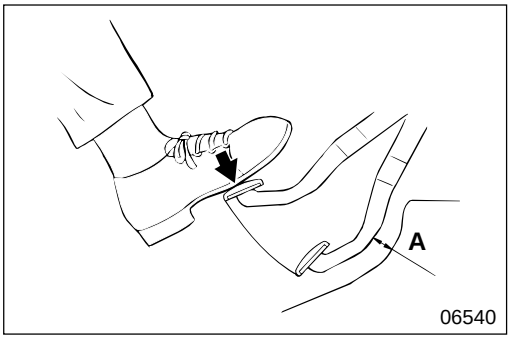

[Inspection]
Depress the brake pedal using 490 N {110 lbf, 50 kgf} when the engine is idling to check if clearance **A** between the brake pedal and the floor panel conforms to the standard value. If the measured value deviates from the standard value, adjust the position of the brake pedal.

[Adjustment]
P35-51

Inspection and Replacement of Disc Brake Pad

Service standards

Unit : mm {in.}

Location	Maintenance item			Standard value	Limit	Remedy
5, 6	Thickness of outer and inner pads	FE639	Front disc brake	12 {0.47}	4 {0.16}	Replace
		FE649	Front disc brake	14 {0.55}	4 {0.16}	Replace
			Rear disc brake	14 {0.55}	4 {0.16}	Replace

Tightening torque

Unit : N·m {lbf.ft, kgf·m}

Location	Parts to be tightened	Tightening torque	Remarks
3	Slide pin bolt tightening	83.3 to 93.1 {61 to 69, 8.5 to 9.5}	Wet

Fluid

Location	Points of application	Kinds	Quantity
3	Thread area of slide pin bolt	Brake fluid (SAE J1703f or FMVSS No.116 DOT3)	As required

Special tools

Unit : mm {in.}

Location	Tool name and shape	Part No.	Application
—	Piston expander 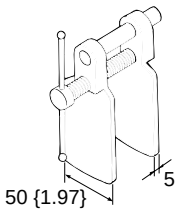	MB990520	Pushing back of piston when replacing brake pad

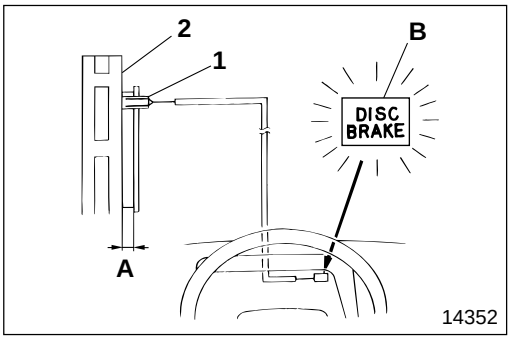

[Inspection]

- When brake pad thickness **A** decreases to approximately 4 mm {0.16 in.}, brake pad wear indicator **1** makes contact with disc rotor **2** and is disconnected. This lights up brake warning lamp **B** within the meter cluster, indicating that the brake pad should be replaced.

INSPECTION AND ADJUSTMENT MOUNTED IN VEHICLE

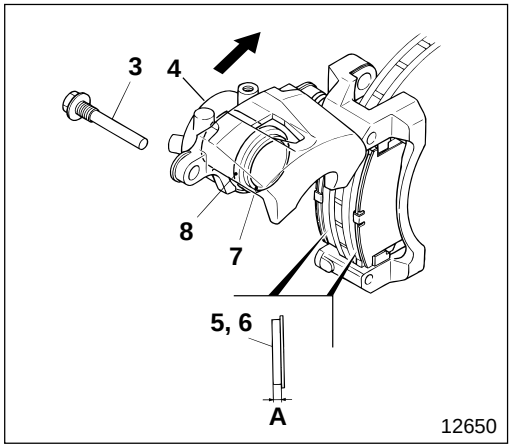

- Remove lower slide pin bolt **3**.
- Turn caliper **4** upward and secure it using wire.

CAUTION

- **Make sure that you do not smear, or get dust on, the grease applied to slide pin bolt 3.**
- **Be careful when you secure caliper 4 that you do not use excessive force on the brake hose or brake pad wear indicator 1.**
- **Make sure that you secure caliper 4 securely.**

- Check thickness **A** of outer pad **5** and inner pad **6** and if the thickness is lower than the limit, replace the pads on the same axle as a unit.
- Check if any fluid is leaking from piston **7**, and check if piston boot **8** is damaged. If any fault is found, replace the faulty parts.

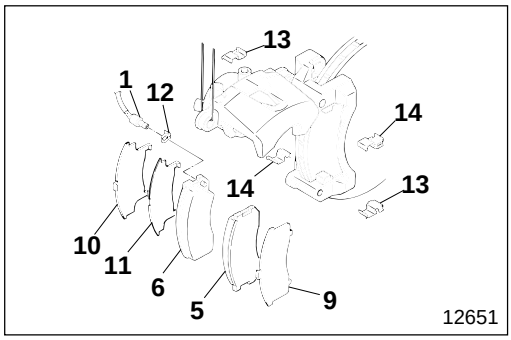

[Replacement]

- Remove the following parts:
  - **9** Outer shim
  - **5** Outer pad
  - **10** Inner shim A
  - **11** Inner shim B
  - **12** Clip
  - **1** Brake pad wear indicator
  - **6** Inner pad
  - **13** Pad liner A
  - **14** Pad liner B

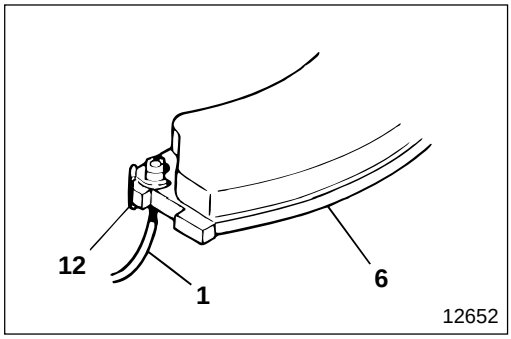

Install brake pad wear indicator **1** on inner pad **6** in the pad kit using clip **12**.

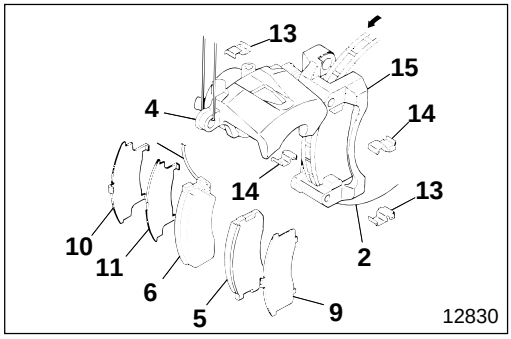

- Clean torque member **15**.
- Install the kit parts onto torque member **15** in the following order:
  - Install pad liner A **13** and pad liner B **14** on torque member **15**.
  - Install outer shim **9** on outer pad **5**.
  - Install inner shims **10**, **11** on inner pad **6**.
  - Install outer pad **5** on torque member **15**.
  - Install inner pad **6** on torque member **15**.
  - Install inner pad **6** so that brake pad wear indicator **1** faces the entrance side (when the vehicle is moving forwards) of disc rotor **2** of caliper **4**.

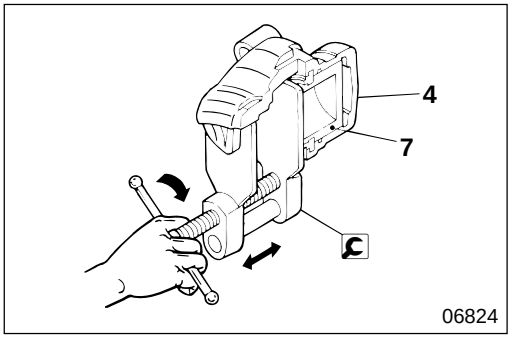

- Push piston **7** until it makes contact with the bottom of caliper **4**.

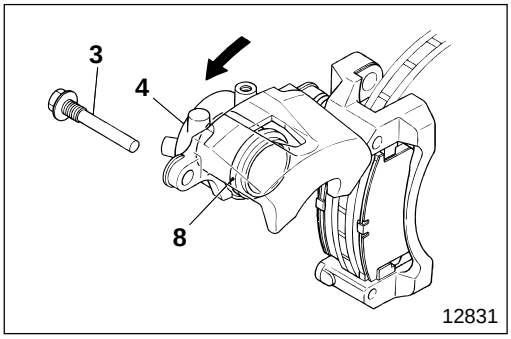

- Slacken off caliper **4**, taking care not to damage piston boot **8**.
- Bleed the bushing.
- Apply brake fluid to the periphery of slide pin bolt **3** and its thread area.
- Tighten slide pin bolt **3** at specified torque.
- Wire up the harness of brake pad wear indicator **1**. Gr 26, 27
- Inspect drag torque. P35-54, 58, 70
- Depress the brake pedal several times.
- Make sure that brake fluid is maintained at the “MAX” level of the fluid tank. If the level drops, add brake fluid. P35-32

INSPECTION AND ADJUSTMENT MOUNTED IN VEHICLE

Drum Brake Lining Thickness Inspection and Replacement

Service standards

Unit : mm {in.}

Location	Maintenance item	Standard value	Limit	Remedy
—	Thickness of brake lining	—	4 {0.16} (Side shoulder means wear limit)	Replace

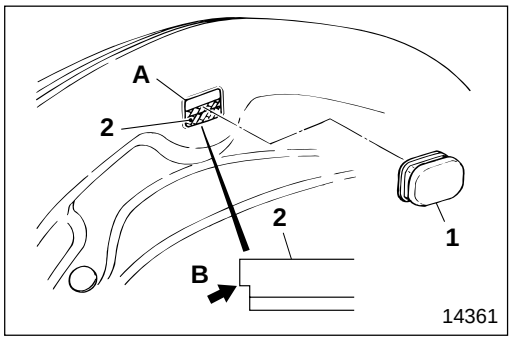

[Inspection]

NOTE

Be sure to inspect at two points for each wheel per side.

- Remove cover **1** from the backing plate.
- Inspect through check hole **A** whether brake lining **2** is worn to the point of side shoulder **B** of the brake lining (the limit).
- If the measured value is lower than the limit, replace brake lining **2** on the same axle as a unit.
- After inspection, be sure to reinstall cover **1**.

[Replacement]

P35-63

Inspection of Brake Shoe Clearance

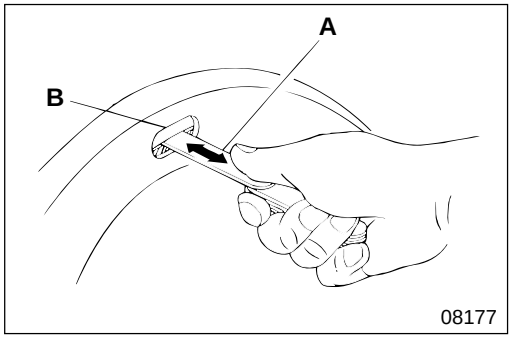

Insert 0.2 mm {0.0079 in.} feeler gauge **A** into inspection hole **B** of the back plate, and make sure that you can move the gauge in and out feeling some resistance. After this inspection, adjust the clearance if any abnormality is found.

P35-61

Inspection of Brake Booster (Master Vac)

Service standards

Location	Maintenance item		Standard value	Limit	Remedy
—	Air tightness with no load (with vacuum meter at 67 kPa {19.7 in. Hg, 500 mmHg} and engine stopped)		Vacuum drop after 15 seconds should be 3.3 kPa {0.98 in. Hg, 25 mmHg} or less	—	Replace
	Airtightness with load (with brake pedal slightly depressed, vacuum meter at 67 kPa {19.7 in. Hg, 500 mmHg} and engine stopped)				
—	Boosting action (Fluid pressure with vacuum meter at 67 kPa {19.7 in. Hg, 500 mmHg} and brake pedal depressed at specified foot pressure)	8 in.+9 in.	4410 kPa {640 lbf/in^2, 45 kgf/cm^2} (98 N {22 lbf, 10 kgf})	—	Replace
			8340 kPa {1210 lbf/in^2, 85 kgf/cm^2} (295 N {66 lbf, 30 kgf})		
		9 in.+10 in.	3920 kPa {570 lbf/in^2, 40 kgf/cm^2} (98 N {22 lbf, 10 kgf})		
			8830 kPa {1280 lbf/in^2, 90 kgf/cm^2} (295 N {66 lbf, 30 kgf})		
	No boosting action (Fluid pressure after vacuum meter falls to 0 kPa {0 in. Hg, 0 mmHg} and brake pedal depressed at specified foot pressure)	8 in.+9 in.	295 kPa {43 lbf/in^2, 3 kgf/cm^2} (98 N {22 lbf, 10 kgf})	—	Replace
			1670 kPa {240 lbf/in^2, 17 kgf/cm^2} (295 N {66 lbf, 30 kgf})		
		9 in.+10 in.	195 kP---a {28 lbf/in^2, 2 kgf/cm^2} (98 N {22 lbf, 10 kgf})		
			1470 kPa {215 lbf/in^2, 15 kgf/cm^2} (295 N {66 lbf, 30 kgf})		

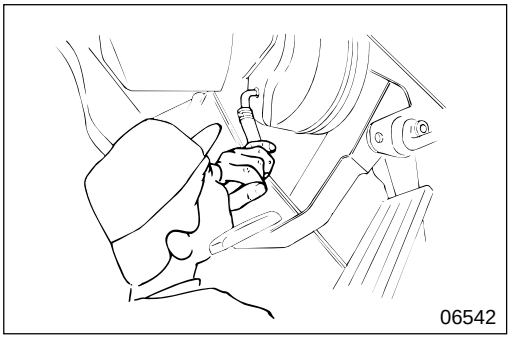

[Inspection]

Two types of inspection are used to inspect the master vac operation, inspection without a tester and inspection with a simple tester. Make sure that there is no fluid leak or damage at the joints of the brake pipes and hoses before inspection.

(1) Inspection of check valve operation

Be sure to inspect the check valve both when opened and when closed.

CAUTION

Make sure that your saliva does not enter the check valve when blowing air through the vacuum hose as this would cause the check valve to malfunction.

NOTE

The check valve fitted to the vacuum hose cannot be removed.

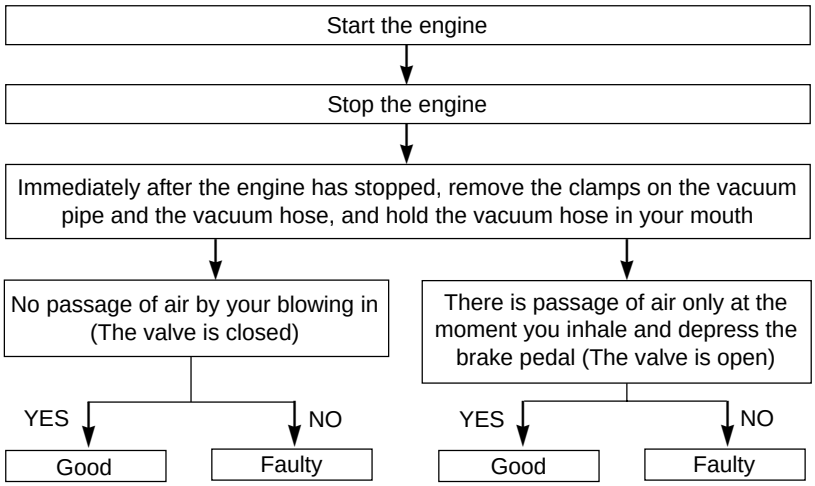

(2) Inspection of master vac operation

NOTE

If the master vac is faulty, determine the quality of the master vac as an independent device by means of a bench test specified by the maker's service station. This is because the above inspection of the master vac operation is merely a simplified inspection. If any fault is found, hand the device over to the service station without disassembling it, and replace the whole assembly. P35-50

● **Inspection method without a tester**

If the master vac is determined to be good by inspections 1 to 3 below, its operation is normal. If any fault is detected in any of the three inspections, the following parts are likely to be faulty.

- Check valve
- Vacuum hose
- Master vac
- Vacuum pump

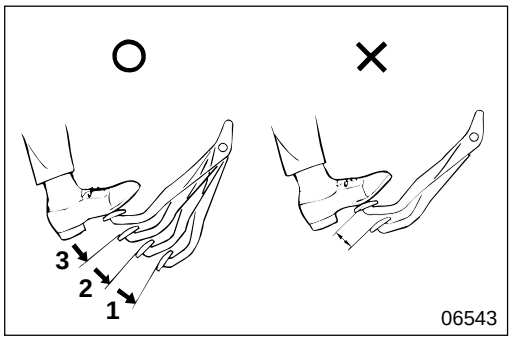

[Inspection 1]

After one to two minutes' operation, stop the engine

↓

Depress the brake pedal using normal foot pressure

↓

The brake stroke is longest in the first brake application, but becomes shorter gradually in the second and the third application

YES ↓ Good

NO ↓ Faulty

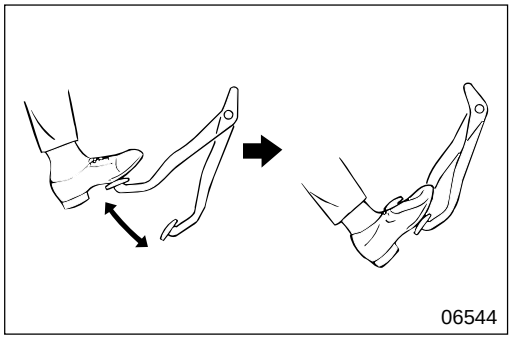

[Inspection 2]

Depress the brake pedal several times while the engine is stopped

↓

With the brake pedal depressed, start the engine

↓

The brake pedal goes down a little

YES ↓ Good

NO ↓ Faulty

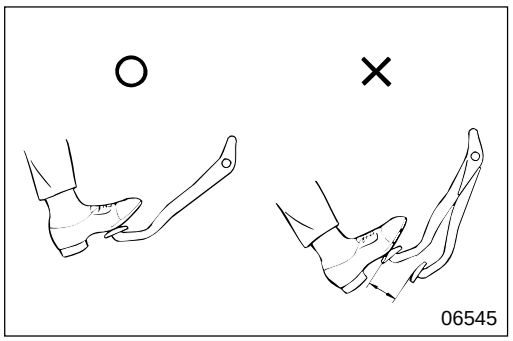

[Inspection 3]

With the brake pedal depressed while the engine is running, stop the engine

↓

The height of the brake pedal remains unchanged for approximately 30 seconds

YES ↓ Good

NO ↓ Faulty

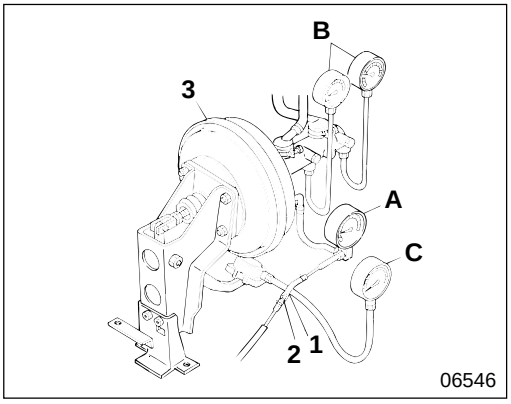

● Inspection with a simplified tester

● Airtightness inspection

- Before inspection, observe the operation of check valve **2** fitted to vacuum hose **1**. P35-41
- Remove vacuum hose **1** from master vac **3**, place the end without the white ○ mark on the master vac and connect it to vacuum meter **A**. Connect another vacuum hose (without a built-in check valve) between the vacuum meter and the master vac.
  Connect pressure gauges **B** and foot pressure meter **C** as illustrated, and bleed the air from the pressure gauges.
- If the results of the following two airtightness inspections are satisfactory, the operation is normal. If any fault is found in any of the two inspections, the following parts are likely to be faulty.
  - Vacuum hose
  - Master vac

[No-load airtightness inspection]

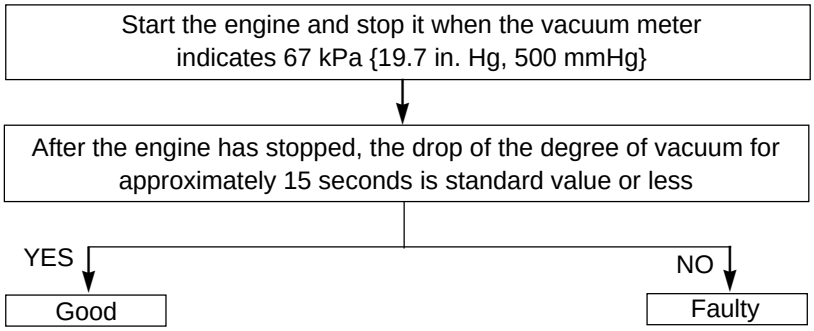

[At load airtightness inspection]

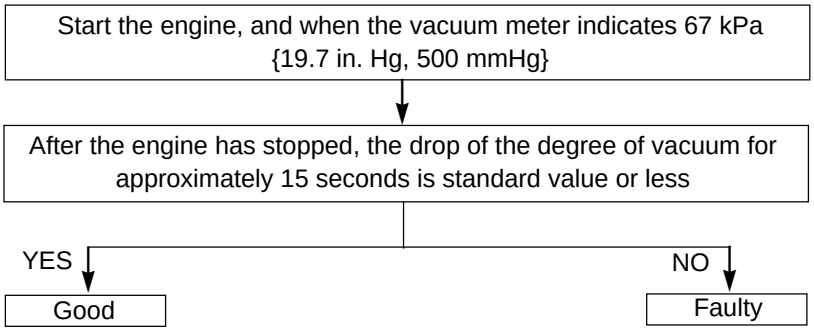

- Be sure when you attach vacuum hose 1 to master vac 3 after the inspection, that the end without the white ○ mark faces the master vac.

● **Inspection of characteristics**

- Inspect characteristics after the airtightness inspection is finished.
- If the results of the following two inspections are good, the operation is normal. If any fault is found in any of the two inspections, the following parts are likely to be faulty.
  - Vacuum hose
  - Master vac

[Boosting action inspection]

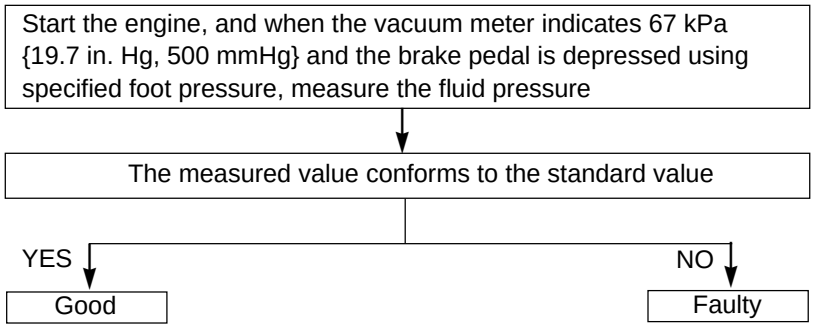

[No boosting action inspection]

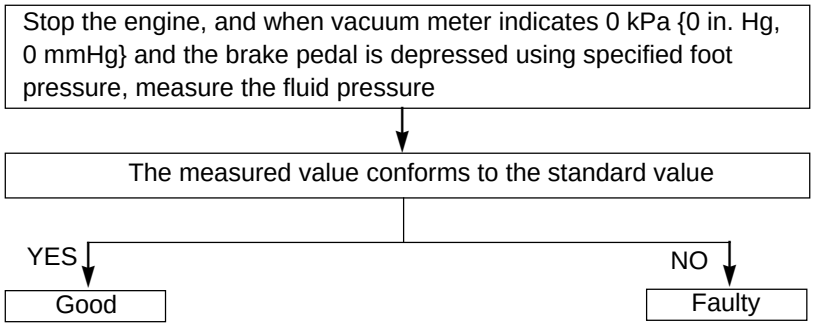

Be sure when you attach vacuum hose 1 to master vac 3 after the inspection, that the end without the white ○ mark faces the master vac.

< 8 inch+9 inch >

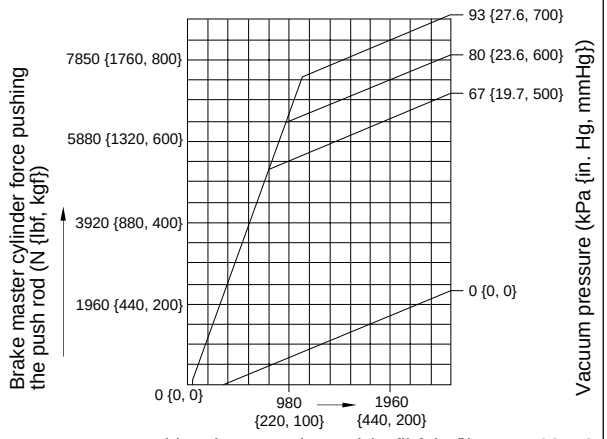

< 9 inch+10 inch >

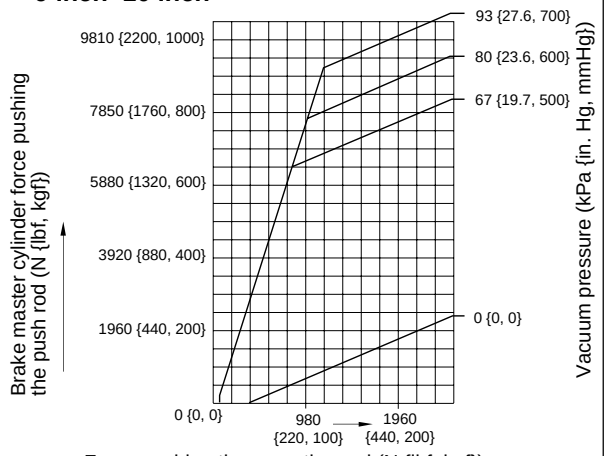

● **Master vac performance diagram**

Inspection of Bypass Valve

Service standards

Location	Maintenance item	Standard value	Limit	Remedy
—	Fluid pressure (when master cylinder and bypass outlet pressures balance) when the front brake system fails	3920 kPa {570 lbf/in^2, 40 kgf/cm^2} or less	—	Replace

Fluid

Location	Points of application	Kinds	Quantity
—	Fluid tank	Brake fluid (SAE J1703f or FMVSS No. 116 DOT3)	As required

WARNING

- **Before inspection do the following to prevent the vehicle from moving accidently.**
- **Carry out inspection on a level area.**
- **Place chocks securely in place at the left and right front wheels.**
- **Pull up the parking brake.**
- **The clutch fluid system and the brake fluid system use the fluid tank in common. Therefore, replacement and air bleeding of the clutch fluid must be carried out simultaneously with that of the brake fluid. Gr 21**
- **You must use new brake fluid (SAE J1703f or FMVSS No. 116 DOT3). Do not add different quality fluid or mineral oil (gas oil, engine oil, gear oil, automatic transmission fluid, etc.) to the clutch system, because this will cause the rubber parts of the clutch system and brake system to swell, resulting in faulty clutch operation, as well as ineffective braking and brake dragging.**
- **Do not allow foreign particles or water to become mixed into the brake fluid when refilling, because this will result in ineffective clutch and brake operations.**
- **If you use a mug for adding brake fluid, keep it solely for that purpose.**

CAUTION

- **Be careful not to splash brake fluid on related parts as this could damage the paintwork.**
- **Be sure to wipe off brake fluid immediately if you splash it on the paintwork.**

NOTE

- **Supply and maintain the brake fluid level to the “MAX” level of the fluid tank.**
- **Make sure you maintain brake fluid at the “MAX” level of the fluid tank since the brake fluid level drops during inspection.**

- Make sure you maintain brake fluid at the “MAX” level of the fluid tank since the brake fluid level drops during replacement.

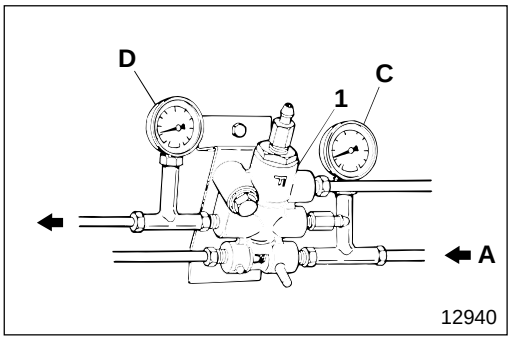

- Install oil pressure gauges **C**, **D** on inlet **A** of the master cylinder of the bypass valve, and outlet **B** of the bypass respectively.

- Bleed the brake system. P35-34

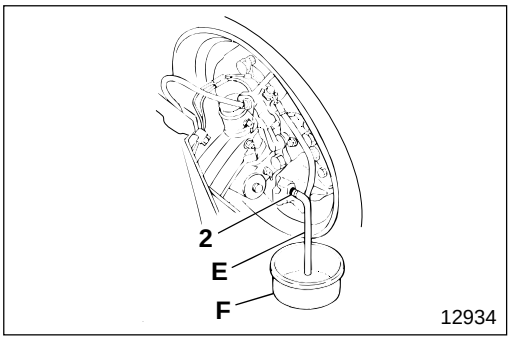

- Connect vinyl pipes **E** to air bleeders **2** on the left and right front disc brakes.
- Put the free ends of vinyl pipes **E** into containers **F**.
- Loosen air bleeder **2** by 90° to open the front brake system.

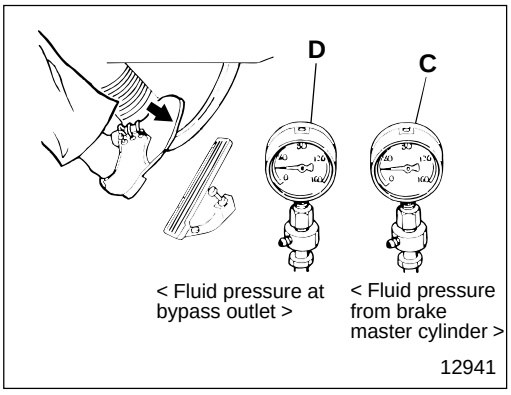

- Start the engine and let it idle.
- Depress the brake pedal gradually and read the gauges when the fluid pressure from the brake master cylinder equals that from the bypass outlet.
- If the measured value deviates from the standard value, replace bypass valve **1**.

BRAKE MASTER CYLINDER

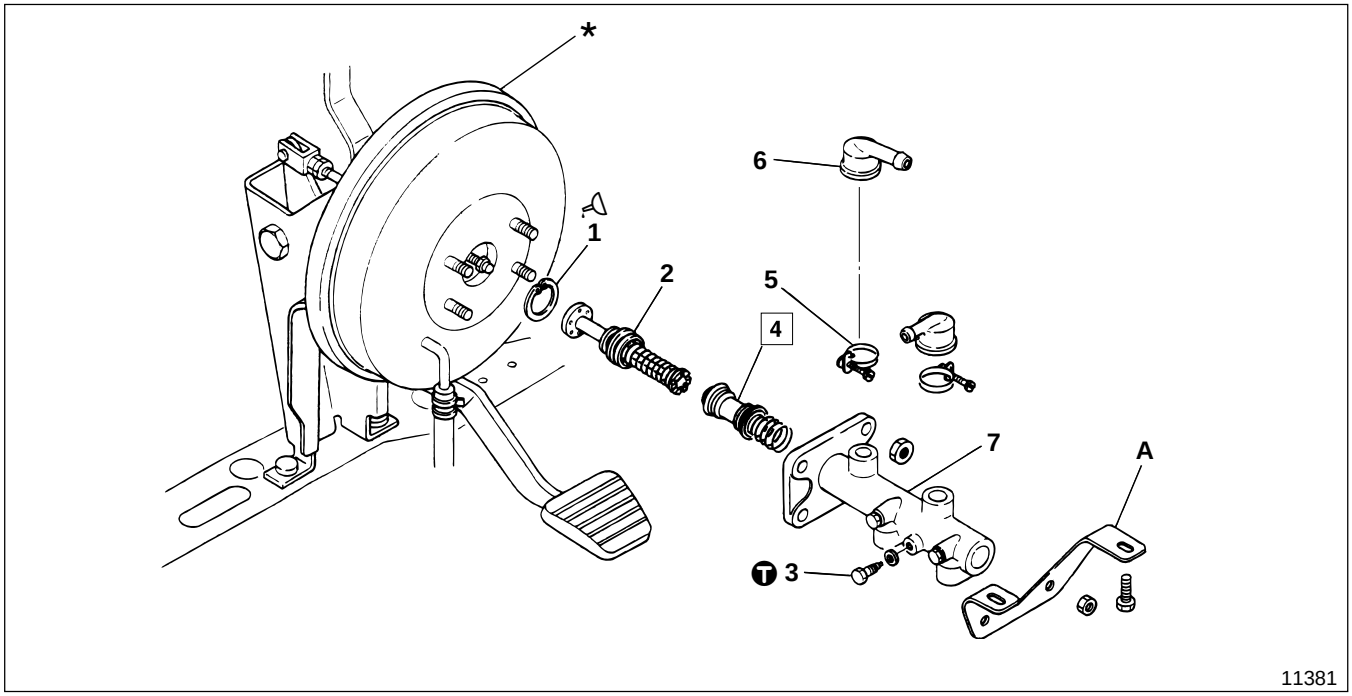

● **Disassembly sequence**

1 Retaining ring
2 Primary piston assembly
3 Set bolt
4 Secondary piston assembly
5 Clamp
6 Connector
7 Cylinder body

A : Master vac support
***** : Master vac and brake pedal assembly 🕮 P35-50

WARNING⚠

Be sure not to damage the inner surface of cylinder body 7, since it will cause air to get mixed in or will result in brake fluid leakage during the removal and installation of primary piston assembly 2 and secondary piston assembly 4.

● **Assembly sequence**

Follow the disassembly sequence in reverse.

Service standards

Unit : mm {in.}

Location	Maintenance item			Standard value (Basic diameter in [ ])	Limit	Remedy
2	Primary piston assembly spring load	FE639 (Installed length 37.7 {1.48})		99 to 120 N {22 to 27 lbf, 10.1 to 12.3 kgf}	93 N {21 lbf, 9.5 kgf}	Replace
		FE649 (Installed length 36.3 {1.43})		100 to 125 N {23 to 28 lbf, 10.5 to 12.7 kgf}	97 N {22 lbf, 9.9 kgf}	Replace
2, 4, 7	Clearance between primary and secondary piston assemblies and cylinder body		FE639	[30.16] 0.02 to 0.10 {[1.19] 0.00079 to 0.0039}	0.2 {0.0079}	Replace
			FE649	[31.75] 0.02 to 0.10 {[1.25] 0.00079 to 0.0039}	0.2 {0.0079}	Replace
4	Secondary piston assembly spring load	FE639 (Installed length 30.7 {1.21})		76 to 92 N {17 to 21 lbf, 7.8 to 9.4 kgf}	72 N {16 lbf, 7.3 kgf}	Replace
		FE649 (Installed length 31.0 {1.22})		76 to 92 N {17 to 21 lbf, 7.8 to 9.4 kgf}	72 N {16 lbf, 7.3 kgf}	Replace

Tightening torque

Unit : N·m {lbf.ft, kgf·m}

Location	Parts to be tightened	Tightening torque	Remarks
3	Set bolt	6.86 to 8.82 {5.1 to 6.5, 0.7 to 0.9}	—

Lubricant

Location	Points of application	Kinds	Quantity
1	Periphery of retaining ring	Rubber grease	As required

◆ Service procedure

4 Secondary piston assembly

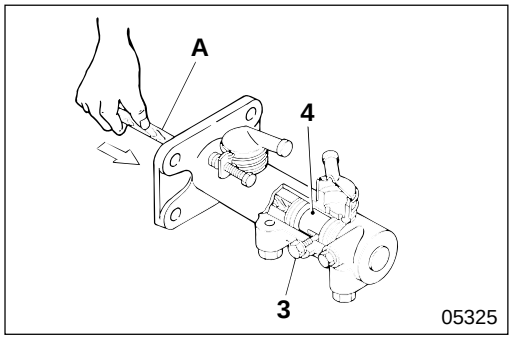

[Removal]

- Using rod **A**, push in secondary piston assembly **4**, then loosen set bolt **3**.

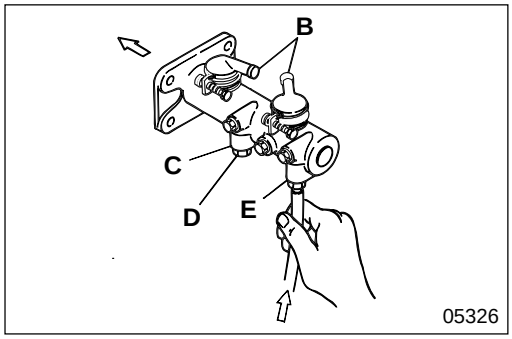

- Put plugs **D** into brake fluid filling port **B** and discharge port **C** that leads to the rear wheel brakes, then feed compressed air via discharge port **E** to the front wheel brakes to extract the secondary piston assembly.

WARNING⚠

You must apply compressed air gradually when you remove secondary piston assembly 4. If you applied compressed air strongly at one time, the secondary piston assembly would be violently ejected.

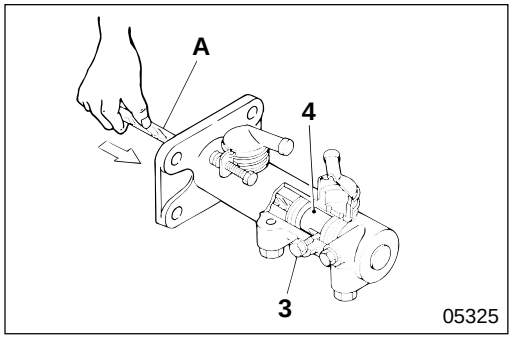

[Installation]

Using rod **A**, push in secondary piston assembly **4**, then tighten set bolt **3** at specified torque.

BRAKE PEDAL AND BRAKE BOOSTER (MASTER VAC)

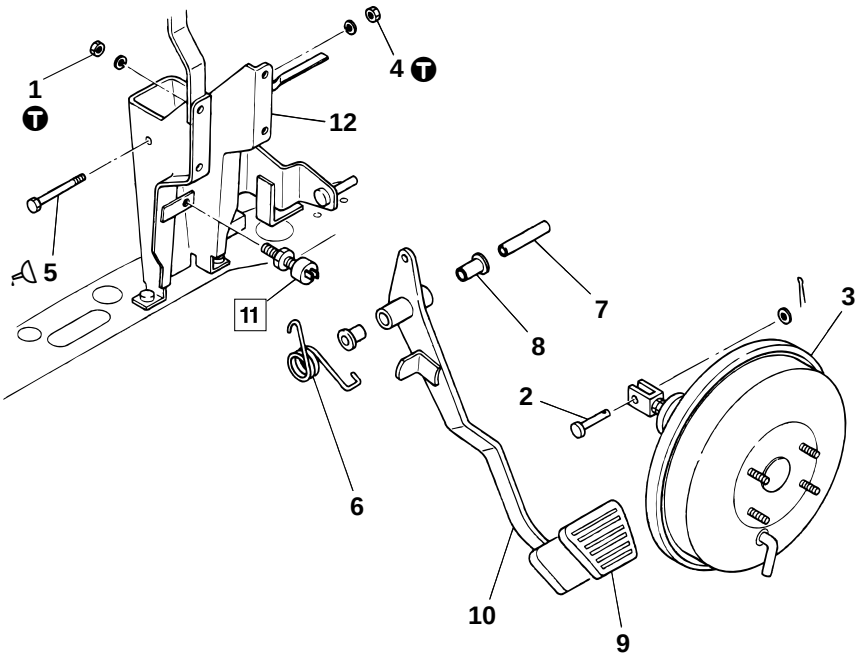

● **Disassembly sequence**

1 Nut
2 Clevis pin
3 Master vac
4 Nut
5 Bolt
6 Spring
7 Collar
8 Bushing
9 Pedal pad
10 Brake pedal
11 Stop lamp switch
Gr 54
12 Support assembly

NOTE

Do not disassemble master vac 3 because it is a non-disassemble type.

● **Assembly sequence**

Follow the disassembly sequence in reverse.

● **Adjustment after assembly** **P35-51**

Service standards

Unit : mm {in.}

Location	Maintenance item		Standard value (Basic diameter in [ ])	Limit	Remedy
7, 8	Clearance between collar and bushing		[16] 0.02 to 0.26 {0.00079 to 0.010}	0.5 {0.020}	Replace
10	Brake pedal	Height from pedal pad center to instrument panel underside	264 {10.4}	—	Adjust
		Full stroke	170 {6.69}	—	Adjust
10, 11	Clearance between brake pedal stopper and tip of stop lamp switch thread area		0 to 0.1 {0 to 0.0039}	—	Adjust

Tightening torque

Unit : N·m {lbf.ft, kgf·m}

Location	Parts to be tightened	Tightening torque	Remarks
1	Nut (Master vac mounting)	8.8 to 14 {6.5 to 10, 0.9 to 1.4}	—
4	Nut (Brake pedal mounting)	34.3 to 53.9 {25 to 40, 3.5 to 5.5}	—

Lubricant

Location	Points of application	Kinds	Quantity
5	Friction surface of bolt bushing	Chassis grease [NLGI No.1 (Ca soap)]	As required

◆ Service procedure

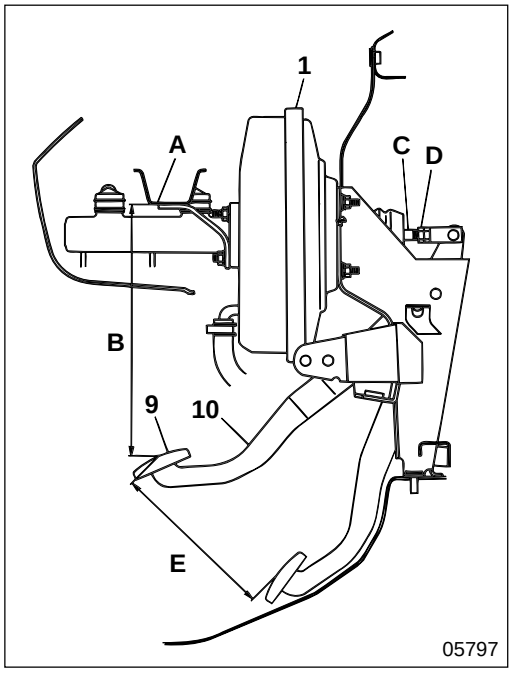

● **Adjustment after assembly**

- Adjustment of brake pedal installation height
  By turning operating rod **C** of master vac **1**, adjust height **B** from the center of pedal pad **9** to the underside of instrument panel **A** to the standard value, then secure in place using nut **D**.

WARNING

Make sure, when brake pedal 10 is depressed fully, that operating rod C of master vac 1 functions as the stopper and the pedal does not come to a stop by hitting against the floor panel, since this will reduce brake effectiveness.

- Inspection of brake pedal full stroke
  Make sure that full stroke **E** when brake pedal **10** is depressed fully conforms to the standard value.
  If there is any fault, adjust the installation height of the brake pedal.

- Inspection of play towards brake pedal Ⓜ Gr 35-36

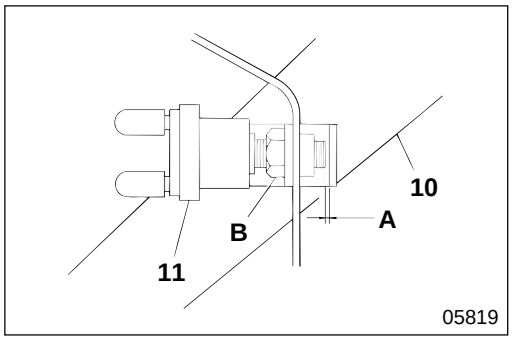

11 **Adjustment of stop lamp switch**

Turn stop lamp switch **11** to adjust clearance **A** between the top of the thread area of the stop lamp switch and the stopper of brake pedal **10** to the standard value, and fasten with lock nut **B**.

WARNING

Make sure, when brake pedal 10 is released, that stop lamp switch 11 does not stop the pedal, since this will cause the brake to drag.

FRONT WHEEL BRAKE < FE639 : DISC BRAKE >

This illustration shows the left side wheel disc brake viewed from the left front.

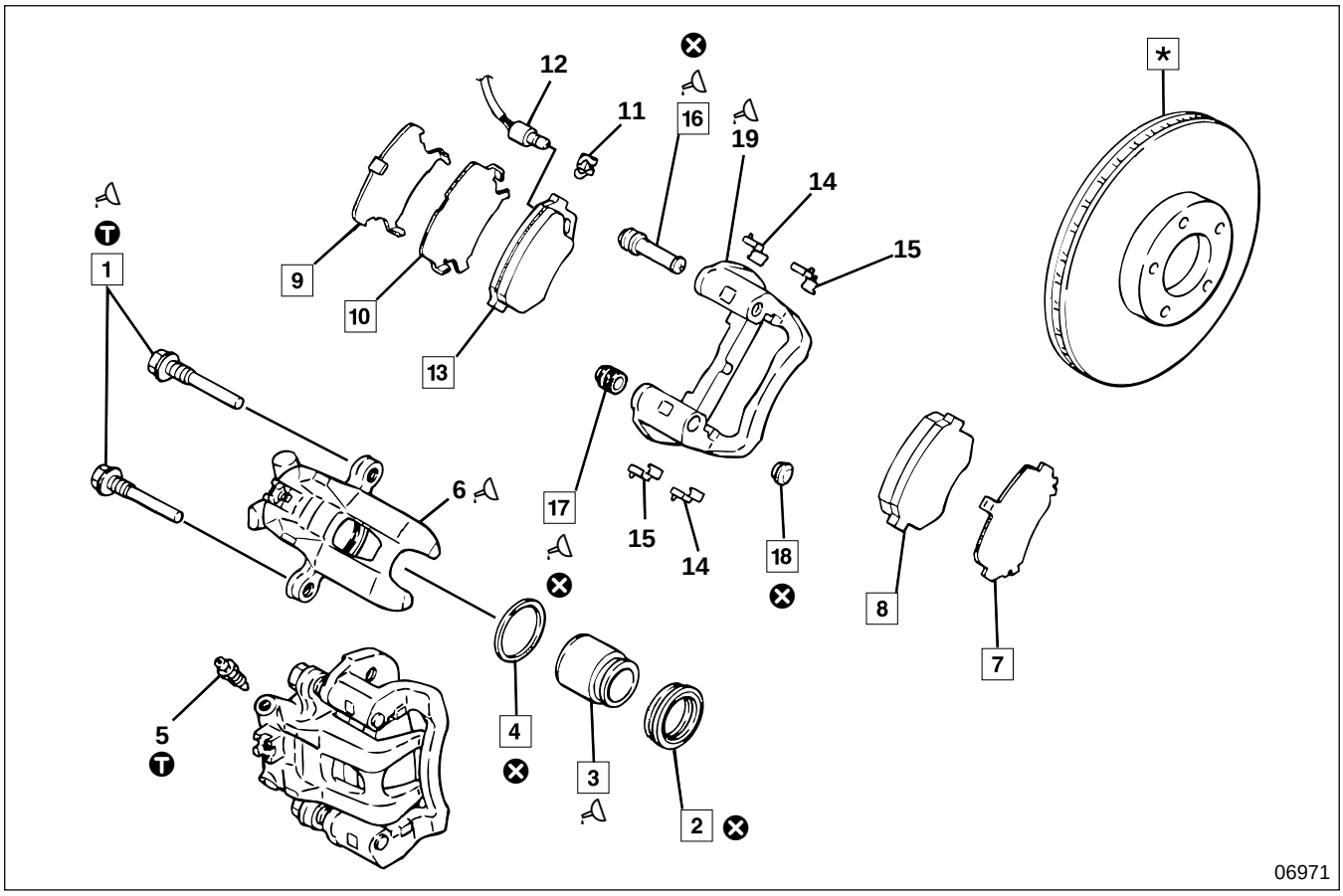

● **Disassembly sequence**

1 Slide pin bolt
2 Piston boot
3 Piston
4 Piston seal
5 Air bleeder (Lower)
6 Caliper
7 Outer shim
8 Outer pad
9 Inner shim A
10 Inner shim B
11 Clip (Upper)
12 Brake pad wear indicator (Upper)
13 Inner pad
14 Pad liner A
15 Pad liner B
16 Bushing
17 Pin boot
18 Cap
19 Torque member

*: Disc rotor Gr 26
⊗: Non-reusable parts

WARNING

Make sure that oil or grease does not stick to the surface of outer pad 8, inner pad 13 or disc rotor * since this will reduce brake effectiveness.

CAUTION

When assembling, use the grease contained in the seal kit.

● **Assembly sequence**

19→16→17→15→14
13→12→11→10→9
8→7
→1→18
6→5→4
3→2

Repair kit : Pad kit
Seal kit
Pad wear indicator kit

Service standards

Unit : mm {in.}

Location	Maintenance item		Standard value	Limit	Remedy
8, 13	Thickness of outer and inner pads		12 {0.47}	4 {0.16}	Replace
*	Disc rotor	Wobble (When installed on front axle)	0.07 {0.0028} or less	0.10 {0.0039}	Replace
		Thickness	20 {0.79}	18 {0.71}	Replace
—	Drag torque	Immediately after releasing brake pedal (Approximately 5 seconds later)	9.8 N·m {7.2 lbf.ft, 1.00 kgf·m}	—	Tangential force at hub bolt : 95 N {21 lbf, 9.7 kgf}
		After rotating disc rotor 10 turns	6.9 N·m {5.1 lbf.ft, 0.70 kgf·m}	—	Tangential force at hub bolt : 67 N {15 lbf, 6.8 kgf}

Tightening torque

Unit : N·m {lbf.ft, kgf·m}

Location	Parts to be tightened	Tightening torque	Remarks
1	Slide pin bolt	83.3 to 93.1 {61 to 69, 8.5 to 9.5}	Wet
5	Air bleeder	6.9 to 8.8 {5.1 to 8.8, 0.7 to 0.9}	Wet

Lubricant and fluid

Location	Points of application		Kinds	Quantity
1	Slide pin bolt	Periphery of slide	Rubber grease	As required
		Contact surfaces of bushing and pin boot	Rubber grease	As required
		Thread area	Brake fluid (SAE J1703f or FMVSS No.116 DOT3)	As required
3	Piston		Brake fluid (SAE J1703f or FMVSS No.116 DOT3)	As required
6	Cylinder lip of caliper		Rubber grease	As required
16	Bushing	Inner periphery	Rubber grease	As required
		Contact surface with slide pin bolt	Rubber grease	As required
17	Contact surfaces of pin boot and slide pin bolt		Rubber grease	As required
19	Torque member	Groove of pin boot	Rubber grease	As required
		Guide hole of main side	Rubber grease	As required
		Seat of cap	Rubber grease	As required

◆ Service procedure

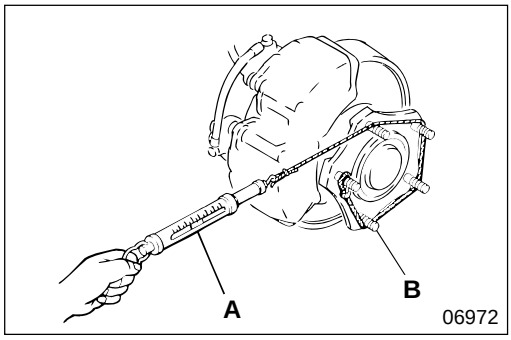

● Measurement of dragging torque

- Fasten spring balance **A** to hub bolt **B** and measure the tangential force.
- If the measured value is the specified value, the torque conforms to the standard value.
- If the measured value deviates from the specified value, inspect the friction surface between piston seal **4** and piston **3**.

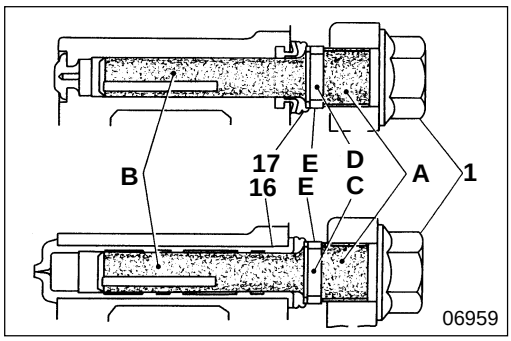

1 Installation of slide pin bolt

- Apply brake fluid to thread area **A** lightly, and apply grease to slide outer periphery **B**, bushing groove **C** or connecting surface **D** of pin boot **17**, then tighten slide pin bolt **1** at specified torque.
- Bleed bushing **16** or pin boot **17**.
- Check that seal **E** of bushing **16** or pin boot **17** is installed in bushing groove **C** of slide pin bolt **1** or connecting surface **D** of the pin boot.

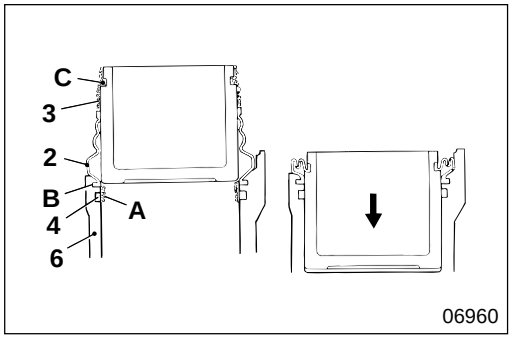

2 to 4 Installation of piston boot, piston and piston seal

- Apply brake fluid to the periphery of piston **3** to insert piston boot **2**.
- Spread the grease applied to piston seal **4** evenly and install it into the seal groove of caliper **6**.
- Apply grease to cylinder lip area **A** of caliper **6** evenly.
- Install the caliper side seal of piston boot **2** to the boot groove **B** of caliper **6**, then press in piston **3** slowly.
- Make sure that the piston side seal of piston boot **2** is installed in the boot groove **C** of piston **3**.

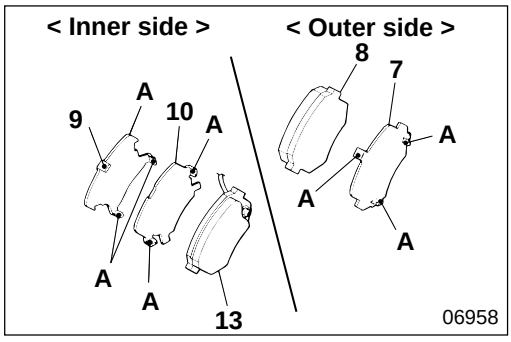

7 to 10 13 Installation of pad and shim

Make sure that you install the shims with pawls **A** facing the right way.

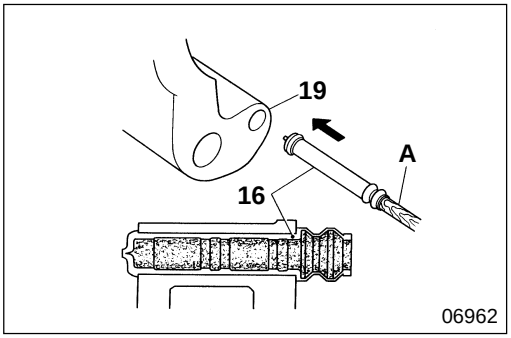

16 **Installation of bushing**

A : Push bar approximately ø8 mm {0.31 in.} long

After installation, apply grease to the whole inner periphery of bushing **16** and its contact surface with slide pin bolt **1**.

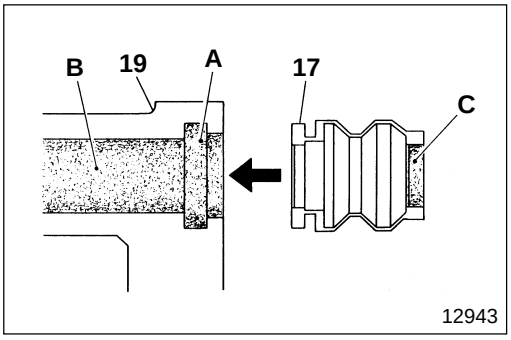

17 **Installation of pin boot**

- Apply grease to pin boot groove **A** of torque member **19**, the whole surface of guide hole **B**, and contact surface **C** between slide pin bolt **1** and pin boot **17**.
- Install pin boot **17**.

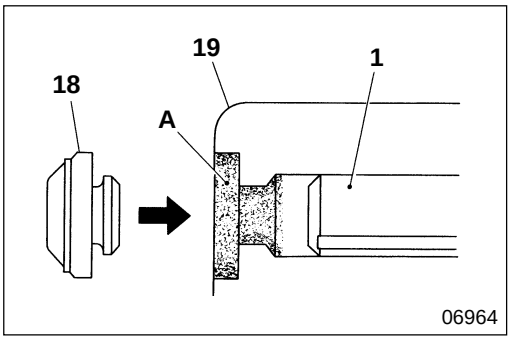

18 **Installation of cap**

- Apply grease to cap seat surface **A**.
- Install cap **18**.

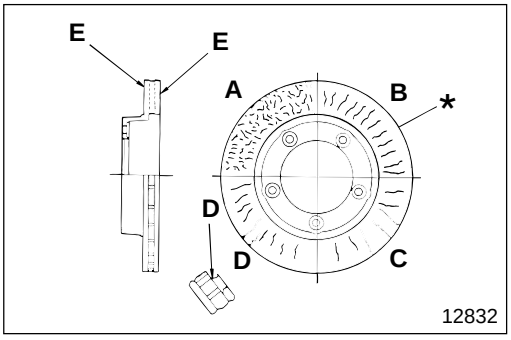

***** **Inspection of disc rotor**

- Inspect the friction surface **E** of disc rotor * visually.
- If any cracks are found, correct or replace disc rotor *.
  - **A** : Net pattern cracks (Correct or replace)
  - **B** : Radial cracks that do not reach the outer periphery (Correct or replace)
  - **C** : Radial cracks that have reached the outer periphery (Replace)
  - **D** : Through cracks (Replace)

FRONT WHEEL BRAKE < FE649 : DISC BRAKE >

This illustration shows the left side wheel disc brake viewed from the left front.

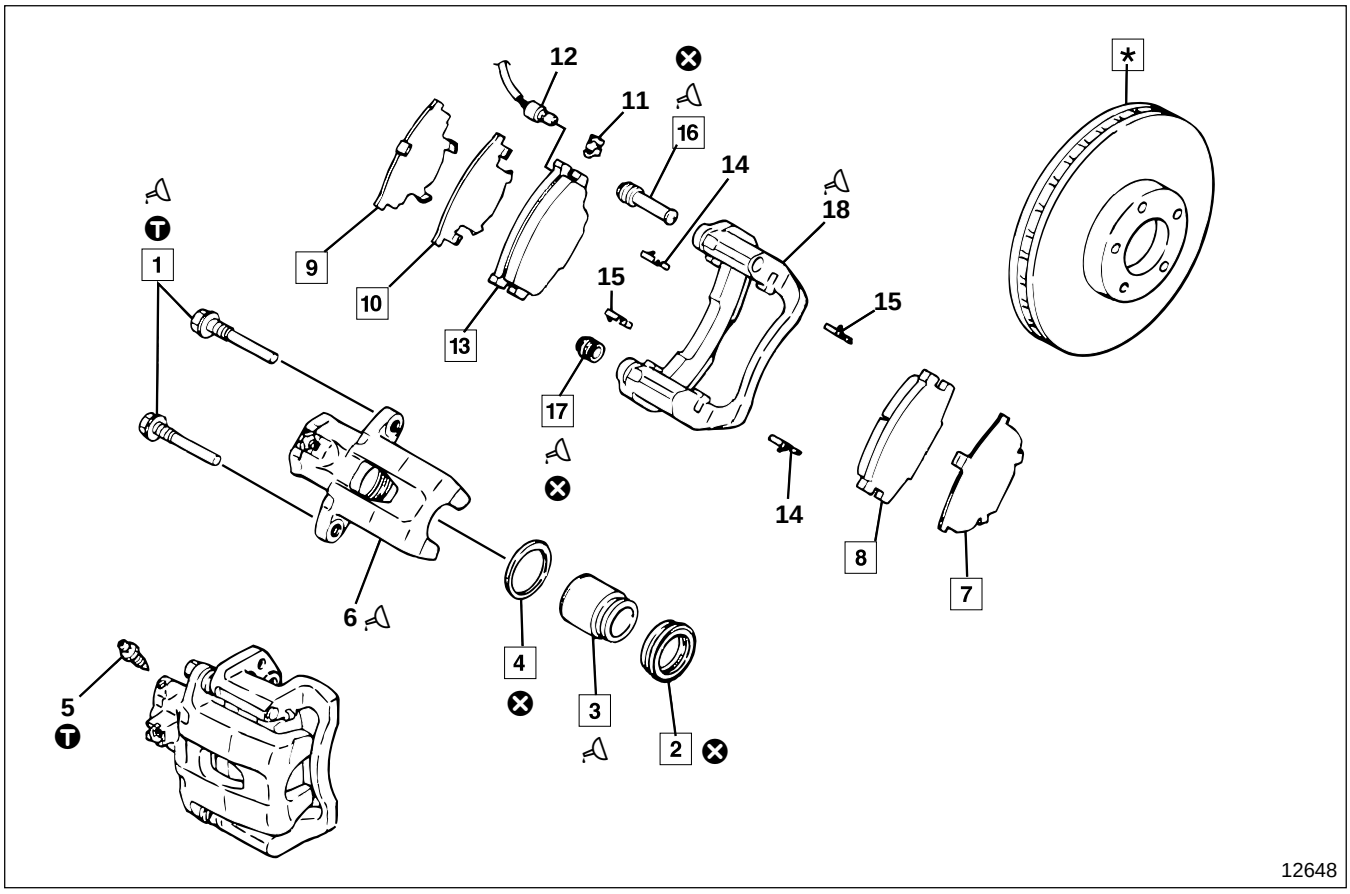

● **Disassembly sequence**

1 Slide pin bolt
2 Piston boot
3 Piston
4 Piston seal
5 Air bleeder (Lower)
6 Caliper
7 Outer shim
8 Outer pad
9 Inner shim A
10 Inner shim B
11 Clip (Upper)
12 Brake pad wear indicator (Upper)
13 Inner pad
14 Pad liner A
15 Pad liner B
16 Bushing
17 Pin boot
18 Torque member

***** : Disc rotor Gr 26
⊗ : Non-reusable parts

WARNING

Make sure that oil or grease does not stick to the surface of outer pad 8, inner pad 13 or disc rotor * since this will reduce brake effectiveness.

CAUTION

When assembling, use the grease contained in the seal kit.

● **Assembly sequence**

18→17→16→15→14
13→12→11→10→9
8→7
→1
6→5→4
3→2

Repair kit : Pad kit
Seal kit
Pad wear indicator kit

Service standards

Unit : mm {in.}

Location	Maintenance item		Standard value	Limit	Remedy
8, 13	Thickness of outer and inner pads		14 {0.55}	4 {0.16}	Replace
*	Disc rotor	Wobble (When installed on front axle)	0.07 {0.0028} or less	0.10 {0.0039}	Replace
		Thickness	40 {1.57}	38 {1.50}	Replace
—	Drag torque	Immediately after releasing brake pedal (Approximately 5 seconds later)	9.8 N·m {7.2 lbf.ft, 1.00 kgf·m}	—	Tangential force at hub bolt : 95 N {21 lbf, 9.7 kgf}
		After rotating disc rotor 10 turns	6.9 N·m {5.1 lbf.ft, 0.70 kgf·m}	—	Tangential force at hub bolt : 67 N {15 lbf, 6.8 kgf}

Tightening torque

Unit : N·m {lbf.ft, kgf·m}

Location	Parts to be tightened	Tightening torque	Remarks
1	Slide pin bolt	83.3 to 93.1 {61 to 69, 8.5 to 9.5}	Wet
5	Air bleeder	6.9 to 8.8 {5.1 to 8.8, 0.7 to 0.9}	Wet

Lubricant and fluid

Location	Points of application		Kinds	Quantity
1	Slide pin bolt	Periphery of slide	Rubber grease	As required
		Contact surfaces of bushing and pin boot	Rubber grease	As required
		Thread area	Brake fluid (SAE J1703f or FMVSS No.116 DOT3)	As required
3	Piston		Brake fluid (SAE J1703f or FMVSS No.116 DOT3)	As required
6	Cylinder lip of caliper		Rubber grease	As required
16	Bushing	Inner periphery	Rubber grease	As required
		Contact surface with slide pin bolt	Rubber grease	As required
17	Contact surfaces of pin boot and slide pin bolt		Rubber grease	As required
18	Torque member	Groove of pin boot	Rubber grease	As required
		Guide hole of main side	Rubber grease	As required

◆ Service procedure

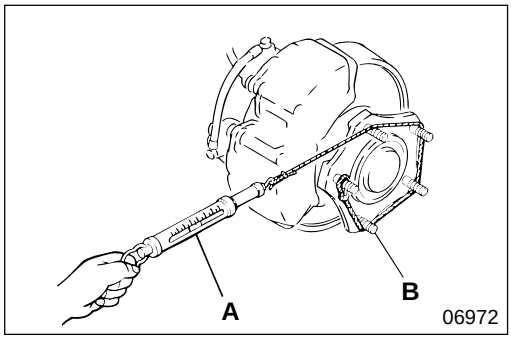

● Measurement of dragging torque

- Fasten spring balance **A** to hub bolt **B** and measure the tangential force.
- If the measured value is the specified value, the torque conforms to the standard value.
- If the measured value deviates from the specified value, inspect the friction surface between piston seal **4** and piston **3**.

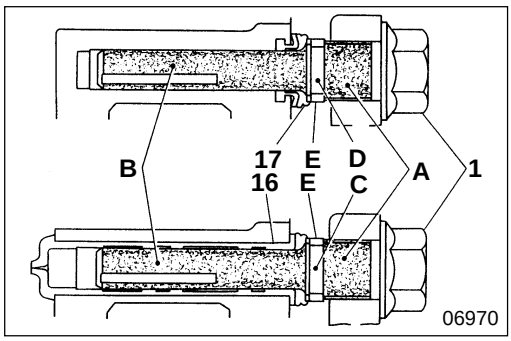

1 Installation of slide pin bolt

- Apply brake fluid to thread area **A** lightly, and apply grease to slide outer periphery **B**, bushing groove **C** or connecting surface **D** of pin boot **17**, then tighten slide pin bolt **1** at specified torque.
- Bleed bushing **16** or pin boot **17**.
- Check that seal **E** of bushing **16** or pin boot **17** is installed in bushing groove **C** of slide pin bolt **1** or connecting surface **D** of the pin boot.

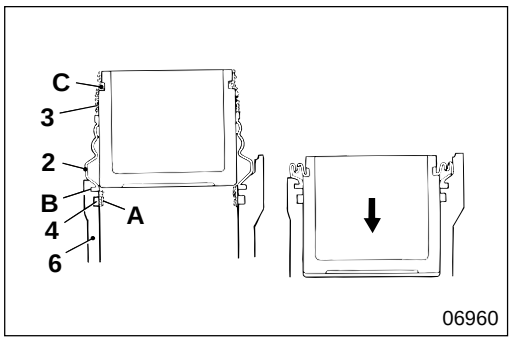

2 to 4 Installation of piston boot, piston and piston seal

- Apply brake fluid to the periphery of piston **3** to insert piston boot **2**.
- Spread the grease applied to piston seal **4** evenly and install it into the seal groove of caliper **6**.
- Apply grease to cylinder lip area **A** of caliper **6** evenly.
- Install the caliper side seal of piston boot **2** to the boot groove **B** of caliper **6**, then press in piston **3** slowly.
- Make sure that the piston side seal of piston boot **2** is installed in the boot groove **C** of piston **3**.

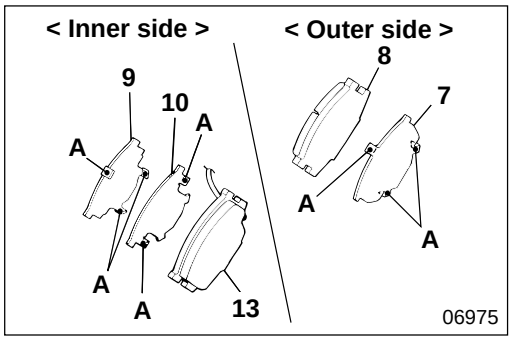

7 to 10 13 Installation of pad and shim

Make sure that you install the shims with pawls **A** facing the right way.

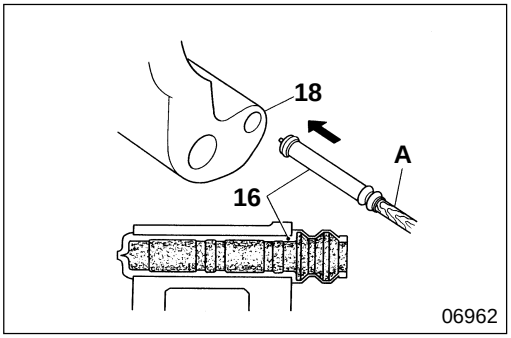

16 **Installation of bushing**

A : Push bar approximately ø8 mm {0.31 in.} long

After installation, apply grease to the whole inner periphery of bushing **16** and its contact surface with slide pin bolt **1**.

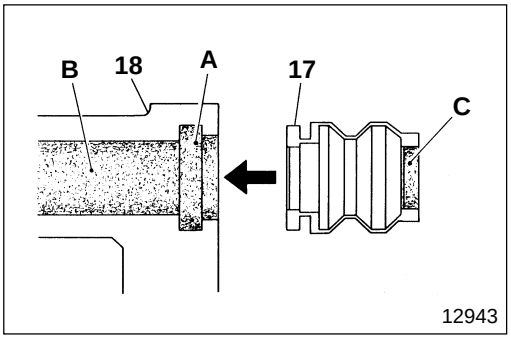

17 **Installation of pin boot**

- Apply grease to pin boot groove **A** of torque member **18**, the whole surface of guide hole **B**, and contact surface **C** between slide pin bolt **1** and pin boot **17**.
- Install pin boot **17**.

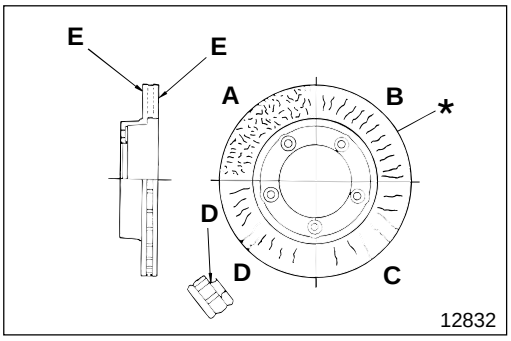

***** **Inspection of disc rotor**

- Inspect the friction surface **E** of disc rotor ***** visually.
- If any cracks are found, correct or replace disc rotor *****.
  - **A** : Net pattern cracks (Correct or replace)
  - **B** : Radial cracks that do not reach the outer periphery (Correct or replace)
  - **C** : Radial cracks that have reached the outer periphery (Replace)
  - **D** : Through cracks (Replace)

REAR WHEEL BRAKE < FE639 : DRUM BRAKE >

Rear Wheel Brake Assembly

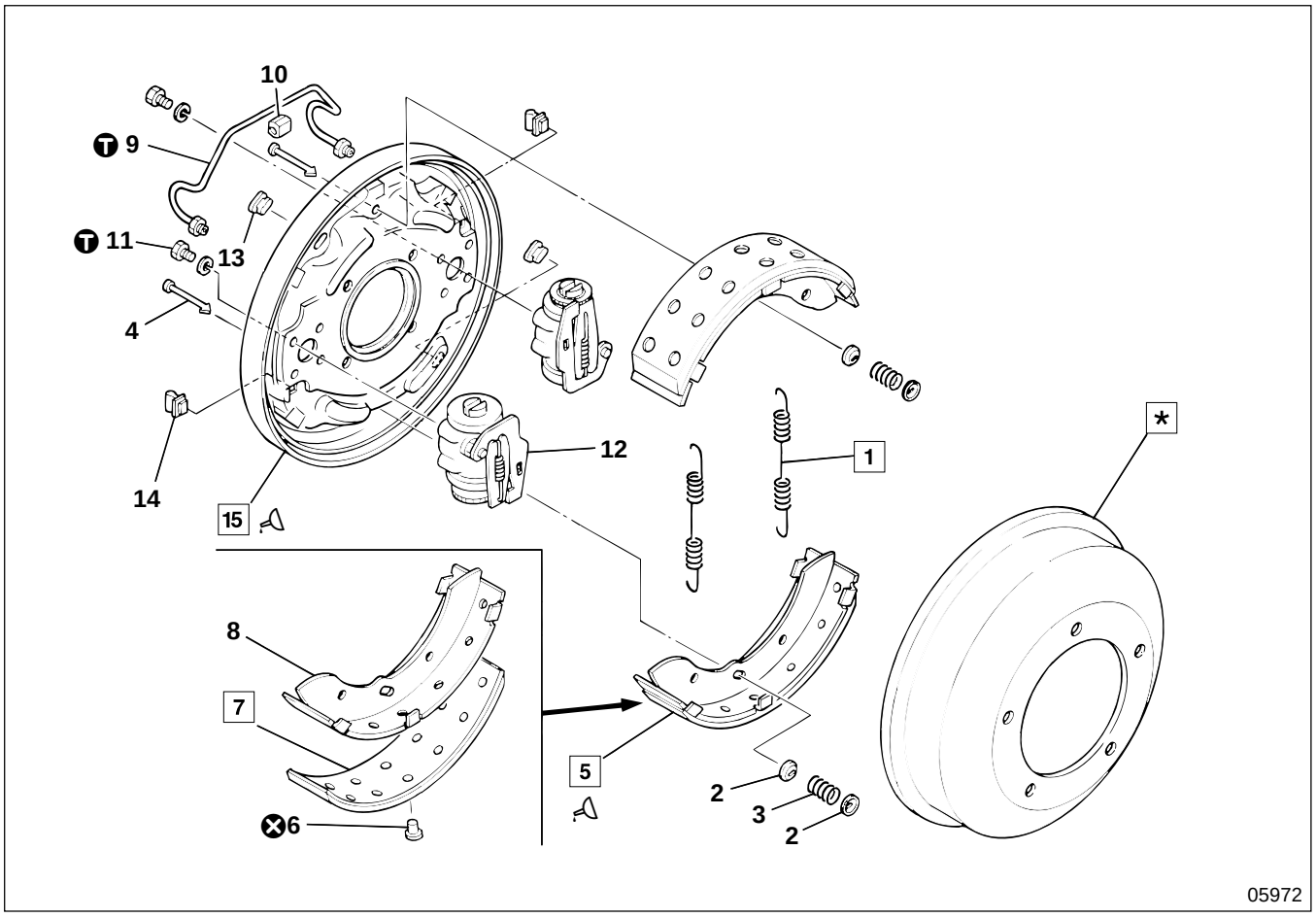

● **Disassembly sequence**

1 Return spring
2 Shoe hold down cup
3 Shoe hold down spring
4 Shoe hold down pin
5 Brake shoe assembly
6 Rivet
7 Brake lining
8 Brake shoe
9 Pipe assembly
10 Spacer
11 Bolt
12 Wheel cylinder assembly 📖 P35-65
13 Cover
14 Cover
15 Backing plate

***** : Brake drum Gr 27

WARNING⚠

Make sure that oil or grease does not stick to the lining surface of brake shoe assembly 5 and the inner surface of brake drum * since this will reduce brake effectiveness.

CAUTION⚠

- **Be sure, when replacing brake shoe assembly 5, to wash and apply rubber grease to the adjuster and adjuster screw of wheel cylinder assembly 12 since particles of brake lining 7 are clogged into them. 📖 P35-65**

● **Assembly sequence**

Follow the disassembly sequence in reverse.

● **Initial adjustment of brake shoe clearance after installation 📖 P35-61**

Service standards

Unit : mm {in.}

Location	Maintenance item		Standard value		Limit	Remedy
1	Return spring load (Installed length 190 {7.48})		195 to 235 N {44 to 53 lbf, 19.8 to 24.2 kgf}		175 N {40 lbf, 18 kgf}	Replace
5	Brake shoe assembly (Thickness of brake lining)		10.0 {0.39}		4.0 {0.16} (Side shoulder means wear limit)	Replace brake lining
*	Brake drum	Inner diameter	320 {12.60}	*321 {12.64}	322 {12.68} or replace	Correct
		Cylindrical accuracy	0.05 {0.0020}		0.2 {0.0079}	Correct or replace

*Refers to the correction limit.

Tightening torque

Unit : N·m {lbf.ft, kgf·m}

Location	Parts to be tightened	Tightening torque	Remarks
9	Pipe assembly	12.75 to 14.71 {9.4 to 11, 1.3 to 1.5}	—
11	Bolt (Wheel cylinder assembly mounting)	37.27 to 49.03 {27 to 36, 3.8 to 5.0}	—

Lubricant

Location	Points of application	Kinds	Quantity
5, 15	Contact surfaces between backing plate ledge and shoe rim, wheel cylinder assembly anchor area of shoe web, and adjusting screw contact point	Brake grease	As required

◆ Service procedure

● **Initial adjustment of brake shoe clearance after installation**

Turning the adjuster of wheel cylinder assembly **12** in arrow direction expands brake shoe assembly **5**, narrowing the clearance between brake drum * and brake lining **7**.

- Jack up the vehicle to make sure that the wheel hub bearing has no play. If there is any play, correct it. Gr 27
- Remove covers **13** and **14**.

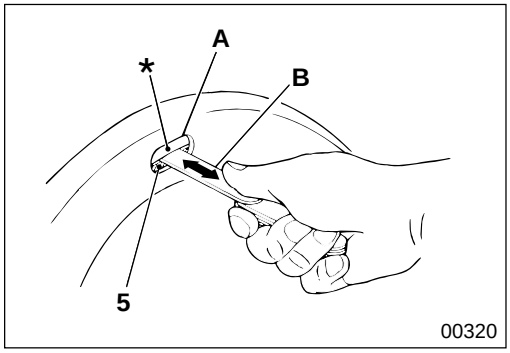

- Adjust the brake shoe clearance as follows, so that 0.3 mm {0.012 in.} feeler gauge **B** can be inserted or extracted through check hole **A**, between brake drum * and brake lining **7** with a little resistance.

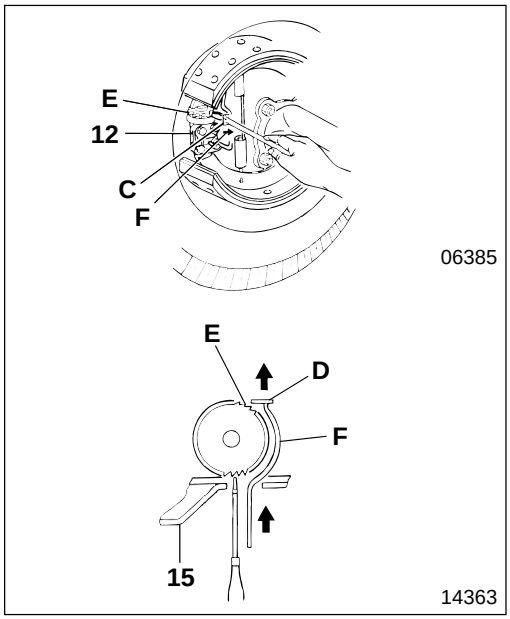

- To increase brake shoe clearance
  - Insert a wire (approximately ø2 mm {0.079 in.}) into the adjusting hole **C** and lift adjusting lever **D** of wheel cylinder assembly **12**.
  - Turn adjuster **E** of wheel cylinder assembly **12**, through adjusting hole **C**, in the opposite direction to arrow **F** on backing plate **15**.
- To decrease brake shoe clearance
  Turn adjuster **E** in the arrow **F** direction marked on backing plate **15** through adjusting hole **C**.
- Extract the feeler gauge and depress the brake pedal two or three times fully, then the specified value brake shoe clearance can be obtained.
- Insert a 0.2 mm {0.0079 in.} feeler gauge through check hole **A** and make sure that it can be inserted or extracted with a little resistance. If there is any fault, disassemble and inspect wheel cylinder assembly **12**. P35-65

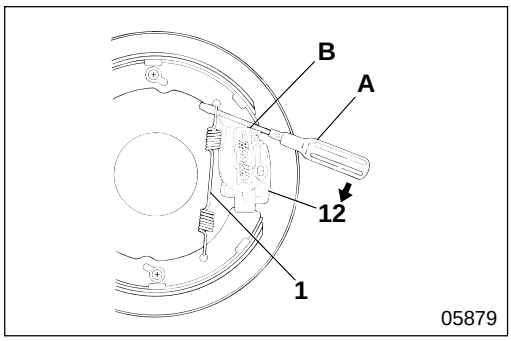

1 **Return spring**

[Removal]
To remove return spring **1**, place screwdriver **A** into the hook of the return spring, then pry and remove the return spring making use of wheel cylinder assembly **12** adjusting screw **B** as a fulcrum.

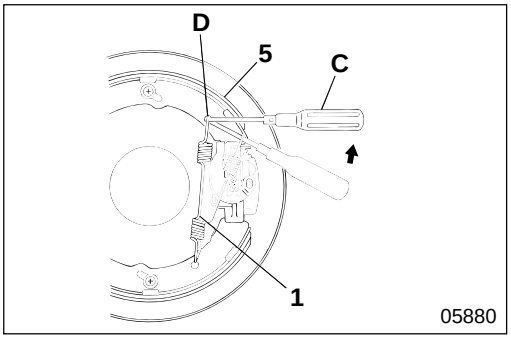

[Installation]
Insert a small cross-point screwdriver **C** into the hook of return spring **1**, insert the tip of the screwdriver into return spring installation hole **D** of brake shoe assembly **5** to pry on the return spring.

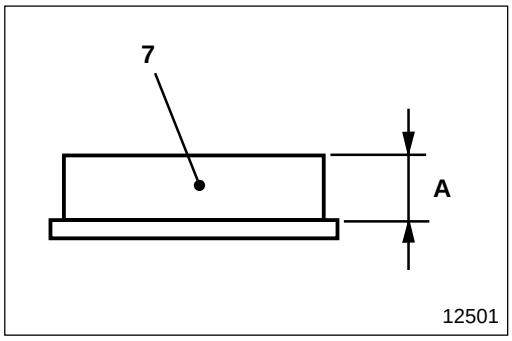

5 **Inspection of brake shoe assembly**

If thickness **A** of brake lining **7** is lower than the limit, replace the brake lining on the same axle as a unit.

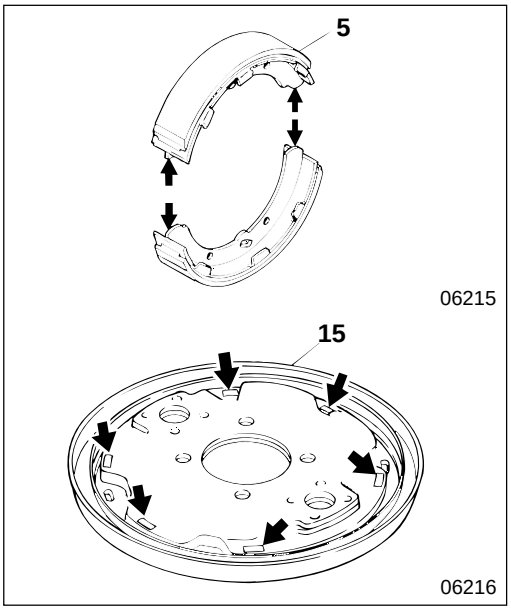

5 **15** **Installation of brake shoe assembly and backing plate**

Apply grease to the points as illustrated, and install brake shoe assembly **5** and backing plate **15**.

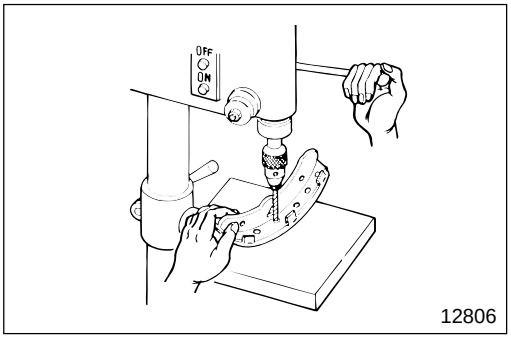

7 **Brake lining**

[Removal]

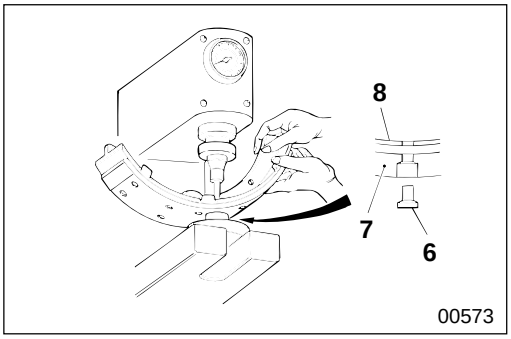

[Installation]

- Clean the mounting surfaces of brake lining **7** and brake shoe **8** with cleaning fluid and dry them.
- Insert rivets **6** from brake lining **7** side, and caulk the rivets at the specified load so that there is no clearance between brake shoe **8** and the brake lining.

  Caulking load for rivets : 21±1 kN {4630±220 lbf, 2100±100 kgf}

- Make sure that you inspect contact with the inner surface of brake drum * after you replace brake linings **7**. If contact is incorrect, correct with the brake assembled.

WARNING⚠

Do not leave lubricant on the surface of brake lining 7 because this reduces braking performance.

CAUTION⚠

Make sure that the type of brake linings 7 you fit are suitable for the intended use of the vehicle. Make sure that you fit identical size and color coated linings on the left and right sides of one shaft.

*** Correction of brake drum**

If the cylindrical accuracy of brake drum * is higher than the limit, or there are seams, correct by machining to the correction limit. Machining of the brake drum should be done with the wheel hub attached as an integral part.

Wheel Cylinder Assembly

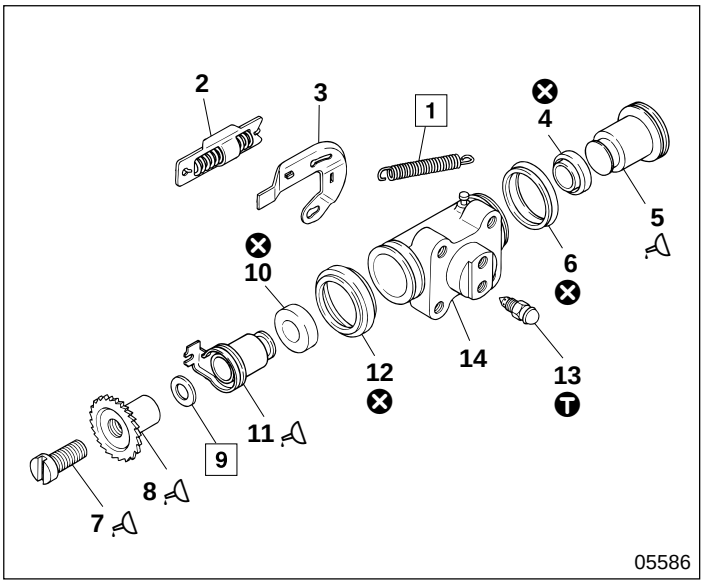

● **Disassembly sequence**

1 Spring
2 Spring and fitting
3 Lever
4 Piston cup
5 Piston
6 Boot
7 Adjusting screw
8 Adjuster
9 Washer
10 Piston cup
11 Piston
12 Boot
13 Bleeder screw
14 Body

⊗ : Non-reusable parts

● **Assembly sequence**

14→13→12→11→10→9→8→7→6→5→4→3→2→1

Repair kit : Wheel cylinder kit

Service standards

Unit : mm {in.}

Location	Maintenance item	Standard value (Basic diameter in [ ])	Limit	Remedy
5, 11, 14	Clearance between piston and body	[28.57 {1.12}] 0.02 to 0.08 {0.00079 to 0.0031}	0.2 {0.0079}	Replace piston

Ⓣ Tightening torque

Unit : N·m {lbf.ft, kgf·m}

Location	Parts to be tightened	Tightening torque	Remarks
13	Bleeder screw	6.9 to 8.8 {5.1 to 6.5, 0.7 to 0.9}	—

Lubricant

Location	Points of application	Kinds	Quantity
5, 7, 8, 11	Thread areas of adjusting screw and adjuster, friction area of piston, and friction area of adjuster	Rubber grease	As required

◆ Service procedure

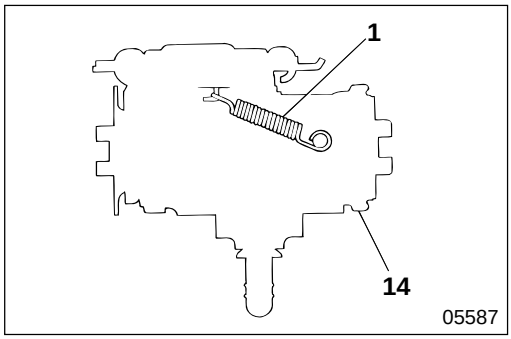

1 **Installation of spring**

Install the closed hook of spring **1** on body **14** side.

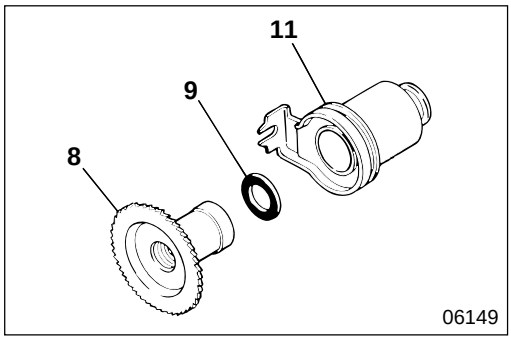

9 **Installation of washer**

Install the washer with its black side facing adjuster **8**.

M E M O

REAR WHEEL BRAKE < FE649 : DISC BRAKE >

This illustration shows the left side wheel disc brake viewed from the left front.

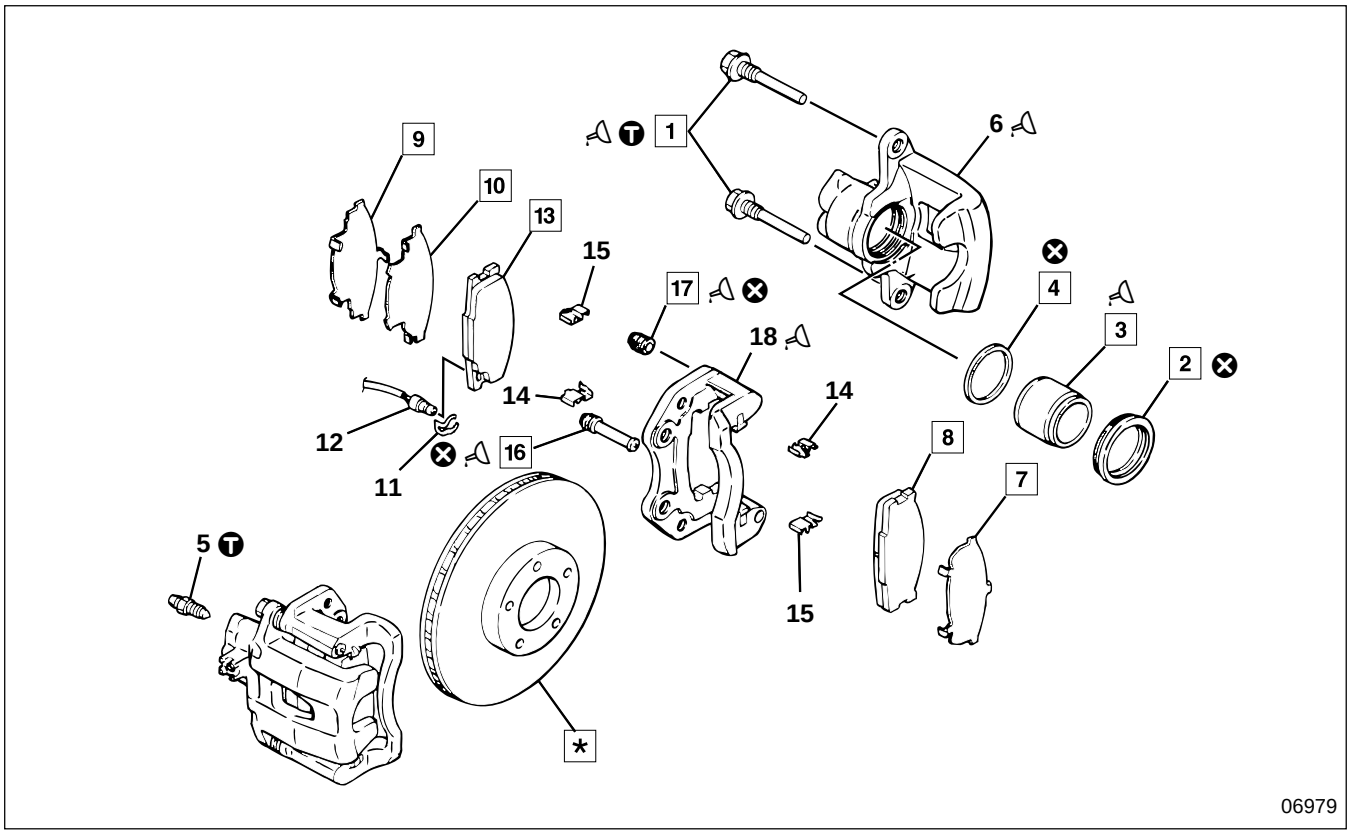

● **Disassembly sequence**

1 Slide pin bolt
2 Piston boot
3 Piston
4 Piston seal
5 Air bleeder
6 Caliper
7 Outer shim
8 Outer pad
9 Inner shim A
10 Inner shim B
11 Clip
12 Brake pad wear indicator
13 Inner pad
14 Pad liner A
15 Pad liner B
16 Bushing
17 Pin boot
18 Torque member

***** : Disc rotor Gr 27
⊗ : Non-reusable parts

WARNING

Make sure that oil or grease does not stick to the surface of outer pad 8, inner pad 13 or disc rotor * since this will reduce brake effectiveness.

CAUTION

When assembling, use the grease contained in the seal kit.

● **Assembly sequence**

18→17→16→15→14
13→12→11→10→9
8→7
6→5→4
3→2
→1

Repair kit : Pad kit
Seal kit
Pad wear indicator kit

Service standards

Unit : mm {in.}

Location	Maintenance item		Standard value	Limit	Remedy
8, 13	Thickness of outer and inner pads		14 {0.55}	4 {0.16}	Replace
*	Disc rotor	Wobble (When installed on rear axle)	0.07 {0.0028} or less	0.10 {0.0039}	Replace
		Thickness	40 {1.57}	38 {1.50}	Replace
—	Drag torque	Immediately after releasing brake pedal (Approximately 5 seconds later)	9.8 N·m {7.2 lbf.ft, 1.00 kgf·m}	—	Tangential force at hub bolt : 88 N {20 lbf, 9 kgf}
		After rotating disc rotor 10 turns	6.9 N·m {5.1 lbf.ft, 0.70 kgf·m}	—	Tangential force at hub bolt : 62 N {14 lbf, 6.3 kgf}

Tightening torque

Unit : N·m {lbf.ft, kgf·m}

Location	Parts to be tightened	Tightening torque	Remarks
1	Slide pin bolt	83.3 to 93.1 {61 to 69, 8.5 to 9.5}	Wet
5	Air bleeder	6.9 to 8.8 {5.1 to 8.8, 0.7 to 0.9}	Wet

Lubricant and fluid

Location	Points of application		Kinds	Quantity
1	Slide pin bolt	Periphery of slide	Rubber grease	As required
		Contact surfaces of bushing and pin boot	Rubber grease	As required
		Thread area	Brake fluid (SAE J1703f or FMVSS No.116 DOT3)	As required
3	Piston		Brake fluid (SAE J1703f or FMVSS No.116 DOT3)	As required
6	Cylinder lip of caliper		Rubber grease	As required
16	Bushing	Inner periphery	Rubber grease	As required
		Contact surface with slide pin bolt	Rubber grease	As required
17	Contact surfaces of pin boot and slide pin bolt		Rubber grease	As required
18	Torque member	Groove of pin boot	Rubber grease	As required
		Guide hole of main side	Rubber grease	As required

◆ Service procedure

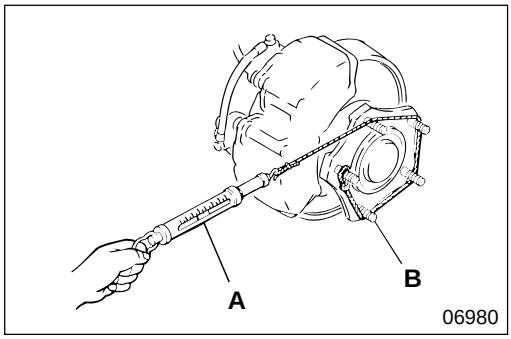

● Measurement of dragging torque

- Fasten spring balance **A** to hub bolt **B** and measure the tangential force.
- If the measured value is the specified value, the torque conforms to the standard value.
- If the measured value deviates from the specified value, inspect the friction surface between piston seal **4** and piston **3**.

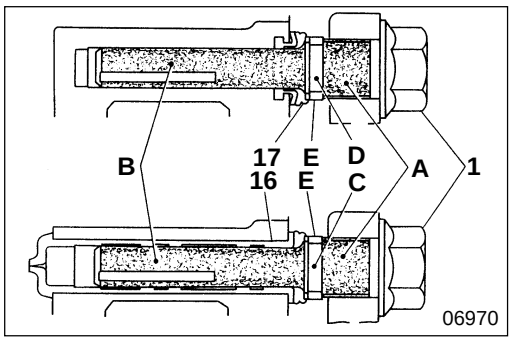

1 Installation of slide pin bolt

- Apply brake fluid to thread area **A** lightly, and apply grease to slide outer periphery **B**, bushing groove **C** or connecting surface **D** of pin boot **17**, then tighten slide pin bolt 1 at specified torque.
- Bleed bushing **16** or pin boot **17**.
- Check that seal **E** of bushing **16** or pin boot **17** is installed in bushing groove **C** of slide pin bolt **1** or connecting surface **D** of the pin boot.

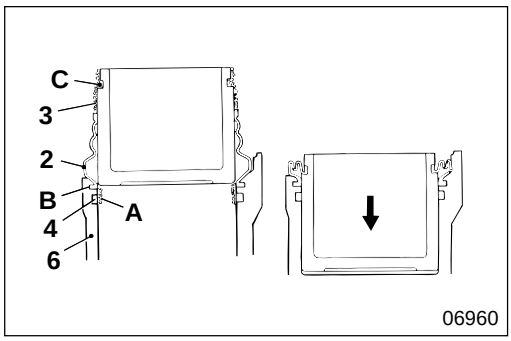

2 to 4 Installation of piston boot, piston and piston seal

- Apply brake fluid to the periphery of piston **3** to insert piston boot **2**.
- Spread the grease applied on piston seal **4** evenly to install it into the seal groove of caliper **6**.
- Apply grease to cylinder lip area **A** of caliper **6** evenly.
- Install the caliper side seal of piston boot **2** to the boot groove **B** of caliper **6**, then press in piston **3** slowly.
- Make sure that the piston side seal of piston boot **2** is installed in the boot groove **C** of piston **3**.

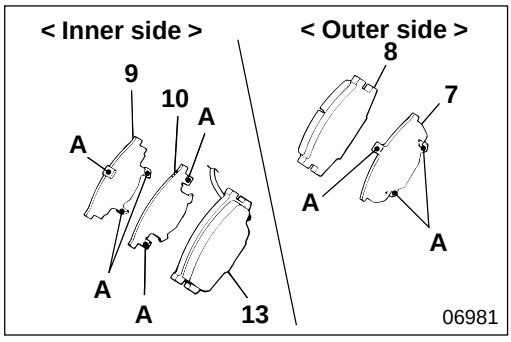

7 to 10 13 Installation of pad and shim

Make sure that you install the shims with pawls **A** facing the right way.

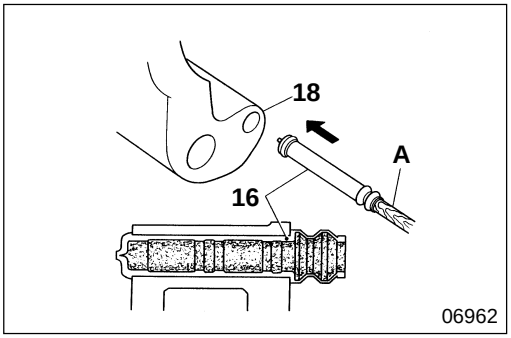

16 **Installation of bushing**

A : Push bar approximately ø8 mm {0.31 in.} long

After installation, apply grease to the whole inner periphery of bushing **16** and its contact surface with slide pin bolt **1**.

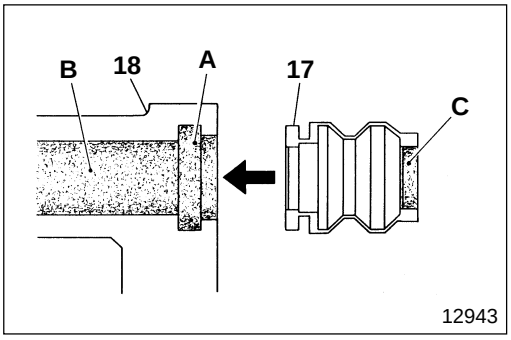

17 **Installation of pin boot**

- Apply grease to pin boot groove **A** of torque member **18**, the whole surface of guide hole **B**, and contact surface **C** between slide pin bolt **1** and pin boot **17**.
- Install pin boot **17**.

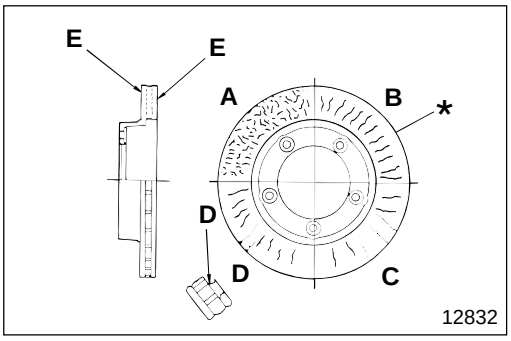

***** **Inspection of disc rotor**

- Inspect the friction surface **E** of disc rotor ***** visually.
- If any cracks are found, correct or replace disc rotor *****.
  - **A** : Net pattern cracks (Correct or replace)
  - **B** : Radial cracks that do not reach the outer periphery (Correct or replace)
  - **C** : Radial cracks that have reached the outer periphery (Replace)
  - **D** : Through cracks (Replace)

VACUUM PUMP

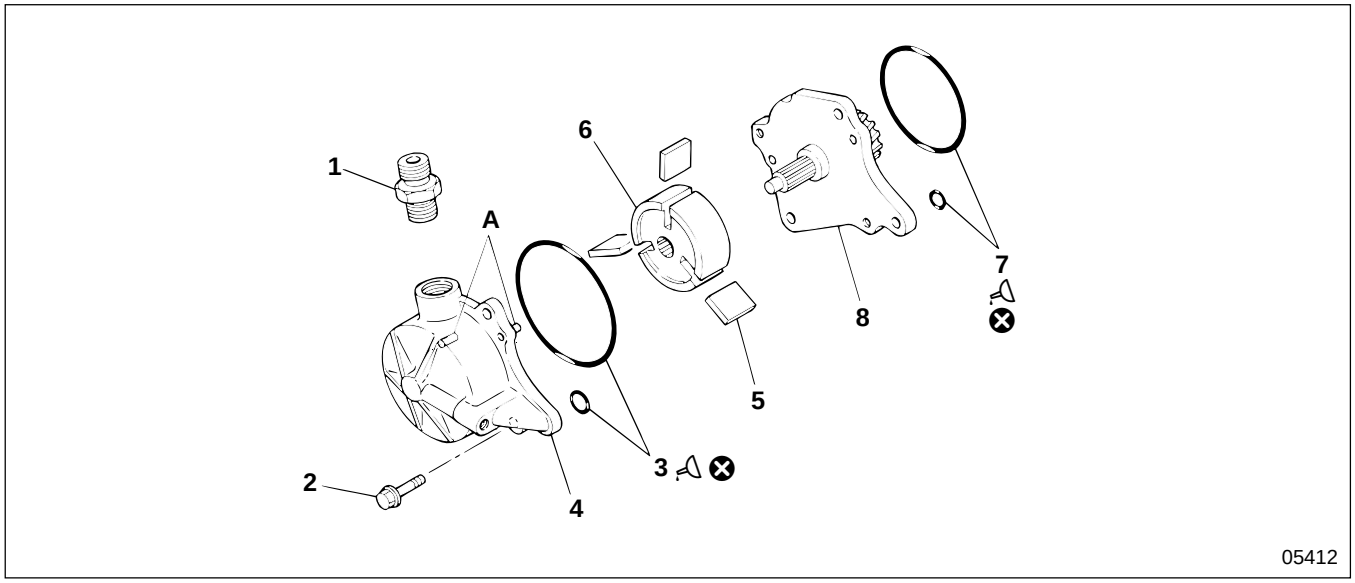

● **Disassembly sequence**

1 Check valve assembly
2 Bolt
3 O-ring
4 Cylinder
5 Vane
6 Rotor
7 O-ring
8 Flange

A : Positioning pin
⊗ : Non-reusable parts

● **Assembly sequence**

Follow the disassembly sequence in reverse.

Service standards

Location	Maintenance item		Standard value	Limit	Remedy
—	Degree of vacuum of pump	60 cm^3 {3.66 cu. in.} : Engine speed 1500 rpm	93.3 kPa {27.6 in. Hg, 700 mmHg}	—	Replace
		90 cm^3 {5.49 cu. in.} : Engine speed 3000 rpm	90.6 kPa {26.8 in. Hg, 680 mmHg} or more	—	Replace

Lubricant

Location	Points of application	Kinds	Quantity
3, 7	Periphery of the O-ring	Engine oil	As required

M E M O

LOAD SENSING VALVE

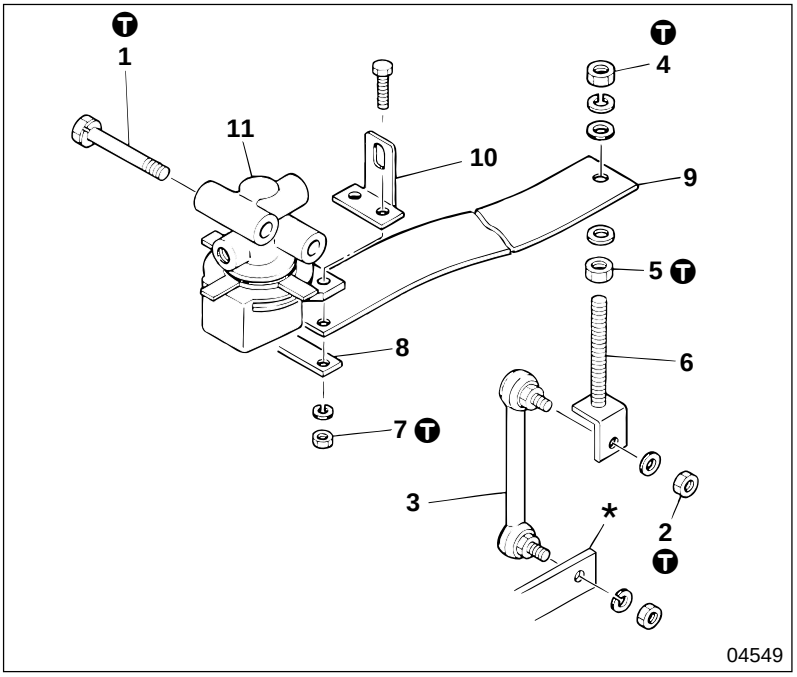

● **Disassembly sequence**

1 Bolt
2 Nut
3 Rod assembly
4 Nut
5 Nut
6 Bracket and bolt assembly
7 Nut
8 Plate
9 Leaf spring
10 Bracket
11 Load sensing valve

***** : Rear axle bracket

NOTE

Do not disassemble load sensing valve 11 because it is a non-disassemble type.

● **Assembly sequence**

Follow the disassembly sequence in reverse.

Ⓣ Tightening torque

Unit : N·m {lbf.ft, kgf·m}

Location	Parts to be tightened	Tightening torque	Remarks
1	Bolt (Load sensing valve mounting)	16 to 25 {12 to 18, 1.68 to 2.52}	—
2	Nut (Rod assembly mounting)	5.9 to 7.9 {4.3 to 5.8, 0.6 to 0.8}	—
4, 5	Nut (Leaf spring adjusting)	11.8 to 17.6 {8.7 to 13, 1.2 to 1.8}	—
7	Nut (Leaf spring mounting)	5.9 to 7.9 {4.3 to 5.8, 0.6 to 0.8}	—

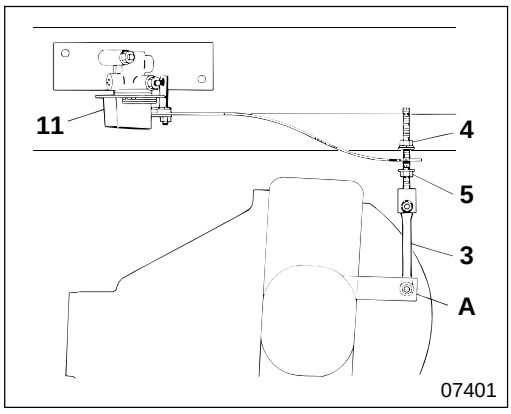

◆ Service procedure

[Installation]

- Install load sensing valve **11** on the vehicle when it is unloaded and mount ball joint part **A** of rod assembly **3** to rear axle bracket *****.
- Loosen nut **4** and nut **5** and adjust as follows.

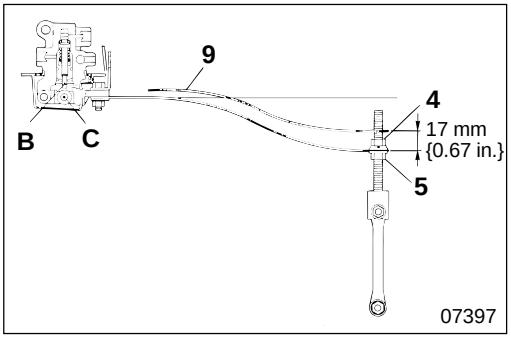

[Adjustment]

- Free leaf spring **9** to lift up the leaf spring and fit plunger **B** to roller **C**.
- In this condition, position nut **5** 17 mm {0.67 in.} below the tip of leaf spring **9**, then tighten nut **4** at specified torque.

EXHAUST BRAKE SYSTEM

Exhaust Brake Unit

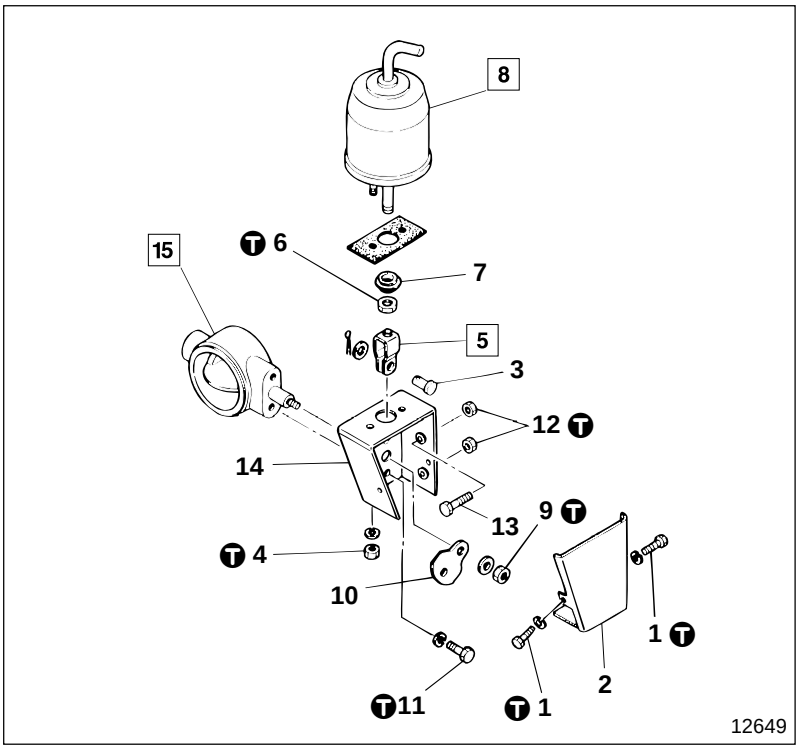

● **Disassembly sequence**

1 Bolt
2 Cover
3 Clevis pin
4 Nut
5 Clevis
6 Lock nut
7 Bearing
8 Vacuum chamber
9 Nut
10 Lever
11 Bolt
12 Nut
13 Adjusting bolt
14 Bracket
15 Valve assembly

● **Assembly sequence**

Follow the disassembly sequence in reverse.

Service standards

Unit : mm {in.}

Location	Maintenance item	Standard value	Limit	Remedy
8	Airtightness in vacuum chamber (Airtightness 15 seconds after applying negative pressure 67 kPa {19.7 in. Hg, 500 mmHg})	63 kPa {18.7 in. Hg, 475 mmHg} or more	—	Replace
14	Average value of upper and lower clearance between butterfly valve and body, when butterfly valve is totally closed (Degree of vacuum in vacuum chamber 86.7 to 93.3 kPa {25.6 to 27.6 in. Hg, 650 to 700 mmHg})	0.10 to 0.25 {0.0039 to 0.0098}	—	Adjust

Ⓣ Tightening torque

Unit : N·m {lbf.ft, kgf·m}

Location	Parts to be tightened	Tightening torque	Remarks
1	Bolt (Cover mounting)	4.9 to 6.9 {3.6 to 5.1, 0.5 to 0.7}	—
4	Nut (Vacuum chamber mounting)	9.8 to 15.7 {7.2 to 12, 1.0 to 1.6}	—
6	Lock nut (Clevis fixing)	9.8 to 15.7 {7.2 to 12, 1.0 to 1.6}	—
9	Nut (Lever mounting)	9.8 to 15.7 {7.2 to 12, 1.0 to 1.6}	—
11	Bolt (Bracket mounting)	9.8 to 15.7 {7.2 to 12, 1.0 to 1.6}	—
12	Nut (Adjusting bolt fixing)	4.9 to 6.9 {3.6 to 5.1, 0.5 to 0.7}	—

◆ Service procedure

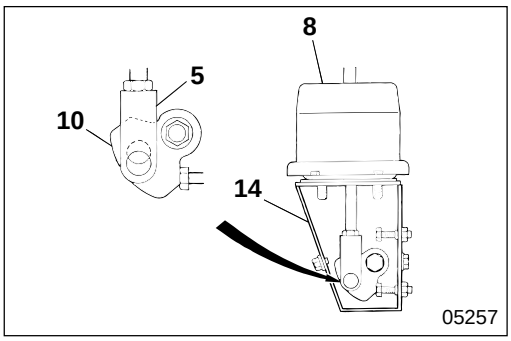

5 **Adjustment of clevis**

Install vacuum chamber **8** on bracket **14**, and adjust the position of clevis **5** so that the hole of the clevis is half the pitch of the hole of lever **10**.

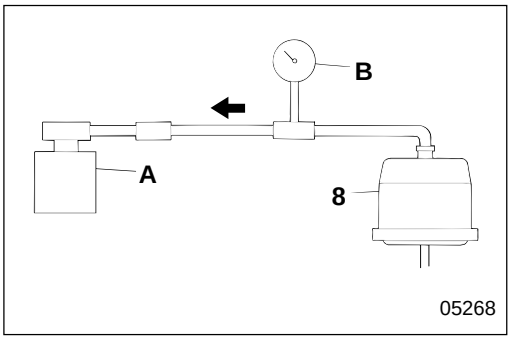

8 **Test of vacuum chamber airtightness**

Arrange piping as illustrated, and apply vacuum of 67 kPa {19.7 in. Hg, 500 mmHg} or more to vacuum chamber **8**, then stop vacuum pump **A**. After 15 seconds, ensure that the value of vacuum gauge **B** is the standard value. If the measured value deviates from the standard value, replace the vacuum chamber.

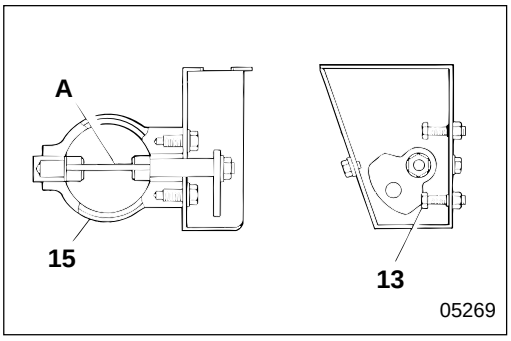

15 **Adjustment of valve assembly**

[Fully-opened adjustment]
Adjust using adjusting bolt **13** so that butterfly valve **A** of valve assembly **15** is fully opened.

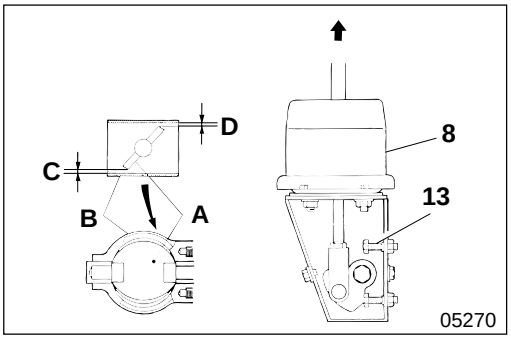

[Fully-closed adjustment]
While applying vacuum 87 to 93 kPa {25.6 to 27.6 in. Hg, 650 to 700 mmHg} to vacuum chamber **8**, adjust using adjusting bolt **13** so that the average value of clearance **C** and **D** between butterfly valve **A** and body **B** is within the standard value.

Clearance=(C+D)/2

Intake Silencer

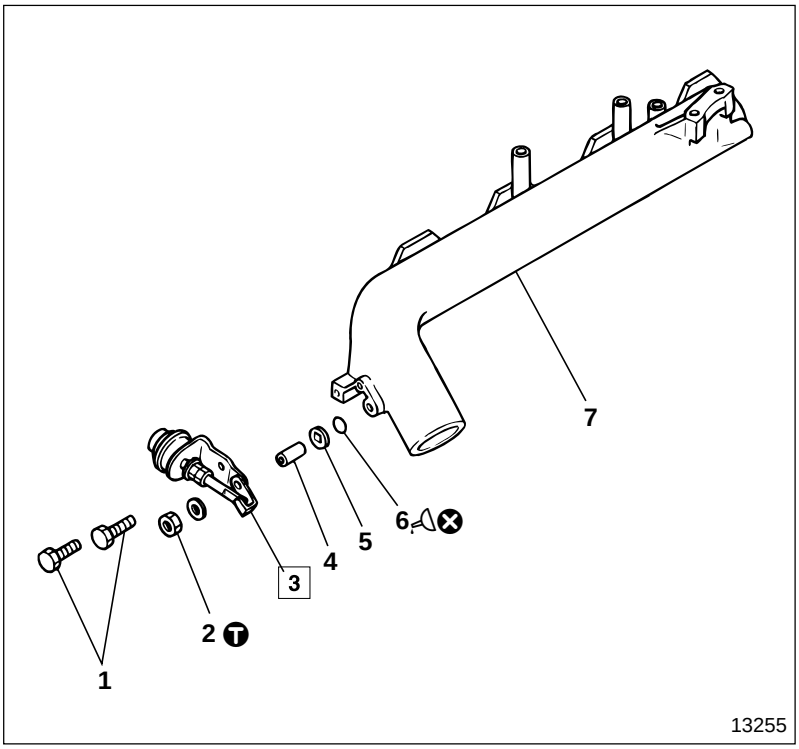

● **Disassembly sequence**

1 Bolt
2 Nut
3 Actuator
4 Spacer
5 Thrust plate
6 O-ring
7 Intake manifold

⊗ : Non-reusable parts

● **Assembly sequence**

Follow the disassembly sequence in reverse.

● **Adjustment after assembly** P 35-79

Service standards

Unit : mm {in.}

Location	Maintenance item	Standard value	Limit	Remedy
3	Actuator (Push rod stroke when negative pressure of 40 kPa {11.8 in. Hg, 300 mmHg} applied)	15 {0.59} or more	—	Replace
—	Clearance between intake manifold and butterfly valve when fully closed	3.6 to 4.0 {0.14 to 0.16}	—	Adjust

Ⓣ Tightening torque

Unit : N·m {lbf.ft, kgf·m}

Location	Parts to be tightened	Tightening torque	Remarks
2	Nut	8 {5.7, 0.8}	—

Lubricant

Location	Points of application	Kinds	Quantity
6	O-ring	Molybdenum disulfide grease [NLGI No.2 Li soap]	As required

◆ Service procedure

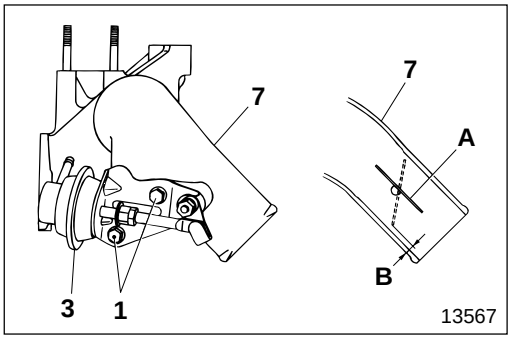

● **Adjustment after assembly**

- Loosen bolts **1**.
- While applying negative pressure of 67 kPa {19.7 in. Hg, 500 mmHg} to actuator **3**, adjust the position of the actuator so that clearance **B** between intake manifold **7** and butterfly valve **A** conforms to the standard value.
- Tighten bolts **1** and fix actuator **3**.

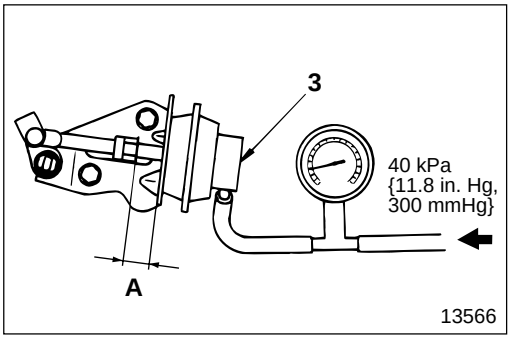

3 **Inspection of actuator**

- Apply negative pressure of 40 kPa {11.8 in. Hg, 300 mmHg} to actuator **3** and measure stroke **A** of the push rod.
- If the measured value deviates from the standard value, replace actuator **3**.

EXHAUST BRAKE SYSTEM

Exhaust Brake System Electric Equipment

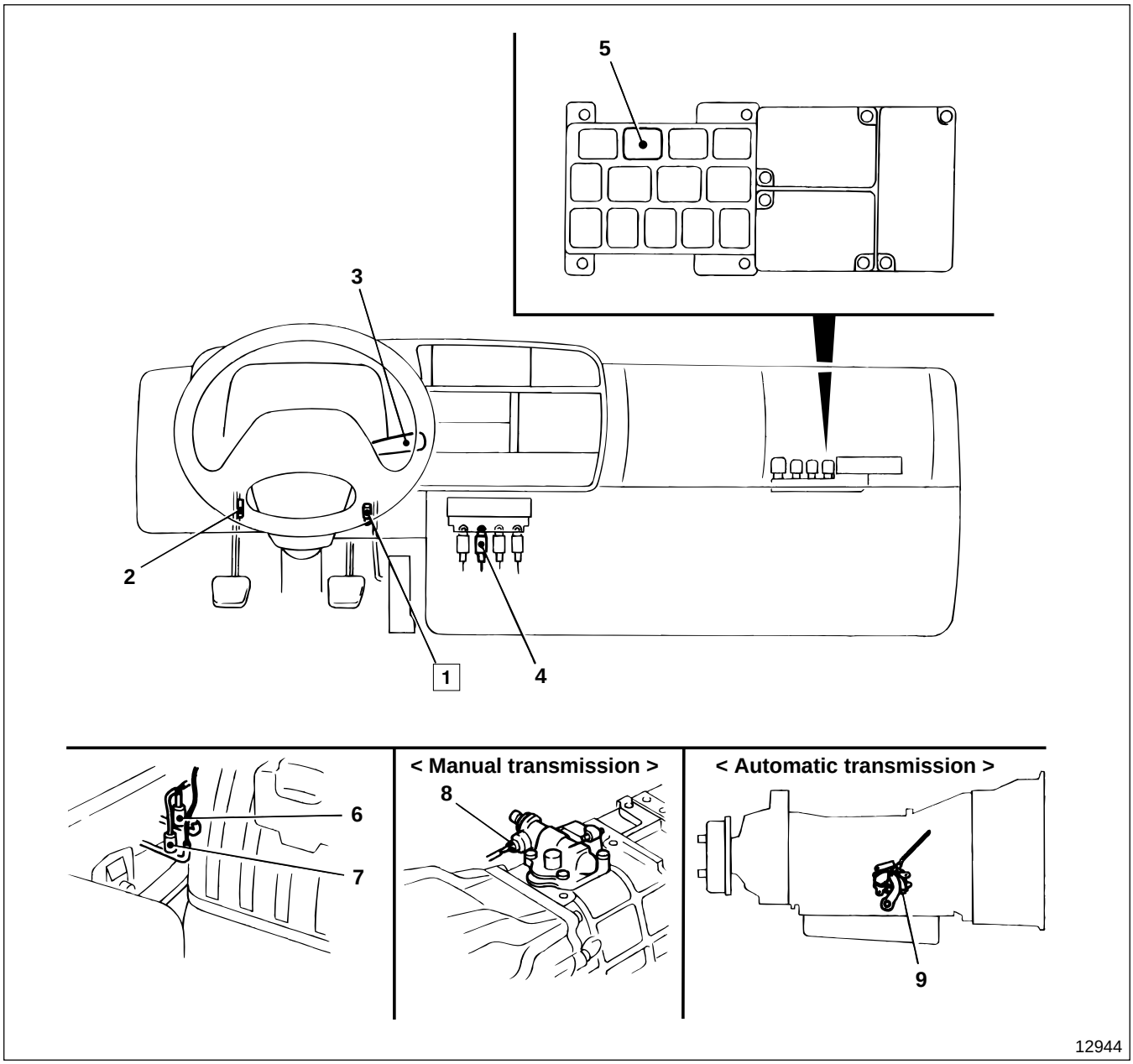

1 Accelerator switch Gr 13, Gr 54
2 Clutch switch < Manual transmission > Gr 21, Gr 54
3 Exhaust brake switch < Manual transmission > Gr 37, Gr 54
4 Exhaust brake cut relay < Manual transmission > Gr 54
5 Exhaust brake cut relay < Automatic transmission > Gr 54
6 3-way magnetic valve (For exhaust brake) Gr 54
7 3-way magnetic valve (For intake shutter) Gr 54
8 Neutral switch < Manual transmission > Gr 22, Gr 54
9 Inhibiter switch < Automatic transmission > Gr 23, Gr 54

◆ Service procedure

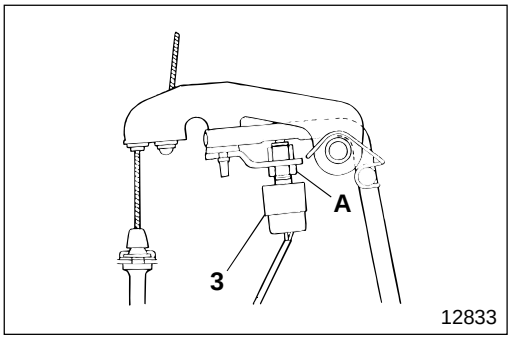

1 Adjustment of accelerator switch

- Turn exhaust brake switch **3** ON, depress the accelerator pedal gradually, and make sure that when the engine revolution reaches 800 to 950 rpm, the exhaust brake operation indicator lamp within the meter cluster goes OFF.
- If the indicator lamp goes OFF when the engine revolution is 800 rpm or less, adjust accelerator switch **1** by screwing it in.
- If the indicator lamp goes OFF when the engine revolution is 950 or more, adjust accelerator switch **1** by unscrewing it.
- After adjustment, fix accelerator switch **1** using lock nut **A**.

MITSUBISHI
FUSO

FE

Service Manual

Group 36
Parking Brake

Table of Contents

BACK

HOME

MITSUBISHI FUSO TRUCK OF AMERICA, Inc.

Pub No. TWSE9501-36

GROUP 36 PARKING BRAKE

SPECIFICATIONS 2

STRUCTURE AND OPERATION 2

TROUBLESHOOTING 4

INSPECTION AND ADJUSTMENT MOUNTED IN VEHICLE

- Adjustment of Parking Brake Shoe Clearance and Ratchet Bar Pulling Stroke 5

PARKING BRAKE CONTROL 6

PARKING BRAKE ASSEMBLY 8

BACKING PLATE AND SHOE ASSEMBLY 10

SPECIFICATIONS/STRUCTURE AND OPERATION

SPECIFICATIONS

Item		Specifications
Brake	Type	Propeller shaft internal expanding type brake
	Operation type	Mechanical cable type
Parking brake assembly	Type	Dual-servo type
	Inner diameter of drum mm {in.}	ø190 {7.48}
	Lining width × Thickness mm {in.}	45×4.0 {1.77×0.16}

STRUCTURE AND OPERATION

Parking Brake Control

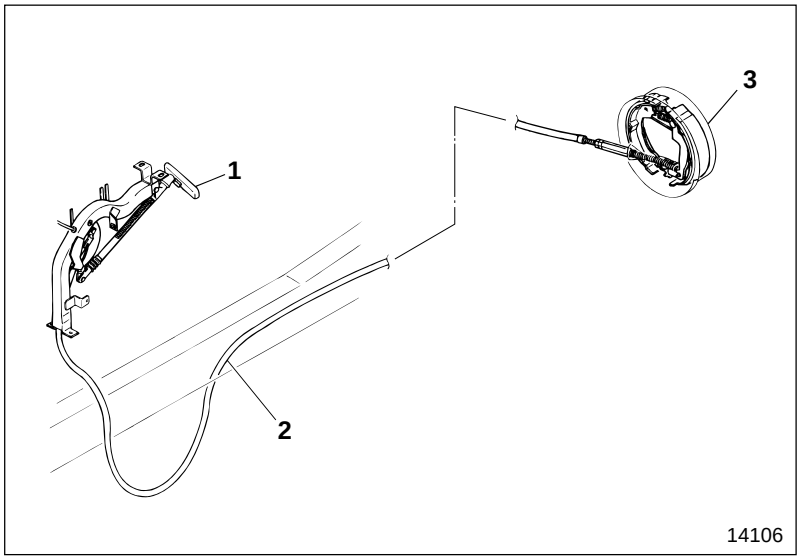

1 Parking brake ratchet bar
2 Parking brake cable
3 Parking brake assembly

Parking Brake Assembly < Dual-servo Type >

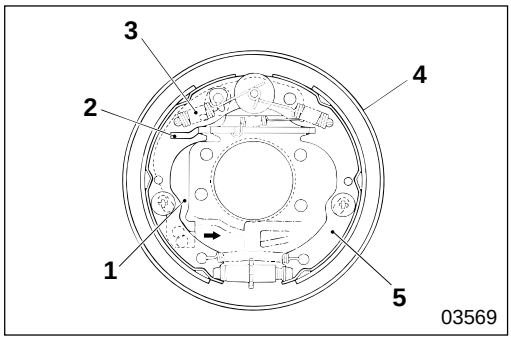

1 Parking lever
2 Strut
3 Shoe return spring
4 Backing plate
5 Shoe and lining assembly

- Pulling the parking brake ratchet bar pulls the parking brake cable, which in turn pulls parking brake lever **1** installed in the parking brake body, operating shoe and lining assembly **5**.
- Activation of parking lever **1** expands one shoe and lining assembly **5** via strut **2**, the parking lever itself expands the other shoe and lining assembly. Therefore, both shoe and lining assemblies function as leading shoes.
- When the ratchet bar (parking lever) is returned, the repercussive force of shoe return spring **3** releases the brake.

Parking Brake Electrical System

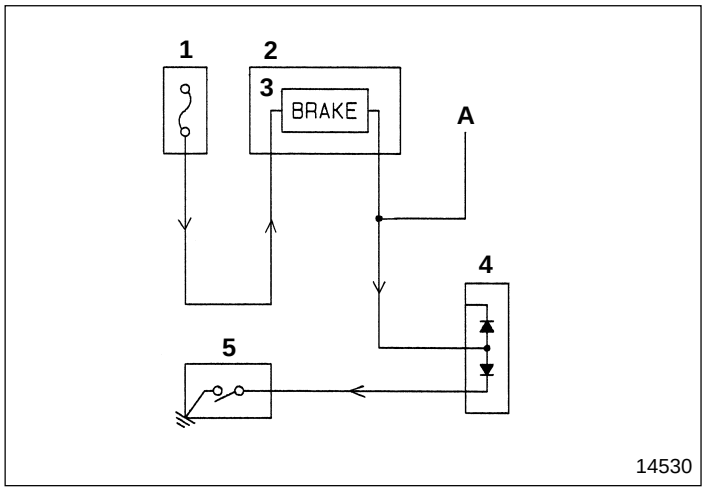

1 Fuse box
2 Meter cluster
3 Brake indicator lamp
4 Diode unit
5 Parking brake switch

A : To the brake fluid level switch

- The parking brake electrical system is provided for indicating, its detecting and indicating function is activated by pulling the parking brake ratchet bar.
- When the parking brake ratchet bar is pulled, the contact point of parking brake switch **5** closes (ON), and brake indicator lamp **3** is lit, indicating that the parking brake is operating.

The current flows as below:
Fuse **1** → Brake indicator lamp **3** → Diode unit **4** → Parking brake switch **5** → Ground

Possible causes / Symptoms		Parking brake does not work	Parking brake does not release smoothly (dragging)	Remarks
Parking brake cable	Inner cable stretched or damaged	○	○	
	Inner cable rusted		○	
	Inner spring of cable deteriorated, fractured		○	
Parking brake ratchet bar	Ratchet bar and ratchet pawl engaging incorrectly	○		
	Pulling stroke insufficient	○	○	
	Pulling stroke excessive	○		
Parking brake assembly	Shoe clearance insufficient		○	
	Shoe clearance excessive	○		
	Parking brake drum inner surface deformed or distorted	○		
	Parking brake drum inner surface greasy or oily	○		
	Linings worn unevenly	○		
	Lining surface greasy or oily	○		
	Shoe return spring deteriorated, fractured		○	

Adjustment of Parking Brake Shoe Clearance and Ratchet Bar Pulling Stroke

Service standards

Unit : mm {in.}

Location	Maintenance item	Standard value	Limit	Remedy
—	Brake shoe clearance	0.2 to 0.25 {0.0079 to 0.0098}	—	Adjust
4	Ratchet bar pulling stroke (Operating force : 295 N {66 lbf, 30 kgf})	80 to 120 {3.15 to 4.72}	—	Adjust

Ⓣ Tightening torque

Unit : N·m {lbf.ft, kgf·m}

Location	Parts to be tightened	Tightening torque	Remarks
6	Lock nut	19 to 27 {14 to 20, 1.9 to 2.8}	—

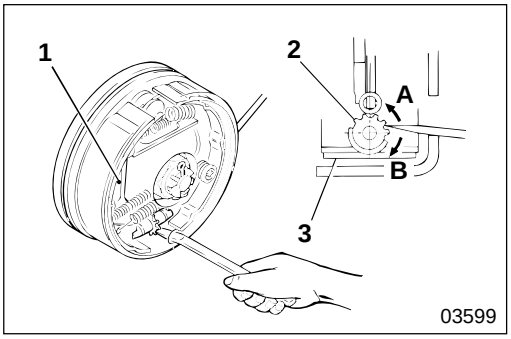

(1) Shoe clearance

When parking lever **1** is released, turn adjuster **2** in the expansion direction, using a screwdriver inserted through the shoe adjusting hole of the parking brake drum, and return 8 to 10 notches from the position where shoe **3** is in close contact with the drum. Then, the shoe clearance will be the standard value.

A : Contraction

B : Expansion

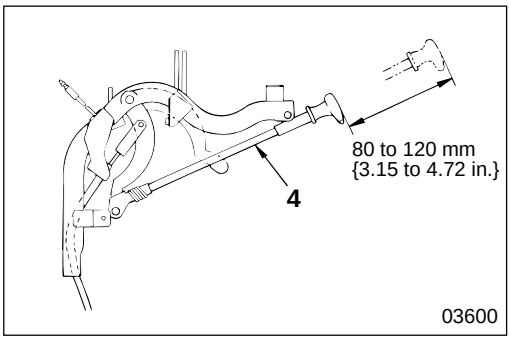

(2) Ratchet bar pulling stroke

Adjust the adjusting nut of the parking brake cable so that the ratchet bar pulling stroke is the standard value when parking brake ratchet bar **4** is pulled from the released position by an operating force of 295 N {66 lbf, 30 kgf}.

Operate ratchet bar two or three times after adjusting to verify the pulling stroke, to make sure that the parking brake is operating properly and that the parking brake drum does not drag when the parking brake is released.

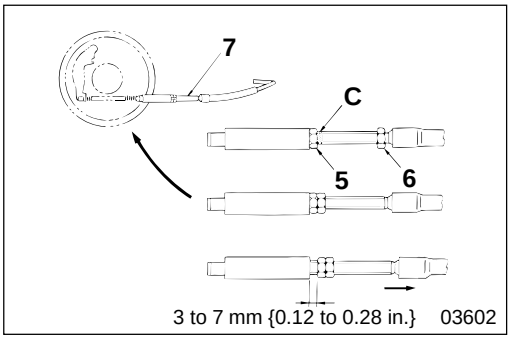

[Adjustment]

- Tighten adjusting nut **5** until mark **C** can be seen.
- Tighten lock nut **6** to the position of adjusting nut **5**.
- Tighten lock nut **6** at specified torque.
- Check clearance when the outer cable of parking brake cable **7** is pulled by an operating force of 59 to 98 N {13 to 22 lbf.ft, 6 to 10 kgf·m}.

PARKING BRAKE CONTROL

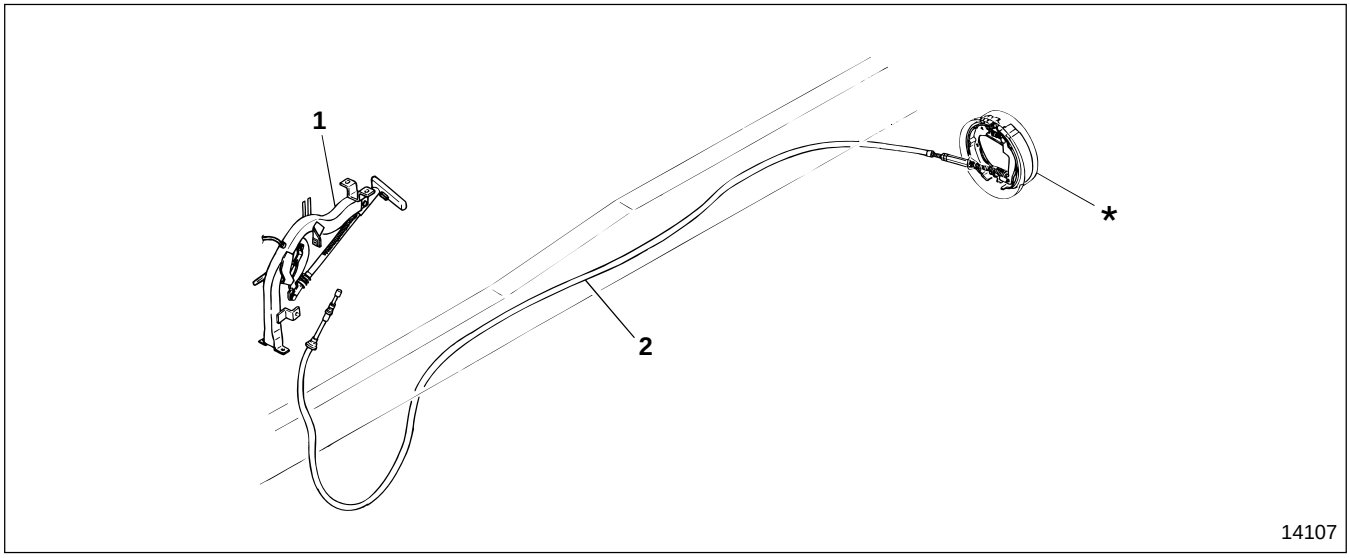

● **Removal sequence**

1 Parking brake ratchet bar assembly 📖 P36-7
2 Parking brake cable

***** : Parking brake assembly 📖 P36-8

WARNING⚠

- **You must place wheel chocks securely in place to prevent the vehicle from moving.**
- **Do not remove the chocks until the entire operation is completed.**

● **Installation sequence**

Follow the removal sequence in reverse.

Parking Brake Ratchet Bar Assembly

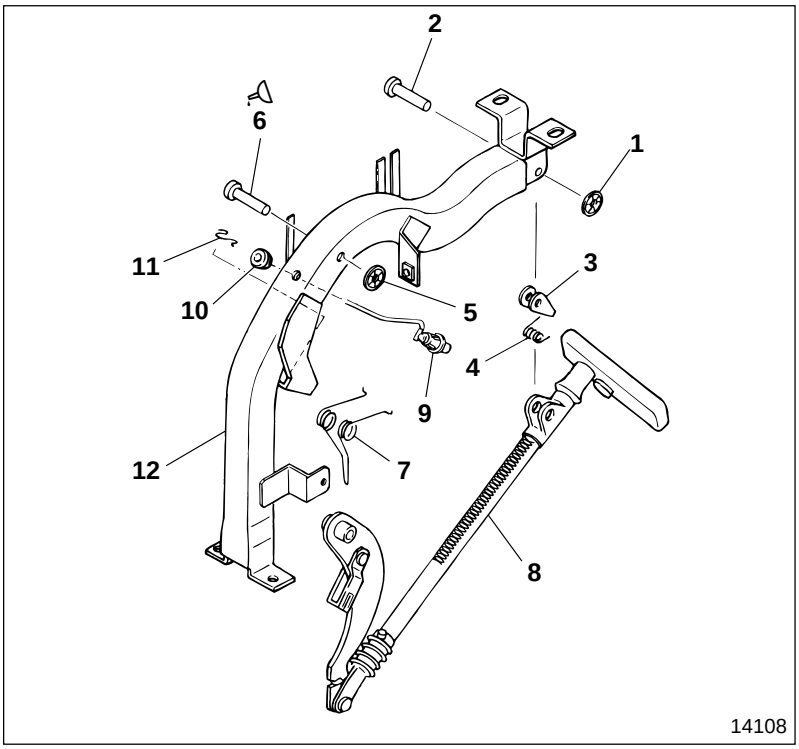

● **Disassembly sequence**

1 Push nut
2 Pin
3 Ratchet pawl
4 Ratchet spring
5 Push nut
6 Pin
7 Return spring
8 Ratchet bar
9 Parking brake switch Gr 54
10 Grommet
11 Clip
12 Support

● **Assembly sequence**

Follow the disassembly sequence in reverse.

Lubricant

Location	Points of application	Kinds	Quantity
6	Sliding area between pin and ratchet bar	Wheel bearing grease [NLGI No.2 (Li soap)]	As required

PARKING BRAKE ASSEMBLY

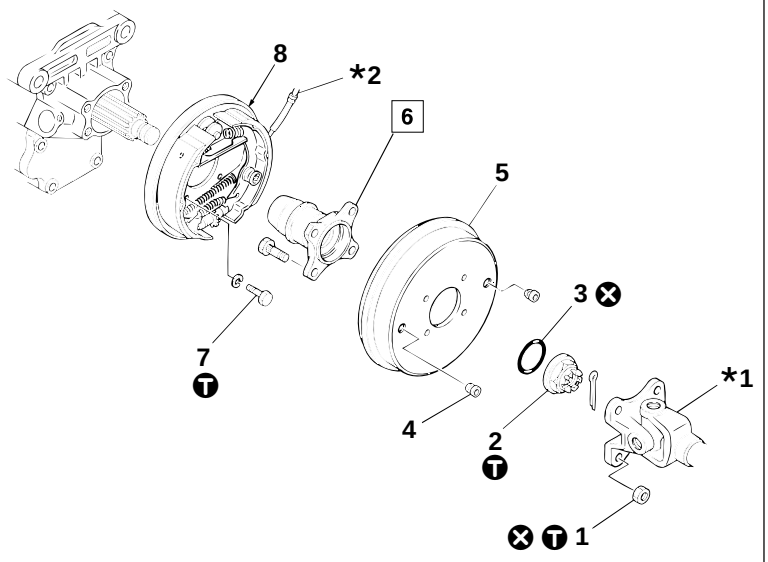

● **Disassembly sequence**

1 Nut
2 Lock nut
3 O-ring
4 Dust plug
5 Parking brake drum
6 Companion flange
7 Bolt
8 Backing plate and shoe assembly
📖 P36-10

***1** : Propeller shaft Gr 25
***2** : Parking brake cable 📖 P36-6
⊗ : Non-reusable parts

WARNING ⚠

- **You must place wheel chocks securely in place to prevent the vehicle from moving.**
- **Do not remove the chocks until the entire operation is completed.**

● **Assembly sequence**

Follow the disassembly sequence in reverse.

Service standards

Unit : mm {in.}

Location	Maintenance item		Standard value	Limit	Remedy
5	Parking brake drum	Inner diameter	ø190 $^{+0.2}_{0}$ {7.48 $^{+0.0079}_{0}$}	ø191 {7.52}	Replace
		Squareness	0.05 {0.0020} or less	—	
		Concentricity	ø0.1 {0.0039} or less	—	
		Cylindrical accuracy	0.05 {0.0020} or less	—	
		Static rotation imbalance	0.49 N·cm {0.0036 lbf.ft, 50 gf·cm} or less	—	

Ⓣ Tightening torque

Unit : N·m {lbf.ft, kgf·m}

Location	Parts to be tightened		Tightening torque	Remarks
1	Nut (Propeller shaft mounting)		98 to 120 {72 to 87, 10 to 12}	—
2	Lock nut (Companion flange mounting)	Manual transmission	245 to 345 {180 to 255, 25 to 35}	—
		Automatic transmission	195 to 450 {145 to 330, 20 to 46}	—
7	Bolt (Backing plate and shoe assembly mounting)		52 to 67 {38 to 49, 5.3 to 6.8}	—

Special tools

Unit : mm {in.}

Location	Tool name and shape	Part No.	Application
6	Flange puller 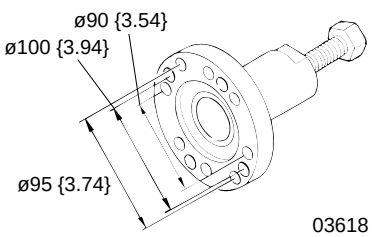	MH061848	Removal of companion flange

◆ Service procedure

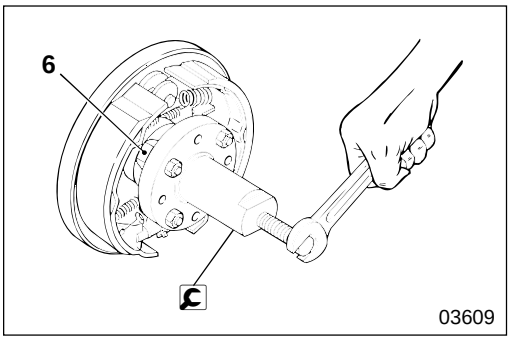

6 **Removal of companion flange**

BACKING PLATE AND SHOE ASSEMBLY

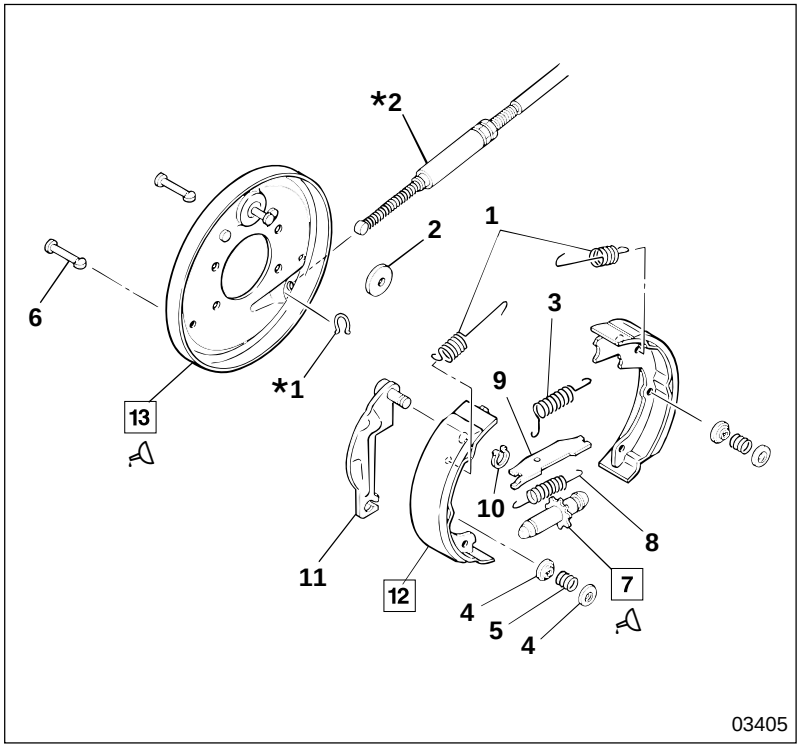

● **Disassembly sequence**

1 Shoe return spring
2 Washer
3 Strut spring
4 Shoe hold down cup
5 Shoe hold down spring
6 Shoe hold down pin
7 Adjuster
8 Adjuster spring
9 Strut
10 Retainer
11 Parking lever
12 Shoe and lining assembly
13 Backing plate

***1** : Retainer
***2** : Parking brake cable 🕮 P36-6

● **Assembly sequence**

Follow the disassembly sequence in reverse.

WARNING⚠

Do not leave grease or oil on the surface of shoe and lining assembly 12 because this reduces braking performance.

NOTE

If shoe and lining assembly 12 has been replaced with a new part, check correctness of contact with the parking brake drum.

Service standards

Unit : mm {in.}

Location	Maintenance item	Standard value	Limit	Remedy
1	Installed load of shoe return spring (Installed length : 67.1 {2.64})	59±5.9 N {13±1.3 lbf.ft, 6±0.6 kgf}	49 N {11 lbf, 5 kgf}	Replace
3	Installed load of strut spring (Installed length : 49 {1.93})	29±2.9 N {6.6±0.7 lbf.ft, 3±0.3 kgf}	26 N {6 lbf, 2.7 kgf}	Replace
5	Installed load of shoe hold down spring (Installed length : 15.5 {0.61})	78±7.8 N {18±1.8 lbf.ft, 8±0.8 kgf}	71 N {16 lbf, 7.2 kgf}	Replace
8	Installed load of adjuster spring (Installed length : 78.2 {3.08})	59±5.9 N {13±1.3 lbf.ft, 6±0.6 kgf}	49 N {11 lbf, 5 kgf}	Replace
12	Thickness of lining	4 {0.16}	1.4 {0.055}	Replace

Lubricant

Location	Points of application	Kinds	Quantity
7	Contact surfaces of both ends of adjuster with shoe and lining assembly	Brake grease	As required
13	Anchor pin area and sliding face (6 points) of backing plate	Brake grease	As required

◆ Service procedure

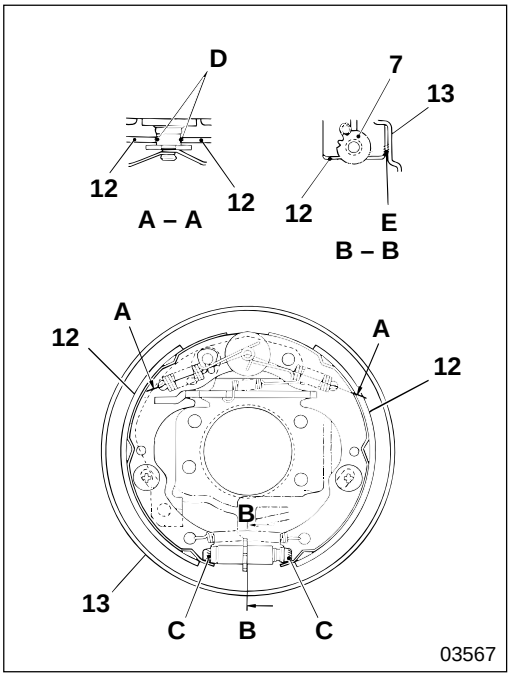

7 **13** **Applying grease to adjuster and backing plate**

- Apply grease to contact surface **C** between both ends of adjuster **7** and shoe and lining assembly **12**.
- Apply grease to area **D** of the anchor pin and sliding face **E** (6 points) of backing plate **13**.

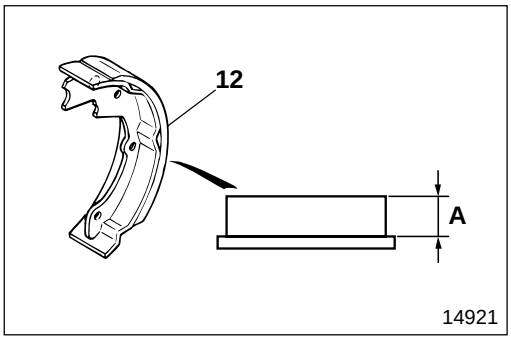

12 **Inspection of shoe and lining assembly**

Measure thickness **A** of the lining. If the measured value is lower the limit, replace shoe and lining assembly **12**.

MITSUBISHI FUSO

FE

Service Manual

Group 37 - Steering

Group 37 - Steering
1998 Minor Change <FE/FG>

BACK HOME

MITSUBISHI FUSO TRUCK OF AMERICA, Inc.

Pub No. TWSE9501-00

MITSUBISHI
FUSO

FE.FG
Service Manual

Group 37
Steering

'98 Minor Change

Table of Contents

MITSUBISHI FUSO TRUCK OF AMERICA, Inc.

BACK HOME

Pub No. TWSE9501-237

GROUP 37 STEERING

SPECIFICATIONS 37- 2

STRUCTURE AND OPERATION 37- 3

TROUBLESHOOTING 37- 8

ON-VEHICLE INSPECTION AND ADJUSTMENT
- Change of Power Steering Fluid 37- 11
- Bleeding of Power Steering System 37- 12
- Steering Wheel Play 37- 12
- Performance Verification Test of Power Steering System 37- 13

STEERING SYSTEM 37- 14

STEERING COLUMN SUBASSEMBLY 37- 20

POWER STEERING BOOSTER
< FE > 37- 24
< FG > 37- 30

POWER STEERING OIL PUMP 37- 36

POWER STEERING OIL TANK 37- 40

POWER STEERING FLUID LINE 37- 41

DRAG LINK 37- 42

TIE ROD ASSEMBLY 37- 44

SPECIFICATIONS

Item \ Model		FE	FG
Steering wheel	Type	2-spoke type	
	Outer diameter mm {in.}	400 {15.7}	
Steering shaft	Type	Universal joint type (High tilt and telescopic type)	
Power steering booster	Manufacturer	KOYO SEIKO	
	Type	Ball nut type	
	Form	Integral type	
	Gear ratio	22.6	
	Cylinder diameter mm {in.}	78 {3.07}	
	Mass (without pitman arm and fluid) kg {lb}	18.2 {40}	16.7 {37}
Power steering oil pump	Manufacturer	NIPPON POWER STEERING	
	Type	Vane type	
	Discharge amount cm^3 {cu.in.}/rev	9.6 {0.59}	
	Regulated flow amount L {qts}/min	7 {7.4}	
	Regulated pressure (relief valve) MPa {lbf/in^2., kgf/cm^2}	9.3 {1350, 95}	10.3 {1490, 105}
	Permissible revolutions rpm	600 to 6500	
	Mass (without drive gear and fluid) kg {lb}	1.64 {3.6}	

Steering System

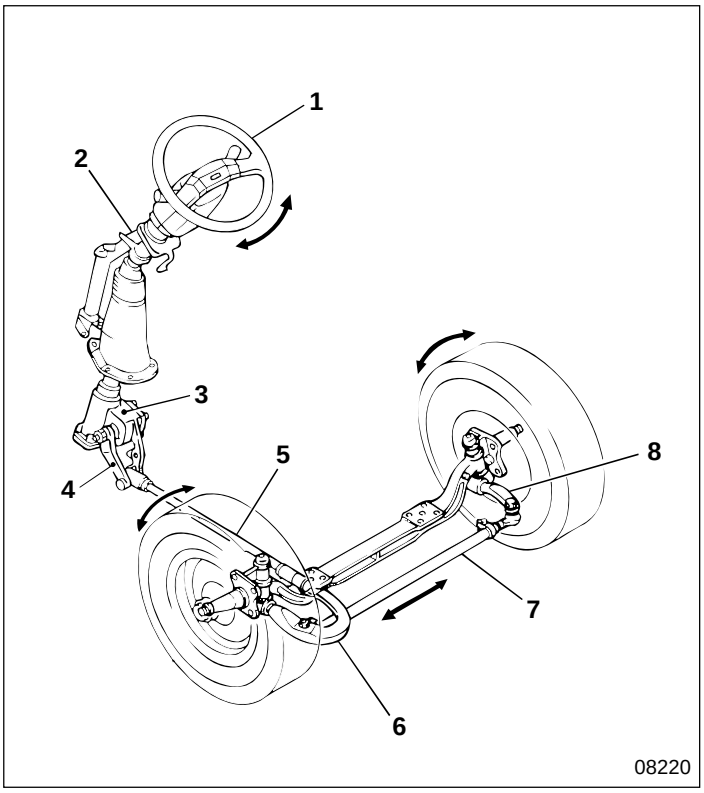

1 Steering wheel
2 Steering column subassembly
3 Power steering booster
4 Pitman arm
5 Drag link
6 Knuckle arm
7 Tie rod
8 Tie rod arm

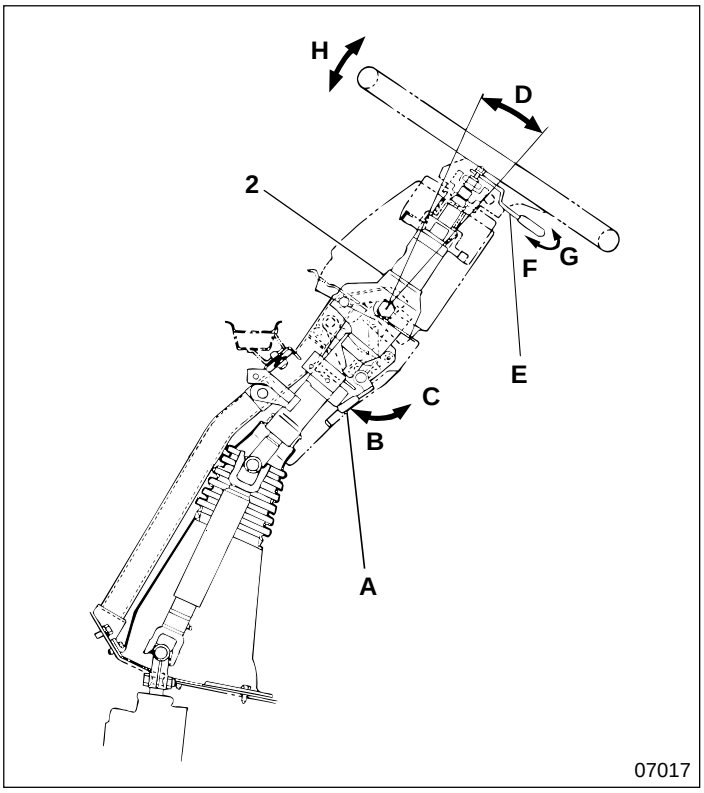

Shifting lock lever **A** from lock position **B** to release position **C** produces high tilt **D**, and turning telescopic lever **E** (counterclockwise) from lock position **F** to release position **G** allows telescopic movement **H**. In this way, the structure of steering column subassembly **2** can be adjusted for optimum driving position.

Power Steering System

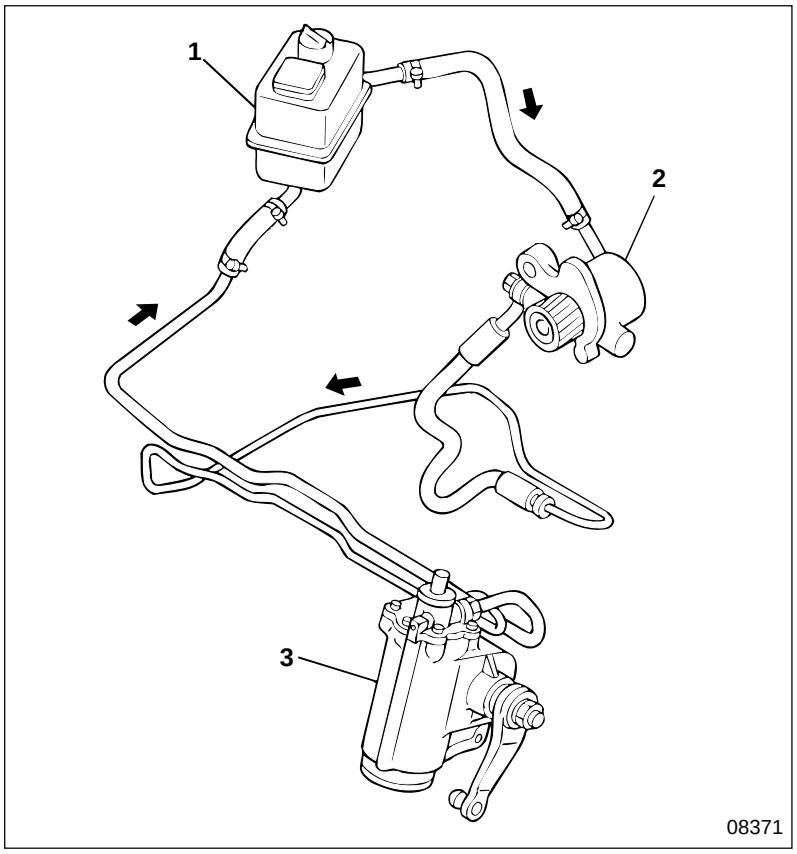

1 Power steering oil tank
2 Power steering oil pump
3 Power steering booster

⬅ : Fluid flow

Power Steering Booster

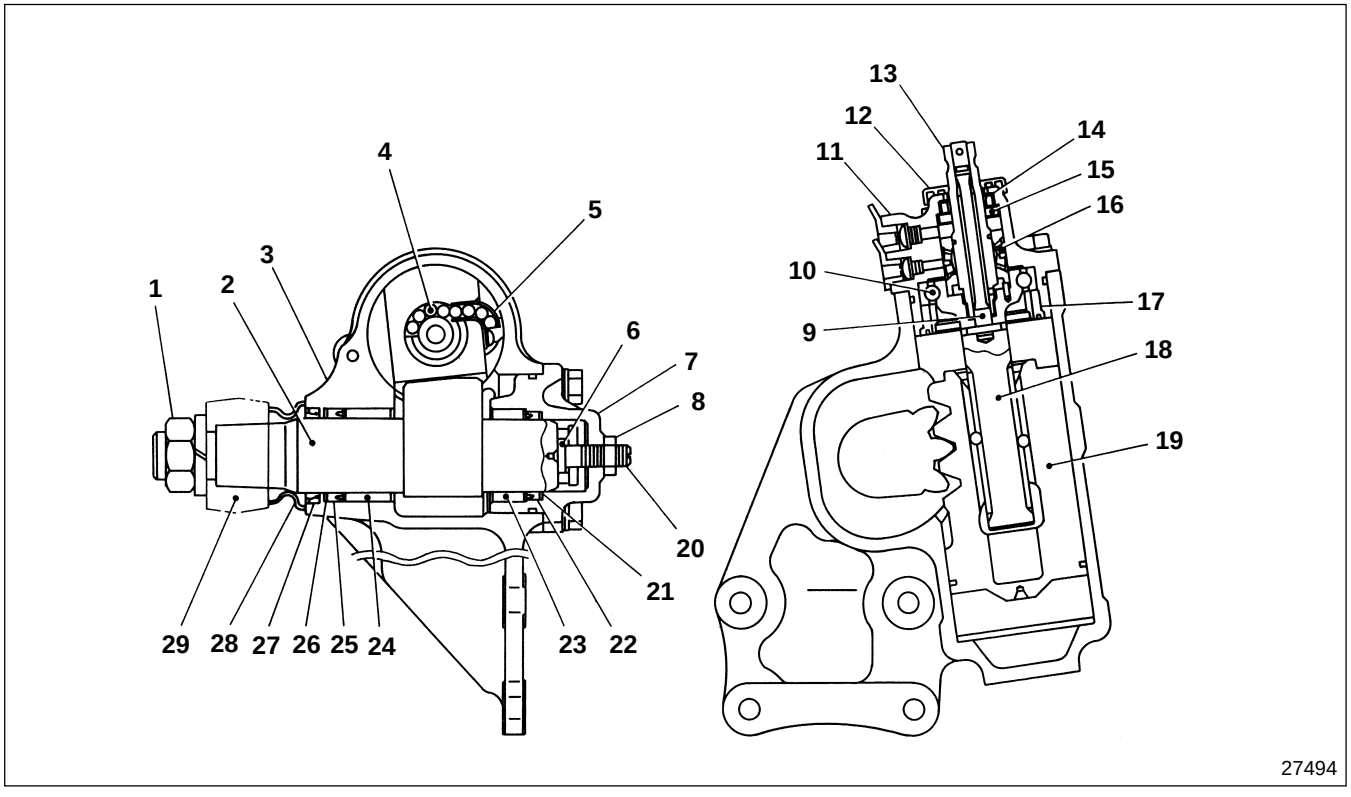

1 Lock nut
2 Sector shaft
3 Gear box
4 Steel ball
5 Circulator
6 Adjusting plate
7 Side cover
8 Nut
9 Torsion bar
10 Bearing
11 Valve housing
12 Dust cover
13 Input shaft
14 Oil seal
15 Bearing
16 Rotary valve
17 Lock screw
18 Main shaft
19 Rack piston
20 Adjusting bolt
21 Backup ring
22 U-packing
23 Needle bearing
24 Needle bearing
25 U-packing
26 Backup ring
27 Oil seal
28 Dust cover
29 Pitman arm

Rotary valve **16** is the central part of the power steering booster. Torsion bar **9** allows the steering reaction force and valve return to operate lightly and smoothly at low speed, and ensures stable steering feel even at high speed.

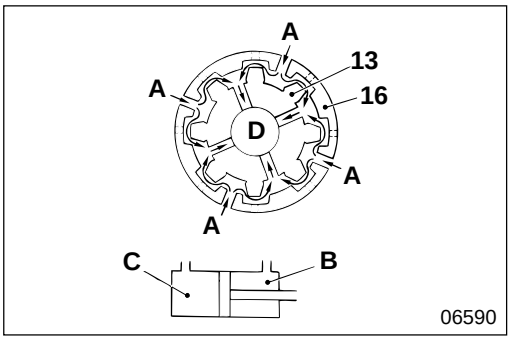

● **Straight-ahead drive operation**

When steering torque is not applied by the steering wheel, input shaft **13** is not activated and remains in neutral. At this time, pressurized fluid from the oil pump flows through the input shaft and the hole of rotary valve **16**, and returns to the oil tank without flowing into cylinder chambers **B**, **C**.
A : From the oil pump
D : To the oil tank

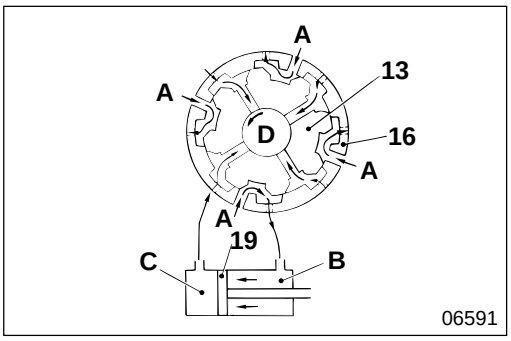

● **Steering operation**

Turning the steering wheel rotates input shaft **13**, causing rotary valve **16** to close the fluid feed passage to cylinder chamber **C**. This produces a pressure difference between cylinder chambers **B**, **C**, which causes rack piston **19** to move, and facilitates rotation of main shaft **18**.
The illustration shows right-turn steering, and should be reversed for left-turn steering.

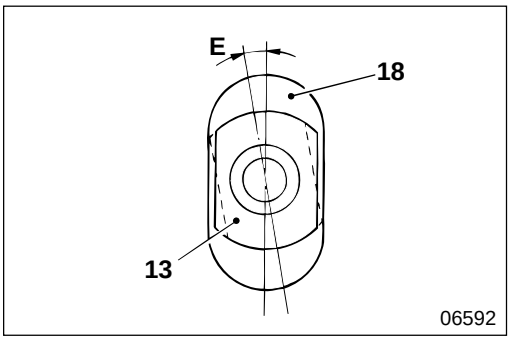

● **Operation when hydraulic circuit is faulty**

The safety structure means that when the fluid circuit is faulty, the stopper of input shaft **13** directly contacts the groove at the large end of main shaft **18** to transmit steering force, enabling manual operation.

Power Steering Oil Pump

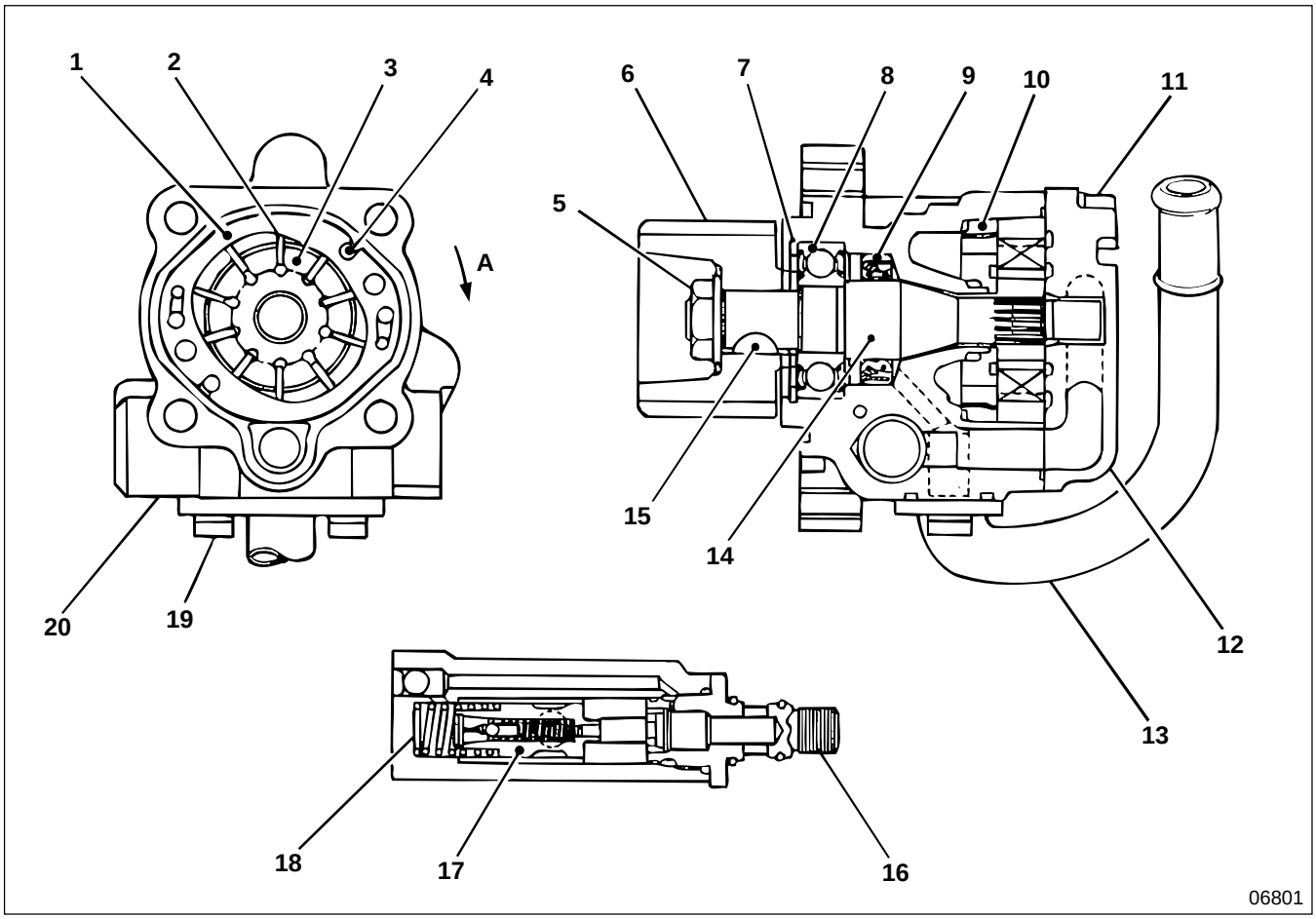

1 Cam ring
2 Vane
3 Rotor
4 Pin
5 Lock nut
6 Gear
7 Snap ring
8 Bearing
9 Oil seal
10 Side plate
11 Bolt
12 Cover
13 Suction connector
14 Shaft
15 Key
16 Connector
17 Relief valve assembly
18 Flow control spring
19 Bolt
20 Body

A : Direction of rotation

Relief Valve Assembly

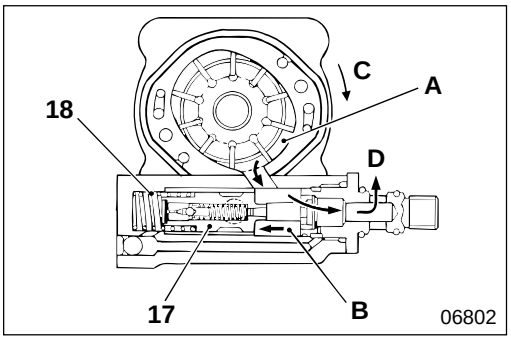

● **Operation of flow control valve**

(1) When not operating (Oil pump rotating at low speed)

Since pressure generated from pressure chamber **A** is low when the oil pump is rotating at low speed, fluid pressure in chamber **B** is also low. Therefore, relief valve assembly **17**, which is pressed by the repercussive force of flow control spring **18** is not activated.

C : Direction of rotation

D : To the power steering booster

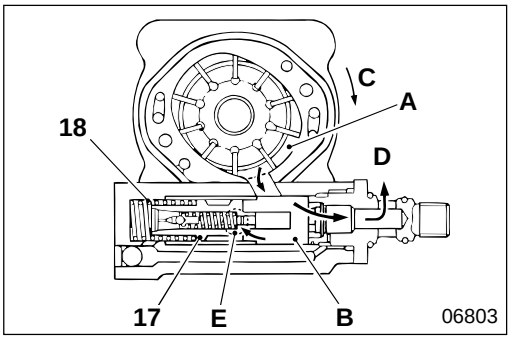

(2) When operating (Oil pump rotating at middle or high speed)

Since pressure generated from pressure chamber **A** is high when the oil pump is rotating at middle or high speed, fluid pressure in chamber **B** is also high. This will activate relief valve assembly **17**, overcoming the repercussive force of flow control spring **18**, and open port **E**, making excess fluid return to the inlet port to adequately regulate the flow of fluid to power steering booster **D**.

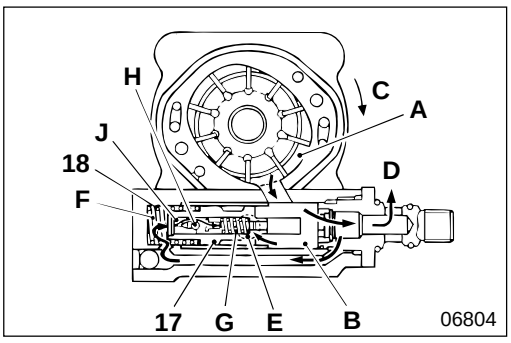

● **Operation of relief valve**

When the steering is lock-to-lock, pressure in chambers **B** and **F** increases and overcomes the repercussive force of relief spring **G** opening relief valve **J**, which was closed by steel ball **H**, causing the fluid to be returned to the inlet port through port **E**. Thus, if pressure in chamber **F** decreases, the relief valve closes again.

Possible causes \ Symptoms		Steering wheel operation heavy	Steering wheel play excessive and unstable	Steering wheel pulls to one side	Steering wheel vibration	Steering wheel self-return bad	Steering wheel does not turn	Steering angle insufficient or difference between right and left	Fluid leaking	Oil pump fluid pressure abnormal	Oil pump gurgles	Oil pump squeaks	Oil pump growls	Remarks
Power steering mechanism faulty	Bearing damaged or worn	○			○	○								
	Ball or groove of ball screw set shaft worn	○	○		○									
	Air bled insufficiently	○												
	Fluid viscosity unsuitable	○												
	Power steering booster system faulty	○												
	Flow control valve malfunctioning	○												
	Rack or ball screw set shaft gear worn		○											
	Sector shaft bearing worn		○		○									
	Power steering booster mounting bolt loose		○											
	Ball screw set shaft and sector shaft play incorrect				○									
	Edge of valve control damaged or control seal ring broken				○									
	Power steering system fluid unsuitable				○									
	Rack engagement starting torque adjusted incorrectly	○				○								
	Fluid circuit clogged	○				○								
	Sector shaft gear worn		○											
	Torsion shaft serration damaged or worn		○											
	Power steering booster body faulty			○	○									
	O-ring or oil seal faulty								○					
	Sealant applied incorrectly								○					
Steering column and link mechanism faulty	Universal joint worn abnormally, damaged, lubricated incorrectly	○	○											
	Link deformed	○												
	Drag link ball stud excessive play		○		○									
	Tie rod end ball stud excessive play		○		○									
	Tie rod bent						○							
	Pitman arm mounting position incorrect							○						
	Steering wheel center offset			○										

Possible causes \ Symptoms		Steering wheel operation heavy	Steering wheel play excessive and unstable	Steering wheel pulls to one side	Steering wheel vibration	Steering wheel self-return bad	Steering wheel does not turn	Steering angle insufficient or difference between right and left	Fluid leaking	Oil pump fluid pressure abnormal	Oil pump gurgles	Oil pump squeaks	Oil pump growls	Remarks
Front axle faulty	Kingpin lubricated incorrectly	○				○								
	Front wheel alignment (toe-in, camber, caster) incorrect	○		○	○	○								
	Thrust bearing damaged	○												
	Wheel hub bearing worn or damaged		○	○	○									Gr 26
	Kingpin or bushing worn or damaged		○	○	○									Gr 26B
	Front axle deformed			○										
	Knuckle arm, tie rod arm, knuckle, etc. tightened incorrectly				○									
	U-bolt of front spring, nut loose				○									Gr 33
	Front axle parts overtightened					○								
	Turning angle adjusted incorrectly						○	○						Gr 26
	Mounting parts, connection point loose		○											Gr 26B
	Knuckle stopper bolt adjusted incorrectly							○						
Oil pump faulty	Oil pump body faulty								○					
	O-ring, oil seal faulty								○					
	Bolt tightened incorrectly								○					
	Maximum generated fluid pressure insufficient									○				
	Fluid line crushed or clogged									○				
	Air lock in oil pump										○			
	Oil pump interior seized									○	○	○		
	Mounting bolt or nut loose												○	
	Pump body faulty												○	
	Valve malfunctioning									○				

TROUBLESHOOTING

Possible causes \ Symptoms		Steering wheel operation heavy	Steering wheel play excessive and unstable	Steering wheel pulls to one side	Steering wheel vibration	Steering wheel self-return bad	Steering wheel does not turn	Steering angle insufficient or difference between right and left	Fluid leaking	Oil pump fluid pressure abnormal	Oil pump gurgles	Oil pump squeaks	Oil pump growls	Remarks
Oil tank faulty	Oil tank leaking due to overflowing								○					
	Oil tank leaking due to air lock								○					
	Fluid level insufficient	○												
Other malfunctions	Load too far forward of load-carrying platform	○												
	Load too far rearward of load-carrying platform		○											
	Load too far to one side of load-carrying platform			○										
	Wheelbase gap between left and right excessive			○										
	Propeller shaft run out excessive				○									Gr 25
	Front axle bent < FE >				○									Gr 26
	Front axle housing bent < FG >				○									Gr 26B
	Rear axle housing bent			○										Gr 27
	Final drive gear and final drive pinion damaged or engaged incorrectly				○									Gr 26B
	Tire pressure insufficient	○												Gr 31
	Tire pressure excessive		○											
	Tire wear difference between left and right excessive			○										
	Tire outer diameter difference between left and right			○										
	Front tire radial and lateral runout, static balance or dynamic balance faulty				○									
	One-sided braking			○										Gr 35

Change of Power Steering Fluid

Ⓣ Tightening torque

Unit : N·m {lbf.ft, kgf·m}

Location	Parts to be tightened	Tightening torque	Remarks
1	Pressure tube	29 to 39 {22 to 29, 3 to 4}	—
2	Return tube	39 to 49 {29 to 36, 4 to 5}	—

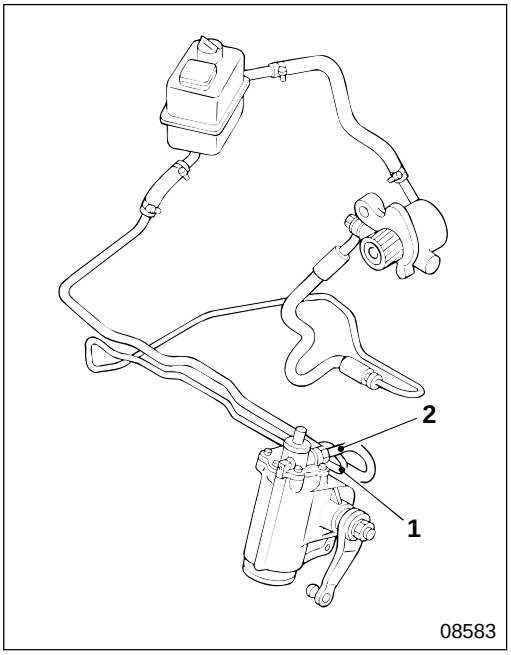

[Draining]

- Jack up the front wheels.
- Release pressure tube **1** and return tube **2** connected to the power steering booster.
- Turn the steering wheel fully left and right repeatedly, and drain the fluid from the power steering booster.
- After draining the fluid, tighten pressure tube **1** and return tube **2** at specified torque.

[Filling]

P37-12

ON-VEHICLE INSPECTION AND ADJUSTMENT

Bleeding of Power Steering System

Fluid

Location	Points of application	Kinds	Quantity
1	Power steering oil tank	Automatic transmission fluid (DEXRON or DEXRON II type)	Filler cap dipstick between MIN and MAX

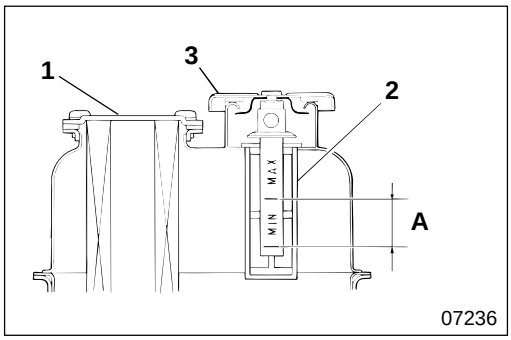

CAUTION

Do not keep the steering wheel turned fully to the left or right for more than fifteen seconds when the engine is running, as this can cause the power steering oil pump to seize up.

- Pour fluid into power steering oil tank **1** up to the inner port of strainer **2**.
- With the engine stopped, jack up the front wheels and turn the steering wheel fully left and right repeatedly. When the fluid level has dropped, add fluid to maintain the fluid level within range **A**.

NOTE

Check the fluid level without screwing on filler cap 3.

- Start the engine and letting it idle, turn the steering wheel fully left and right repeatedly. When the fluid level has dropped, add the fluid to maintain the fluid level within range **A**. Repeat these steps until the fluid level does not drop.
- If there is an abnormal noise, air is still in the system. Turn the steering wheel several times to raise fluid temperature to approximately 60 to 80°C {140 to 176°F}, then stop the engine and wait for approximately five minutes.
- Lower the front wheels and turn the steering wheel several times. If there is no noise, bleeding is completed.
- When bleeding is finished, check fluid level of power steering oil tank **1**, and pipe and hose connections for fluid leaks.

Steering Wheel Play

Service standards

Unit : mm {in.}

Location	Maintenance item	Standard value	Limit	Remedy
—	Steering wheel play (Measure at the outer circumference of steering wheel)	0 to 50 {0 to 1.97}	—	Adjust

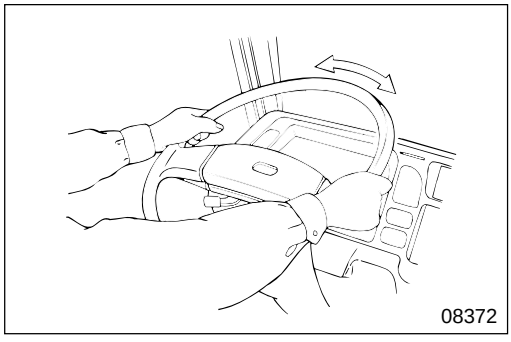

Point the wheels directly forward, start the engine and gently turn the steering wheel left and right to measure play at the outer circumference. If the play deviates from the standard value, adjust tightening points and power steering booster backlash. P37-26, 33

Performance Verification Test of Power Steering System

Service standards

Location	Maintenance item		Standard value	Limit	Remedy
—	Steering system fluid pressure (With hands off steering wheel)		490 kPa {71 lbf/in^2, 5 kgf/cm^2}	—	Repair
—	Relief set pressure (Measure with engine speed at 1000 to 1500 rpm and stop valve closed)	FE	9.3 MPa {1350 lbf/in^2, 95 kgf/cm^2}	Maximum +195 kPa {28 lbf/in^2, 2 kgf/cm^2} Minimum –295 kPa {43 lbf/in^2, 3 kgf/cm^2}	Replace
		FG	10.3 MPa {1490 lbf/in^2, 105 kgf/cm^2}	Maximum 0 kPa {0 lbf/in^2, 0 kgf/cm^2} Minimum –490 kPa {–71 lbf/in^2, –5 kgf/cm^2}	Replace

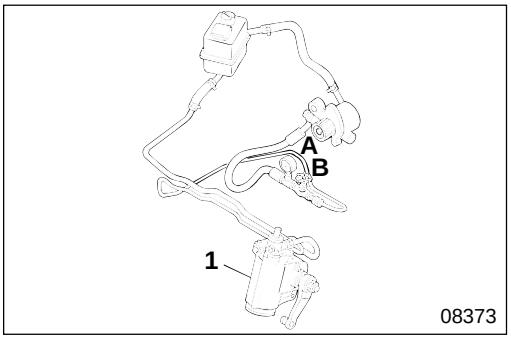

Verify that the power steering booster and the power steering oil pump are operating properly by testing the following items.

CAUTION

Do not keep the steering wheel turned fully to the left or right for more than fifteen seconds when the engine is running, as this can cause the power steering oil pump to seize up.

NOTE

If the fluid pressure is higher than 490 kPa {71 lbf/in^2, 5 kgf/cm^2} with engine idling and the steering wheel free, inspect power steering booster 1 and fluid circuit for clogging.

Test item	Test procedure	Assembly standards
Verification of smooth operation	Jack up the front wheels and turn steering wheel fully left and right	Smooth operation throughout test
Measurement conditions	• Install oil pressure gauge **A** capable of measuring above 10.8 MPa {1560 lbf/in^2, 110 kgf/cm^2} and stop valve **B**, then bleed air • With engine idling, turn steering wheel left and right several times to raise fluid temperature to 50 to 60°C {122 to 140°F} • With the engine idling, open stop valve **B**	
Measurement of fluid pressure	• Measure fluid pressure with hands off steering wheel	490 kPa {71 lbf/in^2, 5 kgf/cm^2}
Measurement of relief pressure	• Gradually increase engine speed and maintain it at 1000 to 1500 rpm, and close stop valve **B** to measure maximum fluid pressure	Relief set pressure 9.3 MPa {1350 lbf/in^2, 95 kgf/cm^2} < FE >, 10.3 MPa {1490 lbf/in^2, 105 kgf/cm^2} < FG >

STEERING SYSTEM

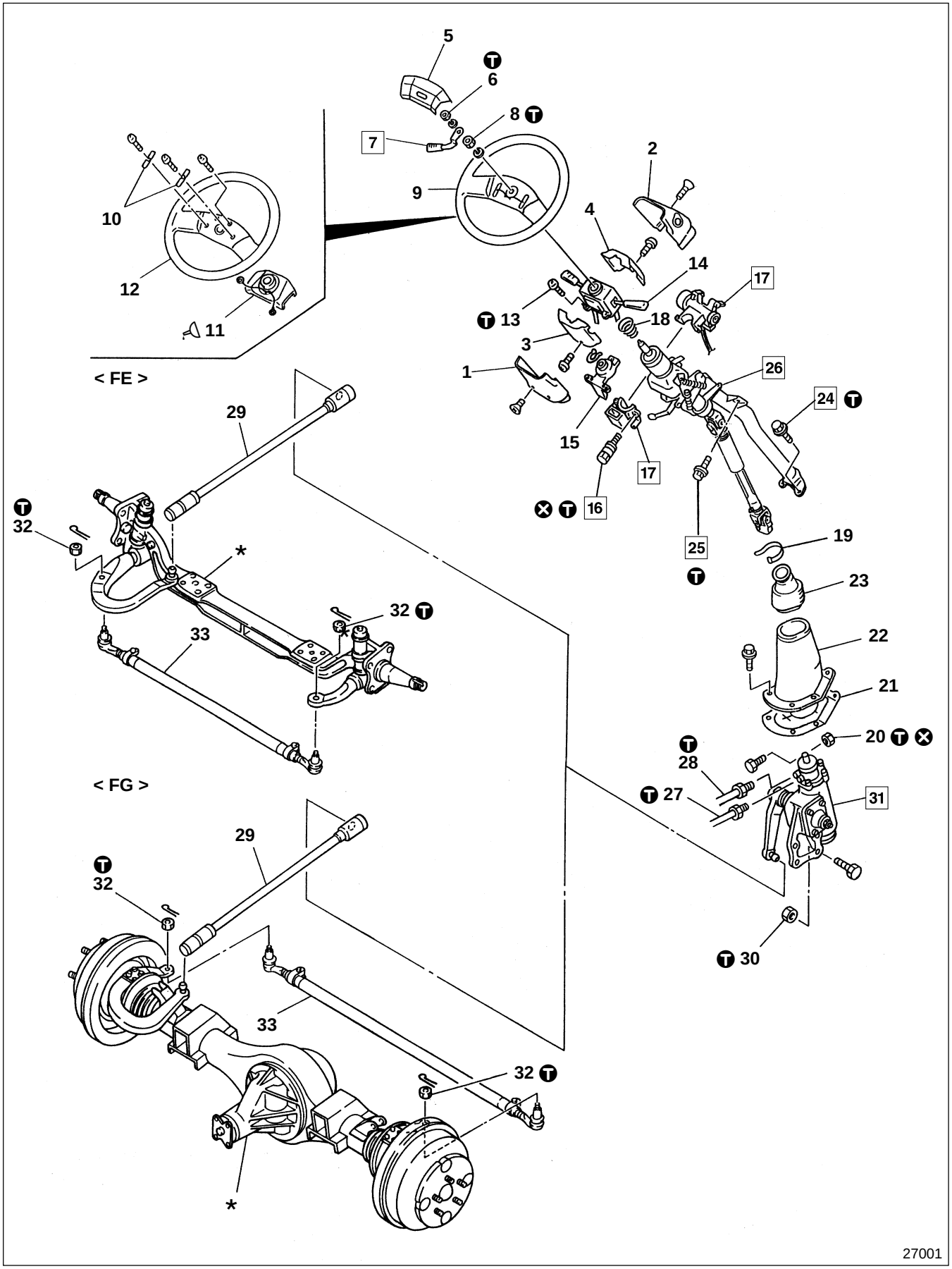

● **Removal sequence**

1 Column cover outer lower
2 Column cover outer upper
3 Column cover inner lower
4 Column cover inner upper
5 Horn pad
6 Nut
7 Telescopic lever
8 Nut
9 Steering wheel assembly
10 Horn spring
11 Cover assembly
12 Steering wheel
13 Screw
14 Combination switch Gr 54
15 Bracket
16 Head cutting bolt
17 Starter switch Gr 54
18 Spring
19 Band
20 Nut
21 Dust cover
22 Dust cover
23 Dust cover
24 Bolt
25 Bolt
26 Steering column subassembly P37-20
27 Pressure tube P37-41
28 Return tube P37-41
29 Drag link P37-42
30 Nut
31 Power steering booster P37-24, 30
32 Nut
33 Tie rod assembly P37-44

*: Front axle assembly
< FE > Gr 26
< FG > Gr26B

⊗: Non-reusable parts

CAUTION⚠

When disconnecting pressure tube 27 and return tube 28, clean the ports to keep them free from dust and other foreign particles.

● **Installation sequence**

Follow the removal sequence in reverse.

Tightening torque

Unit : N·m {lbf.ft, kgf·m}

Location	Parts to be tightened	Tightening torque	Remarks
6	Nut (Telescopic lever mounting)	8.8 to 9.8 {6.5 to 7.2, 0.9 to 1.0}	—
8	Nut (Steering wheel assembly mounting)	39 to 49 {29 to 36, 4 to 5}	—
13	Screw (Combination switch mounting)	2.5±0.5 {1.8±0.4, 0.25±0.05}	—
16	Head cutting bolt (Starter switch mounting)	14.2±1.5 {10±1.1, 1.45±0.15}	—
20	Nut (Steering column subassembly and power steering booster mounting)	53 to 65 {39 to 48, 5.4 to 6.6}	—
24	Bolt (Steering column at floor side mounting)	17 to 26 {12 to 19, 1.7 to 2.6}	—
25	Bolt (Steering column subassembly to instrument panel side mounting)	17 to 26 {12 to 19, 1.7 to 2.6}	—
27	Pressure tube	29 to 39 {22 to 29, 3 to 4}	—
28	Return tube	39 to 49 {29 to 36, 4 to 5}	—
30	Nut (Power steering booster mounting)	83.5 to 108 {61 to 80, 8.5 to 11.0}	—
32	Nut (Tie rod assembly mounting)	93±25 {69±18, 9.5±2.5}	—

Lubricant

Location	Points of application	Specified lubricant	Quantity
11	Contact area between combination switch of cover assembly and horn contact	Wheel bearing grease [NLGI No.2 (Li soap)]	As required

◆ Service procedure

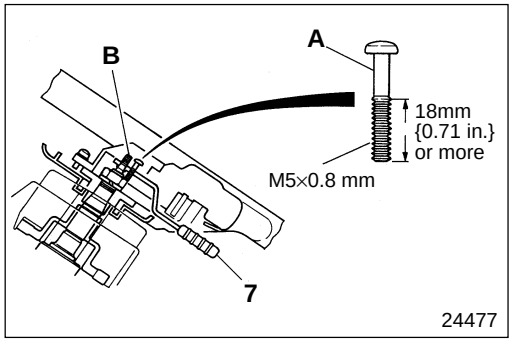

7 **Telescopic lever**

[Removal]
Secure screw **A** (M5×0.8 mm) in tapped hole in telescopic lever **7** and remove telescopic lever from telescopic shaft **B**.

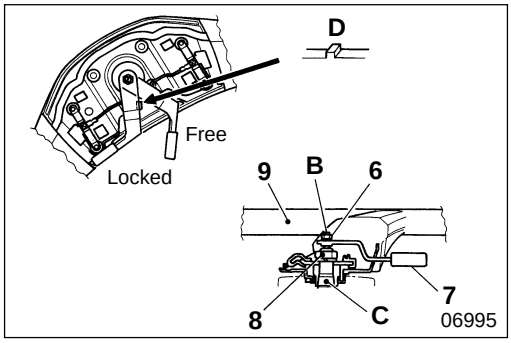

[Installation]
Locate telescopic lever **7** at the specified position (locked), and adjust until the specified torque is applied to telescopic shaft **B**.

CAUTION
Do not crush the screw tip of telescopic shaft B.

Start procedure

Install steering wheel assembly **9**. Using a long socket wrench, tighten nut **8** at specified torque 39 to 49 N·m {29 to 36 lbf.ft, 4 to 5 kgf·m}

Rotate telescopic shaft **B** counterclockwise with your fingers and check for looseness

Looseness found

No looseness

Using a flat-blade screwdriver turn telescopic shaft **B** clockwise and drive it in until it hits lightly with a "clunk", but do not turn it any further

CAUTION

Be careful not to tighten too forcibly or you will crush the end of the telescopic shaft, requiring replacement of telescopic shaft assembly C

Install telescopic lever **7** at a location that allows easy tightening, then tighten nut **6** until the telescopic lever will not slip

Tighten telescopic shaft **B** at operating torque 6.9 to 7.8 N·m {5.1 to 5.8 lbf.ft, 0.7 to 0.8 kgf·m}. (Tighten telescopic bar **7** at torque 69 to 78 N {15 to 18 lbf, 7 to 8 kgf} 100 mm {3.94 in.}from the center of steering wheel assembly **9**

To maintain lock, hold telescopic lever **7** clockwise, then loosen and remove lock nut **6**

Remove telescopic lever **7**

NOTE

Remove telescopic lever 7 following the description under [Removal], taking care not to loosen telescopic shaft B.

Set telescopic lever **7** to specified lock position **D**, marked "凸"

Tighten nut **6** at specified torque 8.8 to 9.8 N·m {6.5 to 7.2 lbf.ft, 0.9 to 1.0 kgf·m}

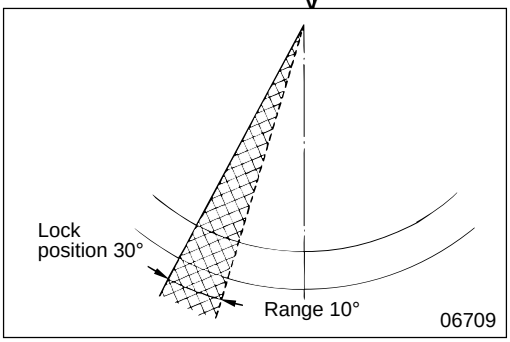

When telescopic lever **7** is released, and telescopic shaft **B** is retightened at operating torque 6.9 to 7.8 N·m {5.1 to 5.8 lbf.ft, 0.7 to 0.8 kgf·m}, the telescopic lever should lock in the 10° range this side of specified lock position 30°

Out of the range

Within the range

Joggle steering wheel assembly **9** up and down and check for looseness

Looseness found

No looseness

Remove nut **6**

Procedure is completed

Remove telescopic lever **7**

CAUTION

Be sure not to operate telescopic shaft B while steering wheel assembly 9 is removed.

NOTE

Be sure to assemble telescopic lever 7 only after steering wheel assembly 9 has been installed.

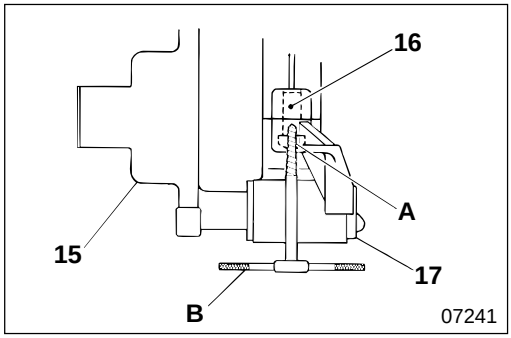

16 **17** **Head cutting bolt, starter switch**

[Removal]

- After removing bracket **15**, drill a ø5.5 to 6.0 mm {0.22 to 0.24 in.} hole 10 to 15 mm {0.39 to 0.59 in.} deep on cutting face **A** of head cutting bolt **16** for mounting starter switch **17**.
- Screw in screw extractor **B** counterclockwise, then pull out head cutting bolt **16**.

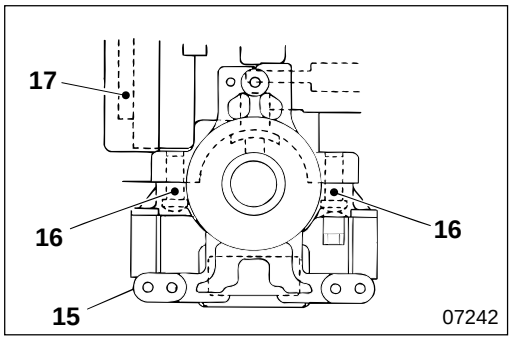

[Installation]

- With new head cutting bolt **16**, tighten starter switch **17** at specified torque to cut the head off the bolt.
- After installing bracket **15**, verify operation of the steering lock function of starter switch **17**.

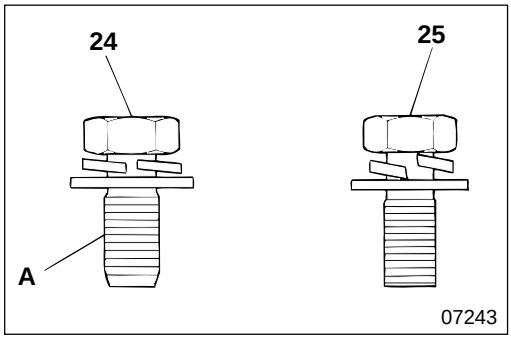

24 **25** **Installation of bolt**

- Bolts **24** and **25**, differ in shape. Do not mix them up when installing.
- Thread area **A** of bolt **24** is elliptical to facilitate grounding of the horn circuit.

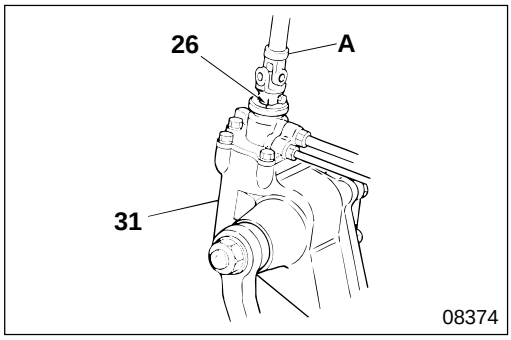

26 **31** **Removal and installation of steering column subassembly and power steering booster**

Before removing steering column subassembly **26**, power streering booster **31**, be sure to make alignment mark **A**.

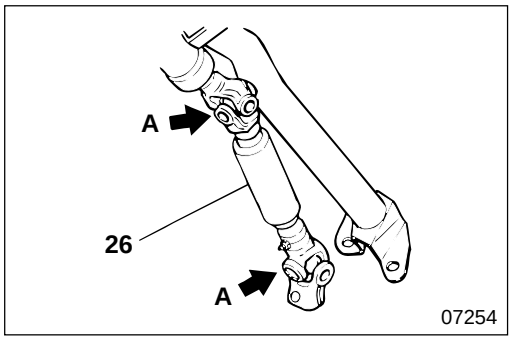

26 **Steering column subassembly**

When the spline of steering column subassembly **26** is disconnected, align the yokes to the same direction **A**.

M E M O

STEERING COLUMN SUBASSEMBLY

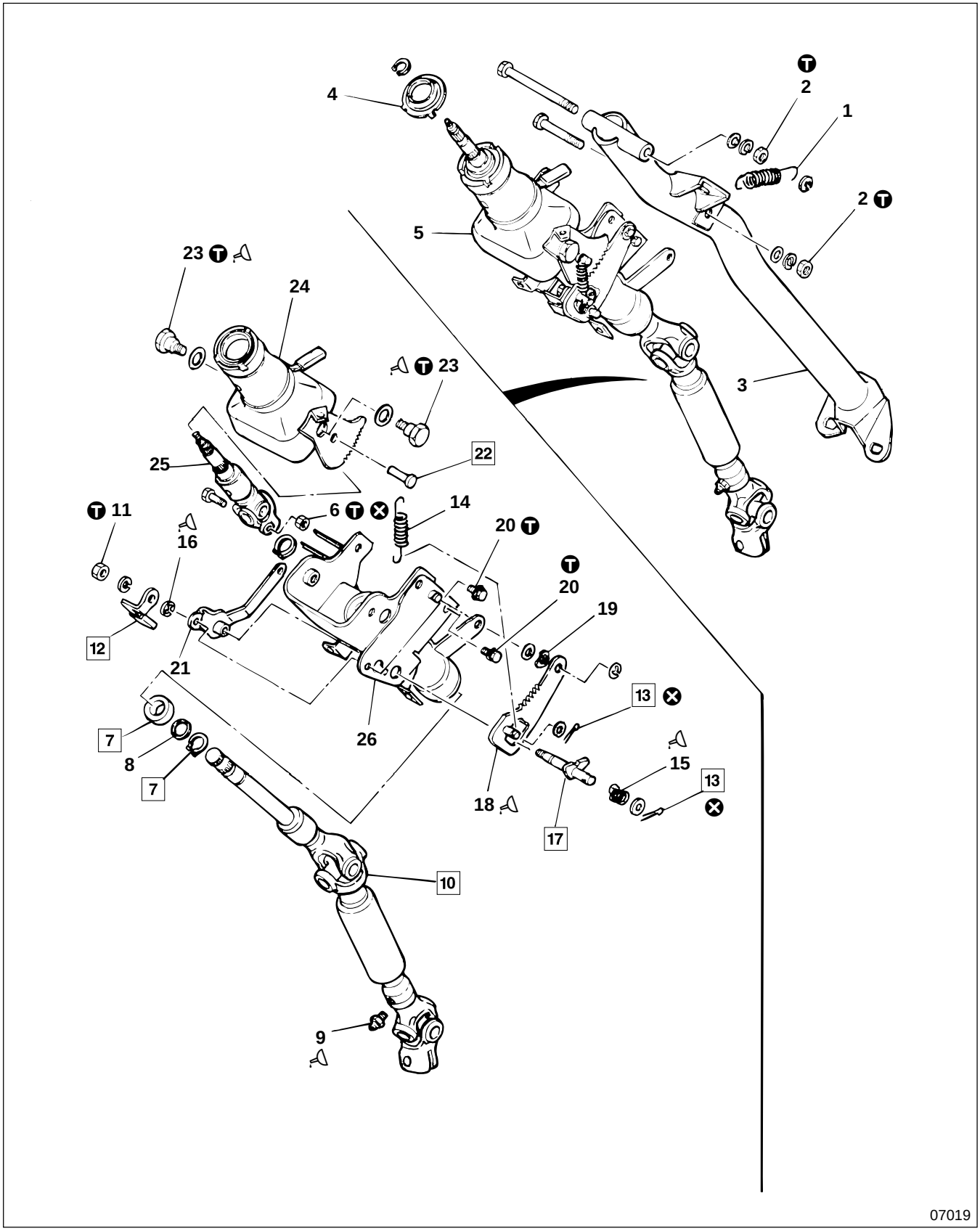

● **Disassembly sequence**

1 Return spring
2 Nut
3 Support bracket
4 Spring seat
5 Steering column assembly
6 Nut
7 Stopper
8 Bearing spacer
9 Grease nipple
10 Steering shaft assembly
11 Nut
12 Lock lever
13 Split pin
14 Return spring
15 Return spring
16 Snap ring
17 Cam
18 Lock plate
19 Wave washer
20 Bolt
21 Lever support
22 Clevis pin
23 Bolt
24 Column support upper
25 Telescopic shaft assembly
26 Column support lower

⊗ : Non-reusable parts

● **Assembly sequence**

5 → 4 → 3 → 2 → 1

5 : 25 → 24 → 23 → 22 → 21 → 20 → 19 → 18 → 17 → 16 → 15 → 14 → 13 → 12 → 11 → 10 → 9 → 8 → 7 → 6
26 →

Tightening torque

Unit : N·m {lbf.ft, kgf·m}

Location	Parts to be tightened	Tightening torque	Remarks
2	Nut (Support bracket mounting)	17 to 26 {12 to 19, 1.7 to 2.6}	—
6	Nut (Steering shaft assembly and telescopic shaft assembly mounting)	53 to 65 {39 to 48, 5.4 to 6.6}	—
11	Nut (Lock lever mounting)	4 to 6 {2.9 to 4.3, 0.4 to 0.6}	—
20	Bolt (Lever support mounting)	7 to 10 {5.1 to 7.2, 0.7 to 1.0}	—
23	Bolt (Column support upper and column support lower mounting)	15 to 20 {11 to 14, 1.5 to 2.0}	—

Lubricant and/or sealant

Location	Points of application	Specified lubricant and/or sealant	Quantity
9	Supply via grease nipple	Wheel bearing grease [NLGI No.2 (Li soap)]	As required
15	Friction surface of return spring and washer	Wheel bearing grease [NLGI No.2 (Li soap)]	As required
16	Friction surfaces of lever support and snap ring	Wheel bearing grease [NLGI No.2 (Li soap)]	As required
18	Friction surfaces of cam and lock plate return spring clevis pin	Wheel bearing grease [NLGI No.2 (Li soap)]	As required
23	Thread area of bolt	THREEBOND thread lock super 103Q or LOCTITE 271	As required
	Friction surface of column support upper and bolt	Wheel bearing grease [NLGI No.2 (Li soap)]	As required

◆ Service procedure

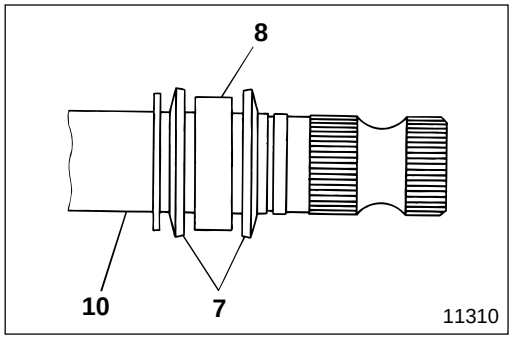

7 **Installation of stopper**

Install stoppers **7** on steering shaft assembly **10** in the direction as illustrated so that they straddle bearing spacer **8**.

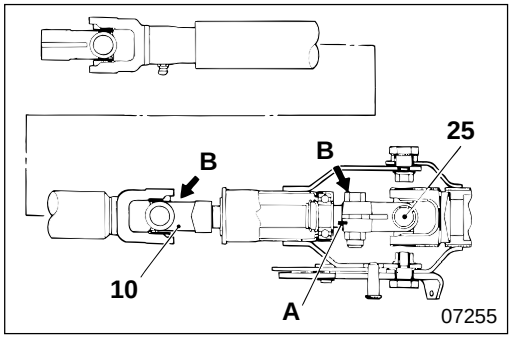

10 **Steering shaft assembly**

- Before removing steering shaft assembly **10**, be sure to make alignment mark **A**.
- Install the steering shaft with direction **B** of the telescopic shaft assembly **25** yoke and steering shaft assembly **10** yoke aligned or at phase angle of 90°.

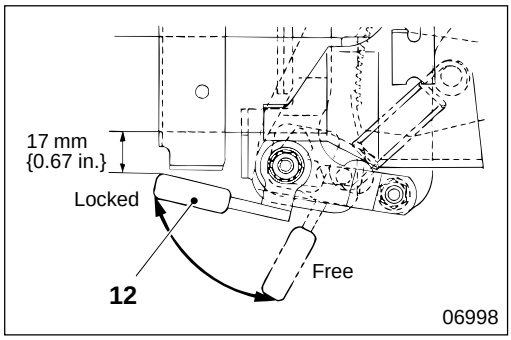

12 **Installation of lock lever**

- Install lock lever **12** so it is within the working angle when locked.
- After installing lock lever **12**, make sure that the lever operates smoothly (operating force less than 49 N {11 lbf, 5 kgf}). With the lever free, make sure that high tilt operates smoothly.

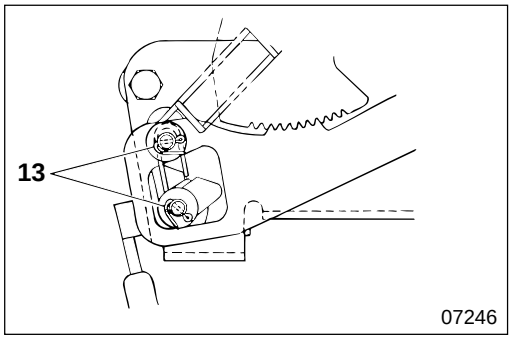

13 **Installation of split pin**

Bend split pin **13** to face outwards as illustrated.

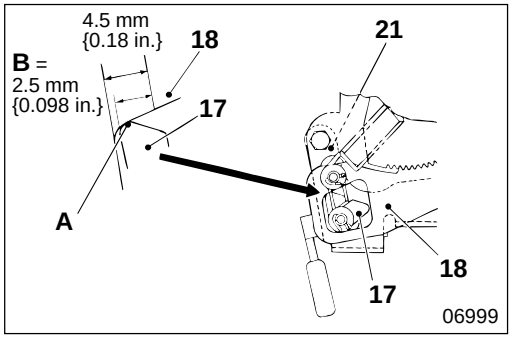

17 **Installation of cam**

Adjust lever support **21** so that the top surface **A** of cam **17** is within dimension **B** of lock plate **18** to install the cam.

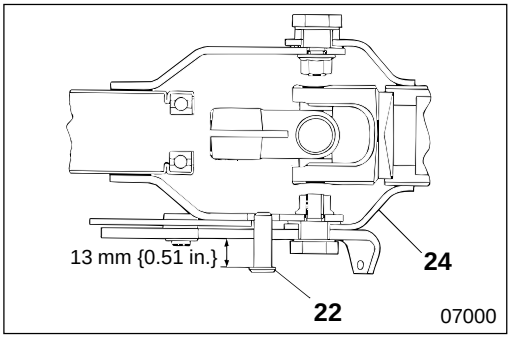

22 **Installation of clevis pin**

Drive clevis pin **22** into column support upper **24** so that the drive dimension is obtained.

POWER STEERING BOOSTER < FE >

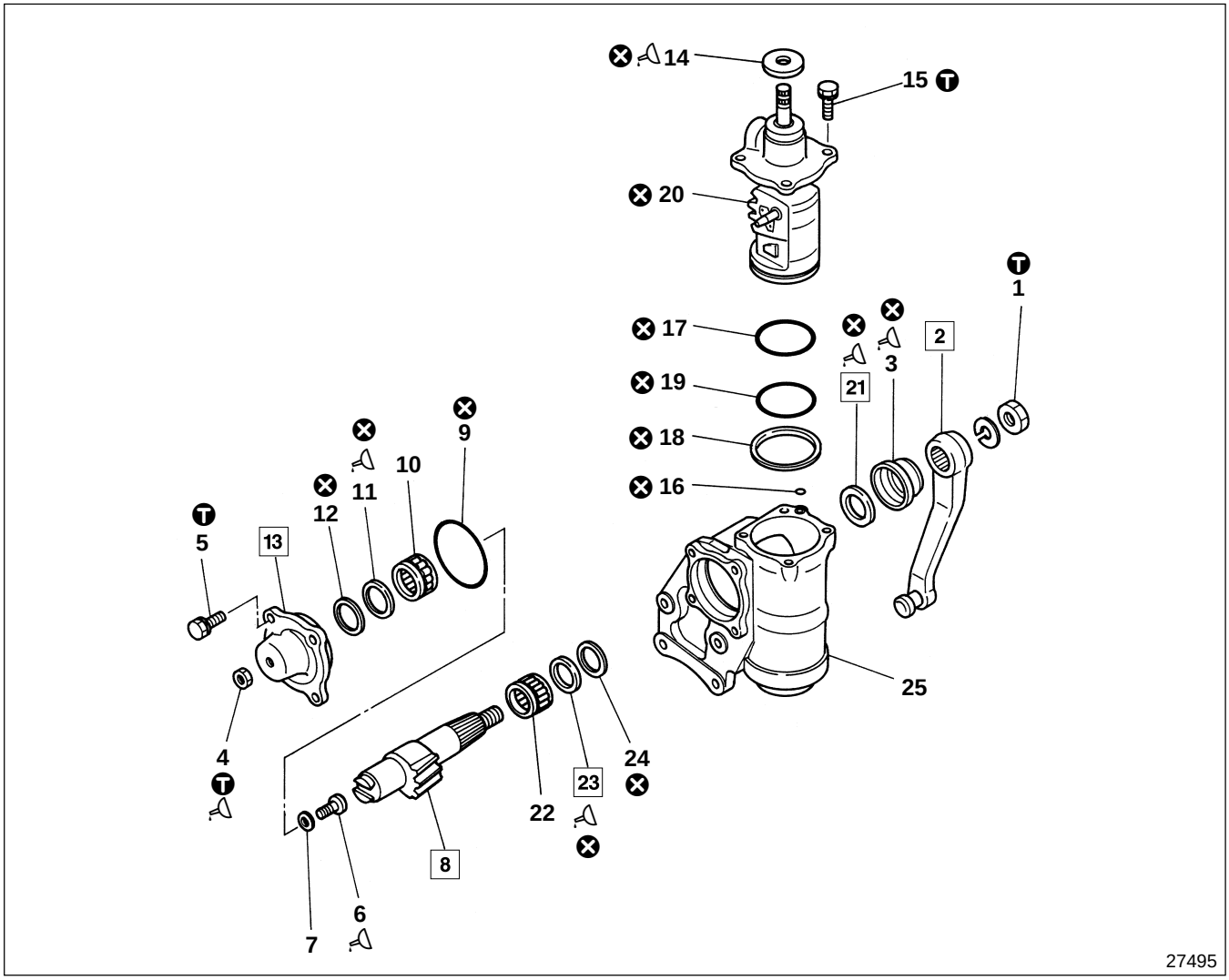

● **Inspection before disassembly**

P37-26

● **Disassembly sequence**

1 Lock nut
2 Pitman arm
3 Dust cover
4 Nut
5 Bolt
6 Adjusting bolt
7 Adjusting plate
8 Sector shaft
9 O-ring
10 Needle bearing
11 U-packing
12 Backup ring
13 Side cover
14 Dust cover
15 Bolt
16 O-ring
17 O-ring
18 Seal ring
19 O-ring
20 Ball screw set shaft
21 Oil seal
22 Needle bearing
23 U-packing
24 Backup ring
25 Gear box

⊗ : Non-reusable parts

NOTE

- **Do not disassemble needle bearing 10, 22 and ball screw set shaft 20 unless they are faulty.**
- **Replace U-packings 11, 23 together with backup rings 12 and 24.**

● **Inspection after assembly**

P37-26

● **Assembly sequence**

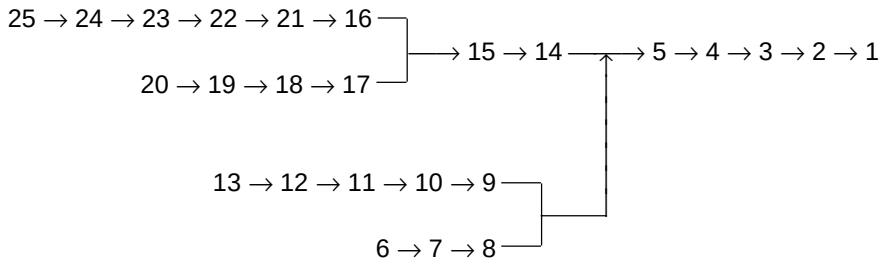

Repair kit : Seal kit

Service standards

Unit : mm {in.}

Location	Maintenance item	Standard value (Basic diameter in [ ])	Limit	Remedy
6, 8	Axial play of center shaft and adjusting bolt	0.1 {0.0039} or less	0.1 {0.0039}	Replace Sector shaft assy
8	Axis diameter of sector shaft (at gear box)	[42] –0.008 to +0.005 {[1.65] –0.00031 to +0.00020}	0.003 {0.00012}	Gap between worn area and unworn area
20	Rotating torque of ball screw set shaft	15 to 69 N·cm {0.11 to 0.51 lbf.ft, 1.5 to 7.0 kgf·cm}	—	—
20, 25	Clearance between ball screw set shaft and gear box	0.022 to 0.069 {0.00087 to 0.0027}	—	Replace
25	Inner diameter of gear box	[78] 0.012 to 0.034 {[3.1] 0.00047 to 0.0013}	0.05 {0.0020}	Gap between worn area and unworn area
—	Total starting torque with power steering booster	98 N·cm {0.72 lbf.ft, 10 kgf·cm} or less	—	Adjust
—	Engagement torque	20 to 49 N·cm {0.14 to 0.36 lbf.ft, 2 to 5 kgf·cm}	—	Adjust

Tightening torque

Unit : N·m {lbf.ft, kgf·m}

Location	Parts to be tightened	Tightening torque	Remarks
1	Lock nut (Pitman arm mounting)	245 to 294 {180 to 215, 25 to 30}	—
4	Nut tightening	29 to 39 {22 to 29, 3 to 4}	—
5, 15	Bolt (Side cover and valve housing mounting)	98 to 115 {72 to 87, 10 to 12}	—

Lubricant and/or sealant

Location	Points of application	Specified lubricant and/or sealant	Quantity
3, 14	Pack interior of dust cover	Wheel bearing grease [NLGI No.2 (Li soap)]	As required
4	Nut fixing point	THREEBOND 1104	As required
6	Head of the adjusting bolt	Wheel bearing grease [NLGI No.2 (Li soap)]	As required
11, 23	Inside periphery of U-packing	Wheel bearing grease [NLGI No.2 (Li soap)]	As required
21	Lip area of oil seal	Wheel bearing grease [NLGI No.2 (Li soap)]	As required

Special tools

Unit : mm {in.}

Location	Tool name and shape	Part No.	Application
2	Pitman arm puller 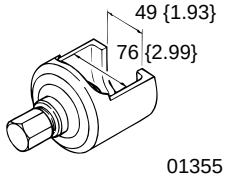	MH062472	Removal of pitman arm

◆ Service procedure

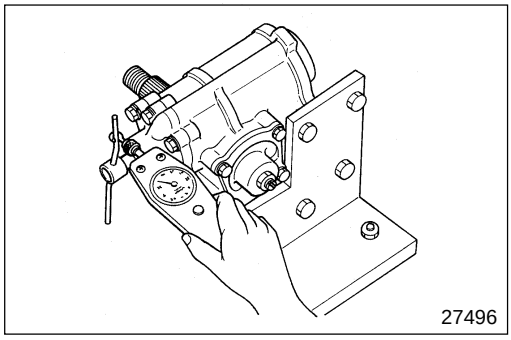

● **Inspection before disassembly**

[Measurement of total starting torque]
Before disassembly, measure the total starting torque for a reference during assembly.

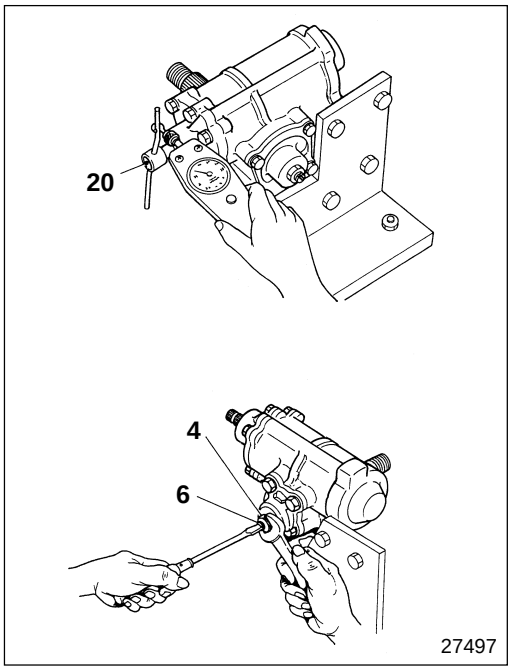

● **Inspection after assembly**

[Measurement of total starting torque]

- While turning ball screw set shaft **20**, one quarter of a turn left and right from the neutral position using a torque meter, drive adjusting bolt **6** in, then adjust so that the total starting torque or the engagement torque is within the standard value.
- After adjustment, tighten nut **4** at specified torque.

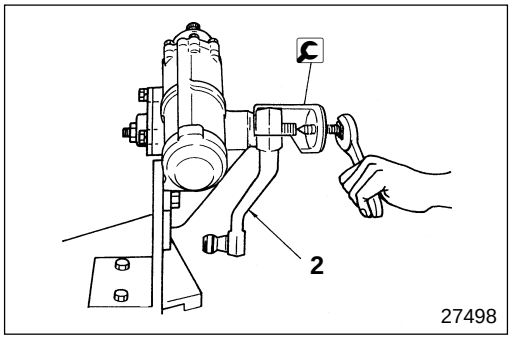

2 **Pitman arm**

[Removal]
: Pitman arm puller

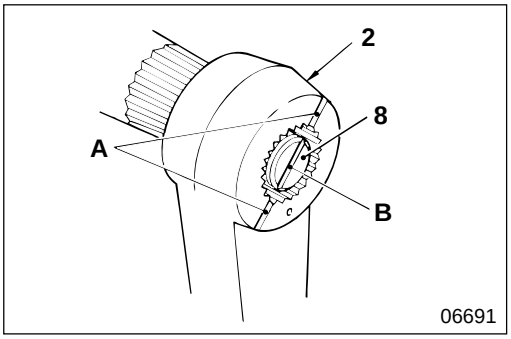

[Installation]
Align slit **B** of the V-groove of sector shaft **8** on the same line as slit **A** of the V-groove of pitman arm **2** when installing it.

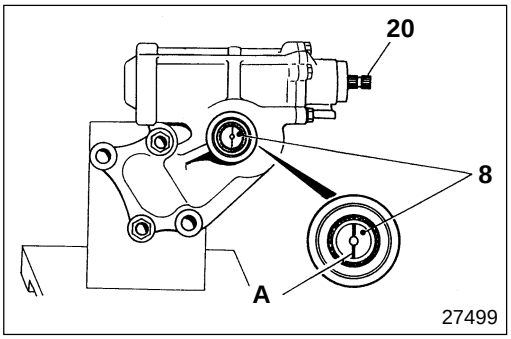

8 **13** **Sector shaft and side cover**

[Removal]

- Turn ball screw set shaft **20** counterclockwise to the lock position, then turn it clockwise approximately 2.6 turns, so that slit **A** of the V-groove at the end of sector shaft **8** is in the neutral position as illustrated.

NOTE

At this time, make sure that slit A of the V-groove at the end of sector shaft 8 is at right angles to the axial line of ball screw set shaft 20.

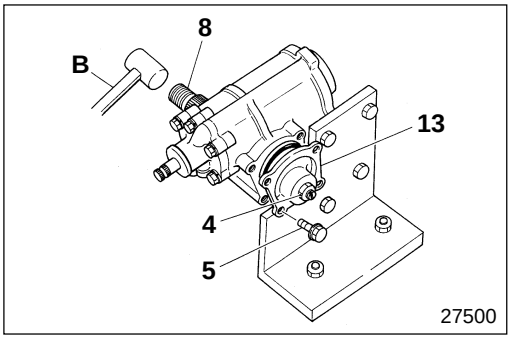

- Loosen nut **4** and remove bolt **5**. After making sure that sector shaft **8** is in the neutral position, tap the end of the sector shaft, and pull out side cover **13** together with the sector shaft.

  B : Plastic-headed mallet

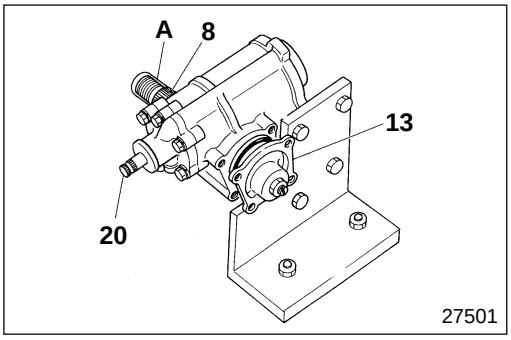

[Installation]
With ball screw set shaft **20** in the neutral position, insert sector shaft **8** and side cover **13**.

CAUTION⚠

Insert sector shaft 8 with the thread area of the shaft end and serration area protected by cover A to prevent damage to the oil seal.

NOTE

- **Turn ball screw set shaft 20, and make sure that the shaft rotates approximately five turns lock-to-lock.**
- **If the number of turns is less, inspect engagement of ball screw set shaft 20 and sector shaft 8.**

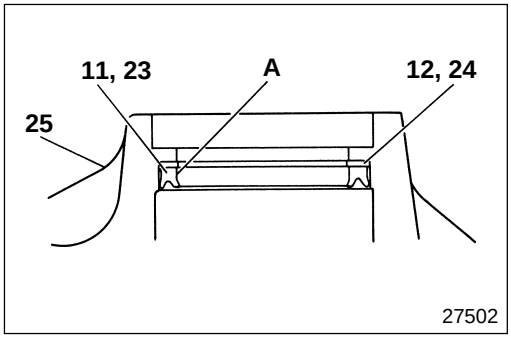

11 **23** **Installation of U-packing**

Apply grease to lip area **A** of U-packing **11, 23** and install into gear box **25** as illustrated.

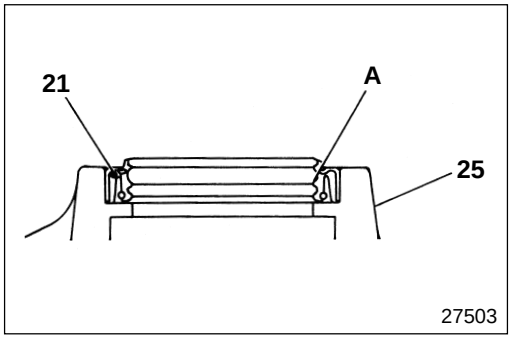

21 **Installation of oil seal**

Apply grease to lip area **A** of oil seal **21** and install into gear box **25** as illustrated.

M E M O

POWER STEERING BOOSTER < FG >

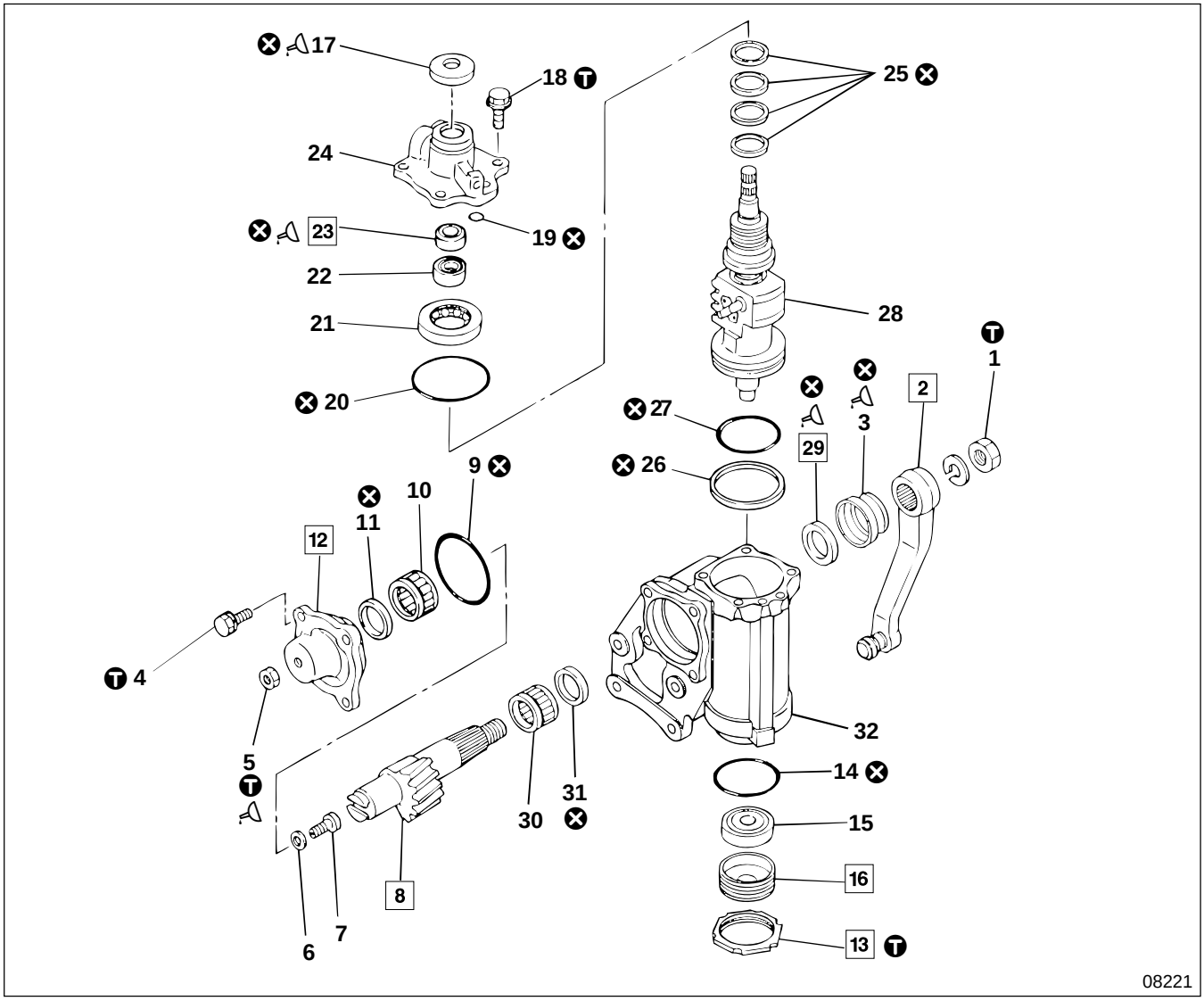

● **Inspection before disassembly**

P37-32

● **Disassembly sequence**

1 Lock nut
2 Pitman arm
3 Dust cover
4 Bolt
5 Nut
6 Adjusting plate
7 Adjusting bolt
8 Sector shaft
9 O-ring
10 Needle bearing
11 U-packing
12 Side cover
13 Special nut
14 O-ring
15 Bearing
16 End cover
17 Dust cover
18 Bolt
19 O-ring
20 O-ring
21 Bearing
22 Bearing
23 Oil seal
24 Valve housing
25 Seal ring
26 Seal ring
27 O-ring
28 Ball screw set shaft
29 Oil seal
30 Needle bearing
31 U-packing
32 Gear box

⊗ : Non-reusable parts

NOTE

Do not disassemble needle bearing 10, 30 and ball screw set shaft 28 unless they are faulty.

● **Inspection after assembly**

🕮 P37-33

● **Assembly sequence**

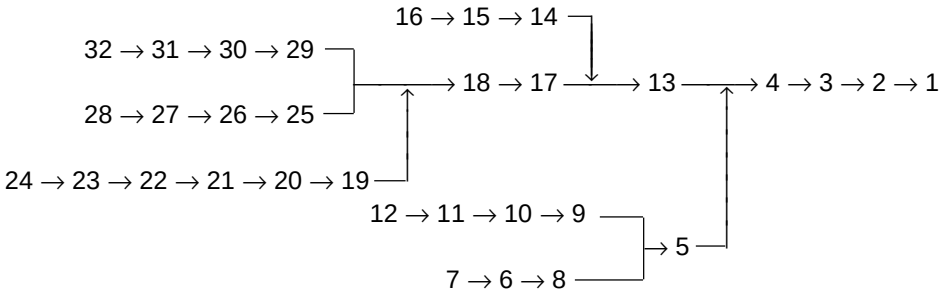

Repair kit : Seal kit

Service standards

Unit : mm {in.}

Location	Maintenance item	Standard value (Basic diameter in [ ])	Limit	Remedy
7, 8	Axial play of center shaft and adjusting bolt	0.1 {0.0039} or less	0.1 {0.0039}	Replace adjusting plate
8	Axis diameter of sector shaft (at gear box)	[40] –0.008 to +0.005 {[1.57] –0.00031 to +0.00020}	0.003 {0.00012}	Gap between worn area and unworn area
28	Main shaft outer diameter of ball screw set shaft	[22.5] –0.05 to 0 {[0.89] –0.0020 to 0}	—	Replace
	Rotating torque of ball screw set shaft	29 to 69 N·cm {0.22 to 0.51 lbf.ft, 3 to 7 kgf·cm}	—	Adjust
28, 32	Clearance between ball screw set shaft and gear box	0.022 to 0.069 {0.00087 to 0.0027}	—	Replace
32	Inner diameter of gear box	[78] 0.012 to 0.034 {[3.1] 0.00047 to 0.0013}	0.05 {0.0020}	Gap between worn area and unworn area
—	Total starting torque with power steering booster	98 N·cm {0.72 lbf.ft, 10 kgf·cm} or less	—	Adjust
—	Engagement torque	20 to 49 N·cm {0.14 to 0.36 lbf.ft, 2 to 5 kgf·cm}	—	Adjust

Tightening torque

Unit : N·m {lbf.ft, kgf·m}

Location	Parts to be tightened	Tightening torque	Remarks
1	Lock nut (Pitman arm mounting)	245 to 294 {180 to 215, 25 to 30}	—
4	Bolt (Side cover mounting)	74 to 98 {54 to 72, 7.5 to 10}	—
5	Nut tightening	29 to 39 {22 to 29, 3 to 4}	—
13	Special nut mounting	177 to 226 {130 to 165, 18 to 23}	—
18	Bolt (Valve housing mounting)	44 to 54 {33 to 40, 4.5 to 5.5}	—

Lubricant and/or sealant

Location	Points of application	Specified lubricant and/or sealant	Quantity
3, 17	Pack interior of dust cover	Wheel bearing grease [NLGI No.2 (Li soap)]	As required
5	Nut fixing point	THREEBOND 1104	As required
23, 29	Lip area of oil seal	Wheel bearing grease [NLGI No.2 (Li soap)]	As required

Special tools

Unit : mm {in.}

Location	Tool name and shape	Part No.	Application
2	Pitman arm puller 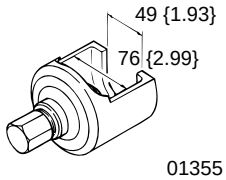	MH062472	Removal of pitman arm
13	Special nut wrench 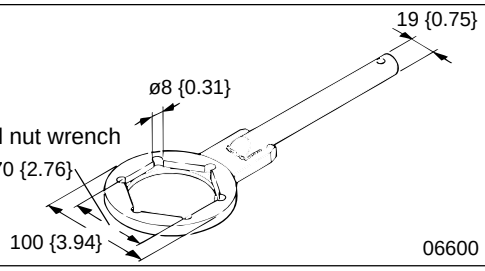	MH061594	Removal and installation of special nut
16	End cover wrench 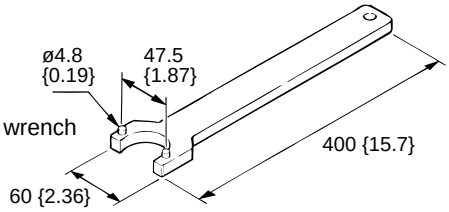	MH061593	Removal and installation of end cover

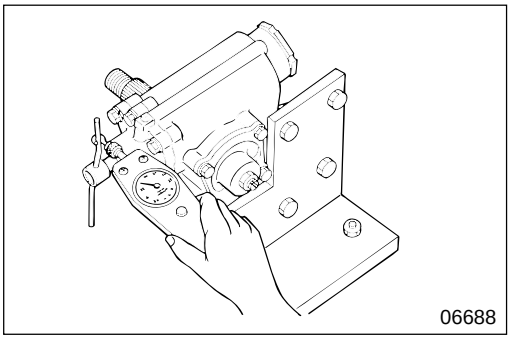

◆ Service procedure

● **Inspection before disassembly**

[Measurement of total starting torque]
Before disassembly, measure the total starting torque for a reference during assembly.

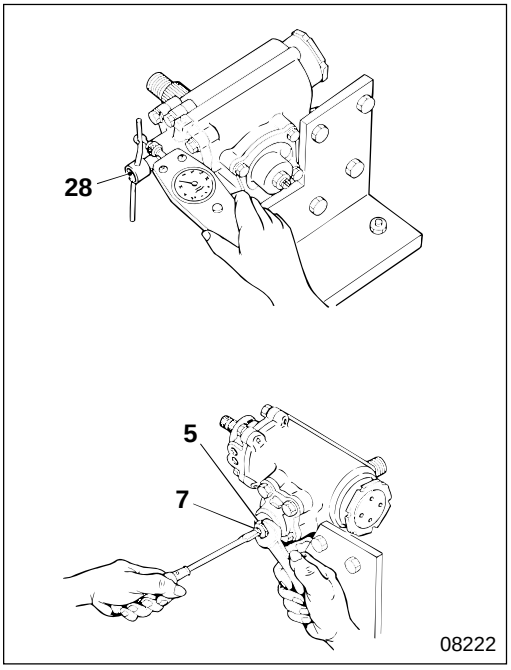

● **Inspection after assembly**

[Measurement of total starting torque]

- While turning ball screw set shaft **28**, one quarter of a turn left and right from the neutral position using a torque meter, drive adjusting bolt **7** in, then adjust so that the total starting torque or the engagement torque is within the standard value.
- After adjustment, tighten nut **5** at specified torque.

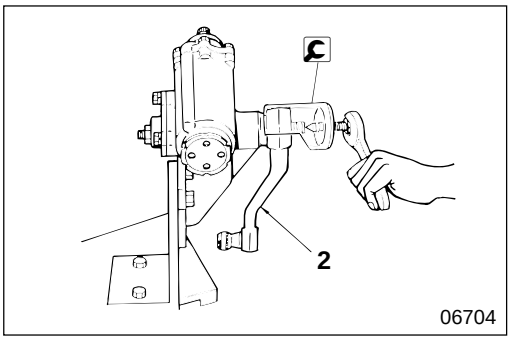

2 **Pitman arm**

[Removal]

: Pitman arm puller

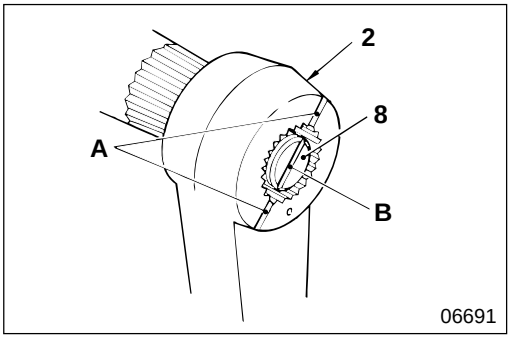

[Installation]

Align slit **B** of the V-groove of sector shaft **8** on the same line as slit **A** of the V-groove of pitman arm **2** when installing it.

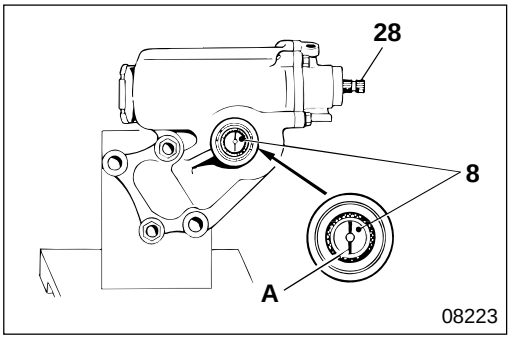

8 **12** **Sector shaft and side cover**

[Removal]

- Turn ball screw set shaft **28** counterclockwise to the lock position, then turn it clockwise approximately 2.6 turns, so that slit **A** of the V-groove at the end of sector shaft **8** is in the neutral position as illustrated.

NOTE

At this time, make sure that slit A of the V-groove at the end of sector shaft 8 is at right angles to the axial line of ball screw set shaft 28.

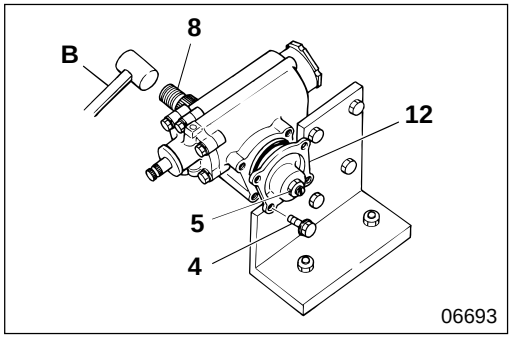

- Loosen nut **5** and remove bolt **4**. After making sure that sector shaft **8** is in the neutral position, tap the end of the sector shaft, and pull out side cover **12** together with the sector shaft.

  B : Plastic-headed mallet

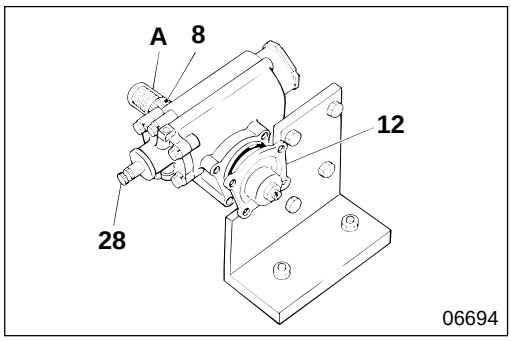

[Installation]
With ball screw set shaft **28** in the neutral position, insert sector shaft **8** and side cover **12**.

CAUTION

Insert sector shaft 8 with the thread area of the shaft end and serration area protected by cover A to prevent damage to the oil seal.

NOTE

- **Turn ball screw set shaft 28, and make sure that the shaft rotates approximately five turns lock-to-lock.**
- **If the number of turns is less, inspect engagement of ball screw set shaft 28 and sector shaft 8.**

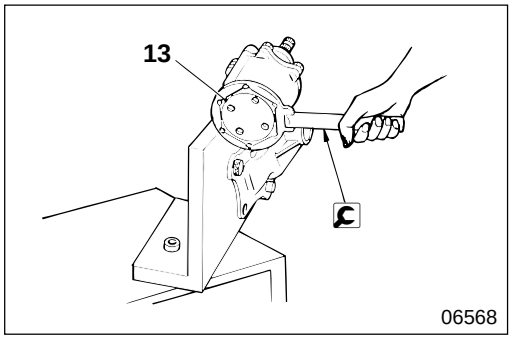

13 Removal and installation of special nut

: Special nut wrench

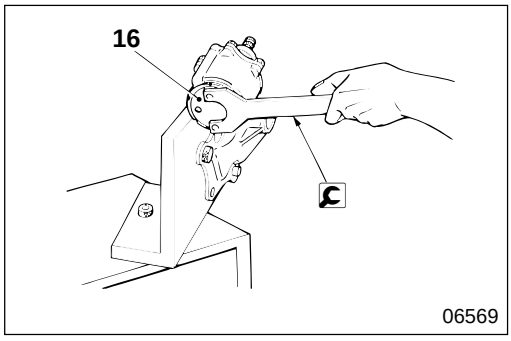

16 End cover

[Removal]

: End cover wrench

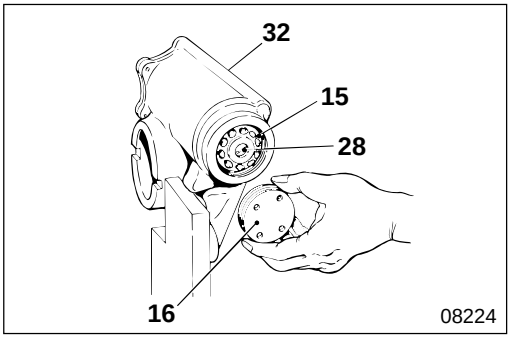

[Installation]

- Install inner race of bearing **15** onto the end of ball screw set shaft **28**, then install the outer race of the bearing onto end cover **16** and screw into gear box **32**.

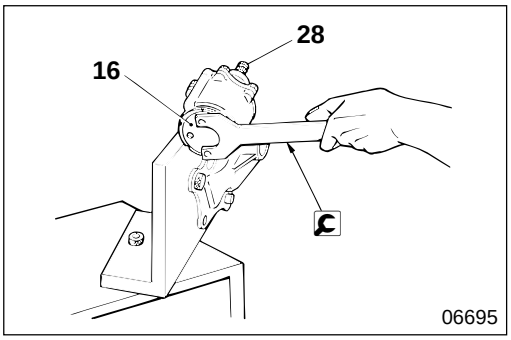

- Making sure that the rotation torque of ball screw set shaft 28 is not uneven, drive in end cover **16**, using 🔧 end cover wrench, until the rotation torque is within the standard value.

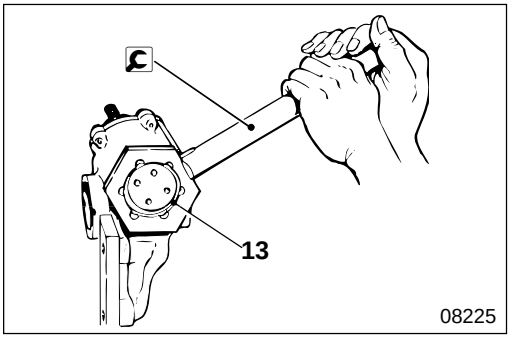

- At the point where the rotation torque is fixed, tighten special nut **13** at specified torque, using 🔧 special nut wrench.

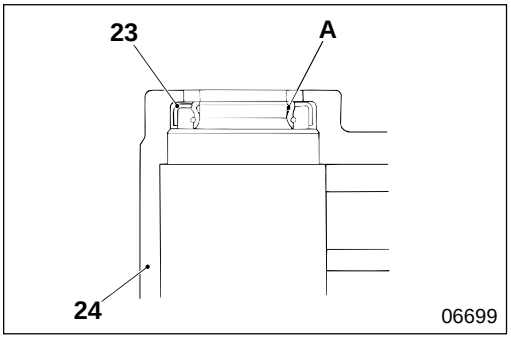

23 **Installation of oil seal**

Apply grease to lip area **A** of oil seal **23** and install into valve housing **24** as illustrated.

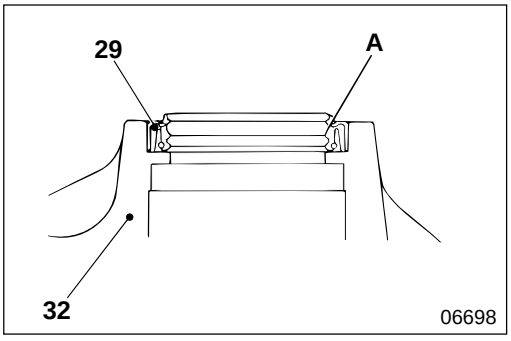

29 **Installation of oil seal**

Apply grease to lip area **A** of oil seal **29** and install into gear box **32** as illustrated.

POWER STEERING OIL PUMP

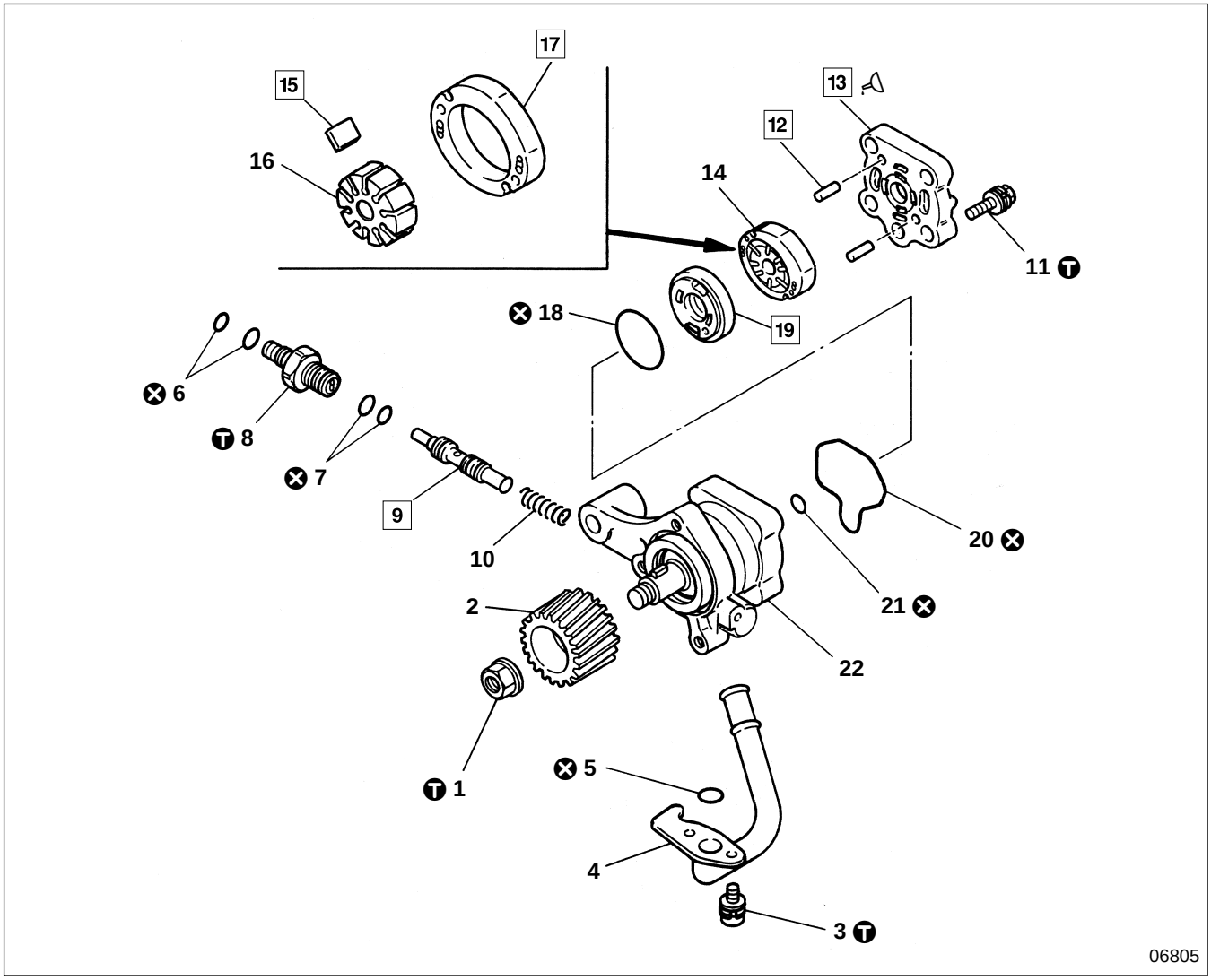

● **Disassembly sequence**

1 Lock nut
2 Gear
3 Bolt
4 Suction connector
5 O-ring
6 O-ring
7 O-ring
8 Connector
9 Relief valve assembly
10 Flow control spring
11 Bolt
12 Pin
13 Cover
14 Cartridge assembly
15 Vane
16 Rotor
17 Cam ring
18 O-ring
19 Side plate
20 O-ring
21 O-ring
22 Body and shaft assembly

⊗ : Non-reusable parts

● **Assembly sequence**

19→18 13→12 8→7→6

22→21→20 →14 →11→10→ 9 →5→4→3→2→1

14 : 15→16→17

Repair kit : Seal kit, Cartridge assembly kit

Service standards

Unit : mm {in.}

Location	Maintenance item	Standard value (Basic diameter in [ ])	Limit	Remedy
9, 22	Clearance between relief valve assembly and body and shaft assembly	[14] 0.01 to 0.02 {[0.55] 0.00039 to 0.00079}	0.03 {0.0012}	—
10	Flow control spring free length	36.5 {1.44}	33.5 {1.32}	—
13	Wear of cover	—	0.05 {0.0020}	—
15, 16	Clearance between vane and rotor	0.01 {0.00039}	0.06 {0.0024}	—
19	Wear of side plate	—	0.05 {0.0020}	—

Tightening torque

Unit : N·m {lbf.ft, kgf·m}

Location	Parts to be tightened	Tightening torque	Remarks
1	Lock nut (Gear mounting)	34 to 45 {25 to 33, 3.5 to 4.6}	Wet
3	Bolt (Suction connector mounting)	6 to 10 {4.3 to 7.2, 0.6 to 1.0}	—
8	Connector	49 to 69 {36 to 51, 5 to 7}	—
11	Bolt (Cover mounting)	18 to 22 {13 to 16, 1.8 to 2.2}	—

Lubricant and/or sealant

Location	Points of application	Specified lubricant and/or sealant	Quantity
13	Bushing of cover	Automatic transmission fluid (DEXRON or DEXRON II type)	As required

◆ Service procedure

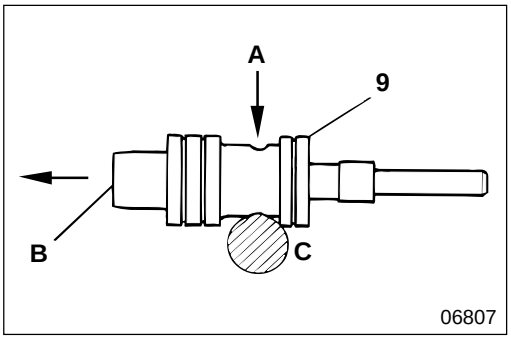

9 **Inspection of relief valve assembly**

Block one side of the hole of relief valve assembly **9**, with your finger **C**, then when air pressure **A** of 390 to 490 kPa {57 to 71 lbf/in^2, 4 to 5 kgf/cm^2} is applied from the other side, check whether air is released from small hole **B** at the rear. If air is not released, it is normal.

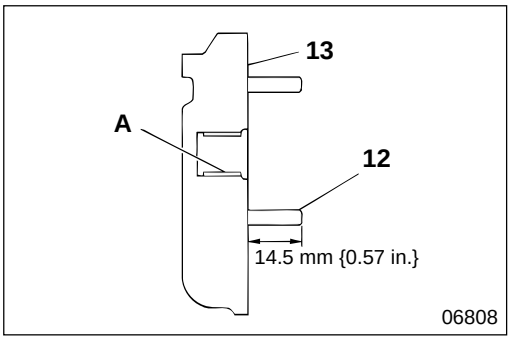

12 **13** **Installation of pin and cover**

- Press-fit pin **12** into cover **13**, to the press-fitting height.
- Apply hydraulic oil to bushing area **A** of the cover.

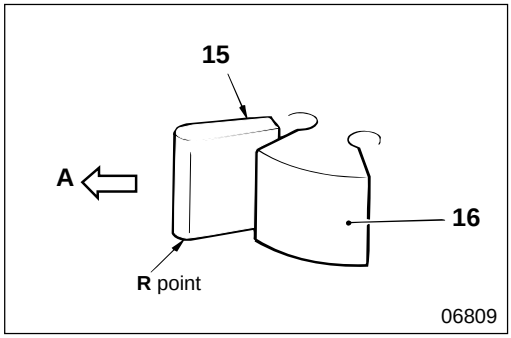

15 **Installation of vane**

With **R** point of vane **15** facing outside **A**, install it on rotor **16** and make sure that the vane moves smoothly. If it is faulty, replace cartridge **14**.

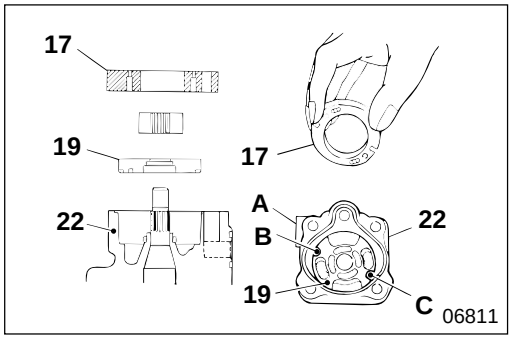

17 **19** **Installation of cam ring and side plate**

- Since the mounting direction of side plate **19** is determined, mount the side plate, so that relief valve side **A** is aligned with round hole **B** (standard pin side) and slotted hole **C** is located on a diagonal.

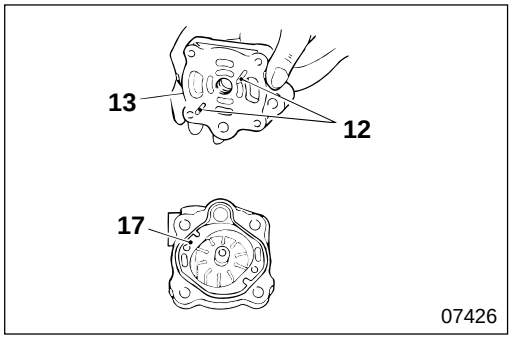

- Align cam ring **17** with pin **12** of cover **13**, then install the cam ring.

M E M O

POWER STEERING OIL TANK

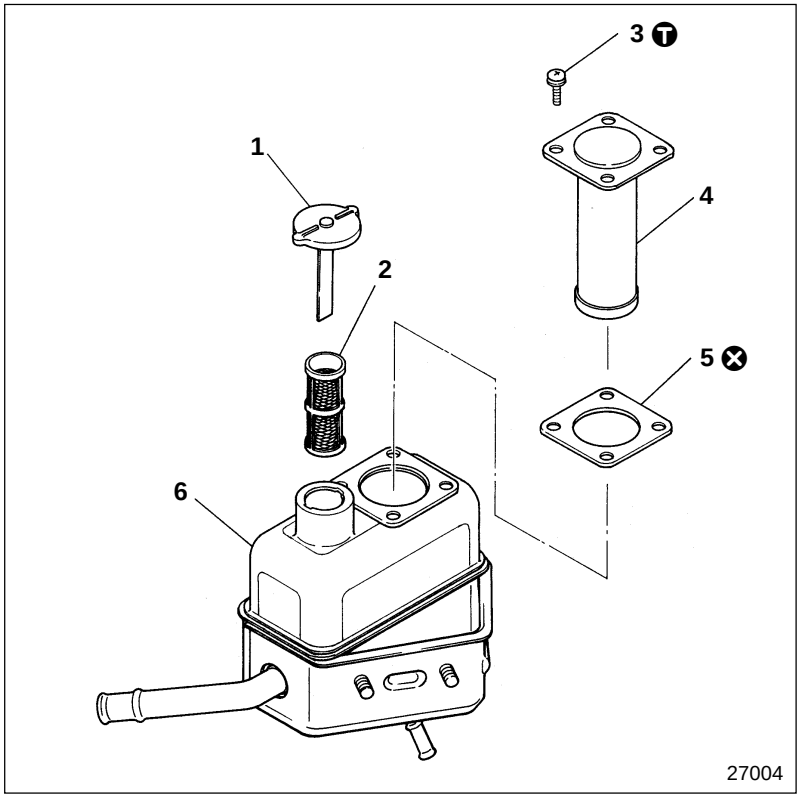

● **Disassembly sequence**

1 Filler cap
2 Strainer
3 Screw
4 Filter
5 Packing
6 Tank

⊗ : Non-reusable parts

● **Assembly sequence**

Follow the disassembly sequence in reverse.

T Tightening torque

Unit : N·m {lbf.ft, kgf·m}

Location	Parts to be tightened	Tightening torque	Remarks
3	Screw (Filter mounting)	1.27±0.29 {0.94±0.22, 0.13±0.03}	—

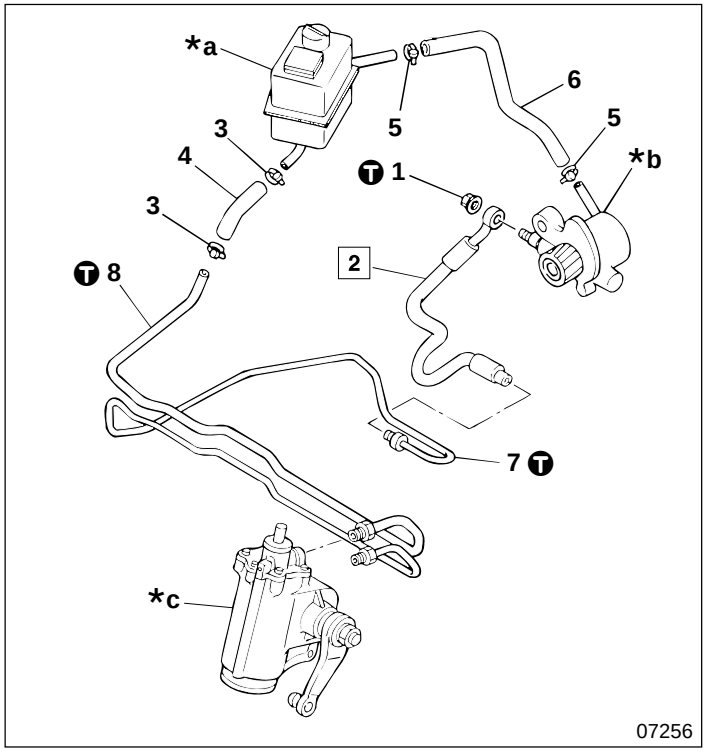

● **Removal sequence**

1 Nut
2 Pressure hose
3 Clamp
4 Rubber hose
5 Clamp
6 Rubber hose
7 Pressure tube
8 Return tube

***a** : Power steering oil tank
***b** : Power steering oil pump
***c** : Power steering booster

● **Installation sequence**

Follow the removal sequence in reverse.

CAUTION⚠

Be sure to bleed air if the fluid line was removed, failure to do so would cause the power steering to malfunction. 🕮 **P37-12**

T Tightening torque

Unit : N·m {lbf.ft, kgf·m}

Location	Parts to be tightened	Tightening torque	Remarks
1	Nut (Pressure hose mounting)	29 to 39 {22 to 29, 3 to 4}	—
7	Pressure tube (Pressure hose and power steering booster connection)	29 to 39 {22 to 29, 3 to 4}	—
8	Return tube (Power steering booster connection)	39 to 49 {29 to 36, 4 to 5}	—

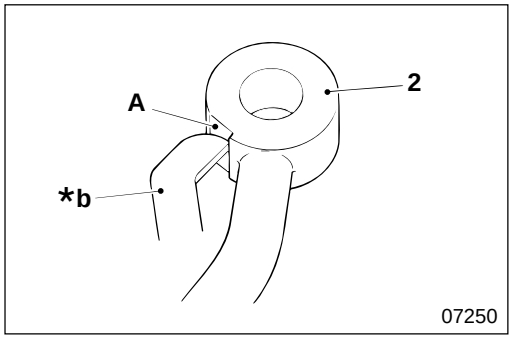

◆ Service procedure

2 **Installation of pressure hose**

Install pressure hose **2** so indent **A** of pressure hose **2** contacts the suction connector of power steering oil pump ***b**.

DRAG LINK

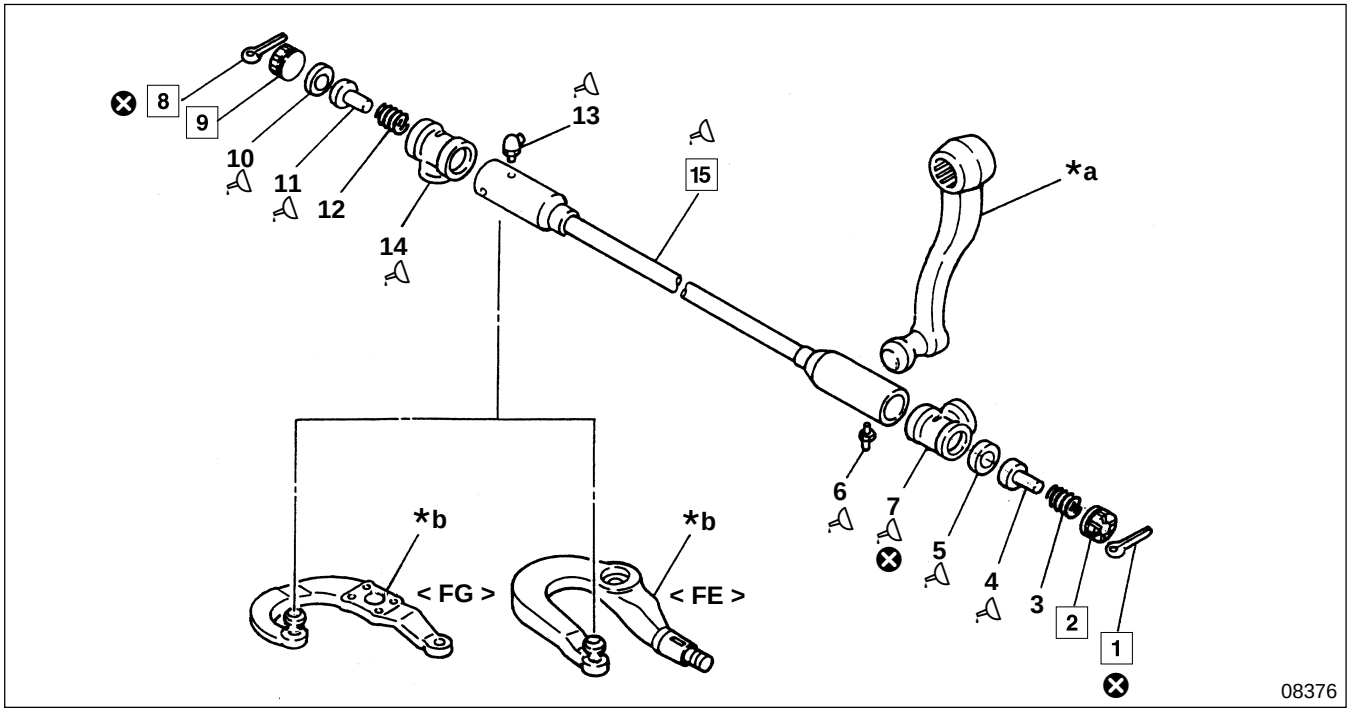

● **Disassembly sequence**

1 Split pin
2 End plug
3 Spring
4 Ball stud seat
5 Ball stud seat
6 Grease nipple
7 Dust cover
8 Split pin
9 End plug
10 Ball stud seat
11 Ball stud seat
12 Spring
13 Grease nipple
14 Dust cover
15 Drag link

***a** : Pitman arm
📖 P37-24, 30
***b** : Knuckle arm
< FE > Gr 26
< FG > Gr 26B
⊗ : Non-reusable parts

● **Assembly sequence**

Follow the disassembly sequence in reverse.

Lubricant

Location	Points of application	Specified lubricant	Quantity
4, 5, 10, 11	Whole area of ball stud seat	Chassis grease [NLGI No.1 (Ca soap)]	As required
6, 13	Supply via grease nipple	Chassis grease [NLGI No.1 (Ca soap)]	As required
7, 14	Arm mounting port of dust cover	Chassis grease [NLGI No.1 (Ca soap)]	As required
15	Pack interior of drag link	Chassis grease [NLGI No.1 (Ca soap)]	As required

◆ Service procedure

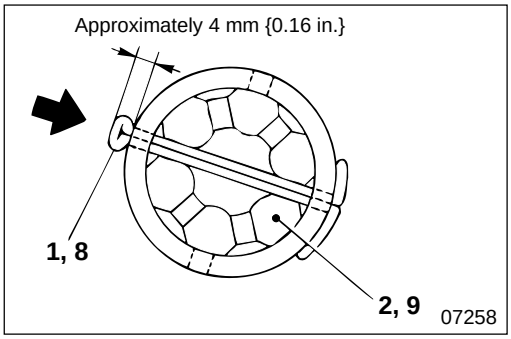

1 **2** **8** **9** **Installation of split pin and end plug**

- Tighten end plug **2, 9** fully, then slacken it off by one half of a turn.
- Place split pins **1**, **8** so that the heads face the outside of the vehicle.
- Stake the heads of split pins **1**, **8** until they are approximately 4 mm {0.16 in.} thick.

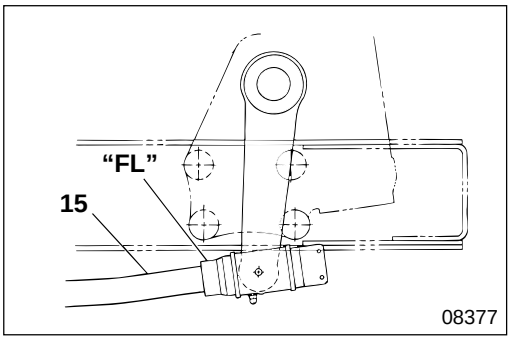

15 **Installation of drag link**

Install drag link **15** with front mark **"FL"** facing the front of the vehicle.

TIE ROD ASSEMBLY

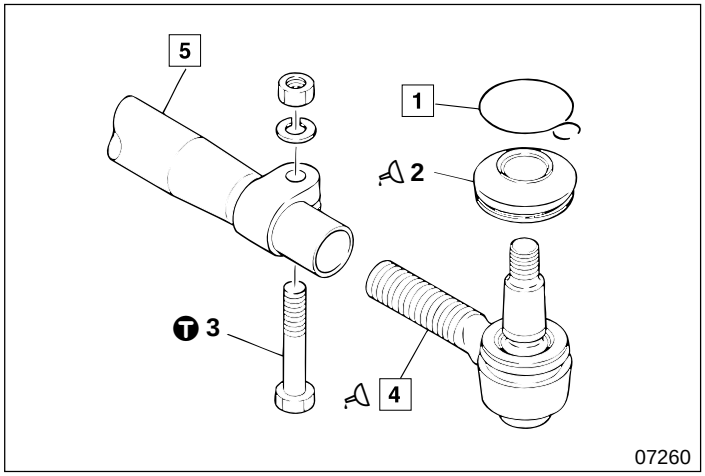

● **Disassembly sequence**

1 Clip
2 Dust cover
3 Clamp bolt
4 Tie rod end
5 Tie rod

NOTE

Do not remove clip 1 or dust cover 2 unless they are faulty.

● **Assembly sequence**

Follow the disassembly sequence in reverse.

Service standards

Unit : mm {in.}

Location	Maintenance item	Standard value	Limit	Remedy
5	Bend of tie rod	1 {0.039} or less	1 {0.039}	Replace

Tightening torque

Unit : N·m {lbf.ft, kgf·m}

Location	Parts to be tightened	Tightening torque	Remarks
3	Clamp bolt (Tie rod end clamp tightening)	25±5 {18±3.6, 2.5±0.5}	—

Lubricant

Location	Points of application	Specified lubricant	Quantity
2	Lip area of dust cover	Wheel bearing grease [NLGI No.2 Li soap]	As required
4	Pack interior of dust cover of tie rod end	Wheel bearing grease [NLGI No.2 Li soap]	As required

◆ Service procedure

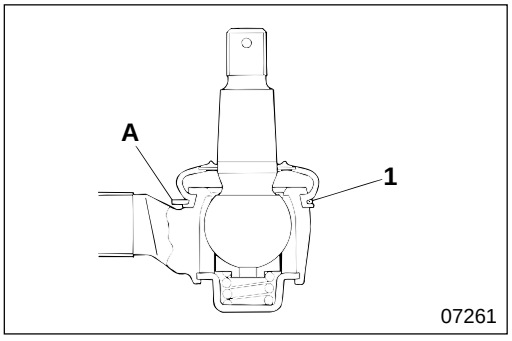

1 **Installation of clip**

Install clip **1** with alignment port **A** in the direction as illustrated.

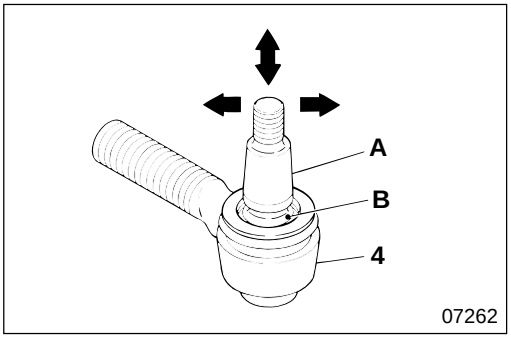

4 **Tie rod end**

[Inspection]
Move ball stud area **A** vertically and horizontally to inspect for looseness. Ensure that ball **B** rotates evenly.

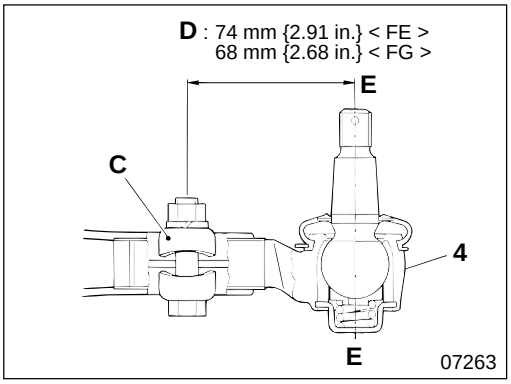

[Installation]
- Screw in tie rod end **4** so that dimension **D** of the tie rod end and clamp **C** differs by 1.5 mm {0.059 in.} or less between left and right.
- Secure axis **E – E** so that it is parallel both left and right.

NOTE

Deviation of the left and right screw-in amount of tie rod end 4 should be within one turn.

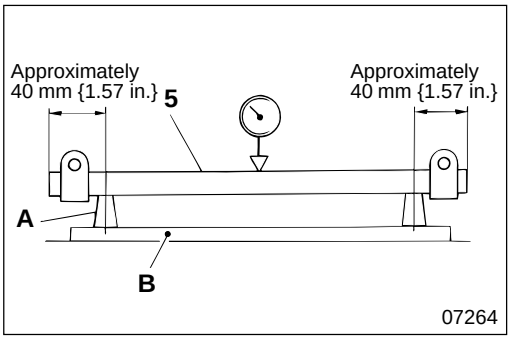

5 **Bending of tie rod**

Measure the bend of tie rod **5** at the center point. If the measured value exceeds the limit, correct or replace the tie rod.

NOTE

To measure the deflection of tie rod 5, turn it one full rotation and read the dial gauge indicator. The deflection is one half of the indicated value.

A : V-block
B : Surface plate

MITSUBISHI
FUSO

FE

Service Manual

Group 37
Steering

Table of Contents

BACK

HOME

MITSUBISHI FUSO TRUCK OF AMERICA, Inc.

Pub No. TWSE9501-37

GROUP 37 STEERING

SPECIFICATIONS 2

STRUCTURE AND OPERATION 3

TROUBLESHOOTING 8

INSPECTION AND ADJUSTMENT MOUNTED IN VEHICLE

- Change of Power Steering Fluid 11
- Bleeding of Power Steering System 12
- Steering Wheel Play 12
- Performance Verification Test of Power Steering System 13

STEERING SYSTEM 14

STEERING COLUMN SUBASSEMBLY 18

POWER STEERING BOOSTER 22

POWER STEERING OIL PUMP 28

POWER STEERING OIL TANK 32

POWER STEERING FLUID LINE 33

DRAG LINK 34

TIE ROD ASSEMBLY 36

SPECIFICATIONS

Item		Specifacations
Steering wheel	Type	2-spoke type
	Outer diameter mm {in.}	400 {15.7}
Steering shaft	Type	Universal joint type (High tilt and telescopic type)
Power steering booster	Manufacturer	KOYO SEIKO
	Type	Ball nut type
	Form	Integral type
	Model No.	2710-5WLO
	Gear ratio	22.6
	Cylinder diameter mm {in.}	78 {3.07}
	Mass (without pitman arm and fluid) kg {lb}	16.7 {37}
Power steering oil pump	Manufacturer	NIPPON POWER STEERING
	Type	Vane type
	Model No.	20210-70924
	Discharge amount cm^3 {cu.in.}/rev	9.6 {0.59}
	Regulated flow amount L {qts}/min	7 {7.4}
	Regulated pressure (relief valve) MPa {lbf/in^2., kgf/cm^2}	10.3 {1490, 105}
	Permissible revolutions rpm	600 to 6500
	Mass (without drive gear and fluid) kg {lb}	1.64 {3.6}

Steering System

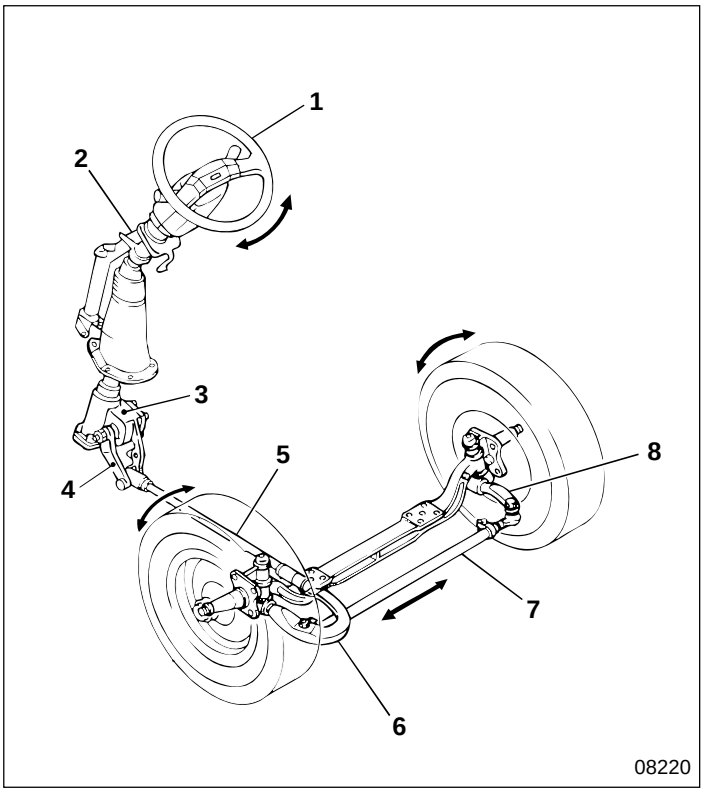

1 Steering wheel
2 Steering column subassembly
3 Power steering booster
4 Pitman arm
5 Drag link
6 Knuckle arm
7 Tie rod
8 Tie rod arm

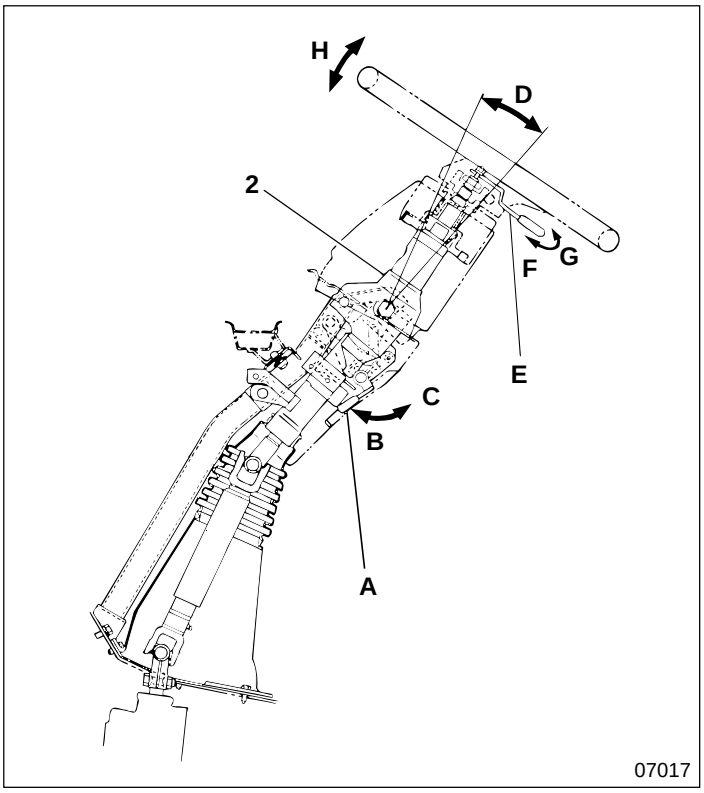

Shifting lock lever **A** from lock position **B** to release position **C** produces high tilt **D**, and turning telescopic lever **E** (counterclockwise) from lock position **F** to release position **G** allows telescopic movement **H**. In this way, the structure of steering column subassembly **2** can be adjusted for optimum driving position.

Power Steering System

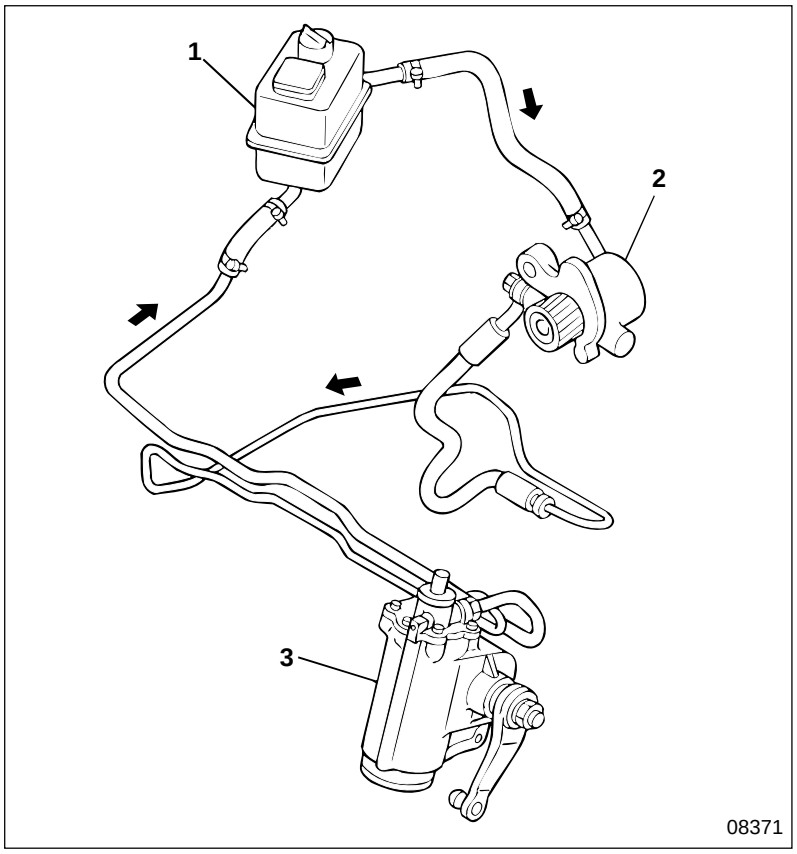

1 Power steering oil tank
2 Power steering oil pump
3 Power steering booster

⬅ : Fluid flow

Power Steering Booster

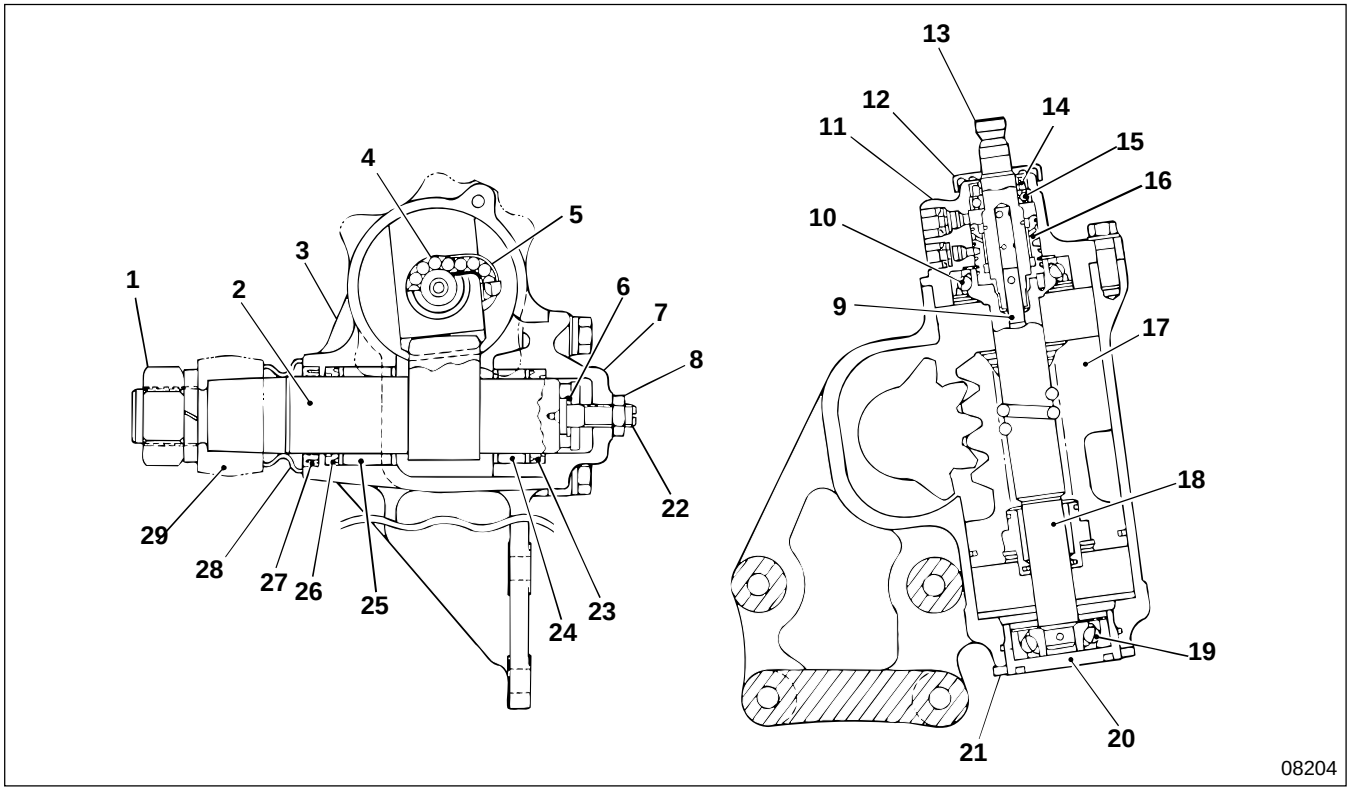

1 Lock nut
2 Sector shaft
3 Gear box
4 Steel ball
5 Circulator
6 Adjusting plate
7 Side cover
8 Nut
9 Torsion bar
10 Bearing
11 Valve housing
12 Dust cover
13 Input shaft
14 Oil seal
15 Bearing
16 Rotary valve
17 Rack piston
18 Main shaft
19 Bearing
20 End cover
21 Special nut
22 Adjusting bolt
23 U-packing
24 Needle bearing
25 Needle bearing
26 U-packing
27 Oil seal
28 Dust cover
29 Pitman arm

Rotary valve **16** is the central part of the power steering booster. Torsion bar **9** allows the steering reaction force and valve return to operate lightly and smoothly at low speed, and ensures stable steering feel even at high speed.

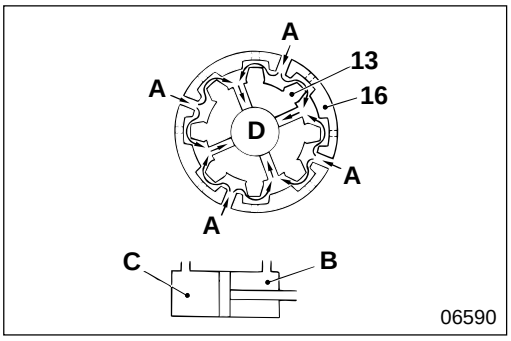

● **Straight-ahead drive operation**

When steering torque is not applied by the steering wheel, input shaft **13** is not activated and remains in neutral. At this time, pressurized fluid from the oil pump flows through the input shaft and the hole of rotary valve **16**, and returns to the oil tank without flowing into cylinder chambers **B**, **C**.
A : From the oil pump
D : To the oil tank

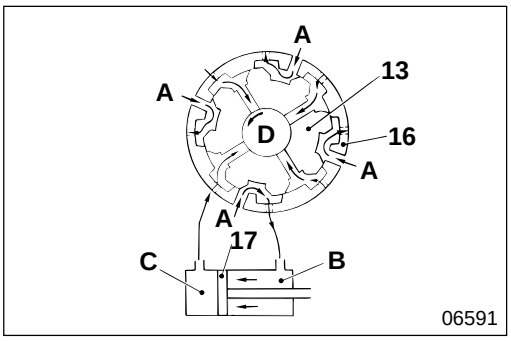

● **Steering operation**

Turning the steering wheel rotates input shaft **13**, causing rotary valve **16** to close the fluid feed passage to cylinder chamber **C**. This produces a pressure difference between cylinder chambers **B**, **C**, which causes rack piston **17** to move, and facilitates rotation of main shaft **18**.
The illustration shows right-turn steering, and should be reversed for left-turn steering.

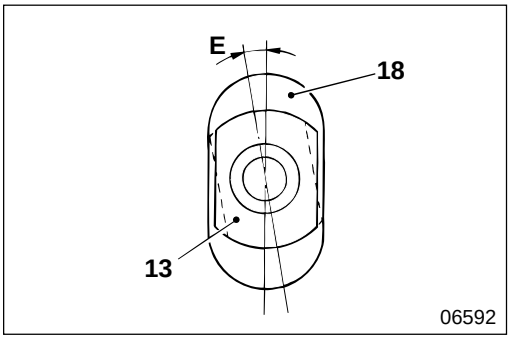

● **Operation when hydraulic circuit is faulty**

The safety structure means that when the fluid circuit is faulty, the stopper of input shaft **13** directly contacts the groove at the large end of main shaft **18** to transmit steering force, enabling manual operation.

Power Steering Oil Pump

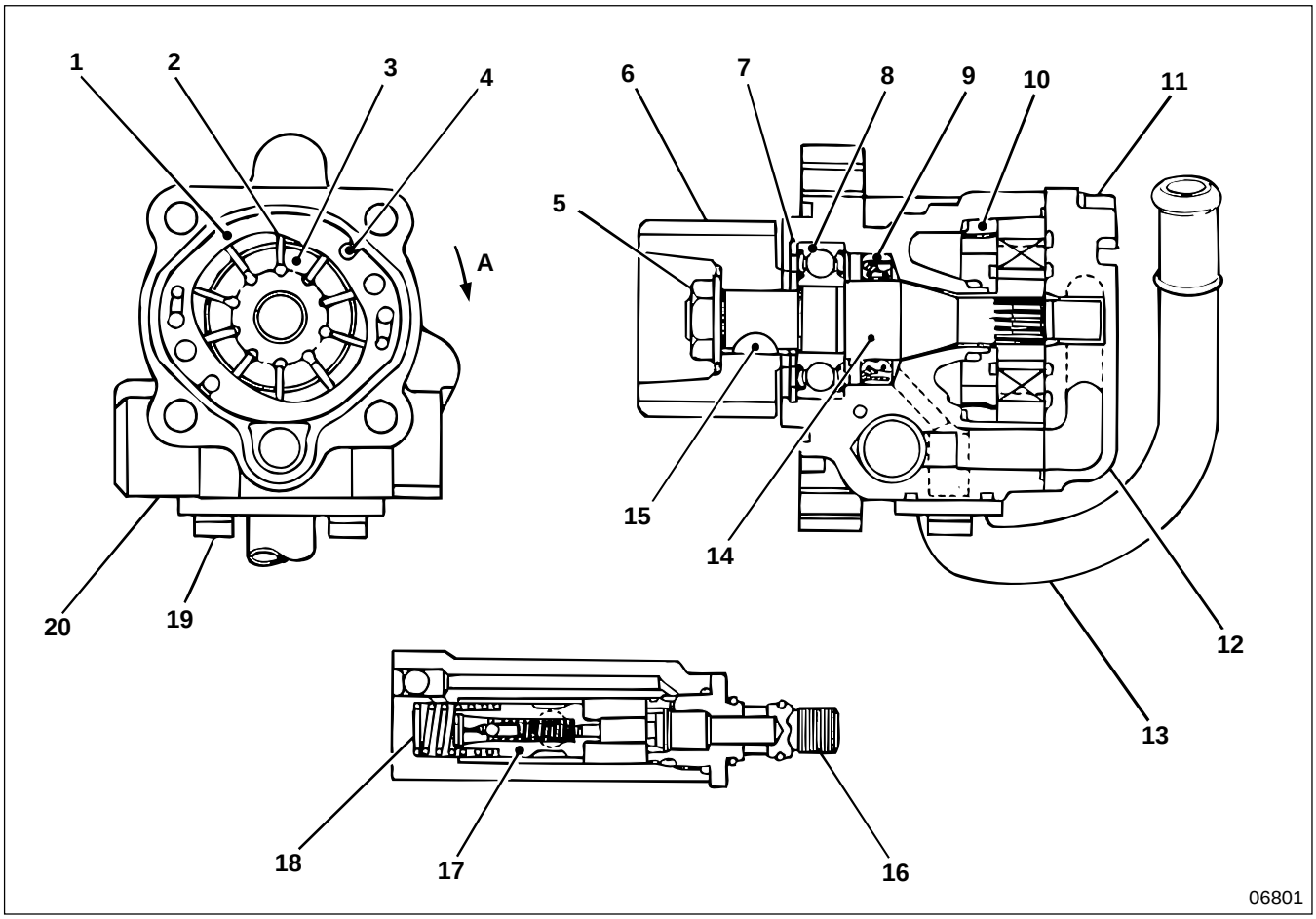

1 Cam ring
2 Vane
3 Rotor
4 Pin
5 Lock nut
6 Gear
7 Snap ring
8 Bearing
9 Oil seal
10 Side plate
11 Bolt
12 Cover
13 Suction connector
14 Shaft
15 Key
16 Connector
17 Relief valve assembly
18 Flow control spring
19 Bolt
20 Body

A : Direction of rotation

Relief Valve Assembly

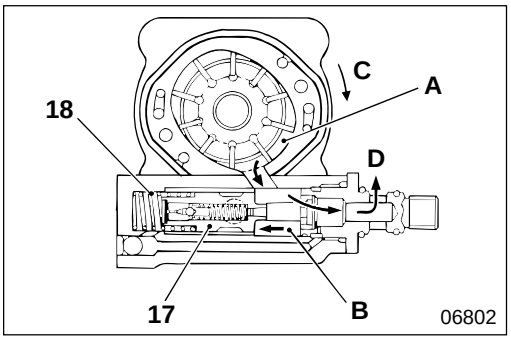

● **Operation of flow control valve**

(1) When not operating (Oil pump rotating at low speed)

Since pressure generated from pressure chamber **A** is low when the oil pump is rotating at low speed, fluid pressure in chamber **B** is also low. Therefore, relief valve assembly **17**, which is pressed by the repercussive force of flow control spring **18** is not activated.

C : Direction of rotation

D : To the power steering booster

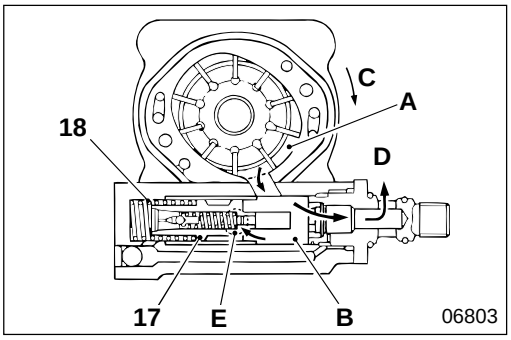

(2) When operating (Oil pump rotating at middle or high speed)

Since pressure generated from pressure chamber **A** is high when the oil pump is rotating at middle or high speed, fluid pressure in chamber **B** is also high. This will activate relief valve assembly **17**, overcoming the repercussive force of flow control spring **18**, and open port **E**, making excess fluid return to the inlet port to adequately regulate the flow of fluid to power steering booster **D**.

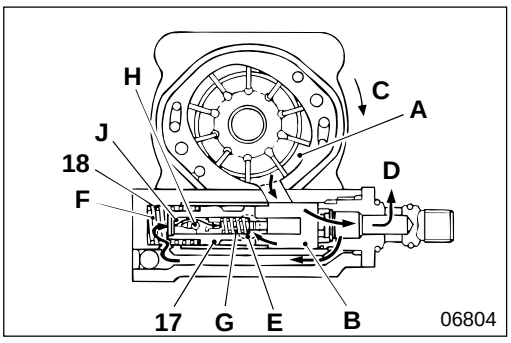

● **Operation of relief valve**

When the steering is lock-to-lock, pressure in chambers **B** and **F** increases and overcomes the repercussive force of relief spring **G** opening relief valve **J**, which was closed by steel ball **H**, causing the fluid to be returned to the inlet port through port **E**. Thus, if pressure in chamber **F** decreases, the relief valve closes again.

Possible causes \ Symptoms		Steering wheel operation heavy	Steering wheel play excessive and unstable	Steering wheel pulls to one side	Steering wheel vibration	Steering wheel self-return bad	Steering wheel does not turn	Steering angle insufficient or difference between right and left	Fluid leaking	Oil pump fluid pressure abnormal	Oil pump gurgles	Oil pump squeaks	Oil pump growls	Remarks
Power steering mechanism faulty	Bearing damaged or worn	○			○	○								
	Ball or groove of ball screw set shaft worn	○	○		○									
	Air bled insufficiently	○												
	Fluid viscosity unsuitable	○												
	Power steering booster system faulty	○												
	Flow control valve malfunctioning	○												
	Rack or ball screw set shaft gear worn		○											
	Sector shaft bearing worn		○		○									
	Power steering booster mounting bolt loose		○											
	Ball screw set shaft and sector shaft play incorrect				○									
	Edge of valve control damaged or control seal ring broken				○									
	Power steering system fluid unsuitable				○									
	Rack engagement starting torque adjusted incorrectly	○				○								
	Fluid circuit clogged	○				○								
	Sector shaft gear worn		○											
	Torsion shaft serration damaged or worn		○											
	Power steering booster body faulty			○	○									
	O-ring or oil seal faulty								○					
	Sealant applied incorrectly								○					
Steering column and link mechanism faulty	Universal joint worn abnormally, damaged, lubricated incorrectly	○	○											
	Link deformed	○												
	Drag link ball stud excessive play		○		○									
	Tie rod end ball stud excessive play		○		○									
	Tie rod bent						○							
	Pitman arm mounting position incorrect							○						
	Steering wheel center offset			○										

Possible causes \ Symptoms		Steering wheel operation heavy	Steering wheel play excessive and unstable	Steering wheel pulls to one side	Steering wheel vibration	Steering wheel self-return bad	Steering wheel does not turn	Steering angle insufficient or difference between right and left	Fluid leaking	Oil pump fluid pressure abnormal	Oil pump gurgles	Oil pump squeaks	Oil pump growls	Remarks
Front axle faulty	Kingpin lubricated incorrectly	○				○								
	Front wheel alignment (toe-in, camber, caster) incorrect	○		○	○	○								
	Thrust bearing damaged	○												
	Wheel hub bearing worn or damaged		○	○	○									Gr 26
	Kingpin or bushing worn or damaged		○	○	○									
	Front axle deformed			○										
	Knuckle arm, tie rod arm, knuckle, etc. tightened incorrectly				○									
	U-bolt of front spring, nut loose				○									Gr 33
	Front axle parts overtightened					○								
	Turning angle adjusted incorrectly						○	○						Gr 26
	Mounting parts, connection point loose		○											
	Knuckle stopper bolt adjusted incorrectly							○						
Oil pump faulty	Oil pump body faulty								○					
	O-ring, oil seal faulty								○					
	Bolt tightened incorrectly								○					
	Maximum generated fluid pressure insufficient									○				
	Fluid line crushed or clogged									○				
	Air lock in oil pump										○			
	Oil pump interior seized									○	○	○		
	Mounting bolt or nut loose												○	
	Pump body faulty												○	
	Valve malfunctioning									○				

TROUBLESHOOTING

Possible causes \ Symptoms		Steering wheel operation heavy	Steering wheel play excessive and unstable	Steering wheel pulls to one side	Steering wheel vibration	Steering wheel self-return bad	Steering wheel does not turn	Steering angle insufficient or difference between right and left	Fluid leaking	Oil pump fluid pressure abnormal	Oil pump gurgles	Oil pump squeaks	Oil pump growls	Remarks
Oil tank faulty	Oil tank leaking due to overflowing								○					
	Oil tank leaking due to air lock								○					
	Fluid level insufficient	○												
Other malfunctions	Load too far forward of load-carrying platform	○												
	Load too far rearward of load-carrying platform		○											
	Load too far to one side of load-carrying platform			○										
	Wheelbase gap between left and right excessive			○										
	Propeller shaft run out excessive				○									Gr 25
	Front axle bent				○									Gr 26
	Rear axle housing bent			○										Gr 27
	Final drive gear and final drive pinion damaged or engaged incorrectly				○									
	Tire pressure insufficient	○												Gr 31
	Tire pressure excessive		○											
	Tire wear difference between left and right excessive			○										
	Tire outer diameter difference between left and right			○										
	Front tire radial and lateral runout, static balance or dynamic balance faulty				○									
	One-sided braking			○										Gr 35

Change of Power Steering Fluid

Ⓣ Tightening torque

Unit : N·m {lbf.ft, kgf·m}

Location	Parts to be tightened	Tightening torque	Remarks
1	Pressure tube	29 to 39 {22 to 29, 3 to 4}	—
2	Return tube	39 to 49 {29 to 36, 4 to 5}	—

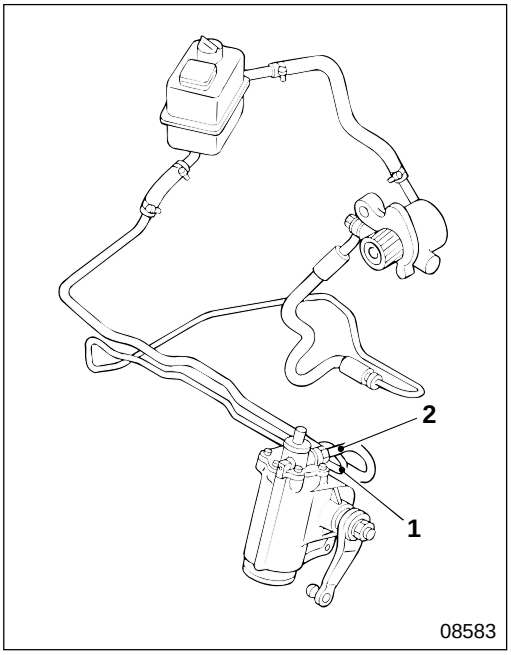

[Draining]

- Jack up the front wheels.
- Release pressure tube **1** and return tube **2** connected to the power steering booster.
- Turn the steering wheel fully left and right repeatedly, and drain the fluid from the power steering booster.
- After draining the fluid, tighten pressure tube **1** and return tube **2** at specified torque.

[Filling]

P37-12

INSPECTION AND ADJUSTMENT MOUNTED IN VEHICLE

Bleeding of Power Steering System

Fluid

Location	Points of application	Kinds	Quantity
1	Power steering oil tank	Automatic transmission fluid (DEXRON or DEXRON II type)	Filler cap dipstick between MIN and MAX

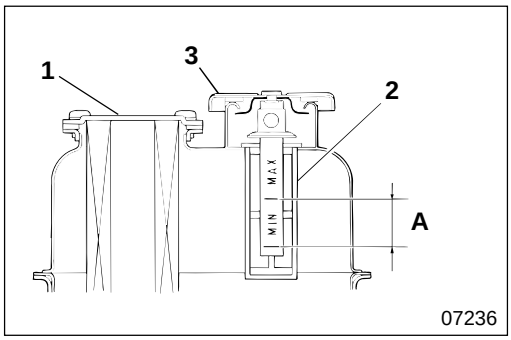

- Pour fluid into power steering oil tank **1** up to the inner port of strainer **2**.
- With the engine stopped, jack up the front wheels and turn the steering wheel fully left and right repeatedly. When the fluid level has dropped, add fluid to maintain the fluid level within range **A**.

NOTE

Check the fluid level without screwing on filler cap 3.

- Start the engine and letting it idle, turn the steering wheel fully left and right repeatedly. When the fluid level has dropped, add the fluid to maintain the fluid level within range **A**. Repeat these steps until the fluid level does not drop.
- If there is an abnormal noise, air is still in the system. Turn the steering wheel several times to raise fluid temperature to approximately 60 to 80°C {140 to 176°F}, then stop the engine and wait for approximately five minutes.
- Lower the front wheels and turn the steering wheel several times. If there is no noise, bleeding is completed.
- When bleeding is finished, check fluid level of power steering oil tank **1**, and pipe and hose connections for fluid leaks.

Steering Wheel Play

Service standards

Unit : mm {in.}

Location	Maintenance item	Standard value	Limit	Remedy
—	Steering wheel play (Measure at the outer circumference of steering wheel)	0 to 50 {0 to 1.97}	—	Adjust

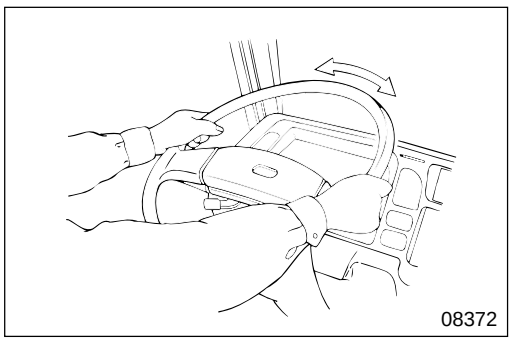

Point the wheels directly forward, start the engine and gently turn the steering wheel left and right to measure play at the outer circumference. If the play deviates from the standard value, adjust tightening points and power steering booster backlash. P37-25

Performance Verification Test of Power Steering System

Service standards

Location	Maintenance item	Standard value	Limit	Remedy
—	Steering system fluid pressure (With hands off steering wheel)	490 kPa {71 lbf/in^2, 5 kgf/cm^2}	—	Repair
—	Relief set pressure (Measure with engine speed at 1000 to 1500 rpm and stop valve closed)	10.3 MPa {1490 lbf/in^2, 105 kgf/cm^2}	Maximum +490 kPa {71 lbf/in^2, 5 kgf/cm^2} Minimum –195 kPa {28 lbf/in^2, 2 kgf/cm^2}	Replace

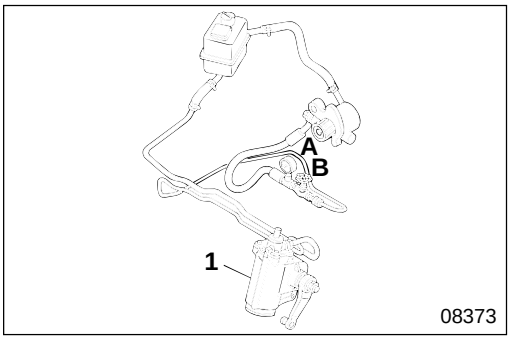

Verify that the power steering booster and the power steering oil pump are operating properly by testing the following items.

NOTE

If the fluid pressure is higher than 490 kPa {71 lbf/in^2, 5 kgf/cm^2} with engine idling and the steering wheel free, inspect power steering booster 1 and fluid circuit for clogging.

Test item	Test procedure	Assembly standards
Verification of smooth operation	Jack up the front wheels and turn steering wheel fully left and right	Smooth operation throughout test
Measurement conditions	• Install oil pressure gauge **A** capable of measuring above 10.8 MPa {1560 lbf/in^2, 110 kgf/cm^2} and stop valve **B**, then bleed air • With engine idling, turn steering wheel left and right several times to raise fluid temperature to 50 to 60°C {122 to 140°F} • With the engine idling, open stop valve **B**	
Measurement of fluid pressure	• Measure fluid pressure with hands off steering wheel	490 kPa {71 lbf/in^2, 5 kgf/cm^2}
Measurement of relief pressure	• Gradually increase engine speed and maintain it at 1000 to 1500 rpm, and close stop valve **B** to measure maximum fluid pressure • Do not keep stop valve **B** closed for more than fifteen seconds	Relief set pressure 10.3 MPa {1490 lbf/in^2, 105 kgf/cm^2}

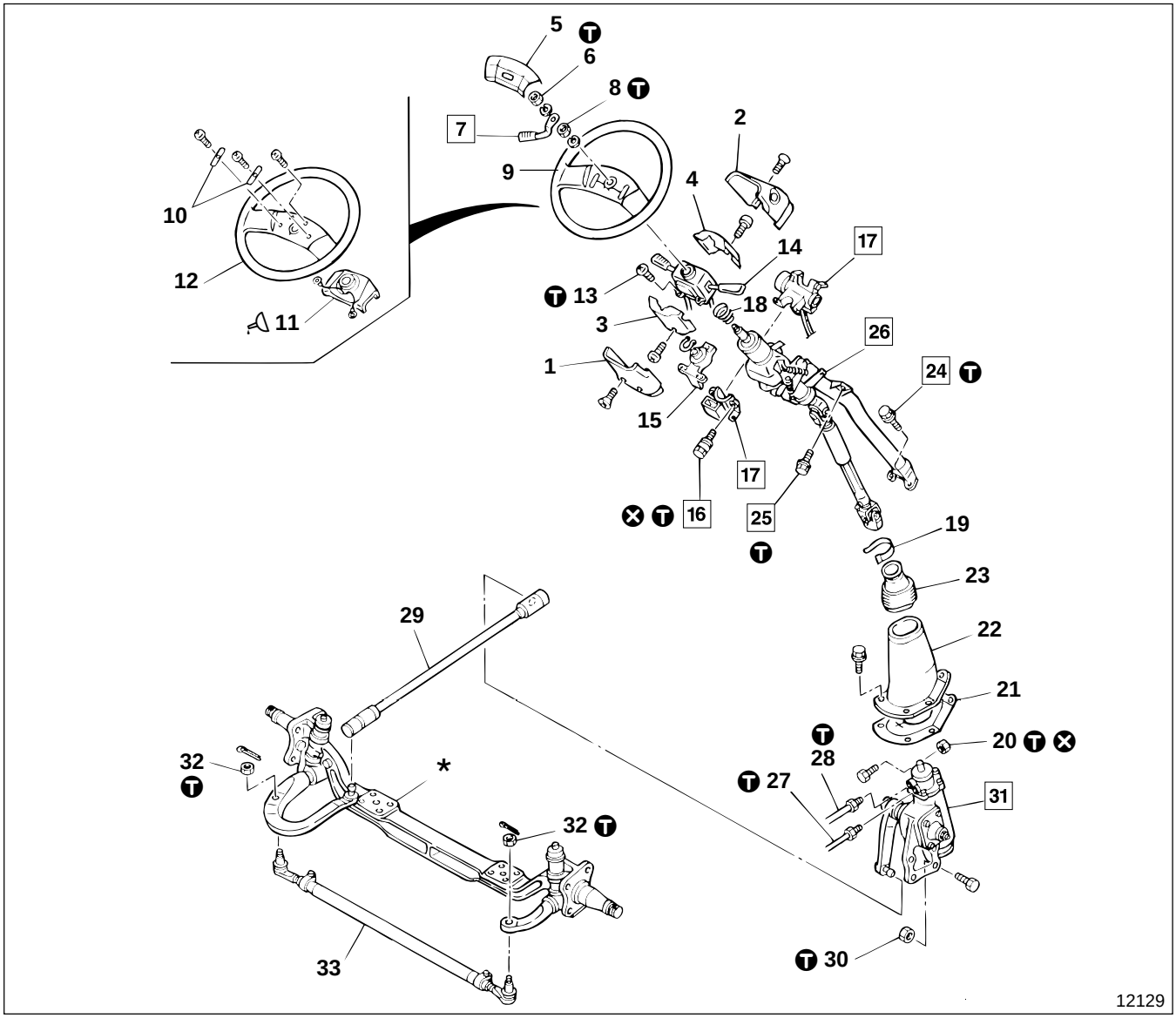

● **Removal sequence**

1 Column cover outer lower
2 Column cover outer upper
3 Column cover inner lower
4 Column cover inner upper
5 Horn pad
6 Nut
7 Telescopic lever
8 Nut
9 Steering wheel assembly
10 Horn spring
11 Cover assembly
12 Steering wheel
13 Screw
14 Combination switch Gr 54
15 Bracket
16 Head cutting bolt
17 Starter switch Gr 54
18 Spring
19 Band
20 Nut
21 Dust cover
22 Dust cover
23 Dust cover
24 Bolt
25 Bolt
26 Steering column subassembly P37-18
27 Pressure tube P37-33
28 Return tube P37-33
29 Drag link P37-34
30 Nut
31 Power steering booster P37-22
32 Nut
33 Tie rod assembly P37-36

*: Front axle assembly Gr 26

⊗: Non-reusable parts

CAUTION⚠

When disconnecting pressure tube 27 and return tube 28, clean the ports to keep them free from dust and other foreign particles.

● **Installation sequence**

Follow the removal sequence in reverse.

Tightening torque

Unit : N·m {lbf.ft, kgf·m}

Location	Parts to be tightened	Tightening torque	Remarks
6	Nut (Telescopic lever mounting)	8.8 to 9.8 {6.5 to 7.2, 0.9 to 1}	—
8	Nut (Steering wheel assembly mounting)	39 to 49 {29 to 36, 4 to 5}	—
13	Screw (Combination switch mounting)	2.5±0.5 {1.8±0.4, 0.25±0.05}	—
16	Head cutting bolt (Starter switch mounting)	14.2±1.5 {10±1.1, 1.45±0.15}	—
20	Nut (Steering column subassembly and power steering booster mounting)	53 to 65 {39 to 48, 5.4 to 6.6}	—
24	Bolt (Steering column at floor side mounting)	17 to 26 {12 to 19, 1.7 to 2.6}	—
25	Bolt (Steering column subassembly to instrument panel side mounting)	17 to 26 {12 to 19, 1.7 to 2.6}	—
27	Pressure tube	29 to 39 {22 to 29, 3 to 4}	—
28	Return tube	39 to 49 {29 to 36, 4 to 5}	—
30	Nut (Power steering booster mounting)	83.5 to 108 {61 to 80, 8.5 to 11}	—
32	Nut (Tie rod assembly mounting)	93±25 {69±18, 9.5±2.5}	—

Lubricant

Location	Points of application	Kinds	Quantity
11	Contact area between combination switch of cover assembly and horn contact	Wheel bearing grease [NLGI No.2 (Li soap)]	As required

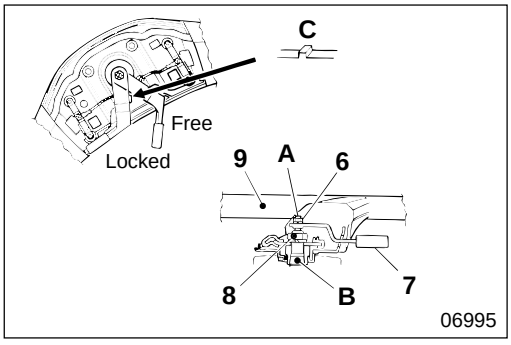

◆ Service procedure

7 **Installation of telescopic lever**

Locate telescopic lever **7** at the specified position, and adjust until the specified torque is applied to telescopic shaft **A**.

CAUTION⚠

Do not crush the screw tip of telescopic shaft A.

Start procedure

Install steering wheel assembly **9**. Using a long socket wrench, tighten nut **8** at specified torque 39 to 49 N·m {29 to 36 lbf.ft, 4 to 5 kgf·m}

Rotate telescopic shaft **A** counterclockwise with your fingers and check for looseness

Looseness found

No looseness

Using a flat-blade screwdriver turn telescopic shaft **A** clockwise and drive it in until it hits lightly with a "clunk", but do not turn it any further

CAUTION

Be careful not to tighten too forcibly or you will crush the end of the telescopic shaft, requiring replacement of telescopic shaft assembly B

Install telescopic lever **7** at a location that allows easy tightening, then tighten nut **6** until the telescopic lever will not slip

Tighten telescopic shaft **A** at operating torque 6.9 to 7.8 N·m {5.1 to 5.8 lbf.ft, 0.7 to 0.8 kgf·m}. (Tighten telescopic bar **7** at torque 69 to 78 N {15 to 18 lbf, 7 to 8 kgf} 100 mm {3.94 in.}from the center of steering wheel assembly **9**

To maintain lock, hold telescopic lever **7** clockwise, then loosen and remove lock nut **6**

Remove telescopic lever **7**

NOTE

Remove telescopic lever 7 by prying it out vertically, taking care not to loosen telescopic shaft A. Prying the lever horizontally can loosen the telescopic shaft

Set telescopic lever **7** to specified lock position **C**, marked "⏃"

Tighten nut **6** at specified torque 8.8 to 9.8 N·m {6.5 to 7.2 lbf.ft, 0.9 to 1.0 kgf·m}

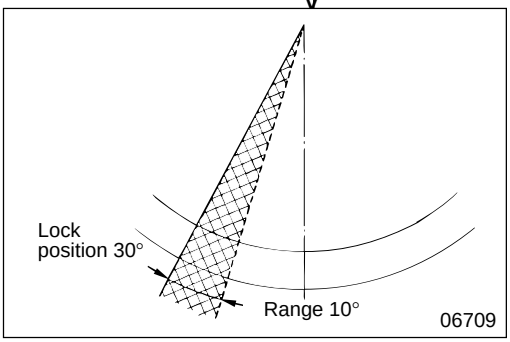

When telescopic lever **7** is released, and telescopic shaft **A** is retightened at operating torque 6.9 to 7.8 N·m {5.1 to 5.8 lbf.ft, 0.7 to 0.8 kgf·m}, the telescopic lever should lock in the 10° range this side of specified lock position 30°

Out of the range

Within the range

Joggle steering wheel assembly **9** up and down and check for looseness

Looseness found

No looseness

Remove nut **6**

Procedure is completed

Remove telescopic lever **7**

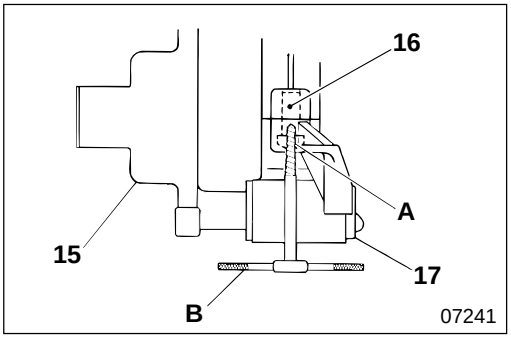

16 **17** **Head cutting bolt, starter switch**

[Removal]

- After removing bracket **15**, drill a ø5.5 to 6.0 mm {0.22 to 0.24 in.} hole 10 to 15 mm {0.39 to 0.59 in.} deep on cutting face **A** of head cutting bolt **16** for mounting starter switch **17**.
- Screw in screw extractor **B** counterclockwise, then pull out head cutting bolt **16**.

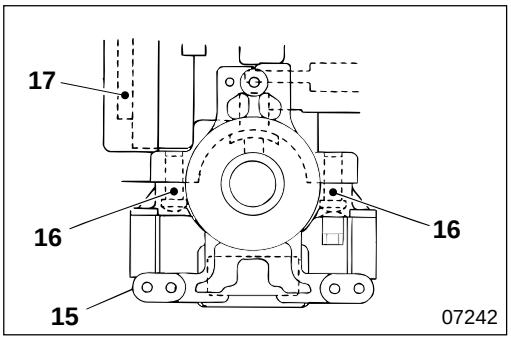

[Installation]

- With new head cutting bolt **16**, tighten starter switch **17** at specified torque to cut the head off the bolt.
- After installing bracket **15**, verify operation of the steering lock function of starter switch **17**.

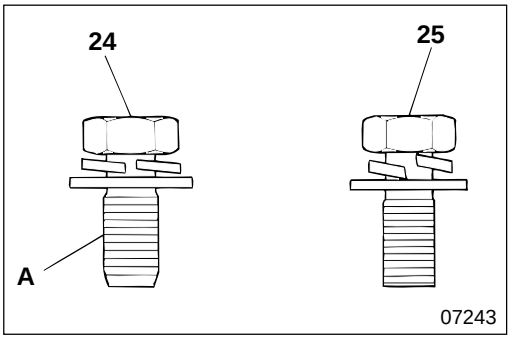

24 **25** **Installation of bolt**

- Bolts **24** and **25**, differ in shape. Do not mix them up when installing.
- Thread area **A** of bolt **24** is elliptical to facilitate grounding of the horn circuit.

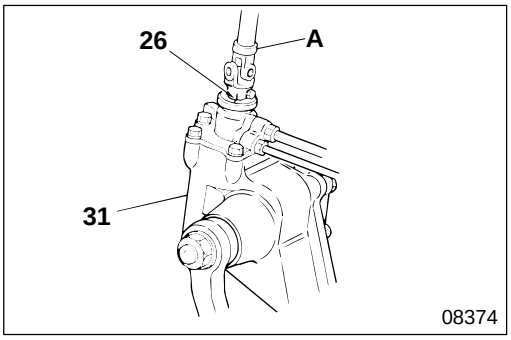

26 **31** **Removal and installation of steering column subassembly and power steering booster**

Before removing steering column subassembly **26**, power streering booster **31**, be sure to make alignment mark **A**.

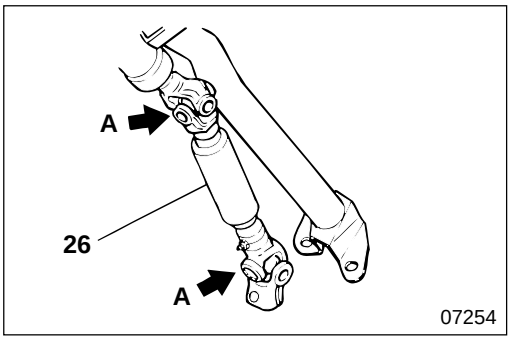

26 **Steering column subassembly**

When the spline of steering column subassembly **26** is disconnected, align the yokes to the same direction **A**.

STEERING COLUMN SUBASSEMBLY

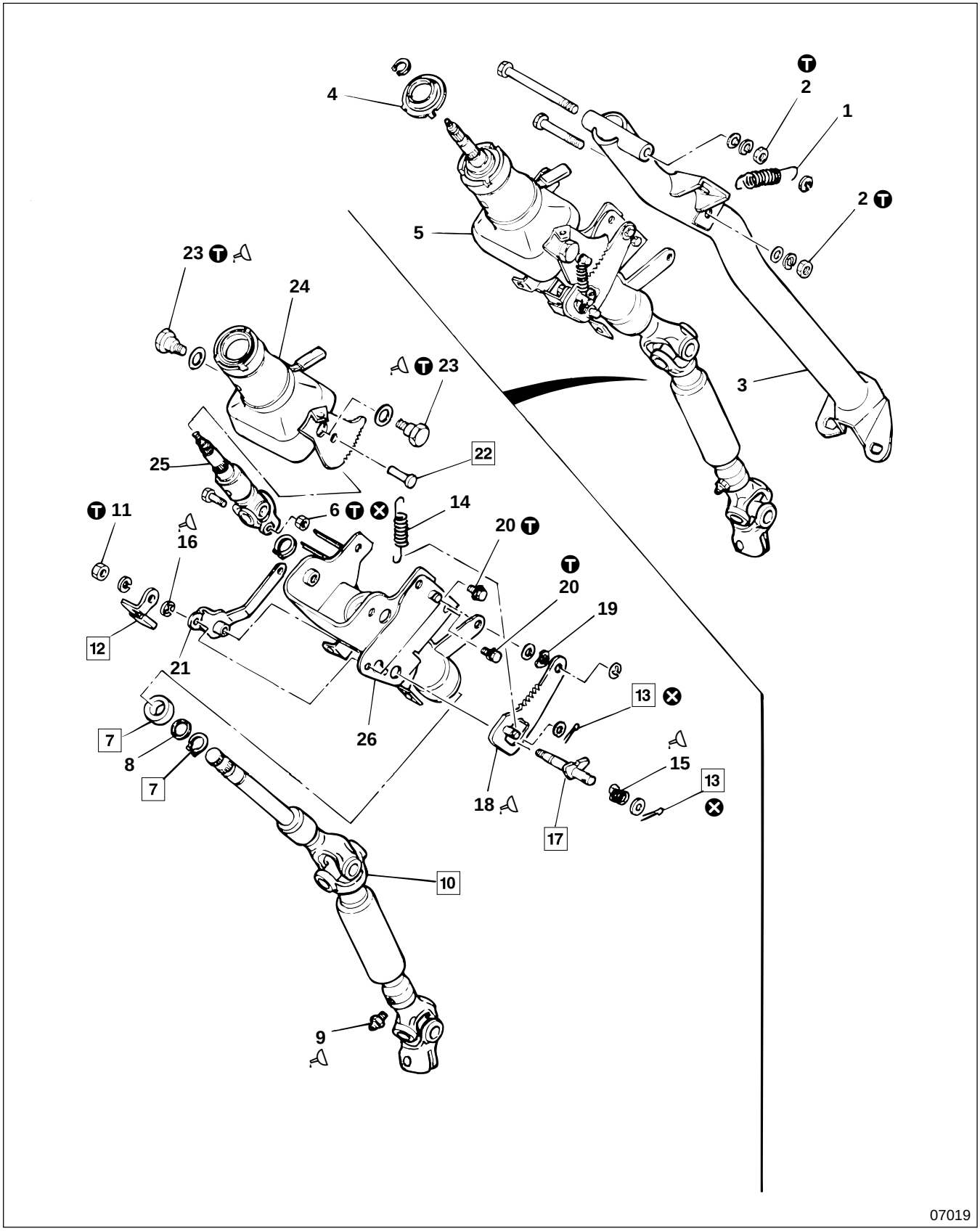

● **Disassembly sequence**

1 Return spring
2 Nut
3 Support bracket
4 Spring seat
5 Steering column assembly
6 Nut
7 Stopper
8 Bearing spacer
9 Grease nipple
10 Steering shaft assembly
11 Nut
12 Lock lever
13 Split pin
14 Return spring
15 Return spring
16 Snap ring
17 Cam
18 Lock plate
19 Wave washer
20 Bolt
21 Lever support
22 Clevis pin
23 Bolt
24 Column support upper
25 Telescopic shaft assembly
26 Column support lower

⊗ : Non-reusable parts

● **Assembly sequence**

5 → 4 → 3 → 2 → 1

5 : 25 → 24 → 23 → 22 → 21 → 20 → 19 → 18 → 17 → 16 → 15 → 14 → 13 → 12 → 11 → 6
26 10 → 9 → 8 → 7

Tightening torque

Unit : N·m {lbf.ft, kgf·m}

Location	Parts to be tightened	Tightening torque	Remarks
2	Nut (Support bracket mounting)	17 to 26 {12 to 19, 1.7 to 2.6}	—
6	Nut (Steering shaft assembly and telescopic shaft assembly mounting)	53 to 65 {39 to 48, 5.4 to 6.6}	—
11	Nut (Lock lever mounting)	4 to 6 {2.9 to 4.3, 0.4 to 0.6}	—
20	Bolt (Lever support mounting)	7 to 10 {5.1 to 7.2, 0.7 to 1.0}	—
23	Bolt (Column support upper and column support lower mounting)	15 to 20 {11 to 14, 1.5 to 2.0}	—

Lubricant and sealant

Location	Points of application	Kinds	Quantity
9	Supply via grease nipple	Wheel bearing grease [NLGI No.2 (Li soap)]	As required
15	Friction surface of return spring and washer	Wheel bearing grease [NLGI No.2 (Li soap)]	As required
16	Friction surfaces of lever support and snap ring	Wheel bearing grease [NLGI No.2 (Li soap)]	As required
18	Friction surfaces of cam and lock plate return spring clevis pin	Wheel bearing grease [NLGI No.2 (Li soap)]	As required
23	Thread area of bolt	THREEBOND thread lock super 103Q or LOCTITE 271	As required
	Friction surface of column support upper and bolt	Wheel bearing grease [NLGI No.2 (Li soap)]	As required

◆ Service procedure

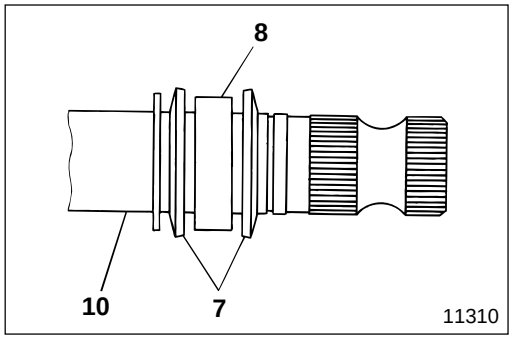

7 **Installation of stopper**

Install stoppers **7** on steering shaft assembly **10** in the direction as illustrated so that they straddle bearing spacer **8**.

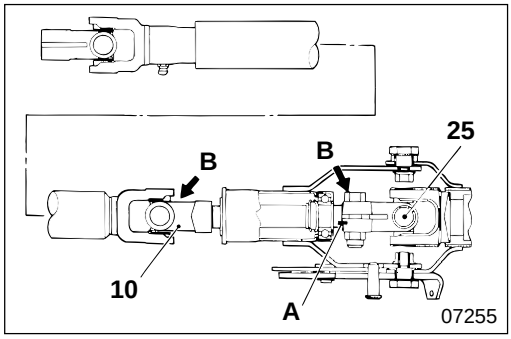

10 **Steering shaft assembly**

- Before removing steering shaft assembly **10**, be sure to make alignment mark **A**.
- Install the steering shaft with direction **B** of the telescopic shaft assembly **25** yoke and steering shaft assembly **10** yoke aligned or at phase angle of 90°.

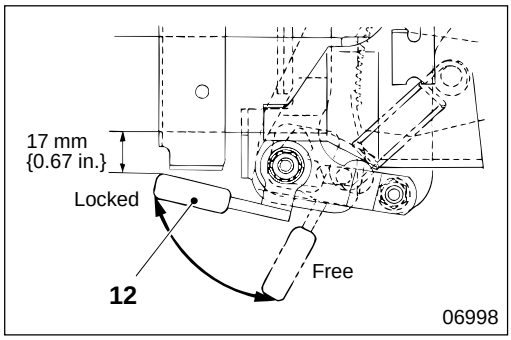

12 **Installation of lock lever**

- Install lock lever **12** so it is within the working angle when locked.
- After installing lock lever **12**, make sure that the lever operates smoothly (operating force less than 49 N {11 lbf, 5 kgf}). With the lever free, make sure that high tilt operates smoothly.

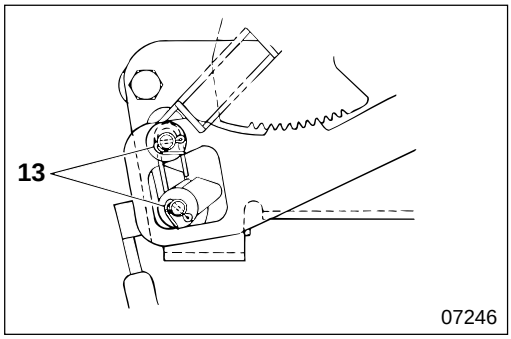

13 **Installation of split pin**

Bend split pin **13** to face outwards as illustrated.

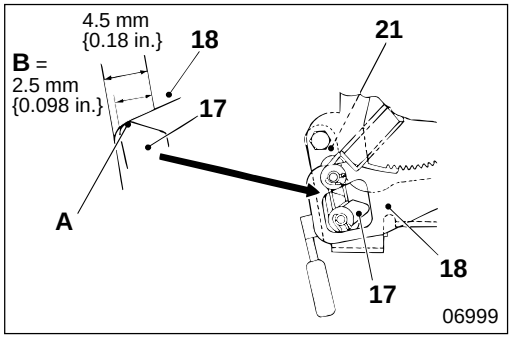

17 **Installation of cam**

Adjust lever support **21** so that the top surface **A** of cam **17** is within dimension **B** of lock plate **18** to install the cam.

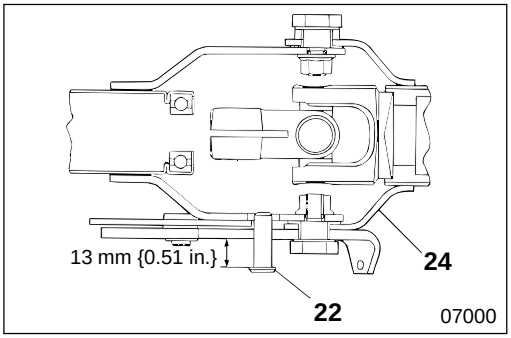

22 **Installation of clevis pin**

Drive clevis pin **22** into column support upper **24** so that the drive dimension is obtained.

POWER STEERING BOOSTER

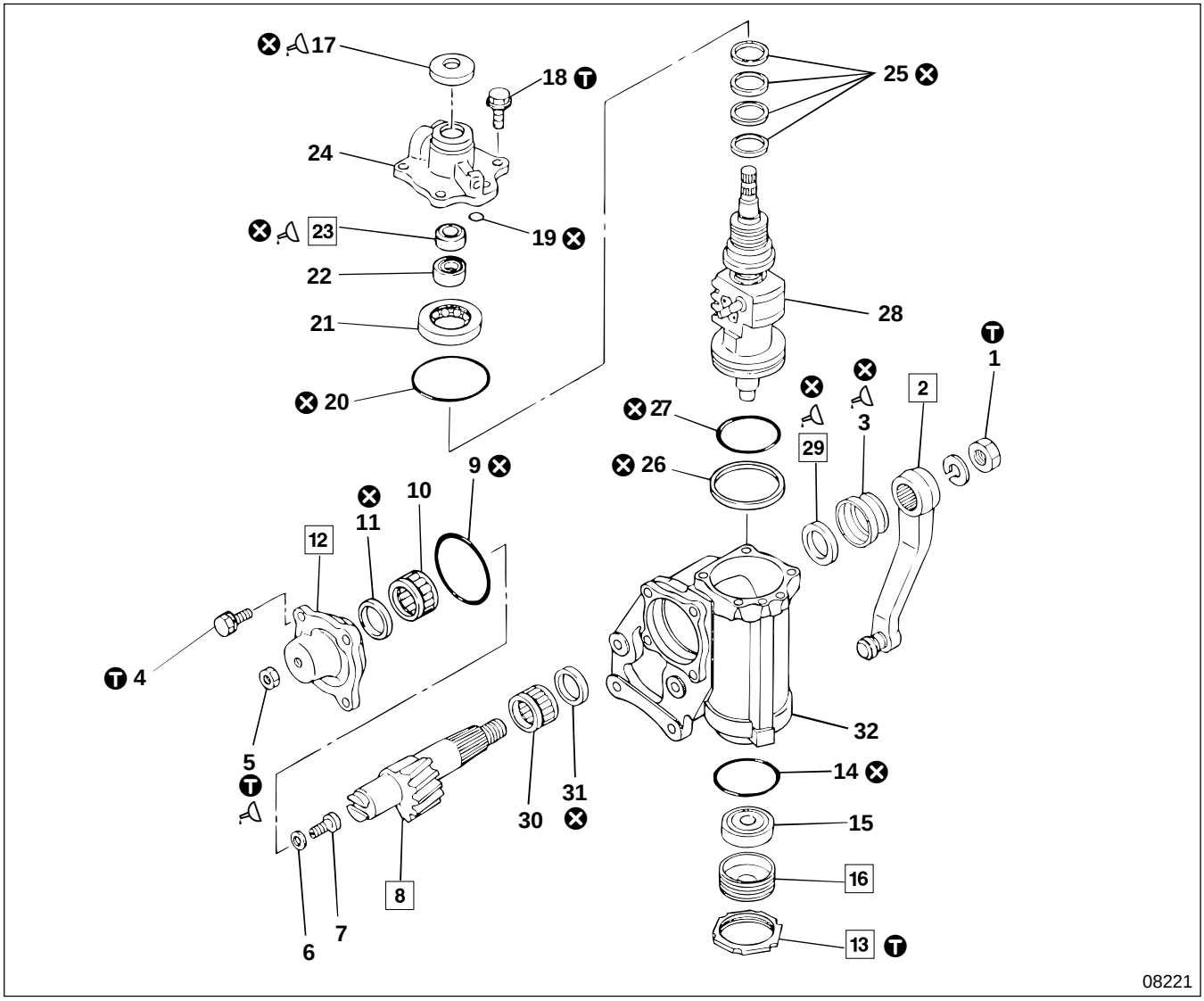

● **Inspection before disassembly**

P37-24

● **Disassembly sequence**

1 Lock nut
2 Pitman arm
3 Dust cover
4 Bolt
5 Nut
6 Adjusting plate
7 Adjusting bolt
8 Sector shaft
9 O-ring
10 Needle bearing
11 U-packing
12 Side cover
13 Special nut
14 O-ring
15 Bearing
16 End cover
17 Dust cover
18 Bolt
19 O-ring
20 O-ring
21 Bearing
22 Bearing
23 Oil seal
24 Valve housing
25 Seal ring
26 Seal ring
27 O-ring
28 Ball screw set shaft
29 Oil seal
30 Needle bearing
31 U-packing
32 Gear box

⊗ : Non-reusable parts

NOTE

Do not disassemble needle bearing 10, 30 and ball screw set shaft 28 unless they are faulty.

● **Inspection after assembly**

P37-25

● **Assembly sequence**

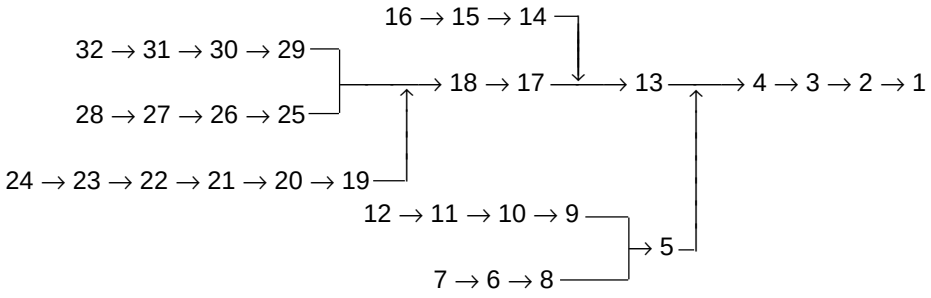

Repair kit : Seal kit

Service standards

Unit : mm {in.}

Location	Maintenance item	Standard value (Basic diameter in [ ])	Limit	Remedy
7, 8	Axial play of center shaft and adjusting bolt	0.1 {0.0039} or less	0.1 {0.0039}	Replace adjusting plate
8	Axis diameter of sector shaft (at gear box)	[40] –0.008 to +0.005 {[1.57] –0.00031 to +0.00020}	0.003 {0.00012}	Gap between worn area and unworn area
28	Main shaft outer diameter of ball screw set shaft	[22.5] –0.05 to 0 {[0.89] –0.0020 to 0}	—	Replace
	Rotating torque of ball screw set shaft	29 to 69 N·cm {0.22 to 0.51 lbf.ft, 3 to 7 kgf·cm}	—	Adjust
28, 32	Clearance between ball screw set shaft and gear box	0.022 to 0.069 {0.00087 to 0.0027}	—	Replace
32	Inner diameter of gear box	[78] 0.012 to 0.034 {[3.1] 0.00047 to 0.0013}	0.05 {0.0020}	Gap between worn area and unworn area
—	Total starting torque with power steering booster	98 N·cm {0.72 lbf.ft, 10 kgf·cm} or less	—	Adjust
—	Engagement torque	20 to 49 N·cm {0.14 to 0.36 lbf.ft, 2 to 5 kgf·cm}	—	Adjust

Tightening torque

Unit : N·m {lbf.ft, kgf·m}

Location	Parts to be tightened	Tightening torque	Remarks
1	Lock nut (Pitman arm mounting)	245 to 294 {180 to 215, 25 to 30}	—
4	Bolt (Side cover mounting)	74 to 98 {54 to 72, 7.5 to 10}	—
5	Nut tightening	29 to 39 {22 to 29, 3 to 4}	—
13	Special nut mounting	177 to 226 {130 to 165, 18 to 23}	—
18	Bolt (Valve housing mounting)	44 to 54 {33 to 40, 4.5 to 5.5}	—

Lubricant and sealant

Location	Points of application	Kinds	Quantity
3, 17	Pack interior of dust cover	Wheel bearing grease [NLGI No.2 (Li soap)]	As required
5	Nut fixing point	THREEBOND 1104	As required
23, 29	Lip area of oil seal	Wheel bearing grease [NLGI No.2 (Li soap)]	As required

Special tools

Unit : mm {in.}

Location	Tool name and shape	Part No.	Application
2	Pitman arm puller 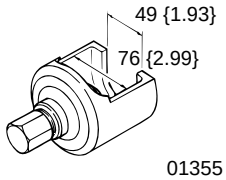 01355	MH062472	Removal of pitman arm
13	Special nut wrench 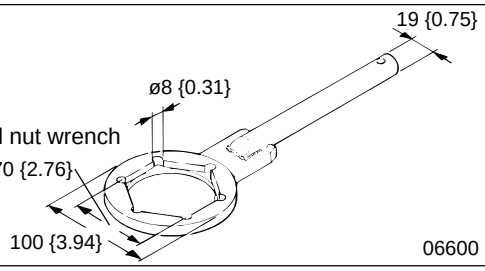 06600	MH061594	Removal and installation of special nut
16	End cover wrench 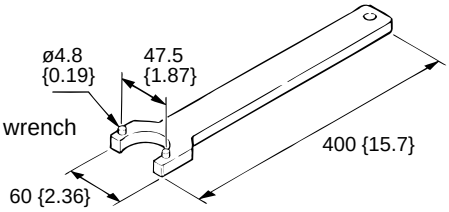 06687	MH061593	Removal and installation of end cover

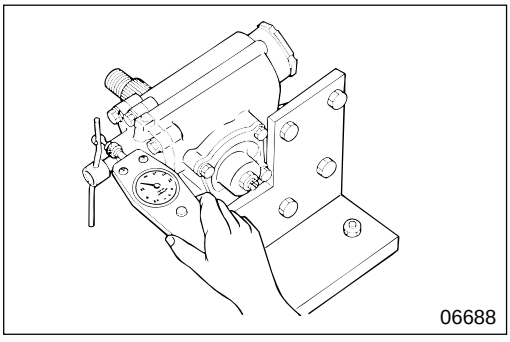
06688

◆ Service procedure

● **Inspection before disassembly**

[Measurement of total starting torque]
Before disassembly, measure the total starting torque for a reference during assembly.

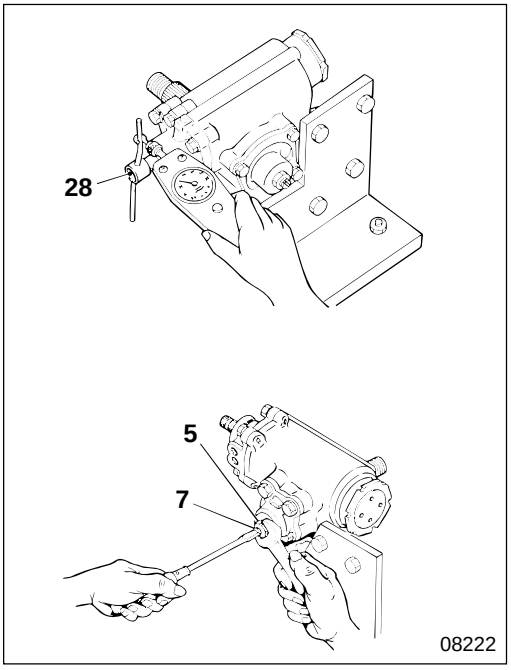

● **Inspection after assembly**

[Measurement of total starting torque]

- While turning ball screw set shaft **28**, one quarter of a turn left and right from the neutral position using a torque meter, drive adjusting bolt **7** in, then adjust so that the total starting torque or the engagement torque is within the standard value.
- After adjustment, tighten nut **5** at specified torque.

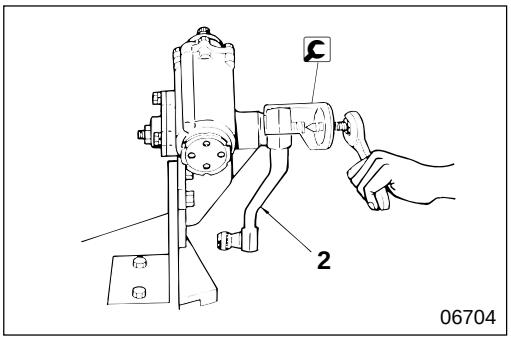

2 **Pitman arm**

[Removal]

[Installation]

Align slit **B** of the V-groove of sector shaft **8** on the same line as slit **A** of the V-groove of pitman arm **2** when installing it.

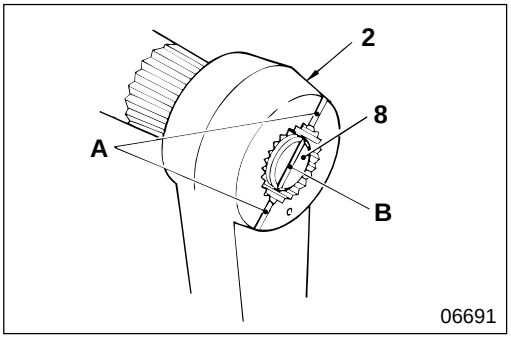

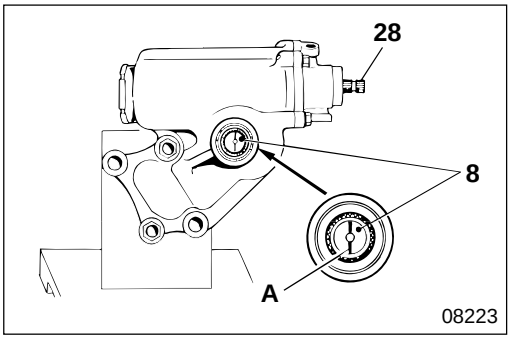

8 **12** **Sector shaft and side cover**

[Removal]

- Turn ball screw set shaft **28** counterclockwise to the lock position, then turn it clockwise approximately 2.6 turns, so that slit **A** of the V-groove at the end of sector shaft **8** is in the neutral position as illustrated.

NOTE

At this time, make sure that slit A of the V-groove at the end of sector shaft 8 is at right angles to the axial line of ball screw set shaft 28.

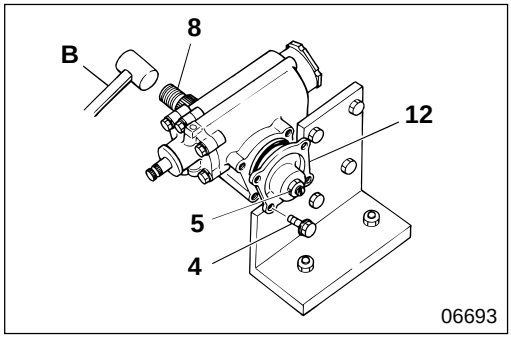

- Loosen nut **5** and remove bolt **4**. After making sure that sector shaft **8** is in the neutral position, tap the end of the sector shaft, and pull out side cover **12** together with the sector shaft.

  B : Plastic-headed mallet

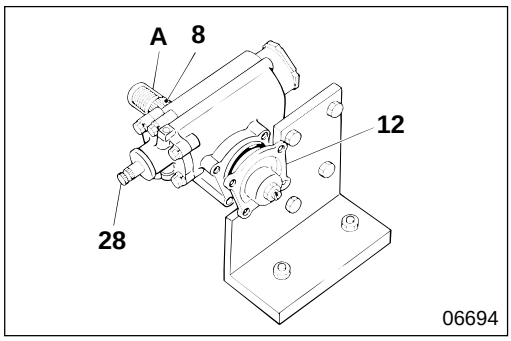

[Installation]
With ball screw set shaft **28** in the neutral position, insert sector shaft **8** and side cover **12**.

CAUTION

Insert sector shaft 8 with the thread area of the shaft end and serration area protected by cover A to prevent damage to the oil seal.

NOTE

- **Turn ball screw set shaft 28, and make sure that the shaft rotates approximately five turns lock-to-lock.**
- **If the number of turns is less, inspect engagement of ball screw set shaft 28 and sector shaft 8.**

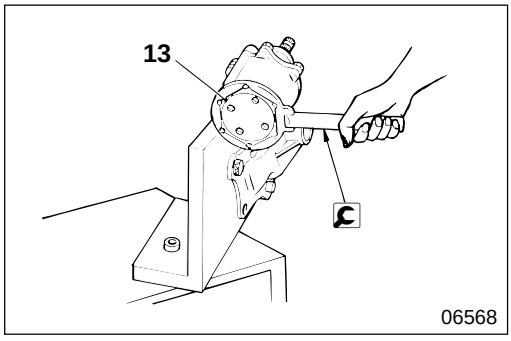

13 **Removal and installation of special nut**

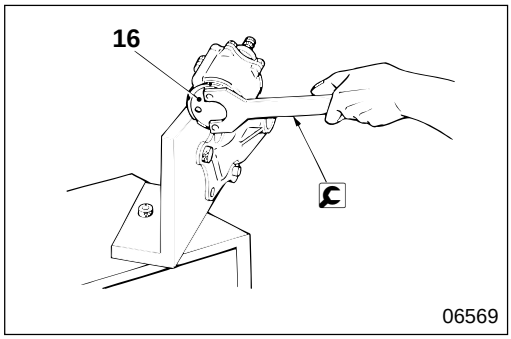

16 **End cover**

[Removal]

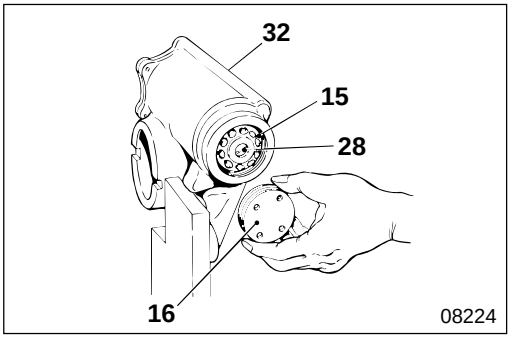

[Installation]

- Install inner race of bearing **15** onto the end of ball screw set shaft **28**, then install the outer race of the bearing onto end cover **16** and screw into gear box **32**.

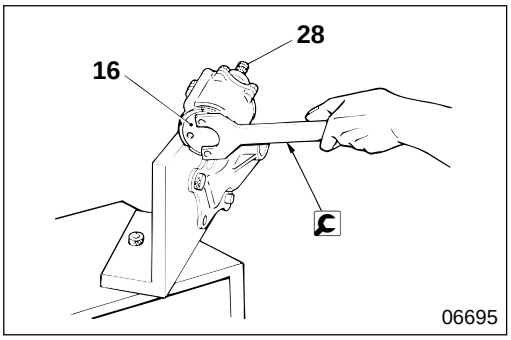

- Making sure that the rotation torque of ball screw set shaft 28 is not uneven, drive in end cover **16**, using 🔧 end cover wrench, until the rotation torque is within the standard value.

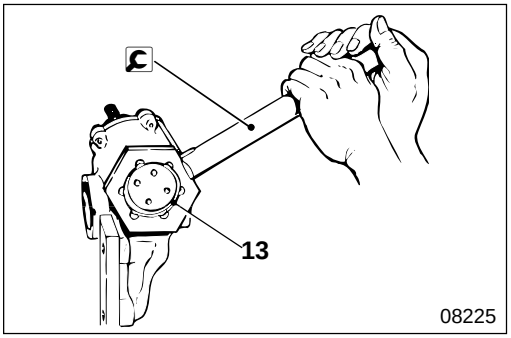

- At the point where the rotation torque is fixed, tighten special nut **13** at specified torque, using 🔧 special nut wrench.

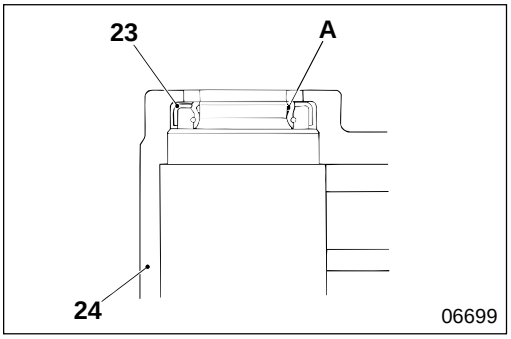

23 **Installation of oil seal**

Apply grease to lip area **A** of oil seal **23** and install into valve housing **24** as illustrated.

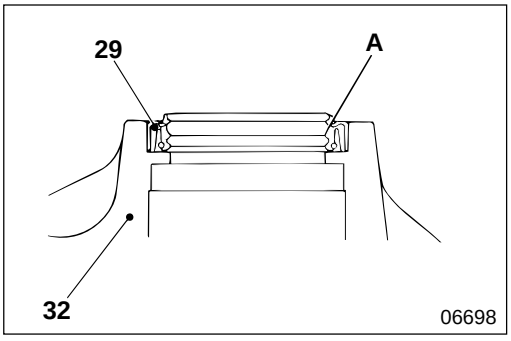

29 **Installation of oil seal**

Apply grease to lip area **A** of oil seal **29** and install into gear box **32** as illustrated.

POWER STEERING OIL PUMP

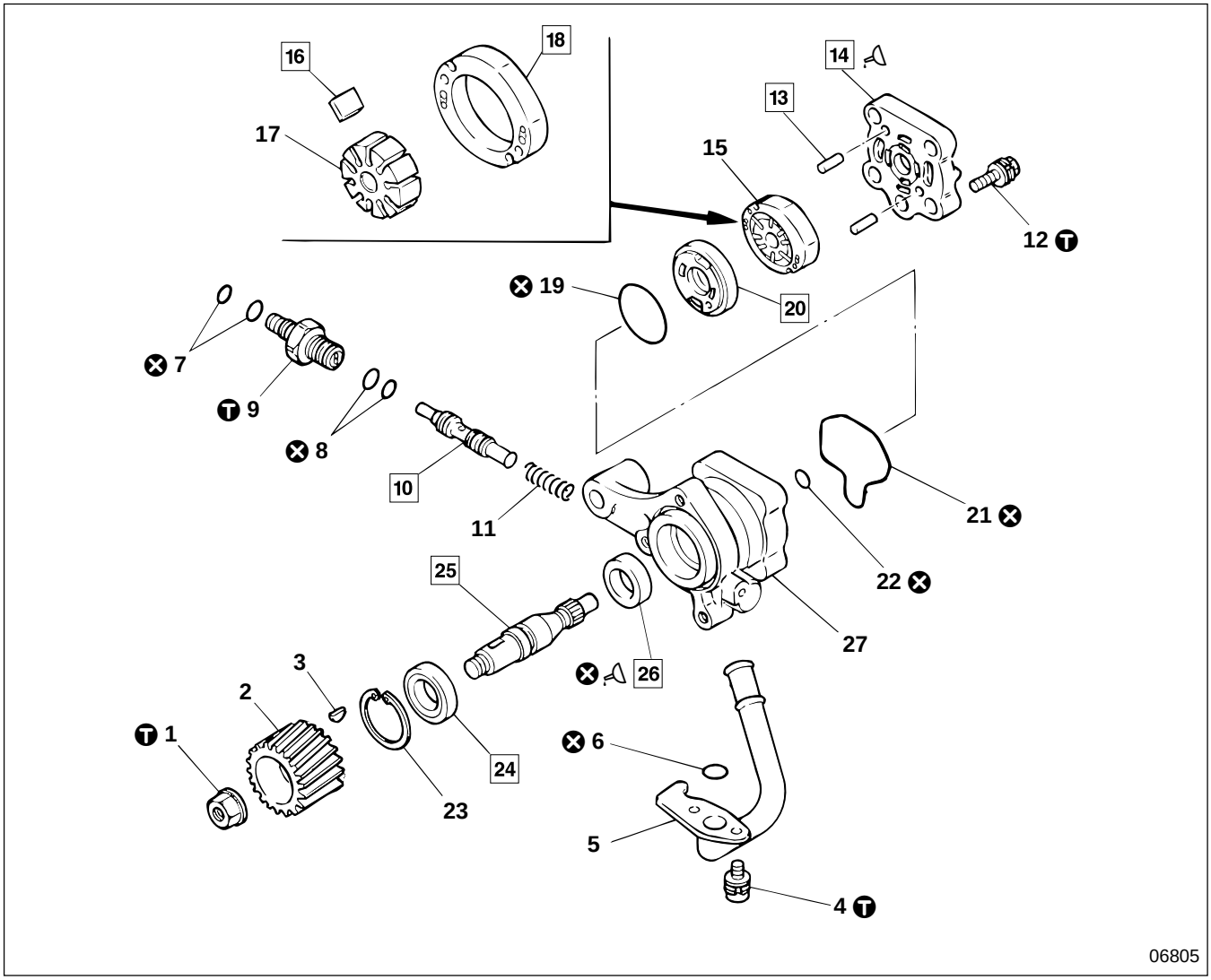

● **Disassembly sequence**

1 Lock nut
2 Gear
3 Key
4 Bolt
5 Suction connector
6 O-ring
7 O-ring
8 O-ring
9 Connector
10 Relief valve assembly
11 Flow control spring
12 Bolt
13 Pin
14 Cover
15 Cartridge assembly
16 Vane
17 Rotor
18 Cam ring
19 O-ring
20 Side plate
21 O-ring
22 O-ring
23 Snap ring
24 Bearing
25 Shaft
26 Oil seal
27 Body

⊗ : Non-reusable parts

● **Assembly sequence**

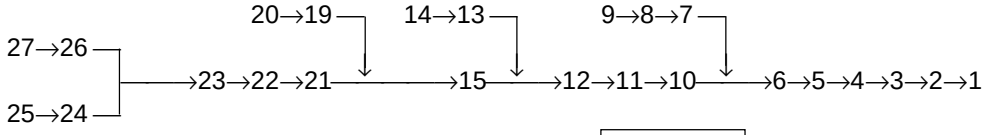

15 : 16→17→18

Repair kit : Seal kit, Cartridge assembly kit

Service standards

Unit : mm {in.}

Location	Maintenance item	Standard value (Basic diameter in [ ])	Limit	Remedy
10, 27	Clearance between relief valve assembly and body	[14] 0.01 to 0.02 {[0.55] 0.00039 to 0.00079}	0.03 {0.0012}	—
11	Flow control spring free length	36.5 {1.44}	33.5 {1.32}	—
14	Wear of cover	—	0.05 {0.0020}	—
16, 17	Clearance between vane and rotor	0.01 {0.00039}	0.06 {0.0024}	—
20	Wear of side plate	—	0.05 {0.0020}	—
25	Wear of shaft oil seal lip area	—	0.05 {0.0020}	—

Tightening torque

Unit : N·m {lbf.ft, kgf·m}

Location	Parts to be tightened	Tightening torque	Remarks
1	Lock nut (Gear mounting)	34 to 45 {25 to 33, 3.5 to 4.6}	Wet
4	Bolt (Suction connector mounting)	6 to 10 {4.3 to 7.2, 0.6 to 1}	—
9	Connector	49 to 69 {36 to 51, 5 to 7}	—
12	Bolt (Cover mounting)	18 to 22 {13 to 16, 1.8 to 2.2}	—

Lubricant and fluid

Location	Points of application	Kinds	Quantity
14	Bushing of cover	Automatic transmission fluid (DEXRON or DEXRON II type)	As required
26	Periphery of lip area of oil seal	Wheel bearing grease [NLGI No. 2 (Li Soap)]	As required

◆ Service procedure

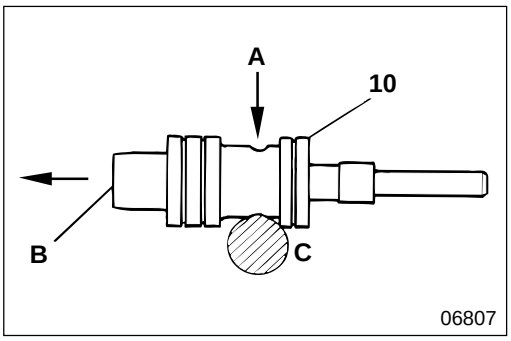

10 **Inspection of relief valve assembly**

Block one side of the hole of relief valve assembly **10**, with your finger **C**, then when air pressure **A** of 390 to 490 kPa {57 to 71 lbf/in^2, 4 to 5 kgf/cm^2} is applied from the other side, check whether air is released from small hole **B** at the rear. If air is not released, it is normal.

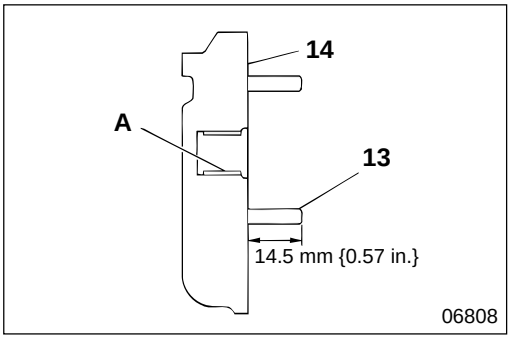

13 **14** **Installation of pin and cover**

- Press-fit pin **13** into cover **14**, to the press-fitting height.
- Apply hydraulic oil to bushing area **A** of the cover.

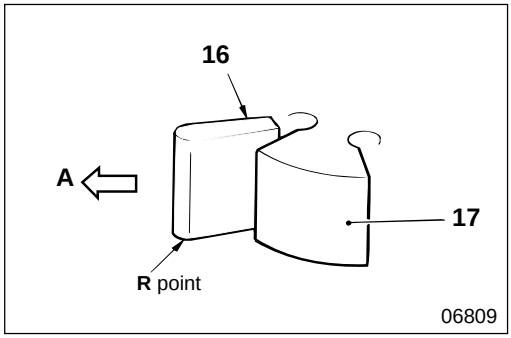

16 **Installation of vane**

With **R** point of vane **16** facing outside **A**, install it on rotor **17** and make sure that the vane moves smoothly. If it is faulty, replace cartridge **15**.

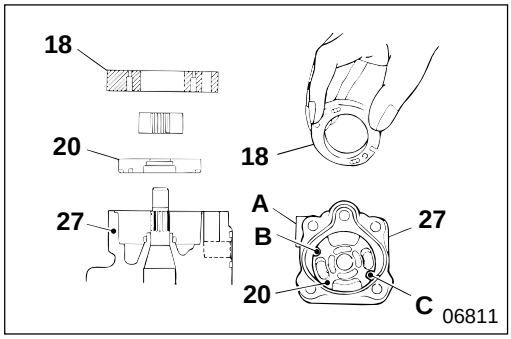

18 **20** **Installation of cam ring and side plate**

- Since the mounting direction of side plate **20** is determined, mount the side plate, so that relief valve side **A** is aligned with round hole **B** (standard pin side) and slotted hole **C** is located on a diagonal.

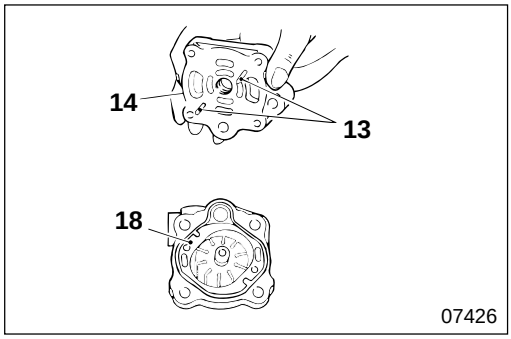

- Align cam ring **18** with pin **13** of cover **14**, then install the cam ring.

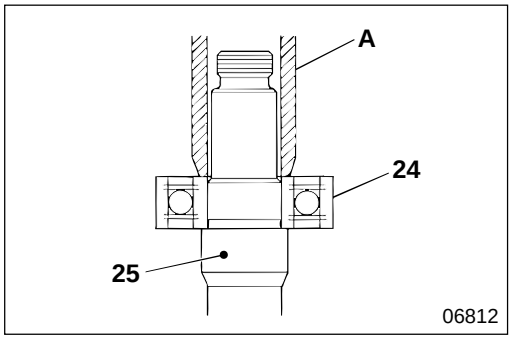

24 **Press-fitting of bearing**

With a suitable pipe **A** on the inner race of bearing **24**, press-fit onto the stepped part of the shaft **25**.

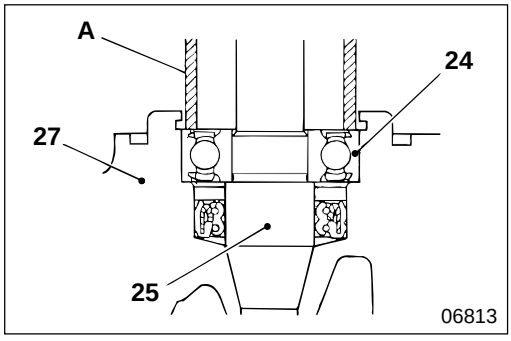

25 **Installation of shaft**

With bearing **24** installed on shaft **25**, press-fit the shaft into body **27** using a suitable pipe **A** on the outer race of the bearing.

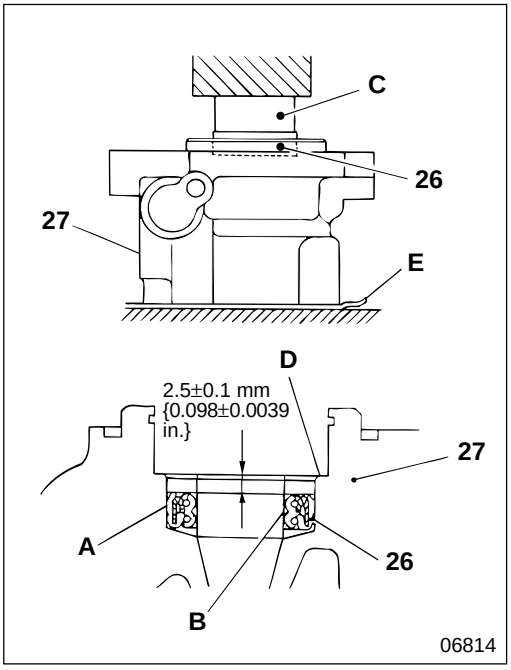

26 **Press-fitting of oil seal**

- Apply grease to periphery **A** of oil seal **26** and lip **B**, then press-fit the oil seal into body **27**, using jig **C** (ring-type plate).
- Press-fit oil seal **26** so that the press-fitting amount from seat surface **D** is as illustrated.

CAUTION⚠

To prevent damage to the lapped surface of body 27 protect it with a soft cloth E.

POWER STEERING OIL TANK

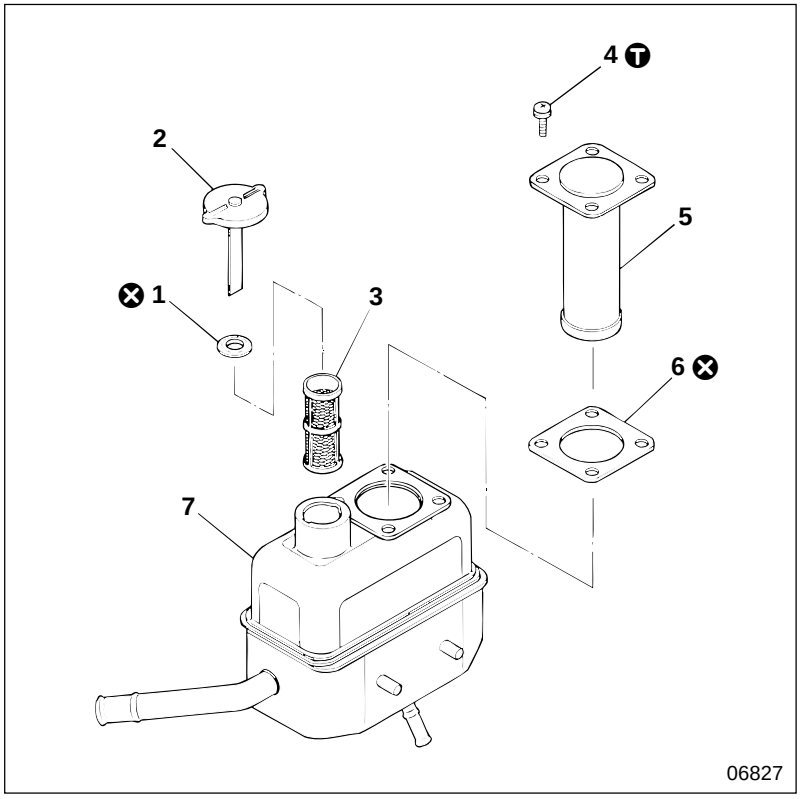

● **Disassembly sequence**

1 Packing
2 Filler cap
3 Strainer
4 Screw
5 Filter
6 Packing
7 Tank

⊗ : Non-reusable parts

● **Assembly sequence**

Follow the disassembly sequence in reverse.

T Tightening torque

Unit : N·m {lbf.ft, kgf·m}

Location	Parts to be tightened	Tightening torque	Remarks
4	Screw (Filter mounting)	1.27±0.29 {0.94±0.22, 0.13±0.03}	—

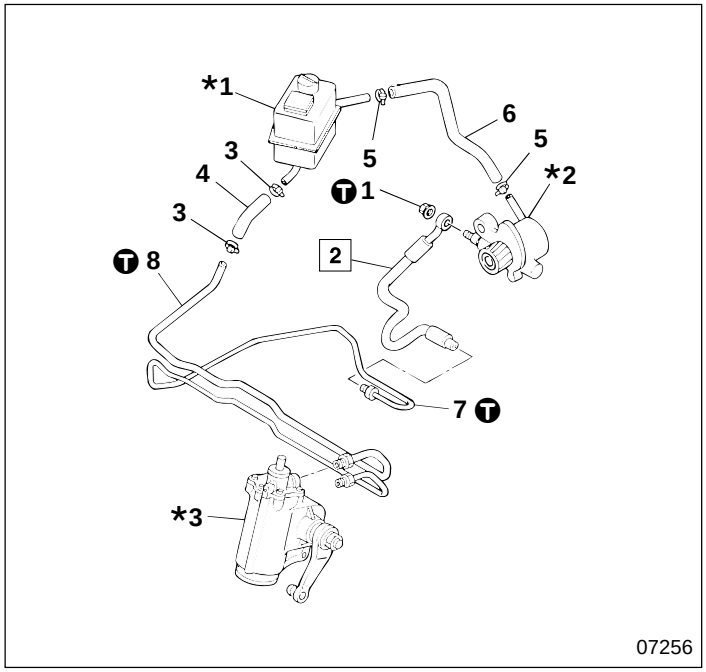

● **Removal sequence**

1 Nut
2 Pressure hose
3 Clamp
4 Rubber hose
5 Clamp
6 Rubber hose
7 Pressure tube
8 Return tube

***1** : Power steering oil tank
***2** : Power steering oil pump
***3** : Power steering booster

● **Installation sequence**

Follow the removal sequence in reverse.

CAUTION⚠

Be sure to bleed air if the fluid line was removed, failure to do so would cause the power steering to malfunction. 🕮 P37-12

T Tightening torque

Unit : N·m {lbf.ft, kgf·m}

Location	Parts to be tightened	Tightening torque	Remarks
1	Nut (Pressure hose mounting)	29 to 39 {22 to 2.9, 3 to 4}	—
7	Pressure tube (Pressure hose and power steering booster connection)	29 to 39 {22 to 29, 3 to 4}	—
8	Return tube (Power steering booster connection)	39 to 49 {29 to 36, 4 to 5}	—

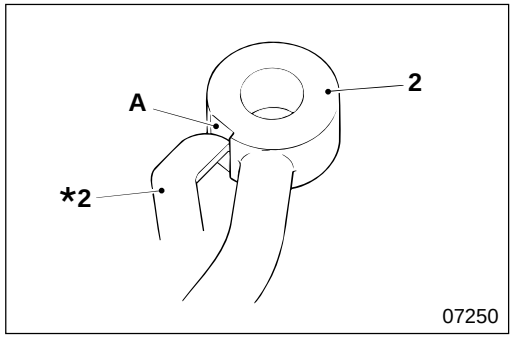

◆ Service procedure

2 Installation of pressure hose

Install pressure hose **2** so indent **A** of pressure hose **2** contacts the suction connector of power steering oil pump ***2**.

DRAG LINK

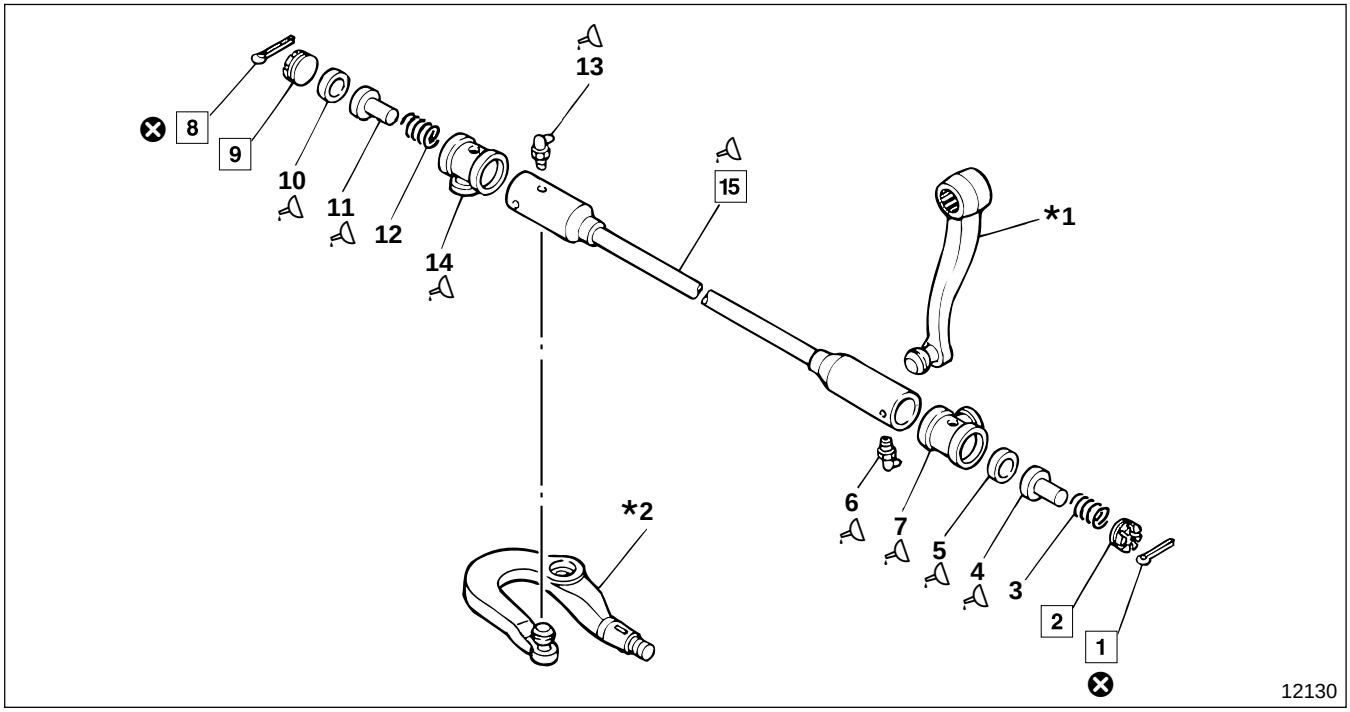

● **Disassembly sequence**

1 Split pin
2 End plug
3 Spring
4 Ball stud seat
5 Ball stud seat
6 Grease nipple
7 Dust cover
8 Split pin
9 End plug
10 Ball stud seat
11 Ball stud seat
12 Spring
13 Grease nipple
14 Dust cover
15 Drag link

***1** : Pitman arm
P37-22
***2** : Knuckle arm
Gr 26
⊗ : Non-reusable parts

● **Assembly sequence**

Follow the disassembly sequence in reverse.

Lubricant

Location	Points of application	Kinds	Quantity
4, 5, 10, 11	Whole area of ball stud seat	Chassis grease [NLGI No.1 (Ca soap)]	As required
6, 13	Supply via grease nipple	Chassis grease [NLGI No.1 (Ca soap)]	As required
7, 14	Arm mounting port of dust cover	Chassis grease [NLGI No.1 (Ca soap)]	As required
15	Pack interior of drag link	Chassis grease [NLGI No.1 (Ca soap)]	As required

◆ Service procedure

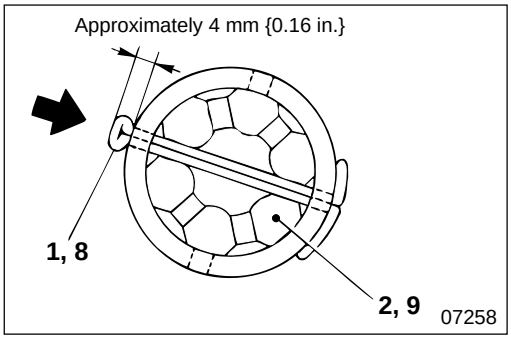

1 **2** **8** **9** **Installation of split pin and end plug**

- Tighten end plug **2, 9** fully, then slacken it off by one half of a turn.
- Place split pins **1**, **8** so that the heads face the outside of the vehicle.
- Caulk the heads of split pins **1**, **8** until they are approximately 4 mm {0.16 in.} thick.

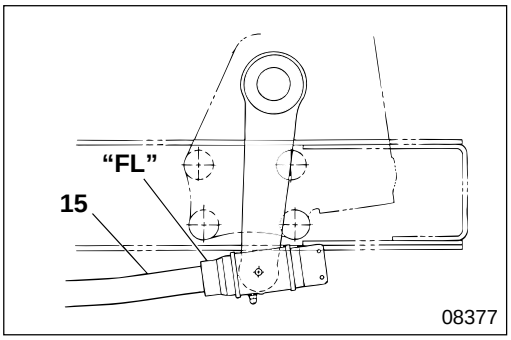

15 **Installation of drag link**

Install drag link **15** with front mark **"FL"** facing the front of the vehicle.

TIE ROD ASSEMBLY

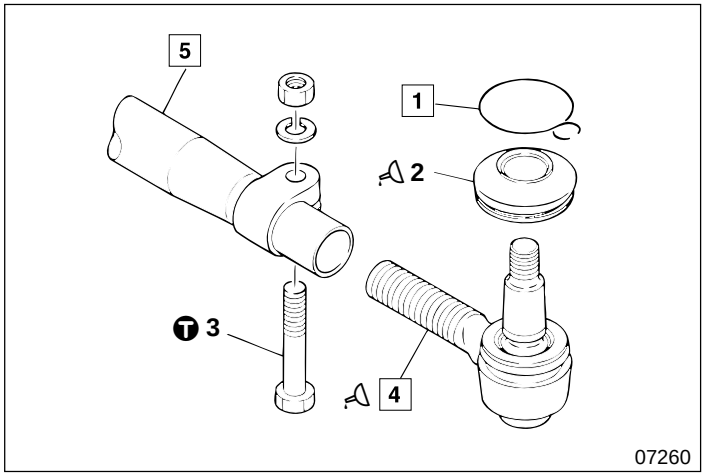

● **Disassembly sequence**

1 Clip
2 Dust cover
3 Clamp bolt
4 Tie rod end
5 Tie rod

NOTE

Do not remove clip 1 or dust cover 2 unless they are faulty.

● **Assembly sequence**

Follow the disassembly sequence in reverse.

Service standards

Unit : mm {in.}

Location	Maintenance item	Standard value	Limit	Remedy
5	Bend of tie rod	1 {0.039} or less	1 {0.039}	Replace

Tightening torque

Unit : N·m {lbf.ft, kgf·m}

Location	Parts to be tightened	Tightening torque	Remarks
3	Clamp bolt (Tie rod end clamp tightening)	25±5 {18±3.6, 2.5±0.5}	—

Lubricant

Location	Points of application	Kinds	Quantity
2	Lip area of dust cover	Wheel bearing grease [NLGI No.2 Li soap]	As required
4	Pack interior of dust cover of tie rod end	Wheel bearing grease [NLGI No.2 Li soap]	As required

◆ Service procedure

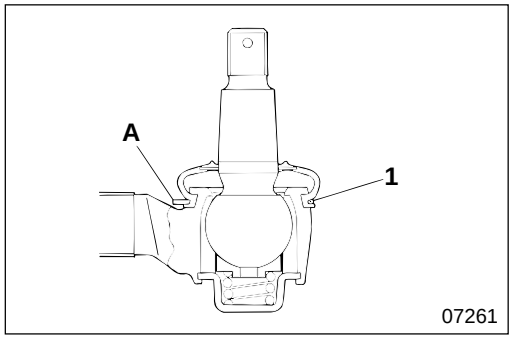

1 **Installation of clip**

Install clip **1** with alignment port **A** in the direction as illustrated.

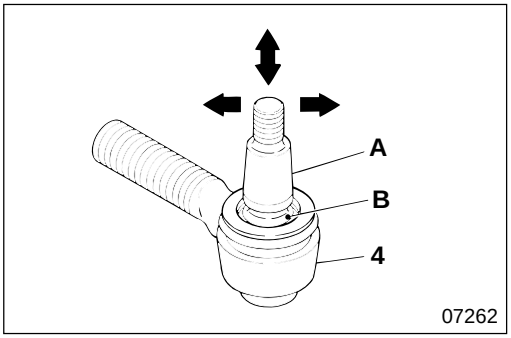

4 **Tie rod end**

[Inspection]
Move ball stud area **A** vertically and horizontally to inspect for looseness. Ensure that ball **B** rotates evenly.

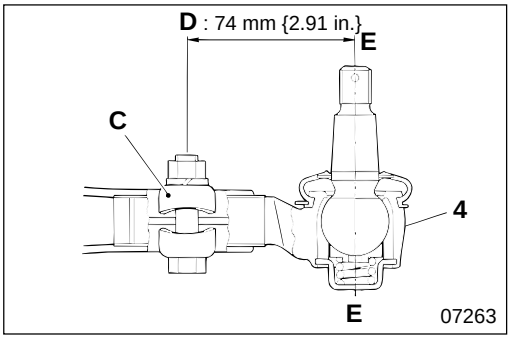

[Installation]
- Screw in tie rod end **4** so that dimension **D** of the tie rod end and clamp **C** differs by 1.5 mm {0.059 in.} or less between left and right.
- Secure axis **E – E** so that it is parallel both left and right.

NOTE

Deviation of the left and right screw-in amount of tie rod end 4 should be within one turn.

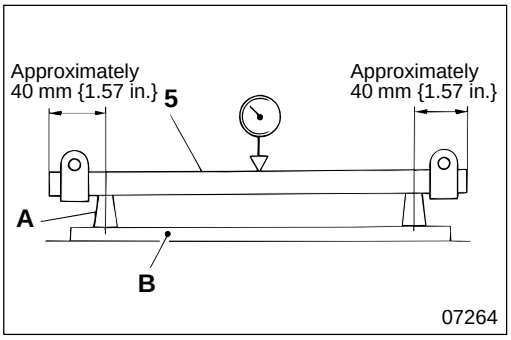

5 **Bending of tie rod**

Measure the bend of tie rod **5** at the center point. If the measured value exceeds the limit, correct or replace the tie rod.

NOTE

To measure the deflection of tie rod 5, turn it one full rotation and read the dial gauge indicator. The deflection is one half of the indicated value.

A : V-block
B : Surface plate

MITSUBISHI
FUSO

FE

Service Manual

Group 41
Frame

Table of Contents

BACK

HOME

MITSUBISHI FUSO TRUCK OF AMERICA, Inc.

Pub No. TWSE9501-41

GROUP 41 FRAME

SPECIFICATIONS 2

STRUCTURE AND OPERATION 2

INSPECTION AND REPAIR OF FRAMES 2

SPECIFICATIONS

Item	Specifications
Frame type	Ladder type
Cross section configuration of side rail	⊐ shape channel section

STRUCTURE AND OPERATION

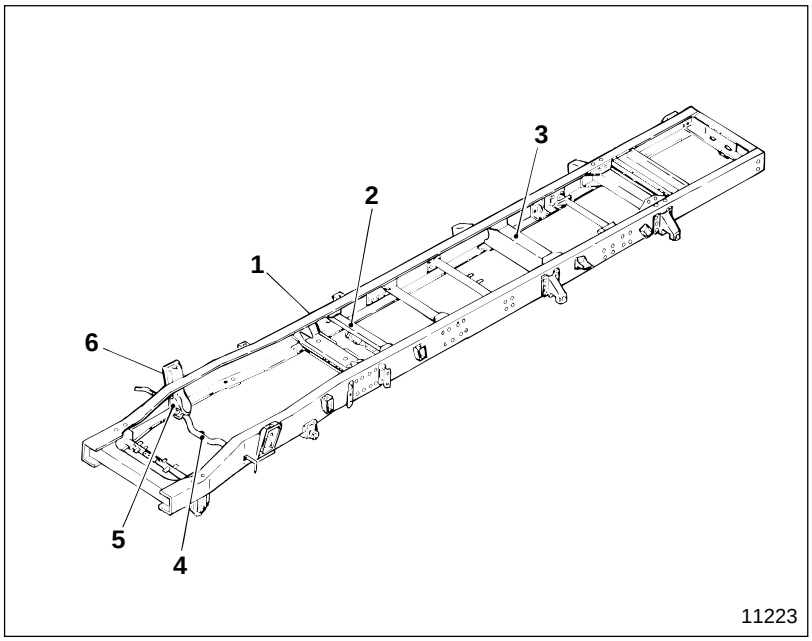

1 Side rail
2 Transmission mounting cross member < Automatic transmission >
3 Cross member
4 Front engine mounting support
5 Front engine mounting support bracket
6 Shock absorber bracket

INSPECTION AND REPAIR OF FRAMES

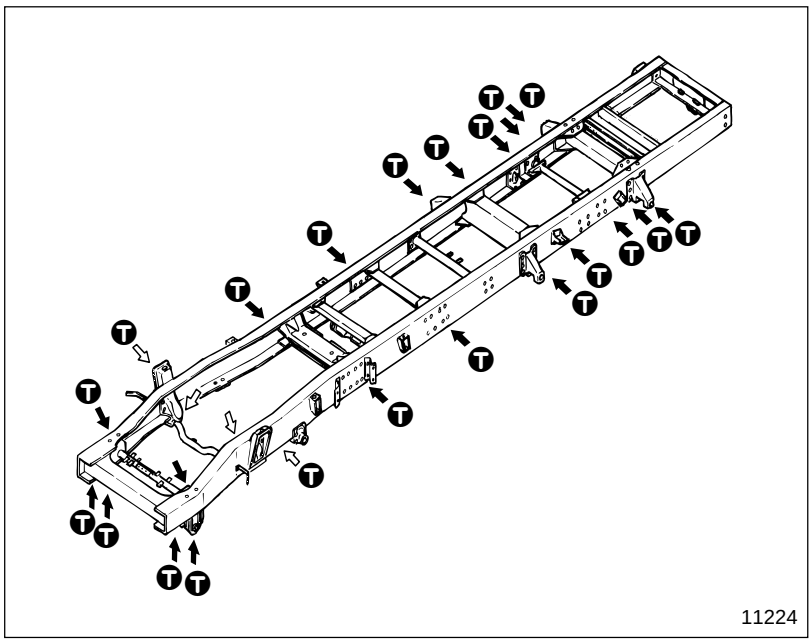

⬅ : Bolt (M10×1.25)
⇦ : Bolt (M12×1.25)

Tightening torque

Unit : N·m {lbf.ft, kg·m}

Location	Parts to be tightened	Tightening torque	Remarks
—	Bolt (⬅ area bolt : M10×1.25)	60 to 80 {43 to 58, 6 to 8}	—
—	Bolt (⇦ area bolt : M12×1.25)	98 to 120 {72 to 87, 10 to 12}	—

◆ Service procedure

● Cleaning of frame

Carefully remove mud, grease, rust, etc. that is stuck to the outer and inner surfaces of the frame.

● Inspection for frame deformation

If any fault such as deformation is found, repair the frame.

● Inspection for cracks in frame

- Remove paint from any areas that are seemingly faulty and carefully inspect.
- If visual inspection is difficult, inspect using color contrast penetrant examination or other methods.
  If a crack is found, repair as follows.

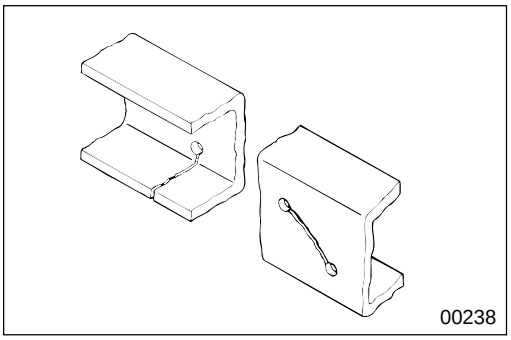

● Repair of crack in frame

- With the vehicle unloaded, level the frame.
- Drill a hole, about twice the thickness of the frame, 10 mm {0.39 in.} from the end of the crack.

NOTE

If a crack is found inside the frame, drill holes at both ends of the crack.

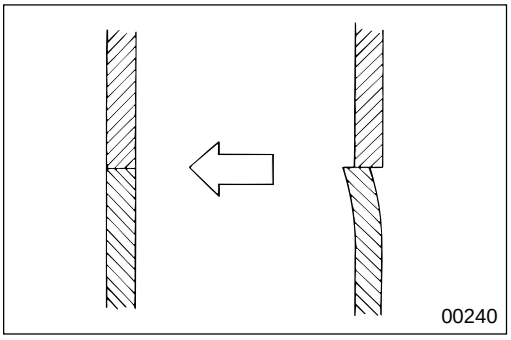

- If the edges of the crack are not flush, make them flush with each other.

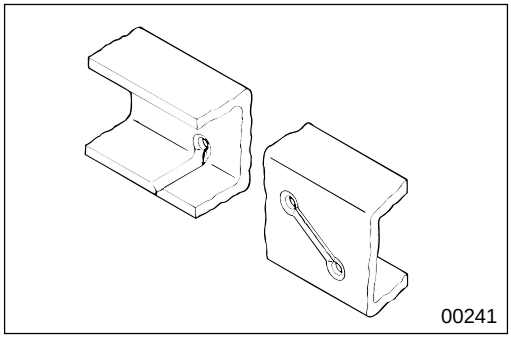
00241

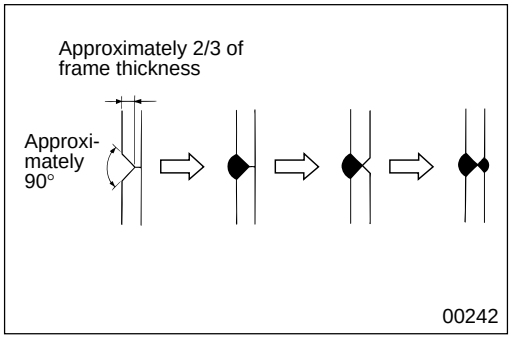

00242

- Using a grinder, etc., grind a 90° V-section channel, two-thirds of the frame thickness, then weld.

WARNING

You must cover any inflammable materials, such as pipelines, wiring harnesses, rubber parts, and the fuel tank, that are near the welding site.

CAUTION

- **Do not use gas welding because the high temperature produced alters the material properties and weakens the welded area. Be sure, therefore, to use electric welding.**
- **Be sure to remove the negative terminal of the battery, then ground the welder near the area to be welded to prevent reversed flow of current from the welder which might burn out electrical components.**
- **Be sure to protect mountings such as main sills that can be damaged by heat, by using heat insulators, etc.**

NOTE

- **Use low-hydrogen type coated CO_2 and arc welding electrodes for welding to prevent harmful defects such as undercutting, blow holes, etc.**
- **Preheat the area to be welded to approximately 50 to 350°C {122 to 662°F} before welding when the workshop temperature is below 0°C {32°F}.**

- Next, grind a V-section channel, as described above, on the opposite side of the weld and weld. At the same time, fill the holes at both ends of the crack by welding.

NOTE

In cold districts, heat the welded area to approximately 200°C {392°F} after welding.

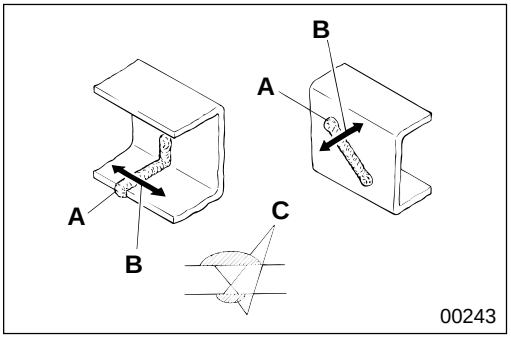

- After welding, grind bead **A** at right angles **B** to remove shaded area **C** as illustrated and grind the area flat.
- Finish the surface so that the frame thickness is identical to the original thickness.

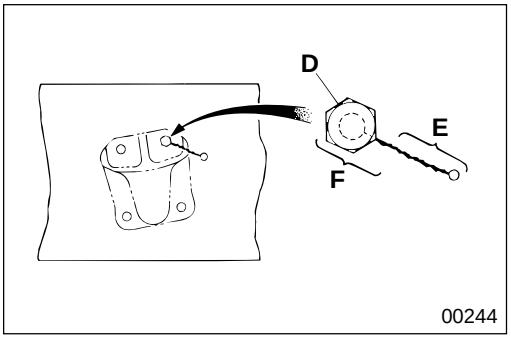

[Repairing cracks caused by rivets or bolt holes]

- To make the edges of the holes flush at the cracked area, temporarily tighten bolt **D** in the hole.
- Weld cracked point **E** at least 20 mm {0.79 in.} from the center of the bolt.
  For welding method refer to the above-mentioned procedures for repairing cracks. P41-3.
- After removing the bolt and making the edges flush, weld remaining area **F** and fill the hole.
- After drilling a hole in the filled area, install a rivet or bolt.

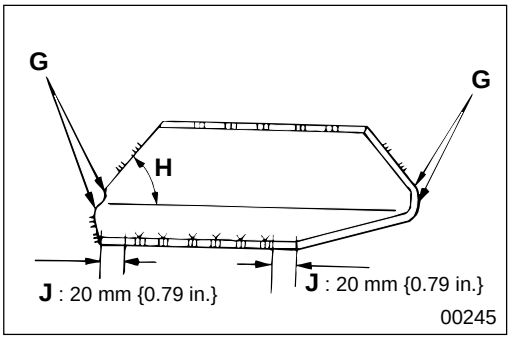

[Repairing using reinforcement plate]

- To prevent concentrated stress being produced at ends **G** of the reinforcement plate, weld the plate with angle **H** at both ends opened 30° or less.
  Do not weld area **J**.
- The reinforcement plate must have enough strength for the cracked area.

NOTE

- **Thickness of reinforcement plate : same as frame thickness**
- **Reinforcement plate material : SAPH440 (hot-rolled sheet steel for automobiles), SS400 (sheet steel for general construction), or equivalent strength.**

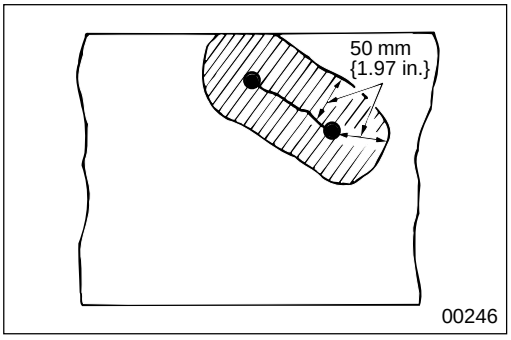

- After welding, heat the shaded area to 600 to 700°C {1112 to 1292°F}.

CAUTION

Be sure to protect mountings such as main sills that can be damaged by heat, by using heat insulators, etc.

INSPECTION AND REPAIR OF FRAMES

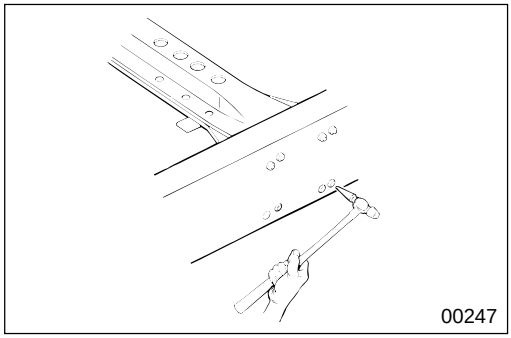

● **Inspection for loose rivets**

- Gently tap the rivet head using an inspection hammer and judge the condition by checking the vibration using the tip of your finger, or by listening to the sound.
- Rust between rivet and frame indicates that the rivet is loose.

CAUTION⚠

Be sure to replace loose rivets because they can break or cause cracking of the frame in the area around the rivet hole, causing accidents.

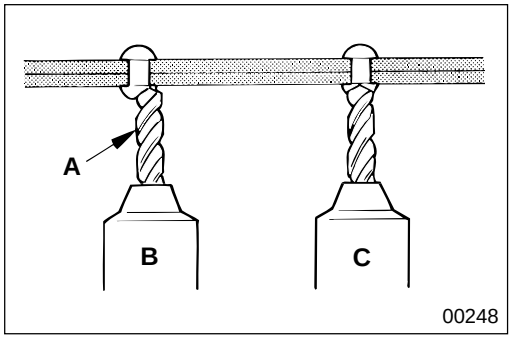

● **Repair of rivet**

- When removing rivets, use a center punch to make an indent in the center of the rivet head; then, drill out using drill **A** or grind.
  B : Incorrect
  C : Correct

CAUTION⚠

Make sure that you do not damage the rivet hole.

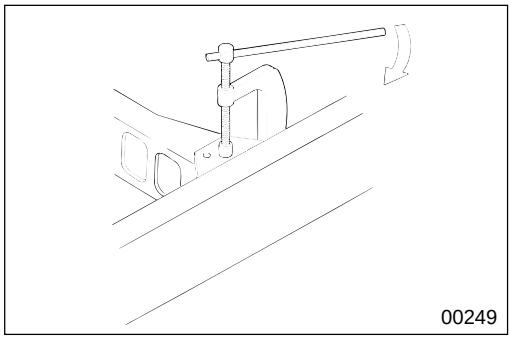

- When rivetting, first clamp both plates tightly near the rivet hole using a clamp to eliminate gaps between plates.

- Using a rivetting machine, insert the rivet (cold rivet).
- If rivetting is impossible, ream the rivet hole, drive in a reamer bolt, fully tightening the nut, then weld it in place.
  A flange bolt and flange nut should be used for the reamer bolt and nut.

● **Inspection for loose bolts and nuts**

- Inspect the mounting bolts in all areas for looseness. Loosened bolts should be tightened at specified torque. 🕮 P41-2

MITSUBISHI
FUSO

FE

Service Manual

Group 42
Cab

Table of Contents

BACK

HOME

MITSUBISHI FUSO TRUCK OF AMERICA, Inc.

Pub No. TWSE9501-42

GROUP 42 CAB

SPECIFICATIONS 2

STRUCTURE AND OPERATION 3

TROUBLESHOOTING 13

INSPECTION AND ADJUSTMENT MOUNTED IN VEHICLE
- Adjustment of Cab Tilt 17
- Adjustment of Door Fitting 18

REMOVAL AND INSTALLATION OF CAB 20

FRONT CAB MOUNTING 28

REAR CAB MOUNTING 30

CAB TILT LINK 32

DOOR 35

CAB EXTERIOR FITTING 40

MIRROR 44

WIPER AND WASHER 46

CAB INTERIOR FITTING 49

INSTRUMENT PANEL 51

WINDOW GLASS 54

SPECIFICATIONS

Item		Specifications
Cab assembly	Type	Cab over type (Forward control type)
	Mass kg {lb}	Approximately 390 {860}
Cab tilt	Type	Torsion bar type
	Tilt angle	45°
Cab mounting Type		Fixed type
Windshield		Laminated glass
Glass other than windshield		Tempered glass
Door glass opening and closing mechanism		Manual control type (Cable driven)

Front Cab Mounting

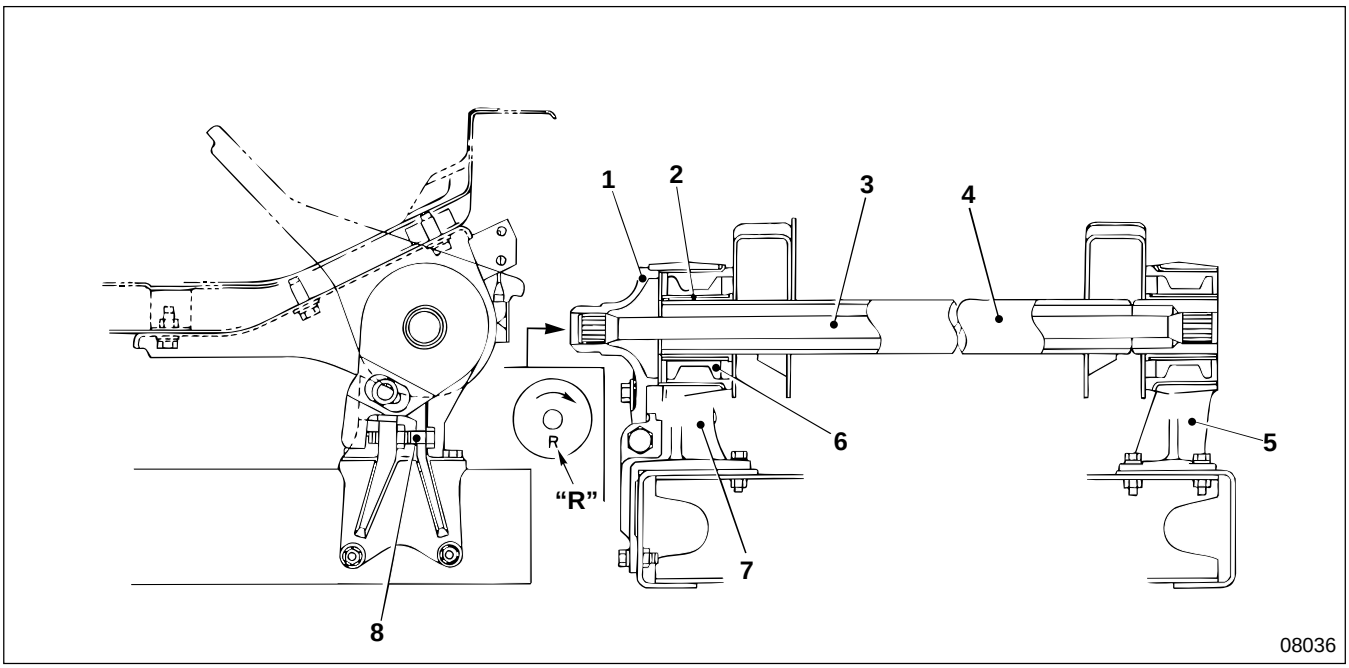

1 Anchor lever
2 Bushing
3 Torsion bar
4 Front floor cross member assembly
5 Front cab mounting bracket, LH
6 Front rubber assembly
7 Front cab mounting bracket, RH
8 Adjusting bolt

Since torsion bar **3** has torsional direction, it is marked **"R"** on its right end to indicate the torsional direction, preventing mistaken installation.

Rear Cab Mounting

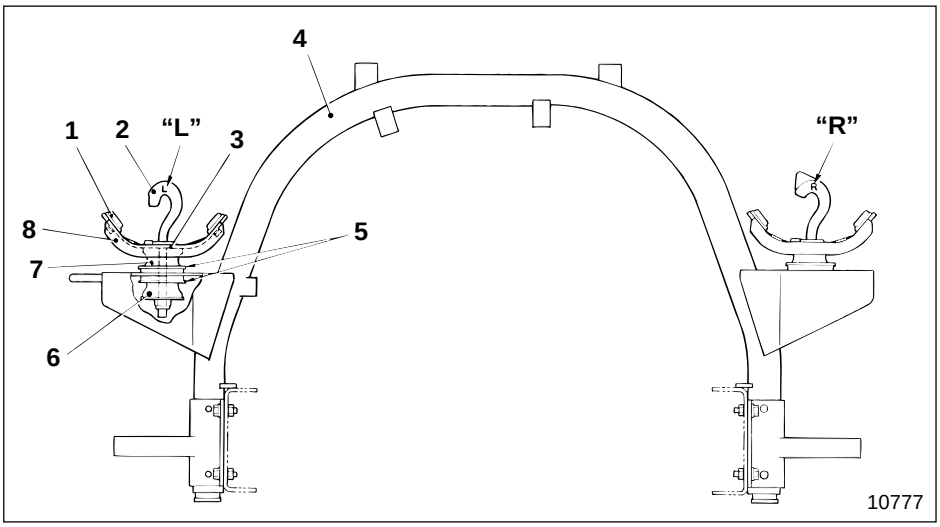

1 Side rubber
2 Anchor hook
3 Spacer
4 Rear mounting post
5 Metal fixture
6 Lower rubber
7 Upper rubber
8 Cab hold bracket

- Anchor hooks **2** are marked **"L"** and **"R"** to identify left and right.
- Between anchor hook **2** and cab hold bracket **8** is spacer **3**. By increasing or decreasing the number of spacers, the cab tilt operating force can be adjusted.

Cab Tilt Link

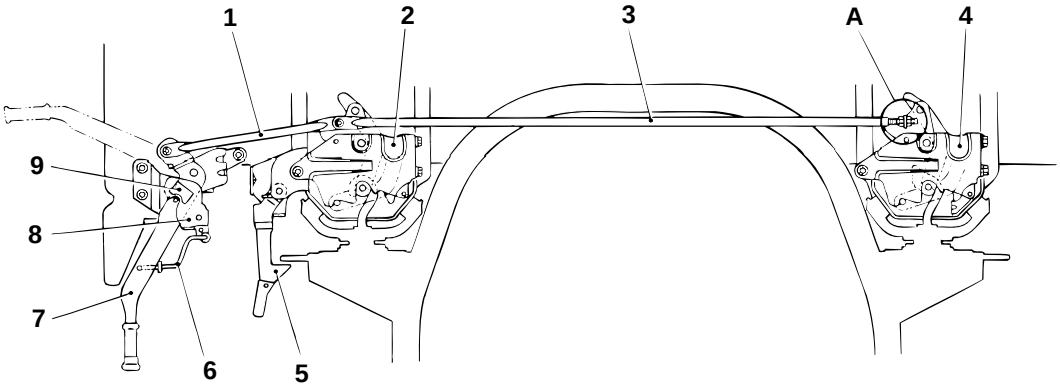

1 Lock handle rod
2 Link assembly, LH
3 Center rod
4 Link assembly, RH
5 L-lever
6 L-lever rod
7 Lock handle
8 Lock latch
9 Cab tilt lock switch

A : Center rod adjusting point

- The length of center rod **3** can be adjusted at mounting part **A** (center rod adjusting point) of link assembly RH **4**.
- Cab tilt lock switch **9**, mounted on lock latch **8**, detects whether lock handle **7** is locked securely.

Cab Tilt Warning Electric Circuit

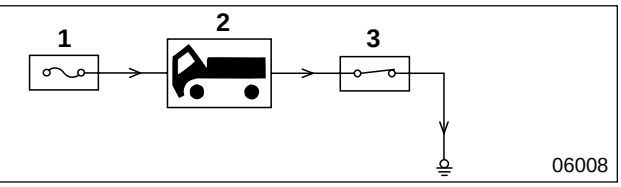

1 Fuse box
2 Cab tilt warning lamp
3 Cab tilt lock switch

Door Locking System

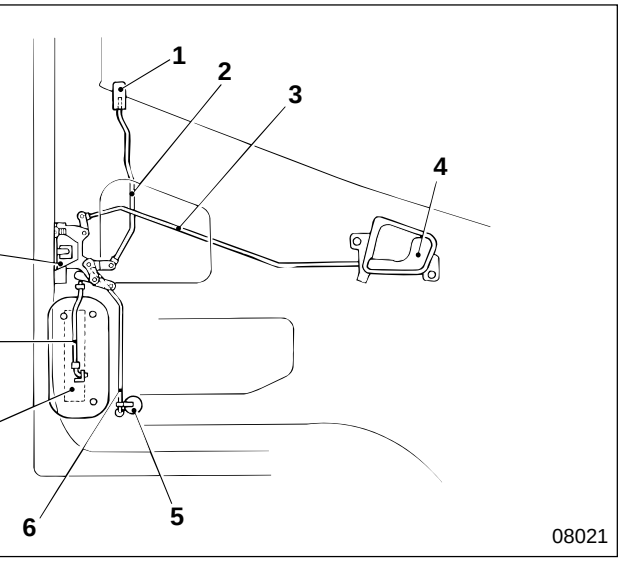

1 Door lock knob
2 Door lock rod
3 Door opening rod
4 Inside handle
5 Door lock cylinder
6 Door lock cylinder rod
7 Outside handle
8 Door opening rod
9 Door lock latch

Door Glass Opening System

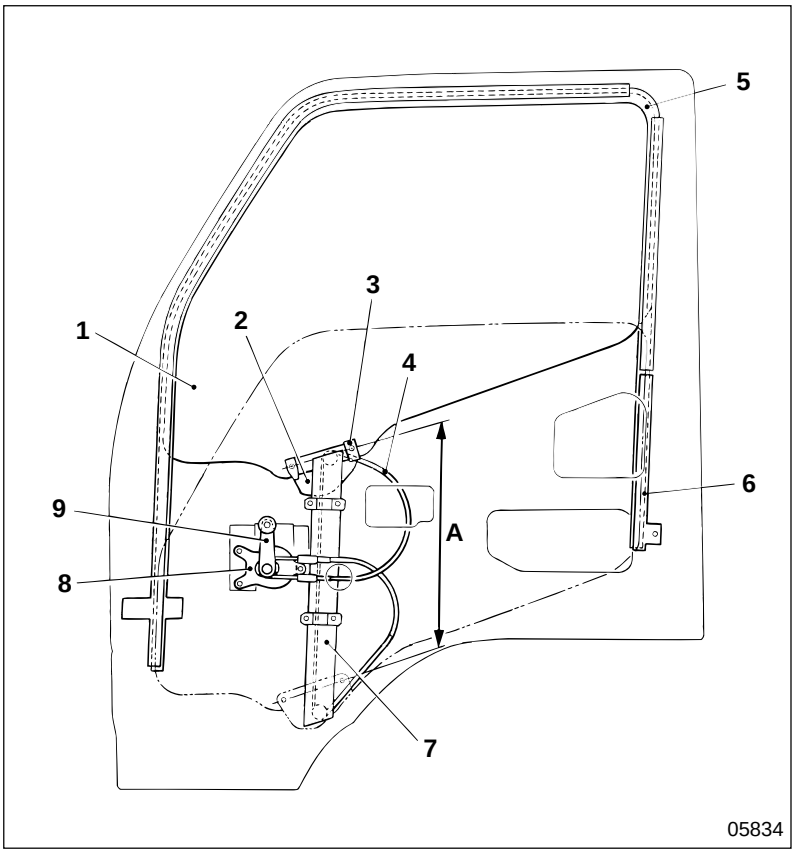

1 Door glass
2 Carrier plate
3 Glass holder
4 Cable
5 Run channel
6 Lower sash
7 Rail
8 Regulator
9 Regulator handle

A : Carrier plate moving range

- Both ends of cable **4** are secured to carrier plate **2**, and regulator **8** is installed in the middle of the cable.
- Regulator **8** winds cable **4**, and moves carrier plate **2** vertically to open and close door glass **1**.
- Carrier plate **2** and door glass **1** are secured by glass holder **3**.
- Regulator handle **9** turns regulator **8**.
- To allow removal and installation of door glass **1**, lower sash **6** is removable.

Wiper and Washer

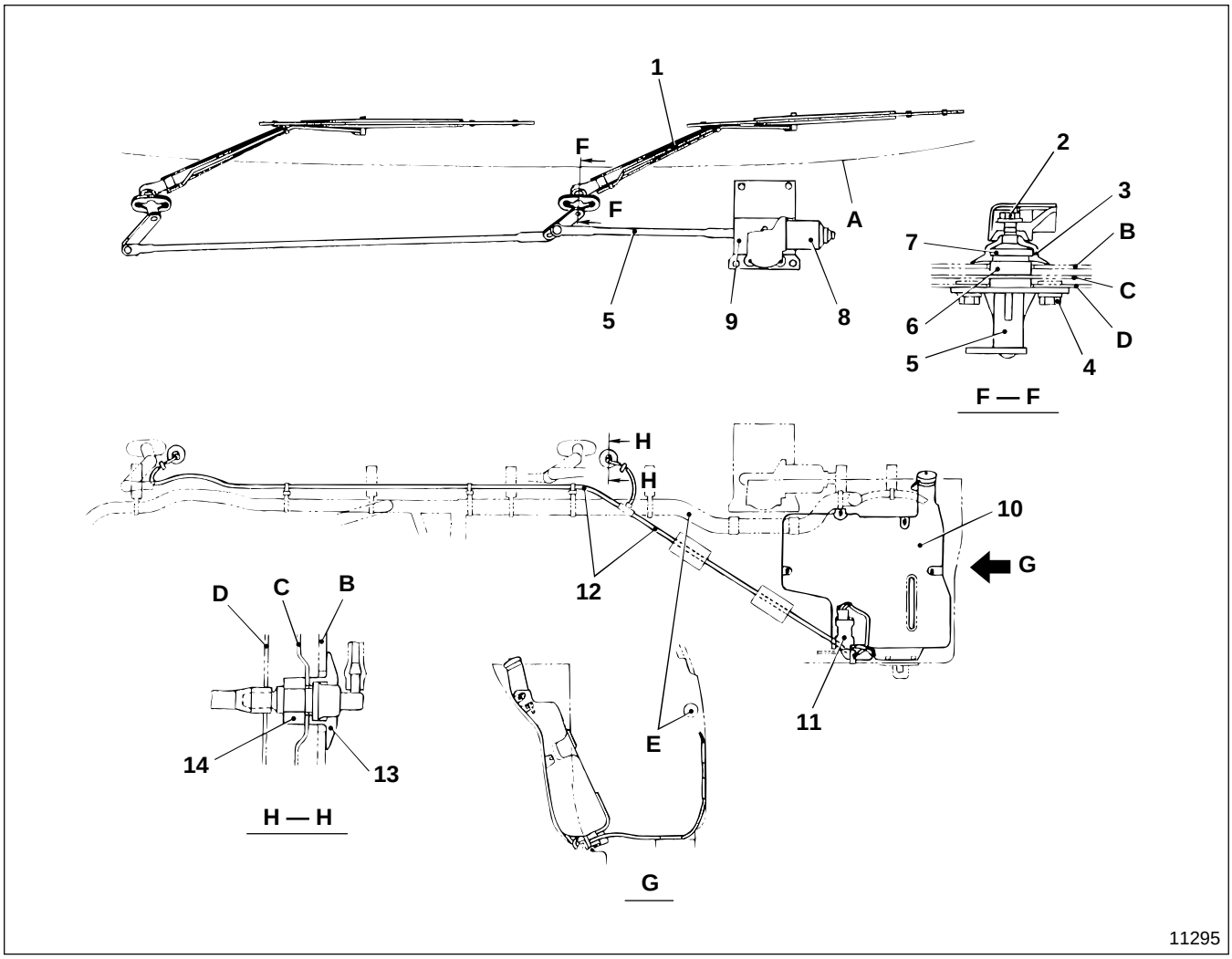

1 Wiper arm and blade assembly
2 Nut
3 Pivot cap
4 Nut
5 Wiper link assembly
6 Packing washer
7 Nut
8 Wiper motor
9 Wiper motor bracket
10 Washer tank
11 Washer motor
12 Washer hose
13 Hose joint
14 Nut

A : Weatherstrip ends
B : Front garnish
C : Front panel
D : Front rail
E : Cab harness

The viewpoint of this illustration is from inside the cab.

Wiper and Washer Electric Circuit

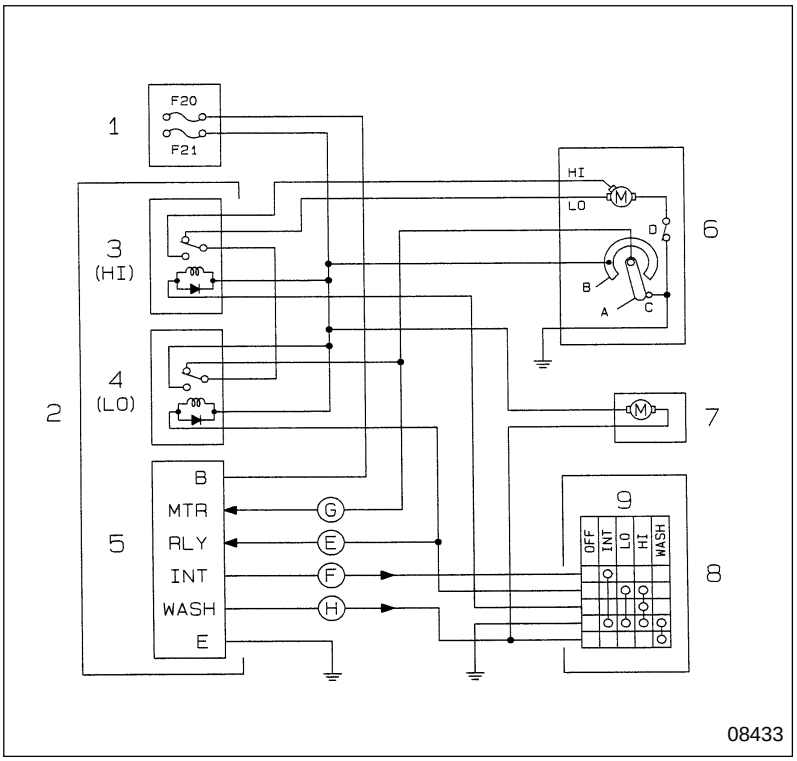

1 Fuse box
2 Relay box
3 Wiper relay (HIGH)
4 Wiper relay (LOW)
5 Multipurpose timing control unit
6 Wiper motor
7 Washer motor
8 Combination switch
9 Wiper and washer switch

Wiper motor **6** section
A : Cam
B : Plate
C : Contact point
D : Circuit breaker

Ⓔ : Wiper motor driving signal (when wiper operating intermittently)
Ⓕ : Intermittent switch signal (when wiper operating intermittently)
Ⓖ : Cam signal (when wiper stops)
Ⓗ : Washer switch signal

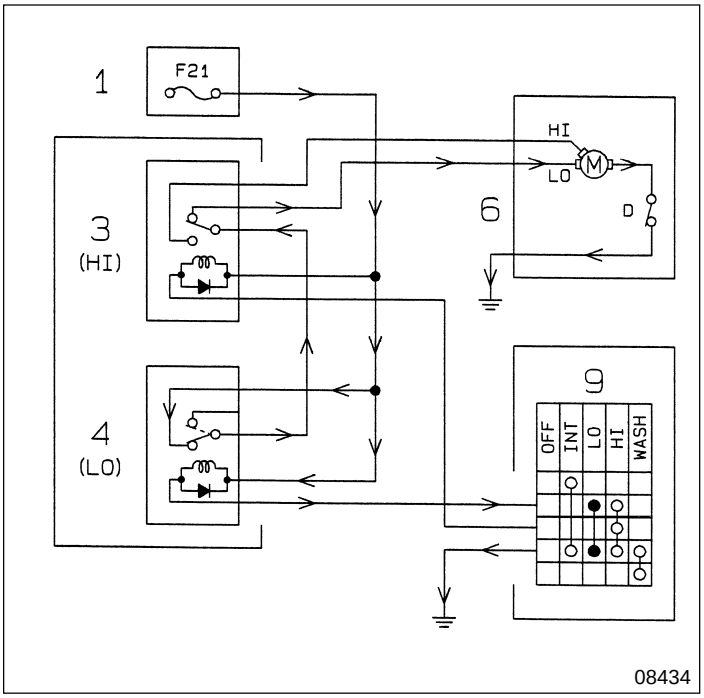

When wiper operating at LOW speed

Position of wiper and washer switch **9** : LO
- **1** (F21) → **4** (coil) → **9** (LO) → Ground
- **1** (F21) → **4** (contact point) → **3** (contact point) → **6** (LO) → **6** (D) → Ground
  Wiper motor **6** rotates at low speed.

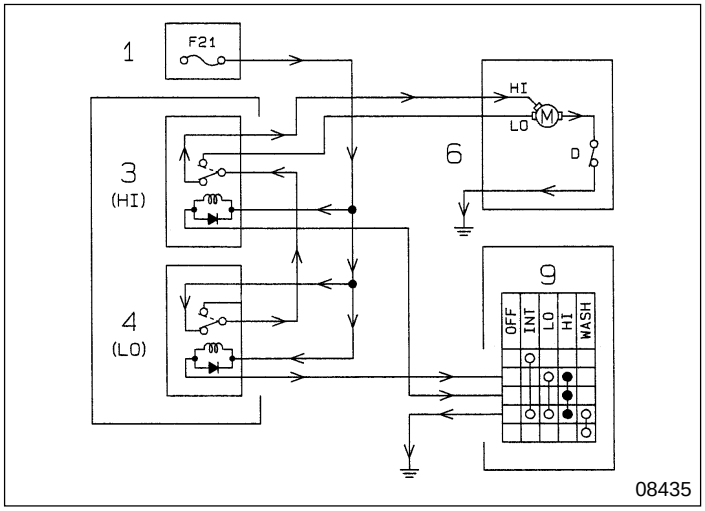

When wiper operating at HIGH speed

Position of wiper and washer switch **9** : HI

- **1** (F21) → **3** (coil) → **9** (HI) → Ground
  → **4** (coil) → Ground
- **1** (F21) → **4** (contact point) → **3** (contact point) → **6** (HI) → **6** (D) → Ground
  Wiper motor **6** rotates at high speed.

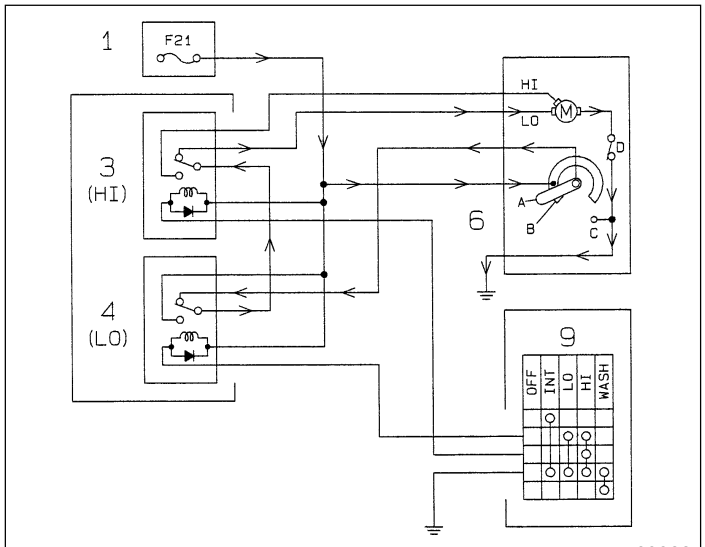

When wiper stops

Position of wiper and washer switch **9** : OFF

- **1** (F21) → **6** (B) → **6** (A) → **4** (contact point) → **3** (contact point) → **6** (LO) → **6** (D) → Ground
  Wiper motor **6** continues to rotate at low speed.

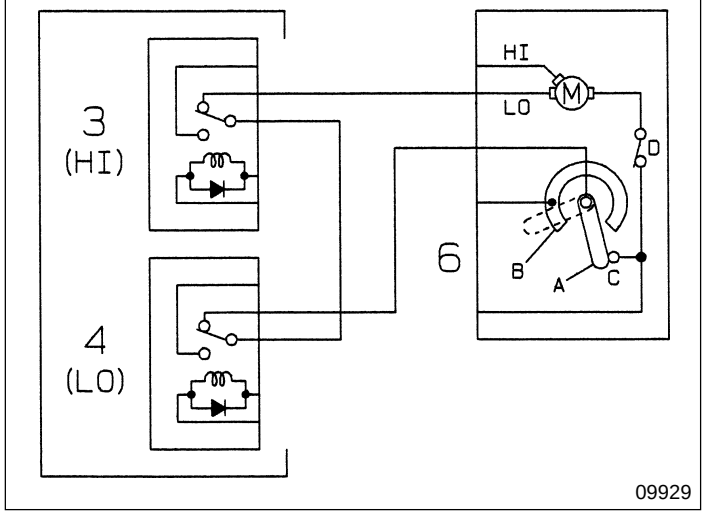

- When cam **A** is separated from plate **B** by rotation of wiper motor **6**, the current to the motor is cut off.
- Wiper motor **6** continues to rotate due to the inertia force of the motor and the wiper link.
- When cam **A** of wiper motor **6** makes contact with contact point **C**, the following ungrounded circuit is formed.
  → **6** (LO) → **6** (D) → **6** (C) → **3** (contact point) ← **4** (contact point) ← **6** (A) ←
- Wiper motor **6** stops by dynamic (electric) braking because of this circuit.

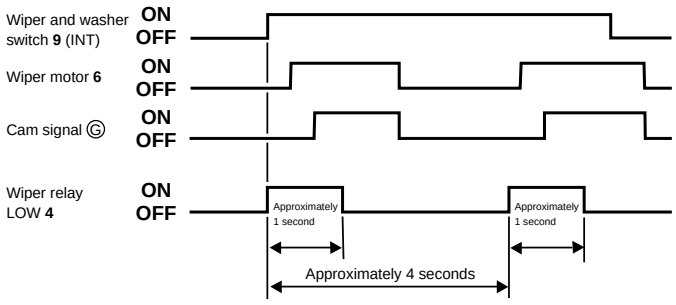

08654

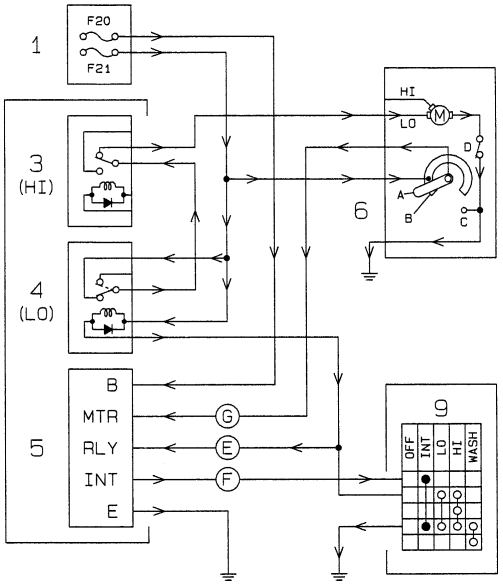

09931

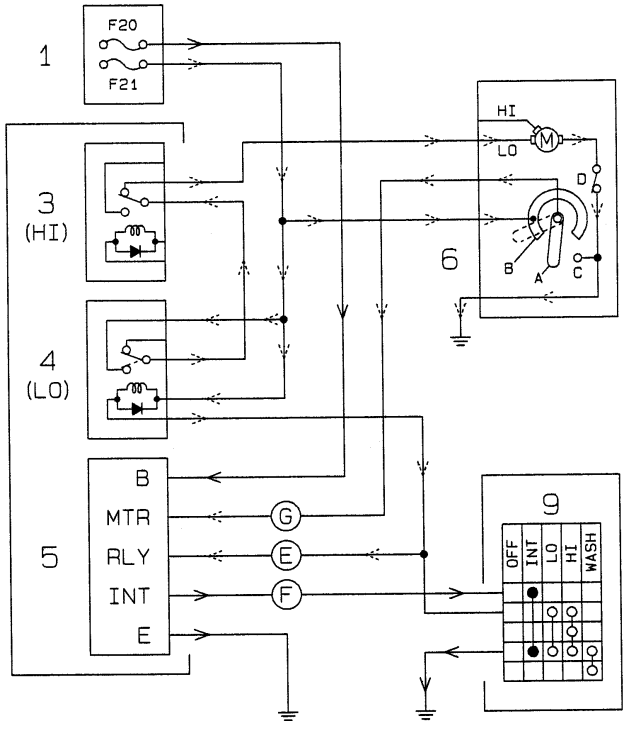

09932

When wiper operating intermittently

Operation mode with multipurpose timing control unit **5**

Position of wiper and washer switch **9** : INT

- **1** (F20) → **5** (B) → Ground
- **5** (INT) —Ⓕ→ **9** (INT) → Ground
- Multipurpose timing control unit **5** sends wiper motor driving signal Ⓔ when it receives intermittent switch signal Ⓕ.
  1 (F21) → **4** (coil) —Ⓔ→ 5 (RLY)
- **1** (F21) → **4** (contact point) → **3** (contact point) → **6** (LO) → **6** (D) → Ground
  Wiper motor **6** rotates at low speed.
- Multipurpose timing control unit **5** sends wiper motor driving signal Ⓔ, then sends cam signal Ⓖ.
  1 (F21) → **6** (B) → **6** (A) –Ⓖ→ **5** (MTR)

- When cam **A** of wiper motor **6** is separated from plate **B**, cam signal Ⓖ turns OFF.
- When cam signal Ⓖ is turned OFF, multipurpose timing control unit **5** turns wiper motor driving signal Ⓔ OFF for specified time.
  The illustrated part ⊣ of the circuit turns OFF.
- Wiper motor **6** stops. 🕮 Gr 42-8
- After specified time has passed, multipurpose timing control unit **5** sends wiper motor driving signal Ⓔ again.
- Wiper motor **6** rotates at low speed.

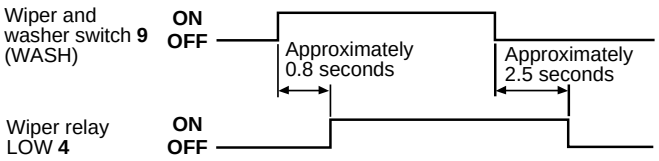

11125

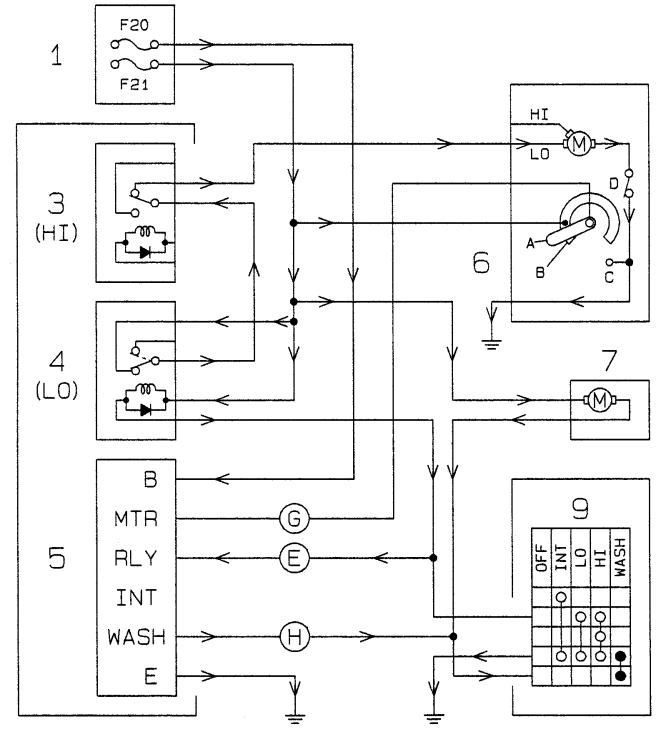

11126

When washer operating

Operation mode with multipurpose timing control unit **5**

Position of wiper and washer switch **9** : WASH

- **1** (F20) → **5** (B) → Ground
- **1** (F21) → **7** → **9** → Ground
  5 (WASH) -Ⓗ

When washer motor **7** operates to spray washer fluid, multipurpose timing control unit **5** transmits washer switch signal Ⓗ.

- 1 (F21) → **4** (coil) —Ⓔ→ **5** (RLY)
  Washer switch signal Ⓗ makes multipurpose timing control unit **5** input wiper motor drive signal Ⓔ.
- 1 (F21) → **4** (contact point) → **3** (contact point) → **6** (LO) → **6** (D) → Ground
  Wiper motor **6** operates at LOW speed.
- When wiper and washer switch **9** is turned to OFF, washer motor **7** stops.
- Then, washer switch signal Ⓗ is turned off and multipurpose timing control unit **5** turns off wiper motor drive signal Ⓔ after specified time.
- Wiper motor **6** automatically stops.
  🕮 P42-8

Emergency Locking Retractor (ELR) Type Seat Belt

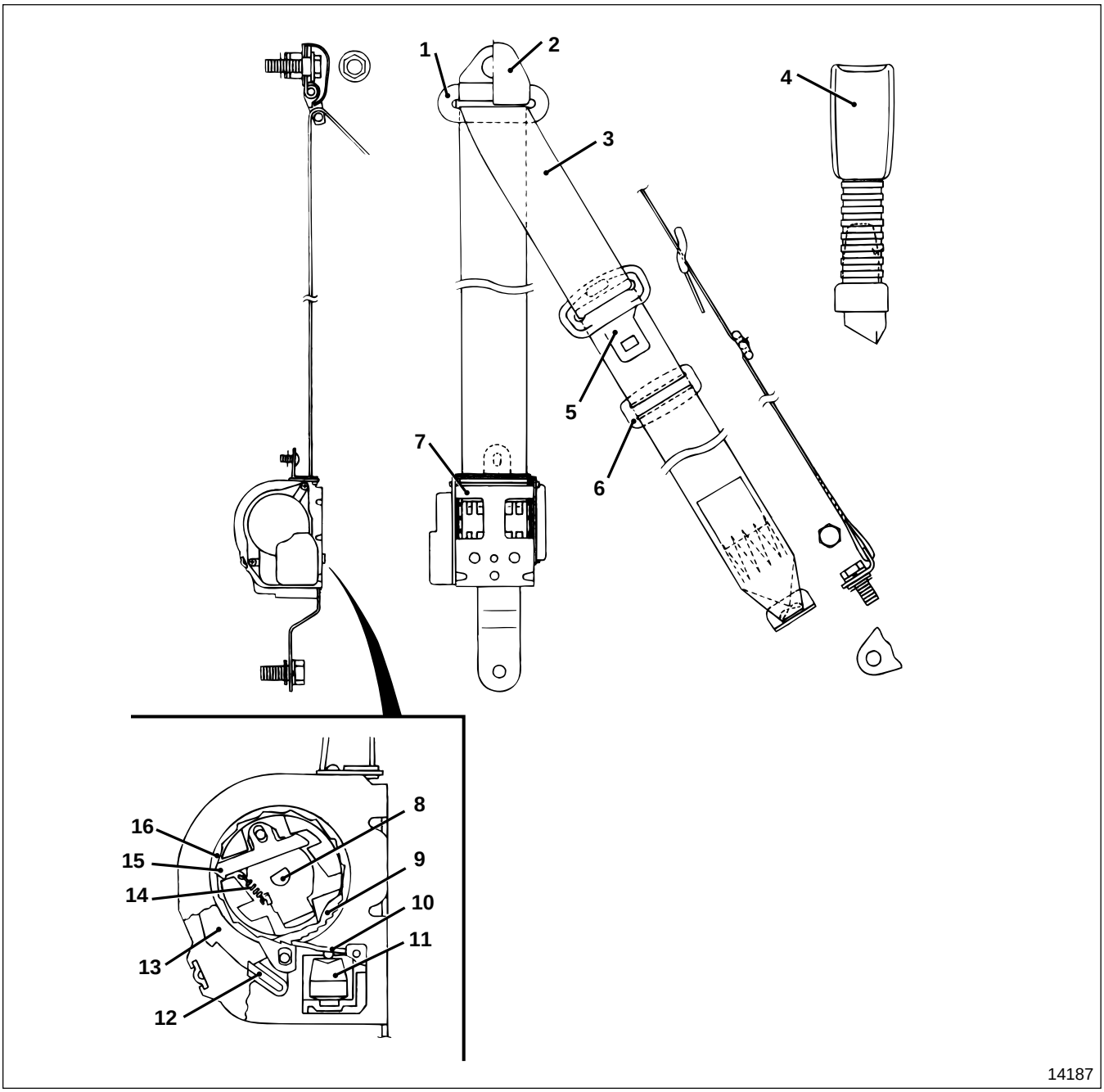

1 Sash guide
2 Cover
3 Webbing
4 Buckle assembly
5 Tongue plate
6 Tongue stopper
7 Emergency locking retractor assembly
8 Spindle
9 Locking gear
10 Mechanism lever
11 Mechanism weight
12 Pawl
13 Ratchet gear
14 Sensor spring
15 Lock arm
16 Clutch

CAUTION⚠

Do not disassemble emergency locking retractor assembly 7, or malfunctions might occur.

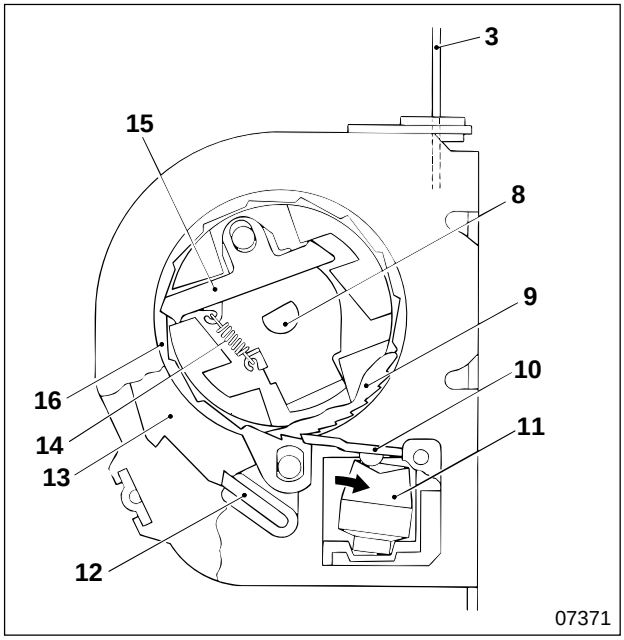

Webbing detecting lock

- When the vehicle is subjected to a sudden impact, such as a crash, webbing **3** retracts according to the movement of passengers, and spindle **8** rotates.
- As the rotation of spindle **8** is higher than the specified value, the repercussive force of sensor spring **14** can no longer retain lock arm **15**. Then, the arm is pulled out from the specified position and is locked by clutch **16**.
- If spindle **8** further rotates, clutch **16** lifts pawl **12** to lock with ratchet gear **13**, making spindle rotation impossible.

Body detecting lock

- When the body is tilted excessively, mechanism weight **11** is tilted, engaging mechanism lever **10** with locking gear **9**, locking it.
- If spindle **8** further rotates, clutch **16** operates as described above, and the spindle cannot rotate.

Cab as a Whole

Possible causes / Symptoms		Cab shimmy (pitching and rolling vibration)	Cab or steering wheel high-frequency vibration (above 20 Hz) or noise	Cab cannot be tilted up	Cab cannot be locked to rear mounting post	Cab tilt warning lamp does not light	Cab tilt warning lamp does not go out	Remarks
Cab-related	Cab mounting loose or play	○						
	Front rubber, rear rubber deteriorated		○					
	Cab mounted incorrectly		○					
	Link assembly from anchor hook does not release			○				
	L-lever release faulty			○				
	Torsion bar damaged or fatigued			○				
	Torsion bar arm installation position incorrect			○				
	Link assembly not hooked to anchor hook				○			
	Link assembly contact with side cushion incorrect				○			
	Cab tilt lock switch adjusted incorrectly					○	○	
	Cab tilt lock switch faulty					○	○	
	Cab tilt warning lamp bulb burnt-out					○		
	Fuse, high-current fuse blown					○		
	Wiring broken or connection faulty					○		
Engine-related	Crossed axes angle of propeller shaft excessive due to increased tilt caused by deteriorated engine mounting		○					
	Engine installation faulty		○					Gr 10
	Intake and exhaust system installation faulty		○					
Transmission-related	Transmission installation faulty		○					Gr 22, 23
Propeller shaft-related	Propeller shaft run-out excessive		○					
	Universal joint worn excessively		○					
	Slip yoke joint spline play		○					
	Center bearing play excessive		○					Gr 25
	Crossed axes angle of mounting dimension excessive due to deteriorated center bearing cushion rubber, etc.			○				
	Crossed axes angle of propeller shaft excessive due to increased tilt of drive axis caused by overloading		○					

TROUBLESHOOTING

Possible causes / Symptoms		Cab shimmy (pitching and rolling vibration)	Cab or steering wheel high-frequency vibration (above 20 Hz) or noise	Cab cannot be tilted up	Cab cannot be locked to rear mounting post	Cab tilt warning lamp does not light	Cab tilt warning lamp does not go out	Remarks
Front axle-related	Axle seat resonance	○						Gr 26
Rear axle-related	Reduction gear engaged incorrectly		○					Gr 27
	Differential gear engaged incorrectly		○					
Wheel and tire-related	Wheel and tire run-out excessive	○						Gr 31
	Wheel and tire unbalanced	○						
	Size and kinds of tire unequal	○						
	Wheel mounting surface warped	○						
Front suspension-related	Leaf spring friction between leaves excessive	○						Gr 33
Brake-related	Brake drum unbalanced	○						Gr 35
	Brake drum eccentric	○						
	Rotor of disc brake eccentric	○						

Door Lock

Symptoms / Possible causes	Door does not shut completely	Door does not lock when door look knob is pressed	Door does not lock when key is turned	Door does not open using outside door handle	Door does not open using inside door handle	Inside door handle self-return poor	Door and cab interference	Remarks
Door installation faulty	○						○	
Striker installation faulty	○							
Door latch lock faulty	○	○	○	○	○			
Door latch rod deformed		○			○			
Door latch rod removed		○	○		○			
Door latch rod obstructed						○		
Door lock cylinder deformed			○					
Left side outside door handle faulty				○				
Inside door handle installation faulty					○			
Inside door handle spring fatigued						○		

TROUBLESHOOTING

Wiper and Washer

Symptoms / Possible causes	Wiper doe not work	Wiper does not stop	Wiper intermittent operation does not work	Wiper blade stop position incorrect	Wiper operation inadequate	Noise during wiper operation	Washer motor does not work	Washer fluid jetting insufficient	Washer fluid does not jet	Remarks
Wiper motor faulty	○	○		○		○				
Washer motor faulty							○	○	○	
Wiper and washer switch faulty	○	○	○				○			
Multipurpose timing control unit faulty			○							Gr 54
Wiper relay faulty	○						○			
Fuse, high-current fuse blown	○						○			
Wiring broken or connection faulty	○		○				○		○	
Wiper motor crank arm set position faulty				○						
Wiper link and wiper arm connection faulty						○				
Wiper blade faulty					○	○				
Wiper arm faulty					○					
Washer hose twisted								○		
Washer hose connected incorrectly									○	
Washer nozzle clogged								○	○	
Washer fluid insufficient									○	

Adjustment of Cab Tilt

Tightening torque

Unit : N·m {lbf.ft, kgf·m}

Location	Parts to be tightened	Tightening torque	Remarks
1	Lock nut (Anchor hook mounting)	83 to 98 {61 to 72, 8.5 to 10.0}	—
4	Bolt (Lock handle mounting)	29 to 39 {22 to 29, 3.0 to 4.0}	—

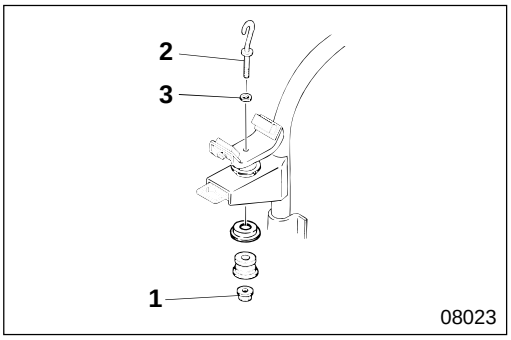

(1) Adjustment of lock handle operating force

Adjust the lock handle operating force by increasing or decreasing the number of spacers **3** as follows:

1 : Lock nut

2 : Anchor hook

	Number of spacers
Heavy operating force	Increased
Light operating force	Decreased

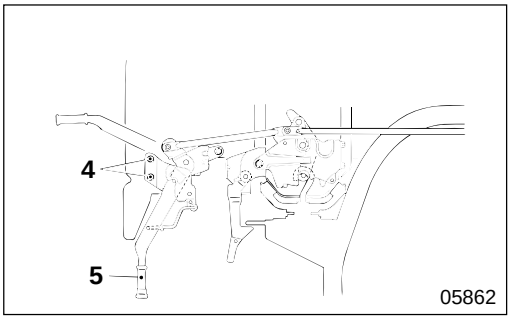

(2) Adjustment for unsmooth latch

If latch operation is not smooth, loosen bolt **4**, and adjust installation of lock handle **5**.

Adjustment of Door Fitting

Ⓣ Tightening torque

Unit : N·m {lbf.ft, kgf·m}

Location	Parts to be tightened	Tightening torque	Remarks
2	Bolt (Upper and lower hinge mounting)	17 to 25 {12 to 19, 1.7 to 2.6}	—
7	Screw (Striker mounting)	8.8 to 14 {6.5 to 10, 0.9 to 1.4}	—

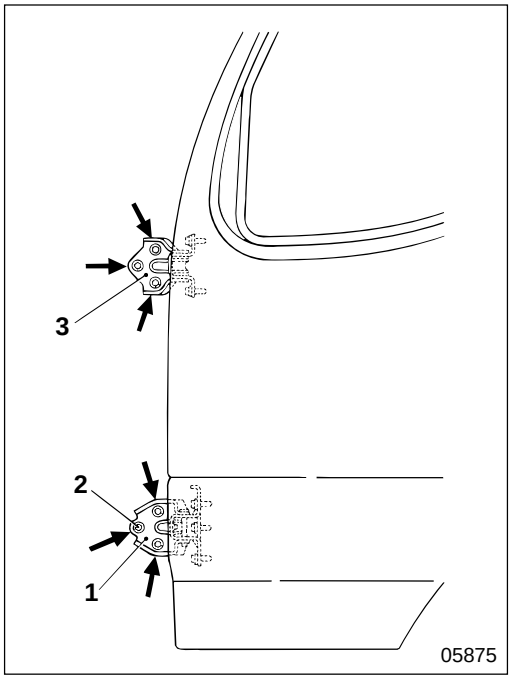

Adjust door fitting at hinge and striker.
(For door fitting dimensions: 🕮 P42-19.)

(1) Adjustment of hinge

For adjustment, use front-side bolt **2** of lower hinge **1** as the reference point.

3 : Upper hinge

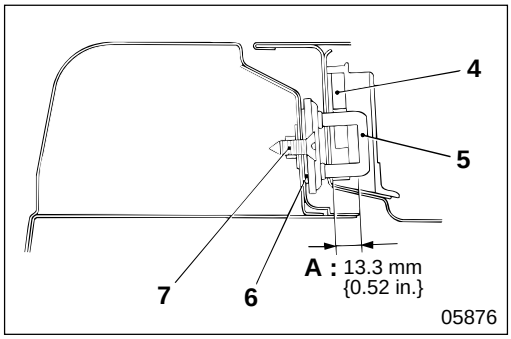

(2) Adjustment of striker

Engagement condition between door lock latch **4** and striker **5** should be adjusted with shim **6** within illustrated range **A**.

7 : Screw

Door Fitting Dimensions

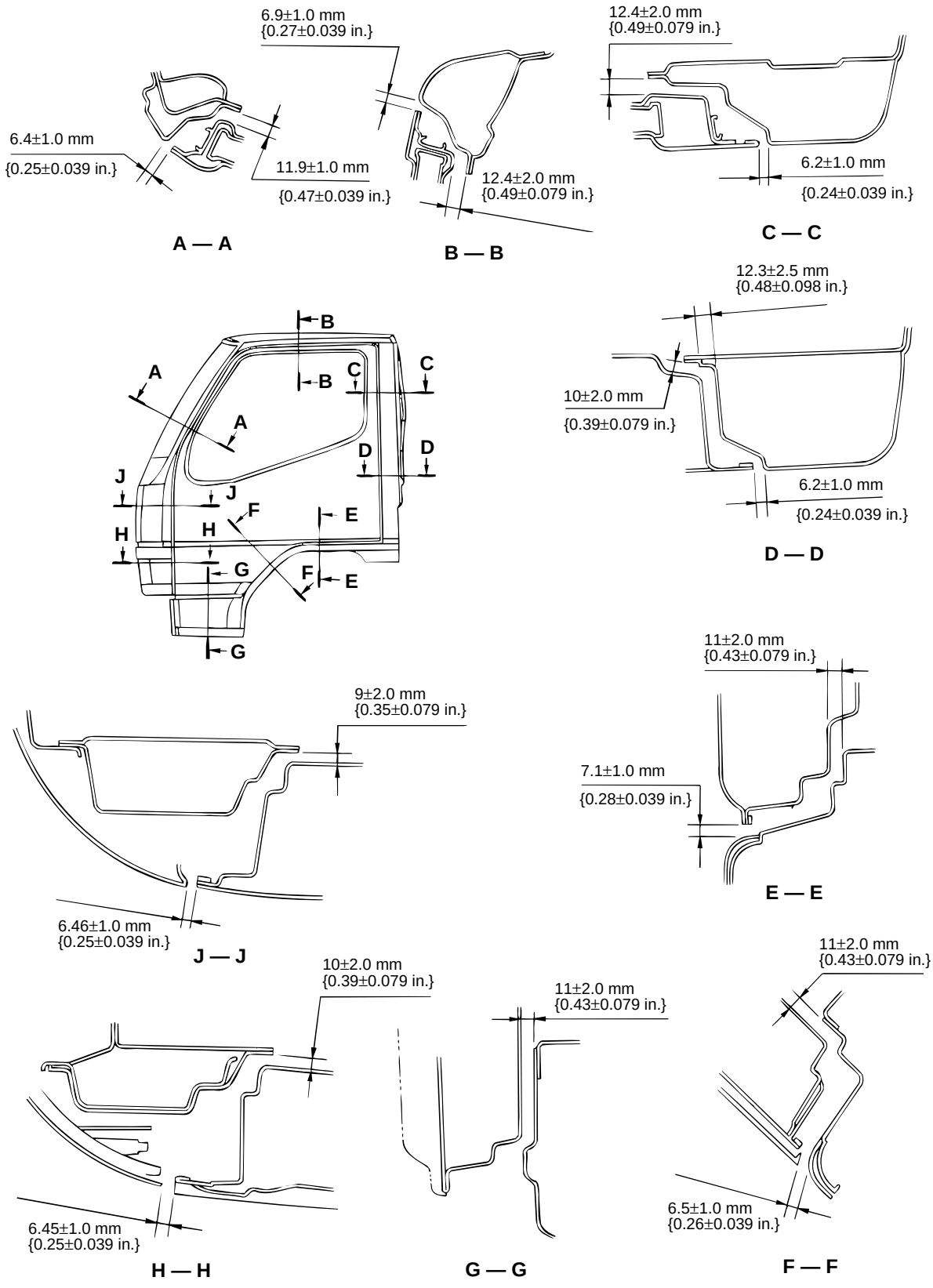

REMOVAL AND INSTALLATION OF CAB

Preliminary Work

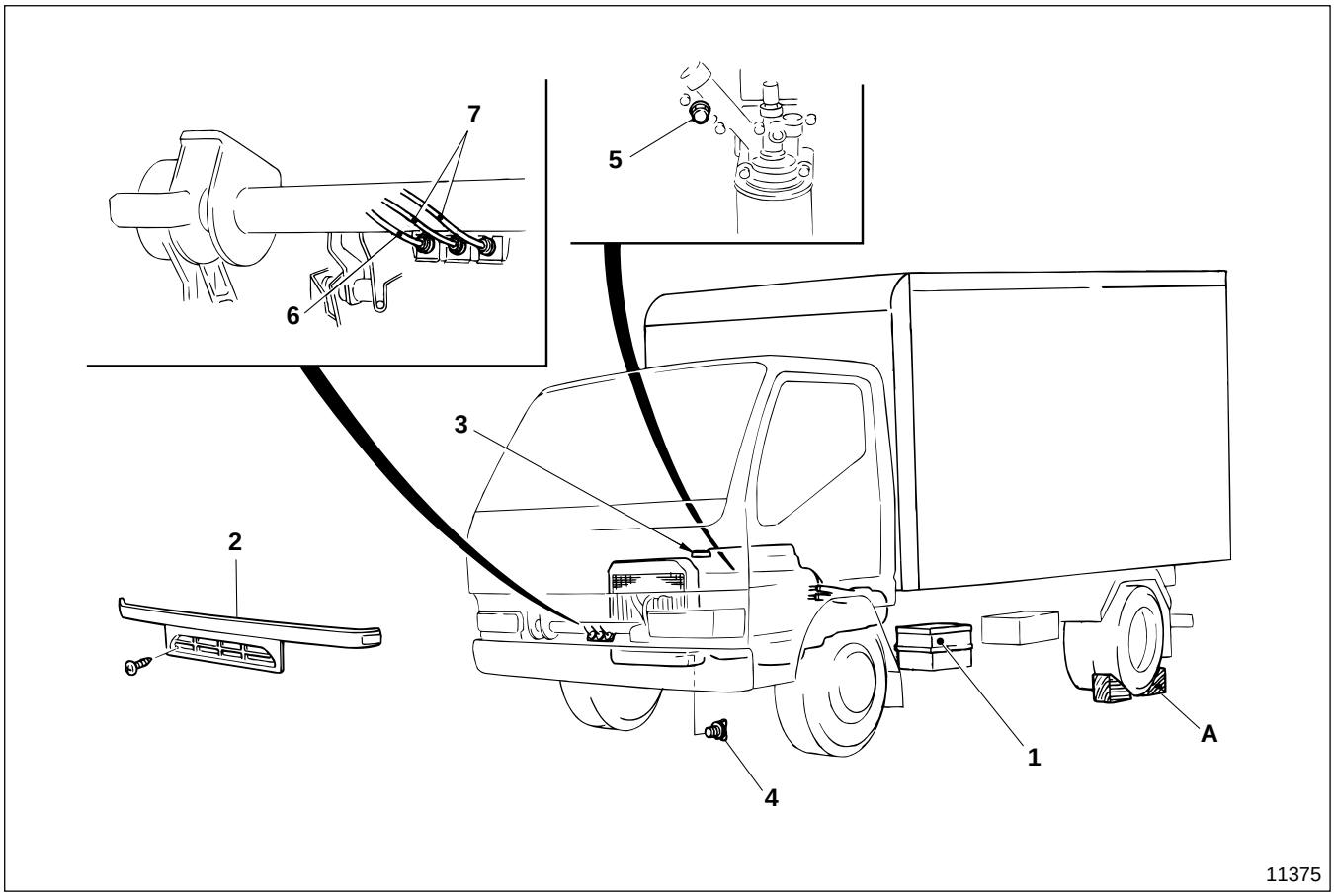

● **Disassembly sequence**

1. Battery (negative terminal) Gr 54
2. Front grille P42-40
3. Pressure cap Gr 14
4. Radiator drain plug Gr 14
5. Crankcase drain plug Gr 14
6. Clutch fluid pipe
   < Manual transmission > Gr 21
7. Brake fluid pipe Gr 35

A : Wheel chock

Work items

- Draining, filling, and air bleeding of clutch fluid and brake fluid Gr 21, Gr 35A
- Draining, filling, and air bleeding of coolant Gr14

WARNING

- **Put chocks A securely in place because the vehicle cannot be maintained at a standstill just by using the parking brake during removal and installation of the cab.**
- **Do not remove chocks A until the entire operation is completed.**

● **Assembly sequence**

Follow the disassembly sequence in reverse.

Work Inside Cab

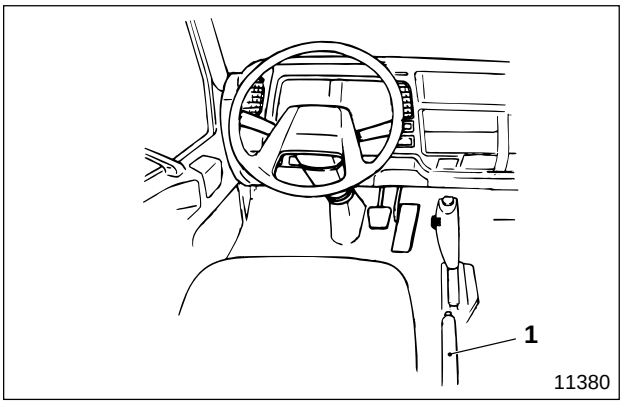

● **Disassembly sequence**

1 Parking brake cable Gr 36

● **Assembly sequence**

Follow the disassembly sequence in reverse.

Work from Front of Cab

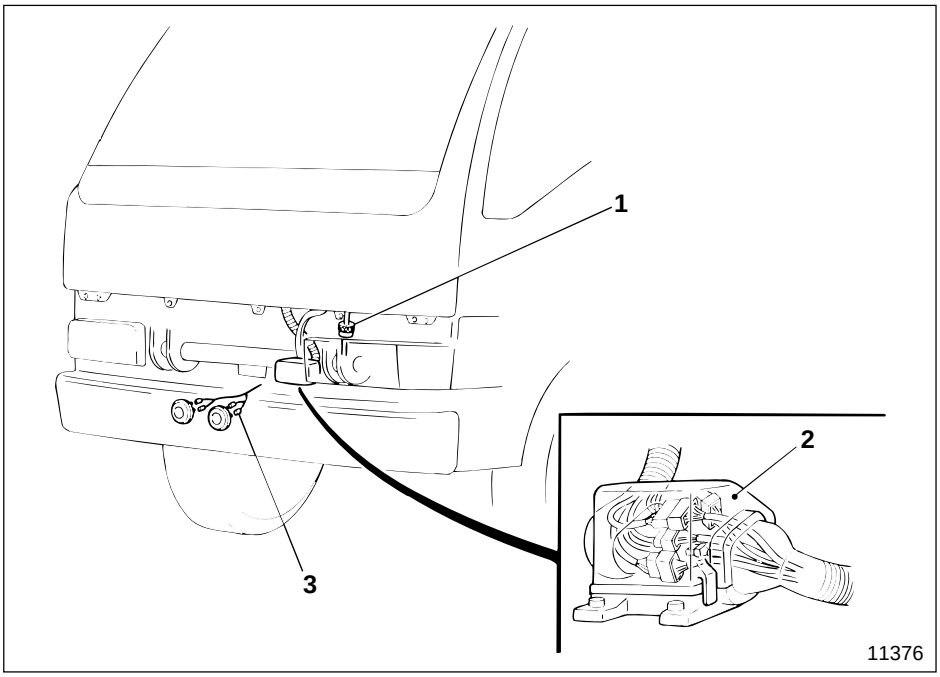

● **Disassembly sequence**

1 Speedometer cable
2 Connection between cab harness and chassis harness
3 Horn harness

● **Assembly sequence**

Follow the disassembly sequence in reverse.

REMOVAL AND INSTALLATION OF CAB

Work with Cab Tilted Up

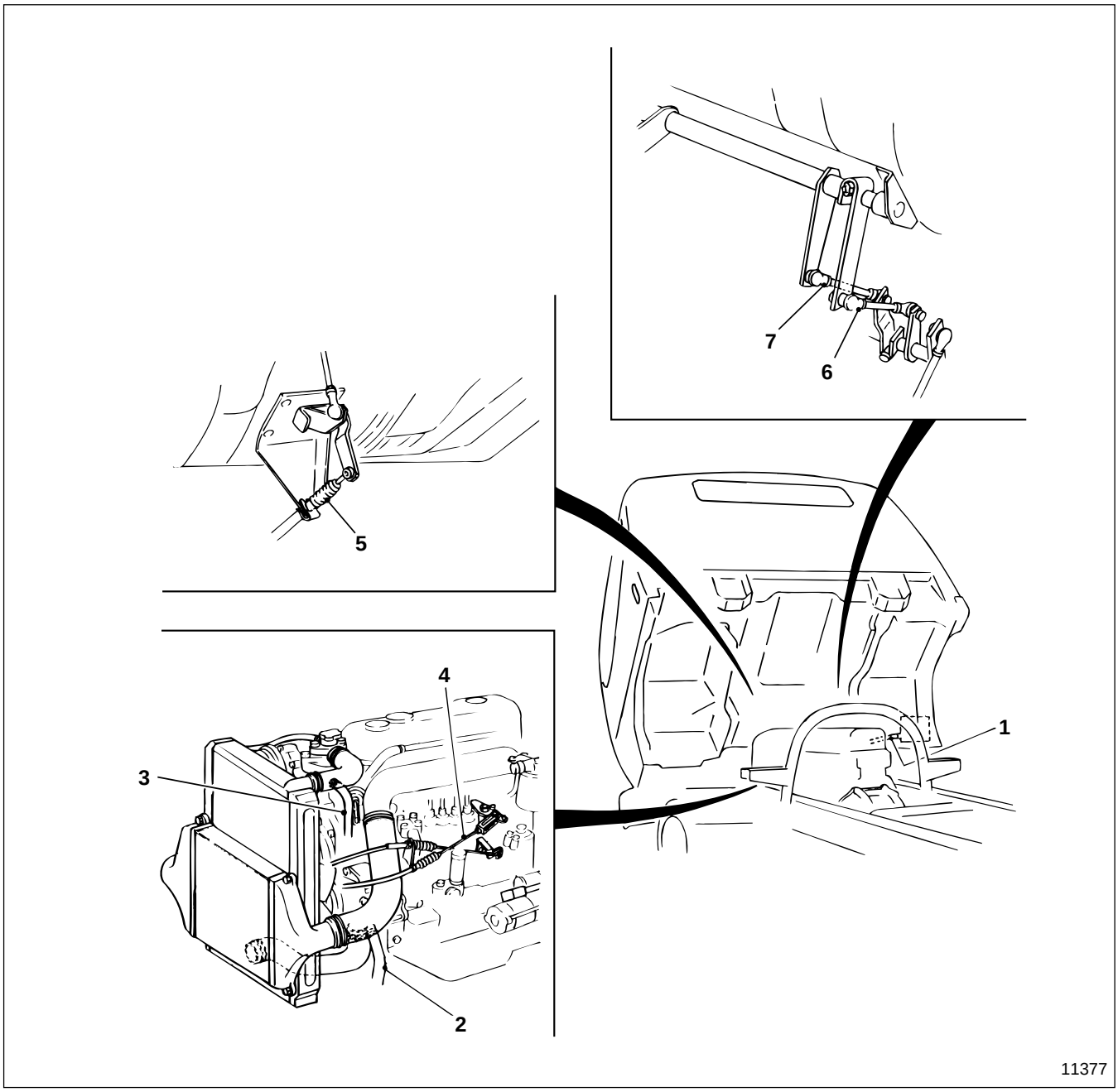

● **Disassembly sequence**

1 Vacuum hose
2 Heater hose (Engine in) Gr 55B
3 Heater hose (Engine out) Gr 55B
4 Accelerator control cable Gr 13
5 Range selector cable < Automatic transmission > Gr 23
6 No.2 shift rod < Manual transmission > Gr 22
7 No.2 selector rod < Manual transmission > Gr 22

● **Assembly sequence**

Follow the disassembly sequence in reverse.

M E M O

REMOVAL AND INSTALLATION OF CAB

Removal and Installation of Tilt Cab Body

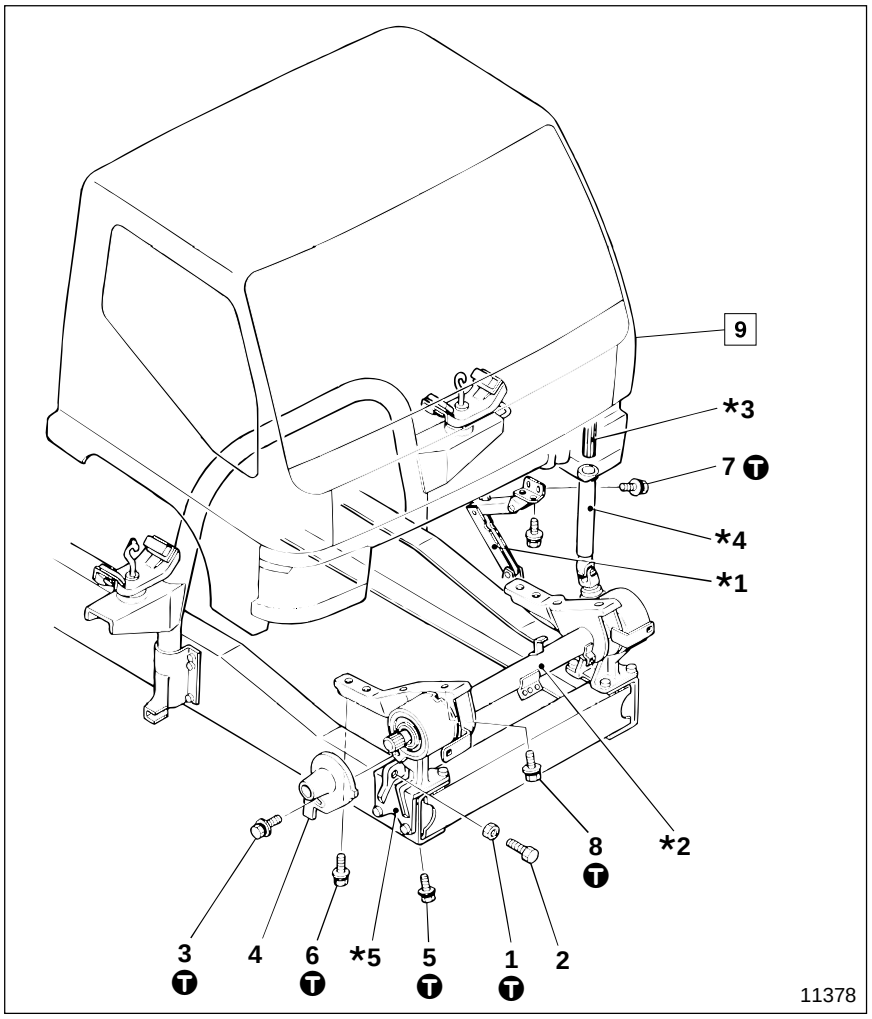

● **Disassembly sequence**

1 Nut
2 Bolt
3 Bolt
4 Anchor lever
5 Bolt
6 Bolt
7 Bolt
8 Bolt
9 Cab assembly

***1** : Cab stay
***2** : Front floor cross member
***3** : Steering yoke
***4** : Steering shaft
***5** : Front cab mounting bracket

● **Assembly sequence**

Follow the disassembly sequence in reverse.

T Tightening torque

Unit : N·m {lbf.ft, kgf·m}

Location	Parts to be tightened	Tightening torque	Remarks
1	Nut (Anchor lever adjusting bolt locking)	59 to 83 {43 to 60, 6 to 8.5}	—
3	Bolt (Anchor lever mounting)	34 to 54 {25 to 40, 3.5 to 5.5}	—
5, 6, 8	Bolt (Front floor cross member mounting)	70 to 95 {51 to 70, 7.1 to 9.7}	—
7	Bolt (Cab stay mounting)	19 to 27 {14 to 21, 1.9 to 2.8}	—

◆ Service procedure

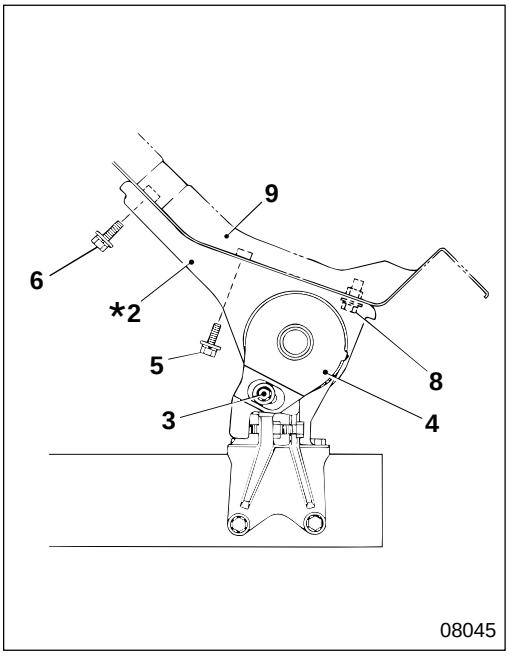

9 **Cab assembly**

[Removal]

- Tilt cab assembly **9** and lock cab stay ***1** securely.
- Remove bolt **3**, and remove anchor lever **4**.
- Of the three bolts that retain front floor cross member ***2**, remove bolts **5**, **6** at rear side, leaving bolt **8** at front side.

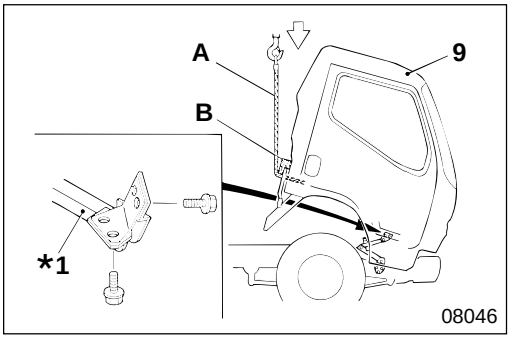

- To separate cab stay ***1** from cab assembly **9**, support the cab securely using crane **A** that is capable of lifting the cab.
  B : Use a wood block for protecting the rear of the cab
- Using crane **A**, lower cab assembly **9** until cab stay ***1** can be removed, then remove it.

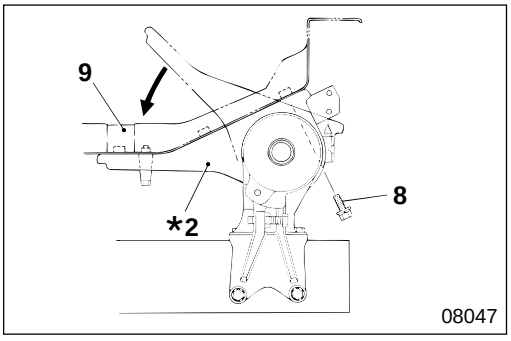

- Fully lower cab assembly **9** to remove remaining bolt **8** that retains front floor cross member ***2**.

REMOVAL AND INSTALLATION OF CAB

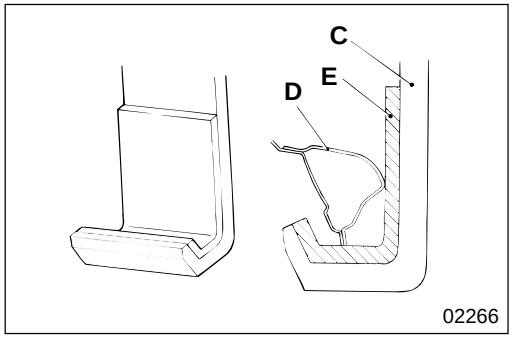

- Set up hoist attachment **C** for the cab as illustrated.

CAUTION

- **Make sure when you set up hoist attachment C that it is capable of lifting cab assembly 9 which weighs approximately 390 kg {860 lb}.**
- **Make sure you install rubber E on hoist attachment C to prevent cab roof D being deformed when the cab is lifted.**

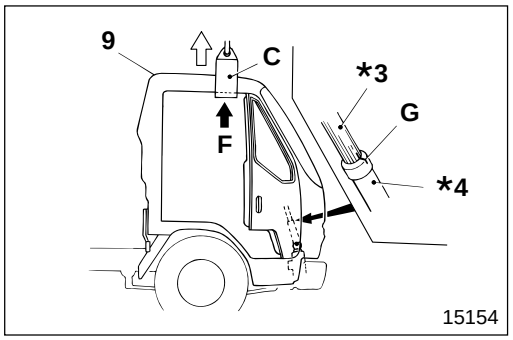

- Mount hoist attachment **C** at center-of-gravity point **F** of cab assembly **9**. Verify the position at which the cab can be lifted horizontally when the cab is lifted slightly.
- Slowly lift cab assembly **9** straight up, and finish lifting when steering yoke ***3** is pulled out from steering shaft ***4**. Make alignment mark **G** before the steering yoke is pulled out from the steering shaft.

WARNING

Never get under cab assembly 9 when it is being lifted.

CAUTION

Make sure, when lifting cab assembly 9, that the wiring harness, cable, hoses, etc. are completely disconnected when the cab is lifted slightly.

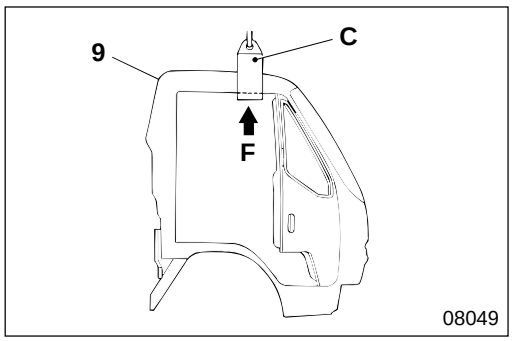

[Installation]

- Mount hoist attachment **C** at center-of-gravity point **F** of cab assembly **9**.

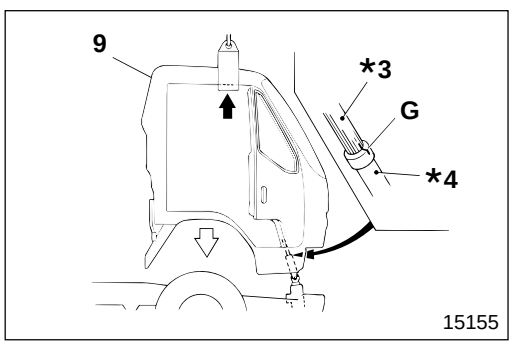

- Slowly lower cab assembly **9** horizontally to insert steering yoke ***3** into steering shaft ***4**, aligning alignment mark **G**.

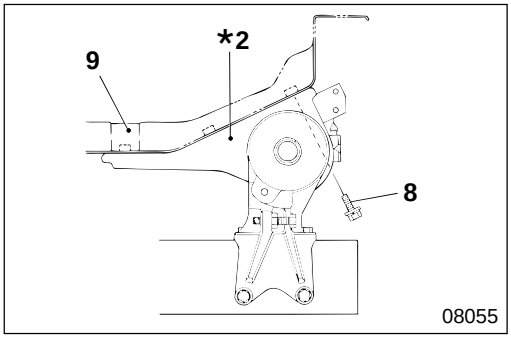

- Slowly lower cab assembly **9** further, and remove hoist attachment **C** after it comes down fully.
- Tighten front bolt **8**, one of the three bolts used for installing front floor cross member ***2**.

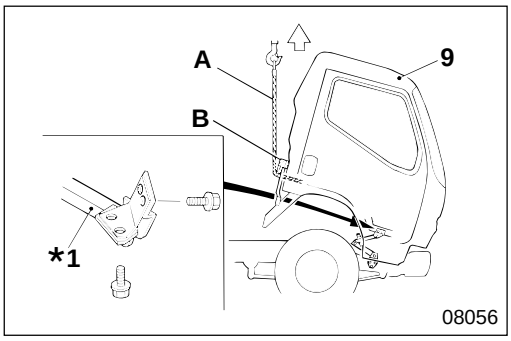

- Securely support cab on crane **A** to tilt cab assembly **9**.
  B : Use a wood block for protecting the rear of the cab
- Using crane **A** tilt cab assembly **9**, and install cab stay ***1**.

WARNING

You must pay close attention to the tilt angle when tilting cab assembly 9 using crane A. It is very dangerous to tilt the cab excessively because it will topple over.

- After installing cab stay ***1**, tilt cab assembly **9** slowly until it is completely tilted, securely lock cab stay, then detach the cab from crane **A**.

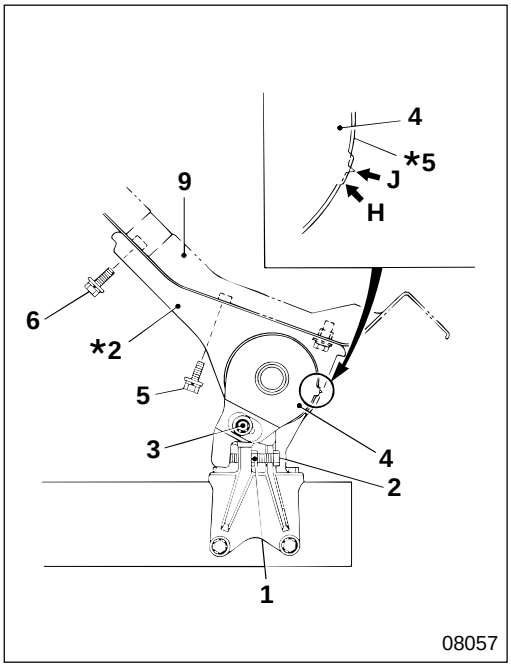

- Tilt cab assembly **9**, and securely lock cab stay ***1**.
- Tighten bolts **5**, **6** to install front floor cross member ***2**.
- Position and install pointer **J** of front cab mounting bracket ***5** in convex area **H** of anchor lever **4** and fix it with bolt **3**.
- Position bolt **2** on anchor lever **4** and lock it with nut **1**.
- After mounting cab assembly **9**, check and adjust the operating force required for the lock handle. P42-17

FRONT CAB MOUNTING

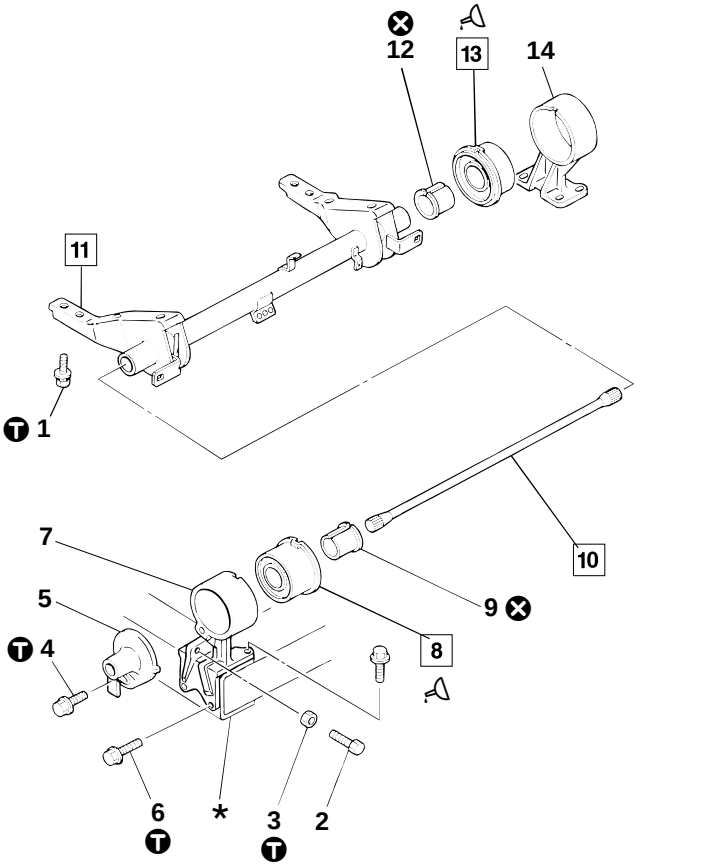

● **Disassembly sequence**

1 Bolt
2 Bolt
3 Nut
4 Bolt
5 Anchor lever
6 Bolt
7 Front cab mounting bracket, RH
8 Front rubber assembly, RH
9 Bushing, RH
10 Torsion bar
11 Front floor cross member assembly
12 Bushing, LH
13 Front rubber assembly, LH
14 Front cab mounting bracket, LH

⊗ : Non-reusable parts
* : Frame

● **Assembly sequence**

Follow the disassembly sequence in reverse.

NOTE

Since the following parts are assembled at the time the cab is mounted, see removal and installation of cab (P42-24) for assembly procedure.
1 : Bolt (Connection of front floor cross member assembly and cab assembly)
2 : Bolt (Adjustment of anchor lever)
3 : Nut
4 : Bolt (Installation of anchor lever)
5 : Anchor lever

Ⓣ Tightening torque

Unit : N·m {lbf.ft, kgf·m}

Location	Parts to be tightened	Tightening torque	Remarks
1	Bolt (Front floor cross member assembly and cab assembly mounting)	70 to 95 {51 to 70, 7.1 to 9.7}	—
3	Nut (Lock of anchor lever adjustment bolt)	59 to 83 {43 to 61, 6 to 8.5}	—
4	Bolt (Anchor lever mounting)	34 to 54 {25 to 40, 3.5 to 5.5}	—
6	Bolt (Front cab mounting bracket mounting)	70 to 85 {51 to 63, 7.1 to 8.7}	—

Lubricant

Location	Points of application	Kinds	Quantity
8, 13	Contact area between front rubber assemblies and front floor cross member assembly	Rubber grease	As required

◆ Service procedure

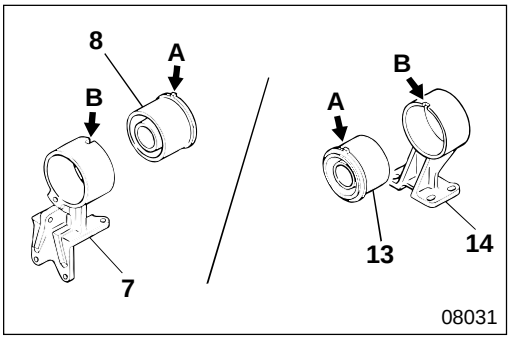

8 **13** **Installation of front rubber assembly**

Install front rubber assembly RH **8** and LH **13** fitting protrusions **A** to the indents **B** of mounting bracket RH **7** and LH **14** respectively.

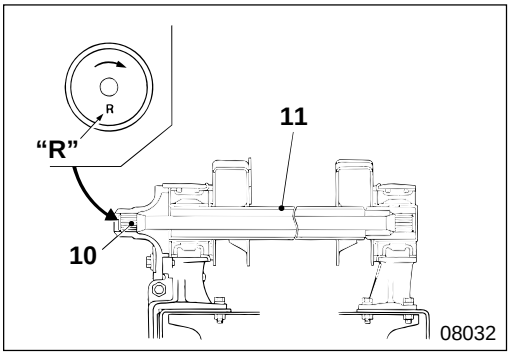

10 **Installation of torsion bar**

Install torsion bar **10** to front floor cross member assembly **11** in the direction as illustrated.

CAUTION⚠

Be sure not to mistake the left side for the right side, when installing torsion bar 10, because the torsion bar will be damaged if its torsion direction is reversed.

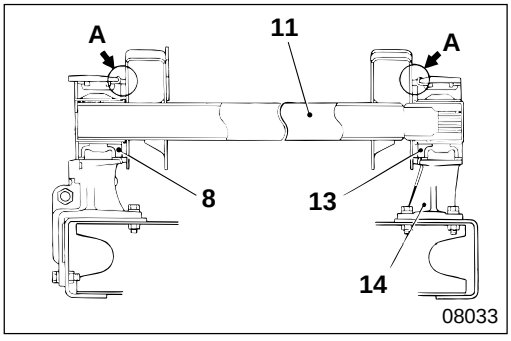

11 **Installation of front floor cross member assembly**

Install front floor cross member assembly **11**, adjusting front cab mounting bracket LH **14** so there is no gap between the front floor cross member assembly and front rubber assembly RH **8** and LH **13** at points **A**.

REAR CAB MOUNTING

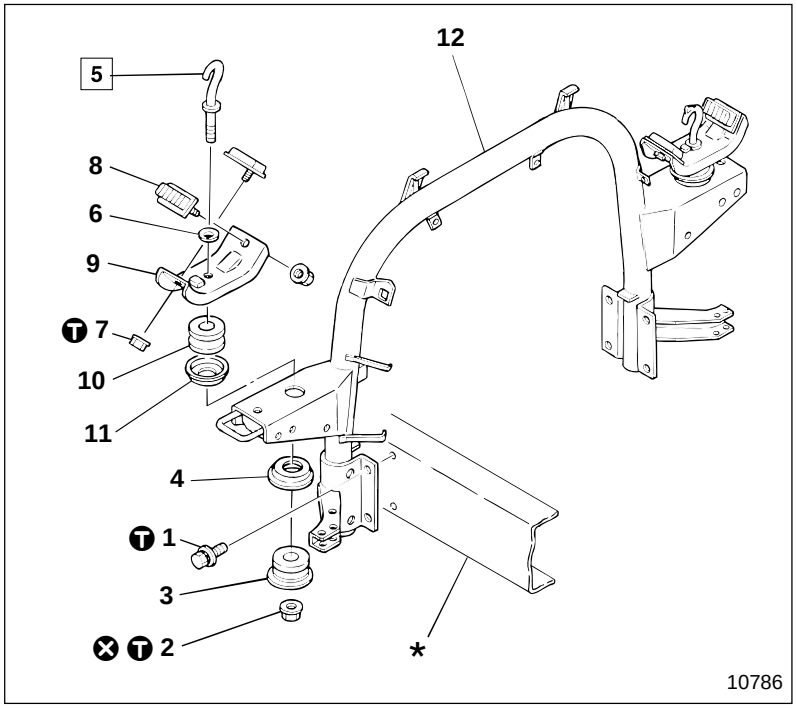

● **Disassembly sequence**

1 Bolt
2 Nut
3 Lower rubber
4 Metal fixture
5 Anchor hook
6 Spacer
7 Nut
8 Side rubber
9 Cab hold bracket
10 Upper rubber
11 Metal fixture
12 Rear mounting post

⊗ : Non-reusable parts
* : Frame

● **Assembly sequence**

Follow the disassembly sequence in reverse.

T Tightening torque

Unit : N·m {lbf.ft, kgf·m}

Location	Parts to be tightened	Tightening torque	Remarks
1	Bolt (Rear mounting post mounting)	78 to 105 {58 to 80, 8 to 11}	—
2	Nut (Anchor hook mounting)	83 to 98 {61 to 72, 8.5 to 10.0}	—
7	Nut (Side rubber mounting)	16 to 20 {12 to 14, 1.6 to 2.0}	—

◆ Service procedure

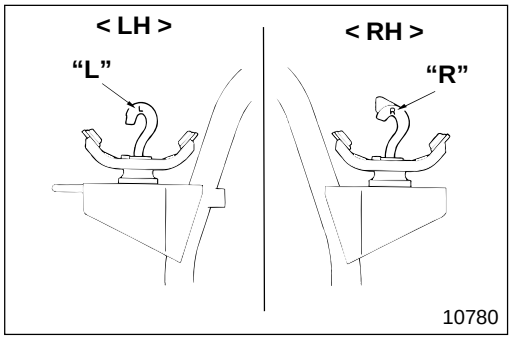

5 **Installation of anchor hook**

L : Left identification mark
R : Right identification mark

M E M O

CAB TILT LINK

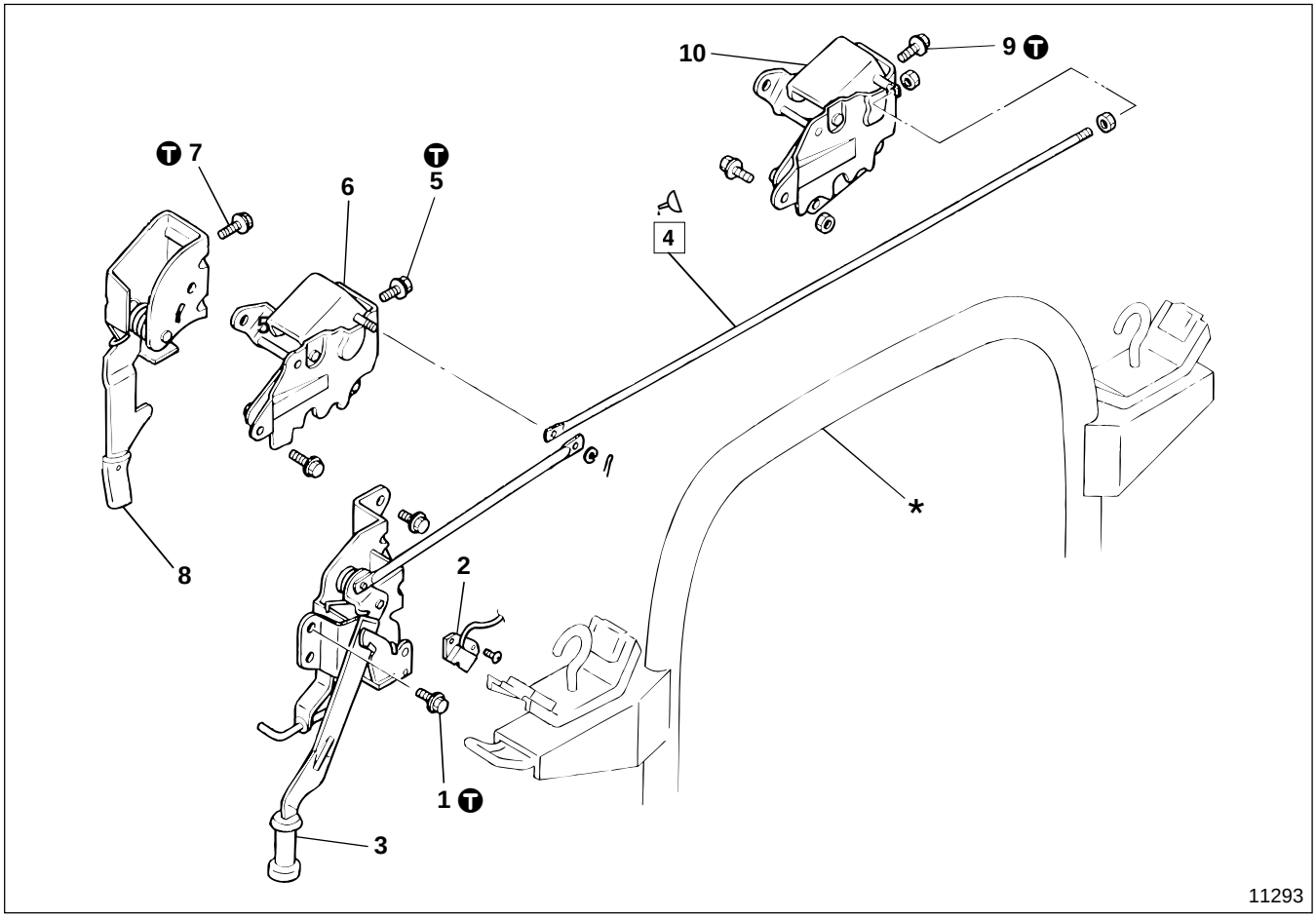

● **Disassembly sequence**

1 Bolt
2 Cab tilt lock switch Gr 54
3 Lock handle assembly
4 Center rod
5 Bolt
6 Link assembly, LH
7 Bolt
8 L-lever assembly
9 Bolt
10 Link assembly, RH

* : Rear mounting post

● **Assembly sequence**

Follow the disassembly sequence in reverse.

Tightening torque

Unit : N·m {lbf.ft, kgf·m}

Location	Parts to be tightened	Tightening torque	Remarks
1	Bolt (Lock handle assembly mounting)	29 to 39 {22 to 29, 3 to 4}	—
5	Bolt (Link assembly, LH mounting)	29 to 39 {22 to 29, 3 to 4}	—
7	Bolt (L-lever assembly mounting)	29 to 39 {22 to 29, 3 to 4}	—
9	Bolt (Link assembly, RH mounting)	29 to 39 {22 to 29, 3 to 4}	—

Lubricant

Location	Points of application	Kinds	Quantity
4	Connecting area between center rod link assembly, LH and lock handle assembly	Wheel bearing grease [NLGI No2 (Li soap)]	As required

◆ Service procedure

● Inspection after assembly

Make sure that operating force for lock handle assembly **3** is correct. If it is too heavy or too light, adjust. P42-17

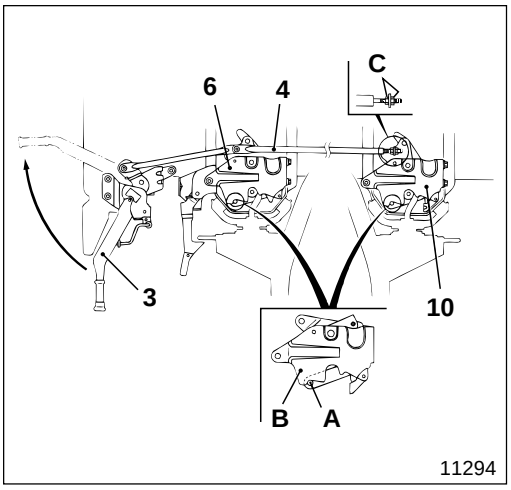

4 **Installation of center rod**

Adjust the length of center rod **4** using lock nut **C** to optimize locking and unlocking of rear cab mounting.

- Raise lock handle assembly **3** all the way, unlocking it.
- Turn and adjust lock nut **C** so that shafts **A** of link assembly LH **6** and RH **10** contact brackets **B**.

CAB TILT LINK

Cab Stay

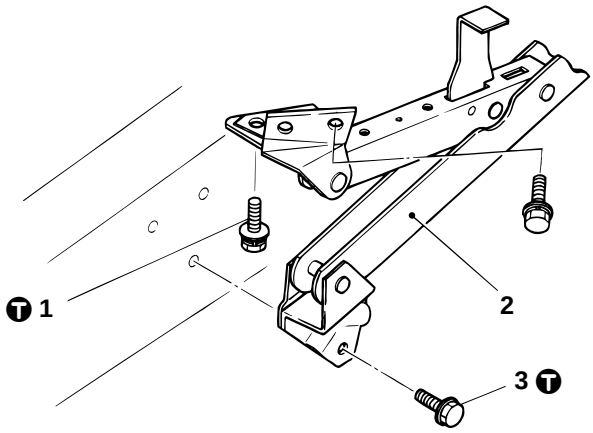

● **Removal sequence**
1 Bolt
2 Cab stay assembly
3 Bolt

WARNING ⚠
You must use a hoist to support the cab when you remove the cab stay assembly.

● **Installation sequence**
Follow the removal sequence in reverse.

Ⓣ Tightening torque

Unit : N·m {lbf.ft, kgf·m}

Location	Parts to be tightened	Tightening torque	Remarks
1	Bolt (Cab stay mounting)	19 to 27 {14 to 20, 1.9 to 2.8}	—
3	Bolt (Cab stay mounting)	59 to 78 {43 to 65, 6 to 8}	—

Door Hinge and Striker

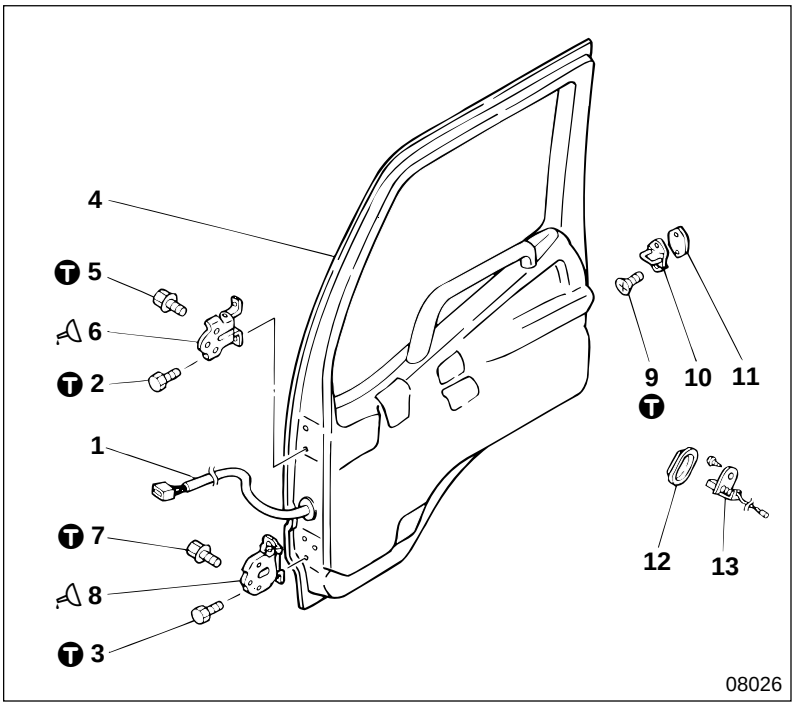

● **Disassembly sequence**

1 Door harness
2 Bolt
3 Bolt
4 Door assembly P42-36
5 Bolt
6 Upper hinge
7 Bolt
8 Lower hinge
9 Screw
10 Striker
11 Shim
12 Grommet
13 Door switch Gr 54

● **Assembly sequence**

Follow the disassembly sequence in reverse.

● **Inspection and adjustment after assembly**

P42-18

NOTE

For adjustment of door fitting: P42-18.

T Tightening torque

Unit : N·m {lbf.ft, kgf·m}

Location	Parts to be tightened	Tightening torque	Remarks
2, 3	Bolt (Door assembly mounting)	17 to 25 {12 to 19, 1.7 to 2.6}	—
5	Bolt (Upper hinge mounting)	17 to 25 {12 to 19, 1.7 to 2.6}	—
7	Bolt (Lower hinge mounting)	17 to 25 {12 to 19, 1.7 to 2.6}	—
9	Screw (Striker mounting)	8.8 to 14 {6.5 to 10, 0.9 to 1.4}	—

Lubricant

Location	Points of application	Kinds	Quantity
6	Upper hinge checker pin roller	Chassis grease [NLGI No.1 (Ca soap)]	As required
8	Lower hinge checker pin roller	Chassis grease [NLGI No.1 (Ca soap)]	As required

DOOR

Door Assembly

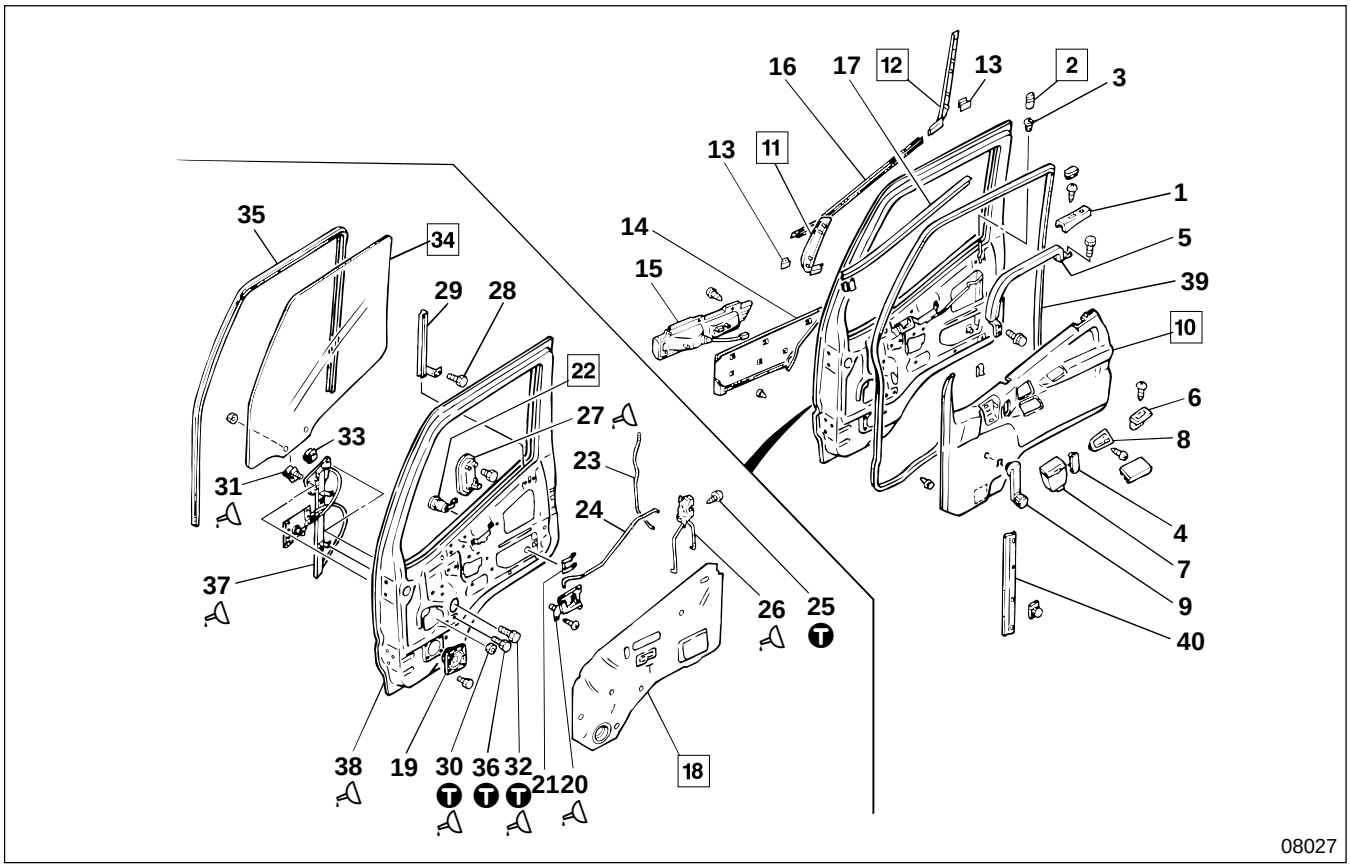

● **Disassembly sequence**

1 Cover
2 Door lock knob
3 Bushing
4 Cover
5 Guard bar
6 Pull handle cover
7 Ashtray
8 Inside handle cover
9 Regulator handle
10 Door trim
11 Front garnish
12 Rear garnish
13 Clip
14 Outer garnish
15 Side combination lamp Gr 54
16 Outer weatherstrip
17 Inner weatherstrip
18 Waterproof cover
19 Speaker
20 Inside handle
21 Clip
22 Door lock cylinder
23 Door lock rod
24 Door opening rod
25 Screw
26 Door lock assembly
27 Outside handle
28 Bolt
29 Lower sash
30 Nut
31 Glass holder
32 Bolt
33 Glass holder
34 Door glass
35 Run channel
36 Bolt
37 Regulator and rail assembly
38 Door panel
39 Weatherstrip
40 Weatherstrip

● **Assembly sequence**

Follow the disassembly sequence in reverse.

NOTE

Service procedure describes details for right side door, the left side door has the same structure.

Tightening torque

Unit : N·m {lbf.ft, kgf·m}

Location	Parts to be tightened	Tightening torque	Remarks
25	Screw (Door lock assembly mounting)	3.9 to 5.9 {2.9 to 4.3, 0.4 to 0.6}	—
30	Nut (Door glass mounting)	6.9 to 11 {5.1 to 8, 0.7 to 1.1}	—
32	Bolt (Door glass mounting)	6.9 to 11 {5.1 to 8, 0.7 to 1.1}	—
36	Bolt (Regulator and rail assembly mounting)	6.9 to 11 {5.1 to 8, 0.7 to 1.1}	—

Lubricant and sealant

Location	Points of application	Kinds	Quantity
20	Turning part of inside handle	Wheel bearing grease [NLGI No.2 (Li soap)]	As required
26	Friction part of door lock assembly	Wheel bearing grease [NLGI No.2 (Li soap)]	As required
27	Friction part of outside handle	Wheel bearing grease [NLGI No.2 (Li soap)]	As required
30	Thread area of nut	LOCTITE DRYLOCK No.203	As required
31, 32	Thread area of bolt	LOCTITE DRYLOCK No.203	As required
37	Friction part of regulator and rail assembly	DYNAMIC GB	As required
38	Door panel waterproof cover mounting surface	BUTYL TAPE	As required

◆ Service procedure

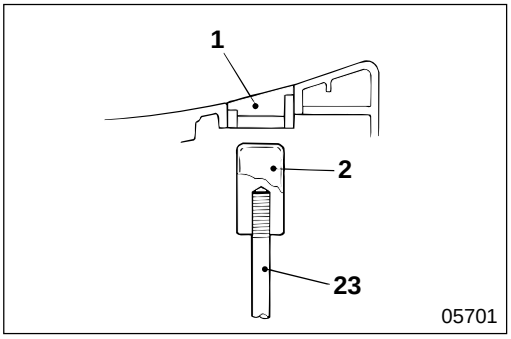

2 **Installation of door lock knob**

- Screw door lock knob **2** onto door lock rod **23** and turn to the right fully.
- Slacken off door lock knob **2** to the left by one or two turns.
- Install cover **1** to prevent door lock knob **2** from turning excessively.

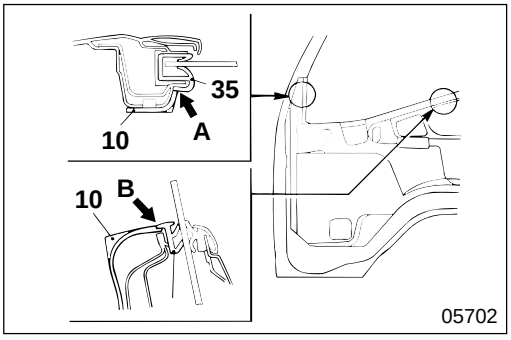

10 **Installation of door trim**

- At front pillar, tap door trim **10** against lip area **A** of run channel **35** .
- In belt line, insert door trim **10** into lip area **B** of inner weatherstrip **17** and install.

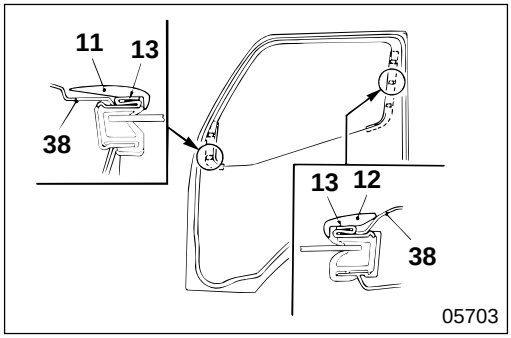

11 **12** **Installation of front garnish and rear garnish**

- Install clips **13** on door panel **38**.
- Install front garnish **11** and rear garnish **12** on clips **13**.

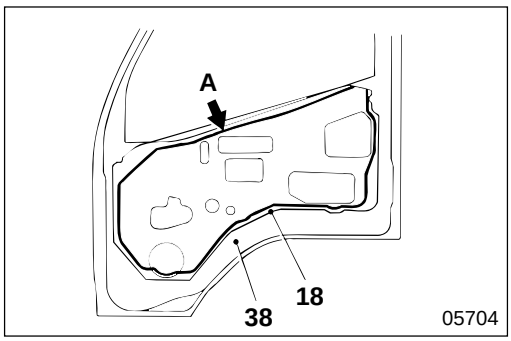

18 **Installation of waterproof cover**

- Apply butyl tape **A** to door panel **38** as illustrated.
- Stick waterproof cover **18** over butyl tape **A**.

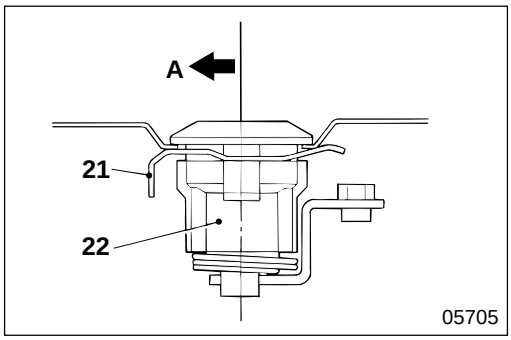

22 **Installation of door lock cylinder**

21 : Clip
A : Front of the vehicle

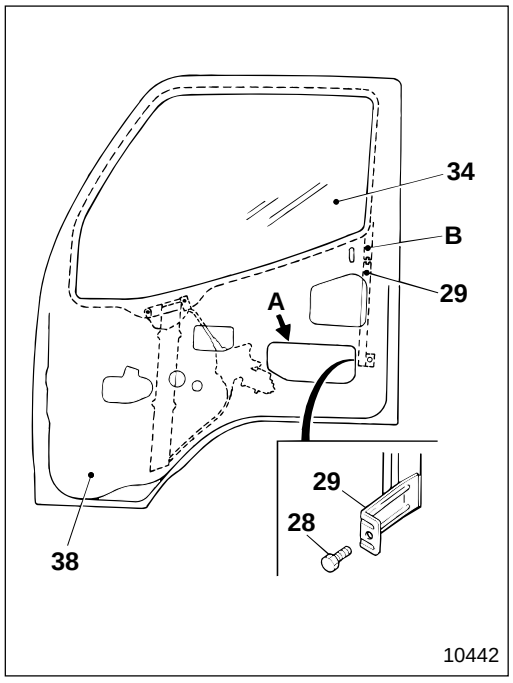

34 **Removal and installation of door glass**

Remove all parts supporting door glass **34** and remove the door glass from the door opening.

- Raise door glass **34** to the upper limit.
- Remove bolt **28** through hole **A** of door panel **38** to remove lower sash **29** which is inserted into upper sash **B**.

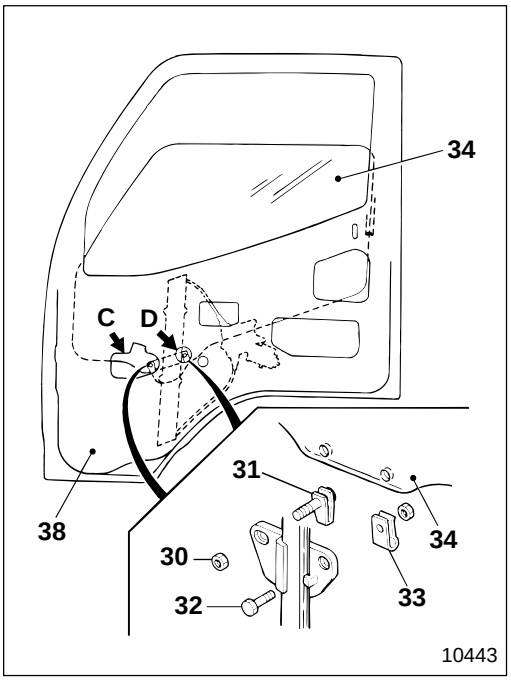

- Lower door glass **34** to the level where nut **30** and bolt **32** can be seen through holes **C** and **D** of door panel **38** respectively.
- Hold door glass **34** with your hands and remove glass holders **31, 33**.
- Remove door glass **34** via the door opening.
- For installation, follow the removal sequence in reverse.

CAB EXTERIOR FITTING

Front Panel

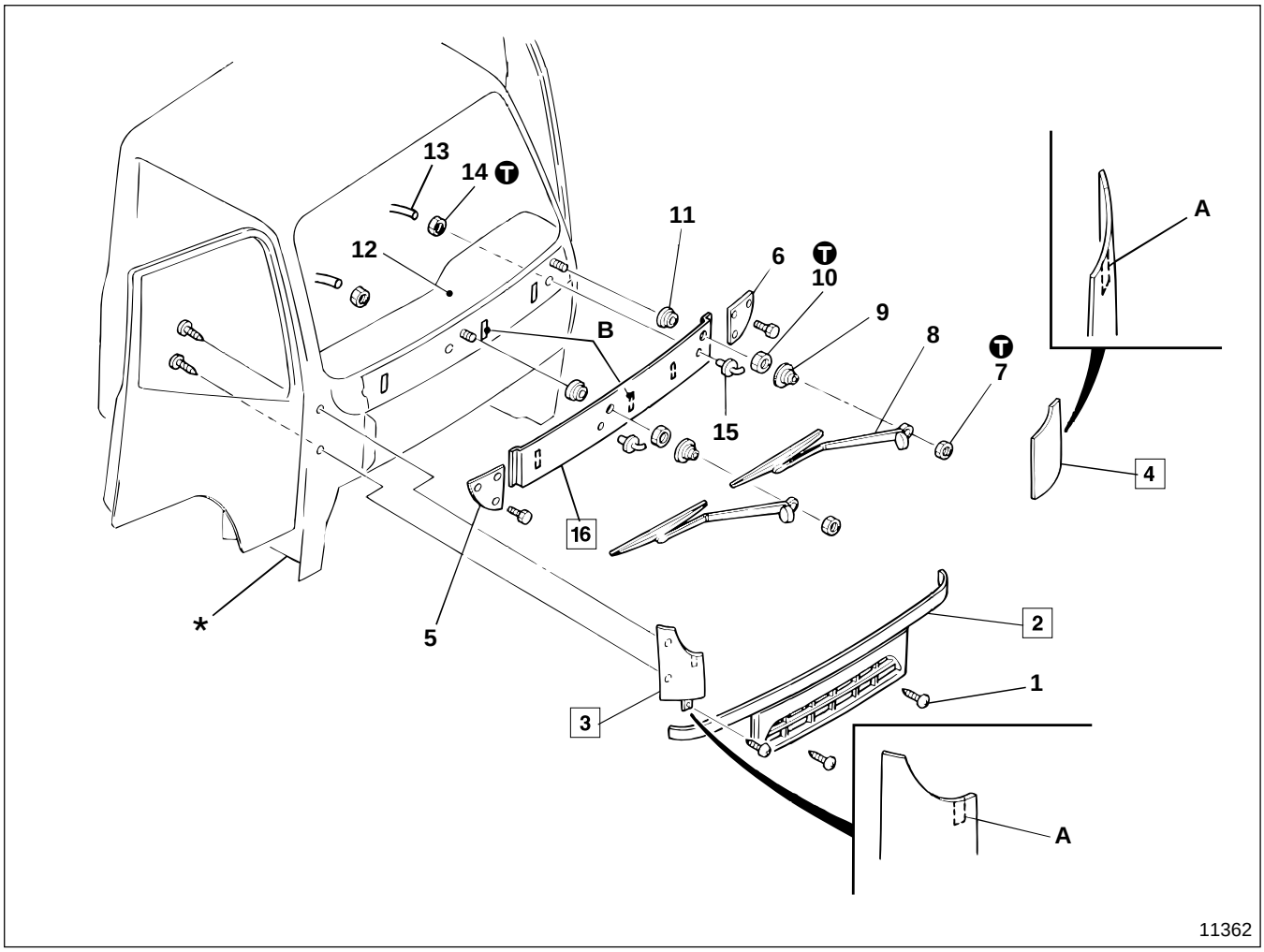

● **Disassembly sequence**

1 Screw
2 Front grille
3 Front side panel, RH
4 Front side panel, LH
5 Side garnish, RH
6 Side garnish, LH
7 Nut
8 Wiper arm and blade assembly 🕮 P42-46
9 Pivot cap
10 Nut
11 Packing washer 🕮 P42-46
12 Instrument panel 🕮 P42-53
13 Washer hose
14 Nut
15 Hose joint
16 Front garnish

***** : Cab assembly
A : Pawl (Front side panel)
B : Magic tape

● **Assembly sequence**

Follow the disassembly sequence in reverse.

Ⓣ Tightening torque

Unit : N·m {lbf.ft, kgf·m}

Location	Parts to be tightened	Tightening torque	Remarks
7	Nut (Wiper arm and blade assembly mounting)	9.8 to 15 {7.2 to 11, 1.0 to 1.5}	—
10	Nut (Packing washer mounting)	14 to 20 {10 to 14, 1.4 to 2.0}	—
14	Nut (Hose joint connecting)	0.59 to 0.88 {0.43 to 0.65, 0.06 to 0.09}	—

◆ Service procedure

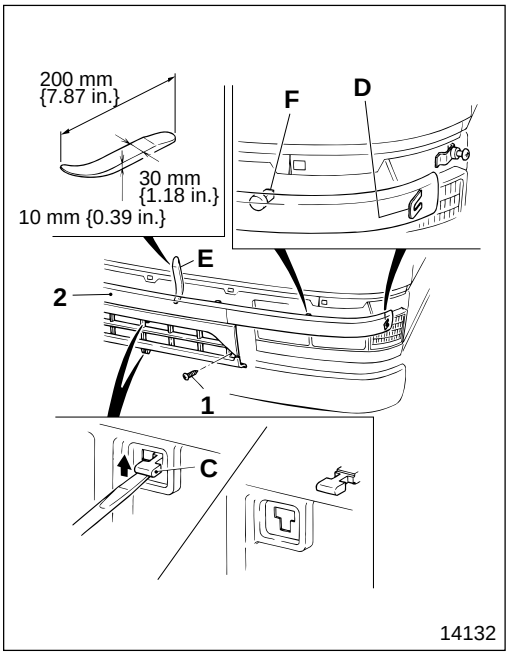

2 **Removal and installation of front grille**

- Remove screws **1** (two points) from front grilles **2**.
- Lift up the ends of clips **C** (two points), located in the center of front grilles **2**, using a screwdriver, and unlock them from the clips.
- Pull out front grilles **2** horizontally, in the vehicle forward running direction, to remove them.

CAUTION

- **Be careful not to apply too much force to front grilles 2, because this would damage them. Be especially careful to avoid applying force to clips D at both sides, support the clips using your hands. If it is hard to remove the front grilles, remove them using nylon jig E as illustrated.**
- **Be careful not to use force when you pull out clips F (five points) from the tops of front grilles 2, because this would damage them.**

- For installation, follow the removal sequence in reverse.

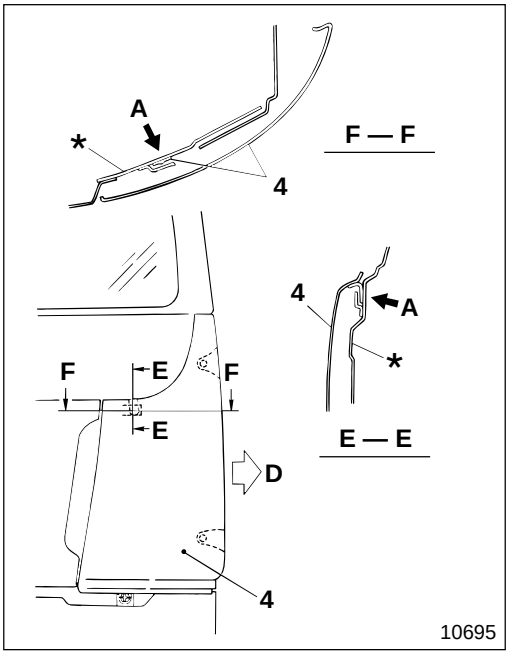

3 **4** **Installation and removal of front side panels RH, LH**

- Move front side panels RH **3**, LH **4** to the outside of the vehicle to remove them from the cab assembly ***.**
  A : Pawl
  (The illustration shows front side panel LH **4**.)
- For installation, follow the removal sequence in reverse.

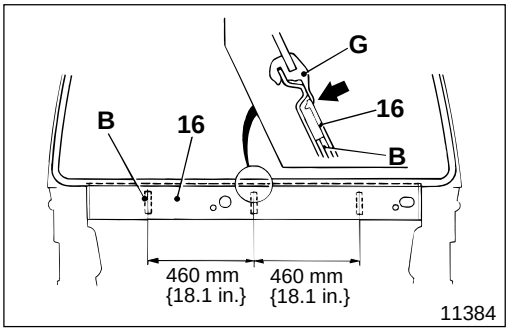

16 **Installation of front garnish**

NOTE

When installing front garnish 16, be careful not to catch weather-strip G of the windshield.

B : Magic tape (3 points)

CAB EXTERIOR FITTING

Step and Fender

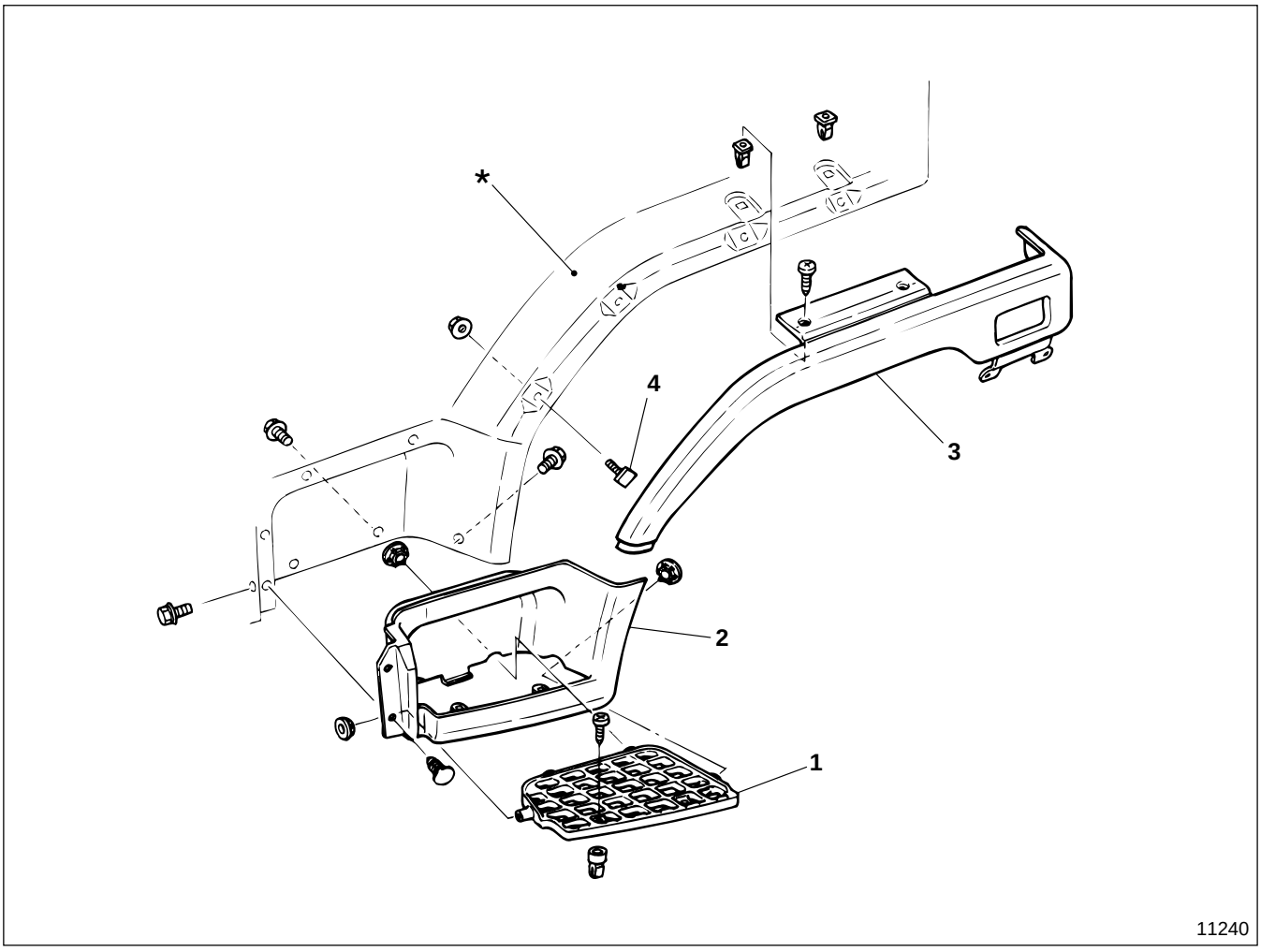

● **Removal sequence**

1 Step
2 Step garnish
3 Fender garnish
4 Set bolt

***** : Cab assembly

● **Installation sequence**

Follow the removal sequence in reverse.

NOTE

This illustration only shows the step and fender for the left side; the same service procedure described above is used for the right side.

M E M O

MIRROR

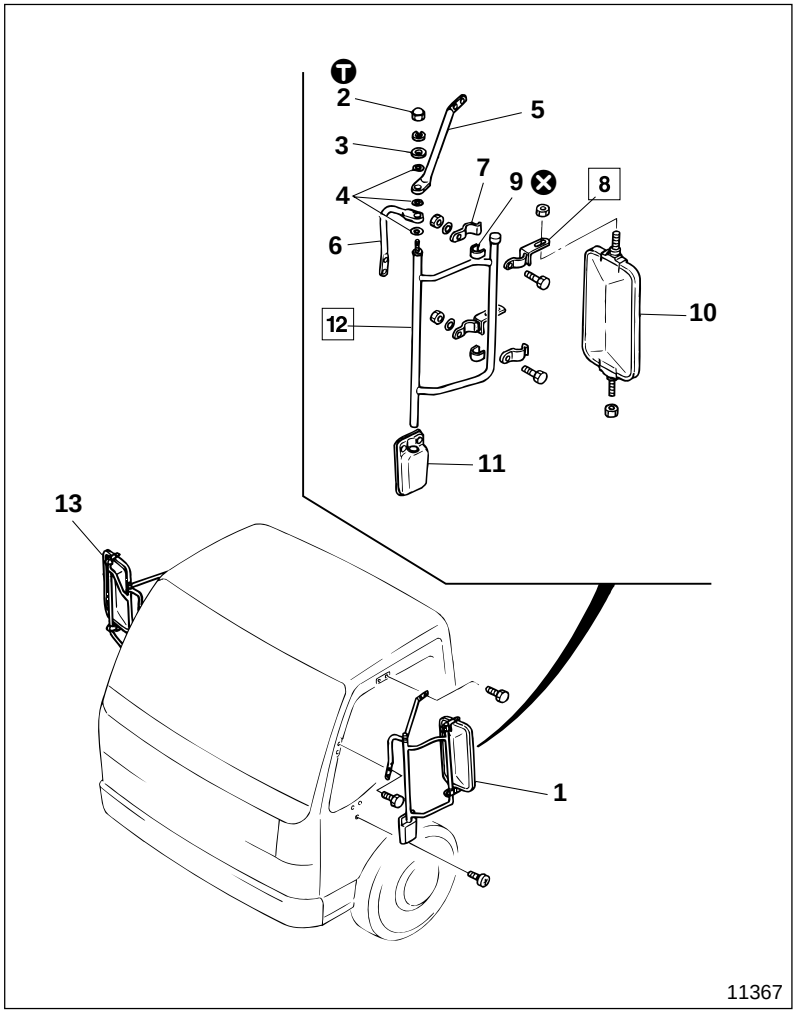

● **Removal sequence**

1 Outside mirror stay assembly, LH
2 Nut
3 Washer (Stainless)
4 Washer
5 Sub mirror stay
6 Sub mirror stay
7 Mirror holder B
8 Mirror holder
9 Packing
10 Outside mirror
11 Lower bracket
12 Main mirror stay
13 Outside mirror stay assembly, RH

⊗ : Non-reusable parts

● **Installation sequence**

Follow the removal sequence in reverse.

NOTE

For outside mirror stay assembly RH 13, follow the same service procedure as for outside mirror stay assembly LH 1.

Ⓣ Tightening torque

Unit : N·m {lbf.ft, kgf·m}

Location	Parts to be tightened	Tightening torque	Remarks
2	Nut (Sub mirror stay and main mirror stay mounting)	24.5 to 29.4 {18 to 22, 2.5 to 3.0}	—

◆ Service procedure

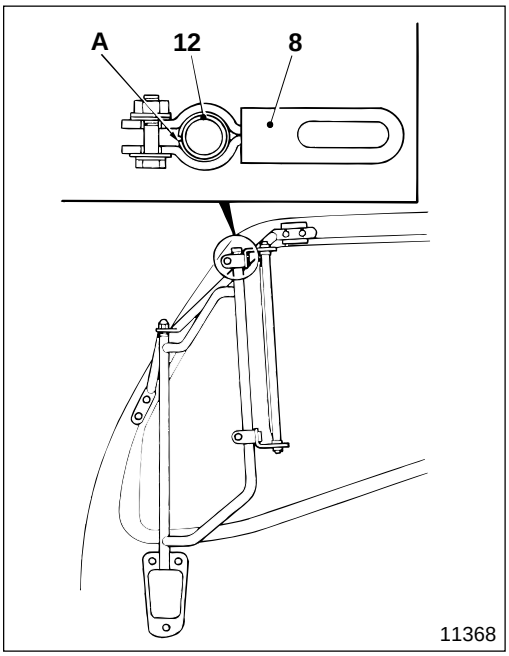

8 **Installation of mirror holder**

Install mirror holder **8** onto main mirror stay **12** in the direction as illustrated.

A : Indent of main mirror stay **12**.

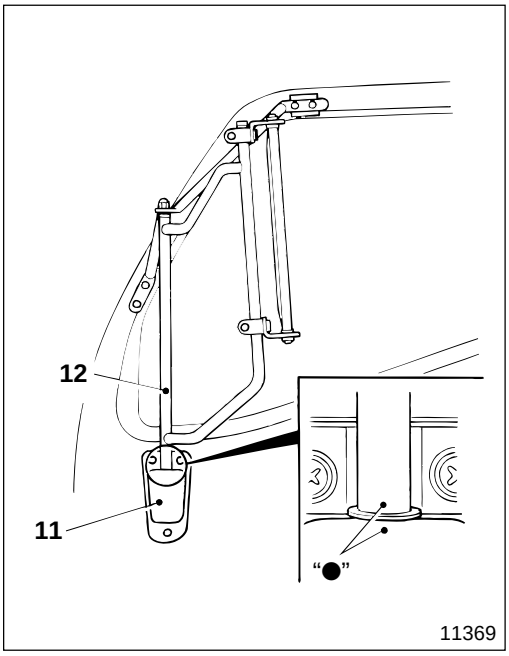

12 **Installation of main mirror stay**

Install main mirror stay **12** and lower bracket **11** so that alignment marks "●" are aligned.

WIPER AND WASHER

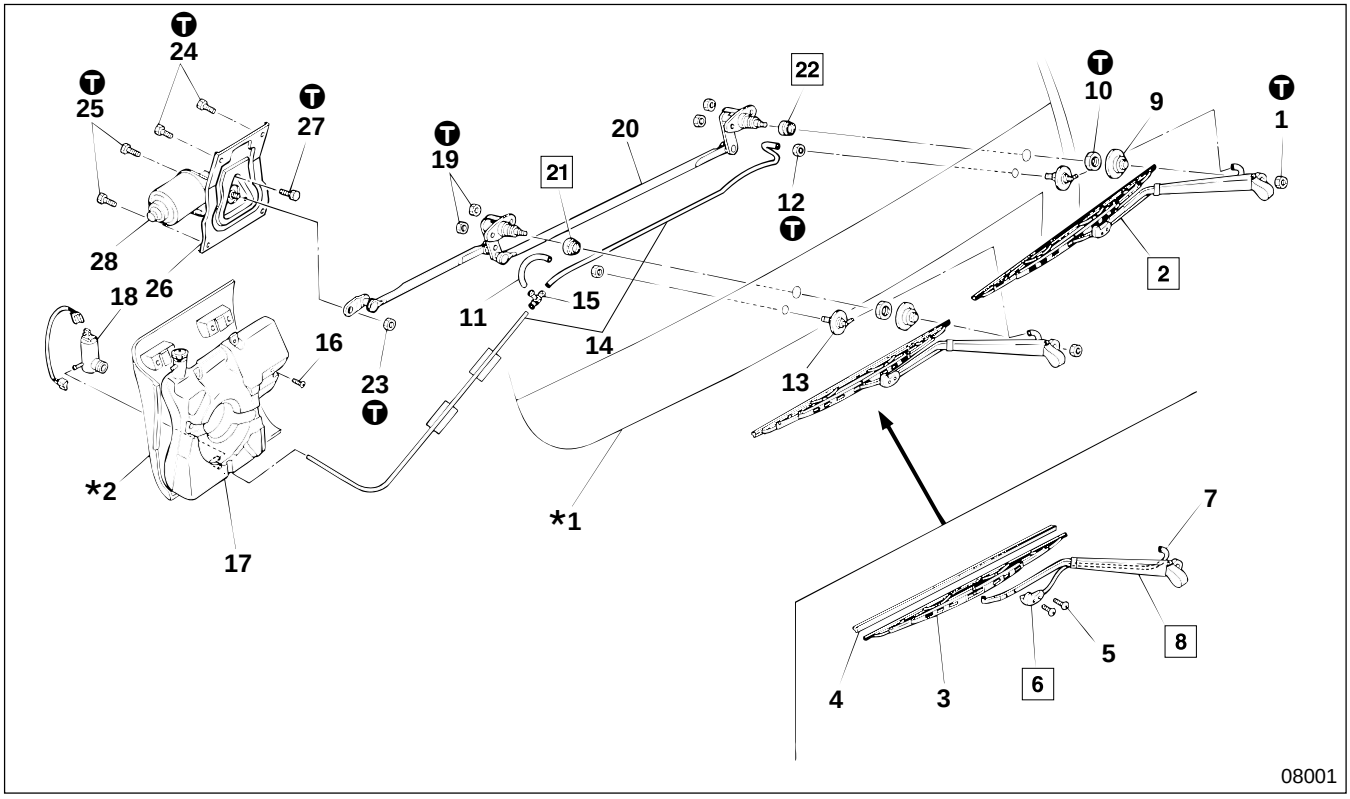

● **Disassembly sequence**

1 Nut
2 Wiper arm and blade assembly
3 Wiper blade
4 Blade rubber
5 Screw
6 Washer nozzle assembly
7 Hose
8 Wiper arm
9 Pivot cap
10 Nut
11 Washer hose
12 Nut
13 Hose joint
14 Washer hose
15 Joint
16 Screw
17 Washer tank
18 Washer motor Gr 54
19 Nut
20 Wiper link assembly
21 Packing washer
22 Packing washer
23 Nut
24 Bolt (L : 16 mm {0.63 in.})
25 Bolt (L : 12 mm {0.47 in.})
26 Wiper motor bracket
27 Bolt
28 Wiper motor Gr 54

***1** : Front garnish P42-40
***2** : Assistant driver's side lower panel P42-51

NOTE

Before disassembling parts 11 to 28, remove the instrument panel to allow access to them. P42-49

● **Assembly sequence**

Follow the disassembly sequence in reverse.

Service standards

Location	Maintenance item	Standard value	Limit	Remedy
2	Wiping force of wiper arm	5.7±0.49 N {1.28±0.11 lbf, 0.58±0.05 kgf}	—	Replace

Tightening torque

Unit : N·m {lbf.ft, kgf·m}

Location	Parts to be tightened	Tightening torque	Remarks
1	Nut (Wiper arm and blade assembly mounting)	9.8 to 15 {7.2 to 11, 1 to 1.5}	—
10	Nut (Packing washer mounting)	14 to 20 {10 to 14, 1.4 to 2}	—
12	Nut (Hose joint mounting)	0.6 to 0.9 {0.4 to 0.7, 0.06 to 0.09}	—
19	Nut (Wiper link mounting)	9.8 to 15 {7.2 to 11, 1 to 1.5}	—
23	Nut (Wiper motor and wiper link mounting)	1.7 to 2.4 {1.2 to 1.7, 0.17 to 0.24}	—
24, 25	Bolt (Wiper motor bracket mounting)	9.8 to 15 {7.2 to 11, 1 to 1.5}	—
27	Bolt (Wiper motor mounting)	5.4 {4, 0.55}	—

◆ Service procedure

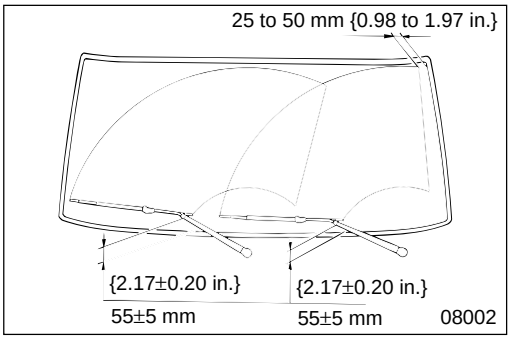

2 **Installation of wiper arm and blade assembly**

Install wiper arm and blade assembly **2** so that dimensions from the edges of the weatherstrip are as illustrated.

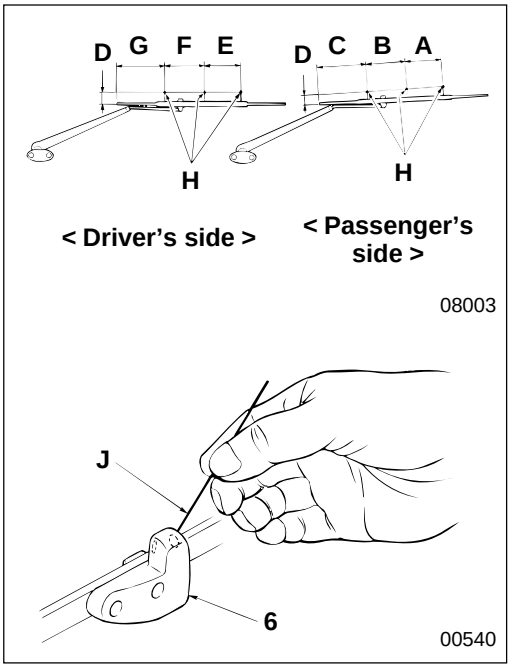

6 **Inspection of washer nozzle assembly**

Make sure that washer fluid spreading target positions **H** are within dimensions **A** to **G**. (Illustration shows the view from inside cab.)

Unit : mm {in.}

		H
Passenger's side	A	110 {4.33}
	B	90 {3.54}
	C	170 {6.69}
	D	15 {0.59}
Driver's side	E	90 {3.54}
	F	90 {3.54}
	G	160 {6.30}

If washer fluid spreading target positions **H** deviate from these dimensions, adjust the jet hole angle of washer nozzle assembly **6** using wire **J**.

CAUTION⚠

Be careful not to damage the jet hole of washer nozzle assembly 6 with wire J when adjusting the angle.

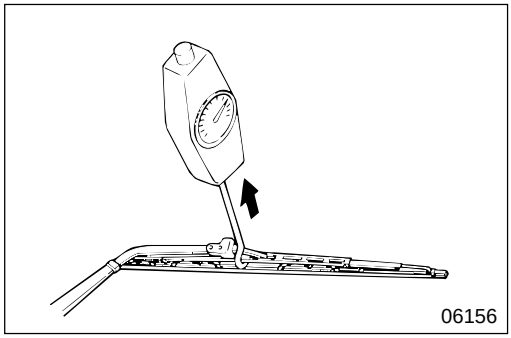

8 **Inspection of wiper arm**

If the measured value deviates from the standard value, replace wiper arm **8**.

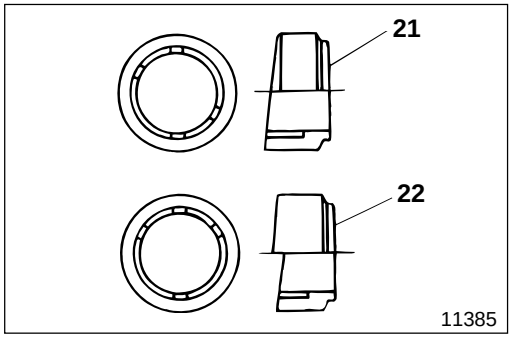

21 **22** **Packing washer**

Because the shape of packing washer **21** for the passenger's side and packing washer **22** for the driver's side are different, be careful not to mix them up during assembly.

Trim

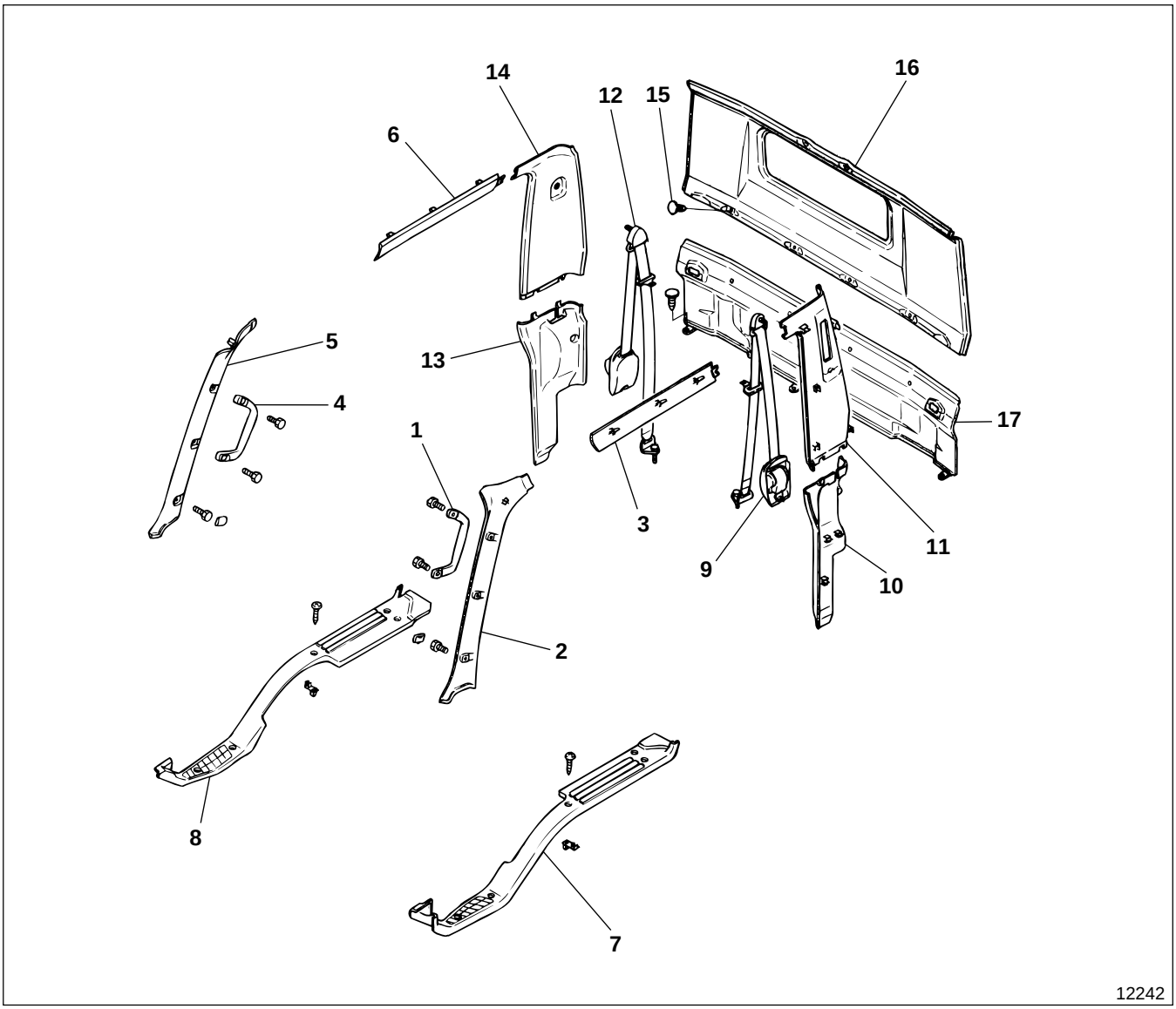

● **Removal sequence**

1 Front pillar grip, LH
2 Front pillar trim, LH
3 Roof side trim, LH
4 Front pillar grip, RH
5 Front pillar trim, RH
6 Roof side trim, RH
7 Scuff plate, LH
8 Scuff plate, RH
9 Seat belt assembly, LH
10 Lower rear pillar trim, LH
11 Upper rear pillar trim, LH
12 Seat belt assembly, RH
13 Lower rear pillar trim, RH
14 Upper rear pillar trim, RH
15 Rear trim clip
16 Upper rear trim
17 Lower rear trim

CAUTION⚠

Do not disassemble seat belt assemblies 9, 12 because this might cause malfunction of the emergency locking retractor.

● **Installation sequence**

Follow the removal sequence in reverse.

CAB INTERIOR FITTING

Headlining

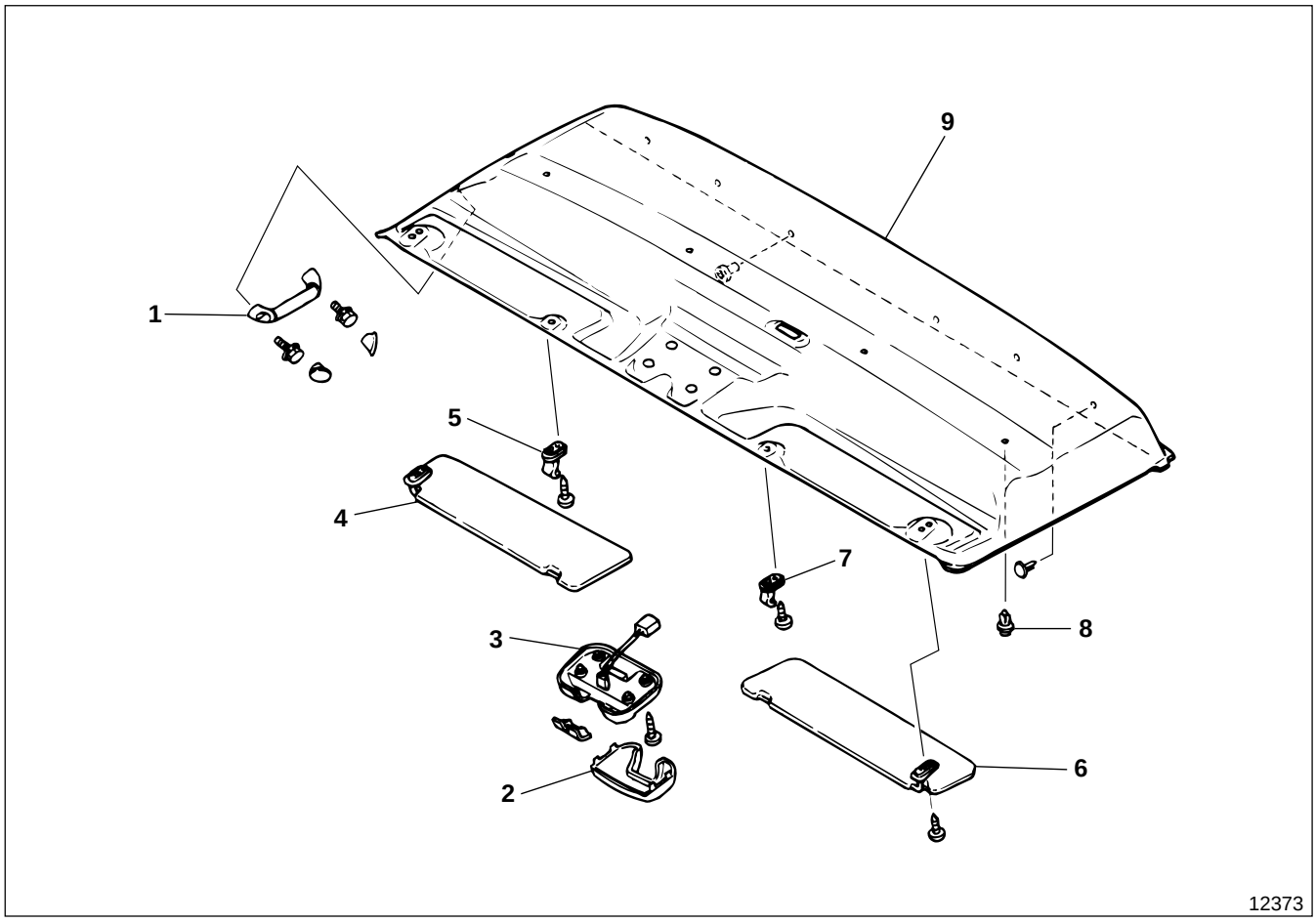

● **Removal sequence**

1 Grip
2 Lens
3 Cab lamp assembly Gr 54
4 Sun visor, RH
5 Hook
6 Sun visor, LH
7 Hook
8 Headlining clip
9 Headlining

● **Installation sequence**

Follow the removal sequence in reverse.

Lower Panel

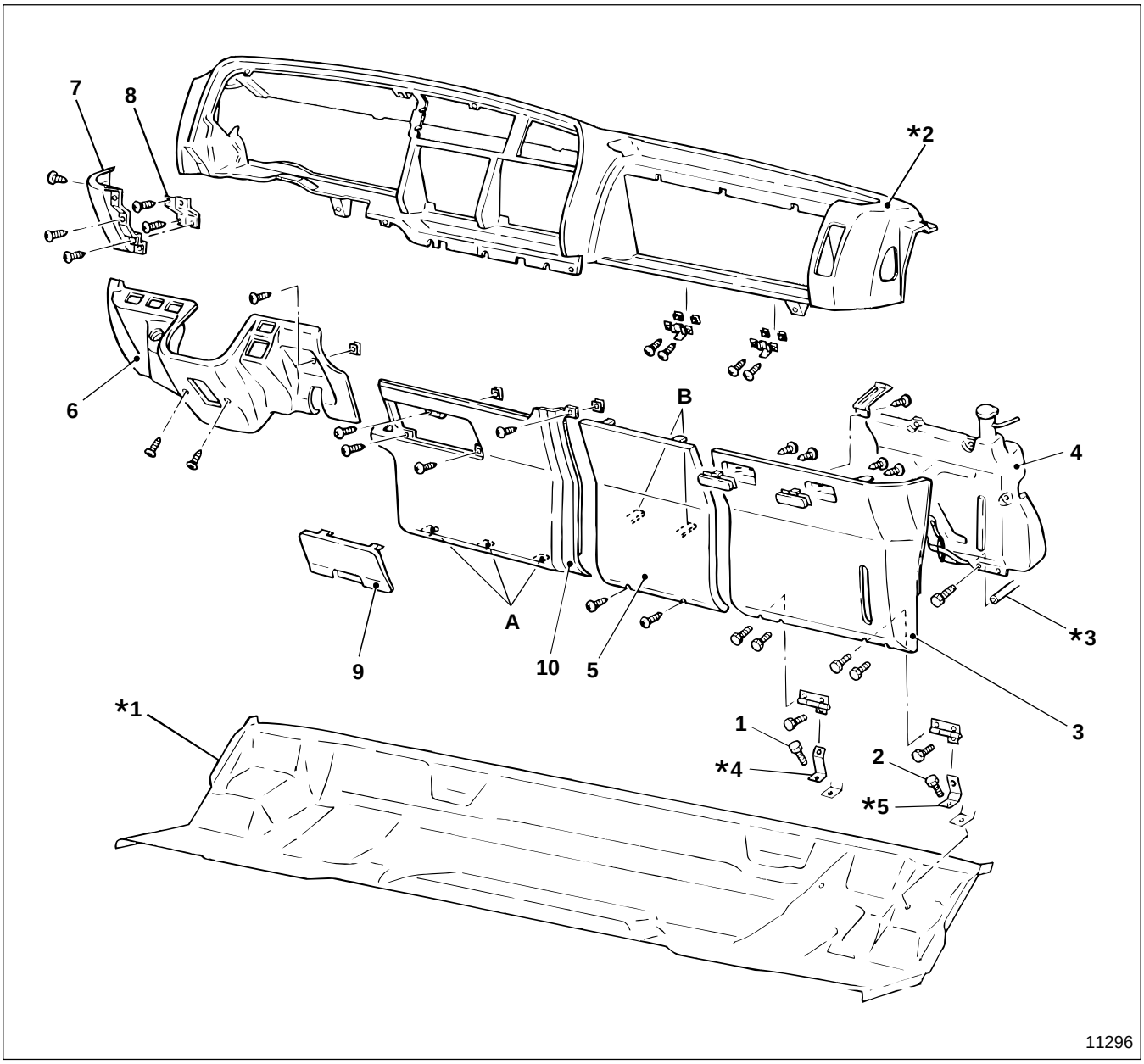

● **Disassembly sequence**

1 Bolt
2 Bolt
3 Passenger's side lower panel
4 Window washer tank
5 Center lower panel
6 Driver's side lower panel
7 Side panel
8 Side panel bracket
9 Fuse box lid
10 Center lower panel

***1** : Front floor
***2** : Instrument panel
📖 P42-53

***3** : Water hose
***4** : Cooling unit
***5** : Blower unit

A : Fixed on heater unit
B : Fixed on joint duct

● **Assembly sequence**

Follow the disassembly sequence in reverse.

INSTRUMENT PANEL

Meter Bezel

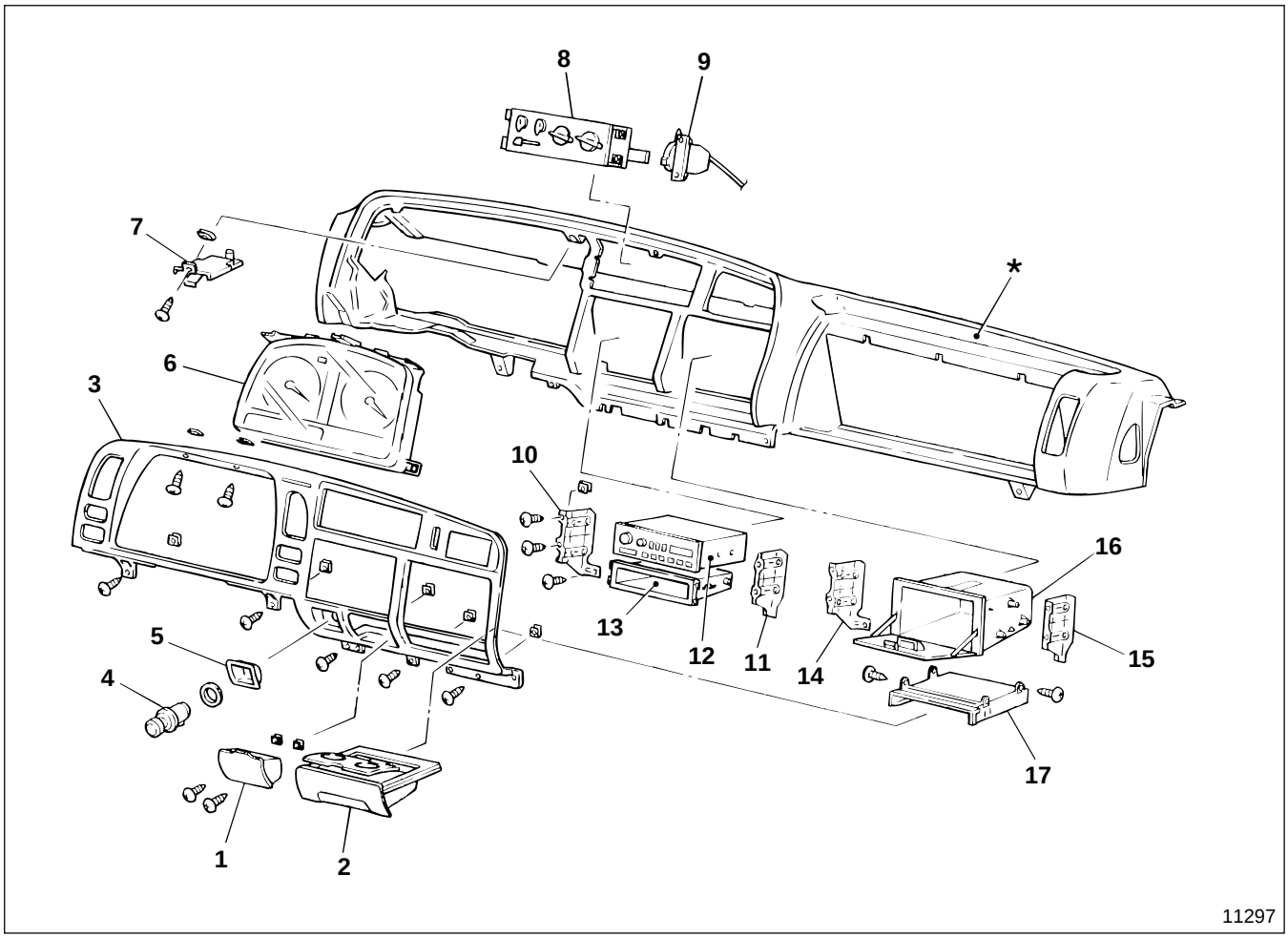

● **Disassembly sequence**

1 Ashtray
2 Cup holder
3 Meter bezel
4 Cigarette lighter Gr 54
5 Protector
6 Meter cluster Gr 54
7 Card holder
8 Heater control assembly Gr 55B
9 Cool air bypass control assembly Gr 55B
10 Bracket, LH
11 Bracket, RH
12 Radio < Option >
13 Box
14 Bracket, LH
15 Bracket, RH
16 Glove compartment
17 Cup holder base

* : Instrument panel P42-53

● **Assembly sequence**

Follow the disassembly sequence in reverse.

Instrument Panel

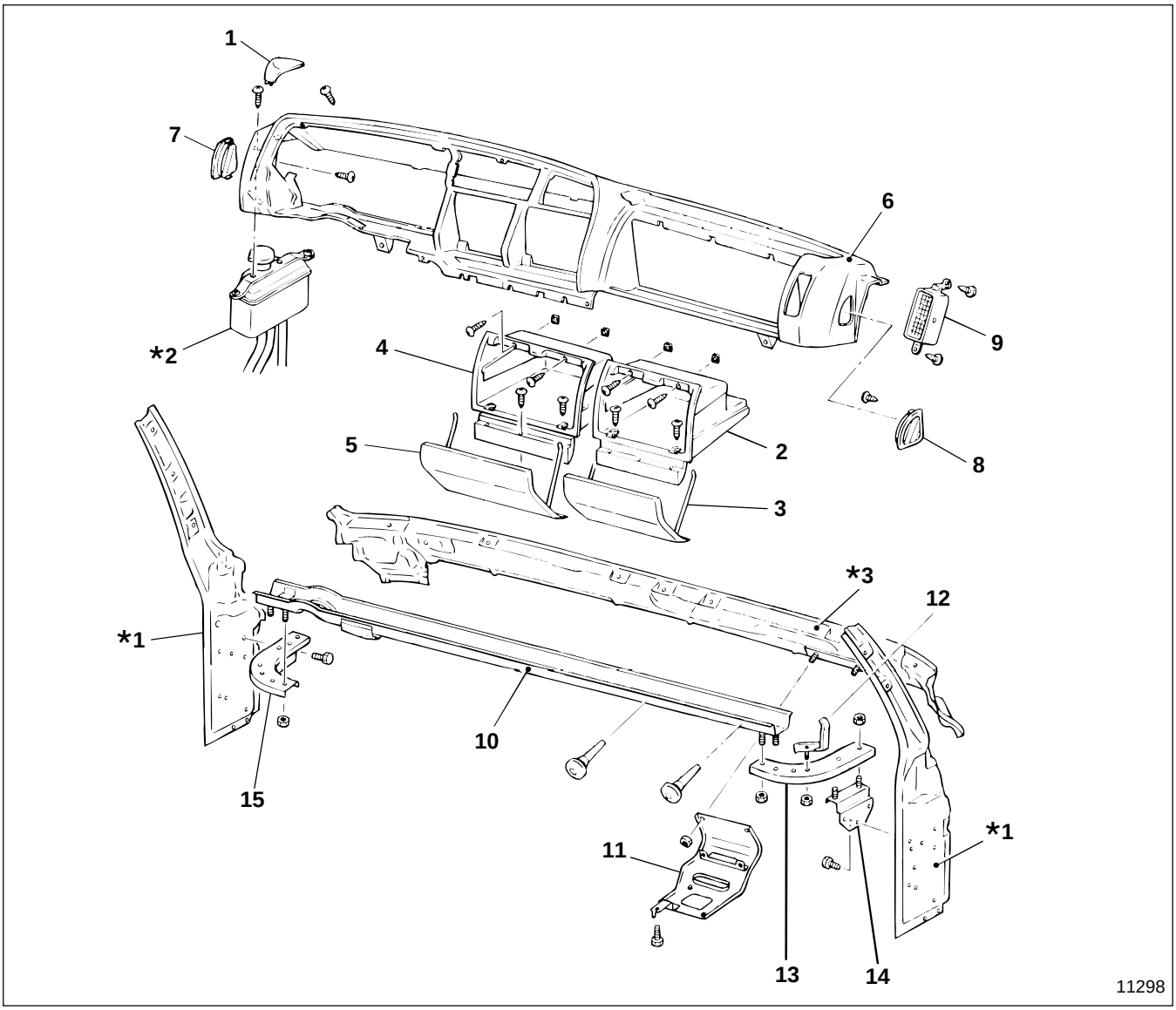

● **Disassembly sequence**

1 Fluid tank lid
2 Glove compartment
3 Glove compartment lid
4 Glove compartment
5 Glove compartment lid
6 Instrument panel
7 Side demister grille
8 Side demister grille
9 Air outlet grille
10 Instrument panel frame
11 Relay bracket
12 Instrument panel support
13 Instrument panel bracket
14 Instrument panel bracket
15 Instrument panel bracket

***1** : Front inner pillar
***2** : Fluid tank Gr 35
***3** : Front window rail

● **Assembly sequence**

Follow the disassembly sequence in reverse.

WINDOW GLASS

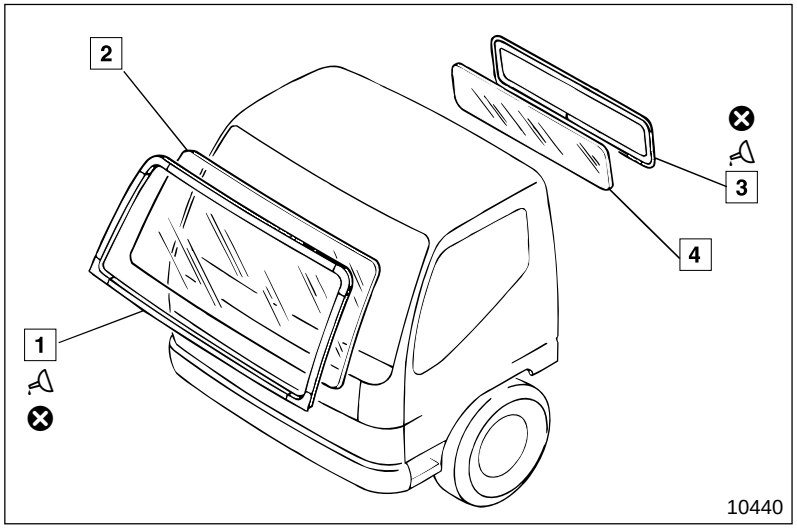

● **Disassembly sequence**

1 Weatherstrip
2 Windshield
3 Weatherstrip
4 Rear window glass

⊗ : Non-reusable parts

● **Assembly sequence**

Follow the disassembly sequence in reverse.

Lubricant

Location	Points of application	Kinds	Quantity
1, 3	Lip area of weatherstrip	Soapy water	As required

◆ Service procedure

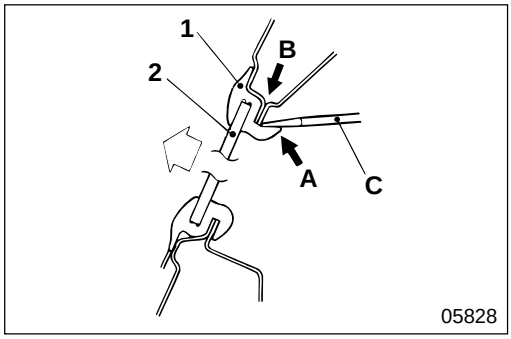

1 **2** **Weatherstrip and windshield**

[Removal]

- From the inside of the cab, separate lip **A** of weatherstrip **1** from flange lip **B** of the cab.
  C : Screwdriver
- Push windshield **2** outward to remove it from the cab.

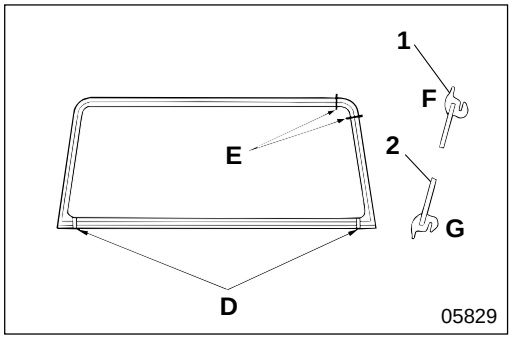

[Installation]

When installing the windshield, pull cord **H** attached to weatherstrip **1** and turn over lip **A**, following the procedure below:

- Position drain hole **D** and joint part **E** of weatherstrip **1** as illustrated and install them on windshield **2**.
  F : Outside
  G : Inside

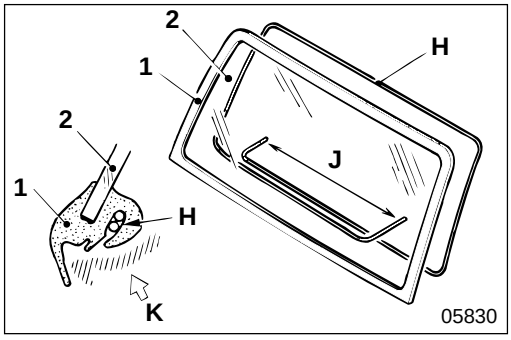

- Lay cord **H** in the cab mounting groove of weatherstrip **1** as illustrated, and overlap the cord at the lower side of the glass by the specified length, see **J**.
- Apply soapy water **K** to weatherstrip **1**.
- Align windshield **2** with the cab.

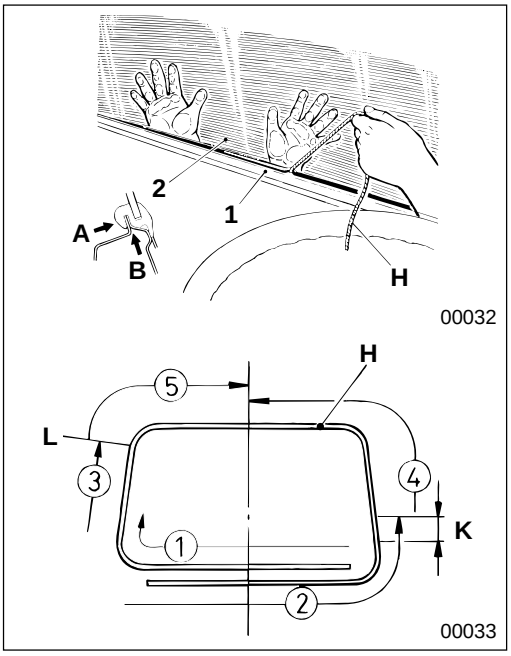

- Push windshield **2** inward from the outside of the cab firmly.
- Inside the cab, pull one end of cord **H** to install lip **A** of weatherstrip **1** into flange lip **B** of the cab.

- Pull cord **H** in the numbered order as illustrated and at the same time have someone push windshield **2** into weatherstrip **1**, tapping the windshield with a rubber-headed mallet.
  - **K** : approximately 100 mm {3.94 in.} from the starting point of the straight section
  - **L** : up to the end of the straight section

CAUTION⚠

Make sure that windshield 2 is installed correctly into the cab before hitting the windshield with the rubber-headed mallet, otherwise the windshield might be broken.

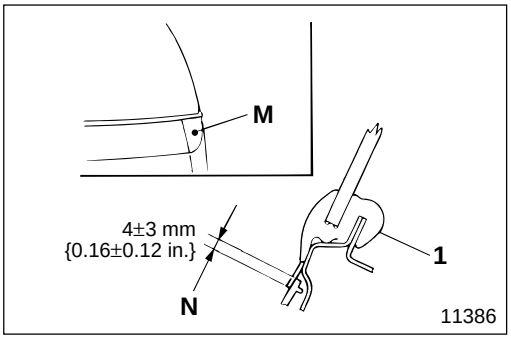

- Provide an overlapped margin **N** on weatherstrip **1** and side garnish **M** to prevent water flowing backwards from the water drain hole.

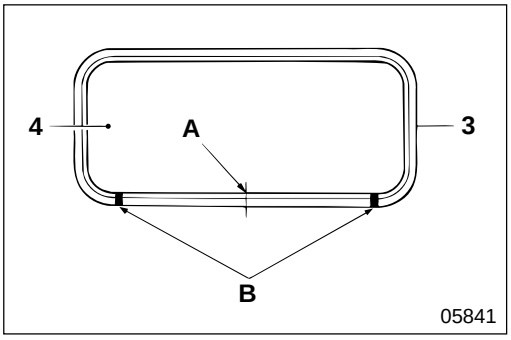

3 **4** **Weatherstrip, rear window glass**

- Install so that joint **A** of weatherstrip **3** is at the bottom center of rear window **4**.
  - **B** : Water drain hole
- Except for the point mentioned above, follow the same service procedure as for installation of the windshield. 🕮 P42-54

MITSUBISHI FUSO

FE

Service Manual

Group 54 - Electrical

Group 54 - Electrical
1998 Minor Change <FG>

BACK HOME

MITSUBISHI FUSO TRUCK OF AMERICA, Inc.

Pub No. TWSE9501-00

MITSUBISHI
FUSO

FG

Service Manual

Group 54
Electrical

'98 Minor Change

Table of Contents

MITSUBISHI FUSO TRUCK OF AMERICA, Inc.

BACK HOME

Pub No. TWSE9501-254

GROUP 54 ELECTRICAL

SPECIFICATIONS < ALTERNATOR > ..... 54 -2

STRUCTURE AND OPERATION < ALTERNATOR > 54- 3

TROUBLESHOOTING 54- 5

100 ON-VEHICLE INSPECTION AND ADJUSTMENT 54- 6

106 ALTERNATOR 54- 8

401 METER CLUSTER 54- 16

810 FOUR-WHEEL DRIVE CIRCUIT 54- 18

This group covers FG only. Please refer to FE for an explanation on parts and items not described here.

SPECIFICATIONS < ALTERNATOR >

Item	Specifications
Manufacturer	MITSUBISHI ELECTRIC
Type	Alternator with built-in regulator (with brush and built-in fan)
Model	A3TN1988
Output V-A	12–100

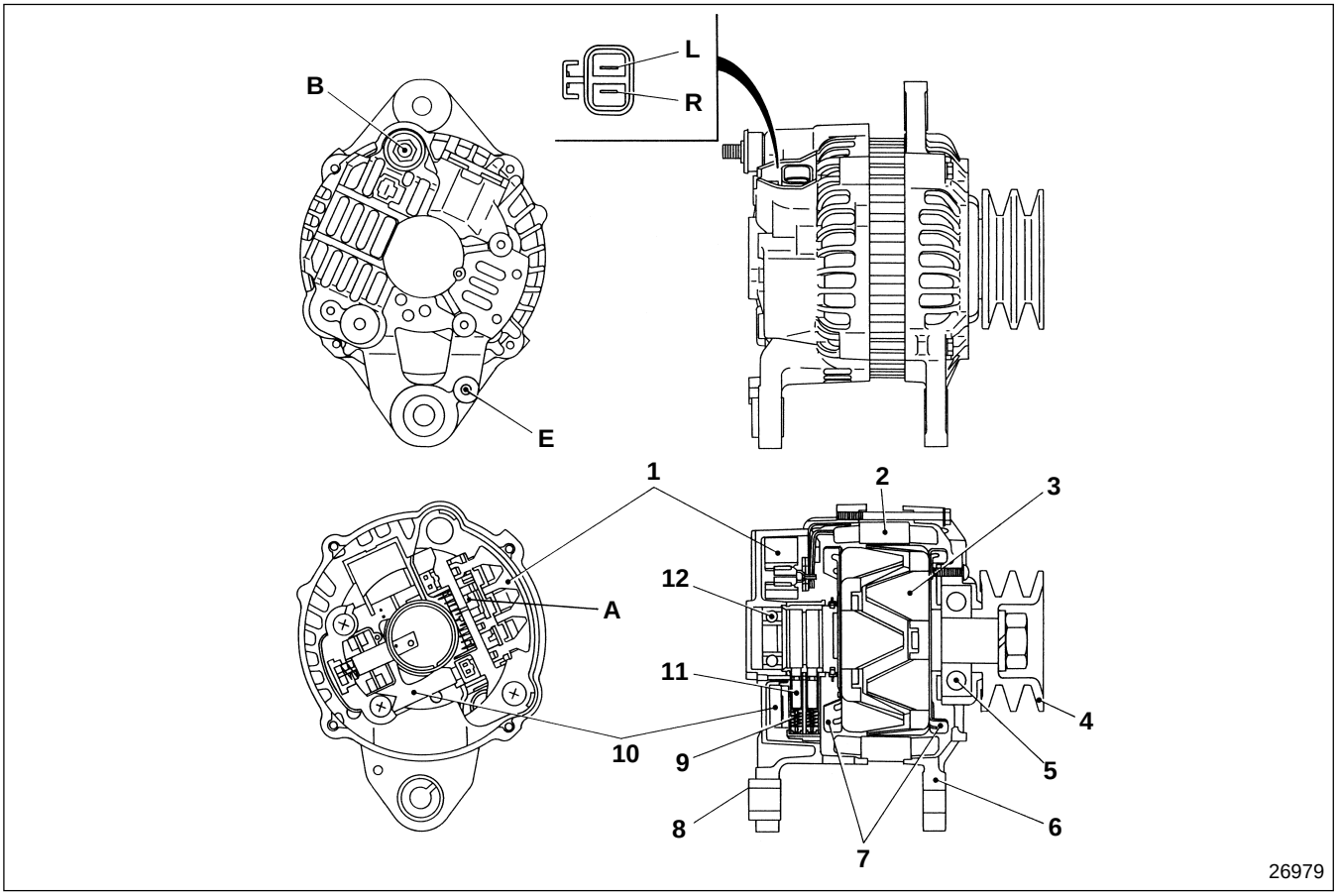

1 Rectifier
2 Stator assembly
3 Rotor assembly
4 Pulley
5 Front bearing
6 Front bracket
7 Fan
8 Rear bracket
9 Brush spring
10 Regulator and brush holder
11 Brush
12 Rear bearing

A : Neutral diode
B : Terminal B
E : Terminal E
L : Terminal L
R : Terminal R

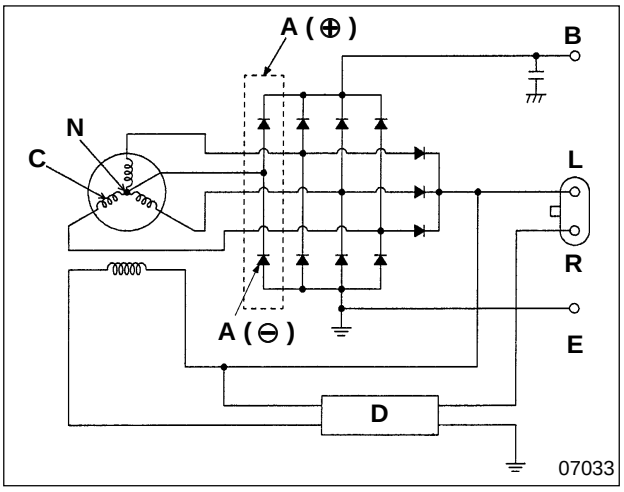

Features

- In addition to the present alternator, this alternator has a neutral diode **A** (⊕ diode, ⊖ diode).
- With this neutral diode **A**, direct output during high speed rotation has increased in contrast to alternators without a neutral diode.
  B : Alternator terminal **B**
  C : Starter coil
  D : IC regulator
  E : Alternator terminal **E**
  L : Alternator terminal **L**
  N : Neutral
  R : Alternator terminal **R**

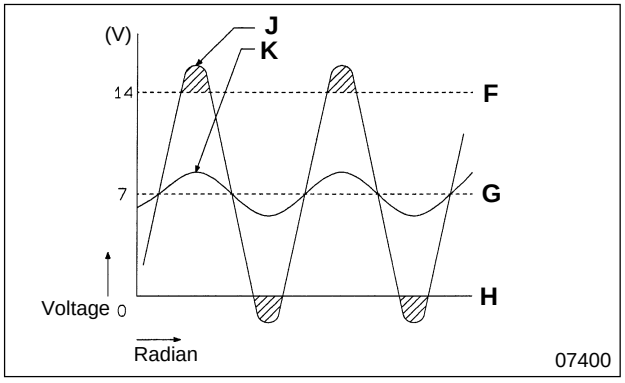

Neutral electrical fluctuation and neutral diode operation

- Electrical potential of the neutral point **N** fluctuate vertically around the neutral point of direct current voltage (1/2 **G** of the output voltage) as shown.
- The area (shown as ▨) indicates where neutral **N** voltage taken out of neutral diode A, rises to exceed output voltage **F** (14V), and the area (shown as ▨) shows where it falls below ground electric potential **H** (0 V), when the alternator is rotating at high speed. Previous direct current output has been exceeded.
  F : Output voltage
  G : Average neutral voltage (1/2 of output voltage)
  H : Ground electric potential
  J : {Neutral voltage} waves at times of high speed revolution
  K : {Neutral voltage} waves at times of low speed revolution
  All voltage and electrical potential conditions for neutral diode **A** are as follows:
- When {neutral points voltage} exceeds 0 V, and is less than 14 V:
  The existing diodes (six units) operate.

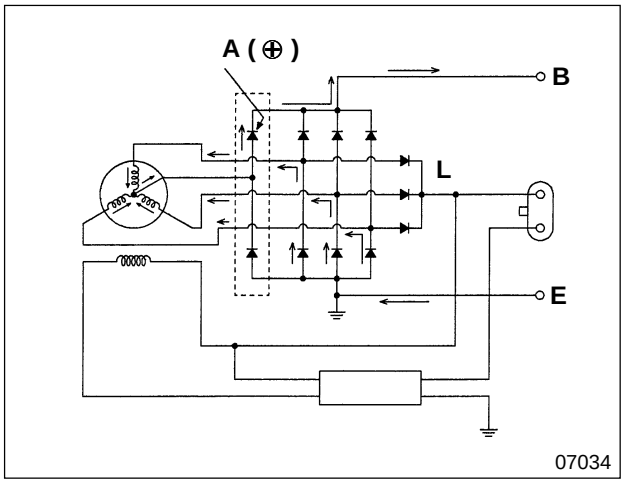

- When {neutral voltage} exceeds 14 V:
  Neutral diode **A** (⊕ side) conducts, adding to the existing direct current output and supply all mechanisms.

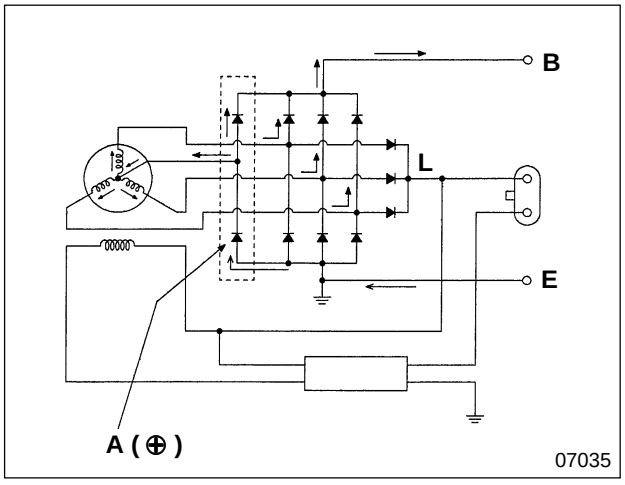

- When {neutral voltage} is below 0 V
  Neutral diode **A** (⊖ side) conducts, passing via the existing diodes (three units) and supply neutral output.

Possible causes \ Symptoms				Battery is normal but discharged	Charge warning lamp [-][+] does not light when turning starter switch ON, with engine stopped	Alternator is normal but battery discharged	Remarks
Connector connection faulty, harness broken, grounding faulty				○		○	
Fuse blown				○	○	○	
V-belts loose				○		○	Gr 14
V-belts damaged				○		○	Gr 14
Battery faulty		○				○	
Alternator	Stator coil broken			○			
	Stator coil short-circuited with core			○			
	Field coil broken			○			
	Rectifier faulty			○			
	Regulator faulty		○	○	○		
	Brushes worn			○			
	Brush spring fatigued			○			
	Wiring faulty			○			
Meter cluster faulty					○		

Battery overheating
Battery electrolyte decreases too early

Inspection of Alternator

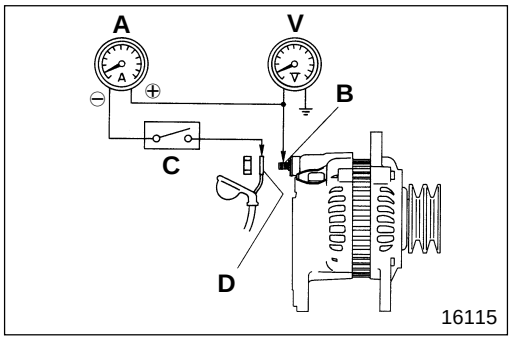

Performance test

- Connect the meters to the alternator as illustrated.
  A : Ammeter (150 amperes class)
  B : Terminal B on alternator
  C : Switch
  D : Terminal
  V : Voltmeter

WARNING

- **Terminal D is always loaded with voltage from the battery.**
- **You must handle terminal D carefully, it will short-circuit if it touches any part other than terminal B on the alternator.**

CAUTION

The wire connected to switch C should be thicker than the chassis side harness connected to terminal B.

- Turn switch **C** on, and check that battery voltage is displayed on the voltmeter.
- Start the engine.
- Turn the switches ON of all the lamps on the vehicle immediately.
- Increase engine revolution immediately, and measure current flow at about 2600 rpm.
- The alternator is assumed to be normal if the measured value is higher than 70% of the specified output.

Specified output of alternator

Voltage	Output
12 V	100 A

NOTE

Since the above inspection is only a simplified check, it is necessary to conduct a stringent test bench for an official check. **P54-10**

Inspection of Regulator

Service standards

Location	Maintenance item	Standard value	Limit	Remedy
—	Adjustment voltage of regulator	14.7±0.3 V	—	Replace

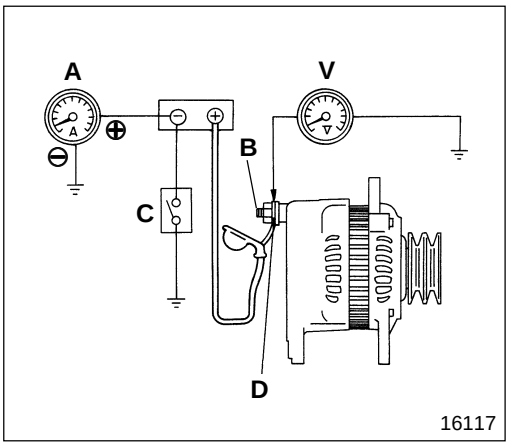

- Connect the meters to the alternator as illustrated.
  A : Ammeter (150 amperes class)
  B : Terminal B on alternator
  C : Switch
  D : Terminal
  L : Terminal L on alternator
  V : Voltmeter

WARNING

- **Terminal D is always loaded with voltage from the battery.**
- **You must handle terminal D carefully, it will short-circuit if it touches any part other than terminal B on the alternator.**

CAUTION

The wire connected to switch C should be thicker than the chassis side harness connected to B terminal.

- To ensure the current consumer is not activated during the inspection, the lamp and heater switches etc., should be turned off.
- Turn switch **C** on and start the engine.
- Measure voltage at **B** terminal, when output current is less than 5A with engines revolution at about 2600 rpm.

NOTE

When output current is between 5A - 10A, values measured (adjustment voltage) may be slightly low.
14V- 0.2-0.3V

- When output voltage exceeds 5A, do either of the following.
  - Turn the engine on and charge the battery.
  - Replace the battery with a fully charged one.
- Where the measured value deviates the limits, reconfirm with the test bench.

106 ALTERNATOR

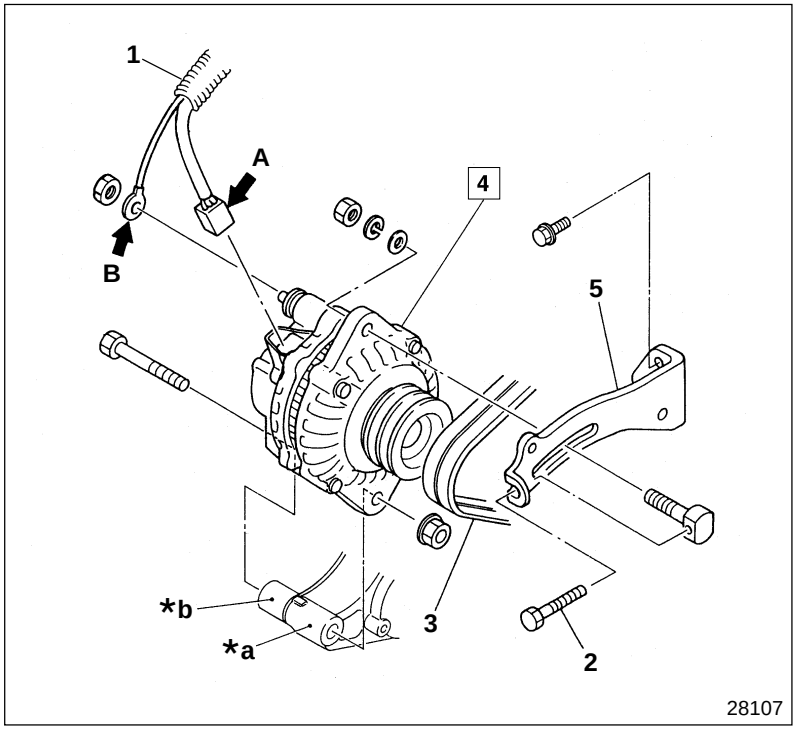

● **Removal sequence**

1 Chassis harness
2 Adjusting bolt
3 V-belts
4 Alternator P54-10
5 Adjusting plate

***a** : Timing gear case Gr 11
***b** : Power steering oil pump Gr 37

A : To terminals L and R
B : To terminal B

WARNING

- **Terminal B is always loaded with voltage from the battery, supplied via chassis harness 1. Therefore when you remove the harness from terminal B, make sure that tools do not touch any adjacent parts because this would cause a short-circuit.**
- **Make sure that you disconnect terminal ⊖ of the battery before removing the harness and insulate the terminal with tape.**

● **Installation sequence**

Follow the removal sequence in reverse.

● **Adjustment after installation**

Adjustment of V-belt **3** tension Gr 14

Service standards

Location	Maintenance item		Standard value	Limit	Remedy
4	Output current (* When alternator is hot and 13.5 V is loaded)	At 1500 rpm	41 A or more	—	Inspect
		At 2500 rpm	73 A or more	—	
		At 5000 rpm	95 A or more	—	
	Adjustment voltage of regulator (When alternator rotates at 5000 rpm and load is 5 A or less)		14.7±0.3 V	—	Replace

* : The value is measured after running the alternator at 5000 rpm (at ambient temperature) with maximum output for 30 minutes.

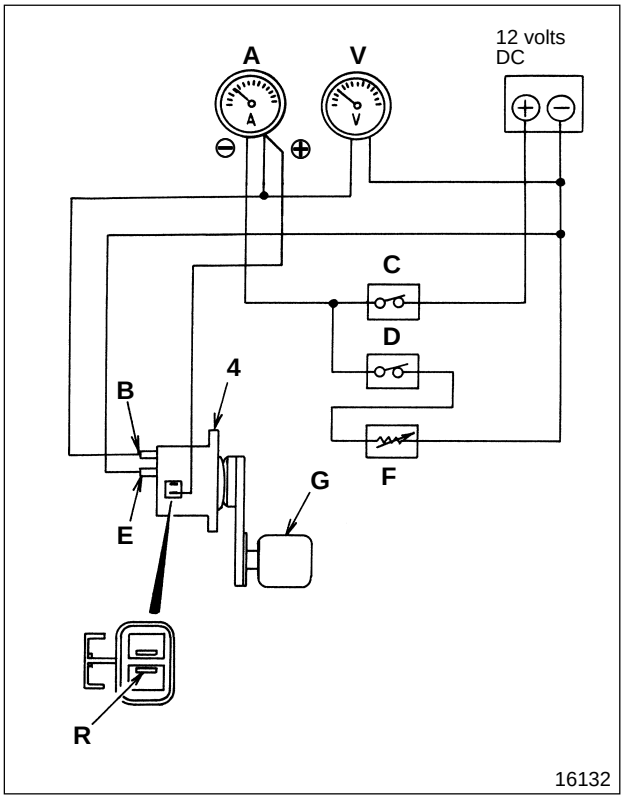

◆ Service procedure

4 Inspection of alternator

(1) Inspection of alternator performance (bench test)

- Connect each unit to the alternators as illustrated.
  A : Ammeter (150 amperes class)
  B : Terminal B on alternator
  C : Switch
  D : Switch
  E : Terminal E on alternator
  F : Load resistance (variable resistance)
  G : Alternator drive motor
  L : Terminal L on alternator
  R : Terminal R on alternator
  V : Voltmeter
- Set load resistance to MAX (almost no load current flows).
- Turn switches **C** and **D** ON.
- Run the alternator at 5000 rpm for 30 minutes to warm it.
- Adjust load resistance **F** until nominal current is achieved.
  Alternator nominal current: 12V-100A

- Measure current of alternator **4** at each specified rpm.
  - If the measured value deviates from the standard value, disassemble and inspect alternator **4**.
    P54-10

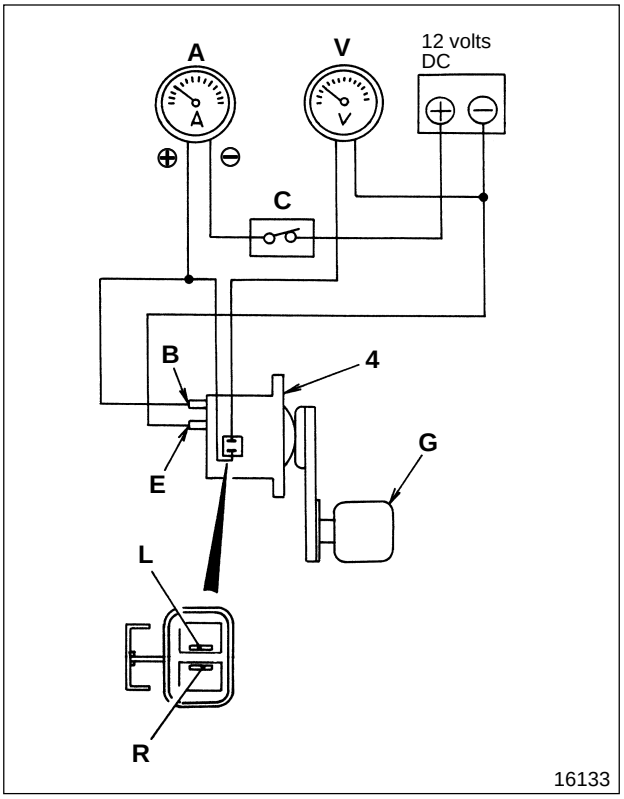

(2) Inspection of regulator (bench test)

- Connect each unit to the alternators as illustrated.
  A : Ammeter
  B : Terminal B on alternator
  C : Switch
  E : Terminal E on alternator
  G : Alternator drive motor
  L : Terminal L on alternator
  R : Terminal R on alternator
  V : Voltmeter
- Turn switch **C** ON.
- Operate alternator **4** at low speed.
- Measure the voltage (adjustment voltage) while increasing revolution rate of alternator **4** up to 5000 rpm. At the same time check that current remains at under 5A.
- Where the measured values are outside the limits do the following:
  - Measured values exceed the limits:
    Replace the regulator
  - Measured values are below the limits:
    Check all parts of the alternator before replacing the regulator.

Alternator

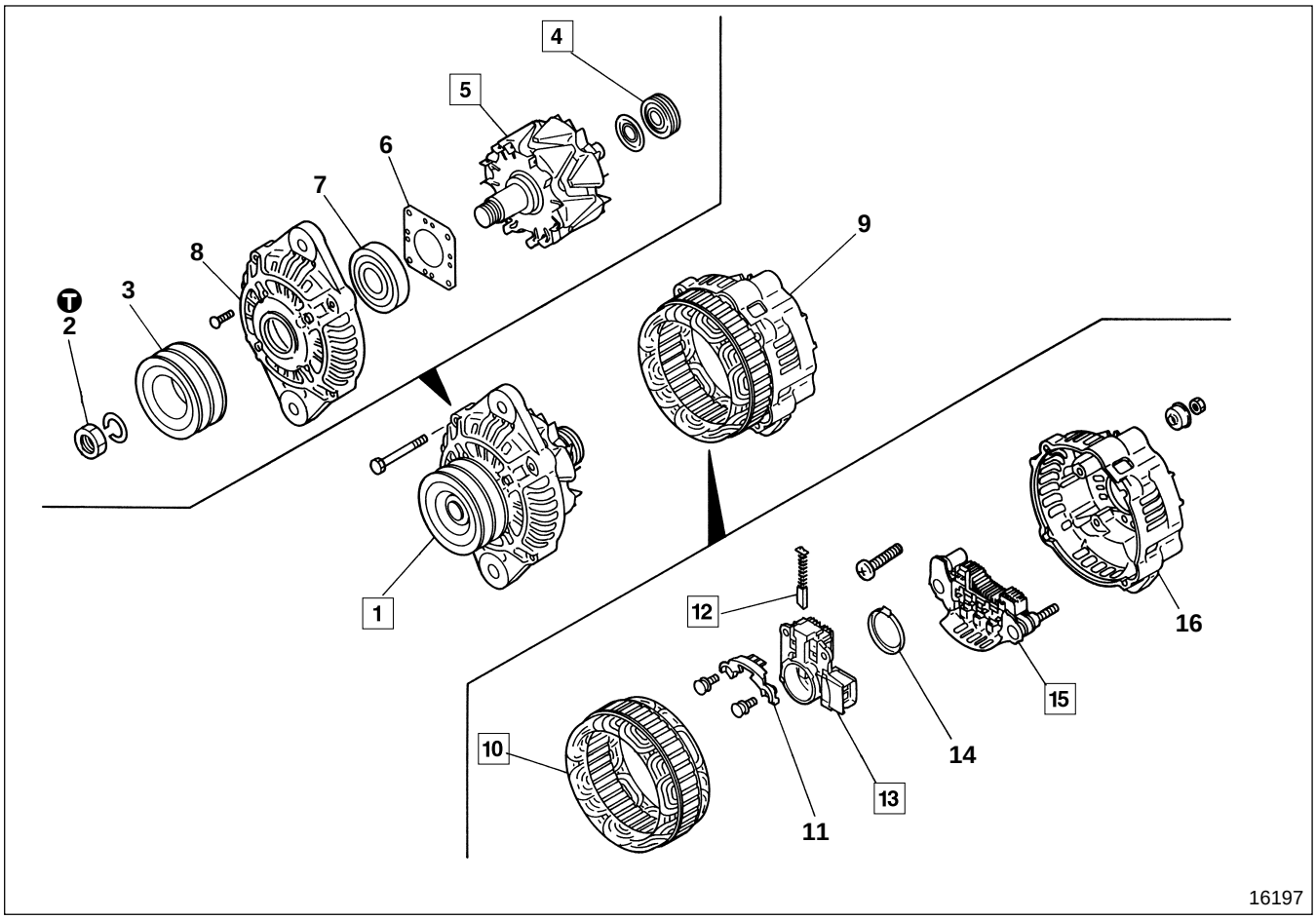

● **Disassembly sequence**

1 Rotor and front bracket assembly
2 Nut
3 Pulley
4 Rear bearing
5 Rotor assembly
6 Cover
7 Front bearing
8 Front bracket
9 Stator and rear bracket assembly
10 Stator assembly
11 Cover
12 Brush
13 Regulator and brush holder
14 Slinger
15 Rectifier
16 Rear bracket

NOTE

Do not remove parts 4, 7, 10, 12 unless they are faulty.

● **Assembly sequence**

9 → 1 9 : 14 → 13 → 12 → 11 → 16 ← 10 (15)

1 : 8 → 7 → 6 → 3 → 2 (5 → 4)

Service standards

Unit : mm {in.}

Location	Maintenance item		Standard value	Limit	Remedy
5	Rotor assembly	Field coil resistance (At 20°C)	2.1 to 2.5	—	Replace
		Slip ring outer diameter	33 {1.30}	32.4 {1.28}	
12	Length of brush		23 {0.91}	8 {0.31}	Replace

Tightening torque

Unit : N·m {lbf.ft, kgf·m}

Location	Parts to be tightened	Tightening torque	Remarks
2	Nut (pulley mounting)	132 to 162 {98 to 120, 13.5 to 16.5}	—

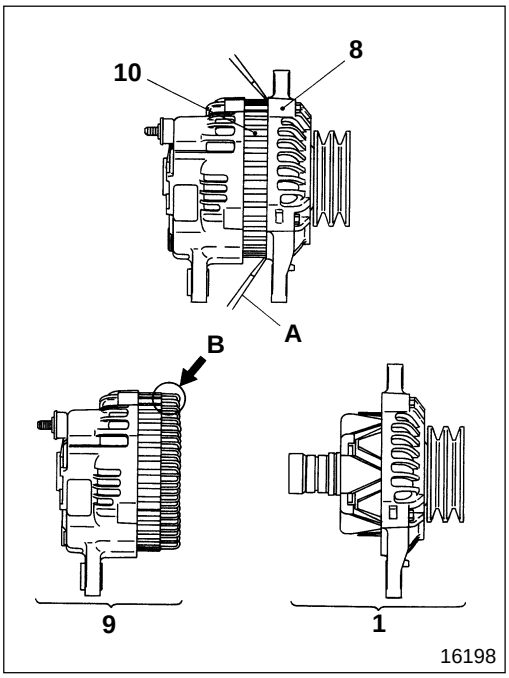

◆ Service procedure

1 Rotor and front bracket assembly

[Removal]

- Insert screwdriver **A** between front bracket **8** and stator assembly **10**.
- Use screwdriver **A** to pry rotor and front bracket assembly **1** away from stator and rear bracket assembly **8**.

CAUTION ⚠

Be careful not to insert the screwdriver too deep or it will damage coil B of stator assembly 10 and might cause a short-circuit.

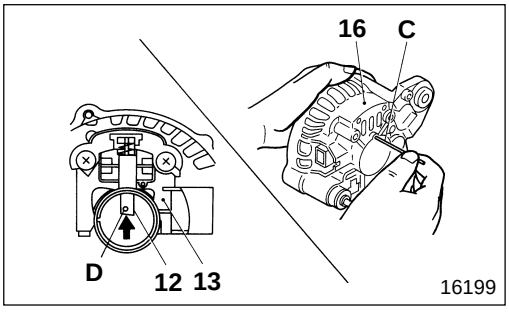

[Installation]

When brush **12** is protruding out of regulator and brush holder **13**, rotor assembly **5** cannot be installed on rear bracket **16**, so perform the following.

- Insert brush **12** into regulator and brush holder **13**.
- Insert pin **C** from the rear end of rear bracket **16**, attach the pin against pin hole **D** and secure the brush **12**.
  If the pin hole **D** is gone due to worn brush **12**, secure front end of the brush with pin.
- After installation, remove pin **C** carefully.

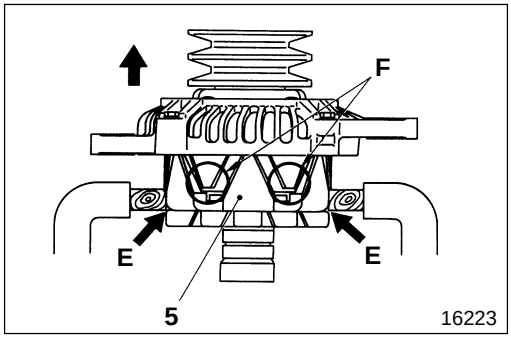

[Disassembly]

CAUTION

Make sure, when you hold rotor assembly 5 in a vise, to grip root E of the core claws. Gripping claws F can damage them.

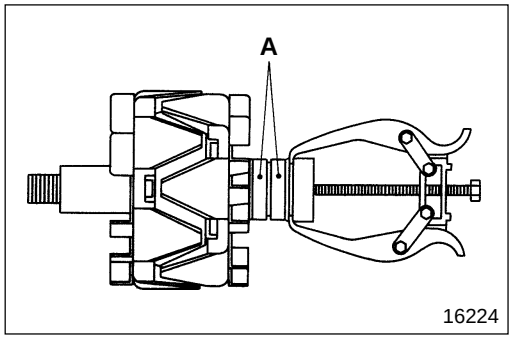

4 Removal of rear bearing

CAUTION

- **Do not damage slip ring A when mounting the bearing puller.**
- **If the slip ring is damaged, brushes will not fit properly.**

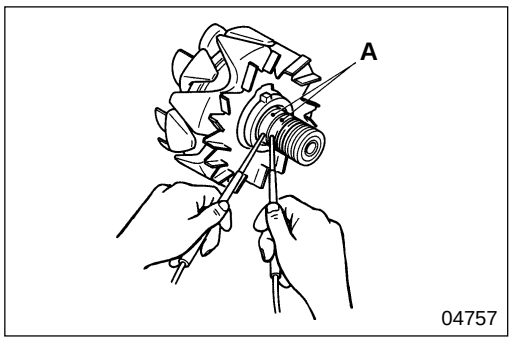

5 Inspection of rotor assembly

(1) Field coil resistance

- Measure resistance between gaps of slip ring **A**.
- If the measured value deviates from the limits, replace rotor assembly **5**.

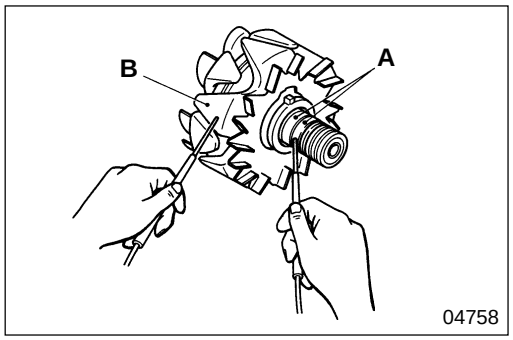

(2) Continuity between slip ring and core

- Check there is no continuity between slip ring **A** and core **B**.
- If continuity is found, replace rotor assembly **5** as there is a short circuit.

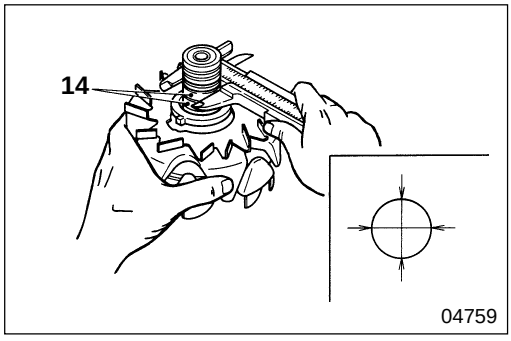

(3) Outer diameter of slip ring

- If outside diameter of slip ring **A** is less than the limit, replace rotor assembly **5**.
- If the outer peripheral diameter of slip ring **A** is rough or worn on one side, polish it smooth with sandpaper or a lathe.

CAUTION

Do not polish slip ring until its outer diameter deviates from the specified limits.

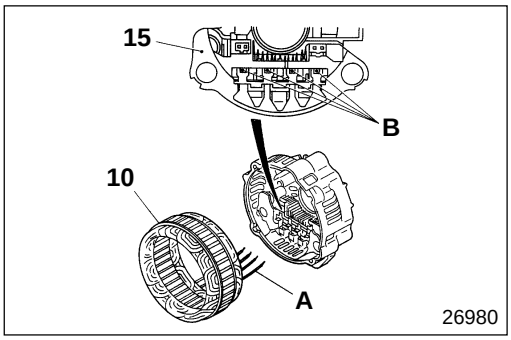

10 Stator assembly

[Removal and installation]

- Disconnect lead **A** of stator assembly **10** from rectifier **15**. The lead is soldered to diode **B** of rectifier **16** at four points.

CAUTION

Make sure that you desolder within five seconds because the diode is heat sensitive.

- To install, follow the removal sequence in reverse.

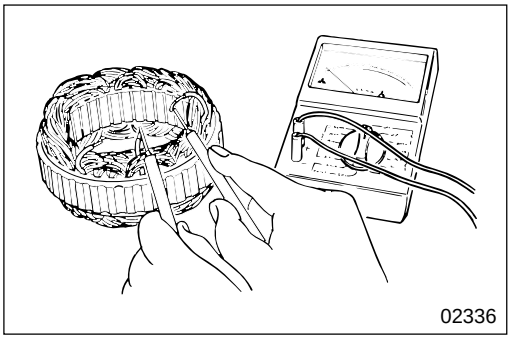

[Inspection]

(1) Continuity of each lead wire

- Make sure that each lead wire has continuity.
- If there is no continuity, the lead wire is broken. Replace stator assembly **10**.

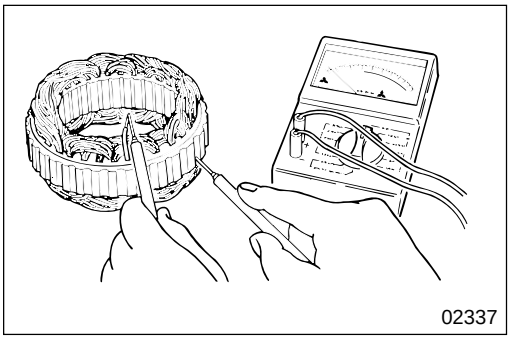

(2) Continuity between lead wires and the core

- Make sure that there is no continuity between lead wires and the core.
- If there is continuity, replace stator assembly **10**, since it might be short-circuited.

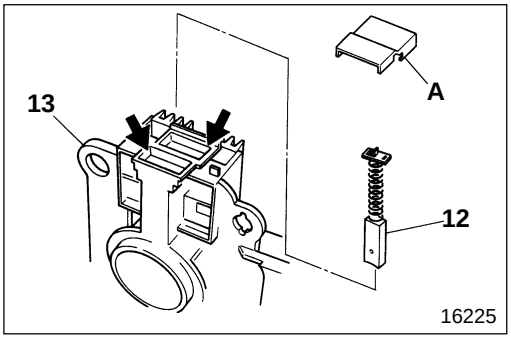

12 Brushes

[Removal]

Remove cover **A**, separate the soldered connection on the lead wire to brush **12** and remove brush from regulator and brush holder **13**.

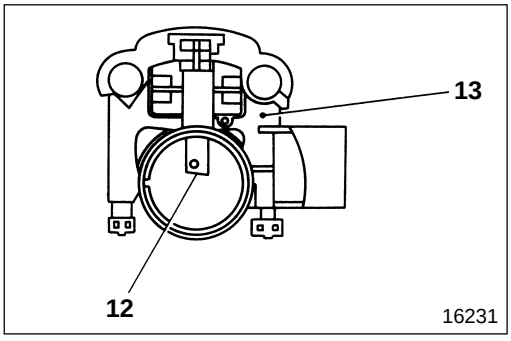

[Installation]

- Install brush **12** in regulator and brush holder **13** facing the direction indicated.
- After installation solder the lead wire to brush **12** onto regulator and brush holder **13**.
  Replace cover **A** to it's original position.

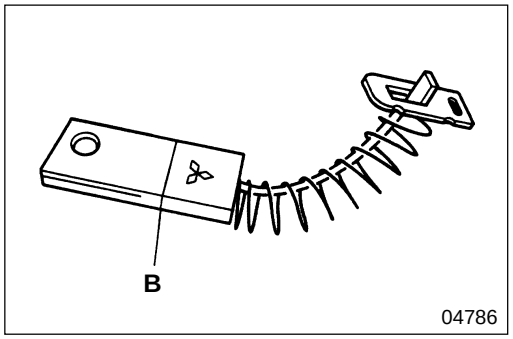

[Inspection]
If the length of brush **B** is approaching permissible wear line **B**, it must be replaced.

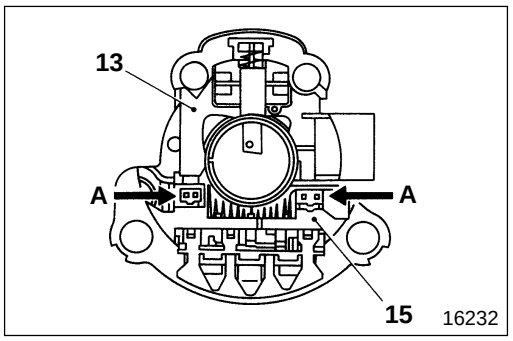

13 Removal of regulator and brush holder

- Disconnect regulator and brush holder **13** from the 2 soldered joints **A** on rectifier **15**, as illustrated.

CAUTION

When the soldered joints are removed, the operation must be performed quickly, (within 5 seconds.)
The diode may be damaged if heat is applied for long period.

- For installation, follow the removal sequence in reverse.

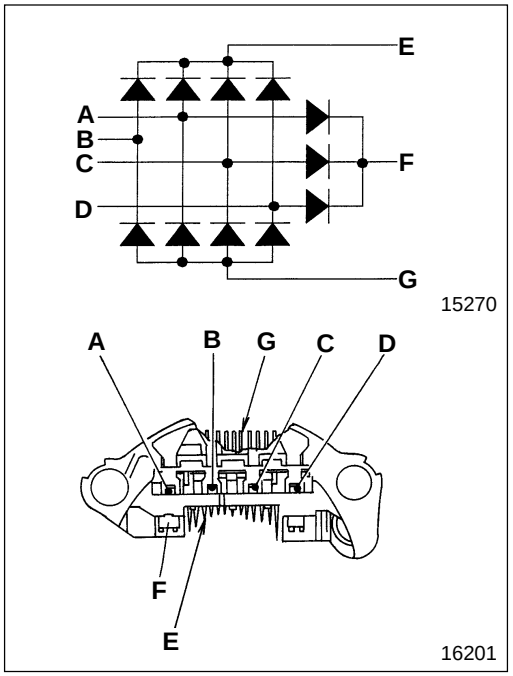

15 Inspection of rectifier

- Inspect whether the diode inside rectifier **15** functions properly, and if any fault is found, replace the rectifier.
  Resistance is infinite at both ends .....open
  Resistance is near 0 at both ends .....short-circuited
  A, **B**, **C**, **D** : Lead connecting area of stator coil
  E, **G** : Heat sink area
  F : Regulator connecting area
- Inspect the rectifier twice, before and after the ⊕ side and ⊖ side of the tester have been changed over.

CAUTION

When inspecting using a tester, the current becomes weaker than the usual current flowing through rectifier 15. Therefore, an incomplete resistance value might be indicated.
Also, this tendency increases as the range of the tester gets smaller. Therefore, use as large a range as possible.

M E M O

Meter Cluster Internal Circuit

This diagram only illustrates the internal circuits of FG meter cluster. Service information is same as for FE.

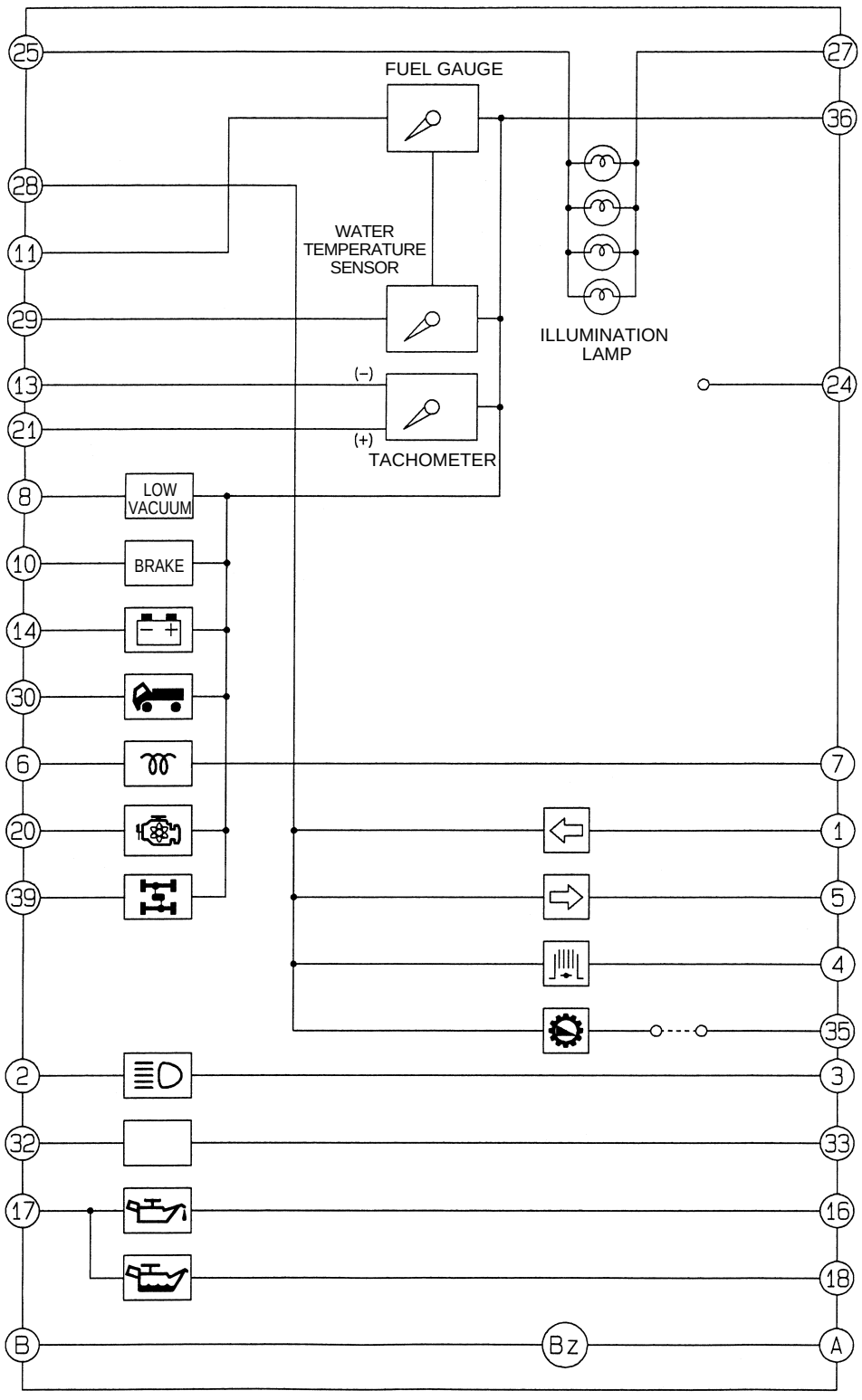

27005

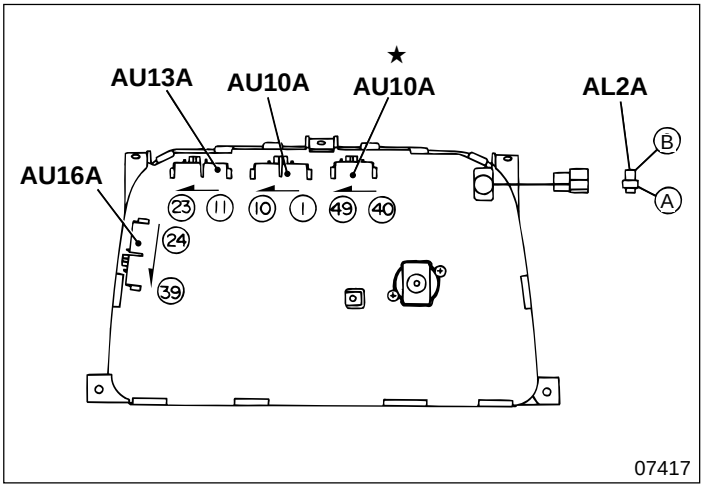

Terminal No.	AU10A
1	Turn, LH ⊕
2	Beam ⊖
3	Beam ⊕
4	Exhaust brake ⊕
5	Turn, RH ⊕
6	Glow ⊖
7	Glow ⊕
8	Vacuum ⊖
9	—
10	Brake ⊖

Terminal No.	AU13A
11	Fuel gauge ⊖
12	—
13	Tachometer ⊖
14	Charge ⊖
15	—
16	Engine oil ⊕
17	Engine oil ⊖
18	Engine oil level
19	—
20	Pre-stroke control ⊖
21	Tachometer ⊕
22	—
23	—

Terminal No.	AU16A
24	Tachograph ⊕ < optional >
25	Illumination ⊖
26	—
27	Illumination ⊕
28	Ground
29	Water temperature gauge ⊖
30	Cab tilt ⊖
31	—
32	(Power take-off)
33	(Power take-off)
34	—
35	Transfer low switch
36	Starter switch terminal M
37	—
38	—
39	Transfer four-wheel drive switch

★ Not used

Terminal No.	AU10A
40	—
41	—
42	—
43	—
44	—
45	—
46	—
47	—
48	—
49	—

Terminal No.	AL2A
A	Buzzer ⊕
B	Buzzer ⊖

A/T : Automatic transmission

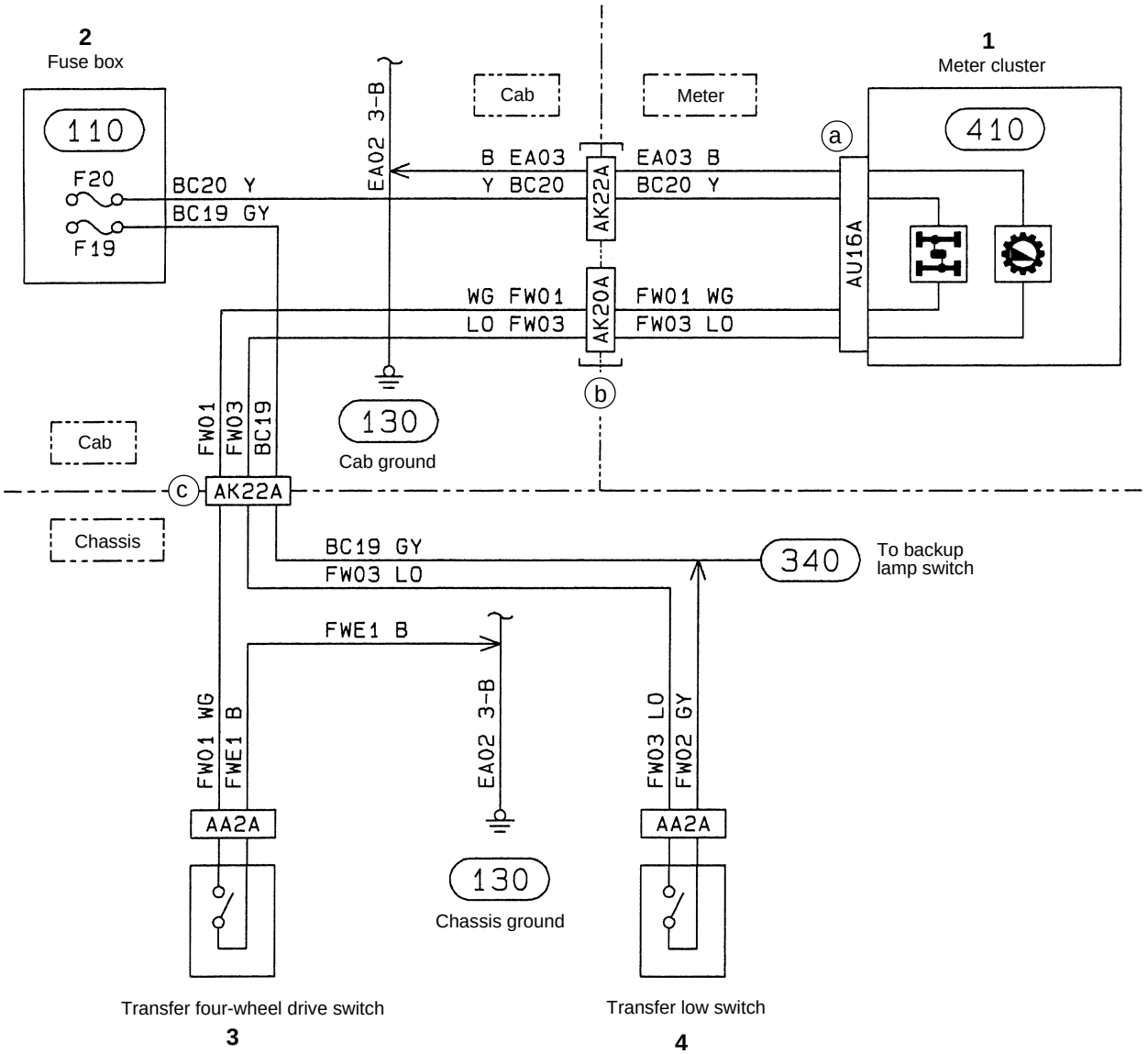
2
Fuse box
110
F20
F19
BC20 Y
BC19 GY
EA02 3-B
Cab
Meter
B EA03
Y BC20
EA03 B
BC20 Y
AK22A
1
Meter cluster
410
a
AU16A
WG FW01
LO FW03
FW01 WG
FW03 LO
AK20A
b
130
Cab ground
Cab
FW01
FW03
BC19
c
AK22A
Chassis
BC19 GY
FW03 LO
340
To backup lamp switch
FWE1 B
FW01 WG
FWE1 B
EA02 3-B
FW03 LO
FW02 GY
AA2A
AA2A
130
Chassis ground
Transfer four-wheel drive switch
3
Transfer low switch
4

26467

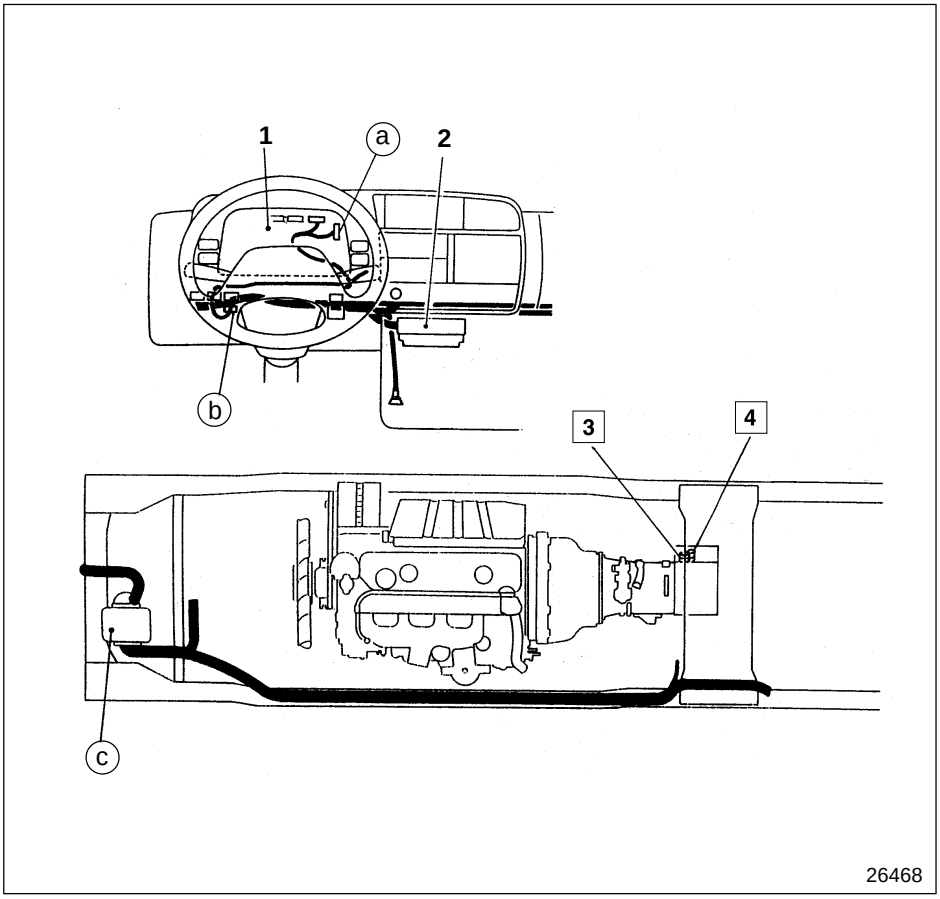

1 Meter cluster 📖 (401)
2 Fuse box 📖 (104)
3 Transfer low switch
4 Transfer four-wheel drive switch

◆ Service procedure

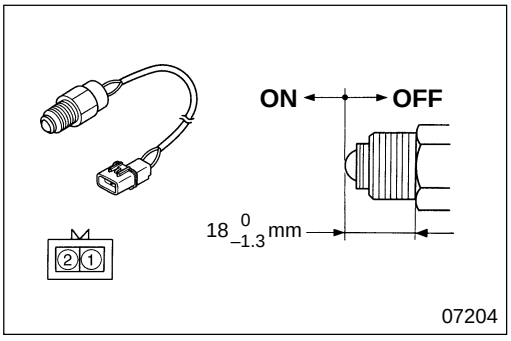

3 Inspection of transfer low switch

- Conduct the continuity test as following.

	①	②
OFF		
ON	○—○	

○—○ : There is continuity between terminals ○ and ○.

- If any fault is found, replace transfer low switch **3**. 📖 Gr 24

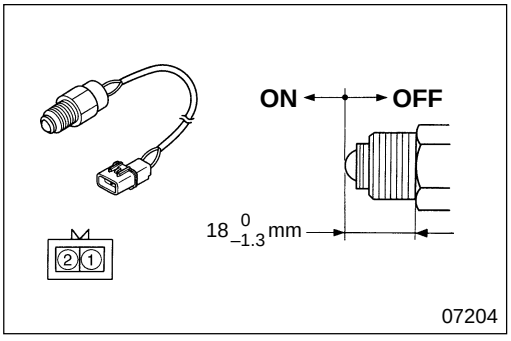

4 Inspection of transfer four-wheel drive switch

- Conduct the continuity test as following.

	①	②
OFF		
ON	○—○	

○—○ : There is continuity between terminals ○ and ○.

- If any fault is found, replace transfer four-wheel drive switch **4**. 📖 Gr 24

MITSUBISHI
FUSO

FE

Service Manual

Group 54
Electrical

Table of Contents

BACK

HOME

MITSUBISHI FUSO TRUCK OF AMERICA, Inc.

Pub No. TWSE9501-54

GROUP 54 ELECTRICAL

1 POWER, CHARGING AND GROUND

SPECIFICATIONS 54-1-2

STRUCTURE AND OPERATION 54-1-3

TROUBLESHOOTING 54-1-6

(100) INSPECTION AND ADJUSTMENT MOUNTED IN VEHICLE
- Inspection of Alternator 54-1-8
- Inspection of Regulator 54-1-9

(101) BATTERY 54-1-10

(104) FUSE 54-1-14

(106) ALTERNATOR 54-1-16

(110) POWER CIRCUIT 54-1-22

(115) RESERVE POWER CIRCUIT 54-1-32

(125) BATTERY CHARGING CIRCUIT 54-1-34

(130) GROUND 54-1-36

2 STARTING, PREHEATING, AND STOPPING ENGINE

SPECIFICATIONS 54-2-2

STRUCTURE AND OPERATION 54-2-3

TROUBLESHOOTING 54-2-10

(200) INSPECTION AND ADJUSTMENT MOUNTED IN VEHICLE
Inspection of Engine Preheating System ... 54-2-12

(201) STARTER 54-2-13

(210) ENGINE STARTING CIRCUIT
< Manual Transmission > 54-2-26
< Automatic Transmission > 54-2-30

(212) SUB-STARTER CIRCUIT
< Manual Transmission > 54-2-34
< Automatic Transmission > 54-2-36

(215) ENGINE STOPPING CIRCUIT 54-2-38

(220) ENGINE PREHEATING CIRCUIT 54-2-42

(225) ENGINE WARMING UP CIRCUIT 54-2-46

3 LIGHTING

SPECIFICATIONS 54-3-2

STRUCTURE AND OPERATION 54-3-4

TROUBLESHOOTING 54-3-6

(300) INSPECTION AND ADJUSTMENT MOUNTED IN VEHICLE
Headlamp Aiming 54-3-8

(310) HEADLAMP CIRCUIT 54-3-10

(320) TAIL LAMP, CLEARANCE LAMP AND LICENSE PLATE LAMP CIRCUITS 54-3-12

(325) STOP LAMP CIRCUIT 54-3-14

(330) TURN SIGNAL LAMP AND HAZARD LAMP CIRCUITS 54-3-16

(340) BACKUP LAMP CIRCUIT
< Manual Transmission > 54-3-18
< Automatic Transmission > 54-3-22

(345) CAB LAMP CIRCUIT 54-3-26

(348) ILLUMINATION LAMP CIRCUIT 54-3-30

(349) MARKER LAMP AND IDENTIFICATION LAMP CIRCUITS 54-3-32

(352) VAN BODY DOME LIGHT CIRCUIT 54-3-34

4 METER

SPECIFICATIONS 54-4-2

TROUBLESHOOTING 54-4-3

(401) METER CLUSTER 54-4-4

(410) TACHOMETER CIRCUIT 54-4-10

(420) FUEL GAUGE CIRCUIT 54-4-12

(425) WATER TEMPERATURE GAUGE CIRCUIT 54-4-16

5 INDICATOR AND WARNING

TROUBLESHOOTING 54-5-2

(500) INSPECTION AND ADJUSTMENT MOUNTED IN VEHICLE
- Inspection of Brake Fluid Level Switch .. 54-5-5

(510) PARKING BRAKE INDICATOR CIRCUIT [BRAKE] 54-5-6

(515) BRAKE WARNING CIRCUIT [LOW VACUUM] [BRAKE] 54-5-8

(535) ENGINE OIL LEVEL AND OIL PRESSURE WARNING CIRCUIT [] [] 54-5-12

(537) OVERHEATING WARNING CIRCUIT 54-5-14

(540) BRAKE PAD WARNING CIRCUIT [DISK BRAKE] 54-5-16

(550) CAB TILT WARNING CIRCUIT [] 54-5-20

6 CAB SIDE ELECTRICS

SPECIFICATIONS 54-6-2

TROUBLESHOOTING 54-6-2

(601) SWITCH 54-6-4

(604) RELAY AND CONTROL UNIT 54-6-8

(606) WARNING BUZZER 54-6-11

(610) CIGARETTE LIGHTER CIRCUIT 54-6-12

(612) AUDIO CIRCUIT 54-6-14

(614) WIPER AND WASHER CIRCUIT 54-6-16

(616) HORN CIRCUIT 54-6-20

(618) HEATER CIRCUIT 54-6-22

7 CHASSIS ELECTRICS

(701) MAGNETIC VALVE 54-7-2

(710) EXHAUST BRAKE CIRCUIT
< Manual Transmission > 54-7-4
< Automatic Transmission > 54-7-8

8 ENGINE AND TRANSMISSION ELECTRICS

(801) ENGINE ELECTRICS 54-8-2

(802) TRANSMISSION ELECTRICS 54-8-6

9 OTHERS

STRUCTURE AND OPERATION 54-9-2

(910) MULTIPURPOSE TIMING CONTROL UNIT CIRCUIT 54-9-8

Model (Number shows number of pins)		Connection
AA	AA 1 A	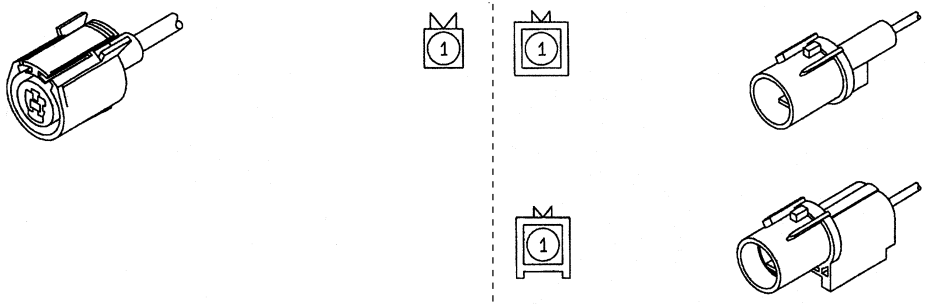
	AA 2 A	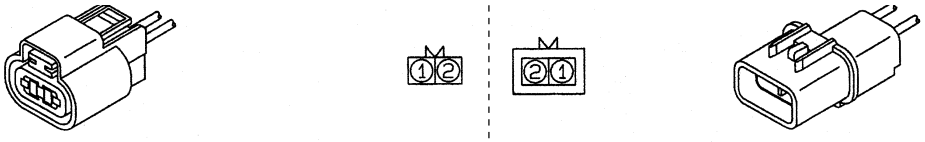
	AA 2 B	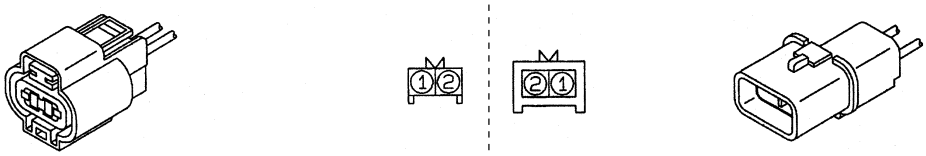
	AA 3 A	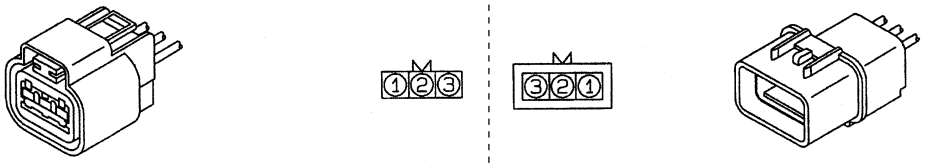
	AA 3 B	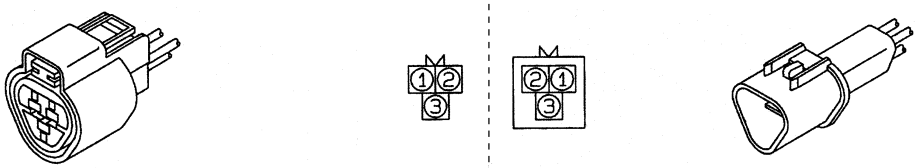
	AA 4 A	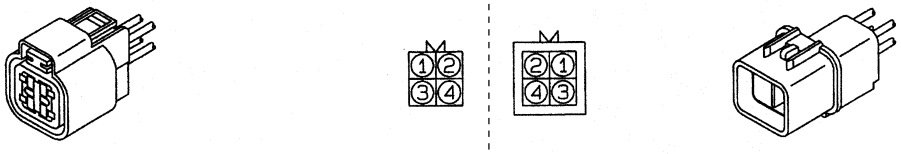
	AA 4 B	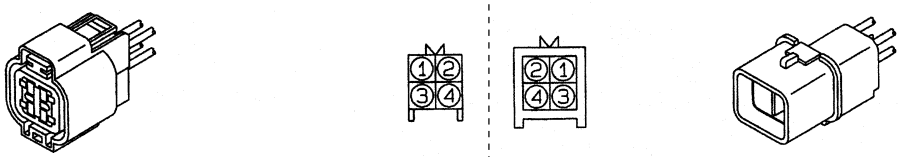
	AA 6 A	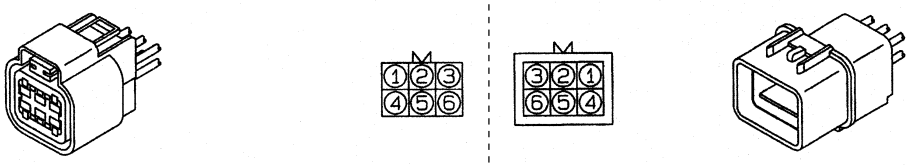

CONNECTOR CONFIGURATION CHART

Model (Number shows number of pins)		Connection			
AA	AA 6 B	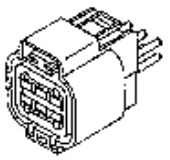		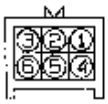	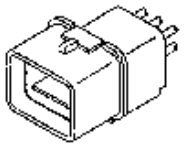
	AA 8 A	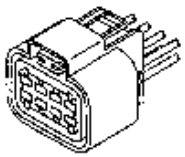	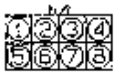	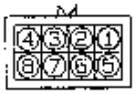	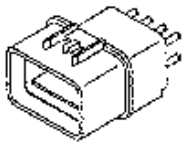
	AA10A	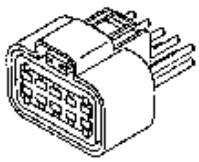		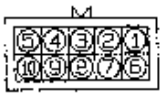	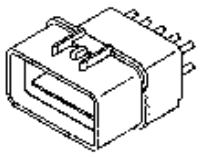
	AA12A	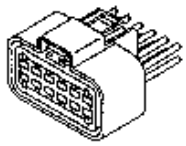			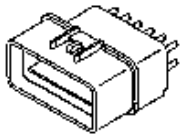
AB	AB 2 A		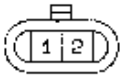	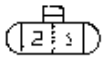	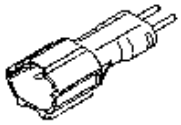
	AB 3 A	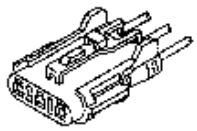	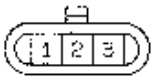	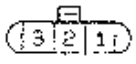	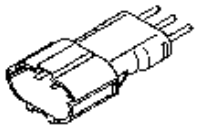
	AB 4 A	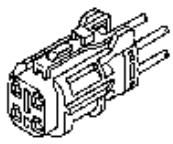	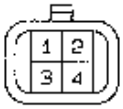	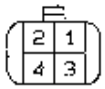	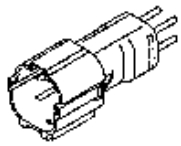
	AB 6 A	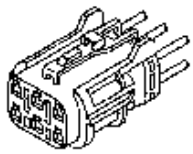	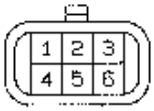		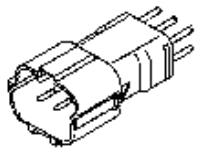
AC	AC 1 A	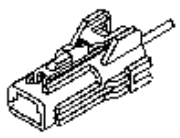			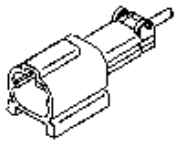

Model (Number shows number of pins)		Connection			
AC	AC 2 A	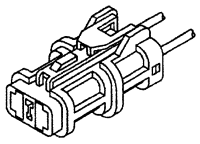			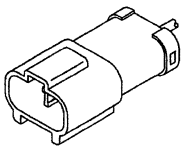
	AC 3 A	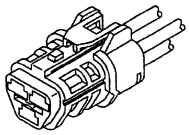		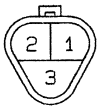	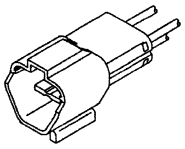
	AC 4 A	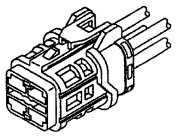	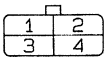	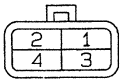	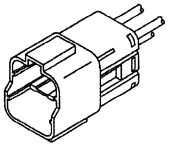
AD	AD 1 A	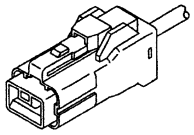			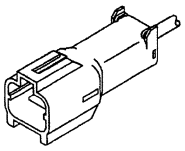
	AD 2 A	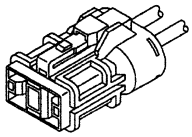	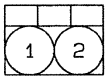	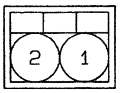	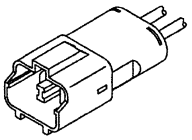
AE	AE 2 A	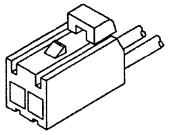			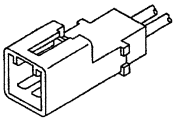
	AE 3 A	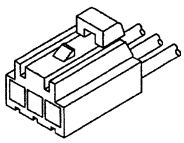	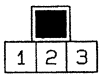	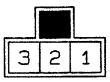	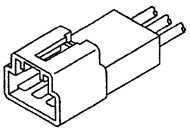
	AE 5 A	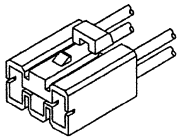	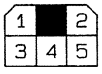	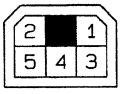	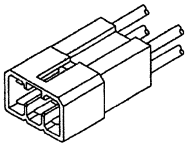
	AE 7 A	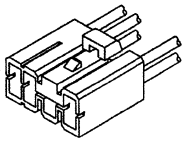		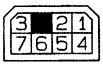	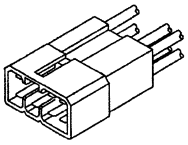

CONNECTOR CONFIGURATION CHART

Model (Number shows number of pins)		Connection			
AE	AE 9 A	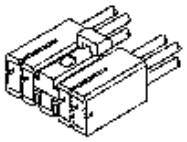		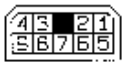	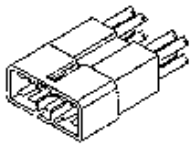
	AE11A	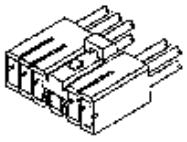	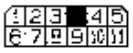	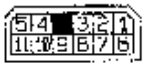	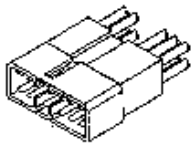
	AE13A	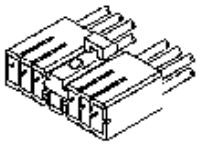			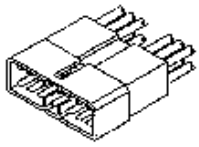
	AE15A	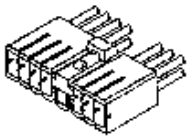	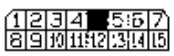		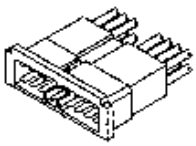
	AE16A (White, Gray, Black)	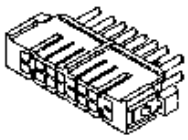	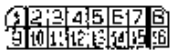	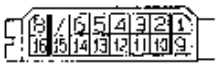	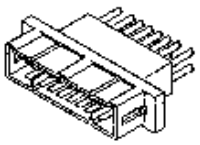
	AE16B (Green)	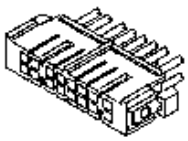	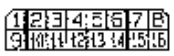		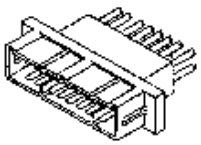
	AE16C (Blue)	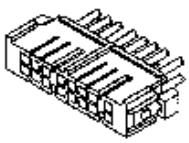	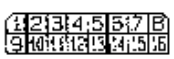	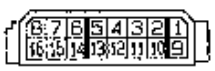	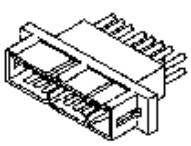
	AE17A	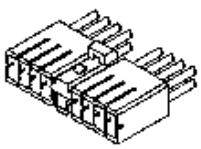			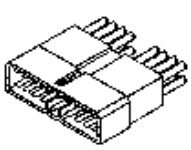
AG	AG16A	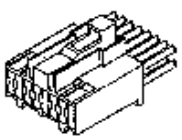	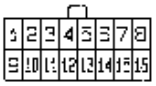		

Model (Number shows number of pins)		Connection
AG	AG20A	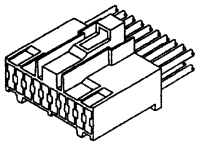 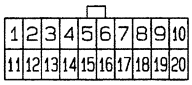
AH	AH10A	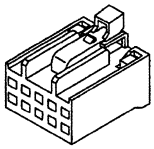 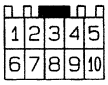 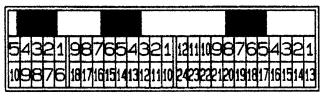 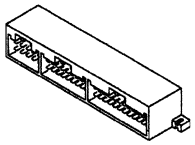
	AH12A	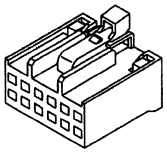 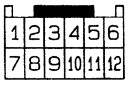 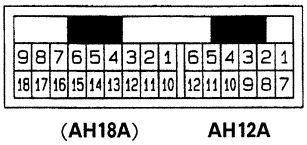 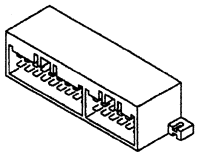
	AH18A	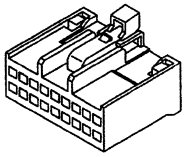 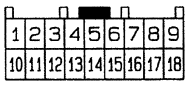 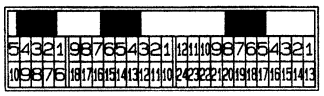 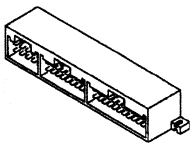
	AH18B	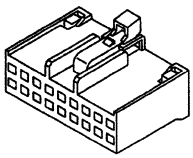 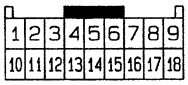 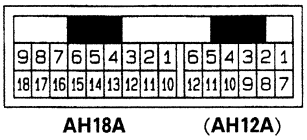 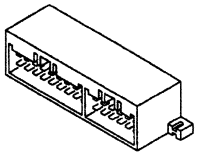

CONNECTOR CONFIGURATION CHART

Model (Number shows number of pins)		Connection
AH	AH24A	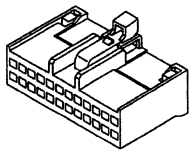 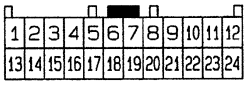 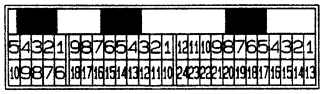 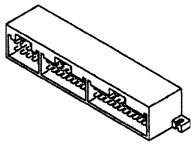
AJ	AJ 2 A	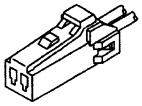   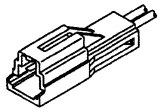
	AJ 4 A	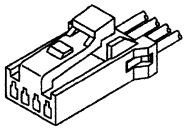  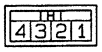 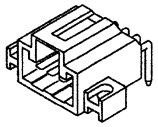
	AJ 8 A	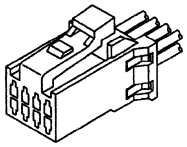  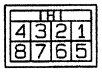 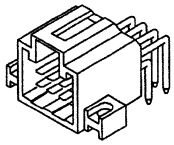
	AJ10A	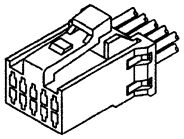 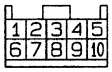 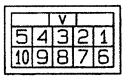 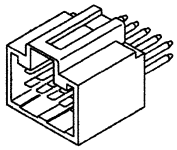 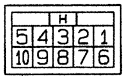 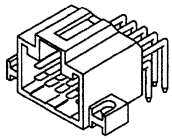
	AJ12A	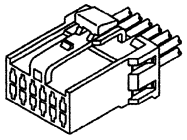 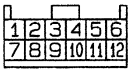 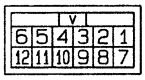 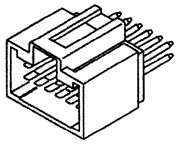 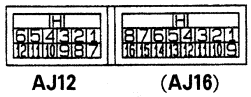 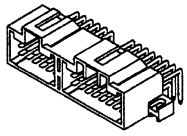

Model (Number shows number of pins)		Connection
AJ	AJ16A	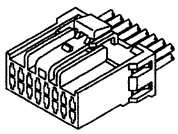 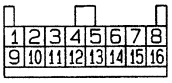 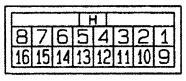 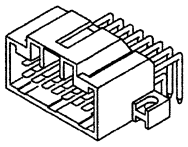 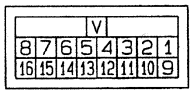 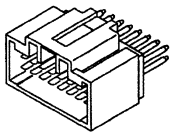 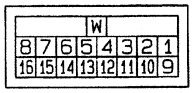 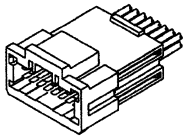 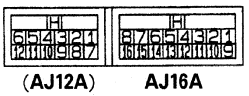 (AJ12A) AJ16A 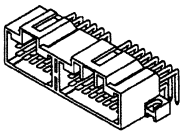 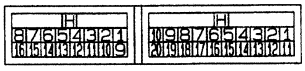 AJ16A (AJ20A) 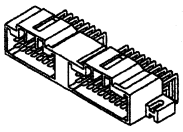

CONNECTOR CONFIGURATION CHART

Model (Number shows number of pins)		Connection
AJ	AJ20A	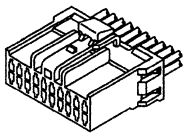 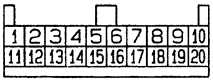 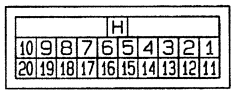 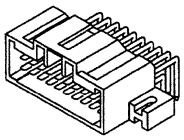 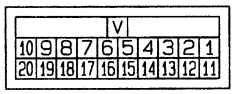 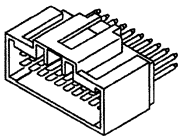 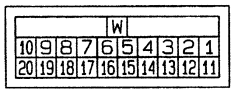 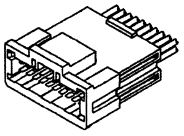 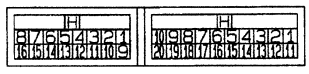 (AJ16A) AJ20A 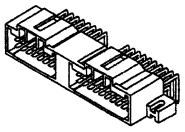
AK	AK 2 A	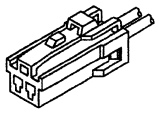   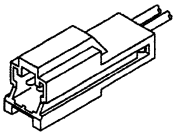
	AK 3 A	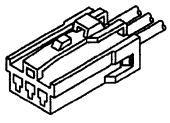   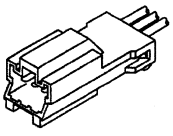
	AK 4 A	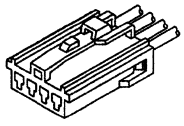   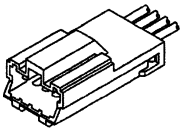
	AK 6 A	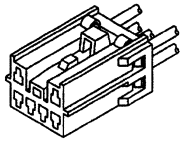   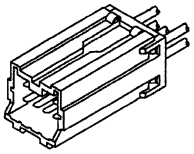

Model (Number shows number of pins)		Connection
AK	AK 8 A	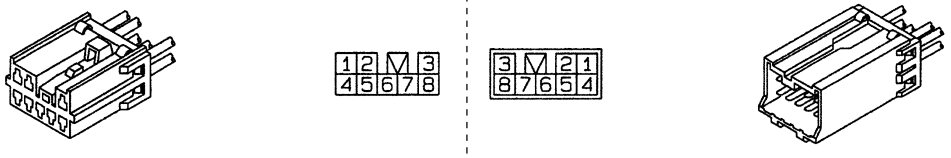
	AK10A	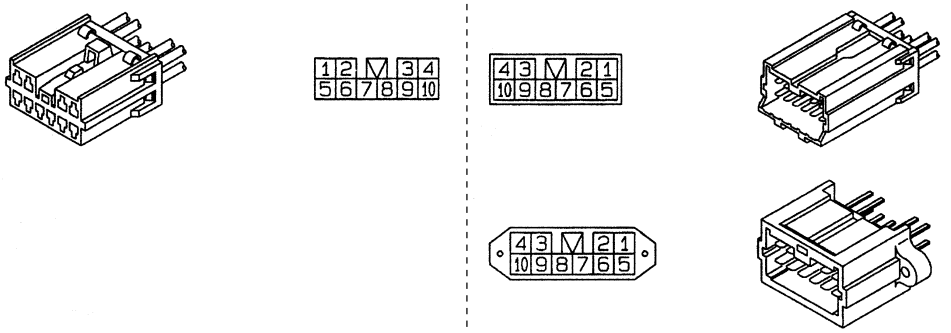
	AK14A	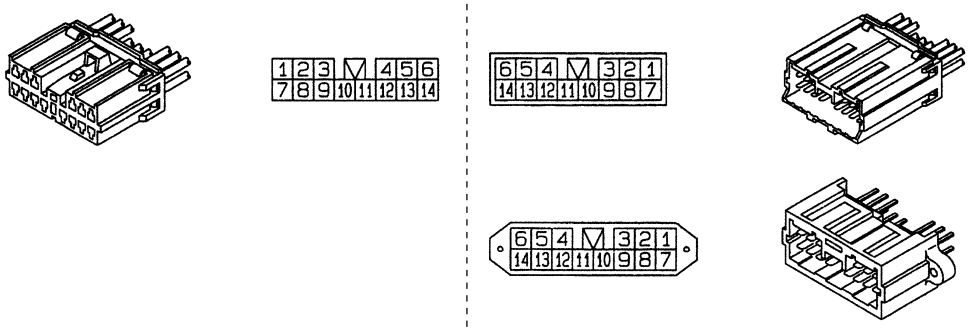
	AK18A	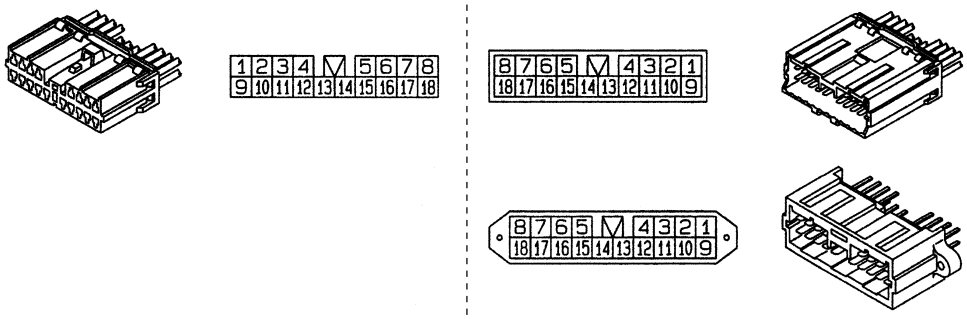
	AK20A	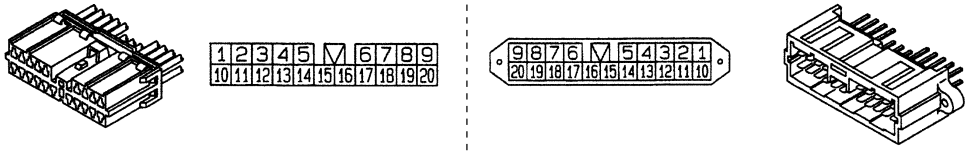

CONNECTOR CONFIGURATION CHART

Model (Number shows number of pins)		Connection
AK	AK20B	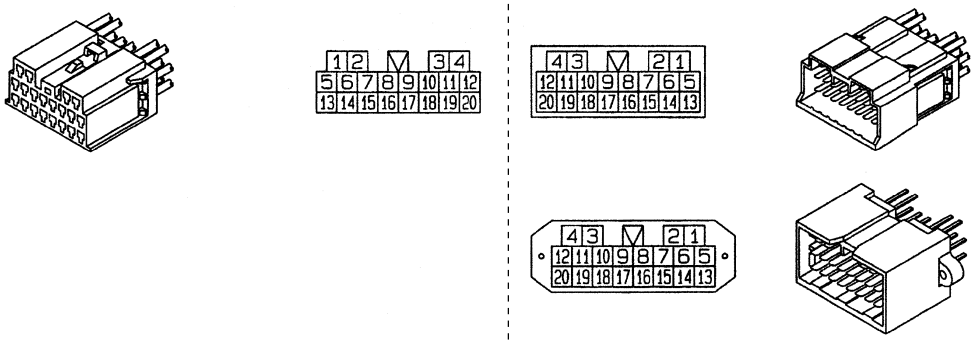
	AK22A	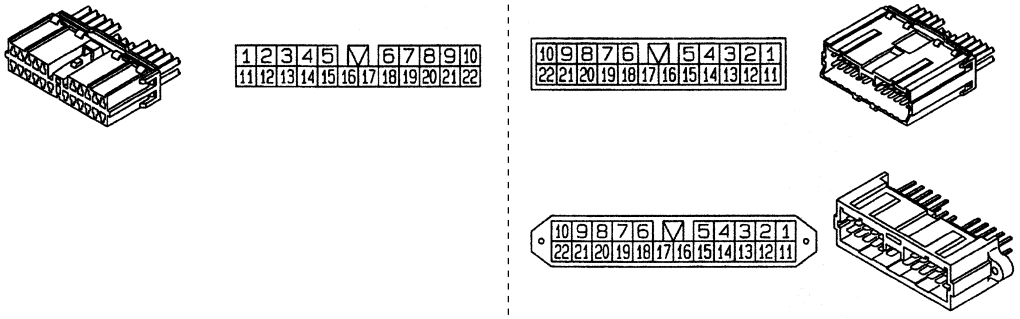
	AK22B	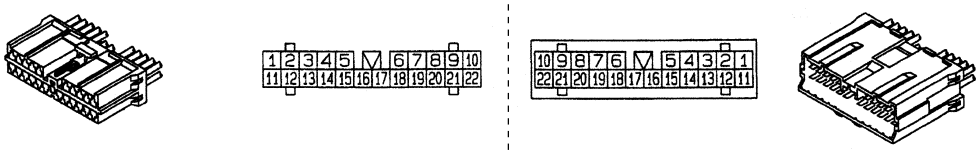
AL	AL 1 A	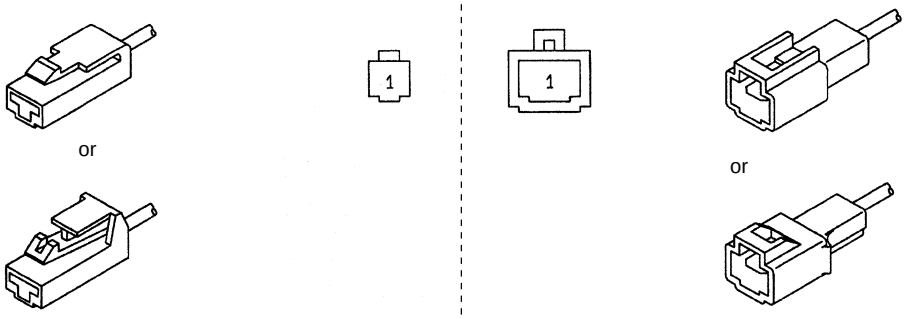
	AL 2 A	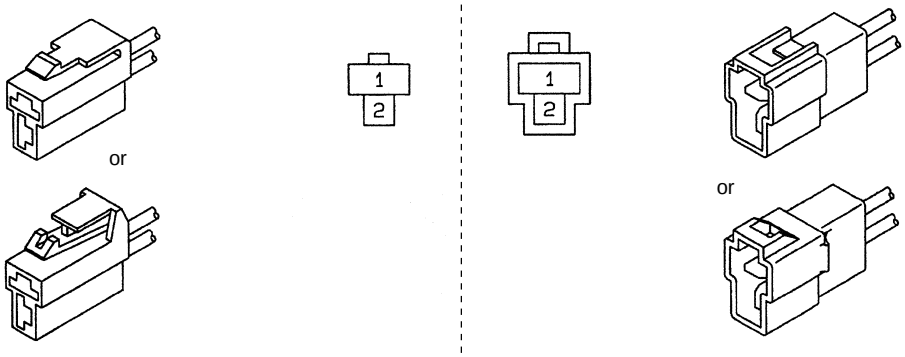

Model (Number shows number of pins)		Connection
AL	AL 2 B	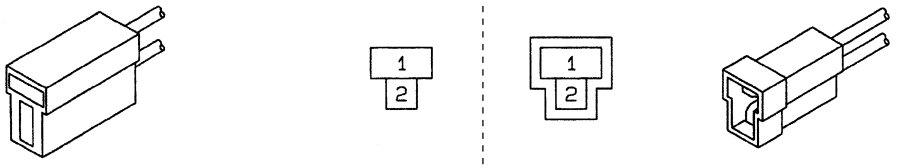
	AL 3 A	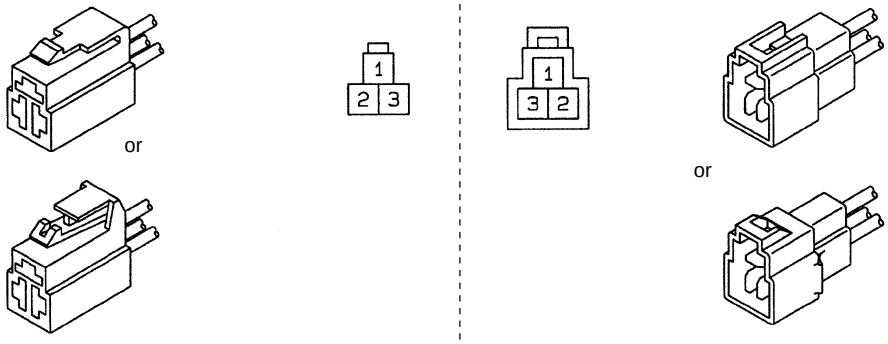
	AL 3 B	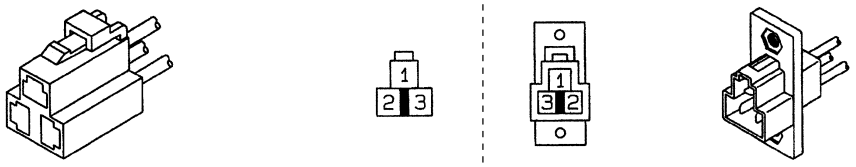
	AL 3 C	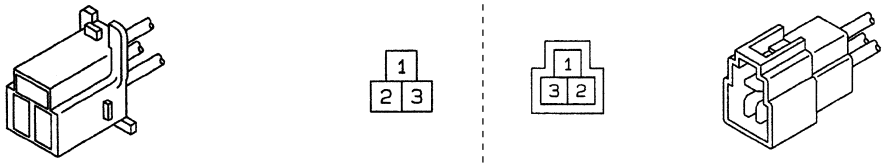
	AL 3 D	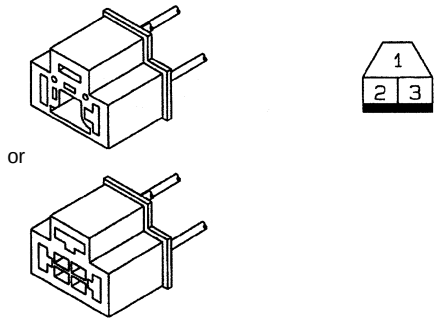
	AL 3 E	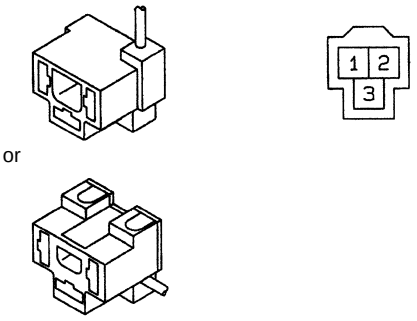

CONNECTOR CONFIGURATION CHART

Model (Number shows number of pins)		Connection	
AL	AL 4 A	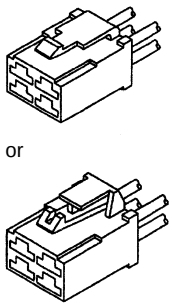	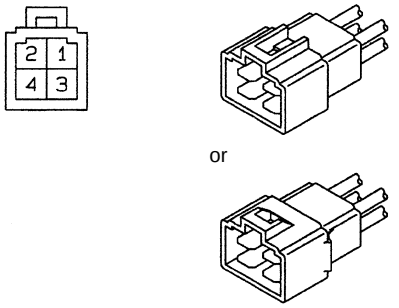
	AL 4 B	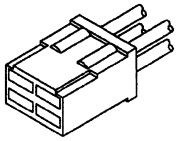	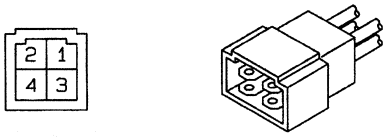
	AL 6 A	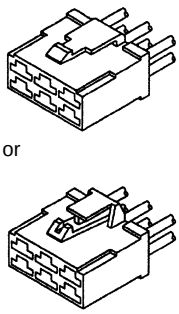	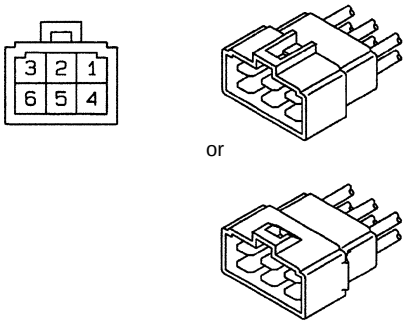
	AL 6 B	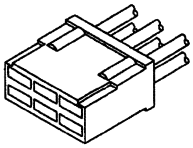	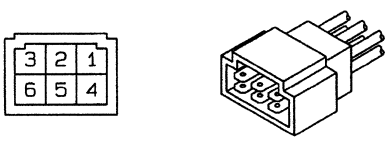
	AL 8 A	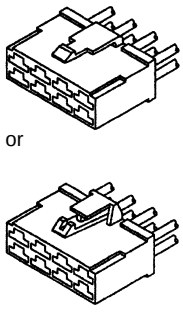	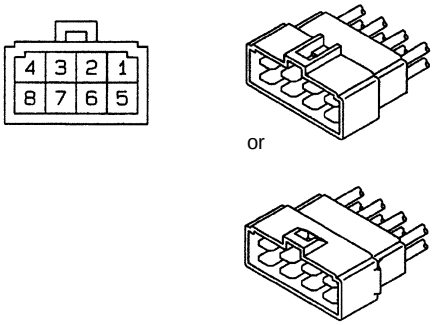
	AL 8 B	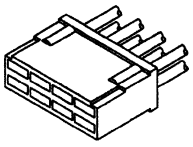	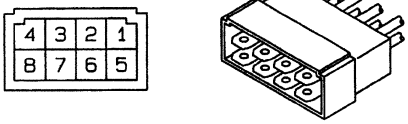

Model (Number shows number of pins)		Connection
AM	AM 2 A	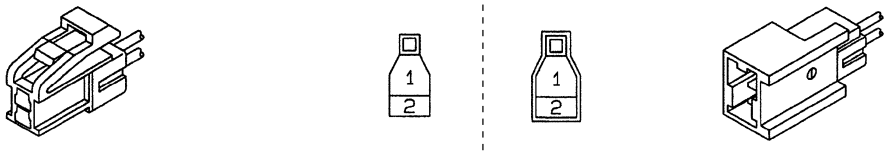
	AM 2 B	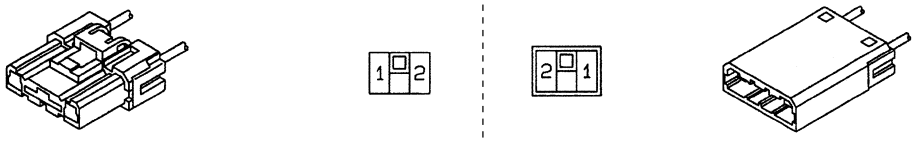
	AM 2 C	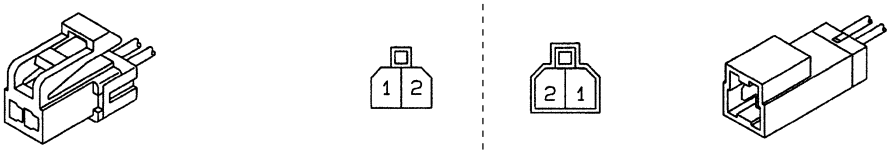
	AM 4 A	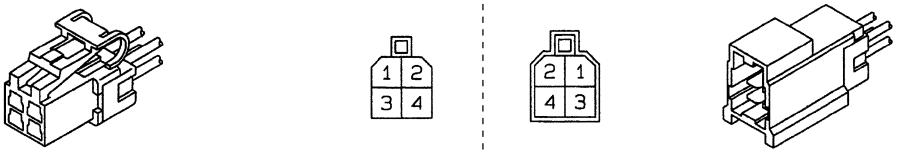
	AM 4 B	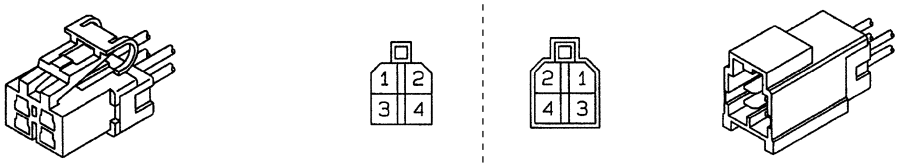
	AM 6 A	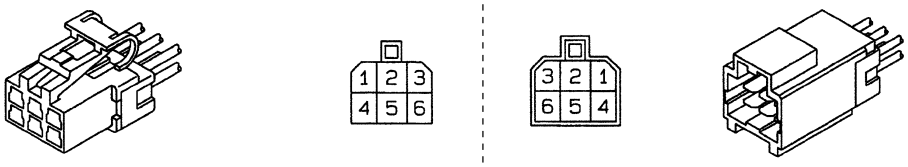
	AM 6 B	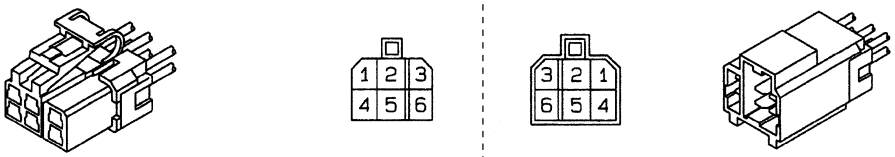
	AM 8 A	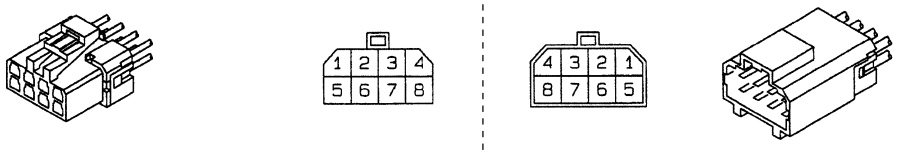
	AM 8 B	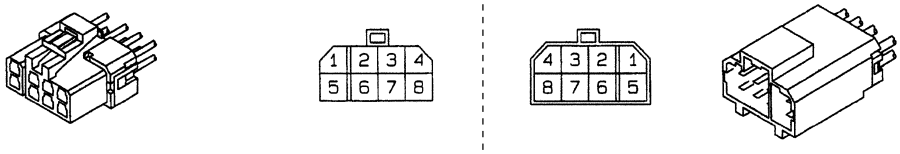

CONNECTOR CONFIGURATION CHART

Model (Number shows number of pins)		Connection			
AM	AM10A	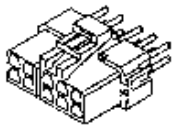	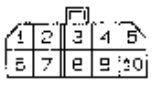	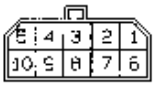	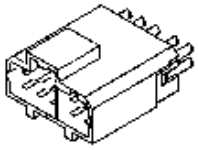
AN	AN 1 A	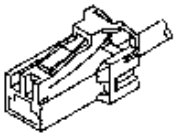			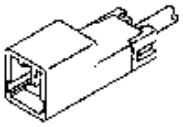
	AN 2 A	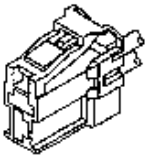			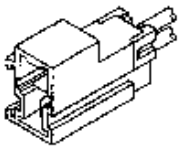
	AN 3 A	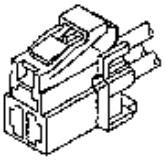	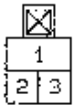	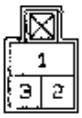	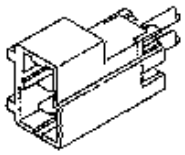
	AN 4 A	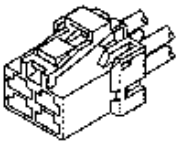	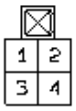	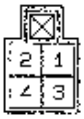	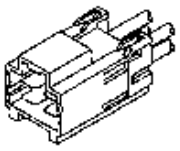
	AN 4 B	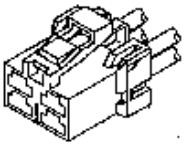	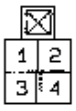	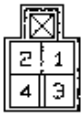	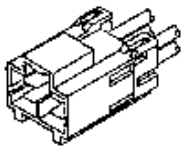
	AN 6 A	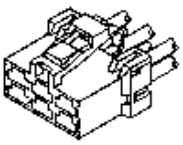	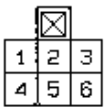	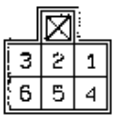	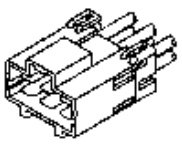
	AN 6 B	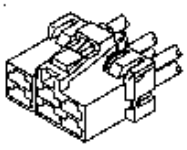	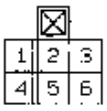		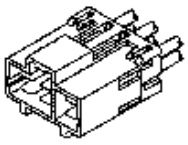
	AN 8 A	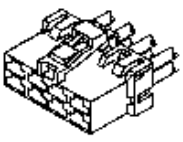	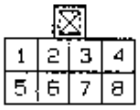	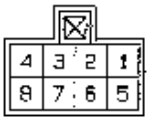	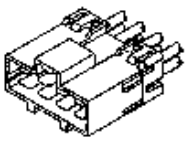

Model (Number shows number of pins)		Connection			
AN	AN 8 B	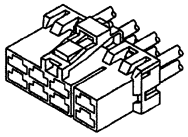	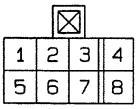	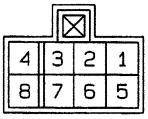	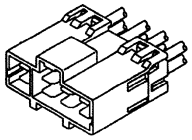
AP	AP 1 A	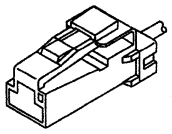	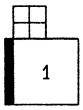	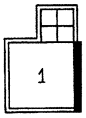	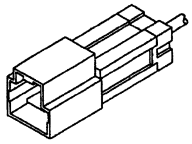
	AP 1 B	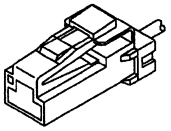	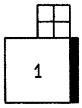	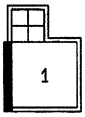	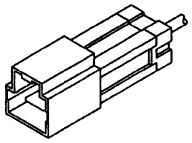
	AP 2 A	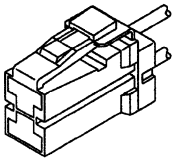	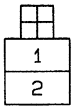	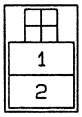	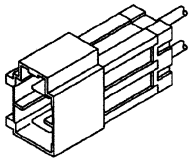
	AP 2 B	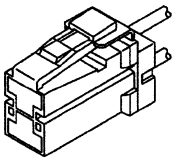	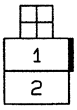	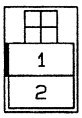	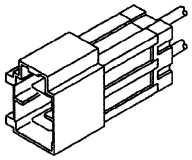
	AP 2 C	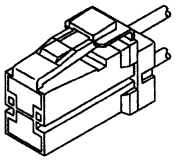	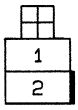	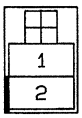	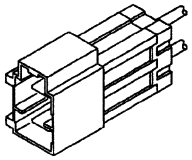
AQ	AQ 3 A	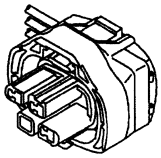			
	AQ 3 B	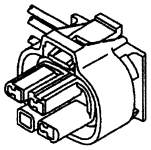			
	AQ13A	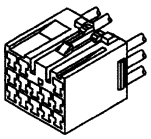	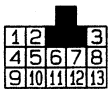	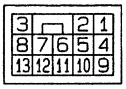	

CONNECTOR CONFIGURATION CHART

Model (Number shows number of pins)		Connection
AQ	AQ15A	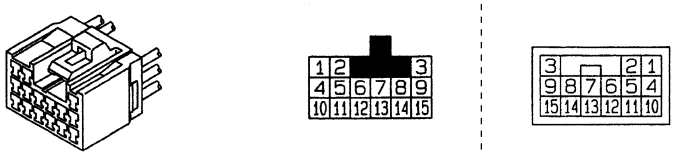
	AQ20A	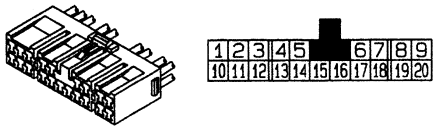
AR	AR 2 A	
	AR 2 B	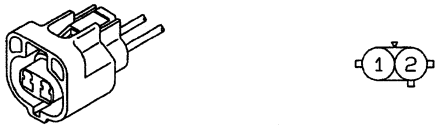
	AR 2 C	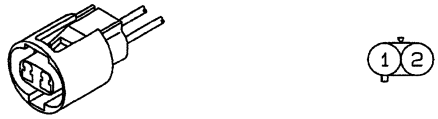
	AR 2 D	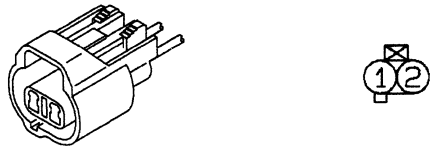
	AR 2 E	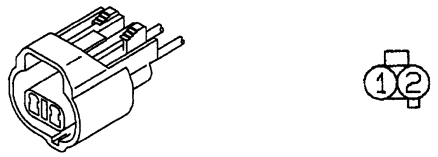
	AR 2 F	

Model (Number shows number of pins)		Connection
AR	AR 3 A	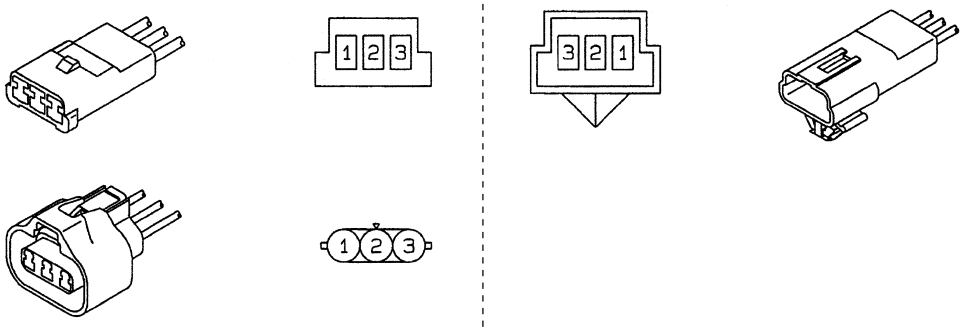
AS	AS 1 A	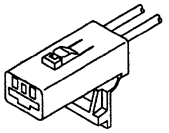
	AS 2 A	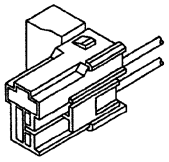
	AS 2 B	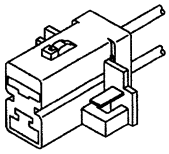
AT	AT 4 A	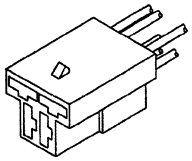
AU	AU 6 A	
	AU 8 A	
	AU10A	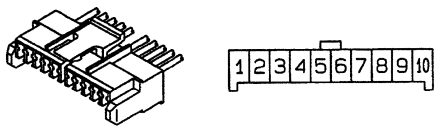

CONNECTOR CONFIGURATION CHART

Model (Number shows number of pins)		Connection
AU	AU12A	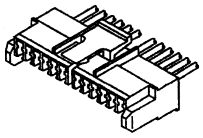 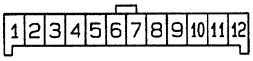
	AU13A	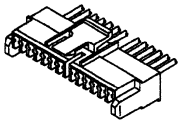 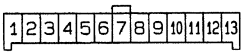
	AU16A	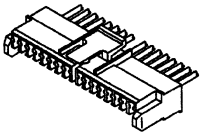 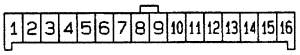
AV	AV 1 A	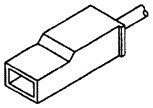 
	AV 2 A	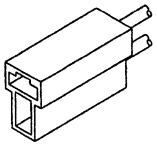 
AW	AW 1 A	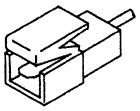   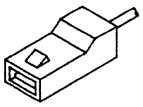
	AW 1 B	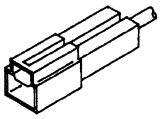   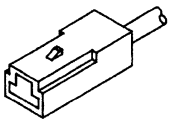
	AW 2 A	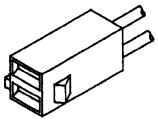   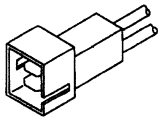
AX	AX 4 A	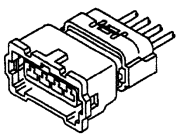  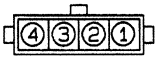 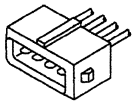

Model (Number shows number of pins)		Connection			
AY	AY 2 A	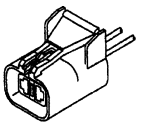			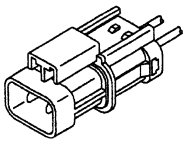
AZ	AZ 2 A	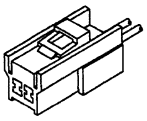			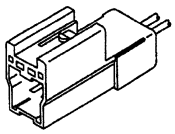
BA	BA 3 A	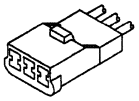	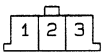	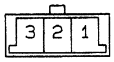	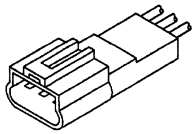
BB	BB 2 A	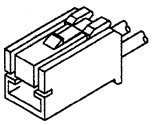			
	BB 3 A	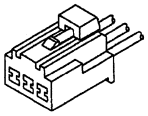	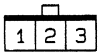	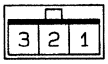	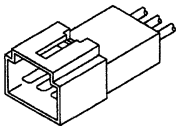
BC	BC 3 A	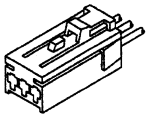	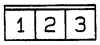	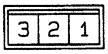	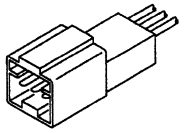
BD	BD 8 A	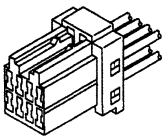	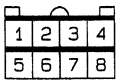	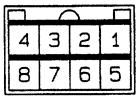	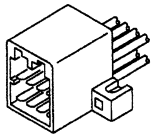
BE	BE 6 A				
BF	BF12A	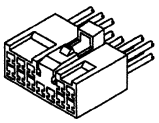	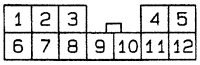	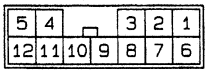	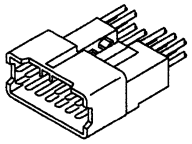

CONNECTOR CONFIGURATION CHART

Model (Number shows number of pins)		Connection	
BG	BG16A	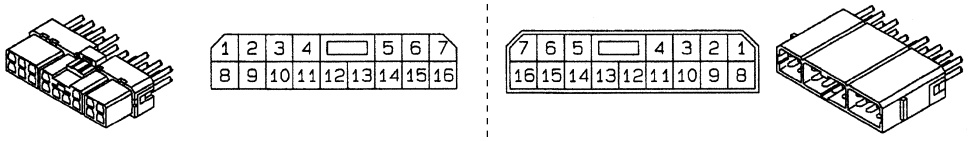	
BH	BH 4 A	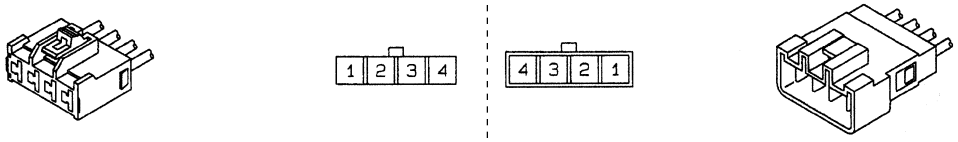	
BJ	BJ 9 A	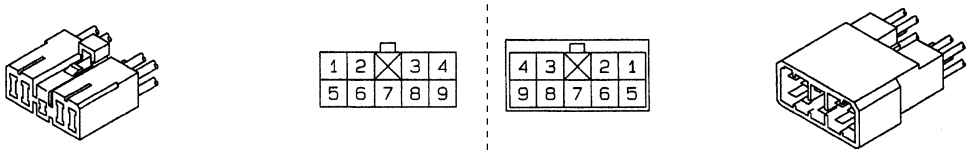	
BL	BL 2 A	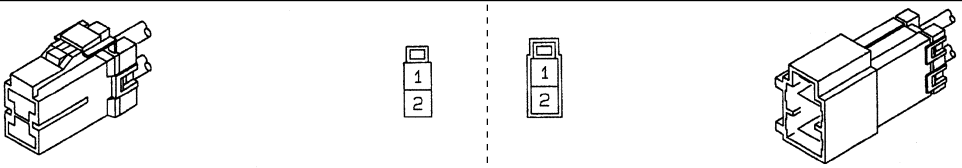	
BM	BM 2 A	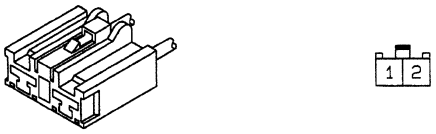	
	BM 2 B		
	BM 2 C		

1 POWER, CHARGING AND GROUND

SPECIFICATIONS 54-1-2

STRUCTURE AND OPERATION 54-1-3

TROUBLESHOOTING 54-1-6

100 INSPECTION AND ADJUSTMENT MOUNTED IN VEHICLE
- Inspection of Alternator 54-1-8
- Inspection of Regulator 54-1-9

101 BATTERY 54-1-10

104 FUSE 54-1-14

106 ALTERNATOR 54-1-16

110 POWER CIRCUIT 54-1-22

115 RESERVE POWER CIRCUIT 54-1-32

125 BATTERY CHARGING CIRCUIT 54-1-34

130 GROUND 54-1-36

SPECIFICATIONS

Battery

Item		Specifications
Model		95D31R
Voltage×No.	V	12×2 (Parallel connection)
Capacity (5-hour rating)	Ah	70

Alternator

Item		Specifications
Manufacturer		MITSUBISHI ELECTRIC
Type		Alternator with built-in regulator (without brush, external fan)
Model		A4TU0088
Output	V-A	12–80

Alternator

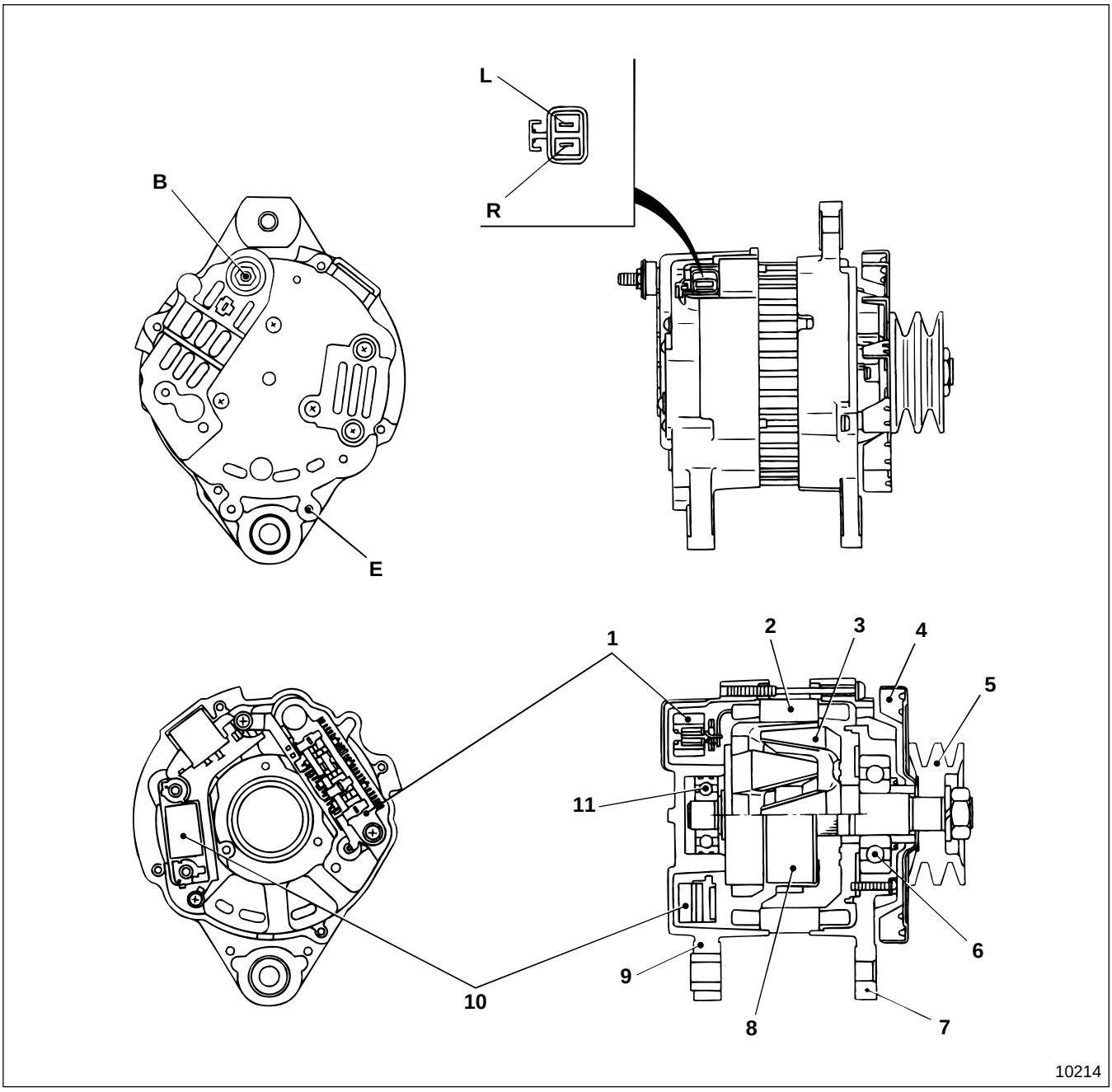

1 Rectifier
2 Stator assembly
3 Rotor assembly
4 Fan
5 Pulley
6 Front bearing
7 Front bracket
8 Field coil
9 Rear bracket
10 Regulator
11 Rear bearing

B : Terminal B
E : Terminal E
L : Terminal L
R : Terminal R

Battery Charging Circuit

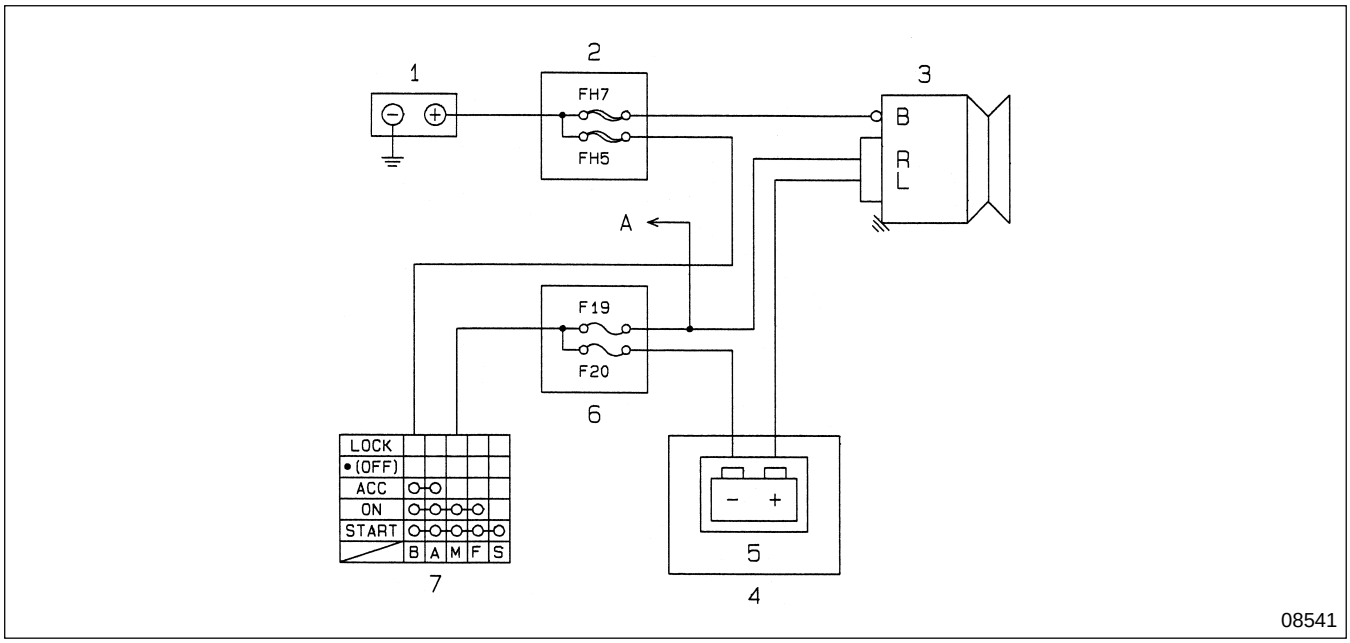

1 Battery
2 High-current fuse box
3 Alternator
4 Meter cluster
5 Charge warning lamp
6 Fuse box
7 Starter switch

A : To each unit
B : Terminal B
L : Terminal L
R : Terminal R

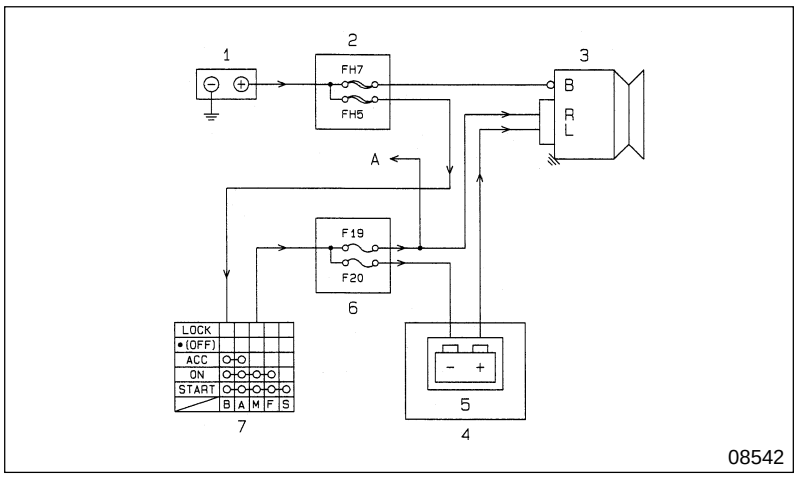

At engine standstill (before starting)

Position of starter switch **7** : ON

- 1→2 (FH5)→7→6 (F19)
  →6 (F20)
  →3 (R→Body ground)
  →5→3 (L→Body ground)

- Charge warning lamp **5** lights up.
  To improve the low-speed power generation build-up performance of alternator **3**, current is fed to terminal **R** immediately after the engine is started.

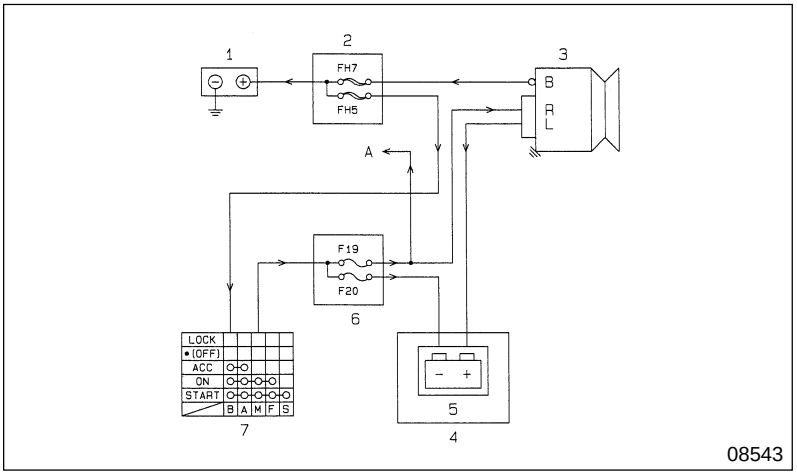

After engine start-up

Position of starter switch **7** : ON

- Alternator **3** starts to generate power.
- The voltage at terminal **B** of alternator **3** rises higher than the voltage of battery **1**.
- As alternator **3** starts to charge battery **1**, units **A** are supplied with power.
  3(B)→2(FH7)→1→Ground
  →(FH5)→7→6(F19)→A
- Since there is no electric potential difference between the output voltage of terminal **L** of alternator **3** and the voltage of battery **1**, charge warning lamp **5** goes off.

TROUBLESHOOTING

Possible causes \ Symptoms		Battery electrolyte decreases too early	Battery overheating	Battery is normal but discharged	Charge warning lamp [-+] does not light when turning starter switch ON, with engine stopped	Alternator is normal but battery discharged	Remarks
Connector connection faulty, harness broken, grounding faulty				○		○	
Fuse blown				○	○	○	
V-belts loose				○		○	Gr 14
V-belts damaged				○		○	Gr 14
Battery faulty		○				○	
Alternator	Stator coil broken			○			
	Stator coil short-circuited with core			○			
	Field coil broken			○			
	Rectifier faulty			○			
	Regulator faulty		○	○	○		
	Wiring faulty			○			
Meter cluster faulty					○		

M E M O

Inspection of Alternator

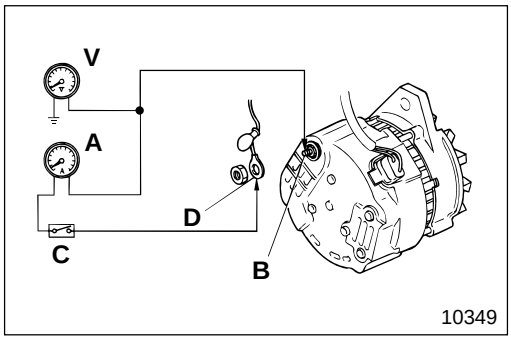

Performance test

- Connect the meters to the alternator as illustrated.
  A : Ammeter (100 amperes class)
  B : Terminal B on alternator
  C : Switch
  D : Terminal
  V : Voltmeter

WARNING

- **Terminal D is always loaded with voltage from the battery.**
- **You must handle terminal D carefully, it will short-circuit if it touches any part other than terminal B on the alternator.**

- Turn switch **C** ON to supply battery voltage to terminal **B** on the alternator.
- Start the engine.
- Turn the switches ON of all the lamps on the vehicle immediately.
- Measure the current when the engine speed reaches approximately 2260 rpm.
- The alternator is assumed to be normal if the measured value is higher than 70% of the specified output.

Specified output of alternator

Alternator model	Voltage	Output
A4TU0088	12 V	80 A

NOTE

Since the above inspection is only a simplified check, it is necessary to conduct a stringent test bench for an official check.
P54-1-17

Inspection of Regulator

Service standards

Location	Maintenance item	Standard value	Limit	Remedy
—	Adjustment voltage of regulator	14.7±0.3 V	—	Replace

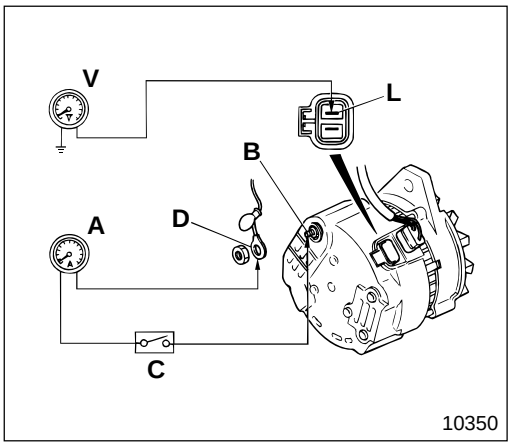

- Connect the meters to the alternator as illustrated.
  A : Ammeter (100 amperes class)
  B : Terminal B on alternator
  C : Switch
  D : Terminal
  L : Terminal L on alternator
  V : Voltmeter

WARNING⚠

- **Terminal D is always loaded with voltage from the battery.**
- **You must handle terminal D carefully, it will short-circuit if it touches any part other than terminal B on the alternator.**

- Turn switch **C** ON and make sure that voltmeter **V** indicates 0 volt.
- If the needle of voltmeter **V** oscillates, something is wrong with the alternator or the wiring.
- Turn switch **C** OFF and start the engine.

CAUTION⚠

Do not start the engine with switch C turned ON because the starter current will flow into ammeter A and damage it.

- If the charge current is five amperes or less and the engine speed is approximately 2260 rpm, measure the adjustment voltage.
- If the charge voltage is five amperes or more, do one of the following :
  - Run the engine for a while to charge the battery.
  - Replace the old battery with a fully-charged one.
  - Connect a 1/4 Ω (25 W) resistor in series with the battery to limit the charge current.
- If the measured value deviates from the standard value, change the regulators.

101 BATTERY

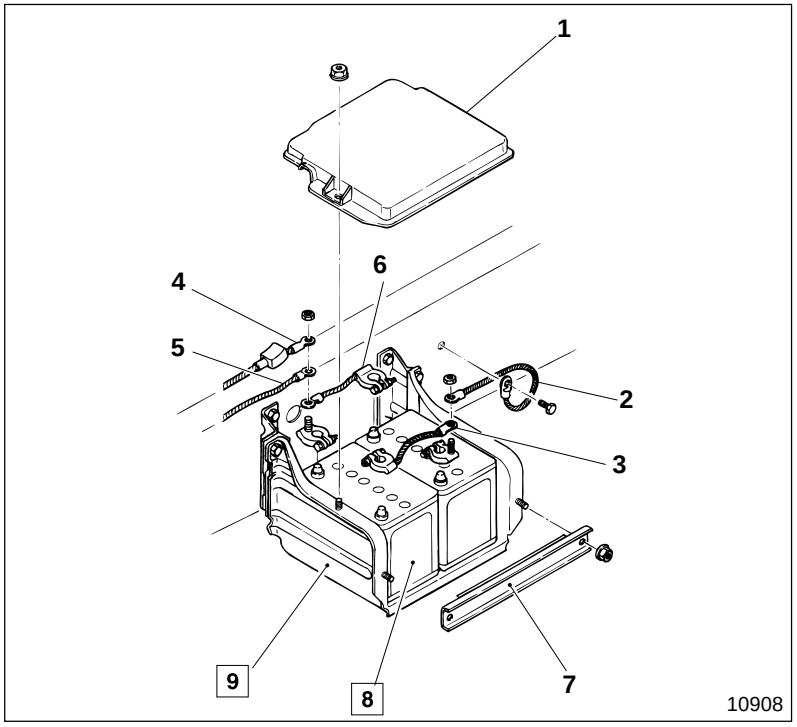

● **Removal sequence**

1 Battery cover
2 Ground cable
3 Battery cable ⊖
4 Starter cable
5 Chassis harness
6 Battery cable ⊕
7 Battery side cover
8 Battery
9 Battery box

● **Installation sequence**

Follow the removal sequence in reverse.

DANGER⚠

- **Since flammable hydrogen gas is generated by battery 8, be sure to obey the following warnings :**
  - **Do not short-circuit the ⊕ and ⊖ terminals on the battery.**
  - **Keep sparks and lit cigarettes away from the battery.**
  - **Do not wear metal objects on your arms and lean over battery 8.**
- **Because the battery electrolyte is diluted sulfuric acid and is corrosive, when handling battery 8 wear safety glasses and rubber gloves to protect the eyes and hands.**

WARNING⚠

To prevent a short-circuit be sure that disconnected battery cables 3 and 6 do not accidentally touch the battery terminals.

CAUTION⚠

- **Make sure that you disconnect battery cable ⊖ 3 first when you disconnect battery cables 3 and 6.**
- **Make sure that all electrical switches of the vehicle are OFF before connecting battery cables 3 and 6.**
- **Make sure that you connect battery cable ⊕ 6 before you connect battery cable ⊖ 3.**

◆ Service procedure

8 Inspection of battery

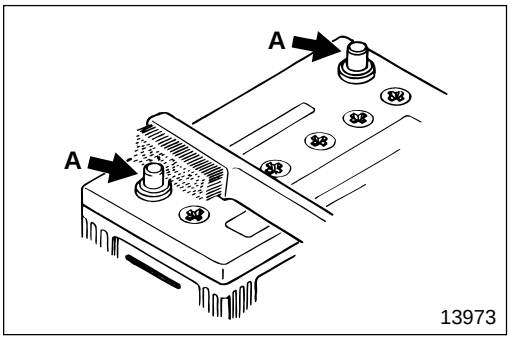

(1) Visual inspection

- If terminal **A** is corroded, scrub off the corrosion from it using a wire brush.
- If cracks or defects are found on battery **8**, replace it since the cracks or defects can cause liquid spills.

CAUTION⚠

Make sure you grease the ⊕ side of terminal A because it is easily corroded.

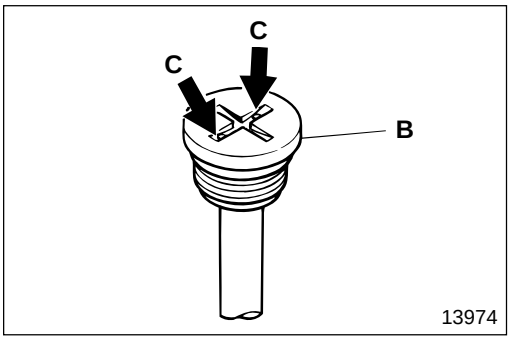

- If bleed hole **C** of vent plug **B** is clogged, clean the hole.

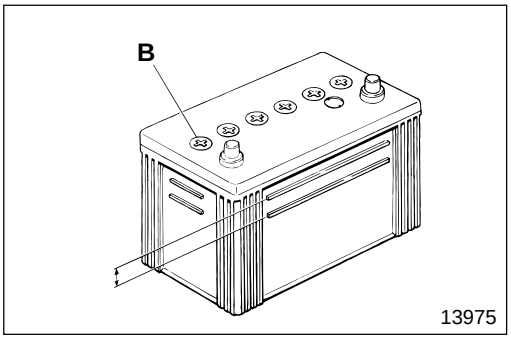

(2) Inspection of fluid level

- Make sure that the battery electrolyte level is between UPPER and LOWER.
- If the level is below LOWER, remove vent plug **B** and fill the battery with distilled water or battery replenisher to UPPER.

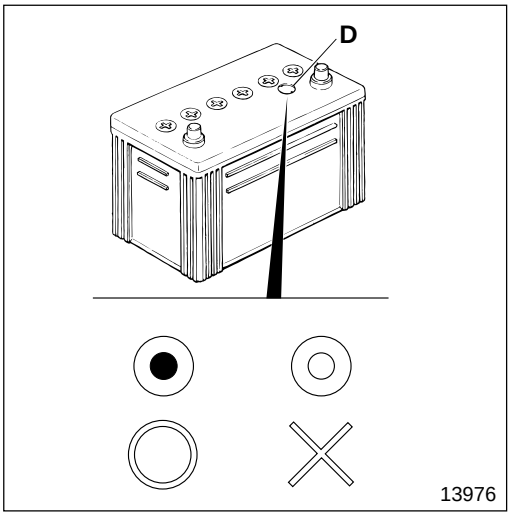

(3) Measurement of specific gravity

You can tell the specific gravity of the battery electrolyte by the color shown in indicator **D**.

Blue : Good
White : Charge or replace

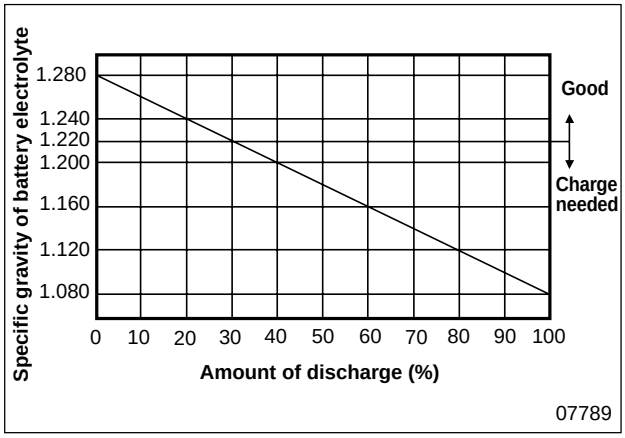

(4) Charging

- Although, as a rule, charging of battery **8** should be done with the battery removed from the vehicle, if you have to charge the battery while it is on the vehicle, make sure that you stop the engine and disconnect battery cable ⊖ **3**.
- Remove vent plug **B** before charging the battery.
- For the recommended charge time and current, see the following table to avoid overcharging.

	Charge current (A)	Charge time (H)	Upper limit of fluid temperature (°C {°F})
Normal charge	Value of 5-hour rating capacity / 10 {113}	*Amount of discharge (Ah) / Charge current (A) ×1.2(to 1.5)	45
Quick charge	Value of 5-hour rating capacity / 1.5 {131}	0.5	55

* Amount of discharge (Ah)=5-hour rating capacity (Ah)× Amount of discharge (%) / 100

- Use the graph shown on the left to calculate the amount of discharge (%).
- Use diluted sulfuric acid, made up of sulfuric acid and refined or distilled water, as the battery electrolyte.
- The specific gravity of fully-charged battery electrolyte is 1.280 with the temperature at 20°C {68°F}.

DANGER⚠

- **Do not let the battery electrolyte level rise and overflow while charging the battery.**
- **Keep naked lights away from the battery while charging it or it might explode.**
- **Be careful not to generate sparks while charging the battery because its dangerous.**
- **After charging the battery, tighten vent plug B, wash away sulfuric acid from the battery using water, and dry the surface.**

9 Inspection of battery box

- If battery box **9** is corroded, scrub off the corrosion from it using a wire brush and apply acid resistant coating.
- If battery box **9** is corroded excessively or if it is broken or cracked, replace it.

M E M O

Installation Position

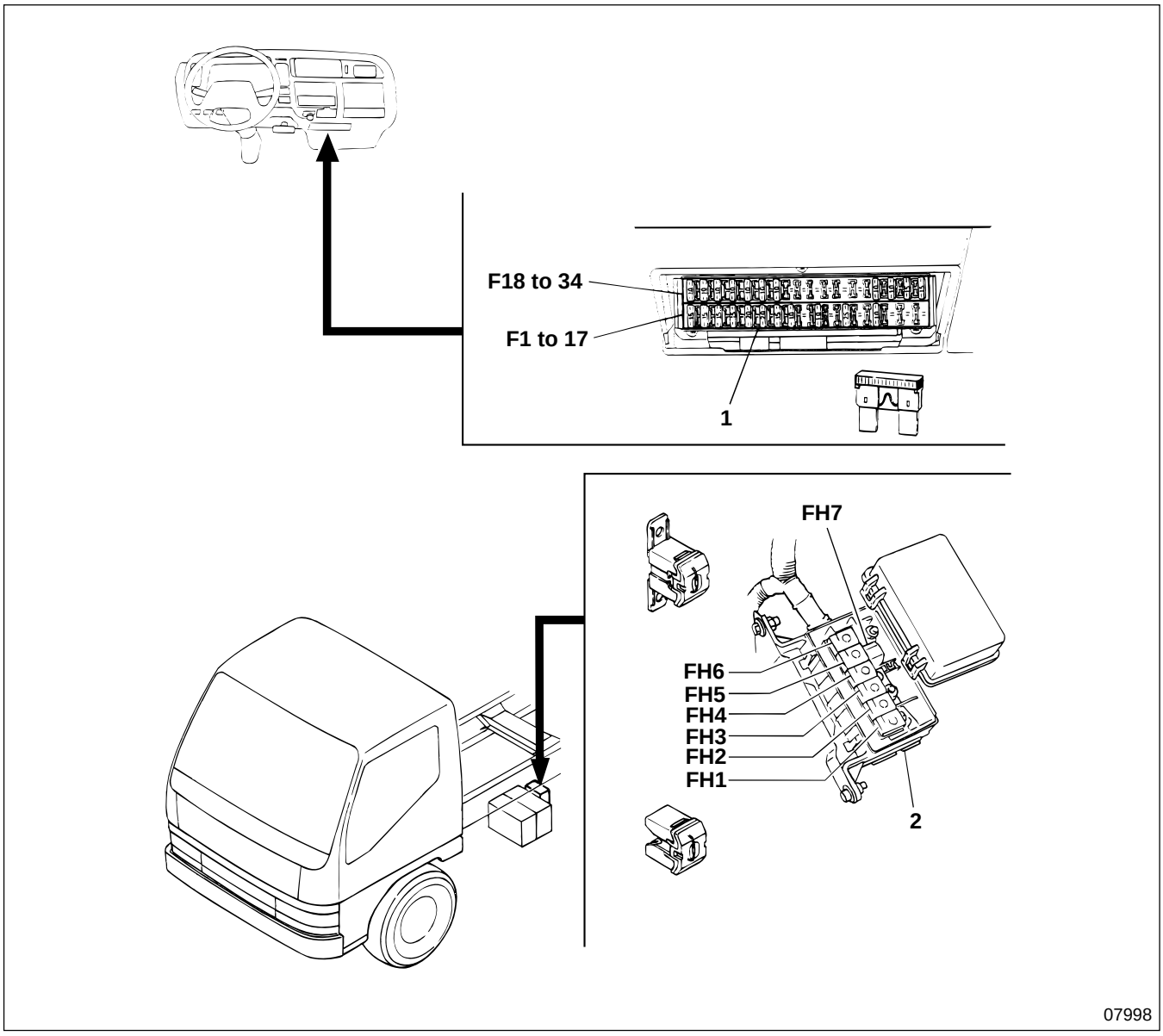

1 Fuse box
2 High-current fuse box

CAUTION

- **If a fuse blows, make sure you identify and remedy the cause, then replace the fuse.**
- **Make sure that you replace the fuse with one having the same rating.**
- **Make sure that you remove the ⊖ terminal of the battery cable before removing high-current fuses FH1 to 7.** 101

High-current fuse box

Fuse No.	Main load	Capacity
FH1	Fuse box (F1 to F4)	50 A
FH2	Fuse box (F5 to F7)	50 A
FH3	—	—
FH4	—	—
FH5	Starter switch (Terminal B)	50 A
FH6	Fuse box (F32 to F34)	50 A
FH7	Alternator	100 A

Fuse box

Fuse No.	Main load	Capacity
F1	Headlamp, LH	15 A
F2	Headlamp, RH	15 A
F3	Stop lamp, horn	15 A
F4	Turn signal lamp, pre-stroke control unit (Memory clear switch)	15 A
F5	Fuel-cut motor	10 A
F6	Cab lamp	10 A
F7	Reserve power (BATT)	10 A
F8	—	—
F9	—	—
F10	Automatic transmission control unit (Memory clear switch)	15 A
F11	—	—
F12	—	—
F13	Cigarette lighter	15 A
F14	Radio	10 A
F15	Reserve power (ACC)	10 A
F16	—	—
F17	Fuel-cut relay	10 A

Fuse No.	Main load	Capacity
F18	Transmission neutral relay < Manual transmission > Inhibitor switch < Automatic transmission >	10 A
F19	Backup lamp	10 A
F20	Meter cluster	10 A
F21	Wiper	10 A
F22	Reserve power (MAIN)	10 A
F23	Automatic transmission control unit	10 A
F24	Automatic transmission control unit	10 A
F25	Pre-stroke cut relay	15 A
F26	—	—
F27	Exhaust brake	10 A
F28	—	—
F29	—	—
F30	—	—
F31	—	—
F32	* Condenser fan	15 A
F33	Blower fan	25 A
F34	Tail lamp	15 A

* : Fuses are provided for these pieces of equipment only where they are installed.

NOTE

Fuses F4, F10 are also parts of the electric power circuit used to memorize the diagnostic codes that are transmitted if the electrical controlling system (Pre-stroke control injection pump, automatic transmission) malfunctions.

106 ALTERNATOR

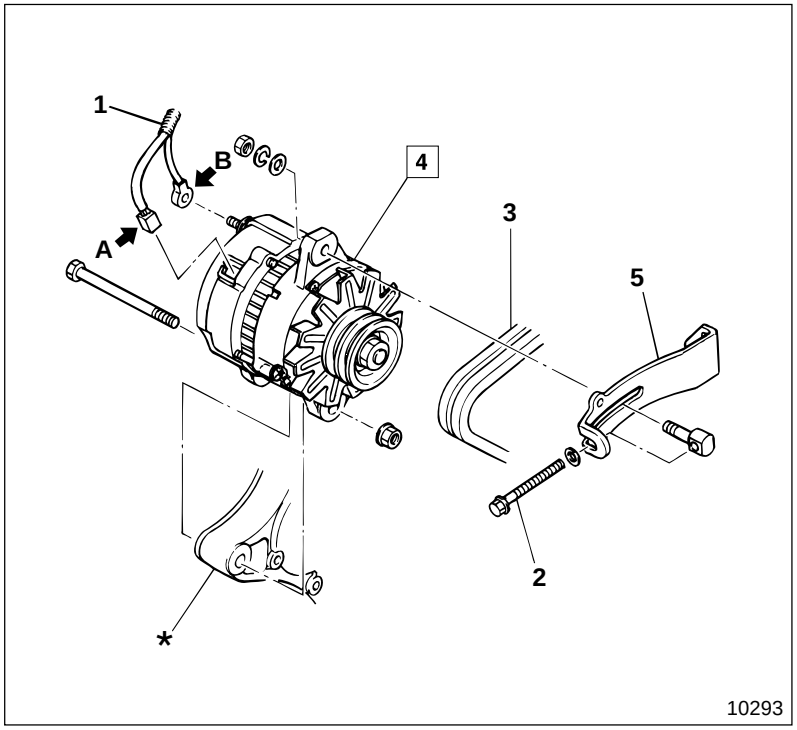

● **Removal sequence**

1 Chassis harness
2 Adjusting bolt
3 V-belts
4 Alternator 📖 P54-1-18
5 Adjusting plate

***** : Timing gear case and front plate Gr 11
A : To terminals L and R
B : To terminal B

WARNING ⚠

- **Terminal B is always loaded with voltage from the battery, supplied via chassis harness 1. Therefore when you remove the harness from terminal B, make sure that tools do not touch any adjacent parts because this would cause a short-circuit.**
- **Make sure that you disconnect terminal ⊖ of the battery before removing the harness and insulate the terminal with tape.**

● **Installation sequence**

Follow the removal sequence in reverse.

● **Adjustment after installation**

Adjustment of V-belt **3** tension Gr 14

Service standards

Location	Maintenance item		Standard value	Limit	Remedy
4	Output current (* When alternator is hot and 13.5 V is loaded)	At 1500 rpm	38 A or more	—	Inspect
		At 2500 rpm	65 A or more	—	
		At 5000 rpm	76 A or more	—	
	Adjustment voltage of regulator (When alternator rotates at 5000 rpm and load is 5 A or less)		14.7±0.3 V	—	Replace

***** : The value is measured after running the alternator at 5000 rpm (at ambient temperature) with maximum output for 30 minutes.

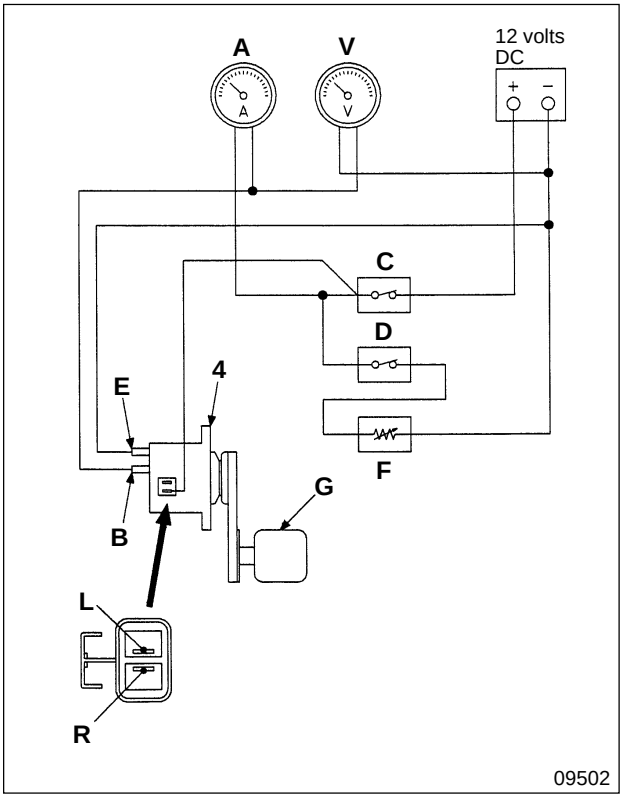

4 Inspection of alternator

(1) Inspection of alternator performance (bench test)

- Connect each unit to the alternators as illustrated.
  A : Ammeter
  B : Terminal B on alternator
  C : Switch
  D : Switch
  E : Terminal E on alternator
  F : Load resistance (variable resistance)
  G : Alternator drive motor
  L : Terminal L on alternator
  R : Terminal R on alternator
  V : Voltmeter
- Turn switches **C**, **D** OFF.
- Run alternator **4** at 5000 rpm.
- Adjust load resistance **F** to maintain the specified current.

  Specified output of the alternator : 12 V-80 A

- After adjustment, run alternator **4** for 30 minutes.
- Maximize load resistance **F** (current hardly flows).
- Turn switches **C**, **D** ON.
- Increase the rotation of alternator **4** gradually and measure current at specified rpm.
- If the measured value deviates from the standard value, disassemble and inspect alternator **4**. P54-1-18

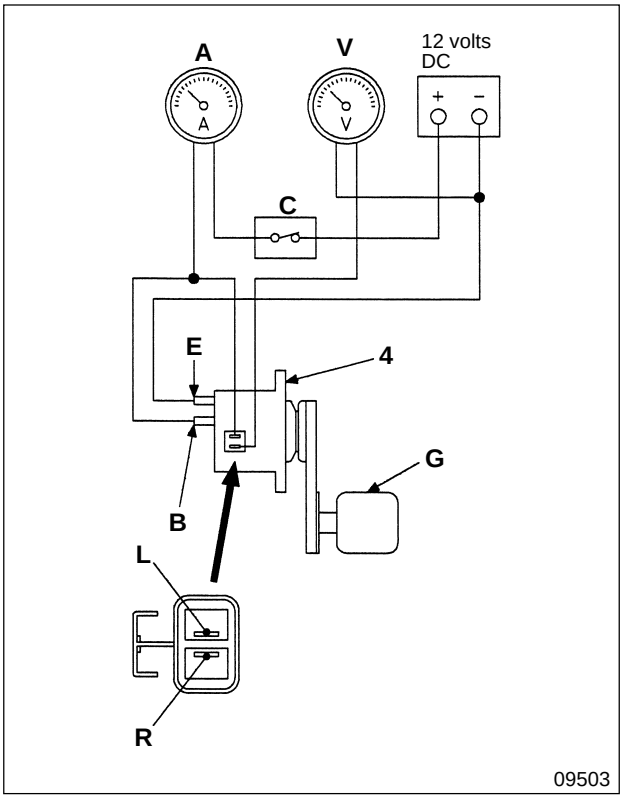

(2) Inspection of regulator (bench test)

- Connect each unit to the alternators as illustrated.
  A : Ammeter
  B : Terminal B on alternator
  C : Switch
  E : Terminal E on alternator
  G : Alternator drive motor
  L : Terminal L on alternator
  R : Terminal R on alternator
  V : Voltmeter
- Turn switch **C** ON.
- Run alternator **4**.
- Make sure that the value of the current at 5000 rpm is five amperes or less.
- Measure voltage (adjustment voltage).
- If the measured value deviates from the standard value, replace the regulator (in alternator **4**).

Alternator

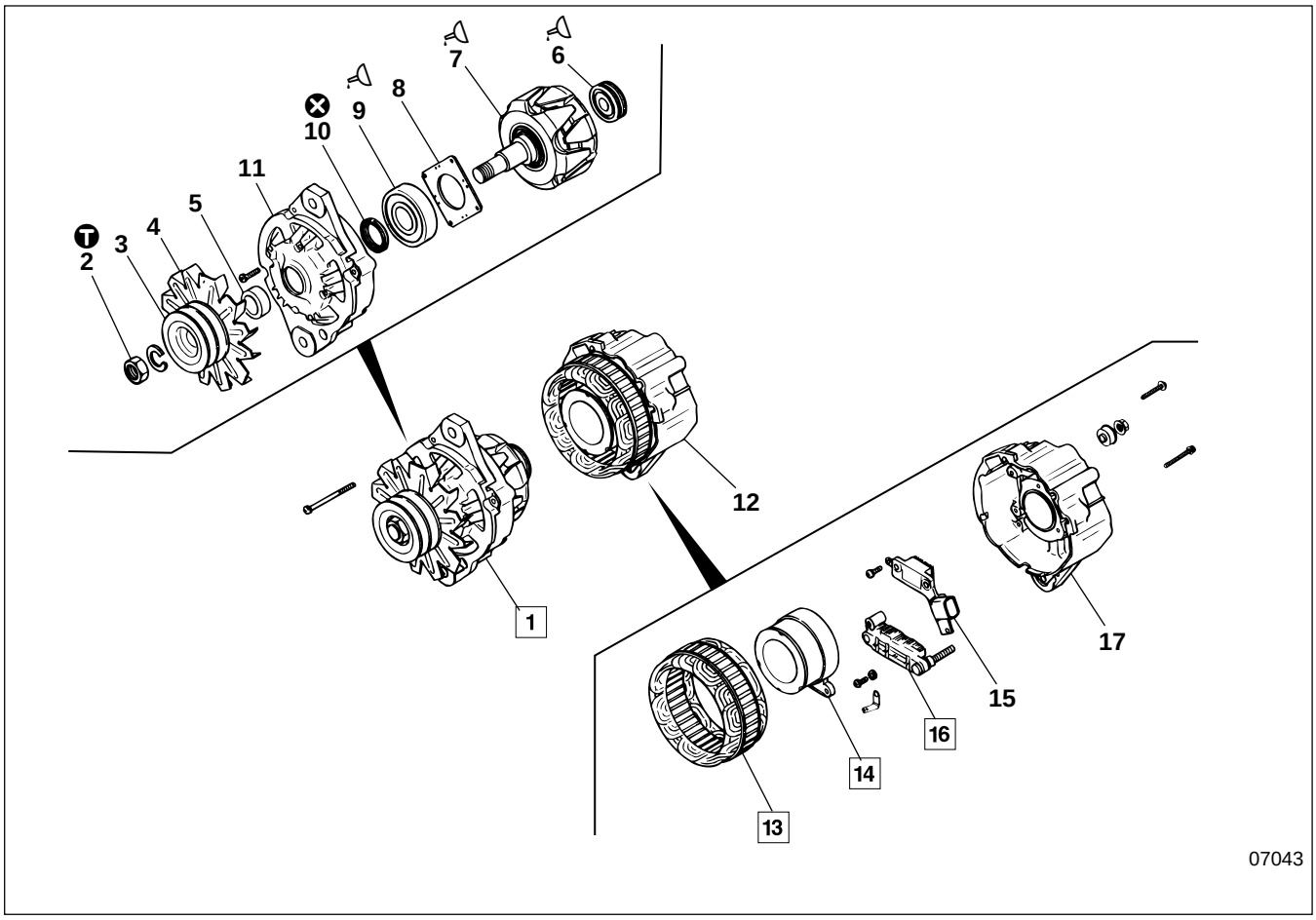

● **Disassembly sequence**

1 Rotor and front bracket assembly
2 Nut
3 Pulley
4 Fan
5 Spacer
6 Rear bearing
7 Rotor assembly
8 Cover
9 Front bearing
10 Oil seal
11 Front bracket
12 Stator and rear bracket assembly
13 Stator assembly
14 Field coil
15 Regulator
16 Rectifier
17 Rear bracket

⊗ : Non-reusable parts

NOTE

Do not remove parts 6, 9, 13 unless they are faulty.

● **Assembly sequence**

12 → 1　　12 : 17 → 16 → 14 → 13 (15)

1 : 11 → 10 → 9 → 8 → 7 → 6 → 5 → 4 → 3 → 2

Service standards

Location	Maintenance item	Standard value	Limit	Remedy
14	Field coil resistance (20°C {68°F})	2.6 to 3.4 Ω	—	Replace

Tightening torque

Unit : N·m {lbf.ft, kgf·m}

Location	Parts to be tightened	Tightening torque	Remarks
2	Nut (pulley mounting)	132 to 162 {98 to 120, 13.5 to 16.5}	—

Lubricant

Location	Points of application	Kinds	Quantity
6	Rear bearing inner periphery	Engine oil	As required
7	Front bearing installation part of rotor assembly	Engine oil	As required
9	Front bearing outer periphery	Engine oil	As required

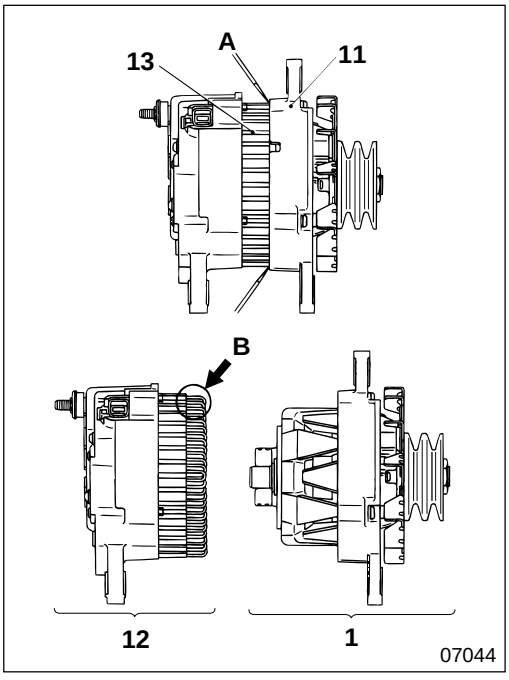

◆ Service procedure

1 Rotor and front bracket assembly

[Removal]

- Insert screwdriver **A** between front bracket **11** and stator assembly **13**.
- Use screwdriver **A** to pry rotor and front bracket assembly **1** away from stator and rear bracket assembly **12**.

CAUTION

Be careful not to insert the screwdriver too deep or it will damage coil B of stator assembly 13 and might cause a short-circuit.

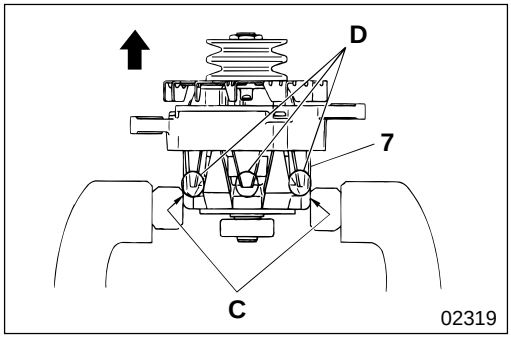

[Disassembly]

CAUTION

Make sure, when you hold rotor assembly 7 in a vise, to grip root C of the core claws. Gripping claws D can damage them.

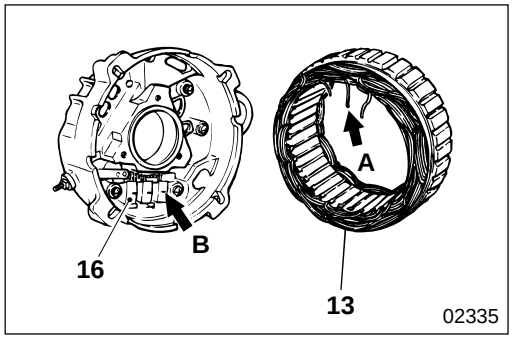

13 Stator assembly

[Removal and installation]

- Disconnect lead **A** of stator assembly **13** from rectifier **16**. The lead is soldered to diode **B** of rectifier **16** at three points.

CAUTION

Make sure that you desolder within five seconds because the diode is heat sensitive.

- To install, follow the removal sequence in reverse.

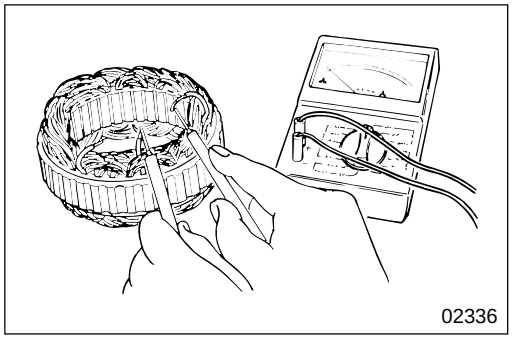

[Inspection]

(1) Continuity of each lead wire

- Make sure that each lead wire has continuity.
- If there is no continuity, the lead wire is broken. Replace stator assembly **13**.

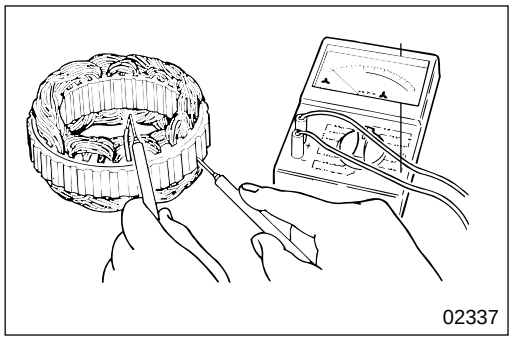

(2) Continuity between lead wires and the core

- Make sure that there is no continuity between lead wires and the core.
- If there is continuity, replace stator assembly **13**, since it might be short-circuited.

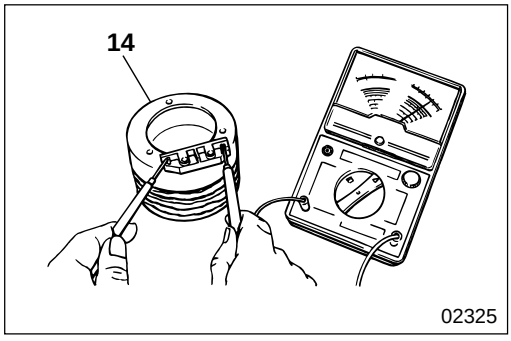

14 Inspection of field coil

- Measure the resistance between the terminals of field coil **14**.
- If the measured value deviates from the standard value, replace field coil **14**.

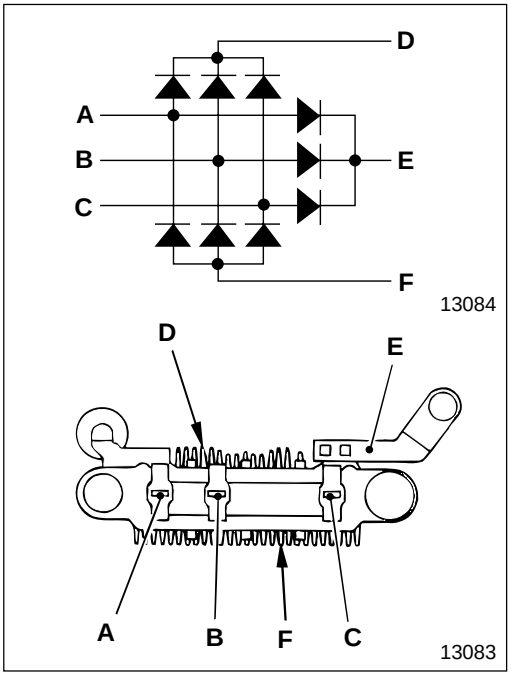

16 **Inspection of rectifier**

- Inspect whether the diode inside rectifier **16** functions properly, and if any fault is found, replace the rectifier.
  A, **B**, **C** : Lead connecting area of stator coil
  D, **E** : Heat sink area
  F : Regulator connecting area
- Inspect the rectifier twice, before and after the ⊕ side and ⊖ side of the tester have been changed over.

CAUTION⚠

When inspecting using a tester, the current becomes weaker than the usual current flowing through rectifier 16. Therefore, an incomplete resistance value might be indicated.
Also, this tendency increases as the range of the tester gets smaller. Therefore, use as big a range as possible.

Power Supply (Battery to High-current Fuse Box and Fuse Box)

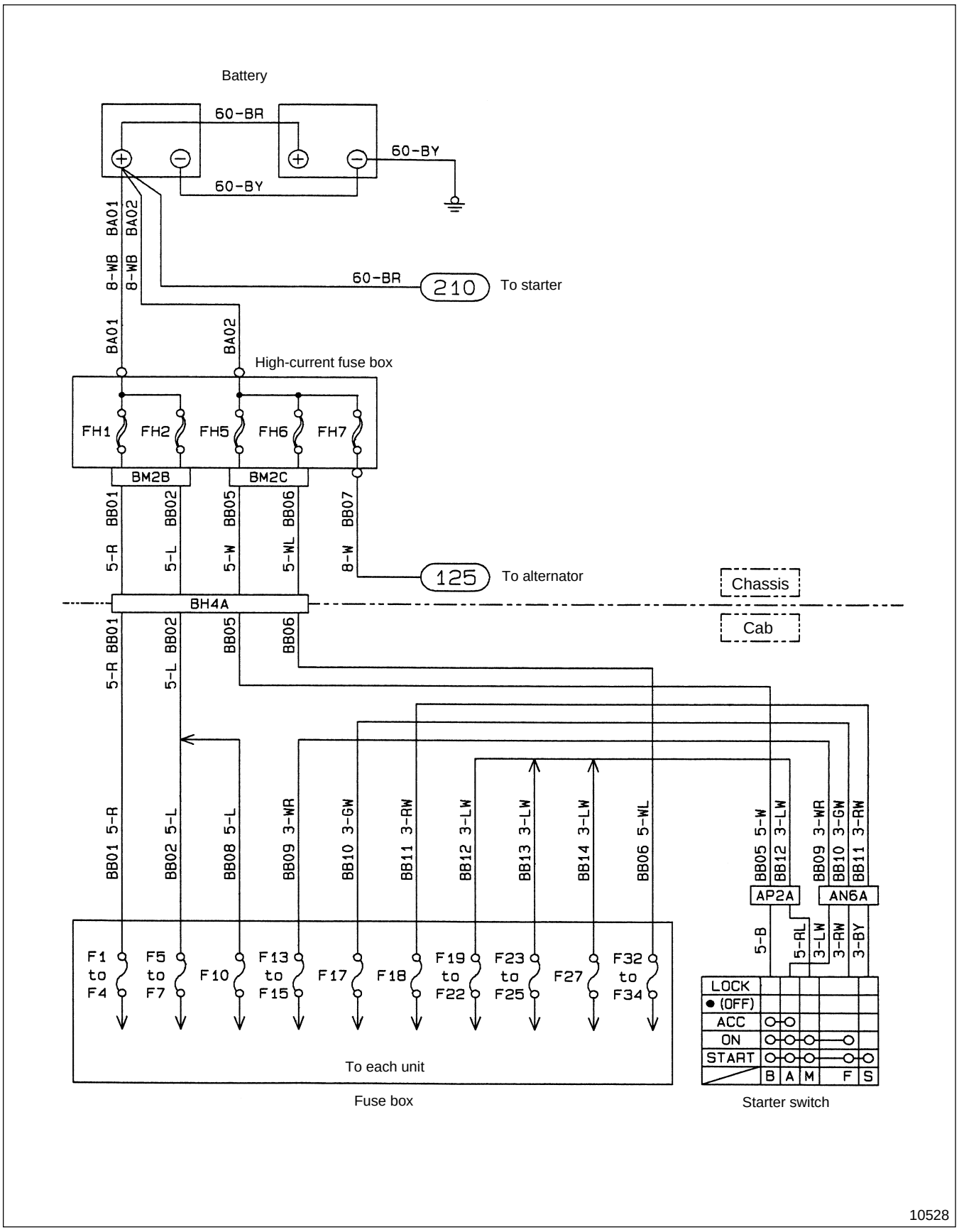

Fuses F1 to F4

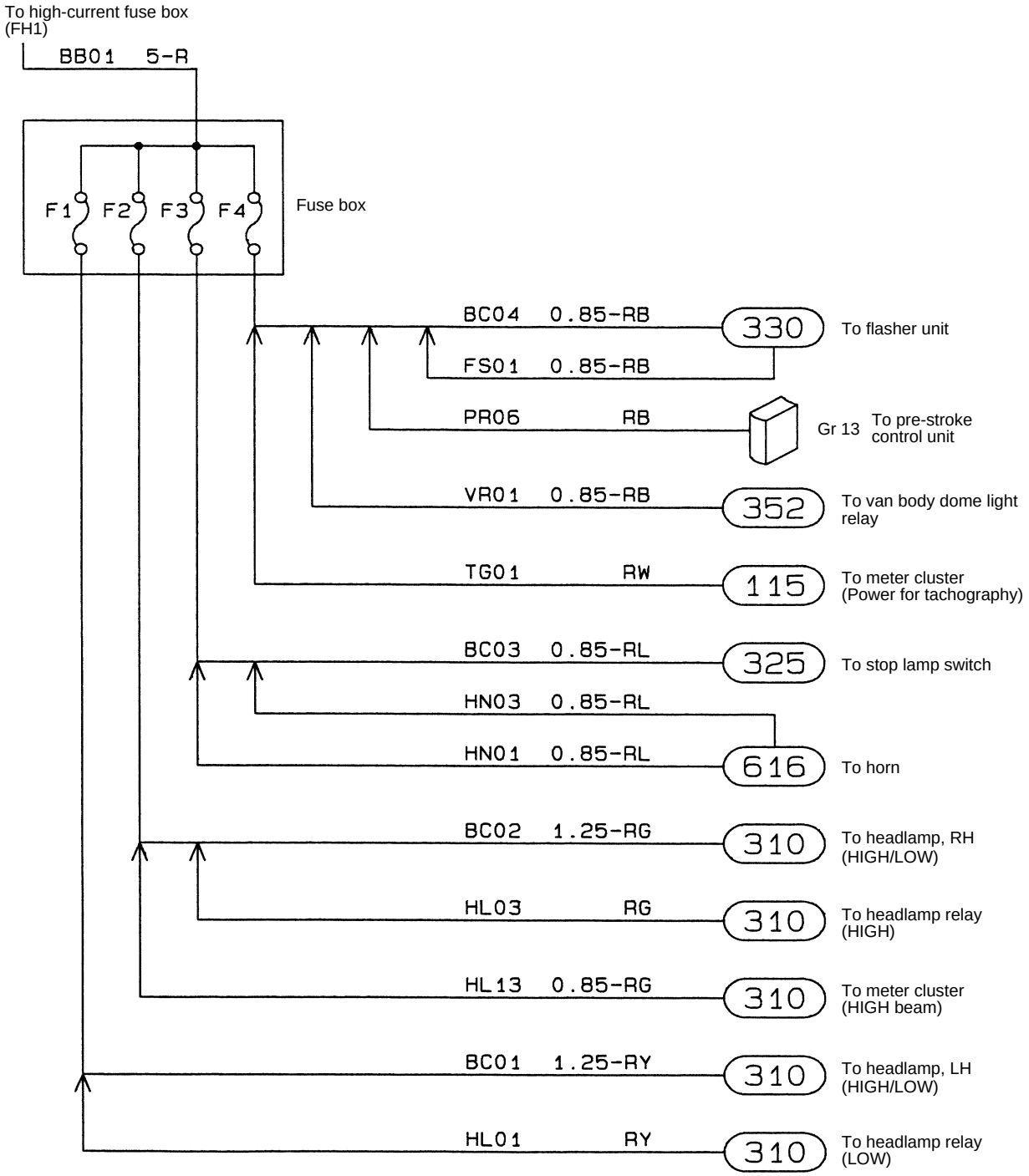

Fuses F5 to F7

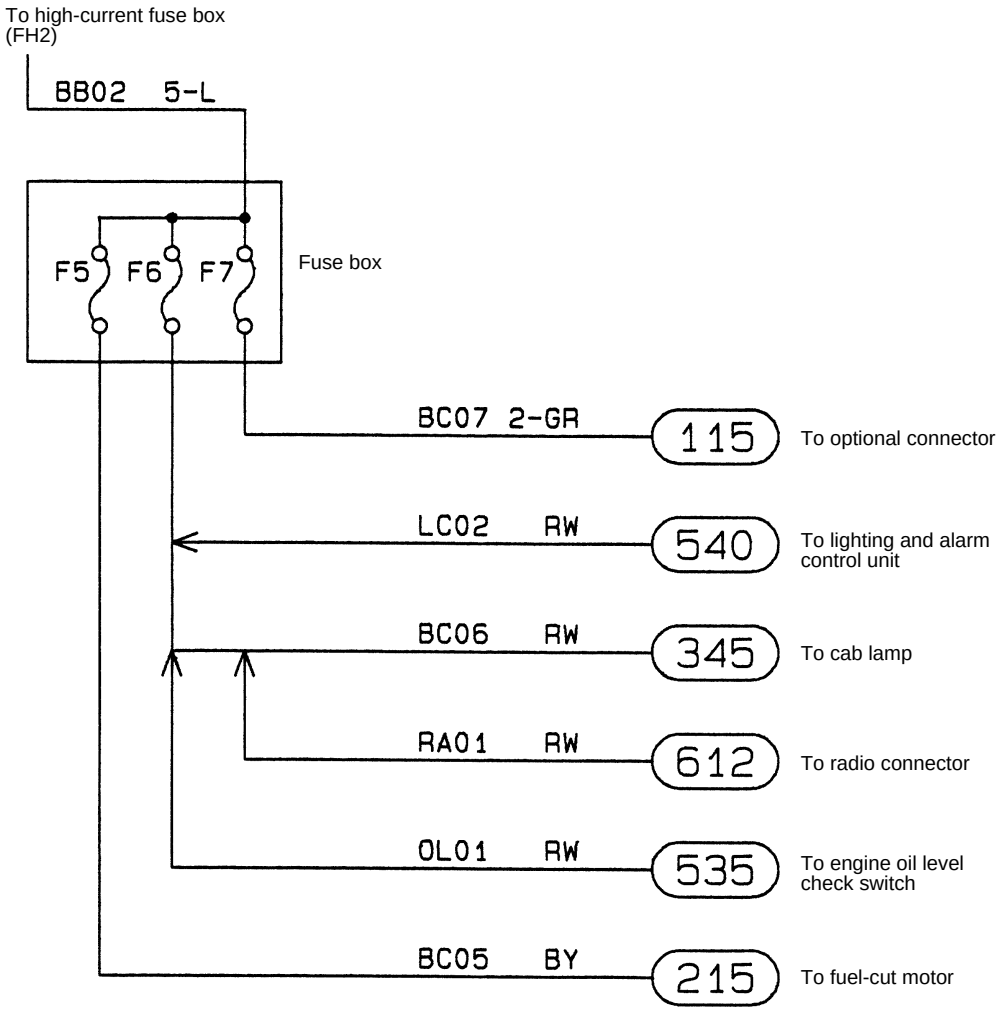

10530

Fuse F10

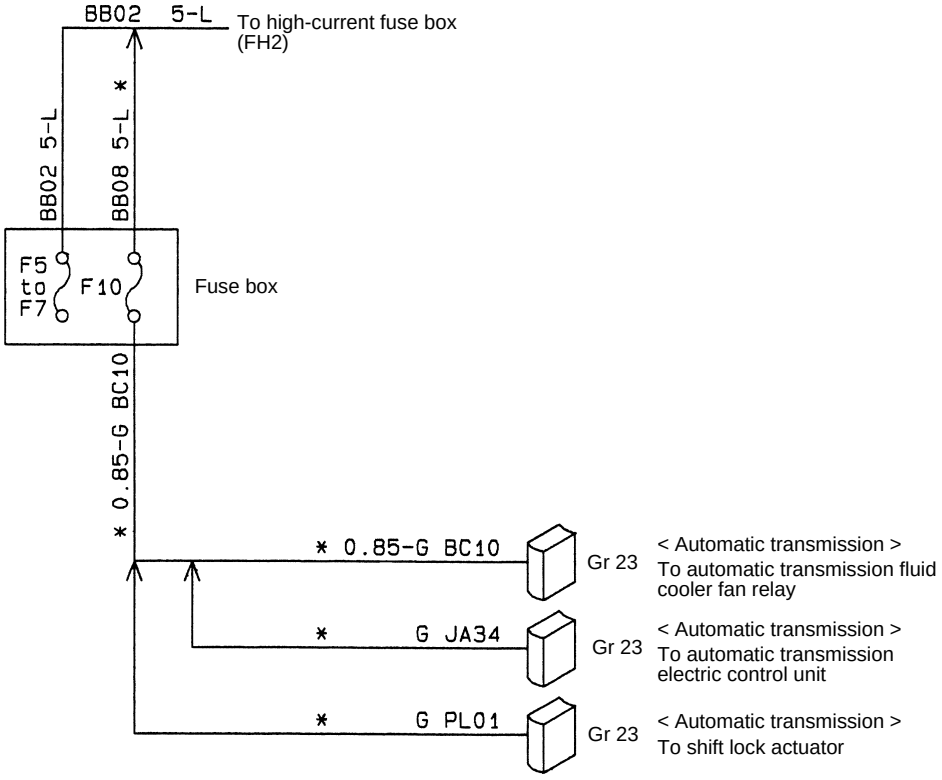

* : Automatic transmission

10531

Fuses F13 to F18

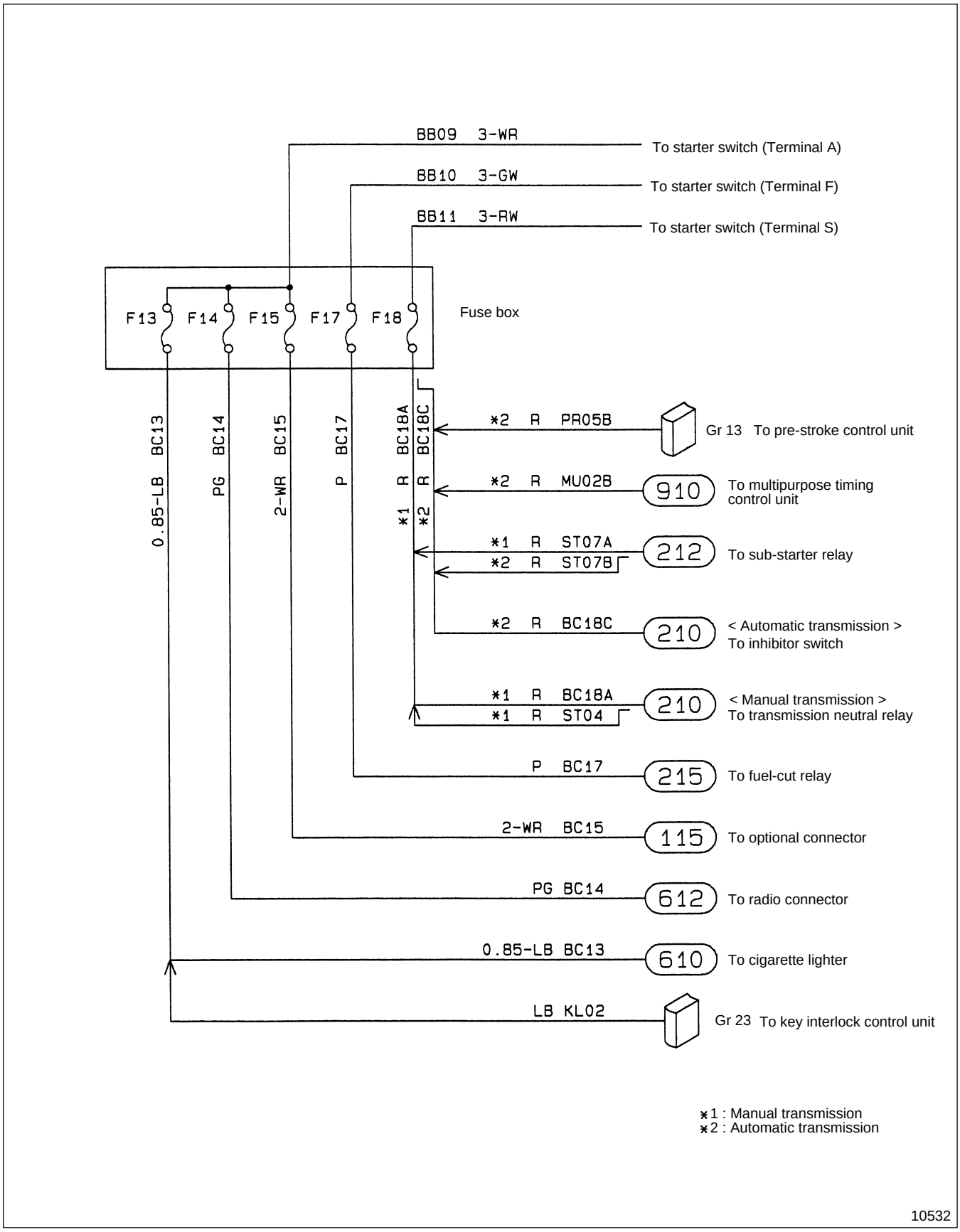

Fuses F19 to F22

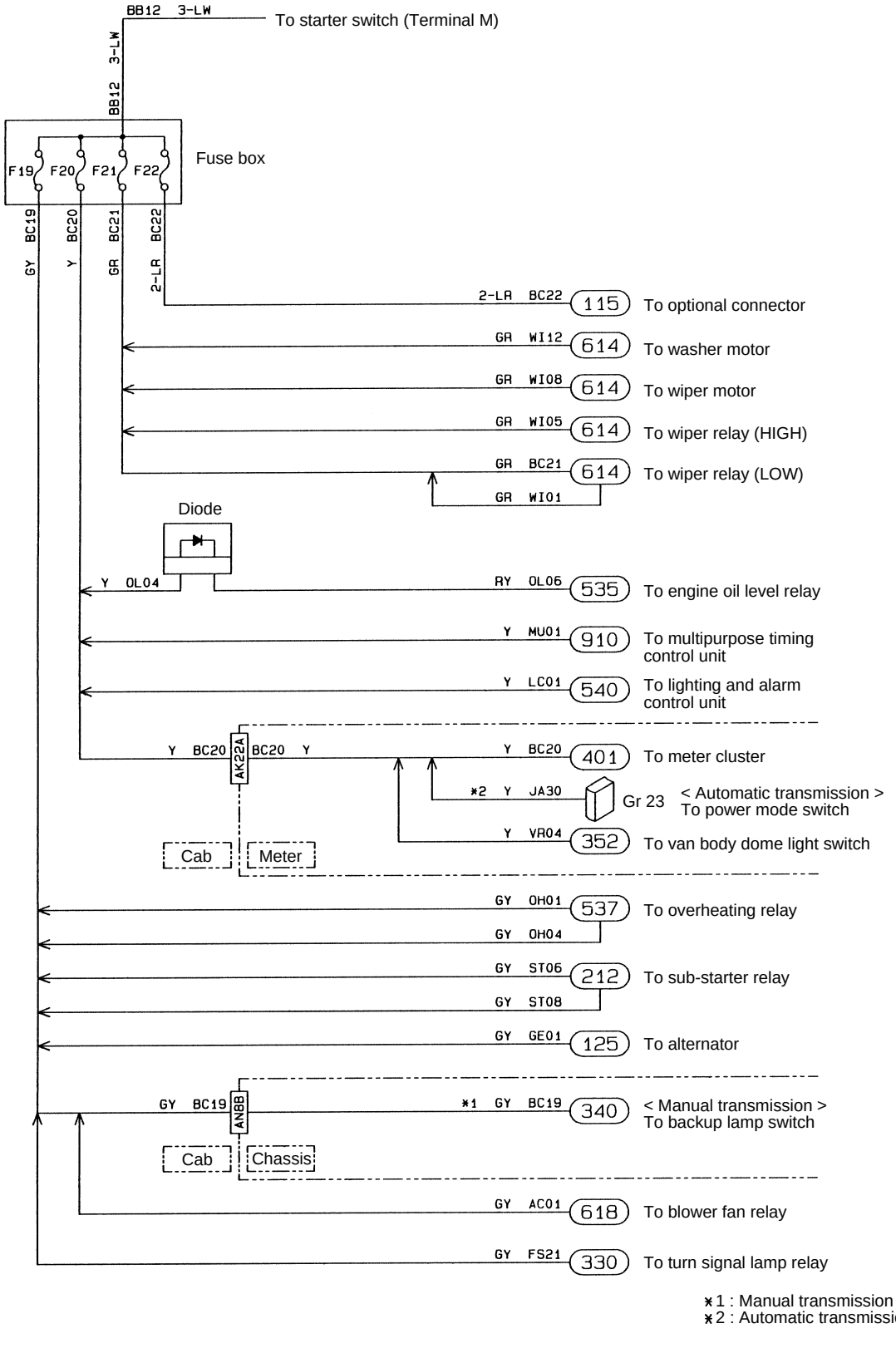

Fuses F23 and F24

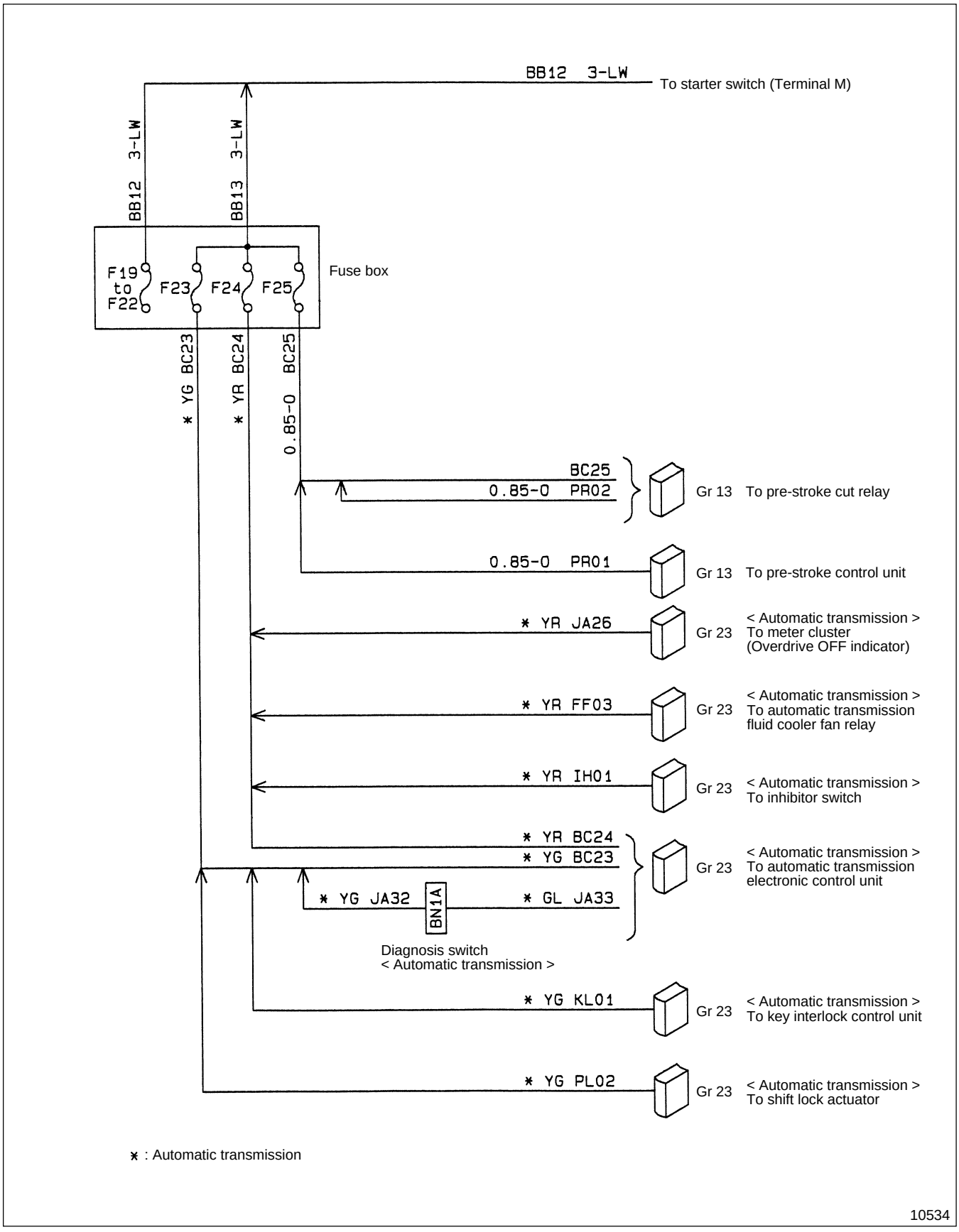

Fuses F27 to F30

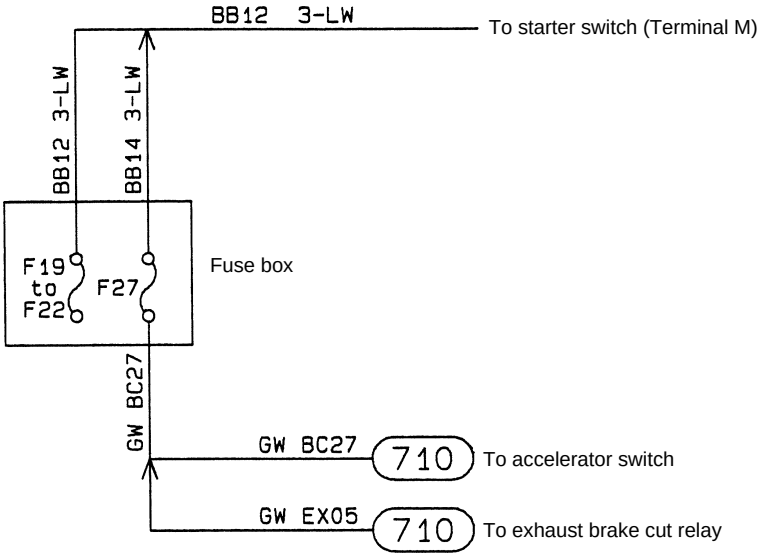

10535

Fuses F31 to F34

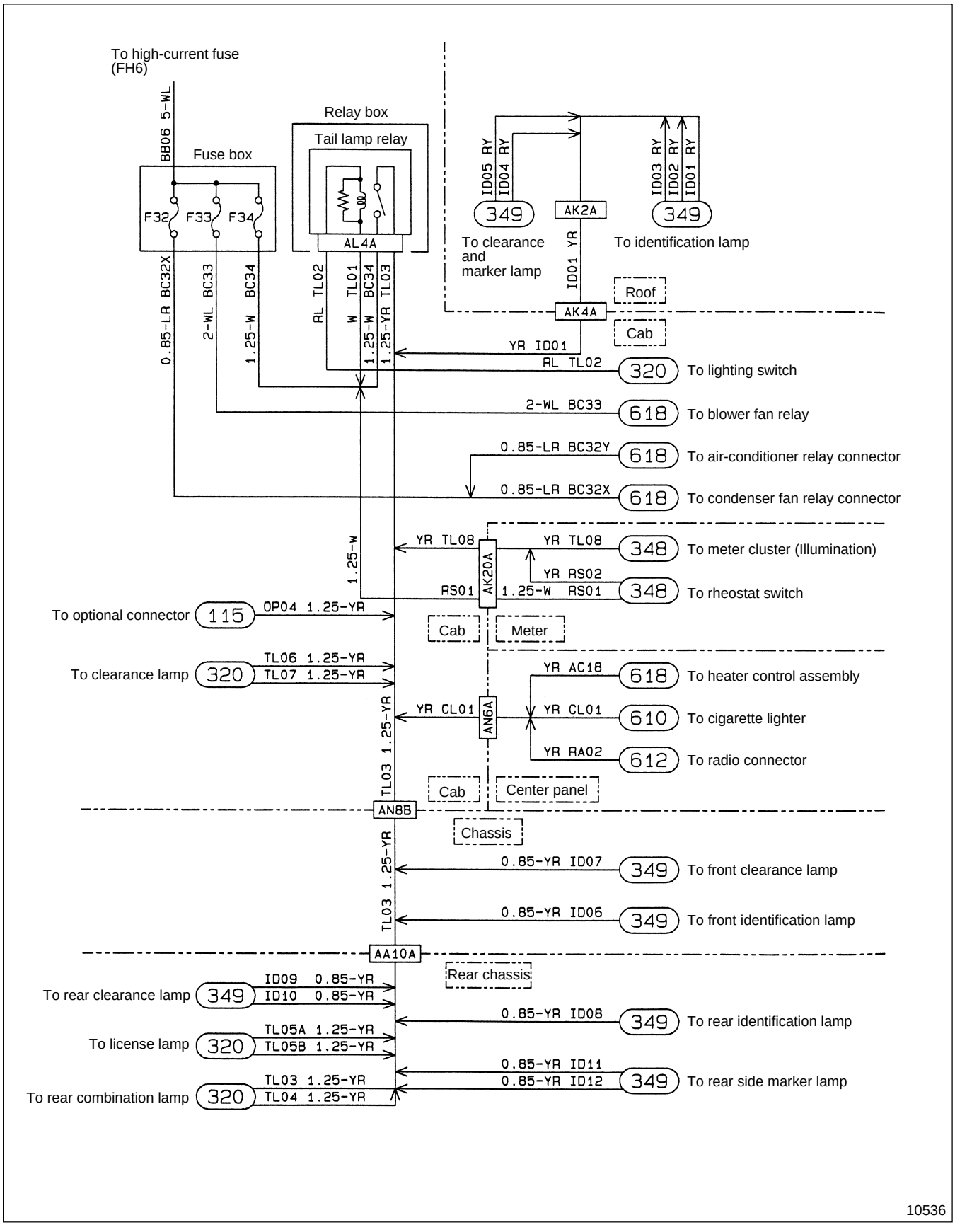

M E M O

115 RESERVE POWER CIRCUIT

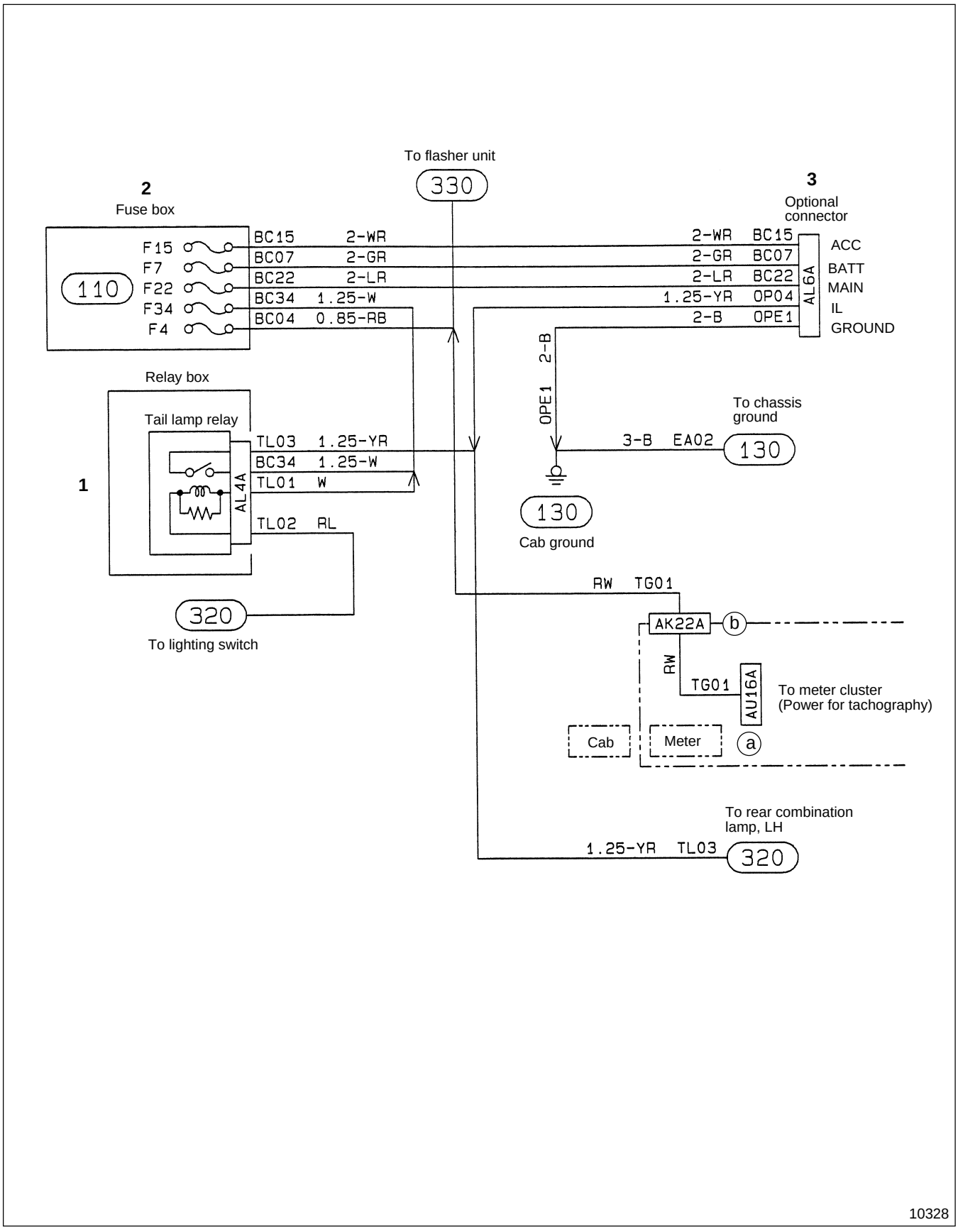

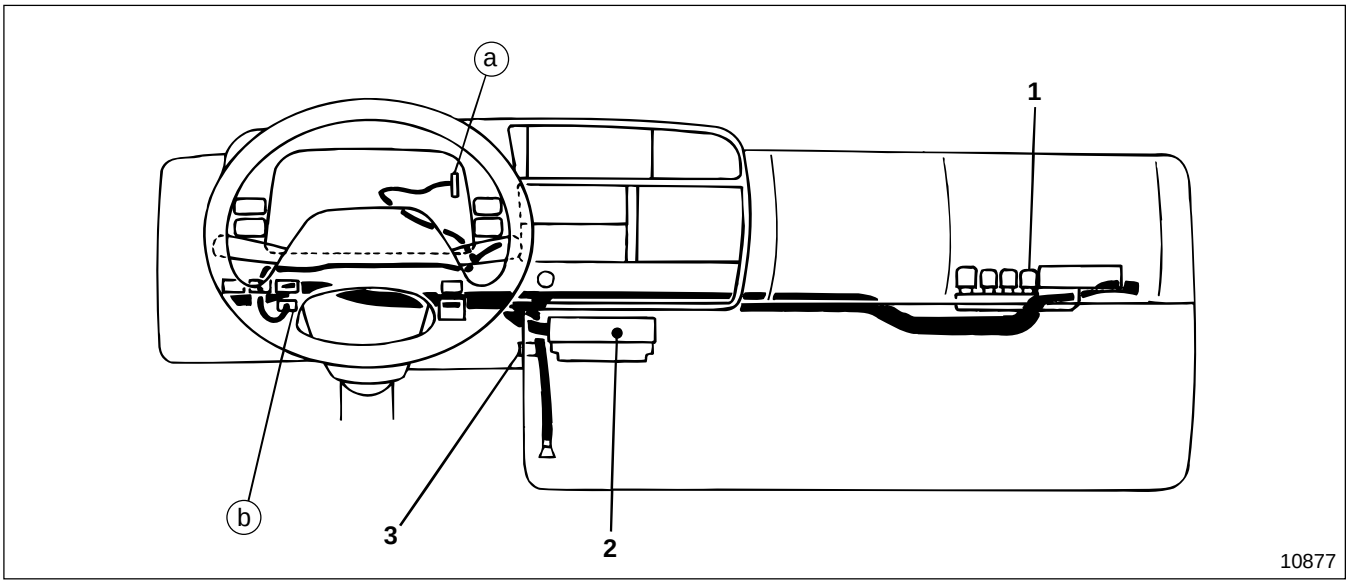

1 Relay box 📖 (604)
2 Fuse box 📖 (104)
3 Optional connector

125 BATTERY CHARGING CIRCUIT

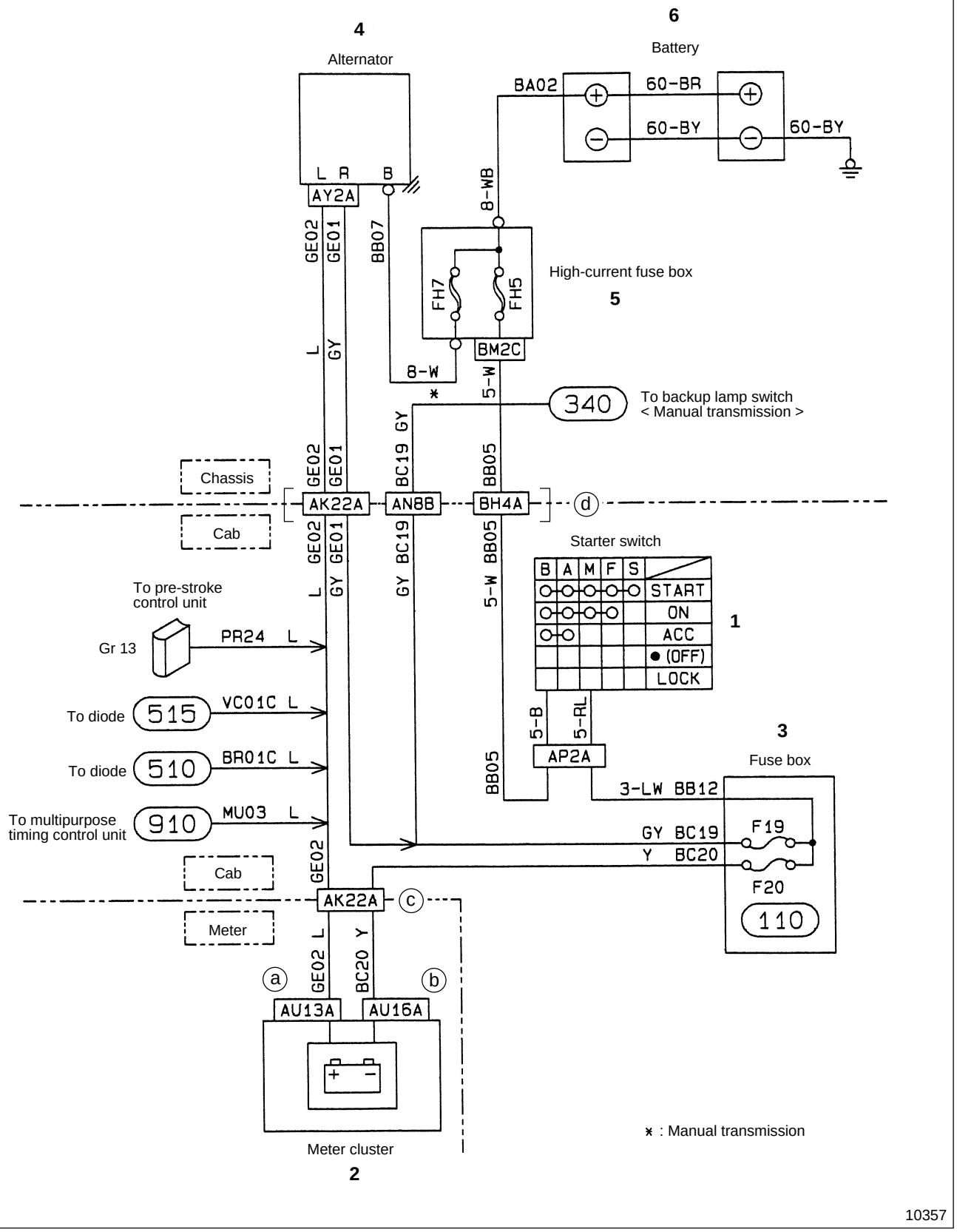

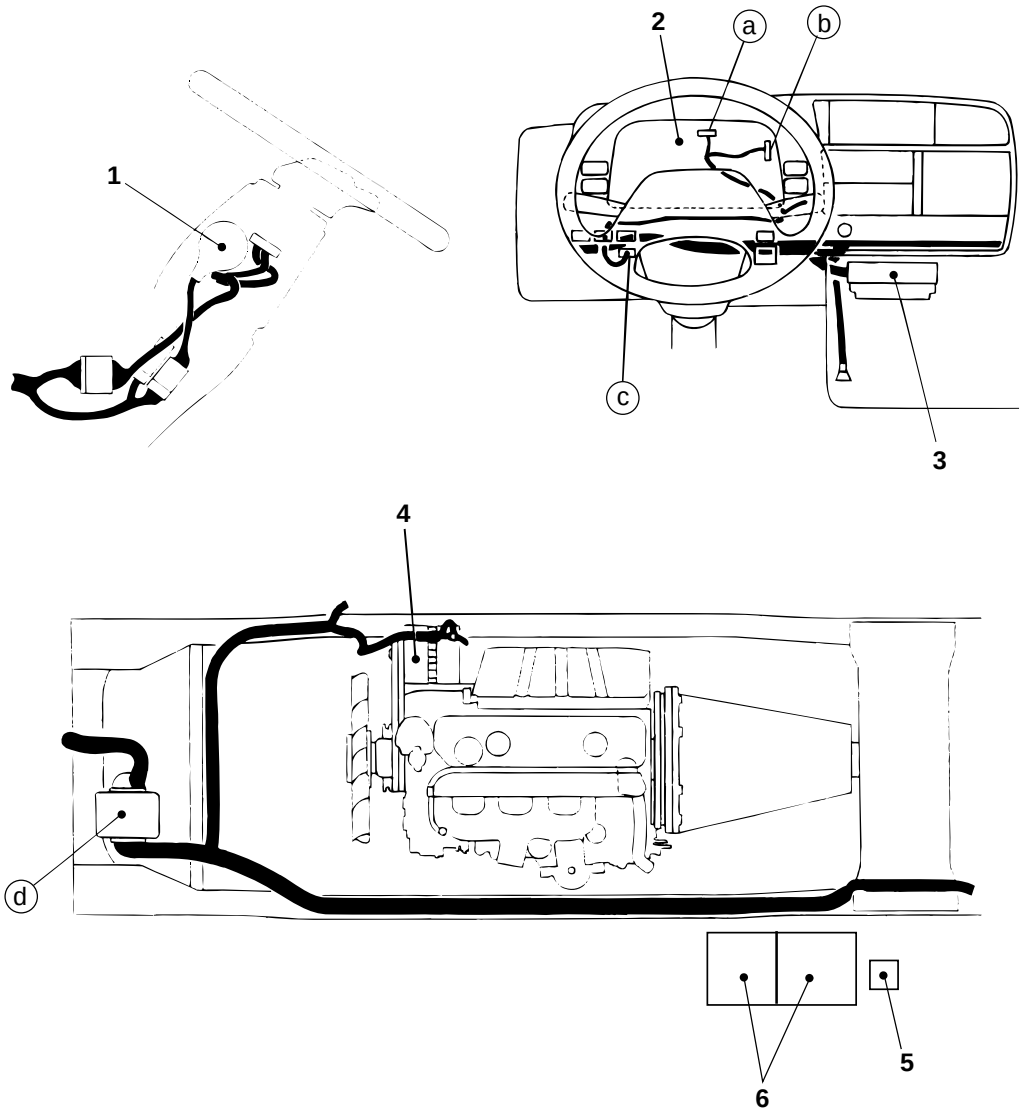

1 Starter switch 🕮 (210)
2 Meter cluster 🕮 (401)
3 Fuse box 🕮 (104)
4 Alternator 🕮 (106)
5 High-current fuse box 🕮 (104)
6 Battery 🕮 (101)

Ground Point

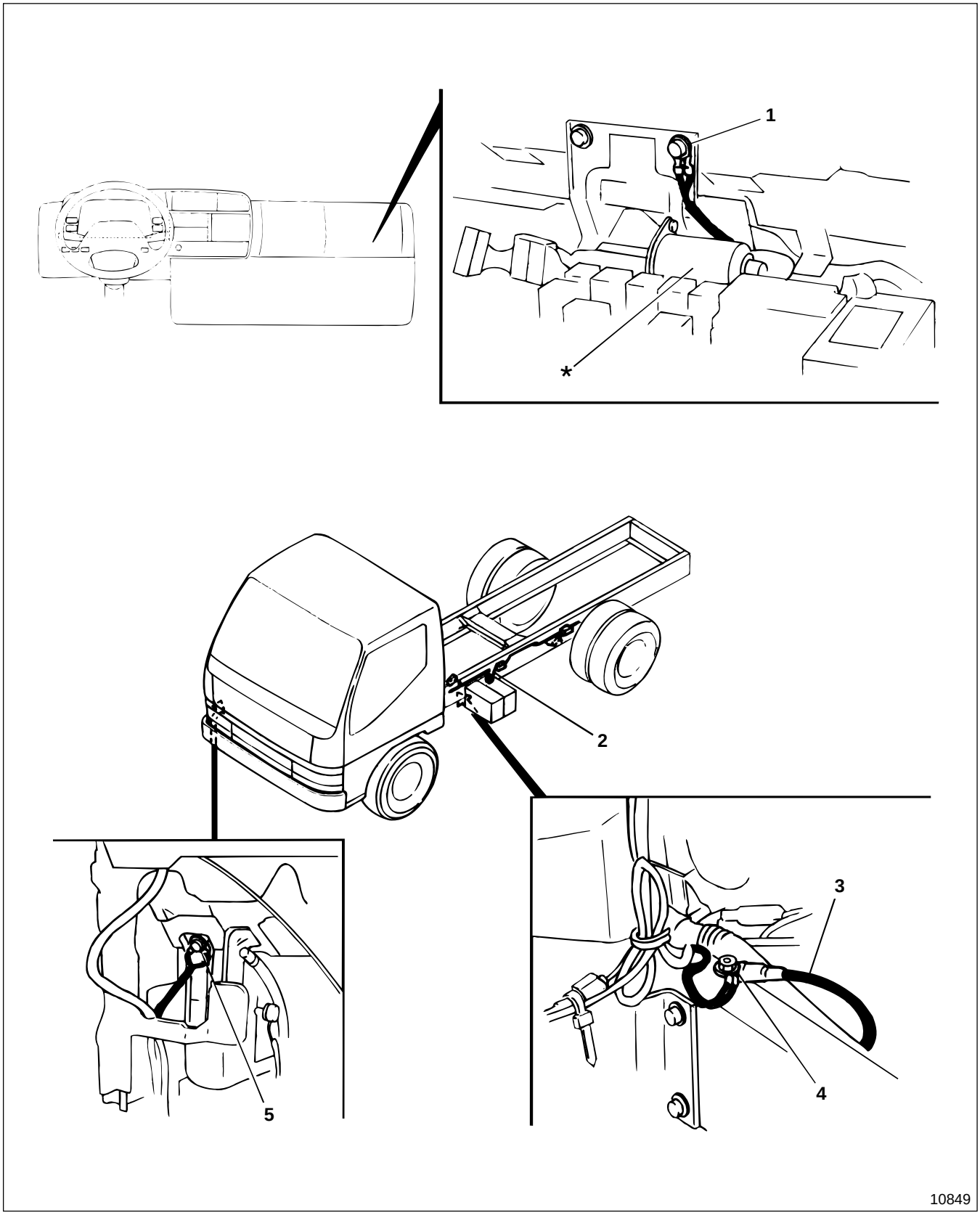

* : Wiper motor

Location	Name	Circuit No.	Wire diameter-wire color	Remarks
1	Cab ground 1	EA01	3-B	
2	Battery ground	—	60-BY	
3	Engine ground	—	40-BY	Manual transmission
			60-BY	Automatic transmission
4	Chassis ground	EA01	3-B	
		EA02	3-B	
		FEE1	B	
5	Cab ground 2	EA02	3-B	

Entire Ground

- This diagram indicates grounding points.
- See the following pages for branching of grounding (wiring for ☆). (in circuit No. order)

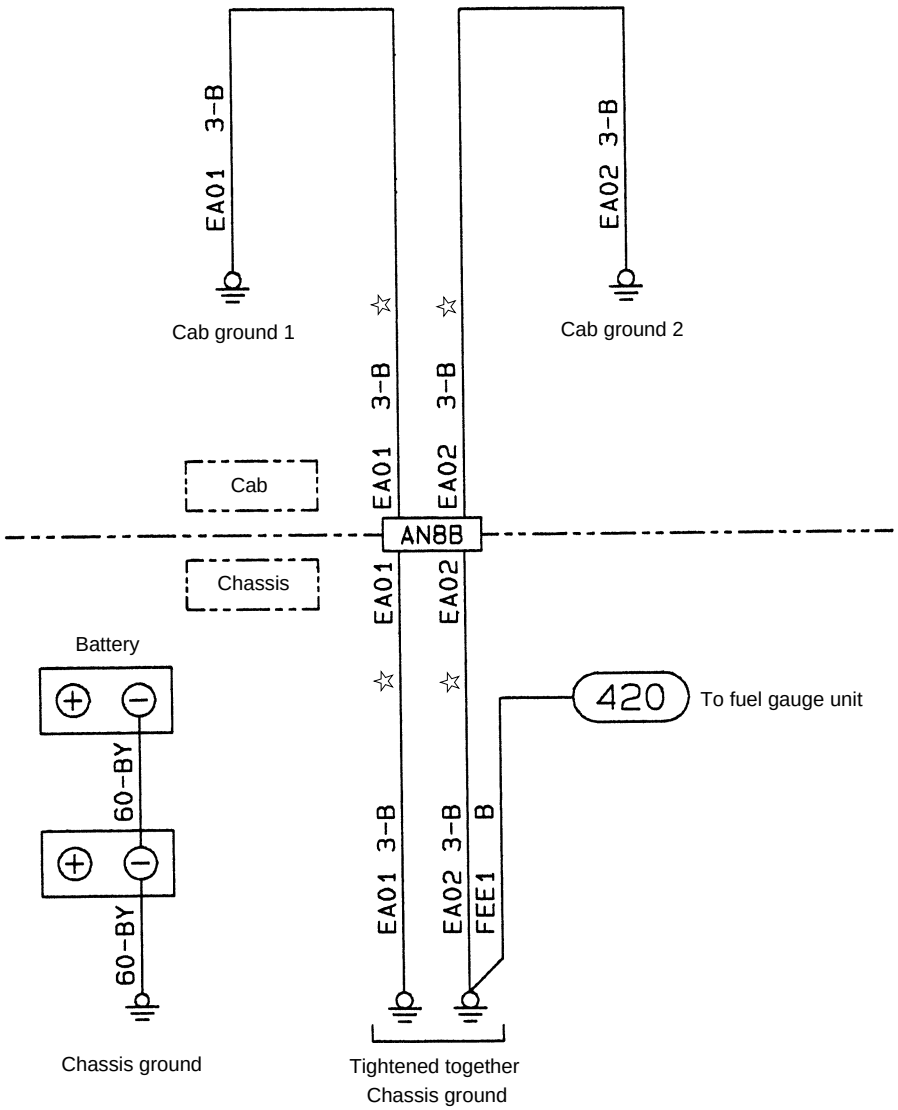

10538

Circuit No.EA01

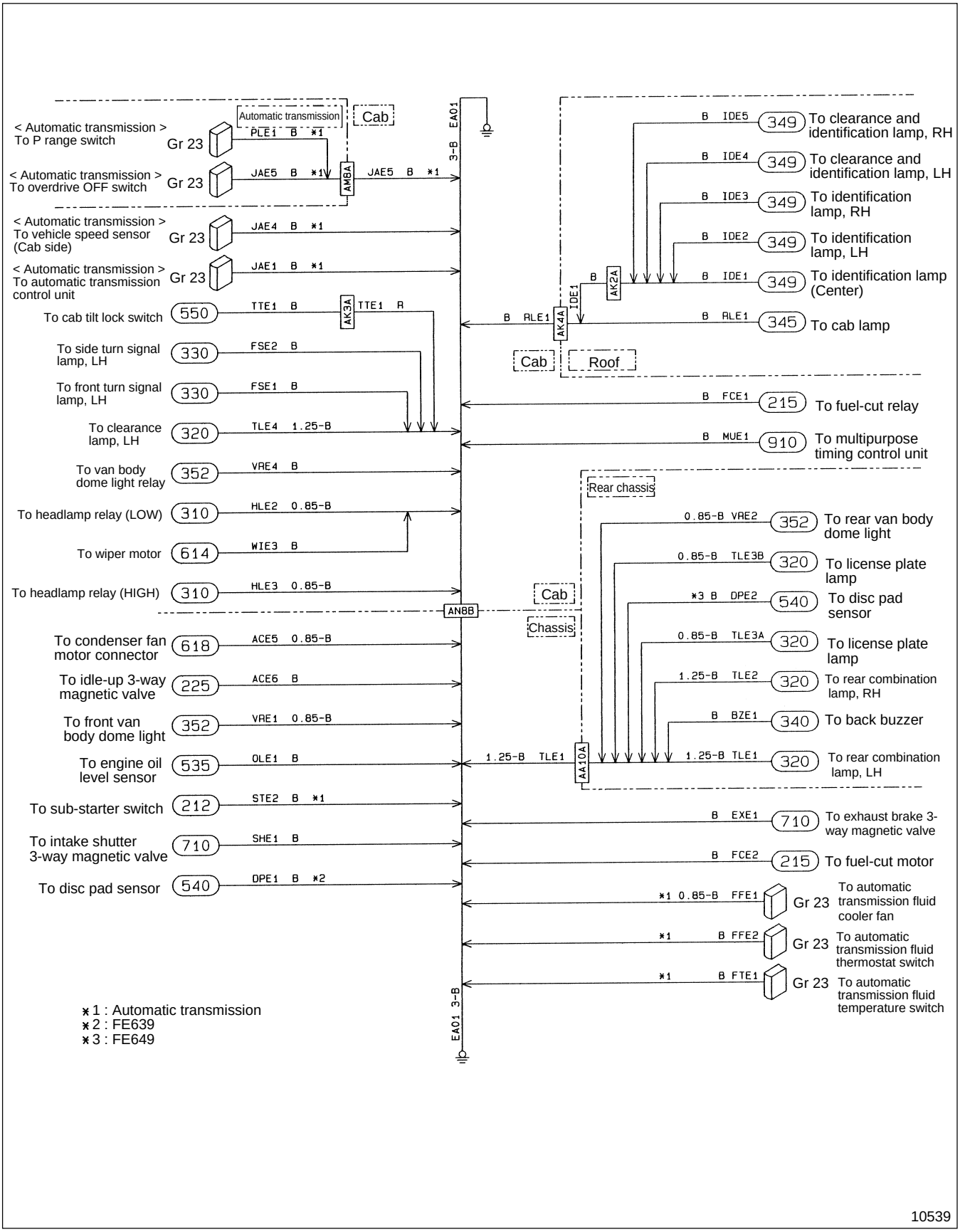

Circuit No.EA02

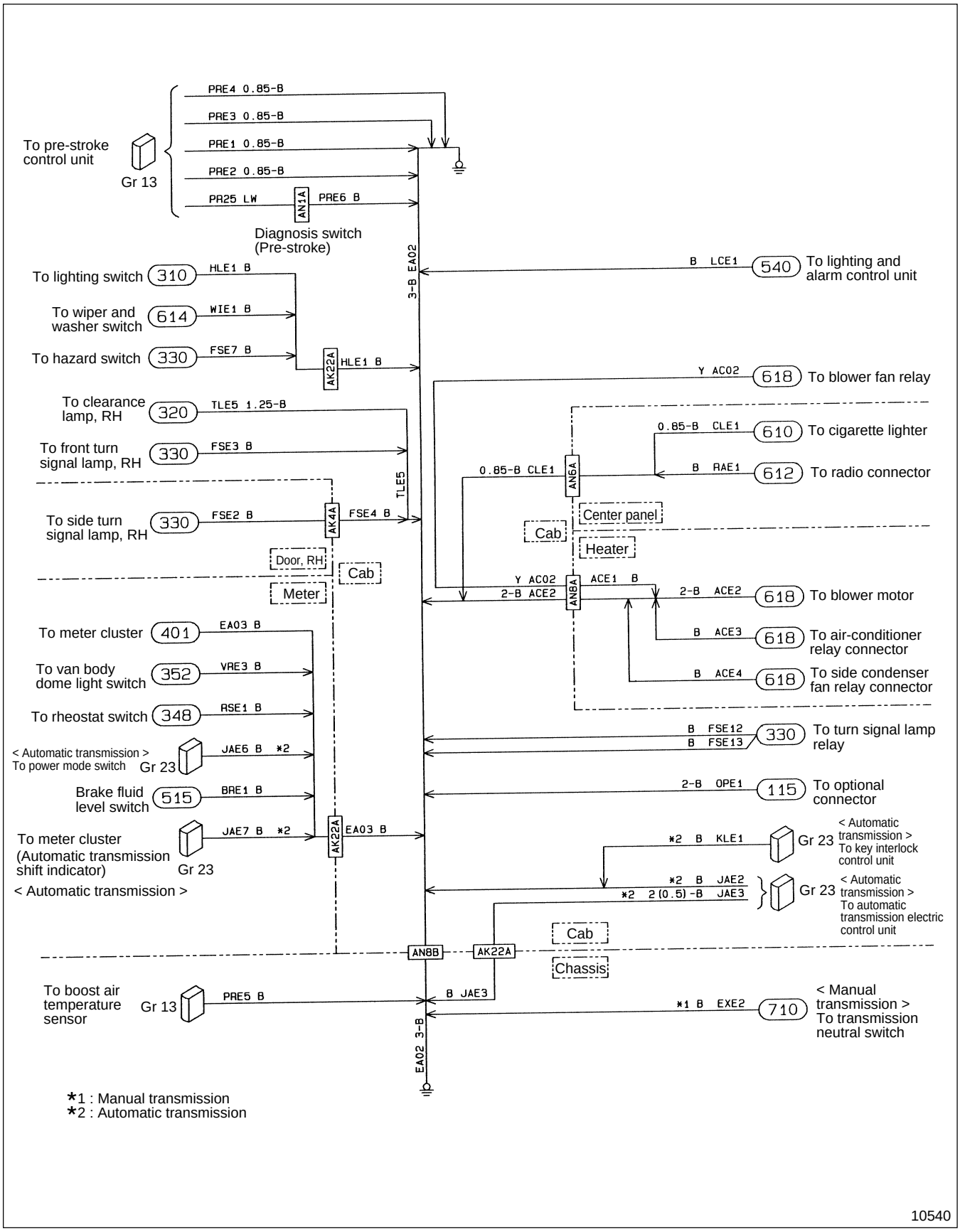

2 STARTING, PREHEATING AND STOPPING ENGINE

SPECIFICATIONS 54-2-2

STRUCTURE AND OPERATION 54-2-3

TROUBLESHOOTING 54-2-10

200 INSPECTION AND ADJUSTMENT MOUNTED IN VEHICLE
Inspection of Engine Preheating System 54-2-12

201 STARTER 54-2-13

210 ENGINE STARTING CIRCUIT
< Manual Transmission > 54-2-26
< Automatic Transmission > 54-2-30

212 SUB-STARTER CIRCUIT
< Manual Transmission > 54-2-34
< Automatic Transmission > 54-2-36

215 ENGINE STOPPING CIRCUIT 54-2-38

220 ENGINE PREHEATING CIRCUIT 54-2-42

225 ENGINE WARMING UP CIRCUIT 54-2-46

SPECIFICATIONS

Item		Specifications
Starter	Manufacturer	MITSUBISHI ELECTRIC
	Reduction gear system	Planetary gear
	Model	M8T55071
	Power V–kW	12–3.0
	Magnetic switch operating voltage V	8 or less
Starter relay	Model	U1X15072
	Voltage rating V–A	12-4
	Magnet closing voltage V	8 or less
	Magnet opening voltage V	3.5 or less
	Allowable cutoff current A	200
Glow plug	Model	Sheathed type
	Voltage–amperage V–A	11–5.5
Glow relay	Model	U1T06296
	Voltage–amperage V–A	12–127
	Magnet closing voltage V	8 or less
	Magnet opening voltage V	3.5 or less
	Allowable cutoff current A	200
Fuel-cut motor	Minimum operating voltage V	10 or less
	Operating amperage A	10 or less

Starter

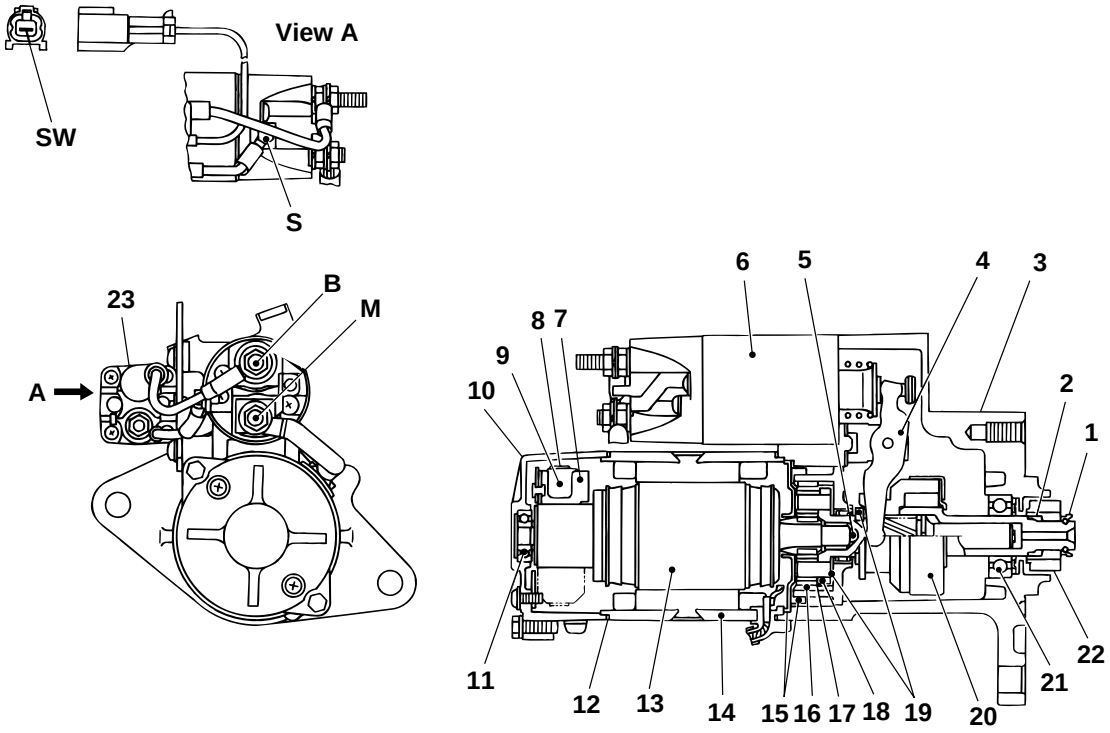

1 Pinion stopper
2 Spring
3 Front bracket
4 Lever
5 Ball
6 Magnetic switch
7 Brush holder
8 Brush spring
9 Brush
10 Rear bracket
11 Rear bearing
12 Rubber packing
13 Armature
14 Yoke assembly
15 Rubber packing
16 Planetary gear
17 Internal gear
18 Gear shaft
19 Washer
20 Overrunning clutch
21 Front bearing
22 Pinion
23 Starter relay

B : Terminal B
M : Terminal M
S : Terminal S
SW : Terminal SW

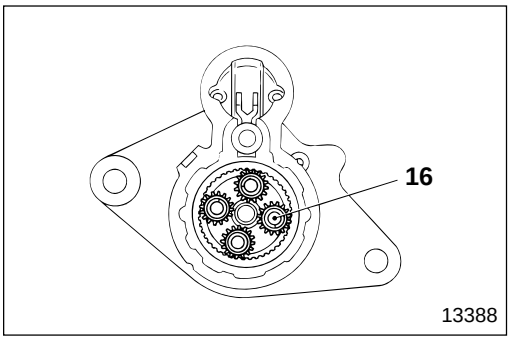

This starter uses planetary gear **16** for the reduction gear system.

Engine Starting Circuit
< Manual transmission >

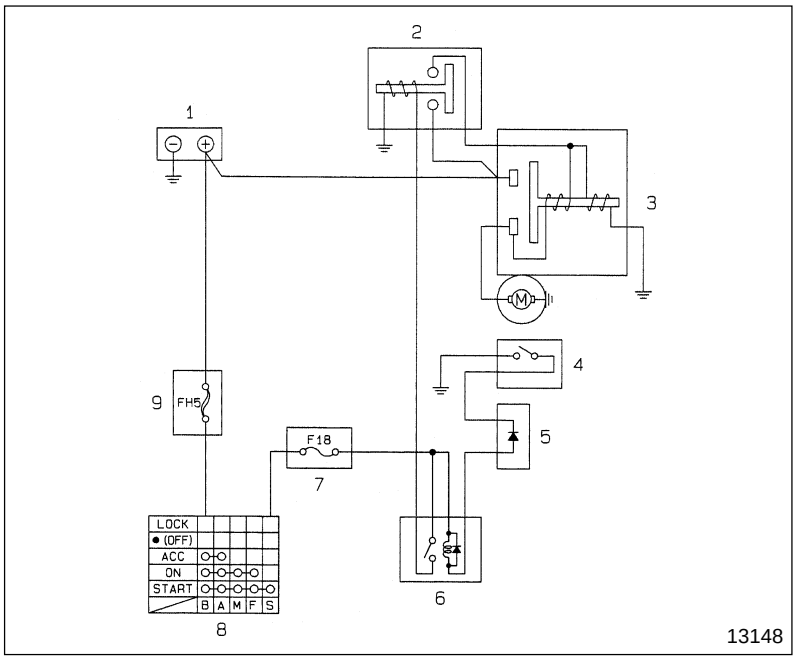

1 Battery
2 Starter relay
3 Starter
4 Transmission neutral switch
5 Diode
6 Transmission neutral relay
7 Fuse box
8 Starter switch
9 High-current fuse box

< Automatic transmission >

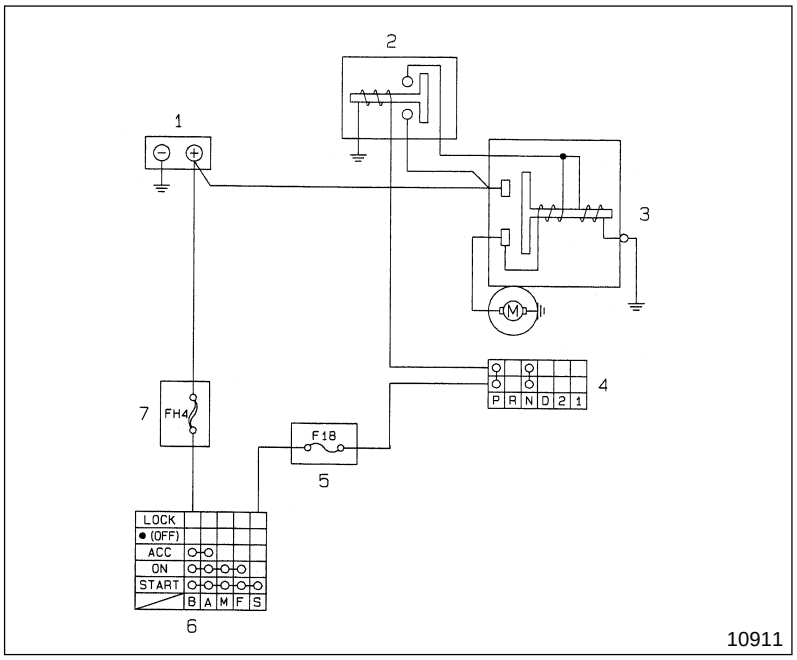

1 Battery
2 Starter relay
3 Starter
4 Inhibitor switch
5 Fuse box
6 Starter switch
7 High-current fuse box

Sub-starter Circuit
< Manual transmission >

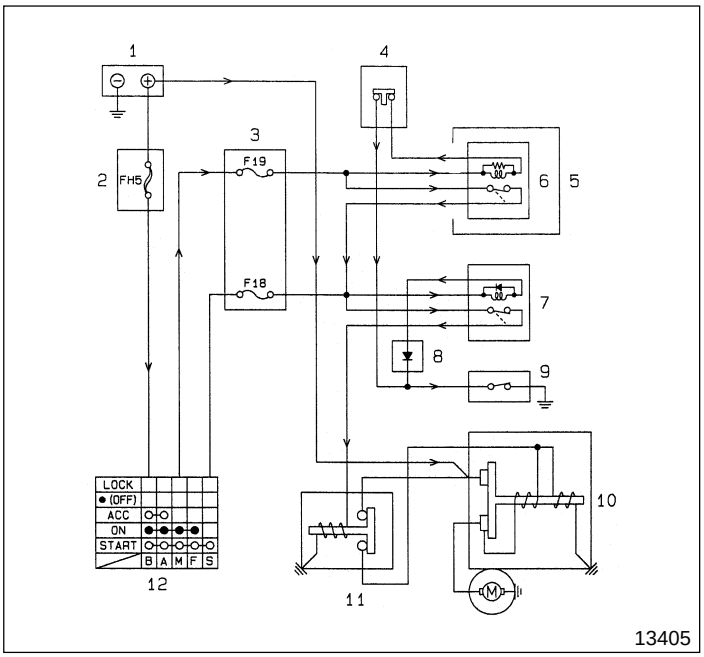

1 Battery
2 High-current fuse box
3 Fuse box
4 Sub-starter switch
5 Relay box
6 Sub-starter relay
7 Transmission neutral relay
8 Diode
9 Transmission neutral switch
10 Starter
11 Starter relay
12 Starter switch

Position of starter switch **12** : ON
Position of sub-starter switch **4** : ON
1→2→12→3 (F19)→6 (coil)→4→9→Ground
1→2→12→3 (F19)→6 (contact point)→7 (coil) →8→9→Ground
1→2→12→3 (F19)→6 (contact point)→7 (contact point)→11 (coil)→Ground
Starter relay **11** operates to turn starter **10**.

< Automatic transmission >

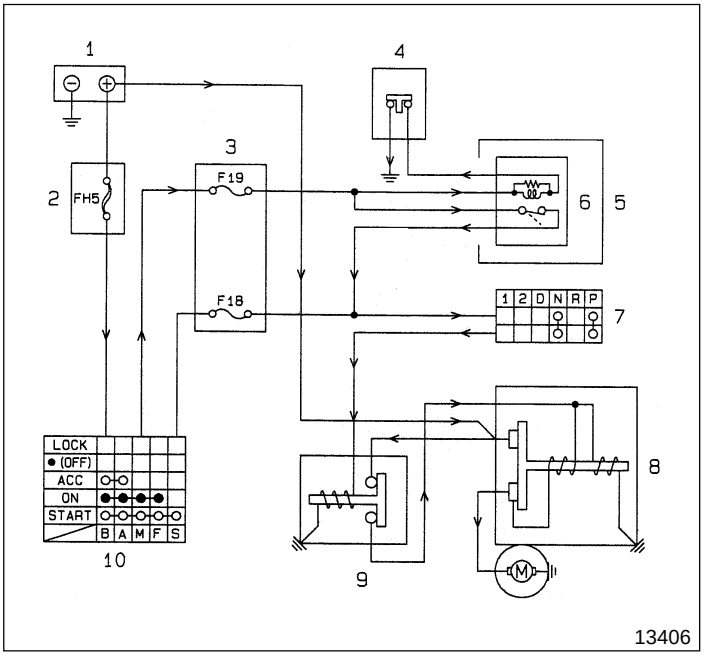

1 Battery
2 High-current fuse box
3 Fuse box
4 Sub-starter switch
5 Relay box
6 Sub-starter relay
7 Inhibitor switch
8 Starter
9 Starter relay
10 Starter switch

Position of starter switch **10** : ON
Position of sub-starter switch **4** : ON
1→2→10→3 (F19)→ 6 (coil)→4→Ground
1→2→10→3 (F19)→ 6 (contact point)→7 → 9 (coil)→Ground
Starter relay **9** operates to turn starter **6**.

Engine Stopping Circuit

Gr 13

Engine Preheating Circuit

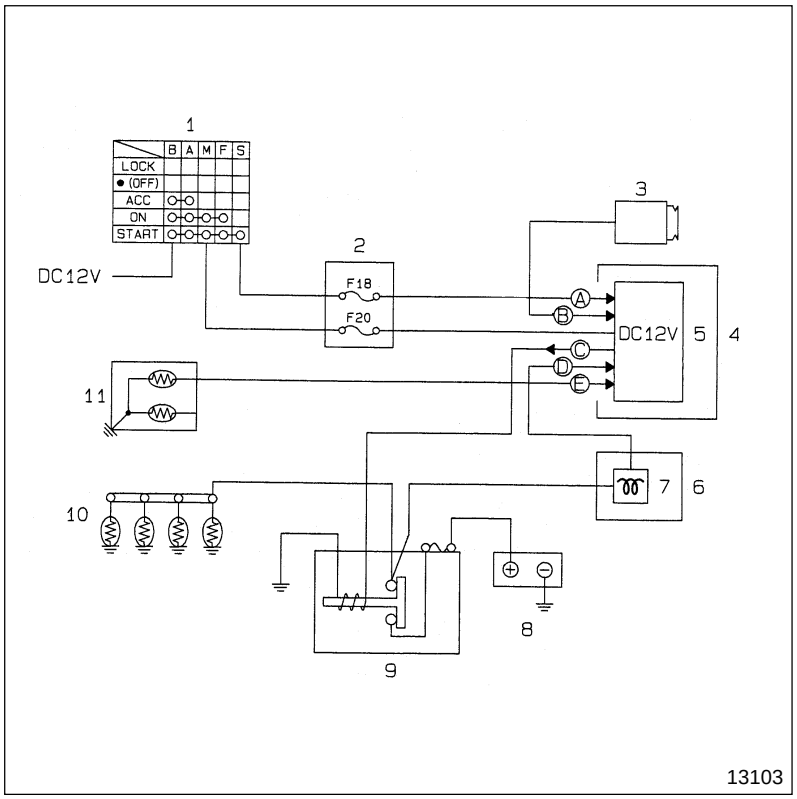

1 Starter switch
2 Fuse box
3 Alternator
4 Relay box
5 Multipurpose timing control unit
P54-9-2
6 Meter cluster
7 Engine preheating indicator lamp
8 Battery
9 Glow relay
10 Glow plug
11 Water temperature sensor

Ⓐ Engine start signal
Ⓑ Alternator charge signal
Ⓒ Glow relay activation signal
Ⓓ lighting-up signal
Ⓔ Engine coolant temperature signal

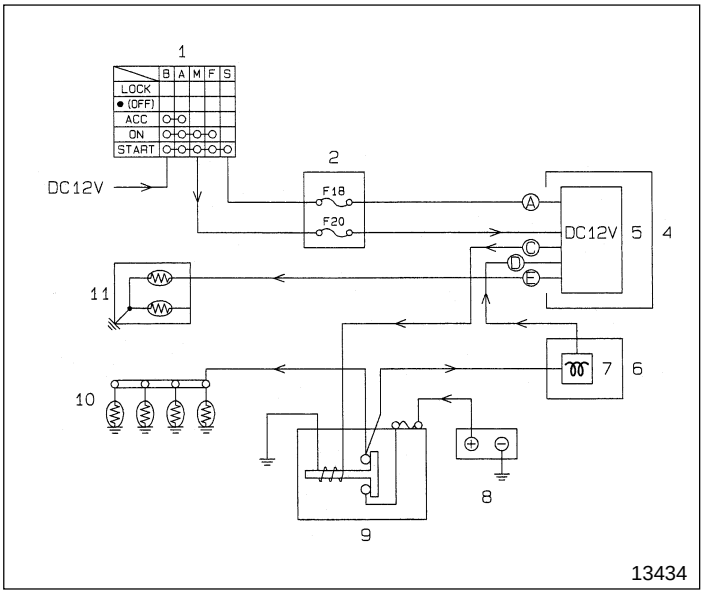

● **Engine Preheating Circuit**

This circuit improves the engine starting performance when the engine coolant temperature is low. The preheating system is controlled by multipurpose timing control unit **5**. P54-9-2

Basic preheating operation

Operation mode P54-2-8

When engine coolant temperature is low (Approximately 60°C {140°F} or less)

- Position of starter switch **1** : ON
  1→2 (F20)→5→Ground
  5 —Ⓔ→11→Ground

  Multipurpose timing control unit **5** detects the engine coolant temperature.
- When the engine coolant temperature is low, multipurpose timing control unit **5** outputs glow relay activation signal Ⓒ.

  5 —Ⓒ→9→Ground

- Glow relay **9** operates to feed power to glow plug **10** and lights up engine preheating indicator lamp **7**.
  8→9 (contact point)→10→Ground
  →7—Ⓓ→5→Ground

When engine coolant temperature is high (Approximately 60°C {140°F} or more)

- Position of starter switch 1 : ON
  1→2 (F20)→5→Ground
  5 —Ⓔ→11→Ground

  Multipurpose timing control unit **5** detects the engine coolant temperature.
- When the engine coolant temperature is high, multipurpose timing control unit **5** does not output glow relay activation signal Ⓒ, so no preheating is performed.

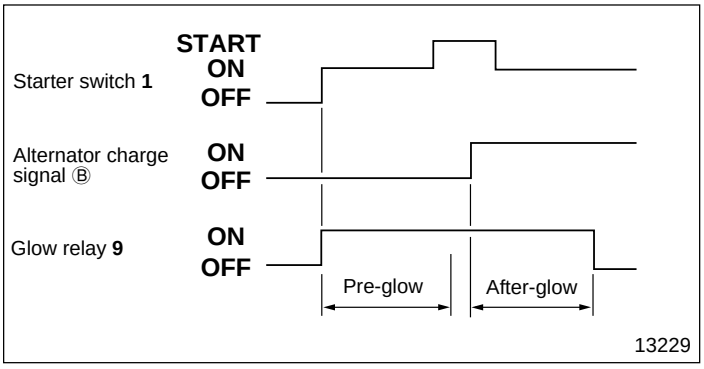

Pre-glow and after-glow

- There are two types of preheating: one is pre-glow, performed before starting the engine; the other is after-glow, performed after starting the engine. They are both controlled by start signal Ⓐ and alternator charge signal Ⓑ.

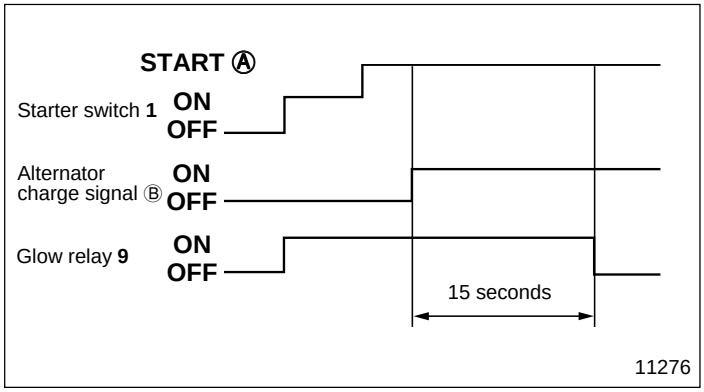

Fail-safe

- If the contacts of the glow relay driving relay in multipurpose timing control unit **5** are welded, preheating indicator lamp 7 **7** blinks to alert the driver of the fault.
- When all of the following conditions are satisfied, the fail-safe function turns off glow relay **9**.
  - Coolant temperature is 60°C {140°F} or less.
  - Engine start signal Ⓐ is ON.
  - Alternator charge signal Ⓑ is ON for **15** seconds.

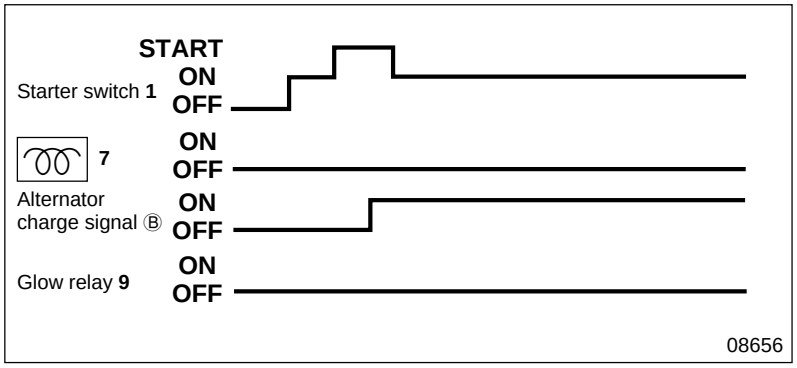

Operation mode

- Where the engine coolant temperature is 60°C {140°F} or more.

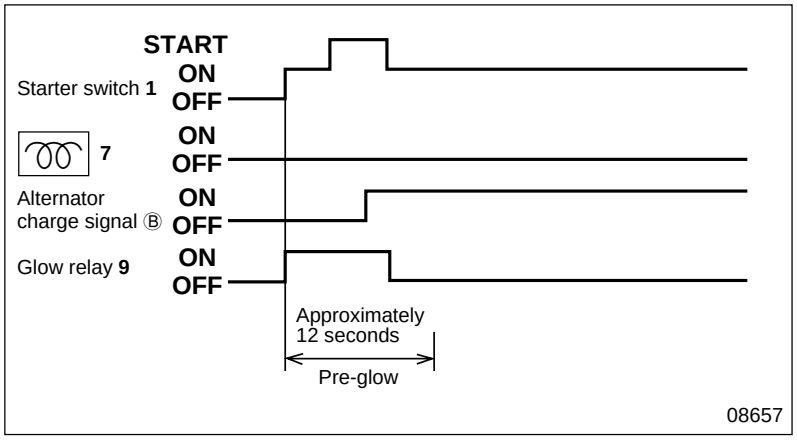

- Where the engine coolant temperature is 0 to 60°C {32 to 140°F}.

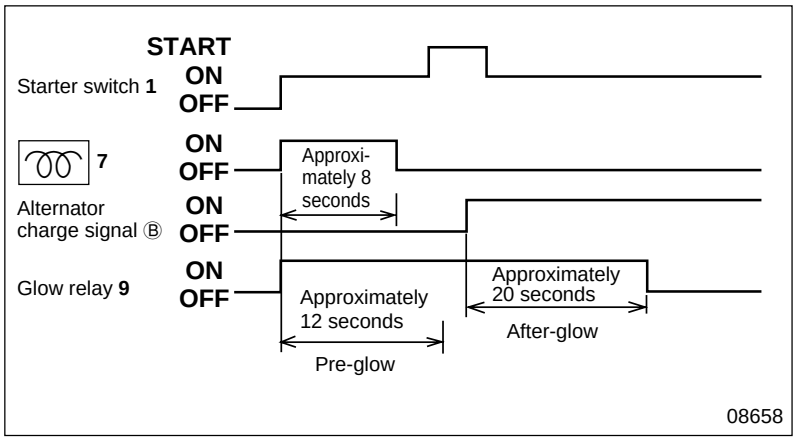

- Where the engine coolant temperature is 0°C {32°F} or less.

M E M O

TROUBLESHOOTING

Symptoms / Possible causes		Starter does not work	Starter works, but engine does not start: Pinion does not engage with ring gear	Starter works, but engine does not start: Pinion engages with ring gear, but does not rotate	Starter works, but engine does not start: Flywheel rotates, but engine does not start	Engine does not stop	Engine cannot be preheated	Engine hard to start	Remarks
Connector connection faulty, harness broken, grounding faulty		○			○	○	○	○	
Fuse blown		○							
Battery charge insufficient		○		○					
Starter	Magnetic switch contact point stuck or melted	○							
	Magnetic switch coil broken	○							
	Overrunning clutch malfunctioned		○						
	Pinion worn or damaged		○						
Starter relay faulty		○							
Starter switch faulty		○				○			
Flywheel ring gear worn or damaged			○						Gr 11
Key interlock control unit faulty < Automatic transmission >		○							Gr 23
Range selector lever in a position other than Neutral or Parking < Automatic transmission >		○							Gr 23
Inhibiter switch faulty < Automatic transmission >		○							Gr 23
Fuel-cut relay faulty					○	○			
Fuel-cut motor faulty					○	○			
Engine stop cable broken or damaged					○	○			Gr 13
Engine stop cable adjusted incorrectly						○			Gr 13
Glow plug faulty							○	○	
Glow relay faulty							○	○	
Water temperature sensor faulty							○	○	
Multipurpose timing control unit faulty							○	○	
Connecting plate connection faulty							○	○	Gr 11
Transmission neutral switch faulty < Manual transmission >		○							
Transmission neutral relay faulty < Manual transmission >		○							
Sub-starter switch faulty									

Possible causes \ Symptoms		Engine does not start although sub-starter switch is turned ON	Remarks
Connector connection faulty, harness broken, grounding faulty		○	
Fuse blown		○	
Battery charge insufficient		○	
Starter	Magnetic switch contact point stuck or melted	○	
	Magnetic switch coil broken	○	
	Overrunning clutch malfunctioned		
	Pinion worn or damaged		
Starter relay faulty		○	
Starter switch faulty		○	
Flywheel ring gear worn or damaged			Gr 11
Key interlock control unit faulty < Automatic transmission >		○	Gr 23
Range selector lever in a position other than Neutral or Parking < Automatic transmission >		○	Gr 23
Inhibiter switch faulty < Automatic transmission >		○	Gr 23
Fuel-cut relay faulty			
Fuel-cut motor faulty			
Engine stop cable broken or damaged			Gr 13
Engine stop cable adjusted incorrectly			Gr 13
Glow plug faulty			
Glow relay faulty			
Water temperature sensor faulty			
Multipurpose timing control unit faulty			
Connecting plate connection faulty			Gr 11
Transmission neutral switch faulty < Manual transmission >		○	
Transmission neutral relay faulty < Manual transmission >		○	
Sub-starter switch faulty		○	

Inspection of Engine Preheating System

Service standards

Location	Maintenance item			Standard value	Limit	Remedy
—	Pre-glow time	Water temperature	60°C {140°F} or more	Does not pre-glow	—	Inspect
			0 to 60°C {32 to 140°F}	Approximately 12 seconds	—	
			0°C {32°F} or less	Approximately 12 seconds	—	
	After-glow time	Water temperature	60°C {140°F} or more	Does not after-glow	—	
			0 to 60°C {32 to 140°F}	Does not after-glow	—	
			0°C {32°F} or less	Approximately 20 seconds	—	
	Indicator lamp lighting time	Water temperature	60°C {140°F} or more	Does not light	—	
			0 to 60°C {32 to 140°F}	Does not light	—	
			0°C {32°F} or less	Approximately 8 seconds	—	

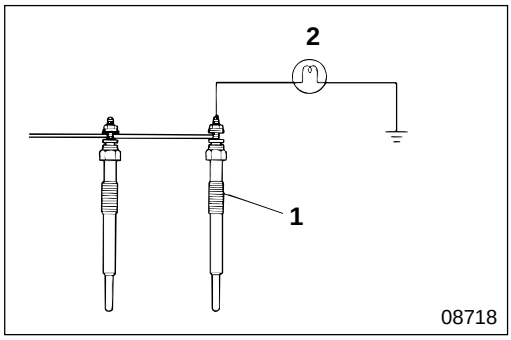

- Turn the starter switch OFF.
- Turn the cold start switch OFF.
- Connect inspection lamp **2** to glow plug **1**.

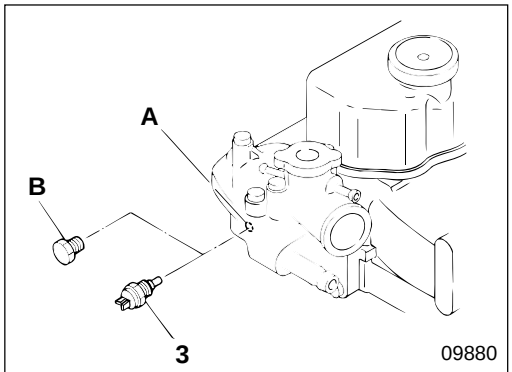

- Remove water temperature sensor **3** from the engine and plug sensor mounting part **A** with plug **B** (M16×1.5 mm).
  Removal and installation of water temperature sensor **3** Gr 14
- Connect extension harness **5** between water temperature sensor **3** and connector **4**.

NOTE

Connect extension harness 5 to terminal C of the multipurpose timing control unit.

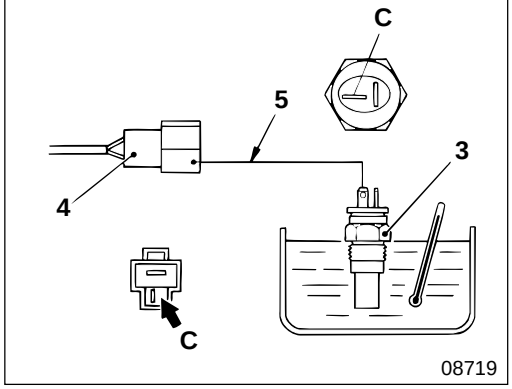

- Put water temperature sensor **3** into a container filled with water.
- Carry out the following inspection while changing the water temperature in the container. If any fault is found, inspect each unit.

(1) Inspection of pre-glow time and indicator lamp lighting time

Turn the starter switch ON but do not start the engine. Make sure that the pre-glow time and the indicator lamp lightning time at each water temperature conform to the standard value.

- For pre-glow time inspection, measure the lighting time of inspection lamp **2**.
- For indicator lamp lightning time inspection, measure the lighting time of lamp within the meter cluster directly.

(2) Inspection of after-glow time

Start the engine and measure the lighting time of inspection lamp **2** from the point lamp within the meter cluster goes off, and make sure that the after-glow time conforms to the standard value.

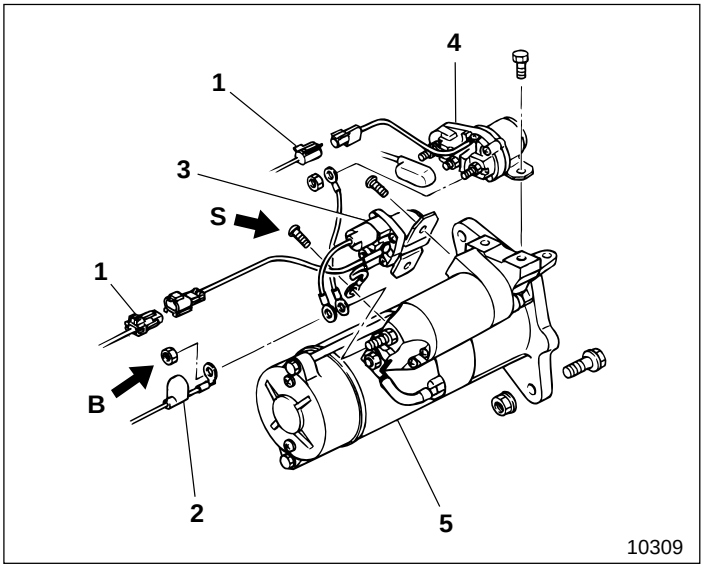

● **Removal sequence**

1 Chassis harness
2 Starter cable (to battery connection)
3 Starter relay
4 Glow relay
5 Starter 🕮 P54-2-14

B : To terminal B
S : To terminal S

WARNING⚠

Never touch the starter with tools when you remove the harness from terminal B. This is because voltage is always supplied to it from starter cable 2, and you will short-circuit the starter. Before removing the harness from terminal B, remove the ⊖ battery terminal and tape it up to insulate it.

● **Installation sequence**

Follow the removal sequence in reverse.

Starter

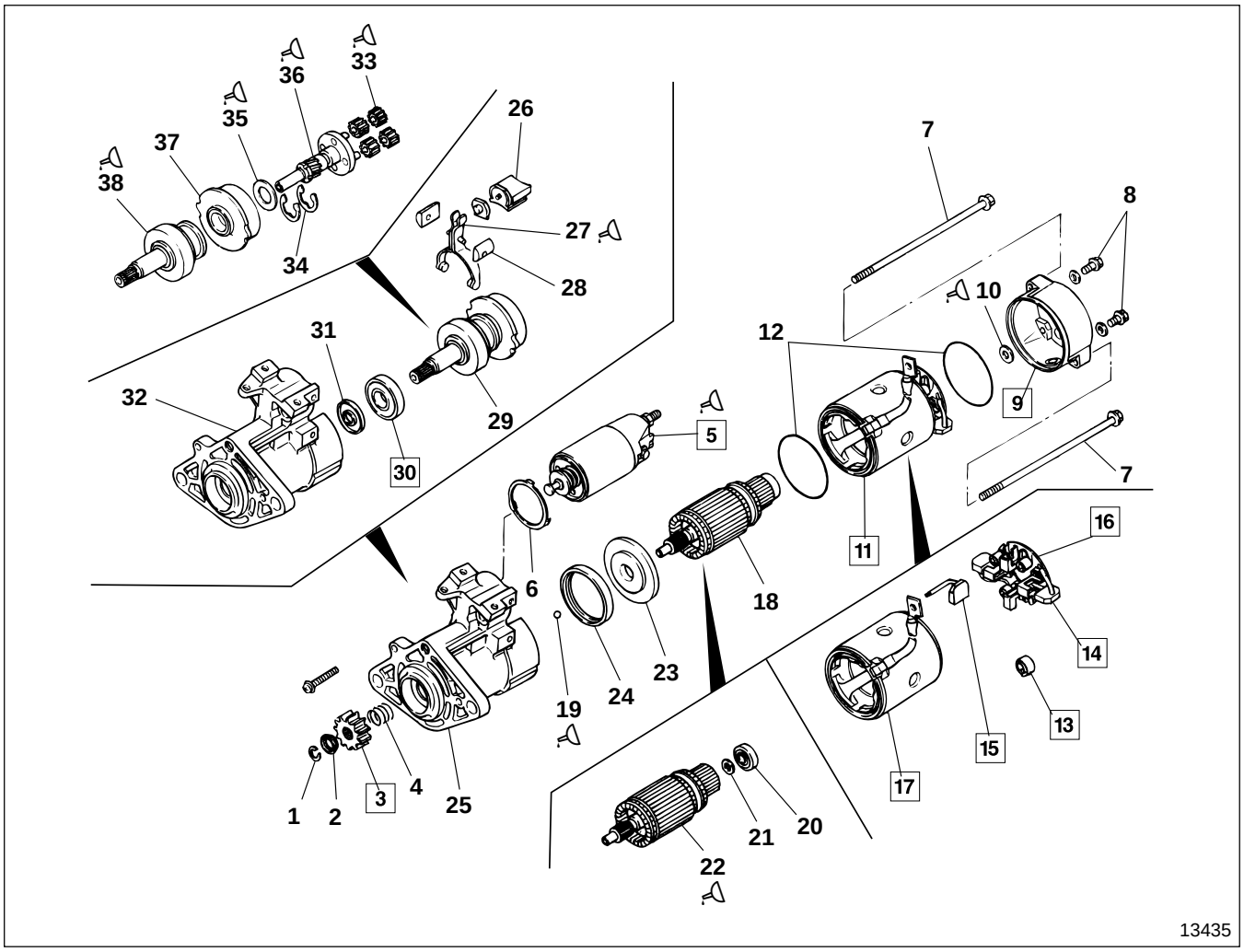

● **Disassembly sequence**

1 Stopper ring
2 Pinion stopper
3 Pinion
4 Spring
5 Magnetic switch
6 Shim
7 Bolt
8 Screw
9 Rear bracket
10 Conical washer
11 Yoke and brush holder assembly
12 Rubber packing
13 Brush spring
14 Brush ⊖
15 Brush ⊕
16 Brush holder assembly
17 Yoke assembly
18 Armature assembly
19 Ball
20 Rear bearing
21 Washer
22 Armature
23 Cover
24 Rubber packing
25 Front bracket assembly
26 Rubber packing
27 Lever
28 Bushing
29 Gear shaft and overrunning clutch assembly
30 Front bearing
31 Dust seal
32 Front bracket
33 Planetary gear
34 Washer
35 Washer
36 Gear shaft
37 Internal gear
38 Overrunning clutch

CAUTION⚠

- **When removing yoke and brush holder assembly 11, make sure you first pull out brushes 14, 15 from brush holder assembly 16 to avoid damaging the commutator of armature 22.**
- **Do not remove bearings 20, 30 unless they are faulty.**
- **Make sure you do not drop armature assembly 18 when you remove yoke and brush holder assembly 11 from front bracket assembly 25.**
- **Be careful not to lose ball 19, since it might come out together with armature assembly 18 when you remove it.**

NOTE

- **You do not have to remove pinion 3 when you disassemble or inspect only the motor assembly, for example: when inspection of the brush assembly is required.**
- **Except for the above, make sure you remove pinon 3 before disassembling any parts.**

● **Assembly sequence**

Follow the disassembly sequence in reverse.

NOTE

Whenever magnetic switch 5 has been replaced, be sure to adjust the pinion gap.

● **Inspection after assembly**

🕮 P54-2-16

Service standards

Unit : mm {in.}

Location	Maintenance item		Standard value	Limit	Remedy
—	Pinion gap		0.5 to 2.0 {0.02 to 0.079}	—	Adjust
—	No-load characteristic (11 V when current flowing)	Current	180 A or less	—	Inspect
		Revolutions per minute	3800 rpm or more	—	
13	Pressure of brush spring		29 to 39 N {6.6 to 8.8 lbf, 3 to 4 kgf}	20 N {4.4 lbf, 2 kgf}	Replace
14, 15	Length of brush		18 {0.71}	11 {0.43}	Replace
18	Armature assembly	Outer diameter of commutator	32 {1.26}	31.4 {1.24}	Replace
		Deflection of commutator periphery	—	0.05 {0.002} or more	Replace
		Mica depth between segments	0.5	0.2 {0.0079} or less	Correct or replace

Lubricant

Location	Points of application	Kinds	Quantity
5	Contact surface between lever and magnetic switch	Multipurpose grease [NLGI No.2 Li soap]	As required
10	Conical washer	Multipurpose grease [NLGI No.2 Li soap]	As required
19	Ball	MOLYKOTE ® AG650	As required
22, 33	Teeth of armature gear and planetary gear	MOLYKOTE ® AG650	As required
22, 36	Friction surfaces of gear shaft and armature	MOLYKOTE ® AG650	As required
27	Friction surfaces of lever and overrunning clutch	Multipurpose grease [NLGI No.2 Li soap]	As required
35	Washer	MOLYKOTE ® AG650	As required
36, 38	Friction surfaces of gear shaft and overrunning clutch	Multipurpose grease [NLGI No.2 Li soap]	As required
38	Spline of overrunning clutch	Multipurpose grease [NLGI No.2 Li soap]	As required

◆ Service procedure

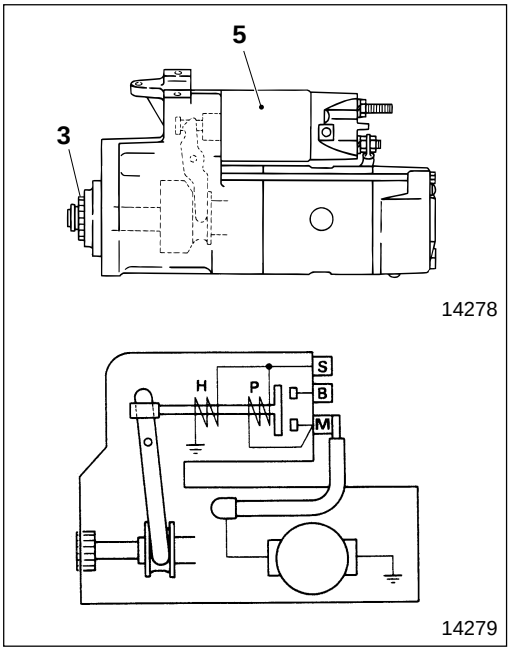

● Inspection after assembly

Inspections after assembling the starter should be carried out with current fed to the starter.

WARNING

- **Do not touch pinion 3 because it jumps out and turns when current is fed to the starter.**
- **Take care not to burn your hand, magnetic switch 5 might be hot after inspection.**

CAUTION

- **The current feeding time to the starter should be within 10 seconds at pull-in coil P side and within 30 seconds at holding coil H side. If the current feeding time exceeds these limits the coil might burn due to overheating.**
- **When current is flowing into the starter, a current of over 100 amperes is fed. When inspecting, use thick cable, such as a booster cable, and make secure connections.**

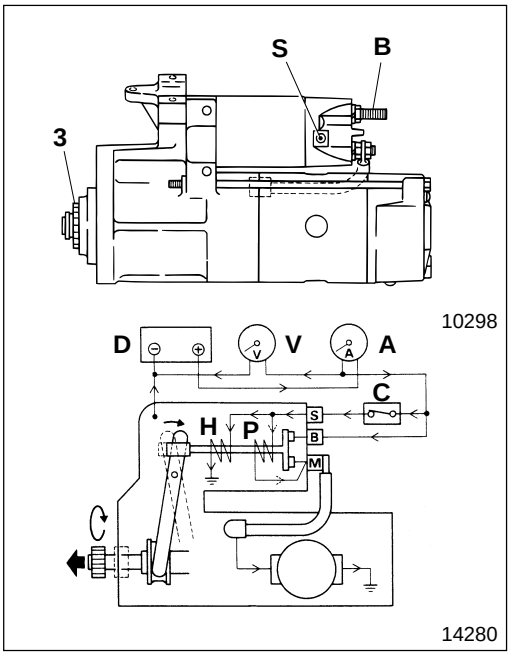

(1) Performance test

- Connect the starter as illustrated.
  - **A** : Ammeter
  - **B** : Terminal B of starter
  - **C** : Switch
  - **D** : DC power supply (12 volts)
  - **S** : Terminal S of starter
  - **V** : Voltmeter
- Set the voltage to **11** volts DC.

CAUTION

Up to 12 volts can be loaded.

- The following work should be done with current fed to the starter. You must complete the full procedure of measuring the intensity of the current and the number of revolutions within 30 seconds.
  - Turn switch **C** ON and feed current into the starter. In this state, pinion **3** jumps out and rotates.

CAUTION

When switch C is turned ON, current is fed both to pull-in coil P and holding coil H. When a large amount of current is fed into terminal M from DC power supply D, via terminal B of the starter, the current stops flowing into the pull-in coil but continues to flow into the holding coil.

To avoid burning the holding coil, be sure to carry out the performance test within 30 seconds.

  - Measure the intensity of the current and the number of revolutions of the starter. Train a strobe light on pinion **3** to measure the revolutions.
  - Turn switch **C** OFF to stop current to the starter.
- If the measured value deviates from the standard value, disassemble the starter again and inspect it.

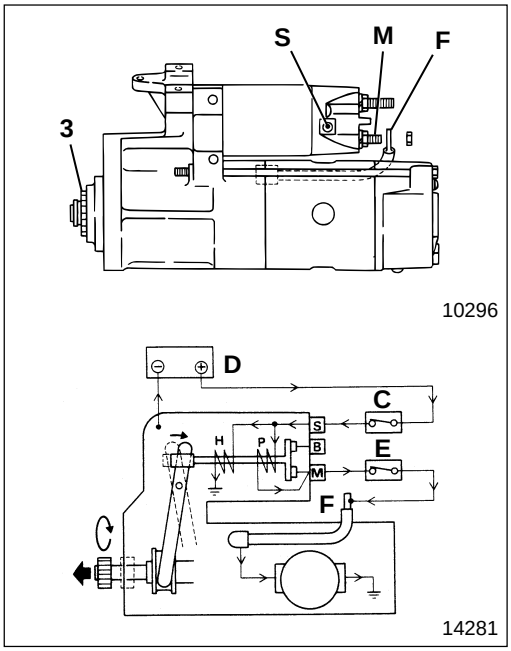

(2) Pinion gap

[Inspection]

- Connect the starter as illustrated.

C : Switch	**F** : Cable
D : 12 volts DC	**M** : Terminal M of starter
E : Switch	**S** : Terminal S of starter

- The following work should be done with current fed to the starter. You must complete the full procedure for measuring the pinion gap within 30 seconds.
  - Turn switches **C** and **E** ON and feed current to the starter. In this state, pinion **3** jumps out and rotates.

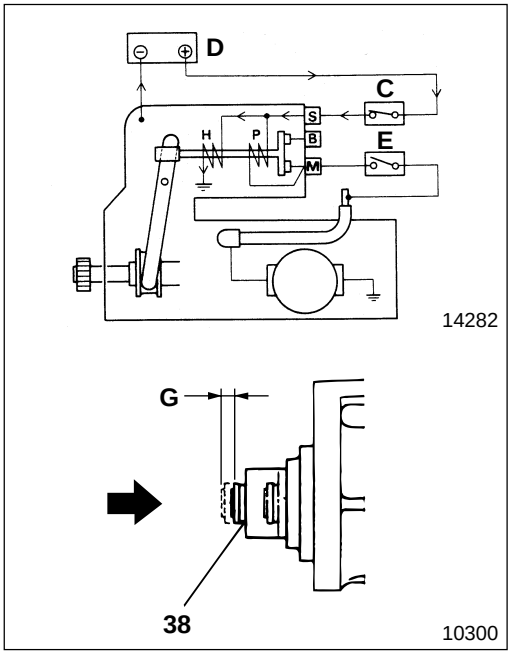

  - Within five seconds of pinion **3** rotating, turn switch **E** OFF to stop rotation of the pinion.

CAUTION⚠

When switches C and E are turned ON, current is fed both to pull-in coil P and holding coil H. The circuit is wired in such a way that the voltage is not applied to terminal B of the starter, so the current continues to flow into the pull-in coil while pinion 3 rotates.

To avoid burning the pull-in coil, be sure to turn switch E OFF within five seconds of the pinion rotating.

  - Push the tip of overrunning clutch **38** lightly and measure pinion gap **G** in the axial direction.
  - Turn switch **C** OFF to stop current to the starter.
- If the measured value deviates from the standard value, adjust the pinion gap as follows.

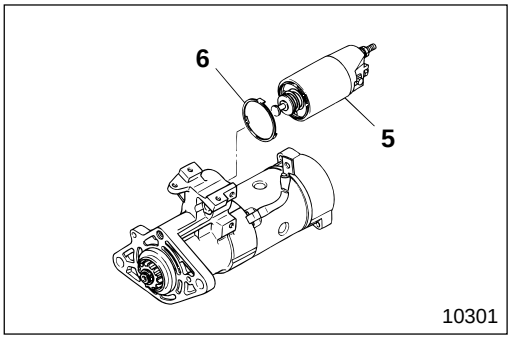

[Adjustment]

- Remove magnetic switch **5** from front bracket assembly **25**.
- Change the thickness of shims **6**. Adding shims decreases pinion gap **G**.
- Type of shim : 0.5, 0.25 mm {0.02, 0.0098 in.}

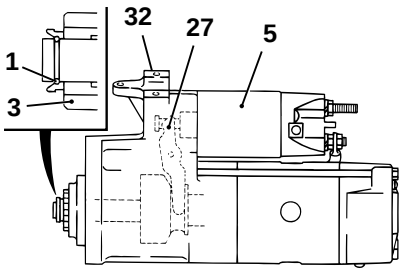

14283

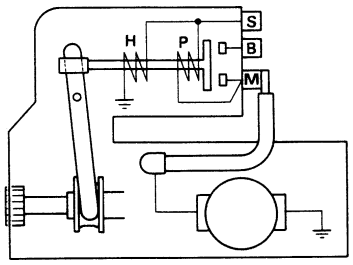

14279

3 Pinion

[Removal]
Feed current to the starter and protrude pinion **3** to remove the pinion.

WARNING

- **Do not touch pinion 3 because it jumps out and turns when current is fed to the starter.**
- **Take care not to burn your hand, magnetic switch 5 might be hot after inspection.**

CAUTION

- **The current feeding time to the starter should be within 10 seconds at pull-in coil P side and within 30 seconds at holding coil H side. If the current feeding time exceeds these limits, the coil might burn due to overheating.**
- **Before making pinion 3 jump out, be sure to feed current to the starter to obtain the correct state. If current is not fed to the starter and lever 27 is pulled to protrude the pinion, front bracket 32 or the lever might be damaged due to the shock produced on removal of stopper ring 1.**
- **The current, when fed to the starter, is over 100 amperes. When inspecting, use thick cable, such as a booster cable, and make secure connections.**

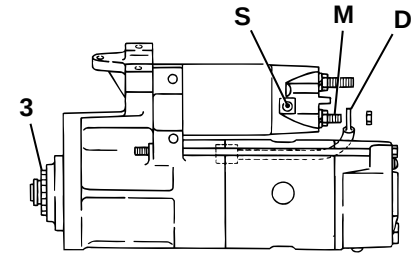

10296

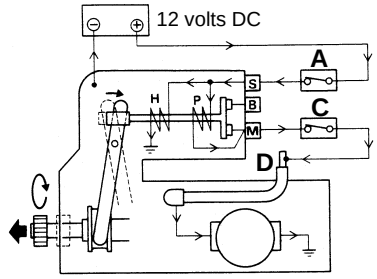

14281

- Connect the starter as illustrated.
  A : Switch
  C : Switch
  D : Cable
  M : Terminal M of starter
  S : Terminal S of starter

- The following work should be done while current is flowing into the starter. You must complete the full procedure for removing pinion **3** within 30 seconds.
  - Turn switches **A** and **C** ON and feed current to the starter. In this state, pinion **3** jumps out and rotates.

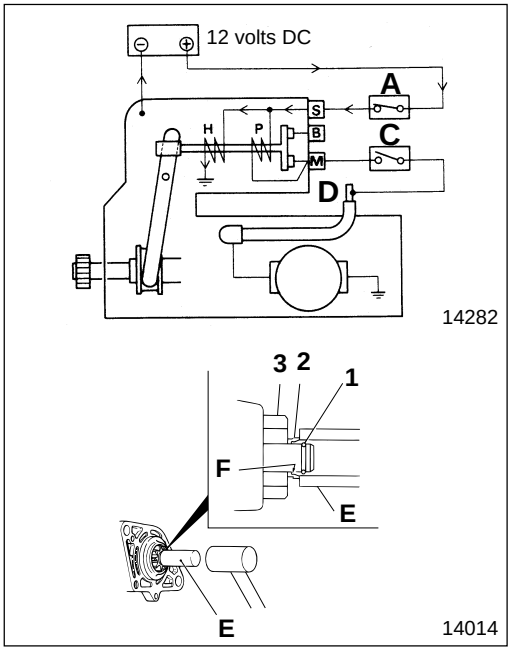

- Within 5 seconds of pinion **3** rotating, turn switch **C** OFF to stop rotation of the pinion.

CAUTION

When switches A and C are turned ON, current is fed both to pull-in coil P and holding coil H. The circuit is wired in such a way that the voltage is not applied to terminal B of the starter, so the current continues to flow into the pull-in coil while pinion 3 rotates.

To avoid burning the pull-in coil, be sure to turn switch C OFF within five seconds after the pinion rotates.

- Apply pipe-shaped tool **E** onto pinion stopper **2**.
- Hit tool **E** lightly using a mallet to remove stopper ring **1** from ring groove **F** of pinion stopper **2**.
- Remove stopper ring **1** and pinion **3**.
- Turn switch **A** OFF to stop current to the starter.

NOTE

When the current to the starter is stopped, stopper ring 1 might fall back into ring groove F of pinion stopper 2 because pinion 3 is pushed inside.

If this occurs, feed current to the starter again and carry out the work.

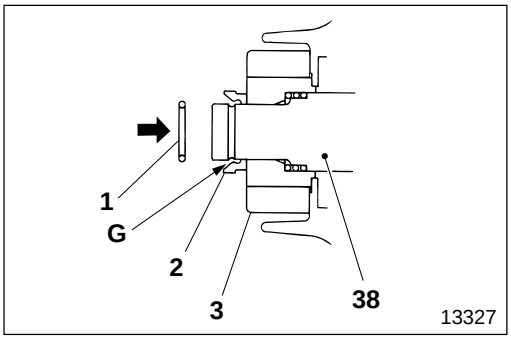

[Installation]

When installing pinion **3**, it is not necessary to feed current to the starter.

- Install pinion stopper **2** and pinion **3** onto overrunning clutch **38** in the direction as illustrated.
- Fit stopper ring **1** into ring groove **G** of overrunning clutch **38**.

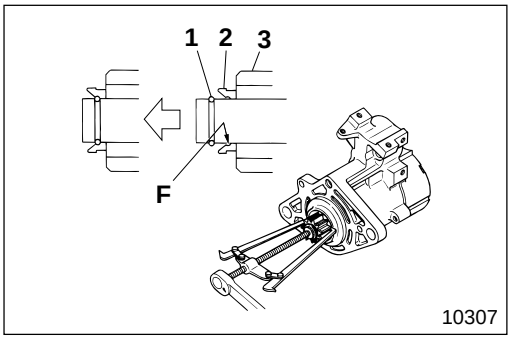

- Pull pinion **3** firmly and set stopper ring **1** on groove **F** of pinion stopper **2**.

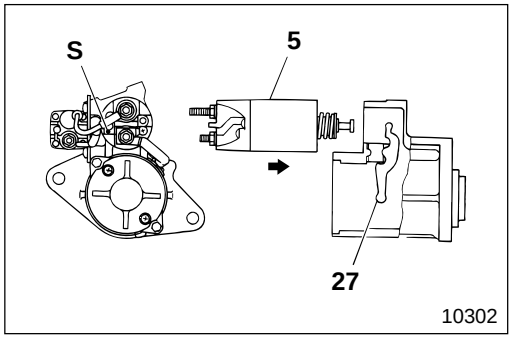

5 Magnetic switch

[Installation]
Install magnetic switch **5** to lever **27**, with terminal **S** facing the direction as illustrated.

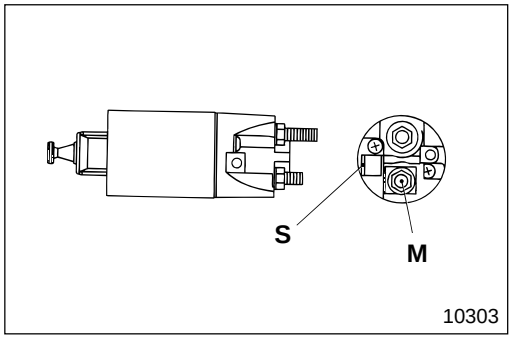

[Inspection]

(1) Testing for coil discontinuity

- Make sure that there is continuity between terminals **S** and **M**.
- If there is no continuity, replace magnetic switch **5**.

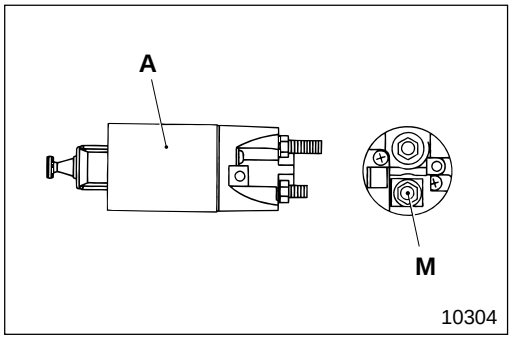

- Make sure that there is continuity between terminal **M** and body **A** of magnetic switch **5**.
- If there is no continuity, replace magnetic switch **5**.

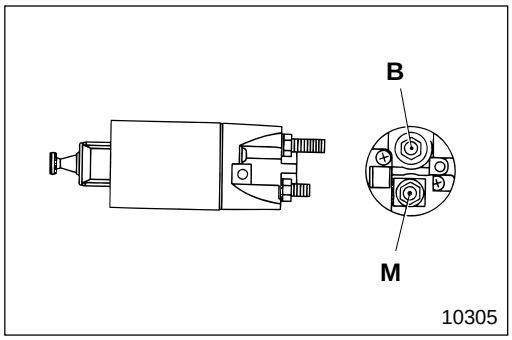

(2) Inspection of welded connections

- Make sure that there is no continuity between terminals **B** and **M**.
- If there is continuity, replace magnetic switch **5**.

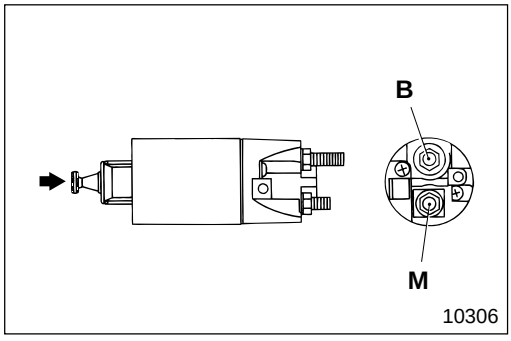

(3) Inspection of connections

- Push the tip of magnetic switch **5** to close the internal connection.
- Make sure that there is continuity between terminals **B** and **M**.
- If there is no continuity, replace magnetic switch **5**.

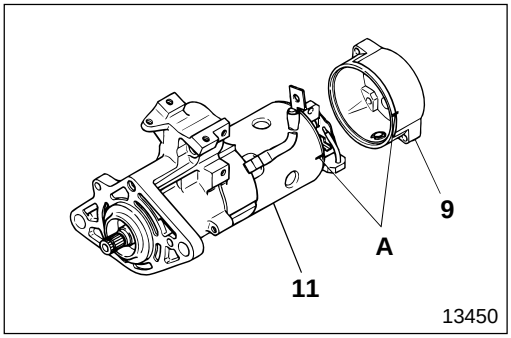

9 **Installation of rear bracket**

A : Alignment mark

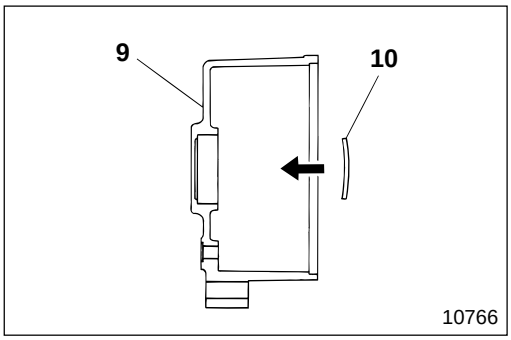

10 **Installation of conical washer**

Install conical washer **10** to rear bracket **9** in the direction as illustrated.

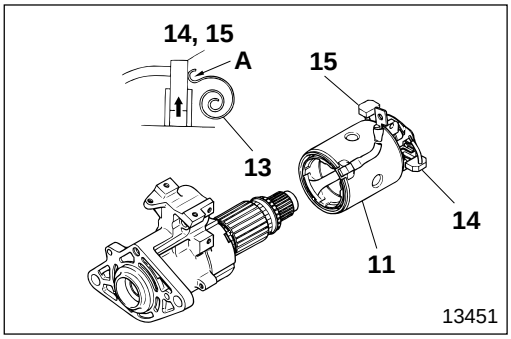

11 **Removal and installation of yoke and brush holder assembly**

- Pull point **A** of brush spring **13** to pull out brushes **14**, **15**.
- After pulling out brushes **14**, **15**, secure them with brush spring **13** as illustrated.
- Remove yoke and brush holder assembly **11**.
- For installation, reverse the removal procedure.

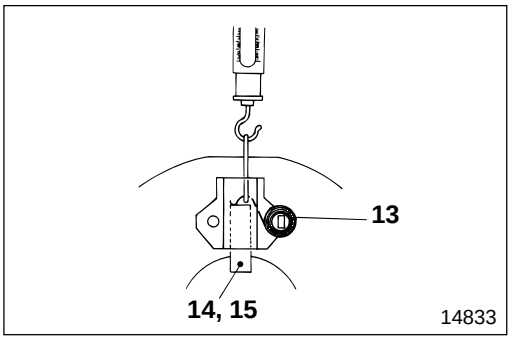

13 **Inspection of brush spring**

- Use new brushes **14**, **15** and measure the load when brush spring **13** is detached from the brushes.
- If the measured value is higher than the limit, replace brush spring **13**.

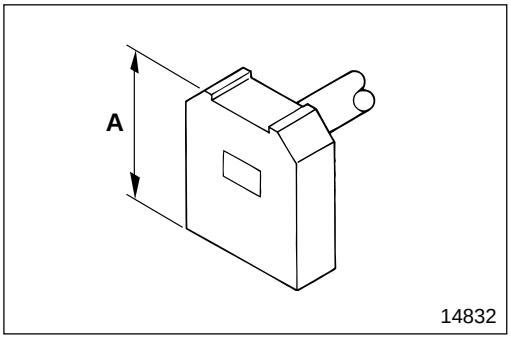

14 **15** **Inspection of brush**

(1) Length of brush

If the measured value is lower than the limit, replace brushes **14**, **15**.

A : Length of brush

NOTE

To replace brush ⊖ 14, replace entire brush holder assembly 16.

(2) Contact surface with commutator

If the surface where the brushes contact the commutator is rough or is worn unevenly, polish the surface with emery paper (300 to 500 grit).

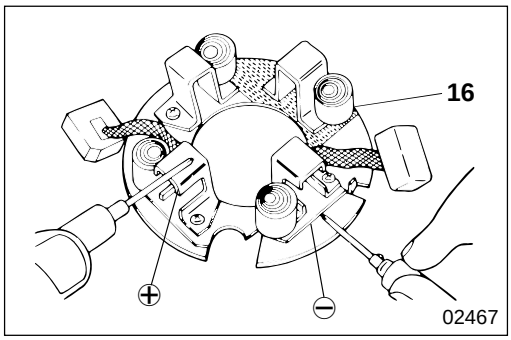

16 Inspection of brush holder assembly

- Make sure that there is no continuity between the ⊕ side of the brush holder and the ⊖ side of the holder plate.
- If there is continuity, they are grounded. Replace brush holder assembly **16**.

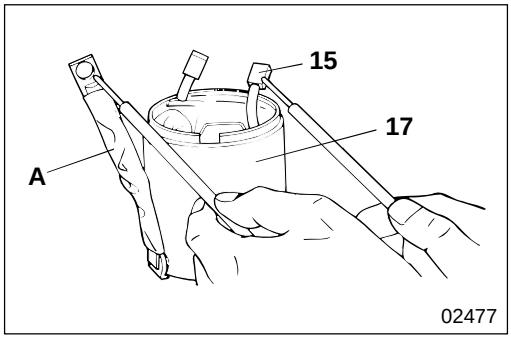

17 Inspection of yoke assembly

(1) Testing for coil disconnection

- Make sure that there is continuity between cable **A** and brush ⊕ **15**.
- If there is no continuity, they are disconnected. Replace brush ⊕ **15** or yoke assembly **17**.

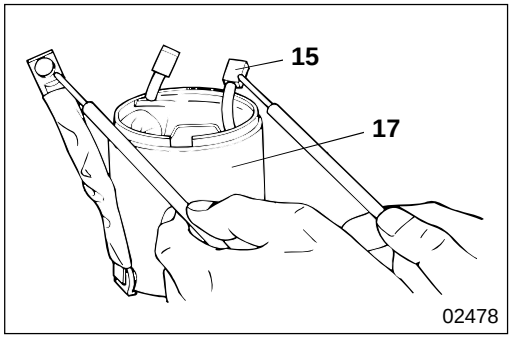

(2) Testing for coil grounding

- Make sure that there is no continuity between yoke assembly **17** and brush ⊕ **15**.
- If there is continuity, they are short-circuited. Inspect the insulated point. If it is hard to repair, replace brush ⊕ **15** or yoke assembly **17**.

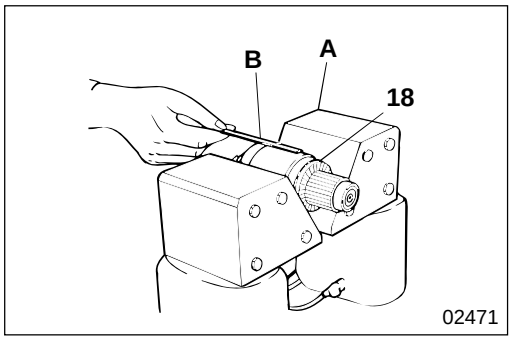

18 Inspection of armature assembly

(1) Testing for coil short-circuit

- Place iron rod **B** parallel to armature assembly **18**.
  A : Armature tester
- Rotate armature assembly **18** slowly.
- If iron rod **B** is pulled or shakes, it indicates that armature assembly **18** is short-circuited, so replace it.

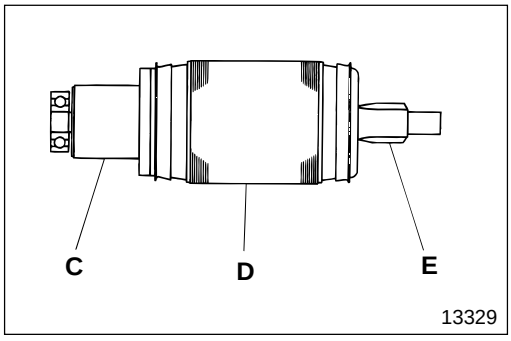

(2) Testing for coil grounding

- Make sure that there is no continuity between commutator **C** and core **D** (or shaft **E**).
- If there is continuity between them, they are short-circuited. Replace armature assembly **18**.

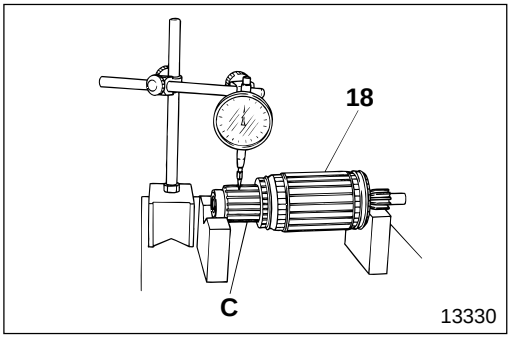

(3) Deflection of commutator

If the measured value is higher than the limit, adjust the outer diameter of commutator **C** within the limit.

(4) Rough commutator surface

- If the surface is rough or has stepped wear, polish the surface with emery paper (300 to 500 grit).
- After polishing, check deflection of commutator **C**.

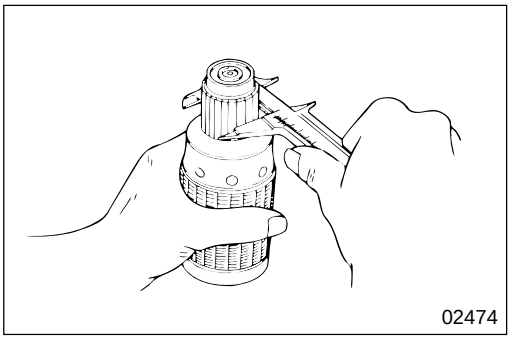

(5) Outer diameter of commutator

If the measured value is higher than the limit, replace armature assembly **18**.

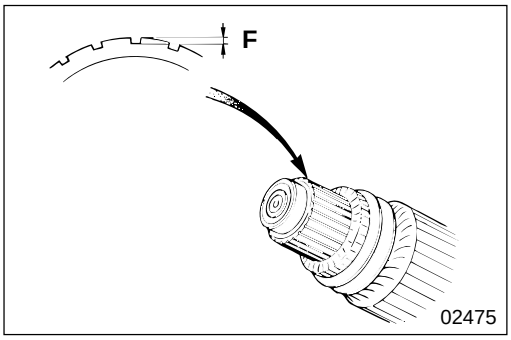

(6) Mica depth between segments

- If the measured value is lower than the limit, correct or replace armature assembly **18**.
  F : Mica depth

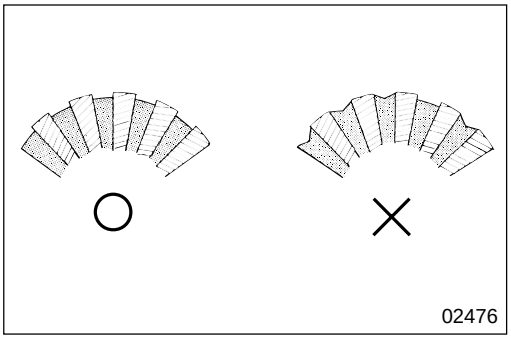

- If the mica is worn as illustrated, replace armature assembly **18**.
  ○ : Good
  × : Faulty

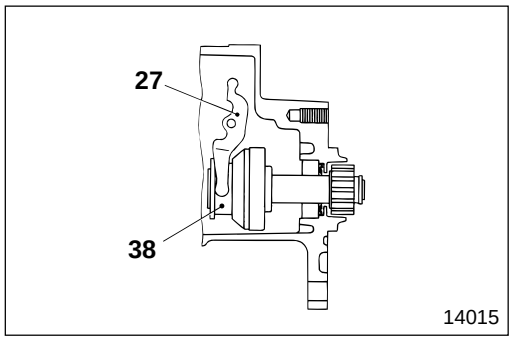

27 **Installation of lever**

Install lever **27** onto overrunning clutch **38** in the direction as illustrated.

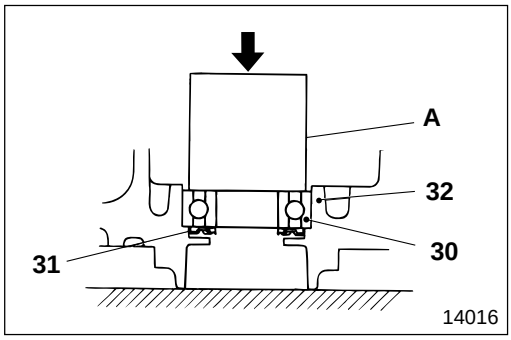

30 **Installation of front bearing**

- Install dust seal **31** before press-fitting front bearing **30**.
- Press-fit front bearing **30** into front bracket **32** using pipe-shaped tool **A**.

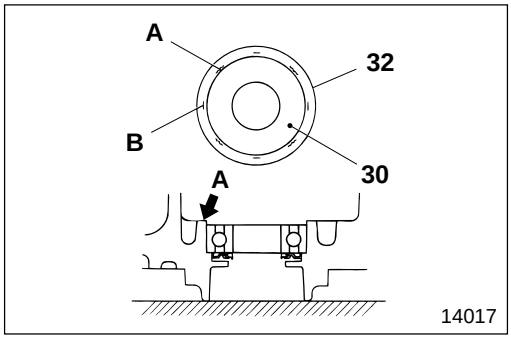

- Re-caulk front bracket **32**.

NOTE

Do not re-caulk previously caulked points B.

A : Caulking points (4 points)

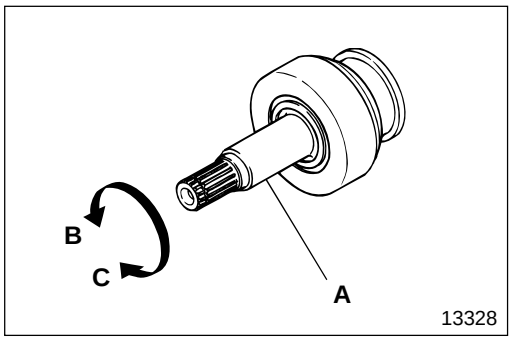

38 **Installation of overrunning clutch**

Carry out the following inspection. If any fault is found, replace overrunning clutch **38**.

- Make sure that shaft **A** turns smoothly when turned in direction **B**.
- Make sure that shaft **A** locks when turned in direction **C**.

M E M O

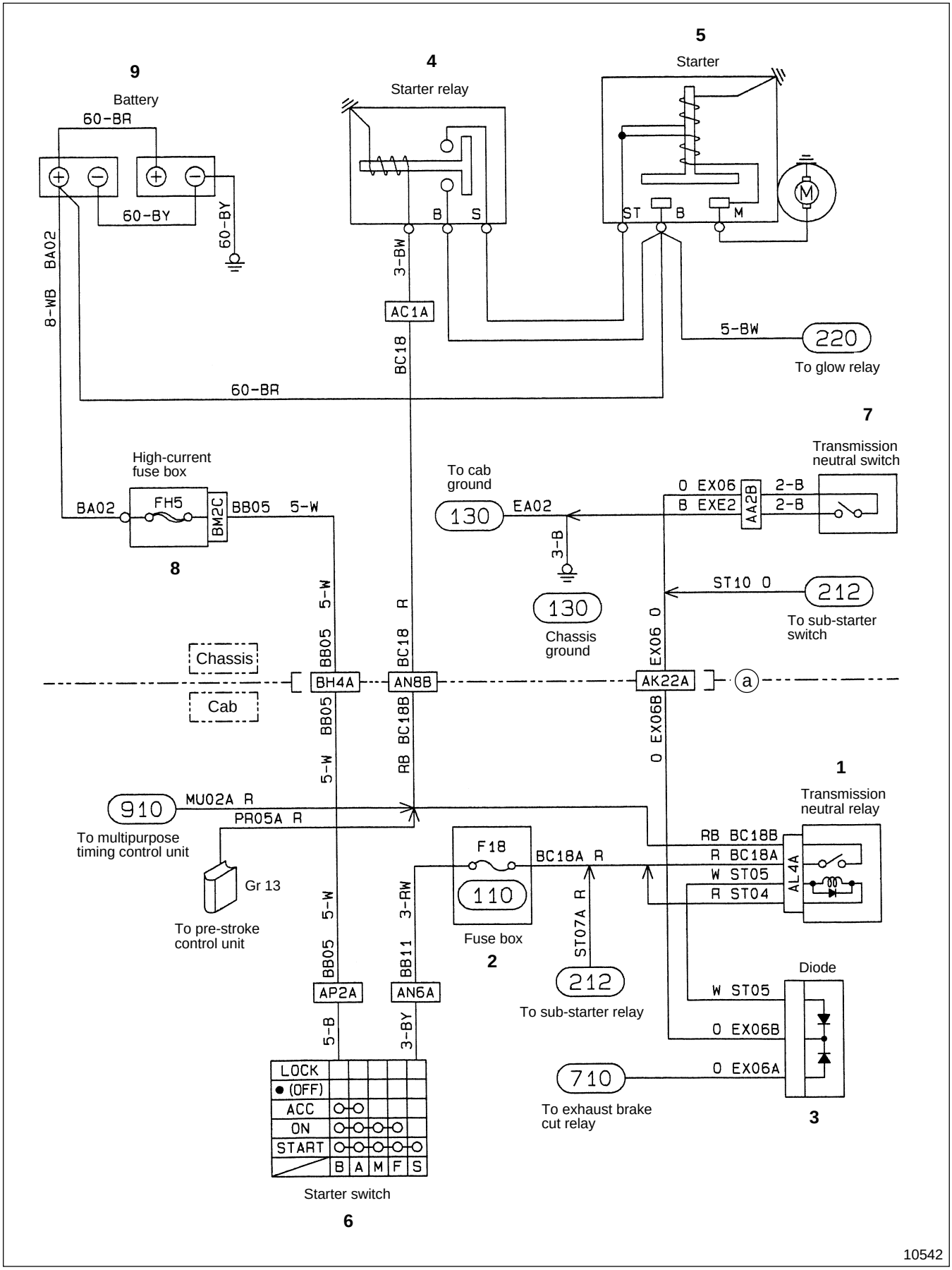
9
Battery
60-BR
60-BY
60-BY
8-WB BA02
4
Starter relay
B S
3-BW
AC1A
BC18
5
Starter
ST B M
5-BW
220
To glow relay
60-BR
7
Transmission neutral switch
0 EX06
B EXE2
AA2B
2-B
2-B
To cab ground
130
EA02
3-B
130
Chassis ground
ST10 0
212
To sub-starter switch
EX06 0
High-current fuse box
BA02
FH5
BM2C
BB05 5-W
8
Chassis
Cab
BH4A
AN8B
AK22A
a
BB05 5-W
BC18 R
RB BC18B
0 EX06B
1
Transmission neutral relay
910
MU02A R
PR05A R
To multipurpose timing control unit
Gr 13
To pre-stroke control unit
F18
110
Fuse box
2
BC18A R
RB BC18B
R BC18A
W ST05
R ST04
AL4A
ST07A R
212
To sub-starter relay
3-RW
BB11
AP2A
AN6A
5-B
3-BY
Diode
W ST05
0 EX06B
0 EX06A
710
To exhaust brake cut relay
3
LOCK
(OFF)
ACC
ON
START
B A M F S
Starter switch
6
10542

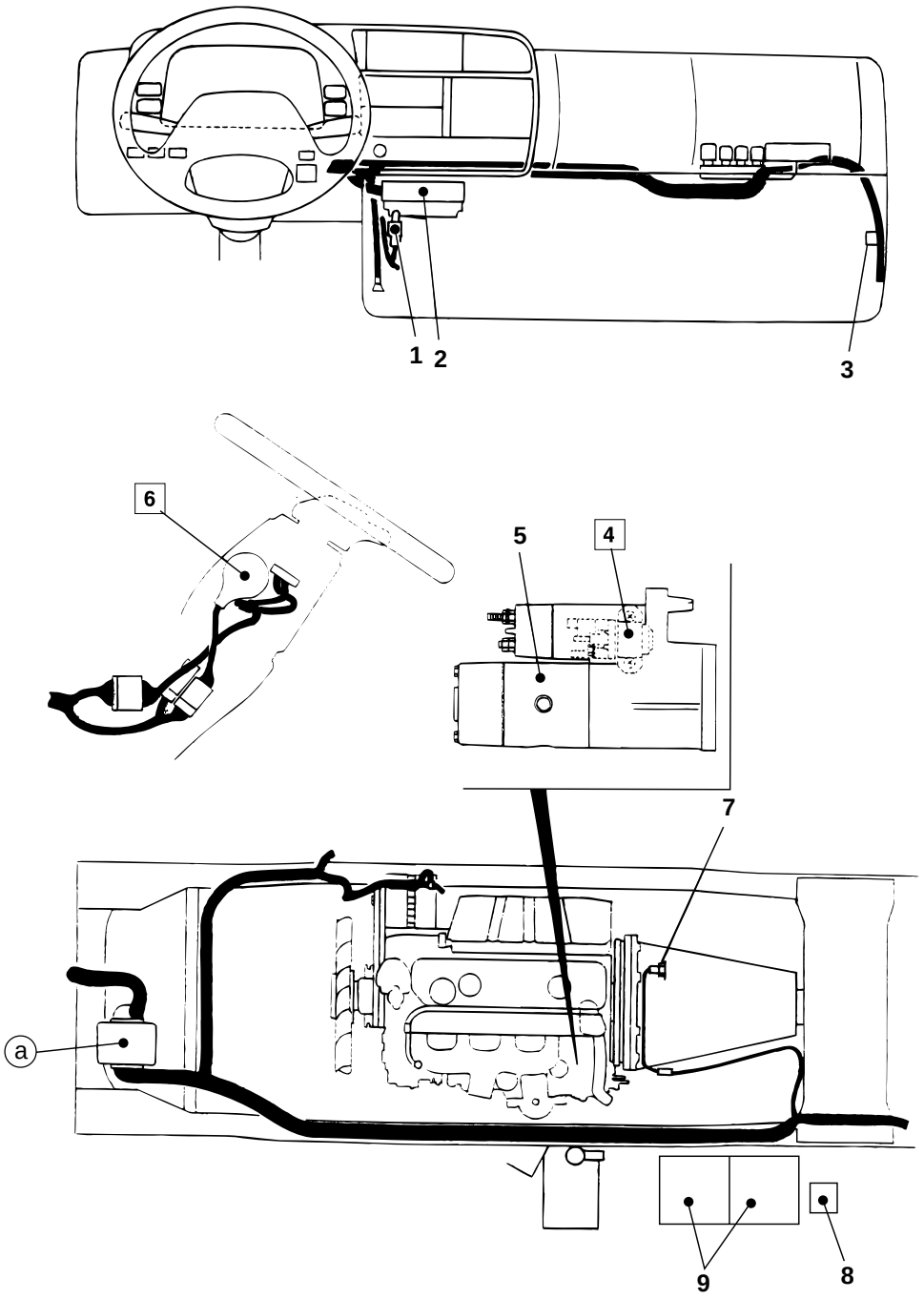

12910

1 Transmission neutral relay 🕮 (604)
2 Fuse box 🕮 (104)
3 Diode
4 Starter relay
5 Starter 🕮 (201)
6 Starter switch
7 Transmission neutral switch 🕮 (802)
8 High-current fuse box 🕮 (104)
9 Battery 🕮 (101)

◆ Service procedure

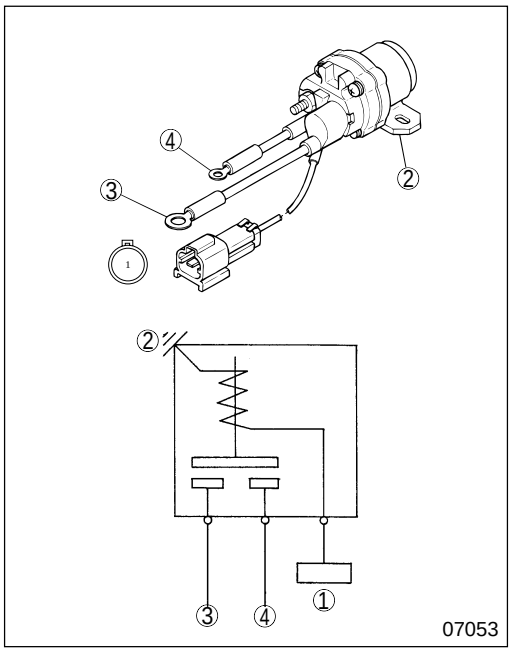

4 **Inspection of starter relay**

- Follow the table below to inspect continuity :

	③	④	①	②
No current			○——○	
Current	○——○		⊕——⊖	

○——○ : There is continuity between terminals ○ and ○.
⊕——⊖ : Indicates that 12 volts DC is applied to the line between the terminals.

- If any fault is found, replace starter relay **4**. P54-2-13

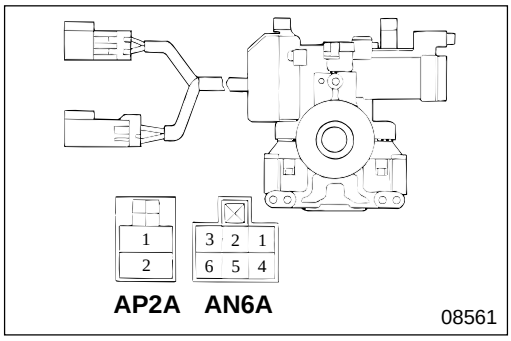

6 **Inspection of the starter switch**

- Follow the table below to inspect continuity :

	AP2A		AN6A		
	②	①	③	④	②
LOCK					
• (OFF)					
ACC	○——		——○		
ON	○——	——○	○——	——○	
START	○——	——○	○——	——○	——○
	B	M	A	F	S

○——○ : There is continuity between terminals ○ and ○.

- If any fault is found, replace starter switch **6**. Gr 37

M E M O

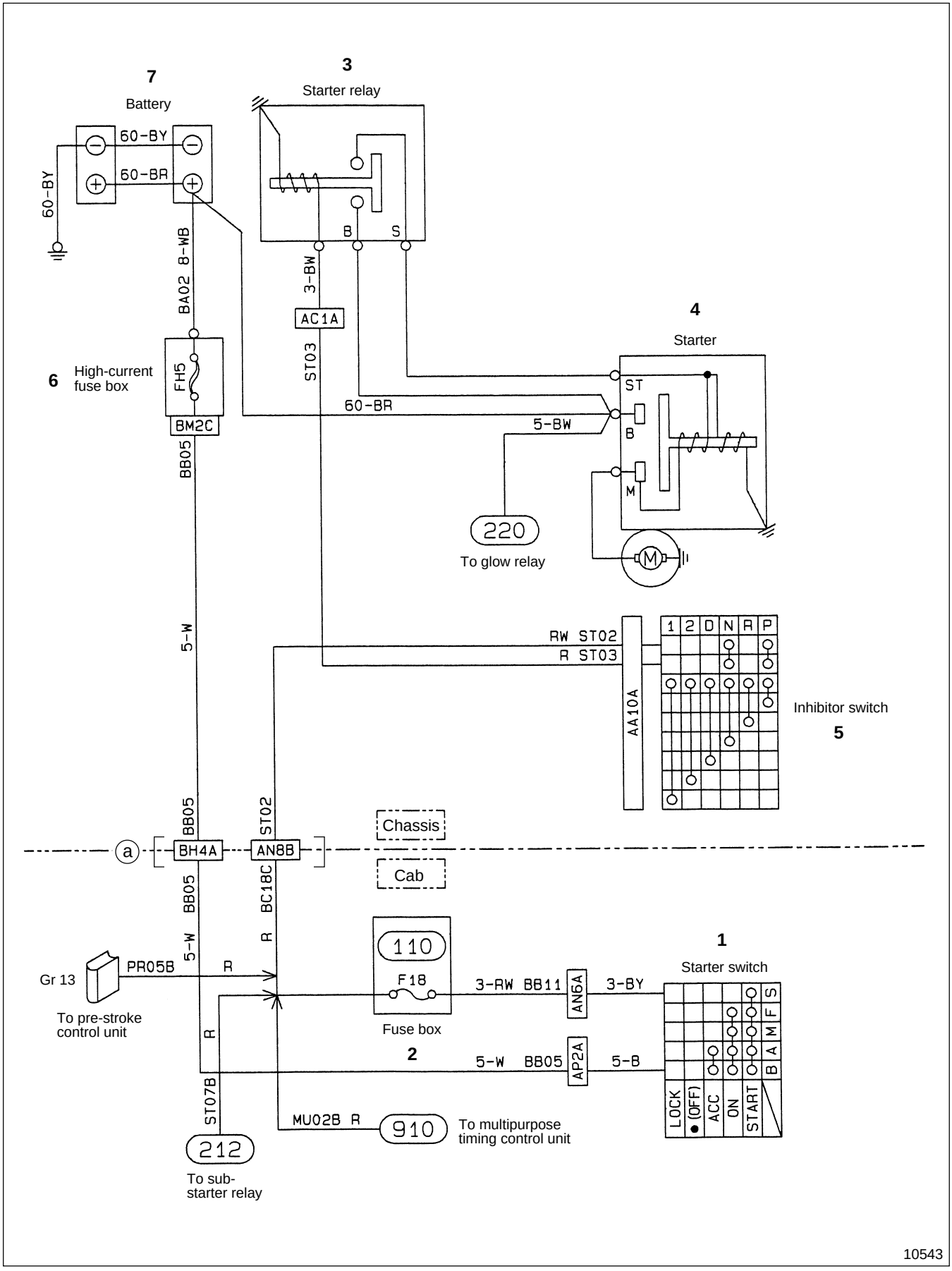
7
Battery
60-BY
60-BR
60-BY
3
Starter relay
B
S
3-BW
AC1A
ST03
BA02 8-WB
4
Starter
ST
B
M
60-BR
5-BW
6
High-current fuse box
FH5
BM2C
BB05
220
To glow relay
5-W
RW ST02
R ST03
AA10A
1 2 D N R P
Inhibitor switch
5
BB05
ST02
a
BH4A
AN8B
Chassis
Cab
BB05
BC18C
5-W
R
110
F18
Fuse box
1
Starter switch
Gr 13
PR05B
R
To pre-stroke control unit
3-RW BB11
AN6A
3-BY
2
5-W BB05
AP2A
5-B
R
ST07B
MU02B R
910
To multipurpose timing control unit
212
To sub-starter relay
LOCK
(OFF)
ACC
ON
START
B A M F S

10543

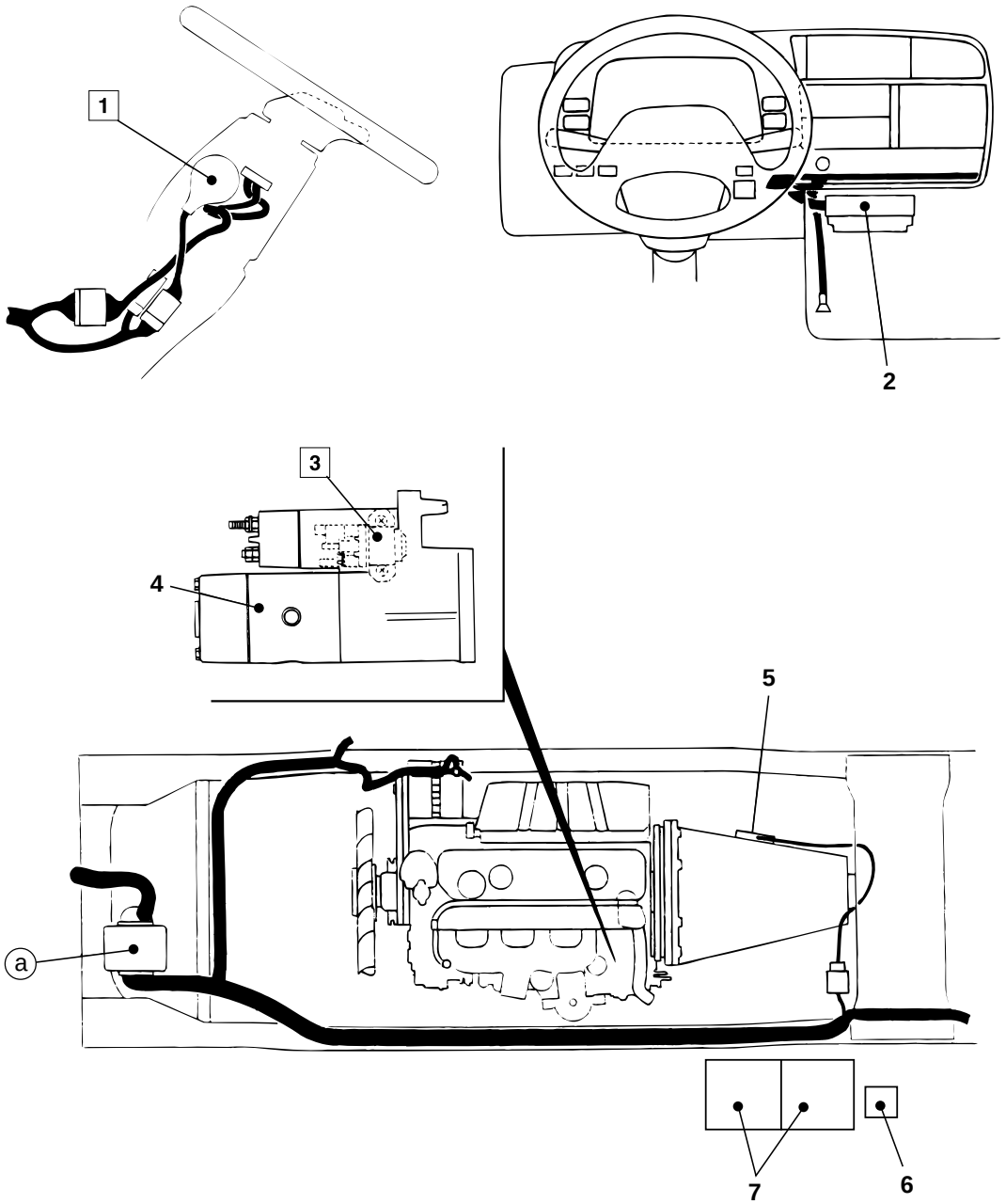

1 Starter switch
2 Fuse box 104
3 Starter relay
4 Starter 201
5 Inhibitor switch Gr 23
6 High-current fuse box 104
7 Battery 101

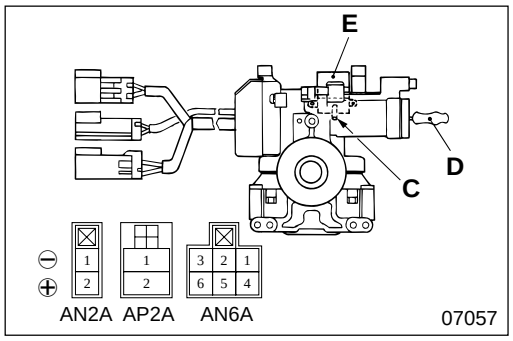

◆ Service procedure

1 Starter switch

Carry out the following inspection. If any fault is found, replace starter switch **1**. Gr 37

(1) Inspection of continuity

- Follow the table below to inspect continuity:

	AP2A		AN6A		
	②	①	③	④	②
LOCK					
• (OFF)					
ACC	○		○		
ON	○	○	○	○	
START	○	○	○	○	○
	B	M	A	F	S

○—○ : There is continuity between terminals ○ and ○.

- If any fault is found, replace starter switch **1**. Gr 37

(2) Inspection of key interlock solenoid

Feed voltage to terminals ① and ② of connector AN2A to inspect the motion of starter key **D**.

E : Interlock solenoid

Voltage between terminals ① and ②	Motion of starter key D	Condition of plunger C
12 V DC	Turns from ACC to START	Plunger C is locked and starter key D cannot be pulled out
0 V DC	Turns from LOCK to START	Plunger C is free and starter key D can be pulled out

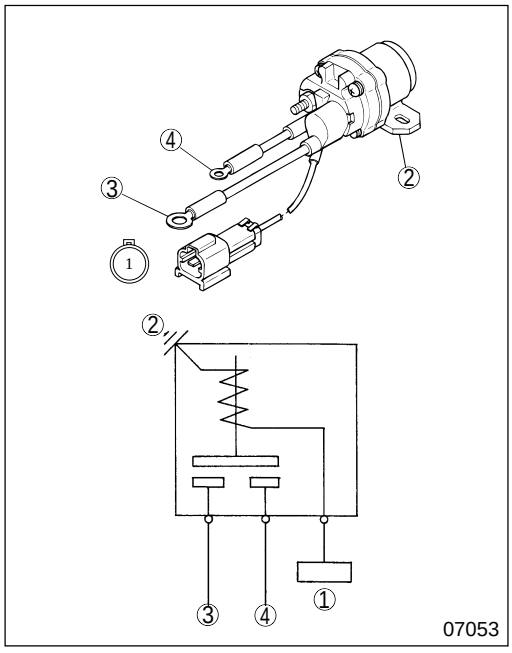

3 Inspection of starter relay

- Follow the table below to inspect continuity :

	③	④	①	②
No current			○	○
Current	○	○	⊕	⊖

○—○ : There is continuity between terminals ○ and ○.

⊕—⊖ : Indicates that 12 volts DC is applied to the line between the terminals.

- If any fault is found, replace starter relay **3**. 54-2-13

M E M O

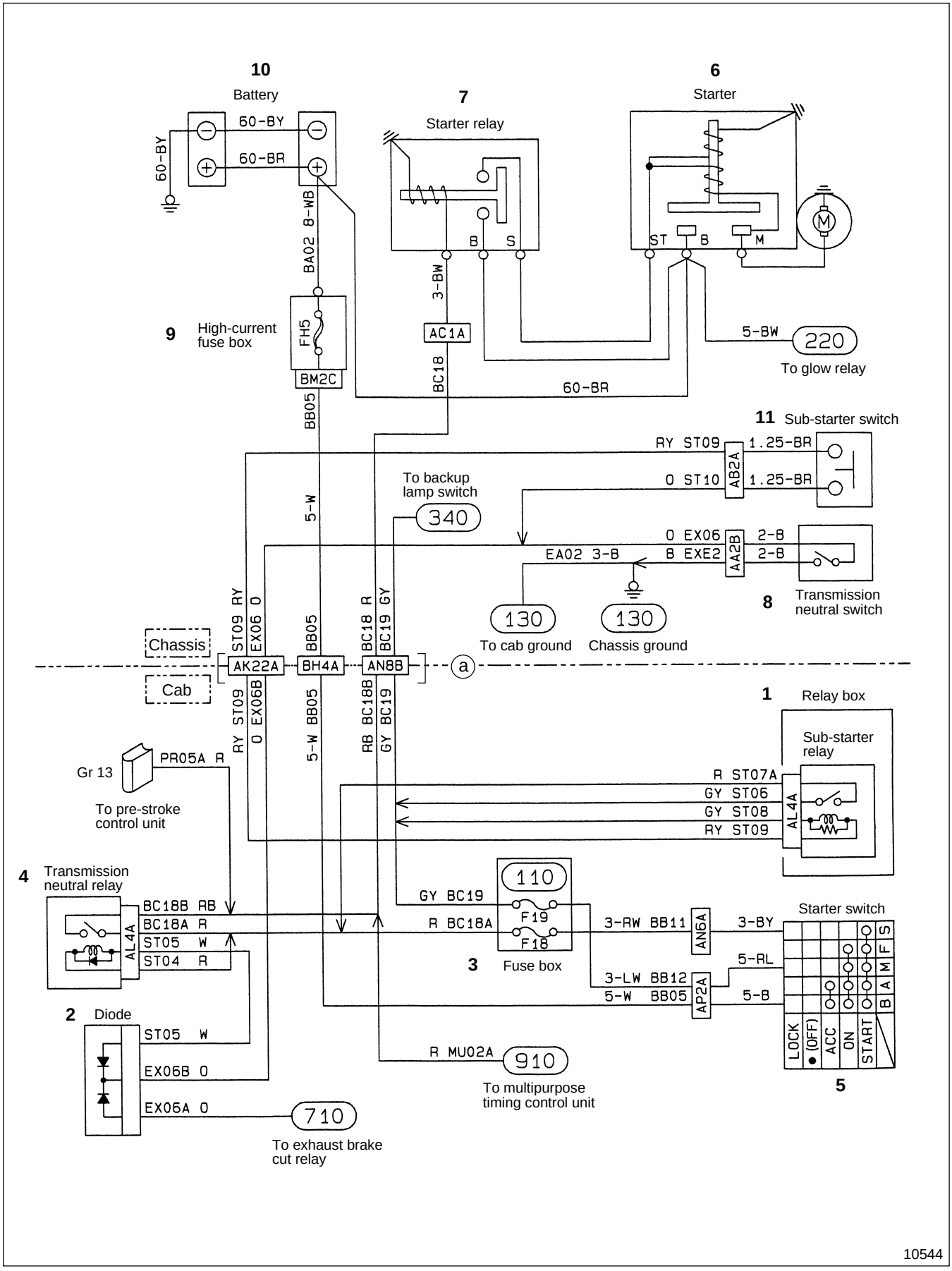
10
Battery
60-BY
60-BR
BA02 8-WB
7
Starter relay
B
S
3-BW
6
Starter
ST
B
M
9
High-current fuse box
FH5
BM2C
BB05
AC1A
BC18
5-BW
220
To glow relay
60-BR
11
Sub-starter switch
RY ST09
1.25-BR
O ST10
AB2A
To backup lamp switch
340
5-W
O EX06
EA02 3-B
B EXE2
AA2B
2-B
8
Transmission neutral switch
130
To cab ground
130
Chassis ground
Chassis
Cab
ST09 RY
EX06 O
BB05
BC18 R
BC19 GY
AK22A
BH4A
AN8B
a
1
Relay box
Sub-starter relay
R ST07A
GY ST06
GY ST08
RY ST09
AL4A
Gr 13
PR05A R
To pre-stroke control unit
RY ST09
O EX06B
5-W BB05
RB BC18B
GY BC19
4
Transmission neutral relay
BC18B RB
BC18A R
ST05 W
ST04 R
AL4A
110
GY BC19
R BC18A
F19
F18
3
Fuse box
3-RW BB11
AN6A
3-BY
5-RL
3-LW BB12
5-W BB05
AP2A
5-B
Starter switch
LOCK
(OFF)
ACC
ON
START
B
A
M
F
S
5
2
Diode
ST05 W
EX06B O
EX06A O
710
To exhaust brake cut relay
R MU02A
910
To multipurpose timing control unit
10544

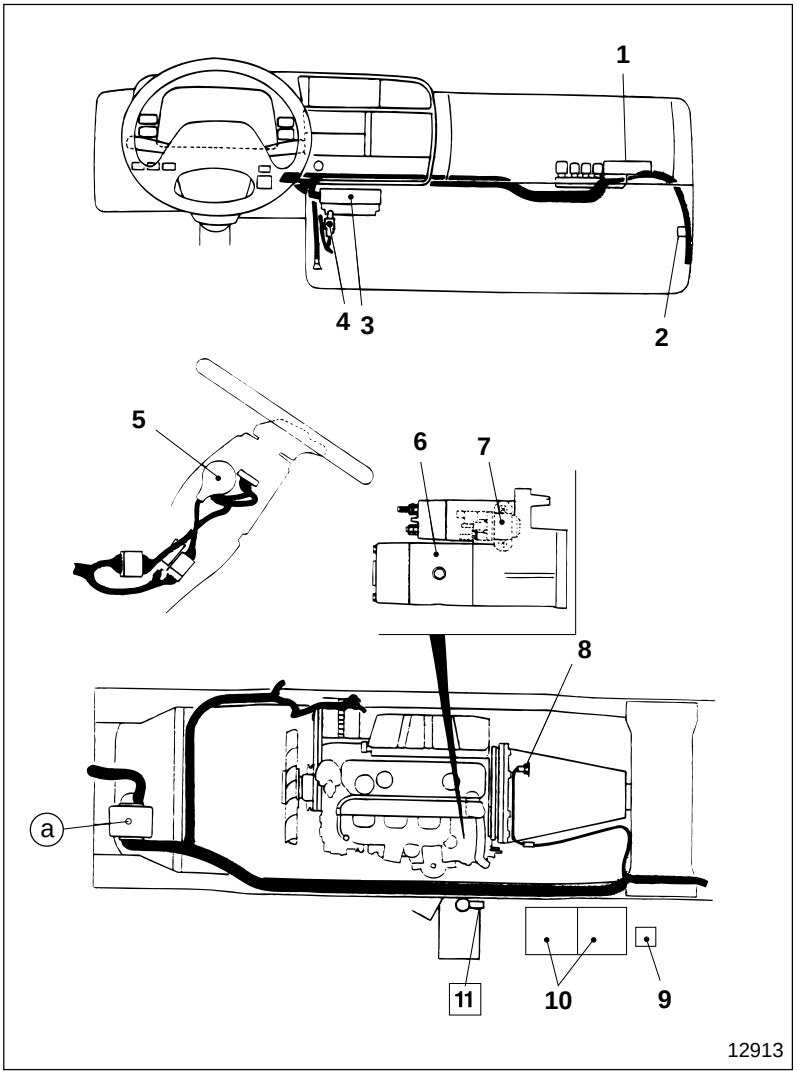

1 Relay box 📖 (604)
2 Diode
3 Fuse box 📖 (104)
4 Transmission neutral relay 📖 (604)
5 Starter switch 📖 (210)
6 Starter 📖 (201)
7 Starter relay
8 Transmission neutral switch 📖 (802)
9 High-current fuse box 📖 (104)
10 Battery 📖 (101)
11 Sub-starter switch

◆ Service procedure

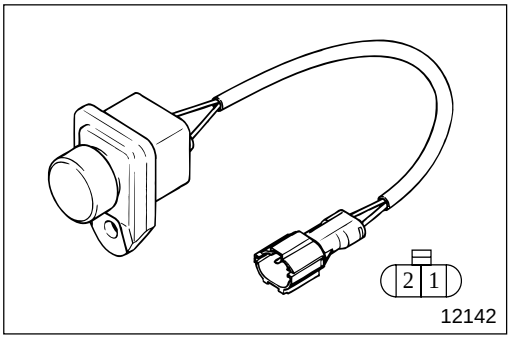

11 **Inspection of sub-starter switch**

- Follow the table below to inspect continuity :

	①	②
ON	○—○	
OFF		

○—○ : There is continuity between terminals ○ and ○.

- If any fault is found, replace sub-starter switch **11**.

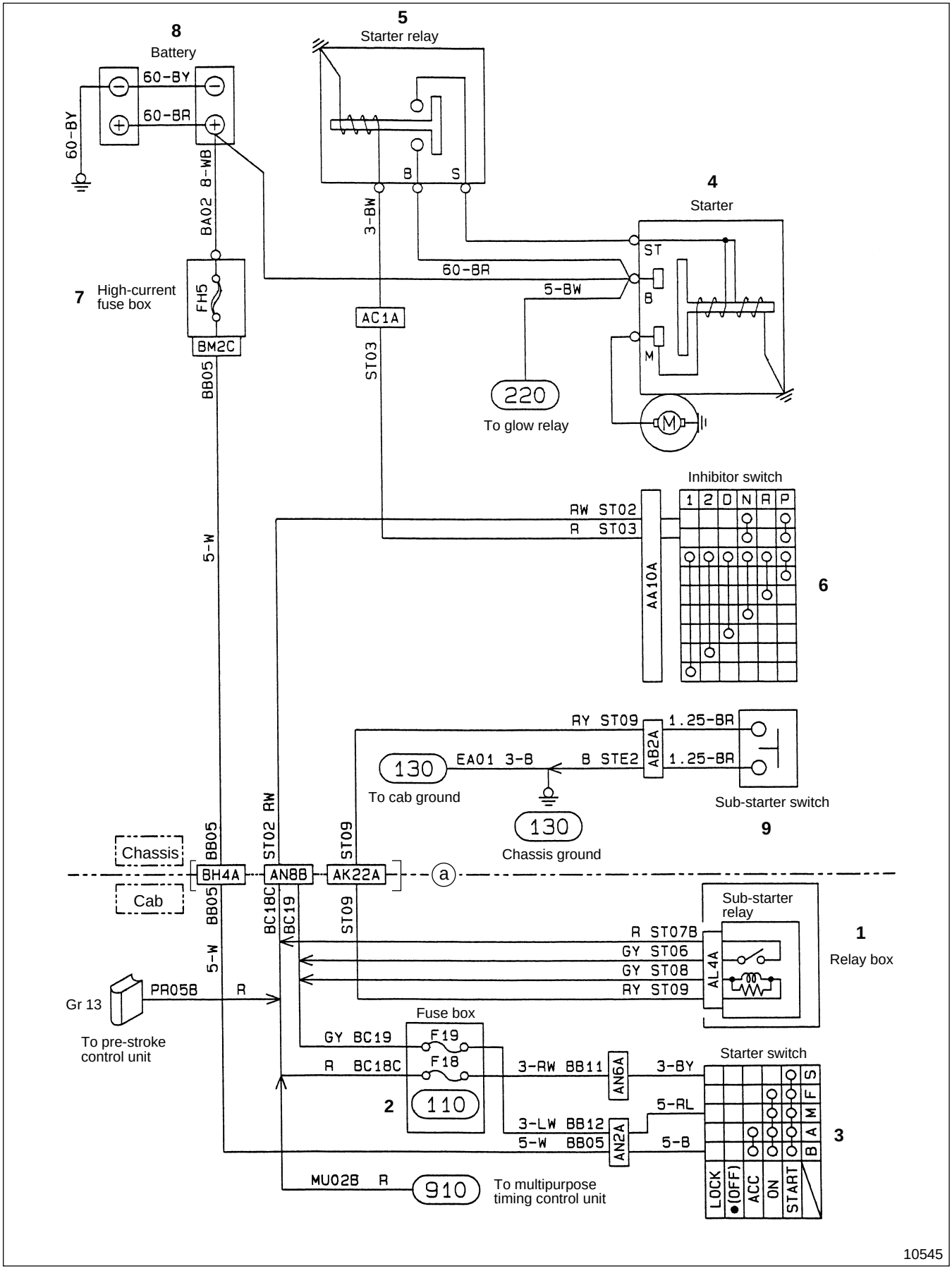
8
Battery
60-BY
60-BR
60-BY
BA02 8-WB
5
Starter relay
B
S
3-BW
4
Starter
ST
B
M
60-BR
5-BW
7
High-current fuse box
FH5
BM2C
BB05
AC1A
ST03
220
To glow relay
Inhibitor switch
1 2 D N R P
RW ST02
R ST03
AA10A
6
5-W
RY ST09
1.25-BR
130
EA01 3-B
B STE2
AB2A
1.25-BR
To cab ground
Sub-starter switch
130
Chassis ground
9
ST02 RW
ST09
Chassis
Cab
BH4A
AN8B
AK22A
a
BB05
BC18C
BC19
ST09
Sub-starter relay
R ST07B
GY ST06
GY ST08
RY ST09
AL4A
1
Relay box
5-W
PR05B
R
Gr 13
To pre-stroke control unit
Fuse box
GY BC19
F19
R BC18C
F18
2
110
3-RW BB11
AN6A
3-BY
5-RL
3-LW BB12
5-W BB05
AN2A
5-B
Starter switch
S
F
M
A
B
3
LOCK
(OFF)
ACC
ON
START
MU02B R
910
To multipurpose timing control unit
10545

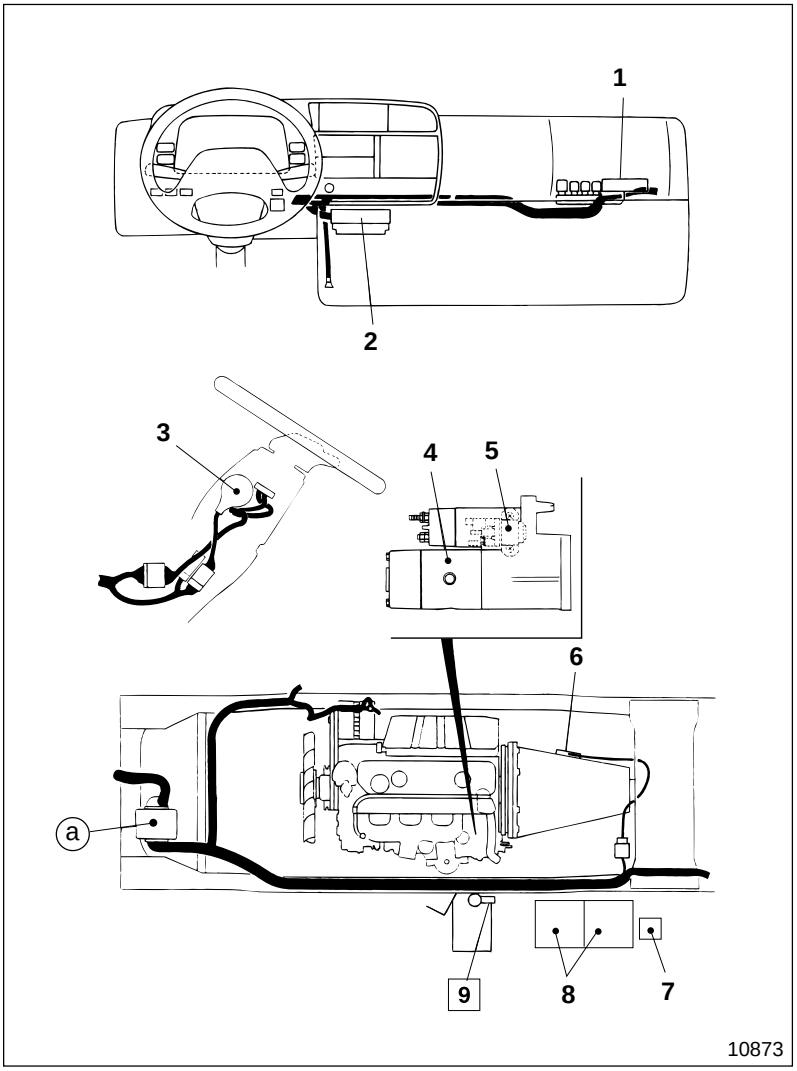

1 Relay box 📖 (604)
2 Fuse box 📖 (104)
3 Starter switch 📖 (210)
4 Starter 📖 (201)
5 Starter relay 📖 (210)
6 Inhibitor switch Gr 23
7 High-current fuse box 📖 (104)
8 Battery 📖 (101)
9 Sub-starter switch

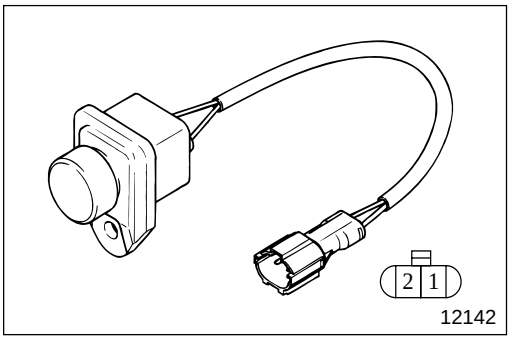

◆ Service procedure

9 **Inspection of sub-starter switch**

- Follow the table below to inspect continuity :

	①	②
ON	○—○	
OFF		

○—○ : There is continuity between terminals ○ and ○.

- If any fault is found, replace sub-starter switch **9**.

215 ENGINE STOPPING CIRCUIT

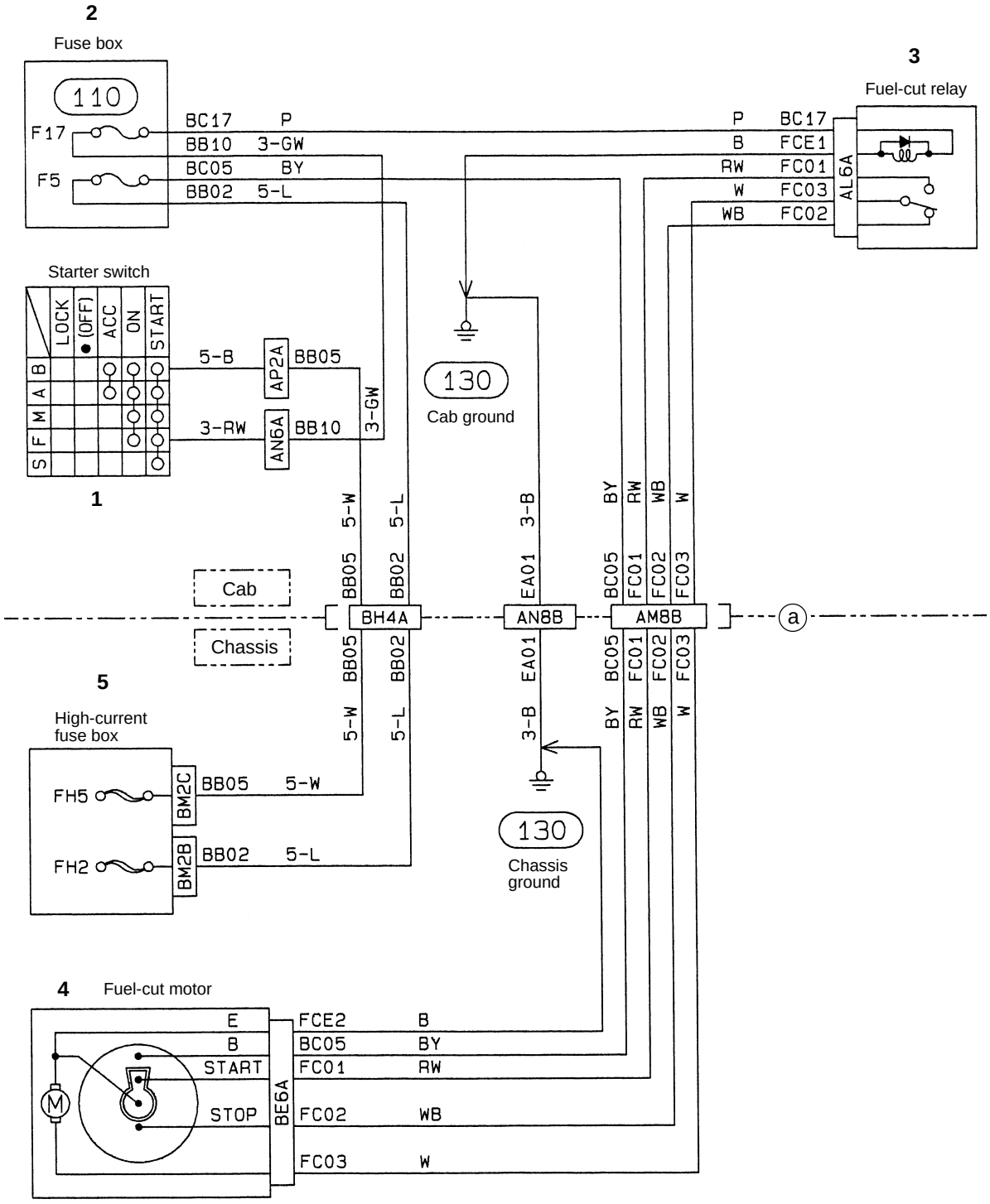

10546

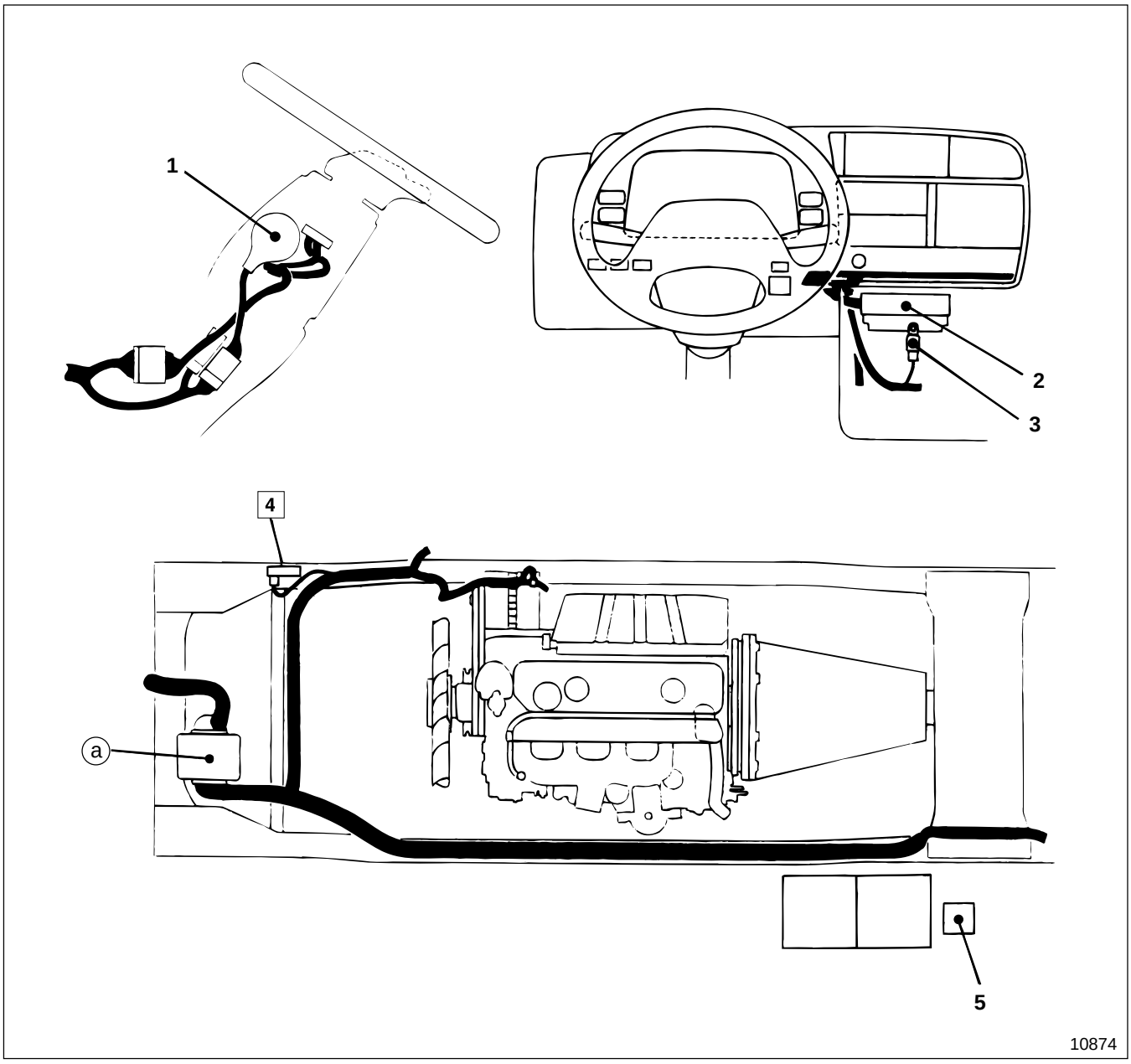

1 Starter switch 🕮 (210)
2 Fuse box 🕮 (104)
3 Fuel-cut relay 🕮 (604)
4 Fuel-cut motor
5 High-current fuse box 🕮 (104)

◆ Service procedure

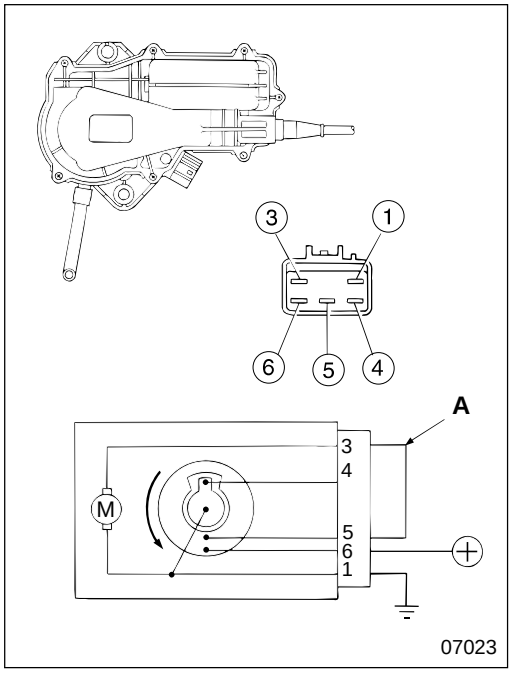

4 Inspection of fuel-cut motor

Inspect the following. If any fault is found, replace fuel-cut motor **4**.

(1) When starter switch is OFF (Fuel-cut state)

- Connect inspection harness **A** between terminals ③ and ⑤.
- Apply 12 volts DC between terminals ① and ⑥ to ensure that fuel-cut motor **4** works correctly.

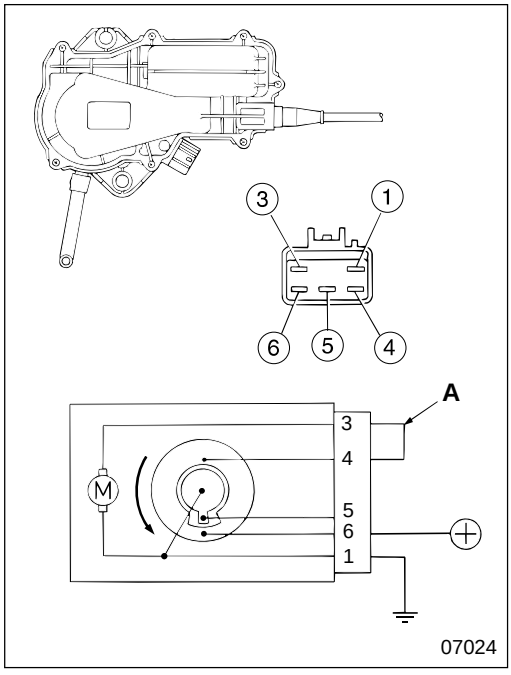

(2) When starter switch is ON (Fuel-cut reset state)

- Connect inspection harness **A** between terminals ③ and ④.
- Apply 12 volts DC between terminals ① and ⑥ to ensure that fuel-cut motor **4** works correctly.

M E M O

220 ENGINE PREHEATING CIRCUIT

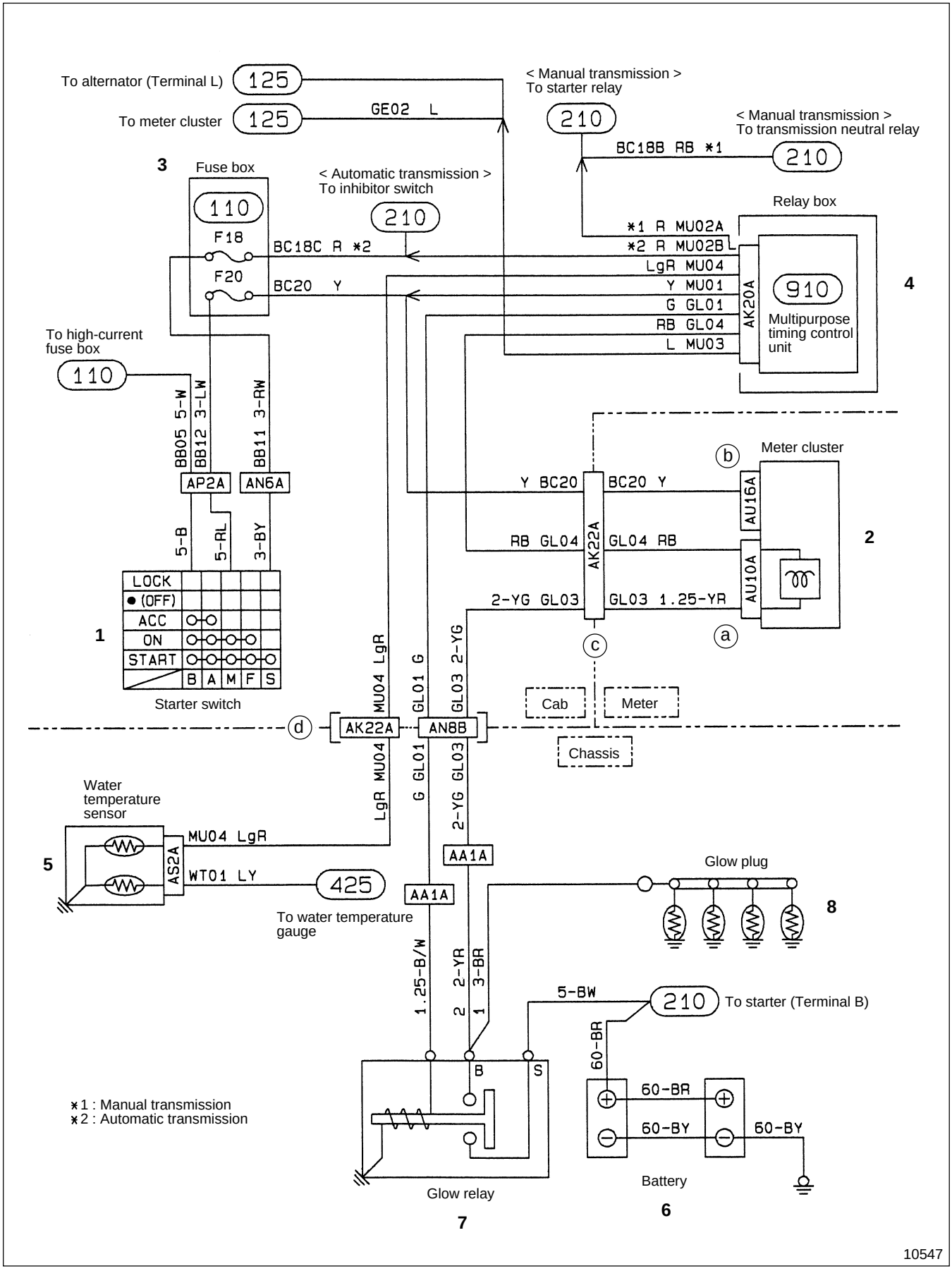

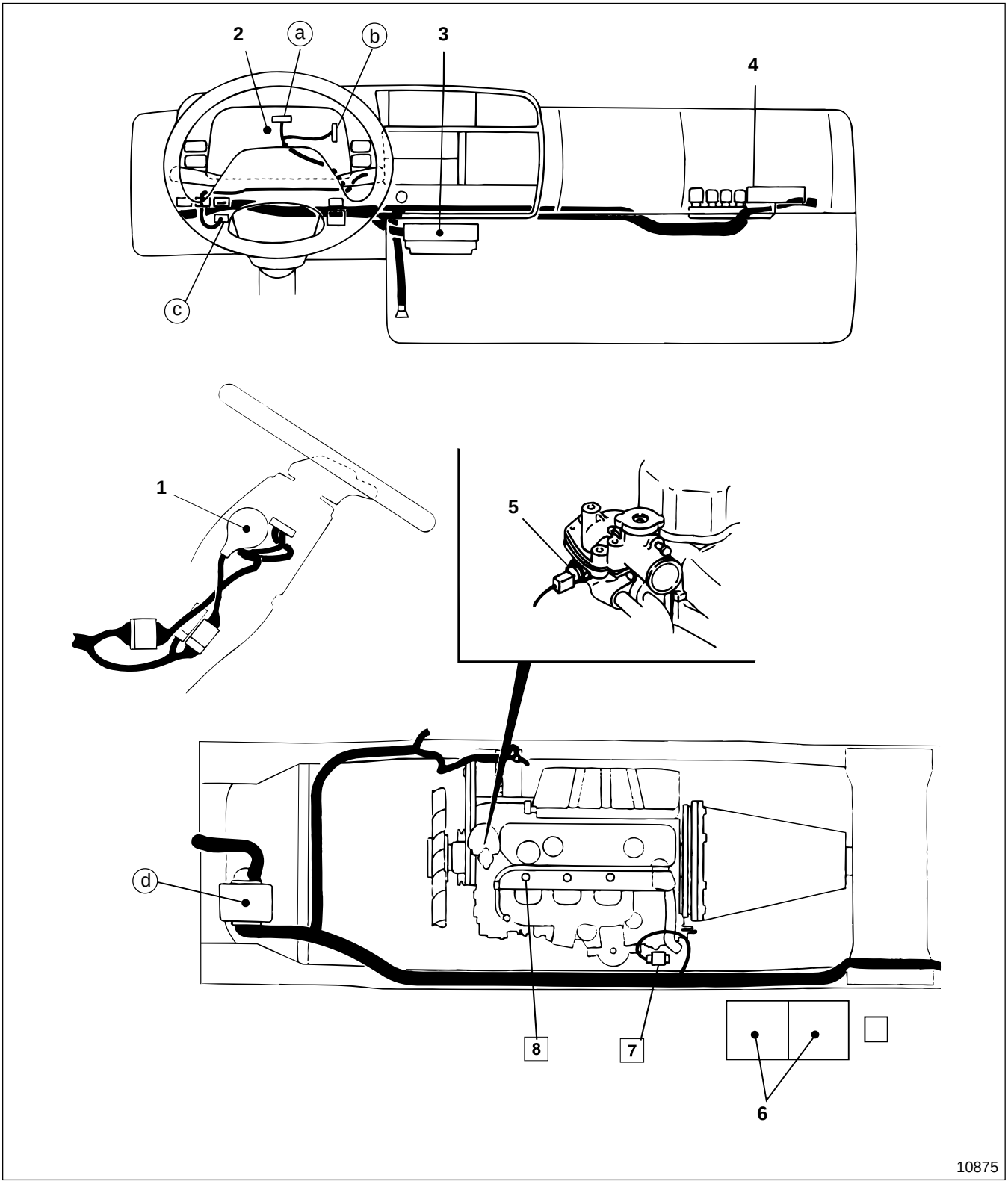

1 Starter switch 🕮 (210)
2 Meter cluster 🕮 (401)
3 Fuse box 🕮 (104)
4 Relay box 🕮 (604)
5 Water temperature sensor 🕮 (801)
6 Battery 🕮 (101)
7 Glow relay
8 Glow plug

220 ENGINE PREHEATING CIRCUIT

Service standards

Location	Maintenance item	Standard value	Limit	Remedy
8	Resistance of glow plug (at ambient temperature)	1.0 Ω (Reference value)	—	Replace

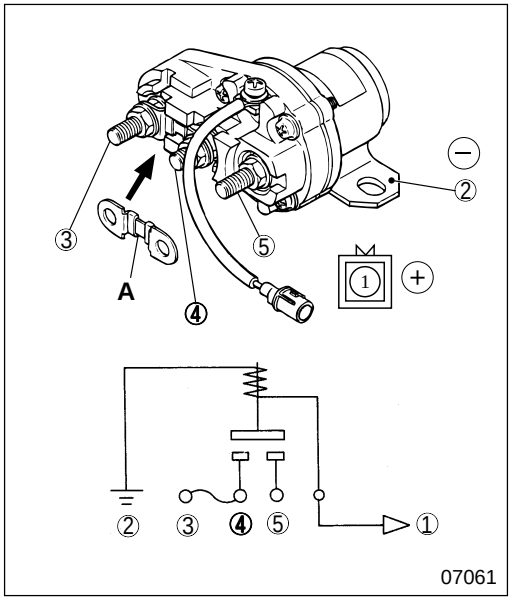

◆ Service procedure

7 **Inspection of glow relay**

(1) Inspection of fuse

If any fault is found, replace fuse **A** (127 amperes).

(2) Inspection of body

- Follow the table below to inspect continuity :

	③	④	⑤	①	②
No current	○—○				
Current	○—○	○—○	○	⊕	⊖

○—○ : There is continuity between terminals ○ and ○.
⊕—⊖ : Indicates that 12 volts DC is applied to the line between the terminals.
A : Fuse (127 amperes)

- If any fault is found, replace glow relay **7**.

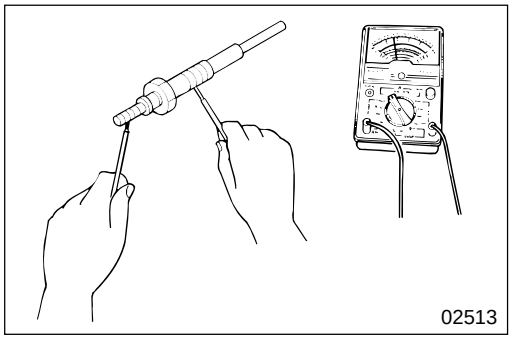

8 **Inspection of glow plug**

- Measure the resistance of glow plug **8** as illustrated.
- If the measured value deviates from the standard value, replace glow plug **8**.

M E M O

225 ENGINE WARMING UP CIRCUIT

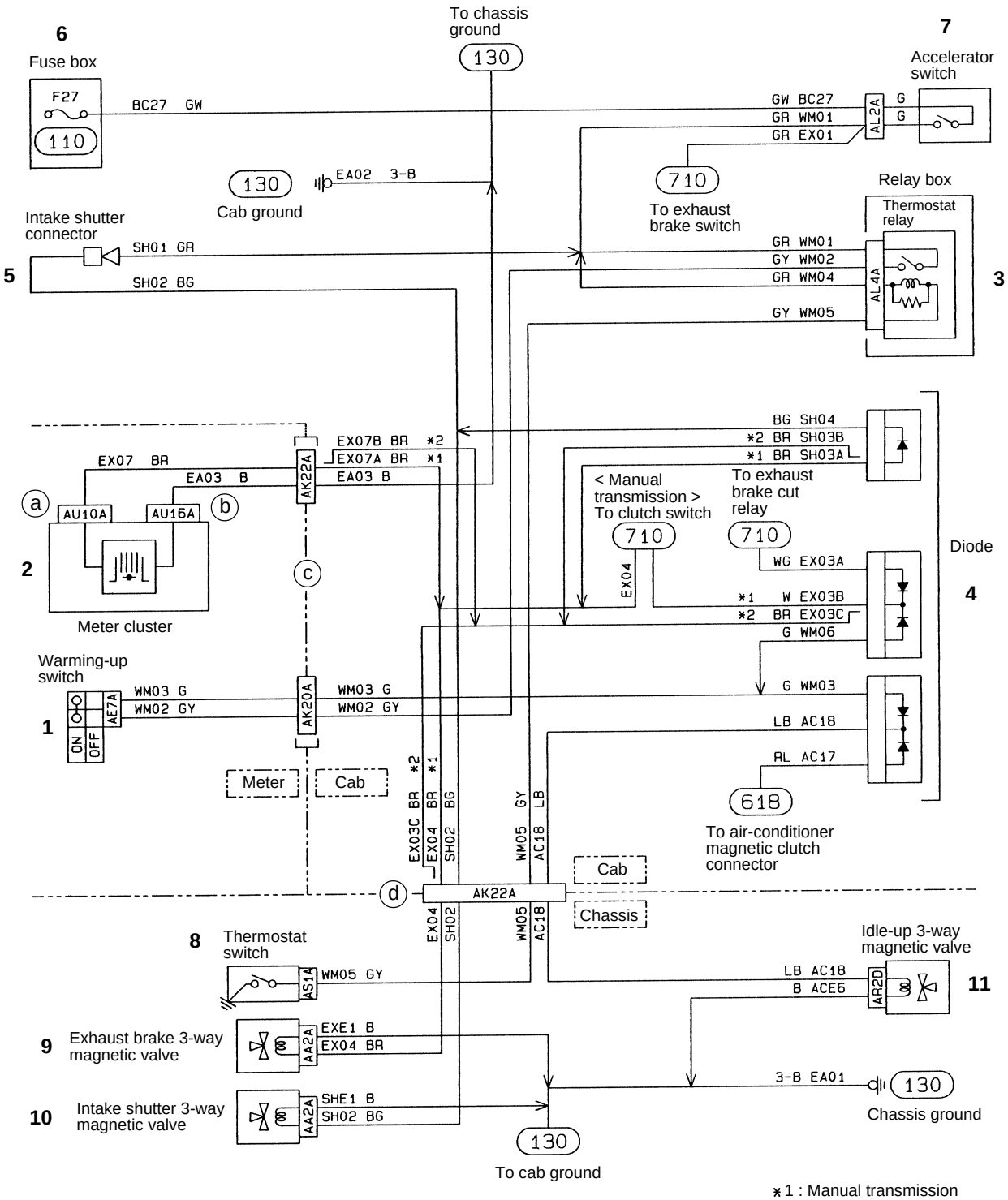

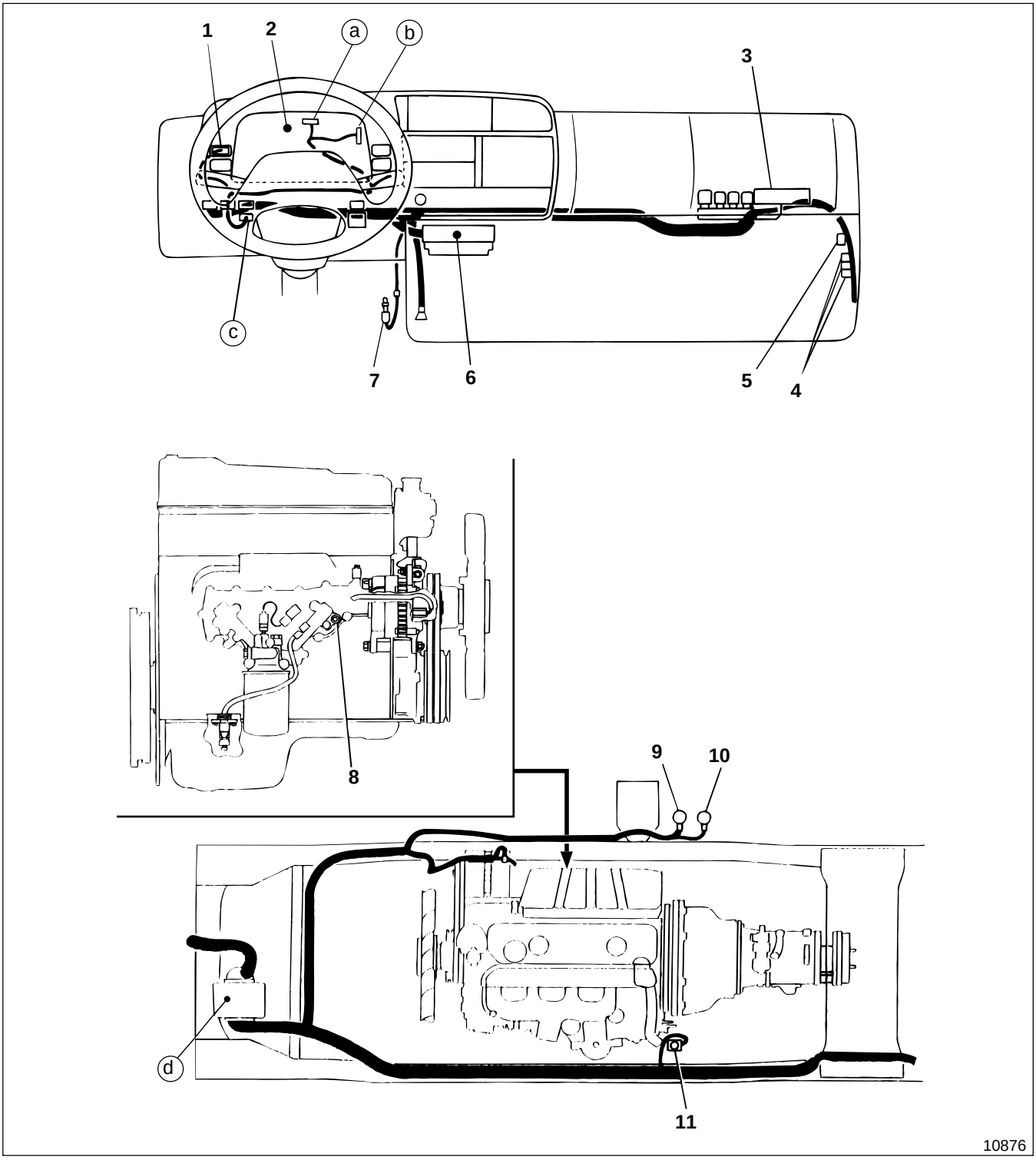

1 Warming up switch 601
2 Meter cluster 401
3 Relay box 604
4 Diode
5 Intake shutter connector
6 Fuse box 104
7 Accelerator switch 710
8 Thermostat switch 801
9 Exhaust brake 3-way magnetic valve 701
10 Intake shutter 3-way magnetic valve 701
11 Idle up 3-way magnetic valve 701

3 LIGHTING

SPECIFICATIONS 54-3-2

STRUCTURE AND OPERATION 54-3-4

TROUBLESHOOTING 54-3-6

300 INSPECTION AND ADJUSTMENT MOUNTED IN VEHICLE
Headlamp Aiming 54-3-8

310 HEADLAMP CIRCUIT 54-3-10

320 TAIL LAMP, CLEARANCE LAMP AND LICENSE PLATE LAMP CIRCUITS 54-3-12

325 STOP LAMP CIRCUIT 54-3-14

330 TURN SIGNAL LAMP AND HAZARD LAMP CIRCUITS 54-3-16

340 BACKUP LAMP CIRCUIT
< Manual Transmission > 54-3-18
< Automatic Transmission > 54-3-22

345 CAB LAMP CIRCUIT 54-3-26

348 ILLUMINATION LAMP CIRCUIT 54-3-30

349 MARKER LAMP AND IDENTIFICATION LAMP CIRCUITS 54-3-32

352 VAN BODY DOME LIGHT CIRCUIT 54-3-34

SPECIFICATIONS

Item			Specifications
Voltage		V	12
Headlamp	Model		Sealed beam
	Type		Reflex type
	HIGH beam	W	50
	HIGH/LOW beam	W	60/40
Front turn signal lamp (also used as hazard lamp)		W	21
Clearance lamp		W	7.5
Side turn signal lamp (also used as hazard lamp)		W	5
Rear combination lamp	Stop/Tail	W	27/8
	Turn (also used as hazard lamp)	W	27
	Backup	W	27
License plate lamp		W	8
Cab lamp		W	10
Identification lamp		W	7.5
Clearance and side marker lamp		W	7.5
Back buzzer	Rated voltage	V	12
	Rated current	mA	50 or less
	Sound pressure	dB	85±10 (at 1 m {3.3 ft})
	Frequency Times/minute		85±15

M E M O

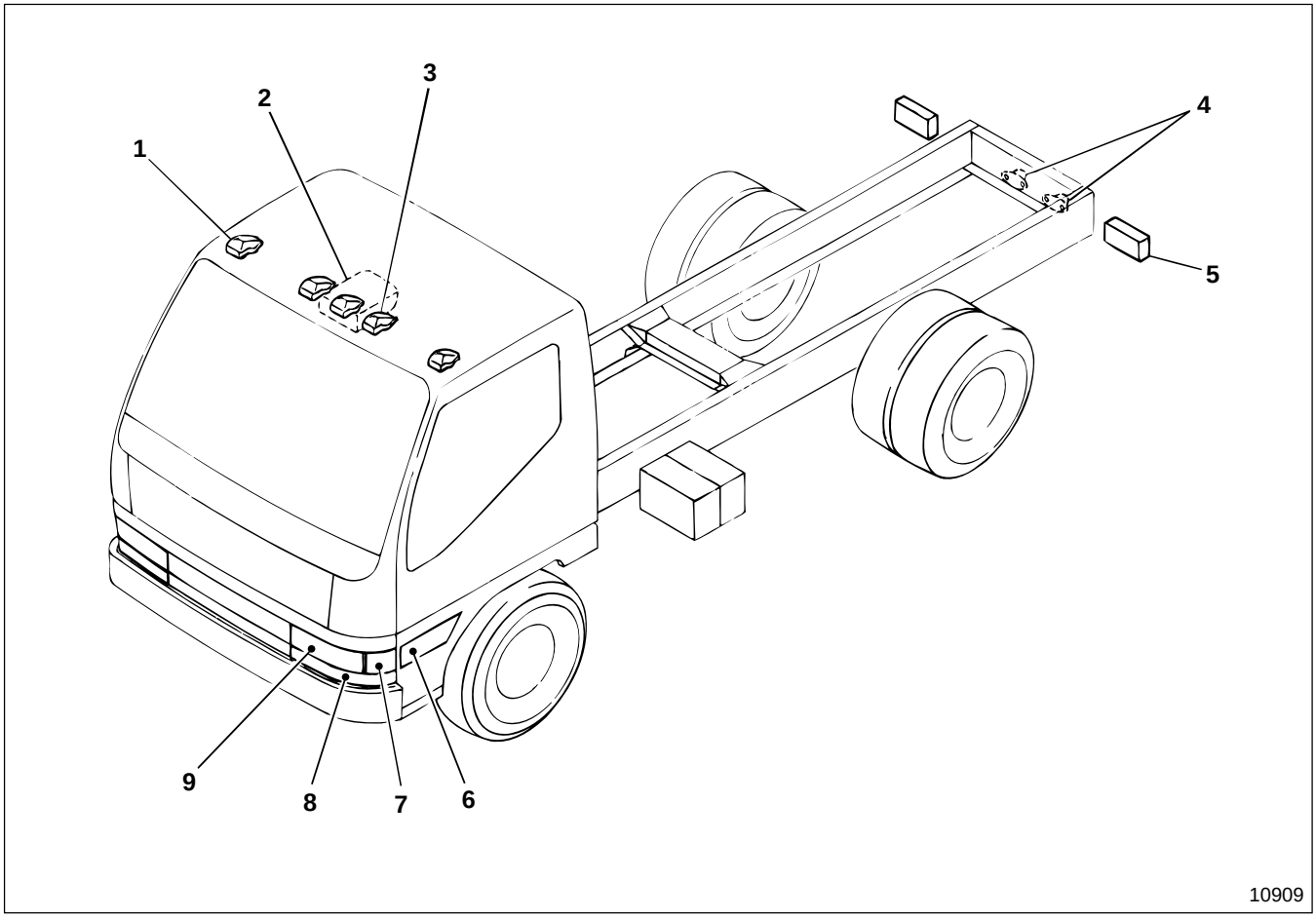

1 Clearance and side marker lamp
2 Cab lamp
3 Identification lamp
4 License plate lamp
5 Rear combination lamp
6 Side turn signal lamp
7 Clearance lamp
8 Front turn signal lamp
9 Headlamp

Headlamp

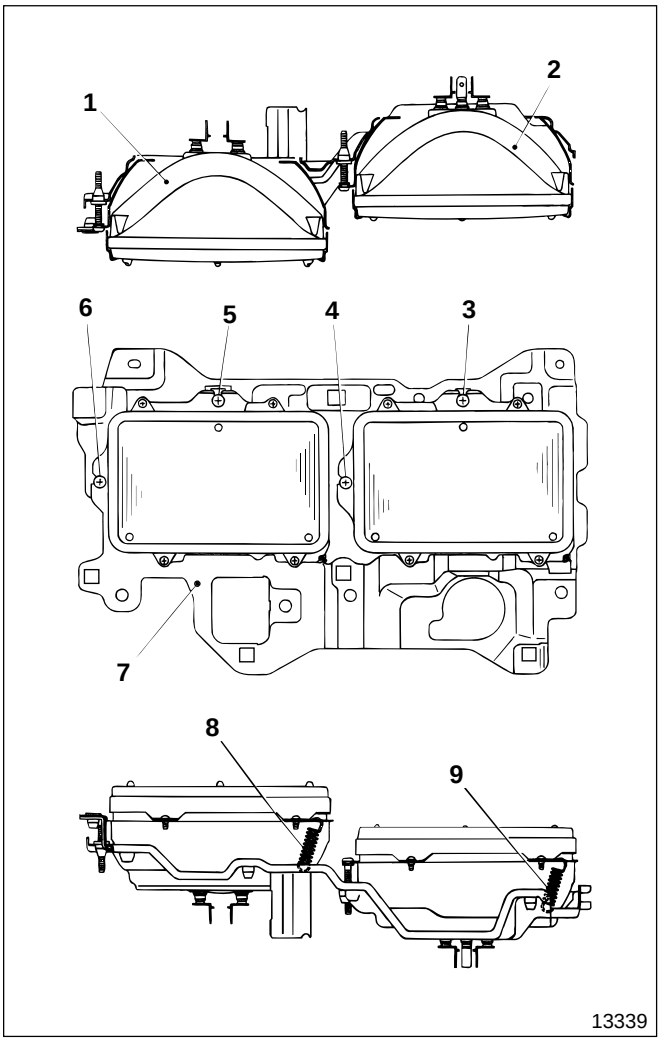

1 Sealed beam unit (HIGH beam)
2 Sealed beam unit (HIGH/LOW beam)
3 Screw (HIGH/LOW beam, vertical adjustment)
4 Screw (HIGH/LOW beam, horizontal adjustment)
5 Screw (HIGH beam, vertical adjustment)
6 Screw (HIGH beam, horizontal adjustment)
7 Housing
8 Extension spring
9 Extension spring

- The headlamp unit consists of sealed beam units **1, 2** separately installed in housing **7**. Sealed beam unit **1** is for HIGH beam, and sealed beam unit **2** is for HIGH/LOW beam.
- The headlamp aiming can be adjusted by changing the installation angle of sealed beam units **1, 2**.
- To adjust the installation angle of sealed beam unit **1**, turn screws **5, 6**. Extension spring **8** sets the angle of the sealed beam unit.
- To adjust the installation angle of sealed beam unit **2**, turn screws **3, 4**. Extension spring **9** sets the angle in the same way as for sealed beam unit **1**.

TROUBLESHOOTING

Possible causes \ Symptoms		Headlamp				Tail lamp, clearance lamp, license plate lamp, clearance and side marker lamp, identification lamp	Stop lamp does not light
		Does not light	Dim	HIGH beam does not light	LOW beam does not light	Does not light	
Connector connection faulty, harness broken, grounding faulty		○				○	○
Fuse blown		○				○	○
Battery charge insufficient			○				
Alternator output insufficient			○				
Bulb burnt-out		○				○	○
Power (wattage) of bulb is lower than specified value							
Power (wattage) of bulb is higher than specified value							
Combination switch	Lighting switch faulty	○				○	
	Dimmer switch faulty			○	○		
	Turn signal switch faulty						
	Hazard switch faulty						
Relay box	Headlamp relay (HIGH/LOW) faulty	○		○	○		
	Tail lamp relay faulty					○	
	Flasher unit faulty						
Stop lamp switch faulty							○
Meter cluster faulty							
Backup lamp switch faulty							
Back buzzer faulty							
Door switch faulty							
Cab lamp faulty							
Rheostat switch faulty							
Van body dome light relay faulty							
Van body dome light switch faulty							

Symptoms / Possible causes		Turn signal lamp (also used as hazard lamp)					Backup lamp does not light	Back buzzer does not sound	Cab lamp does not light	Meter and heater control illumination lamps do not light	Meter and heater control illumination lamps cannot be adjusted	Van body dome light does not light
		Does not light	Does not go off	Blinks too slowly	Blinks too quickly	Blink interval uneven						
Connector connection faulty, harness broken, grounding faulty		○					○	○	○	○		○
Fuse blown		○					○		○	○		○
Battery charge insufficient			○									
Alternator output insufficient			○									
Bulb burnt-out		○			○		○		○	○		○
Power (wattage) of bulb is lower than specified value					○							
Power (wattage) of bulb is higher than specified value				○								
Combination switch	Lighting switch faulty											
	Dimmer switch faulty											
	Turn signal switch faulty	○	○									
	Hazard switch faulty	○	○									
Relay box	Headlamp relay (HIGH/LOW) faulty											
	Tail lamp relay faulty									○		
	Flasher unit faulty	○	○	○	○	○						
Stop lamp switch faulty												
Meter cluster faulty												
Backup lamp switch faulty							○	○				
Back buzzer faulty								○				
Door switch faulty									○			
Cab lamp faulty									○			
Rheostat switch faulty										○	○	
Van body dome light relay faulty												○
Van body dome light switch faulty												○

Headlamp Aiming

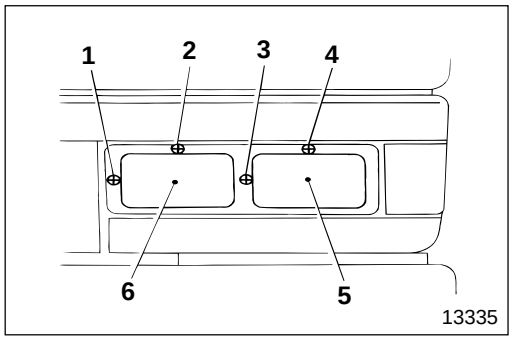

1 Screw (HIGH beam, horizontal adjustment)
2 Screw (HIGH beam, vertical adjustment)
3 Screw (HIGH/LOW beam, horizontal adjustment)
4 Screw (HIGH/LOW beam, vertical adjustment)
5 HIGH/LOW beam
6 HIGH beam

To adjust the headlamp move the optical axis of HIGH beam **6** by turning screws **1, 2**; and move the optical axis of HIGH/LOW beam **5** by turning screws **3, 4.** You need to adjust the aiming of both the HIGH and the HIGH/LOW beams on both the left and right headlamps.

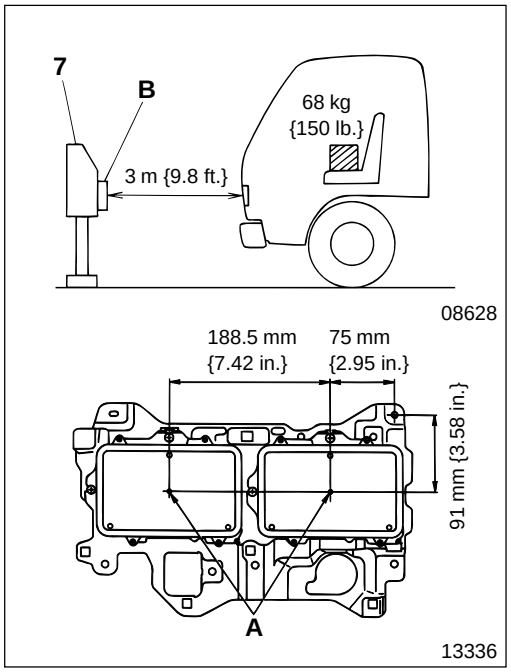

(1) Preparatory work before adjustment

- Park the vehicle on a level place.

WARNING⚠

You must put wheel chocks securely in place.

- Unload the vehicle and make sure no one is in it.
- Inflate the tires to specified pressure. Gr 31
- Seat one person or an equivalent mass (68 kg {150 lb}) in the vehicle.
- Start the engine and check that the battery is being charged.
- Place convergent headlamp tester **7** in line with HIGH beam **6** or HIGH/LOW beam **5** of either the left or right headlamp at a distance of **3** m {9.8 ft}.
- Align the center of convergent lens **B** of convergent headlamp tester **7** with lamp center **A** of HIGH beam **6** or HIGH/LOW beam **5** . (The illustration shows a left headlamp.)
- When adjusting one headlamp, mask the other to avoid light leakage.

(2) Adjustment

WARNING⚠

Do not mask a lit headlamp for more than 10 minutes or the heat generated might cause a fire.

CAUTION⚠

When completing the adjustment using screws 1 to 4, the action must be finished in the tightening direction.

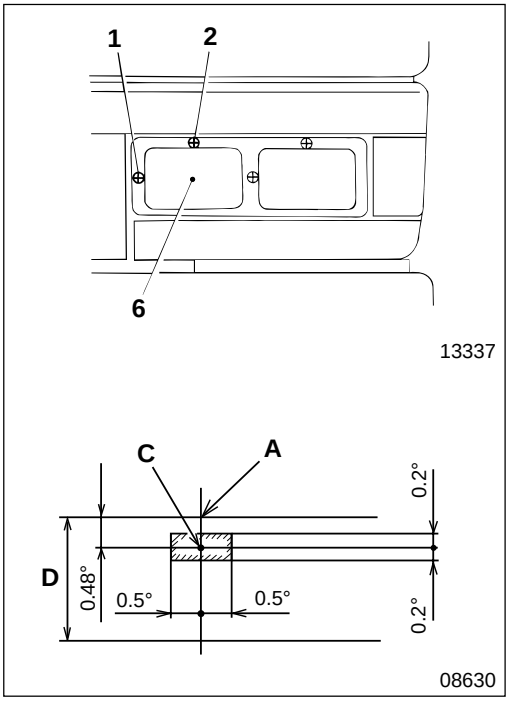

● **Adjustment of HIGH beam unit**

- Turn on HIGH beam **6**.
- Adjust as follows so that the optical axis (maximum illumination point) **C** of HIGH beam **6** is located as illustrated:
  - Vertical adjustment: Turn screw **2** to adjust.
  - Horizontal adjustment: Turn screw **1** to adjust.

  The aiming of both left and right HIGH beams **6** should be adjusted to the position as illustrated.

▨ : Tolerance of adjustment

A : Center of headlamp
D : Height from the ground to headlamp center

	Adjusting direction for optical axis			
	Upward	Downward	Leftward	Rightward
Screw 1	—	—	(Counter-clockwise)	(Clockwise)
Screw 2	(Clockwise)	(Counter-clockwise)	—	—

Turning direction of the screws in the table is as viewed from the front.

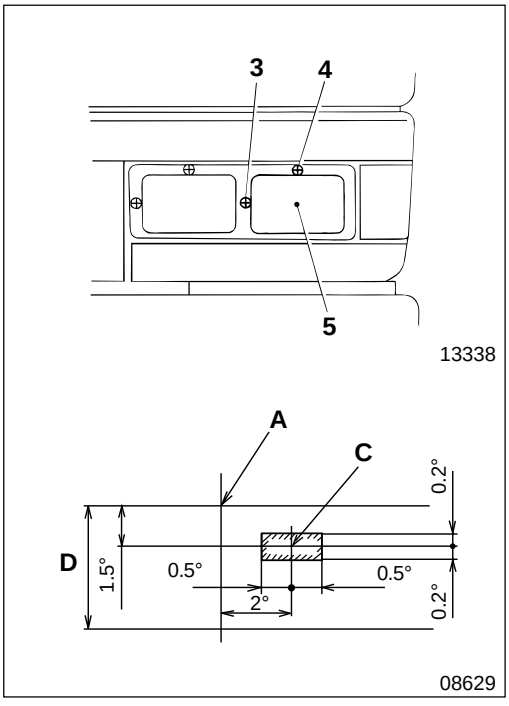

● **Adjustment of HIGH/LOW beam unit**

- Turn on the LOW beam of HIGH/LOW beam **5**.
- Adjust as follows so that the optical axis (maximum illumination point) **C** of HIGH/LOW beam is located as illustrated:
  - Vertical adjustment: Turn screw **4** to adjust.
  - Horizontal adjustment: Turn screw **3** to adjust.

  The aiming of both left and right HIGH/LOW beams **5** should be adjusted to the position as illustrated.

▨ : Tolerance of adjustment

A : Center of lamp
D : Height from the ground to headlamp center

	Adjusting direction for optical axis			
	Upward	Downward	Leftward	Rightward
Screw 3	—	—	(Counter-clockwise)	(Clockwise)
Screw 4	(Clockwise)	(Counter-clockwise)	—	—

Turning direction of the screws in the table is as viewed from the front.

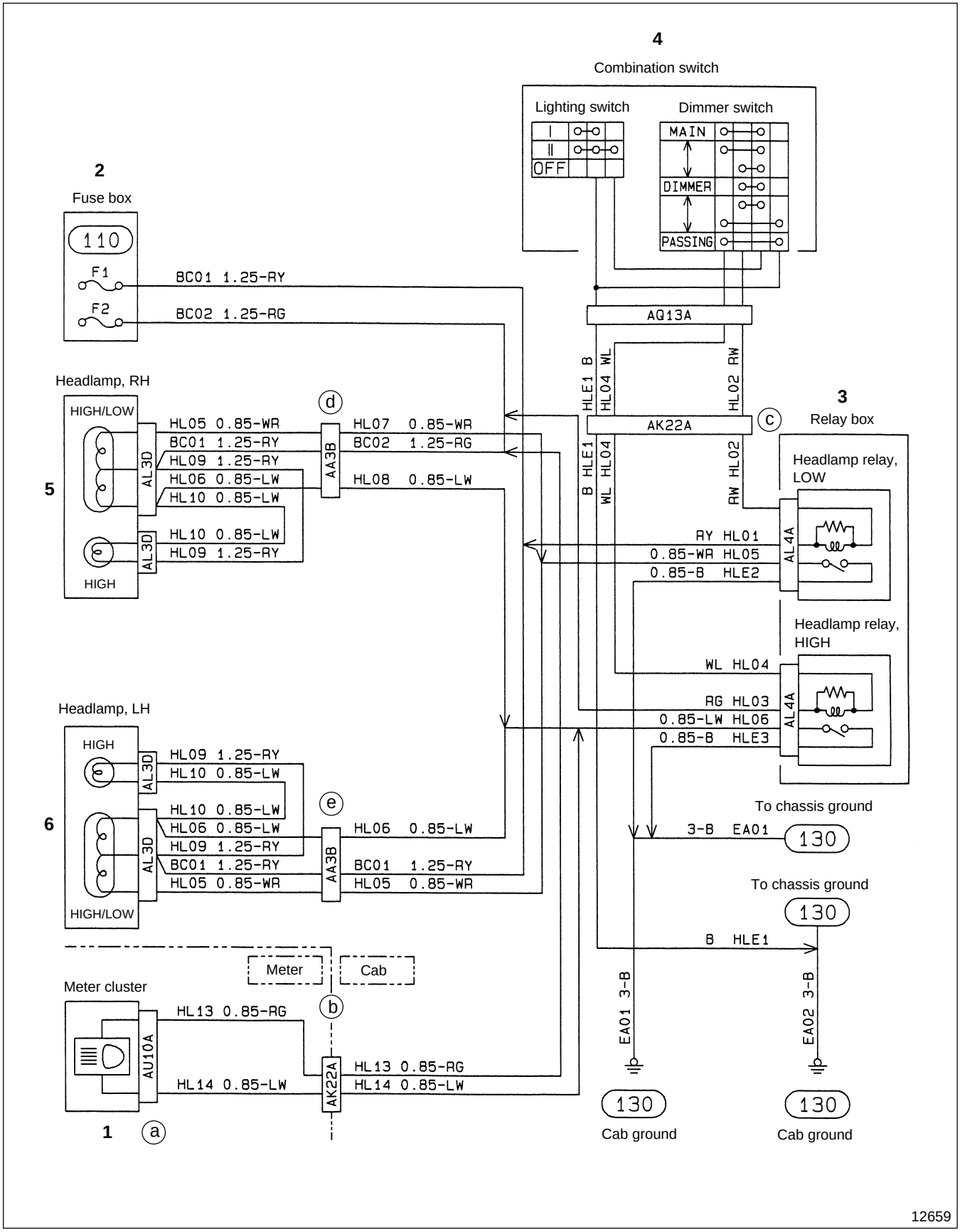
4
Combination switch
Lighting switch
Dimmer switch
I
II
OFF
MAIN
DIMMER
PASSING
2
Fuse box
110
F1
F2
BC01 1.25-RY
BC02 1.25-RG
AQ13A
HLE1 B
HL04 WL
HL02 RW
Headlamp, RH
HIGH/LOW
HIGH
AL3D
AA3B
d
HL05 0.85-WR
BC01 1.25-RY
HL09 1.25-RY
HL06 0.85-LW
HL10 0.85-LW
HL07 0.85-WR
BC02 1.25-RG
HL08 0.85-LW
5
AK22A
c
3
Relay box
Headlamp relay, LOW
AL4A
RY HL01
0.85-WR HL05
0.85-B HLE2
Headlamp relay, HIGH
WL HL04
RG HL03
0.85-LW HL06
0.85-B HLE3
Headlamp, LH
6
e
HL06 0.85-LW
BC01 1.25-RY
HL05 0.85-WR
To chassis ground
3-B EA01
130
B HLE1
EA01 3-B
EA02 3-B
Meter
Cab
Meter cluster
AU10A
b
HL13 0.85-RG
HL14 0.85-LW
1
a
Cab ground
12659

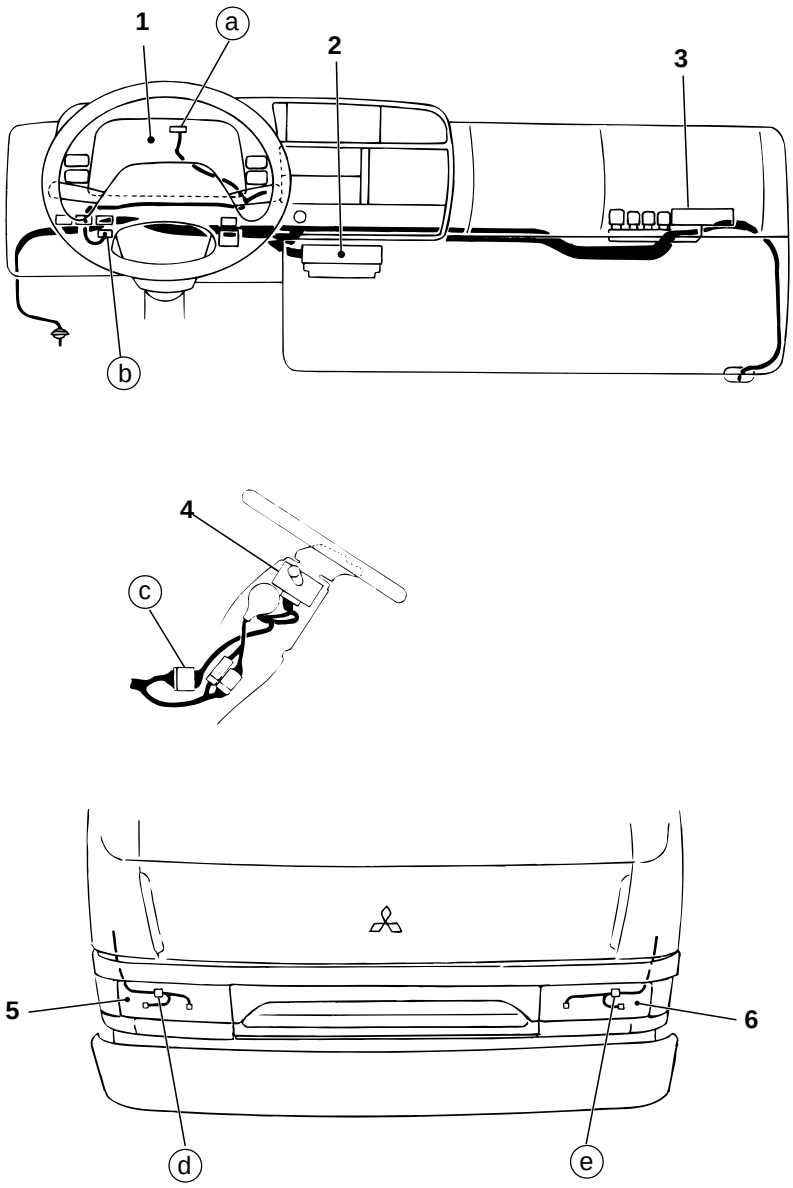

1 Meter cluster 🕮 (401)
2 Fuse box 🕮 (104)
3 Relay box 🕮 (604)
4 Combination switch 🕮 (601)
5 Headlamp, RH 🕮 (300)
6 Headlamp, LH 🕮 (300)

320 TAIL LAMP, CLEARANCE LAMP AND LICENSE PLATE LAMP CIRCUITS

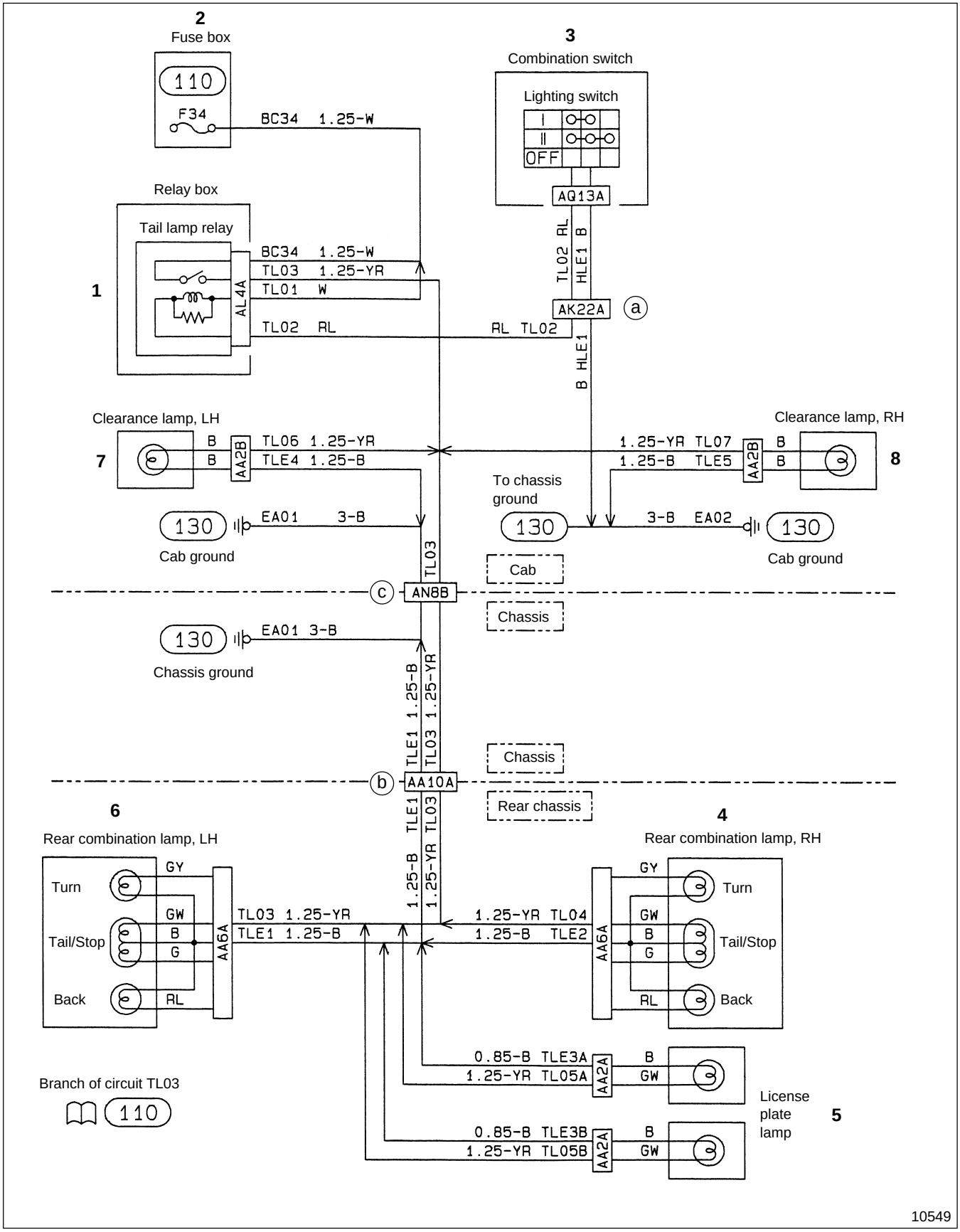

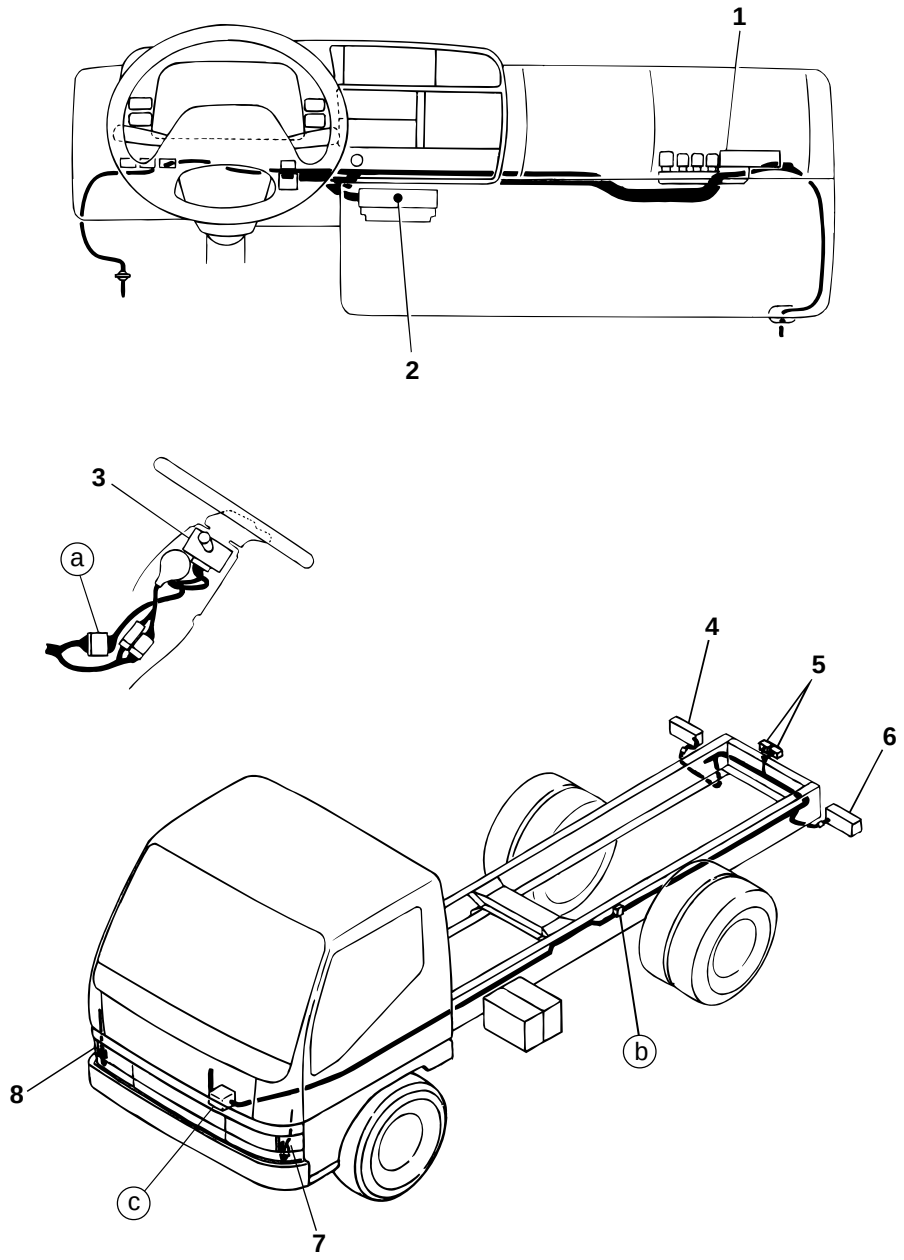

10850

1 Relay box 🕮 (604)
2 Fuse box 🕮 (104)
3 Combination switch 🕮 (601)
4 Rear combination lamp, RH
5 License plate lamp
6 Rear combination lamp, LH
7 Clearance lamp, LH
8 Clearance lamp, RH

325 STOP LAMP CIRCUIT

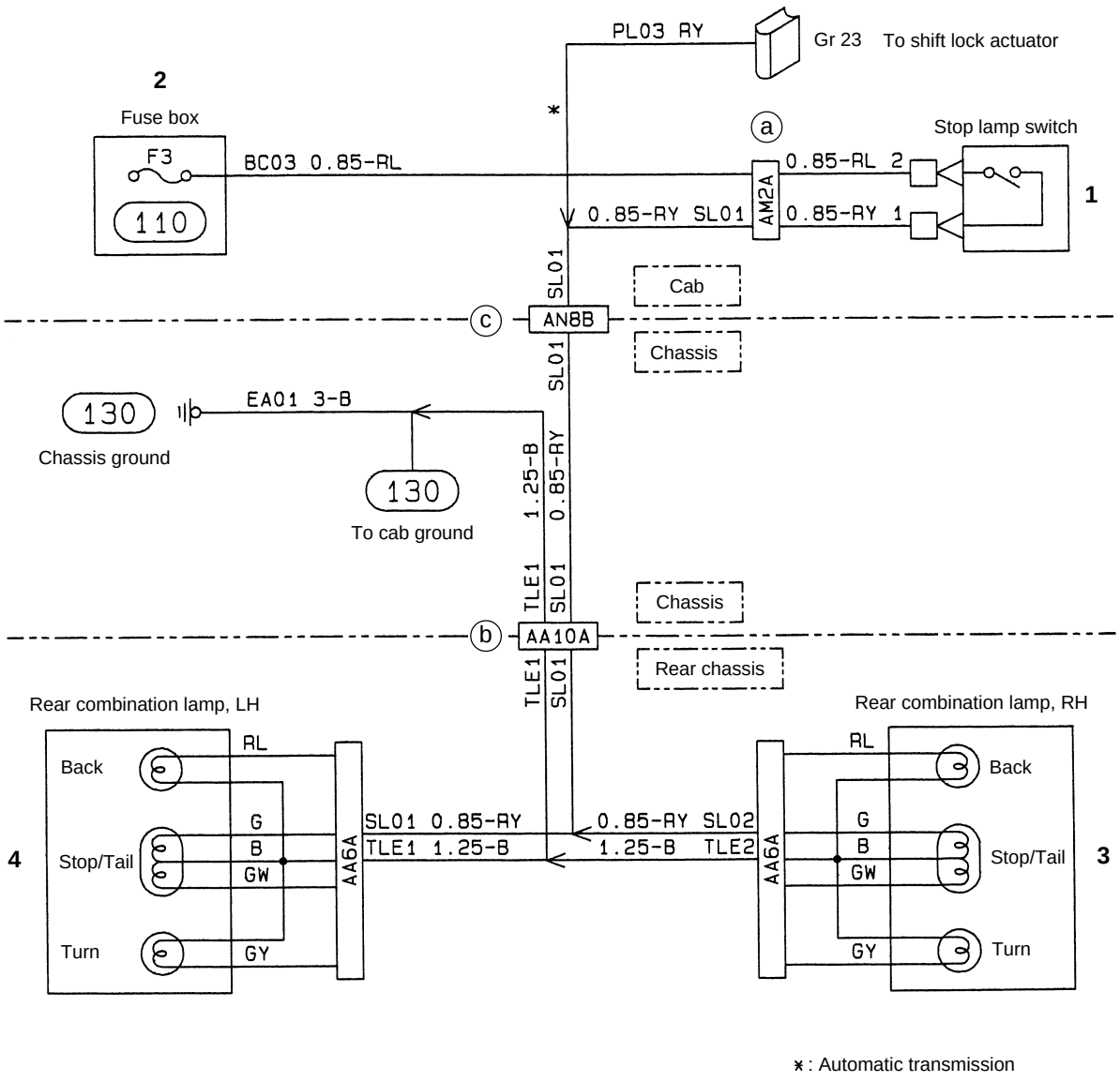

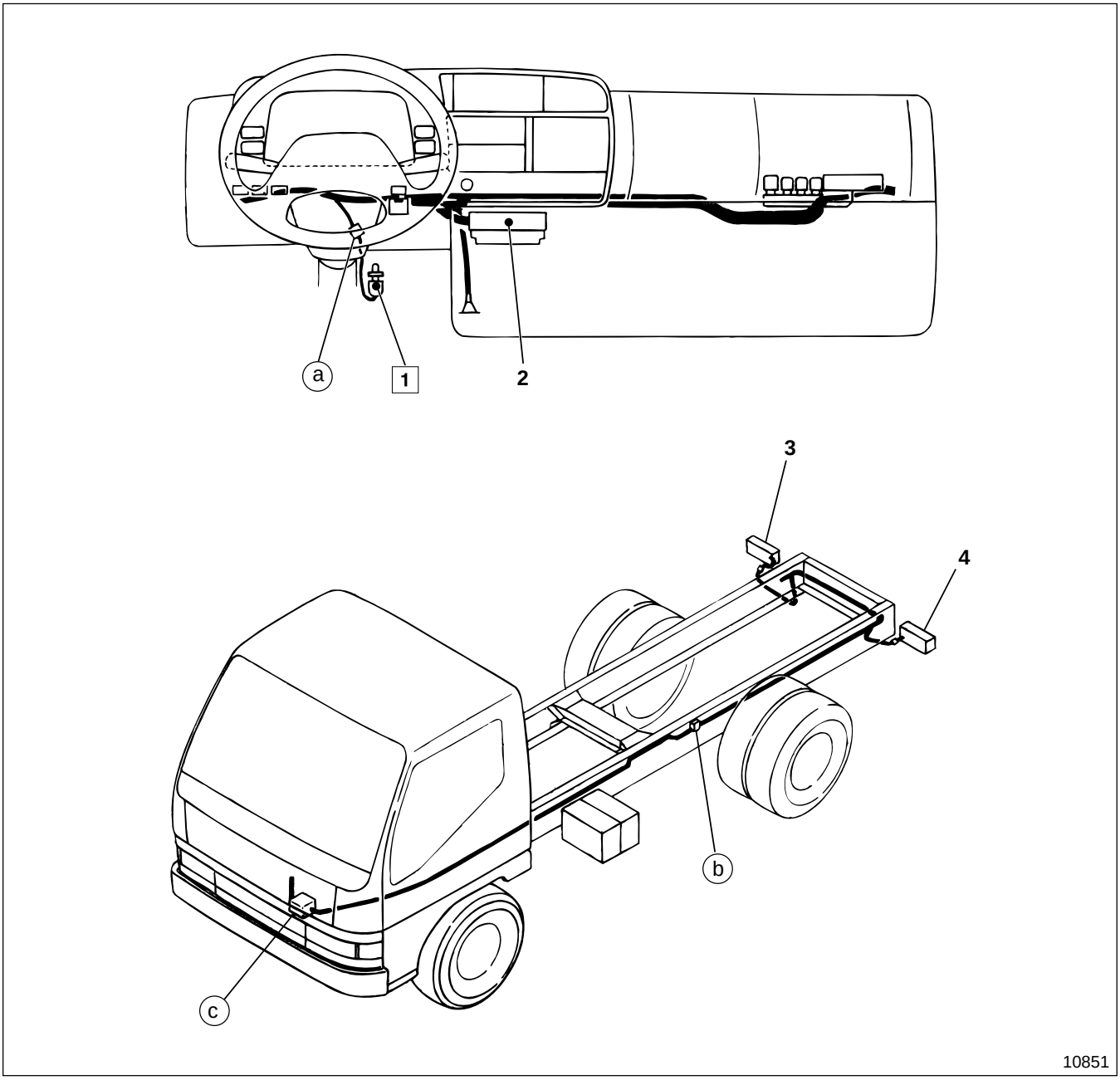

1 Stop lamp switch
2 Fuse box 104
3 Rear combination lamp, RH
4 Rear combination lamp, LH

◆ Service procedure

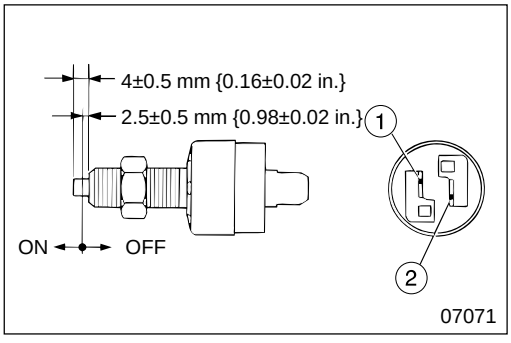

1 **Inspection of stop lamp switch**

- Follow the table below to inspect continuity:

	①	②
ON	○—○	
OFF		

○—○ : There is continuity between terminals ○ and ○.

- If any fault is found, replace stop lamp switch **1**. Gr 35

330 TURN SIGNAL LAMP AND HAZARD LAMP CIRCUITS

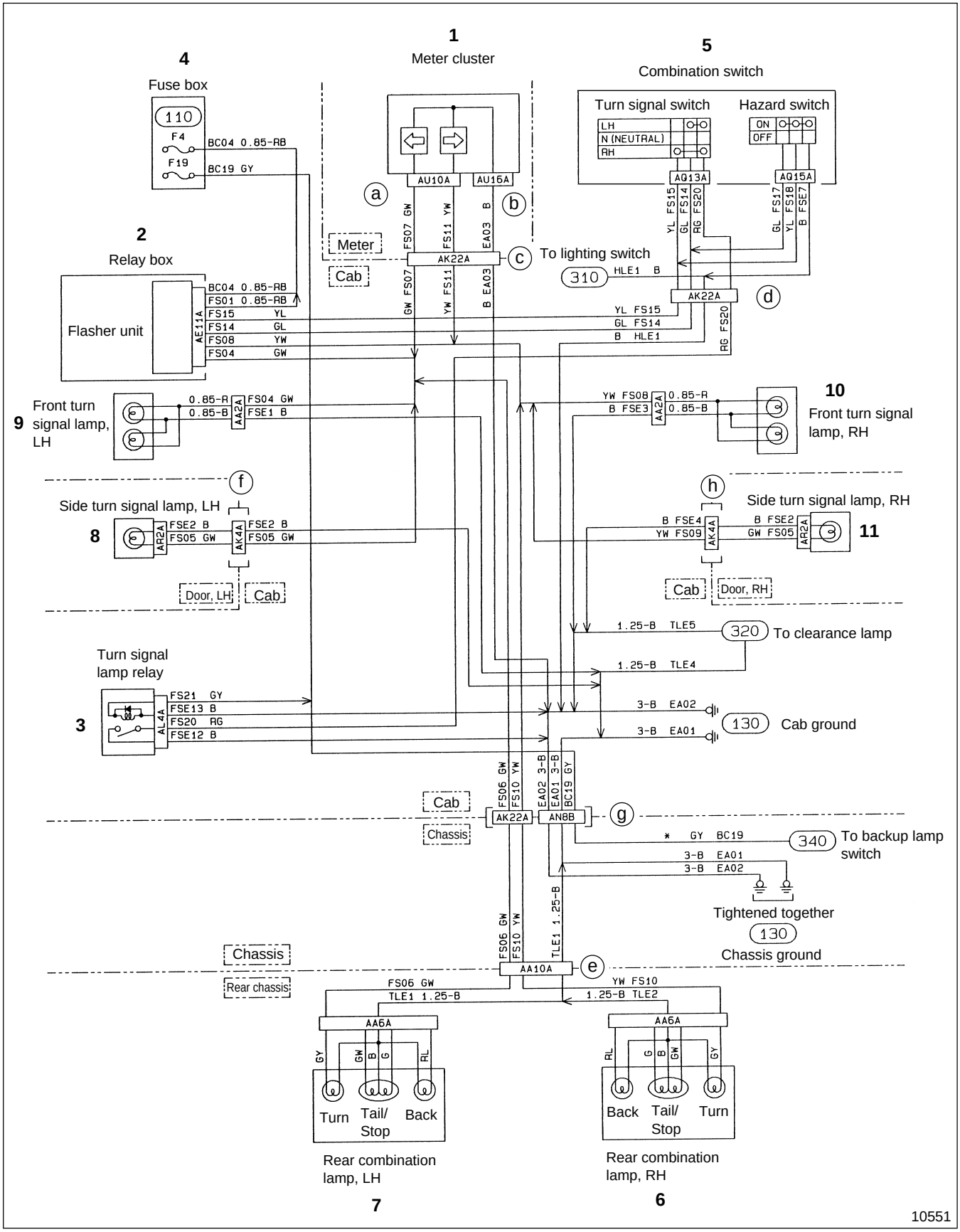

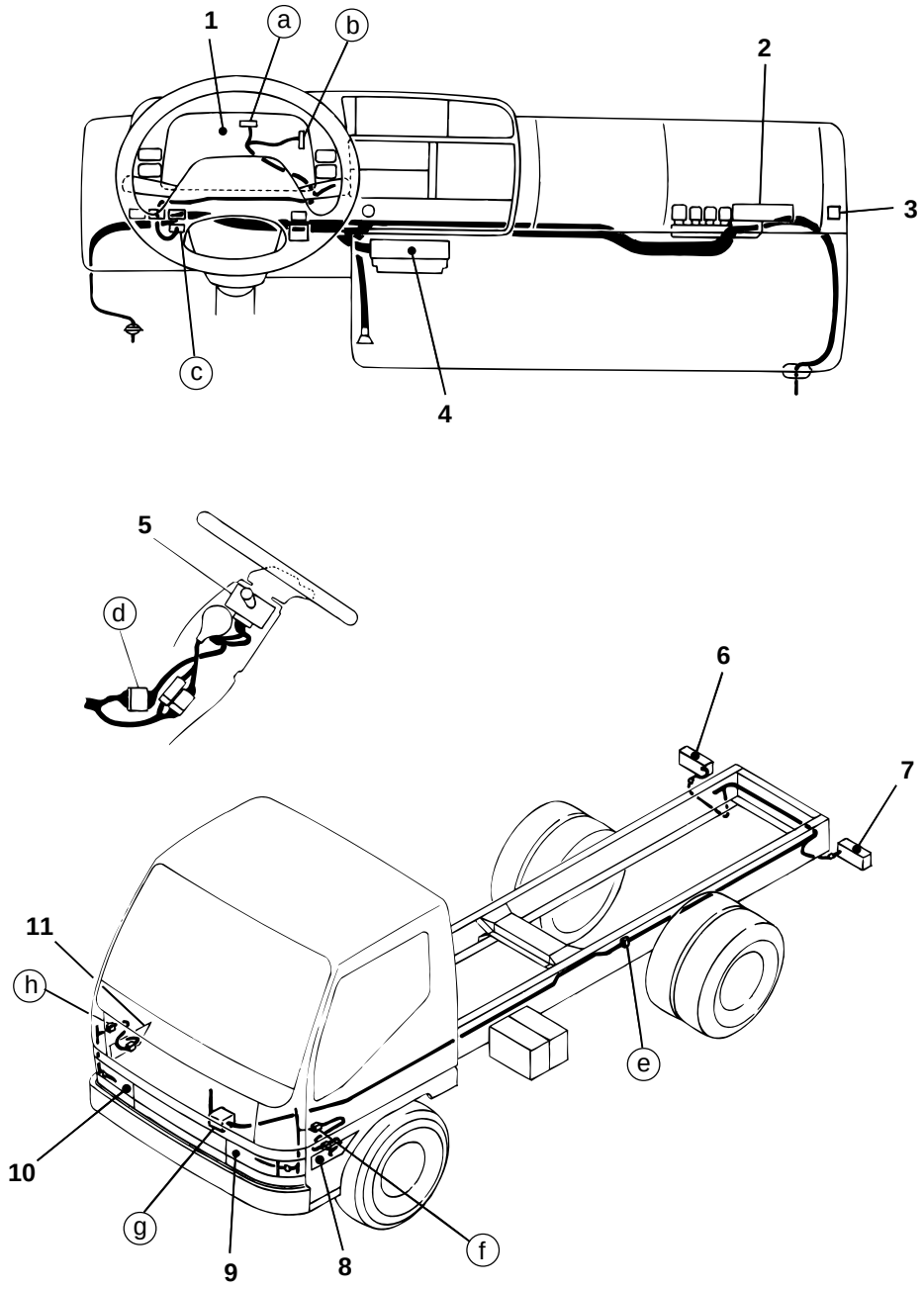

10879

1 Meter cluster 401
2 Relay box 604
3 Turn signal lamp relay 604
4 Fuse box 104
5 Combination switch 601
6 Rear combination lamp, RH
7 Rear combination lamp, LH
8 Side turn signal lamp, LH
9 Front turn signal lamp, LH
10 Front turn signal lamp, RH
11 Side turn signal lamp, RH

340 BACKUP LAMP CIRCUIT < Manual Transmission >

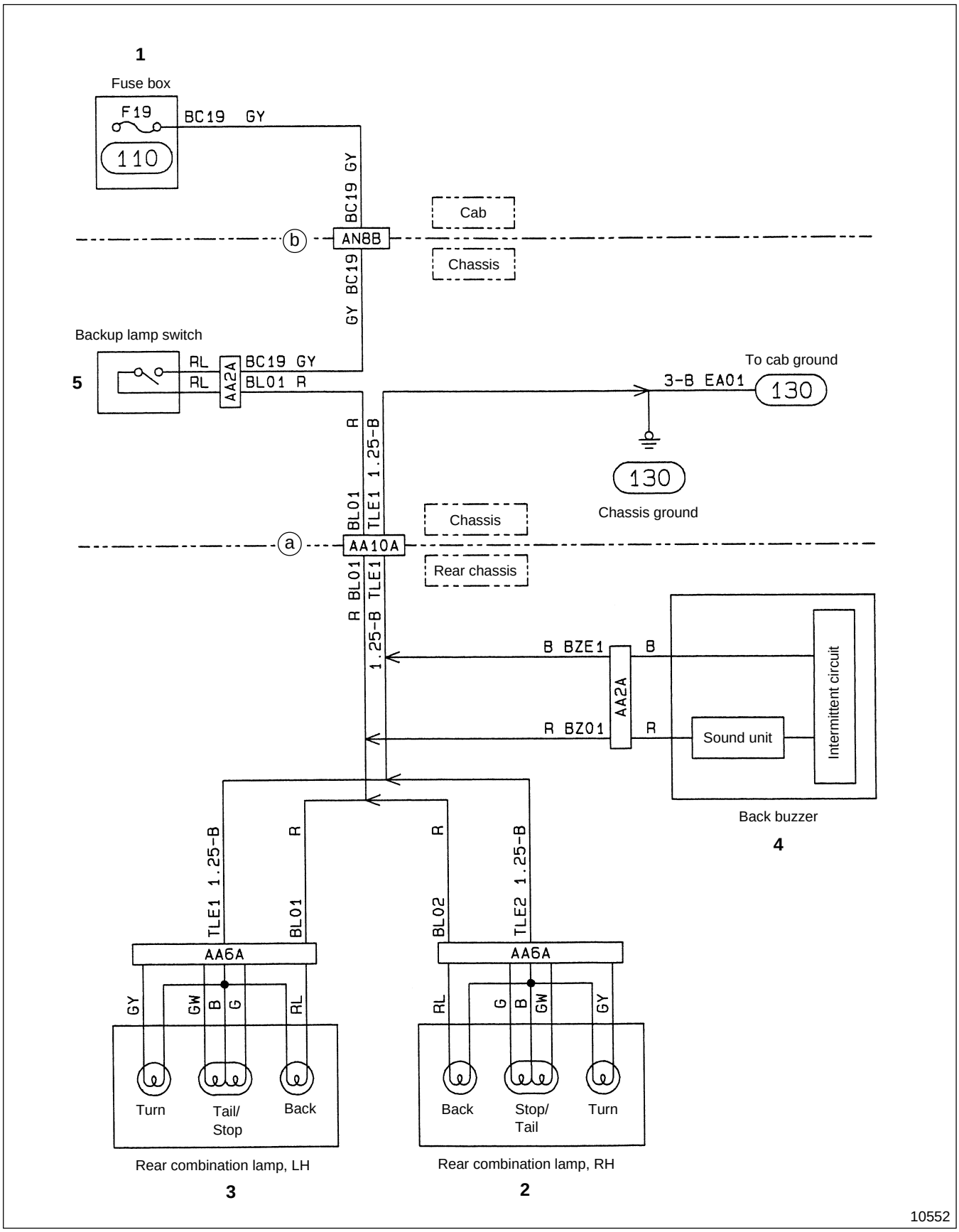

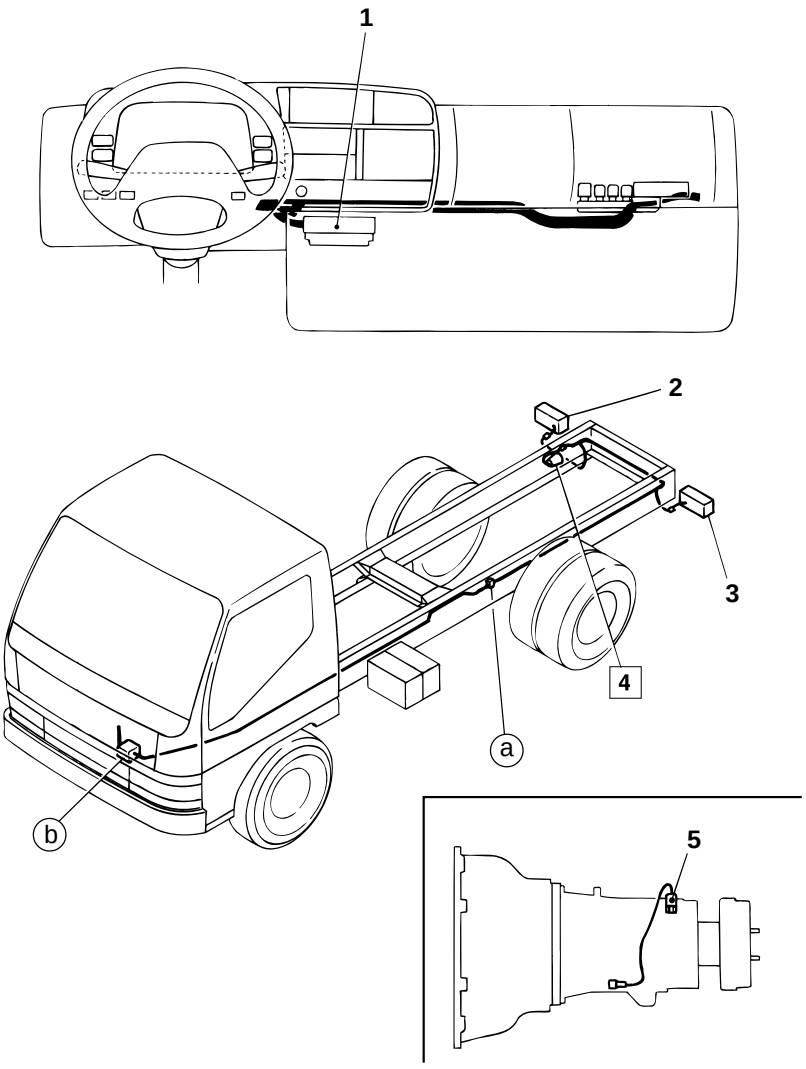

12919

1 Fuse box 104
2 Rear combination lamp, RH
3 Rear combination lamp, LH
4 Back buzzer
5 Backup lamp switch 802

◆ Service procedure

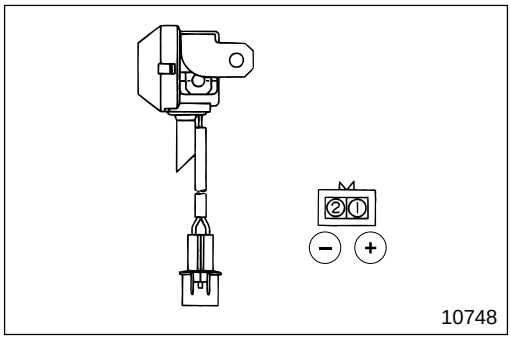

10748

4 **Back buzzer**

[Inspection]

- Make sure that back buzzer **4** sounds intermittently when you apply 12 volts DC between terminals ① and ②.
- If any fault is found, replace back buzzer **4**.

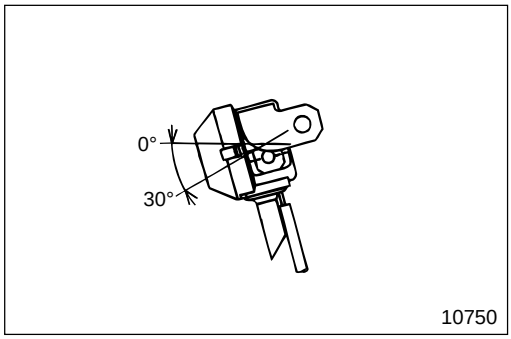

10750

[Installation]

Install back buzzer **4** to the frame within the angle range as illustrated.

CAUTION

Be careful to install back buzzer 4 within the illustrated angle range or the back buzzer will not be drained normally.

M E M O

340 BACKUP LAMP CIRCUIT < Automatic Transmission >

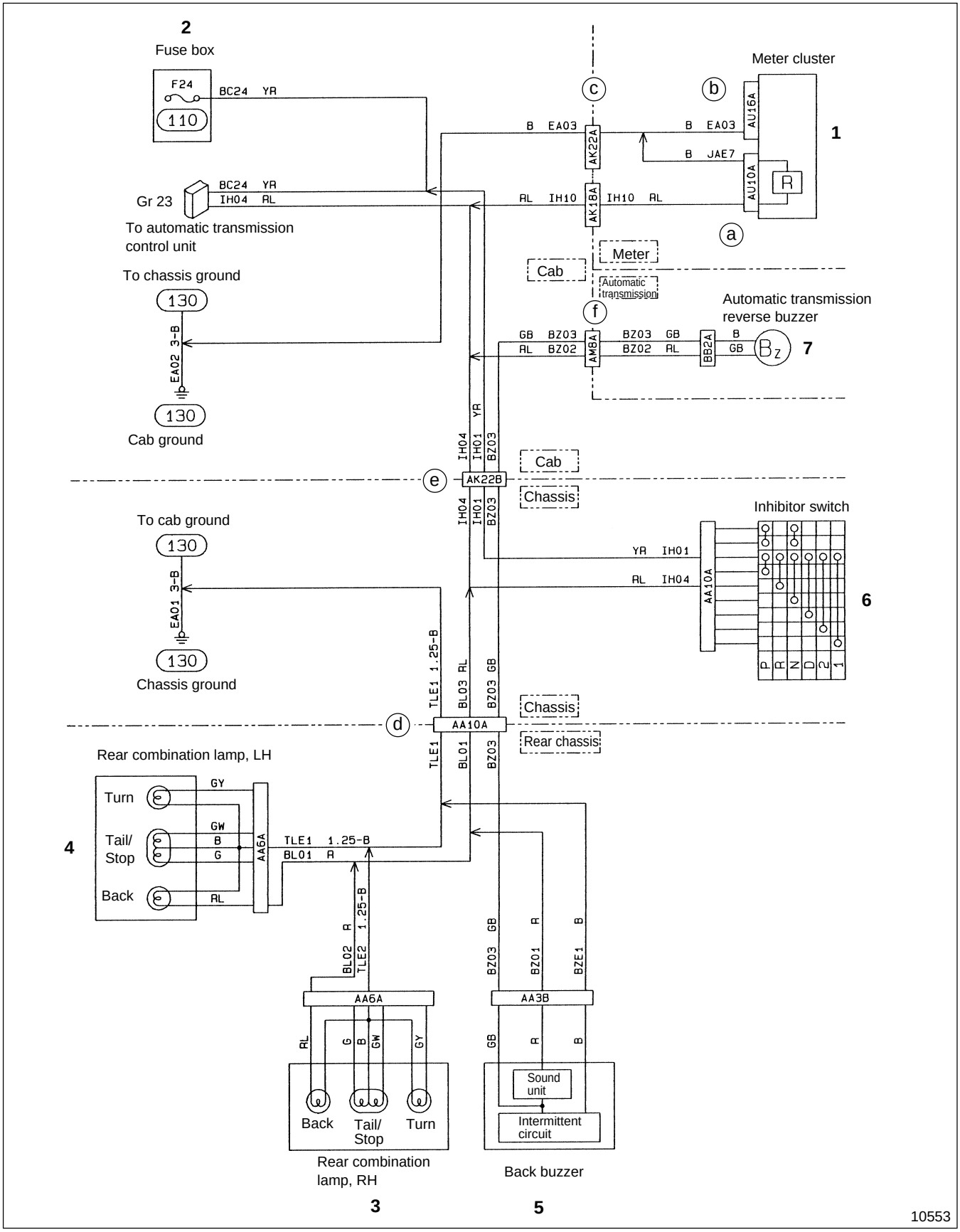

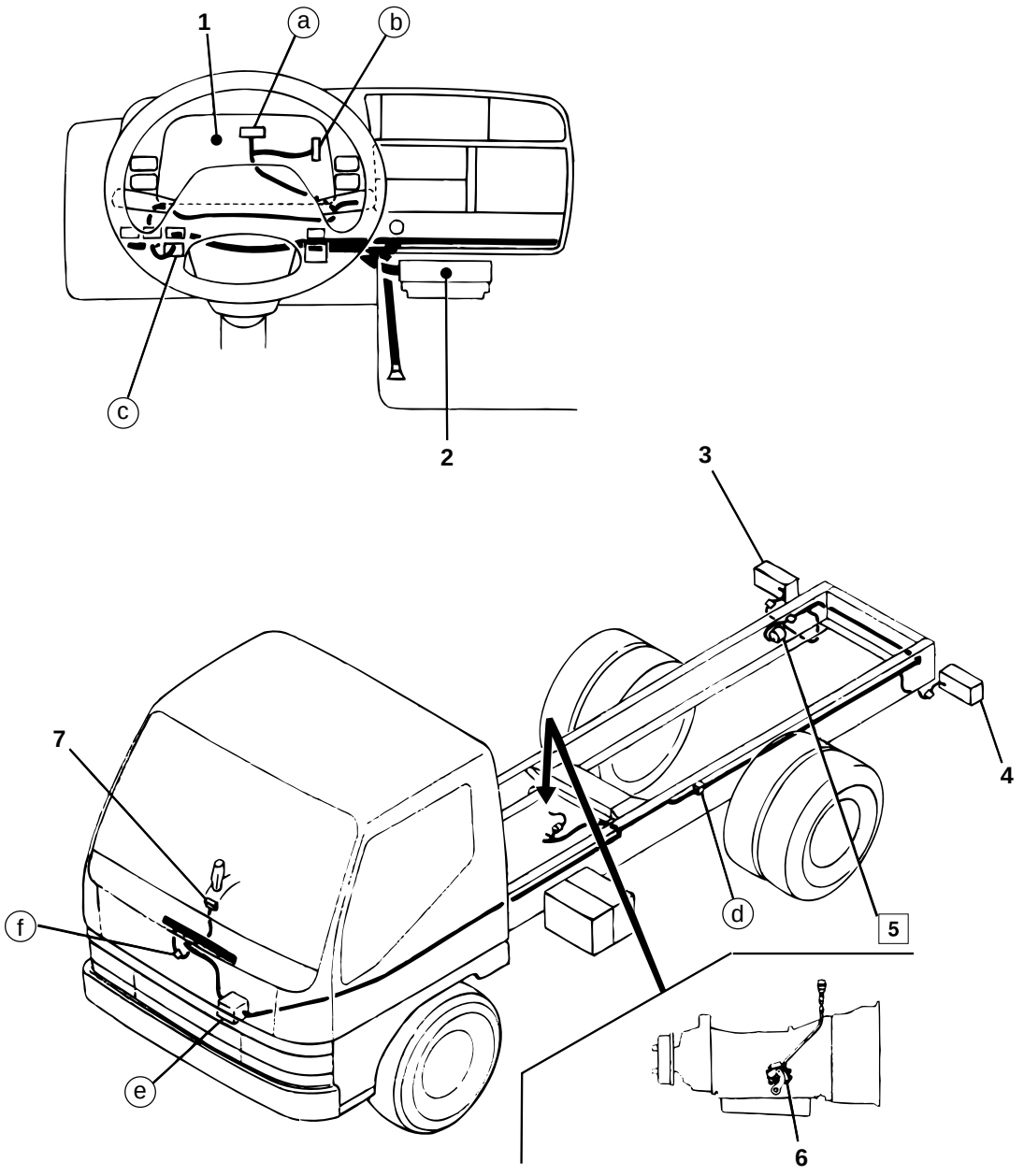

1 Meter cluster 401
2 Fuse box 104
3 Rear combination lamp, RH
4 Rear combination lamp, LH
5 Back buzzer
6 Inhibiter switch Gr 23
7 Automatic transmission reverse buzzer 606

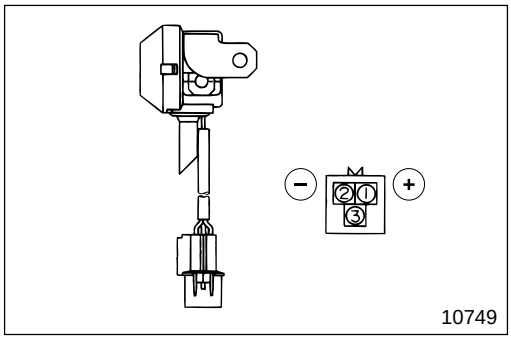

◆ Service procedure

5 **Back buzzer**

[Inspection]
Carry out the following inspection.
If any fault is found, replace back buzzer **5**.

(1) Back buzzer terminal

Make sure that back buzzer **5** sounds intermittently when you apply 12 volts DC between terminals ① and ②.

(2) Automatic transmission reverse buzzer terminal

Make sure that there is continuity between terminals ② and ③.

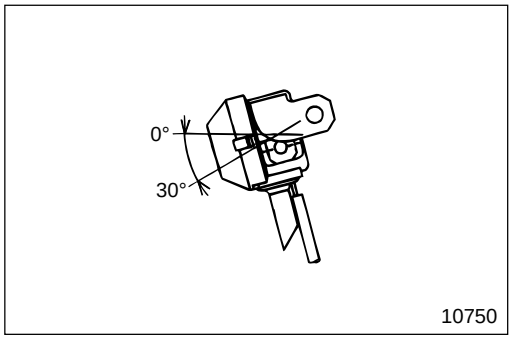

[Installation]
Install back buzzer **5** to the frame within the angle range as illustrated.

CAUTION

Be careful to install back buzzer 5 within the illustrated angle range or the back buzzer will not be drained normally.

M E M O

345 CAB LAMP CIRCUIT

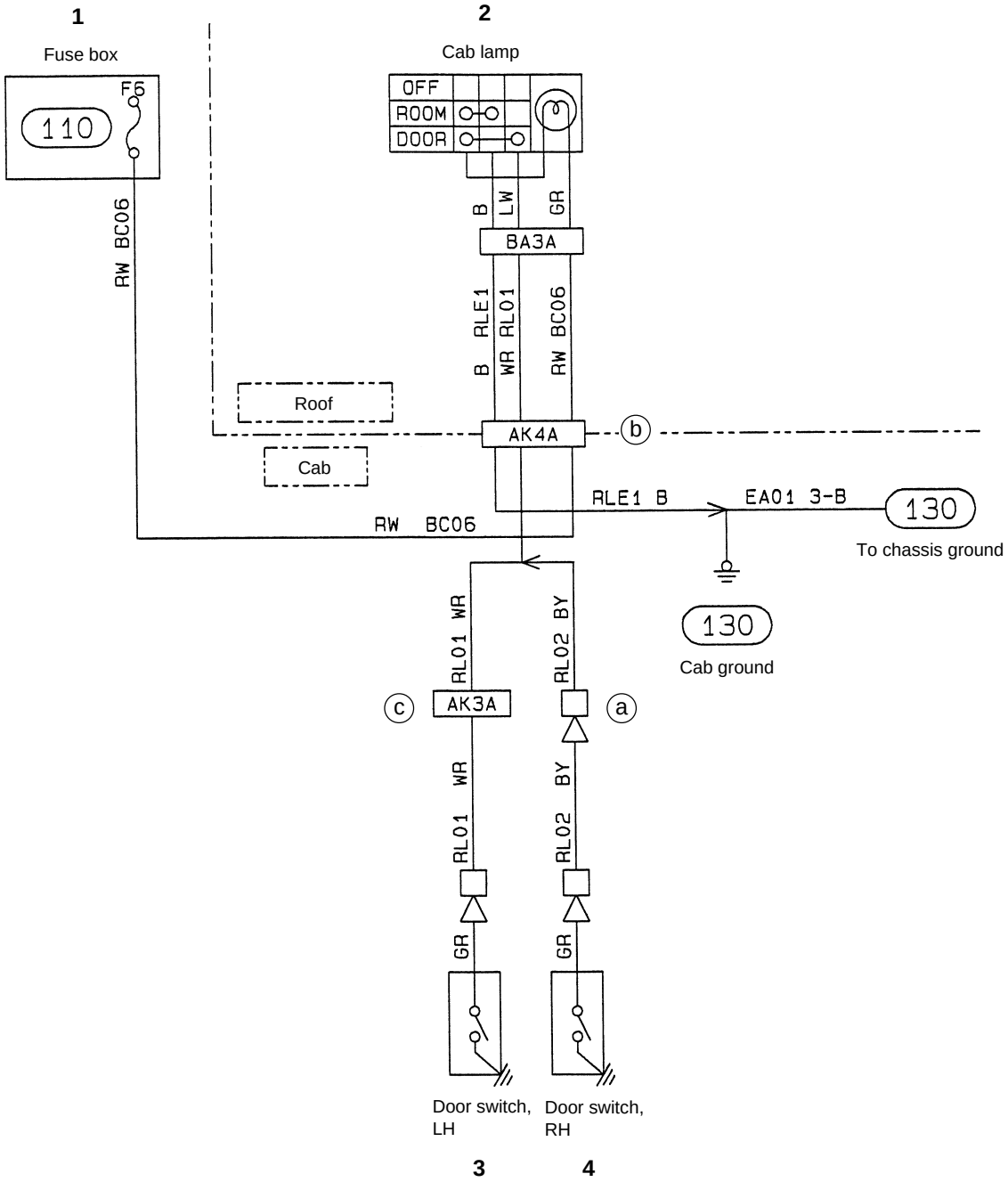

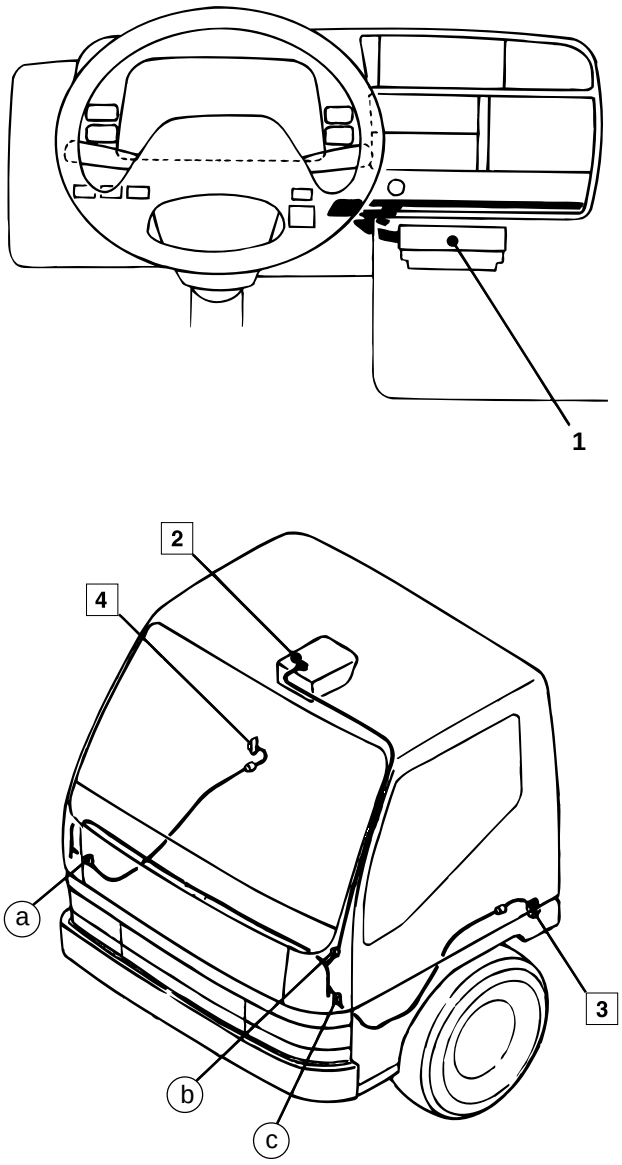

10853

1 Fuse box 104
2 Cab lamp
3 Door switch, LH
4 Door switch, RH

◆ Service procedure

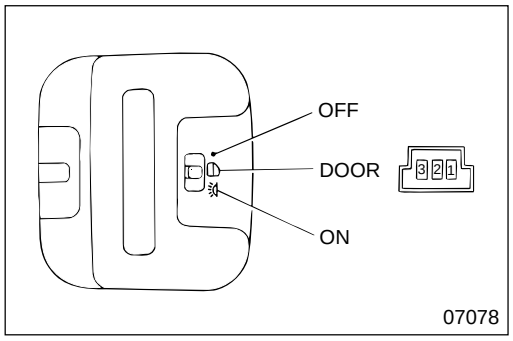

2 **Inspection of cab lamp**

- Follow the table below to inspect continuity:

	①	②	③
OFF			
DOOR	○—○		
ON	○——	——	○

○—○ : There is continuity between terminals ○ and ○. (When valve is installed.)

- If any fault is found, replace cab lamp **2**.

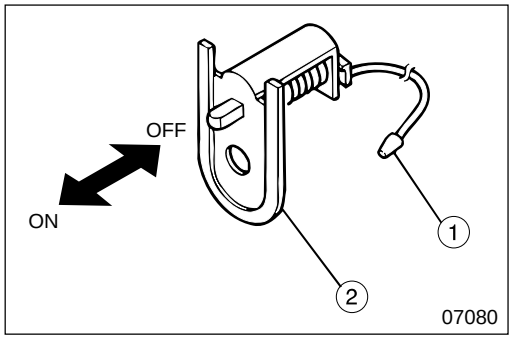

3 **4** **Inspection of door switches**

- Follow the table below to inspect continuity:

	①	②
OFF		
ON	○—○	

○—○ : There is continuity between terminals ○ and ○.

- If any fault is found, replace door switches **3, 4**. Gr 42

M E M O

348 ILLUMINATION LAMP CIRCUIT

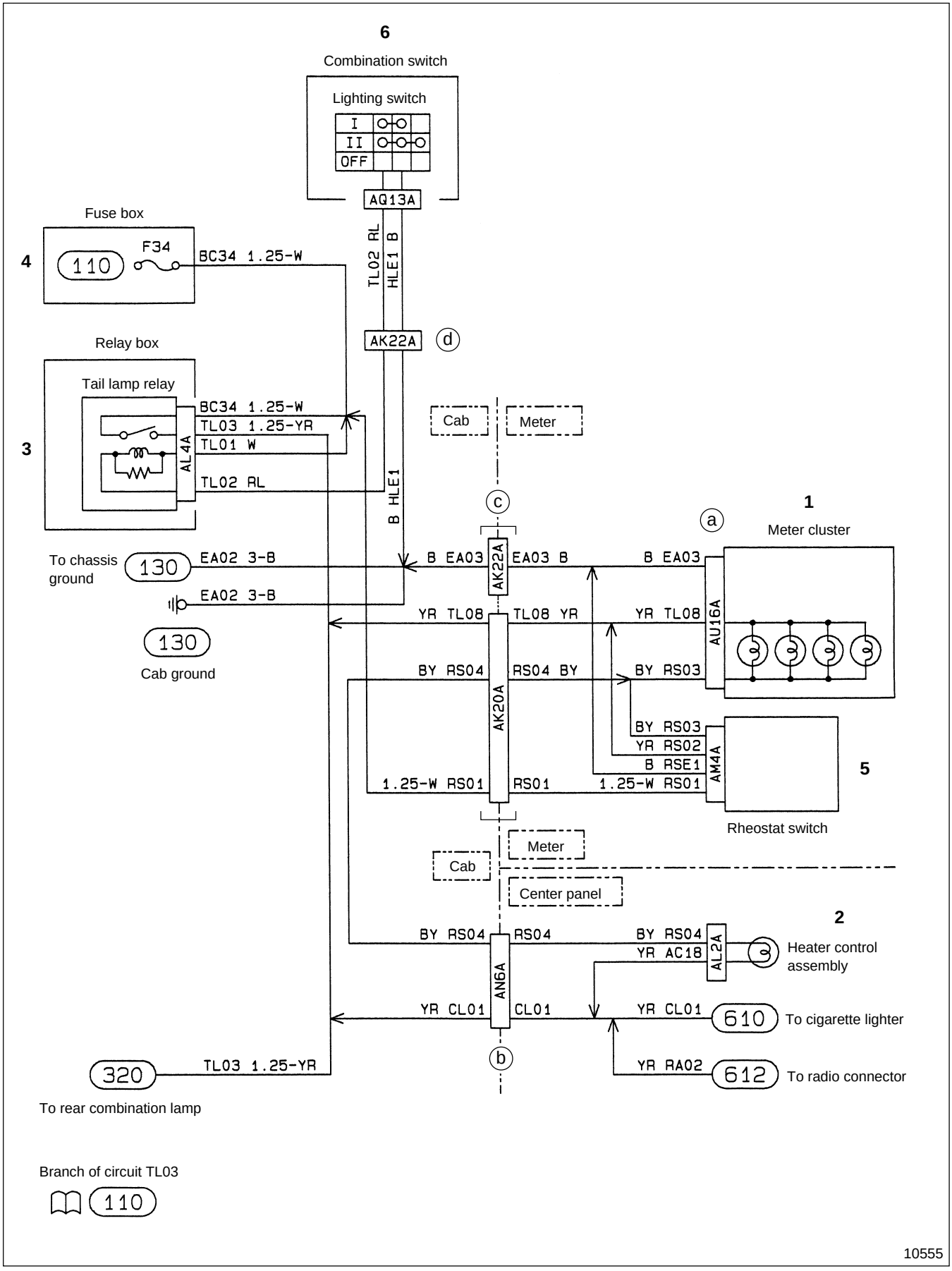

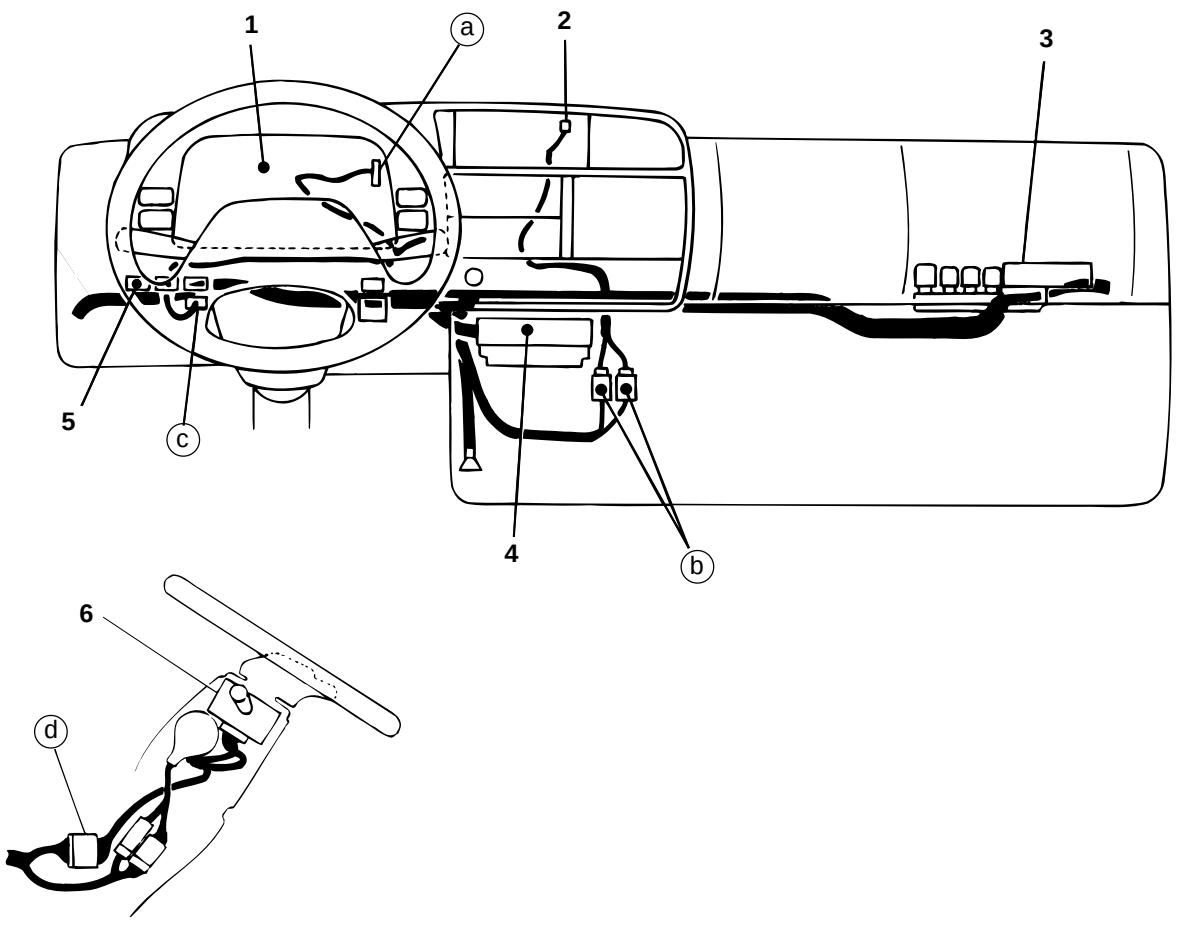

1 Meter cluster 401
2 Heater control assembly 618
3 Relay box 604
4 Fuse box 104
5 Rheostat switch 601
6 Combination switch 601

349 MARKER LAMP AND IDENTIFICATION LAMP CIRCUITS

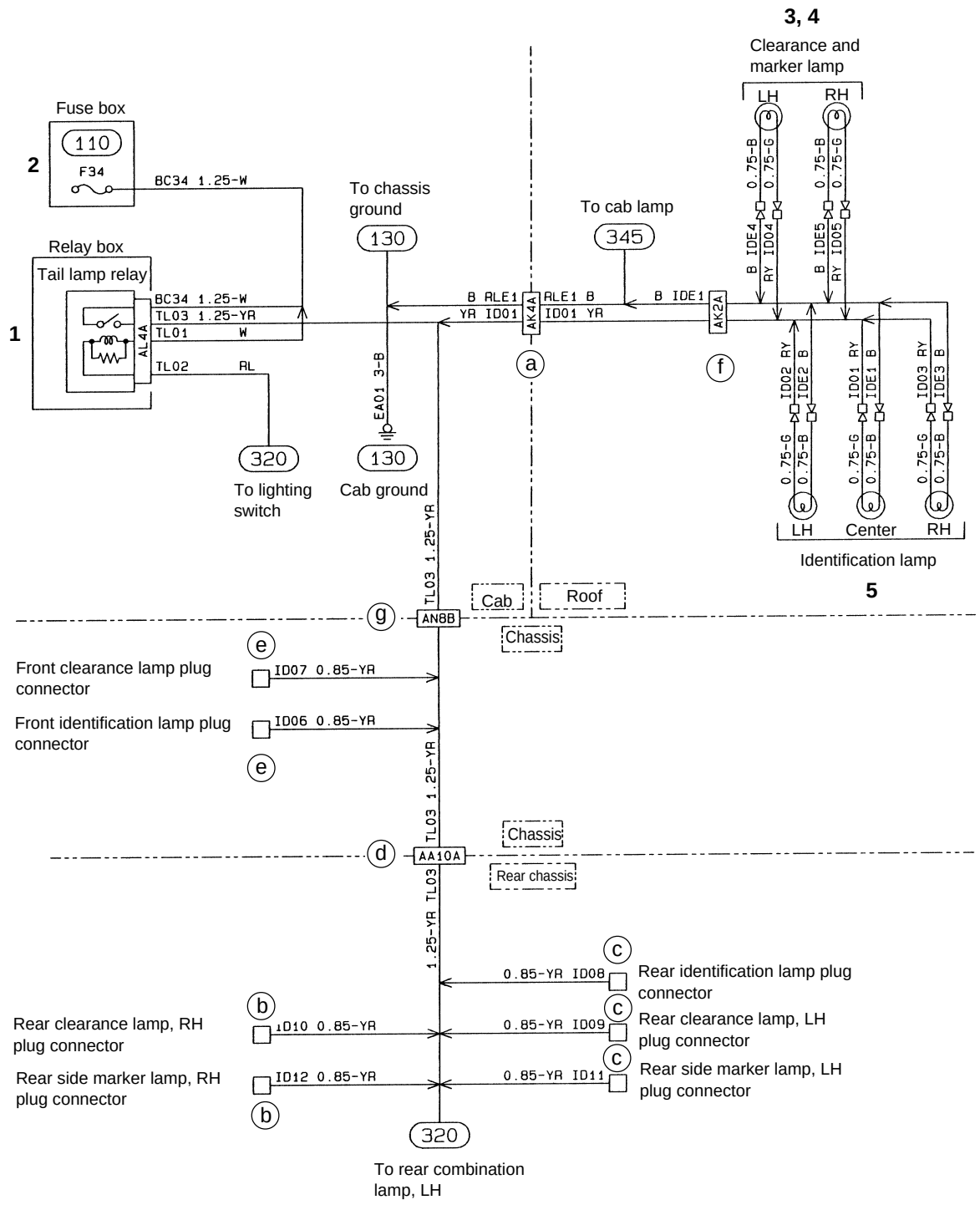

10556

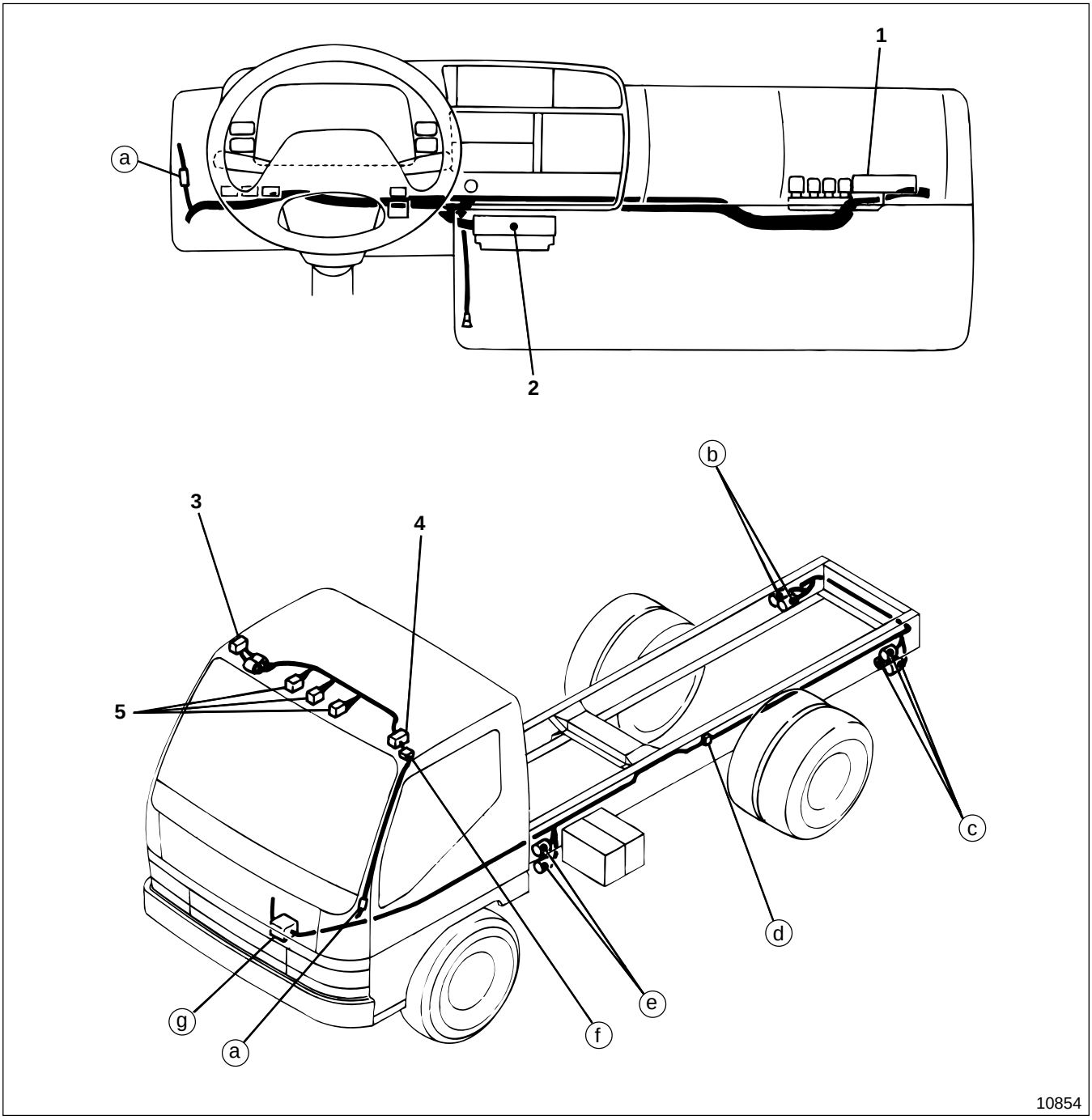

1 Relay box 🕮 (604)
2 Fuse box 🕮 (104)
3 Clearance and side marker lamp, RH
4 Clearance and side marker lamp, LH
5 Identification lamp

352 VAN BODY DOME LIGHT CIRCUIT

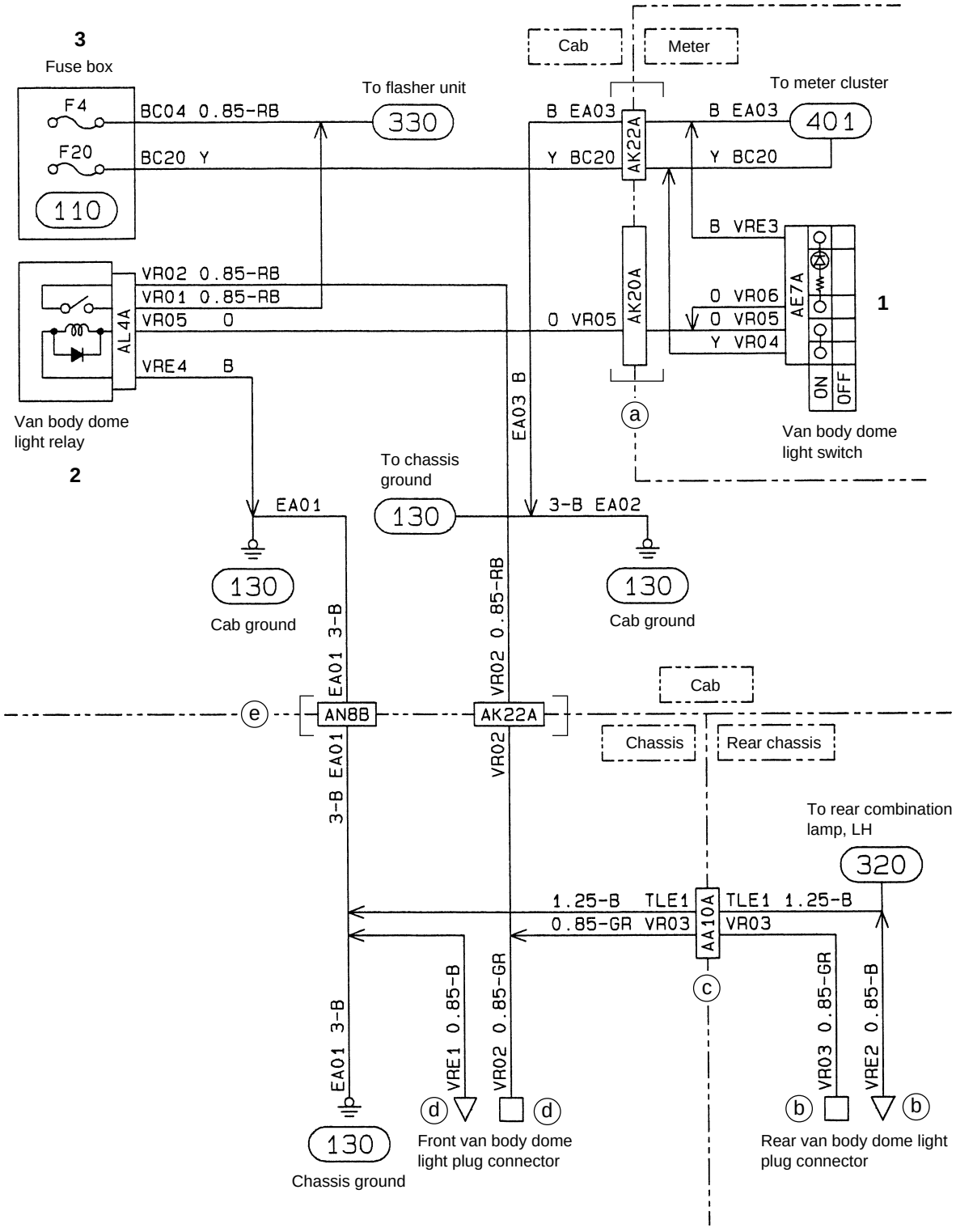

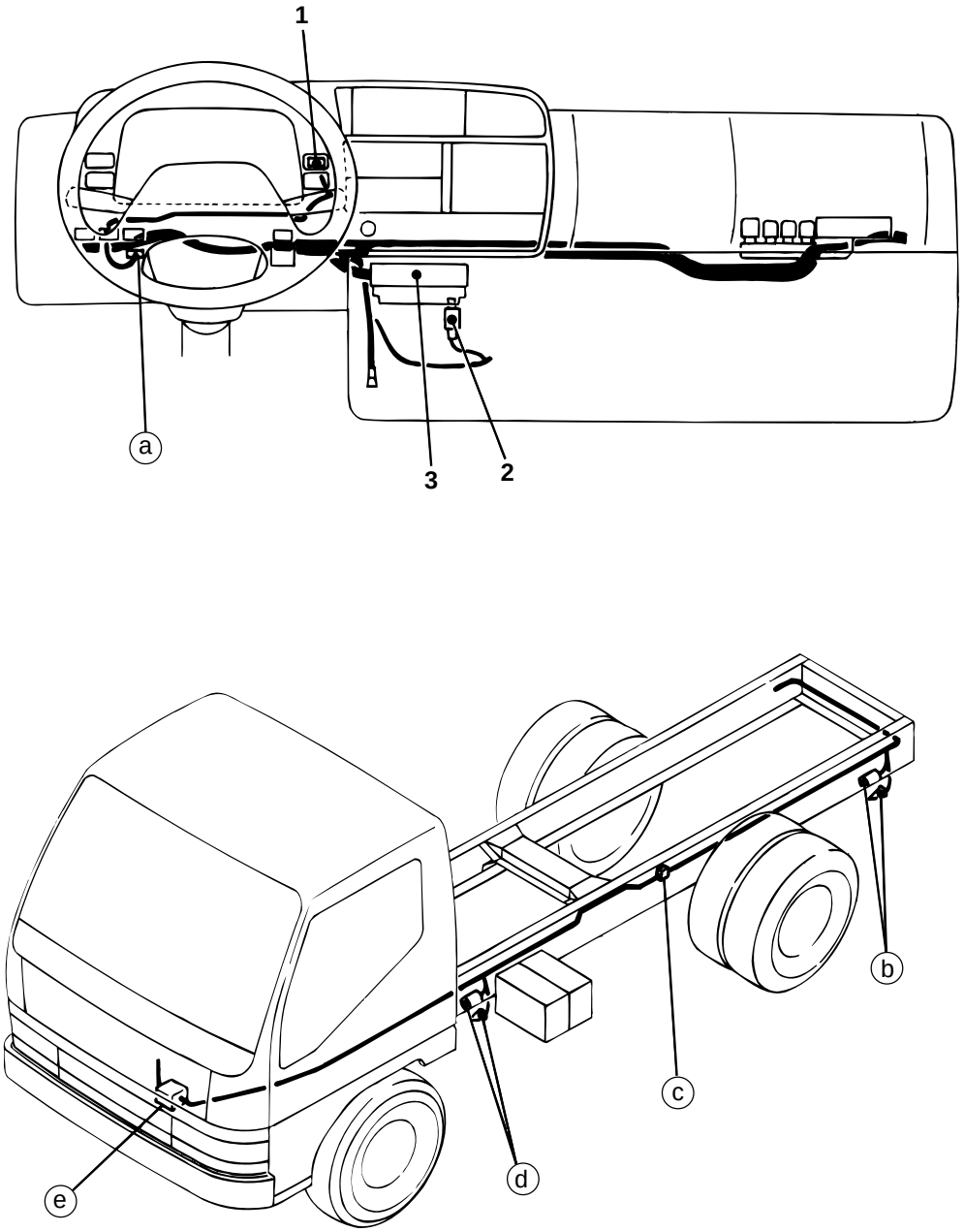

10855

1 Van body dome light switch 🕮 (601)
2 Van body dome light relay 🕮 (604)
3 Fuse box 🕮 (104)

4 METER

SPECIFICATIONS 54-4-2

TROUBLESHOOTING 54-4-3

401 METER CLUSTER 54-4-4

410 TACHOMETER CIRCUIT 54-4-10

420 FUEL GAUGE CIRCUIT 54-4-12

425 WATER TEMPERATURE GAUGE CIRCUIT 54-4-16

SPECIFICATIONS

Item				Specifications
Meter cluster	Manufacturer			NIPPONDENSO
	Voltage		V	12
	Lighting bulb		W	3.4, 3 (Water temperature gauge)
	Indicator lamp bulb		W	1.4
	Warning lamp bulb		W	1.4
	Bulb for automatic transmission shift indicator		W	1.12
	Meter warning buzzer	Rated current	mA	50 or less (Mean value)
		Sound pressure	dB	60 $^{+6}_{0}$ (at 1 m {3.3 ft})

Possible causes \ Symptoms		Needle does not move	Needle movement unstable	Indication error large	Meter generates noise	Remarks
Connector connection faulty, harness broken, grounding faulty		○	○			
Fuse blown		○				
Inner circuit of meter cluster faulty		○	○	○		
Printed board of meter cluster faulty		○				
Tachometer	Engine revolution sensor coil broken	○				
	Engine revolution sensor installed incorrectly	○	○			Gr 13
	Tachometer faulty	○	○	○	○	
Speedometer	Speedometer cable broken	○				
	Speedometer cable connection faulty		○		○	
	Speedometer cable lubricant exhausted		○		○	
	Tires incorrect			○		Gr 31
	Tires worn and tire pressure incorrect			○		Gr 31
	Transmission L-joint incorrect (gear ratio different)			○		Gr 22
	Transmission speedometer gear incorrect (gear ratio different)			○		Gr 22
	Installation angle of transmission speedometer gear bush incorrect (not set at correct gear ratio point)			○		Gr 22
	Speedometer faulty	○	○	○	○	
Water temperature gauge	Water temperature sensor faulty	○		○		
	Water temperature gauge faulty	○		○		
	Thermostat does not close	○				Gr 14
Fuel gauge	Fuel gauge unit faulty	○		○		
	Fuel gauge faulty	○		○		

401 METER CLUSTER

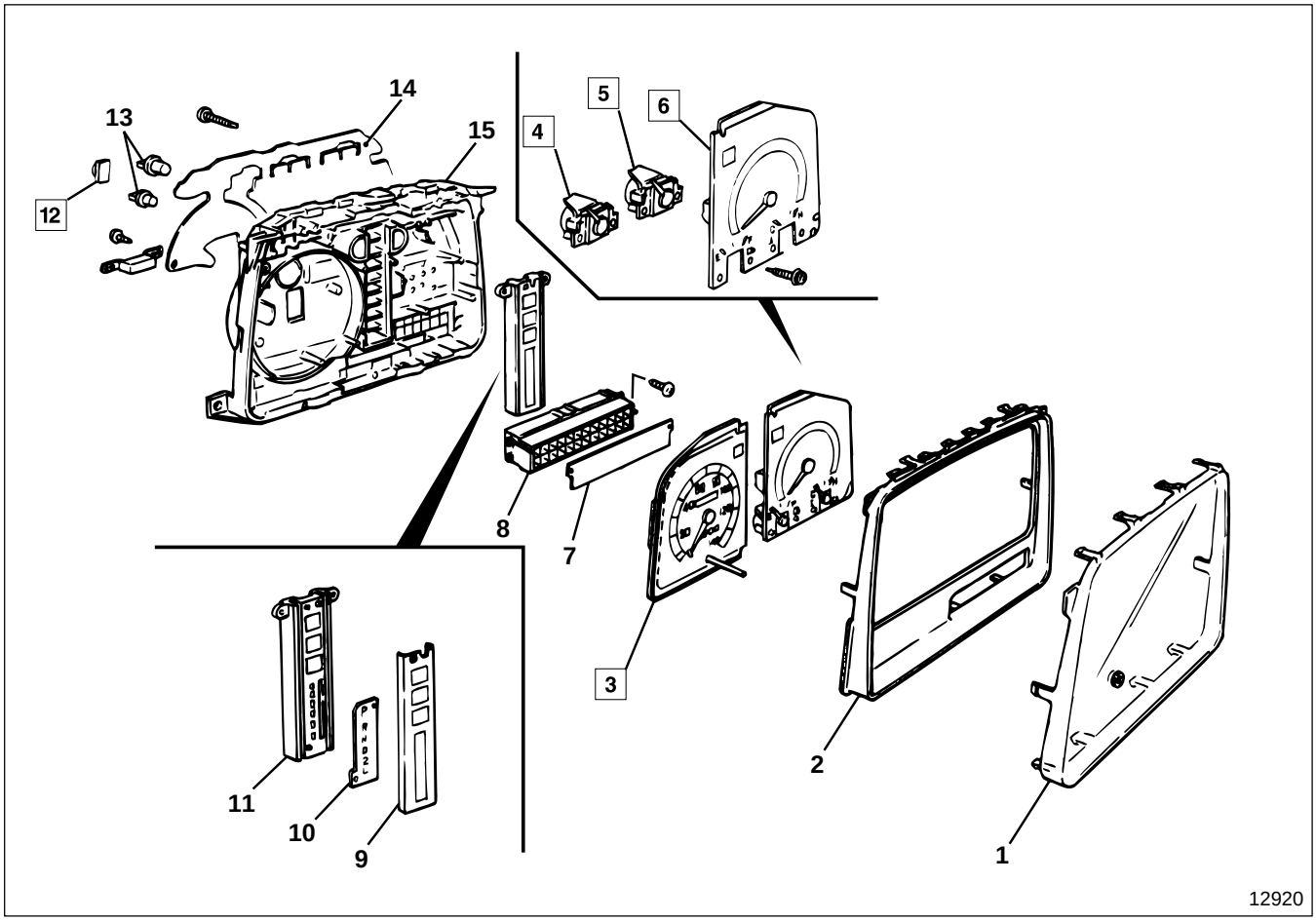

● **Disassembly sequence**

1 Meter glass
2 Window plate
3 Speedometer
4 Fuel gauge
5 Water temperature gauge
6 Tachometer
7 Indicator plate
8 Indicator case
9 Plate cover
10 Indicator plate < Automatic transmission >
11 Indicator case
12 Meter warning buzzer
13 Bulb
14 Printed board
15 Meter case

● **Assembly sequence**

Follow the disassembly sequence in reverse.

Removal and installation of meter cluster Gr 42

Service standards

Location	Maintenance item			Standard value	Limit	Remedy
3	Indication area of speedometer assembly		At 10 mph	16.1±3.2 km/h {10±2 mph}	—	Replace
			At 20 mph	32.2 $^{+3.2}_{-2.4}$ km/h {20 $^{+2}_{-1.5}$ mph}		
			At 40 mph	64.4 $^{+4}_{-1.6}$ km/h {40 $^{+2.5}_{-1}$ mph}		
			At 50 mph	80.5 $^{+4.8}_{0}$ km/h {50 $^{+3}_{0}$ mph}		
			At 60 mph	96.6 $^{+4.8}_{0}$ km/h {60 $^{+3}_{0}$ mph}		
4	Resistance of fuel gauge	Needle position	FULL	4 Ω	—	Replace
			1/2	50 Ω		
			EMPTY	135 Ω		
5	Resistance of water temperature gauge	Needle position	50°C {122°F}	131.0 Ω	—	Replace
			83°C {181°F}	39.3 Ω		
			105°C {221°F}	21.6 Ω		
			120°C {248°F}	14.7 Ω		
6	Indication range of tachometer 20±2°C {68±3.6°F} 13.5±0.1 V		At 550 rpm	550±50 rpm	—	Replace
			At 1000 rpm	1000±70 rpm		
			At 1500 rpm	1500±110 rpm		
			At 2000 rpm	2000±110 rpm		
			At 2500 rpm	2500±110 rpm		
			At 3000 rpm	3000±110 rpm		
			At 4500 rpm	4500±125 rpm		

◆ Service procedure

3 Inspection of speedometer

- Measure the indication area of speedometer **3** at various speed ranges using a speedometer tester.
- If the measured value deviates from the standard value, carry out the following inspection. If the inspection does not indicate a fault, replace speedometer **3**.

(1) Inspection of installed condition of speedometer cable

Gr 22 < Manual transmission >
Gr 23 < Automatic transmission >

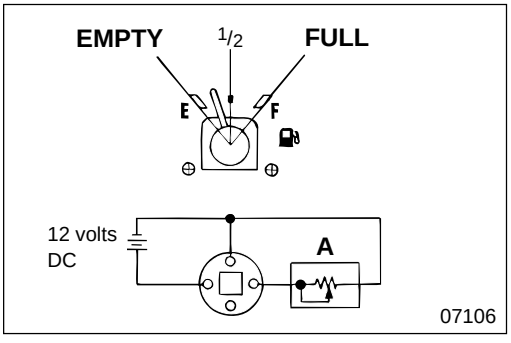

4 Inspection of fuel gauge

- Connect a variable resistor to fuel gauge **4** as illustrated.
  A : Variable resistor
- Measurement order
  FULL → 1/2 → EMPTY

NOTE

The movement of the gauge needle is subject to hysteresis (oscillation). Be sure to measure following the measurement order.

- Increase the value of variable resistor **A** gradually from 0 Ω.
- Measure the resistance respectively when the needle of fuel gauge **4** indicates FULL, 1/2 and EMPTY.
- If the measured value deviates from the standard value, replace fuel gauge **4**.

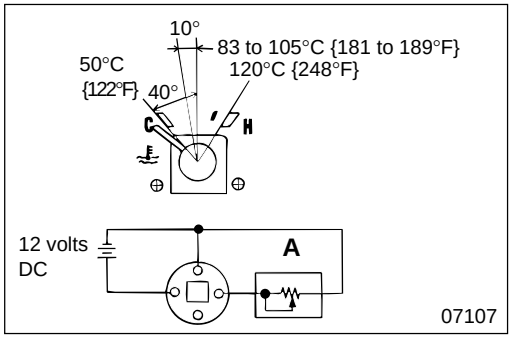

5 **Inspection of water temperature gauge**

- Connect a variable resistor to water temperature gauge **5** as illustrated.
  A : Variable resistor
- Measurement order
  Low temperature → High temperature

NOTE

The movement of the gauge needle is subject to hysteresis (oscillation). Be sure to measure following the measurement order.

- Increase the value of variable resistor **A** gradually from 0 Ω.
- Measure the resistance respectively when the needle of water temperature gauge **5** indicates 50°C {122°F}, 83 to 105°C {181 to 189°F}, and 120°C {248°F}.
- If the measured value deviates from the standard value, replace water temperature gauge **5**.

6 **Inspection of tachometer**

- Measure the indication area of tachometer **6** at various revolution ranges using an engine revolution counter.
- If the measured value deviates from the standard value, carry out the following inspection. If the inspection does not indicate a fault, replace tachometer **6**.

(1) Inspection of the engine revolution sensor body 801

(2) Inspection of the installed condition of the engine revolution sensor Gr 13

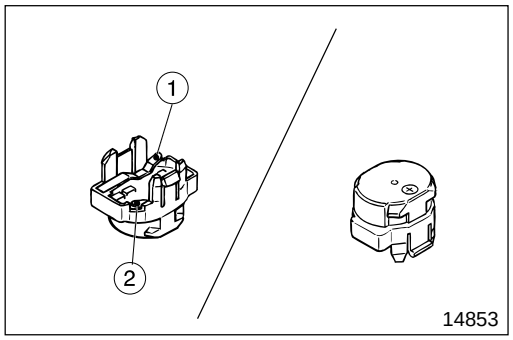

12 **Inspection of meter warning buzzer**

- Apply 12 volts DC between terminals ① and ② to check if meter warning buzzer **12** sounds.
- If any fault is found, replace meter warning buzzer **12**.

CAUTION

- **Be careful not to mix up ⊕ and ⊖ when you apply voltage to meter warning buzzer 12, because this would damage the meter warning buzzer.**
- **Make sure you check ⊕ and ⊖ on the top of meter warning buzzer 12.**

M E M O

Meter Cluster Internal Circuit

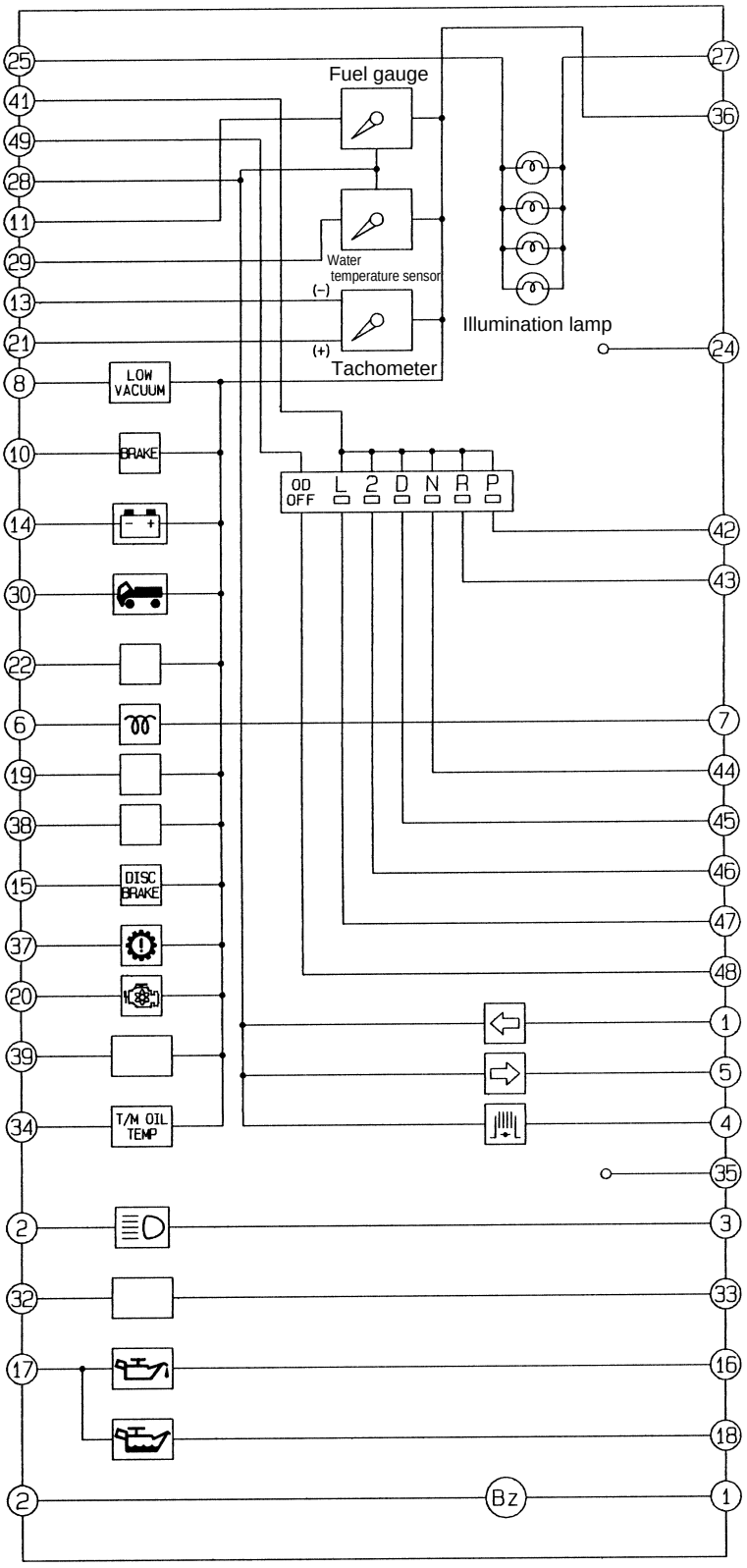

10558

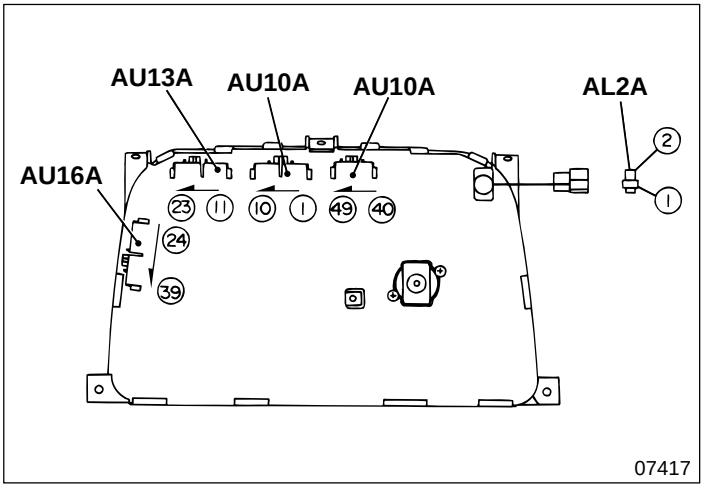

Terminal No.	AU10A
1	Turn, LH ⊕
2	Beam ⊖
3	Beam ⊕
4	Exhaust brake ⊕
5	Turn, RH ⊕
6	Glow ⊖
7	Glow ⊕
8	Vacuum ⊖
9	—
10	Brake ⊖

Terminal No.	AU13A
11	Fuel gauge ⊖
12	—
13	Tachometer ⊖
14	Charge ⊖
15	Disc brake ⊖
16	Engine oil ⊕
17	Engine oil ⊖
18	Engine oil ⊕
19	—
20	Pre-stroke control ⊖
21	Tachometer ⊕
22	—
23	—

Terminal No.	AU16A
24	Tachograph ⊕ < optional >
25	Illumination ⊖
26	—
27	Illumination ⊕
28	Ground
29	Water temperature gauge ⊖
30	Cab tilt ⊖
31	—
32	—
33	—
34	A/T fluid temperature ⊖
35	—
36	Starter switch terminal M
37	A/T warning ⊖
38	—
39	—

Terminal No.	AU10A
40	—
41	A/T shift ⊖
42	A/T shift (P) ⊕
43	A/T shift (R) ⊕
44	A/T shift (N) ⊕
45	A/T shift (D) ⊕
46	A/T shift (2) ⊕
47	A/T shift (L) ⊕
48	A/T overdrive OFF ⊕
49	A/T overdrive OFF ⊖

Terminal No.	AL2A
1	Buzzer ⊕
2	Buzzer ⊖

A/T : Automatic transmission

410 TACHOMETER CIRCUIT

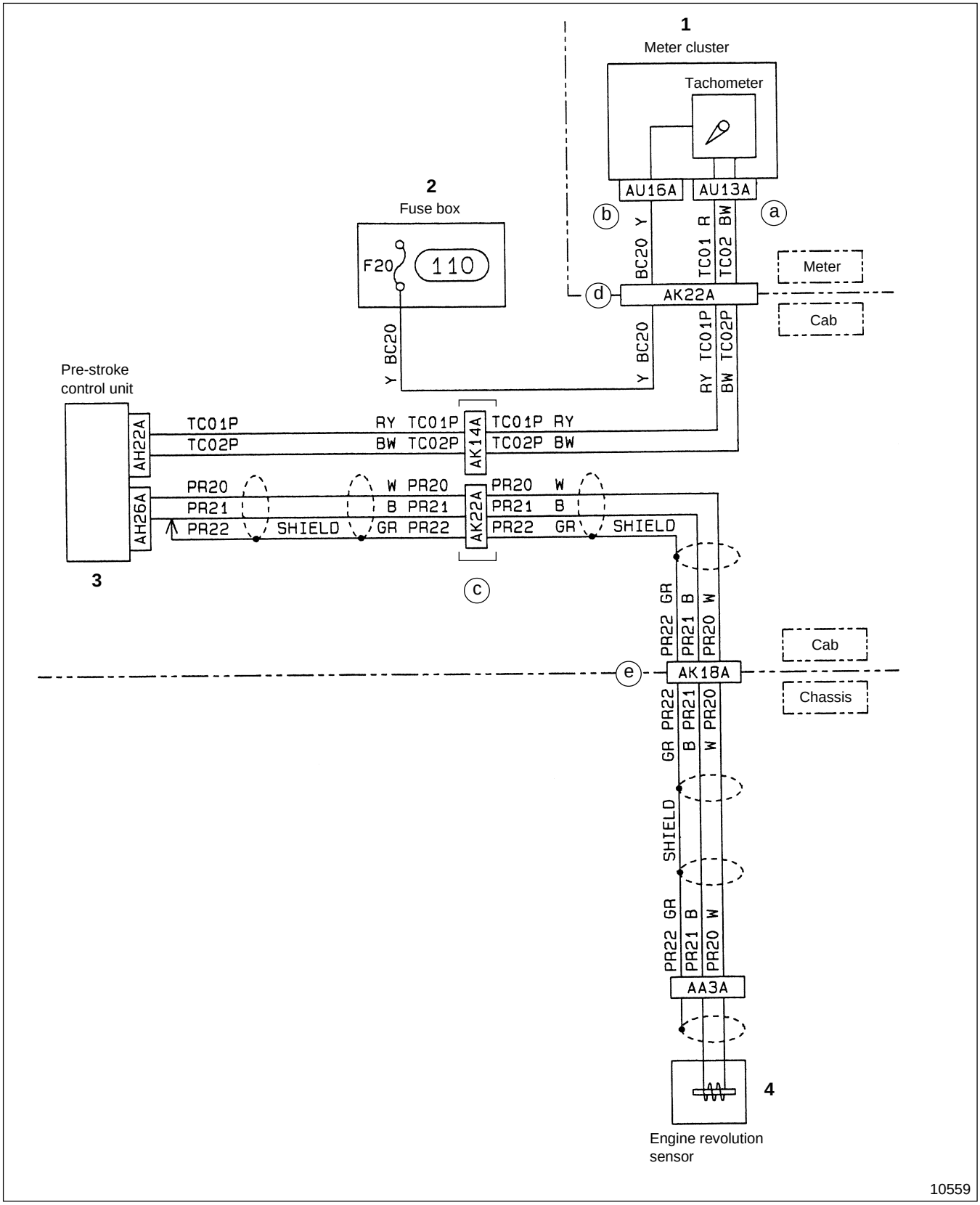

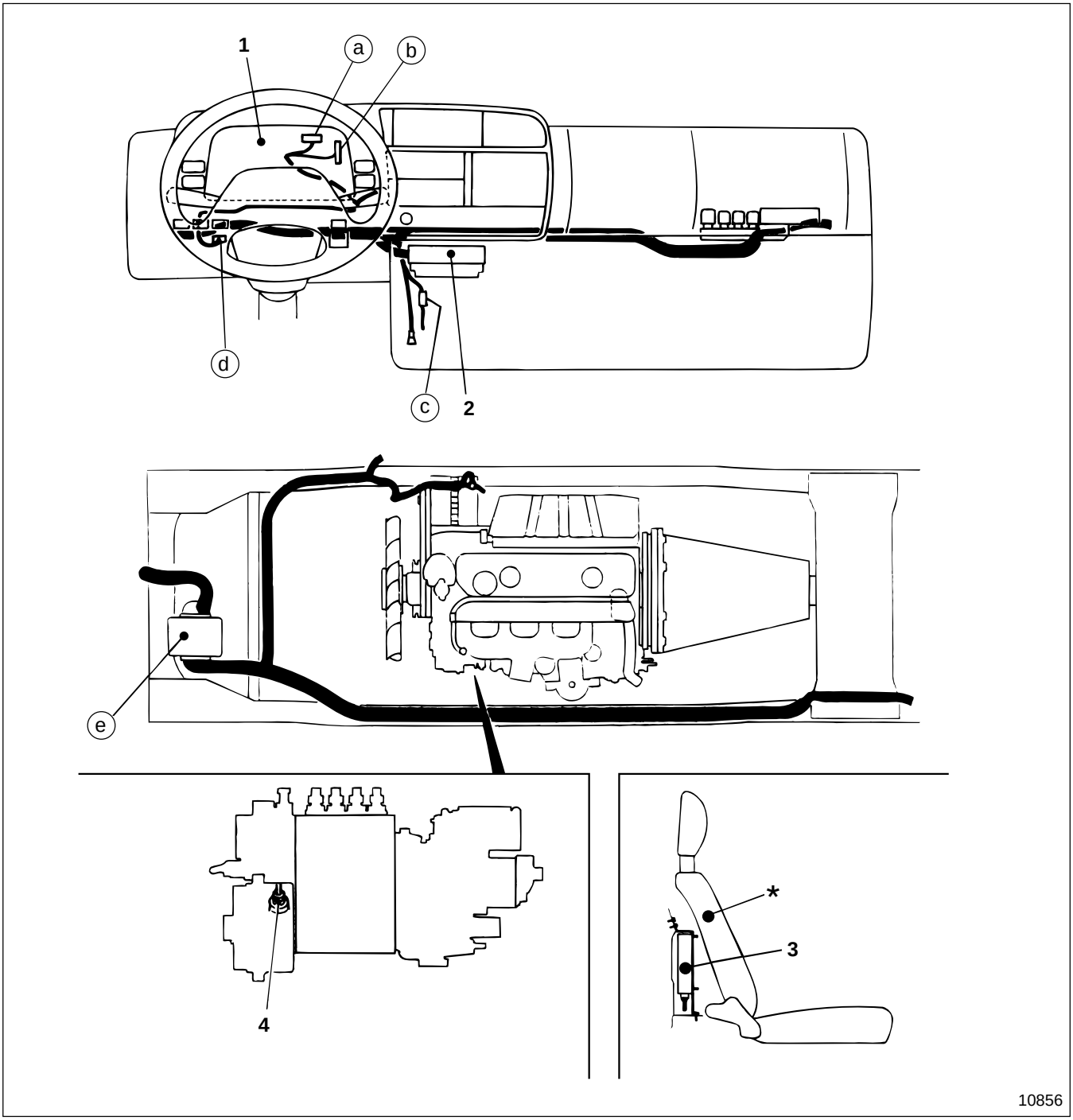

1 Meter cluster 🕮 (401)
2 Fuse box 🕮 (104)
3 Pre-stroke control unit 🕮 (604)
4 Engine revolution sensor 🕮 (801)

***** Passenger's seat

420 FUEL GAUGE CIRCUIT

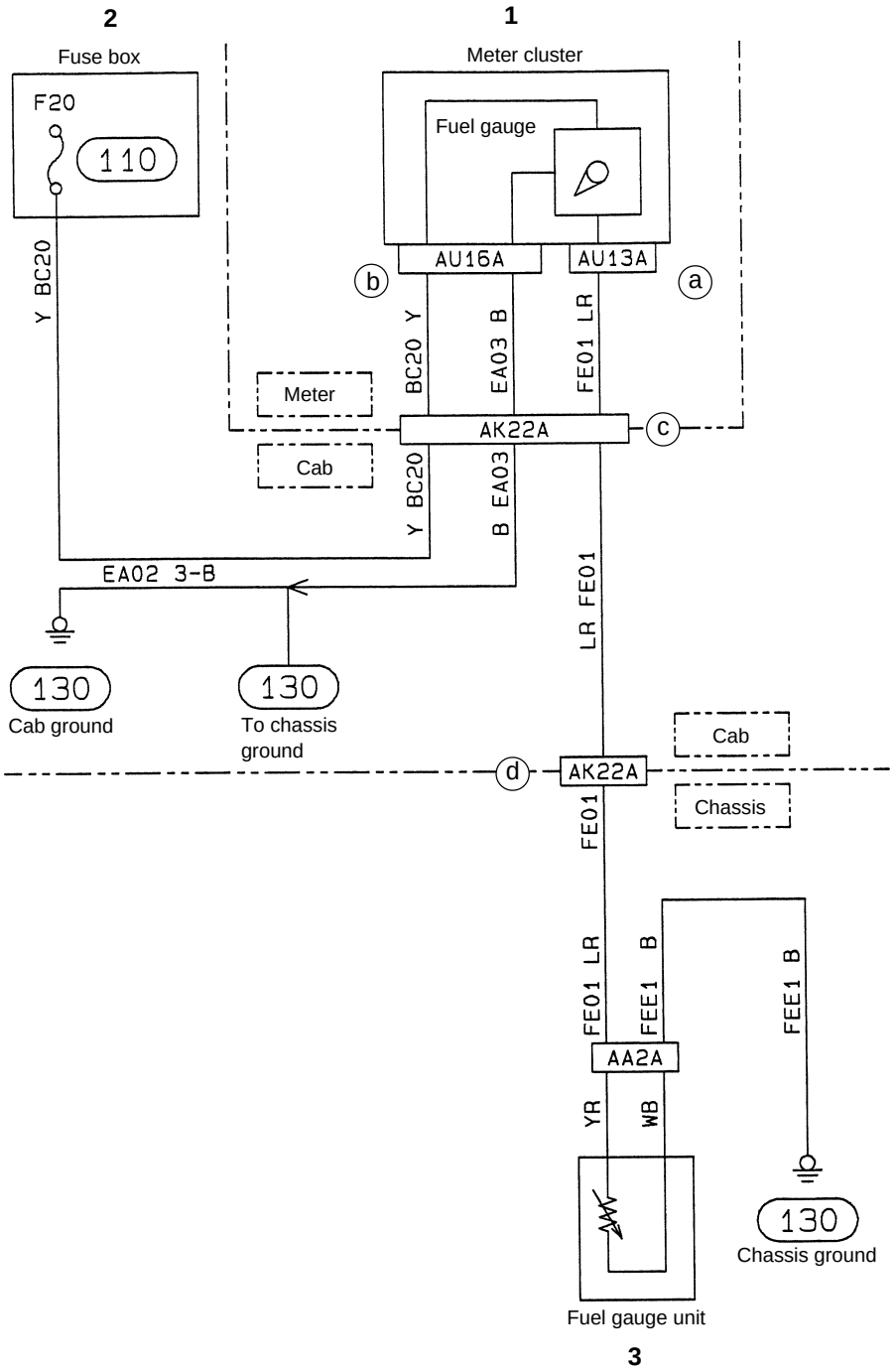

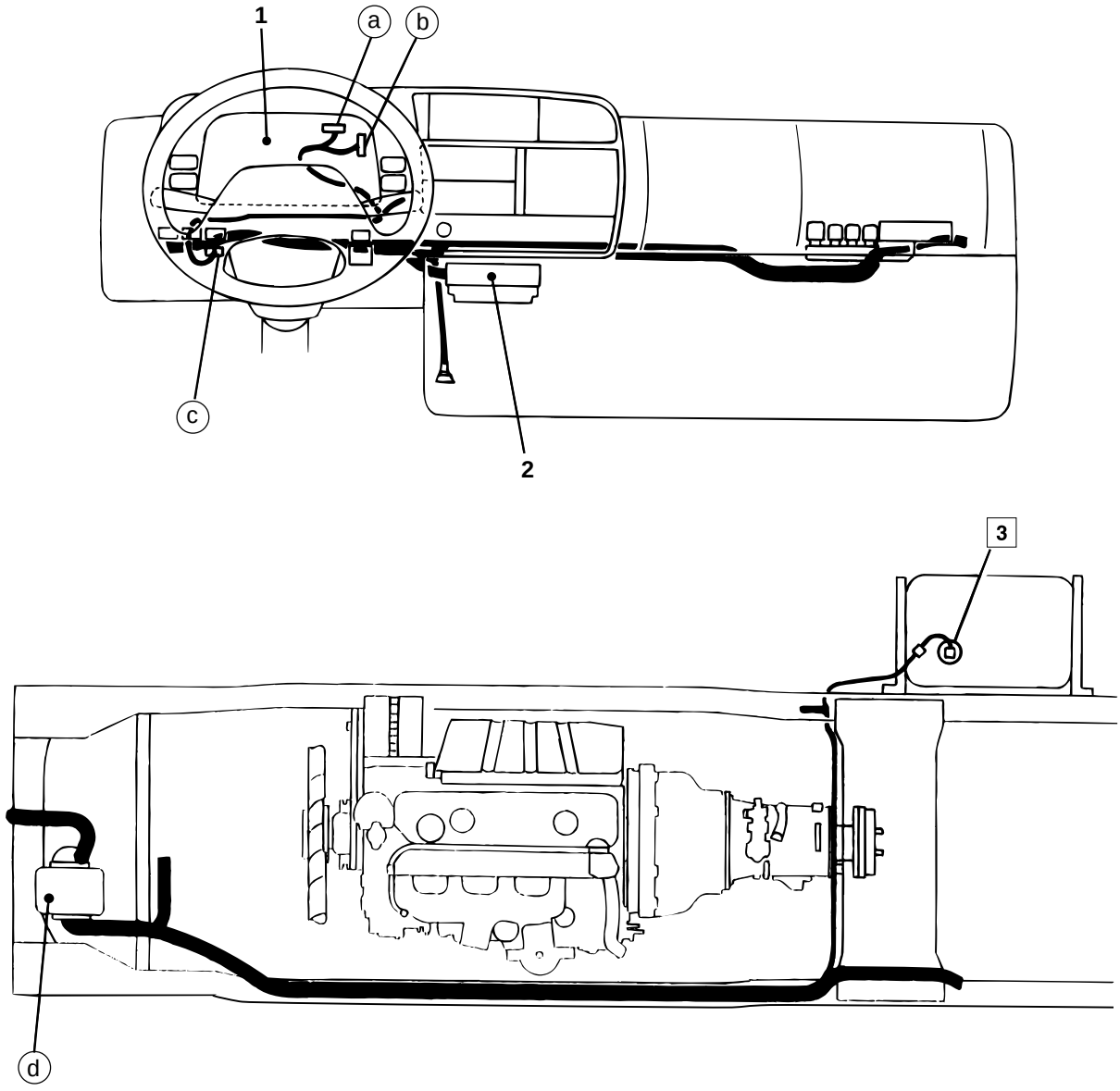

1 Meter cluster 401
2 Fuse box 104
3 Fuel gauge unit

Service standards

Location	Maintenance item			Standard value	Limit	Remedy
3	Resistance of fuel gauge unit	Float arm location	EMPTY	150±10 Ω	—	Replace
			1/2	50±3 Ω		
			FULL	0^{+2}_{0} Ω		

( ): Reference values

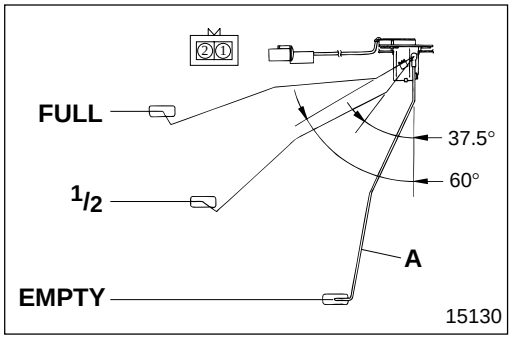

◆ Service procedure

3 **Inspection of fuel gauge unit**

- Measure the resistance between terminals ① and ② when float arm **A** makes contact with both end stoppers (**E** and **F**) and midpoint positions of the movable range, respectively.
- If the measured value deviates from the standard value, replace fuel gauge unit **3**.

M E M O

425 WATER TEMPERATURE GAUGE CIRCUIT

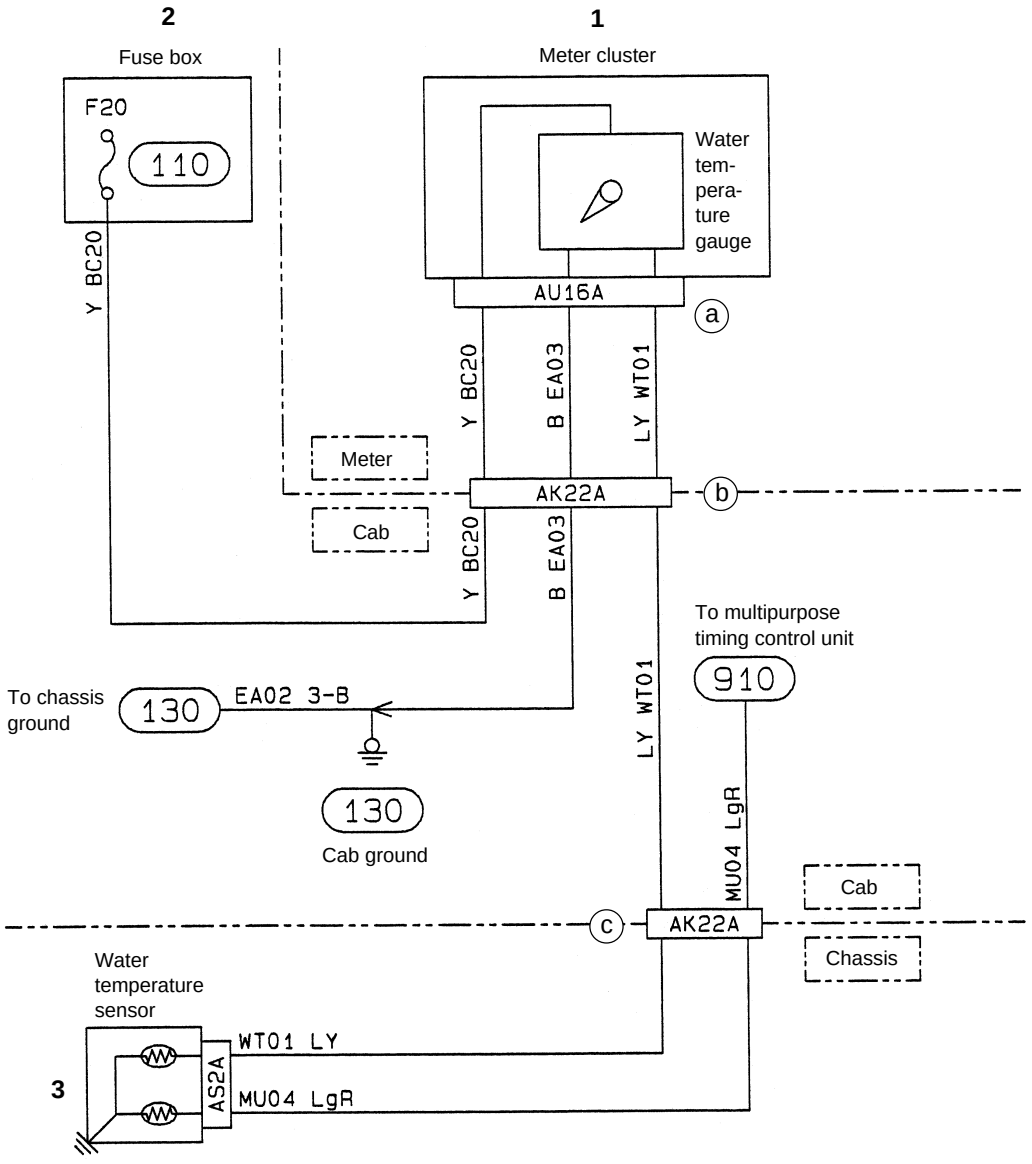

10561

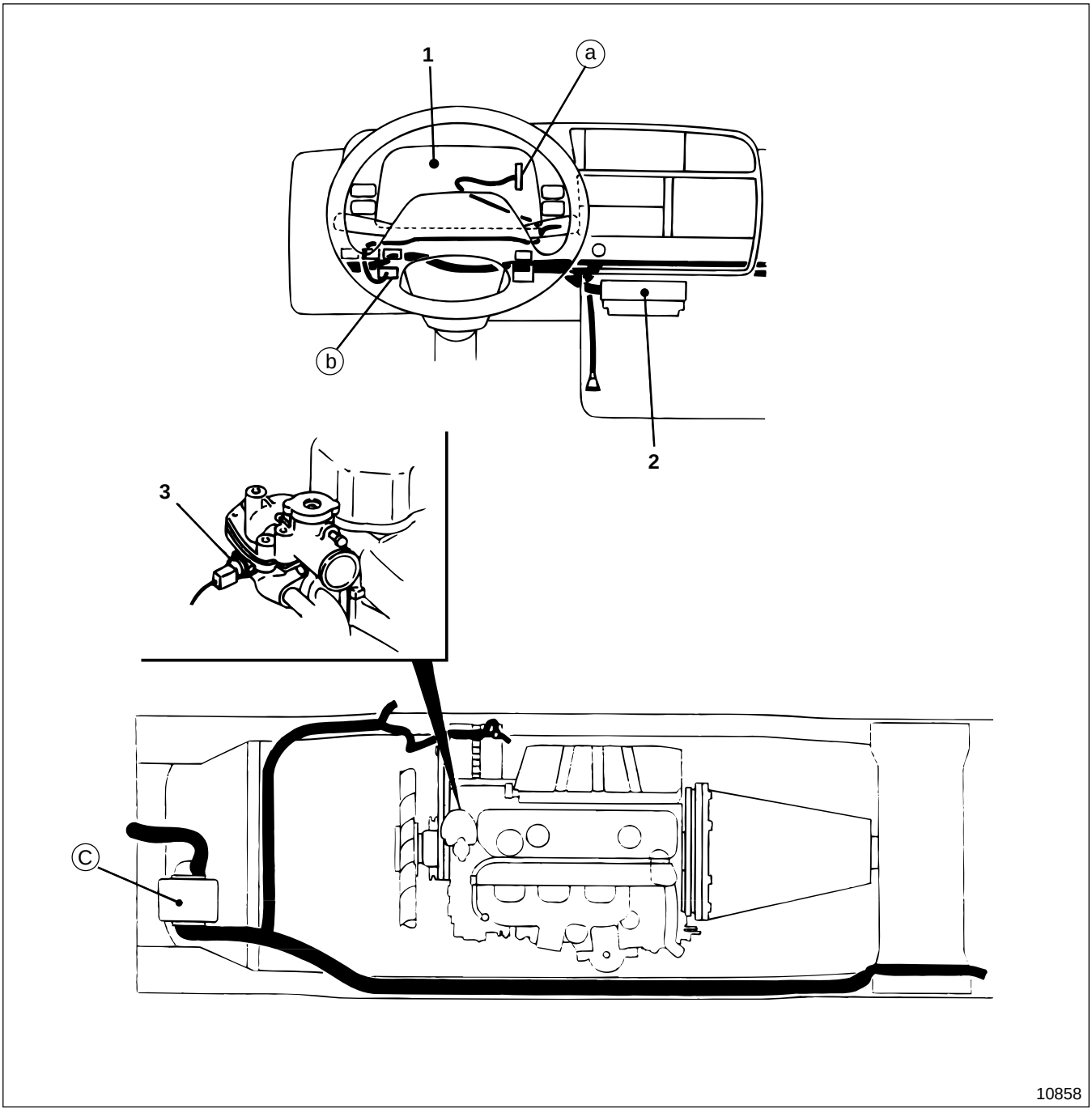

1 Meter cluster 🕮 (401)
2 Fuse box 🕮 (104)
3 Water temperature sensor 🕮 (801)

5 INDICATOR AND WARNING

TROUBLESHOOTING **54-5-2**

(500) **INSPECTION AND ADJUSTMENT MOUNTED IN VEHICLE**
- **Inspection of Brake Fluid Level Switch** **54-5-5**

(510) **PARKING BRAKE INDICATOR CIRCUIT** [BRAKE] **54-5-6**

(515) **BRAKE WARNING CIRCUIT** [LOW VACUUM] [BRAKE] **54-5-8**

(535) **ENGINE OIL LEVEL AND OIL PRESSURE WARNING CIRCUIT** [ ] [ ] **54-5-12**

(537) **OVERHEATING WARNING CIRCUIT** **54-5-14**

(540) **BRAKE PAD WARNING CIRCUIT** [DISC BRAKE] **54-5-16**

(550) **CAB TILT WARNING CIRCUIT** [ ] **54-5-20**

For details on the following indicator and warning lamps, see the relevant sections.

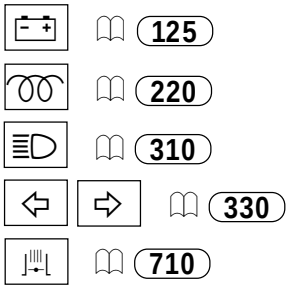

(125)
(220)
(310)
(330)
(710)

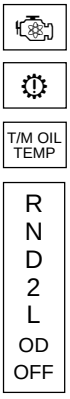

Gr 13
Gr 23 < Automatic transmission >
Gr 23 < Automatic transmission >
Gr 23 < Automatic transmission >

TROUBLESHOOTING

Symptoms / Possible causes		Lamps do not light with starter switch turned ON (engine not started)	BRAKE: Lamp does not light although parking brake lever is pulled	BRAKE: Lamp does not go out although parking brake lever is returned	BRAKE: Lamp does not light although brake fluid level is insufficient	BRAKE: Lamp lights although brake fluid level is sufficient	LOW VACUUM: Lamp does not light although vacuum tank negative pressure is low	LOW VACUUM: Lamp lights although vacuum tank negative pressure is sufficient	Remarks
Connector connection faulty, harness broken, grounding faulty		○	○		○		○		
Fuse blown		○	○		○		○		
Meter cluster	Internal circuit faulty	○	○	○	○	○	○	○	
	Bulb burnt-out	○	○		○		○		
	Buzzer faulty								
Parking brake switch faulty			○	○					
Brake fluid level switch faulty					○	○			
Brake lining or brake pad worn									Gr 35
Vacuum switch faulty							○	○	
Cab tilt lock switch	Switch body faulty								
	Installation faulty								Gr 42
Overheating switch faulty									
Overheating relay faulty									
Brake pad wear indicator	Indicator body faulty								
	Installation faulty								Gr 35
Engine oil level check switch faulty									
Engine oil level sensor faulty									
Engine oil level relay faulty									
Engine oil pressure switch faulty									
Lighting and alarm control unit faulty									

Symptoms / Possible causes		Lamp does not light although engine oil level is insufficient *	Lamp lights although engine oil level is sufficient *	Lamp does not light although engine oil level is insufficient *	Lamp lights although engine oil level is sufficient *	Warning lamp does not light although engine oil pressure is low	Warning lamp lights although engine oil pressure is sufficient	Buzzer does not sound when overheating	Buzzer sounds when not overheating	Remarks
Connector connection faulty, harness broken, grounding faulty			○	○		○		○		
Fuse blown			○	○		○		○		
Meter cluster	Internal circuit faulty	○	○	○	○	○	○	○	○	
	Bulb burnt-out		○	○		○				
	Buzzer faulty							○		
Parking brake switch faulty										
Brake fluid level switch faulty										
Brake lining or brake pad worn										Gr 35
Vacuum switch faulty										
Cab tilt lock switch	Switch body faulty									
	Installation faulty									Gr 42
Overheating switch faulty								○	○	
Overheating relay faulty								○		
Brake pad wear indicator	Indicator body faulty									
	Installation faulty									Gr 35
Engine oil level check switch faulty			○	○						
Engine oil level sensor faulty		○	○	○	○					
Engine oil level relay faulty		○	○	○	○					
Engine oil pressure switch faulty						○	○			
Lighting and alarm control unit faulty										

* : The lamp is lit in accordance with the engine oil level when the engine oil level switch is turned ON.

TROUBLESHOOTING

Symptoms / Possible causes		DISC BRAKE: Lamp does not light when brake pad thickness reaches limit of use	DISC BRAKE: Lamp lights although brake pad thickness is sufficient	Lamp lights although cab is locked to rear cab mounting	Lamp does not light although cab is not locked to rear cab mounting	Remarks
Connector connection faulty, harness broken, grounding faulty		○	○		○	
Fuse blown		○				
Meter cluster	Internal circuit faulty	○	○	○	○	
	Bulb burnt-out	○			○	
	Buzzer faulty					
Parking brake switch faulty						
Brake fluid level switch faulty						
Brake lining or brake pad worn						Gr 35
Vacuum switch faulty						
Cab tilt lock switch	Switch body faulty			○	○	
	Installation faulty			○		Gr 42
Overheating switch faulty						
Overheating relay faulty						
Brake pad wear indicator	Indicator body faulty	○	○			
	Installation faulty	○				Gr 35
Engine oil level check switch faulty						
Engine oil level sensor faulty						
Engine oil level relay faulty						
Engine oil pressure switch faulty						
Lighting and alarm control unit faulty		○				

Inspection of Brake Fluid Level Switch

Service standards

Unit : mm {in.}

Location	Maintenance item		Standard value	Limit	Remedy
—	Warning lamp lighting position for brake fluid level switch	FE 639	41.0±3 {1.61±0.12}	—	Replace
		FE649	49.5 {1.95}		

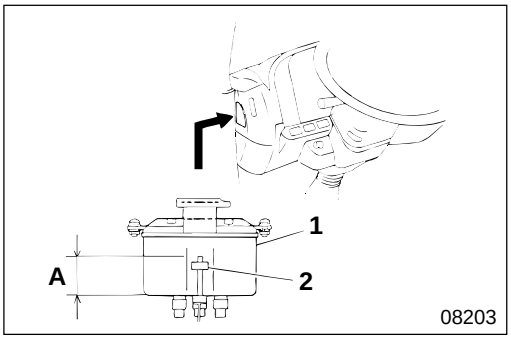

- Start engine.
- Drain the brake fluid gradually from fluid tank assembly **1**.

CAUTION

If brake fluid is spilt on any part of the vehicle, wipe it off immediately, since the solvent in the fluid can damage the paintwork.

- Measure height **A** of brake fluid level switch **2** when BRAKE warning lamp within the meter cluster lights.
- If the measured value deviates from the standard value, remove and check fluid tank assembly **1**.

Removal and installation : Gr 42
Inspection : (515)

510 PARKING BRAKE INDICATOR CIRCUIT

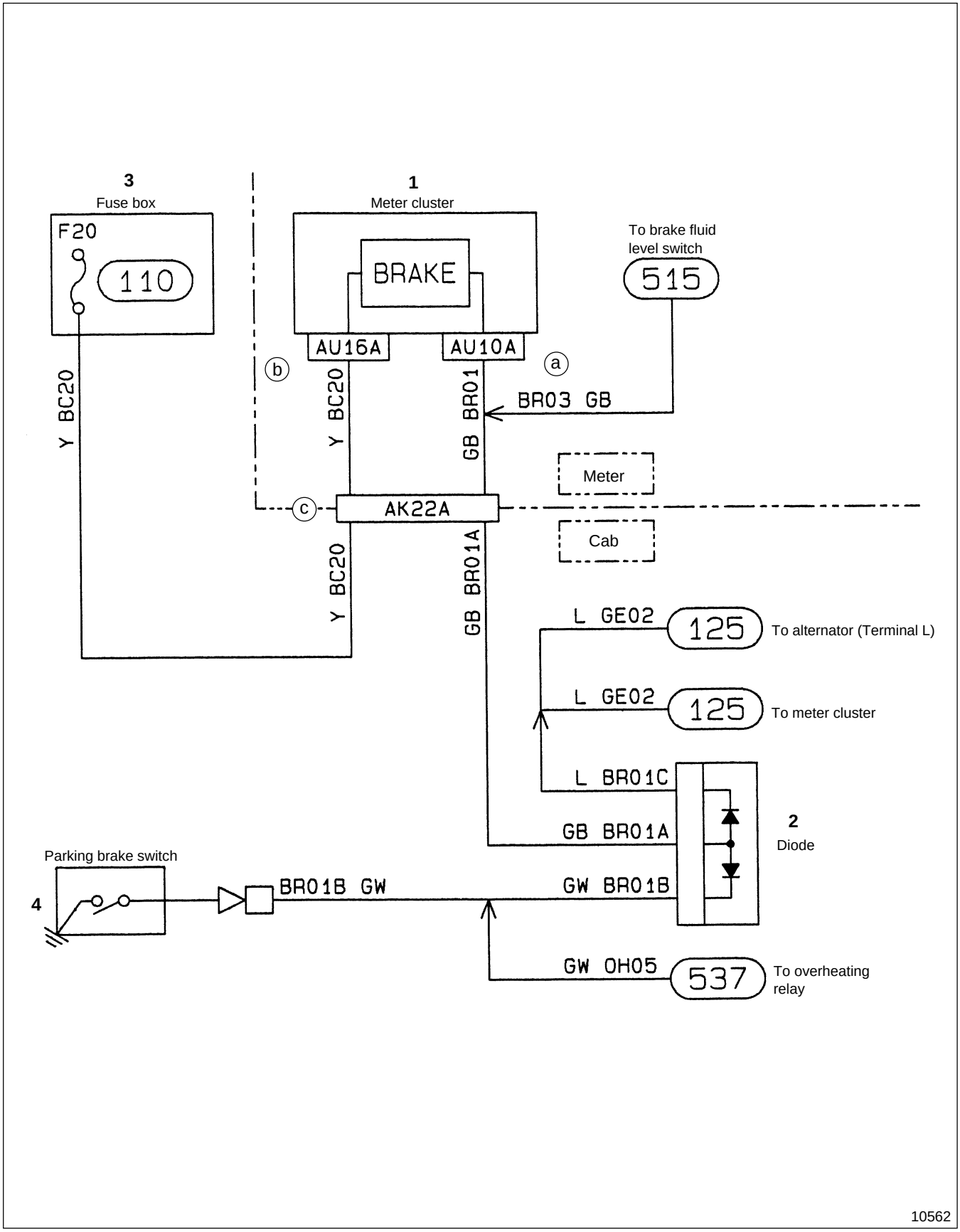

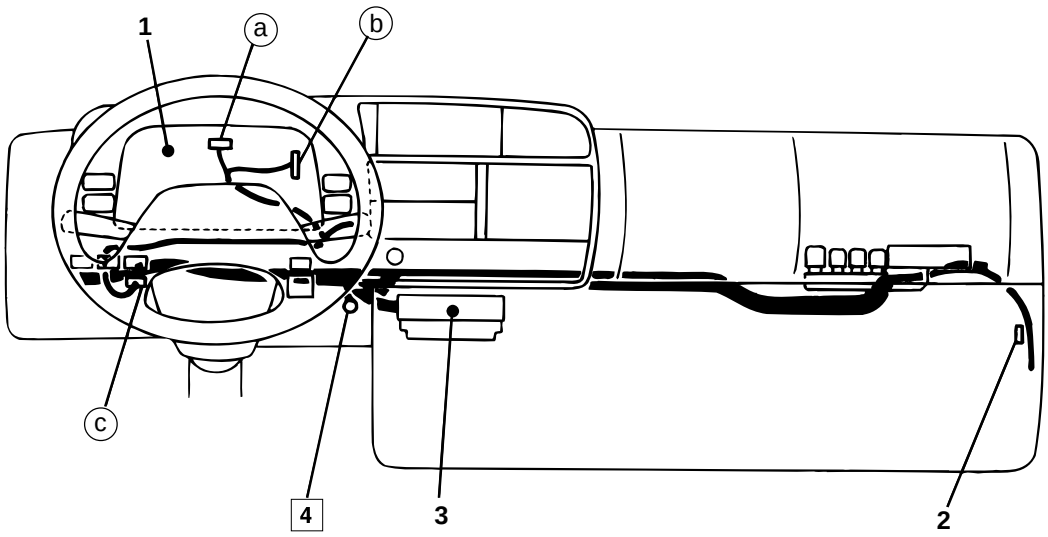

10859

1 Meter cluster 401
2 Diode
3 Fuse box 104
4 Parking brake switch

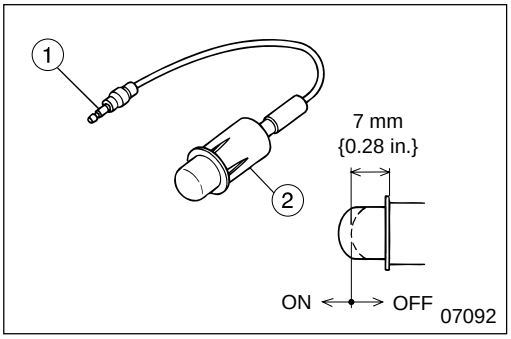

◆ Service procedure

4 **Inspection of parking brake switch**

- Follow the table below to inspect continuity:

	①	② (Body)
OFF		
ON	○	○

○——○ : There is continuity between terminals ○ and ○.

- If any fault is found, replace parking brake switch **4**. Gr 36

515 BRAKE WARNING CIRCUIT

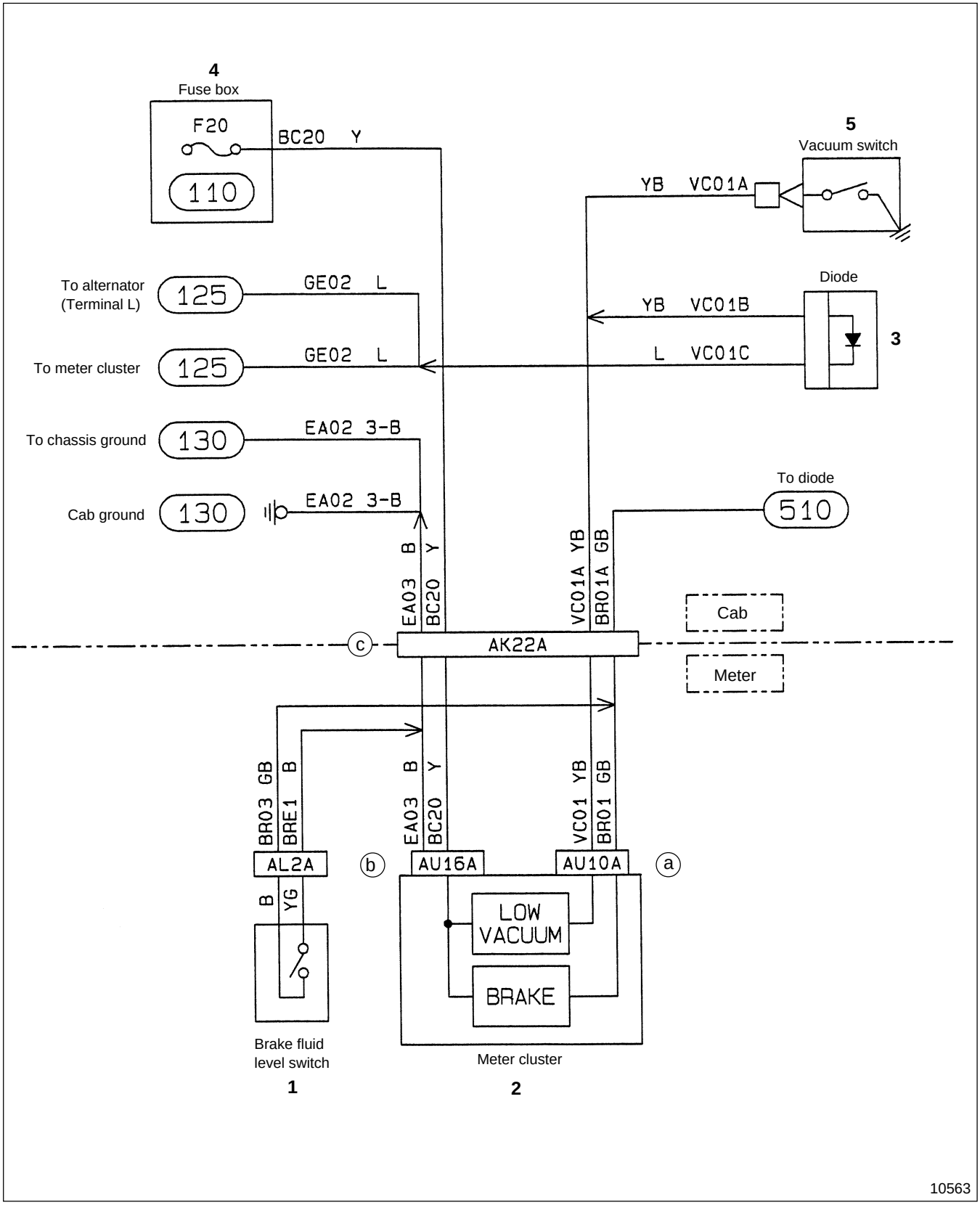

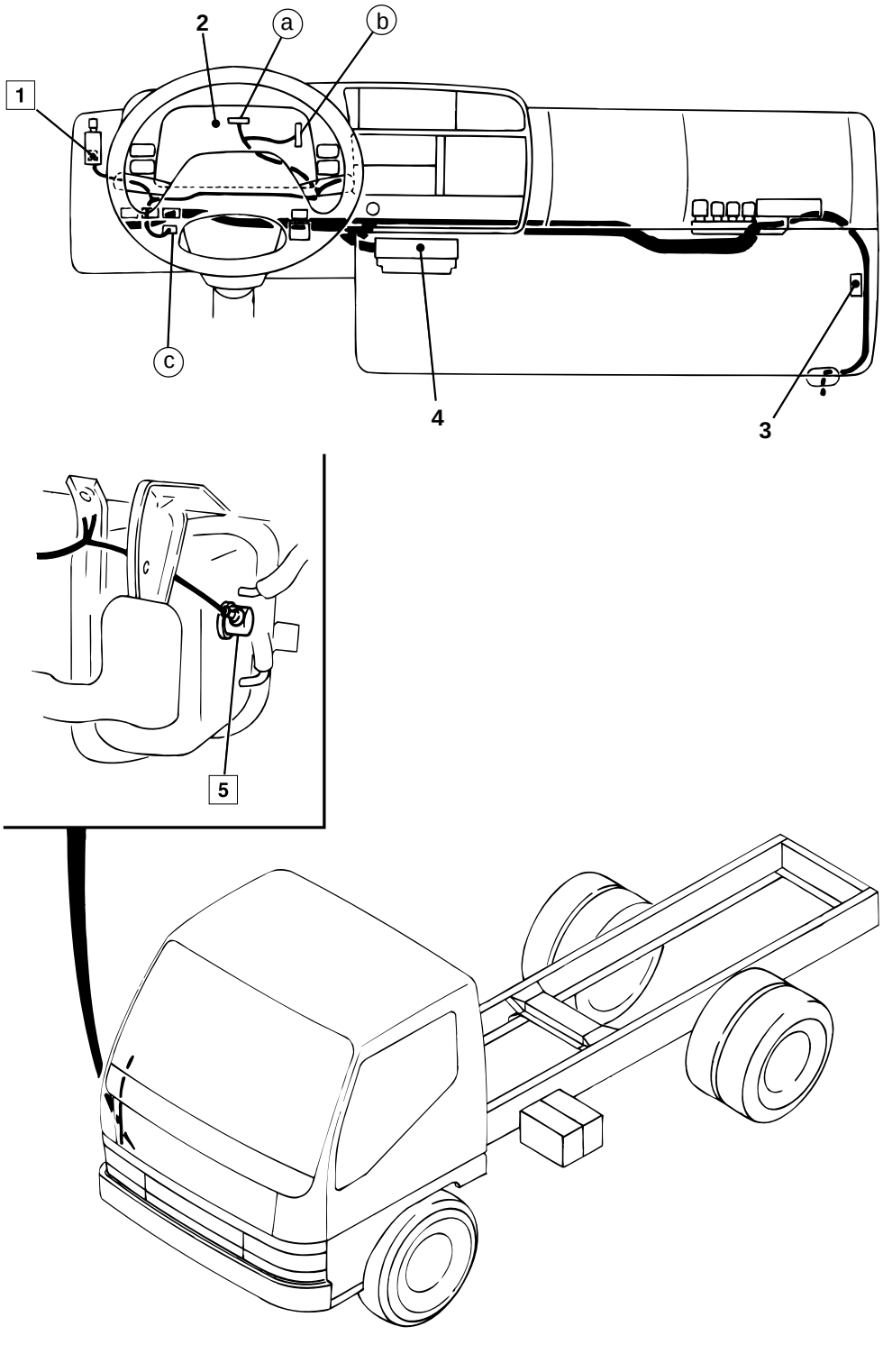

10860

1 Brake fluid level switch
2 Meter cluster 401
3 Diode
4 Fuse box 104
5 Vacuum switch

Service standards

Unit : mm {in.}

Location	Maintenance item		Standard value	Limit	Remedy
1	Continuity position of brake fluid level switch	FE 639	41.0±3 {1.61±0.12} (Equivalent to 120 cm³ {7.32 cu. in., 120 cc})	—	Replace
		FE 649	49.5 {1.95} (Equivalent to 170±15 cm³ {10.4±0.92 cu. in., 170±15 cc})	—	Replace
5	Vacuum switch operating pressure		$-47^{+3.3}_{-4.0}$ kPa {$-13.78^{+0.98}_{-1.18}$ in.Hg, -350^{+25}_{-30} mmHg}	—	Replace

◆ Service procedure

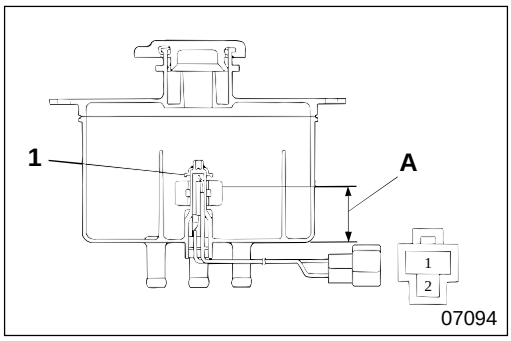

1 Inspection of brake fluid level switch

- Drain the brake fluid gradually from the fluid tank assembly.

CAUTION⚠

If brake fluid is spilt on any part of the vehicle, wipe it off immediately, since the solvent in the fluid can damage the paintwork.

- Measure height **A** of brake fluid level switch **1** when continuity is present between terminals ① and ②.
- If the measured value deviates from the standard value, replace the fluid tank assembly. Gr 42

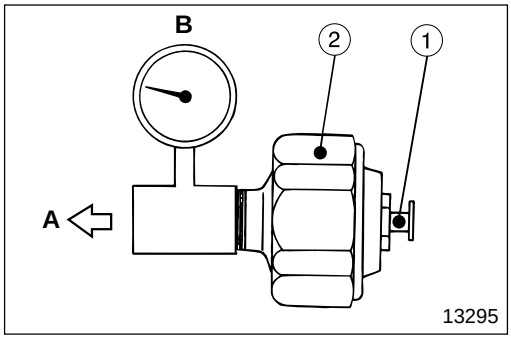

5 Inspection of vacuum switch

Carry out the following inspection. If any fault is found, replace vacuum switch **5**.

- Make sure that there is no continuity between terminals ① and ② (Body) when negative pressure **A** is not applied to vacuum switch **5**.
- Apply negative pressure **A** to vacuum switch **5** gradually starting from 0 kPa {0 in.Hg, 0 mmHg}.
  Measure the negative pressure when continuity is present between terminals ① and ② (Body), and make sure that the measured value conforms to the standard value.
  B : Vacuum gauge

M E M O

535 ENGINE OIL LEVEL AND OIL PRESSURE WARNING CIRCUIT

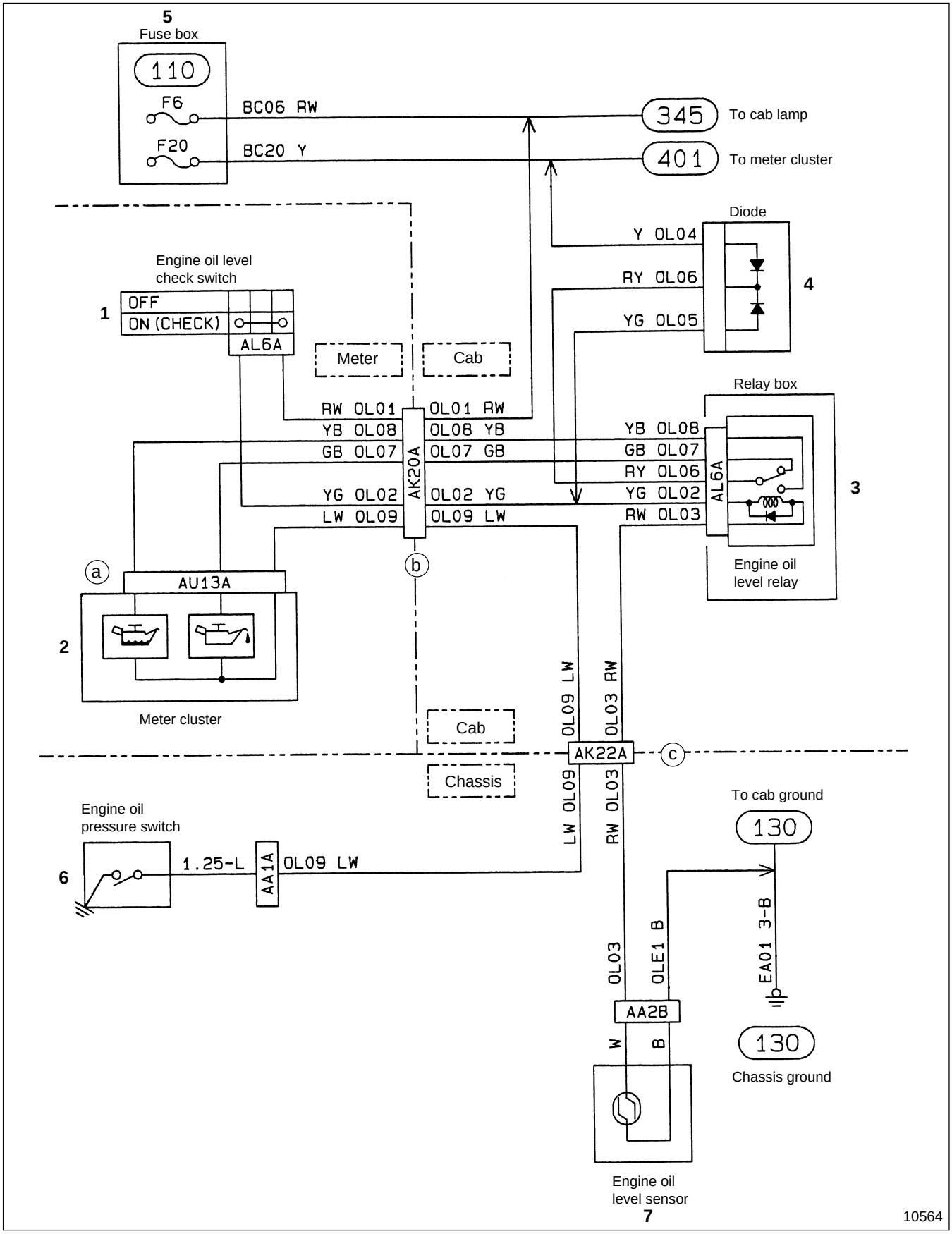

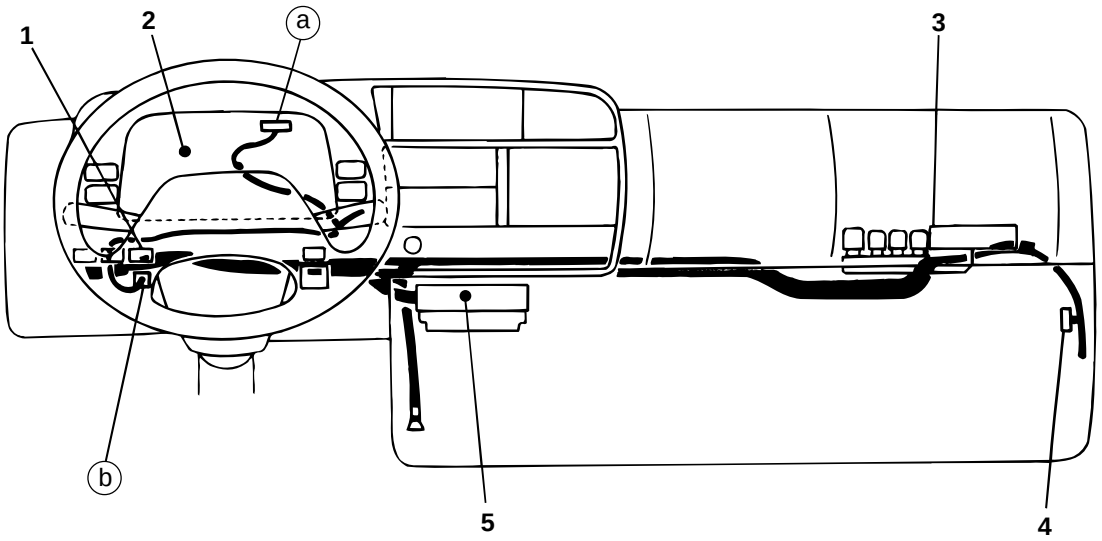

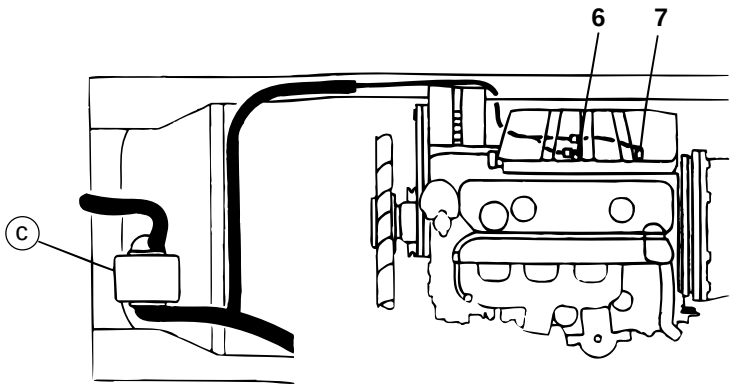

10861

1 Engine oil level check switch 601
2 Meter cluster 401
3 Relay box 604
4 Diode
5 Fuse box 104
6 Engine oil pressure switch 801
7 Engine oil level sensor 801

537 OVERHEATING WARNING CIRCUIT

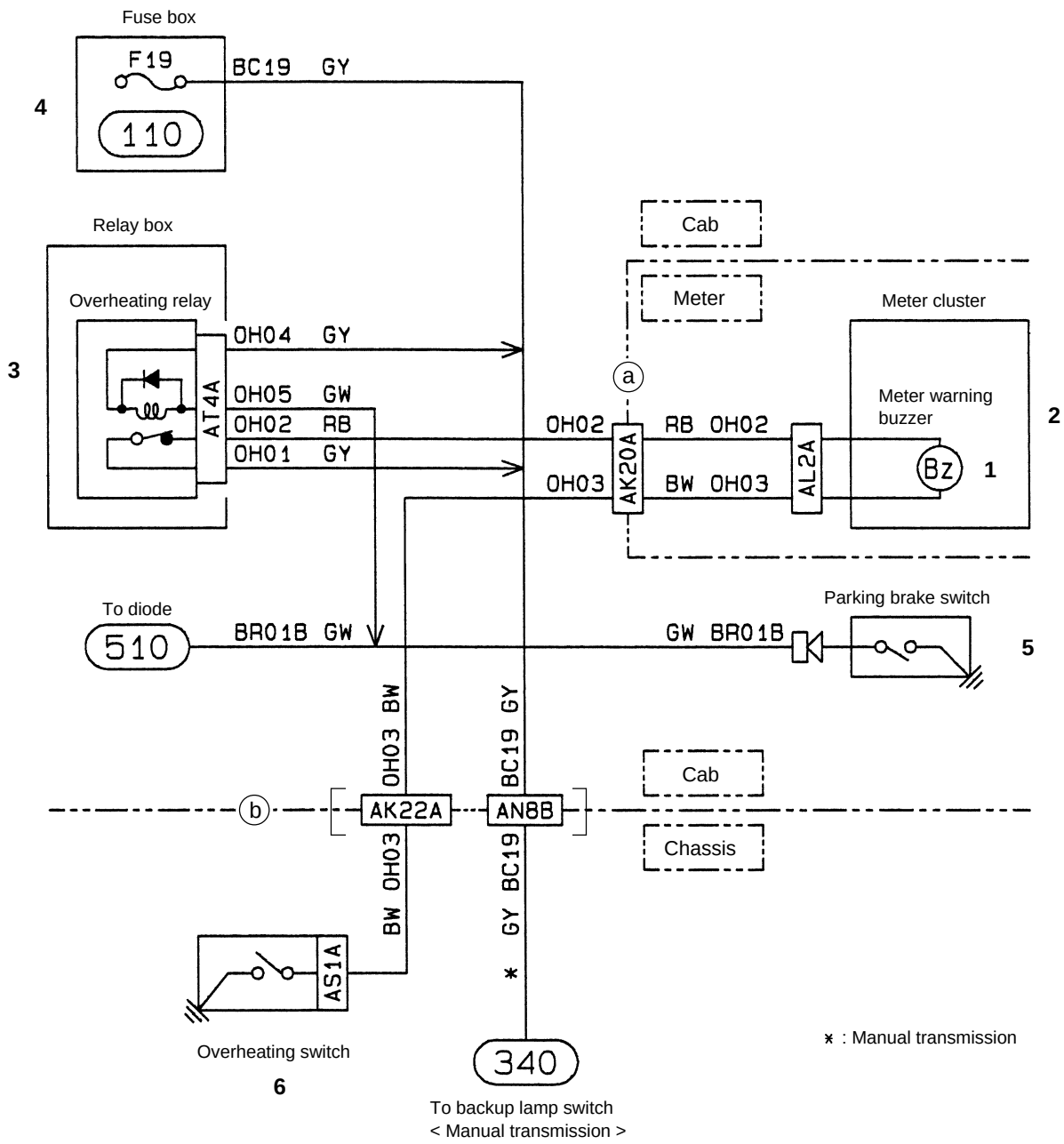

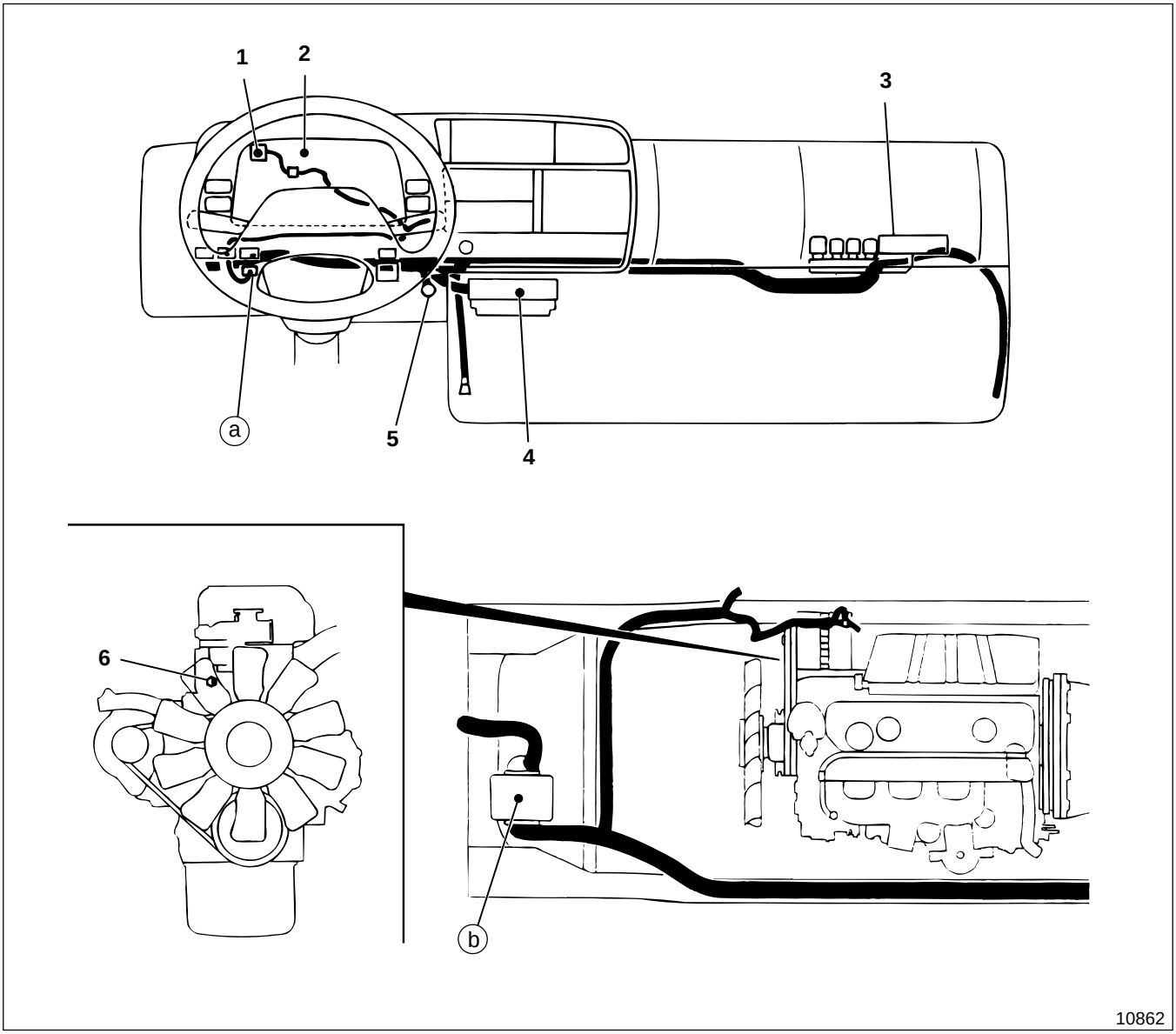

1 Meter warning buzzer 401
2 Meter cluster 401
3 Relay box 604
4 Fuse box 104
5 Parking brake switch 510
6 Overheating switch 801

540 BRAKE PAD WARNING CIRCUIT

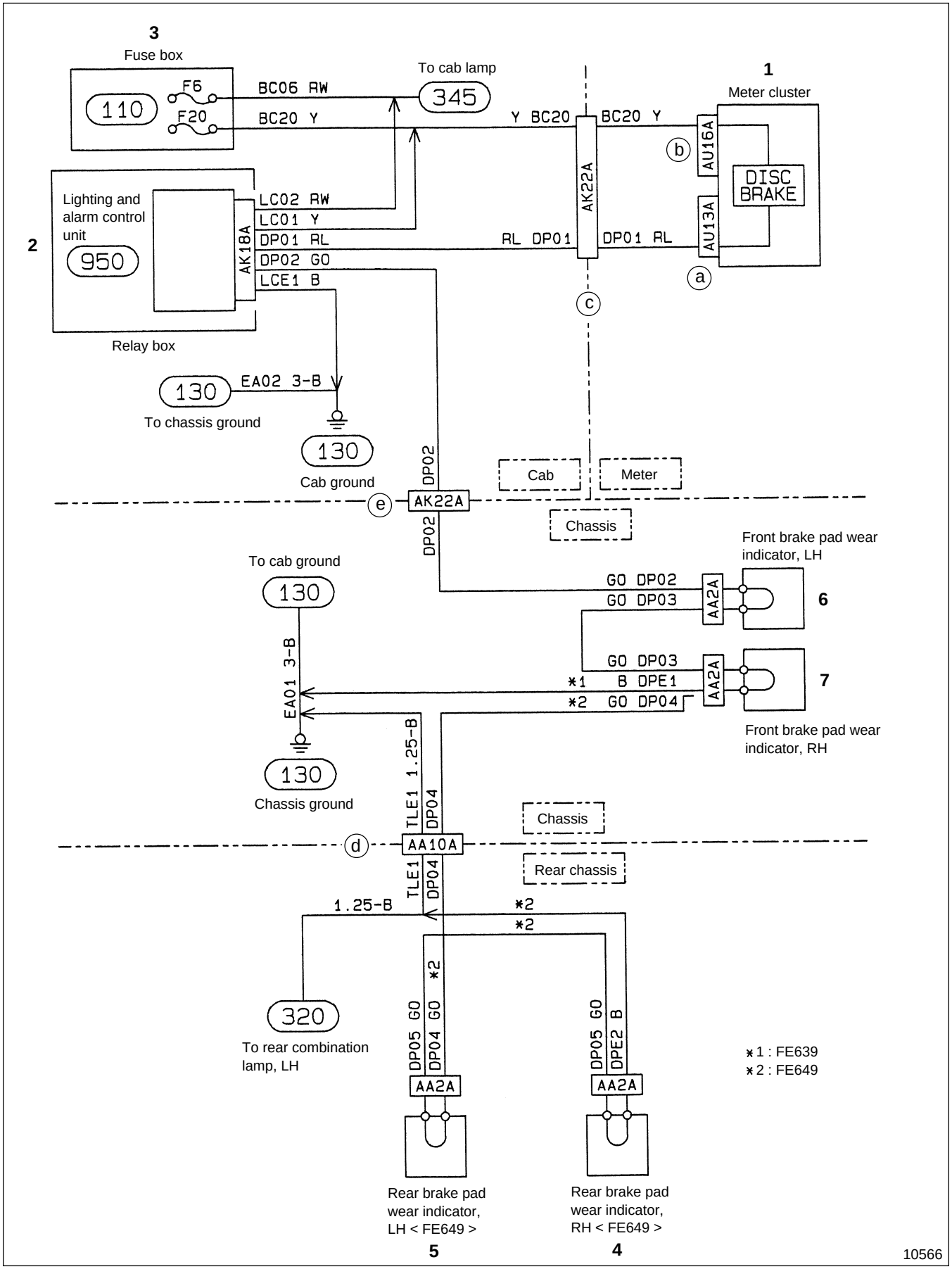

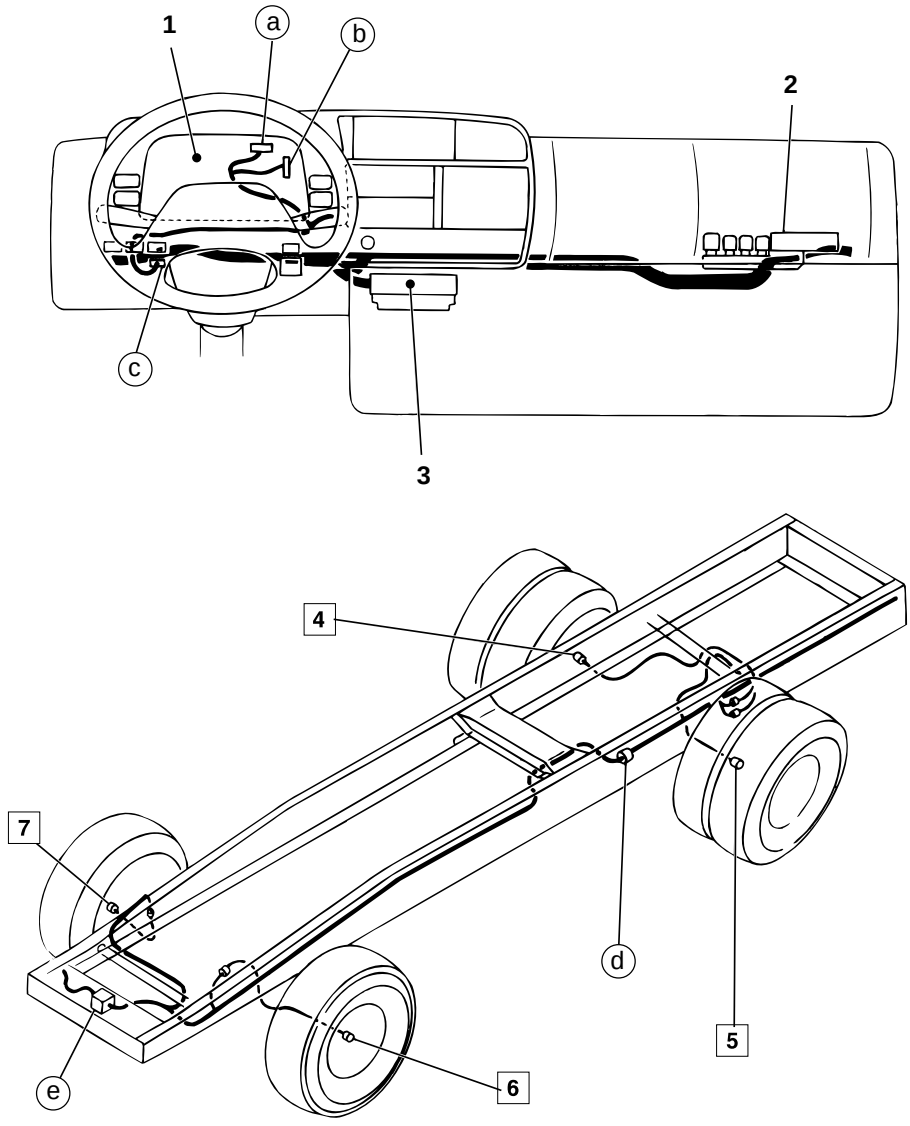

10863

1 Meter cluster 401
2 Relay box 604
3 Fuse box 104
4 Rear brake pad wear indicator, RH < FE649 >
5 Rear brake pad wear indicator, LH < FE649 >
6 Front brake pad wear indicator, LH
7 Front brake pad wear indicator, RH

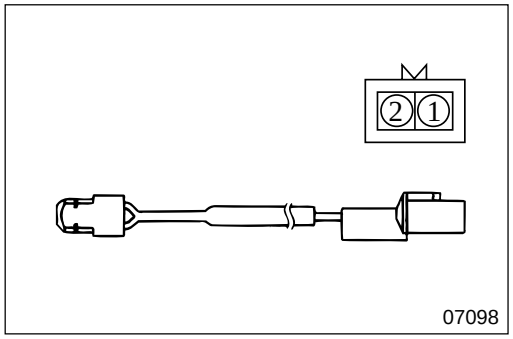

◆ Service procedure

4 **to** **7** **Inspection of brake pad wear indicator**

If there is no continuity between terminals ① and ②, replace brake pad wear indicators **4** to **7**. Gr 26, 27, 35

M E M O

550 CAB TILT WARNING CIRCUIT

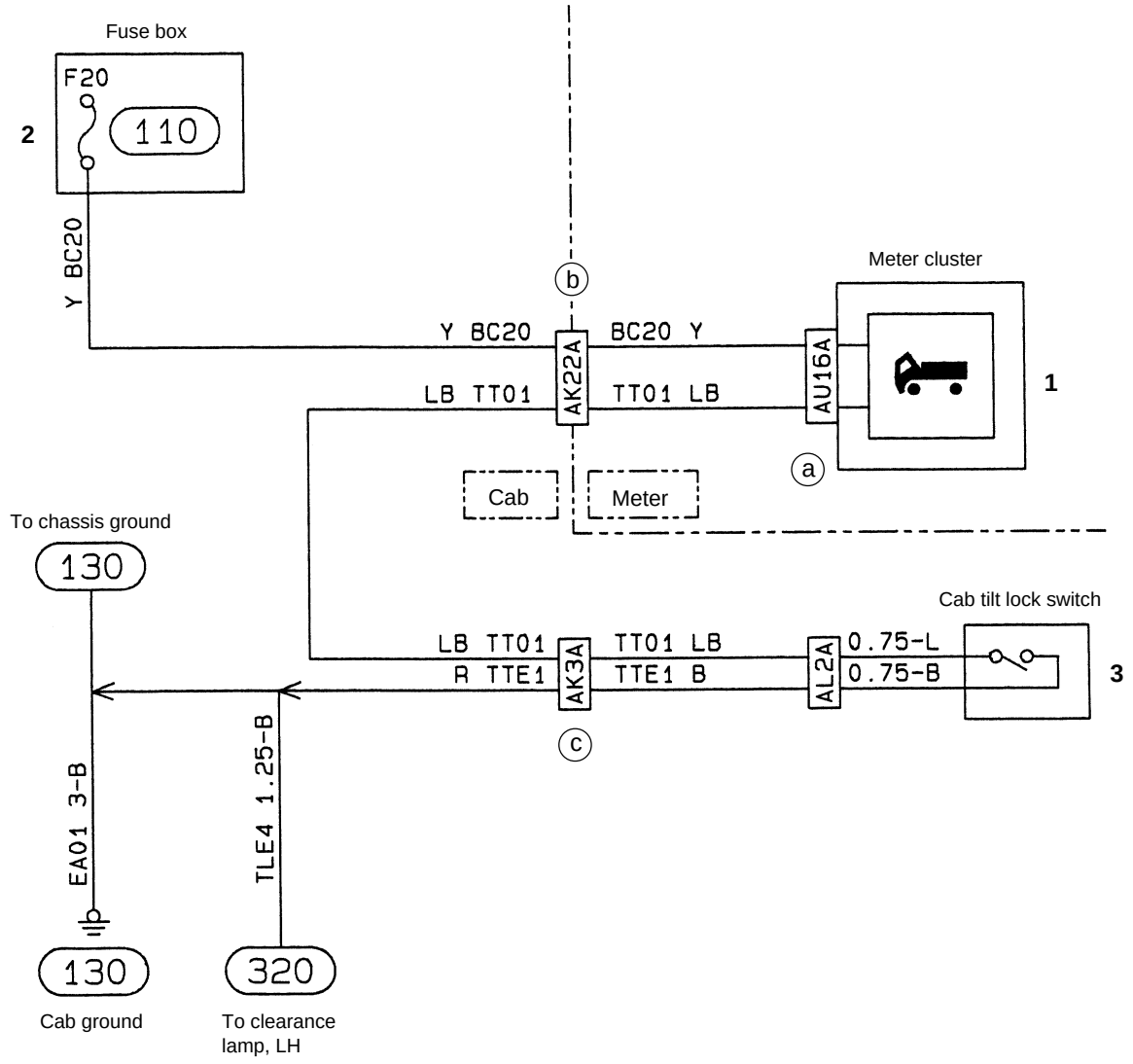

10570

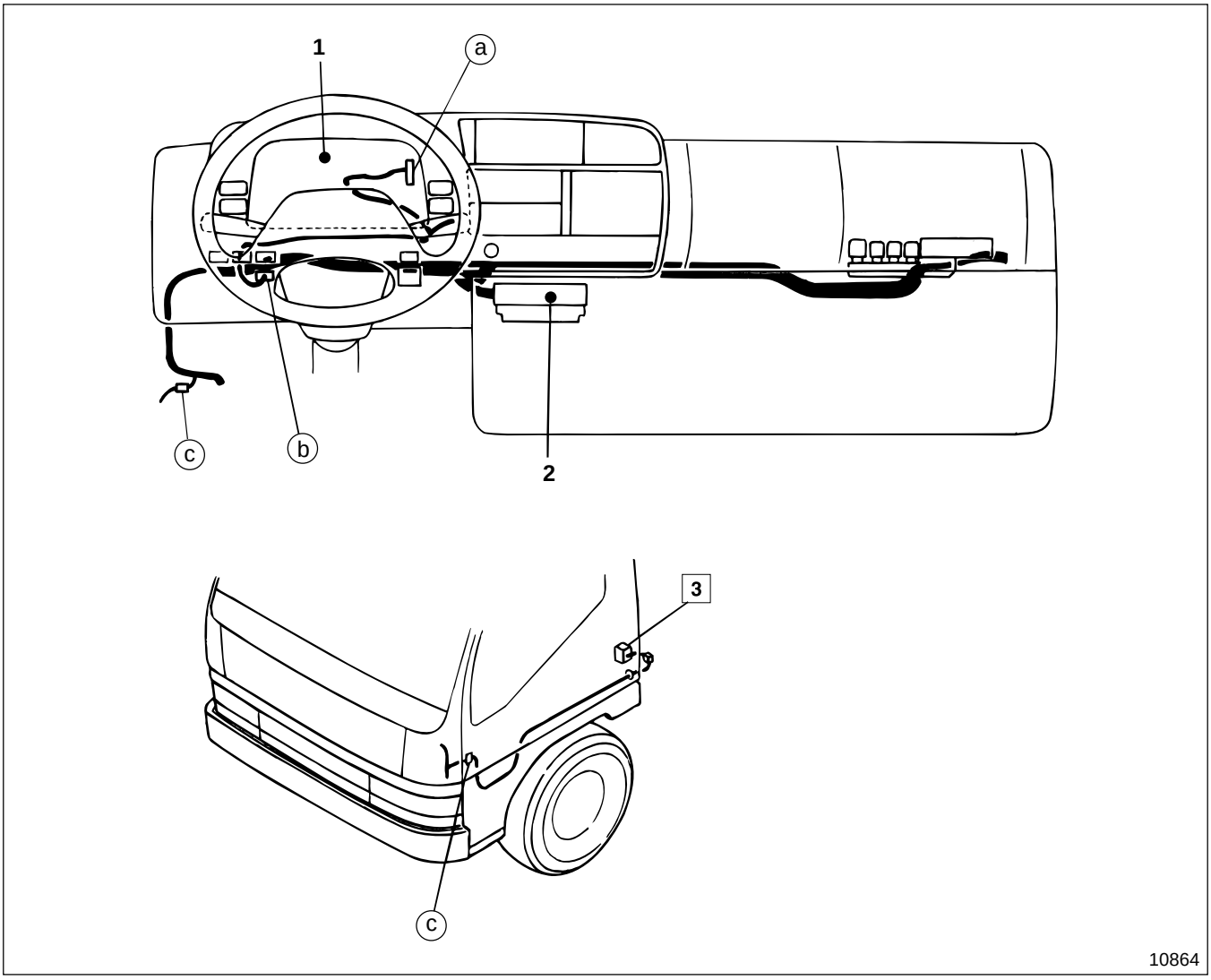

1 Meter cluster 401
2 Fuse box 104
3 Cab tilt lock switch

◆ Service procedure

3 Inspection of cab tilt lock switch

- Follow the table below to inspect continuity:

	①	②
ON	○—○	
OFF		

○—○ : There is continuity between terminals ○ and ○.

- If any faut is found, replace cab tilt lock switch **3**. Gr 42

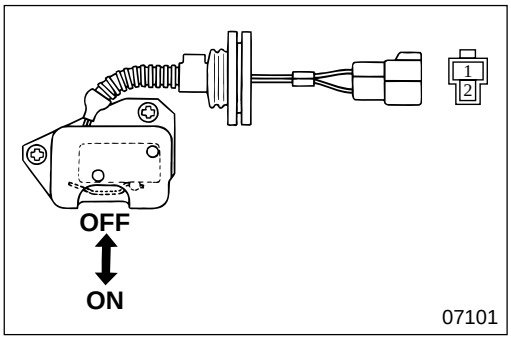

⑥ CAB SIDE ELECTRICS

SPECIFICATIONS 54-6-2

TROUBLESHOOTING 54-6-2

601 SWITCH 54-6-4

604 RELAY AND CONTROL UNIT 54-6-8

606 WARNING BUZZER 54-6-11

610 CIGARETTE LIGHTER CIRCUIT 54-6-12

612 AUDIO CIRCUIT 54-6-14

614 WIPER AND WASHER CIRCUIT 54-6-16

616 HORN CIRCUIT 54-6-20

618 HEATER CIRCUIT 54-6-22

SPECIFICATIONS/TROUBLESHOOTING

SPECIFICATIONS

Item			Specifications
Minimum operating voltage of relay		V	8 or less
Speaker	Rated input	W	15
	Maximum input	W	30
	Impedance	Ω	4±0.6
Automatic transmission reverse buzzer	Rated voltage	V	12
	Rated current	mA	66 or less (Mean value)
	Sound pressure	dB	80±10 (at 1 m {3.3 ft})
Electric horn	Rated voltage	V	12
	Rated current	mA	$3.0\ ^{+0.5}_{-1.0}$
	Sound pressure	dB	105±5 (at 2 m {6.6 ft})

TROUBLESHOOTING

Symptoms / Possible causes	Cigarette lighter		Audio					Remarks
	Does not glow	Does not return	Specific frequency band does not work	Spurious noise generated	Sound quality poor	Sound from one side only	Left and right volume different	
Connector connection faulty, harness broken, grounding faulty	○			○		○		
Fuse blown	○							
Cigarette lighter faulty	○	○						
Antenna and antenna cable connection faulty				○				
Speaker faulty			○	○	○	○	○	
Left and right speaker impedance different							○	

Accessory noise generation source

Accessory	Noise	Symptoms
Alternator	Whistling	High pitch sound when accelerator pedal suddenly depressed (Stops soon after engine stopped)
Water temperature gauge	Scratching	Occurs when engine running (Continues for a while after engine stops)
Engine oil pressure switch	Rattling	Depends on engine speed (Does not occur during idling)
Fuel gauge unit	Scratching	Occurs when engine suddenly revved, while running on rough roads, or starter switch turned ON
Flasher unit	Banging	When turn signal blinks
Horn	Hissing	Occurs when horn button pressed or released
Wiper motor	Whining	Depends on windshield wiper speed
Washer motor	Whining	When windshield washer operates

Symptoms / Possible causes	Horn				Remarks
	No Sound	Continuous sound	Small sound	Sound quality poor	
Connector connection faulty, harness broken, grounding faulty	○				
Fuse blown	○				
Horn switch faulty	○	○			
Horn faulty	○		○	○	
Horn stay warped			○	○	
Battery voltage insufficient	○		○		

Installation Position

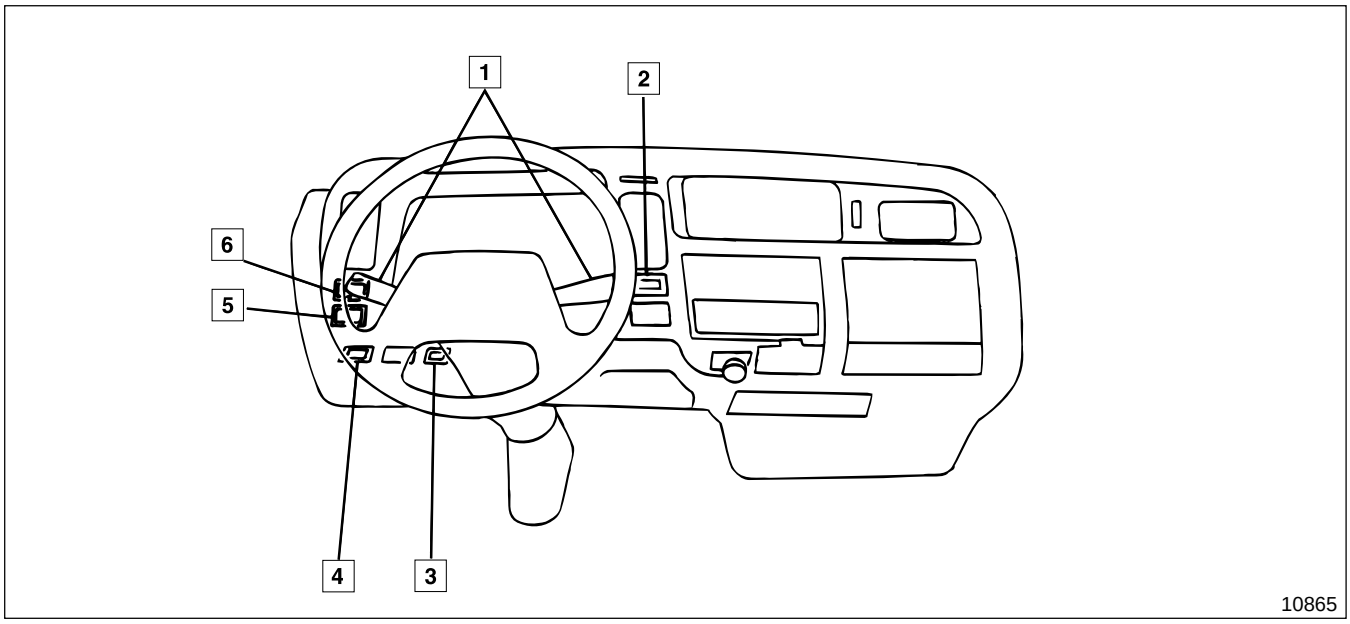

1 Combination switch
2 Van body dome light switch
3 Engine oil level switch
4 Rheostat switch
5 Power mode switch < Automatic transmission >
6 Warming up switch

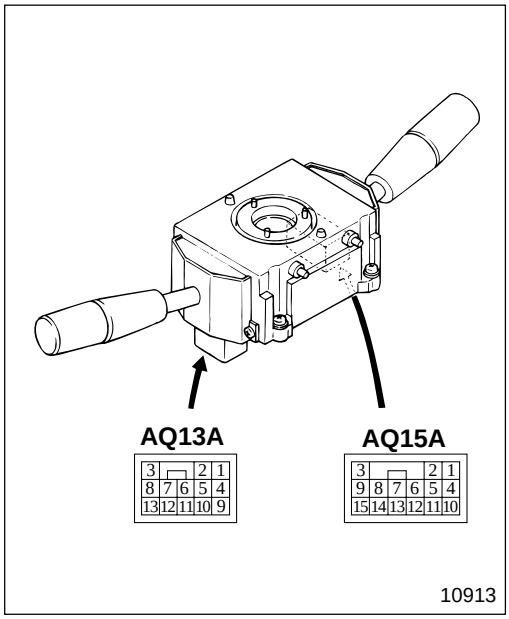

◆ Service procedure

1 **Inspection of combination switch**

- Operate combination switch **1**.
- Check for continuity between connector terminals, referring to the connector connection table.
  There is continuity between terminals ○ and ○ in the table.

- If any fault is found, replace combination switch **1**.

AQ13A Connector connection table

		①	②	③	⑦	⑧	⑨	⑩	⑪	Body ground	Internal connection
Lighting switch	OFF										
	I	○						○			
	II	○						○			○
Dimmer switch	Main						○				○
	↕						○		○		○
	Dimmer								○		○
	↕	○					○		○		○
	Passing	○					○				
Turn signal switch	LH			○	○						
	N (neutral)										
	RH			○		○					
Horn switch	OFF										
	ON		○							○	

AQ15A Connector Connection Table

		①	②	③	⑤	⑥	⑦	⑧	⑨	⑭	⑮
Wiper switch	OFF										
	INT (intermittent)			○							○
	LO (LOW)		○								○
	HI (HIGH)	○	○								○
	WASH (washer)									○	○
Exhaust brake switch	OFF										
	ON				○	○					
Hazard switch	OFF										
	ON						○	○	○		

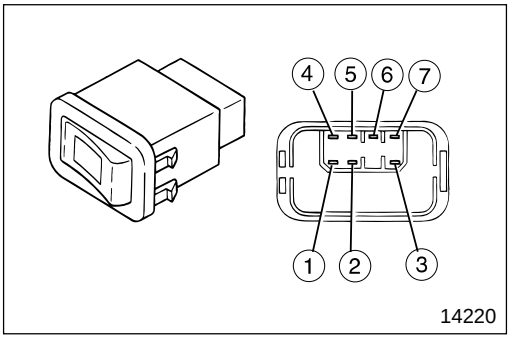

2 **Inspection of van body dome light switch**

- Follow the table below to inspect continuity:

	①	⑤	⑦	LED (Operation indication light)	③
ON	○	○	○	○	○
OFF					

○—○ : There is continuity between terminals ○ and ○.

- If any fault is found, replace van body dome light switch **2**.

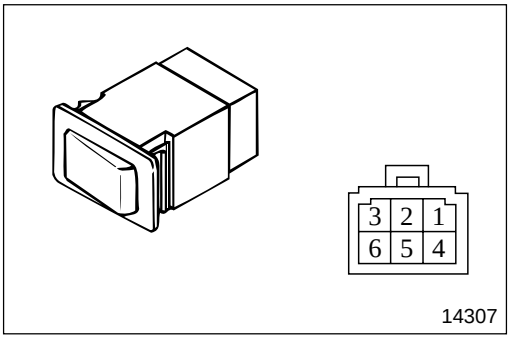

3 **Inspection of engine oil level switch**

- Follow the table below to inspect continuity:

	①	③
ON(CHECK)	○	○
OFF		

○—○ : There is continuity between terminals ○ and ○.

- If any fault is found, replace engine oil level switch **3**.

4 **Inspection of rheostat switch**

- Rheostat switch **4** contains a control circuit, because of this it is difficult to inspect rheostat switch **4** independently, therefore you should inspect the rheostat switch indirectly, by inspecting the system harness and the related parts.
- If no fault is found in the related parts but the system is faulty, replace rheostat switch **4**.

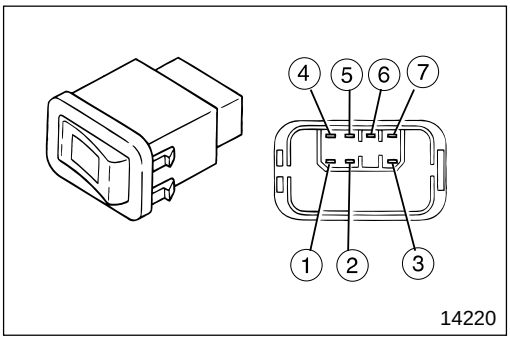

5 **Inspection of power mode switch**

- Follow the table below to inspect continuity:

	①	⑤	⑦	LED (Operation indication light)	③
PWR	○	○	○	○	○
ECO					

○—○ : There is continuity between terminals ○ and ○.

- If any fault is found, replace power mode switch **5**.

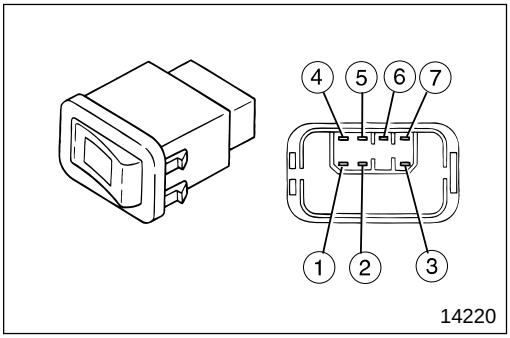

6 **Inspection of warming up switch**

- Follow the table below to inspect continuity:

	①	⑤
ON	○—○	
OFF		

○—○ : There is continuity between terminals ○ and ○.

- If any fault is found, replace warming up switch **6**.

Installation Position

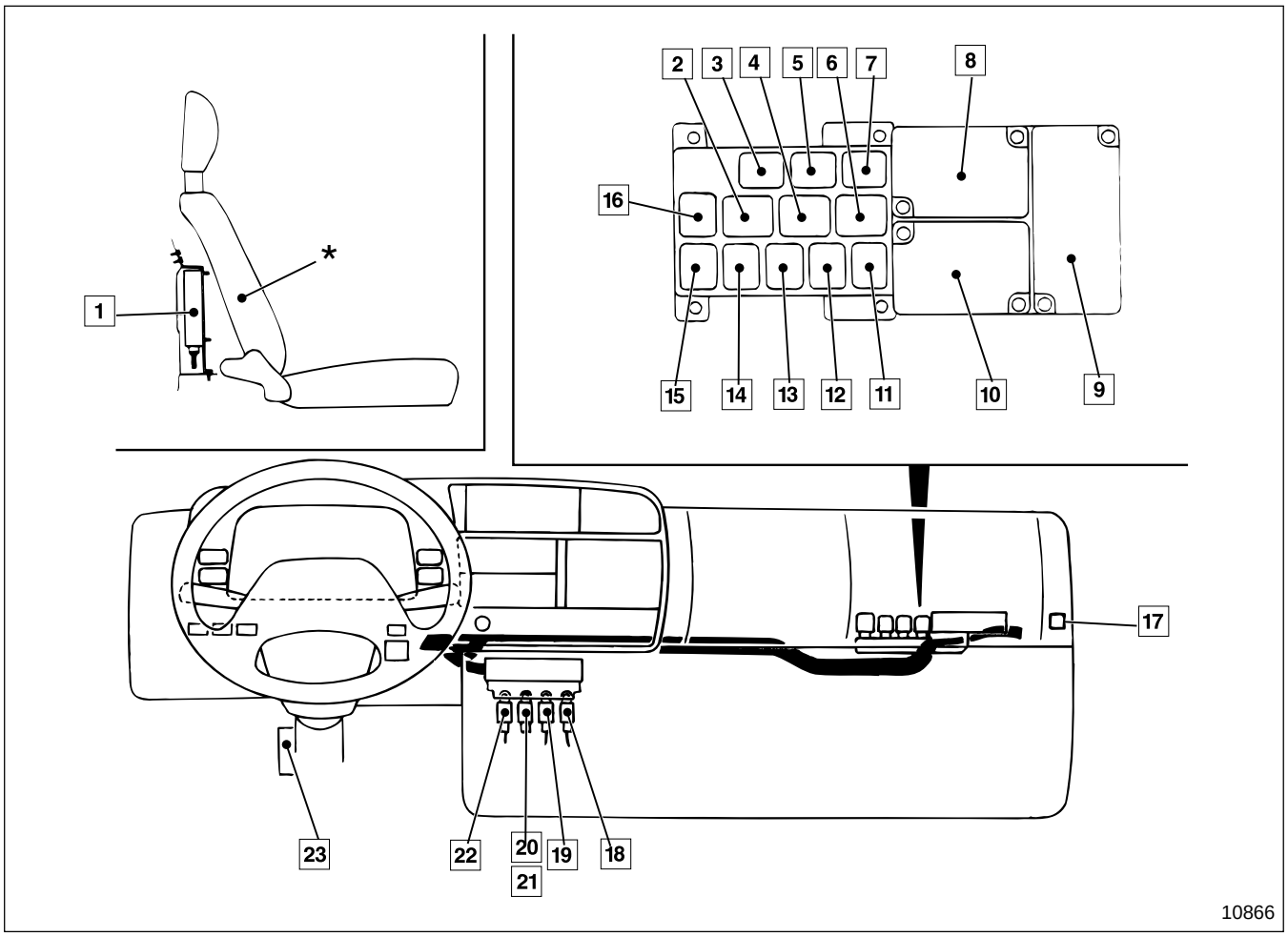

1 Pre-stroke control unit Gr 13
2 Wiper relay (LOW)
3 Exhaust brake cut relay
< Automatic transmission >
4 Wiper relay (HIGH)
5 Overheating relay
6 Engine oil level relay
7 Pre-stroke cut relay
8 Flasher unit
9 Multipurpose timing control unit
10 Lighting and alarm control unit
11 Sub-starter relay
12 Thermostat relay
13 Tail lamp relay
14 Headlamp relay (HIGH)
15 Headlamp relay (LOW)
16 Blower fan relay
17 Turn signal lamp relay
18 Van body dome light relay
19 Fuel-cut relay
20 Automatic transmission fluid cooler fan relay
< Automatic transmission >
21 Exhaust brake cut relay (Time lag relay)
< Manual transmission >
22 Transmission neutral relay
< Manual transmission >
23 Automatic transmission control unit Gr 23

* : Passenger's seat

Service standards

Location	Maintenance item	Standard value	Limit	Remedy
21	Exhaust brake cut relay time lag (Time lag relay)	10±3.5 sec.	—	Replace

◆ Service procedure

1 8 to 10 23 Inspection of control unit

Since it is difficult to check each unit separately, judge the soundness of each unit indirectly by checking switches harnesses and related parts in the system.

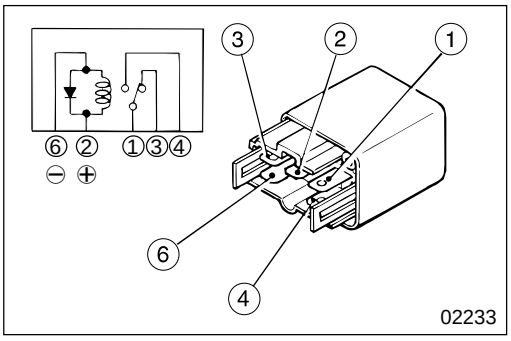

2 4 6 19 Inspection of relay (Open type 5-pin)

- Follow the table below to inspect continuity:

	①	②	③	④	⑥
No current	○		○		
	○				○
Current	○			○	
		⊕			⊖

○——○ : There is continuity between terminals ○ and ○.
⊕——⊖ : Indicates that 12 volts DC is applied to the line between the terminals.

- If any fault is found, replace the relay.

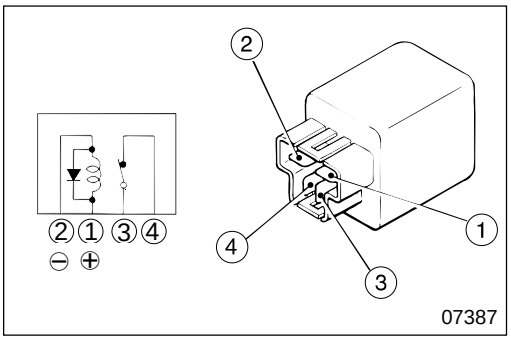

3 5 7 Inspection of relay (Close type 4-pin)

- Follow the table below to inspect continuity:

	①	②	③	④
No current	○	○		
			○	○
Current			◌	◌
	⊕	⊖		

○——○ : There is continuity between terminals ○ and ○.
⊕——⊖ : Indicates that 12 volts DC is applied to the line between the terminals.
◌----◌ : Indicates that the continuity between the terminals is lost.

- If any fault is found, replace the relay.

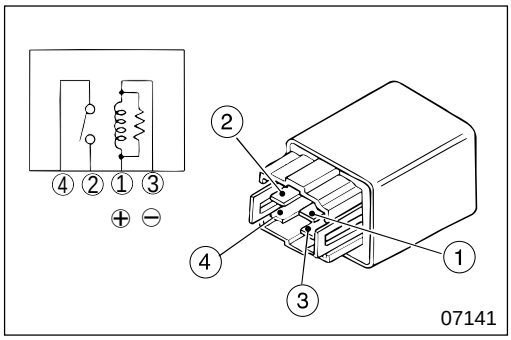

11 to 16 Inspection of relay (Open type 4-pin)

- Follow the table below to inspect continuity:

	①	②	③	④
No current	○——○			
Current	⊕		⊖	○——○

○——○ : There is continuity between terminals ○ and ○.
⊕——⊖ : Indicates that 12 volts DC is applied to the line between the terminals.

- If any fault is found, replace the relay.

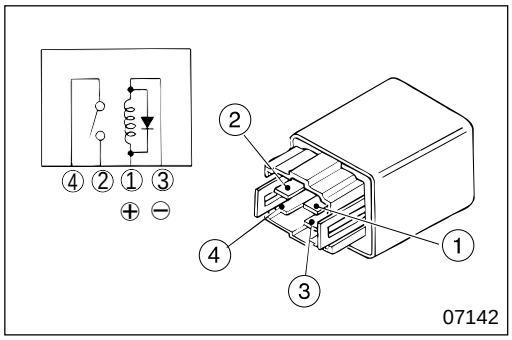

17 18 20 22 Inspection of relay (Open type 4-pin)

- Follow the table below to inspect continuity:

	①	②	③	④
No current	○——○			
Current	⊕		⊖	○——○

○——○ : There is continuity between terminals ○ and ○.
⊕——⊖ : Indicates that 12 volts DC is applied to the line between the terminals.

- If any fault is found, replace the relay.

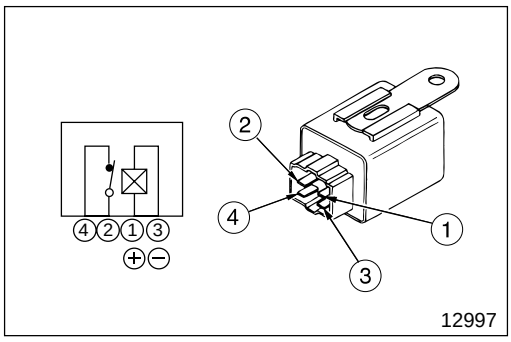

21 Inspection of relay (Close type 4-pin time lag relay)

- Follow the table below to inspect continuity:

	①	②	③	④	Remarks
No current	○——○				—
Current	⊕	◌---◌	⊖	◌---◌	Measure time lag until continuity between the terminals is lost

○——○ : There is continuity between terminals ○ and ○.
⊕——⊖ : Indicates that 12 volts DC is applied to the line between the terminals.
◌---◌ : Indicates that continuity between the terminals is lost.

- If any fault is found, replace the relay.

Installation Position

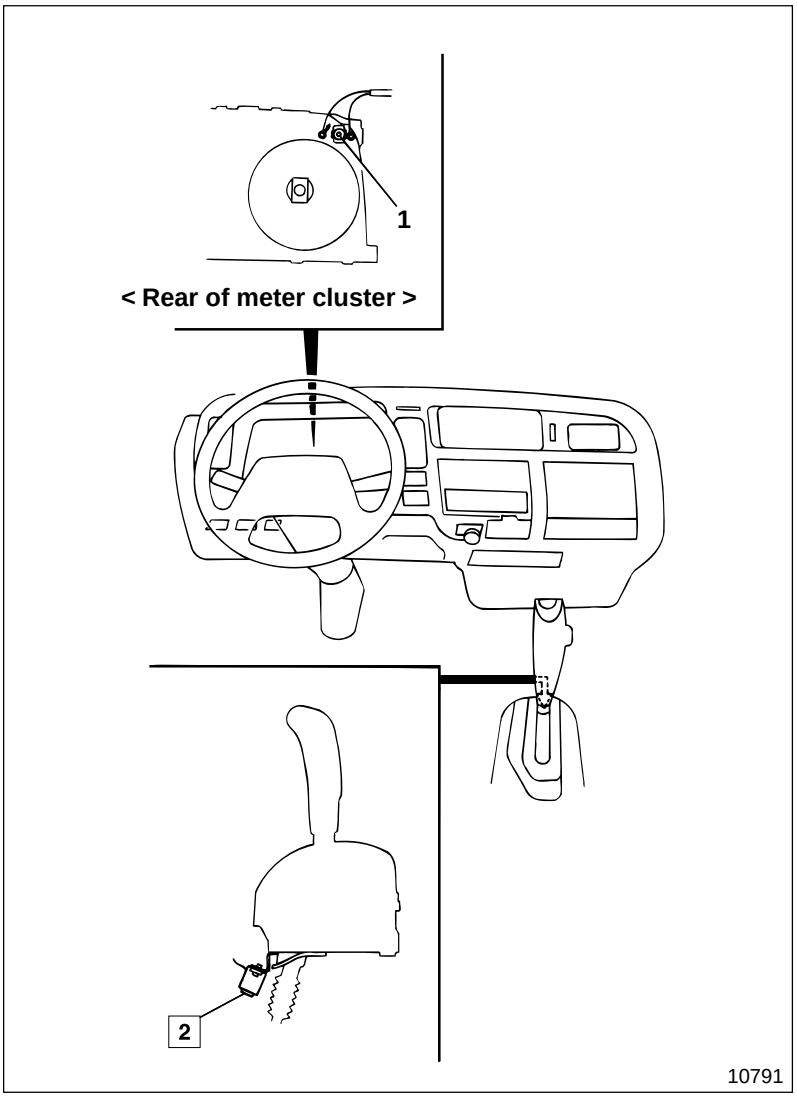

1 Meter warning buzzer 401
2 Automatic transmission reverse buzzer
< Automatic transmission >

◆ Service procedure

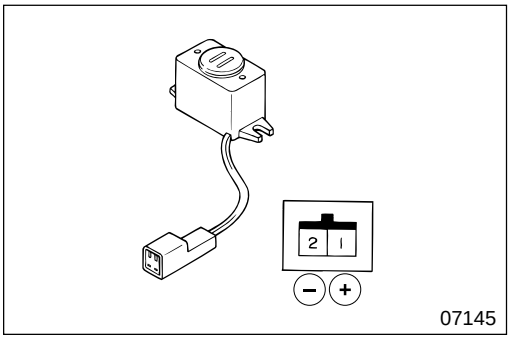

2 **Inspection of automatic transmission reverse buzzer**

- Make sure that automatic transmission reverse buzzer **2** sounds when you apply 12 volts DC between terminals ① and ②.
- If any fault is found, replace automatic transmission reverse buzzer **2**. Gr 23

NOTE

- **Automatic transmission reverse buzzer 2 sounds continuously when you apply voltage.**
- **If you want to make automatic transmission buzzer 2 sound intermittently, use the automatic transmission reverse buzzer and the back buzzer in combination.**

610 CIGARETTE LIGHTER CIRCUIT

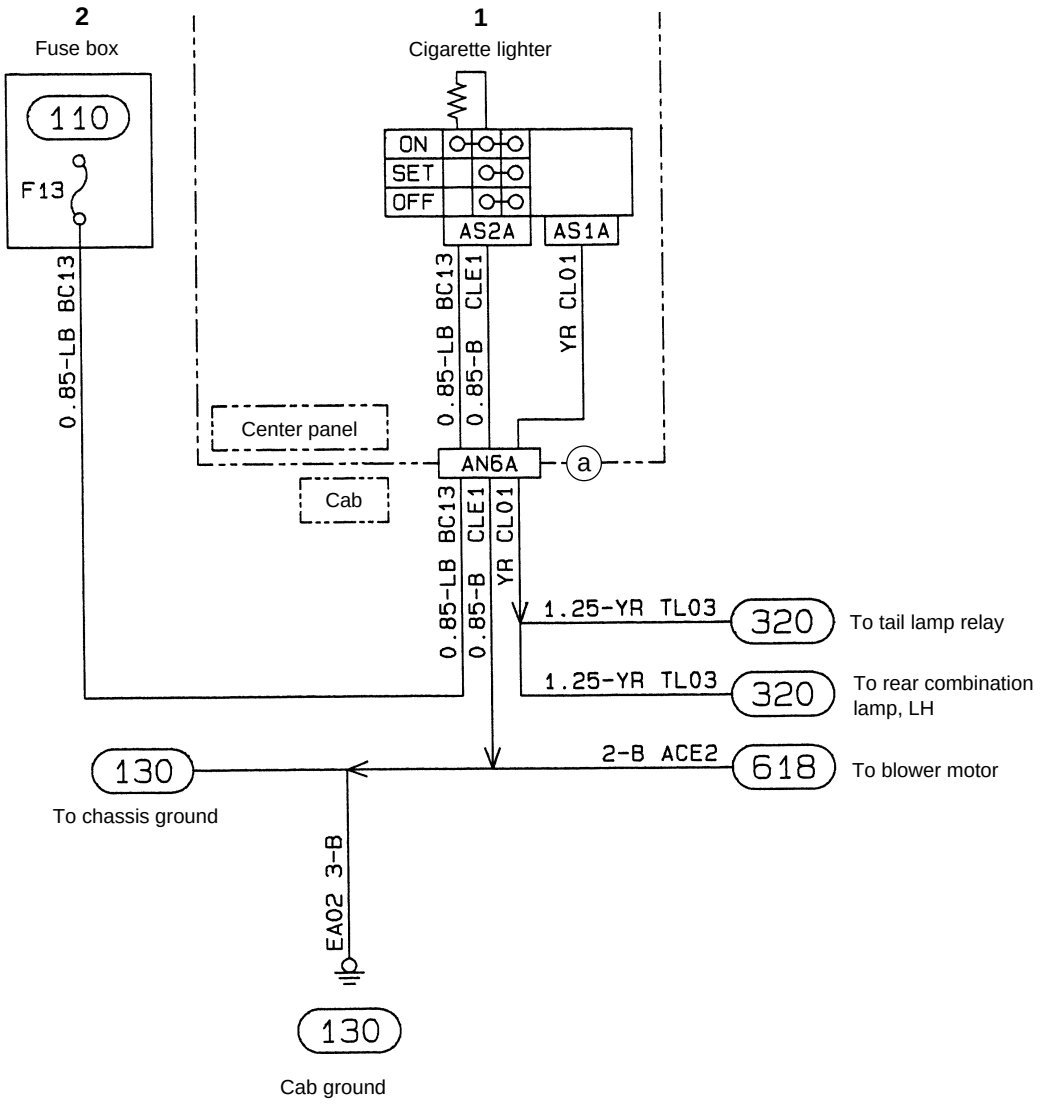

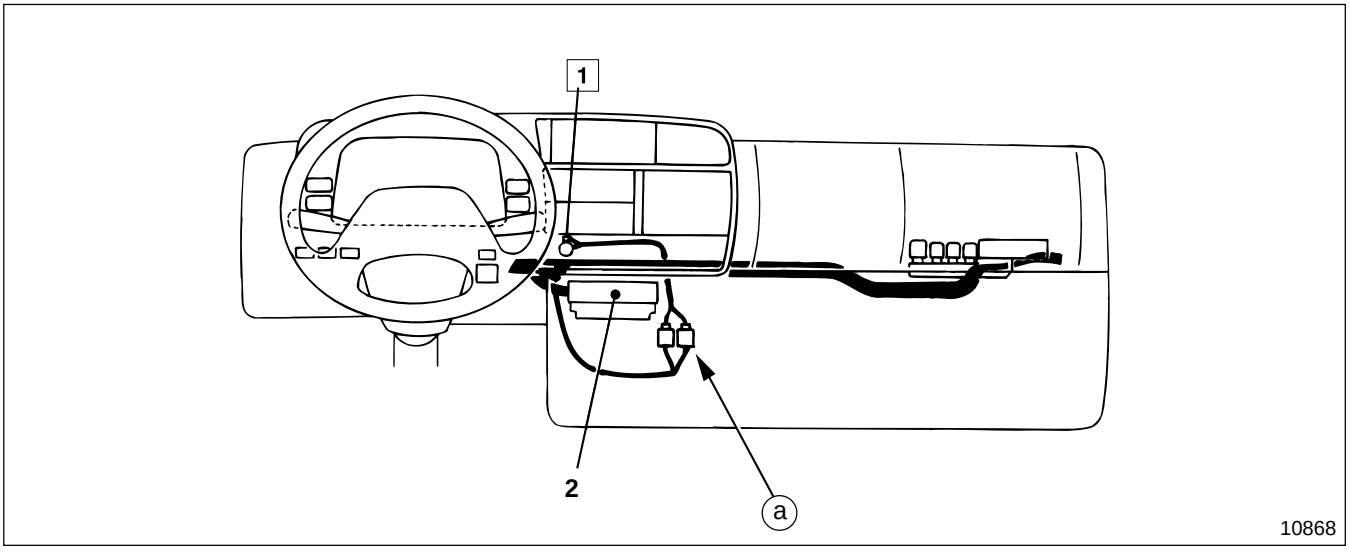

1 Cigarette lighter
2 Fuse box 104

Service standards

Location	Maintenance item	Standard value	Limit	Remedy
1	Cigarette lighter plug return time	15±5 seconds	—	Replace

◆ Service procedure

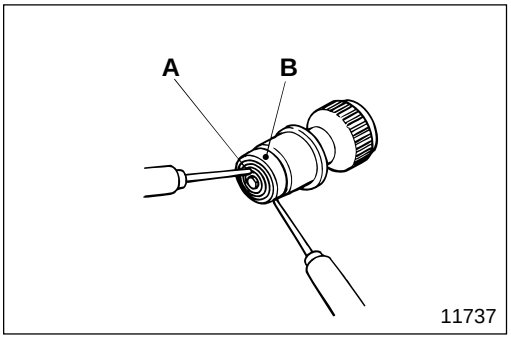

1 **Inspection of cigarette lighter**

Carry out the following inspection. If any fault is found, replace cigarette lighter **1** :

- Make sure that there is continuity between heater element **A** and body **B**.

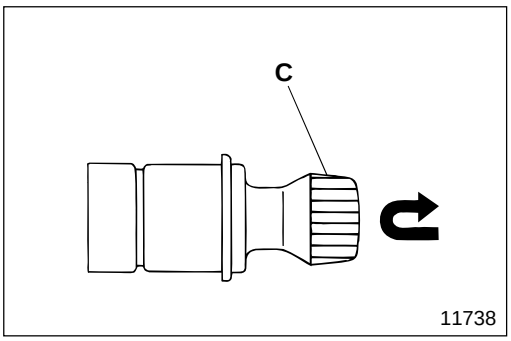

- Make sure that plug **C** returns to its original position quickly when it is pushed in.
- Turn the starter switch to ACC or ON.
- Push plug **C** into the socket of the vehicle.
- Measure the time required for pushed-in plug **C** to return to its original position.
- Make sure that heater element **A** is glowing.

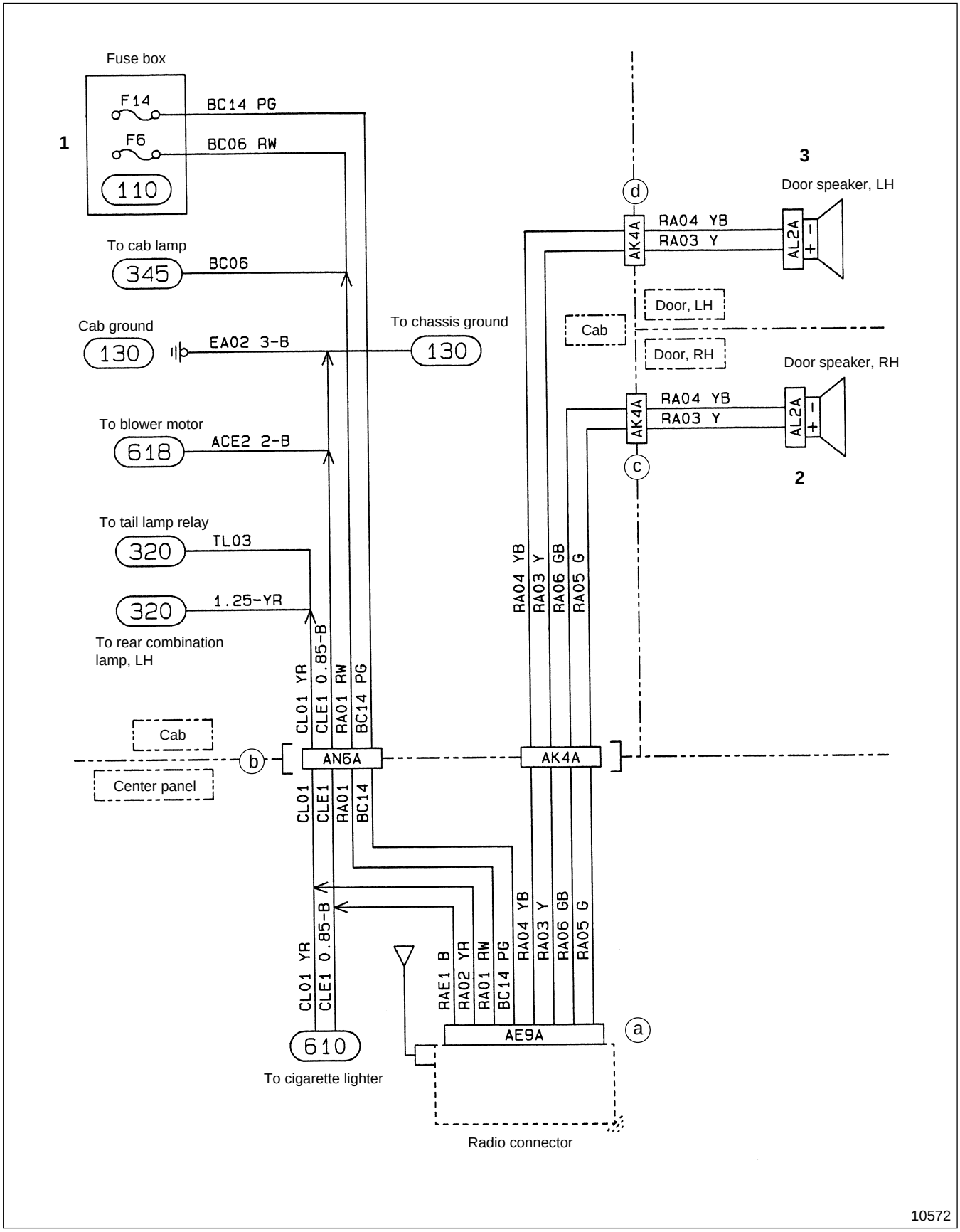
Fuse box
F14
BC14 PG
F6
BC06 RW
110
1
To cab lamp
345
BC06
Cab ground
130
EA02 3-B
To chassis ground
130
To blower motor
618
ACE2 2-B
To tail lamp relay
320
TL03
320
1.25-YR
To rear combination lamp, LH
Cab
Center panel
b
AN6A
AK4A
CL01 YR
CLE1 0.85-B
RA01 RW
BC14 PG
CL01
CLE1
RA01
BC14
RA04 YB
RA03 Y
RA06 GB
RA05 G
d
AK4A
RA04 YB
RA03 Y
AL2A
3
Door speaker, LH
Door, LH
Cab
Door, RH
Door speaker, RH
AK4A
RA04 YB
RA03 Y
AL2A
c
2
CL01 YR
CLE1 0.85-B
610
To cigarette lighter
RAE1 B
RA02 YR
RA01 RW
BC14 PG
RA04 YB
RA03 Y
RA06 GB
RA05 G
AE9A
a
Radio connector
10572

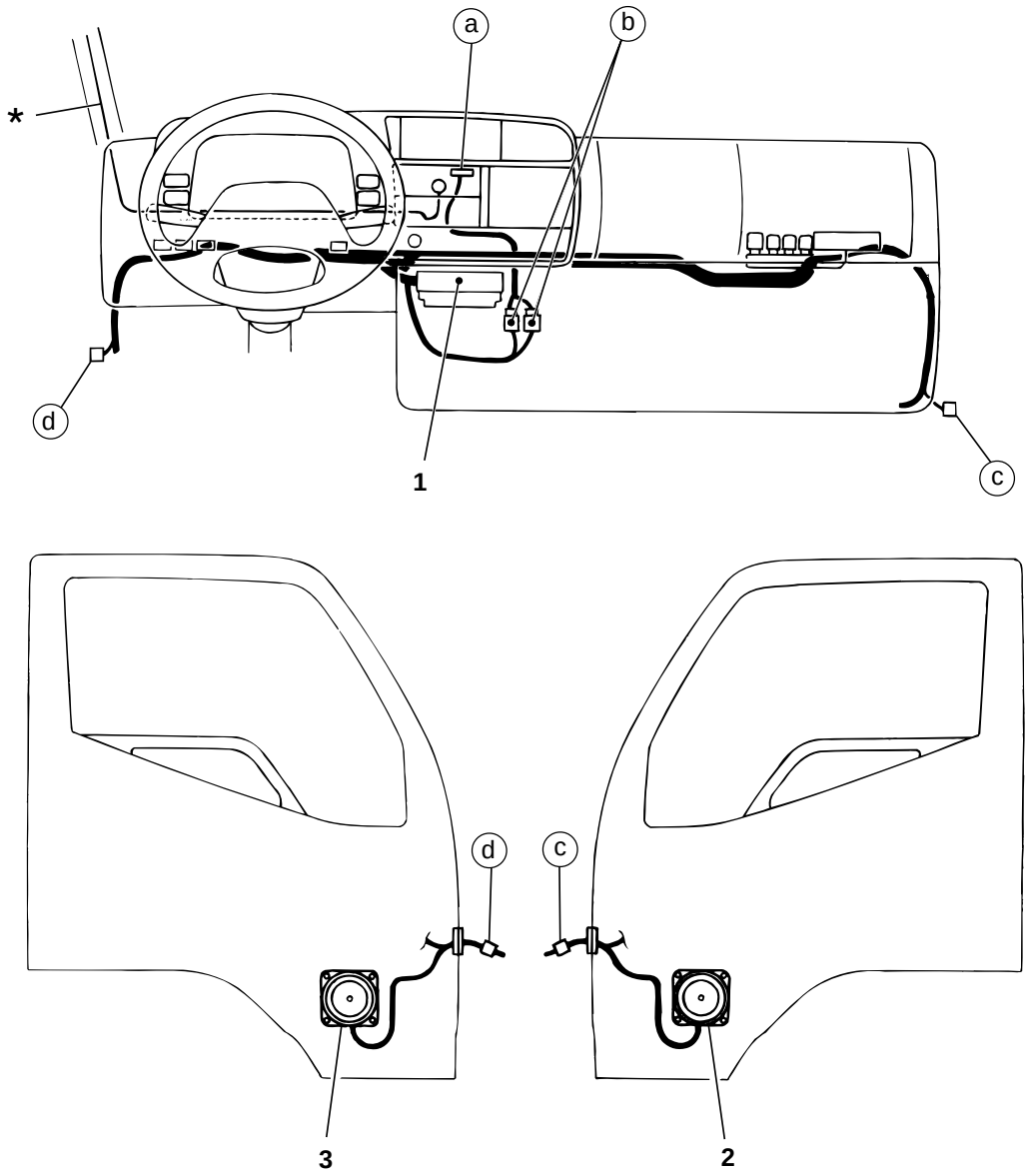

1 Fuse box 104
2 Door speaker, RH
3 Door speaker, LH

***** : Antenna cable

614 WIPER AND WASHER CIRCUIT

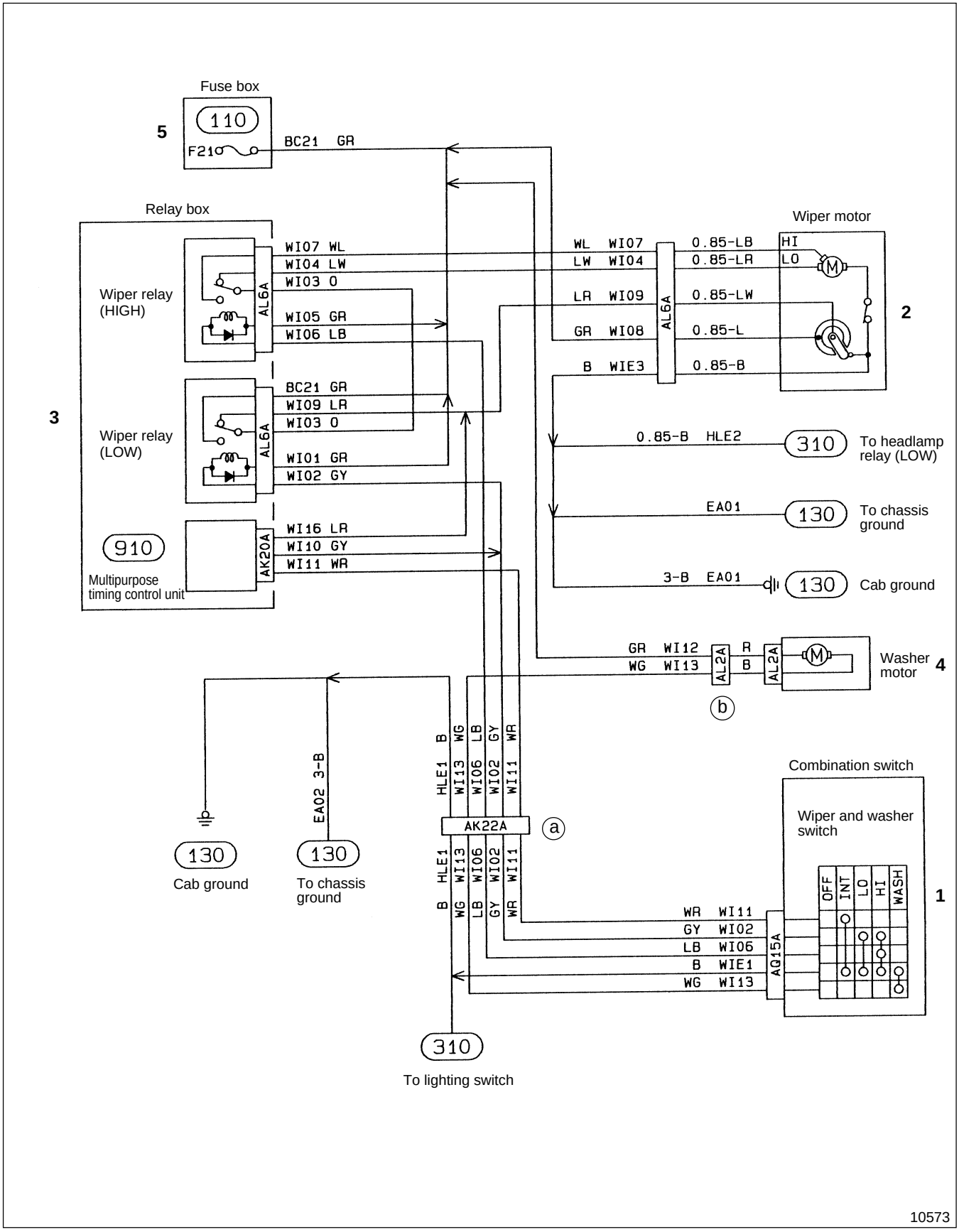

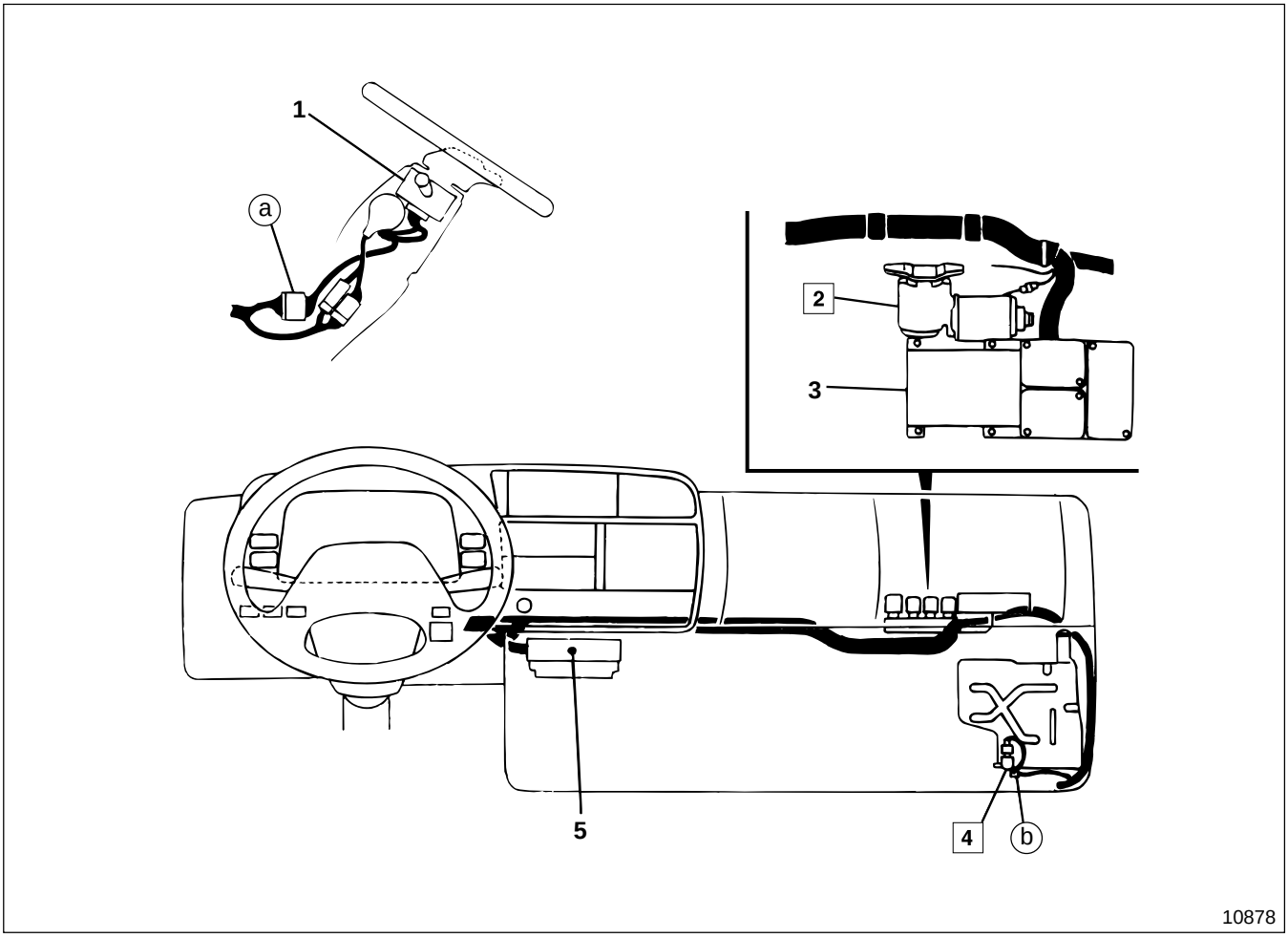

1 Combination switch 601
2 Wiper motor
3 Relay box 604
4 Washer motor
5 Fuse box 104

◆ Service procedure

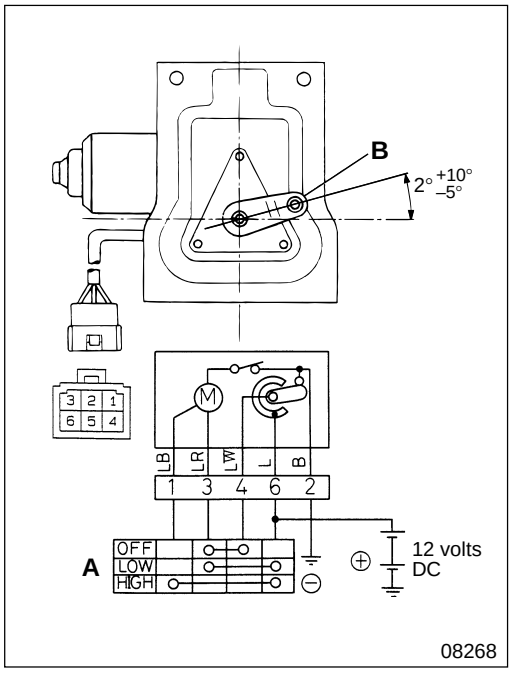

2 Inspection of wiper motor

- Connect wiper motor **2** as illustrated.
  A : Switch
- Carry out the following inspection. If any fault is found, replace wiper motor **2**. Gr 42

(1) Inspection of motor operation

- Make sure that wiper motor **2** turns at high speed when you turn switch **A** to HIGH.
- Make sure that wiper motor **2** turns at low speed when you turn switch **A** to LOW.

(2) Inspection of automatic stopping position

- Turn switch **A** to LOW to turn wiper motor **2** at low speed.
- When crank arm **B** is at any position other than the automatic stopping position (other than the illustrated angle), turn switch **A** to OFF.
- Make sure that crank arm **B** stops at the automatic stopping position (within the illustrated angle).

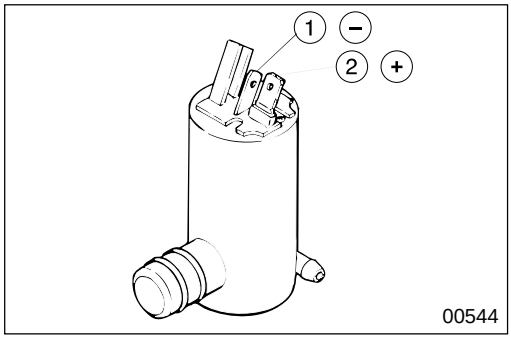

4 Inspection of washer motor

- Apply 12 volts DC between terminals ① and ② and make sure that washer motor **4** operates.
- If washer motor **4** does not operate, replace it. Gr 42

M E M O

616 HORN CIRCUIT

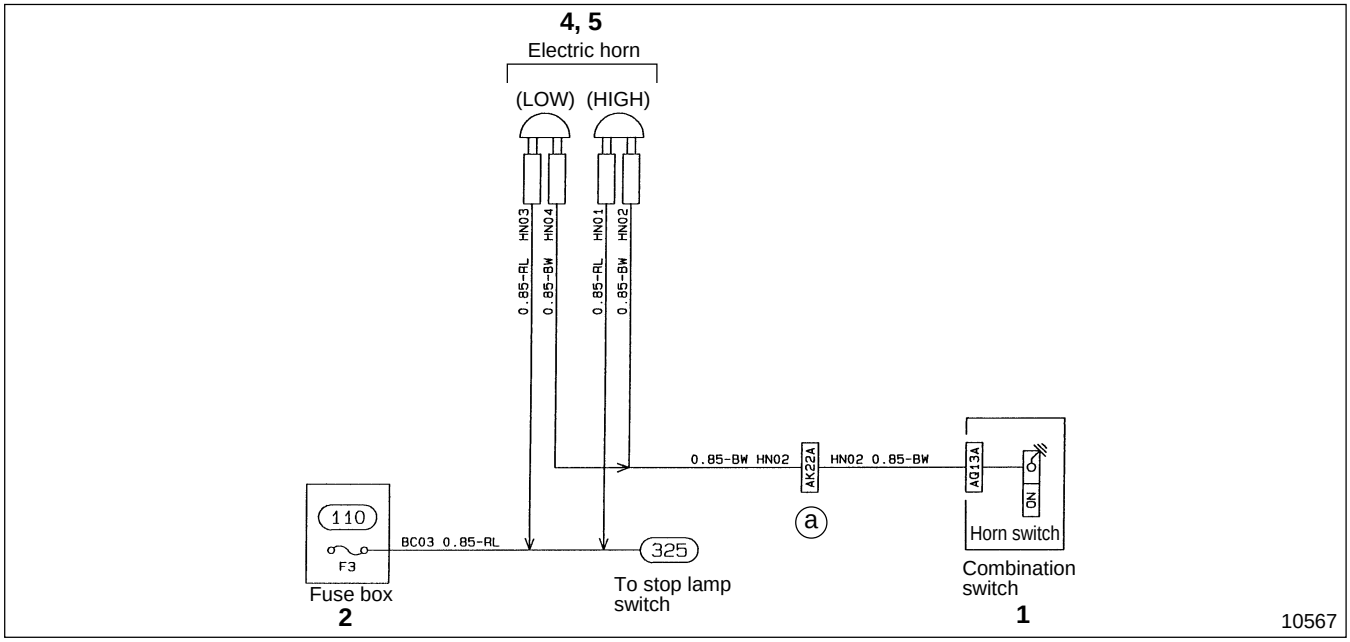

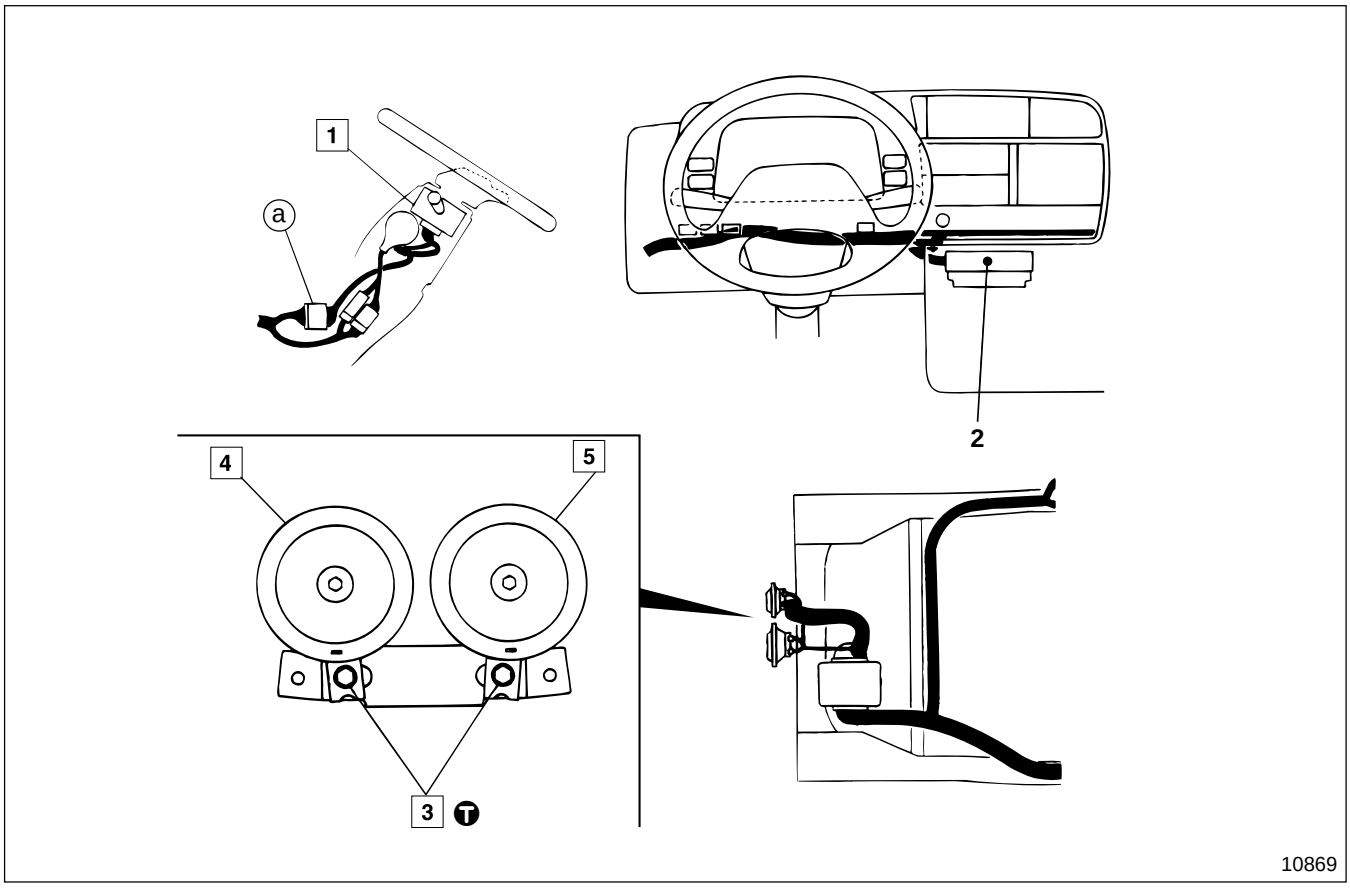

1 Combination switch 🕮 601
2 Fuse box 🕮 104
3 Bolt
4 Electric horn (HIGH)
5 Electric horn (LOW)

Tightening torque

Unit : N·m {lbf.ft, kgf·m}

Location	Parts to be tightened	Tightening torque	Remarks
3	Bolt (Electric horn mounting)	11.8 to 15.6 {8.7 to 11.6, 1.2 to 1.6}	—

◆ Service procedure

4 **5** **Electric horn**

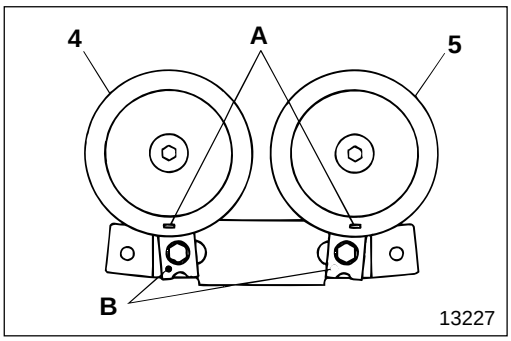

[Installation]

Install electric horns **4**, **5** as illustrated.

A : Drain hole

CAUTION

- **Do not bend or damage stay B or the sound quality of electric horns 4, 5 can be changed and the horn capacity can deteriorate.**
- **Be careful to install the horn correctly as illustrated, or the horn cannot be drained normally.**

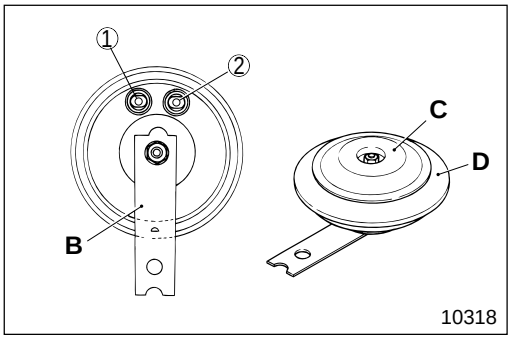

[Inspection]

- Make sure that electric horns **4, 5** sound when you apply 12 volts DC between terminals ① and ②. (No polarity)
- If any fault is found, replace electric horns **4, 5**.
- Remove any foreign particles from resonator **C** or vibration plate **D**.

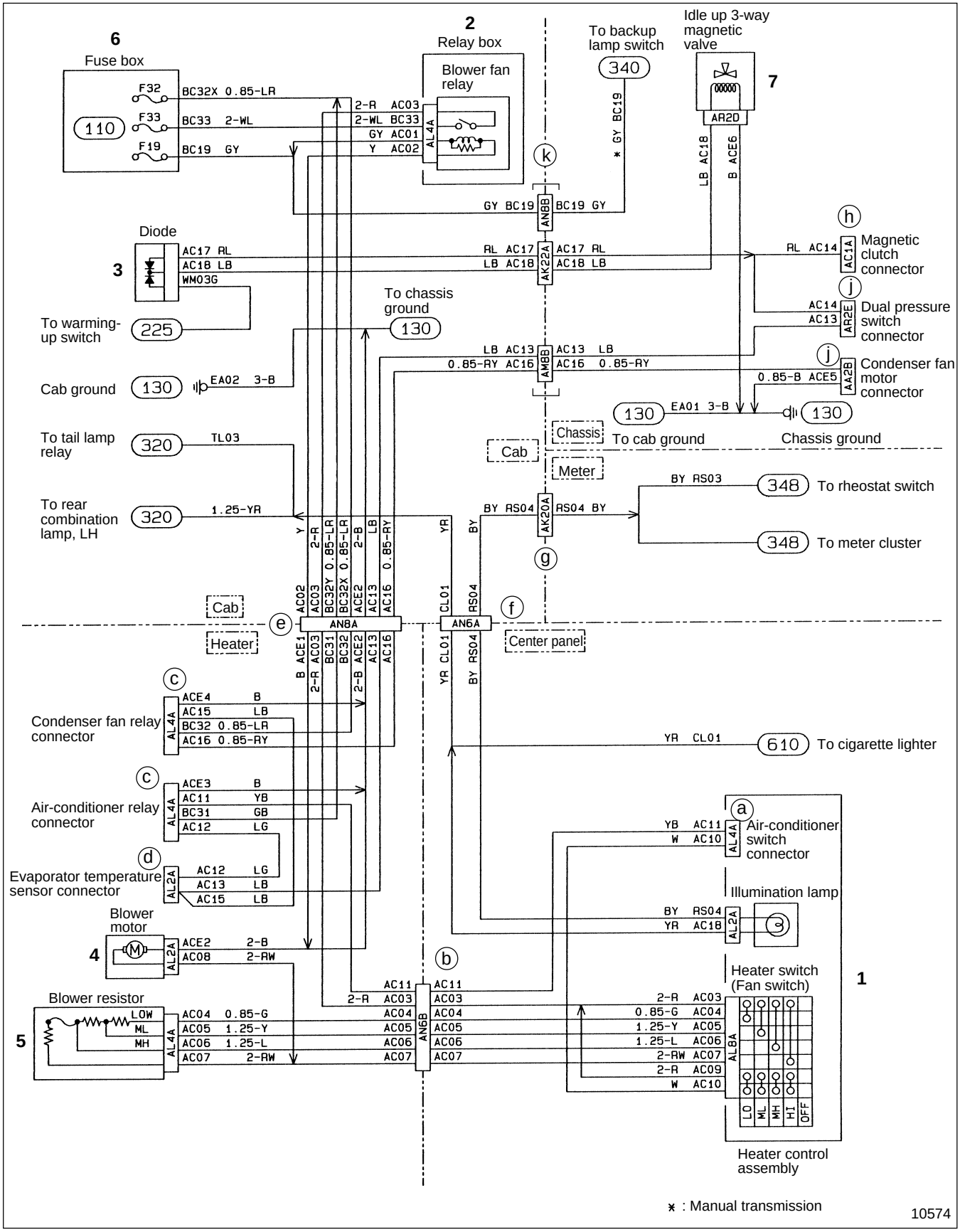
6
Fuse box
F32
F33
F19
110
BC32X 0.85-LR
BC33 2-WL
BC19 GY
2
Relay box
Blower fan relay
AL4A
2-R AC03
2-WL BC33
GY AC01
Y AC02
To backup lamp switch
340
* GY BC19
Idle up 3-way magnetic valve
7
AR2D
LB AC18
B ACE6
k
GY BC19
AN8B
BC19 GY
h
Magnetic clutch connector
AC1A
RL AC14
Diode
3
AC17 RL
AC18 LB
WM03G
RL AC17
LB AC18
AK22A
AC17 RL
AC18 LB
To chassis ground
130
To warming-up switch
225
j
Dual pressure switch connector
AR2E
AC14
AC13
Cab ground
130
EA02 3-B
LB AC13
0.85-RY AC16
AM6B
AC13 LB
AC16 0.85-RY
j
Condenser fan motor connector
AA2B
0.85-B ACE5
130
EA01 3-B
130
Chassis
To cab ground
Chassis ground
To tail lamp relay
320
TL03
Cab
Meter
BY RS03
348
To rheostat switch
To rear combination lamp, LH
320
1.25-YR
BY RS04
RS04 BY
AK20A
348
To meter cluster
g
Cab
Heater
e
AN8A
f
AN6A
Center panel
c
Condenser fan relay connector
AL4A
ACE4 B
AC15 LB
BC32 0.85-LR
AC16 0.85-RY
YR CL01
610
To cigarette lighter
c
Air-conditioner relay connector
AL4A
ACE3 B
AC11 YB
BC31 GB
AC12 LG
a
Air-conditioner switch connector
AL4A
YB AC11
W AC10
d
Evaporator temperature sensor connector
AL2A
AC12 LG
AC13 LB
AC15 LB
Illumination lamp
BY RS04
YR AC18
AL2A
g
Blower motor
4
AL2A
ACE2 2-B
AC08 2-RW
b
Heater switch (Fan switch)
1
Blower resistor
5
LOW
ML
MH
AL4A
AC04 0.85-G
AC05 1.25-Y
AC06 1.25-L
AC07 2-RW
AC11
2-R AC03
AC04
AC05
AC06
AC07
AN6B
2-R AC03
0.85-G AC04
1.25-Y AC05
1.25-L AC06
2-RW AC07
2-R AC09
W AC10
AL8A
LO
ML
MH
HI
OFF
Heater control assembly
* : Manual transmission
10574

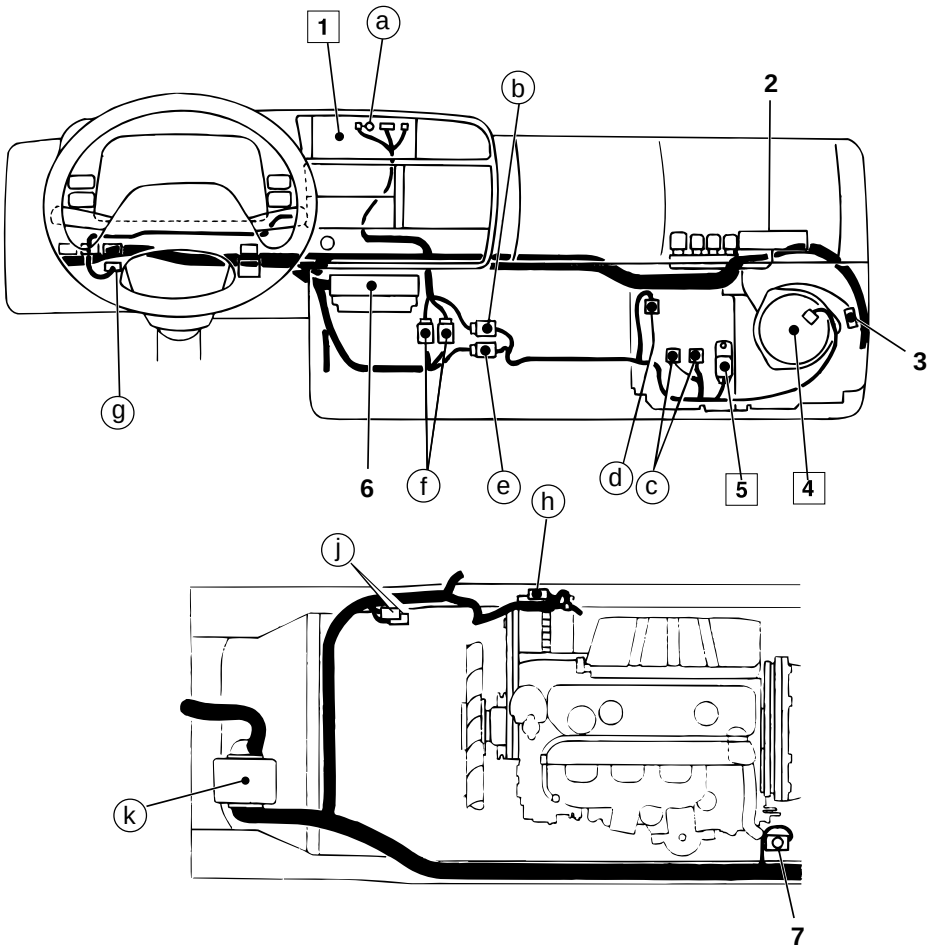

10870

1 Heater control assembly
2 Relay box (604)
3 Diode
4 Blower motor
5 Blower resistor
6 Fuse box (104)
7 Idle up 3-way magnetic valve (701)

Service standards

Location	Maintenance item		Standard value	Limit	Remedy
5	Resistance of blower resistor  14315	① - ②	0.81 Ω	—	Replace
		① - ③	0.28 Ω		
		① - ④	1.94 Ω		

◆ Service procedure

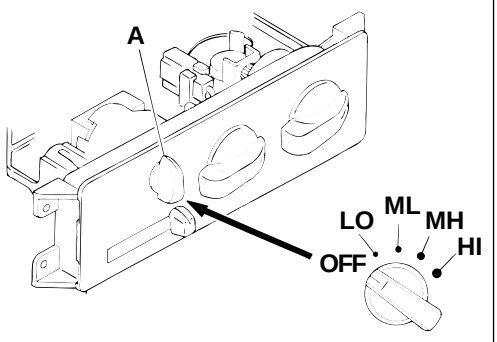

10124

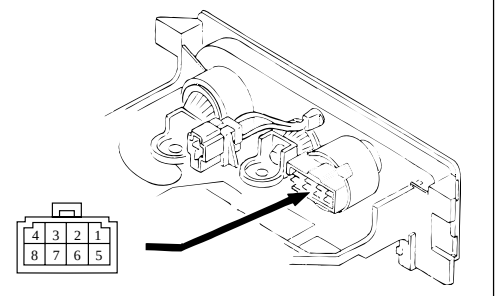

10125

1 Inspection of heater control assembly

Inspection of blower switch A

- Follow the table below to inspect continuity:

	⑧	②	⑦	③	⑥	⑤	④
OFF							
LO (LOW)	○—○					○—○	
ML (MIDDLE LOW)	○—	——	—○			○—○	
MH (MIDDLE HIGH)	○—	——	——	—○		○—○	
HI (HIGH)	○—	——	——	——	—○	○—○	

○—○ : There is continuity between terminals ○ and ○.

- If any fault is found, replace blower switch **A**.

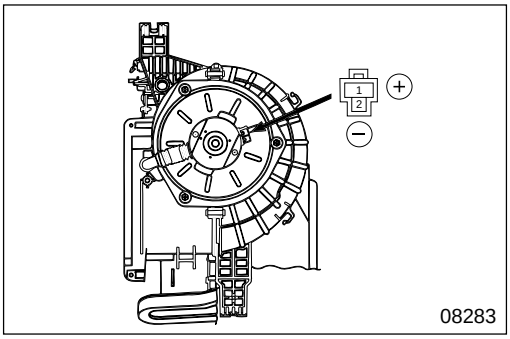

08283

4 Inspection of blower motor

- Make sure that blower motor **4** operates when 12 volts DC is applied between terminals ① and ②.
- If any fault is found, replace blower motor **4**.

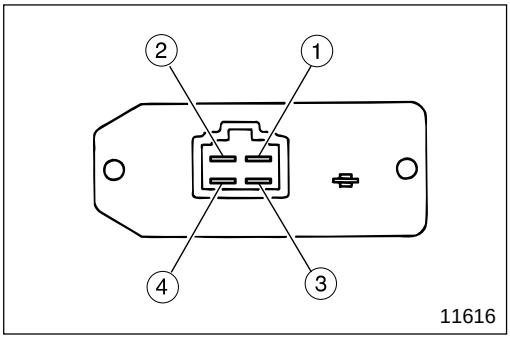

11616

5 Inspection of blower resistor

- Measure resistance between terminals ① and ② (MIDDLE LOW), ① and ③ (MIDDLE HIGH) and ① and ④ (LOW).
- If the measured value deviates from the standard value, replace blower resistor **5**.

7 CHASSIS ELECTRICS

701 MAGNETIC VALVE 54-7-2

710 EXHAUST BRAKE CIRCUIT

< Manual Transmission > 54-7-4

< Automatic Transmission > 54-7-8

701 MAGNETIC VALVE

Installation Position

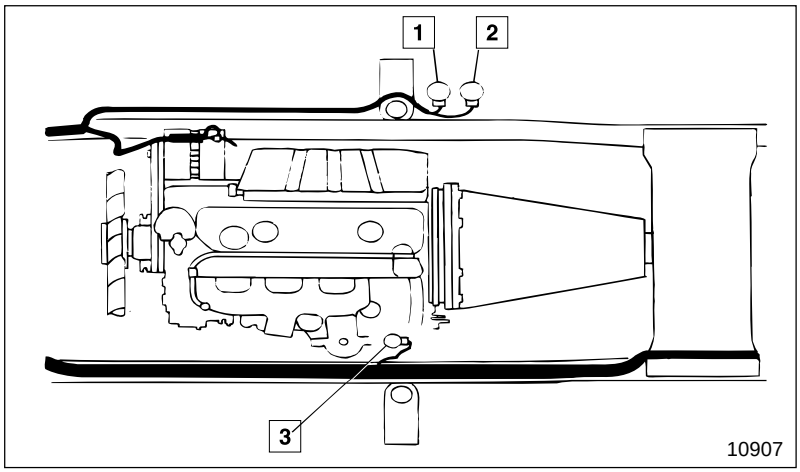

1 Intake shutter 3-way magnetic valve
2 Exhaust brake 3-way magnetic valve
3 Idle up 3-way magnetic valve

Service standards

Location	Maintenance item	Standard value	Limit	Remedy
1, 2	Minimum operating voltage of 3-way magnetic valve 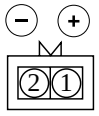 14318	11 V or less	—	Replace
3	Minimum operating voltage of 3-way magnetic valve 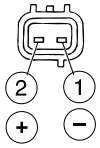 15024	8 V or less	—	Replace

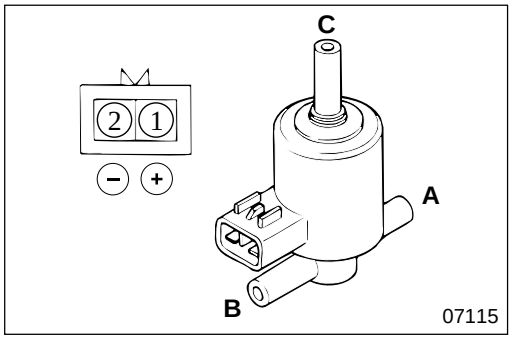

◆ Service procedure

1 **2** **Inspection of 3-way magnetic valve**

Carry out the following inspection. If any fault is found, replace 3-way magnetic valves **1, 2** :

Air circuit table (There is air continuity between terminals ○ and ○.)

	Input port A	Output port B	Exhaust port C
ON	○	○	
OFF		○	○

(1) Operation inspection

- Apply voltage between terminals ① and ②, increasing gradually from 0 volt.
- Measure voltage (minimum operating voltage) when magnetic valves **1, 2** starts operating. (You can tell if the magnetic valves are ON or OFF by listening for an operating sound.)

(2) Airtightness inspection

- When magnetic valve is ON :
  - Close output port **B**.
  - Apply 12 volts DC between terminals ① and ②.
  - Make sure that there is no air suction from exhaust port **C** when negative pressure (–100 kPa {–30 in.Hg, –750 mmHg}) is applied to input port **A**.
- When magnetic valve is OFF :
  - Close exhaust port **C**.
  - Make sure that there is no air suction from output port **B** when negative pressure (–100 kPa {–30 in.Hg, –750 mmHg}) is applied to input port **A**.

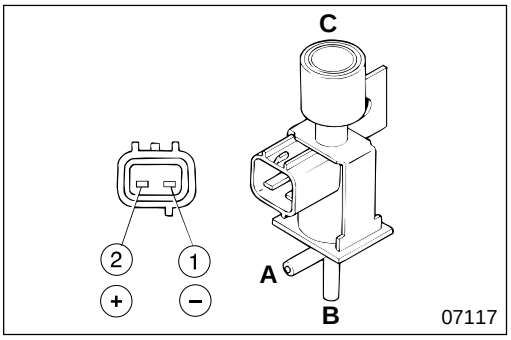

3 Inspection of 3-way magnetic valve

Carry out the following inspection. If any fault is found, replace 3-way magnet valve **3** :
Air circuit table (There is air continuity between terminals ○ and ○.)

	Input port **A**	Output port **B**	Exhaust port **C**
ON	○	○	
OFF		○	○

(1) Operation inspection

- Apply voltage between terminals ① and ②, increasing gradually from 0 volt.
- Measure voltage (minimum operating voltage) when 3-way magnetic valve **3** starts operating. (You can tell if the magnetic valves are ON or OFF by listening for an operating sound.)

(2) Airtightness inspection

- When magnetic valve is ON :
  - Close output port **B**.
  - Apply 12 volts DC between terminals ① and ②.
  - Make sure that there is no air suction from exhaust port **C** when negative pressure (–60 kPa {–18 in.Hg, –450 mmHg}) is applied to input port **A**.
- When magnetic valve is OFF :
  - Close exhaust port **C**.
  - Make sure that there is no air suction from output port **B** when negative pressure (–60 kPa {–18 in.Hg, –450 mmHg}) is applied to input port **A**.

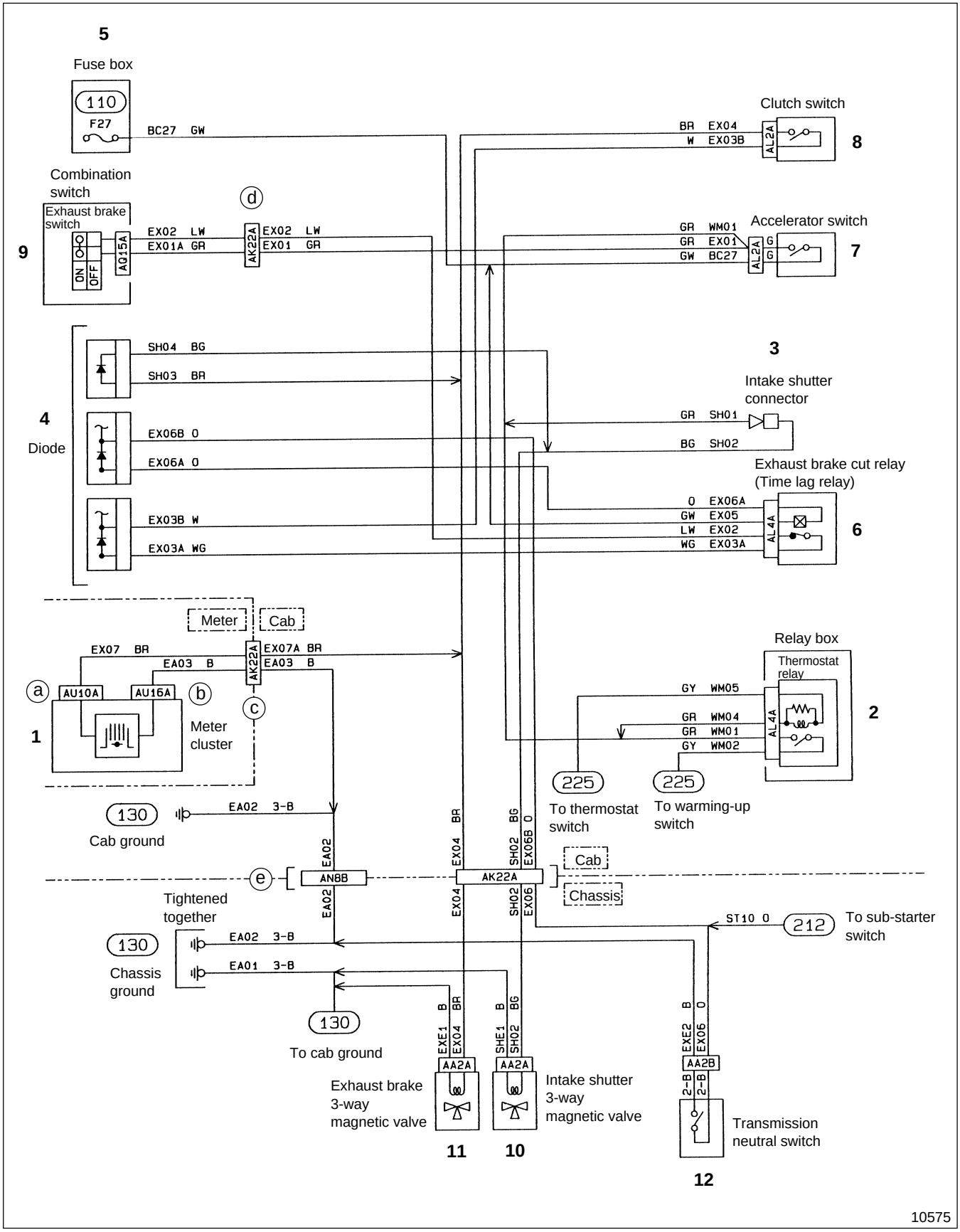
5
Fuse box
110
F27
BC27 GW
Clutch switch
BR EX04
W EX03B
AL2A
8
Combination switch
Exhaust brake switch
d
9
EX02 LW
EX01A GR
AG15A
ON
OFF
AK22A
EX02 LW
EX01 GR
Accelerator switch
GR WM01
GR EX01
GW BC27
AL2A
G
G
7
3
SH04 BG
SH03 BR
Intake shutter connector
GR SH01
BG SH02
4
Diode
EX06B O
EX06A O
EX03B W
EX03A WG
Exhaust brake cut relay (Time lag relay)
O EX06A
GW EX05
LW EX02
WG EX03A
AL4A
6
Meter
Cab
EX07 BR
EA03 B
AK22A
EX07A BR
EA03 B
Relay box
Thermostat relay
a
AU10A
AU16A
b
c
1
Meter cluster
GY WM05
GR WM04
GR WM01
GY WM02
AL4A
2
225
225
To thermostat switch
To warming-up switch
130
Cab ground
EA02 3-B
EA02
EX04 BR
SH02 BG
EX06B O
Cab
e
AN8B
AK22A
Chassis
Tightened together
EA02
EX04
SH02
EX06
ST10 O
212
To sub-starter switch
130
Chassis ground
EA02 3-B
EA01 3-B
130
To cab ground
EXE1 B
EX04 BR
SHE1 B
SH02 BG
EXE2 B
EX06 O
AA2A
AA2A
AA2B
2-B
2-B
Exhaust brake 3-way magnetic valve
Intake shutter 3-way magnetic valve
Transmission neutral switch
11
10
12
10575

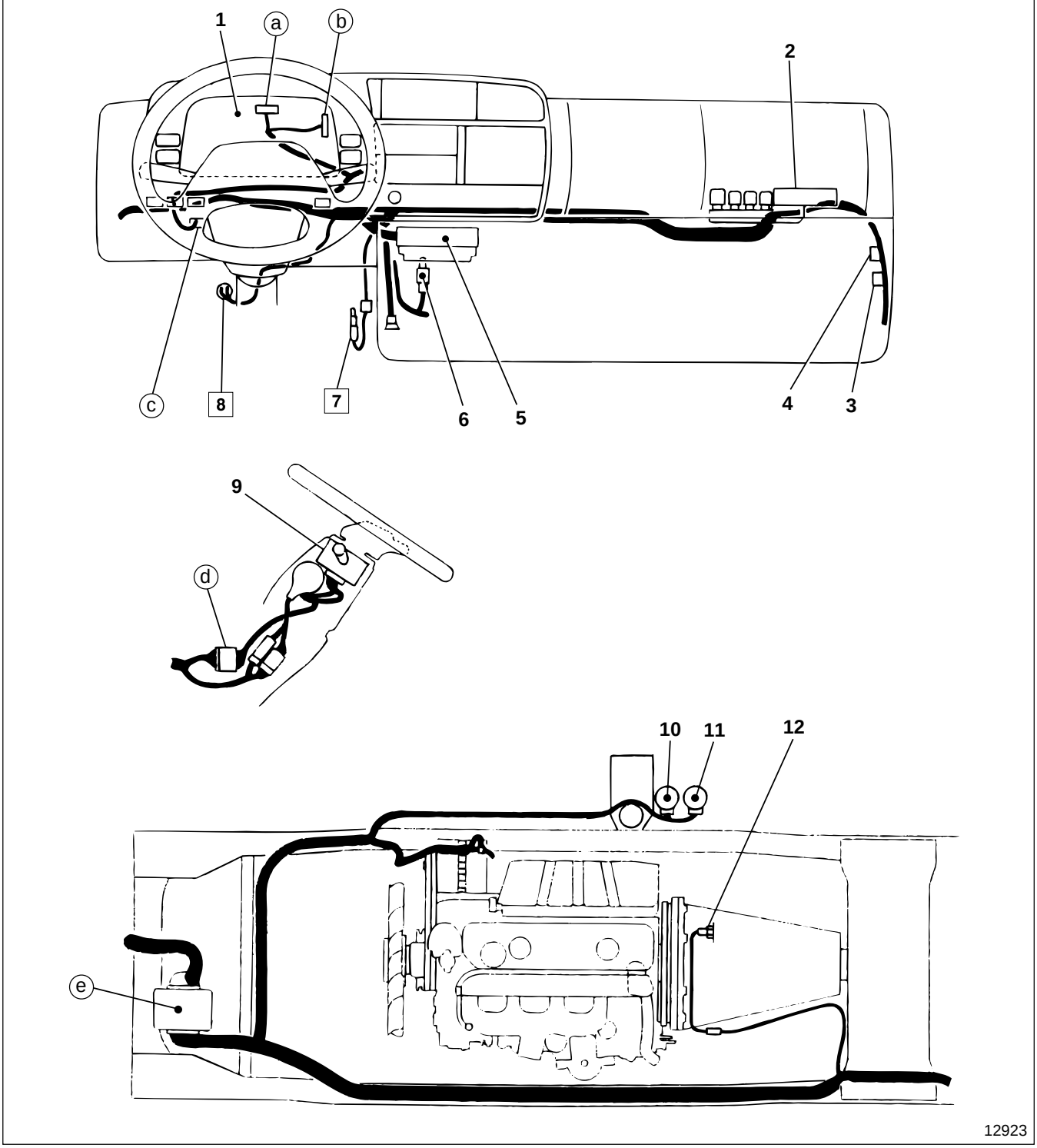

1 Meter cluster 401
2 Relay box 604
3 Intake shutter connector
4 Diode
5 Fuse box 104
6 Exhaust brake cut relay (Time lag relay) 604
7 Accelerator switch
8 Clutch switch
9 Combination switch 601
10 Intake shutter 3-way magnetic valve 701
11 Exhaust brake 3-way magnetic valve 701
12 Transmission neutral switch 802

◆ Service procedure

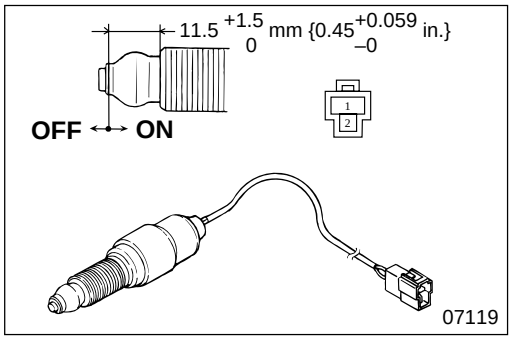

7 **Inspection of accelerator switch**

- Follow the table below to inspect continuity:

	①	②
OFF		
ON	○——	——○

○—○ : There is continuity between terminals ○ and ○.

- If any fault is found, replace accelerator switch **7**. Gr 13

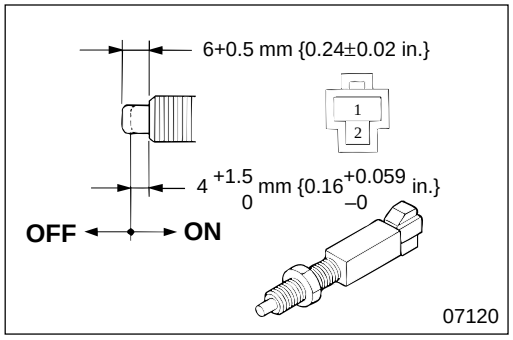

8 **Inspection of clutch switch**

- Follow the table below to inspect continuity:

	①	②
OFF		
ON	○——	——○

○—○ : There is continuity between terminals ○ and ○.

- If any fault is found, replace clutch switch **8**. Gr 21

M E M O

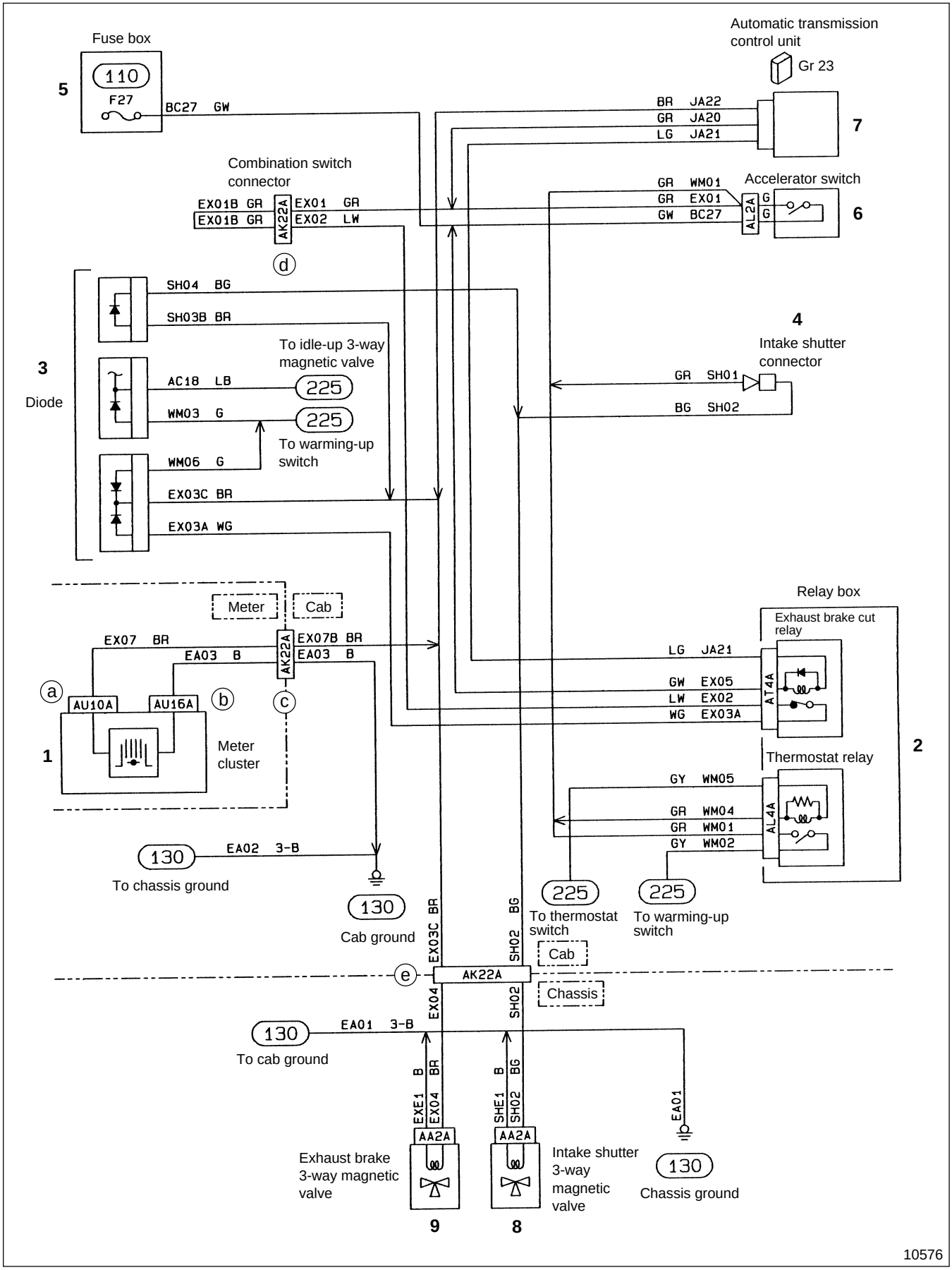
Fuse box
110
F27
BC27 GW
5
Automatic transmission control unit
Gr 23
BR JA22
GR JA20
LG JA21
7
Combination switch connector
EX01B GR
EX01B GR
AK22A
EX01 GR
EX02 LW
d
GR WM01
GR EX01
GW BC27
AL2A
G
G
Accelerator switch
6
SH04 BG
SH03B BR
To idle-up 3-way magnetic valve
4
Intake shutter connector
3
Diode
AC18 LB
225
WM03 G
225
To warming-up switch
GR SH01
BG SH02
WM06 G
EX03C BR
EX03A WG
Meter
Cab
Relay box
Exhaust brake cut relay
EX07 BR
EA03 B
AK22A
EX07B BR
EA03 B
LG JA21
GW EX05
LW EX02
WG EX03A
AT4A
a
AU10A
AU16A
b
c
1
Meter cluster
Thermostat relay
2
GY WM05
GR WM04
GR WM01
GY WM02
AL4A
130
EA02 3-B
To chassis ground
130
Cab ground
225
To thermostat switch
225
To warming-up switch
EX03C BR
SH02 BG
Cab
e
AK22A
Chassis
EX04
SH02
130
EA01 3-B
To cab ground
EXE1 B
EX04 BR
SHE1 B
SH02 BG
EA01
AA2A
AA2A
Exhaust brake 3-way magnetic valve
Intake shutter 3-way magnetic valve
130
Chassis ground
9
8
10576

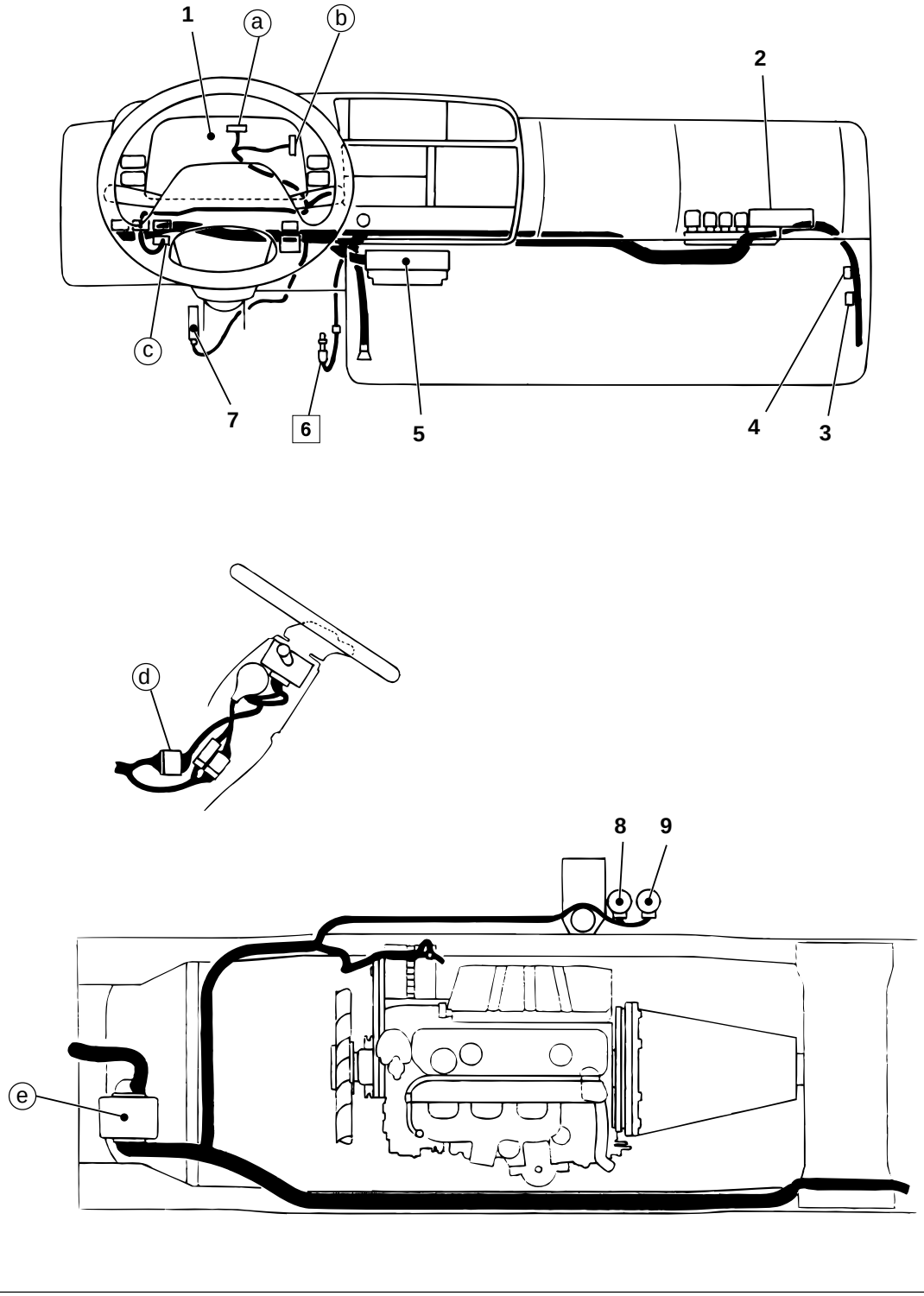

1 Meter cluster 401
2 Relay box 604
3 Diode
4 Intake shutter connector
5 Fuse box 104
6 Accelerator switch
7 Automatic transmission control unit Gr 23
8 Intake shutter 3-way magnetic valve 701
9 Exhaust brake 3-way magnetic valve 701

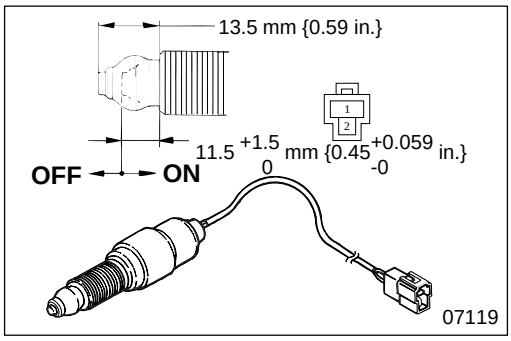

◆ Service procedure

6 **Inspection of accelerator switch**

- Follow the table below to inspect continuity:

	①	②
OFF		
ON	○—○	

○—○ : There is continuity between terminals ○ and ○.

- If any fault is found, replace accelerator switch **6**. Gr 13

8 ENGINE AND TRANSMISSION ELECTRICS

801 ENGINE ELECTRICS 54-8-2

802 TRANSMISSION ELECTRICS 54-8-6

Installation Position

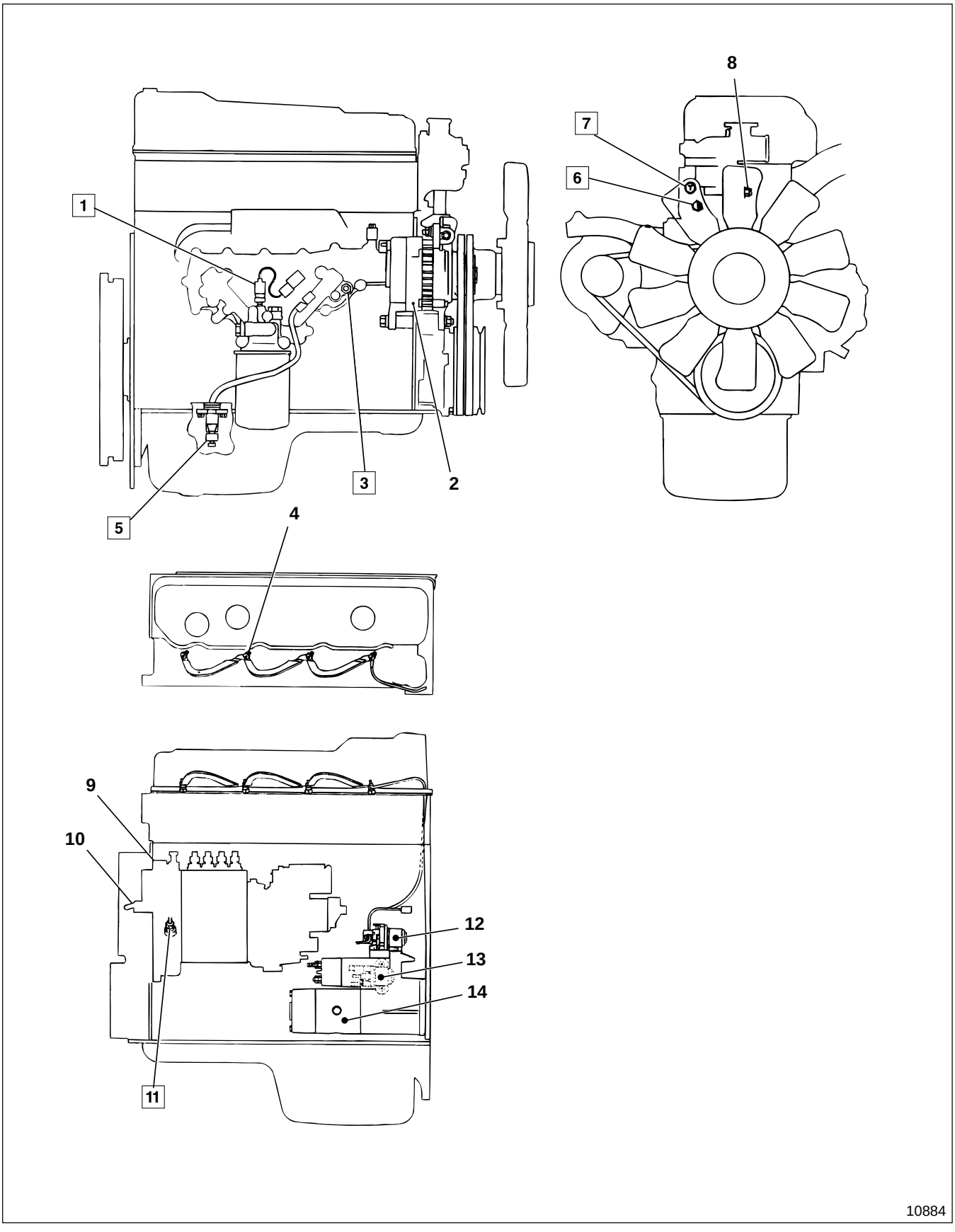

1 Engine oil pressure switch
2 Alternator 📖 (106)
3 Thermostat switch
4 Glow plug 📖 (220)
5 Oil level sensor
6 Overheating switch
7 Water temperature sensor (Connects to water temperature gauge and multipurpose timing control unit)
8 Water temperature sensor (Connects to pre-stroke control unit) 📦 Gr 13
9 Pre-stroke actuator 📦 Gr 13
10 Control rod position sensor 📦 Gr 13
11 Engine revolution sensor
12 Glow relay 📖 (220)
13 Starter relay 📖 (210)
14 Starter 📖 (201)

Service standards

Location	Maintenance item			Standard value	Limit	Remedy
1	Operating pressure of engine oil pressure switch			49±9.8 kpa {7.1±1.4 lbf/in², 0.5±0.1 kgf/cm²}	—	Replace
3	Operating temperature of thermostat switch	When temperature increases (ON→OFF)		77±3°C {170±5.4°F}	—	Replace
		When temperature decreases (OFF→ON)		70°C {158°F}		
6	Operating temperature of overheating switch	When temperature increases (ON→OFF)		110±2°F {230±3.6°F}	—	Replace
		When temperature decreases (OFF→ON)		110±4°C {230±7.2°F}	—	
7	Resistance of water temperature sensor 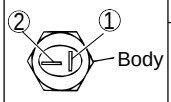 14321	① - (Body) (Water temperature gauge side)	50°C {122°F}	(153.9 Ω)	—	Replace
			80°C {176°F}	$51.9^{+4.9}_{-4.4}$ Ω		
			100°C {212°F}	$27.4^{+1.9}_{-1.2}$ Ω		
		② - (Body) (Multipurpose timing control unit side)	20°C {68°F}	3.25±0.33 kΩ		
			60°C {140°F}	(620 Ω)		
			80°C {176°F}	(300 Ω)		
11	Resistance of engine revolution sensor (At room temperature 25°C {77°F}) 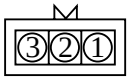 14366		① - ②	2.1 to 2.5 k Ω	—	Replace

The values in ( ) are reference values.

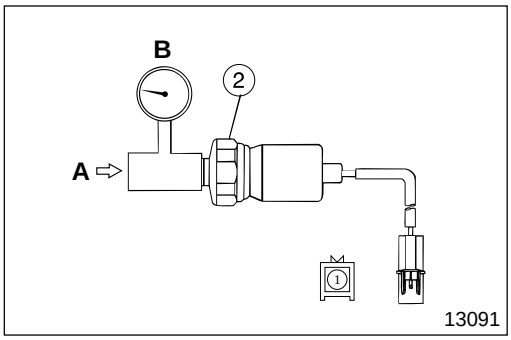

13091

◆ Service procedure

1 Inspection of engine oil pressure switch

Carry out the following inspection. If any fault is found, replace engine oil pressure switch **1**. 📦 Gr 12

- Make sure that there is continuity between terminals ① and ② (Body) when air pressure **A** is not applied to engine oil pressure switch **1**.
- Apply air pressure **A** to engine oil pressure switch **1** gradually starting from 0 kpa {0 lbf/in², 0 kgf/cm²}.
  Measure the air pressure when continuity is lost between terminals ① and ② (body), and make sure that it conforms the measured valve the standard value.
  B : Air pressure gauge

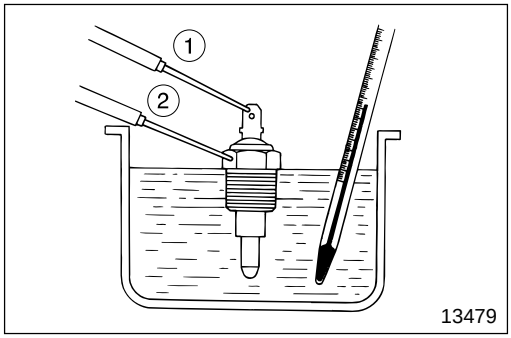

3 Inspection of thermostat switch

Carry out the following inspection. If any fault is found, replace thermostat switch **3**. Gr 12

- Make sure that there is continuity between terminals ① and ② (Body) at room temperature (20°C{68°F}).
- Place thermostat switch **3** in a container filled with engine oil and raise the oil temperature while stirring the oil.
  Measure the temperature when continuity is lost between terminals ① and ② (Body), and make sure that the measured value conforms to the standard value.
- Lower the oil temperature and measure the temperature when continuity is present between terminals ① and ② (Body), and make sure that the measured value conforms to the standard value.

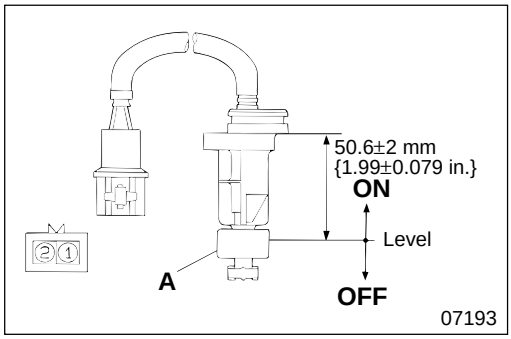

5 Inspection of engine oil level sensor

- Follow the table below to inspect continuity:

	①	②
ON	○	○
OFF		

○—○ : There is continuity between terminals ○ and ○.

- If any fault is found, replace engine oil level sensor **5**. Gr 12

A : Float

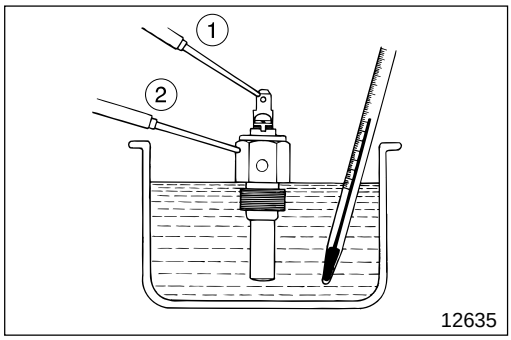

6 Inspection of overheating switch

Carry out the following inspection. If any fault is found, replace overheating switch **6**. Gr 14

- Make sure that there is no continuity between terminals ① and ② (Body) at room temperature (20°C {68°F}).
- Place overheating switch **6** in a container filled with engine oil and raise the oil temperature while stirring the oil.
  Measure the temperature when there is continuity between terminals ① and ② (Body), and make sure that the measured value conforms to the standard value.
- Lower the oil temperature and measure the temperature when continuity is lost between terminals ① and ② (Body), and make sure that the measured value conforms to the standard value.

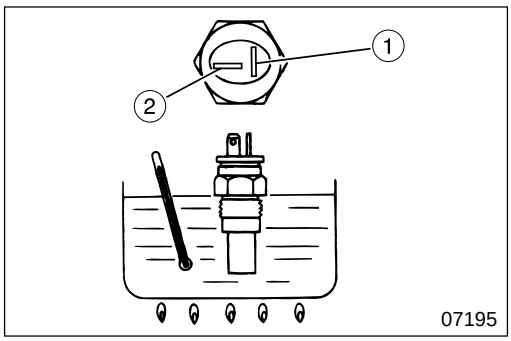

7 Inspection of water temperature sensor

- Place water temperature sensor **7** in engine oil in a container.
- Raise the oil temperature to the specified values and stir the oil.
- Measure the resistance between terminal ① and the body, and terminal ② and the body.
  Terminal ① : Water temperature gauge connection
  Terminal ② : Multipurpose timing control unit connection
- If the measured value deviates from the standard value, replace water temperature sensor **7**. Gr 14

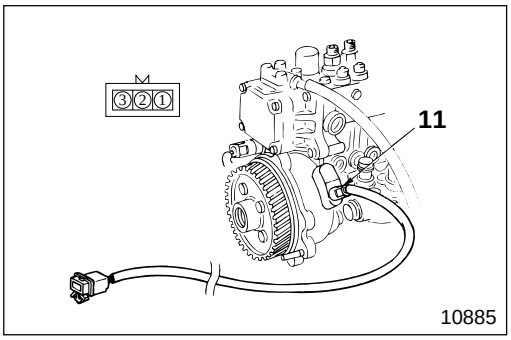

11 **Inspection of engine revolution sensor**

- Measure the resistance between terminals ① and ②.
- If the measured value deviates from the standard value, replace engine revolution sensor **11**. Gr 13

Installation Position

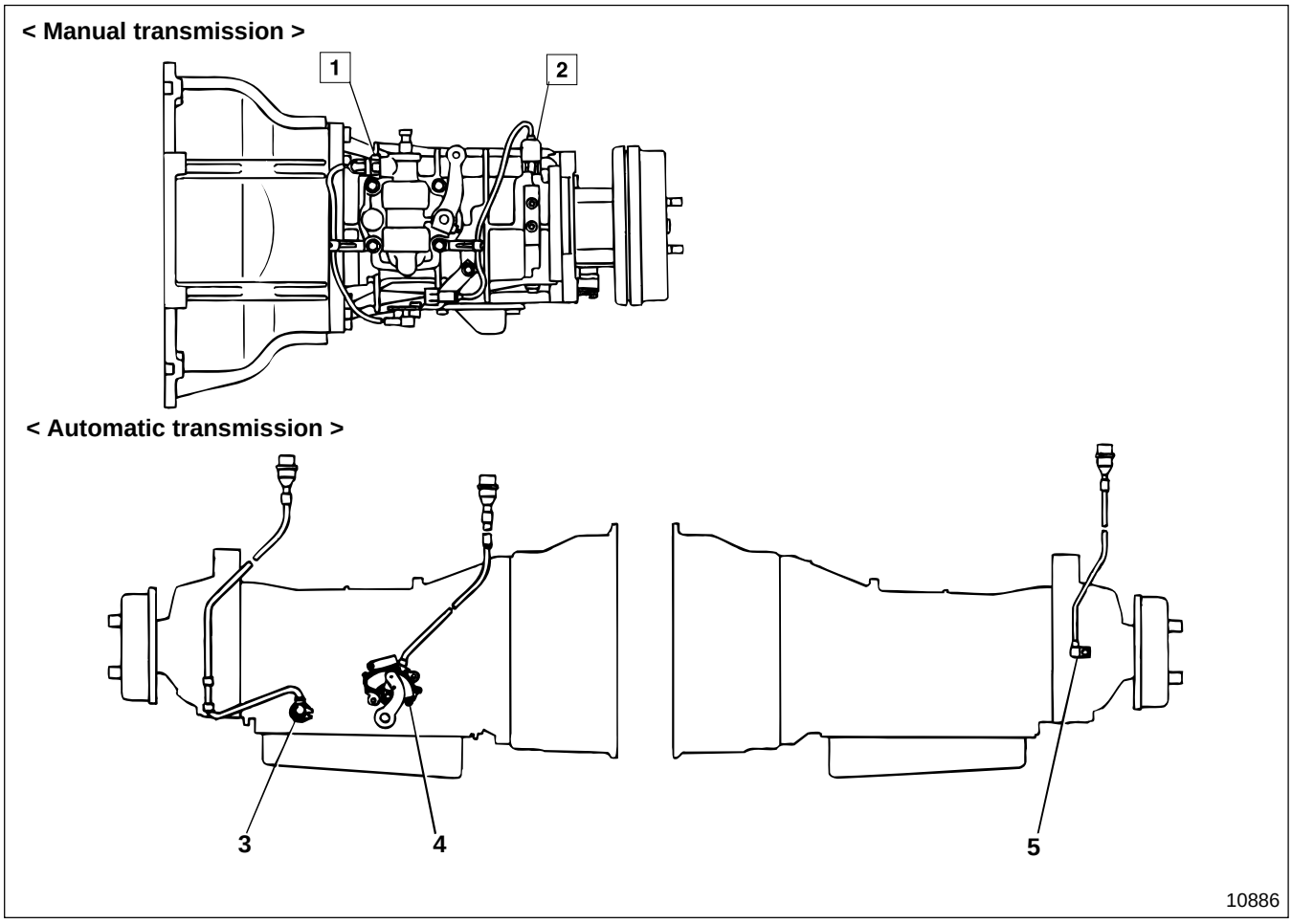

1 Transmission neutral switch < Manual transmission >
2 Backup lamp switch < Manual transmission >
3 Vehicle speed sensor < Automatic transmission > Gr 23
4 Inhibitor switch < Automatic transmission > Gr 23
5 Automatic transmission terminal connector < Automatic transmission > Gr 23

◆ Service procedure

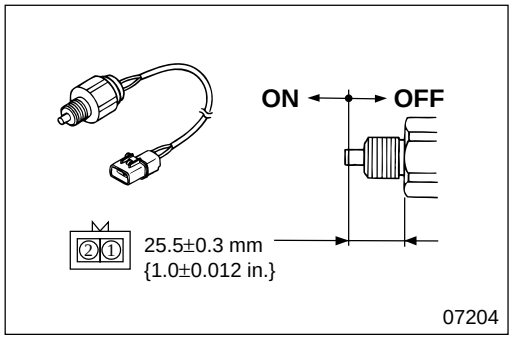

1 **Inspection of transmission neutral switch**

- Follow the table below to inspect continuity.

	①	②
OFF		
ON	○—○	

○—○ : There is continuity between terminals ○ and ○.

- If any fault is found, replace transmission neutral switch **1**. Gr 22

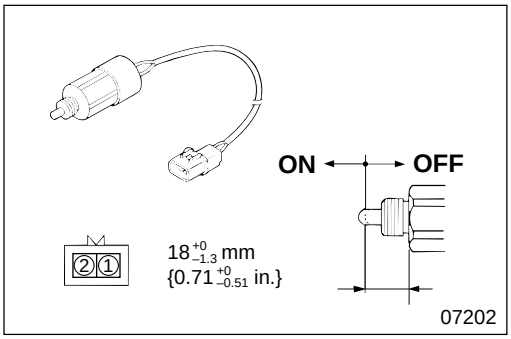

2 **Inspection of Backup lamp switch**

- Follow the table below to inspect continuity.

	①	②
OFF		
ON	○—○	

○—○ : There is continuity between terminals ○ and ○.

- If any fault is found, replace backup lamp switch **2** . Gr 22

9 OTHERS

STRUCTURE AND OPERATION 54-9-2

910 MULTIPURPOSE TIMING CONTROL UNIT CIRCUIT 54-9-8

Multipurpose Timing Control Unit

- The multipurpose timing control unit controls the following functions:

Intermittent wiper activation function	Gr 42
Engine preheating function	Gr 54-2-6

- Sensors and switches are fitted to these systems as information sources for the multipurpose timing control unit.
- Using the information provided, circuits in the multipurpose timing control unit control the functions mentioned above.

● Internal structure of multipurpose timing control unit

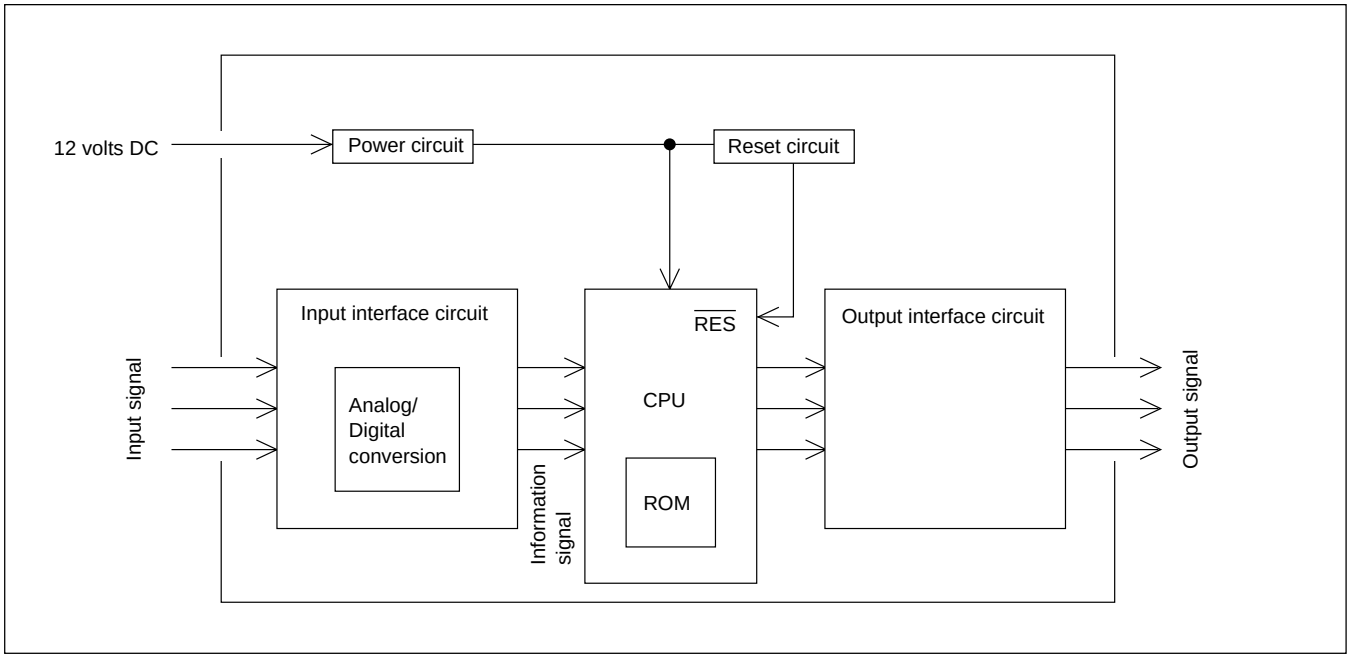

- The internal structure mainly consists of the input interface circuit, *1CPU, *2ROM, and the output interface circuit.
  - *1CPU : Central Processing Unit. Compares the input information with information stored in the memory to output commands.
  - *2ROM : Read Only Memory. Stores fixed data and programs that are not erased even after the power is turned off.
- Input signals are transmitted from information sources, such as sensors and switches, to the input interface circuit.
- The input interface circuit converts these input signals from analog signals to digital signals. This enables the CPU to calculate data and transmits them to the CPU as information signals.
- The CPU compares the information signals with the data in the ROM, calculates the signals, and sends them to the output interface circuit.
- The output interface circuit issues commands to systems, based on the above comparison and calculated results, as output signals.
- Sequential execution of the above processes allows optimum control over functions.

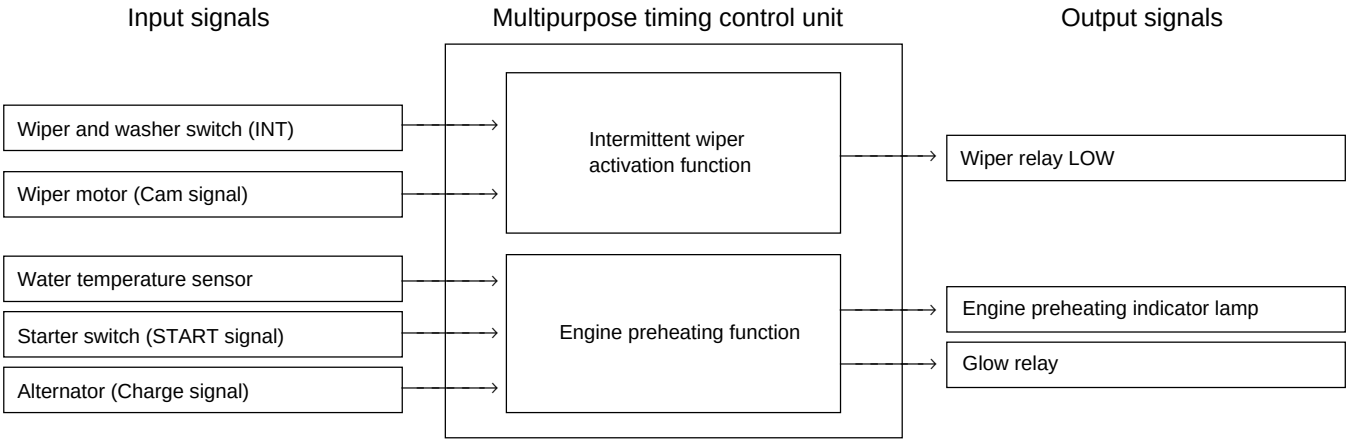

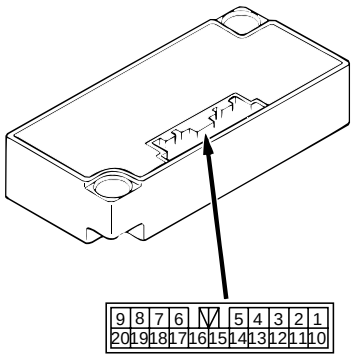

07504

Terminal No.	Connecting destinations	Terminal No.	Connecting destinations
1	Glow relay	11	—
2	Wiper motor (Cam signal)	12	—
3	Engine preheating indicator lamp	13	—
4	Wiper relay LOW	14	Cab ground
5	—	15	—
6	—	16	Alternator terminal L (Charge signal)
7	—	17	—
8	—	18	Starter switch (Start signal)
9	Water temperature sensor	19	Wiper switch (Intermittent)
10	Starter switch (ON power supply)	20	—

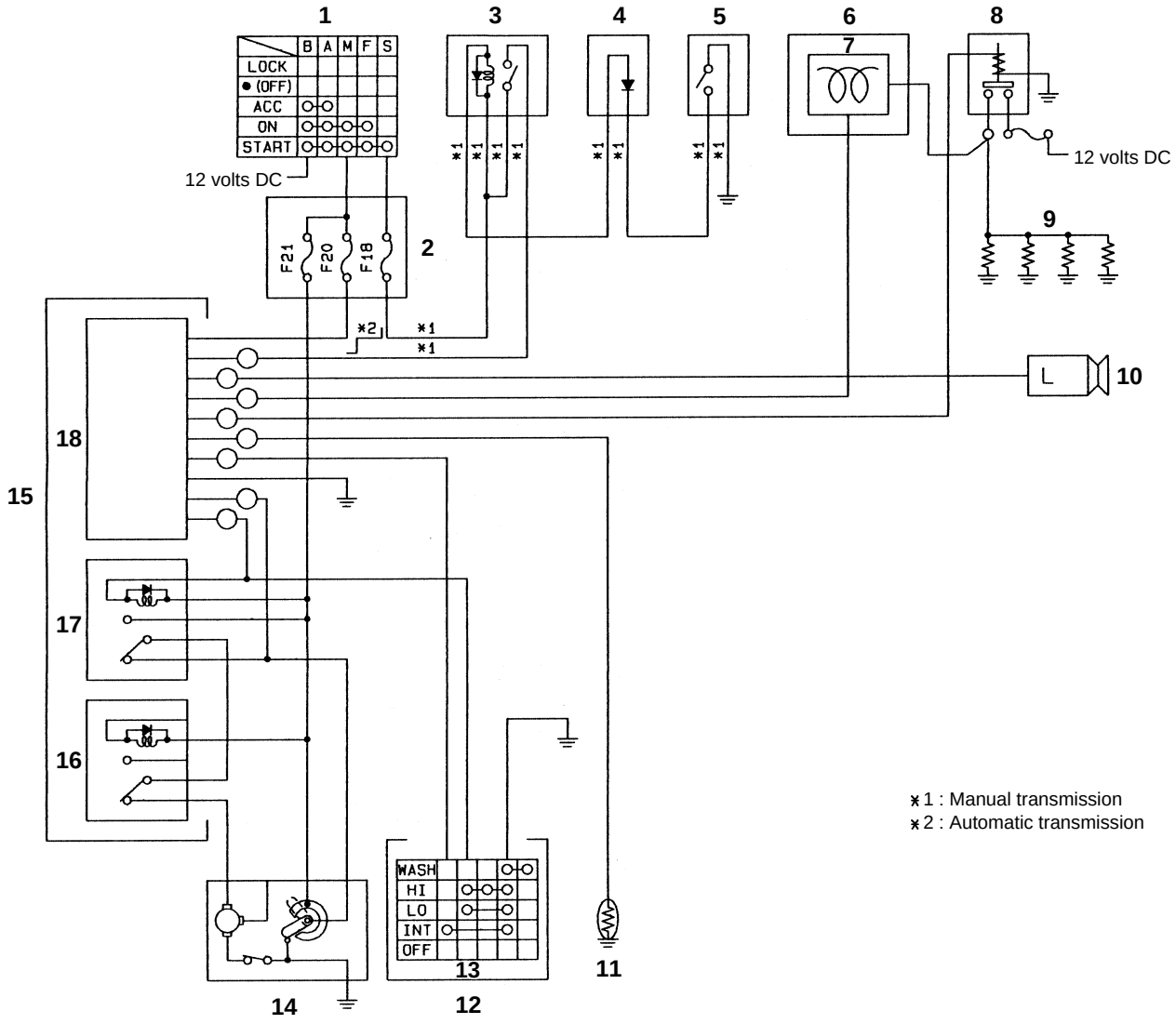
1
3
4
5
6
7
8
B A M F S
LOCK
● (OFF)
ACC
ON
START
12 volts DC
12 volts DC
F21
F20
F18
2
9
*2
*1
*1
L
10
18
15
17
16
WASH
HI
LO
INT
OFF
13
11
14
12
*1 : Manual transmission
*2 : Automatic transmission

12924

	Main functions of sensors	Information signals
1 Starter switch	Detection of START position	Ⓐ : Start signal
2 Fuse box		
3 Transmission neutral relay < Manual transmission >		
4 Diode < Manual transmission >		
5 Transmission neutral switch < Manual transmission >		
6 Meter cluster		
7 Engine preheating indicator lamp		Ⓒ : light-up signal
8 Glow relay		Ⓓ : Glow relay activation signal
9 Glow plug		
10 Alternator	Output of alternator charge signal	Ⓑ : Alternator charge signal
11 Water temperature sensor	Detection of engine coolant temperature	Ⓔ : Engine coolant temperature signal
12 Combination switch		
13 Wiper and washer switch		Ⓕ : Intermittent wiper switch signal
14 Wiper motor		Ⓖ : Wiper motor cam signal
15 Relay box		
16 Wiper relay HIGH		
17 Wiper relay LOW	Intermittent wiper operation	Ⓗ : Wiper relay activation signal
18 Multipurpose timing control unit		

Lighting and Alarm Control Unit

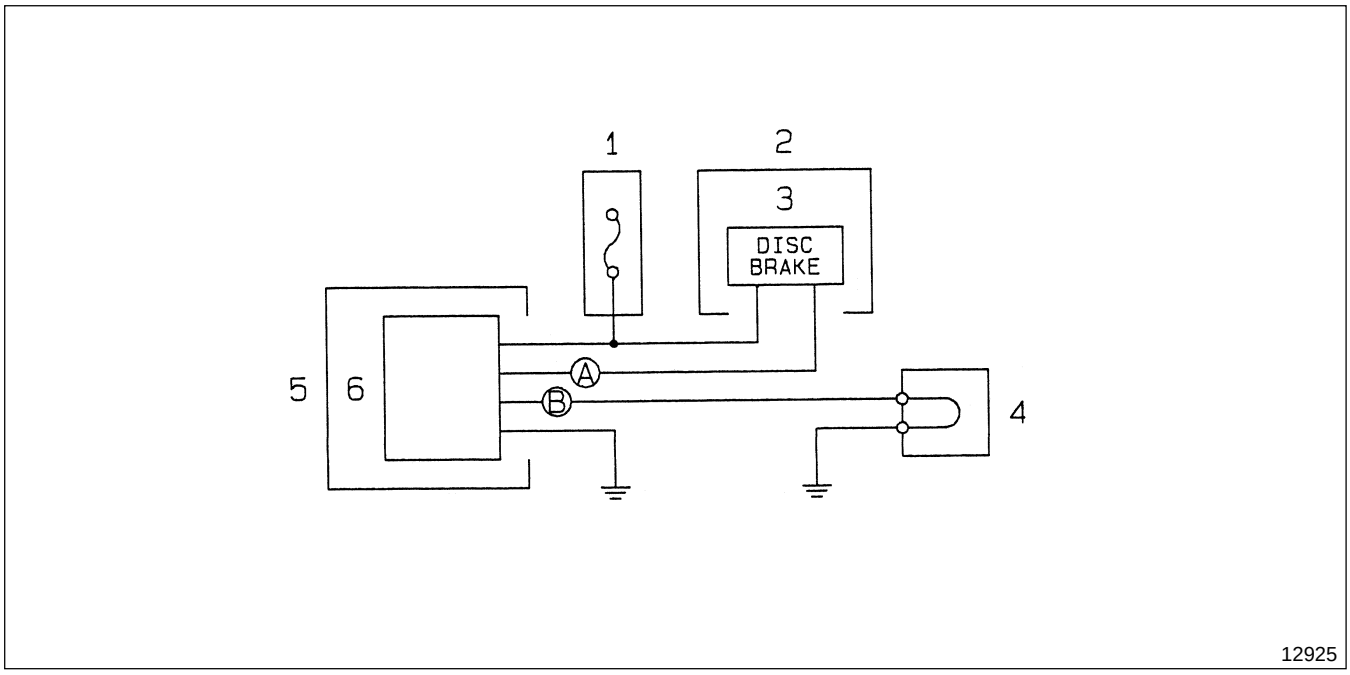

1 Fuse box
2 Meter cluster
3 Disc brake warning lamp
4 Brake pad wear indicator
5 Relay box
6 Lighting and alarm control unit

Ⓐ : Warning lamp light-up signal
Ⓑ : Brake pad wear signal

- Lighting and alarm control unit **6** controls the brake pad wear indication function.
- Based on information received from brake pad wear indicator **4**, lighting and alarm control unit **6** uses its internal circuit to light up disc brake warning lamp DISC BRAKE **3**. Gr 35

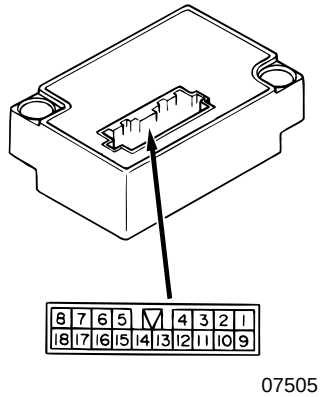

Terminal No.	Connecting destinations	Terminal No.	Connecting destinations
1	Starter switch (Terminal M)	10	–
2	–	11	–
3	–	12	–
4	Disc brake warning lamp	13	–
5	–	14	Fuse box (12 volts DC)
6	–	15	–
7	–	16	Brake pad wear indicator
8	–	17	–
9	–	18	–

M E M O

910 MULTIPURPOSE TIMING CONTROL UNIT CIRCUIT

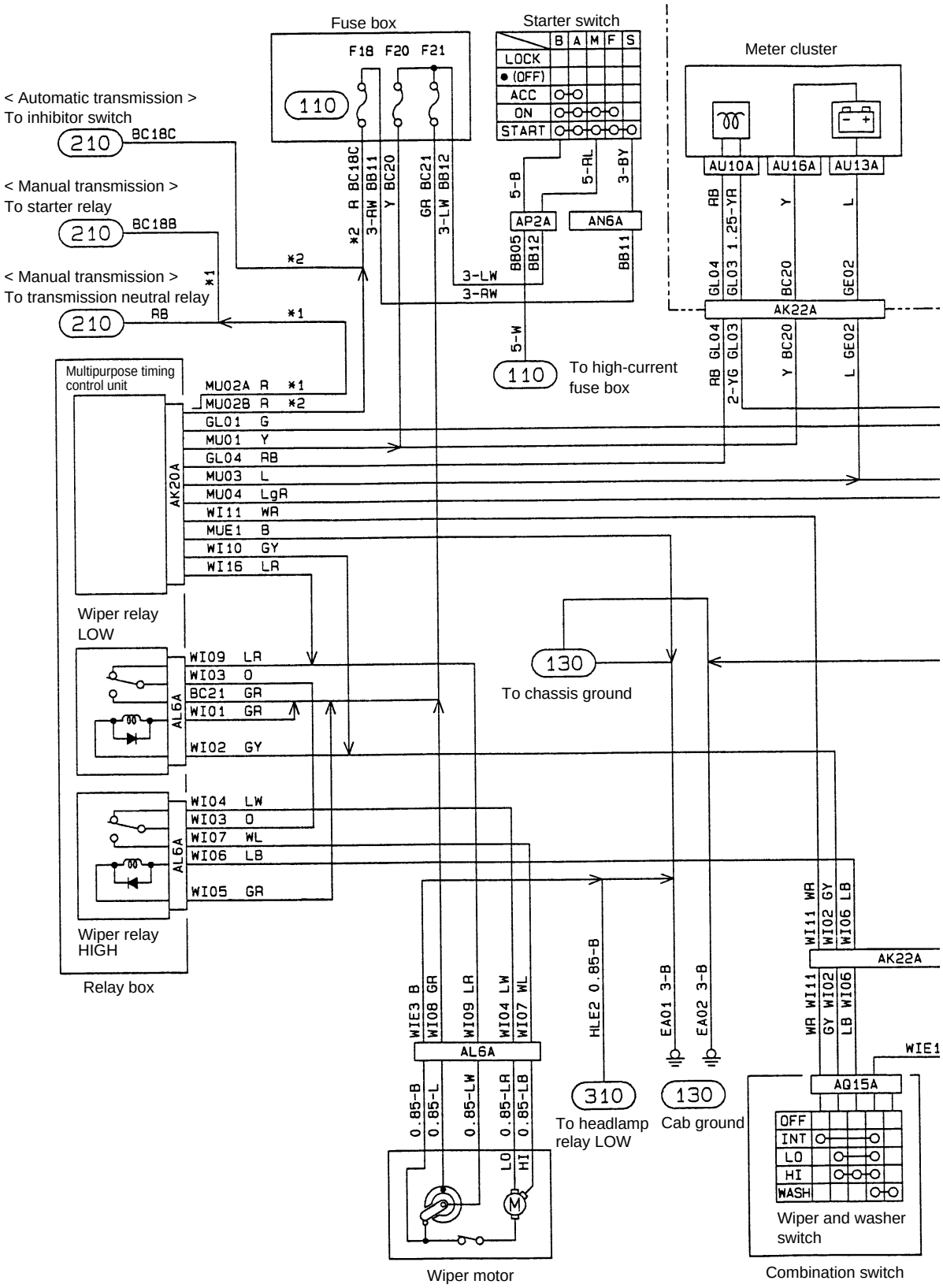

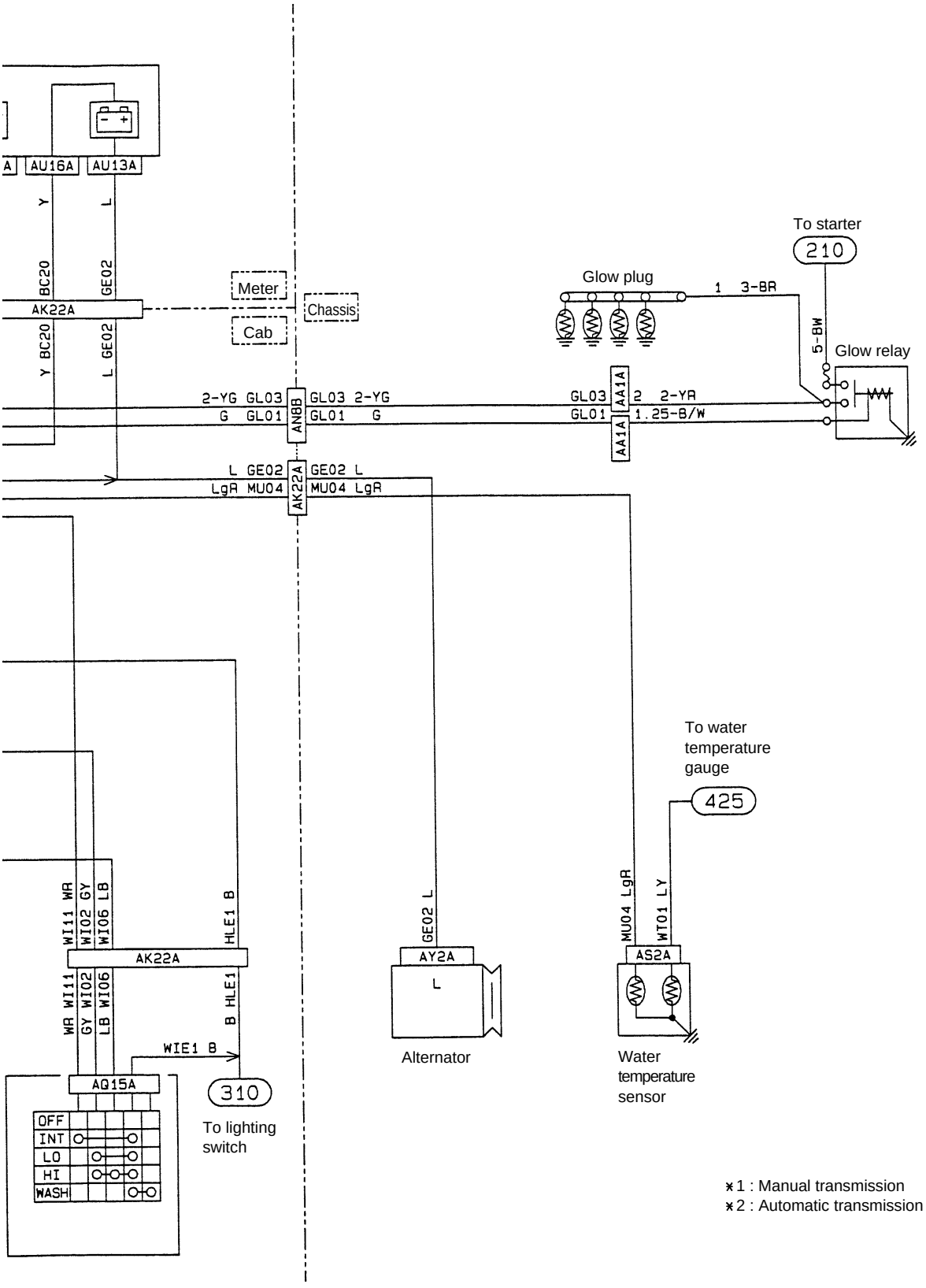
AU16A
AU13A
Y
L
BC20
GE02
AK22A
Meter
Chassis
Cab
Y BC20
L GE02
2-YG GL03
G GL01
AN8B
GL03 2-YG
GL01 G
L GE02
LgR MU04
AK22A
GE02 L
MU04 LgR
Glow plug
1 3-BR
To starter
210
5-BW
Glow relay
GL03
GL01
AA1A
2 2-YR
1.25-B/W
WI11 WR
WI02 GY
WI06 LB
HLE1 B
AK22A
WR WI11
GY WI02
LB WI06
B HLE1
WIE1 B
AQ15A
OFF
INT
LO
HI
WASH
310
To lighting switch
GE02 L
AY2A
L
Alternator
MU04 LgR
WT01 LY
AS2A
To water temperature gauge
425
Water temperature sensor
*1 : Manual transmission
*2 : Automatic transmission

10577

BACK HOME

FE

Service Manual

55A
Air Conditioner

55B
Heater

MITSUBISHI FUSO TRUCK OF AMERICA, Inc.

Pub No. TWSE9501-00

MITSUBISHI
FUSO

FE

Service Manual

Group 55A
Air-conditioner

Table of Contents

BACK

HOME

MITSUBISHI FUSO TRUCK OF AMERICA, Inc.

Pub No. TWSE9501-55A

FOREWORD

This service manual describes the maintenance data consisting of constructive & functional outlines, inspection, and repair service of MITSUBISHI FUSO GENUINE TRUCK CAB AIR CONDITIONER.

Table of contents

1. SPECIFICATIONS 1
2. OUTLINES OF REFRIGERATION SYSTEM 2
3. CONSTRUCTION 4
4. TROUBLE SHOOTING 11
5. REMOVAL AND INSTALLATION 18
6. TREATMENT AFTER INSTALLATION 21
7. MAINTENANCE 27
8. COOLING UNIT ASSEMBLY 28
9. COMPRESSOR & CLUTCH ASSEMBLY 30

1. SPECIFICATIONS

Item			Description
Vehicle name & model			FE
*Cooling capacity (on JIS conditions)			4,200 W (3,600 kcal/h, 14,300 B.T.U/h)
Compresssor	Model		MSC90T
	Displacement		90 cc
	Maximum revolution		MAX 9,000 min^{-1} (9,000 rpm)
	Compressor oil		SUNPAG 56, 120cc (7.3 cu.in)
Magnetic clutch	Type		Dry single disc magnet
	Voltage & input		DC 12V, 38 W
Cooling unit assembly	Type		Laminated type
Controls	Air flow control		Rotary switch, Four step type
	Temperature control		Electric thermostat
Condenser	Type		Corrugated fin type
Receiver assembly			Cylinder type, approx 350 cc (21.4 cu.in)
Protective equipment	Frost prevention (thermostat)		OFF : 33 °F (0.5 °C) ON : 38 °F (3.5 °C)
	Relief valve		Open : 3.50 ~ 4.10 MPaG (508 ~ 594 Lb/in^2G, 35.7 ~ 41.8 kgf/cm^2G) Close : 2.94 MPaG (427 Lb/in^2G, 30 kgf/cm^2G)
	Dual pressure switch	Low pressure switch	OFF : 0.2 MPaG (28 Lb/in^2G, 2 kgf/cm^2G) ON : 0.225 MPaG (32 Lb/in^2G, 2.25 kgf/cm^2G)
		High pressure switch	OFF : 2.94 MPaG (418 Lb/in^2G, 30 kgf/cm^2G) ON : 2.35 MPaG (334 Lb/in^2G, 24 kgf/cm^2G)
	Fuse (Blower fan) Fuse (Magnetic clutch)		15 A 15 A
Refrigerant and quantity			HFC - 134a, 1.4 lb (650 g)

*The * marked cooling capacity is based on JIS conditions
Compressor speed : 1,800 rpm
Condensing temperature : 131 °F (55 °C)
Cooling unit inlet air dry bulb temperature : 80.6 °F (27 °C)
Cooling unit inlet air wet bulb temperature : 67.1 °F (19.5 °C)
Terminal voltage : DC 12V

2. OUTLINES OF REFRIGERATION SYSTEM

2.1 Air system

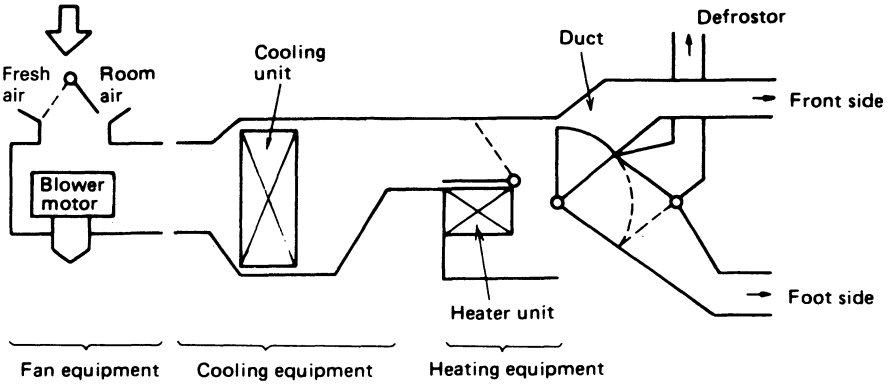

Cooling operation

Fresh air is induced to the cooling unit assembly by a blower fan, where it is cooled down and dehydrated, then discharged at the front side outlet through a duct.

Heating operation

Fresh air is induced to the heater unit by a blower fan through the cooling unit assembly, where it is heated, then discharged at the foot side outlet through a duct.

Dehumidifying operation

Fresh air is induced to the cooling by a blower fan,where it is cooled down and dehydrated,and succeedingly to the heater unit for warming, then discharged at the front side outlet through a duct.

Temperaure control

Cooled air and warmed air are mixed for temperature control of the room inside.

2.2 Refrigerating cycle

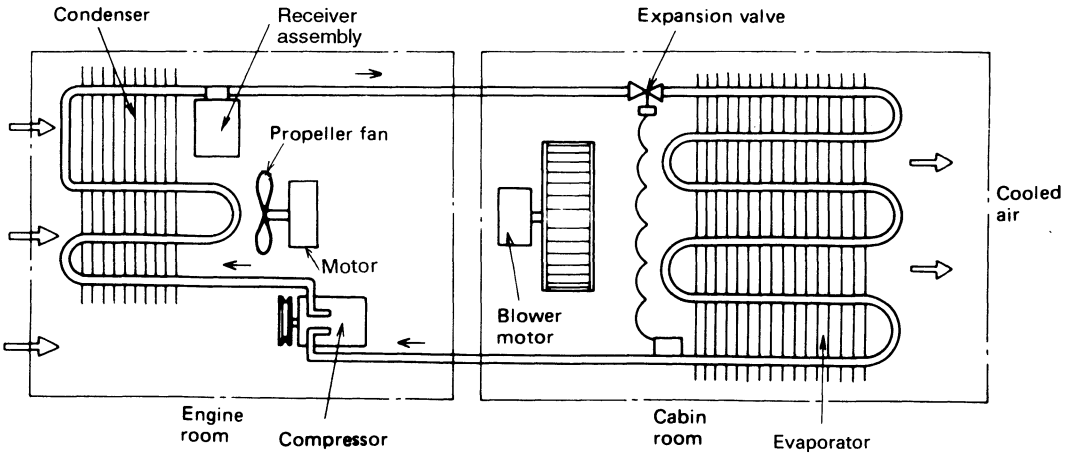

While the refrigerant, HFC-134a is cooling the air drawn into the evaporator, it evaporates and becomes a gas. This gas is compressed to high pressure and temperature in the compressor, and sent into the condenser where it is cooled and becomes liquid.

This cooling in the condenser is carried out by the open air passing through the condenser sucked by radiator fan and vehicle motion of the vehicle. The liquid refrigerant flows through the receiver assembly where water and dirt are removed, and then it enters the expansion valve. Here the liquid refrigerant is throttled and changed to a mixture of liquid and gas in low temperature and low pressure, and is sent to the evaporator.

In the evaporator, the refrigerant absorbs heat from the surroundings and becomes a gas. That is, because the evaporator itself is cooled at this time, the return air to the cooling unit is cooled, and the interior of the vehicle becomes cool. In this way the refrigerant flow makes a complete circuit.

2.3 Electrical system

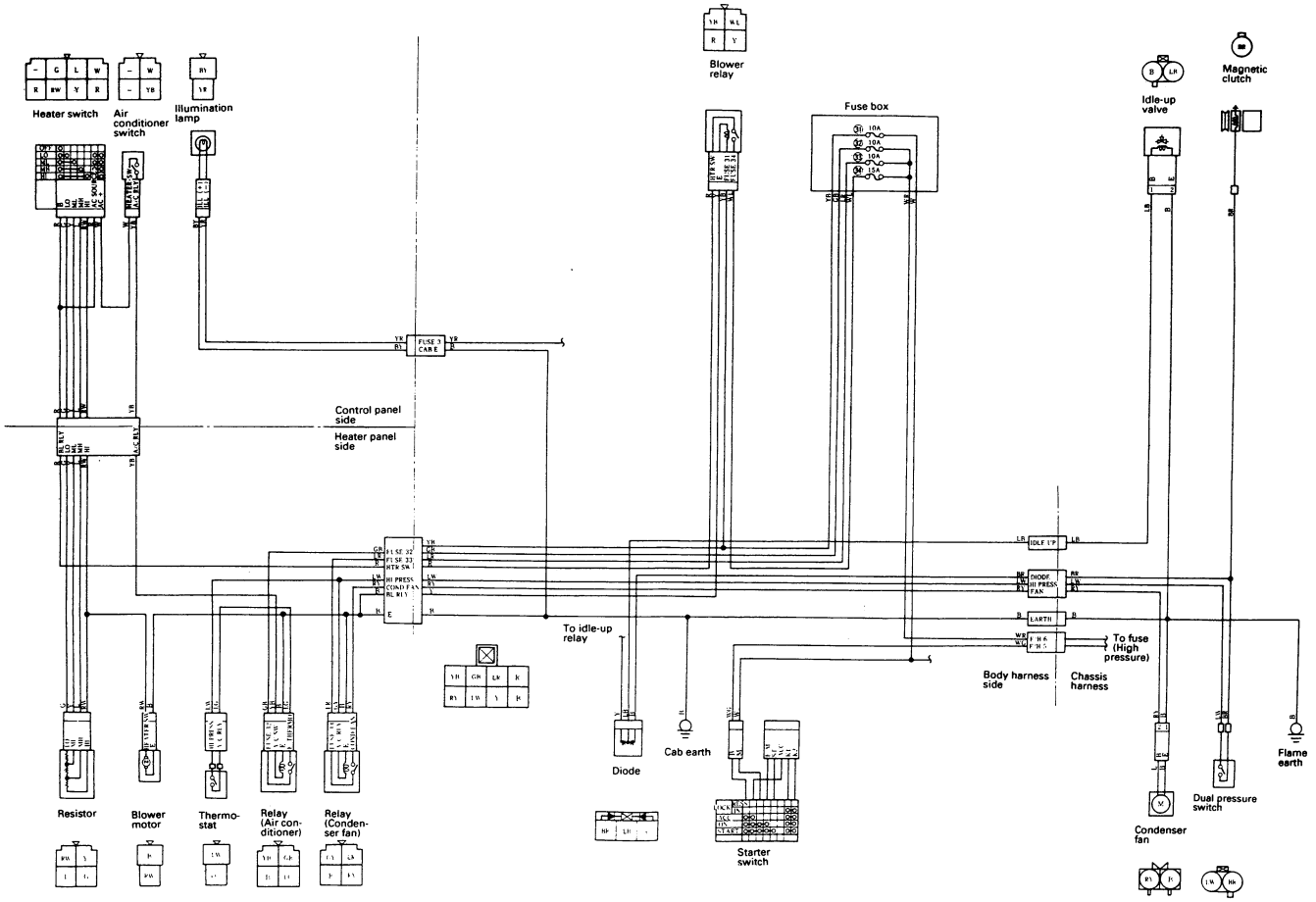

The power source is supplied from the TRUCK battery. When the blower switch is put ON, the power relay becomes ON, and electricity is connected to the magnetic clutch of the compresssor. The magnetic clutch switches ON or OFF by air conditioner switch, thermostat, and low pressure switch as the controls for operation service, or safety protection.

The cabin room air temperature is set to a preset point by adjusting the temp.control lever, and the opening degree of the air mix damper.

3. CONSTRUCTION

3.1 Engine room

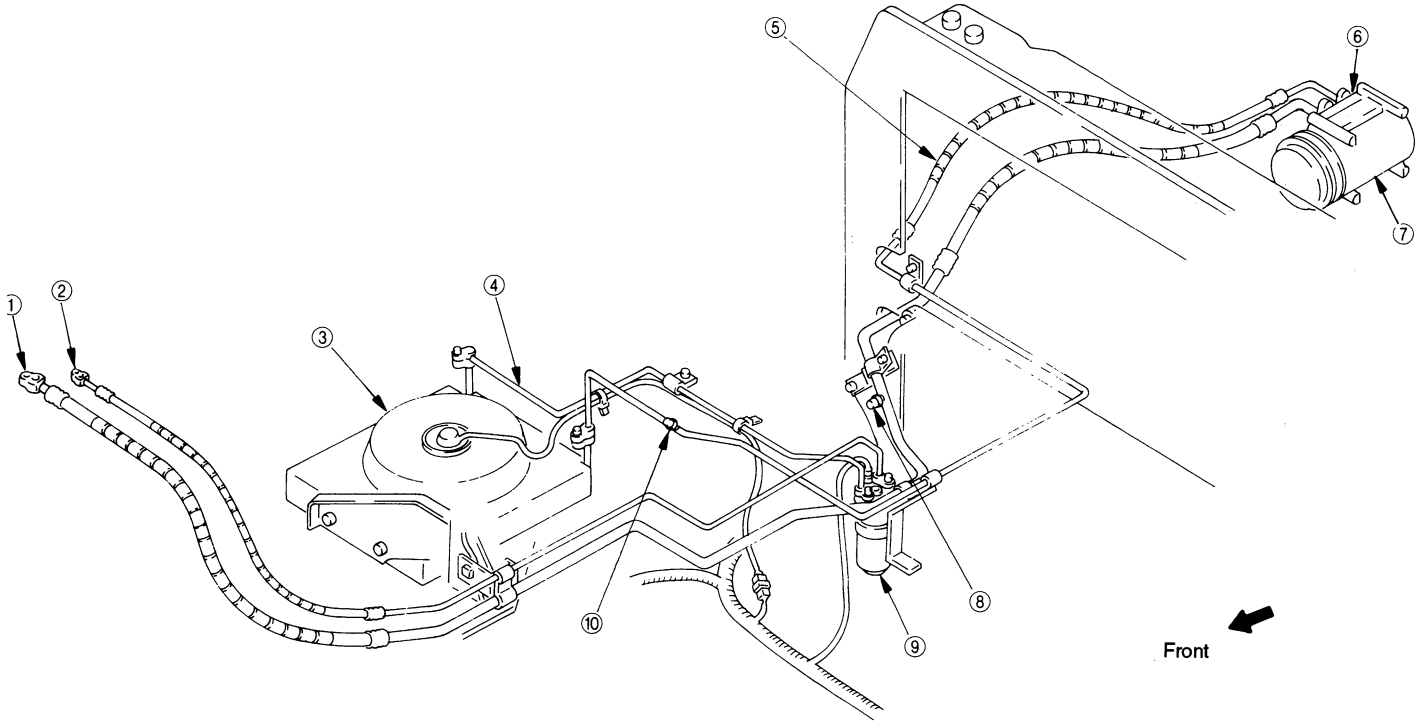

① Suction hose
② Liquid hose
③ Side condenser assembly
④ Pipe (LQ)
⑤ Discharge hose
⑥ Relief valve
⑦ Compressor & clutch assembly
⑧ Check valve (LP)
⑨ Receiver assembly
⑩ Check valve (HP)

3.2 Cabin room

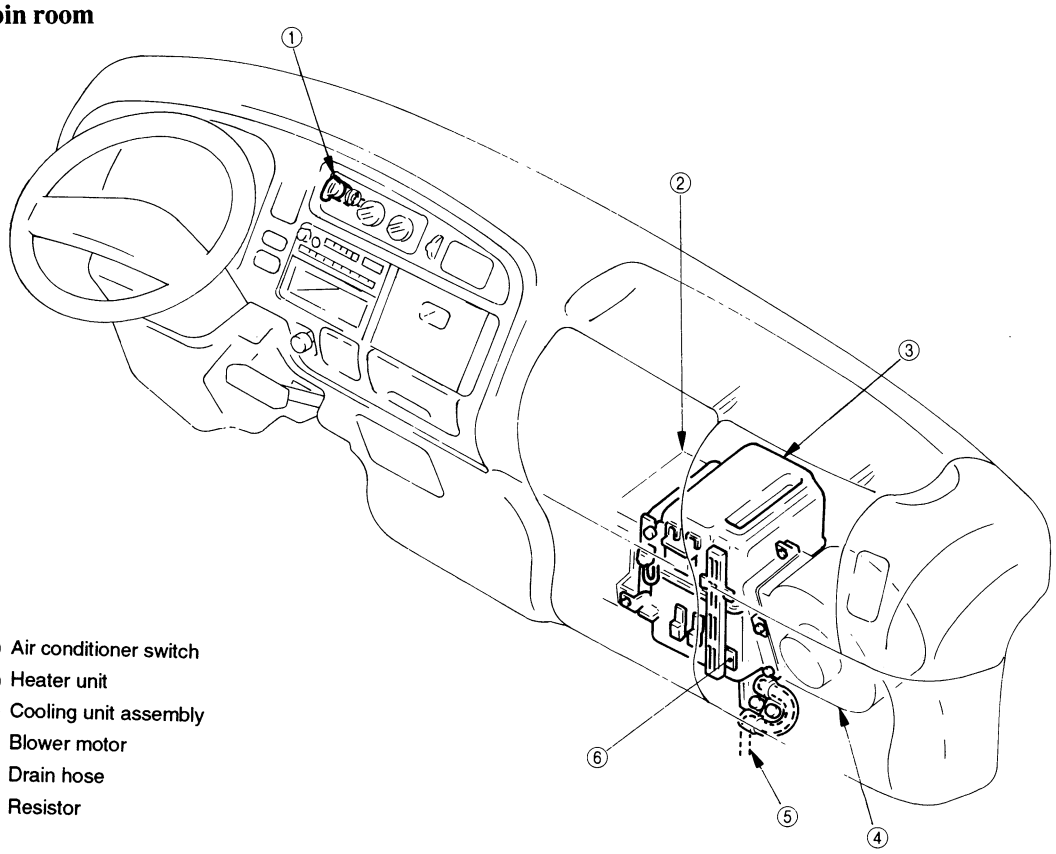

① Air conditioner switch
② Heater unit
③ Cooling unit assembly
④ Blower motor
⑤ Drain hose
⑥ Resistor

3.3 Control system

(1) Controls in panel
Do not run the air conditioner when it is child.

Air conditioner switch
By select the air conditioner switch initially in cooling or drying operation, the compressor starts running.

Fan switch
The air flow is selectable, out of the below four volume.

OFF	No air flow
○	Gentle
○	Low
○	Medium
○	High

Air outlet mode select switch
The air outlet is selected by positioning in cooling and heating operation.

- .....The conditioned air is discharged at the center and both side outlets directed by the louvers as required.
- .....The conditioned air is discharged at the center and both side and foot outlets directed by the louvers as required.
- .....The conditioned air is discharged at the foot outlets directed by the louvers as required.
- .....The conditioned air for dehumidifying is discharged at the foot outlets and to the front glass.
- .....The conditioned air for dehumidifying is discharged to the front glass.

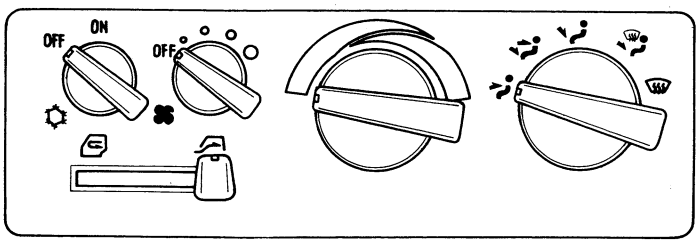

Shift lever, air sirculation
The resirculation air is selectable out of the below sirculation models.

- .....ROOM AIR CIRCULATION
- .....FRESH AIR INTAKE

Temperature control switch
The discharged air temperature is controllable by selecting the position of the control lever in cooling, heating or drying operation.

BLUE ZONE ..... For cool air blow

RED ZONE ..... For warm air blow

By turning the switch toward the BLUE and RED ZONE sides, the supply air temperature becomes more cooler and warmer respectively.

(2) Oeration control

Operation mode	Setting control lever	Air delivery	Remarks
COOL	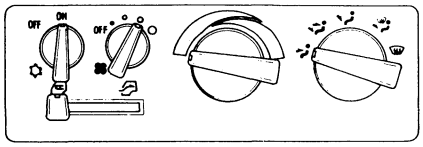	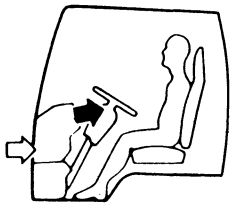	Earlier cooling service, or conditioning at dusty, polluted air prevailing places: Shift lever, air circulation – – 
HEAT	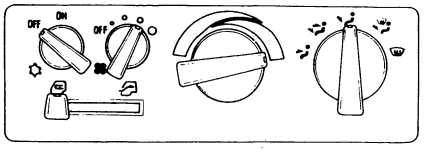	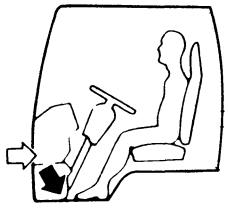	Earlier cooling service, or conditioning at dusty, polluted air prevailing places: Shift lever, air circulation Air outlet mode select switch — 
DEHUMIDIFY	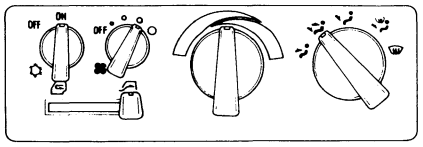	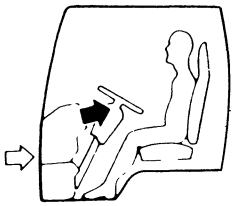	Wetty conditioning in head cooled, and foot warmed : Shift lever, air outlet Air outlet mode select switch — 
DEFROST	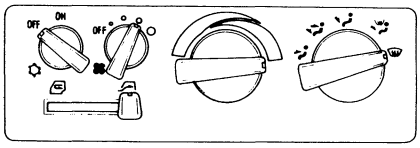	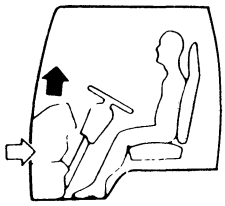	
VENTILATION	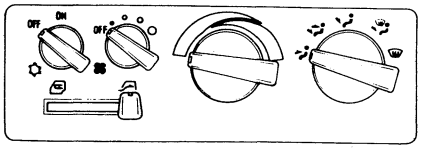	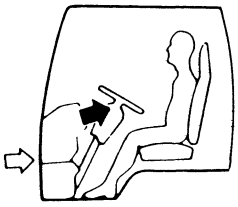	

3.4 Compressor and clutch assembly

3.4.1 Compressor

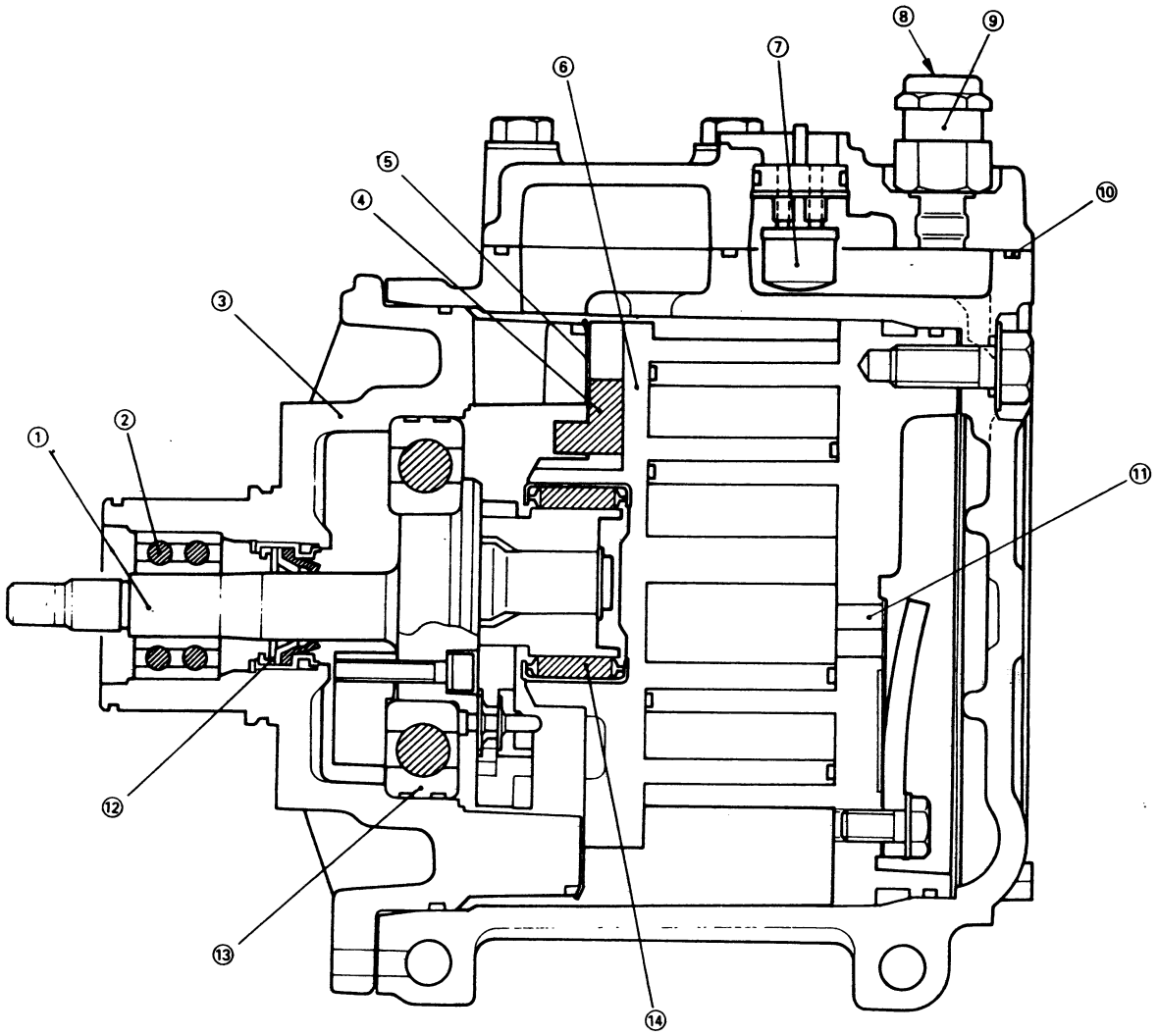

① Crankshaft
② Bearing
③ Front case assembly
④ Housing assembly
⑤ Thrust plate
⑥ Orbit scroll assembly
⑦ Thermostat
⑧ Dust seal
⑨ H/P relief valve
⑩ O ring
⑪ Port hole
⑫ Shaft seal
⑬ Bearing
⑭ Needle bearing

3.4.2 Check valve

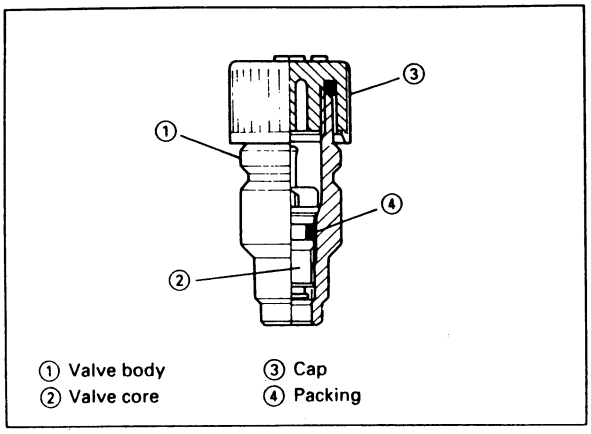

The suction hose and discharge hose are provided with check valve, and designed for gas evacuation and charging service. (shown above)

In the valves, a valve rubber tube, as in automobile tire tubes, is provided as shown in the figure.

Slackening the flare nut on the gauge manifold causes the passage to close automatically by the spring force, and tightening the flare nut causes the passage to open while pressing the compressed spring.

3.4.3 Magnetic clutch

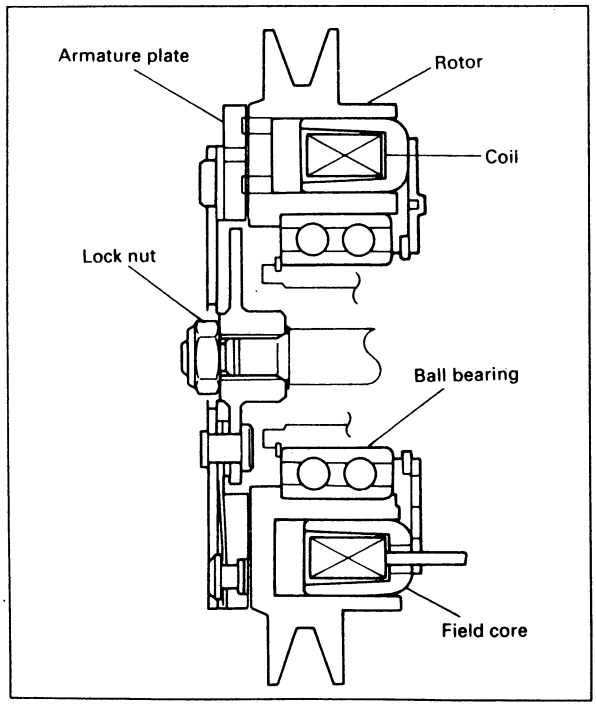

The magnetic clutch is mounted on the compressor crankshaft to start and stop the compressor.

This means that the magnetic clutch is actuated to control the compressor operation electrically by the thermostat.

3.5 Side condenser assembly

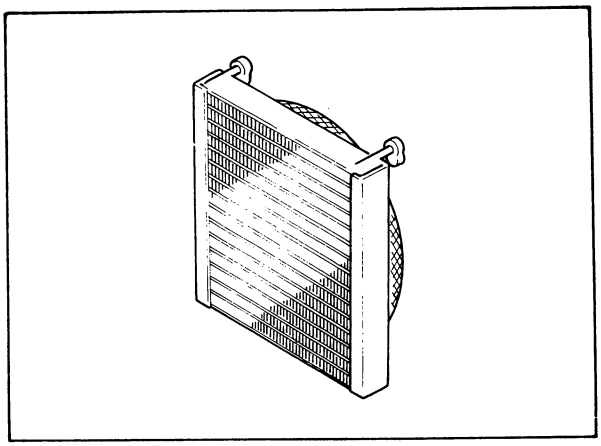

The condenser is a means to liquefy the refrigerant gas. As the condenser is cooled by the air pulled in by the condenser fan, the refrigerant in the condenser is cooled into liquid. Therefore, when any obstacle prevents the air from flowing evenly to the condenser or the air flow is short circuited, the cooling effect is reduced, with a decrease in the performance of the condenser. When the vehicle is driven at a high speed, the air flow increases resulting in an increase of the cooling effect, and performance of the condenser.

3.6 Relief valve

The relief valve is mounted to the compressor & clutch assembly. The relief valve is usually closed by spring. If pressure of refrigerant in air conditioner system is higher than spring pressure, refrigerant is discharged from relief valve. The pressure drop due to discharge refrigerant, and relief valve is closed again.

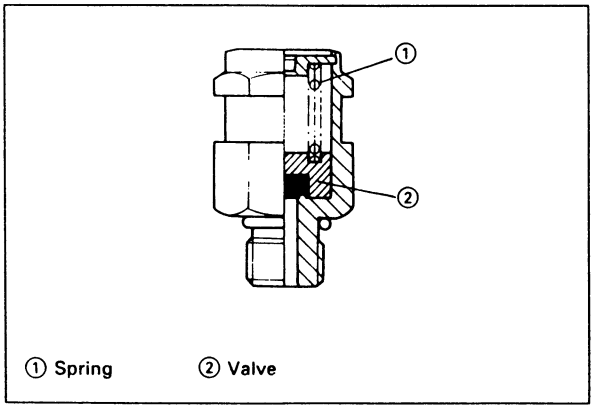

Preset : MPaG (Lb/in²G, kgf/cm²G)

Open	3.50~4.10 (508~594, 35.7~41.8)
Close	2.94 (427, 30)

3.7 Receiver assembly

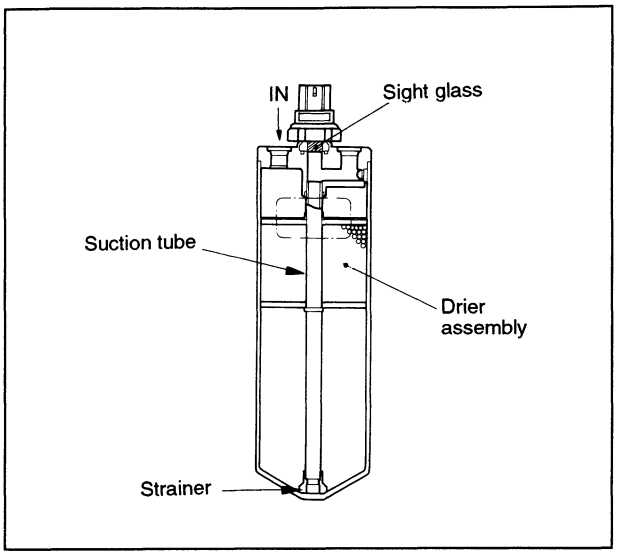

A receiver assembly is served as a refrigerant reservoir located between the condenser and the expansion valve.

The receiver assembly consists of a filter and a sight glass. The filter is used to remove dust, the drier is used to remove moisture from the refrigerant in the circuit, and the sight glass is used to check the refrigerant charge.

Any moisture in the refrigerant may not only corrode metal surfaces in the refrigerant circuit, but also cause the throttle of the expansion valve to be frosted, resulting in the interruption of refrigerant circulation.

Therefore,the receiver assembly must be handled very carefully. When storing or installing it,care should be taken to protect it from the deterioration of drying performance due to exposure to the air.

The retardation of heat exchange, or any fire around the refrigerant circuit will cause excessive pressurization or heating of the refrigerant. Should such an accident occur, the refrigerant in the circuit must be expelled to the outside to prevent the above hazards.

The sight glass is a sort of peep window used to check the refrigerant flow in the refrigerant circuit.

The sight glass appears clear when the refrigerant flow is enough, and shows bubbles flowing when the refrigerant flow is short.

3.8 Cooling unit assembly

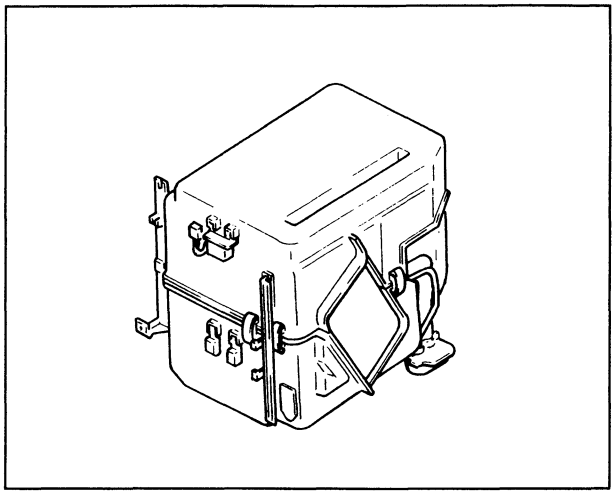

Evaporator core

The evaporator core is a type of corrugated fin and tube.

The tube is arranged in zigzag to achieve high efficiency, and to make the core system compact.

A thicker reinforced plastic plate is used as the enclosure to inclease heat and shock resistance,and to protect the core from humidity. This case is a split type, and in a simple design to facilitate installation on the floor panel and the instrument panel frame of the vehicle.

3.9 Expansion valve

The expansion valve is mounted at the inlet of the cooling unit. The liquid refrigerant from the receiver is led to it through a narrow passage (for throttle action), where-in, the liquid refrigerant is condensed with pressure dropping and at the same time the flow rate is adjusted before the refrigerant is sent to the cooling unit. The refrigeration load in the cooling unit is not constant, but usually fluctuates over a certain range. So the refrigerant flow should undergo the control in design. An automatic expansion valve performs this function automatically. The air conditioner uses a thermal type automatic expansion valve.

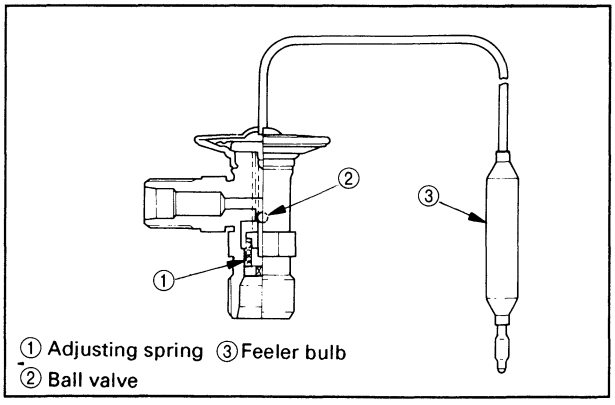

3.10 Dual pressure switch

The dual pressure switch, fixed to the receiver functions as a protector for stopping the compressor (OFF) at a preset value of pressure in the refrigerant circuit.

Preset : MPaG (Lb/in²G, kgf/cm²G)

	L.P.SW	H.P.SW
OFF	0.2 (28, 2)	2.94 (418, 30)
ON	0.225 (32, 2.25)	2.35 (334, 24)

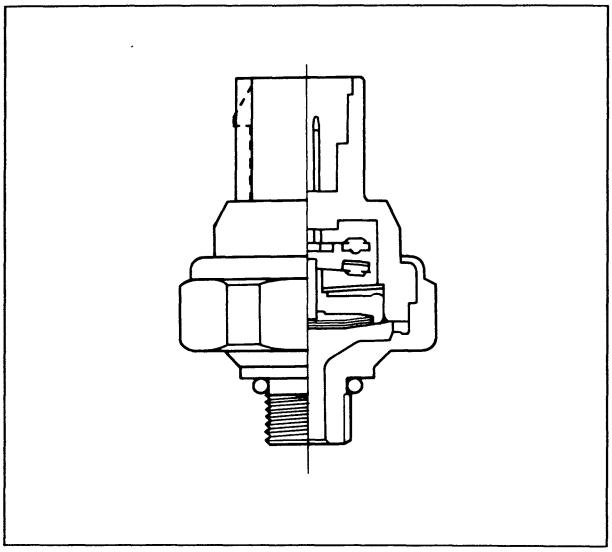

3.11 Power relay

The power relay is excited at a closed position of the micro switch and enables the magnetic clutch to be ready for engaging electrically.

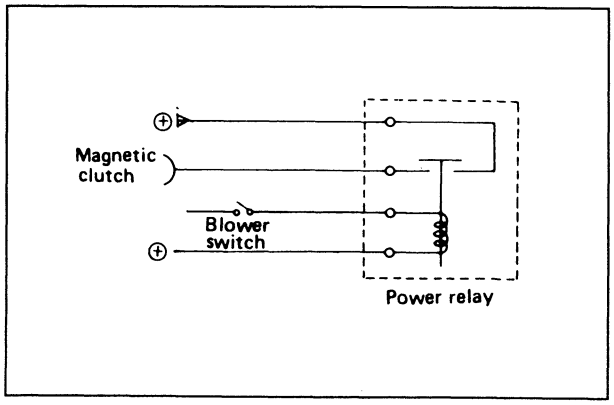

3.12 Air conditioner switch

The air conditioner switch functions as an operation controller for starting or stopping the compressor in cooling and dehumidifying

Set the it to the "ON" position, the magnetic clutch becomes engaged and the compresssor starts.

Set the it to the "OFF" position, the magnetic clutch becomes disengaged and the compresssor stops.

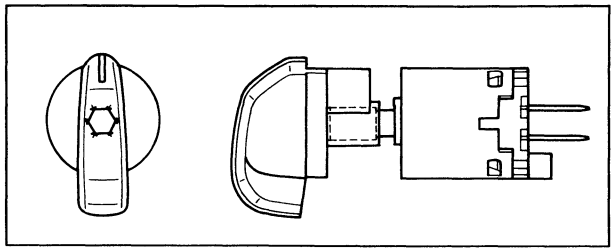

3.13 Thermostat

The thermostat is mounted on the evaporator case.

It senses the temperature of the evaporator fins, and controls the compressor operation for ON or OFF as specified below.

Preset : °F(°C)

OFF	33 (0.5)
ON	38 (3.5)

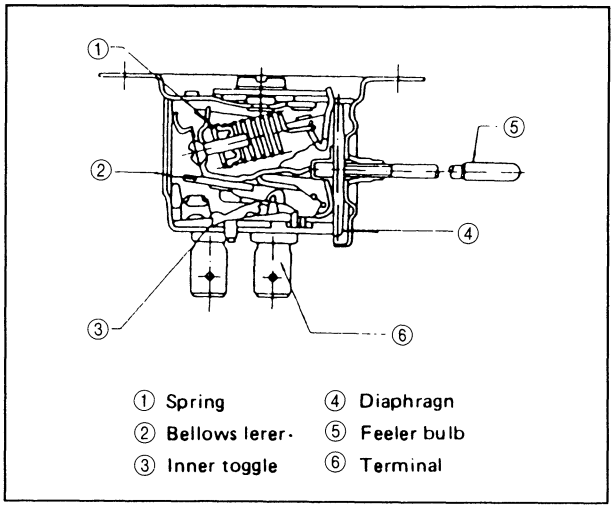

4. TROUBLE SHOOTING

4.1 General precautions

(1) When handling refrigerant (HFC-134a), the following precautions must be observed.
   a. Always wear eye protection and a pair of gloves which handling refrigerant.
   b. Be careful the liquid refrigerant dose not contact the skin.
   c. Keep the refrigerant container blow 100 degrees F (40 degrees C).
   d. Do not handle the refrigerant in an enclosed area having an open flame.The refrigerant may produce a poisonous gas.
   e. When dumping the refrigerant from the system, release it slowly so as not to expell all the compressor oil.

(2) If liquid refrigerant strikes eye or skin.
   a. Do not rub eye or skin.
   b. Splash large quantities of cool water on the eye or skin.
   c. Rush to a physician or hospital for immediate professional treatment.

4.2 Trouble cause and remedy

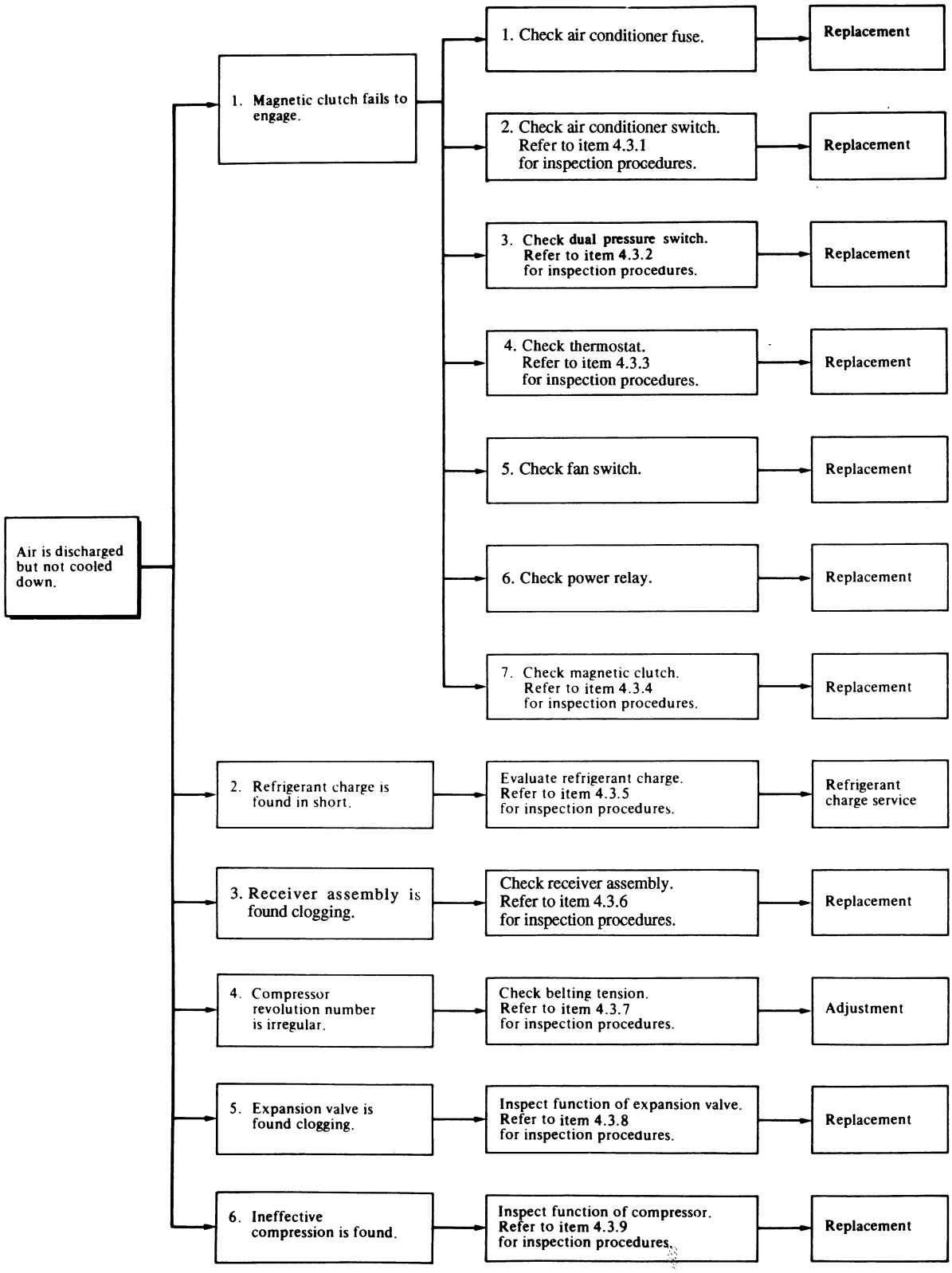

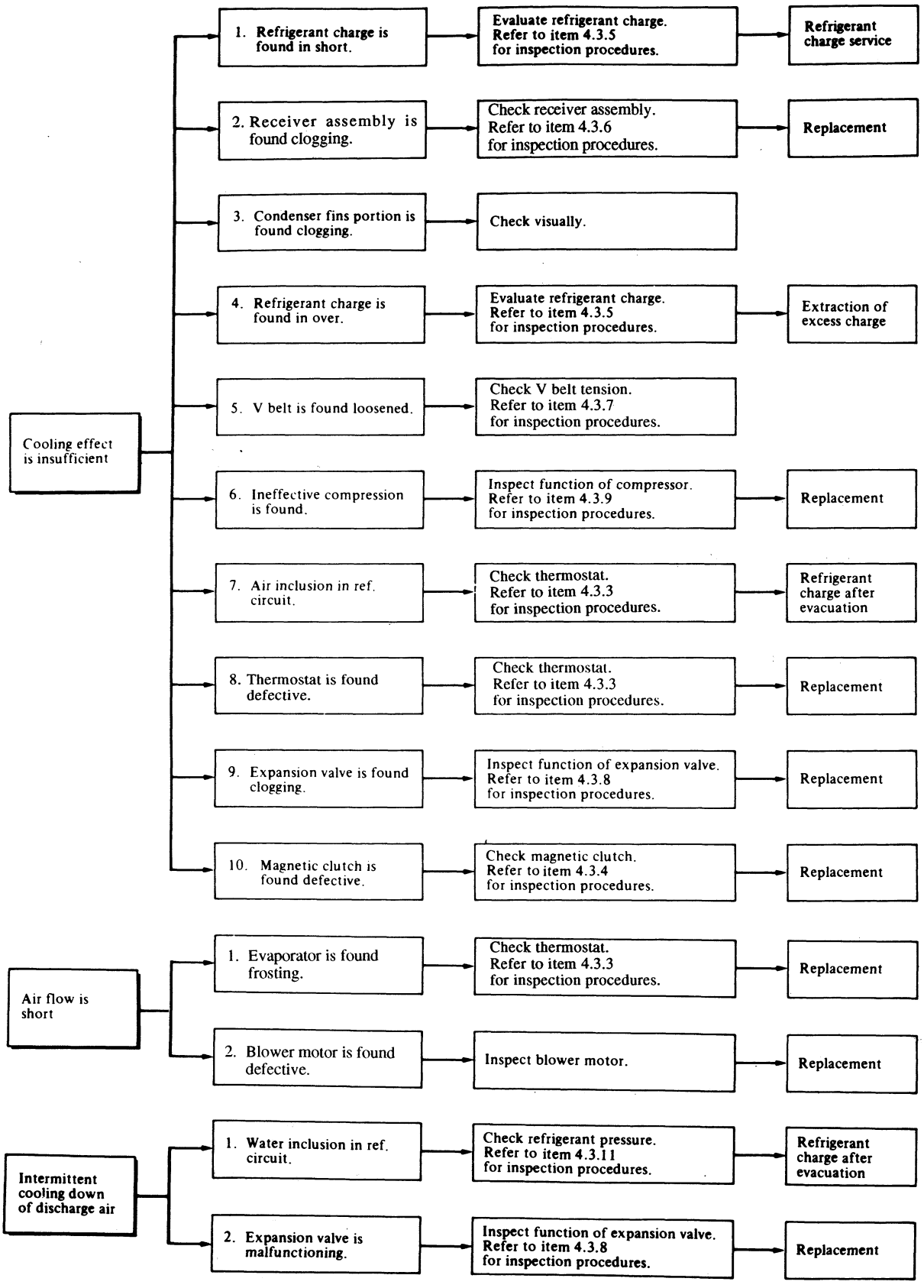
Cooling effect is insufficient
1. Refrigerant charge is found in short.
Evaluate refrigerant charge. Refer to item 4.3.5 for inspection procedures.
Refrigerant charge service
2. Receiver assembly is found clogging.
Check receiver assembly. Refer to item 4.3.6 for inspection procedures.
Replacement
3. Condenser fins portion is found clogging.
Check visually.
4. Refrigerant charge is found in over.
Evaluate refrigerant charge. Refer to item 4.3.5 for inspection procedures.
Extraction of excess charge
5. V belt is found loosened.
Check V belt tension. Refer to item 4.3.7 for inspection procedures.
6. Ineffective compression is found.
Inspect function of compressor. Refer to item 4.3.9 for inspection procedures.
Replacement
7. Air inclusion in ref. circuit.
Check thermostat. Refer to item 4.3.3 for inspection procedures.
Refrigerant charge after evacuation
8. Thermostat is found defective.
Check thermostat. Refer to item 4.3.3 for inspection procedures.
Replacement
9. Expansion valve is found clogging.
Inspect function of expansion valve. Refer to item 4.3.8 for inspection procedures.
Replacement
10. Magnetic clutch is found defective.
Check magnetic clutch. Refer to item 4.3.4 for inspection procedures.
Replacement
Air flow is short
1. Evaporator is found frosting.
Check thermostat. Refer to item 4.3.3 for inspection procedures.
Replacement
2. Blower motor is found defective.
Inspect blower motor.
Replacement
Intermittent cooling down of discharge air
1. Water inclusion in ref. circuit.
Check refrigerant pressure. Refer to item 4.3.11 for inspection procedures.
Refrigerant charge after evacuation
2. Expansion valve is malfunctioning.
Inspect function of expansion valve. Refer to item 4.3.8 for inspection procedures.
Replacement

ɛction procedures

r conditioner switch

ug the air conditioner switch.

:k the continuity between terminals of the air itioner switch with a tester.

inuity

itch position	Terminal's number	Result, in normal
OFF	①—②	No
ON	①—②	Yes

Terminal's number / h ion	1	2
OFF	○	
ON	○—○	

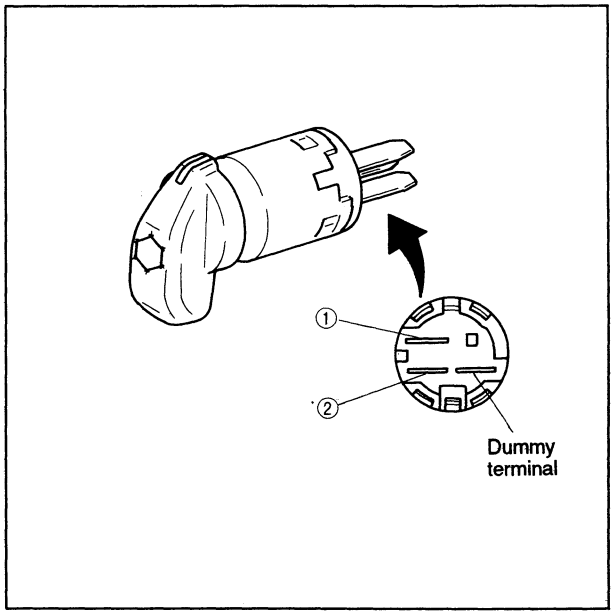

ɔual pressure switch

dual pressure switch is attached to the receiver ɔly for controlling the operation of the air oner by checking the inside pressure of the r assembly.

MPaG (Lb/in²G, kgf/cm²G)

High side	Low side
2.94 (418, 30)	0.2 (28, 2)
2.35 (334, 24)	0.225 (32, 2.25)

ıplug the connector at the receiver assembly.

ıeck the continuity between terminals of the nnector with a tester.

hen electric continuity is found, connect the nnector to the high pressure switch.

ttach the high pressure gauge and low pressure ıuge.

perate the air conditioner.

ɔver the surface of the condenser by using a piece paper.

hen the high pressure exceeds 2.94 MPaG (418 b/in²G, 30 kgf/cm²G), if the magnetic clutch is ırned off, the switch is normal.

the magnetic clutch is not turned off, replace ressure switch with new one.

heck the accuracy of the preset as below.

ı) Stop the air conditioner.

ɔ) Purge the air conditioner of refrigerant slowly starting at over 0.225 MPaG (32 Lb/in²G, 2.25kgf/cm²G).

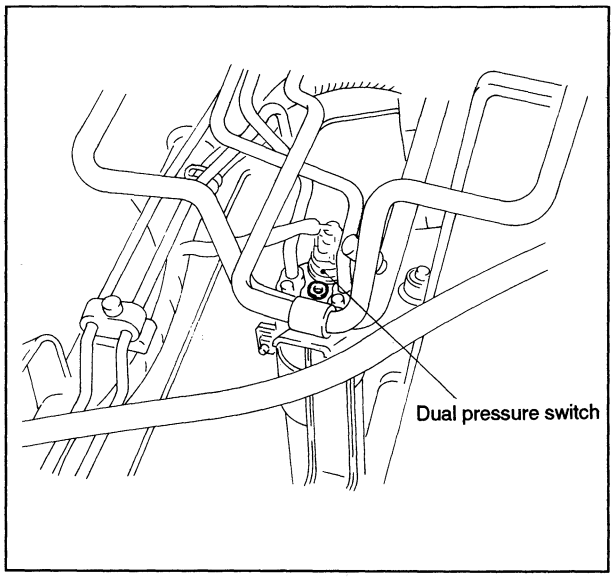

(c) At reading the pressure 0.2 MPaG (28 Lb/in²G, 2 kgf/cm²G), the switch opens.

(d) Here, stop the purging, then turn it to charging.

(e) At reading the pressure 0.225 MPaG (32 Lb/in²G, 2.25 kgf/cm²G), the switch closes.

If the dual pressure switch does not meet specifications, replace the switch.

4.3.3 Thermostat

The thermostat is mounted on the evaporator case. It controls the operation of the air conditioner by sensing the temperature of the evaporator fins.

Preset : °F (°C)

OFF	33 (0.5)
ON	38 (3.5)

(1) Check the accuracy of the preset as below.
  (a) Soak the sensor of the thermostat in ice-water of below 33 °F (0.5 °C).
  (b) Check the cotinuity between the switch terminals.
  (c) Pull the sensor out of the ice-water, and check the continuity at over 38 °F (3.5 °C) of the sensor.

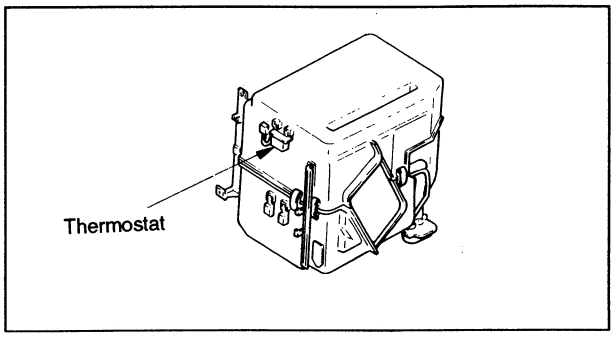

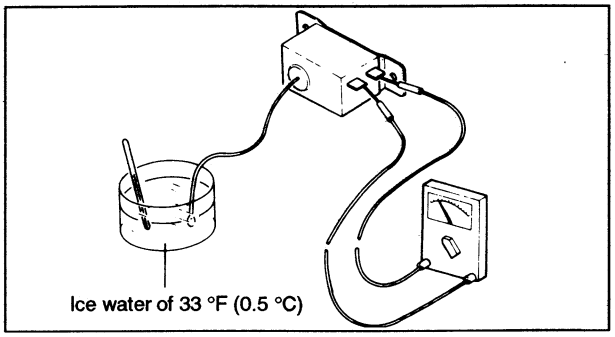

4.3.4 Magnetic clutch

(1) Disconnect the wiring to the magnetic clutch.
(2) Apply a positive side power voltage to the magnetic clutch through the wiring.
(3) In the case of regular functioning, the pulley and magnetic clutch are engaged with a clicking sound. The failing means any malfunction of the magnetic clutch.

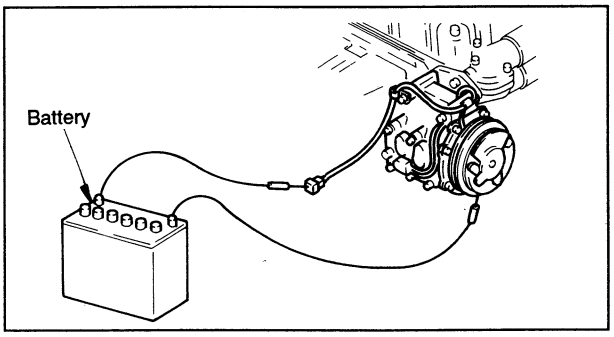

4.3.5 Refrigerant charge

(1) Set the temperature control lever at the cool position.
(2) Open doors of the room.
(3) Set the blower switch at the ON position.
(4) Adjust the engine revolution at 1500 rpm.
(5) Operate the air conditioner switch for comp. ON.
(6) Watch the sight glass of the receiver assembly at the inside of the engine room.
  (a) If judged as insufficient refrigerant charging, repair the leaks, then charge it additionally.
  (b) If judged as over charging of refrigerant, extract an excess refrigerant.
(7) Diagnosis by pressure reading
  (a) Short of refrigerant :
  Lower pressure for both L.P. and H.P. reading
  (b) Express of refrigerant :
  Higher pressure for L.P. and H.P. reading

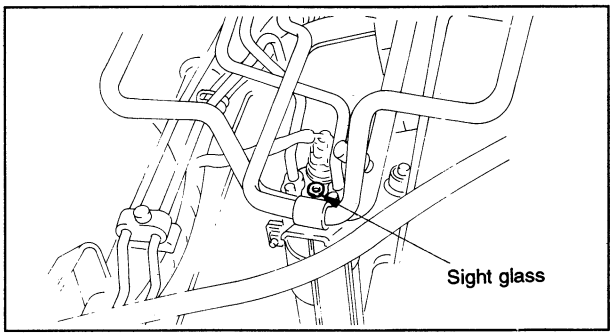

Sight glass		Remarks
Proper refrigerant level	Bubble	1. Bubble occasionally appears. 2. Bubble disappear if speed is a little increased.

Insufficient refrigerant	Bubble	Considerable bubbles appear. If the system is extremely short of refrigerant, the sight glass appear white.
Excessive refrigerant		1. No bubbles appear. 2. Slight bubbles appear if speed is decreased.

4.3.6 Receiver assembly

(1) While operating the air conditioner, touch the refrigerant piping with a hand at the inlet and outlet portions.

(a) Sensed temperature difference :

It is possible that clogging is happening at the inside, liquid receiver assembly is to be replaced with a new one.

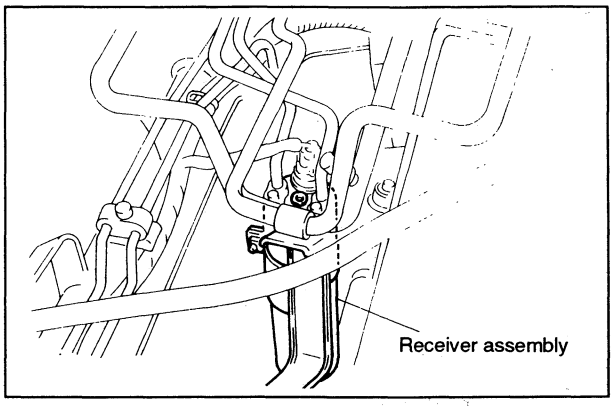

4.3.7 Belt tension

(1) Depress the V belt with a thumb at the ⬅ marked position, and adjust the stretching as below.

Stretching degree : 7 ~ 10 mm (0.28 ~ 0.40 in) (deflection)

(2) Adjustment

(a) Loosen the nut of the tension pulley.

(b) Control the belting tension by the adjusting bolt.

(c) After finishing, retighten the nut as before.

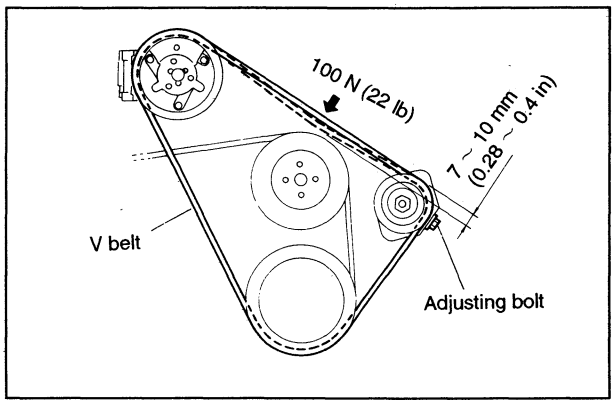

4.3.8 Expansion valve

⚠CAUTION

The test should be applied to only the case of the other components being free from troubles, and the expansion malfunctioning singly.

(1) Build up the test circuit with a gauge manifold.

(2) Soak the sensor bulb in ice water of 32 °F (0 °C), and of 50 °F (10 °C) respectively.

(3) Pressurize the H.P. side with dry nitrogen gas of 1.03MPaG (10.5 kgf/cm²G).

(4) Check the reading of the L.P. side pressure gauge for the standard range.

At 32 °F (0 °C) --- 0.127 MPaG (18.4 Lb/in²G, 1.3 kgf/cm²G)

At 50 °F (10 °C) --- 0.23 MPaG (33.4 Lb/in²G, 2.35 kgf/cm²G)

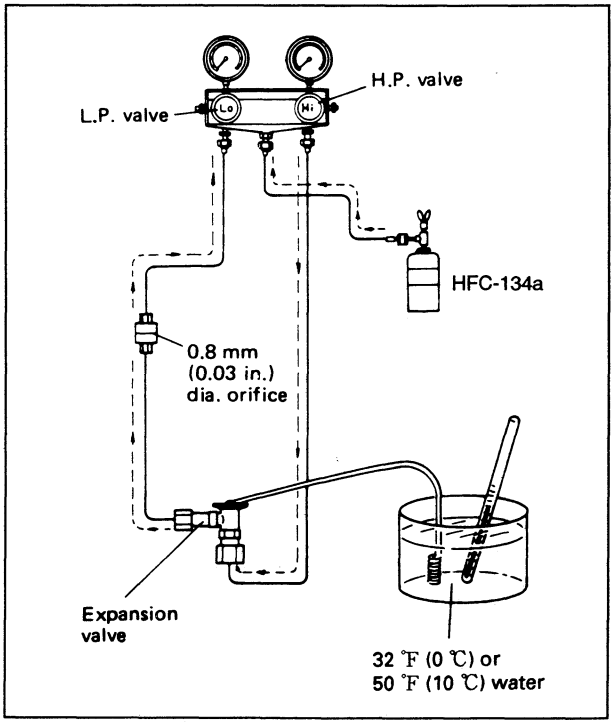

4.3.9 Pressure check

(1) Mount a low pressure gauge hose and a high pressure gauge hose on the check valve.

(2) Drive the air conditioner.

(3) Showing of higher L.P. side pressure and lower H.P. side pressure evidences ineffective compression.

Standard pressure

L.P. side pressure	About 0.26 MPaG (38.4 Lb/in²G, 2.7 kgf/cm²G)
H.P. side pressure	About 1.42 MPaG (207.6 Lb/in²G, 14.6 kgf/cm²G)

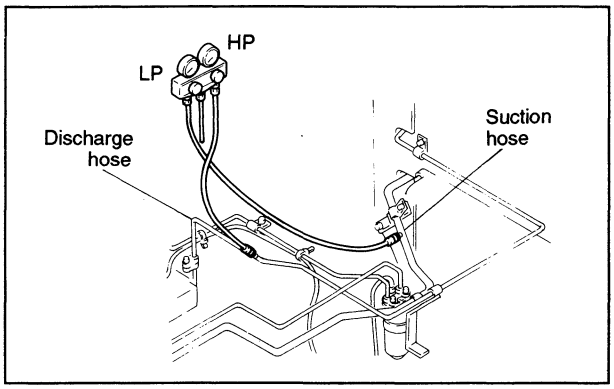

4.3.10 Air inclusion in ref.circuit

The abnormal reading of the refrigerant circuit evidences afraid air inclusion.

A little higher L.P. side pressure Noticeably higher H.P. side pressure

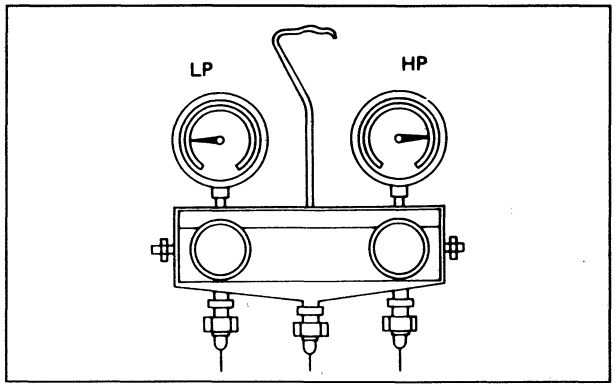

4.3.11 Moisture inclusion in ref. circuit

(1) During the operation, cooled air supply is interrupted periodically with a time interval.
This phenomenon evidences afraid water inclusion.

(2) Check the refrigerant pressure at a stop of the cooled air supply to make sure of the water inclusion.

L.P. side pressure ..... Almost vacuum
H.P. side pressure ..... Noticeably low

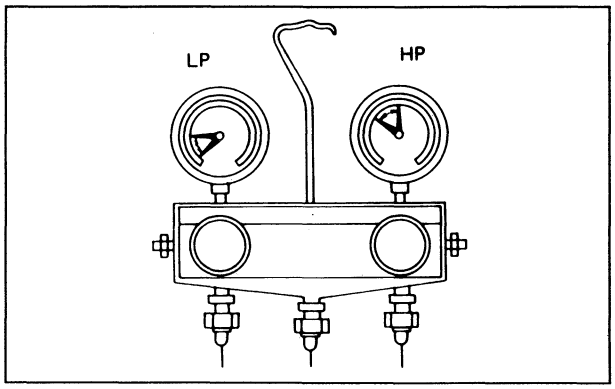

5. REMOVAL AND INSTALLATION

5.1 Precaution for removal and installation.

1. Disconnect the (-) ground cable from the battery, and place a cover on the battery.

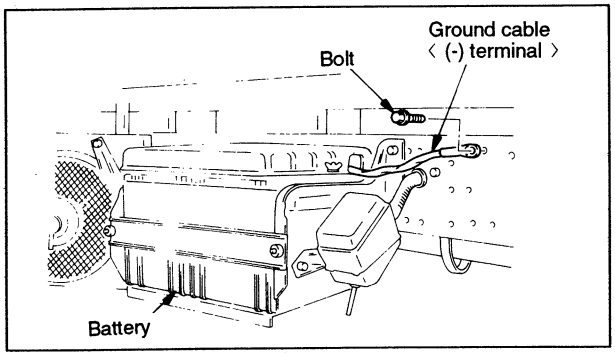

2. Make certain all the openings are covered with caps in order to prevent entry of foreign substances such as dust and dirt.
3. Never tamper with the brake and fuel systems, including the brake tubes and hoses.
4. Avoid doing the work in a dusty place or outdoors in rainy weather. If tubes or functional parts are removed, put a cap in position immediately in order to prevent entry of dust and moisture.
5. Connect the charging hose of the gauge manifold to the check valves (suction and discharge) of the suction hose and discharge hose, and recover the refrigerant by refrigerant recovery unit until its pressure is reduced to 0 kPaG (0 psiG, 0 kgf/cm²G). (Make sure that there is no internal pressure in the equipment.)

   Abrupt discharging might result in the discharge of the refrigerant oil from the compressor.
6. When coupling the flared tube, coat the flared portion with the compressor oil at the inner side.
7. Make sure to use the wheel chocks.

5.2 Removal

5.2.1 Inside the engine room

(1) Compressor & clutch assembly
   (a) Withdraw the wiring of the magnetic clutch at the connector.
   (b) Remove the V belt by loosening fixature of the tension pulley.
   (c) Take of the archor bolts : M8 × 100, 3 pcs and M8 × 130, 1 pc.
   (d) Dismount the compressor.

(2) Receiver assembly
   (a) Unplug the dual pressure switch at the connector.
   (b) Separate the interconnecting refrigerant pipe of the receiver assembly.

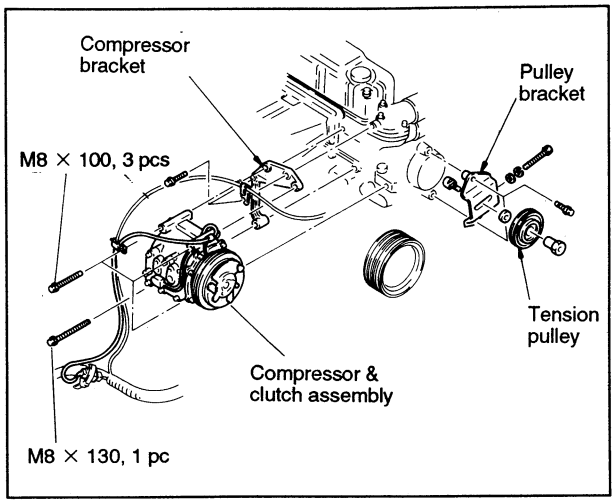

   (c) Take off the fixing bolt : M8 × 20, 2 pcs.
   (d) Dismount the receiver assembly.

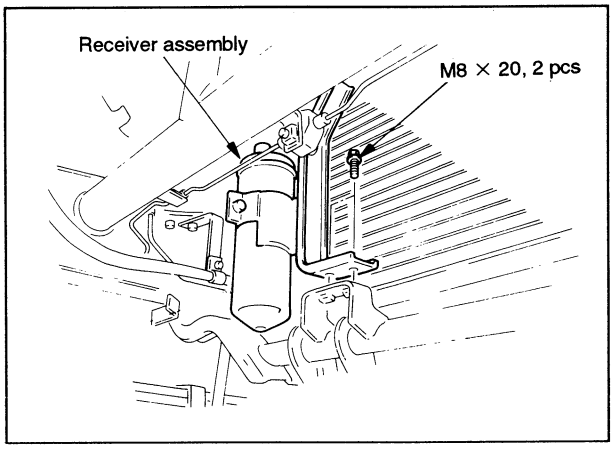

(3) Side condenser assembly
   (a) Unplug the condencer fan harness at the vehicle side harness.
   (b) Take off the fixing bolt : M8 × 20, 2 pcs and M8 × 25, 2 pcs.
   (c) Dismount the side condenser assembly (and baffle plate).

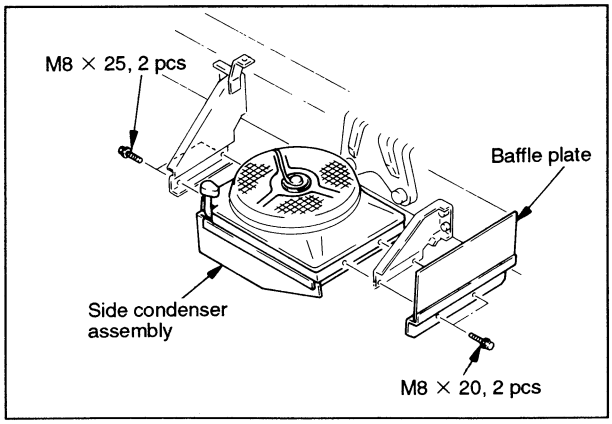

5.2.2 Cabin room

(1) Cooling unit assembly

(a) Separate the interconnecting refrigerant pipes of the cooling unit assembly.

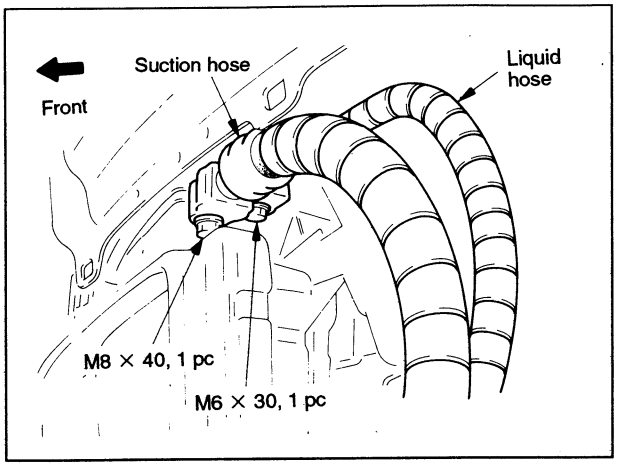

(b) Withdraw the wiring of the cooling unit assembly at the connectors.

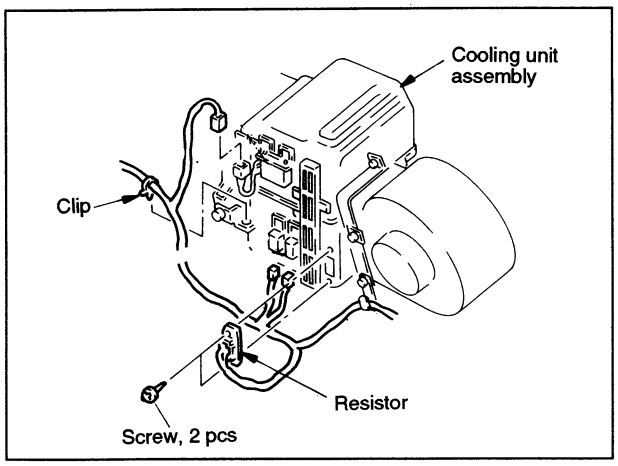

(c) Take off the fixing bolts : M8 × 20, 2 pcs.

(d) Dismount the drain hose cover.

(e) Reconnect the drain hose from the cooling unit assembly.

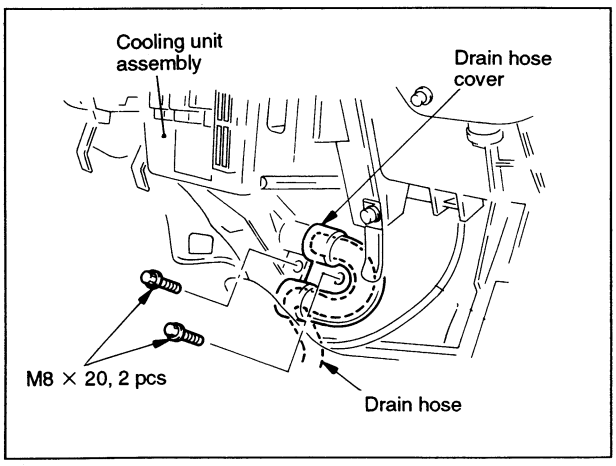

(f) Take off the fixing screws : M6 × 16, 6 pcs.

(g) Dismount the cooling unit assembly.

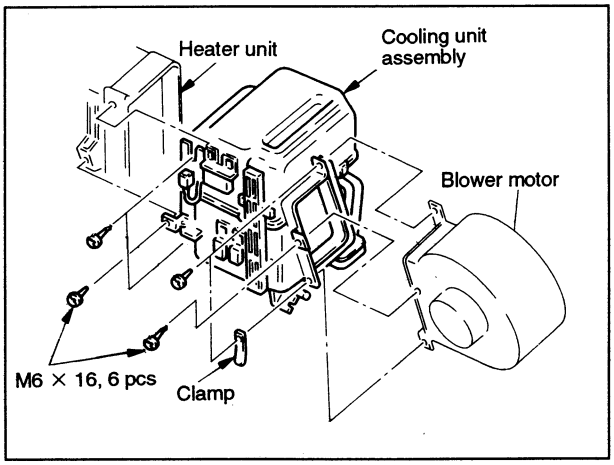

(2) Air conditioner switch

Pull out the air conditioner switch.

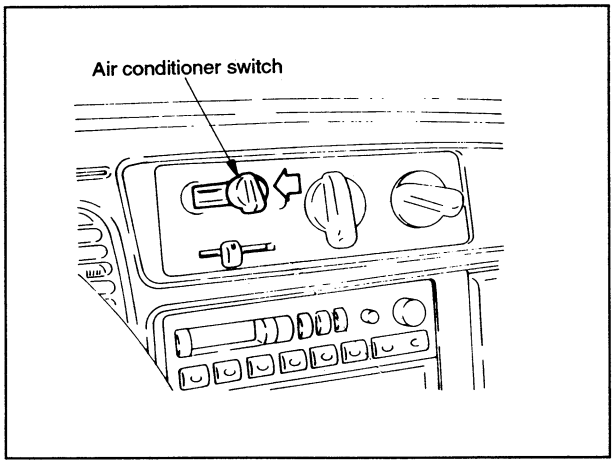

5.3 Installation

Installation is performed in the opposite sequence of removal.

○ Torques for tightening coupler of refrigerant tubing.

Nm (Lb.ft.kgm)

Compressor suction hose	29-34 (21 ~ 24, 3.0 ~ 3.5)
Compressor discharge hose	20-25 (14 ~ 18, 2.0 ~ 2.5)
Compressor inlet hose	20-25 (14 ~ 18, 2.0 ~ 2.5)
Compressor outlet hose	12-14 (8.6 ~ 10, 1.2 ~ 1.5)
Liquid receiver assembly inlet and outlet hoses	12-14 (8.6 ~ 10, 1.2 ~ 1.5)
Cooling unit inlet hose	12-14 (8.6 ~ 10, 1.2 ~ 1.5)
Cooling unit outlet hose	29-34 (21 ~ 24, 3.0 ~ 3.5)

○ Torques for tightening general bolt and nut

Nm (Lb.ft. kgm)

Nominal size	Pitch	Tightening torque		
		Head mark 4	Head mark 7	Head mark 8
M 5	0.8	3-4 (2.1 ~ 2.9, 0.3 ~ 0.4)	5-6 (3.6 ~ 4.3, 0.5 ~ 0.6)	5-7 (3.6 ~ 5, 0.5 ~ 0.7)
M 6	1.0	5-6 (3.6 ~ 4.3, 0.5 ~ 0.6)	9-11 (6.4 ~ 7.9, 0.9 ~ 1.1)	8-12 (5.7 ~ 8.6, 0.8 ~ 1.2)
M 8	1.25	12-14 (8.6 ~ 10, 1.2 ~ 1.5)	19-24 (13.6 ~ 17, 2.0 ~ 2.5)	19-29 (13.6 ~ 21, 2.0 ~ 3.0)
M10	1.25	24-29 (17 ~ 21, 2.5 ~ 3.0)	38-48 (27 ~ 34, 4.0 ~ 5.0)	43-58 (30.7 ~ 41.4, 4.5 ~ 6.0)
M10	1.5	17-26 (12 ~ 18.6, 1.8 ~ 2.7)	32-48 (23 ~ 34.3, 3.3 ~ 5.0)	41-58 (29.3 ~ 41.4, 4.3 ~ 6.0)
M12	1.25	34-43 (24.3 ~ 31, 3.5 ~ 4.5)	58-77 (41 ~ 55, 6.0 ~ 8.0)	82-106 (58.6 ~ 75.7, 8.5 ~ 11.0)
M14	1.5	72-82 (51 ~ 59, 7.5 ~ 8.5)	115-134 (82 ~ 96, 12.0 ~ 14.0)	125-173 (89.3 ~ 123.6, 13.0 ~ 18.0)

NOTE

For the cases of spring washer seated, and thread or seating surface coated with oil, the value shall be reduced down to 85 percent of the data listed.

6. TREATMENT AFTER INSTALLATION

6.1 Check and adjustment

After installation, check the following points and confirm that everything is normal, then charge the gas, and do the performance and operation tests.

(1) Check if any abnormal vehicle performance, happens or not by installing the air conditioner.

(2) Check the operation of the magnetic clutch. (with the compressor disengaged)

(3) Check if any parts left unmounted or any tool left in the vehicle.

(4) Check to ensure that the temperature control lever operates properly.

(5) Check the tension of the belt.

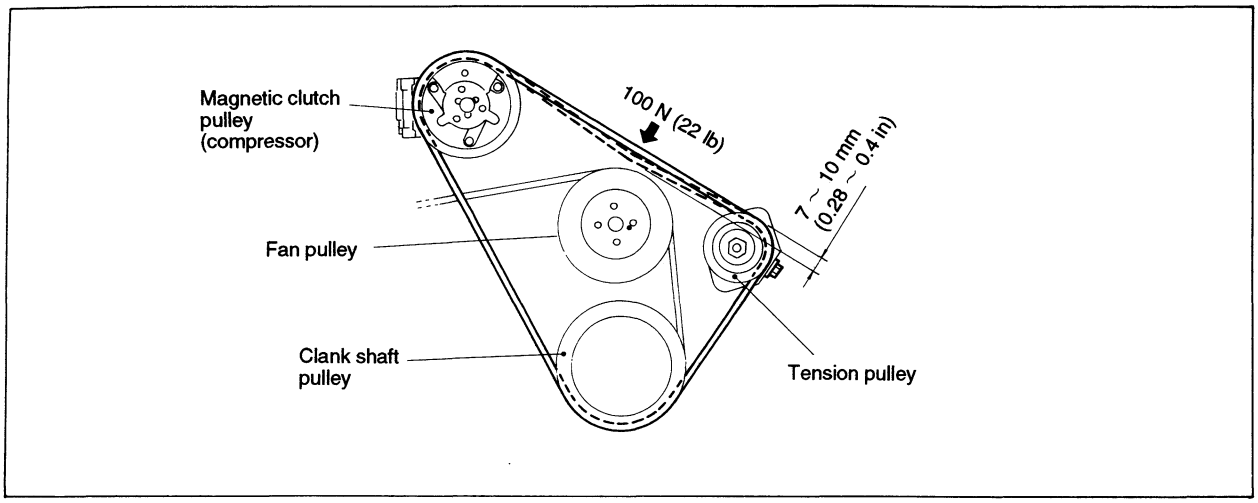

6.2 Leak test

After all the piping works are completed, conduct an leak test by the following procedure to check any leaks at the flare coupling, etc. and then evacuate the system. If this leak test is omitted and evacuation is immediately started, there is no way of detecting possible leak. If there are leaks, the specified vacuum cannot be attained. In order to save the service time be sure to conduct the leak test before evacuation.

6.2.1 Test points

(1) All pipe joint.

(2) Shaft seal and check valve on the compressor.

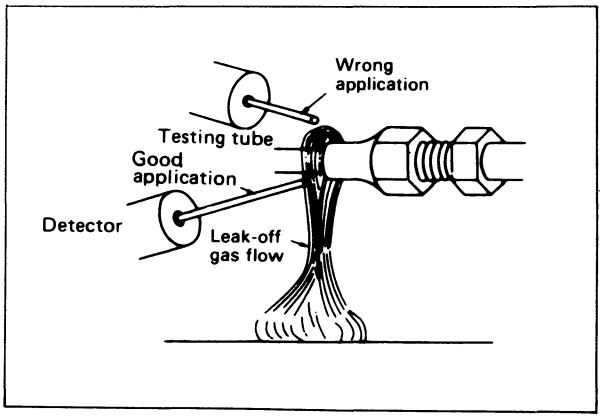

6.2.2. Test procedure

(1) For the gas leak test, the use of an electric gas leak detector is recommended. (HFC-134a SAE Approved)

(2) Perform the test at a place as in free from air flowing.

(3) The refrigerant is heavier than air. Leaks will concentrate at the bottom. Make certain that the testing tube is applied below the check point.

(4) The test should be performed patiently. Make certain that testing tube is moved slowly [approx. 10 mm/sec. (0.4 in./sec.)].

(5) The high pressure side refrigerant circuit should be tested for gas leaks during operation. Those areas which are dangerous or hard to test during operation (including areas around the compressor and condenser) should be tested direct after shutdown.

(6) The low pressure side refrigerant circuit should be tested during shutdown after the gas pressure has balanced.

(7) The test should be performed on the basis of the following standards:

Gas leak test standards

Test Point / Instrument	Compressor shaft seal	Other parts
Electric gas leak detector	Pointer shall not swing more than 0.1 mA at the low sensitivity.	Pointer must not swing more than 0.1 mA at the high sensitivity.
Halide torch gas leak detector	Flame colour (moss green) shall not change.	

⚠ WARNING

- **Smoking should be forbidden if a gas leak is detected.**
- **If a flame is applied to the refrigerant, toxic phosgene gas will be produced. Do not keep the detector in contact with a leaky point for a long time.**

- Leak test procedure

1. Attach refrigerant supply and gauge set as shown with all valves closed. Open refrigerant supply valve on can.
2. Loosen the center charging hose fitting at the manifold gauge end to blow any air from the hose until it hisses for a few seconds, then retighten it.
3. Open both gauge valves to partially charge the system and then close both valves.
4. The system can then be checked for leaks using an electronic leak detector.
5. If leaks are found that require the system to be opened (to repair or replace hoses, fittings, etc.), release any charge in the system.
6. After checking and repairing leaks, system must be evacuated.

6.3 System Charging

GENERAL PRECAUTIONS

⚠WARNING

When handling refrigerant (HFC-134a), the following precautions must be observed.

— Always wear eye protection and gloves while handling refrigerant.

— Be careful that liquid refrigerant does not contact the skin.

If liquid refrigerant strikes eye or skin:

— Do not rub on skin.

— Splash large quantities of cool water on the eye or skin.

— Flush eyes or skin with cool water for 5 minutes.

— Rush to a physician or hospital for immediate professional treatment.

— Do not attempt to treat it yourself.

— Keep the refrigerant (HFC-134a) container below 104°F (40°C).

— Do not handle the refrigerant in an enclosed area having an open flame; the refrigerant may produce a poisonous gas.

— Use approved recovery equipment to recover HFC-134a refrigerant before attempting service of this or any other HFC-134a system.

— Do not attempt to leak test an HFC-134a system with high pressure air or nitrogen. Mixing HFC-134a with a concentrated quantity of air may be combustible in the presence of ignition.

6.3.1 Evacuation

INSTALLATION OF SIMPLE HFC-134a EQUIPMENT

(1) Connect the manifold gauge to the service valves.

(2) Connect the packless valve to the vacuum pump.

(3) With the charge valve handle turned back all the way, install the service can.

(4) Connect the equipment as illustrated.

⚠CAUTION

1. **Do not connect the high and low pressure sides adversely. (Connect high pressure side to the condenser and low pressure side to the cooling unit assembly)**
2. **The indications "DIS" and "SUC" on the compressor indicate high and low pressure sides respectively.**

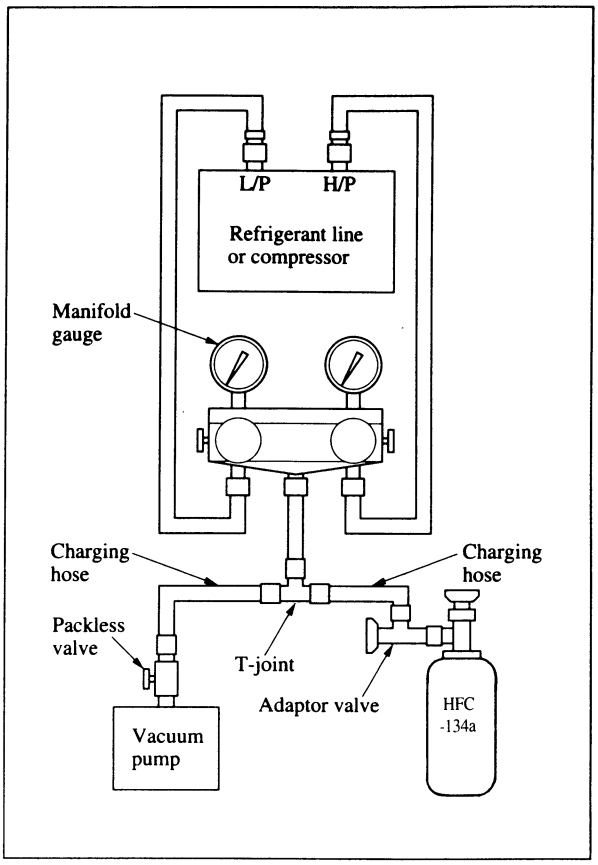

6.3.2 Evacuate the System

The refrigerant system must be evacuated before charging. Charge using HFC-134a refrigerant only. HFC-134a is available in bulk tanks. Follow the safety precautions for handling HFC-134a as listed in this section.

Follow the evacuation procedure below and at right.

This procedure assumes no HFC-134a refrigerant has been introduced into the system. If evacuating a charged system, it is necessary to recover the existing HFC-134a refrigerant before continuing with these instructions. Refer to the recovery equipment manufacturer's instructions for proper refrigerant recovery.

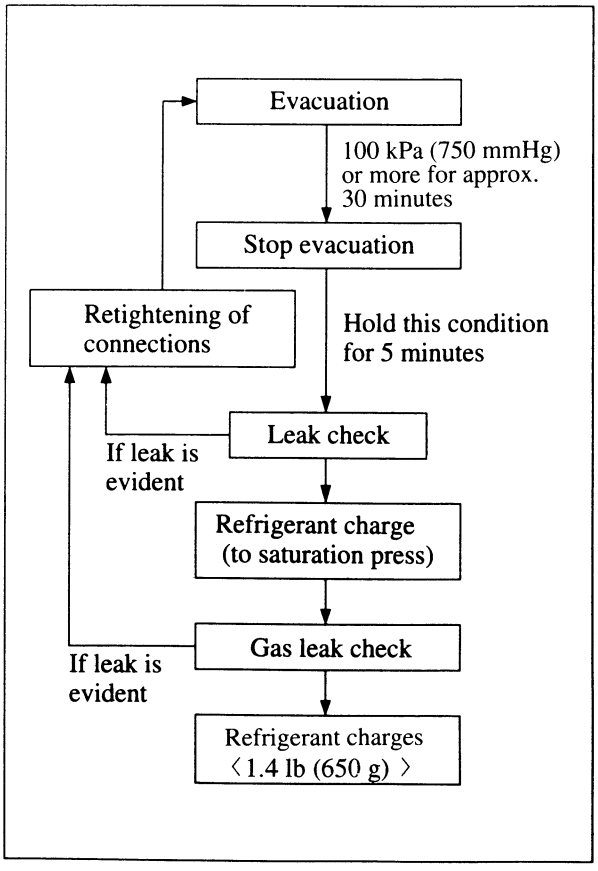

(1) Start up the vacuum pump.

⚠CAUTION

1. **Do not use the compressor for evacuation.**
2. **Do not operate the compressor in the vacuum condition; damage may occur.**

(2) Open the manifold gauge handles and the packless valve.

(3) Evacuate to a vacuum reading of 100 kPa (750 mmHg) or higher (approx. 30 minutes).

(4) Turn back the packless valve all the way and close the service valve.

(5) Stop the vacuum pump and allow to stand for 5 minutes.

(6) Check for leak. (Good if the vacuum is held.)

CHARGING WITH BULK TANK

(1) Open the charge valve to charge the system with refrigerant.

(2) When the refrigerant is no longer drawn in, turn back the high pressure side manifold gauge handle.

(3) Check for refrigerant leaks using a leak detector.

(4) Start the engine.

(5) Operate the air conditioner and set at the lowest temperature (MAX. COOL).

(6) Fix the engine speed at 1,500 rpm.

(7) Continue charging system until proper refrigerant quantity is introduced into the system.

⚠CAUTION

If the bulk tank is inverted, liquid refrigerant may be drawn into the compressor damaging it by liquid compression.

Keep the bulk tank upright to ensure that refrigerant is charged in gas state.

(8) Upon completion of charging, turn back the low pressure side manifold gauge handles.

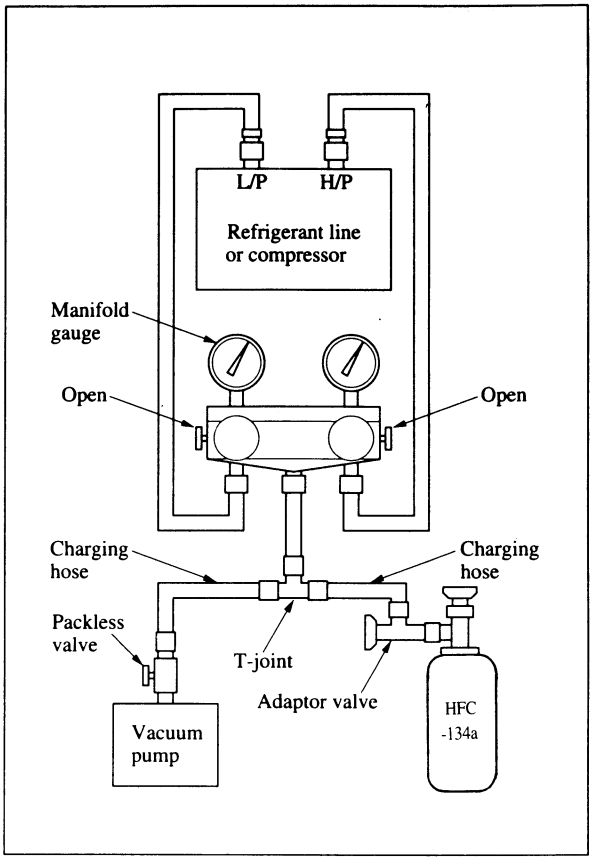

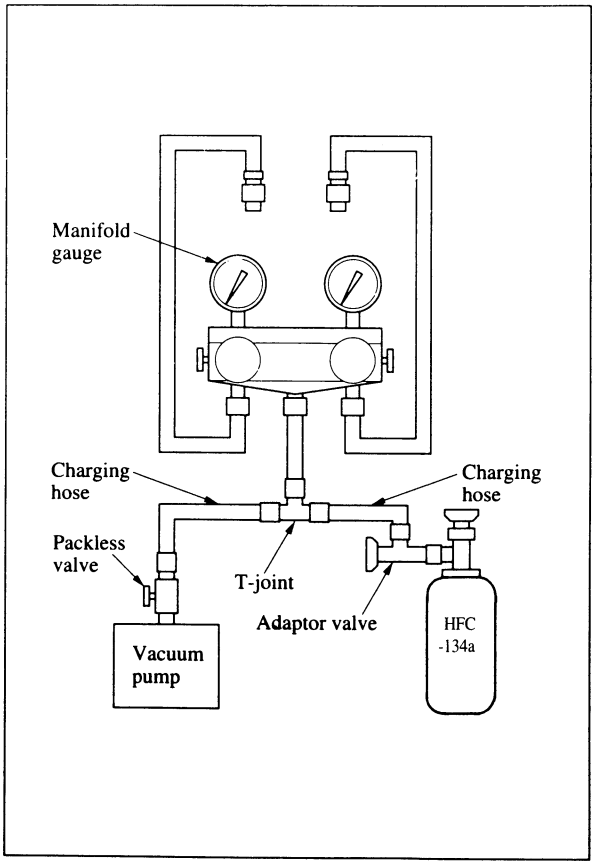

6.3.3 Removal of Charge Equipment

(1) Close the charge valve.

(2) Remove the manifold gauge from each service valve.

⚠CAUTION

Do not remove the bulk tank, T-joints and adaptor valves but keep them connected for next charge operation.

CORRECTING LOW REFRIGERANT LEVEL

Locate the source of the low refrigerant level, recover system, repair system, evacuate system, charge system, check for leaks.

⚠CAUTION

If the bulk tank is not emptied completely, keep the charge valve connected to the can for next charging.

6.3.4 Discharging System

Use the refrigerant recovery unit which can be purchased in local market to discharge refrigerant gas from the system.

⚠CAUTION

Refer to that Refrigerant Recovery Unit Instruction Manual for operation which is attached on the unit.

LIQUID CHARGE, through high side using charging station:

⚠CAUTION

Do not run engine when performing liquid charge; compressor will be damaged.

(1) After the system is evacuated, close gauge valves, connect center hose to refrigerant supply. Loosen center fitting at gauge to blow any air out of the hose and then retighten.

(2) Following charging station manufacturer's instructions charge the system until 1.4 lb (650 g) of refrigerant is pumped into the system.

(3) When system is fully charged, close high gauge valve and refrigerant supply valve, then quickly disconnect gauge hoses from service valves.

(4) After charging the system, refer to Pre-Delivery Inspection.

6.4 Performance test

6.4.1 Preparation

Reinstall all vehicle parts that were removed for installation of the air conditioner at their original positions, adjust the mounting, and test the following items.

1. Installation of grommets
   Install the specified grommets

6.4.2 Stationary performance test

1. Operating conditions
   a. Place the vehicle in the shade with doors open.
   b. Keep the return air temperature between 77 to 86°F (25 to 30°C). (Adjust by changing the opening degree of the doors).
   c. Set the fan switch to the max position.
   d. Turn the thermostat control lever to the cool position.
   e. Set the engine speeed to approx. 1,500 rpm.
   f. Set the high pressure at 1.17 to 1.37 MPa (170 to 200 Lb/in²G, 12 to 14 kgf/cm²G). (If the high side pressured does not rise up, place paper or the like in front of the condenser.)

2. Test procedure

Operate the air conditioner for more than 10 minutes under the above operating conditions in order to stabilize the high and low pressures. Then perform the test by the following procedure:

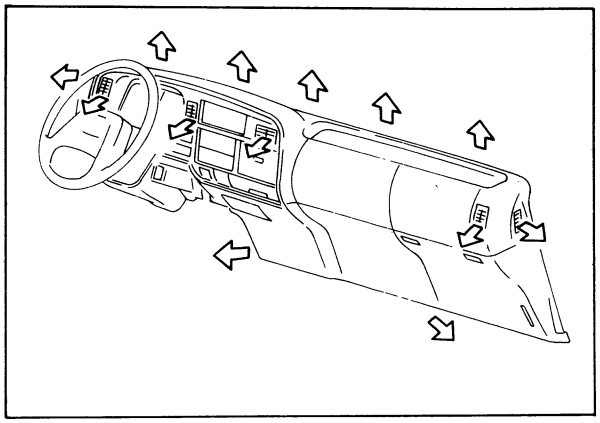

a. Measure the outlet air temperature at the inside space of the outlet grille.

b. Measure the air conditioner intake air temperature, humidity, etc., and the items shown in the Table of Measuring Items at a position free from the effects of cool outlet air.

c. The intersecting point of the plotted line perpendicular to the point which corresponds to the air conditioner intake and outlet air temperature difference and the plotted line perpendicular to the point which corresponds to the relative humidity of intake air should be between the oblique lines in bigure.

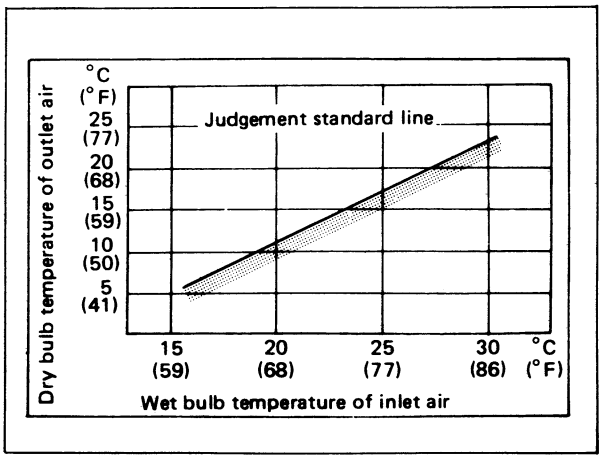

7. MAINTENANCE

No.	Check point	Service and inspection intervals				
		When used only in summer (approx. for three months)		When used in all seasons		
		At the beginning of season	At the end of season	Every 5,000 km (3,000 miles)	Every 10,000 km (6,000 miles)	Every 20,000 km (12,000 miles)
1	Check condenser and radiator fin for clogging.	○	○	○		
2	Retighten all bolts.	○			○	
3	Check for refrigerant leaks.	○			○	
4	Check refrigerant level.	○		○		
5	Check V-belt tension.	○		○		
6	Check operation of magnetic clutch.	○			○	
7	Check operation of thermostat.	○				○
8	Cooling unit assembly performance test.	○		○		
9	Compressor overhaul.		Every four years			Every 40,000 km (24,000 miles)

⚠ CAUTION

Even after the hot season is over, the air conditioner should be kept ready for operation all year round. Do not remove the V-belt or other parts.
This is because the air conditioner must be operated once a week for several minutes regardless of the season in order to prevent gas leaks caused by drying of the compressor shaft seal, and also to maintain the compressor itself in the best condition.

8. COOLING UNIT ASSEMBLY

8.1 Components

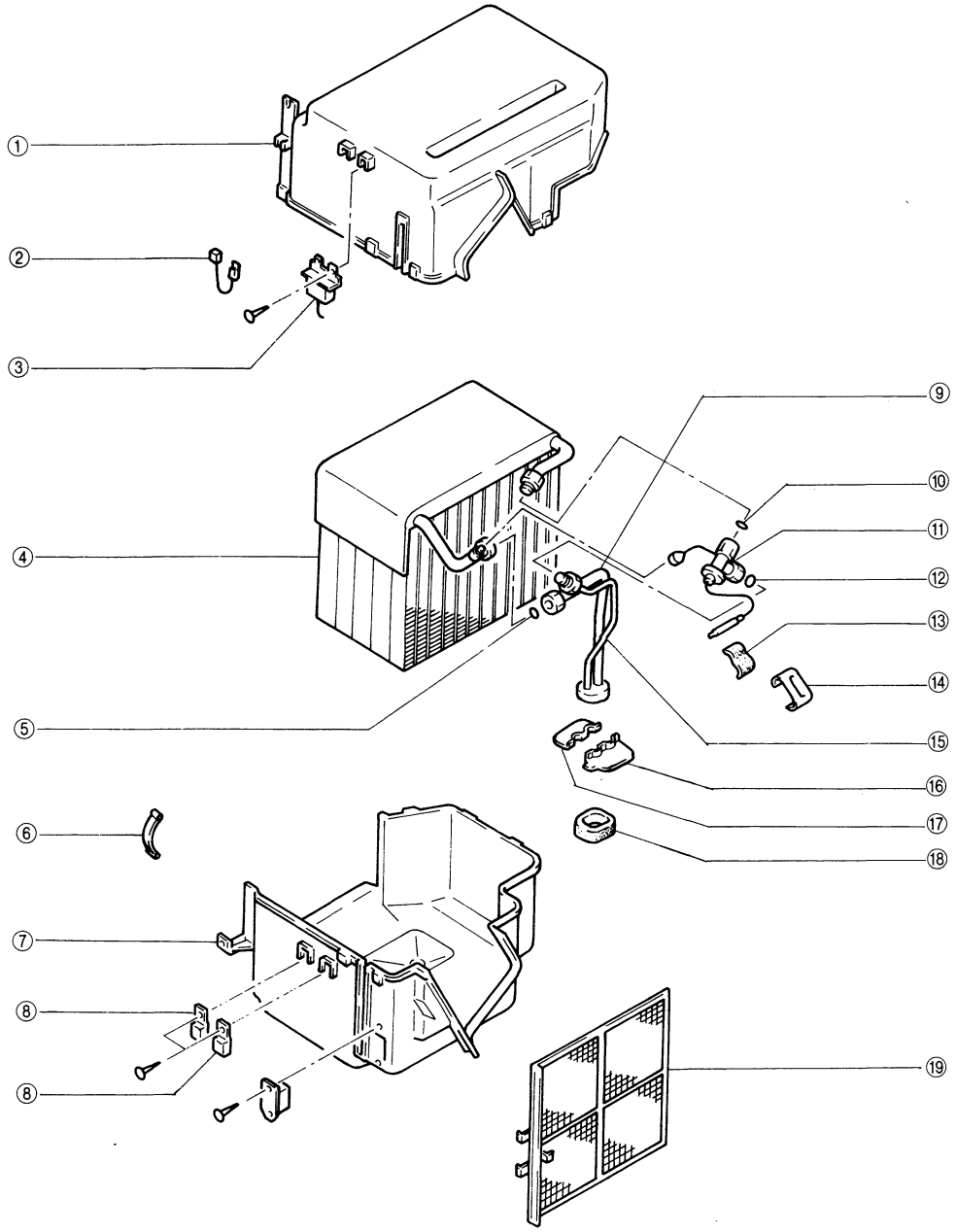

① Cooler case (upper)
② Joint harness
③ Thermostat
④ Evaporator
⑤ O-ring
⑥ Clip
⑦ Cooler case (lower)
⑧ Power relay
⑨ Pipe
⑩ O-ring
⑪ Expansion valve
⑫ O-ring
⑬ Insulation rubber
⑭ Clip
⑮ Baffle plate
⑯ Battle plate
⑰ Insulation rubber
⑱ Air filter

8.2 Cautions in disassembling

(1) Direct after disconnecting the refrigerant piping blind the opening to prevent dust and moisture etc. from entering in it.

(2) When disconnecting the expansion valve, surely apply two spanners to prevent unstable twisting from applying with the one for supporting and the other for torquing at the connection.

(3) Pipings in the cooling unit assembly should be handled gently. Particularly, the ingress and egress portions should be from any bending trouble in carrying it.

(4) If the cooling unit assembly is stored, or transported on disassembled condition, be careful not to deform the fins.

(5) When disconnecting the wirring, avoid pulling it with the insulation cover catched, but apply force by pinching the terminals or by catching the connectors.

8.3 Disassembling

(1) Remove the clips for jointings the upper & lower side cooler case with a flat type screwdriver.

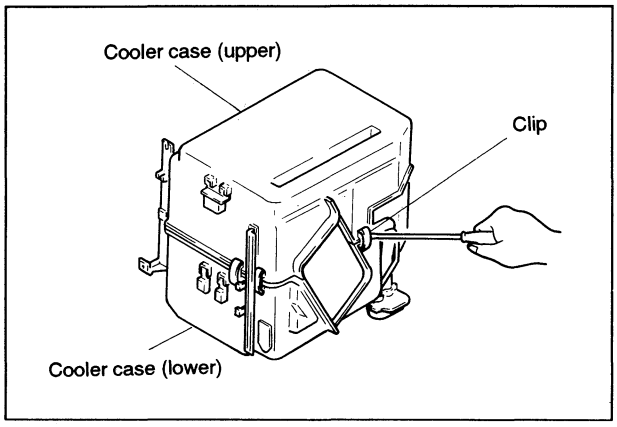

(2) Dismount the cooler case (upper).

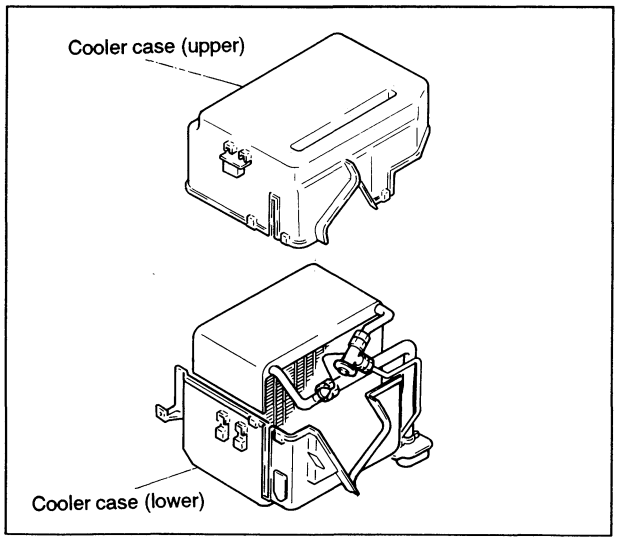

(3) Dismount the evaporator.

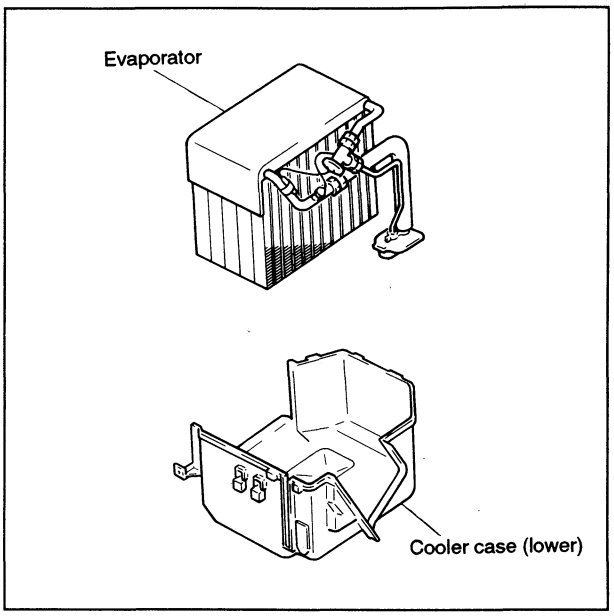

(4) Separate the expantion valve.
Dismount the feeler bulb at the suction side.

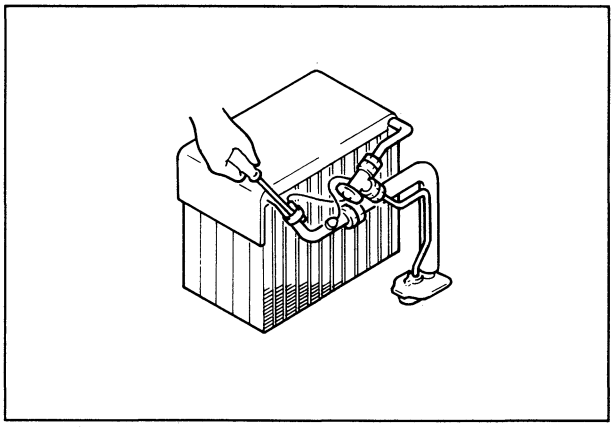

(5) Disconnect the expansion valve from the circuit.

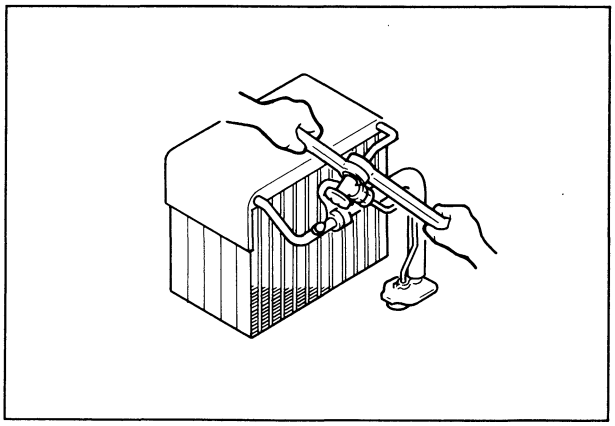

9. COMPRESSOR & CLUTCH ASSEMBLY

9.1 Disassembling the clutch.

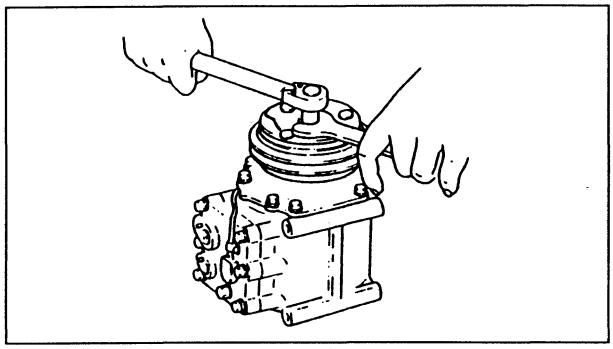

(1) Removal of armature plate.
   (a) Lock up the armature plate with a armature plate fixture and remove the lock nut.
   (b) Remove the armature plate.

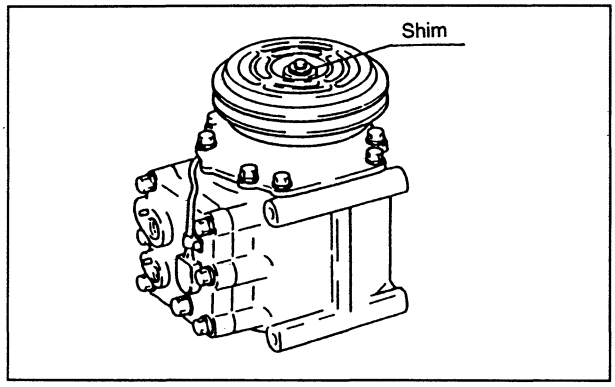

(2) Remove the shim.

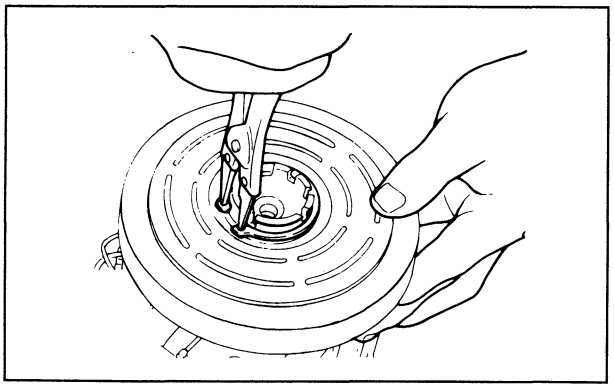

(3) Withdrawing rotor.
   (a) Remove the snap ring at the front case side with snap ring pliers.
   (b) Withdraw the rotor toward you and remove it from the front case.

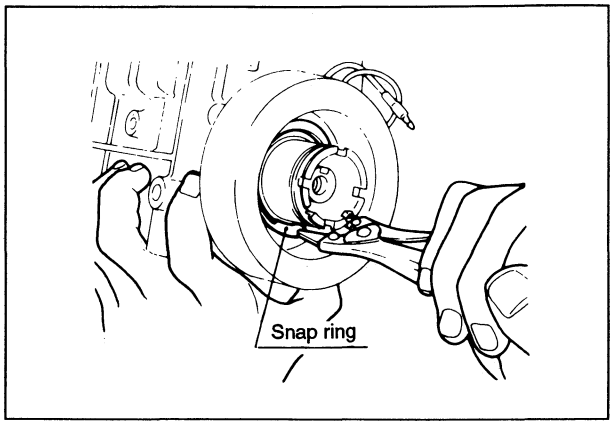

(4) Removal of field core.
   (a) Remove the snap ring for fixing the field core with snap ring pliers.

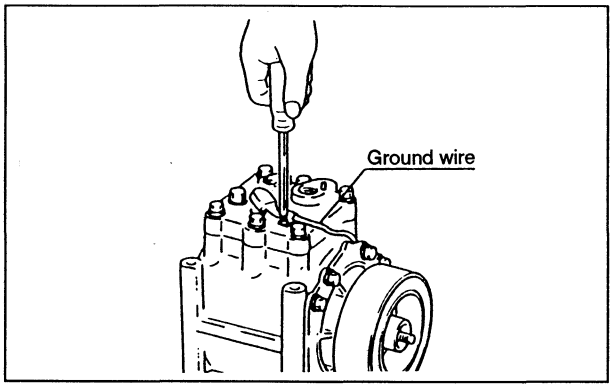

   (b) Remove the ground wire with a cross point screwdriver and withdraw the field core toward you to remove it from the crankcase.

(5) Removal of key.
   Remove the key from the shaft using the top of a flat type screwdriver.

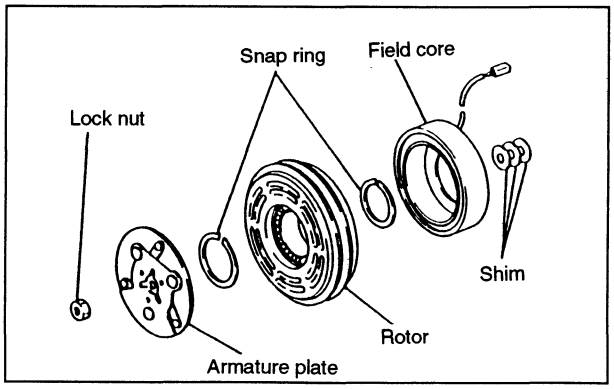

(6) Components of magnetic clutch.

9.2 Reassembly the clutch.

(1) Insert the key into the crankshaft.

(2) Insert the field core.

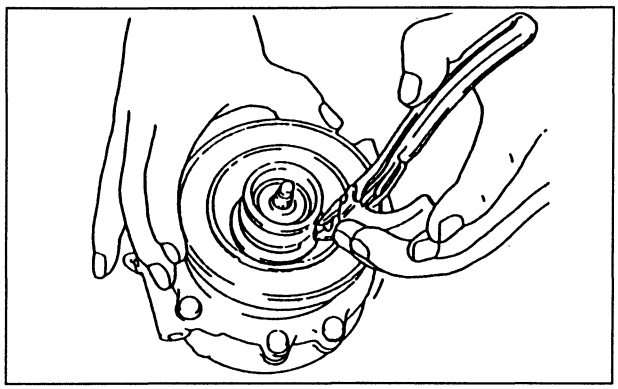

(a) Insert the field core into the front case and position it with a knock pin.

(b) Insert the snap ring for fixing field core into the groove and fix it with snap ring pliers as shown the below.

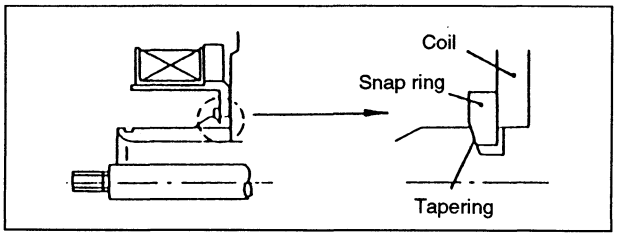

(c) Connect the ground wire.

(3) Insert the rotor into the front case.

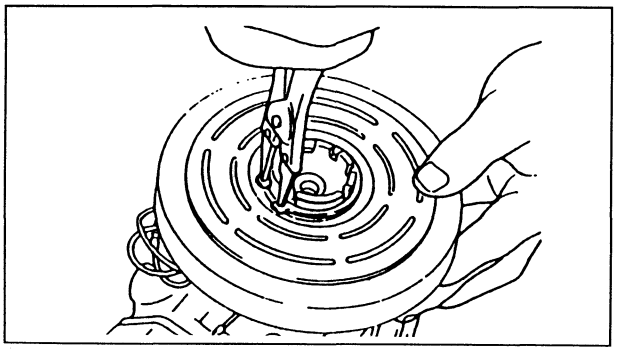

(4) Insert the snap ring for the front case side into the groove with snap ring pliers.

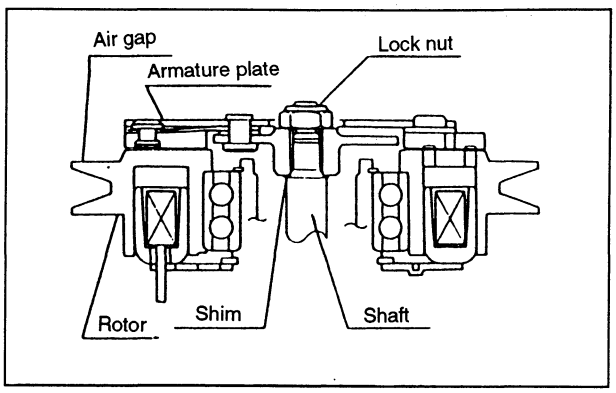

(5) Install the armature plate.

(a) Place a shim on the end of the shaft and insert the armature plate, adjusting to the key.

(b) Tighten the center bolt to the specified torque, 15.7 N.m (160 kgf.cm), with in-between plain washer.

(c) Measure the air gap.
The air gap shoud be within 0.4 to 0.65 mm (0.016 ~ 0.026 in).
Adjust it by shim if it is not within the specifications. Adjusting shim : 0.1, 0.3, 0.5, or 0.8 mm (0.004, 0.012, 0.02, or 0.03 in).

9.3 Special tool figure

The dimensions are in millimeter

(1) Armature plate fixture

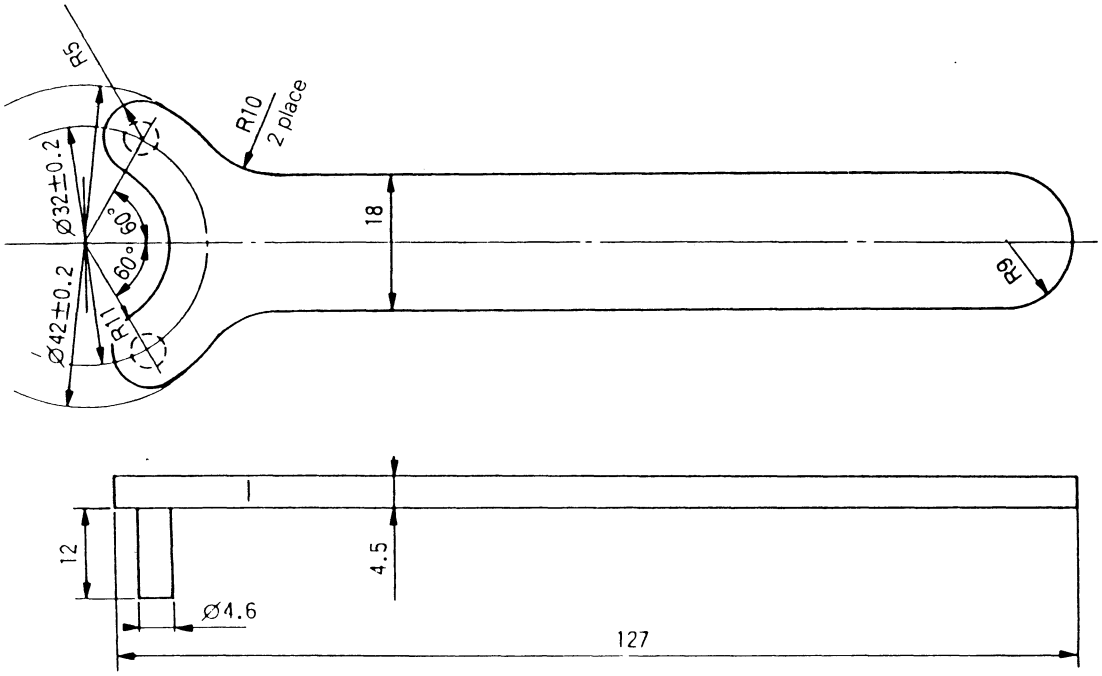

MITSUBISHI
FUSO

FE

Service Manual

Group 55B
Heater

Table of Contents

BACK

HOME

MITSUBISHI FUSO TRUCK OF AMERICA, Inc.

Pub No. TWSE9501-55B

GROUP 55B HEATER

SPECIFICATIONS 2
STRUCTURE AND OPERATION 3
TROUBLESHOOTING 9
HEATER HOSE 10
HEATER CONTROL 12
AIR DUCT 15
HEATER UNIT AND BLOWER ASSEMBLY 16

SPECIFICATIONS

Items		Specifications
System	Type	Inside/outside air combining, hot-water type heating system
	Standard voltage V	12
	Damper changeover system	Manual cable type
Blower assembly	Manufacturer	NIPPONDENSO
	Power consumption W	170
	Maximum rotation rpm	3450
Heater unit assembly	Manufacturer	NIPPONDENSO
	Temperature control system	Air mixing type
	* Heating performance kW {BTU/h, kcal/h}	*3.53 {12060, 3040}

* : Heating performance is shown under the following conditions.
Temperature difference : 65°C {119°F}
Water flow : 6 L/min {0.0035 ft^3/s}
Voltage : 12 V DC

Heater

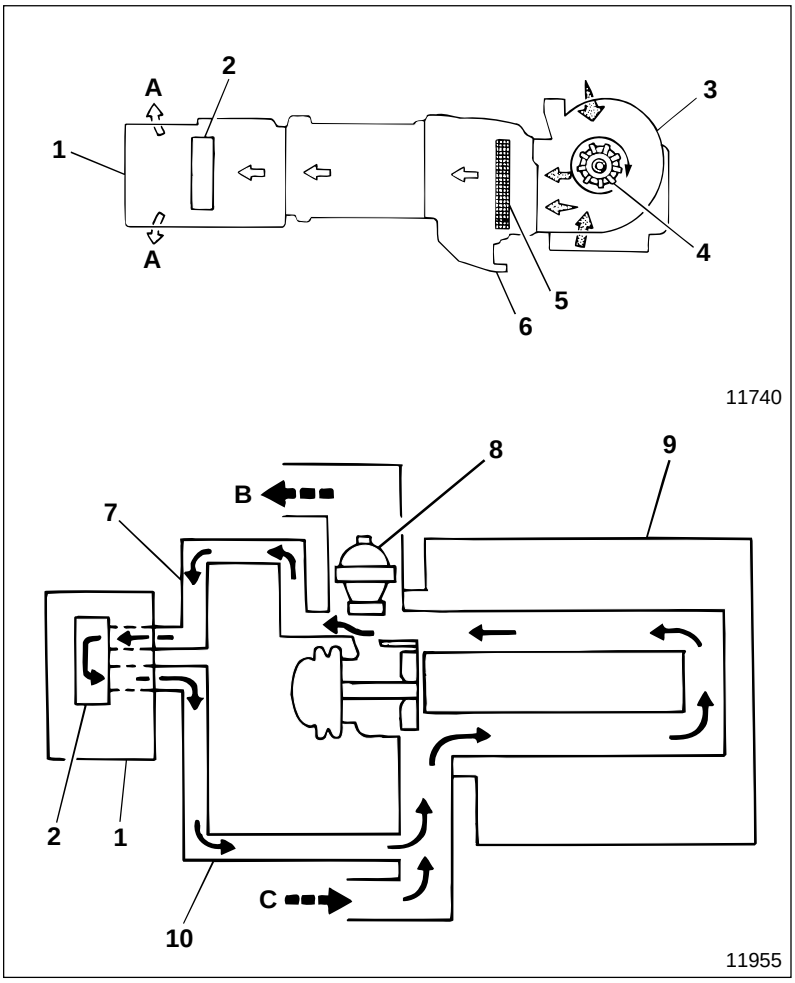

1 Heater unit
2 Heater core
3 Blower assembly
4 Fan
5 Air filter
6 Duct assembly
7 Heater hose (Heater in)
8 Thermostat
9 Engine
10 Heater hose (Heater out)

A : To duct
B : To radiator
C : From radiator

tside air (Intake)

de air (Circulation)

ered air

- Warm engine coolant that has absorbed heat from engine **9** does not flow through thermostat **8** but circulates as follows:
  7→2→10→9
  ↑_____↵
- Air sent to heater unit **1** from blower assembly **3** is warmed by heater core **2** (heat exchanger). Then the ducts deliver the warmed air to the cab.

Heater Electric Circuit

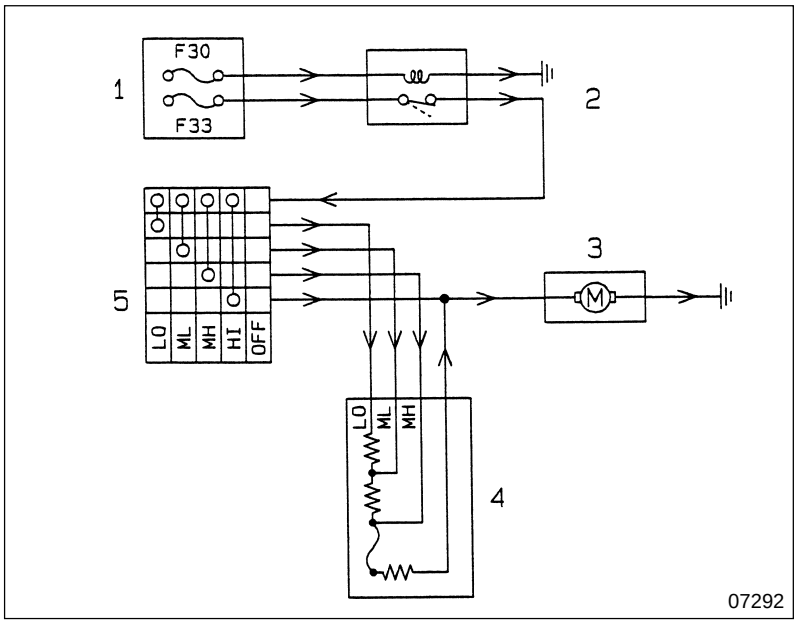

1 Fuse box
2 Blower fan relay
3 Blower motor
4 Blower resistor
5 Fan switch (Heater switch)

- The resistance of blower resistor **4** controls blower motor **3**, which in turn controls the air flow, except when the air flow is set to HI (high speed). When the air flow is set to HI, the current does not flow through the blower resistor.

Fan switch 5 set to LO position

- 1 (F30)→2 (coil)→Ground
- 1 (F33)→2 (contact point)→5 (LO)→4 (LO)→3→Ground

Fan switch 5 set to HI position

- 1 (F30)→2 (coil)→Ground
- 1 (F33)→2 (contact point)→5 (HI)→3→Ground

Fan switch 5 set to either ML or MH position

The current flows through blower resistor **4** in the same way as when set to LO position, routing ML or MH respectively instead of LO.

Air Duct

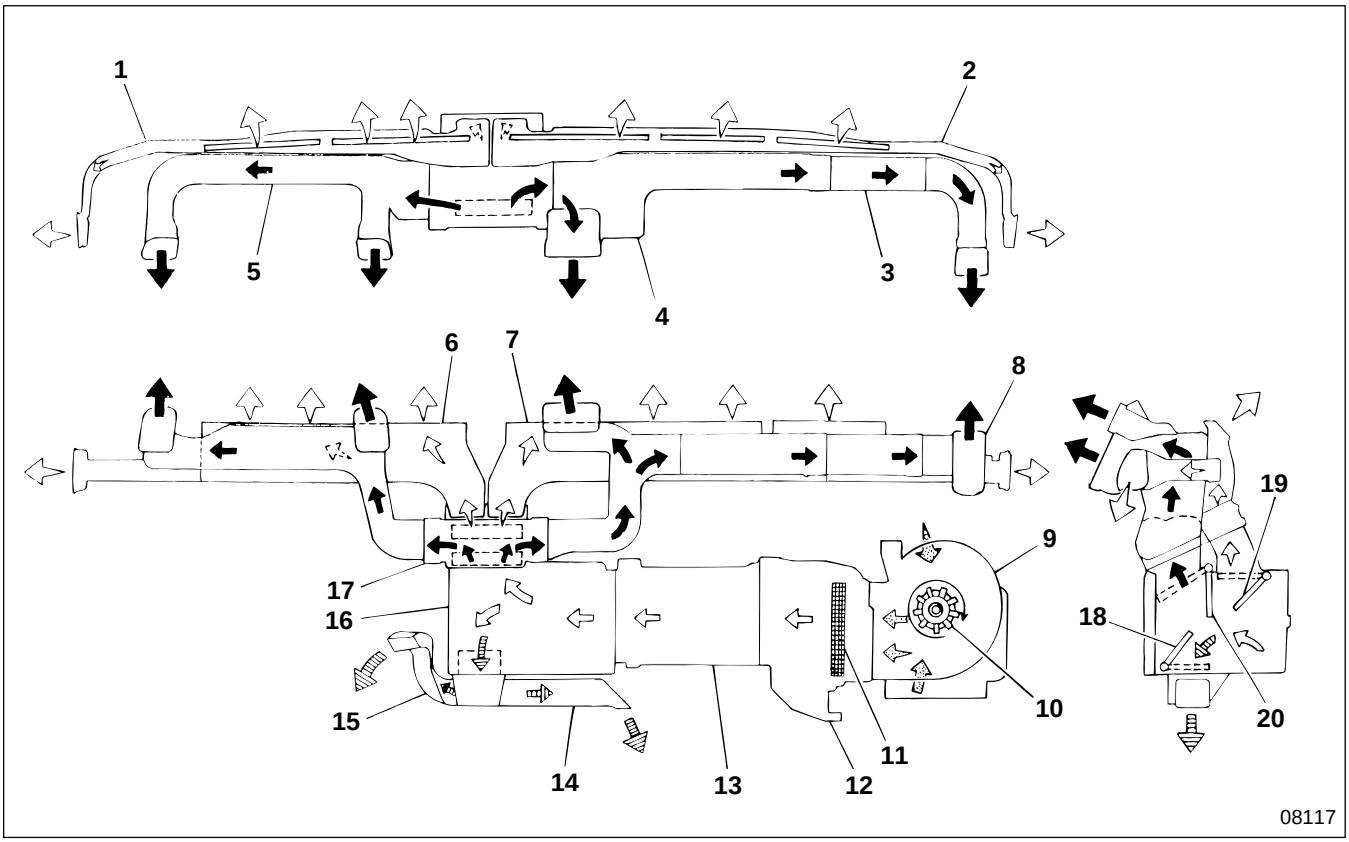

1 Defroster side duct, LH
2 Defroster side duct, RH
3 Face duct B
4 Center face duct
5 Face duct, LH
6 Front defroster, LH
7 Front defroster, RH
8 Face duct A
9 Blower assembly
10 Fan
11 Air filter
12 Duct assembly < without air-conditioner >
Cooling unit < with air-conditioner : option >
13 Joint duct
14 Foot duct, RH
15 Foot duct, LH
16 Heater unit
17 Center duct
18 Damper (FOOT)
19 Damper (DEF)
20 Damper (FACE)

tside air (Intake) ide air (Circulation) tered air (in heater and cooling unit)

(FACE))Air (DEF) Air (FOOT)

Since dampers **18**, **19, 20** of heater unit **16** are opened and shut by the switching operation of the heater control assembly, the outside air and inside air coming from blower assembly **9** flow as illustrated.

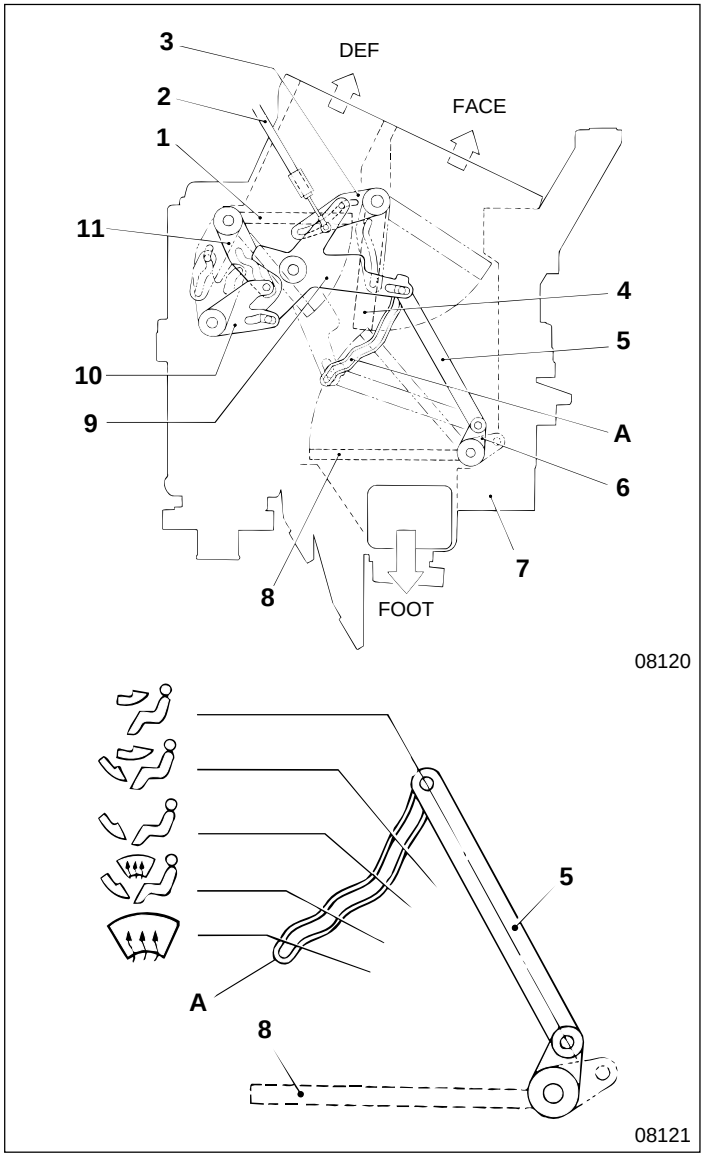

● **Mode changeover system**

1 Damper (DEF)
2 Mode changeover control cable
3 Lever
4 Damper (FACE)
5 Lever
6 Lever
7 Heater unit
8 Damper (FOOT)
9 Lever
10 Lever
11 Lever

A : Rail

- The opening and closing of dampers **1**, **4**, **8** is mechanically controlled by the movement of mode changeover control cable **2**, transmitted as follows:
  2→9→3→4 (FACE)
  →5→6→8 (FOOT)
  →10→11→1 (DEF)

  Levers **3**, **5**, **6**, **10**, **11** move together with lever **9**. Dampers **1**, **4** , **8** move together with levers **3**, **6**, **11**, the degree of opening is determined by the shape of the lever grooves.

- Lever **5** is connected to rail **A**. Since the lever moves along the groove of the rail, damper **8** (FOOT) can be opened and closed in combination with other modes to activate bi-level mode.

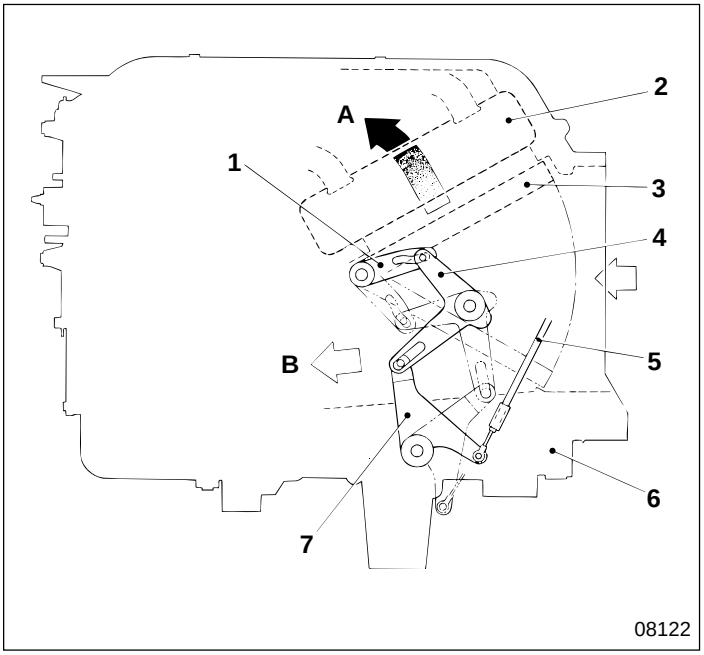

● **Air mixing control**

1 Lever
2 Heater core
3 Damper
4 Lever
5 Air mixing control cable
6 Heater unit
7 Lever

A : Warm air
B : Unwarmed air

- The degree of opening of damper **3** controls the flow of both air **A** that has passed through and been warmed by heater core **2**, and air B that has not been warmed.
- Damper **3** is mechanically operated by the movement of air mixing control cable **5**, transmitted as follows:
  5→7→4→1→3
  Lever 1 moves together with damper **3**.

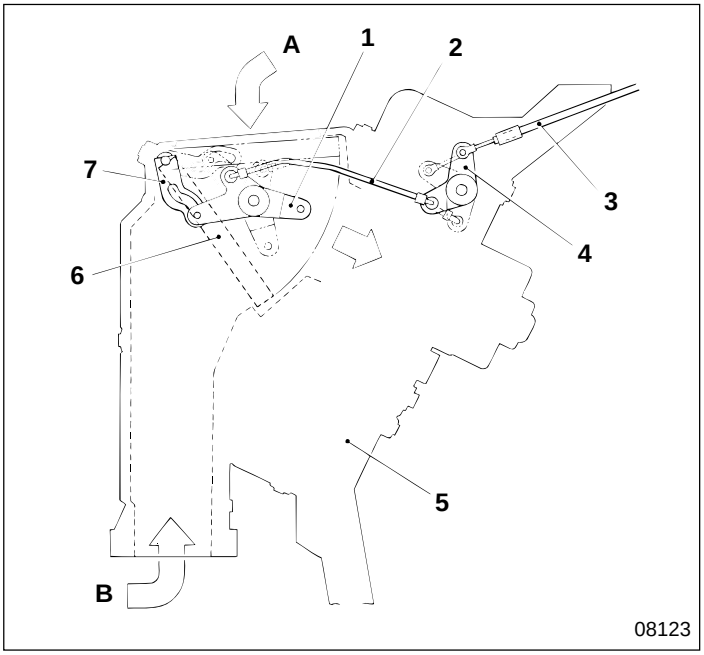

● **Air intake control**

1 Lever
2 Rod
3 Inside/outside air changeover control cable
4 Lever
5 Blower assembly
6 Damper
7 Lever

A : Inside air
B : Outside air

- Changeover of air intake from inside to outside is controlled by the opening and closing of damper **6**.
- Damper **6** is mechanically operated by the movement of inside/outside air changeover control cable **3**.
  3→4→2→1→7→6
  Lever 7 moves together with damper **6**.

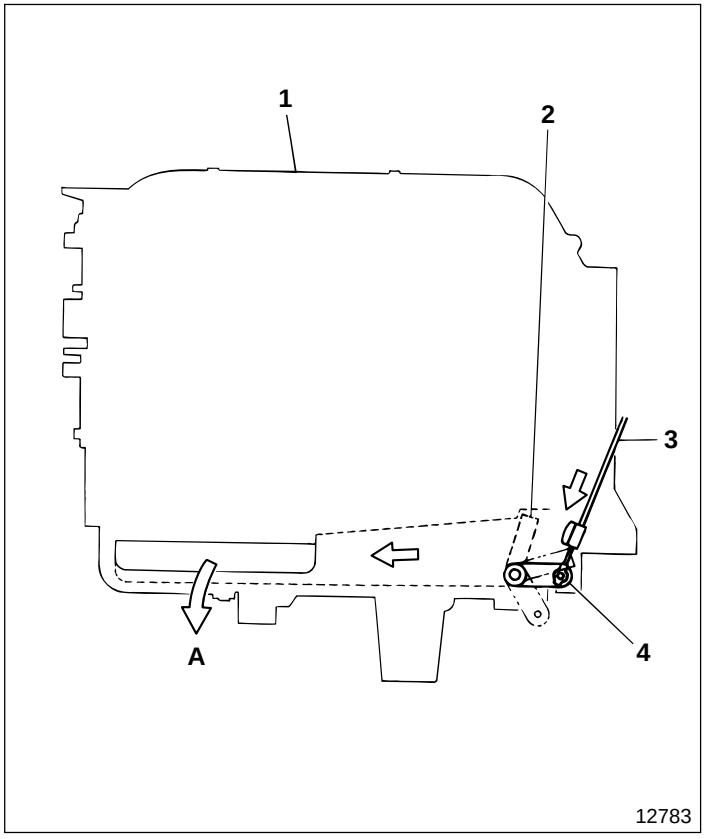

● **Air flow bypass changeover**

1 Heater unit
2 Damper
3 Air flow bypass changeover control cable
4 Lever

A : Air not warmed by heater core

- Damper **2** is opened and closed to change the air flow from warm air to air that has not passed through and been warmed by heater core **2**.
- Damper **2** is mechanically operated by the movement of air flow bypass changeover control cable **3**, transmitted as follows:
  3→4→2
  Lever **4** moves together with damper **2**.

Symptoms / Possible causes	Air does not flow from vents	Heater does not work well	Airflow control setting cannot be changed	Drafts from vents	Temperature control setting cannot be adjusted	Outside/inside air control cannot be changed	Air volume from vents unstable	Control switches operation heavy	Air flow bypass cannot be changed	Remarks
Blower motor coil broken or short-circuited	○									
Blower motor relay contact point melted, coil broken or short-circuited	○									
Blower resistor operation malfunctioning							○			
Mode damper opening and closing faulty			○	○				○		
Air mixing damper opening and closing faulty				○	○			○		
Inside/outside air changeover damper opening and closing faulty				○		○		○		
Heater control assembly faulty	○	○	○	○	○	○				
Thermostat does not close		○								Gr 14
Coolant amount insufficient		○								Gr 14
Connector connection faulty, harness broken or grounding faulty	○		○	○	○	○				
Fuse blown	○									
Heater pipes clogged, loose or connection faulty		○								
Duct connection faulty				○						
Heater unit clogged		○								
Control cable sliding movement faulty, installation faulty			○	○		○		○		
Control cable connecting lever of units bent			○	○		○		○		
Control cable connecting lever sliding parts of units worn or lubricated insufficiently			○	○		○		○		
Air flow bypass changeover damper opening and closing faulty									○	

HEATER HOSE

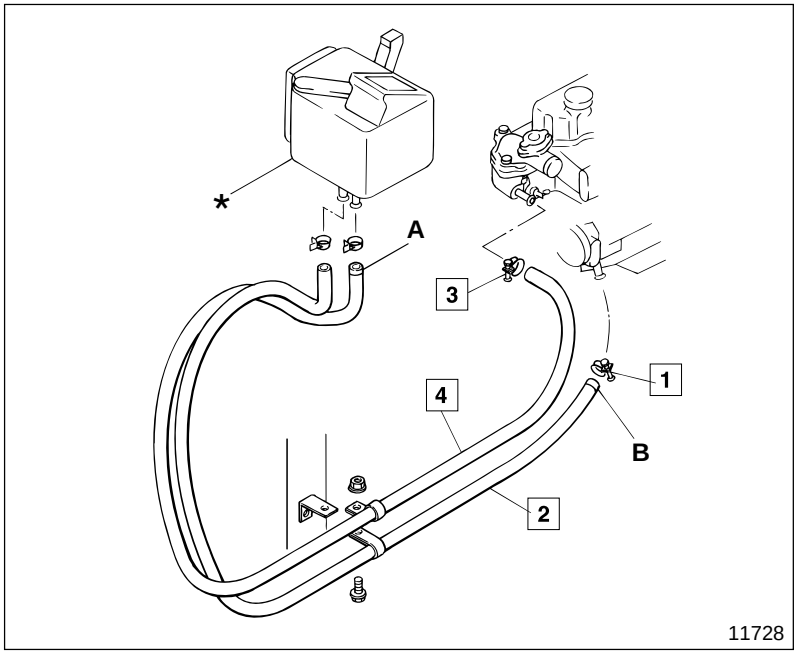

● **Disassembly sequence**

1 Hose clamp
2 Heater hose (Heater out)
3 Hose clamp
4 Heater hose (Heater in)

***** : Heater unit
A : White mark
B : Yellow mark

NOTE

- **Drain engine coolant from radiator before removing hoses.** Gr 14
- **Make sure that yellow mark B on heater hose 2 and white mark A on heater hose 4 are clearly visible before removing parts. If there are no marks, make identification marks before removing parts.**

● **Assembly sequence**

Follow the disassembly sequence in reverse.

CAUTION ⚠

- **Be sure that hoses are inserted securely to prevent coolant leaking.**
- **Make sure not to mix up heater hoses 2, 4 when connecting them because mistaken connection would damage the heater unit.**

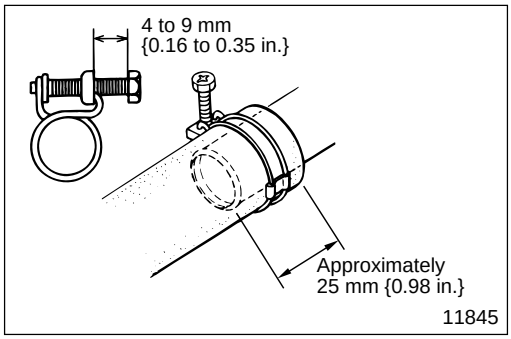

◆ Service procedure

1 **to** **4** **Installation of heater hose and hose clamp**

- Install heater hoses **2**, **4** to conform to the dimension as illustrated.
- Tighten hose clamps **1**, **3** to conform to the dimension as illustrated.

M E M O

HEATER CONTROL

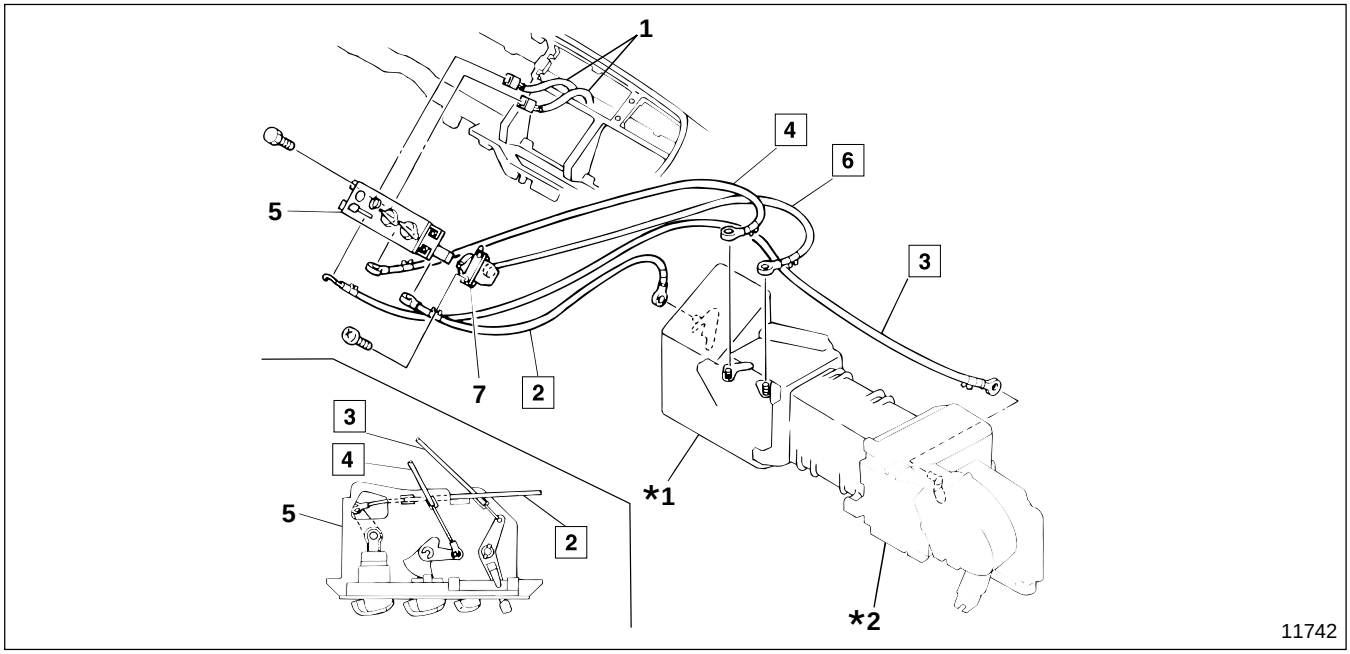

● **Disassembly sequence**

1 Harness
2 Mode changeover control cable
3 Inside/outside air changeover control cable
4 Air mixing control cable
5 Heater control assembly Gr 54
6 Air bypass changeover control cable
7 Air bypass control lever

***1** : Heater unit assembly P55-16
***2** : Blower assembly P55-16

● **Assembly sequence**

Follow the disassembly sequence in reverse.

◆ Service procedure

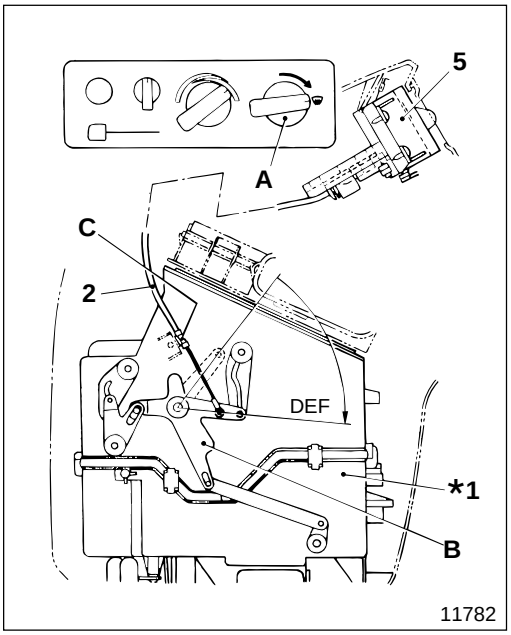

2 Installation of mode changeover control cable

- Turn mode changeover control dial **A** of heater control assembly **5** to (DEF).
- Turn mode changeover damper lever **B** of heater unit assembly ***1** to DEF.
- Under these conditions, install mode changeover control cable **2** onto mode changeover damper lever **B** and fasten it with clip **C**.

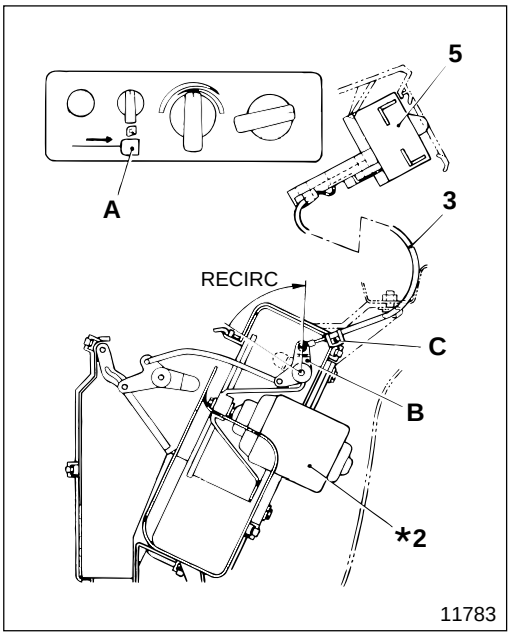

3 Installation of inside/outside air changeover control cable

- Set inside/outside changeover lever **A** of heater control assembly **5** to (RECIRC : Inside air).
- Turn inside/outside air changeover damper lever **B** of blower assembly ***2** to RECIRC.
- Under these conditions, install inside/outside air changeover control cable **3** onto inside/outside air changeover damper lever **B** and fasten it with clip **C**.

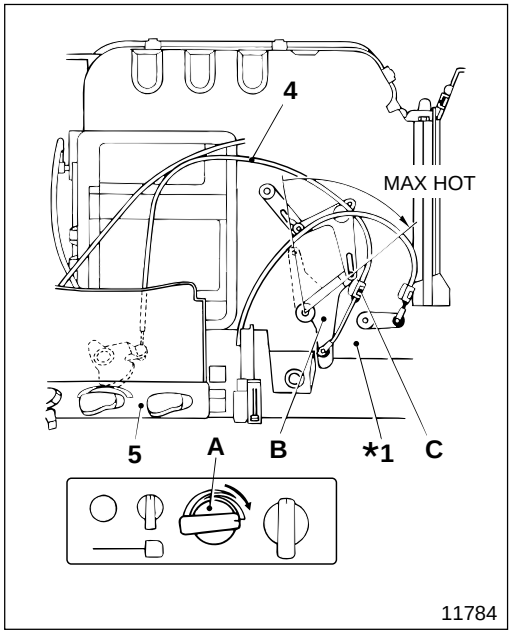

4 Installation of air mixing control cable

- Fully turn temperature control dial **A** of heater control assembly **5** clockwise to MAX HOT (maximum heating).
- Turn air mixing damper lever **B** of heater unit assembly ***1** to MAX HOT (maximum heating).
- Under these conditions, install air mixing control cable **4** onto air mixing damper lever **B** and fasten it with clip **C**.

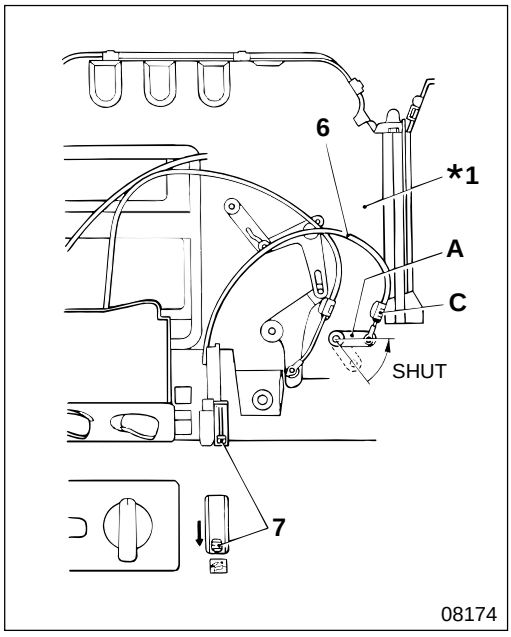

6 Installation of air bypass changeover control cable

- Set air bypass changeover control lever **7** to SHUT.
- Set air bypass lever **A** of heater unit assembly ***1** to SHUT.
- Under these conditions, install air bypass changeover control cable **6** onto air bypass lever **7** and fasten it with clip **C**.

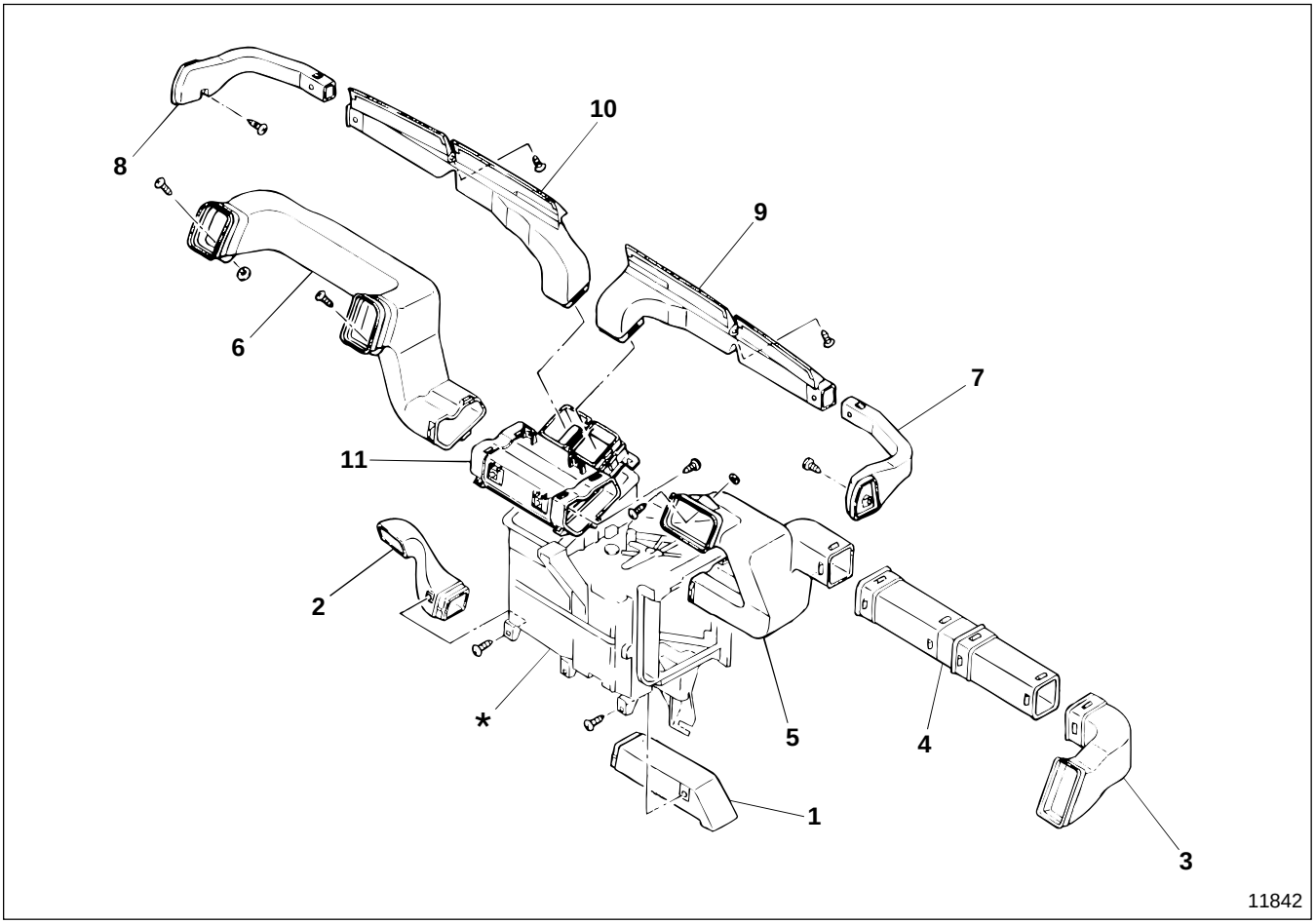

● **Disassembly sequence**

1 Foot duct, RH
2 Foot duct, LH
3 Face duct A
4 Face duct B
5 Center face duct
6 Face duct, LH
7 Defroster side duct, RH
8 Defroster side duct, LH
9 Front defroster duct, RH
10 Front defroster duct, LH
11 Center duct

***** : Heater unit

● **Assembly sequence**

Follow the disassembly sequence in reverse.

HEATER UNIT AND BLOWER ASSEMBLY

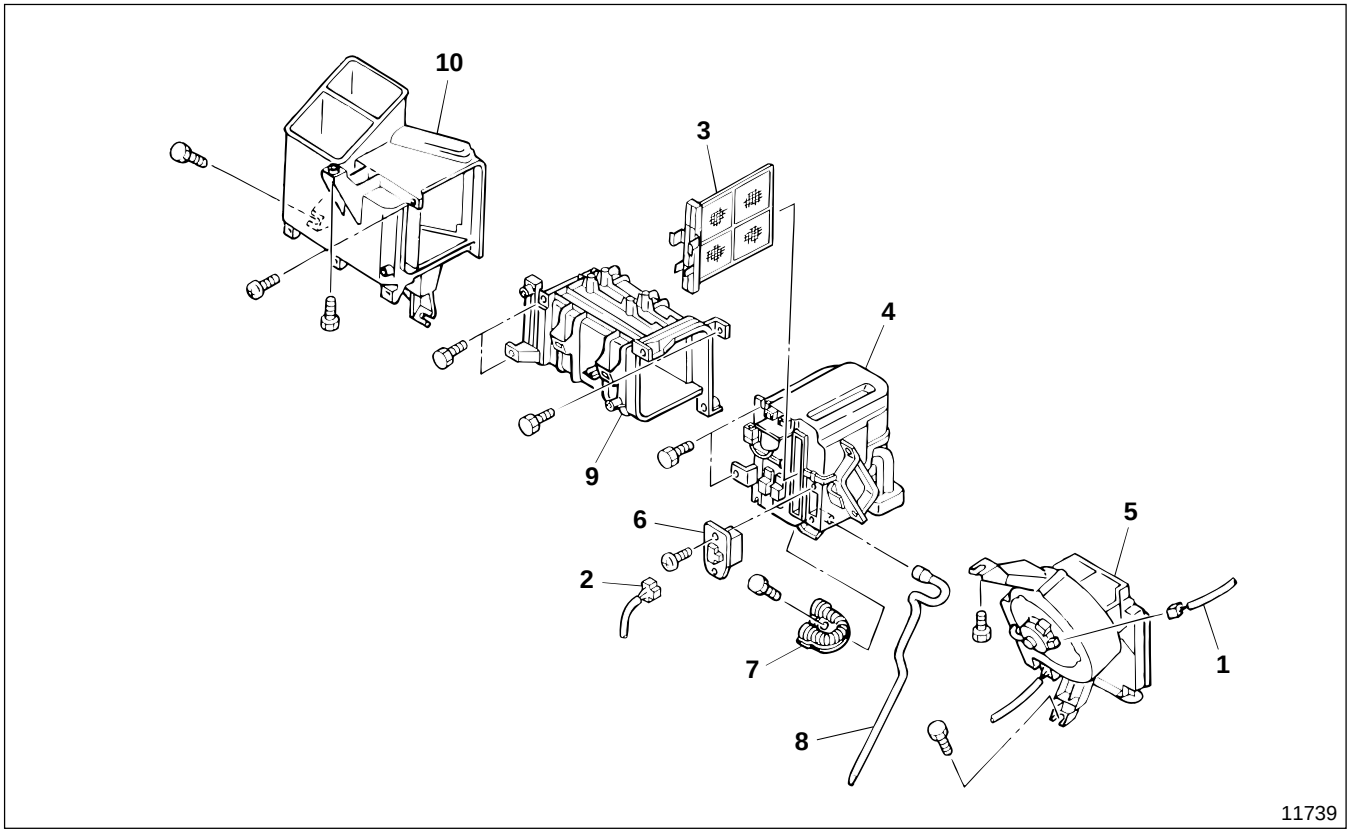

● **Disassembly sequence**

1 Harness
2 Harness
3 Air filter
4 Duct assembly
5 Blower assembly Gr 54
6 Blower resistor Gr 54
7 Cover
8 Drain hose
9 Joint duct
10 Heater unit assembly

● **Assembly sequence**

Follow the disassembly sequence in reverse.

FH

SERVICE MANUAL

FOREWORD

This Service Manual contains maintenance and repair methods for personnel involved in the maintenance and repair of the Mitsubishi Fuso Truck FH Series. Read this manual carefully as an aid to providing correct, efficient and fast maintenance. Please note, however, that due to continued vehicle improvements the specifications and numbers given for use in maintenance might change without notice. If you have any questions, or encounter a problem, please do not hesitate to contact your nearest Mitsubishi Fuso Dealer or Distributor.

May 1995

HOME

GROUP INDEX

HOW TO READ THIS MANUAL

GENERAL 00

MAINTENANCE SCHEDULE 01

REMOVAL AND INSTALLATION OF ENGINE 10

ENGINE 11

LUBRICATION 12

FUEL AND ENGINE CONTROL 13

COOLING 14

INTAKE AND EXHAUST 15

CLUTCH 21

MANUAL TRANSMISSION 22

AUTOMATIC TRANSMISSION 23

PROPELLER SHAFT 25

FRONT AXLE 26

REAR AXLE 27

WHEEL AND TIRE 31

FRONT SUSPENSION 33

REAR SUSPENSION 34

BRAKE 35

PARKING BRAKE 36

STEERING 37

FRAME 41

CAB 42

ELECTRICAL 54

AIR-CONDITIONER 55A

HEATER 55B

1. GROUP CLASSIFICATIONS

This Manual is divided into Groups, one for each system of the vehicle.

Gr. No.	Group Name	Description
00	General	External views, major specifications, power train table, operation performance curves, engine performance curves, servicing precautions, standard bolt and nut tightening torque table, towing precautions, vehicle identification numbers.
01	Maintenance Schedule	Maintenance schedule, simple maintenance, lubrication chart, oils and greases to use.
11	Engine	Cylinder head, valve mechanism, camshaft, pistons, crankshaft, timing gear, flywheel
12	Lubrication	Oil pump, oil filter, oil cooler
13	Fuel and Engine Control	Injection pump, injection nozzles, fuel filter, fuel tank, water separator, engine control, accelerator pedal, throttle button.
14	Cooling	Water pump, thermostat, radiator, fan.
15	Intake and Exhaust	Air cleaner, intake shutter, turbocharger.
16	Engine electrical	Starter, alternator, vacuum pump, pre-heat system
21	Clutch	Clutch, clutch control (master cylinder, power cylinder)
22	Manual Transmission	Transmission, transmission control.
23A	Automatic Transmission	Maintenance and inspection, removal, installation, oil seal replacement.
23B	Automatic Transmission (Body unit)	Automatic transmission body.
25	Propeller Shaft	Propeller shaft, universal joint, center bearing.
26	Front Axle	Front axle, kingpins, knuckles, hub bearings.
27A, B	Rear Axle	Rear axle, reduction and differential, hub bearings.
31	Wheels and Tires	Tire, disc wheel.
33	Front Suspension	Front suspension, leaf springs, shock absorbers, stabilizers.
34	Rear Suspension	Rear suspension, leaf springs, shock absorbers, stabilizers.
35	Brake	Brake pedal, master-vac, wheel brake (wheel cylinder, brake drum, brake shoes), exhaust brake (exhaust brake valve, power chamber).
36	Parking Brake	Parking brake (brake drum, brake shoe), parking brake control.
37	Steering	Steering wheel, power steering booster, power steering oil pump, steering linkage, tie-rods.
41	Frame	Frame inspection and maintenance.
42	Cab	Body, window glass, doors, seats.
54	Chassis electrical	Meters, gauges, switches, lamps, warning and indicator lamps, wipers
55A	Air Conditioner	Air conditioner ventilation system.
55B	Heater	Heater

Page numbers start at "1" for each section.

2. TERMINOLOGY AND UNITS

The terminology and units used in this manual are as follows.

(1) Front and back
The direction in which the vehicle normally travels is the front, the opposite end is the back.

(2) Left and right
Left and right are as usual when looking toward the front of the vehicle from the direction in which it moves.

(3) Maintenance standards terminology

- Nominal value
  Standard values are used to indicate nominal design dimensions, design dimensions for single parts, standard gap between parts when assembled, and the standard performance of assemblies. Values in brackets are basic diameters.
- Limit
  These are performance and strength values which cannot be exceeded. These values are necessary when repairing or replacing parts.

(4) Tightening torque
Tightening bolts and nuts too much or too little can have a large influence on performance and functions. Thus, tightening torque is specified for each location that must be tightened. When tightening must be performed in a wet condition, this is specified. If not specified, tightening is performed dry.
When tightening is not specified, tighten according to the standard bolts and nuts tightening torque table.

(5) Units
Length, weight surface area and capacity are in accordance with SI. Foot pounds and metric units are indicated in brackets. Temperatures are given in degree Celsius with degrees in Fahrenheit in brackets.

MITSUBISHI
FUSO

FH

Service Manual

How to Read this Manual

Table of Contents

BACK

HOME

MITSUBISHI FUSO TRUCK OF AMERICA, Inc.

Pub No. TWME9502-H

HOW TO READ THIS MANUAL

HOW THIS MANUAL IS COMPILED ii

GENERAL EXPLANATION OF THIS MANUAL iii

TERMS AND UNITS xiii

HOW TO READ THIS MANUAL

How This Manual Is Compiled

- This manual is compiled by classifying various systems into certain groups.
- Each group contains specifications; troubleshooting; maintenance service standards; ⓣ tightening torque; lubricant, fluid and sealant; special tools; and service procedure.
- Group 54 Electrical is divided into subgroups 1 to 9 and each subgroup has its own index No. ((100) to (999)) for systematic documentation.

The index No. has the following format:

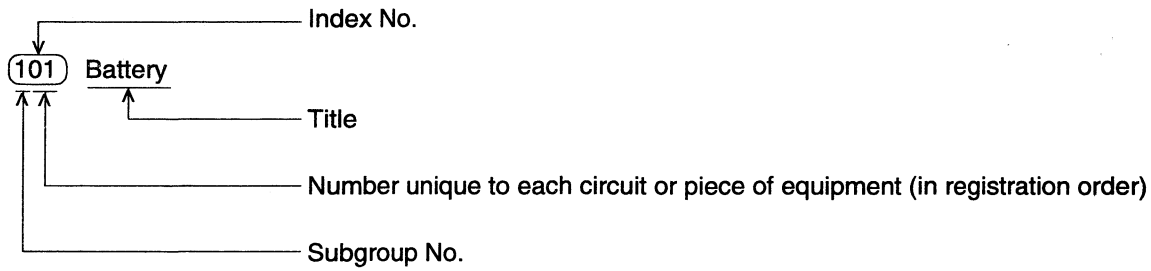

- Page enumeration is independent by every group where first page is always 1.

Group No.	Group denomination	Contents
00	General	Model coding system, power train table, chassis No., engine No., power train label, vehicle identification No., precautions for maintenance operation, table of standard tightening torques, connector configuration chart
01	Maintenance schedule	Maintenance schedule tables, maintenance operations, lubrication
10	Removal and installation of engine	Removal and installation of engine from vehicle
11	Engine	Engine body
12	Lubrication	Lubrication system, oil pressure system
13	Fuel and engine control	Fuel system, engine control, pre-stroke control injection pump system
14	Cooling	Cooling system
15	Intake and exhaust	Intake and exhaust system, turbocharger, intercooler
21	Clutch	Clutch body and clutch control system
22A	Manual transmission < M060S5, S6, M070S6 >	Transmission body and transmission control system
22B	Manual transmission < M8S2×5 >	Transmission body and transmission control system
23	Automatic transmission	Transmission control system, oil cooler system
25	Propeller shaft	Front and rear propeller shafts, center bearing assembly
26	Front axle	Front axle and wheel alignment
27	Rear axle	Axle drive mechanism
31	Wheel and tire	Wheel and tire
33	Front suspension	Leaf suspension mechanism
34	Rear suspension	Leaf suspension mechanism

Group No.	Group denomination	Contents
35A	Brake < Air over hydraulic brake >	Brake mechanism, dual brake valve, brake booster (airmaster), air compressor, air dryer, exhaust brake system
35B	Brake < Full air brake >	Brake mechanism, dual brake valve, air compressor, air dryer, exhaust brake system
36A	Parking brake < Center parking brake >	Control system, center brake body
36B	Parking brake < Wheel parking brake >	Control system, parking brake control valve, spring brake valve
37	Steering	Steering system, power steering booster, oil pump
41	Frame	Frame repair
42	Cab	Cab mounting and tilt, door, exterior fittings, interior fittings
54	Electrical	Power supply, charging and grounding system, engine start and stop systems, lighting system, meter system, indicator and warning systems, cab electric devices, chassis electric devices, engine and transmission electric devices
55A	Air-conditioner	Air-conditioner
55B	Heater	Heater

General Explanation of This Manual

● **Specifications**
Particulars relative to maintenance service are made.

● **Structure and operation**
(1) Regarding conventional equipment, descriptions are made in brief.
(2) Regarding new equipment, descriptions of system and operating condition are made in detail.

● **Troubleshooting**
Symptoms of troubles and possible causes are described comparatively.

● **Inspection and adjustment mounted in vehicle**
Descriptions are made regarding inspection and adjustment of units mounted in vehicle.

● **Service procedure**
In principle, an explanation is given at the spread title page so that the service procedure can be understood. Servicing points are explained as a supplementary explanation.

HOW TO READ THIS MANUAL

Regarding the design of this manual

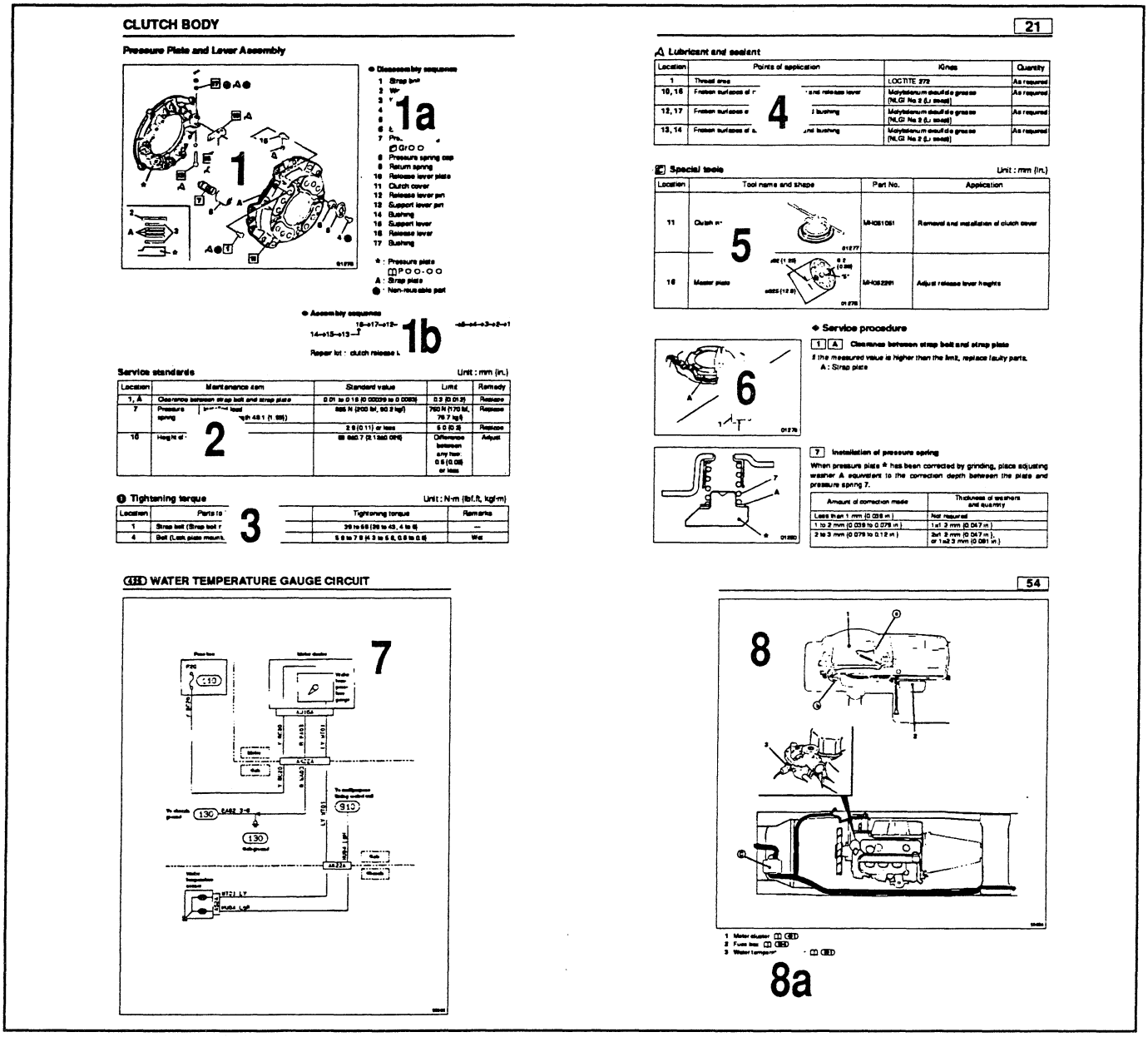

1. .....Illustration for disassembly and assembly or removal and installation : 3-D exploded view of component parts is displayed.
   1a. .....Names of parts show an example of the disassembly (removal) sequence.
   1b. .....When the assembly (installation) sequence differs from the disassembly (removal) sequence, an example of the assembly (installation) sequence is shown.
2. .....Service standards are shown collectively, classified by location.
3. .....Tightening torques are shown collectively, classified by location.
4. .....Points of lubricant, fluid and sealant application are shown collectively, classified by location.
5. .....Special tools to be used are shown collectively, classified by location.
6. .....When it is considered hard to understand the service procedure, just by the foregoing description, a supplementary description of the service procedure is given.
7. .....Various system circuits are illustrated starting from the fuses. Battery to fuse wiring is treated as a power supply circuit.
8. .....Circuit diagram of parts, connectors and harnesses.
   8a. .....Part names.

1. Illustration for disassembly and assembly or removal and installation

This shows that the appropriate service procedure is described in the text.

This shows the key No. of the part. In the text, this No., is referred to uniformly throughout.

CLUTCH BODY

Pressure Plate and Lever Assembly

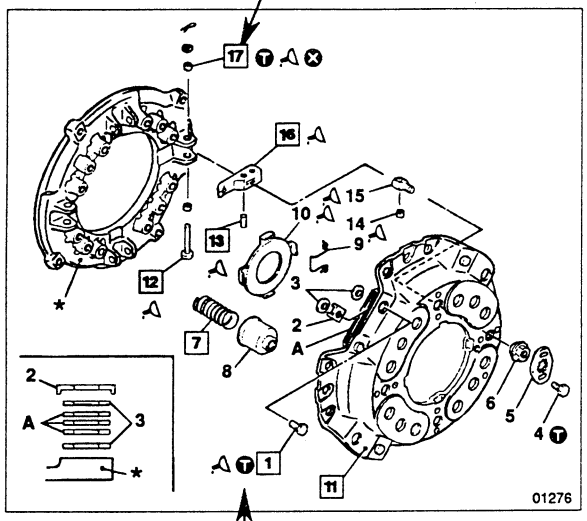

● Disassembly sequence

1 Strap bolt
2 Washer
3 Washer
4 Bolt
5 Lock plate
6 Support nut
7 Pressure spring
Gr ○ ○
8 Pressure spring cap
9 Return spring
10 Release lever plate
11 Clutch cover
12 Release lever pin
13 Support lever pin
14 Bushing
15 Support lever
16 Release lever
17 Bushing

* : Pressure plate
P ○ ○ - ○ ○
A : Strap plate
⊗ : Non-reusable part

● Assembly sequence

16→17→12→10→9→8→7→6→5→4→3→2→1
14→15→13→┘

Repair kit: clutch rel e lever kit

This shows an example of the disassembly (removal) sequence.

This shows that the service procedure is described in another section.

P ○ ○ - ○ ○
: shows reference page within the same group.

Gr ○ ○
: shows reference group within the same book.

No service procedure is referred to in this section, but the item can be an objective of various procedures.

Meaning of symbols

- T : shows that the tightening torque is specified.
- : shows that application of lubricant, fluid or sealant is required.
- ⊗ : shows that the part should not be reused.

This is shown when the assembly (installation) sequence is not the reverse of the disassembly (removal) sequence.

This shows that a repair kit is available.

2. Service standards table

Only the relevant service standards are shown.

Service standards Unit : mm {in.}

Location	Maintenance item		Standard value	Limit	Remedy
1, 11	Clearance between strap bolt and strap plate		0.01 to 0.16 {0.00039 to 0.0063}	0.3 {0.012}	Replace
7	Pressure spring	Installed load (Installed length 49.1 {1.93})	835 N {185 lbf, 85 kgf}	710 N {160 lbf, 72.3 kgf}	Replace
		Tilt	2.9 {0.11} or less	5.0 {0.20}	Replace

This shows the key No. of the relevant part.

3. Tightening torque table

This shows specified tightening torque.

T Tightening torque Unit : N·m {lbf.ft, kgf·m}

Location	Parts to be tightened	Tightening torque	Remarks
1	Strap bolt (Strap bolt mounting)	39 to 59 {29 to 43, 4 to 6}	—
4	Bolt (Lock plate mounting)	5.9 to 7.8 {4.3 to 5.8, 0.6 to 0.8}	Wet

This shows that the item is to be tightened wet.

This shows the key No. of the relevant part.

4. Lubricant, fluid and sealant table

Only the relevant lubricant, fluid and sealant are shown.

This shows the application point.

Lubricant, fluid and sealant

Location	Points of application	Kinds	Quantity
1	Thread area of bolt	LOCTITE 272	As required
10, 16	Friction surfaces of release lever plate and release lever	Molybdenum disulfide grease [NLGI No.2 (Li soap)]	As required

This shows the key No. of the relevant part.

This shows the specified brand.

5. Special tools table

Only the relevant special tools are shown.

Purpose of special tools is shown.

Special tools

Unit : mm {in.}

Location	Tool name and shape	Part No.	Application
11	Clutch installer 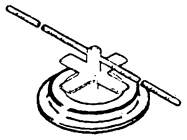 01277	MH061051	Removal and installation of clutch cover
16	Master plate 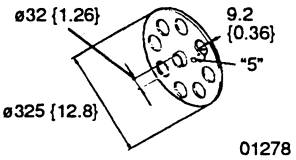 01278	MH062291	Adjust release lever heights

This shows the key No. of the relevant part.

Quote this number when placing an order for the part.

6. Service procedure

This indicates a special service tool.

This shows the key No. of the relevant part.

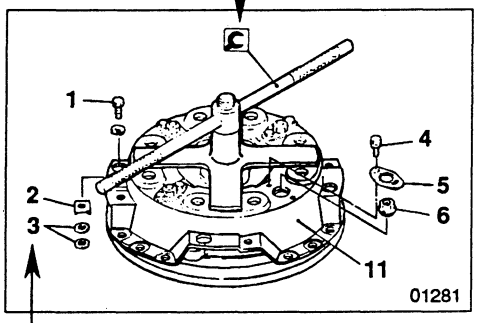

01281

11 Removal and installation of clutch cover

- Depress pressure spring **7** using clutch installer, then remove the following parts:
  Strap bolt **1**, washer **2**, washer **3**, bolt **4**, lock plate **5**, support nut **6**
- Loosen the clutch installer gradually, then remove clutch cover **11** when the pressure spring is fully released.
- For installation, follow the removal sequence in reverse.

Servicing procedures of disassembly (removal), assembly (installation), inspection, adjustment, etc. are shown collectively.

The key No. referred to in the text is always the same as the key No. shown in the illustration.

7. Circuit Description

- The circuits show systems classified by index numbers.
- Only the functioning wires in the system are described. When a wire is connected to the system circuit, but does not function in the system, the wire is referred to by an index number. (*4-1*)
- The connector installation point mark corresponds to the marks in the vehicle layout so that the connector installation points can be checked during inspection. (*3-1, 3-2*)
- In basic descriptions, the fuse box is considered as the power source for a circuit. The circuit from the battery to the fuse box is separately described as a power circuit and referred to by the index number in each circuit. (*4-2*)
  However, for circuits that require a description of the circuit from the battery, the battery is considered as the power source.
- Switches and relays in the circuit diagram are shown in the state where no current flows through the circuit.

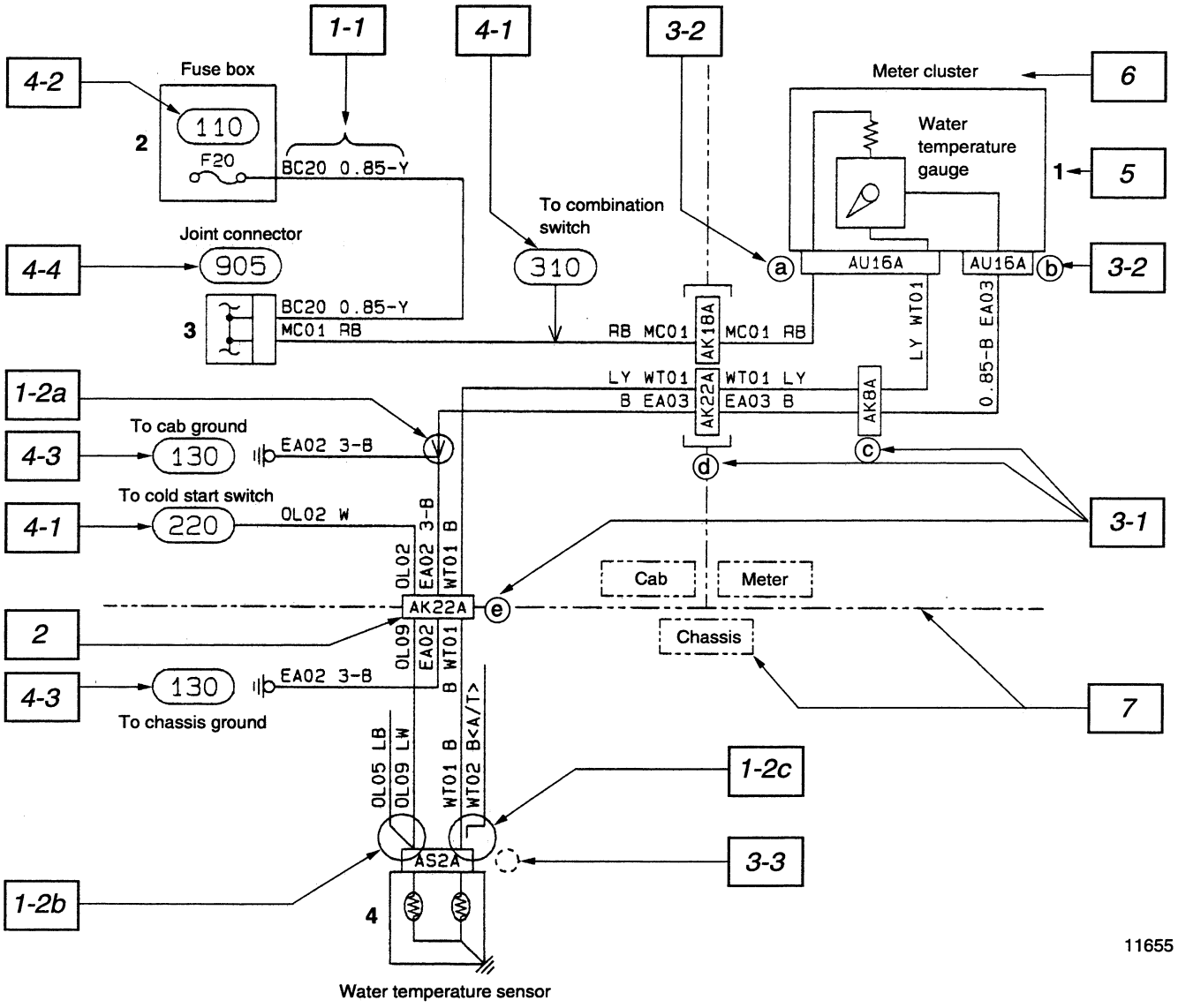

- Items described in circuit diagram
  - *1* Wire
  - *2* Connector
  - *3* Connector installation point mark
  - *4* Index number
  - *5* Key number
  - *6* Part name
  - *7* Indication of harness installation area on the vehicle

For details, see overleaf.

1 Wire

1-1 Circuit number, cross section of conductor and color of wire are indicated for each wire.

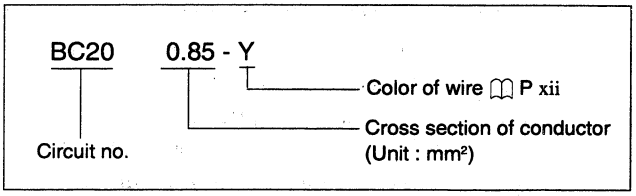

As 0.5 mm² cross section wire is the most commonly used, the cross section indication is omitted when it is 0.5 mm². All the other figures are indicated as illustrated.

Example : 0.5 mm²; BC20 Y 0.85 mm²; BC20 0.85-Y 5 mm²; BC20 5-Y

1-2 Different types of wire connection are indicated as follows:

1-2a When wire is connected normally.

(Indicated by an arrow. The arrow direction, however, does not indicated the current flow direction.)

1-2b When two or more wires are connected to a connector terminal.

1-2c When the type of wire or connection differs according to specifications.

2 Connector

Connector type is indicated in a box □ . Whether the connector is female or male is not indicated. 🖻 Gr ○ ○

Though several connectors can be installed in one point on an actual vehicle, only the connector related to the system is indicated in the circuit diagram.

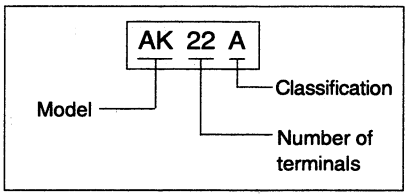

3 Connector installation point mark ○ ○ ○

Connector installation point marks (a , b , c ...) indicate the installation positions on a vehicle corresponding to the vehicle layout. The marks are indicated only where the actual installation position on the vehicle is difficult to check or when you need to distinguish the connector in question from among several other connectors at the same point.

3-1 When the actual position on the vehicle is difficult to check.

A mark is indicated for each connector. When several connectors are installed at one point they are indicated by a mark in [ ].

3-2 When it is difficult to identify the connector in question because there are several connectors of the same type.

3-3 When the connector installation point is clear enough, the mark is not indicated.

4 Index number ⬭

The index number 110 in a circuit diagram shows the connecting destination that is not directly used in the system or indicates another diagram that provides a detailed description of each unit. This can be used as a reference to check the relationship with other circuits. Different types of index numbers are indicated as follows:

4-1 To show the connecting destination with another circuit.

4-2 To show the power circuit from the battery and the connecting destination with another circuit connected to the fuse.

4-3 To show the grounding position on the vehicle and the connecting destination of another circuit that is grounded.

4-4 To show a diagram that describes the details of a unit that has complex wiring.

5 Key number

Key numbers correspond to those in the vehicle layout.

6 Part name

Part names are preceded by key numbers.

7 Installation area of harness on the vehicle

This indicates the area where the harness is installed on the vehicle using border lines so that the connector installation positions can be checked easily.

8. Vehicle layout description

- Vehicle layout describes installation points of parts, connectors and harnesses.

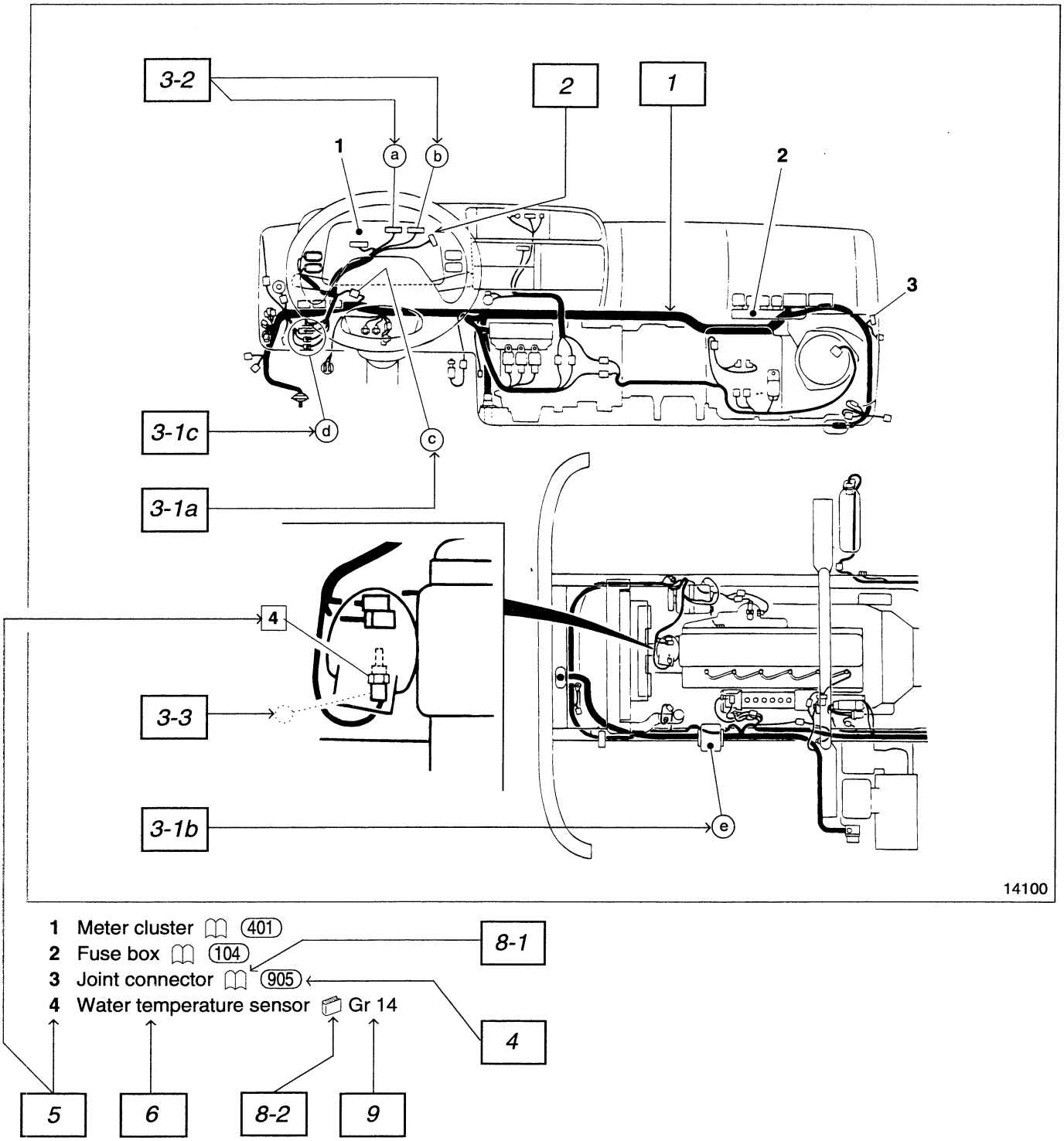

- Items described in vehicle layout

1 Wire	*4* Index number	(*7* Described only in circuit diagram)
2 Connector	*5* Key number	*8* Reference mark
3 Connector installation point mark	*6* Part name	*9* Reference group

For details, see overleaf.

1 Wire

This indicates the wiring status of the harness actually installed on the vehicle.

2 Connector

The connector installation point is indicated briefly (in a two dimensional or three dimensional drawing).

3 Connector installation point mark

The connector installation point marks are normally indicated clockwise, starting from the top left of the layout. The marks correspond to those in the circuit diagram. However, some of the marks directly indicated in the circuit diagram are indicated indirectly as follows in the vehicle layout.

3-1 When it is difficult to recognize the connector position on the actual vehicle

3-1a Indicates the connector in question.

3-1b Indicates the connector box or bracket for the connector in question, but does not indicate the connector itself.

3-1c Indicates the area where connectors, including the one in question, are located, but does not indicate the connector itself.

(This indication is used when several connectors are installed in one area and the connectors are not fixed with clips, and it is difficult to identify the actual position of the connector in question solely by the wiring status of the harness.)

3-2 When connectors of the same type are located closely together, and it is difficult to identify which is the one in question

3-3 Marks are not indicated when the connector position is clear enough.

4 Index number

In the vehicle layout, the index number is indicated so that parts can be easily inspected. For this reason, index numbers do not indicate the connecting destination of a circuit, as in the circuit diagram, but indicate the numbers where removal and installation, inspection, or adjustment procedures are described.

5 Key number

Key numbers are normally indicated clockwise, starting from the top left of the layout. The numbers correspond to those in the circuit diagram. When the key number is enclosed in a box, the service procedure for the part is described.

6 Part name

(*7* Described only in circuit diagram)

8 Reference mark

Two types of reference mark are indicated as follows:

8-1 When referring to a part in the same group : 🕮

8-2 When referring to a part in another group : 🗀

9 Reference group

● Wire Colors

Example: WB means a wire whose ground color is white and whose stripe is black.

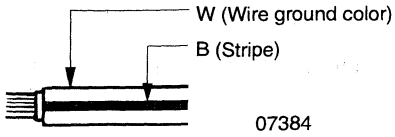

Wire ground color		Wire ground color + Stripe									
W	White	WR	White red	WB	White black	WL	White blue	WG	White green		
B	Black	BW	Black white	BY	Black yellow	BR	Black red				
R	Red	RW	Red white	RB	Red black	RY	Red yellow	RG	Red green	RL	Red blue
Y	Yellow	YR	Yellow red	YB	Yellow black	YG	Yellow green	YL	Yellow blue	YW	Yellow white
G	Green	GW	Green white	GR	Green red	GY	Green yellow	GB	Green black	GL	Green blue
Br	Brown	BrW	Brown white								
L	Blue	LW	Blue white	LR	Blue red	LY	Blue yellow	LB	Blue black	LO	Blue orange
Lg	Yellow green	LgR	Yellow green red	LgY	Yellow green yellow	LgB	Yellow green black	LgW	Yellow green white		
O	Orange										
P	Pink	PB	Pink black								

● Sealed Wire

A sealed wire is clearly identified as follows:

Example

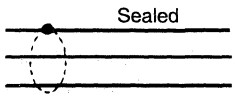

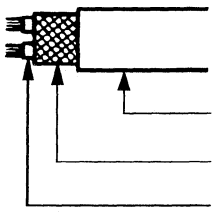

07385

● Symbol Mark

Battery	Fuse	High current fuse	Motor	Lamp	Switch
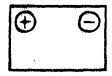				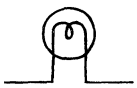	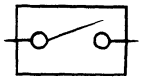

Switch	Ground	Diode	Emitting diode	Zener diode	Condenser
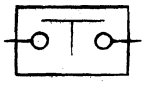					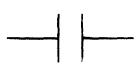

Transistor	Relay	3-way magnetic valve
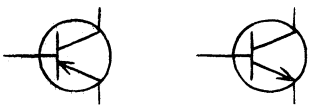	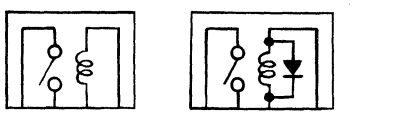	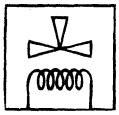

Terms and Units

The terms and units in this manual are defined as follows.

- This service manual contains important cautionary instructions and supplementary information under the following four headings which identify the nature of the instructions and information:

DANGER⚠ — Precautions that should be taken in handling potentially dangerous substances such as battery fluid and coolant additives.

WARNING⚠ — Precautionary instructions, which, if not observed, could result in serious injury or death.

CAUTION⚠ — Precautionary instructions, which, if not observed, could result in damage to or destruction of equipment or parts.

NOTE — Suggestions or supplementary information for more efficient use of equipment or a better understanding.

- **Front and rear**

The forward running direction of the vehicle is the front and the reversing direction is the rear.

- **Left and right**

Left hand side and right hand side, when facing the forward running direction of the vehicle, are respectively left and right.

- **Terms of service standards**

(1) Standard value

Standard value dimensions in designs indicating: the design dimensions of individual parts, the standard clearance between two parts when assembled, and the standard value for an assembly part, as the case may be.
The figure in [ ] is the basic diameter.

(2) Limit

When the value of a part exceeds this, it is no longer serviceable in respect of performance and strength and must be replaced or repaired.

- **Tightening torque**

Excessive or insufficient tightening torque has particular importance in respect of performance. Accordingly, tightening torque is specified in locations that are to be tightened.
Where there is no specified figure for tightening torque, follow the table covering standard tightening torques.
When the item is to be tightened in a wet state, wet is indicated. Where there is no indication, read it as dry, and tighten at specified torque.

- **Unit**

Length, weight, surface area and capacity are in SI units. Imperial and metric units are given in brackets. Temperatures are given in degrees Celsius with degrees Fahrenheit given in brackets.

MITSUBISHI FUSO

BACK HOME

FH

Service Manual

1996 Group 00 - General

1997 Model Changes
1998 Model Changes
1999 Model Changes
2000 Model Changes
2001 Model Changes

MITSUBISHI FUSO TRUCK OF AMERICA, Inc.

Pub No. TWME9502-00

MITSUBISHI FUSO

Service Manual

Table of Contents

BACK

HOME

FH 2001

Model Year Changes

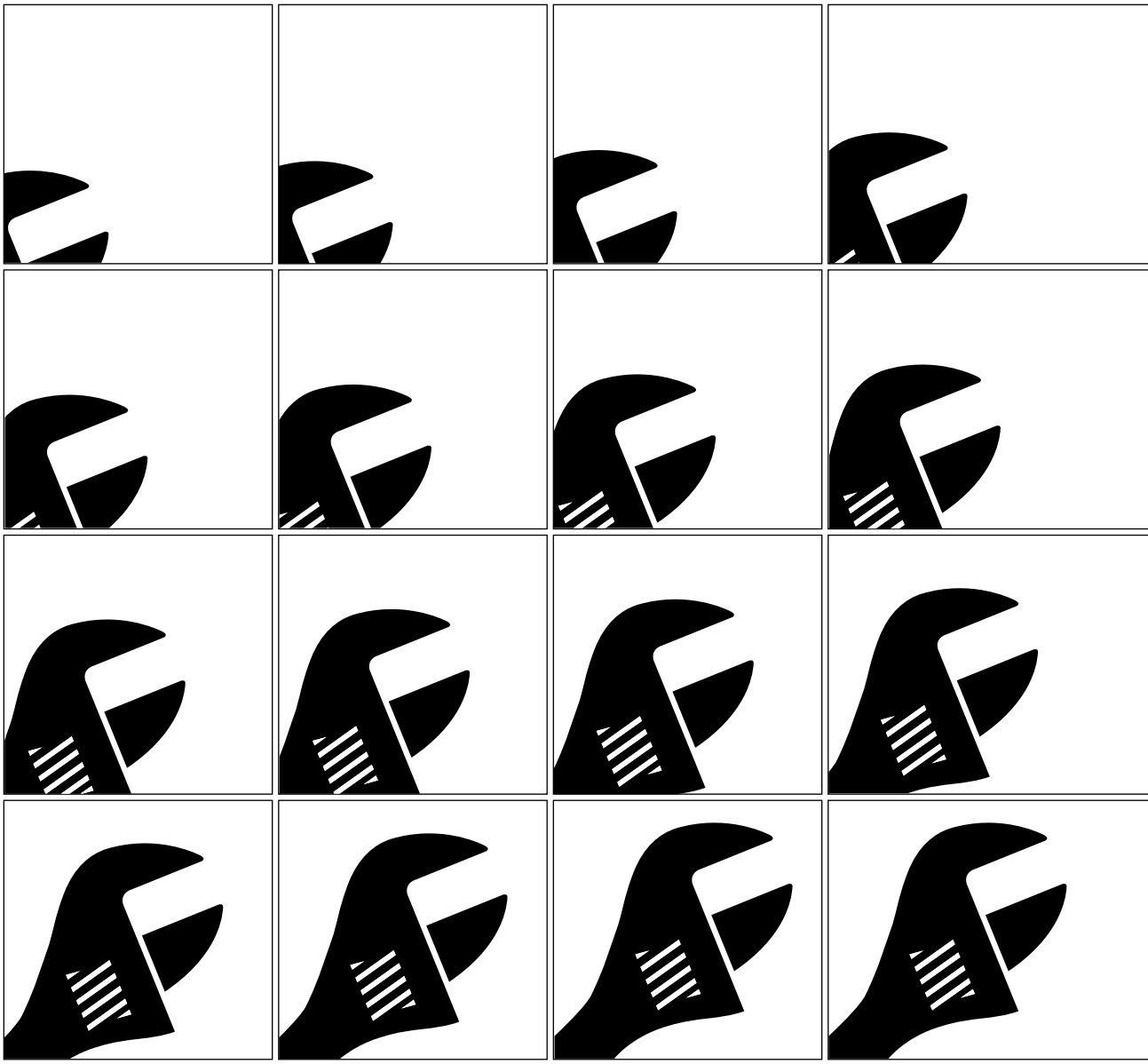

Pub. No. TWME9502-5

FH

SERVICE MANUAL

FOREWORD

This Service Manual contains maintenance and repair methods for personnel involved in the maintenance and repair of 2001 model Mitsubishi Fuso Truck FH series.
Read this manual carefully as an aid to providing correct, efficient and fast maintenance.
Please note, however, that due to continuous improvements on the specifications, numbers and description for maintenance might be changed without prior notice.
If you have any question, or encounter a problem, please do not hesitate to contact your nearest Mitsubishi Fuso dealer or distributor.

© Mitsubishi Motors Corporation, May 2000

MITSUBISHI FUSO TRUCK OF AMERICA, Inc.

GROUP INDEX

2001 MODEL CHANGES

GENERAL 00

MAINTENANCE SCHEDULE 01

COOLING 14

ELECTRICAL 54

2001 MODEL CHANGES

Item	'01 Model	⇦	'00 Model
Gr 00 General Power Train Table and Vehicle Identification Number updated	🕮 Gr 00		—
Gr 01 Maintenance Schedule Maintenance Operations revised as required	🕮 Gr 01		—
Gr 13 Fuel and engine control Part No. and type of Read Only Memory (ROM) pack are different.	MK 386562 (MRT-E7)		MK 344606 (MRT-F6)
Gr 14 Cooling Radiator replaced with new type	🕮 Gr 14		—
Gr 35 Brake Brake pedal-to-floor clearance changed	32 mm {1.26 in.}		52 mm {2.05 in.}
Standard value of brake pedal mounting height	254 mm {10.0 in.}		264 mm {10.4 in.}
Gr 54 Electrical ① POWER, CHARGING AND GROUND • Fuse box changed in construction due to adoption of mirror heater	(104) FUSE 🕮 P.54-7		
⑥ CAB SIDE ELECTRICS • Mirror heater circuit is added.	(629) MIRROR HEATER CIRCUIT 🕮 P.54-8		

GROUP 00 GENERAL

POWER TRAIN TABLE 00-2

VEHICLE IDENTIFICATION NUMBER 00-2

PRECAUTIONS FOR MAINTENANCE OPERATION 00-3

POWER TRAIN TABLE/VEHICLE IDENTIFICATION NUMBER

Power Train Table

Model	Engine model	Clutch model	Transmission model	Propeller shaft	Rear axle model	Final reduction and gear ratio
FH211C G. V. W. 8160 kg {17955 lb}	6D34T2 175 HP/2900 rpm 325 ft.lbs/2000 rpm (SAE, Gross)	C5M33	M050S5 6.875/1.000	P4	R040T	D040H 4.111
FH211E, G, H, J, K G. V. W. 8160 kg {17995 lb}			M050S6 6.523/0.803			D040H 4.625
FH211C, E, G, H, J, K G. V. W. 8160 kg {17995 lb}		Torque converter (TC290-1.72)	M4A4 (Allison AT542 or AT545) 3.454/1.000			D040H 4.111

Identification Number

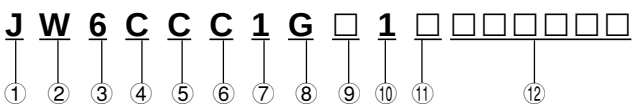

①	Country	J : Japan
②	Make	W: Mitsubishi Fuso
③	Vehicle type	6 : Incomplete Vehicle
④	Gross vehicle weight/Brake system	C : 16001 to 19500 lbs/Hydraulic
⑤	Line	C : FH211
⑥	Series (Wheelbase)	C : 2.6 to 2.89 m {8.53 to 9.48 ft.}
		E : 3.2 to 3.49 m {10.49 to 11.44 ft.}
		G : 3.8 to 4.09 m {12.46 to 13.41 ft.}
		H : 4.1 to 4.39 m {13.45 to 14.40 ft.}
		J : 4.4 to 4.69 m {14.43 to 15.38 ft.}
		K : 4.7 to 4.99 m {15.41 to 16.37 ft.}
⑦	Cab chassis type	1 : Chassis cab
⑧	Engine	G : 5.861 ℓ Diesel turbocharged and charge air cooled
⑨	Check digit	
⑩	Model year	1 : 2001
⑪	Plant	K : Kawasaki-1
		L : Kawasaki-2
		M : Kawasaki-3
⑫	Plant sequential number	

DANGER ⚠

This product contains or emits chemicals known to the State of California to cause cancer and birth defects or other reproductive harm.

GROUP 01 MAINTENANCE SCHEDULE

MAINTENANCE OPERATIONS

- **Battery 01-2**
- **Fuse 01-6**

MAINTENANCE OPERATIONS

Battery

DANGER ⚠

- **Since flammable hydrogen gas is generated by the battery, be sure to obey the following warnings:**
  - **Do not short-circuit the ⊕ and ⊖ terminals on the battery.**
  - **Keep sparks and lit cigarettes away from the battery.**
  - **Do not wear metal objects on your arms and lean over the battery.**
- **Because the battery electrolyte is diluted sulfuric acid and is corrosive, when handling the battery wear safety glasses and rubber gloves to protect the eyes and hands.**
- **Battery posts, terminals and related accessories contain lead and lead compounds. Wash hands after handling.**

WARNING ⚠

To prevent a short-circuit be sure that the disconnected the battery cables do not accidentally touch the battery terminals.

CAUTION ⚠

- **Make sure that you disconnect the battery cable ⊖ first when you disconnect the battery cables.**
- **Make sure that all electrical switches of the vehicle are OFF before connecting the battery cables.**
- **Make sure that you connect the battery cable ⊕ before you connect the battery cable ⊖.**

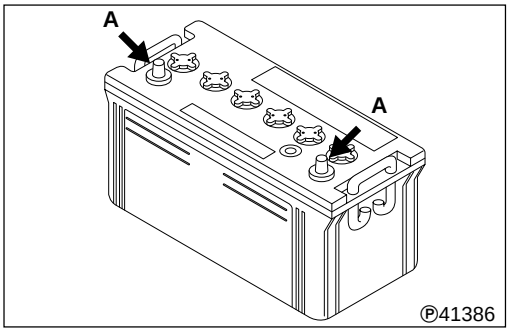

Visual inspection

- If terminal **A** is corroded, scrub the corrosion off of it using a wire brush.
- If cracks or defects are found on the battery, replace it since the cracks or defects can cause liquid spills.

CAUTION ⚠

Make sure you grease the ⊕ side of terminal A because it is easily corroded.

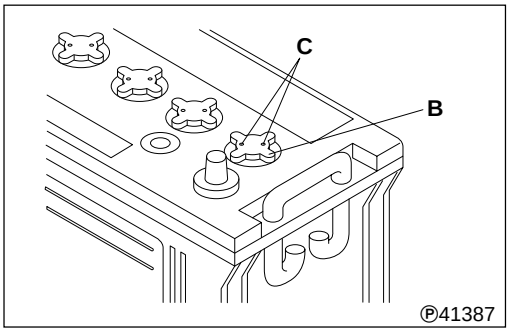

- If bleed hole **C** of vent plug **B** is clogged, clean the hole.

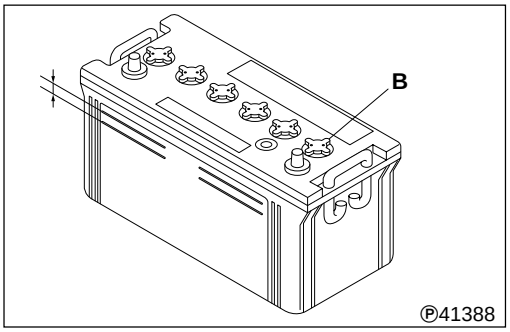

Inspection of fluid level

- Make sure that the battery electrolyte level is between the UPPER and LOWER level lines.
- If the level is below the LOWER level line, remove vent plug **B** and fill the battery with distilled water or battery replenisher to the UPPER level.

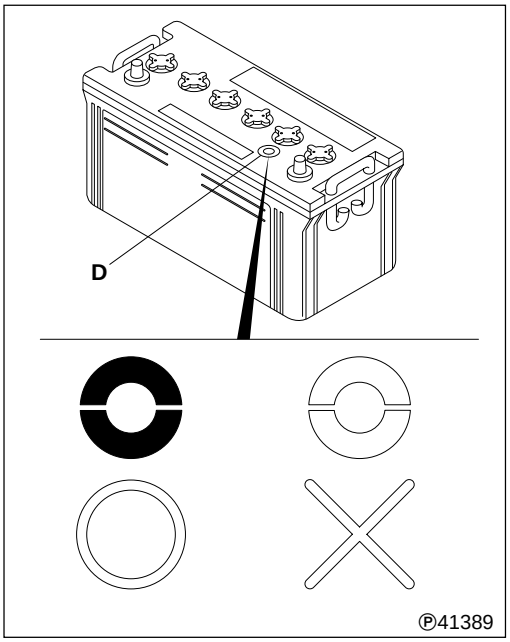

Measurement of specific gravity

You can tell the specific gravity of the battery electrolyte by the color shown in indicator **D**.

Blue : Good
White : Charge or replace

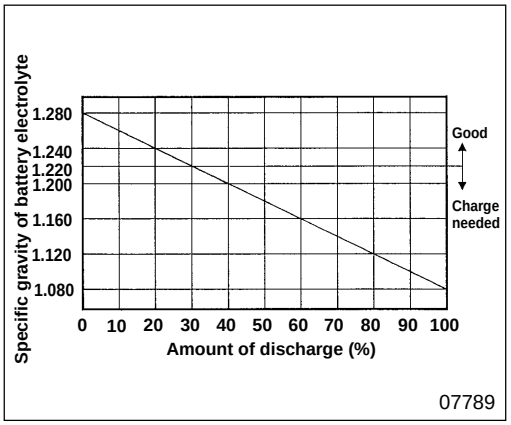

Charging

- Although, as a rule, charging of the battery should be done with the battery removed from the vehicle, if you have to charge the battery while it is on the vehicle, make sure that you stop the engine and disconnect the battery cable ⊖.
- Remove vent plug **B** before charging the battery.
- For the recommended charge time and current, see the following table to avoid overcharging.

	Charge current (A)	Charge time (H)	Upper limit of fluid temperature (°C {°F})
Normal charge	$\frac{\text{Value of 5-hour rating capacity}}{10}$	$\frac{\text{* Amount of discharge (Ah)}}{\text{charge current (A)}} \times 1.2$ (to 1.5)	45 {113}
Quick charge	$\frac{\text{Value of 5-hour rating capacity}}{1.5}$	0.5	55 {131}

* Amount of discharge (Ah) = 5-hour rating capacity (Ah) $\times \frac{\text{Amount of discharge (\%)}}{100}$

- Use the graph shown on the left to calculate the amount of discharge (%).
- Use diluted sulfuric acid, made up of sulfuric acid and refined or distilled water, as the battery electrolyte.
- The specific gravity of fully-charged battery electrolyte is 1.280 with the temperature at 20°C {68°F}.

DANGER ⚠

- **Do not let the battery electrolyte level rise and overflow while charging the battery.**
- **Keep unprotected lights away from the battery while charging it or it might explode.**
- **Be careful not to generate sparks while charging the battery because it is dangerous.**
- **After charging the battery, tighten vent plug B, wash away sulfuric acid from the battery using water, and dry the surface.**
- **Be sure to check the electrolyte level before charging the battery. Charging with the electrolyte level below the lower limit (LOWER LEVEL) can cause premature deterioration, heat generation and explosion of the battery.**

MEMO

Fuse

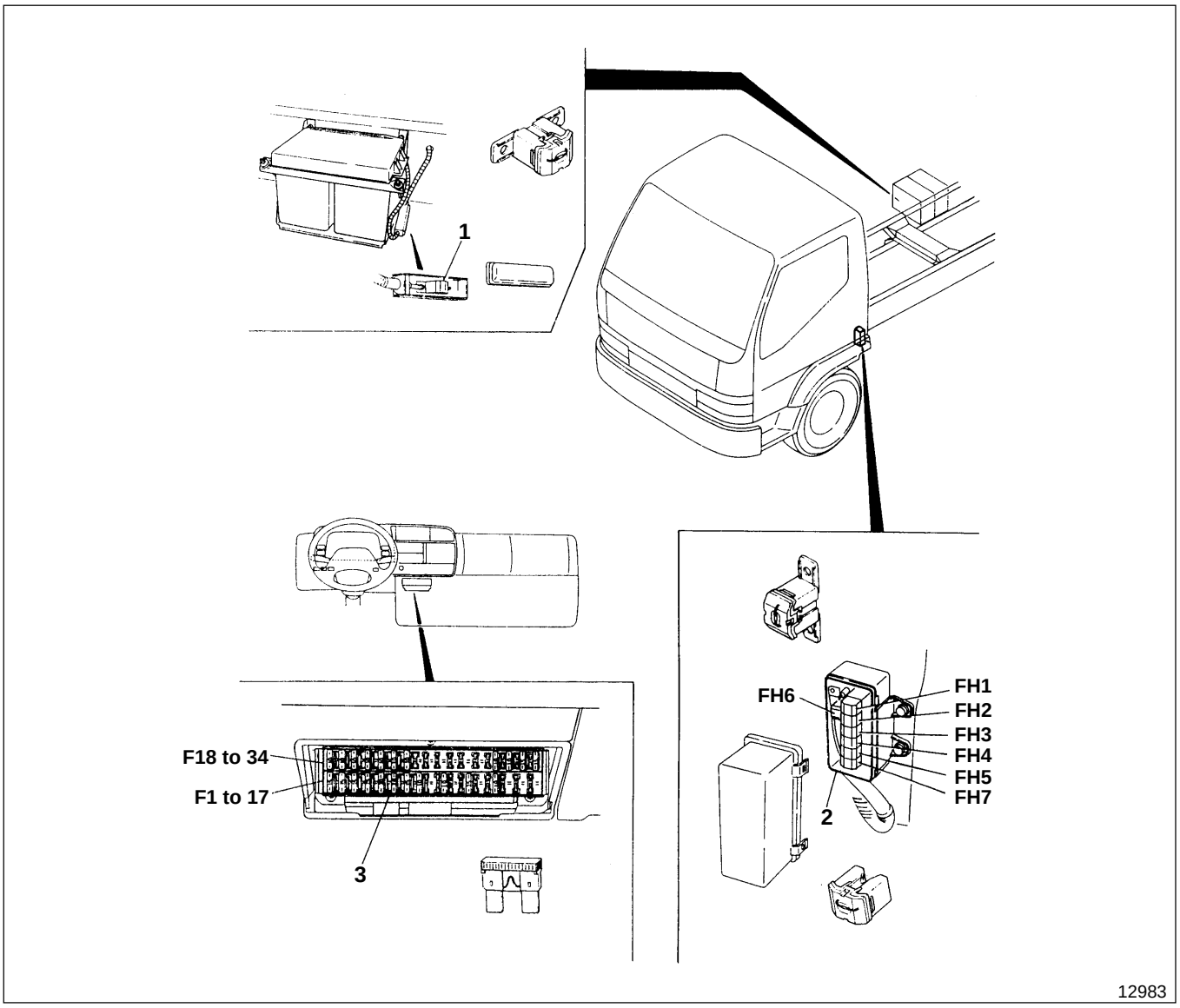

1 Main high-current fuse
2 High-current fuse box
3 Fuse box

CAUTION ⚠

- **If a fuse blows, make sure you identify and remedy the cause, then replace the fuse.**
- **Make sure that you replace the fuse with one having the same rating.**
- **Make sure that you remove the ⊖ terminal of the battery cable before removing main high-current fuse 1 and high-current fuses FH1 to 7.**

Main high-current fuse

Fuse No.	Main load		Capacity
—	High-current fuse box	—	140A
		For ABS	50A

High-current fuse box

Fuse No.	Main load	Capacity
FH1	Fuse box (F1 to F4)	50A
FH2	Fuse box (F5 to F8, F11)	40A
FH3	Brake booster (Hydraulic booster)	30A
FH4	Starter switch (Terminal B)	50A
FH5	Glow relay	50A
FH6	Alternator	140A
FH7	Fuse box (F31 to F34)	40A
FH8	ABS hydraulic unit	40A

Fuse box

Fuse No.	Main load	Capacity
F1	Headlamp, LH	15A
F2	Headlamp, RH	15A
F3	Stop lamp, horn	15A
F4	Turn signal lamp	15A
F5	—	—
F6	Cab lamp	10A
F7	Van body dome light	10A
F8	A/T fluid cooler fan relay	20A
F9	—	—
F10	Power window	25A
F11	Reserve power (BATT)	10A
F12	—	—
F13	Cigarette lighter	15A
F14	Radio	10A
F15	Reserve power (ACC)	10A
F16	—	—
F17	Mirror heater	10A

Fuse No.	Main load	Capacity
F18	Starter	10A
F19	Backup lamp	10A
F20	Meter cluster, DRL	10A
F21	Wiper	10A
F22	Engine control (ECU)	10A
F23	—	—
F24	ABS	10A
F25	Option (MAIN)	10A
F26	Mirror heater	10A
F27	Exhaust brake, A/T	10A
F28	Transmission PTO	10A
F29	Pre-stroke cut relay (Engine control)	10A
F30	* Air-conditioner control	10A
F31	* Air-conditioner compressor	10A
F32	* Condenser fan	15A
F33	Blower fan	25A
F34	Tail lamp	20A

* : Fuses are provided for these pieces of equipment only where they are installed.

PTO : Power take-off
A/T : Automatic transmission
DRL : Daytime running light
ABS : Anti-lock brake system

GROUP 14 COOLING

RADIATOR, FAN SHROUD 14-2

RADIATOR, FAN SHROUD

Radiator Assembly

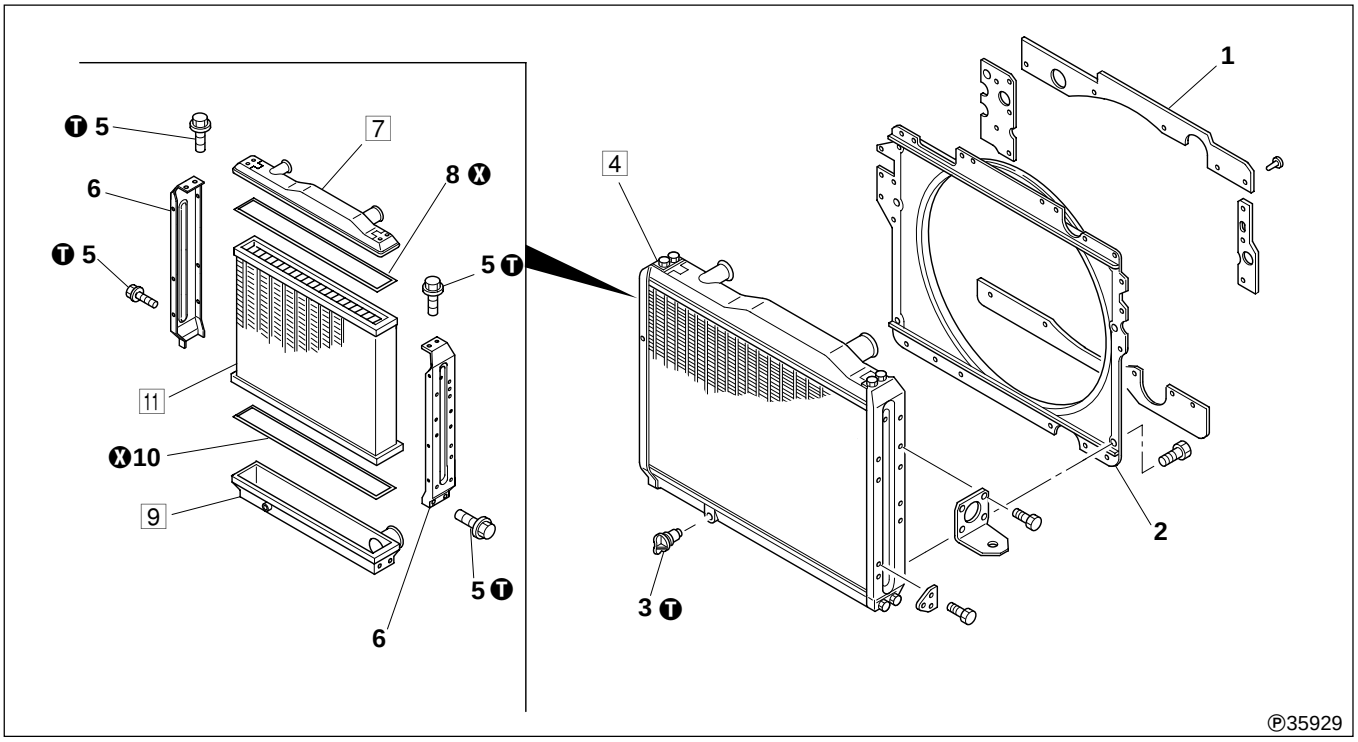

● **Disassembly sequence**

1 Baffle plate
2 Radiator shroud
3 Drain cock
4 Radiator assembly
5 Bolt
6 Side member
7 Upper tank
8 O-ring
9 Lower tank
10 O-ring
11 Core

Ⓧ : Non-reusable part

CAUTION ⚠

- **Do not disassemble the radiator assembly 4 unless defects are evident.**
- **The upper tank 7 and lower tank 9 are made of plastic and could crack if subjected to undue shock. Handle them with care.**
- **Replace the core 11 if the clinching tabs that hold the upper tank 7 or lower tank 9 have two paint marks, showing that the tabs have been bent back twice.** 🕮 **P.14-3**

● **Assembly sequence**

Follow the disassembly sequence in reverse.

Service standards

Location	Maintenance item	Standard value	Limit	Remedy
4	Radiator assembly air leakage (with air pressure of 150 kPa {21 psi, 1.5 kgf/cm²})	0 cm³ {0 cu. in.}	—	Rectify or replace

Tightening torque

Unit: N·m{ft.lbs, kgf·m}

Location	Parts to be tightened	Tightening torque	Remarks
3	Drain cock	2 {1.4, 0.2}	—
5	Bolt (side member mounting)	13 {9, 1.3}	—

Special tool

Location	Tool name and shape	Part No.	Application
7, 9	Lock & break tool	Obtain locally or use sublet repair	Upper tank, lower tank removal

The part number given is Toyo Radiator's one.

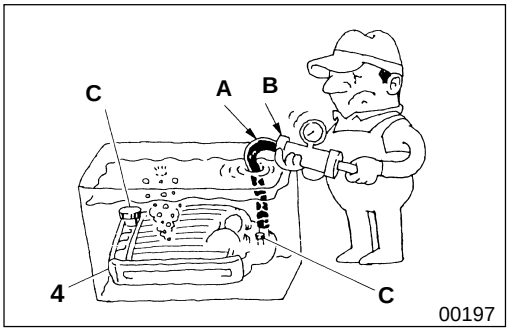

Service procedure

4 **Radiator inspection**

- Fit a hose **A**, radiator cap tester **B** and plug **C** onto the radiator upper tank **7**.
- Fit a plug **C** onto the radiator lower tank **9**, then immerse the radiator in a tank of water.
- Using the radiator cap tester **B**, apply the specified air pressure of 150 kPa {21 psi, 1.5 kgf/cm^2}, and check for air leakage.
- If air leakage is apparent, repair or replace the radiator assembly **4**.

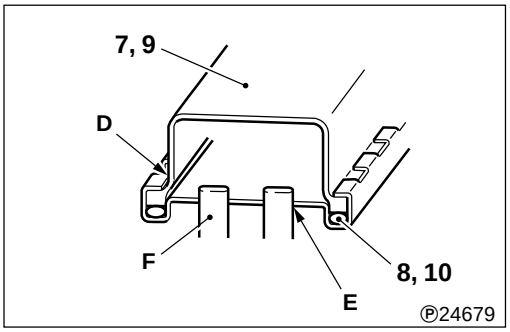

- Replace the following parts according to the leaking locations.

Leaking location	Part to replace
Tank root **D**	O-ring **8** or **10**
Tank **7**	Tank **7**, O-ring **8**
Tank **9**	Tank **9**, O-ring **10**
Tube fitted area **E**	Core **11**, O-ring **8**, **10**
	* Tube **F** (TIG welded), O-ring **8**, **10**
Tube **F**	Core **11**, O-ring **8**, **10**

* : When repaired

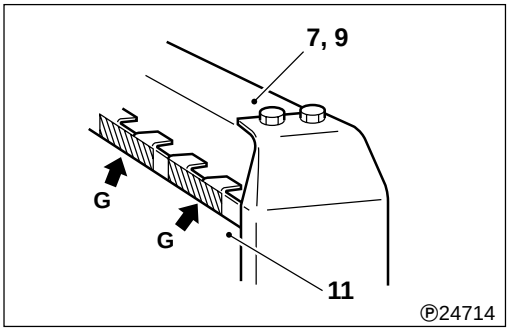

CAUTION ⚠

- **Replace the core 11 if its clinching tabs that hold the upper tank 7 or lower tank 9 have two paint marks G, evidence of the tabs having been bent back twice.**
- **The tabs are provided with one paint mark each time they are bent back. Count the paint marks on each of upper and lower tabs separately.**

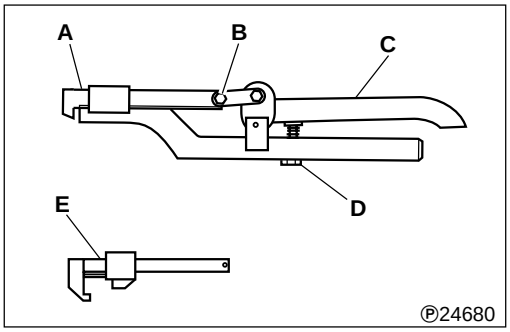

7 9 **Upper tank and lower tank**

Remove and reinstall the tanks using the Lock and Break Tool.

A: Attachment (for tank removal)
B: Attachment locking bolt
C: Slide handle
D: Stopper/adjuster bolt
E: Attachment (for tank installation)

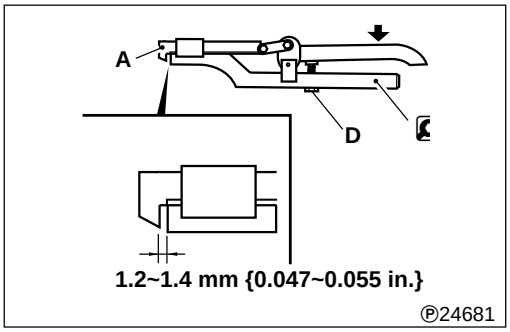

[Removal]

- Fit attachment **A** onto the end of the Lock and Break Tool, set it to the illustrated dimension and lock it in position with the stopper/adjuster bolt **D**.

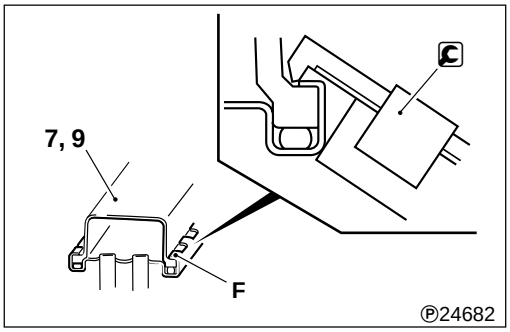

- Using the Lock and Break Tool, bend up the tabs **F** of the core **11** that hold the tank **7**, **9**.

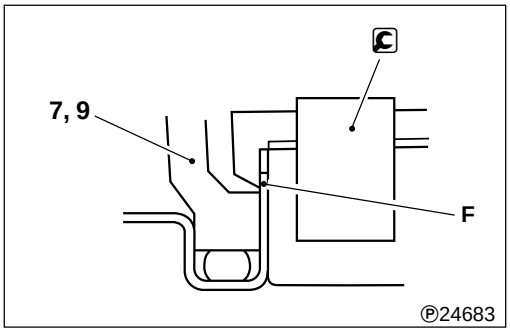

- Straighten the tabs **F** completely as shown by gripping the Lock and Break Tool.
- After straightening all the tabs **F**, grasp the inlet or outlet pipe and remove the tank **7**, **9**.

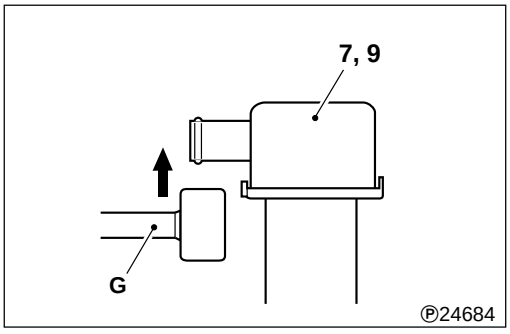

- If the tank **7**, **9** is difficult to remove, tap it with a rubber or plastic hammer **G**.

CAUTION ⚠

The tanks 7 and 9 are made of plastic and may crack if subjected to undue shock. Handle them with care.

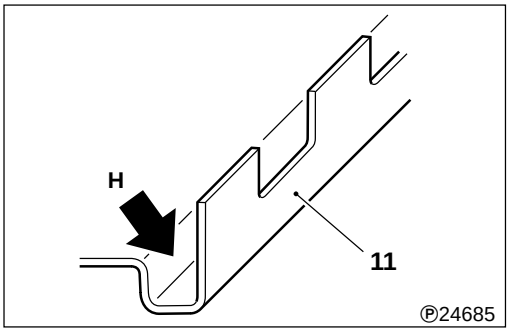

[Inspection]

- Check the tank mounting channels **H** of the core **11** for foreign matter.
- If foreign matter is stuck inside the mounting channels, rub it away with sandpaper (approx. #1000) or blow it out with compressed air.

CAUTION ⚠

If any foreign matter (even a single hair) remains when the O-ring 8, 10 and tank 7, 9 are fitted, leakage can occur. Carefully inspect and clean each tank mounting channel H entirely.

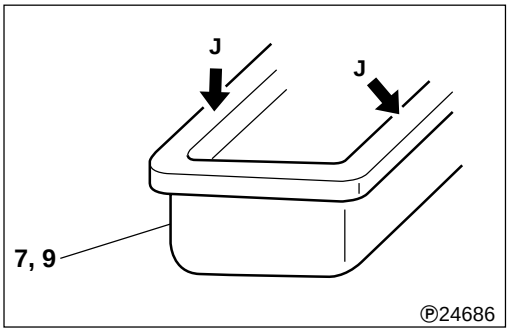

- Clean the core contacting surface **J** of the tank **7**, **9** and inspect it for damage. Replace the tank if any defect is evident.

CAUTION ⚠

Perform works with bare hands to prevent foreign matter from sticking to the surface J.

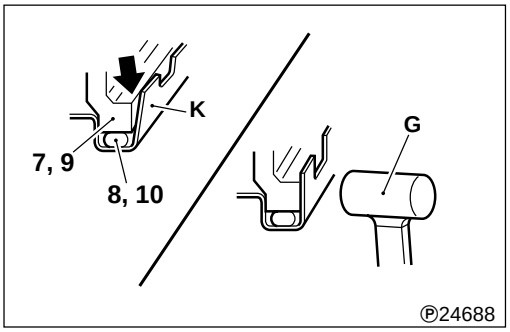

[Installation]

- Install the tank **7**, **9** in position. Check that the sub-plate **K** of the core is in close contact with the tank. If there is any space, tap the sub-plate lightly with a rubber or plastic hammer to eliminate space.

CAUTION ⚠

Handle the parts with bare hands to prevent foreign matter from sticking to the O-ring 8, 10 and tank 7, 9.

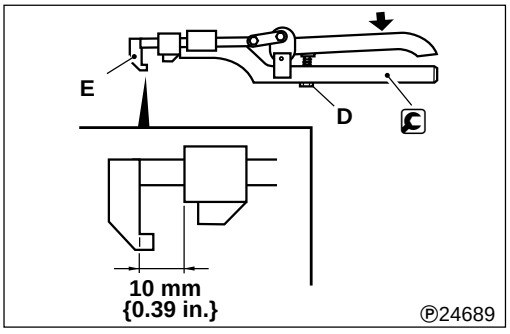

- Fit attachment **E** onto the end of the C Lock and Break Tool, set it to the illustrated dimension and lock it in position with the stopper/adjuster bolt **D**.

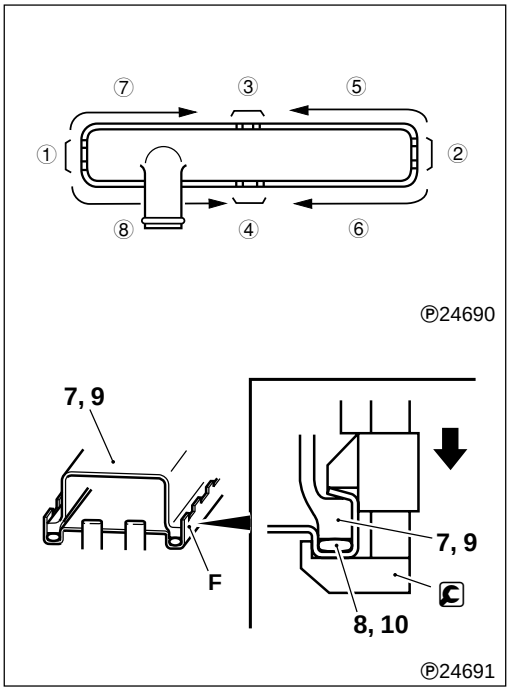

- Clinch the tabs **F** of the core **11** to hold the tank **7**, **9** in the illustrated order.

  ① ~ ④ :Two center tabs on each side
  ⑤ ~ ⑧ : Remaining tabs in illustrated sequence
  : Lock and Break Tool (with attachment **E**)

CAUTION ⚠

The sides ① and ② do not allow the Lock and Break Tool to be used for clinching. Clinch these sides using a pair of pliers with tape wrapped around its jaws.

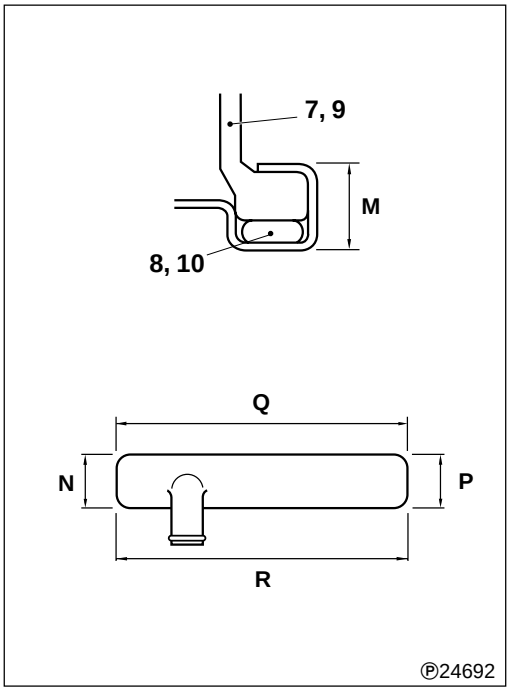

- Check that the tabs have been clinched to the following dimensions.

  M : 14.65 ~ 15.05 mm {0.576 ~ 0.592 in.} (Sides **N** and **P**)
  10.05 ~ 10.45 mm {0.395 ~ 0.411 in.} (Sides **Q** and **R**)
- Check for leaks. P.14-3
- Provide a paint mark to the sub-plate **K** of the core **11** to indicate that the tabs have been bent up and then down. P.14-3

CAUTION ⚠

Provide one paint mark after each removal of the tank.

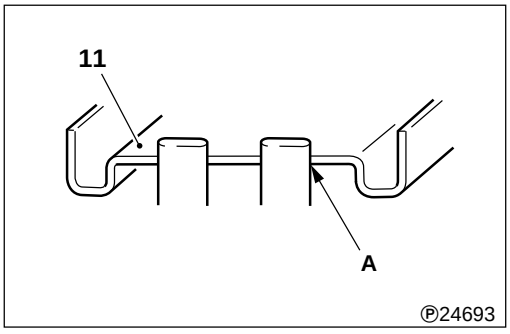

11 Core

If water leaks from the tube fitted area **A**, replace the core **11** or repair it by the following method.

[Repair]

WARNING ⚠

- **Repair is carried out by tungsten inert gas arc (TIG) welding, which requires the skill of a trained welder.**
- **To avoid danger, dry the core 11 completely before welding.**

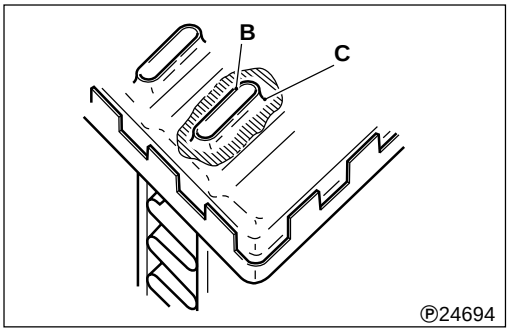

- Clean both edges **B** of the leaky tube and their surroundings **C** using a stainless steel wire brush. Scrub the surface until it glistens with exposed aluminum.

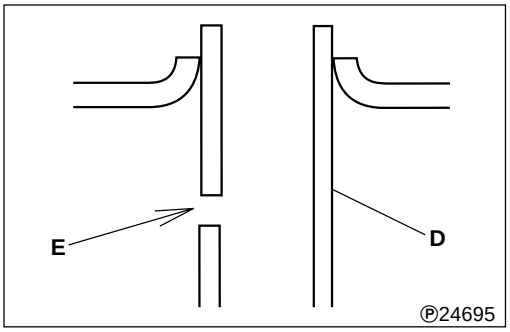

- Since both ends of the tube are covered with weld metal, make a small hole **E** in the tube **D** to allow air venting.

CAUTION ⚠

Absence of the small hole E causes escaping air to produce small pin holes in the weld.

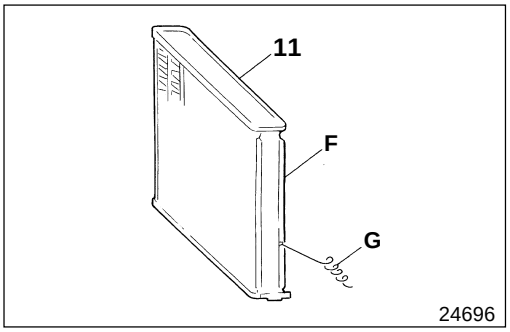

- Connect a grounding wire **G** from the support **F** of the core **11** to an appropriate object.

CAUTION ⚠

Improper connection of the grounding wire G causes a short circuit during welding work and the core could be fused at the welded portion.

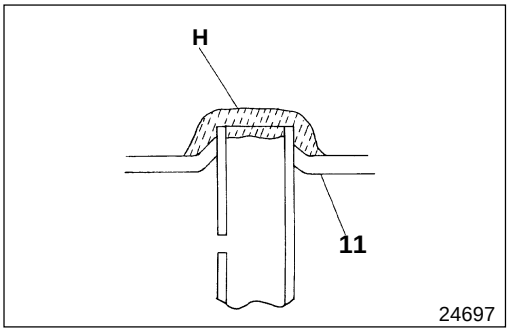

- Cover both ends of the tube with welding metal.
  H : Tungsten inert gas arc weld (TIG)
  Welding conditions:
  Welding rod: A4043 (approx. 2 mm {0.0079 in.} in diameter)
  Welding current: 80A AC
- After welding, check for the following defects. Rectify the weld or replace the core **11** if any of the defects is evident.
  - Undercut
  - Bead crack
  - Crack in base metal

CAUTION ⚠

Weld with sufficient care. Poor welding may cause leakage to reoccur.

GROUP 54 ELECTRICAL

1 POWER, CHARGE AND GROUND

SPECIFICATIONS 5
STRUCTURE AND OPERATION 5
TROUBLESHOOTING 3
100 ON-VEHICLE INSPECTION AND ADJUSTMENT
• Inspection of Alternator 3
• Inspection of Regulator 3
101 BATTERY 54-4
104 FUSE 54-7
106 ALTERNATOR 5
110 POWER CIRCUIT 5
115 RESERVE POWER CIRCUIT 5
125 BATTERY CHARGING CIRCUIT 3
130 GROUND 3

2 STARTING, PREHEATING AND STOPPING ENGINE

SPECIFICATIONS 1
STRUCTURE AND OPERATION 1
TROUBLESHOOTING 1
200 ON-VEHICLE INSPECTION AND ADJUSTMENT
Inspection of Engine Preheating System 1
201 STARTER 1
210 ENGINE STARTING CIRCUIT
<Manual Transmission> 5
<Automatic Transmission> 5
220 ENGINE PREHEATING CIRCUIT
<Manual Transmission> 3
<Automatic Transmission> 2

3 LIGHTING

SPECIFICATIONS 1
STRUCTURE AND OPERATION 1
TROUBLESHOOTING 1
300 ON-VEHICLE INSPECTION AND ADJUSTMENT
Headlamp Aiming 1
310 HEADLAMP CIRCUIT 1
313 DAYTIME RUNNING LIGHT CIRCUIT 5
320 TAIL LAMP, CLEARANCE LAMP AND LICENSE PLATE LAMP CIRCUITS 3
325 STOP LAMP CIRCUIT 3
330 TURN SIGNAL LAMP AND HAZARD LAMP CIRCUITS 1
340 BACKUP LAMP CIRCUIT 1
345 CAB LAMP CIRCUIT 4
348 ILLUMINATION LAMP CIRCUIT 1
349 MARKER LAMP AND IDENTIFICATION LAMP CIRCUITS 1
352 VAN BODY DOME LIGHT CIRCUIT 3

4 METER

SPECIFICATIONS 1
TROUBLESHOOTING 1
401 METER CLUSTER 5
410 SPEEDOMETER AND TACHOMETER CIRCUIT 1
420 FUEL GAUGE CIRCUIT 1
425 WATER TEMPERATURE GAUGE CIRCUIT 1

5 INDICATOR AND WARNING

TROUBLESHOOTING 3

500 ON-VEHICLE INSPECTION AND ADJUSTMENT
- Inspection of Brake Fluid Level Switch 3
- Inspection of Power Steering Fluid Level Sensor 3

510 PARKING BRAKE INDICATOR CIRCUIT 4

515 BRAKE WARNING CIRCUIT 4

530 WATER LEVEL WARNING CIRCUIT 3

536 ENGINE OIL PRESSURE WARNING CIRCUIT 4

537 OVERHEATING WARNING CIRCUIT 3

547 AUTOMATIC TRANSMISSION FLUID TEMPERATURE WARNING CIRCUIT 3

549 POWER STEERING FLUID LEVEL WARNING CIRCUIT 3

550 CAB TILT WARNING CIRCUIT 1

6 CAB SIDE ELECTRICAL

SPECIFICATIONS 3

TROUBLESHOOTING 3

601 SWITCH 1

604 RELAY AND CONTROL UNIT 1

606 WARNING BUZZER 1

610 CIGARETTE LIGHTER CIRCUIT 1

612 AUDIO CIRCUIT 1

614 WIPER AND WASHER CIRCUIT 1

616 HORN CIRCUIT 3

618 HEATER CIRCUIT 1

622 POWER WINDOW AND AUTO DOOR LOCK CIRCUIT 5

629 MIRROR HEATER CIRCUIT 54-8

7 CHASSIS ELECTRICAL

701 MAGNETIC VALVE
<Manual Transmission> 3

710 EXHAUST BRAKE CIRCUIT
<Manual Transmission> 5

8 ENGINE AND TRANSMISSION ELECTRICS

801 ENGINE ELECTRICS 1

802 TRANSMISSION ELECTRICS
<Manual Transmission> 1
<Automatic Transmission> 1

850 TRANSMISSION POWER TAKE-OFF CIRCUIT
<Option> 1

9 OTHERS

STRUCTURE AND OPERATION 2

905 JOINT CONNECTOR 3

910 MULTIPURPOSE TIMING CONTROL UNIT CIRCUIT 2

1: '96 Model Gr 54 (Pub No. TWME9502-54)
2: '97 Model Gr 54 (Pub No. TWME9502-1)
3: '98 Model Gr 54 (Pub No. TWME9502-254)
4: '99 Model Gr 54 (Pub No. TWME9502-3)
5: '00 Model Gr 54 (Pub No. TWME9502-4)

MEMO

101 BATTERY

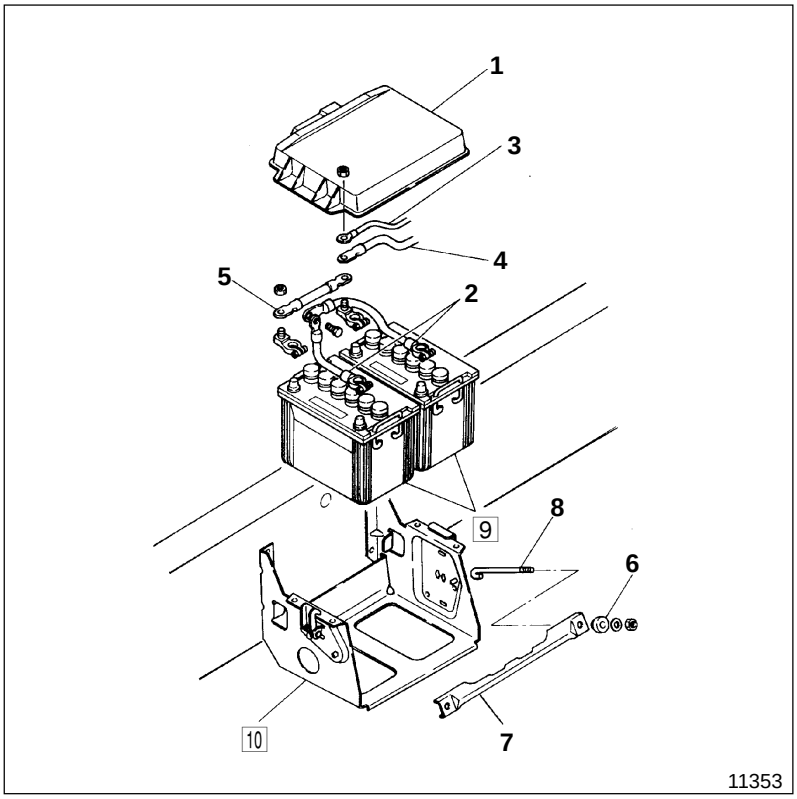

● **Removal sequence**

1 Battery cover
2 Battery cable ⊖
3 Harness (Main high-current fuse)
4 Starter cable
5 Battery cable ⊕
6 Rubber grommet
7 Angle frame
8 Set bolt
9 Battery
10 Battery box

● **Installation sequence**

Follow the removal sequence in reverse.

DANGER ⚠

- **Because flammable hydrogen gas is generated from battery 9, be sure to obey the following.**
  - **Never attempt to short-circuit the positive an negative terminals of battery 9, and generate sparks, or smoke a cigarette near it.**
  - **Do not wear metal objects on your arms or do not lean over battery 9.**
- **Sulfuric acid of the electrolyte is very corrosive. Whenever handling battery 9, wear safety goggles and rubber gloves to protect your eyes and hands.**
- **Battery posts, terminals and related accessories contain lead and lead compounds. Wash hands after handling.**

WARNING ⚠

When you disconnect battery cables 2 to 5, disconnect battery cable ⊖ 2 first.

CAUTION ⚠

- **Make sure that all electrical switches of the vehicle are off before connecting battery cables 2 and 5.**
- **Be sure to connect battery cable ⊕ 5 first before you connect battery cable ⊖ 2.**
- **To prevent a short-circuit, take care that disconnected battery cables 2 and 5 do not accidentally touch the battery terminals.**

Service standards

Location	Inspection item	Standard value	Limit	Remedy
9	Specific gravity of battery electrolyte (20°C {68°F})	1.220 to 1.290	—	Charge or replace

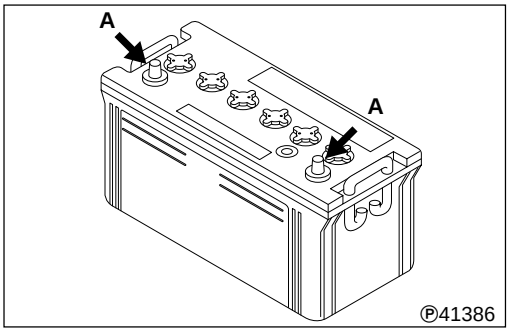

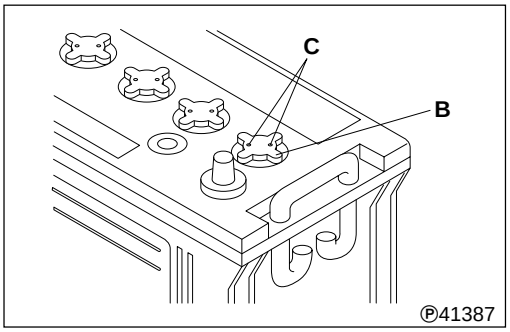

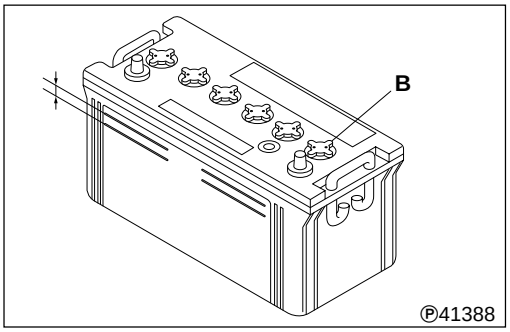

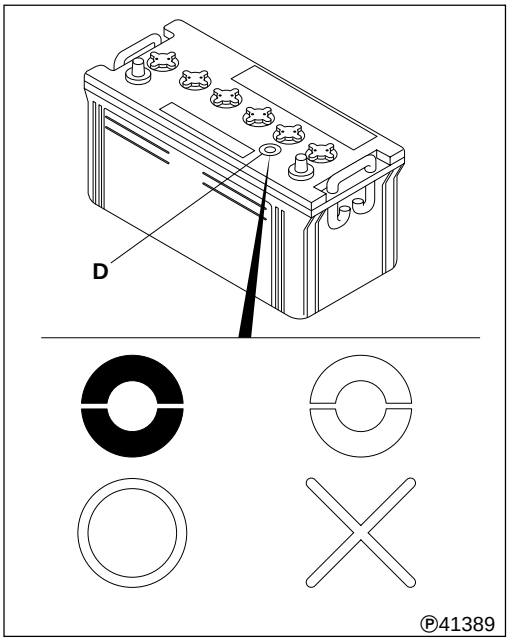

◆ Service procedure

9 Inspection of battery

(1) Visual inspection

- If terminal **A** is corroded, scrub the corrosion off of it using a wire brush.
- If cracks or defects are found on battery **9**, replace it because the cracks or defects can cause liquid spills.

CAUTION ⚠

Be sure to apply grease to the ⊕ side of terminal A because it is easily corroded.

- If the air bleed hole **C** of vent plug **B** is clogged, clean the hole.

(2) Inspection of fluid level

- Confirm that the level of battery electrolyte is between the UPPER and LOWER LEVEL lines.
- If the level is below the LOWER LEVEL line, remove vent plug **B** and replenish the distilled water or battery fluid to the UPPER LEVEL.

(3) Specific gravity measurement

You can tell the specific gravity of the battery electrolyte by the color shown in indicator **D**.

Blue : Good
White : Charge or replace

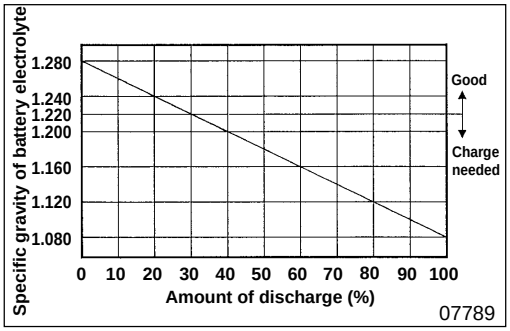

(4) Charging

- Battery **9** must be, as a rule, charged in the off-vehicle condition. If it is charged on vehicle, however, be sure to remove the grounding cable before starting the procedure.
- The battery must be charged with its all of vent plugs removed.
- For the recommended charge time and current, see the following table to avoid overcharging.

	Charge current (A)	Charge time (H)	Upper limit of fluid temperature (°C {°F})
Normal charge	Value of 5-hour rating capacity/10	{* Amount of discharge (Ah)/ Charge current (A)} × 1.2 (to 1.5)	45 {113}
Quick charge	Value of 5-hour rating capacity/1.5	0.5	55 {131}

* Amount of discharge (Ah) = 5-hour rating capacity (Ah) × [Amount of discharge (%)] / 100

- Use the graph shown on the left to calculate the amount of discharge (%).
- For the battery electrolyte, use diluted sulfuric acid, made up of sulfuric acid and refined or distilled water.
- The specific gravity of fully-charged battery electrolyte is 1.280 at the liquid temperature of 20°C {68°F}.

DANGER ⚠

- **Do not let the battery electrolyte level rise and overflow while charging the battery.**
- **Keep open flame away from the battery while charging it or it might explode.**
- **Be careful not to generate sparks while charging the battery because it is dangerous.**
- **After charging the battery, tighten the vent plugs, wash away sulfuric acid from the battery using water, and dry the surface.**
- **Be sure to check the electrolyte level before charging the battery. Charging with the electrolyte level below the lower limit (LOWER LEVEL) can cause premature deterioration, heat generation and explosion of the battery.**

10 Inspection of battery box

- If battery box **10** is corroded, scrub the corrosion off of it using a wire brush and apply acid resistant coating.
- If the battery box **10** is corroded excessively, deformed or cracked, replace it with a new one.

Main high-current fuse

Fuse No.	Main load		Capacity
—	High-current fuse box	—	140A
		For ABS	50A

High-current fuse box

Fuse No.	Main load	Capacity
FH1	Fuse box (F1 to F4)	50A
FH2	Fuse box (F5 to F8, F11)	40A
FH3	Brake booster (Hydraulic booster)	30A
FH4	Starter switch (Terminal B)	50A
FH5	Glow relay	50A
FH6	Alternator	140A
FH7	Fuse box (F31 to F34)	40A
FH8	ABS hydraulic unit	40A

Fuse box

Fuse No.	Main load	Capacity
F1	Headlamp, LH	15A
F2	Headlamp, RH	15A
F3	Stop lamp, horn	15A
F4	Turn signal lamp	15A
F5	—	—
F6	Cab lamp	10A
F7	Van body dome light	10A
F8	A/T fluid cooler fan relay	20A
F9	—	—
F10	Power window	25A
F11	Reserve power (BATT)	10A
F12	—	—
F13	* Cigarette lighter	15A
F14	Radio	10A
F15	Reserve power (ACC)	10A
F16	—	—
F17	* Mirror heater	* 10A

Fuse No.	Main load	Capacity
F18	Starter	10A
F19	Backup lamp	10A
F20	Meter cluster, DRL	10A
F21	Wiper	10A
F22	Engine control (ECU)	10A
F23	—	—
F24	ABS	10A
F25	Option (MAIN)	10A
F26	* Mirror heater	* 10A
F27	Exhaust brake, A/T	10A
F28	Transmission PTO	10A
F29	Pre-stroke cut relay (Engine control)	10A
F30	* Air-conditioner control	10A
F31	* Air-conditioner compressor	10A
F32	* Condenser fan	15A
F33	Blower fan	25A
F34	Tail lamp	20A

* marks indicate changed parts or added parts.

* : Fuses are provided for these pieces of equipment only where they are installed.

PTO : Power take-off
A/T : Automatic transmission
DRL : Dyatime running light
ABS : Anti-lock brake system

629 MIRROR HEATER CIRCUIT

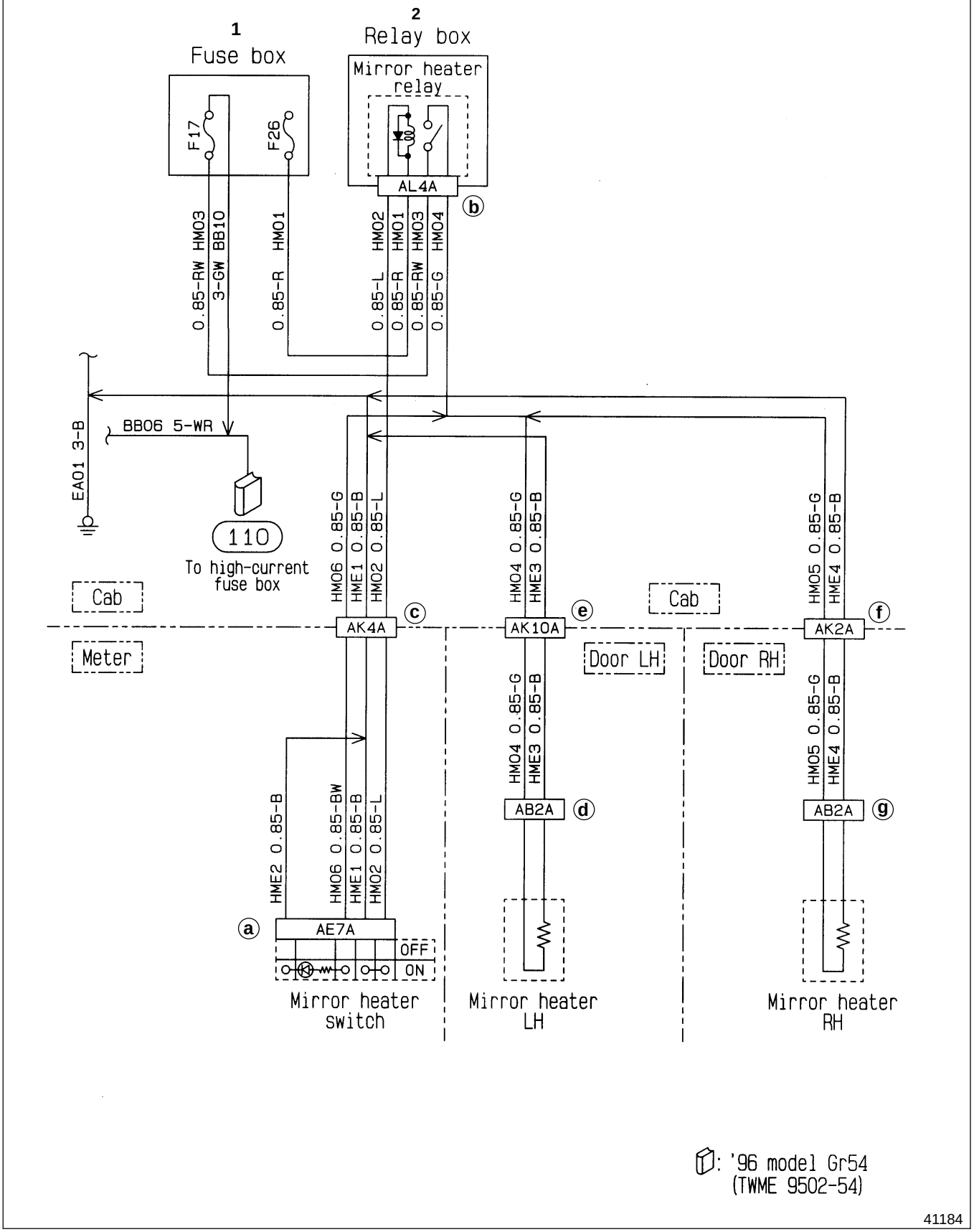

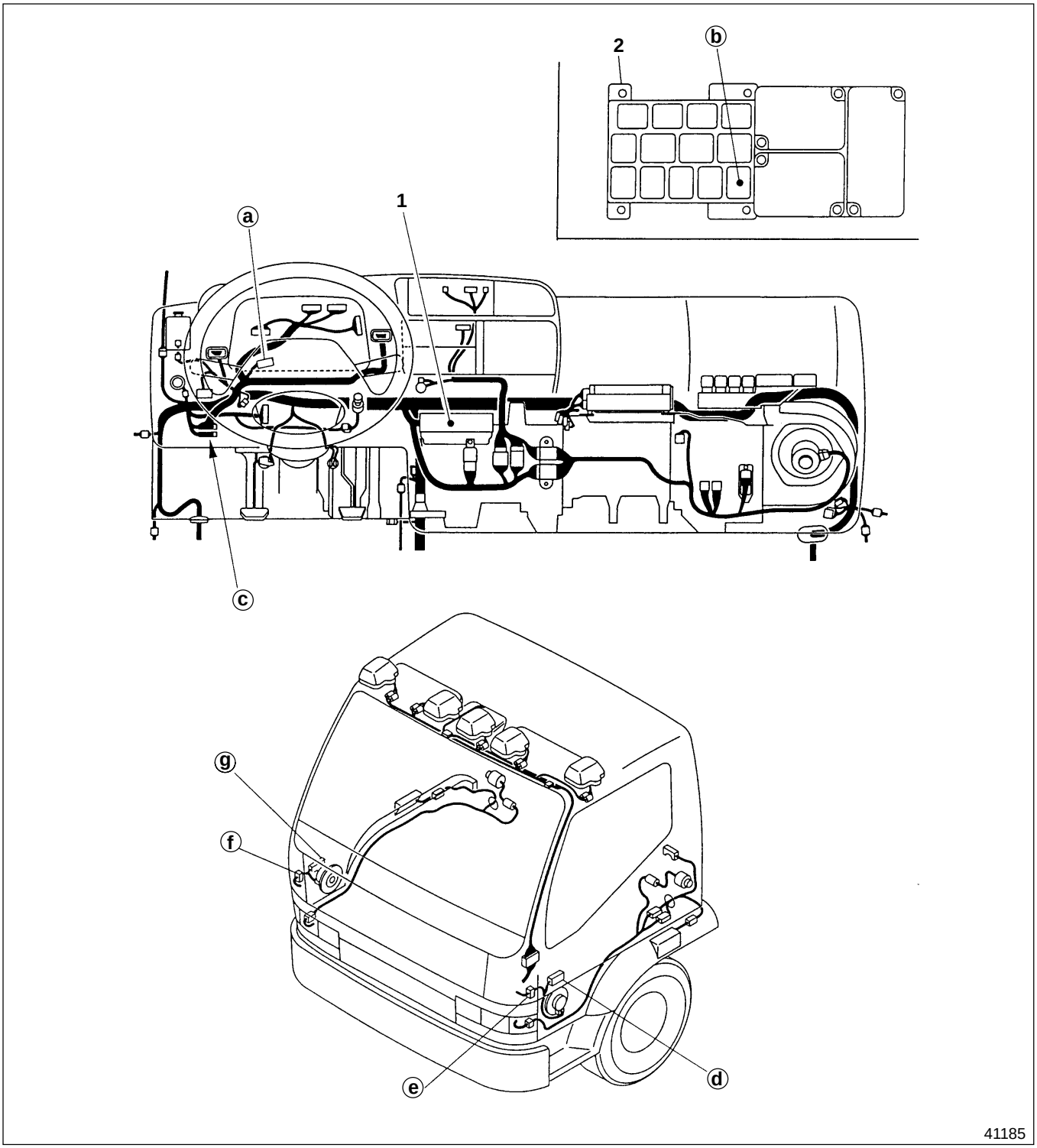

1 Fuse box 104
2 Relay box

MITSUBISHI FUSO

Service Manual

Table of Contents

BACK

HOME

FH 2000
Model Year Changes

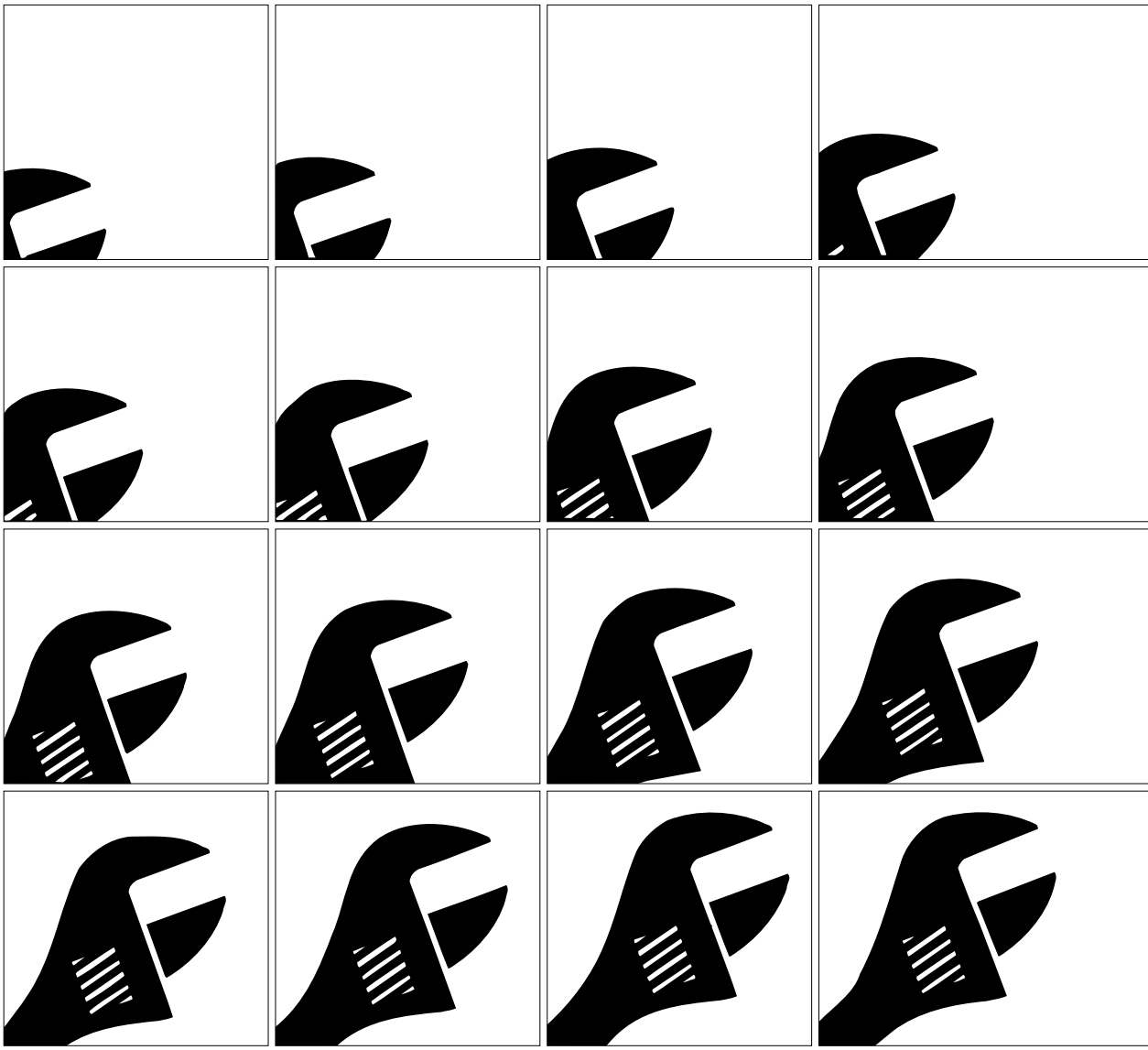

Pub. No. TWME9502-4

FH

SERVICE MANUAL

FOREWORD

This Service Manual contains maintenance and repair methods for personnel involved in the maintenance and repair of 2000 model Mitsubishi Fuso Truck FH Series.
Read this manual carefully as an aid to providing correct, efficient and fast maintenance.
Please note, however, that due to continuous improvements on the specifications, numbers and description for maintenance might change without prior notice.
If you have any questions, or encounter a problem, please do not hesitate to contact your nearest Mitsubishi Fuso dealer or distributor.

© Mitsubishi Motors Corporation, May 1999

MITSUBISHI FUSO TRUCK OF AMERICA, Inc.

GROUP INDEX

2000 MODEL CHANGES

GENERAL **00**

CAB **42**

ELECTRICAL **54**

2000 MODEL CHANGES

Item	’00 Model ⇦	’99 Model
Gr 00 General • Manual transmission of FH211 E, G, H, J, K has been changed to 6-speed, and differential gear ratio has also been changed accordingly. • The vehicle identification number has changed.	🕮 Gr 00 General	—

Gr 13 Fuel and engine control
- Components of throttle position sensor assembly have been changed.

< ’00 Model >

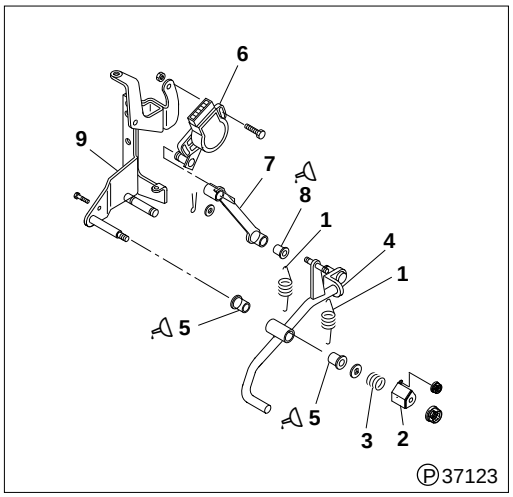

● **Removal sequence**
1. Return spring
2. Shaft cover
3. Spring
4. Accelerator control arm
5. Bushing
6. Throttle position sensor
7. Accelerator control extension
8. Bushing
9. Bracket

● **Installation sequence**

Follow the removal sequence in reverse.

Lubricant

Location	Points of application	Specified lubricant	Quantity
5, 8	Slide-contacting surfaces of bushing and support assembly	Chassis grease [NLGI No.1 (Ca soap)]	As required

< ’99 Model >

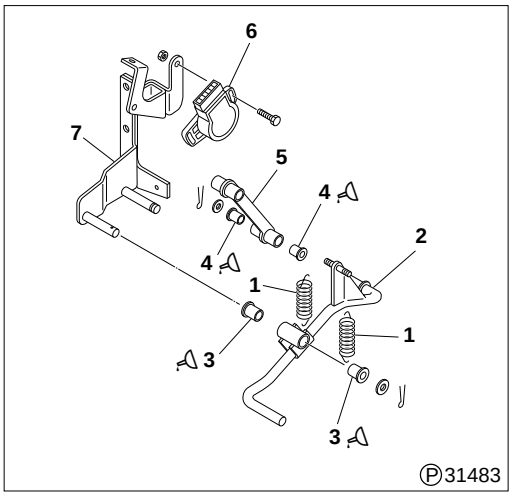

● **Removal sequence**
1. Return spring
2. Accelerator control arm
3. Bushing
4. Bushing
5. Accelerator control extension
6. Throttle position sensor
7. Bracket

● **Installation sequence**

Follow the removal sequence in reverse.

Lubricant

Location	Points of application	Specified lubricant	Quantity
3, 4	Slide-contacting surfaces of bushing and support assembly	Chassis grease [NLGI No.1 (Ca soap)]	As required

• Part No. and type of ROM pack have been changed.	MK 344606 (MRT-E6)	MK 327927 (MRT-E4)

Item	'00 Model ⇦	'99 Model
Gr 22 Manual Transmission • 6-speed transmission has been added.	Gr 22 Manual Transmission < M050S5, S6 > '00 Minor Change (Pub. No. TWME9502-422)	—
Gr 35 Brake System • Procedures for bleeding brake system are added because of anti-lock brake system (ABS).	[Procedure for bleeding hydraulic unit] • Ordinary bleeding procedure is used for the primary side (non-hydraulic system). However, when the solenoid valve of the hydraulic unit operates (ABS operation) with air mixed in the primary side, air enters the secondary side (hydraulic system). Therefore, be sure to bleed air from the secondary side using the MUT-II by following the procedures described below. • Regarding the use of the MUT-II, refer to Gr 35A. < Bleeding front brakes > • Bleed the primary side of the front brake system. (Ordinary bleeding procedure) • Depress the brake pedal, and select the actuator drive mode, "FL ABS MV ON," on the MUT-II to force-drive the brake. • Bleed air from the secondary side of the front left wheel brake system. • Repeat the above two steps until air is completely removed. • Depress the brake pedal, and select the actuator drive mode, "FR ABS MV ON," on the MUT-II to force-drive the brake. • Bleed air from the secondary side of the front right wheel brake system. • Repeat the above two steps until air is completely removed. < Bleeding rear brakes > • Bleed the primary side of the rear brake system. (Ordinary bleeding procedure) • Depress the brake pedal, and select the actuator drive mode, "RL ABS MV ON," on the MUT-II to force-drive the brake. • Bleed air from the secondary side of the rear left wheel brake system. • Repeat the above two steps until air is completely removed. • Depress the brake pedal, and select the actuator drive mode, "RR ABS MV ON," on the MUT-II to force-drive the brake. • Bleed air from the secondary side of the rear right wheel brake system. • Repeat the above two steps until air is completely removed.	
Gr 35A Anti-lock Brake System • Anti-lock brake system (ABS) is added.	Gr 35A Anti-lock brake system (ABS) '00 Minor Change (Pub. No. TWME9502-435A)	—
Gr 42 Cab • Power window system equipped with central door lock switch is used for door windows.	Gr 42 Cab	—

2000 MODEL CHANGES

<table>
<tr><th>Item</th><th>’00 Model</th><th>⇦</th><th>’99 Model</th></tr>
<tr><td>Gr 54 Electrical
1 POWER, CHARGE AND GROUND
• Capacities of main high-current fuses main load specifications have changed.</td><td>140A
50A (for ABS)
(104) FUSE 🕮 P54-4
(110) POWER CIRCUIT 🕮 P54-12</td><td></td><td>120A
—</td></tr>
<tr><td>• High-current fuse box main load specifications have changed or added.</td><td colspan="3">FH3 (30A Brake booster) (104) FUSE 🕮 P54-4
FH6 (140A 100A Alternator) (104) FUSE 🕮 P54-4
FH8 (40A ABS hydraulic unit) (104) FUSE 🕮 P54-4</td></tr>
<tr><td>• Capacities of fuses listed on the right and main load specifications have changed.</td><td>F10 Power window 25A
F17 —
F20 Meter cluster, DRL 10A
F24 ABS 10A
F25 Option (main) 10A
F34 Tail lamp 20A</td><td></td><td>F10 —
F17 Spare 10A
F20 Meter cluster 10A
F24 —
F25 —
F34 Tail lamp 15A</td></tr>
<tr><td>• Alternator capacity has been increased.</td><td>100A Alternator
(106) ALTERNATOR 🕮 P54-6</td><td></td><td>80A Alternator</td></tr>
<tr><td>• Spare DC output (main) has been added.
• Chassis grounding wire has been added.</td><td colspan="3">(115) RESERVE POWER CIRCUIT 🕮 P54-14

Chassis ground
<table><tr><th>Circuit No.</th><th>Wire diameter - wire color</th></tr><tr><td>ABE1</td><td>2 - B</td></tr><tr><td>ABE3</td><td>2 - B</td></tr></table>
 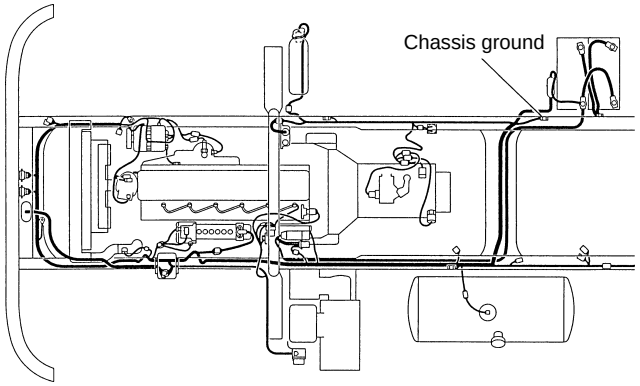

36600</td></tr>
</table>

Item	'00 Model ⇦ '99 Model
2 **STARTING, PREHEATING AND STOPPING ENGINE** • Overrun prevention circuit has been added to engine starting circuit.	(210) ENGINE STARTING CIRCUIT 🕮 P54-16, 18
3 **LIGHTING** • Daytime running light system is added.	(313) DAYTIME RUNNING LIGHT CIRCUIT 🕮 P54-20
4 **METER** • Meter cluster has been changed, including addition of indicator.	(401) METER CLUSTER 🕮 P54-24
6 **CAB SIDE ELECTRICAL** • Power window and auto door lock circuit is added.	(622) POWER WINDOW AND AUTO DOOR LOCK CIRCUIT 🕮 P54-26
7 **CHASSIS SIDE ELECTRICS** • Exhaust brake circuitry has been changed due to addition of anti-lock brake system (ABS).	(710) EXHAUST BRAKE CIRCUIT 🕮 P54-30
9 **OTHERS** • Circuitry of multipurpose timing control unit has been changed due to addition of starter overrun prevention circuit.	(210) ENGINE STARTING CIRCUIT 🕮 P54-16, 18

GROUP 00 GENERAL

POWER TRAIN TABLE .....00 - 2

VEHICLE IDENTIFICATION NUMBER .....00 - 2

POWER TRAIN TABLE/VEHICLE IDENTIFICATION NUMBER

POWER TRAIN TABLE

Model	Engine model	Clutch model	Transmission model	Propeller shaft	Rear axle model	Final reduction and gear ratio
FH211C G. V. W. 8160 kg {17995 lb}	6D34T2 175 HP/2900 rpm 325 lb.ft/2000 rpm (SAE, Gross)	C5M33	M050S5 6.875/1.000	P4	R040T	D040H 4.111
FH211E, G, H, J, K G. V. W. 8160 kg {17995 lb}			M050S6 6.523/0.803			D040H 4.625
FH211C, E, G, H, J, K G. V. W. 8160 kg {17995 lb}		Torque converter (TC290-1.72)	M4A4 (Allison AT542 or AT545) 3.454/1.000			D040H 4.111

IDENTIFICATION NUMBER

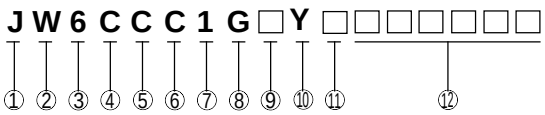

①	Country	J :	Japan
②	Make	W :	Mitsubishi Fuso
③	Vehicle type	6 :	Incomplete Vehicle
④	Gross vehicle weight/Brake system	C :	16001 to 19500 lbs/Hydraulic
⑤	Line	C :	FH211
⑥	Series (Wheelbase)	C :	2.6 to 2.89 m {8.53 to 9.48 ft.}
		E :	3.2 to 3.49 m {10.49 to 11.44 ft.}
		G :	3.8 to 4.09 m {12.46 to 13.41 ft.}
		H :	4.1 to 4.39 m {13.45 to 14.40 ft.}
		J :	4.4 to 4.69 m {14.43 to 15.38 ft.}
		K :	4.7 to 4.99 m {15.41 to 16.37 ft.}
⑦	Cab chassis type	1 :	Chassis cab
⑧	Engine	G :	5.861 ℓ Diesel turbocharged and charge air cooled
⑨	Check digit		
⑩	Model year	Y :	2000
⑪	Plant	K :	Kawasaki-1
		L :	Kawasaki-2
		M :	Kawasaki-3
		N :	Nakatsu
⑫	Plant sequential number		

GROUP 42 CAB

STRUCTURE AND OPERATION ..... 42 - 2

TROUBLESHOOTING ..... 42 - 4

DOOR ..... 42 - 6

Door Locking System

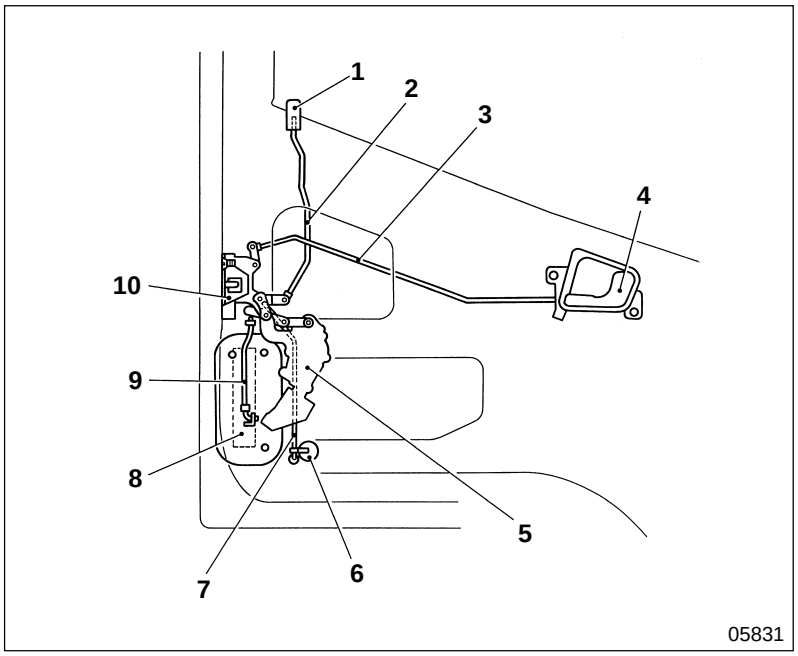

1 Door lock knob
2 Door lock rod
3 Door opening rod
4 Inside handle
5 Door lock actuator
6 Door lock cylinder
7 Door lock cylinder rod
8 Outside handle
9 Door opening rod
10 Door lock latch

Auto Door Lock Electric Circuit

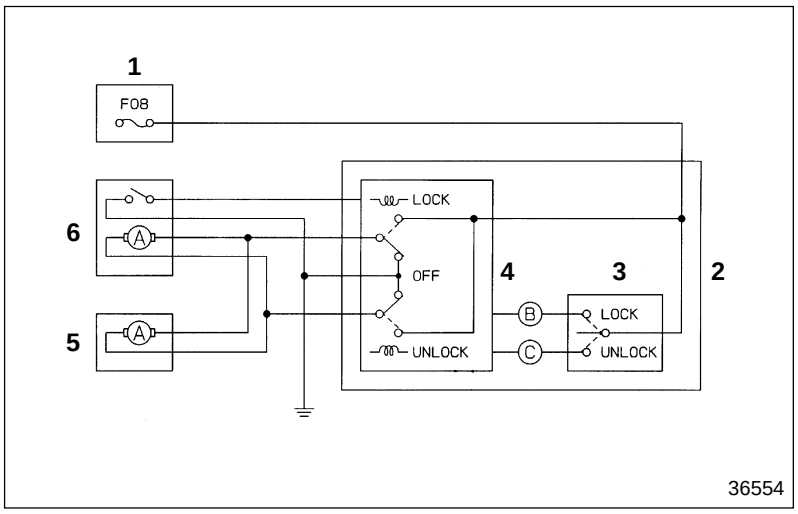

1 Fuse box
2 Driver's side power window switch
3 Auto door lock switch
4 Door lock relay
5 Passenger's side door lock actuator
6 Driver's side door lock actuator

A : Actuator

Ⓑ : Lock signal
Ⓒ : Unlock signal

From the driver's side, the doors can be locked and unlocked by auto door lock switch **3** as well as by door lock actuator **6**.

Door Glass Opening System

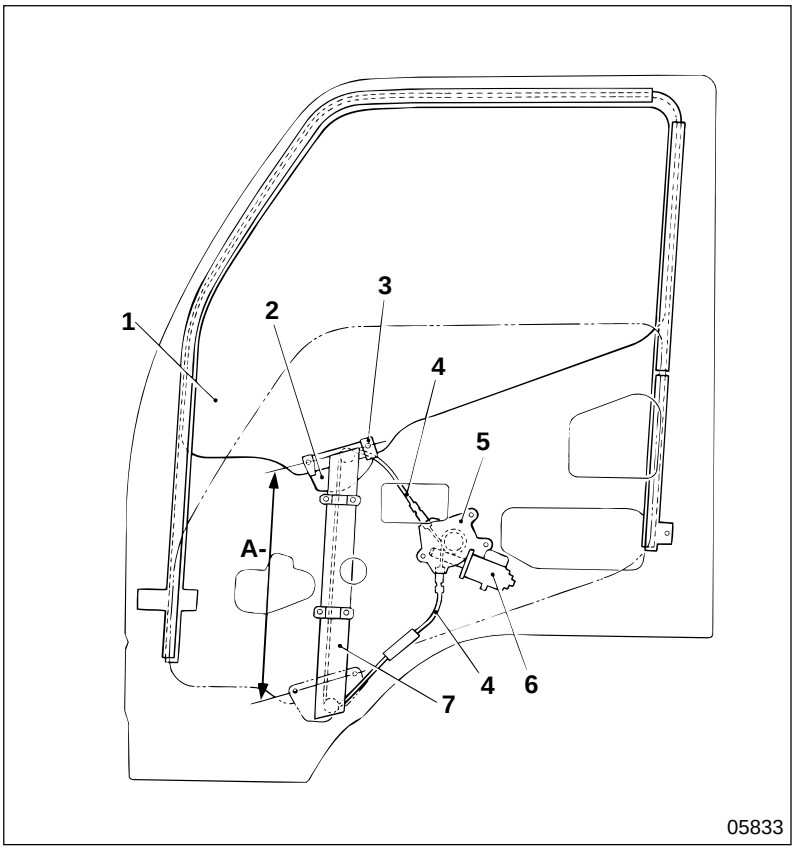

1 Door glass
2 Carrier plate
3 Glass holder
4 Cable
5 Regulator
6 Power window motor
7 Rail

A : Carrier plate moving range

- Both ends of cable **4** are secured to carrier plate **2**, and regulator **5** is installed to the wire at a midpoint.
- Regulator **5** rotates, thus winding cable **4** and moving carrier plate **2** in a vertical direction to raise or lower door glass **1**.

Power Window Electric Circuit

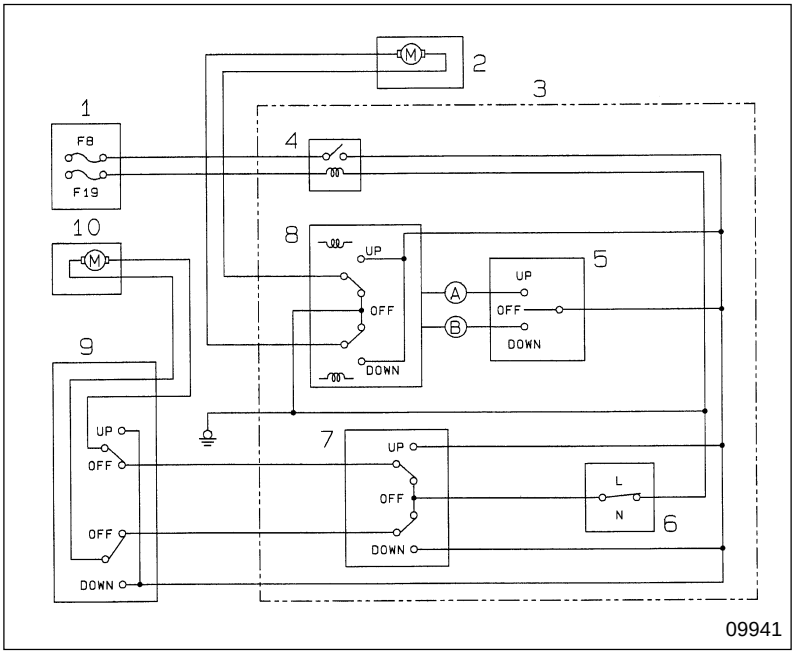

1 Fuse box
2 Driver's side power window motor
3 Driver's side power window switch assembly
4 Relay
5 Driver's side power window switch
6 Power window lock switch
7 Driver's side power window switch (for opening and closing passenger's side door glass)
8 Power window relay
9 Passenger's side power window switch
10 Passenger's side power window motor

M : Motor

Ⓐ : UP signal
Ⓑ : DOWN signal

- Power window switch assembly **3** on the driver's side is integrated with power window switches **5**, **7** and power window lock switch **6**.
- When power window lock switch **6** is set to the LOCK position, the door glass on the passenger's side cannot be operated by power window switches **7**, **9**.

Door Lock

Possible causes \ Symptoms	Door latch does not engage, and door does not close	Door does not lock when door lock knob is pressed	Door does not lock when key is turned	Remote door lock does not operate	Door does not open when outside door handle is operated	Door does not open when inside door handle is operated	Inside door handle does not return properly to original position	There is interference between door and cab	Remarks
Door installation faulty	○							○	
Striker installation faulty	○								
Faulty door locking mechanism of door latch	○	○	○		○	○			
Door latch rod deformed		○				○			
Door latch rod disconnected		○	○			○			
Door latch rod interference							○		
Door lock cylinder deformed			○						
Faulty auto door lock switch in power window & door lock switch				○					🕮 Gr 54
Door lock actuator faulty				○					
Fuse or high-current fuse blown				○					
Open circuit or faulty connection of wire				○					
Left-side outside door handle faulty					○				
Inside door handle installation faulty						○			
Spring fatigue in inside door handle							○		

Power Window

Symptoms / Possible causes	Door window glass drops of its own accord while cruising	Abnormal noise from power window regulator while cruising	Power window does not operate	Power window does not stop	Abnormal noise while power window operating	After the starter switch has been turned OFF the window does not operate within 30 seconds of the power window switch being operated	After the starter switch has been turned OFF and although the doors have been opened within 30 seconds, the window does not operate within 30 seconds of the power window switch being operated	Remarks
Power window switch faulty			○	○		○	○	
Power window regulator faulty	○		○	○	○			
Power window regulator mounting faulty					○			🕮 Gr 54
Fuse and high-current fuse burnt-out			○					
Wiring broken or connection faulty			○					
Power window glass and door belt line molding rattling		○						

DOOR

Door Assembly

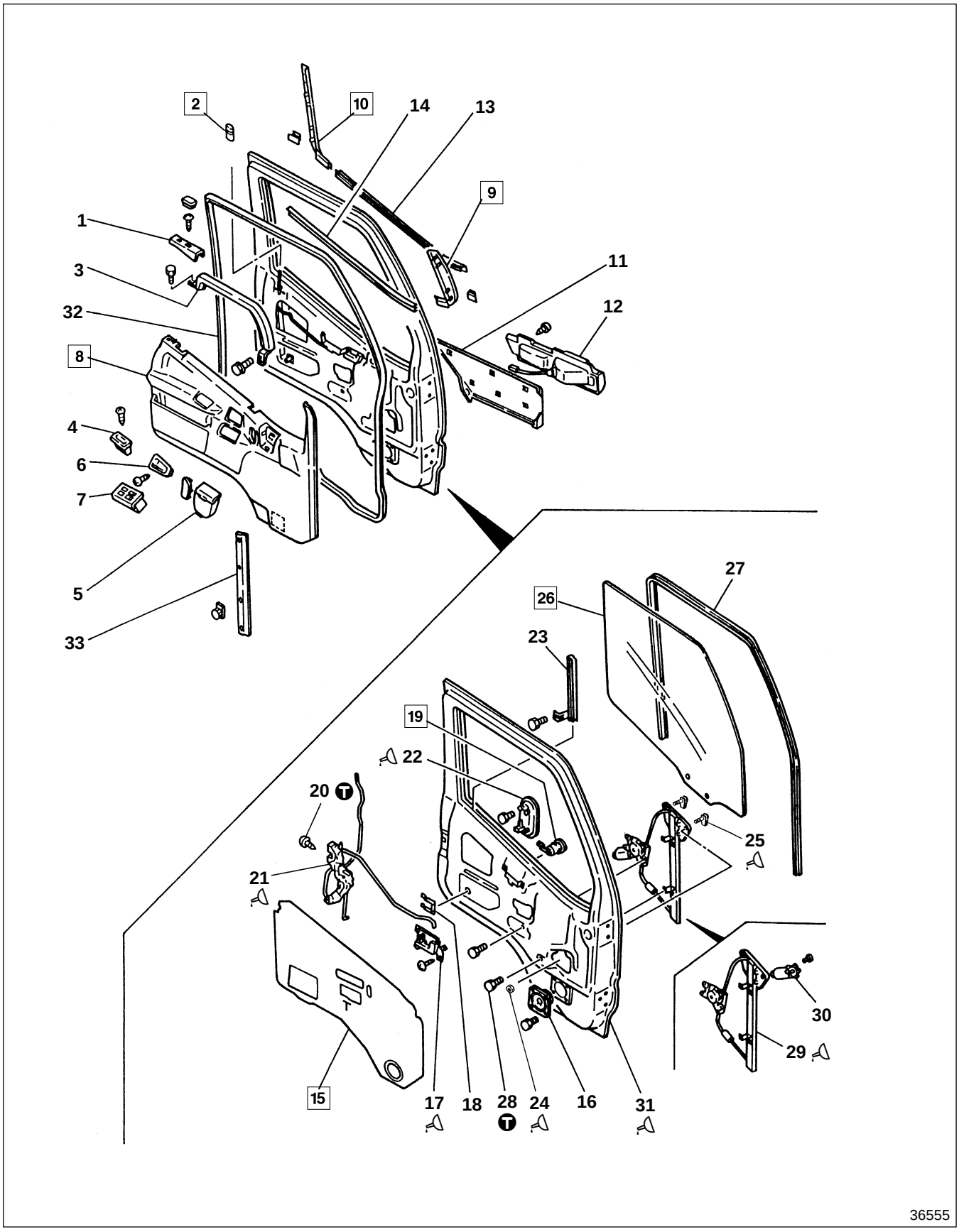

● **Disassembly sequence**

1 Cover
2 Door lock knob
3 Guard bar
4 Pull handle cover
5 Ashtray
6 Inside handle cover
7 Power window switch 🕮 Gr 54
8 Door trim
9 Front garnish
10 Rear garnish
11 Outer garnish
12 Side combination lamp 🕮 Gr 54
13 Outer weather strip
14 Inner weather strip
15 Waterproof cover
16 Speaker
17 Inside handle
18 Clip
19 Door lock cylinder
20 Screw
21 Door lock actuator 🕮 Gr 54
22 Outside handle
23 Lower sash
24 Nut
25 Glass holder
26 Door glass
27 Run channel
28 Bolt
29 Regulator & rail assembly
30 Power window motor 🕮 Gr 54
31 Door panel
32 Weather strip
33 Weather strip

● **Reassembly sequence**

Follow the disassembly sequence in reverse.

Ⓣ Tightening torque

Unit : N·m {lbf.ft, kgf·m}

Location	Parts to be tightened	Tightening torque	Remarks
20	Screw (Door lock actuator mounting)	4 to 6 {2.9 to 4.3, 0.4 to 0.6}	—
28	Bolt (Regulator & rail assembly mounting)	6.9 to 10.8 {5.1 to 8.0, 0.7 to 1.1}	—

Lubricant and/or sealant

Location	Points of application	Specified lubricant and/or sealant	Quantity
17	Rotating surface of inside handle	Multipurpose grease [NLGI No.2 (Li soap)]	As required
21	Sliding surface of door lock actuator	Multipurpose grease [NLGI No.2 (Li soap)]	As required
22	Sliding surface of outside handle	Multipurpose grease [NLGI No.2 (Li soap)]	As required
24	Threads of nut	Loctite (Japan) Drylock No. 203	As required
25	Threads of glass holder bolt	Loctite (Japan) Drylock No. 203	As required
29	Sliding surfaces of regulator & rail assembly	Dynamic GB	As required
31	Waterproof cover installation surface of door panel	Butyl tape	As required

◆ Service procedure

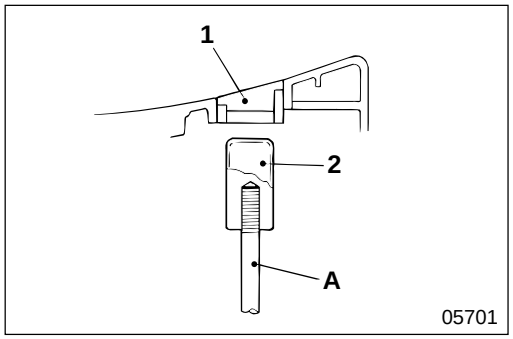

2 **Installation of door lock knob**

- Install door lock knob **2** to door lock rod A of door lock actuator **21**, and turn the knob fully in clockwise direction.
- Back off door lock knob **2** by turning it 1 or 2 turns in counterclockwise direction.
- Position cover **1** to prevent door lock knob **2** from turning.

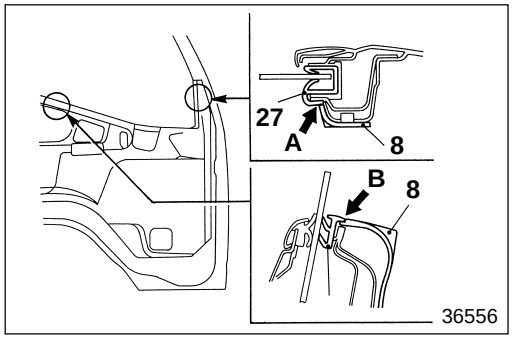

8 **Installation of door trim**

- On the front pillar section, install door trim **8** by pressing it to lip section **A** of run channel **27**.
- On the belt line section, install door trim **8** by pressing it to lip section **B** of inner weather strip **14**.

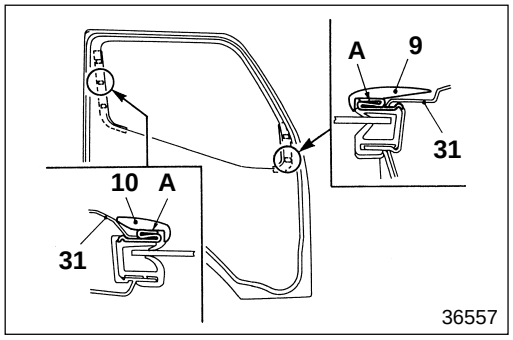

9 **10** **Installation of front and rear garnishes**

- Install clips **A** to door panel **31** prior to the installation of the garnishes.
- Install front garnish **9** and rear garnish **10** to clips **A**.

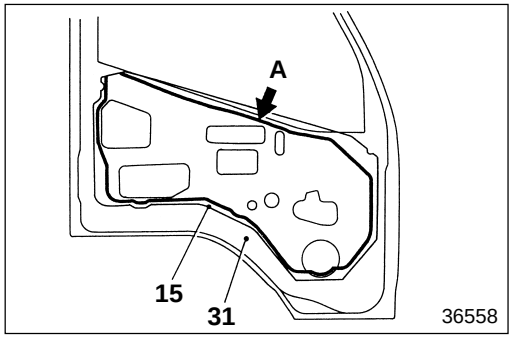

15 **Installation of waterproof cover**

- Apply butyl tape **A** to door panel **31**, as indicated in the illustration.
- Install waterproof cover **15** by pasting onto butyl tape **A**.

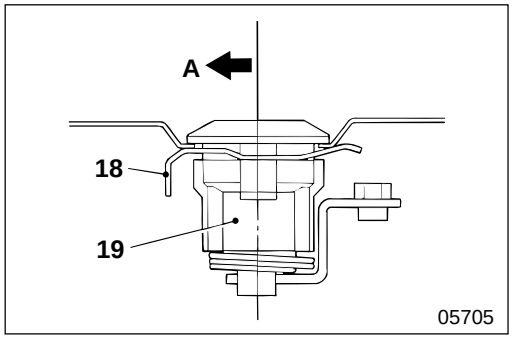

19 **Installation of door lock cylinder**

Install door lock cylinder **19** to clip **18** in the direction indicated in the illustration.

A : Vehicle front side

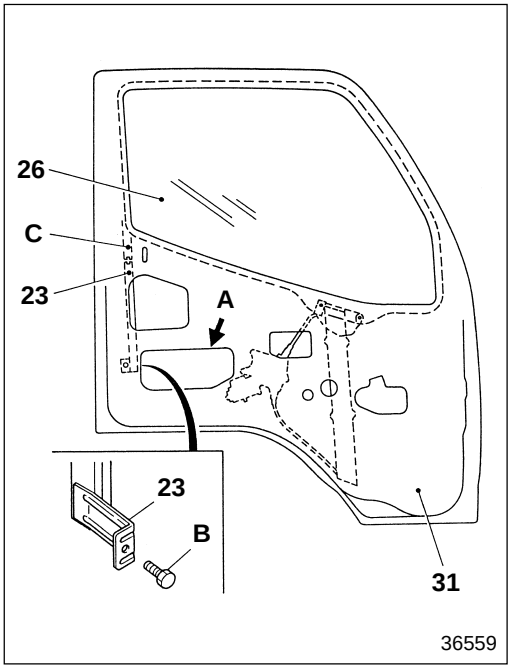

26 **Removal and installation of door glass**

Remove all parts supporting door glass **26**, then remove the door glass through the open space in the door.

- Pull door glass **26** all the way to the top.
- Remove bolt **B** through hole **A** in door panel **31**, and remove lower sash **23**.
  Note that the lower sash is inserted in upper sash **C**.

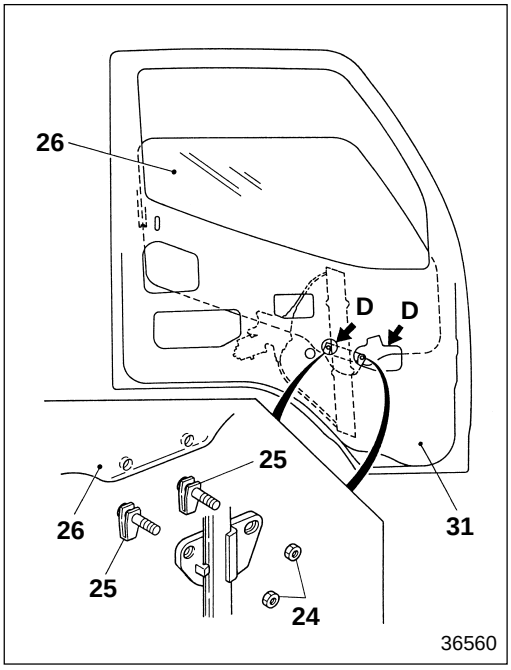

- Lower door glass **26** until nut **24** becomes visible through hole **D** in door panel **31**.
- Support door glass **26** by hand, then remove glass holder **25**.
- Remove door glass **26** through the open space in the door.
- To install door glass **26**, follow the removal procedure in reverse.

M E M O

GROUP 54 ELECTRICAL

1 POWER, CHARGE AND GROUND

SPECIFICATIONS 54-3

STRUCTURE AND OPERATION 54-3

TROUBLESHOOTING 3

100 ON-VEHICLE INSPECTION AND ADJUSTMENT
- Inspection of Alternator 3
- Inspection of Regulator 3

101 BATTERY 1

104 FUSE 54-4

106 ALTERNATOR 54-6

110 POWER CIRCUIT 54-12

115 RESERVE POWER CIRCUIT 54-14

125 BATTERY CHARGING CIRCUIT 3

130 GROUND 3

2 STARTING, PREHEATING AND STOPPING ENGINE

SPECIFICATIONS 1

STRUCTURE AND OPERATION 1

TROUBLESHOOTING 1

200 ON-VEHICLE INSPECTION AND ADJUSTMENT
Inspection of Engine Preheating System 1

201 STARTER 1

210 ENGINE STARTING CIRCUIT
< Manual Transmission > 54-16
< Automatic Transmission > 54-18

220 ENGINE PREHEATING CIRCUIT
< Manual Transmission > 3
< Automatic Transmission > 2

3 LIGHTING

SPECIFICATIONS 1

STRUCTURE AND OPERATION 1

TROUBLESHOOTING 1

300 ON-VEHICLE INSPECTION AND ADJUSTMENT
Headlamp Aiming 1

310 HEADLAMP CIRCUIT 1

313 DAYTIME RUNNING LIGHT CIRCUIT 54-20

320 TAIL LAMP, CLEARANCE LAMP AND LICENSE PLATE LAMP CIRCUITS 3

325 STOP LAMP CIRCUIT 3

330 TURN SIGNAL LAMP AND HAZARD LAMP CIRCUITS 1

340 BACKUP LAMP CIRCUIT 1

345 CAB LAMP CIRCUIT 4

348 ILLUMINATION LAMP CIRCUIT 1

349 MARKER LAMP AND IDENTIFICATION LAMP CIRCUITS 1

352 VAN BODY DOME LIGHT CIRCUIT 3

4 METER

SPECIFICATIONS 1

TROUBLESHOOTING 1

401 METER CLUSTER 54-24

410 SPEEDOMETER AND TACHOMETER CIRCUIT 1

420 FUEL GAUGE CIRCUIT 1

425 WATER TEMPERATURE GAUGE CIRCUIT 1

5 INDICATOR AND WARNING

TROUBLESHOOTING 3

(500) ON-VEHICLE INSPECTION AND ADJUSTMENT
- Inspection of Brake Fluid Level Switch 3
- Inspection of Power Steering Fluid Level Sensor 3

(510) PARKING BRAKE INDICATOR CIRCUIT [BRAKE] 4

(515) BRAKE WARNING CIRCUIT [BRAKE] 4

(530) WATER LEVEL WARNING CIRCUIT 3

(536) ENGINE OIL PRESSURE WARNING CIRCUIT 4

(537) OVERHEATING WARNING CIRCUIT 3

(547) AUTOMATIC TRANSMISSION FLUID TEMPERATURE WARNING CIRCUIT [T/M OIL TEMP] 3

(549) POWER STEERING FLUID LEVEL WARNING CIRCUIT [BRAKE] 3

(550) CAB TILT WARNING CIRCUIT 1

6 CAB SIDE ELECTRICAL

SPECIFICATIONS 3

TROUBLESHOOTING 3

(601) SWITCH 1

(604) RELAY AND CONTROL UNIT 1

(606) WARNING BUZZER 1

(610) CIGARETTE LIGHTER CIRCUIT 1

(612) AUDIO CIRCUIT 1

(614) WIPER AND WASHER CIRCUIT 1

(616) HORN CIRCUIT 3

(618) HEATER CIRCUIT 1

(622) POWER WINDOW AND AUTO DOOR LOCK CIRCUIT 54-26

1 : '96 Model Gr 54 (Pub. No. TWME9502-54)
2 : '97 Model Gr 54 (Pub. No. TWME9502-1)
3 : '98 Model Gr 54 (Pub No. TWME9502-254)
4 : '99 Model Gr 54 (Pub No. TWME9502-3)

7 CHASSIS ELECTRICAL

(701) MAGNETIC VALVE
< Manual Transmission > 3

(710) EXHAUST BRAKE CIRCUIT
< Manual Transmission > 54-30

8 ENGINE AND TRANSMISSION ELECTRICS

(801) ENGINE ELECTRICS 1

(802) TRANSMISSION ELECTRICS
< Manual Transmission > 1
< Automatic Transmission > 1

(850) TRANSMISSION POWER TAKE-OFF CIRCUIT
< Option > 1

9 OTHERS

STRUCTURE AND OPERATION 2

(905) JOINT CONNECTOR 3

(910) MULTIPURPOSE TIMING CONTROL UNIT CIRCUIT 2

This chapter contains information on the alternator. Items not covered in this chapter are the same as those of '99 model.

SPECIFICATIONS

Item			Specifications	
Alternator	Manufacturer		MITSUBISHI ELECTRIC	
	Type		Alternator with built-in regulator (without brush external fan)	
	Vacuum pump		Without	With
	Model		A4TU0488	A4TU0588
	Output	V-A	12-100	

STRUCTURE AND OPERATION

Alternator

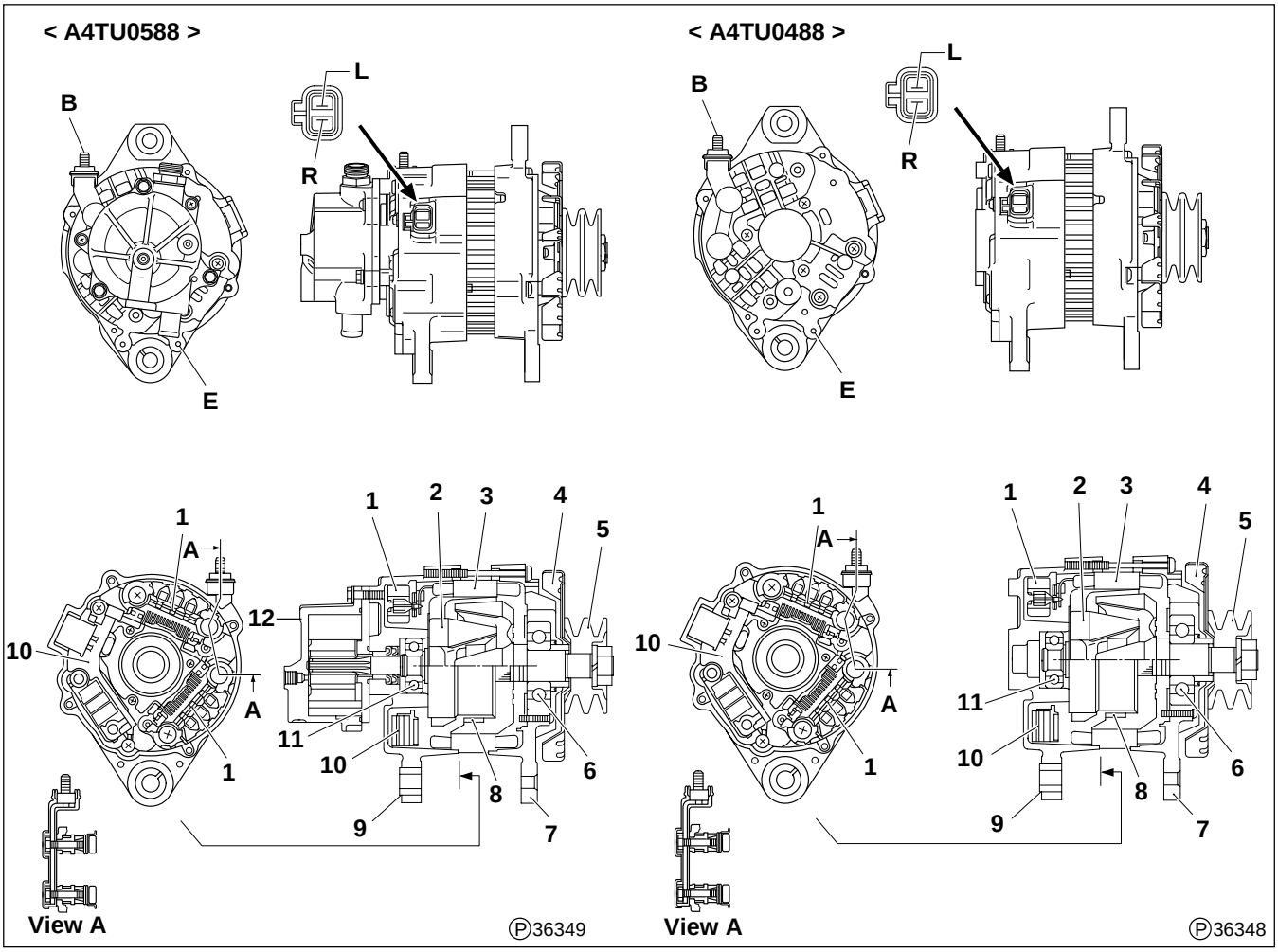

104 FUSE

Main high-current fuse

Fuse No.	Main load		Capacity
—	High-current fuse box	—	★ 140 A
		For ABS	★ 50 A

High-current fuse box

Fuse No.	Main load	Capacity
FH1	Fuse box (F1 to F4)	50 A
FH2	Fuse box (F5 to F8, F11)	40 A
FH3	Brake booster (Hydraulic booster)	★ 30 A
FH4	Starter switch (Terminal B)	50 A
FH5	Glow relay	50 A
FH6	Alternator	★ 140 A
FH7	Fuse box (F31 to F34)	40 A
FH8	★ ABS hydraulic unit	★ 40 A

Fuse box

Fuse No.	Main load	Capacity
F1	Headlamp, LH	15 A
F2	Headlamp, RH	15 A
F3	Stop lamp, horn	15 A
F4	Turn signal lamp	15 A
F5	—	—
F6	Cab lamp	10 A
F7	Van body dome light	10 A
F8	A/T fluid cooler fan relay	20 A
F9	—	—
F10	★ Power window	★ 25 A
F11	Reserve power (BATT)	10 A
F12	—	—
F13	* Cigarette lighter	15 A
F14	Radio	10 A
F15	Reserve power (ACC)	10 A
F16	—	—
F17	★ —	★ —

Fuse No.	Main load	Capacity
F18	Starter	10 A
F19	Backup lamp	10 A
F20	Meter cluster, ★ DRL	10 A
F21	Wiper	10 A
F22	Engine control (ECU)	★ 10 A
F23	—	—
F24	★ ABS	★ 10 A
F25	★ Option (MAIN)	★ 10 A
F26	—	—
F27	Exhaust brake, A/T	10 A
F28	Transmission PTO	10 A
F29	Pre-stroke cut relay (Engine control)	10 A
F30	* Air-conditioner control	10 A
F31	* Air-conditioner compressor	10 A
F32	* Condenser fan	15 A
F33	Blower fan	25 A
F34	Tail lamp	★ 20 A

* : Fuses are provided for these pieces of equipment only where they are installed.

PTO : Power take-off
A/T : Automatic transmission
DRL : Dyatime running light
ABS : Anti-lock brake system

★ marks indicate changed parts or added parts.

M E M O

106 ALTERNATOR

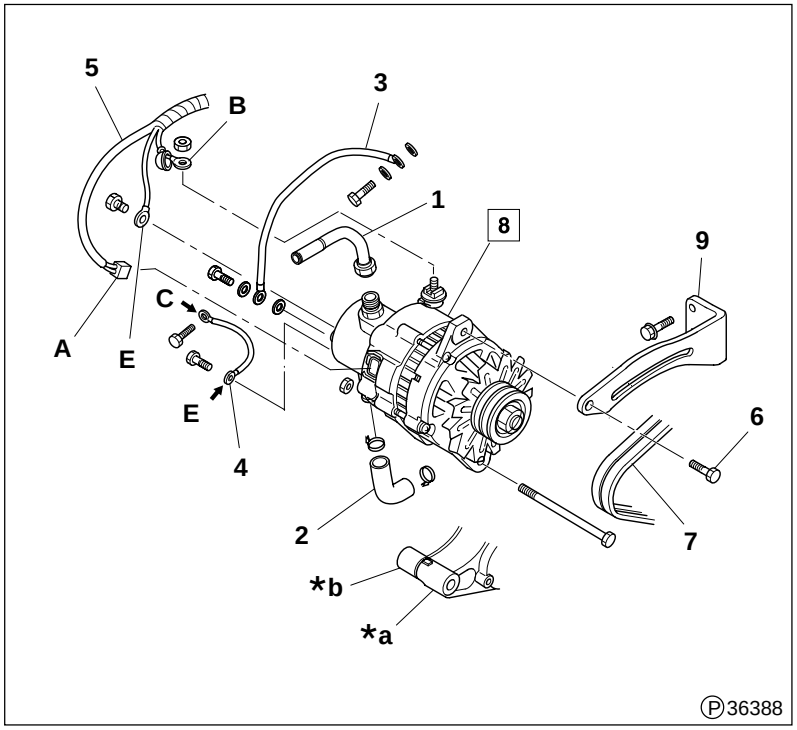

● **Removal sequence**

1 Vacuum pipe
2 Oil return hose
3 Oil inlet hose
4 Ground cable
5 Chassis harness
6 Adjusting bolt
7 V-belts
8 Alternator 🕮 P54-8
9 Adjusting plate

***a** : Timing gear case and front plate
Gr 11
***b** : Power steering oil pump
A : To terminals L and R
B : To terminal B
C : Connected to crankcase
E : To terminal E

WARNING⚠

- **Terminal B is always loaded with voltage from the battery, supplied via chassis harness 5. Therefore when you remove the harness from terminal B, make sure that tools do not touch any adjacent parts because this would cause a short-circuit.**
- **Make sure that you disconnect terminal ⊖ of the battery before removing the harness and insulate the terminal with tape.**

● **Installation sequence**

Follow the removal sequence in reverse.

● **Adjustment after installation**

Adjustment of V-belt **7** tension Gr 14

Service standards

Location	Maintenance item			Standard value	Limit	Remedy
8	Output current (* When engine is hot and 13.5 V is loaded)	Without vacuum pump	At 1500 rpm	53 A or more	—	Inspect
			At 2500 rpm	84 A or more	—	
			At 5000 rpm	102 A or more	—	
		With vacuum pump	At 1500 rpm	51 A or more	—	Inspect
			At 2500 rpm	81 A or more	—	
			At 5000 rpm	98 A or more	—	
	Adjustment voltage of regulator (At 5000 rpm, 5 A is loaded)			14.7±0.3 V	—	Replace

* : The value of the ambient temperature is measured after running the alternator drive motor at maximum power (5000 rpm) for 30 minutes.

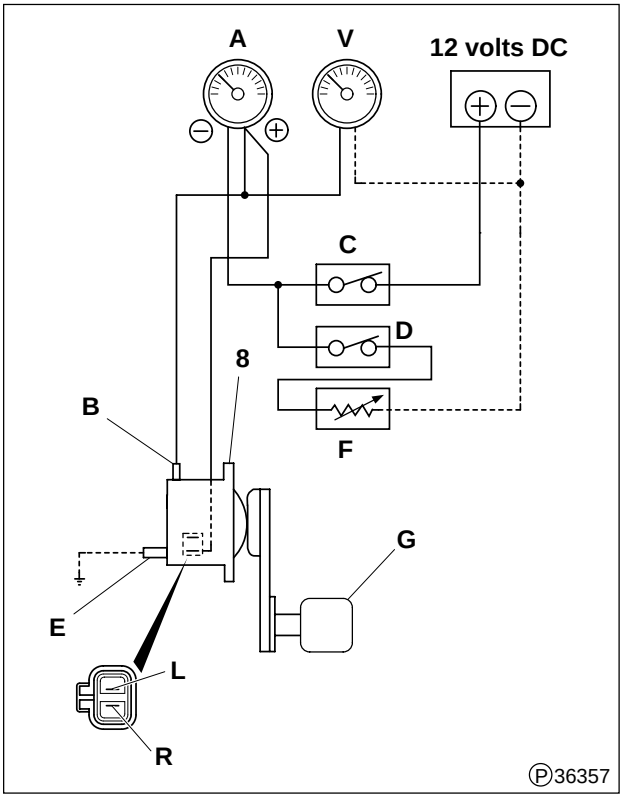

8 Inspection of alternator

(1) Inspection of alternator performance (bench test)

- Connect each unit to alternators **8** as illustrated.

CAUTION⚠

Use sufficiently thick wires for the wiring and make sure all connecting parts are securely connected.

A : Ammeter
B : Terminal B on alternator
C : Switch
D : Switch
E : Terminal E on alternator
F : Load resistance (variable resistance)
G : Alternator drive motor
L : Terminal L on alternator
R : Terminal R on alternator
V : Voltmeter

- Maximize load resistance **F** (load current hardly flows).
- Turn switches **C**, **D** ON.
  With the alternator **8** rotating at 5000 rpm, adjust load resistance **F** to the current specified in the Service Standards table. Then, operate the alternator for 30 minutes.
  Specified output of the alternator : Approx. 100 A
- Increase the rotation of alternator **8** gradually and measure current at specified rpm.
- If the measured value deviates from the standard value, disassemble and inspect alternator **8**. 🕮 P54-8

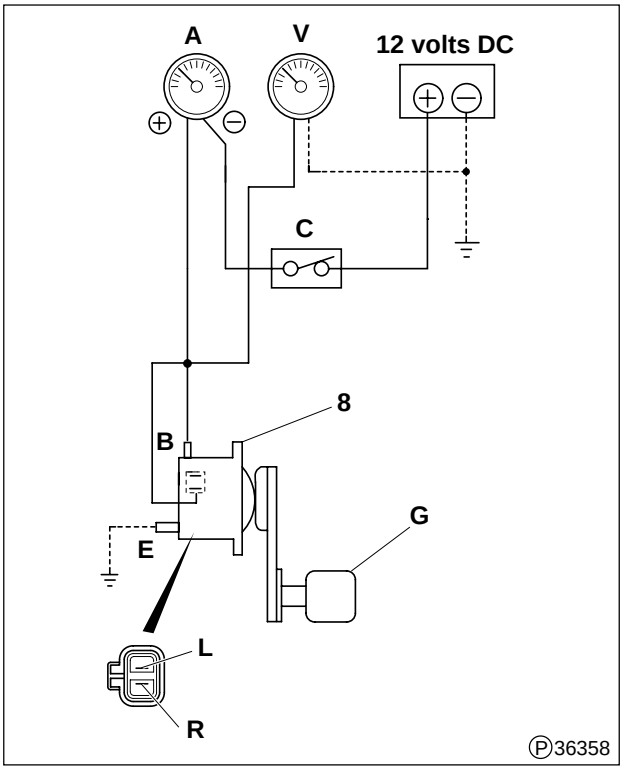

(2) Inspection of regulator (bench test)

- Connect each unit to the alternators as illustrated.
  A : Ammeter
  B : Terminal B on alternator
  C : Switch
  E : Terminal E on alternator
  G : Alternator drive motor
  L : Terminal L on alternator
  R : Terminal R on alternator
  V : Voltmeter
- Turn switch **C** ON.
- Run alternator **8** at low speed.
- Measure the voltage (adjustment voltage) when alternator **8** has reached a speed of 5000 rpm. Make sure at such time that the value of the current is five amperes or less.
- If the measured value deviates from the standard value, perform either of the following.
  - If the measured value is higher than the standard value : Replace the regulator
  - If the measured value is lower than the standard value : Before replacing the regulator check the alternator area.

Alternator

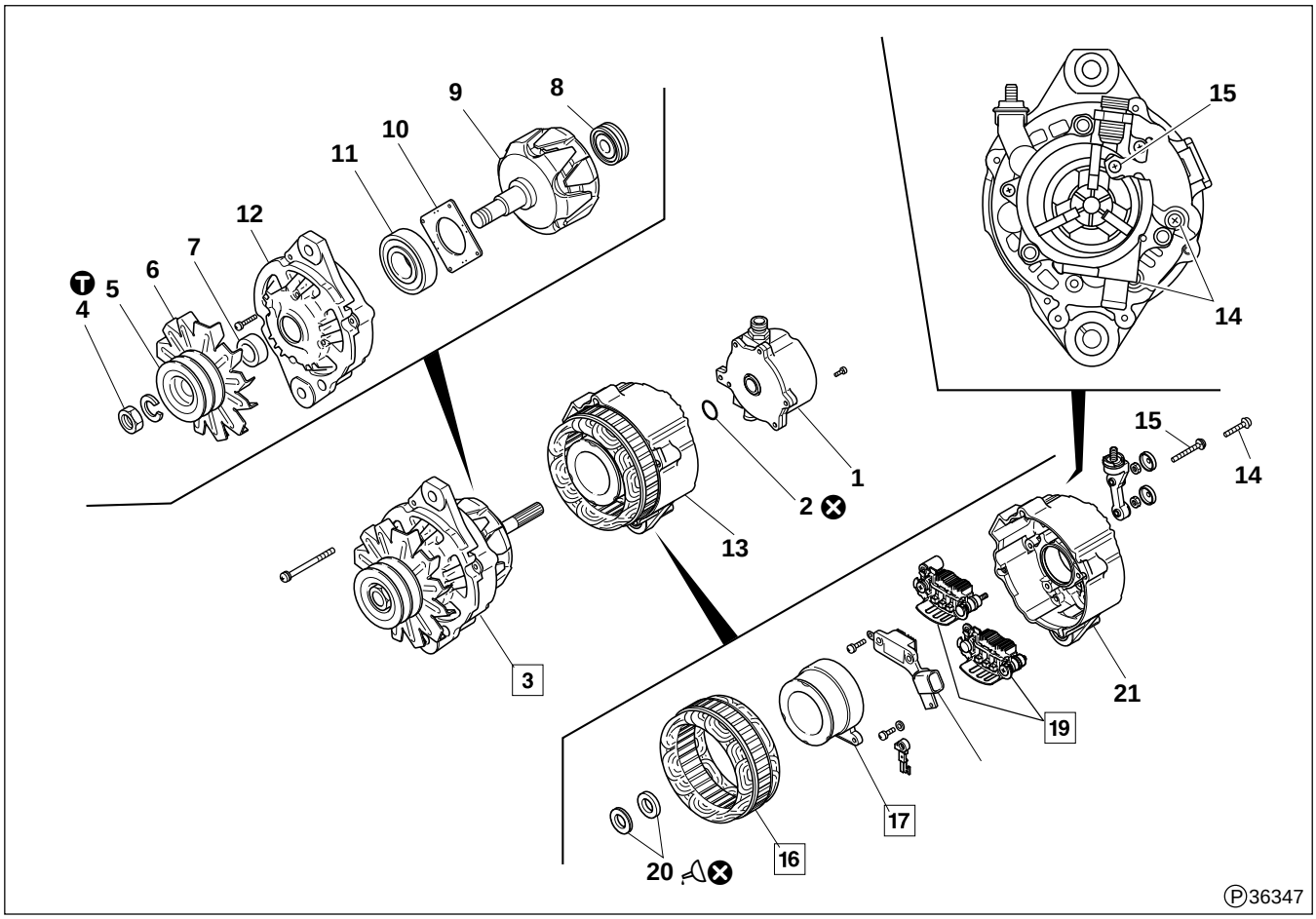

● **Disassembly sequence**

1 Vacuum pump Gr 35
2 O-ring
3 Rotor and front bracket assembly
4 Nut
5 Pulley
6 Fan
7 Spacer
8 Rear bearing
9 Rotor assembly
10 Cover
11 Front bearing
12 Front bracket
13 Stator and rear bracket assembly
14 Screw
15 Screw
16 Field coil
17 Stator assembly
18 Regulator
19 Rectifier
20 Oil seal
21 Rear bracket

⊗ : Non-reusable parts

CAUTION

When removing field coil 16, support the field coil by hand or with a stand to prevent it from falling due to its own weight.

NOTE

Do not remove parts 8, 11, 16 unless they are faulty.
Alternator without vacuum pump is not equipped with parts 1 and 2.

● **Assembly sequence**

Follow the disassembly sequence in reverse.

Service standards

Location	Maintenance item	Standard value	Limit	Remedy
16	Field coil resistance (20°C {68°F})	2.0 to 2.4 Ω	—	Replace

Tightening torque

Unit : N·m {lbf.ft, kgf·m}

Location	Parts to be tightened	Tightening torque	Remarks
4	Nut (Pulley mounting)	132 to 162 {98 to 120, 13.5 to 16.5}	—

Lubricant

Location	Points of application	Specified lubricant	Quantity
20	Oil seal lip area	Idemistu Autolux or lubricant supplied with oil seal	As required

◆ Service procedure

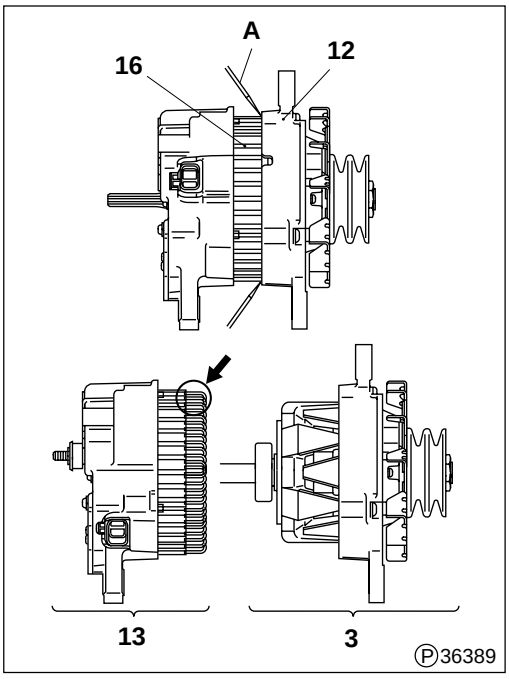

3 **Rotor and front bracket assembly**

[Removal]

- Insert screwdriver **A** between front bracket **12** and stator assembly **17**.
- Use screwdriver **A** to pry rotor and front bracket assembly **3** away from stator and rear bracket assembly **13**.

CAUTION

Be careful not to insert the screwdriver too deep or it will damage coil B of stator assembly 17 and might cause a short-circuit.

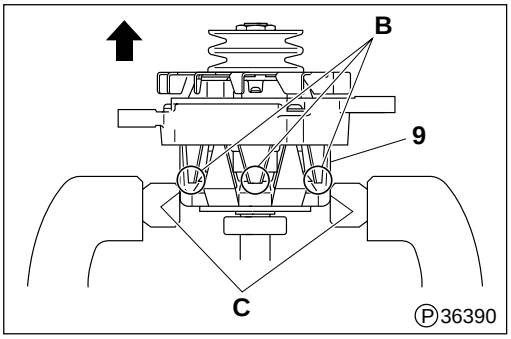

[Disassembly]

CAUTION

Make sure, when you hold rotor assembly 9 in a vise, to grip root C of the core claws. Gripping claws D can damage them.

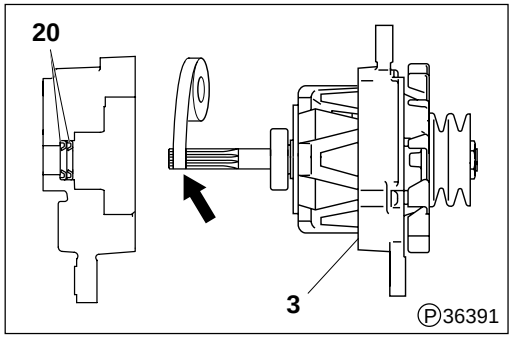

[Installation]

CAUTION⚠

To prevent damaging oil seal 20 during assembly, cover spline area E of the shaft of rotor and front bracket assembly 3 with tape.

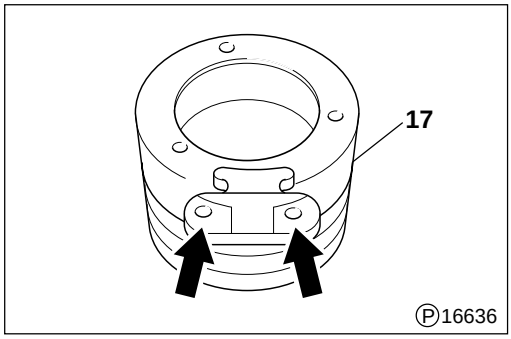

17 Inspection of stator

- Measure the resistance between the terminals of field coil **17**.
- If the measured value deviates from the standard value, replace stator **17**.

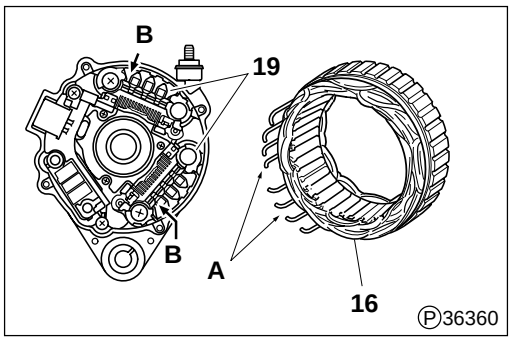

16 Field coil assembly

[Removal and installation]

- Disconnect lead **A** of field coil assembly **16** from rectifier **19**. The lead is soldered to diode **B** of rectifier **19** at eight points. (Each of the two rectifiers has 4 soldered sections.)

CAUTION⚠

Make sure that you desolder within five seconds because the diode is heat sensitive.

- To install, follow the removal sequence in reverse.

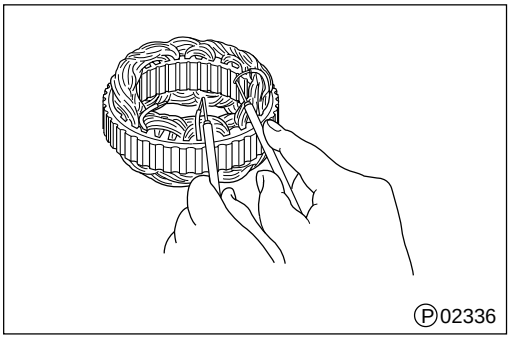

[Inspection]

(1) Continuity of each lead wire

- Check electrical conductivity between individual lead wires of the four wires soldered to each rectifier.
- If there is no continuity, the lead wire is broken. Replace field coil assembly **16**.

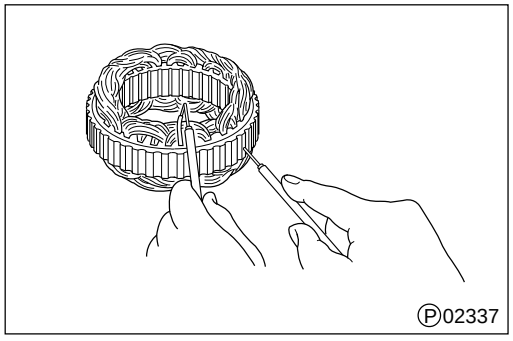

(2) Continuity between lead wires and the core

- Make sure that there is no continuity between all lead wires and the core.
- If there is continuity, replace field coil assembly **16**, since it might be short-circuited.

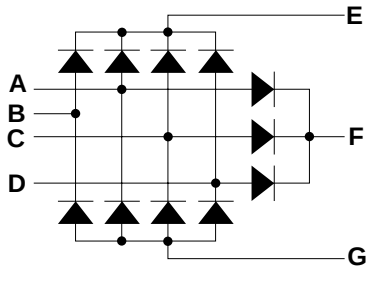

Ⓟ15270

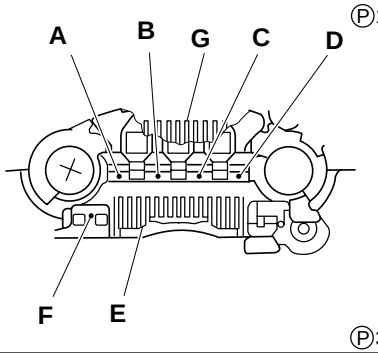

Ⓟ36361

19 **Inspection of rectifier**

- Inspect whether the diode inside rectifier **19** functions properly, and if any fault is found, replace the rectifier.
  Infinite resistance in both.....Open circuit
  Near-zero Ω resistance in both.....Short circuit
  A, B, C, D : Lead connecting area of stator coil
  E, G : Heat sink area
  F : Regulator connecting area
- Inspect the rectifier twice, before and after the ⊕ side and ⊖ side of the tester have been changed over.

CAUTION⚠

When inspecting using a tester, the current becomes weaker than the usual current flowing through rectifier 19. Therefore, an incomplete resistance value might be indicated.
Also, this tendency increases as the range of the tester gets smaller. Therefore, use as large range as possible.

Power Supply (Battery to High-current Fuse Box and Fuse Box)

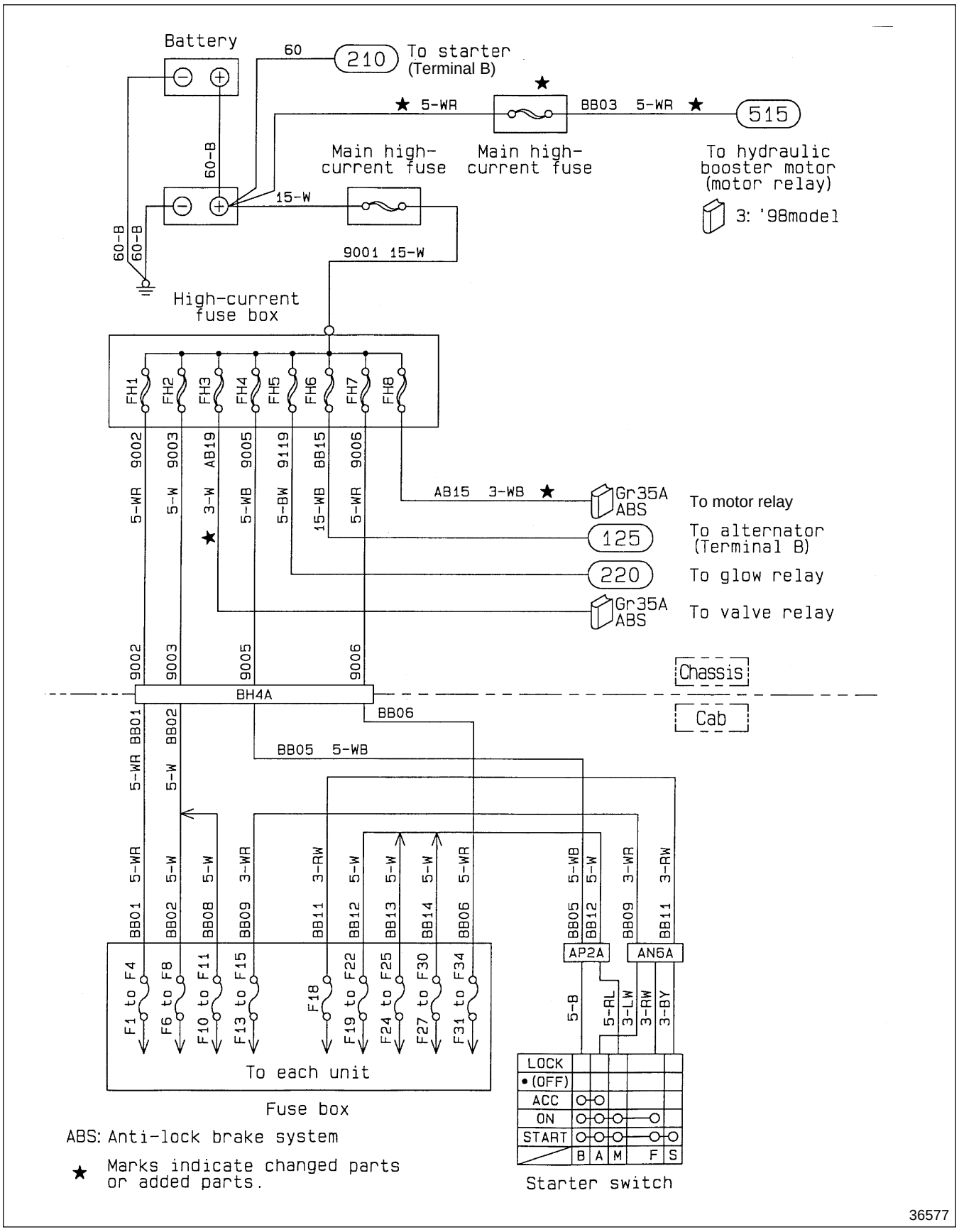

M E M O

115 RESERVE POWER CIRCUIT

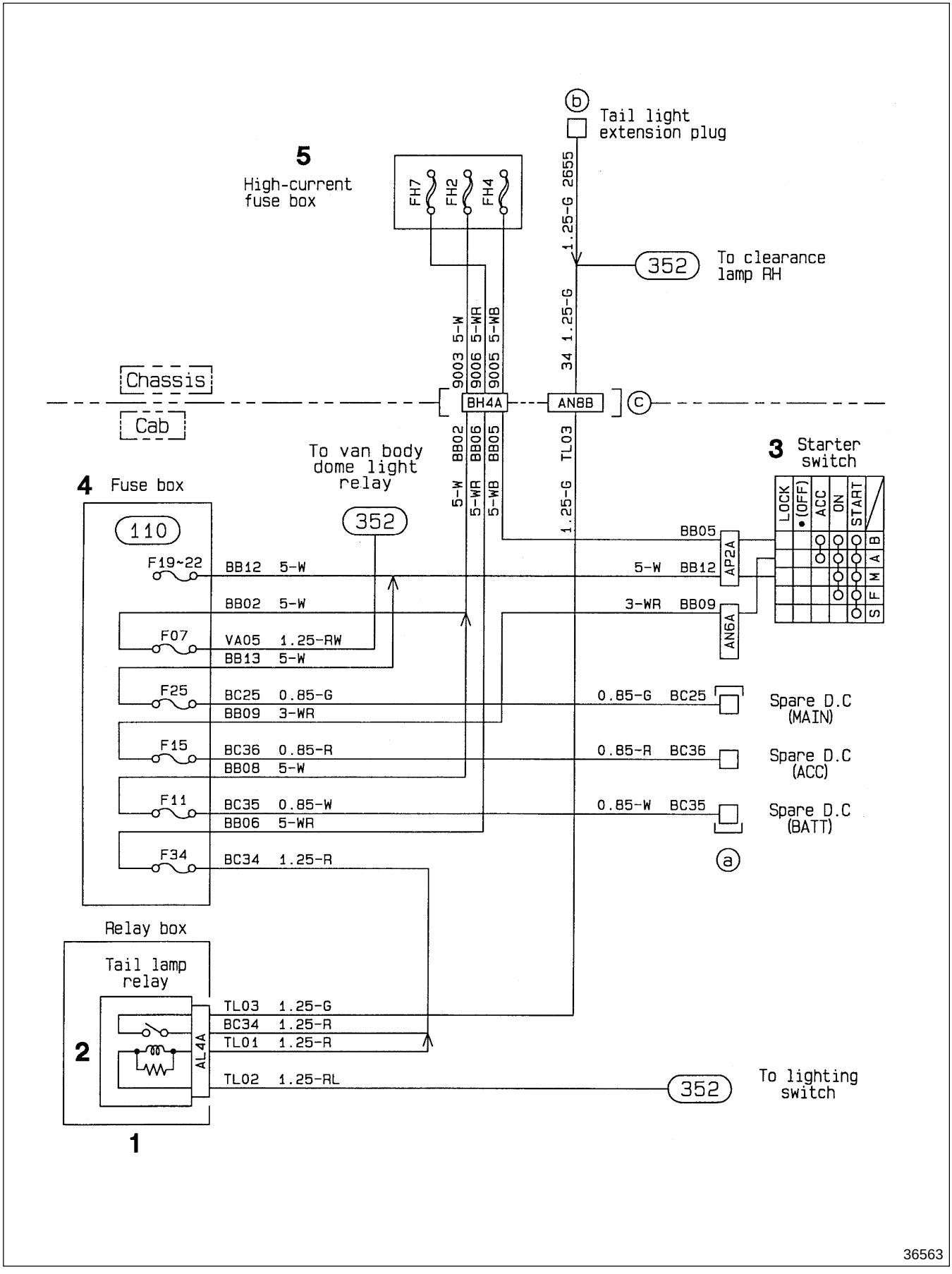

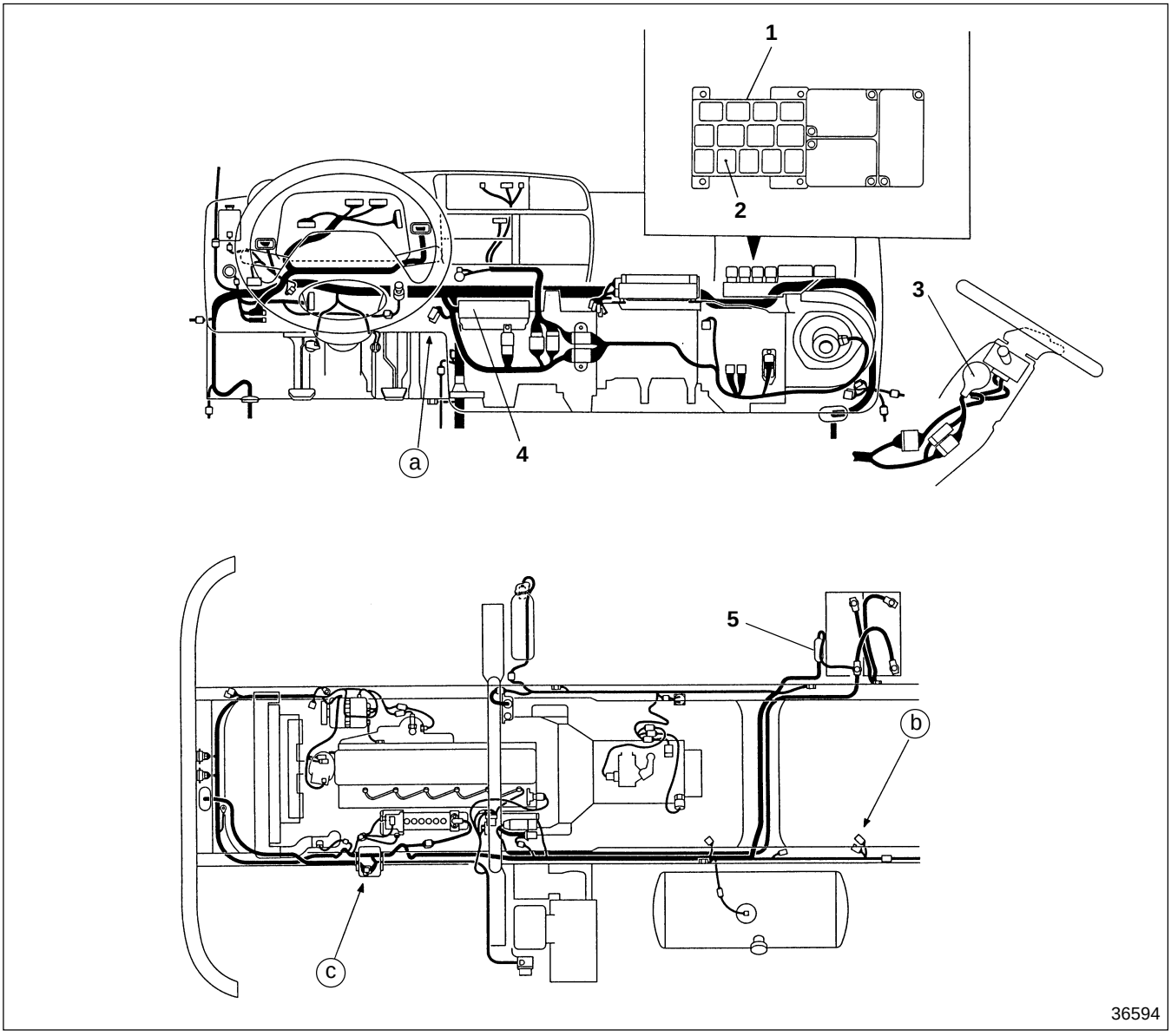

1 Relay box 1 (604)
2 Tail lamp relay 1 (604)
3 Starter switch 1 (210)
4 Fuse box (104)
5 Main high-current fuse box (104)
6 Battery 1 (101)
7 High-current fuse box (104)

For information on the following equipment, refer to the manuals indicated.

- Transmission power take-off 1 (850)
- Van body dome light 3 (352)
- Air-conditioner 1 (618)

1 : '96 model Gr 54 (TWME 9502-54)
3 : '98 model Gr 54 (TWME 9502-254)

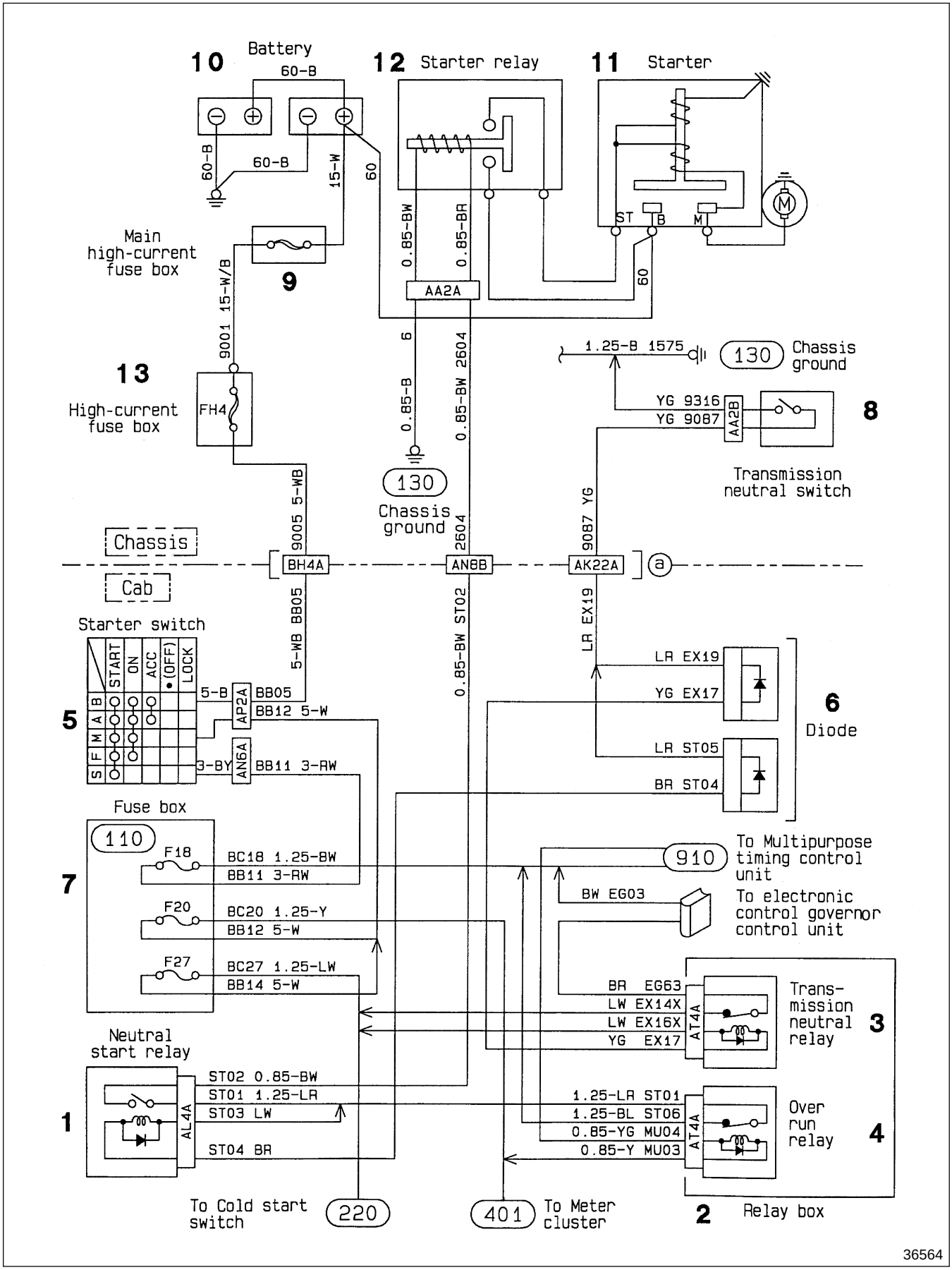
10 Battery
60-B
60-B
60-B
15-W
60
12 Starter relay
11 Starter
ST
B
M
0.85-BW
0.85-BR
AA2A
60
Main high-current fuse box
9
9001 15-W/B
13
High-current fuse box
FH4
6
0.85-B
0.85-BW 2604
1.25-B 1575
130 Chassis ground
YG 9316
YG 9087
AA2B
8
Transmission neutral switch
130
Chassis ground
9087 YG
9005 5-WB
Chassis
Cab
BH4A
AN8B
AK22A
a
5-WB BB05
0.85-BW ST02
LR EX19
Starter switch
S F M A B
START ON ACC (OFF) LOCK
5
5-B
AP2A
BB05
BB12 5-W
3-BY
AN6A
BB11 3-RW
LR EX19
YG EX17
LR ST05
BR ST04
6
Diode
Fuse box
110
7
F18
BC18 1.25-BW
BB11 3-RW
F20
BC20 1.25-Y
BB12 5-W
F27
BC27 1.25-LW
BB14 5-W
910
To Multipurpose timing control unit
BW EG03
To electronic control governor control unit
BR EG63
LW EX14X
LW EX16X
YG EX17
AT4A
Trans-mission neutral relay
3
Neutral start relay
1
AL4A
ST02 0.85-BW
ST01 1.25-LR
ST03 LW
ST04 BR
1.25-LR ST01
1.25-BL ST06
0.85-YG MU04
0.85-Y MU03
AT4A
Over run relay
4
To Cold start switch
220
401
To Meter cluster
2
Relay box
36564

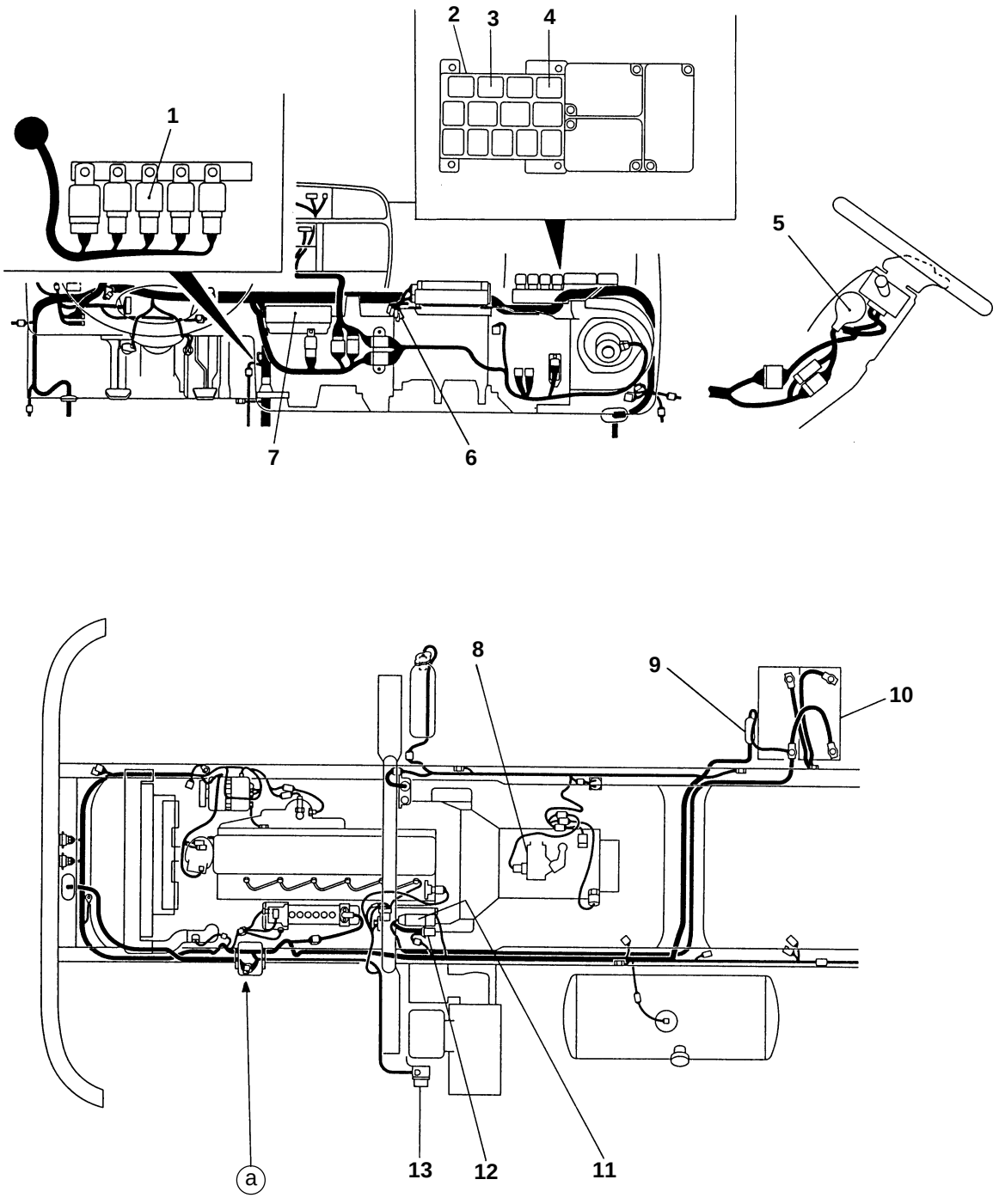

1 Neutral start relay 1 (604)
2 Relay box 1 (604)
3 Transmission neutral relay 1 (604)
4 Over run relay 1 (604)
5 Starter switch 1 (210)
6 Diode
7 Fuse box (104)
8 Transmission neutral switch 1 (802)
9 Main high-current fuse box (104)
10 Battery 1 (101)
11 Starter 1 (201)
12 Starter relay 1 (210)
13 High-current fuse box (104)

1 : '96 Model Gr 54 (Pub. No. TWME9502-54)

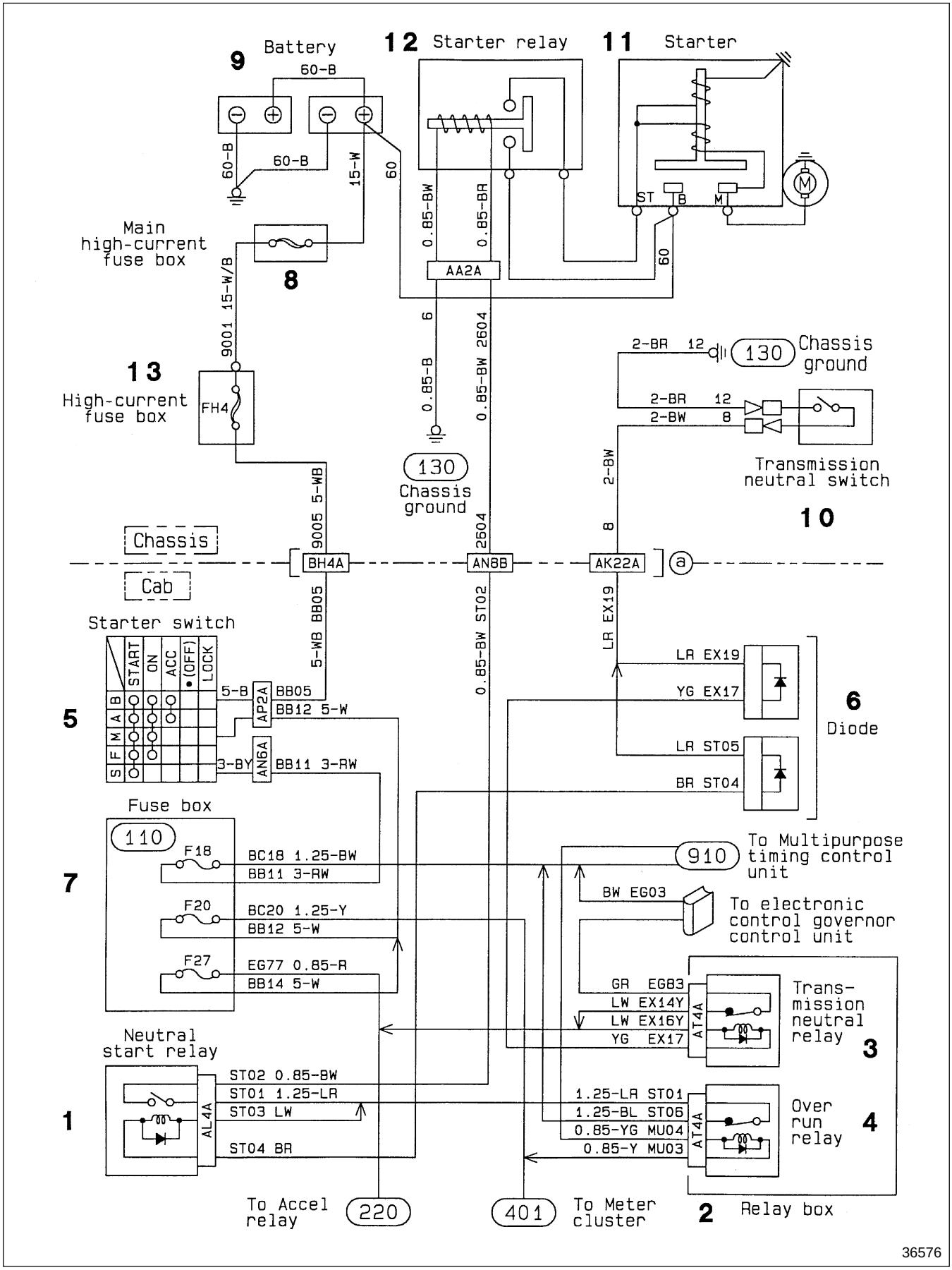
9 Battery
60-B
60-B
60-B
15-W
60
12 Starter relay
11 Starter
0.85-BW
0.85-BR
ST
B
M
60
AA2A
Main high-current fuse box
8
9001 15-W/B
13 High-current fuse box
FH4
6
0.85-B
0.85-BW 2604
130 Chassis ground
2-BR 12
130 Chassis ground
2-BR 12
2-BW 8
Transmission neutral switch
10
2-BW 8
9005 5-WB
Chassis
Cab
BH4A
AN8B
AK22A
a
5-WB BB05
0.85-BW ST02
LR EX19
Starter switch
START
ON
ACC
(OFF)
LOCK
B
A
M
F
S
5
5-B
AP2A
BB05
BB12 5-W
3-BY
AN6A
BB11 3-RW
LR EX19
YG EX17
LR ST05
BR ST04
6 Diode
Fuse box
110
7
F18
BC18 1.25-BW
BB11 3-RW
F20
BC20 1.25-Y
BB12 5-W
F27
EG77 0.85-R
BB14 5-W
910
To Multipurpose timing control unit
BW EG03
To electronic control governor control unit
GR EG83
LW EX14Y
LW EX16Y
YG EX17
AT4A
Trans-mission neutral relay
3
Neutral start relay
1
AL4A
ST02 0.85-BW
ST01 1.25-LR
ST03 LW
ST04 BR
1.25-LR ST01
1.25-BL ST06
0.85-YG MU04
0.85-Y MU03
AT4A
Over run relay
4
To Accel relay
220
401
To Meter cluster
2 Relay box
36576

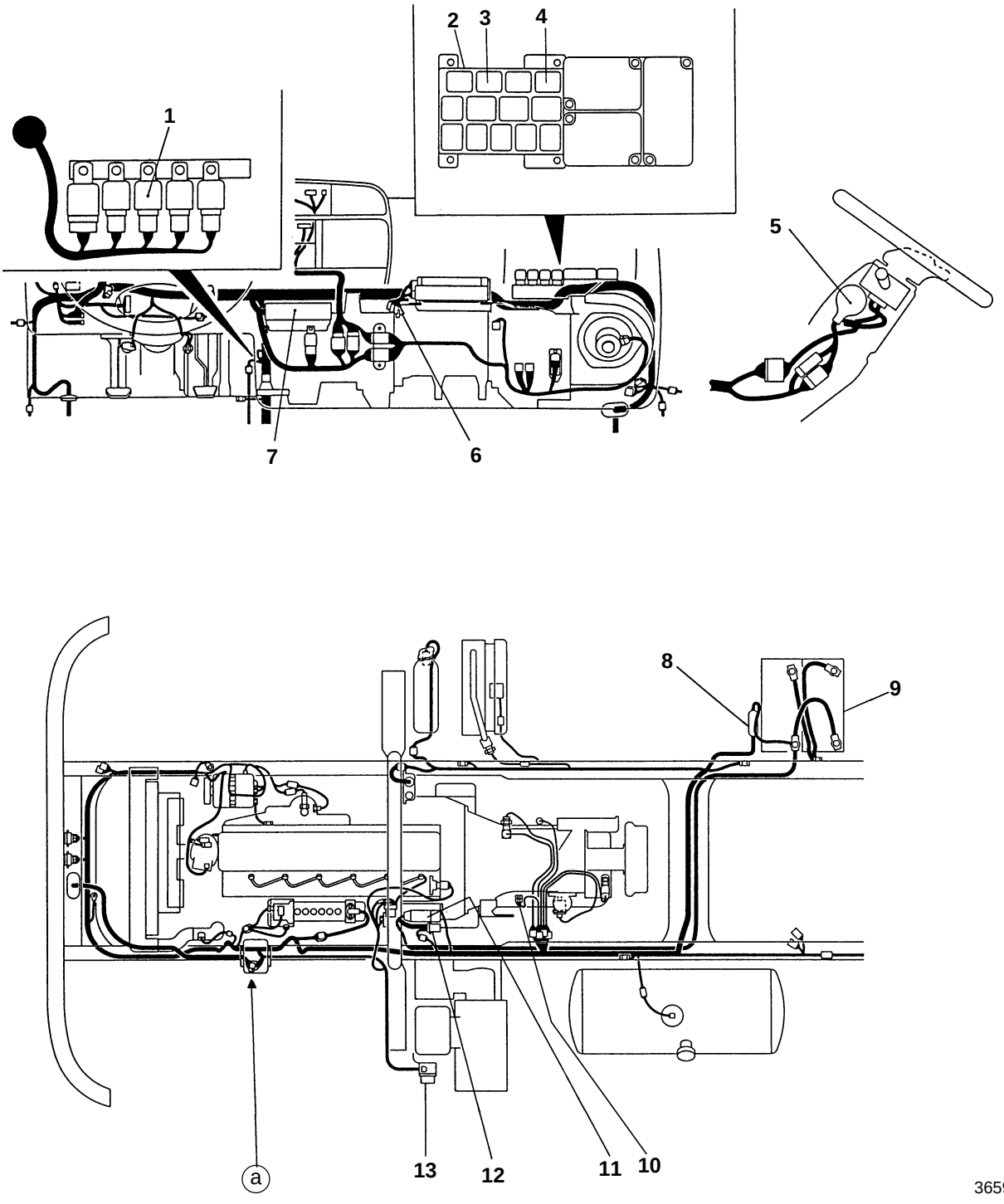

1 Neutral start relay 1 (604)
2 Relay box 1 (604)
3 Transmission neutral relay 1 (604)
4 Over run relay 1 (604)
5 Starter switch
6 Diode
7 Fuse box (104)
8 Main high-current fuse box (104)
9 Battery 1 (101)
10 Transmission neutral switch 1 (802)
11 Starter 1 (201)
12 Starter relay
13 High-current fuse box (104)

1 : '96 Model Gr 54 (Pub. No. TWME9502-54)

313 DAYTIME RUNNING LIGHT CIRCUIT

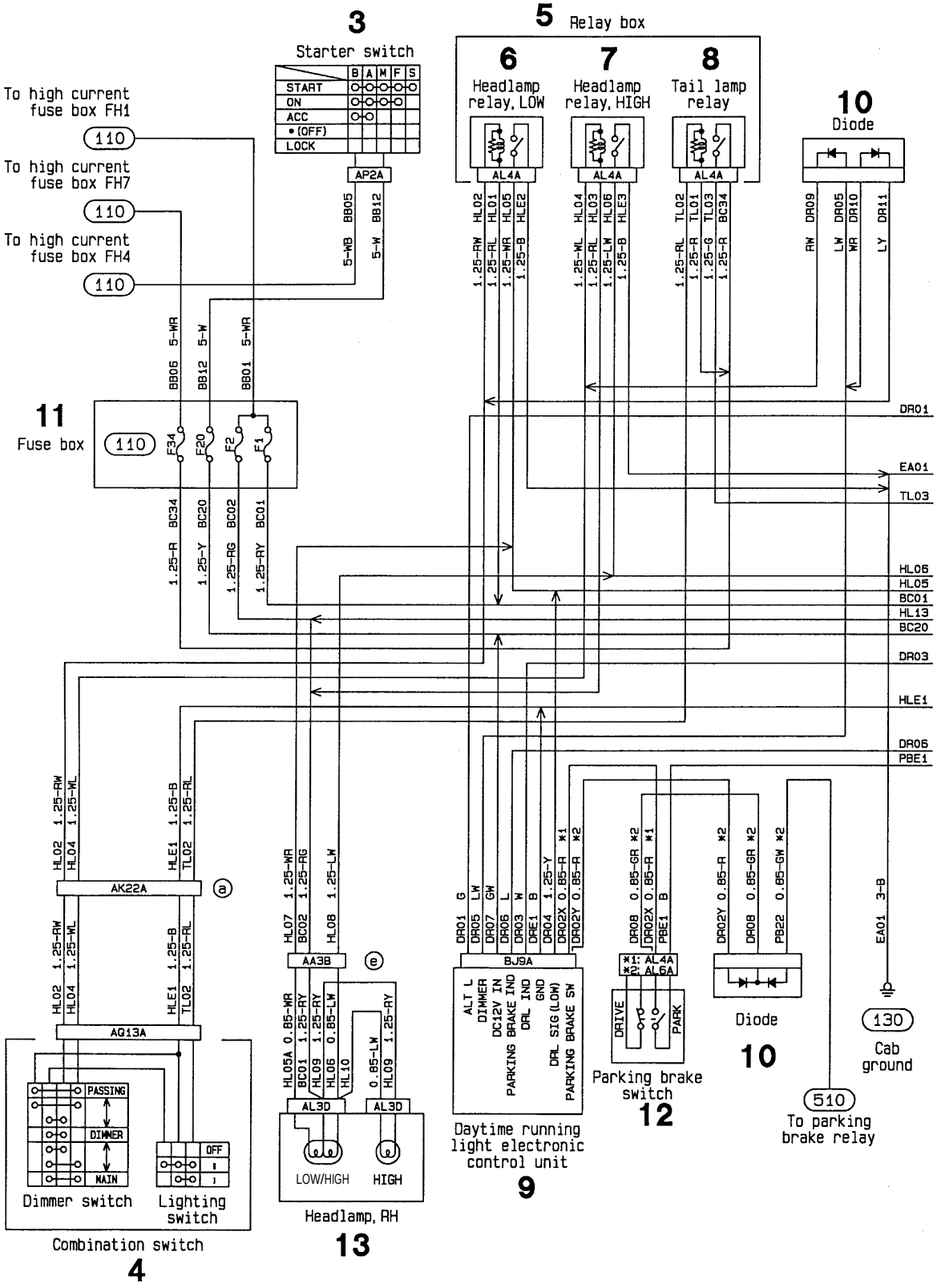

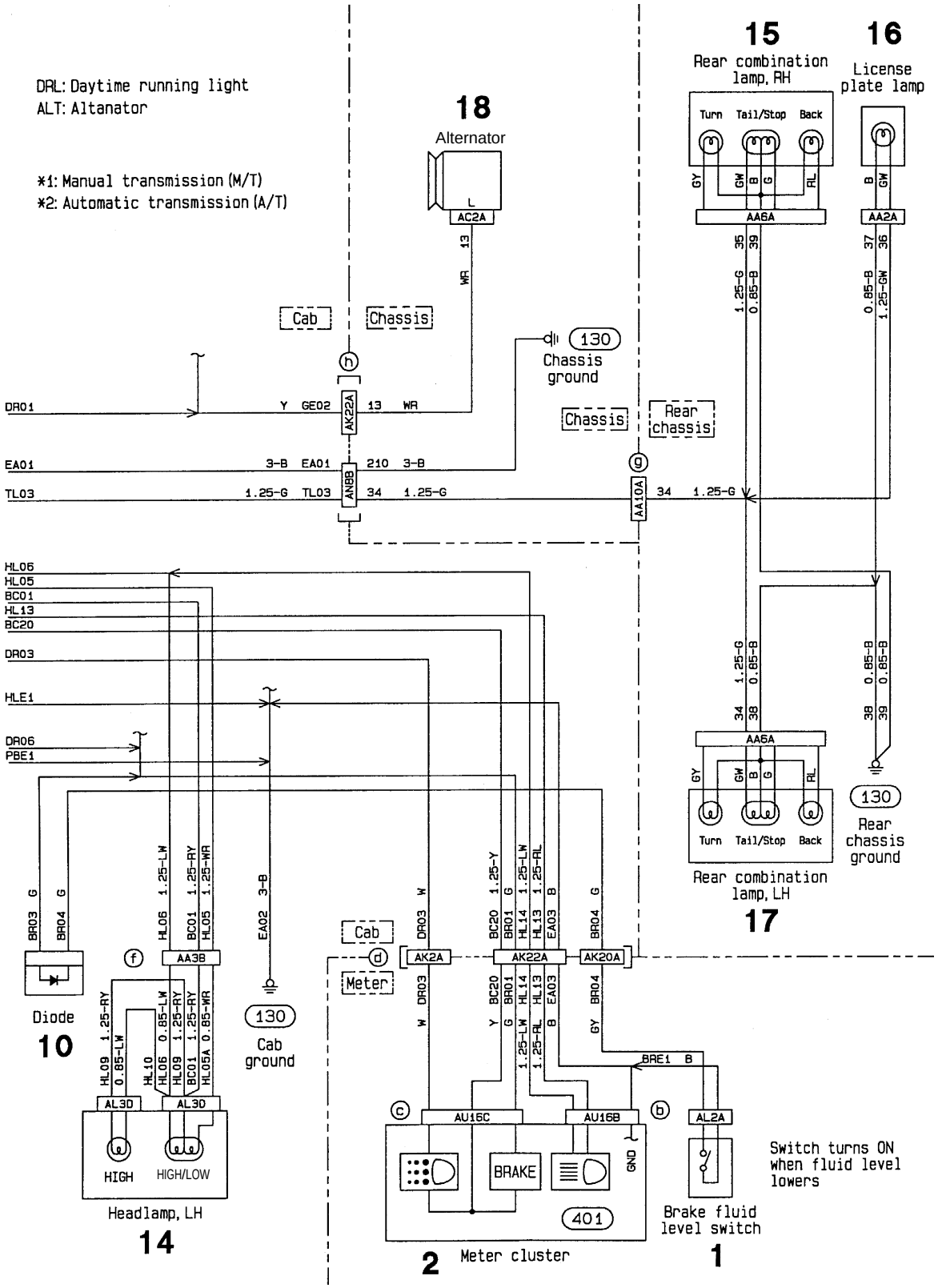
DRL: Daytime running light
ALT: Altanator
*1: Manual transmission (M/T)
*2: Automatic transmission (A/T)
18
Alternator
AC2A
15
Rear combination lamp, RH
16
License plate lamp
Turn
Tail/Stop
Back
AA6A
AA2A
Cab
Chassis
130
Chassis ground
DR01
AK22A
EA01
TL03
AN8B
AA10A
Rear chassis
HL06
HL05
BC01
HL13
BC20
DR03
HLE1
DR06
PBE1
AA6A
130
Rear chassis ground
Rear combination lamp, LH
17
Diode
10
AA3B
Cab ground
Meter
AK2A
AK22A
AK20A
AL3D
HIGH
HIGH/LOW
Headlamp, LH
14
AU16C
AU16B
AL2A
BRAKE
GND
401
Meter cluster
2
Brake fluid level switch
1
Switch turns ON when fluid level lowers

36562

313 DAYTIME RUNNING LIGHT CIRCUIT

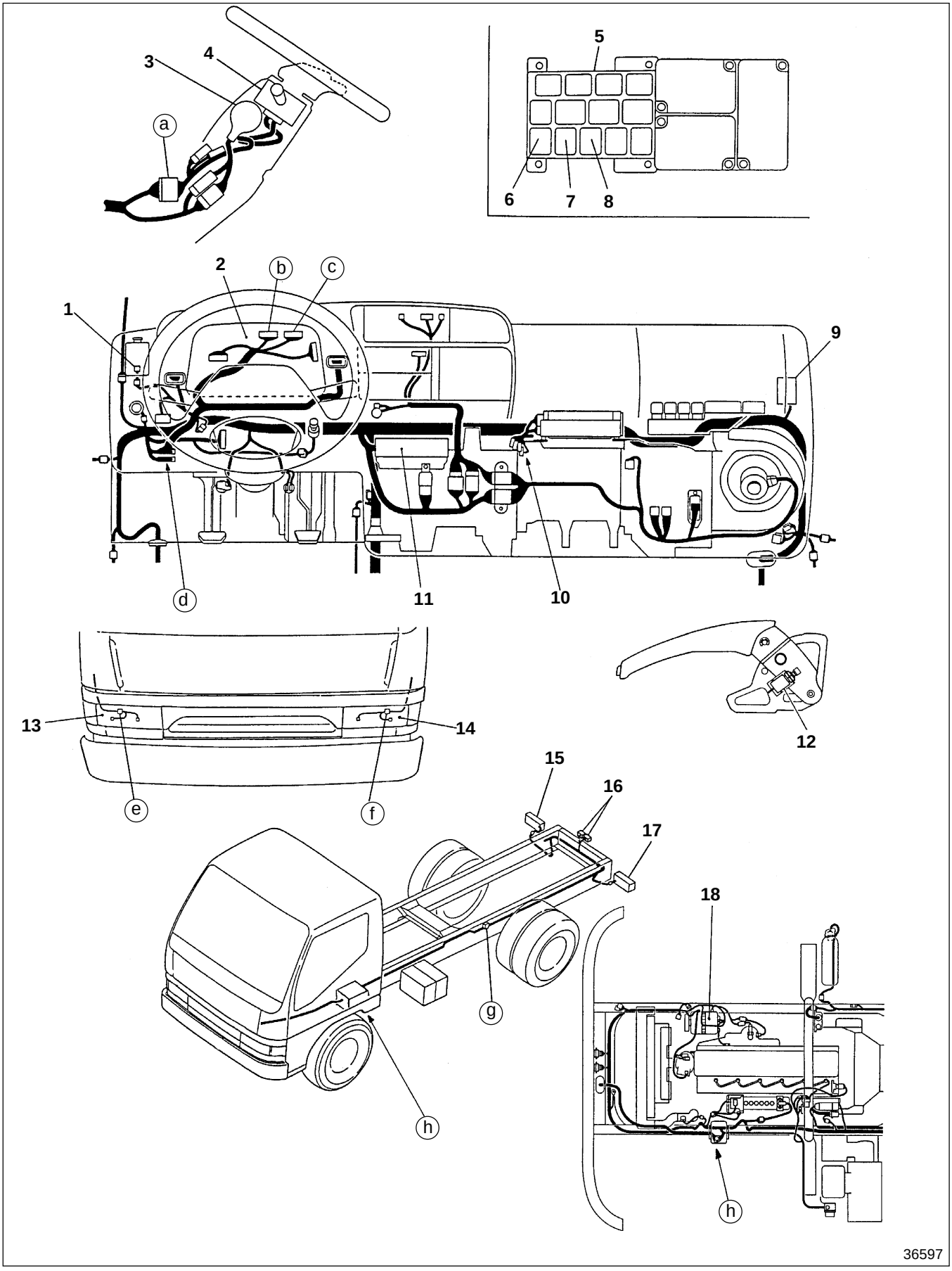

1 Brake fluid level switch 1 (515)
2 Meter cluster (401)
3 Starter switch 1 (210)
4 Combination switch 1 (601)
5 Relay box 3 (604)
6 Headlamp relay, LOW 3 (604)
7 Headlamp relay, HIGH 3 (604)
8 Tail lamp relay 3 (604)
9 Daytime running light control unit
10 Diode
11 Fuse box (104)
12 Parking brake switch 1 (510)
13 Headlamp, RH
14 Headlamp, LH
15 Rear combination lamp, RH
16 License plate lamp
17 Rear combination lamp, LH
18 Alternator (106)

1 : '96 Model Gr 54 (Pub No. TWME9502-54)
3 : '99 Model Gr 54 (Pub No. TWME9502-3)

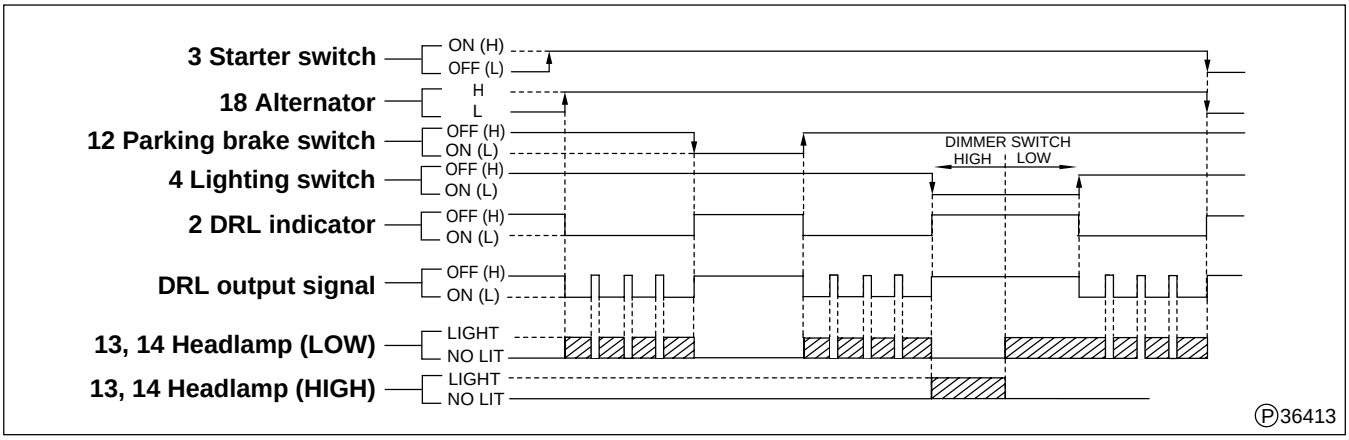

[Outline]
The daytime running light system (DRL) turns on head lamps **13**, **14** in low beam as soon as the engine starts even if the light switch is in the OFF position.
Headlamps **13**, **14** repeat On/Off operations at 120 Hz according to the above timing chart. Because of the cyclic On/Off operations, the headlamps are dimmer than when the headlamp switch is ON.
Explanation of timing chart
- After the engine starts, when alternator **18** begins generating electricity with starter switch **3** in the ON position, headlamps **13**, **14** light.
- When parking brake switch **12** is ON, the DRL turns off to switch off the headlamps.

Meter Cluster Internal Circuit

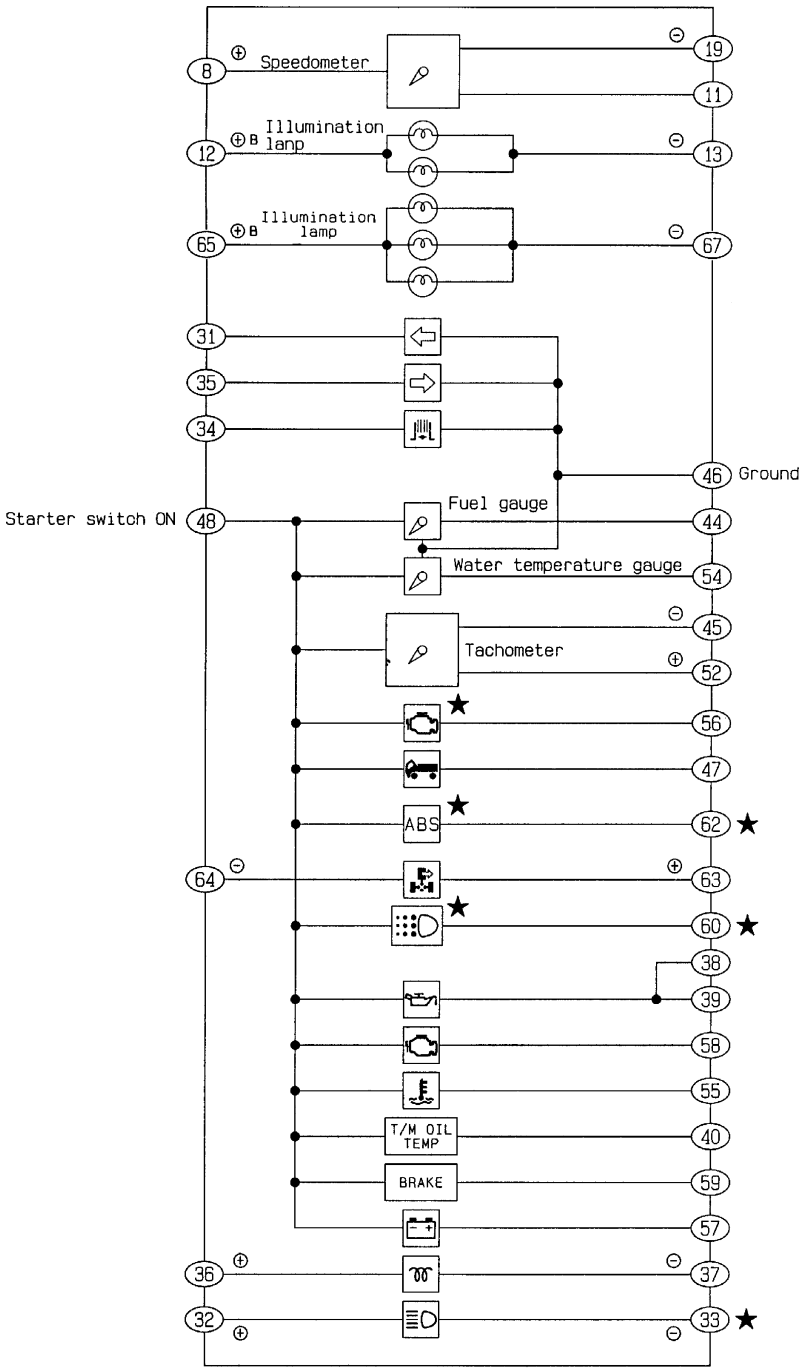

★ Marks indicate changed parts or added parts.

36598

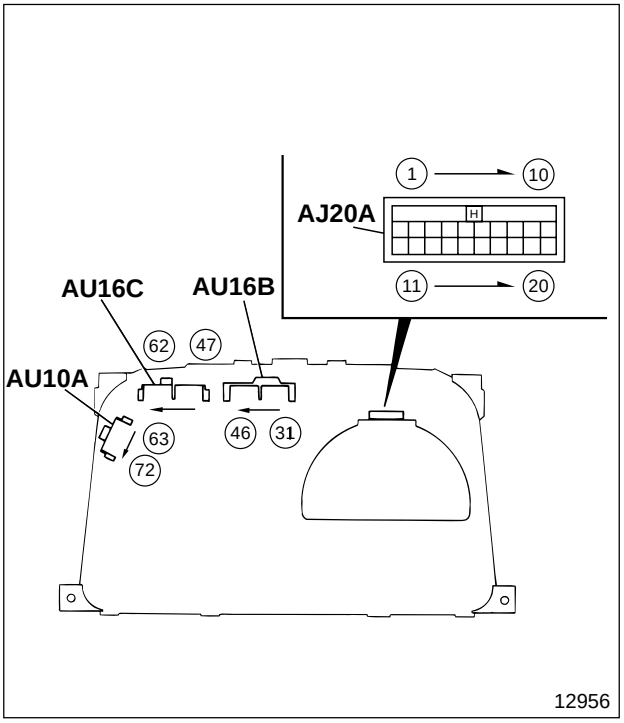

ABS : Anti-lock Brake System
DRL : Daytime Running Light
★ marks indicate added parts.

Terminal No.	AJ20A
1	—
2	—
3	—
4	—
5	—
6	—
7	—
8	Speedometer ⊕
9	—
10	—
11	Vehicle speed sensor ⊕
12	Illumination ⊕ (Speedometer)
13	Illumination ⊖ (Speedometer)
14	—
15	—
16	—
17	—
18	—
19	Speedometer ⊖
20	—

Terminal No.	AU16B
31	Turn signal (LH)
32	HIGH beam ⊕
33	HIGH beam ⊖
34	Exhaust brake < Manual transmission>
35	Turn signal (RH)
36	Glow ⊕
37	Glow ⊖
38	Engine oil filter
39	Engine oil pressure level
40	Automatic transmission fluid temperature
41	—
42	—
43	—
44	Fuel gauge
45	Tachometer ⊖
46	Ground

Terminal No.	AU10A
63	Power take-off ⊕
64	Power take-off ⊖
65	Illumination ⊕
66	—
67	Illumination ⊖
68	—
69	—
70	—
71	—
72	—

Terminal No.	AU16C
47	Cab tilt
48	Power
49	—
50	—
51	—
52	Tachometer ⊕
53	—
54	Water temperature gauge
55	•Engine coolant level •Engine coolant temperature
56	Pre-stroke control
57	Battery charge
58	Electronic control governor
59	Brake •Parking brake •Brake booster (Hydraulic booster) •Brake fluid level •Power steering fluid level
60	★ DRL
61	—
62	★ ABS

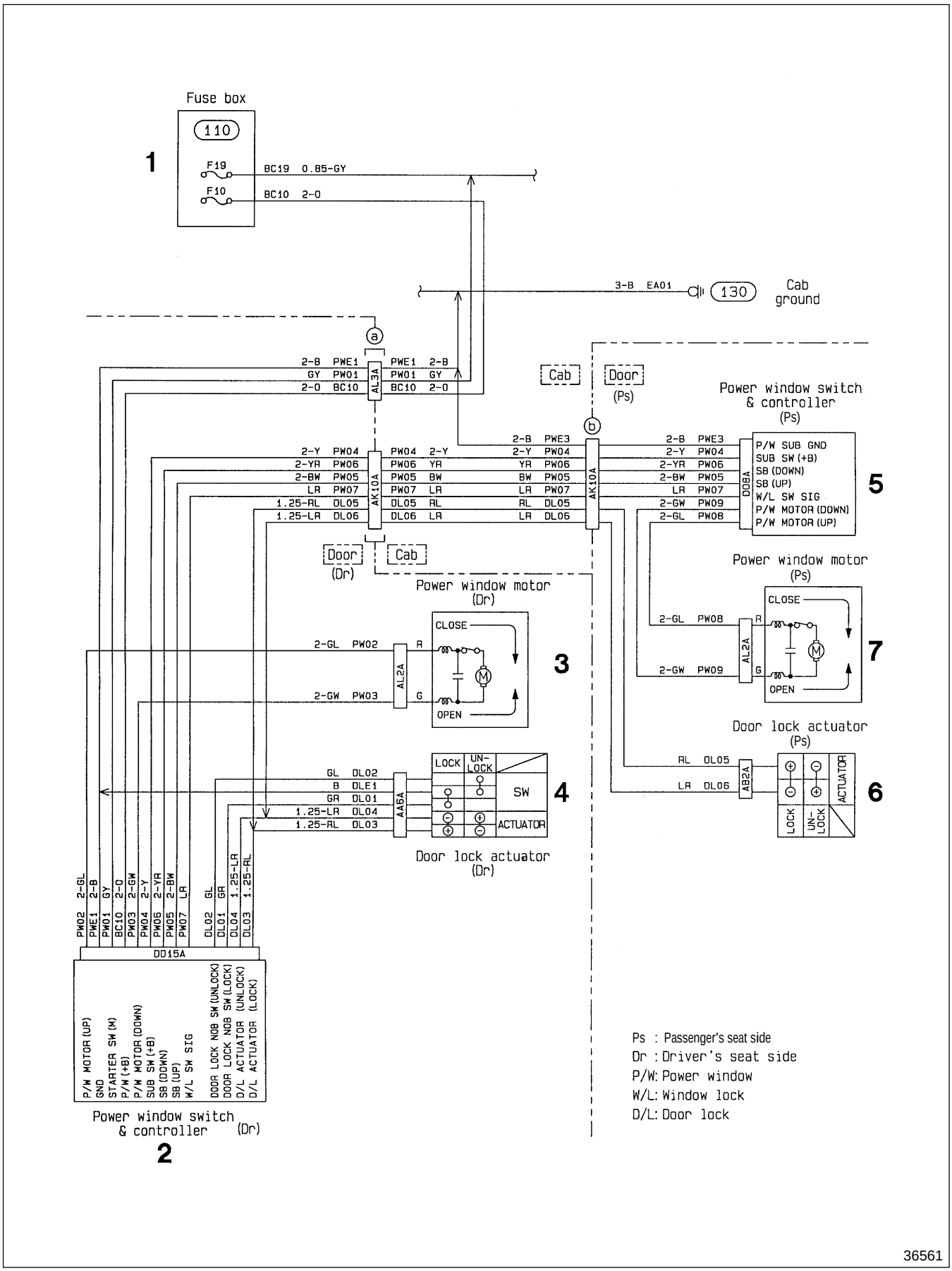
Fuse box
110
1
F19
F10
BC19 0.85-GY
BC10 2-O
3-B EA01
130
Cab ground
Cab
Door (Ps)
Power window switch & controller (Ps)
5
P/W SUB GND
SUB SW (+B)
SB (DOWN)
SB (UP)
W/L SW SIG
P/W MOTOR (DOWN)
P/W MOTOR (UP)
Power window motor (Ps)
7
CLOSE
OPEN
Door lock actuator (Ps)
6
Door (Dr)
Cab
Power window motor (Dr)
3
Door lock actuator (Dr)
4
LOCK
UN-LOCK
SW
ACTUATOR
Power window switch & controller (Dr)
2
P/W MOTOR (UP)
GND
STARTER SW (M)
P/W (+B)
P/W MOTOR (DOWN)
SUB SW (+B)
SB (DOWN)
SB (UP)
W/L SW SIG
DOOR LOCK NOB SW (UNLOCK)
DOOR LOCK NOB SW (LOCK)
D/L ACTUATOR (UNLOCK)
D/L ACTUATOR (LOCK)
Ps : Passenger's seat side
Dr : Driver's seat side
P/W: Power window
W/L: Window lock
D/L: Door lock
36561

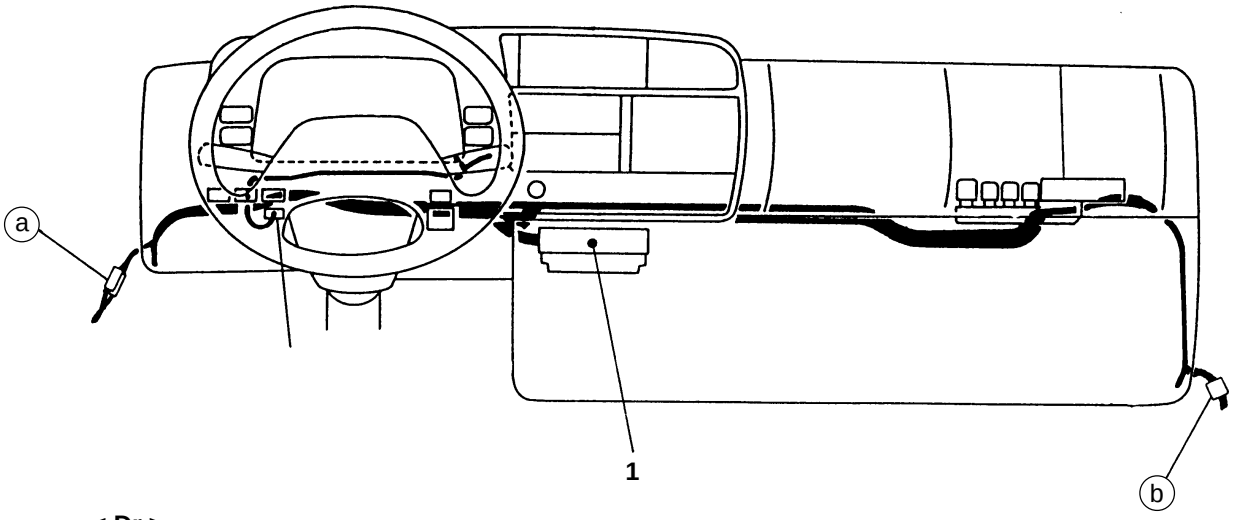

< Dr >

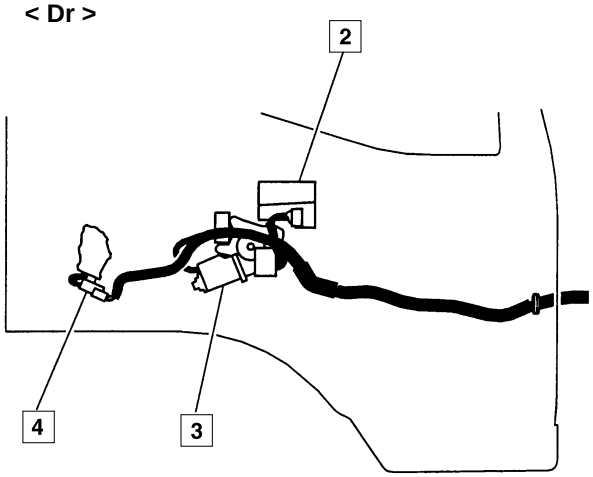

< Ps >

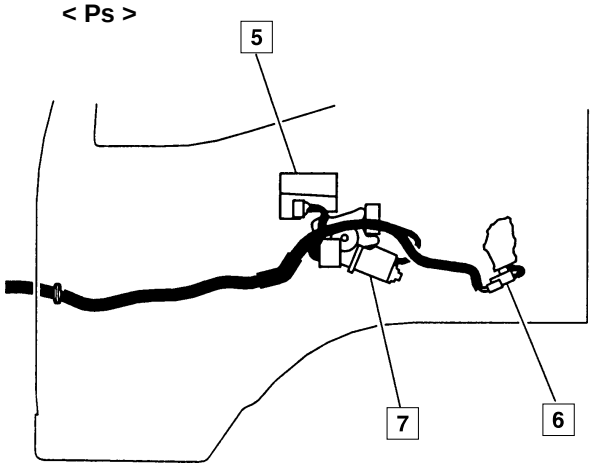

1 Fuse box (104)
2 Power window switch & controller (Dr)
3 Power window motor (Dr)
4 Door lock actuator (Dr)
5 Power window switch & controller (Ps)
6 Door lock actuator (Ps)
7 Power window motor (Ps)

Ps : Passenger's seat side
Dr : Driver's seat side

36416

◆ Service procedure

2 **5** **Inspection of power window switch & controller**

- Since the units alone cannot be readily checked in the off-vehicle state, check the harness, switch and other related parts in each system.
- If any fault is not found in the related parts, and the problem still remains in the system, replace the control unit or other units.

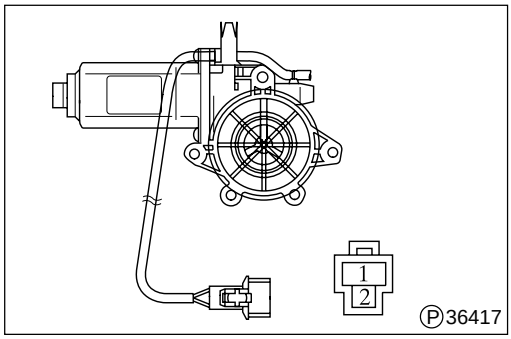

3 **7** **Inspection of power window motors**

- Follow the table below to check for operation.

	①	②
UP (Close)	⊕	⊖
Down (Open)	⊖	⊕

⊕—⊖ : Indicates the terminals where 12 volts DC is to be applied.

- If any fault is found, replace power window motors **3**, **7**. 🕮 Gr42

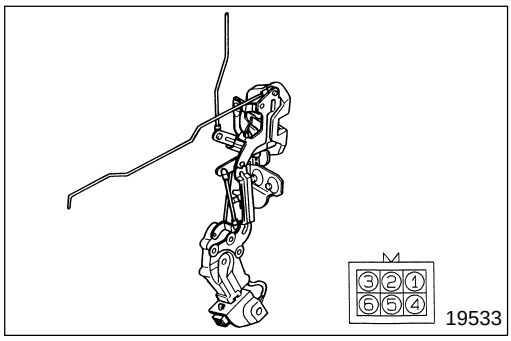

4 **Inspection of door lock actuator (driver's seat side)**

- Follow the table below to check for continuity and operation.

	①	②	③	④	⑤
LOCK		○	○	⊖	⊕
UNLOCK	○	○		⊕	⊖

○—○ : There is continuity between terminals.
⊕—⊖ : Indicates the terminals where 12 volts DC is to be applied

- If any fault is found, replace door lock actuator (driver's seat side) **4**. 🕮 Gr42

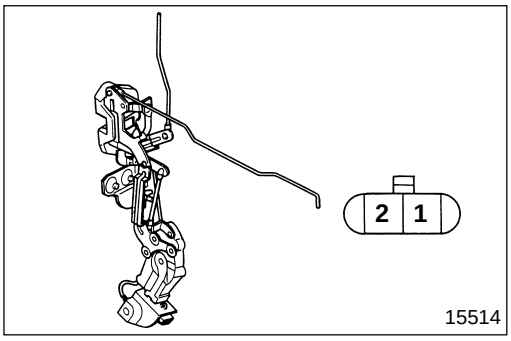

6 **Inspection of door lock actuator (passenger's seat side)**

- Follow the table below to check for operation.

	①	②
LOCK	⊖	⊕
UNLOCK	⊕	⊖

⊕—⊖ : Indicates the terminals where 12 volts DC is to be applied.

- If any fault is found, replace door lock actuator (passenger's seat side) **6**. 🕮 Gr42

M E M O

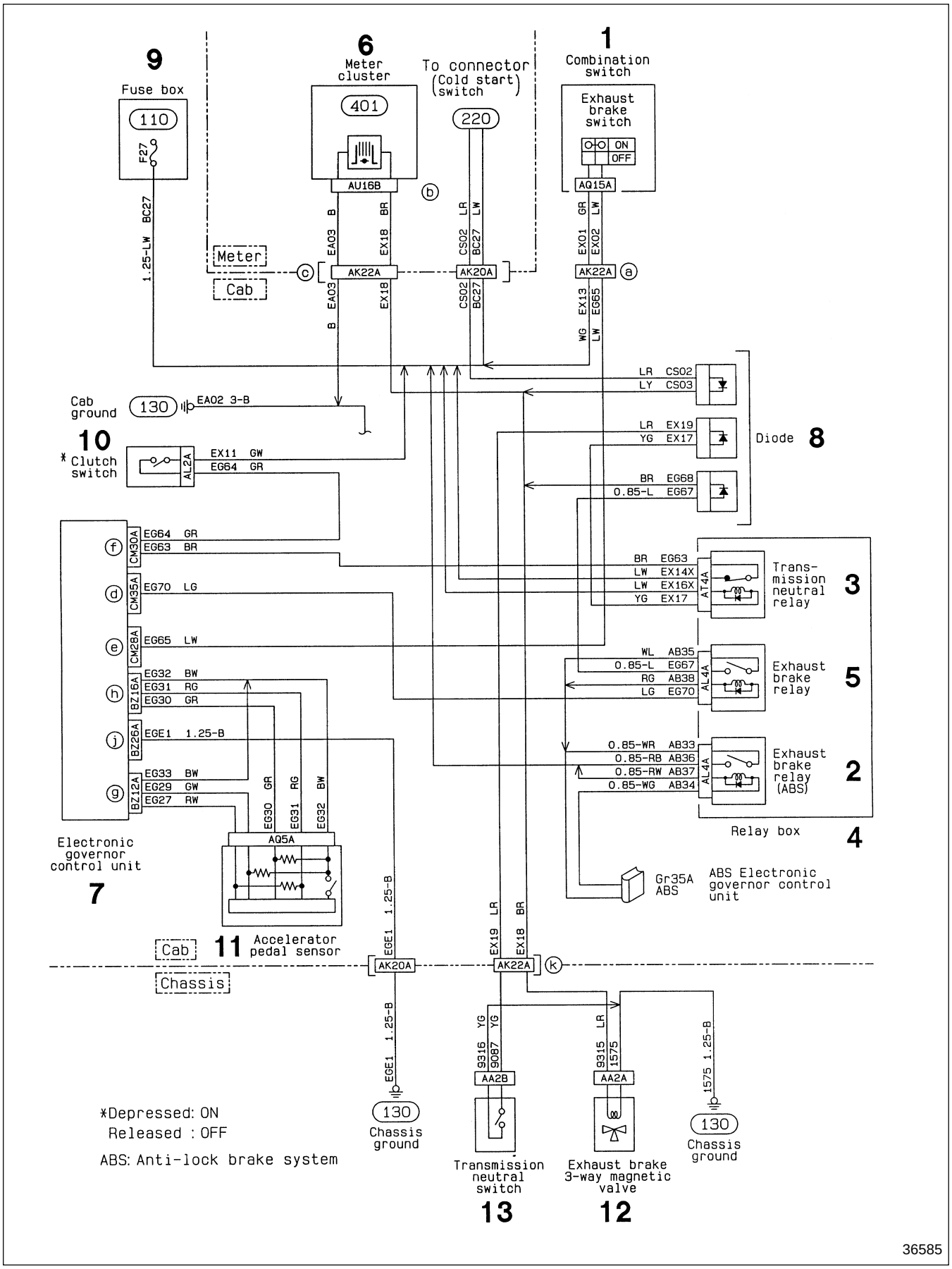
9
Fuse box
110
F27
1.25-LW BC27
6
Meter cluster
401
AU16B
B EA03
BR EX18
Meter
Cab
AK22A
AK20A
To connector (Cold start) (switch)
220
LR CS02
LW BC27
1
Combination switch
Exhaust brake switch
ON
OFF
AQ15A
GR EX01
LW EX02
AK22A
WG EX13
LW EG65
Cab ground
130
EA02 3-B
10
* Clutch switch
AL2A
EX11 GW
EG64 GR
LR CS02
LY CS03
LR EX19
YG EX17
Diode 8
BR EG68
0.85-L EG67
CM30A
EG64 GR
EG63 BR
CM35A
EG70 LG
CM28A
EG65 LW
BZ16A
EG32 BW
EG31 RG
EG30 GR
BZ26A
EGE1 1.25-B
BZ12A
EG33 BW
EG29 GW
EG27 RW
BR EG63
LW EX14X
LW EX16X
YG EX17
AT4A
Trans-mission neutral relay 3
WL AB35
0.85-L EG67
RG AB38
LG EG70
AL4A
Exhaust brake relay 5
0.85-WR AB33
0.85-RB AB36
0.85-RW AB37
0.85-WG AB34
AL4A
Exhaust brake relay (ABS) 2
Relay box 4
Gr35A ABS
ABS Electronic governor control unit
Electronic governor control unit
7
AQ5A
EG30 GR
EG31 RG
EG32 BW
Cab
11 Accelerator pedal sensor
Chassis
EGE1 1.25-B
AK20A
EX19 LR
EX18 BR
AK22A
k
EGE1 1.25-B
130
Chassis ground
9316 YG
9087 YG
AA2B
9315 LR
1575
AA2A
1575 1.25-B
130
Chassis ground
Transmission neutral switch 13
Exhaust brake 3-way magnetic valve 12
*Depressed: ON
Released : OFF
ABS: Anti-lock brake system
36585

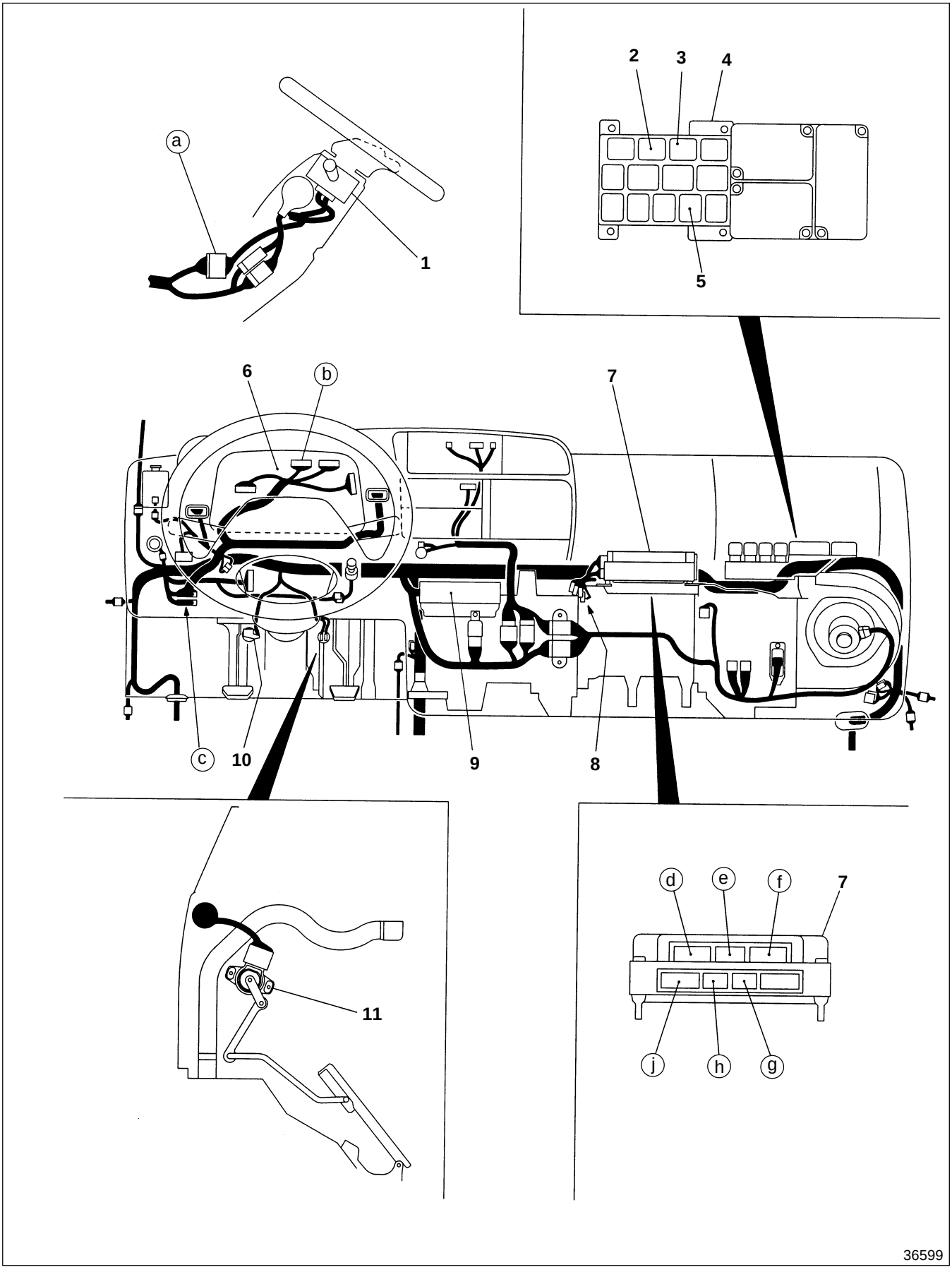
a
1
2
3
4
5
6
b
7
c
10
9
8
11
d
e
f
7
j
h
g
36599

(710) EXHAUST BRAKE CIRCUIT < Manual Transmission >

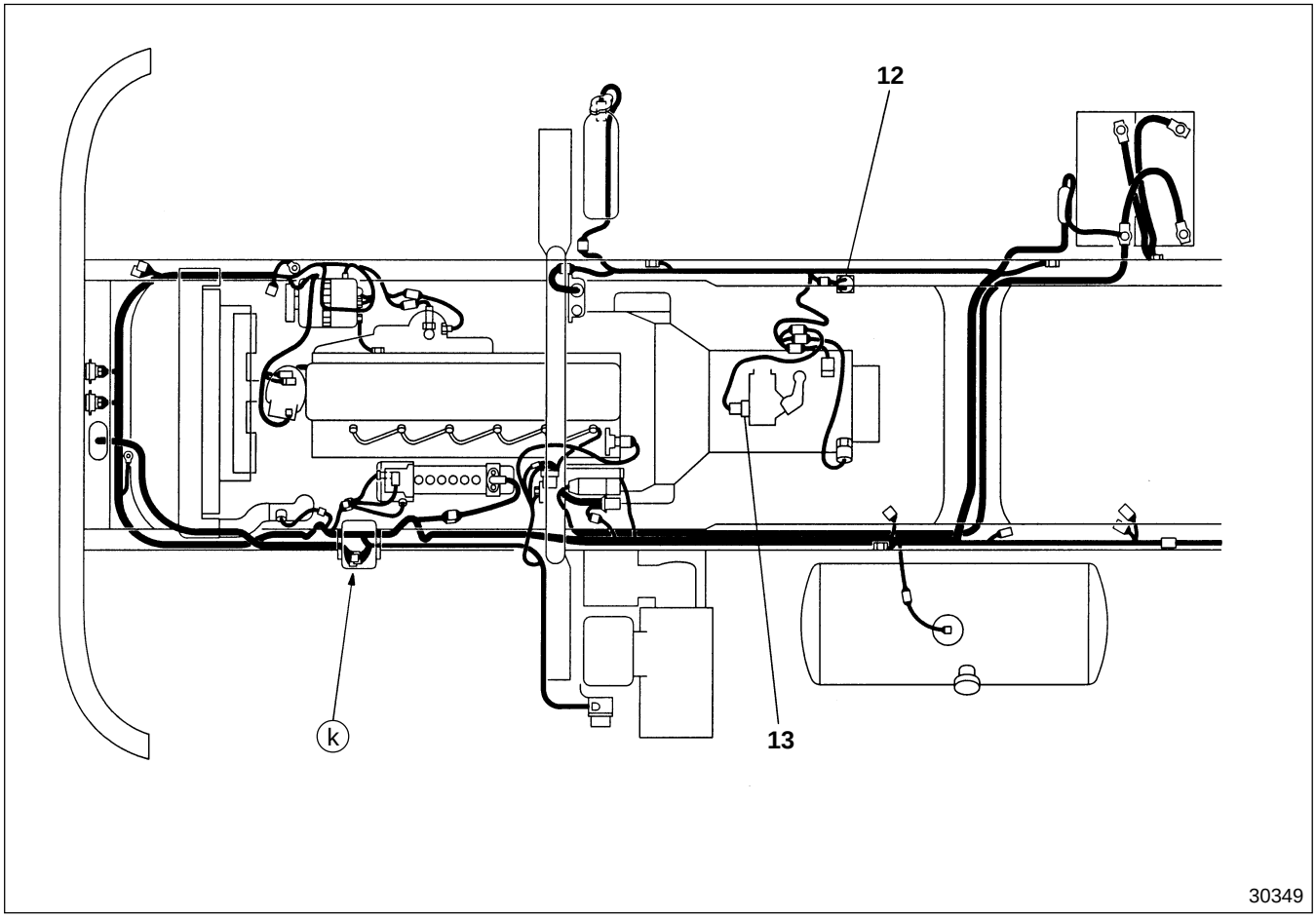

1 Combination switch 1 (601)
2 Exhaust brake cut relay (ABS) 3 (604)
3 Transmission neutral relay
4 Relay box 3 (604)
5 Exhaust brake relay
6 Meter cluster (401)
7 Electronic governor control unit 4
8 Diode
9 Fuse box (104)
10 Clutch switch 1 (710)
11 Throttle position sensor 4
12 Exhaust brake 3-way magnetic value 1 (701)
13 Transmission neutral switch 1 (802)

1 : '96 Model Gr 54 (Pub. No. TWME9502-54)
3 : '98 Model Gr 54 (Pub. No. TWME9502-254)
4 : '99 Model Gr 13 (Pub. No. TWME9502-313)

MITSUBISHI MOTORS

Service Manual

Table of Contents

BACK

HOME

FH 1999
Model Changes

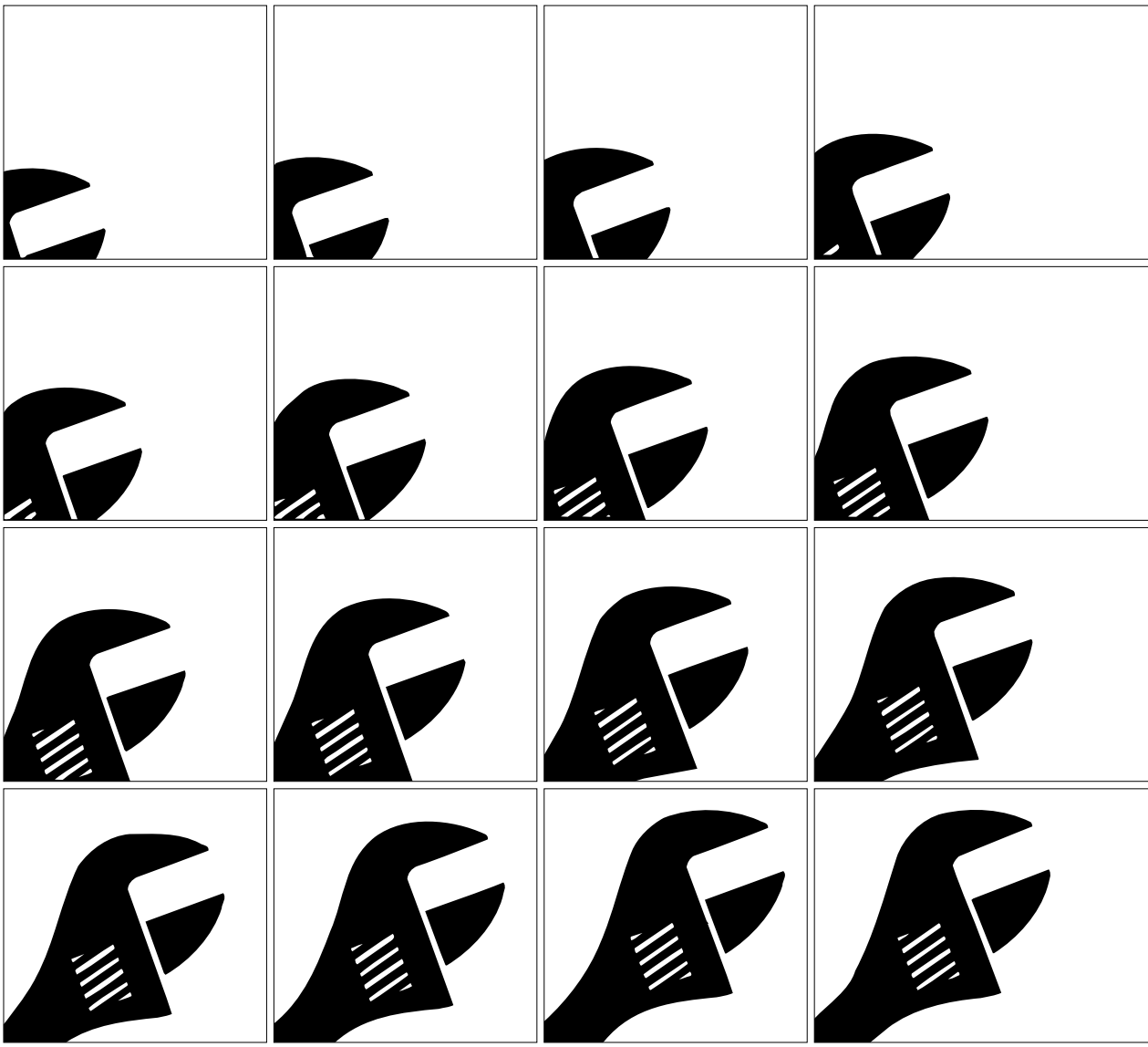

Pub. No. TWME9502-3

FH

SERVICE MANUAL

FOREWORD

This Service Manual contains maintenance and repair methods for personnel involved in the maintenance and repair of 1999 model Mitsubishi Fuso Truck FH Series.
Read this manual carefully as an aid to providing correct, efficient and fast maintenance.
Please note, however, that due to continuous improvements on the specifications, numbers and description for maintenance might change without prior notice.
If you have any question, or encounter a problem, please do not hesitate to contact your nearest Mitsubishi Fuso dealer or distributor.

© Mitsubishi Motors Corporation, March1998

MITSUBISHI FUSO TRUCK OF AMERICA, Inc.

GROUP INDEX

1999 MODEL CHANGES

GENERAL **00**

STEERING **37**

ELECTRICAL **54**

1999 MODEL CHANGES

1999 MODEL CHANGES

<table>
<tr><th>Item</th><th>’99 Model</th><th>⇦</th><th>’98 Model</th></tr>
<tr><td>Gr 00 General
• The vehicle identification number has changed.
• Model with K-specification wheelbase is added.
• Maximum GCW has changed.
< Automatic transmission >
• Engine type has changed.</td><td>🕮 00-2

Setting of K-specification vehicle
🕮 00-2
10000 kg {22050 lbs}

6D34-1AT2</td><td></td><td>—

No K-specification vehicle
10885 kg {24000 lbs}

6D34-0AT2</td></tr>
<tr><td>Gr 11 Engine
• Combustion chamber configuration and service standard value are different.</td><td>Combustion chamber
 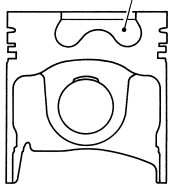
30330

Service standards
<table><tr><th>Location</th><th>Maintenance item</th><th>Standard value</th><th>Limit</th><th>Remedy</th></tr><tr><td>–</td><td>Gap between piston and connecting rod assembly and cylinder sleeve</td><td>[104] 0.10 to 0.14
{[4.094] 0.0039 to 0.0055}</td><td>–</td><td>Correct, or replace with oversizeparts</td></tr></table></td><td></td><td>Combustion chamber
 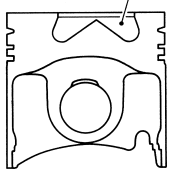
30331

Unit : mm {in.}</td></tr>
<tr><td>Gr 13 Fuel and Engine Control
• Electronic injection pump system is different.

🖹 Gr 13 Fuel and Engine Control '99 Minor change (Pub. No. TWME9502-313)</td><td>Electronic governor and pre-stroke control injection pump system</td><td></td><td>Mechanical governor and pre-stroke control injection pump system</td></tr>
<tr><td>• Governor has changed from mechanical type to electronic type.

🖹 Gr 13 Fuel and Engine Control '99 Minor change (Pub. No. TWME9502-313)</td><td>Electronic governor
 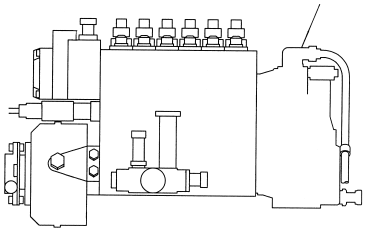
31130

<table><tr><td>Governor type</td><td>RED-III electronically controlled governor</td></tr></table></td><td></td><td>Mechanical governor
 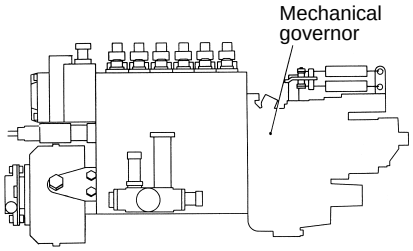
31131

RLD-J all-speed mechanical governor with boost compensator</td></tr>
<tr><td>• Fuel injection timing is different.</td><td>3° ± 0.5° BTDC</td><td></td><td>5° ± 0.5° BTDC</td></tr>
</table>

Item	’99 Model ⇦ ’98 Model
• Engine control system has been changed due to the use of new electronic governor system. Gr 13 Fuel and Engine Control '99 Minor change (Pub. No. TWME9502-313)	<’99 Model> 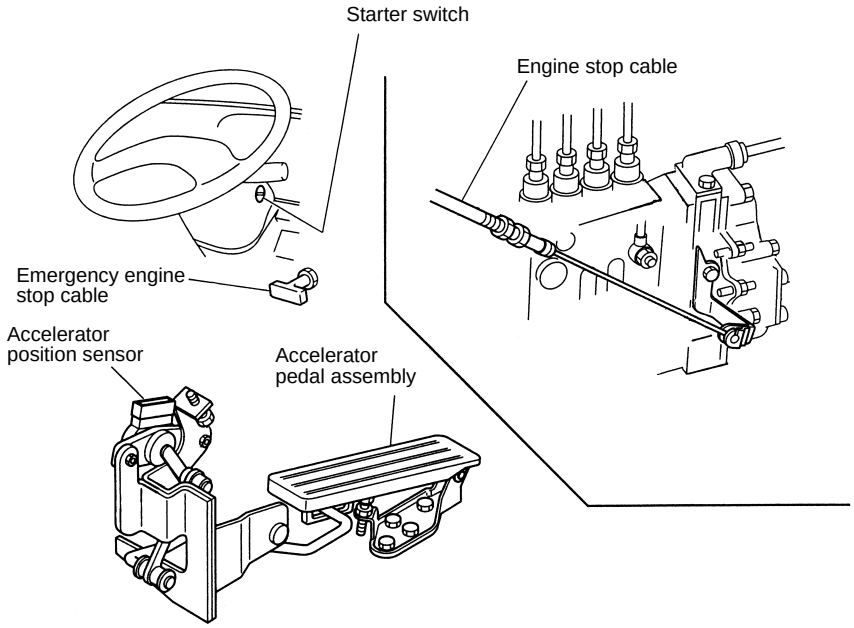 31132 <’98 Model> 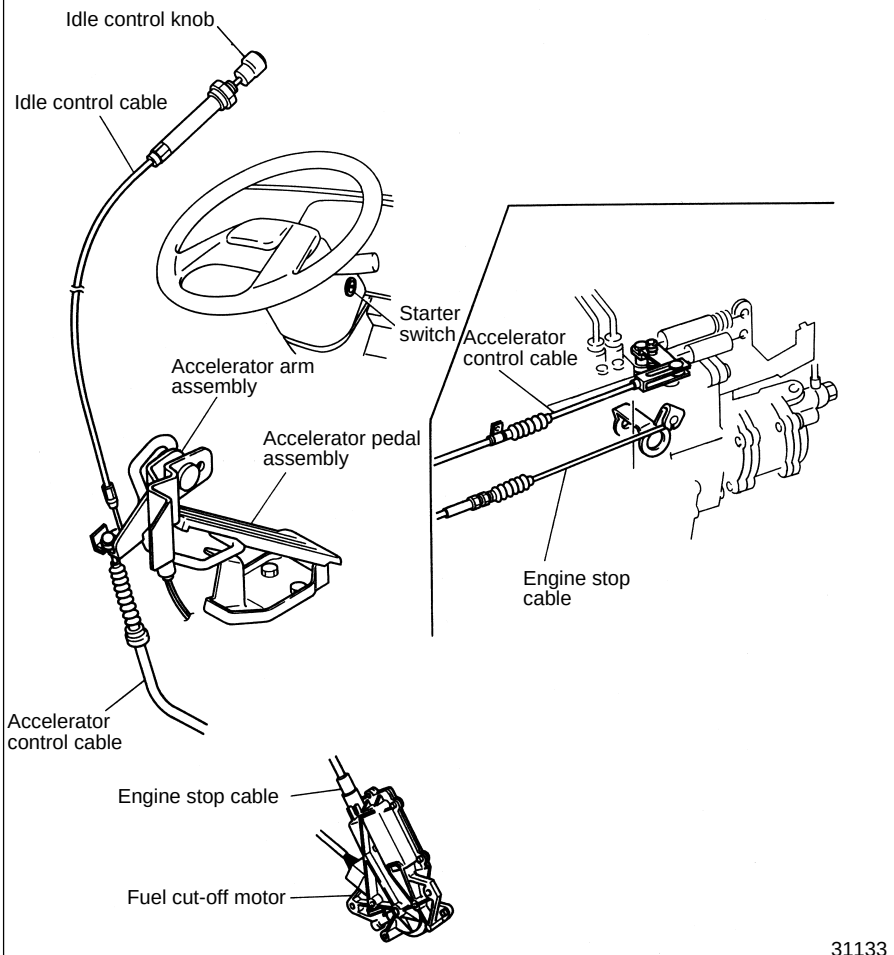 31133

1999 MODEL CHANGES

Item	’99 Model ⇦ ’98 Model
Gr 15 Intake and Exhaust • Boost compensator hose was replaced by boost pressure sensor hose due to the installation of boost pressure sensor.	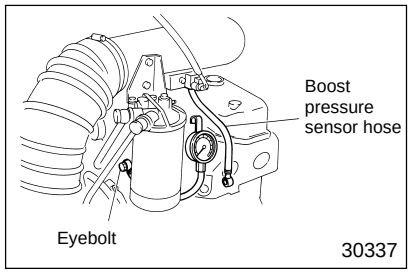 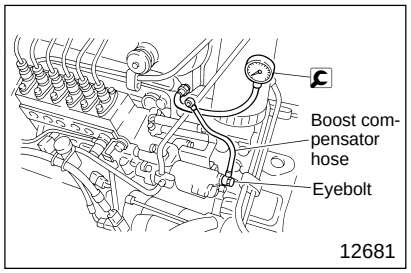
• Because exhaust manifold gasket has been changed, installation procedure is added.	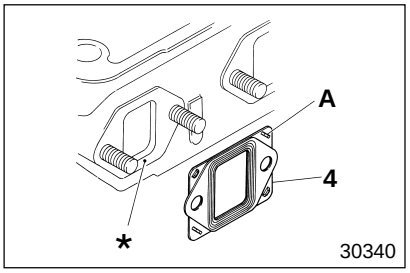 **4 Installation of gasket** Install gasket **4** on cylinder head * in the direction as illustrated. **A**: Protrusion
Gr 23 Automatic Transmission • Modulator has changed from mechanical type to electric type.	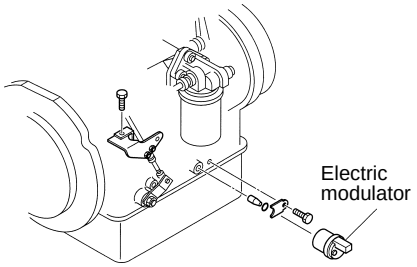 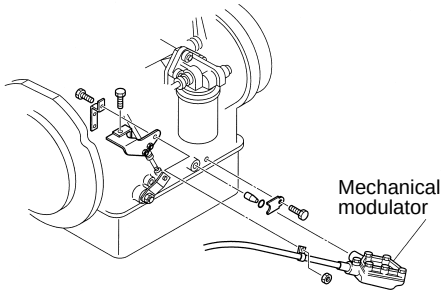 Operating system 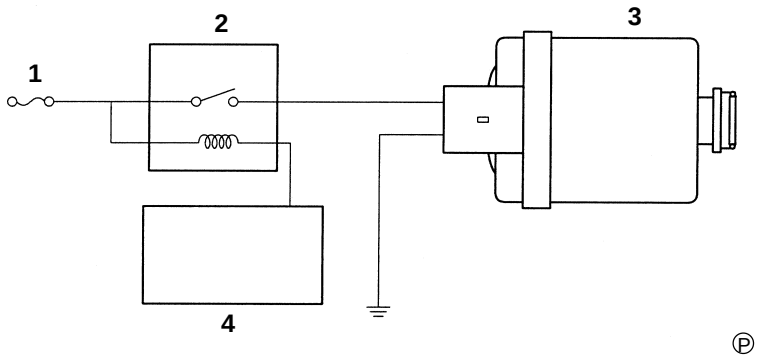 Ⓟ31632 **1** Fuse **2** Relay **3** Modulator **4** Electric governor ECU • Outline of operating system Electronic governor ECU 4 sends a signal via relay to modulator 3 for switching between closed-throttle shift and full-throttle shift. • Operating conditions Throttle opening of 80% or more : ON (Full-throttle shift) Throttle opening of 65% or less after ON : OFF (Closed-throttle shift)

Item	’99 Model ⇦ ’98 Model
• Type M4A4 (Allison AT545) automatic transmission is made available as an option.	The following shows the differences between the standard Type M4A4 (Allison AT542) automatic transmission and the new optional Type M4A4 (Allison AT545) automatic transmission.

Item			Specifications	
Type			M4A4 (Allison AT542)	M4A4 (Allison AT545)
Torque converter	Type Stall torque ratio		3-element, 1-stage, 2-phase 1.72	←
Transmission	Type		Planetary gear type 4 forward speeds, 1 reverse speed	←
	Gear ratio	1st	3.454	←
		2nd	2.253	←
		3rd	1.407	←
		4th	1.000	←
		Reverse	5.024	←
Range selector pattern			R—Ⓝ—D—3—2—1 (Engine can be started in N position only)	←
Recommended fluid	Fluid quantity (except oil cooler piping) L {qts}		Automatic transmission fluid (DEXRON or DEXRON II type) 14 {15} When oil is replaced: 8.5 {9.0}	Automatic transmission fluid (DEXRON or DEXRON II type) 20.8 {22} When oil is replaced: 15 {16}
Mass < Wet > Kg {lb}			167 {368}	173 {381}
Transmission control			Floor shift remote control, cable type	←

AT542

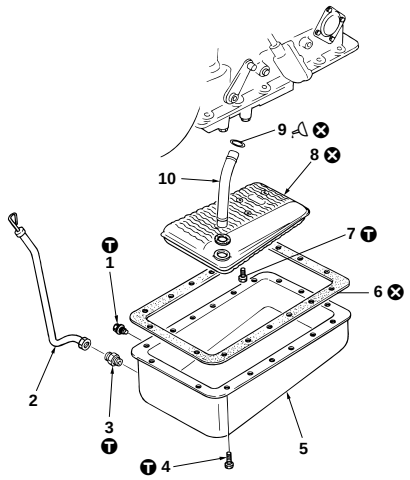

13962

AT545

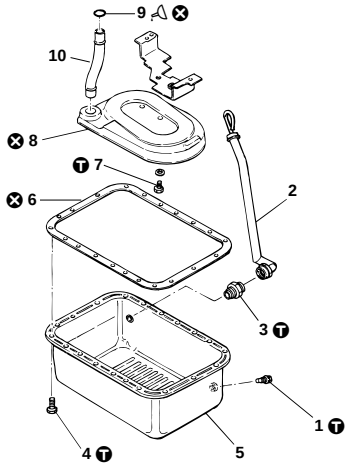

13963

● **Removal sequence**

1 Drain plug
2 Dipstick and dipstick guide
3 Dipstick guide connector
4 Bolt
5 Oil pan
6 Gasket
7 Bolt
8 Oil filter
9 Seal ring
10 Intake pipe

⊗ : Non-reusable parts

● **Installation sequence**

Follow the removal sequence in reverse.

Repair kit : Oil filter and gasket kit

Ⓣ Tightening torque Unit : N·m {lbf.ft, kgf·m}

Location	Parts to be tightened	Tightening torque	Remarks
1	Drain plug	20 to 27 {15 to 20, 2.05 to 2.75}	—
3	Dipstick guide connector	125 to 135 {91 to 100, 12.55 to 13.76}	—
4	Bolt (Oil pan mounting)	14 to 18 {10 to 13, 1.4 to 1.8}	—
7	Bolt (Oil filter mounting)	14 to 18 {10 to 13, 1.4 to 1.8}	—

Fluid

Location	Points of application	Specified fluid	Quantity
9	Seal ring	Automatic transmission fluid (DEXRON or DEXRON II type)	As required

1999 MODEL CHANGES

Item	’99 Model ⇦ ’98 Model	
Gr 25 Propeller Shaft • Three-piece propeller shaft is used in K-wheelbase models.	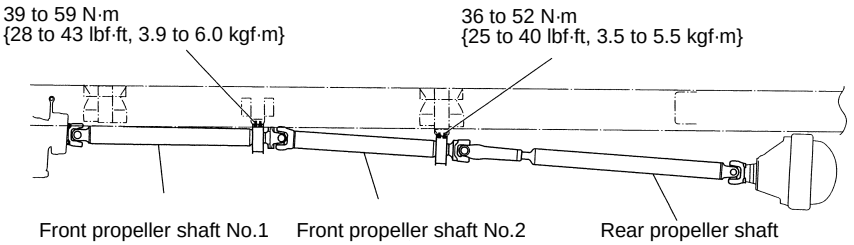 Ⓟ 32407	
Gr 36 Parking Brake • Shape and mounting method of parking brake cable bracket have been changed.	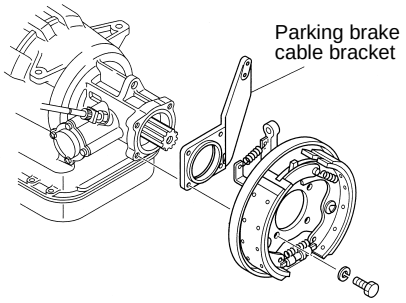 Ⓟ 31127	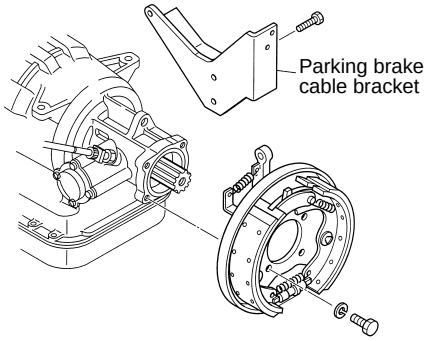 Ⓟ 31128

Item	'99 Model	⇦	'98 Model
Gr 37 Steering • Diameter of steering wheel is different.	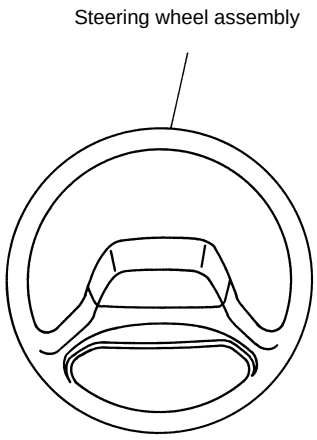 ø 400 mm {ø15.7 in.}		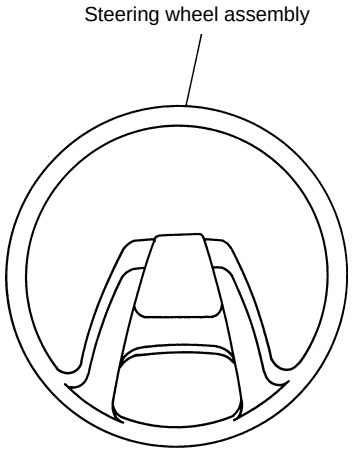 ø 450 mm {ø17.7 in.} 30366
• Steering system is different.	🕮 Gr 37 Steering		—
Gr 42 Cab • Changed to full trim.	Gr 42 Cab (Pub. No. TWME 9502-42)		—
• Side door beams are added in doors.	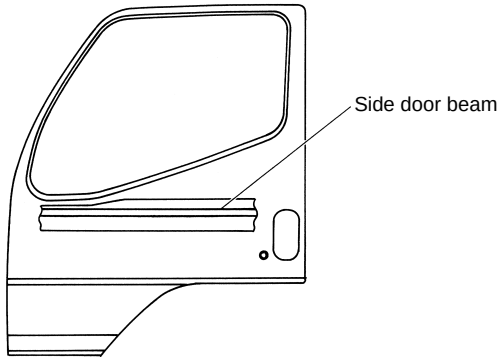 30546		

1999 MODEL CHANGES

Item	'99 Model	⇦	'98 Model
1 POWER CHARGING AND GROUND • Battery has changed.	115E41R		95E41R
• Capacities of fuses listed on the right and main load specifications have changed. A/T : Automatic transmission M/T : Manual transmission	Discontinued F17 Spare 5A F22 Electronic governor ECU 5A F27 Exhaust brake < M/T > 10A Accelerator relay < A/T > 10A F29 Pre-stroke cut-off relay 10A		F5 Fuel cut-off motor 10A F17 Fuel cut-off relay 10A — F27 Exhaust brake < M/T > 10A F29 Pre-stoke cut-off relay 15A
2 ENGINE STARTING, PREHEATING AND STOPPING • Engine starting circuit has been changed due to the use of neutral start relay .	(210) ENGINE STARTING CIRCUIT 🕮 P54-4		
• Engine shut-down circuit has been changed due to the use of electronic governor system. (Fuel cut-off relay and fuel cut-off motor have also been changed accordingly.)	Electronically controlled engine shut-down Gr13 Fuel and engine control		Electric-and-mechanical engine shut down device 🕮 (215) Engine Stopping Circuit
3 LIGHTING • Circuit indicated on the right has been changed due to the discontinued use of joint connector.	(345) CAB LAMP CIRCUIT 🕮 P54-8		
4 METER • Maximum revolution indication and scale of tachometer are different due to the use of electronic governor system.	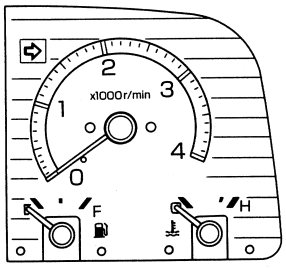 <Maximum engine speed indication: 4000 rpm> 13.5±0.1 V 550±35 rpm 1000±50 rpm 1500±60 rpm 2000±65 rpm 2500±70 rpm 3000±75 rpm —		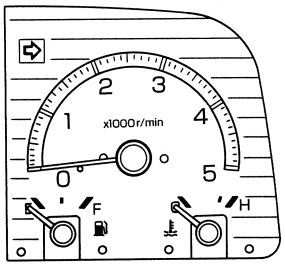 30667 <Maximum engine speed indication: 5000 rpm> 13±0.2 V 550±50 rpm 1000±70 rpm 1500±110 rpm 2000±110 rpm 2500±110 rpm 3000±110 rpm 4500±125 rpm
• Warning lamp is added due to the use of electronic governor system	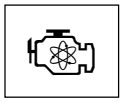 (ORANGE) Electronic governor warning lamp (vehicle driveable) 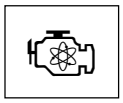 (RED) Electroric governor warning lamp (vehicle not driveable)		

Item	’99 Model ⇦ ’98 Model
	<Internal Circuit of meter cluster> 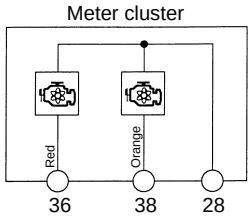 <Back side of meter cluster> 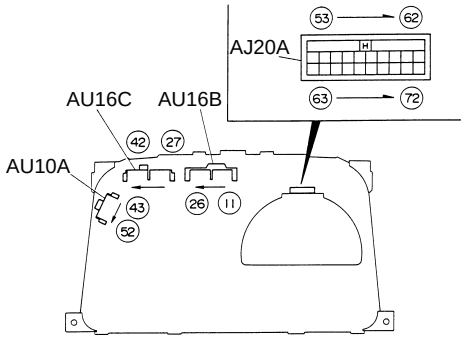 30279 Connector No. / Terminal No. / — AU16C / 28 / Starter switch terminal M AU16C / 36 / Electronic governor control unit AU16C / 38 / Electronic governor control unit
5 INDICATOR AND WARNING Circuit indicated on the right has been changed due to the discontinued use of joint connector.	(510) PARKING BRAKE INDICATOR CIRCUIT 🕮 P54-10 (515) BRAKE WARNING CIRCUIT 🕮 P54-12 (536) ENGINE OIL PRESSURE WARNING CIRCUIT 🕮 P54-14
7 CHASSIS SIDE ELECTRICAL Circuit indicated on the right has been changed due to the use of electronic governor system.	(710) EXHAUST BRAKE CIRCUIT 🕮 P54-16
9 OTHERS Joint connector was discontinued.	—

GROUP 00 GENERAL

POWER TRAIN TABLE .....00 - 2

IDENTIFICATION NUMBER .....00 - 2

CONNECTOR CONFIGURATION CHART .....00 - 3

POWER TRAIN TABLE/VEHICLE IDENTIFICATION NUMBER

POWER TRAIN TABLE

Model	Engine model	Clutch model	Transmission model	Propeller shaft	Rear axle model	Final reduction and gear ratio
FH211C, E, G, H, J, K G. V. W. 8160 kg {17995 lb}	6D34T2 175 HP/2900 rpm 325 lb.ft/2000 rpm (SAE, Gross)	C5M33	M050S5 6.875/1.000	P4	R040T	D040H 4.111
		Torque converter (TC290-1.72)	M4A4 (Allison AT542 or AT545) 3.454/1.000			

IDENTIFICATION NUMBER

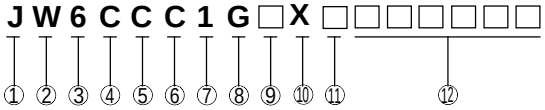

①	Country	J :	Japan
②	Make	W :	Mitsubishi Fuso
③	Vehicle type	6 :	Incomplete Vehicle
④	Gross vehicle weight/Brake system	C :	16001 to 19500 lbs/Hydraulic
⑤	Line	C :	FH211
⑥	Series (Wheelbase)	C :	2.6 to 2.89 m {114.6 in.}
		E :	3.2 to 3.49 m {130.3 in.}
		G :	3.8 to 4.09 m {150.0 in.}
		H :	4.1 to 4.39 m {169.7 in.}
		J :	4.4 to 4.69 m {181.5 in.}
		K :	4.7 to 4.99 m {191.7 in.}
⑦	Cab chassis type	1 :	Chassis cab
⑧	Engine	G :	5.861 ℓ Diesel turbocharged and charge air cooled
⑨	Check digit		
⑩	Model year	X :	1999
⑪	Plant	K :	Kawasaki-1
		L :	Kawasaki-2
		M :	Kawasaki-3
		N :	Nakatsu
⑫	Plant sequential number		

CONNECTOR CONFIGURATION CHART

Connector is added due to the use of electronic governor.

Type (numeral indicates number of terminal)		Female-Male	
AQ	AQ5A	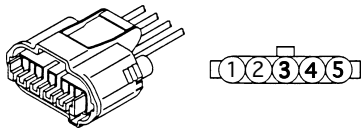	
BZ	BZ12A		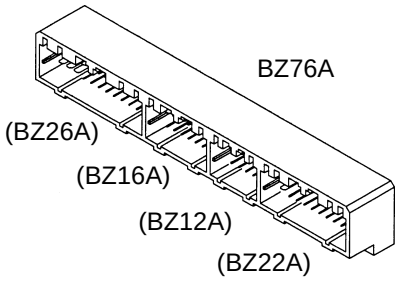 BZ76A (BZ26A) (BZ16A) (BZ12A) (BZ22A)
	BZ16A	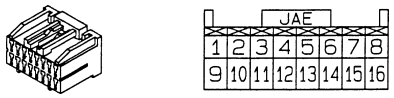	
	BZ22A	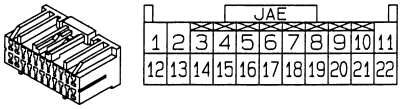	
	BZ26A	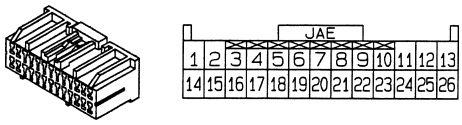	
CB	CB16A	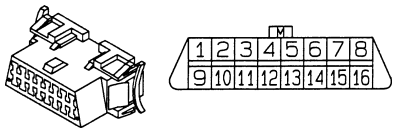	
CH	CH3A	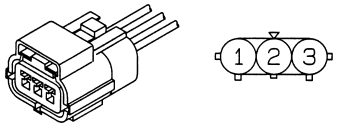	
CM	CM28A	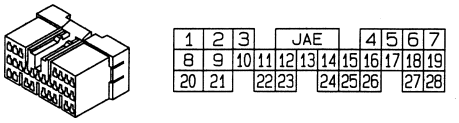	
	CM30A	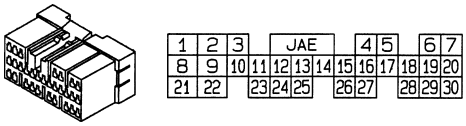	
	CM35A	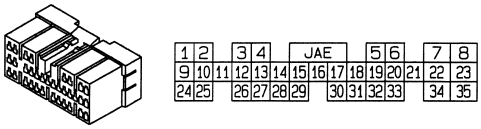	

GROUP 37 STEERING

STEERING SYSTEM .....37 - 2

STEERING SYSTEM

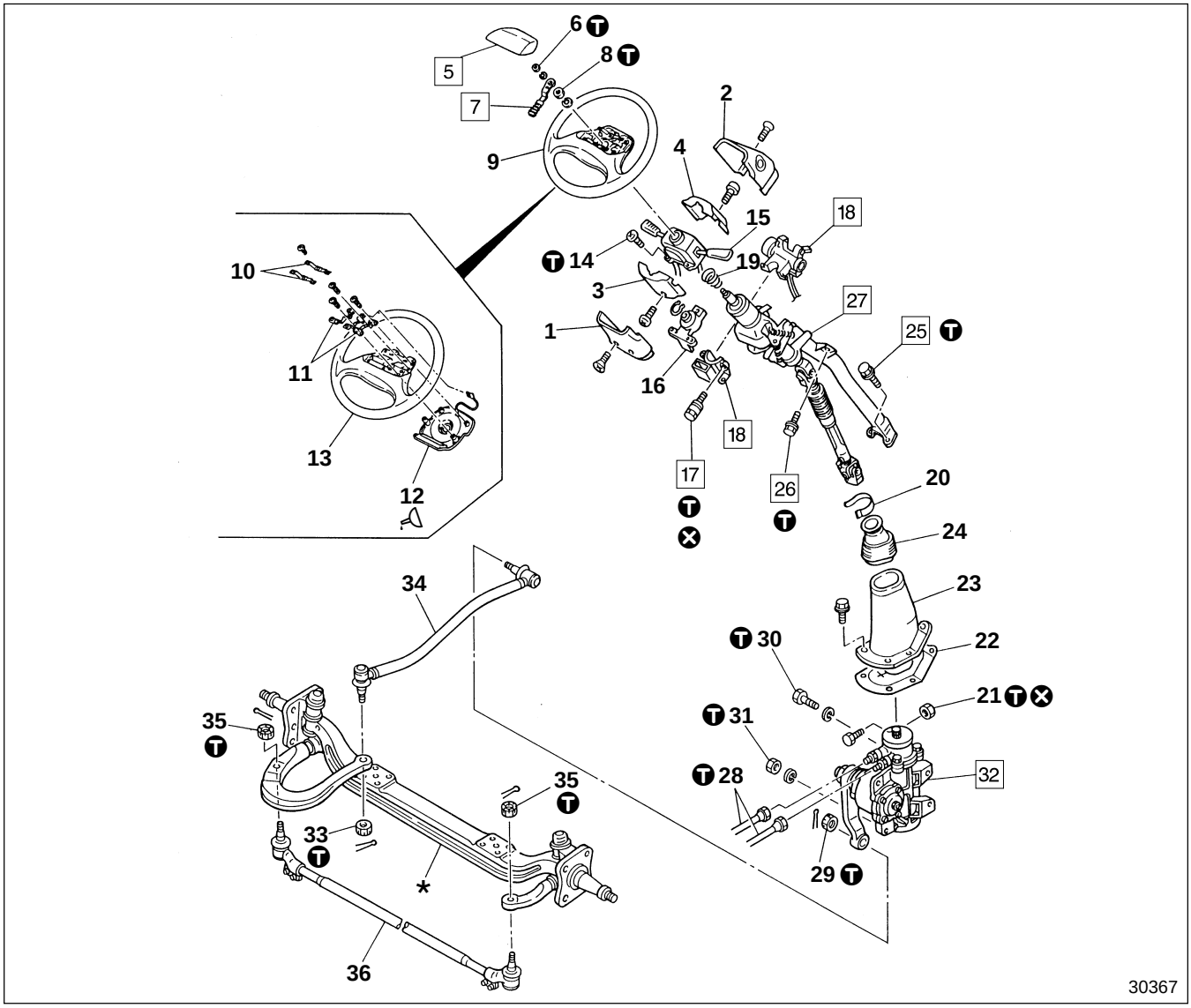

● **Removal sequence**

1 Column cover outer lower
2 Column cover outer upper
3 Column cover inner lower
4 Column cover inner upper
5 Horn pad
6 Nut
7 Telescopic lever
8 Nut
9 Steering wheel assembly
10 Horn spring
11 Contact plate
12 Cover assembly
13 Steering wheel
14 Screw
15 Combination switch Gr 54
16 Bracket
17 Head cutting bolt
18 Starter switch Gr 54
19 Spring
20 Band
21 Nut
22 Dust cover
23 Dust cover
24 Dust cover
25 Bolt
26 Bolt
27 Steering column subassembly Gr 37
28 Oil pipe Gr 37
29 Nut
30 Bolt
31 Nut
32 Power steering booster Gr 37
33 Nut
34 Drag link Gr 37
35 Nut
36 Tie rod assembly Gr 37

* : Front axle assembly Gr 26
⊗ : Non-reusable parts

CAUTION ⚠

Be sure to clean the port area of oil pipe 28 when disconnecting the oil pipe, so as to keep it free from dust and foreign particles.

● **Installation sequence**

Follow the removal sequence in reverse.

Tightening torque

Unit : N·m {lbf.ft, kgf·m}

Location	Parts to be tightened	Tightening torque	Remarks
6	Nut (Teletscopic lever mounting)	8.8 to 9.8 {6.5 to 7.2, 0.9 to 1.0}	—
8	Nut (Steering wheel assembly mounting)	39 to 49 {29 to 36, 4 to 5}	—
14	Screw (Combination switch mounting)	2.5±0.5 {1.8±0.36, 0.25±0.05}	—
17	Head cutting bolt (Starter switch mounting)	14.2±1.5 {10±1.1, 1.45±0.15}	—
21	Nut (Steering column subassembly and power steering booster mounting)	51.45±2.45 {38±1.8, 5.25±0.25}	—
25	Bolt (Steering column at floor side mounting)	17 to 26 {12 to 19, 1.7 to 2.6}	—
26	Bolt (Steering column subassembly to instrument panel side mounting)	17 to 26 {12 to 19, 1.7 to 2.6}	—
28	Oil pipe	66.69±12.75 {49±9.4, 6.8±1.3}	—
29	Nut (Drag link and power steering booster mounting)	190±47.5 {140±35,19.4±4.85}	—
30	Bolt (Power steering booster mounting)	175.4±26.5 {130±20, 17.9±2.7}	—
31	Nut (Power steering booster mounting)	175.4±26.5 {130±20, 17.9±2.7}	—
33	Nut (Drag link and front axle assembly mounting)	190±47.5 {140±35, 19.4±4.85}	—
35	Nut (Tie rod assembly and front axle assembly mounting)	190±47.5 {140±35, 19.4±4.85}	—

Lubricant

Location	Points of application	Specified lubricant	Quantity
12	Contact area between combination switch of cover assembly and horn contact	Wheel bearing grease [NLGI No.2 (Li soap)]	As required

◆ Service procedure

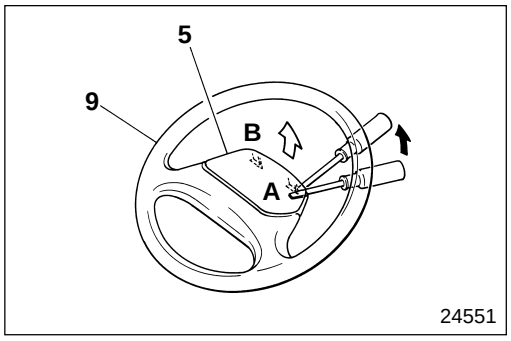

5 **Removal of horn pad**

- Insert a flat-tip screwdriver into the space between steering wheel assembly **9** and shoulder sections **A**, **B** of horn pad **5**, and disengage the latch by prying open the horn pad with the screwdriver until a clicking sound is produced.
- Insert a finger into the space behind horn pad **5** and remove the horn pad.

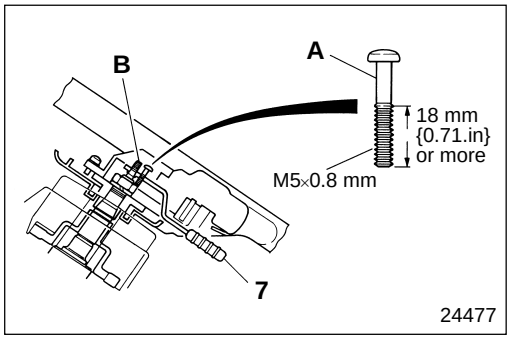

7 **Telescopic lever**

[Removal]
Secure screw **A** (M5×0.8 mm) in tapped hole in telescopic lever **7** and remove telescopic lever from telescopic shaft **B**.

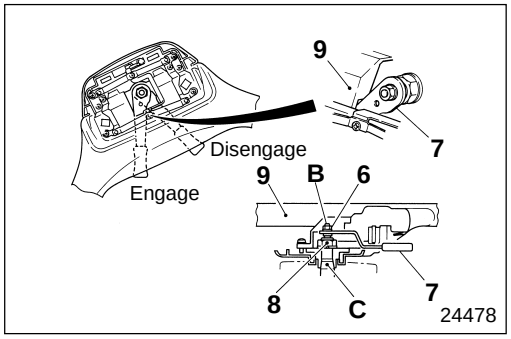

[Installation]

- Make adjustment so that telescopic lever **7** positioned at the designated location applies the specified torque on telescopic shaft **B**.

CAUTION ⚠
Be careful not to damage the threads on the tip of telescopic shaft B.

C : Telescopic shaft assembly

Start procedure

Install steering wheel assembly **9**. Using a long socket wrench, tighten nut **8** at specified torque 39 to 49 N·m {29 to 36 lbf.ft, 4 to 5 kgf·m}

Rotate telescopic shaft **B** counterclockwise with your fingers and check for looseness

Looseness found

No looseeness

Using a flat-blade screwdriver turn telescopic shaft **B** clockwise and drive it in until it hits lightly with a “clunk”, but do not turn it any further

CAUTION ⚠

Be careful not to over tighten or you will crush the end of the telescopic shaft, requiring replacement of telescopic shaft assembly C

Install telescopic lever **7** at a location that allows easy tightening, then tighten nut **6** until the telescopic lever will not slip

Tighten telescopic shaft **B** at operating torque 6.9 to 7.8 N·m {5.1 to 5.8 lbf.ft, 0.7 to 0.8 kgf·m}. (Tighten telescopic bar **7** at torque 69 to 78 N {15 to 18 lbf, 7 to 8 kgf} at 100 mm {3.94 in.} from the center of steering wheel assembly **9**

To maintain lock, hold telescopic lever **7** clockwise, then loosen and remove lock nut **6**

Remove telescopic lever **7**

NOTE

Remove telescopic lever 7 following the description under [Removal], taking care not to loosen telescopic shaft B.

Set telescopic lever **7** to specified lock position (within **10°** before the position at which telescopic lever contacts steering wheel assembly **9**).

Tighten nut **6** at specified torque 8.8 to 9.8 N·m {6.5 to 7.2 lbf.ft, 0.9 to 1.0 kgf·m}

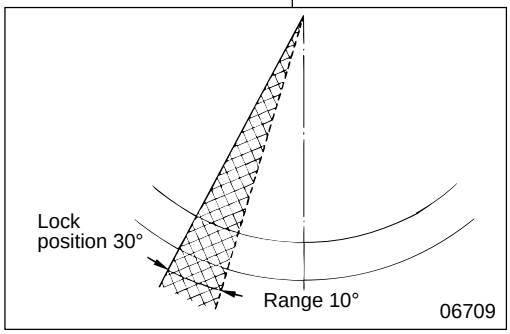

When telescopic lever **7** is released, and telescopic shaft **B** is retightened at operating torque 6.9 to 7.8 N·m {5.1 to 5.8 lbf.ft, 0.7 to 0.8 kgf·m}, the telescopic lever should lock in the 10° range this side of specified lock position 30°

Out of the range

Within the range

Jiggle steering wheel assembly **9** up and down and check for looseness

Looseness found

No looseness

Remove nut **6**

Procedure is completed

Remove telescopic lever **7**

CAUTION ⚠

Be sure not to operate telescopic shaft B while steering wheel assembly 9 is removed.

NOTE

Be sure to assemble telescopic lever 7 only after steering wheel assembly 9 has been installed.

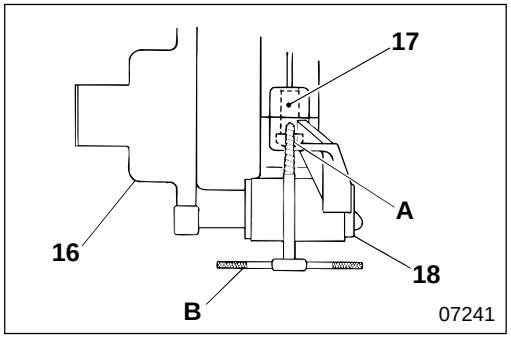

17 **18** **Head cutting bolt, starter switch**

[Removal]

- After removing bracket **16**, drill a 5.5 to 6.0 mm {0.22 to 0.24 in.} hole 10 to 15 mm {0.39 to 0.59 in.} deep in surface **A** of head cutting bolt **17** for mounting starter switch **18**.
- Screw in screw extractor **B** counterclockwise, then remove head cutting bolt **17**.

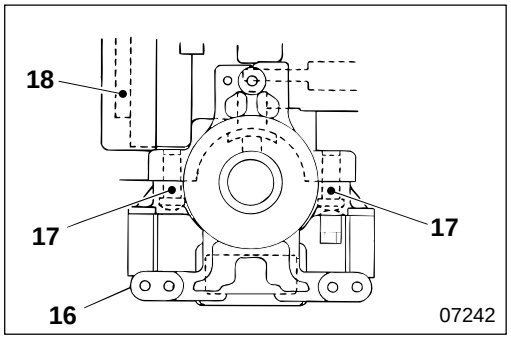

[Installation]

- With new head cutting bolt **17**, tighten starter switch **18** at specified torque to cut the head off the bolt.
- After installing bracket **16**, verify operation of the steering lock function of starter switch **18**.

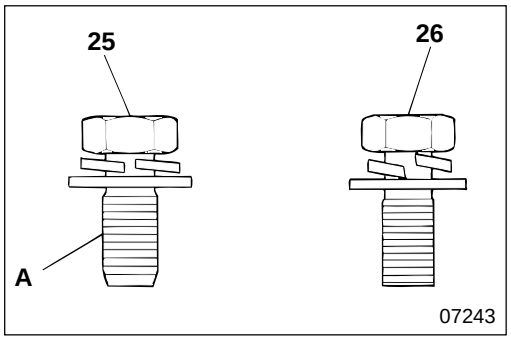

25 **26** **Installation of bolt**

- Bolts **25** and **26**, differ in shape. Do not mix them up when installing.
- Thread area **A** of bolt **25** is elliptical to facilitate grounding of the horn circuit.

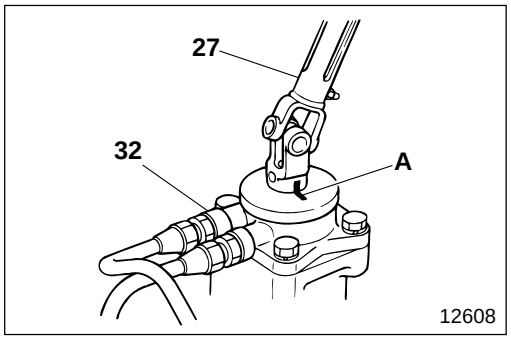

27 **32** **Removal and Installation of steering column subassembly, and power steering booster**

Before removing steering column subassembly **27** or power steering booster **32**, be sure to make alignment mark **A**.

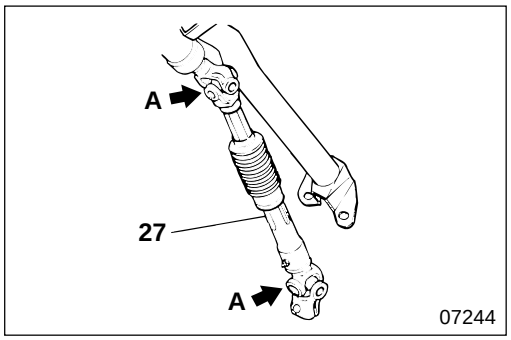

27 **Steering column subassembly**

When the spline of steering column subassembly **27** has been disconnected, align marks **A** on the yokes to face the same direction.

M E M O

GROUP 54 ELECTRICAL

1 POWER, CHARGE AND GROUND

SPECIFICATIONS 3

STRUCTURE AND OPERATION 3

TROUBLESHOOTING 3

100 ON-VEHICLE INSPECTION AND ADJUSTMENT
- Inspection of Alternator 3
- Inspection of Regulator 3

101 BATTERY 1

104 FUSE 3

106 ALTERNATOR 3

110 POWER CIRCUIT 3

115 RESERVE POWER CIRCUIT 3

125 BATTERY CHARGING CIRCUIT 3

130 GROUND 3

2 STARTING, PREHEATING AND STOPPING ENGINE

SPECIFICATIONS 1

STRUCTURE AND OPERATION 1

TROUBLESHOOTING 1

200 ON-VEHICLE INSPECTION AND ADJUSTMENT
Inspection of Engine Preheating System 1

201 STARTER 1

210 ENGINE STARTING CIRCUIT
<Manual Transmission > 54-4
<Automatic Transmission> 54-4

220 ENGINE PREHEATING CIRCUIT
< Manual Transmission > 3
<Automatic Transmission> 2

3 LIGHTING

SPECIFICATIONS 1

STRUCTURE AND OPERATION 1

TROUBLESHOOTING 1

300 ON-VEHICLE INSPECTION AND ADJUSTMENT
Headlamp Aiming 1

310 HEADLAMP CIRCUIT 1

320 TAIL LAMP, CLEARANCE LAMP AND LICENSE PLATE LAMP CIRCUITS 3

325 STOP LAMP CIRCUIT 3

330 TURN SIGNAL LAMP AND HAZARD LAMP CIRCUITS 1

340 BACKUP LAMP CIRCUIT 1

345 CAB LAMP CIRCUIT 54-8

348 ILLUMINATION LAMP CIRCUIT 1

349 MARKER LAMP AND IDENTIFICATION LAMP CIRCUITS 1

352 VAN BODY DOME LIGHT CIRCUIT 3

4 METER

SPECIFICATIONS 1

TROUBLESHOOTING 1

401 METER CLUSTER 3

410 SPEEDOMETER AND TACHOMETER CIRCUIT 1

420 FUEL GAUGE CIRCUIT 1

425 WATER TEMPERATURE GAUGE CIRCUIT 1

5 INDICATOR AND WARNING

TROUBLESHOOTING 3

(500) ON-VEHICLE INSPECTION AND ADJUSTMENT
- Inspection of Brake Fluid Level Switch 3
- Inspection of Power Steering Fluid Level Sensor 3

(510) PARKING BRAKE INDICATOR CIRCUIT BRAKE 54-10

(515) BRAKE WARNING CIRCUIT BRAKE ... 54-12

(530) WATER LEVEL WARNING CIRCUIT 3

(536) ENGINE OIL PRESSURE WARNING CIRCUIT 54-14

(537) OVERHEATING WARNING CIRCUIT 3

(547) AUTOMATIC TRANSMISSION FLUID TEMPERATURE WARNING CIRCUIT T/M OIL TEMP 3

(549) POWER STEERING FLUID LEVEL WARNING CIRCUIT BRAKE 3

(550) CAB TILT WARNING CIRCUIT 1

6 CAB SIDE ELECTRICAL

SPECIFICATIONS 3

TROUBLESHOOTING 3

(601) SWITCH 1

(604) RELAY AND CONTROL UNIT 1

(606) WARNING BUZZER 1

(610) CIGARETTE LIGHTER CIRCUIT 1

(612) AUDIO CIRCUIT 1

(614) WIPER AND WASHER CIRCUIT 1

(616) HORN CIRCUIT 3

(618) HEATER CIRCUIT 1

1 : '96 Model Gr 54 (Pub. No. TWME9502-54)
2 : '97 Model Gr 54 (Pub. No. TWME9502-1)
3 : '98 Model Gr 54 (Pub No. TWME9502-254)

7 CHASSIS ELECTRICAL

(701) MAGNETIC VALVE
< Manual Transmission > 3

(710) EXHAUST BRAKE CIRCUIT
< Manual Transmission > 54-16

8 ENGINE AND TRANSMISSION ELECTRICS

(801) ENGINE ELECTRICS 1

(802) TRANSMISSION ELECTRICS
< Manual Transmission > 1
< Automatic Transmission > 1

(850) TRANSMISSION POWER TAKE-OFF CIRCUIT
< Option > 1

9 OTHERS

STRUCTURE AND OPERATION 2

(905) JOINT CONNECTOR 3

(910) MULTIPURPOSE TIMING CONTROL UNIT CIRCUIT 2

210 ENGINE STARTING CIRCUIT

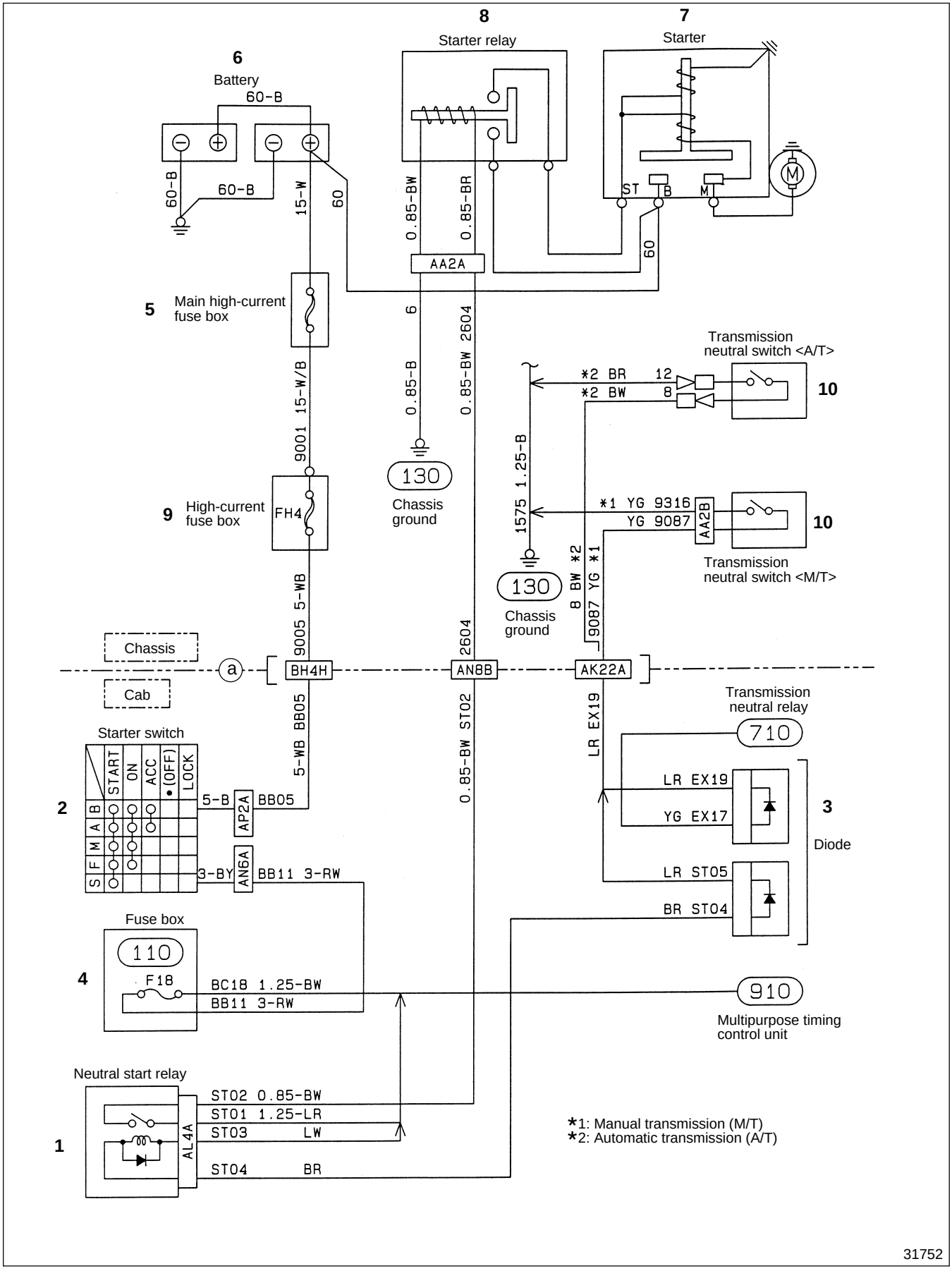

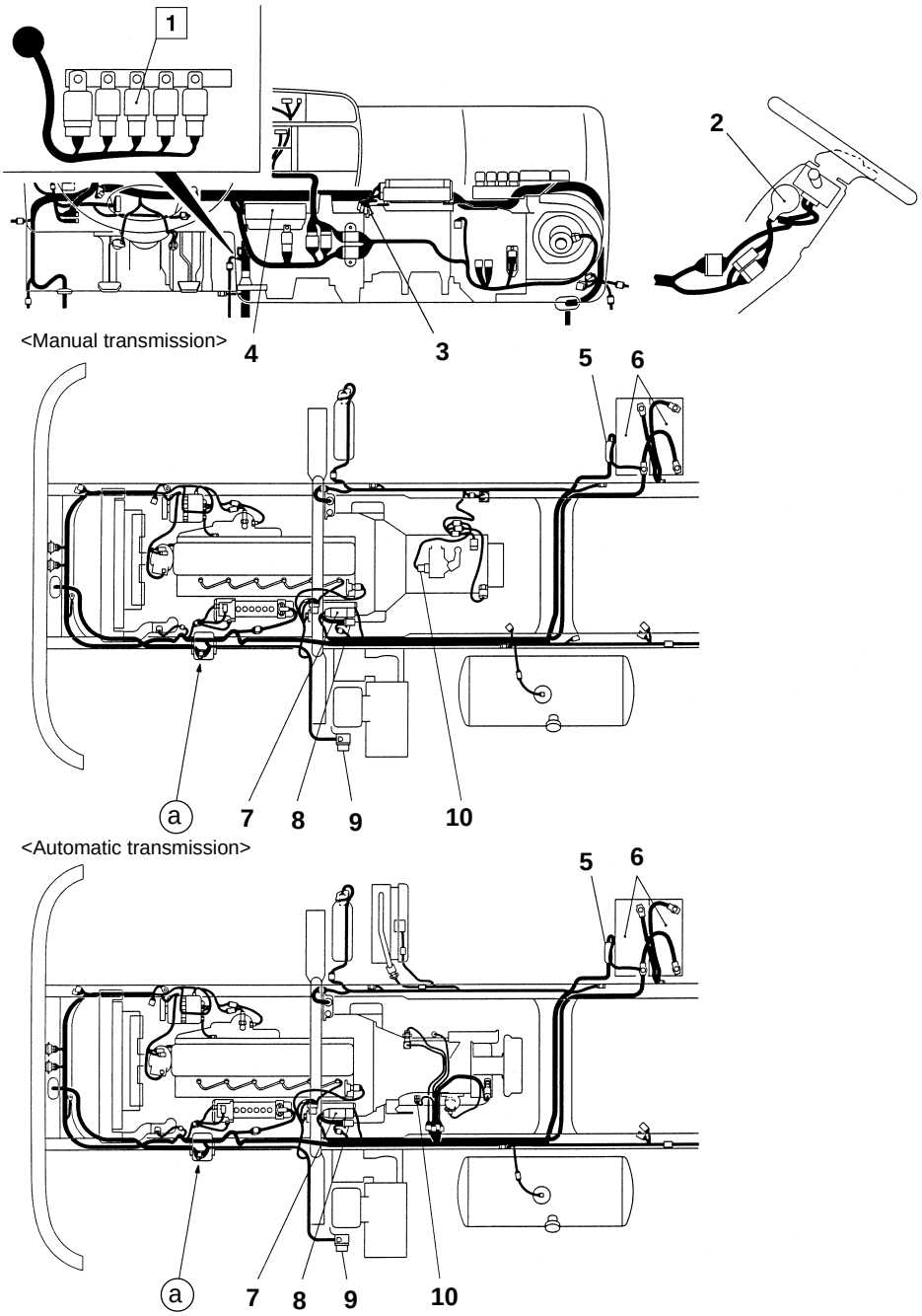

1 Neutral start relay
2 Starter switch 1 (210)
3 Diode
4 Fuse box 2 (104)
5 Main high-current fuse box 2 (104)
6 Battery 1 (101)
7 Starter 1 (201)
8 Starter relay 1 (210)
9 High-current fuse box 2 (104)
10 Transmission neutral switch 1 (802)

1 : '96 Model Gr54 (Pub. No. TWME9502-54)
2 : '96 Model Gr54 (Pub. No. TWME9502-254)

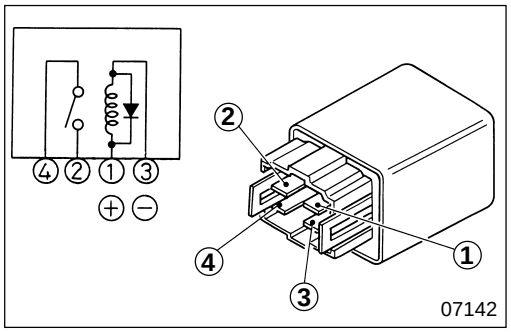

◆ Service procedure

1 Inspection of relay (Open type 4-pin)

- Follow the table below to check for continuity and operation.

	①	②	③	④
No current	○		○	
Current	⊕	○	⊖	○

○—○ : There is continuity between terminals ○ and ○.
⊕—⊖ : Indicates that 12 volts DC is applied to the line between the terminals.

- If any fault is found, replace the relay.

M E M O

345 CAB LAMP CIRCUIT

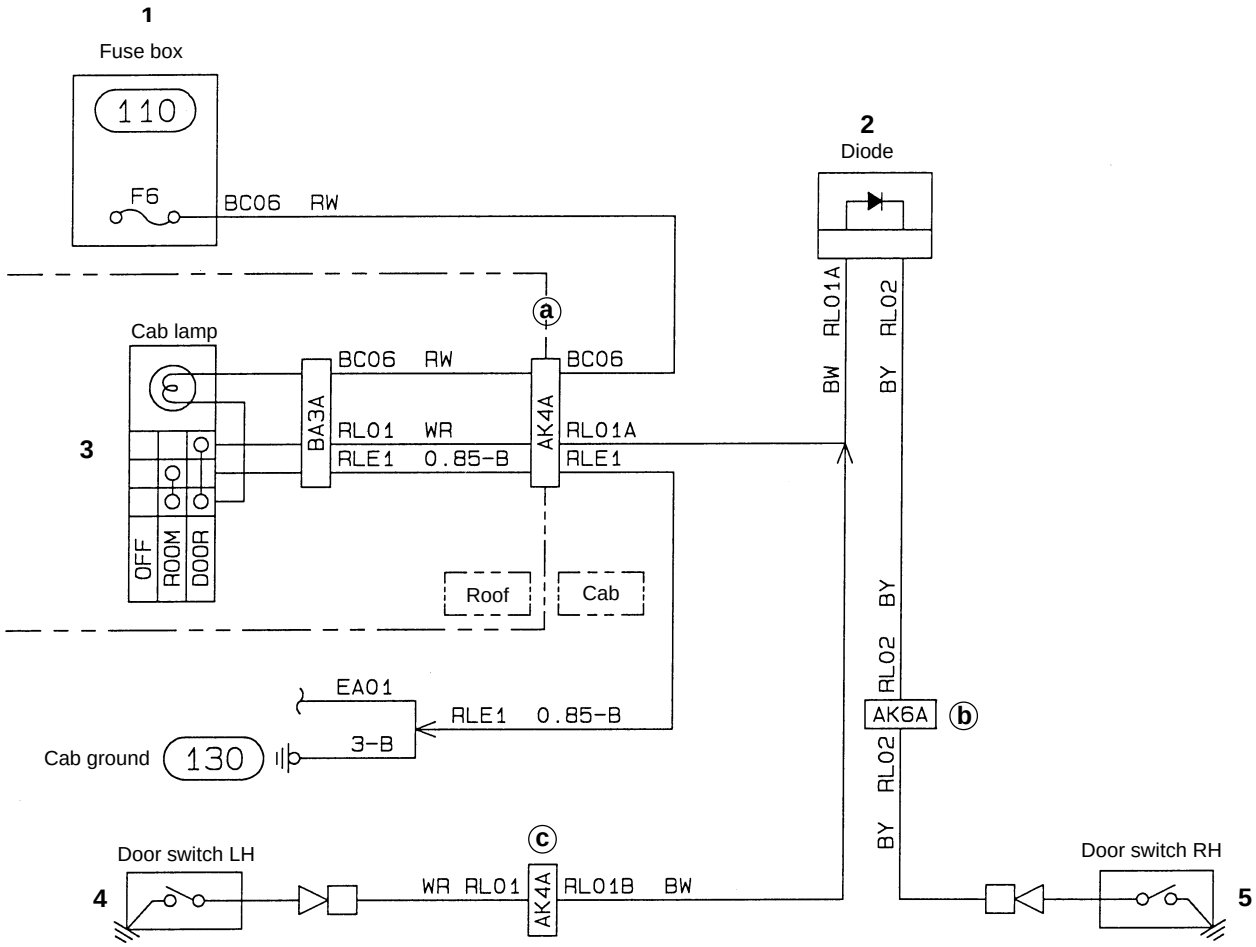

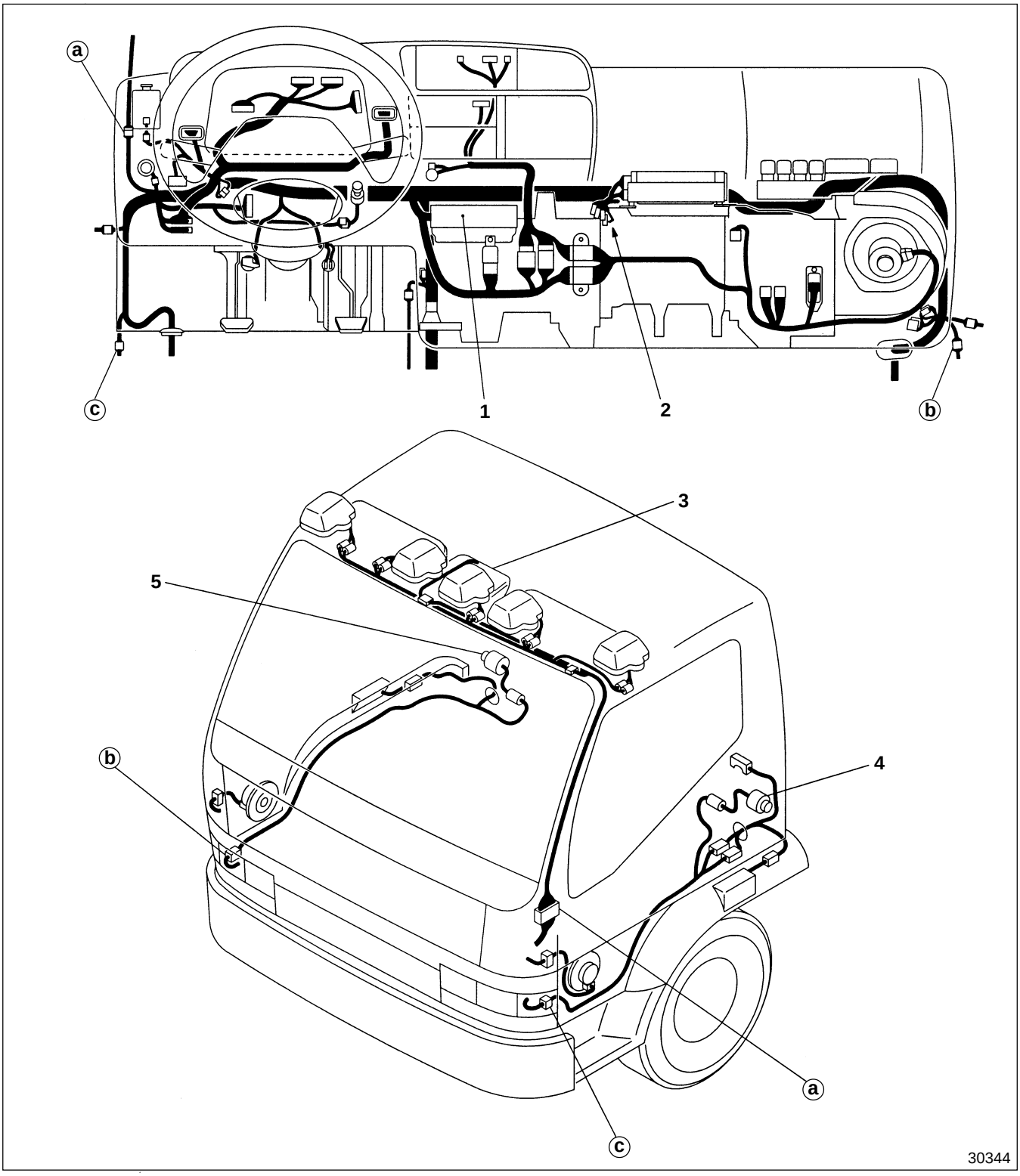

1 Fuse box 2 (104)
2 Diode
3 Cab lamp 1 (345)
4 Door switch, LH 1 (345)
5 Door switch, RH 1 (345)

1 : '96 Model Gr 54 (Pub. No. TWME9502-54)
2 : '98 Model Gr 54 (Pub. No. TWME9502-254)

510 PARKING BRAKE INDICATOR CIRCUIT

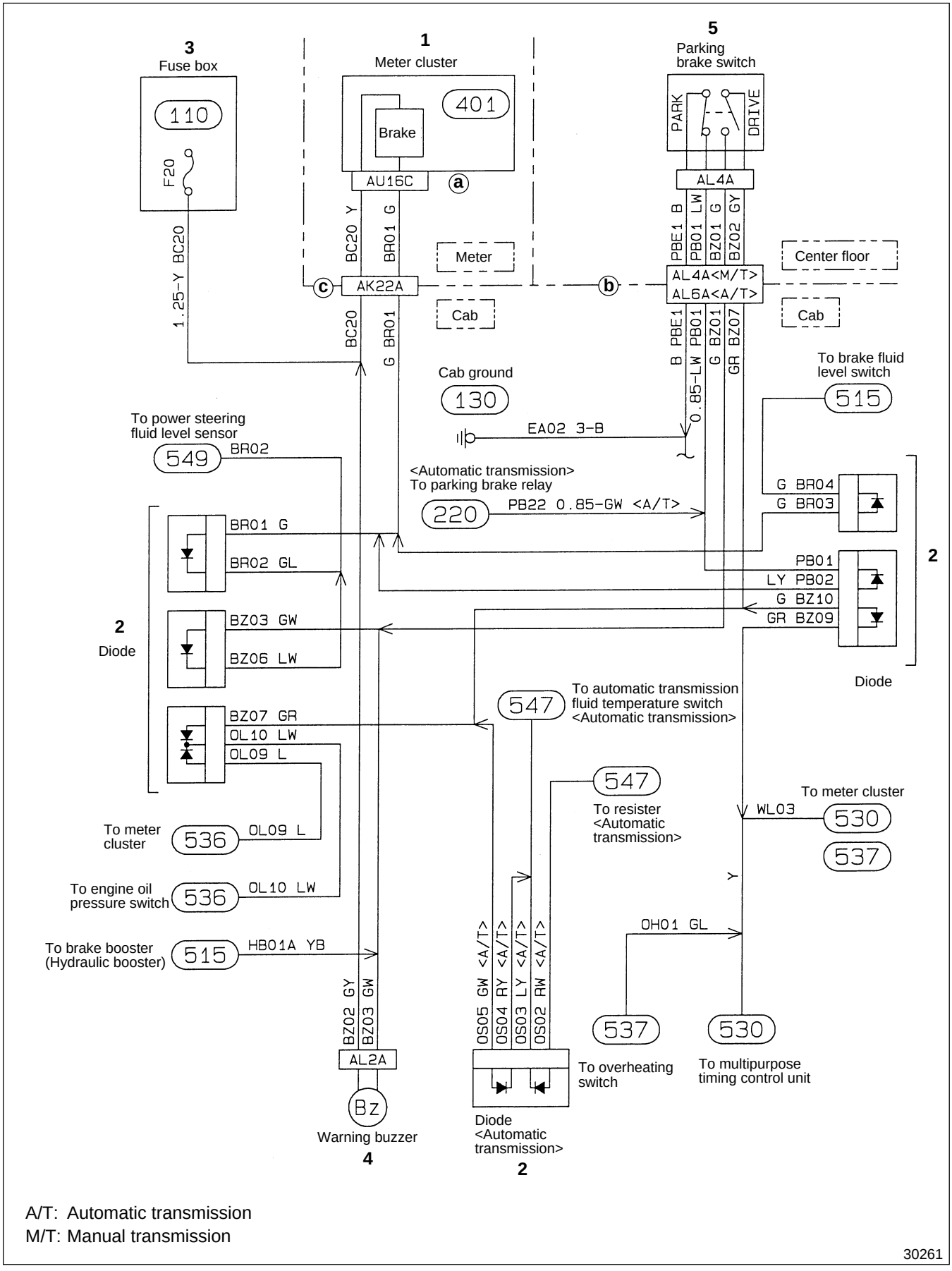

A/T: Automatic transmission
M/T: Manual transmission

30261

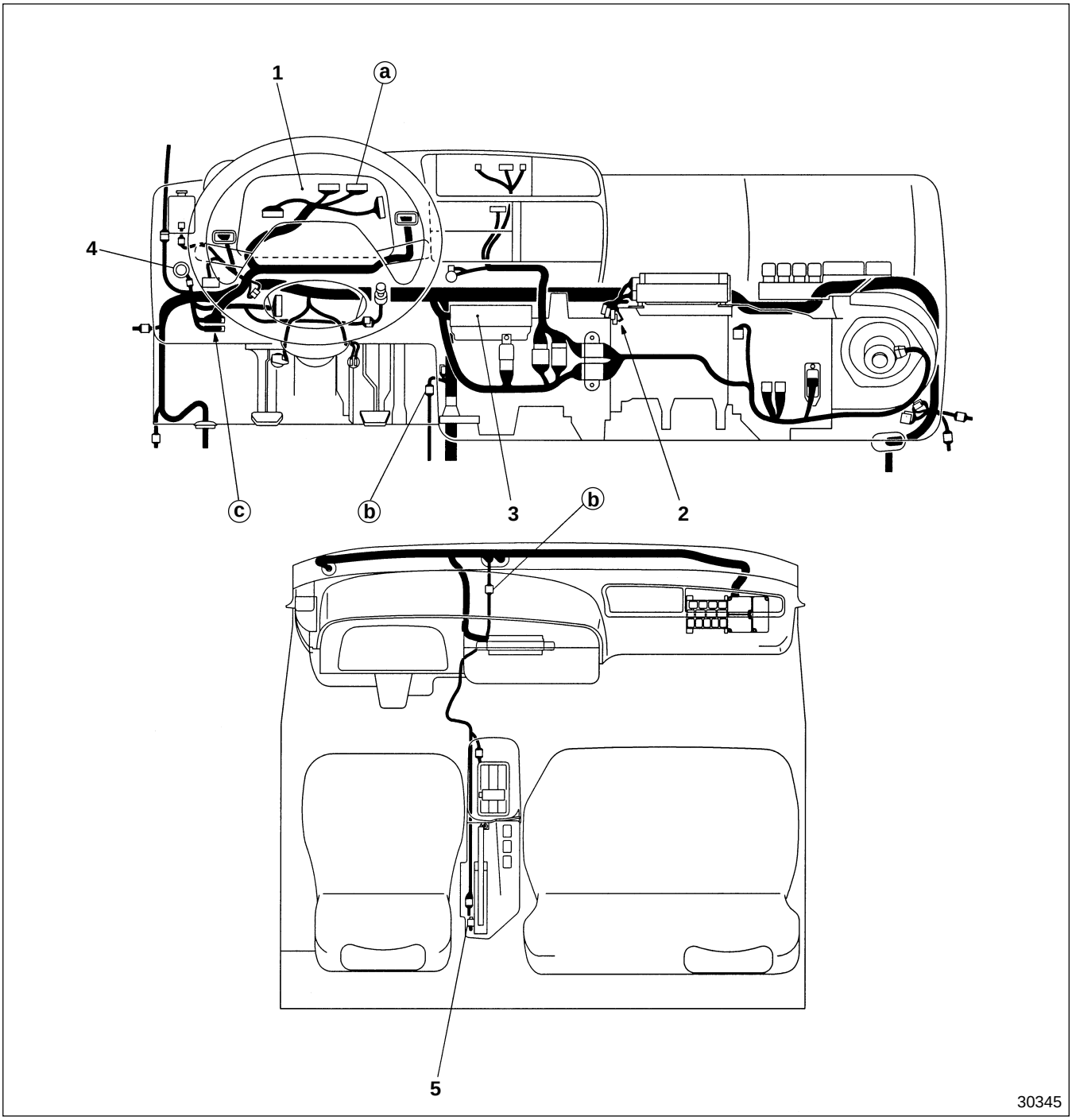

1 Meter cluster 2 401
2 Diode
3 Fuse box 2 104
4 Warning buzzer 1 606
5 Parking brake switch 1 510

1 : '96 Model Gr 54 (Pub. No. TWME9502-54)
2 : '98 Model Gr 54 (Pub. No. TWME9502-254)

515 BRAKE WARNING CIRCUIT

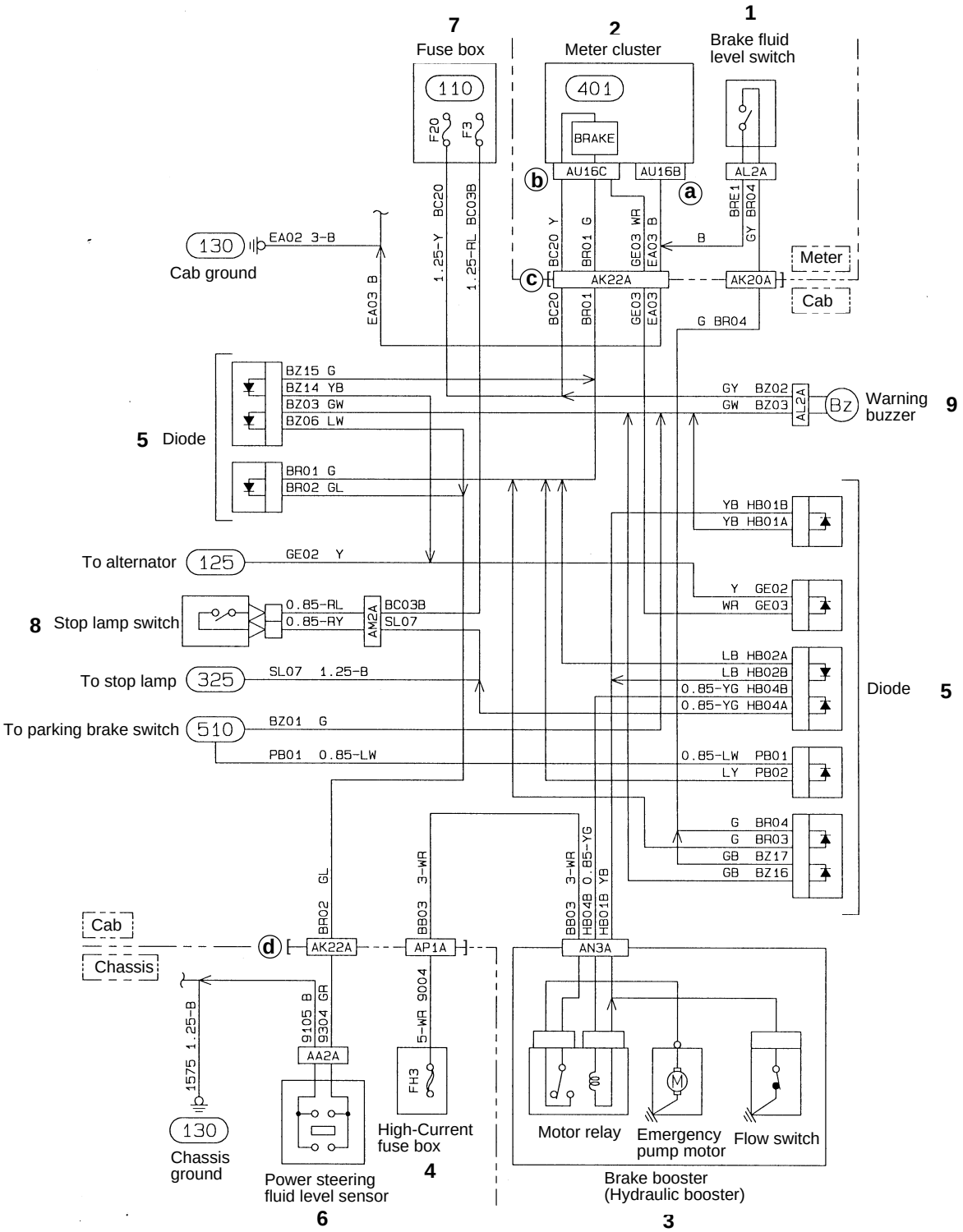

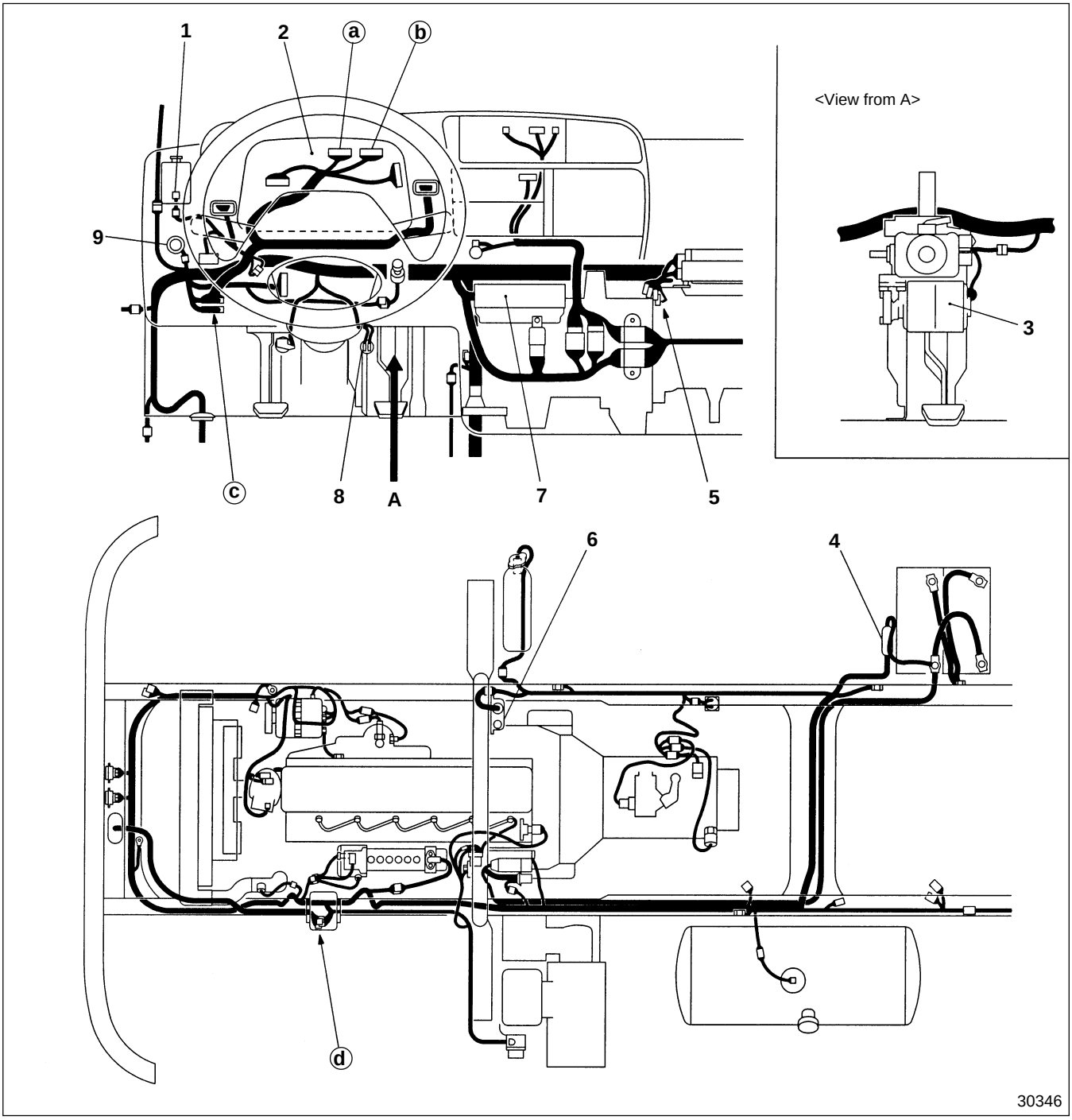

1 Brake fluid level switch 2 (515)
2 Meter cluster 2 (401)
3 Brake booster (Hydraulic booster) 3
4 High-current fuse box 2 (104)
5 Diode
6 Power steering fluid level sensor 2 (549)
7 Fuse box 2 (104)
8 Stop lamp switch 2 (325)
9 Warning buzzer 1 (606)

1 : '96 Model Gr 54 (Pub. No. TWME9502-54)
2 : '98 Model Gr 54 (Pub. No. TWME9502-254)
3 : '98 Model Gr 35 (Pub. No. TWME9502-235)

536 ENGINE OIL PRESSURE WARNING CIRCUIT

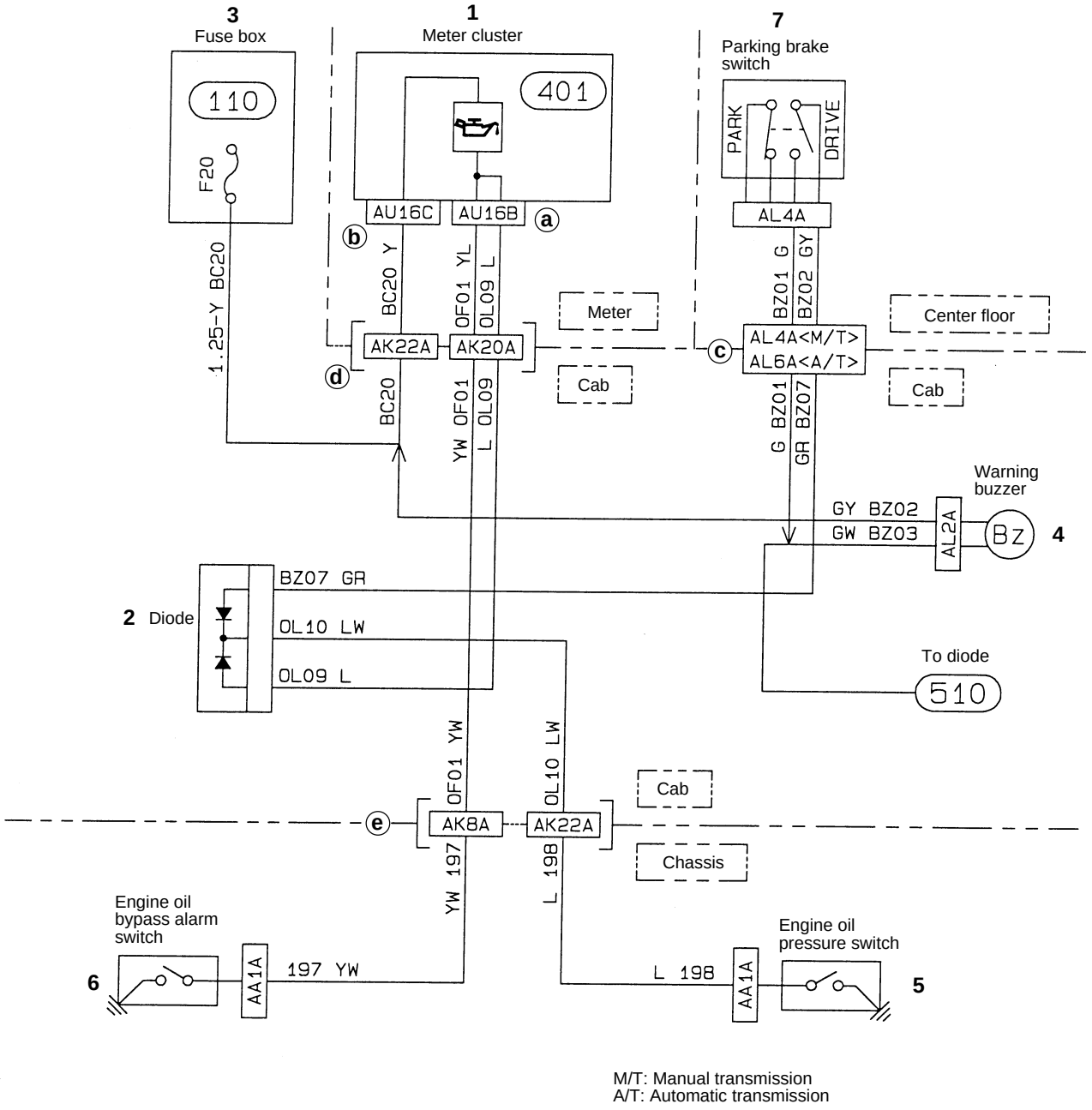

M/T: Manual transmission
A/T: Automatic transmission

30263

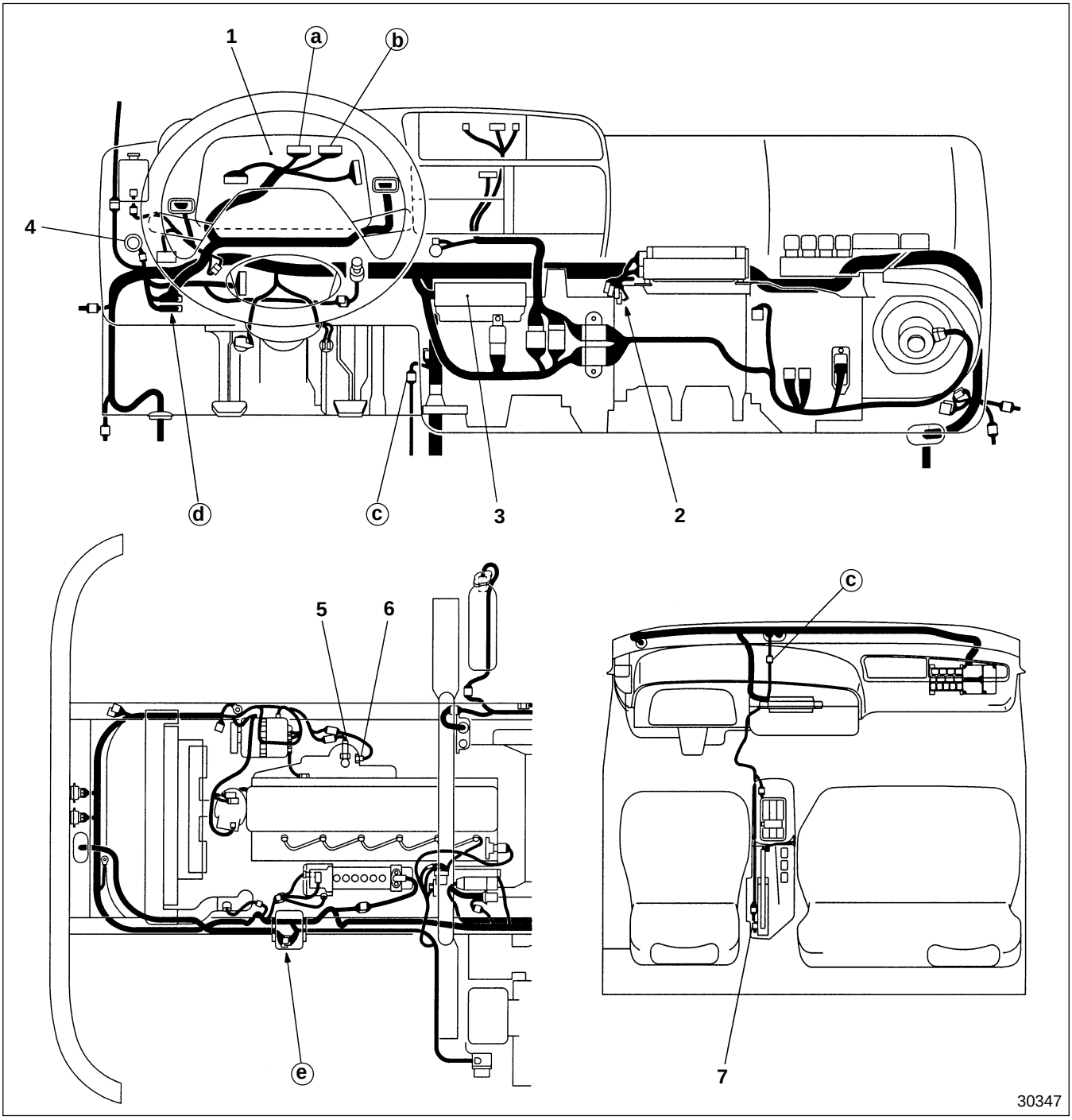

1 Meter cluster 2 (401)
2 Diode
3 Fuse box 2 (104)
4 Warning buzzer 1 (606)
5 Engine oil pressure switch 1 (801)
6 Engine oil by pass alarm switch 1 (801)
7 Parking brake switch 1 (510)

1 : '96 Model Gr 54 (Pub. No. TWME9502-54)
2 : '98 Model Gr 54 (Pub. No. TWME9502-254)

710 EXHAUT BRAKE CIRCUIT <MANUAL TRANSMISSION>

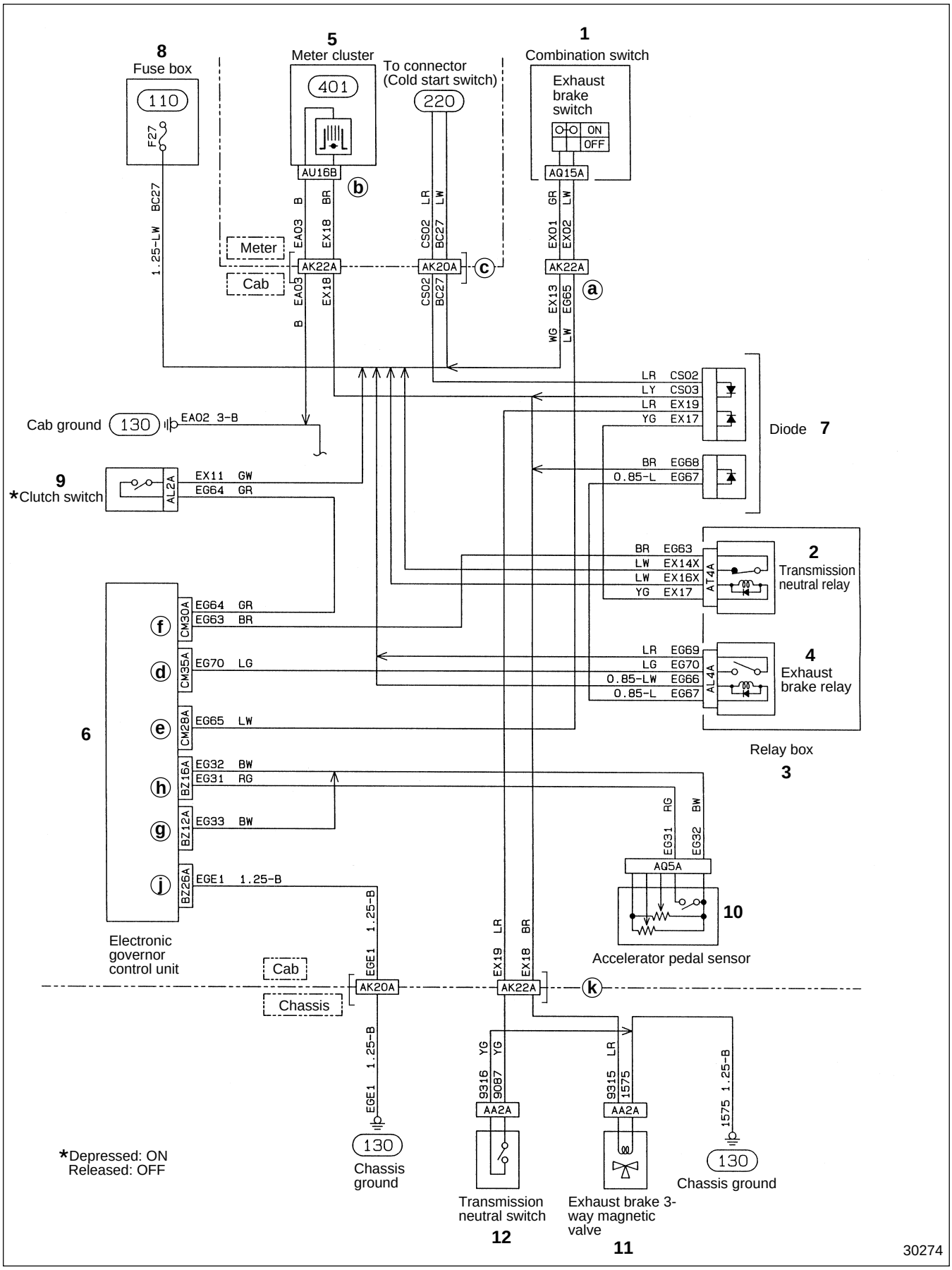

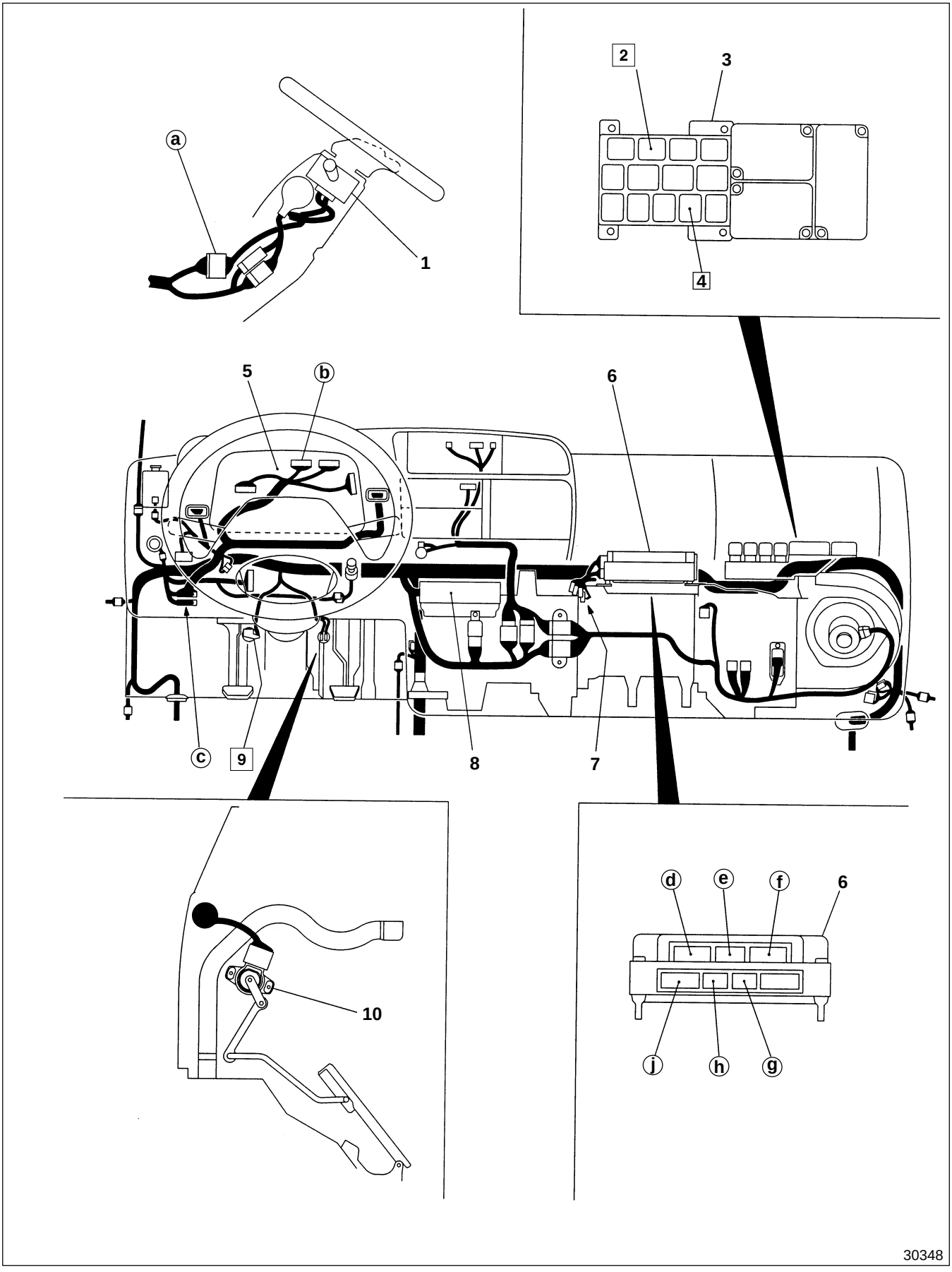
a
1
2
3
4
5
b
6
c
9
8
7
10
d
e
f
6
j
h
g
30348

(710) EXHAUT BRAKE CIRCUIT <MANUAL TRANSMISSION>

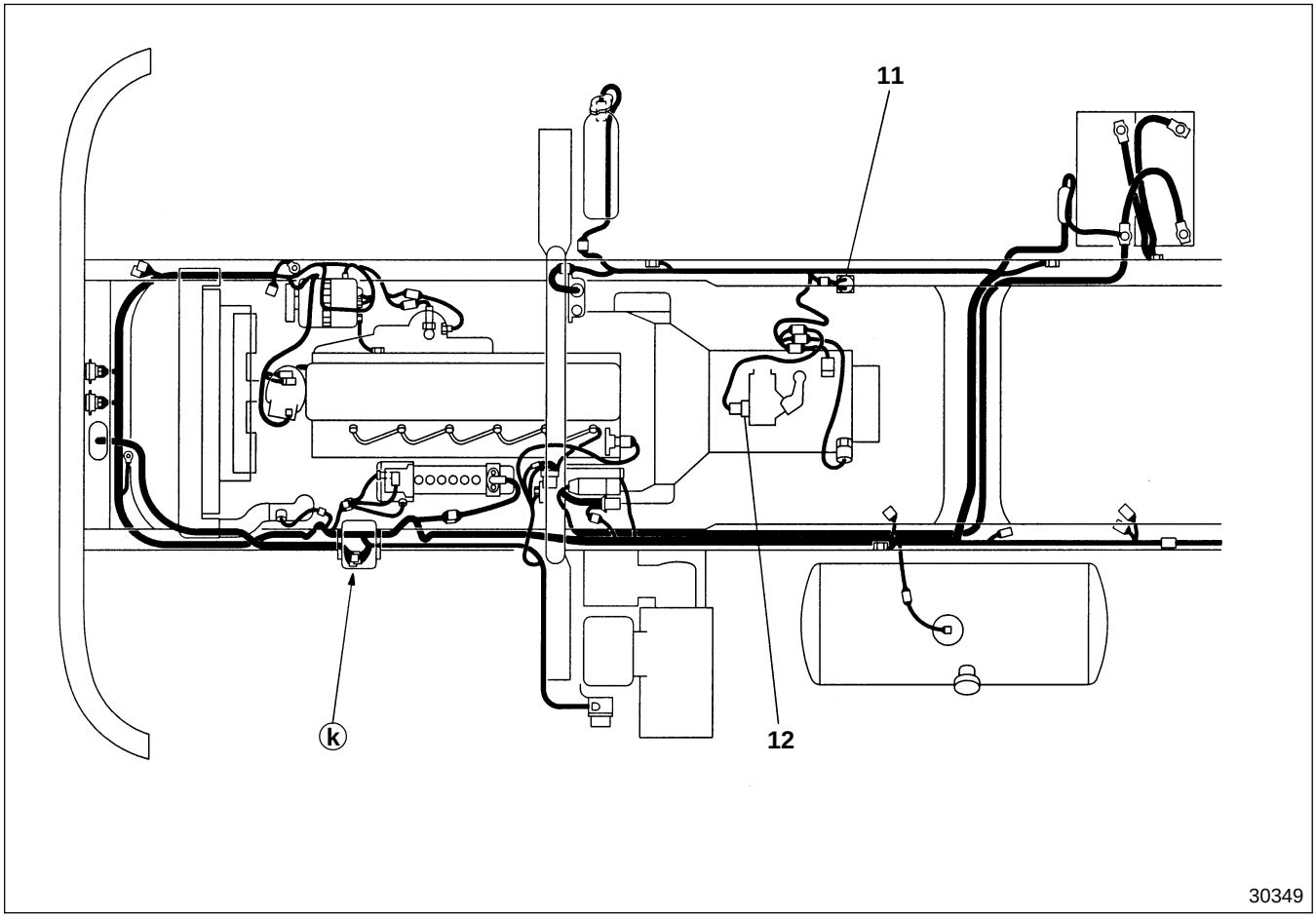

1 Combination switch 1 (601)
2 Transmission neutral relay
3 Relay box
4 Exhaust brake relay
5 Meter cluster 2 (401)
6 Electronic governor control unit 3
7 Diode
8 Fuse box 2 (104)
9 Clutch switch 1 (710)
10 Accelerator sensor 3
11 Exhaust brake 3-way magnetic value 1 (701)
12 Transmission neutral switch 1 (802)

1 : '96 Model Gr 54 (Pub. No. TWME9502-54)
2 : '98 Model Gr 54 (Pub. No. TWME9502-254)
3 : '99 Model Gr 13

◆ Service procedure

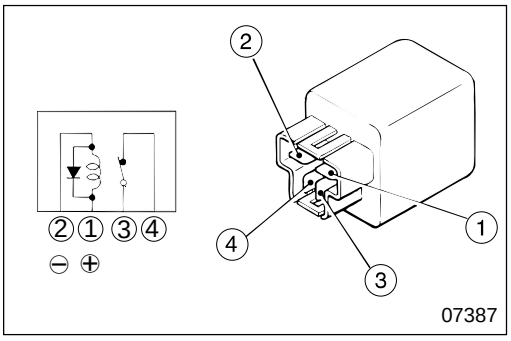

2 Inspection of relay (Close type 4-pin)

- Follow the table below to check for continuity and operation.

	①	②	③	④
No current	○—○			○—○
Current	⊕—⊖		◌----◌	

○—○ : There is continuity between terminals ○ and ○.
⊕—⊖ : Indicates that 12 volts DC is applied to the line between the terminals.
◌----◌ : Indicates that continuity between the terminals is lost.

- If any fault is found, replace the relay.

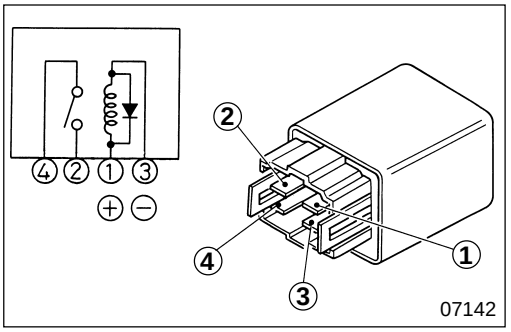

4 Inspection of relay (Open type 4-pin)

- Follow the table below to check for continuity and operation.

	①	②	③	④
No current	○—○			
Current	⊕	○	⊖	○

○—○ : There is continuity between terminals ○ and ○
⊕—○

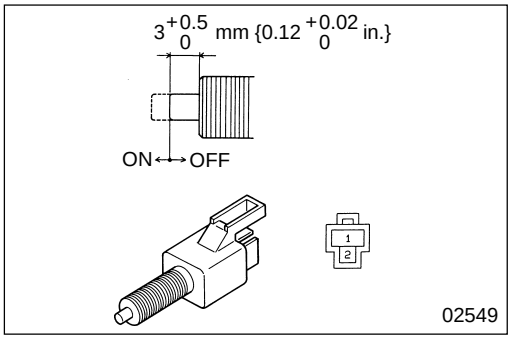

9 Inspection of clutch switch

- Follow the table below to check for continuity.

	①	②
OFF		
ON	○—○	

○—○: There is continuity between terminals.

- If any fault is found, replace the clutch switch.

MITSUBISHI MOTORS

Service Manual

Table of Contents

BACK

HOME

FH 1998

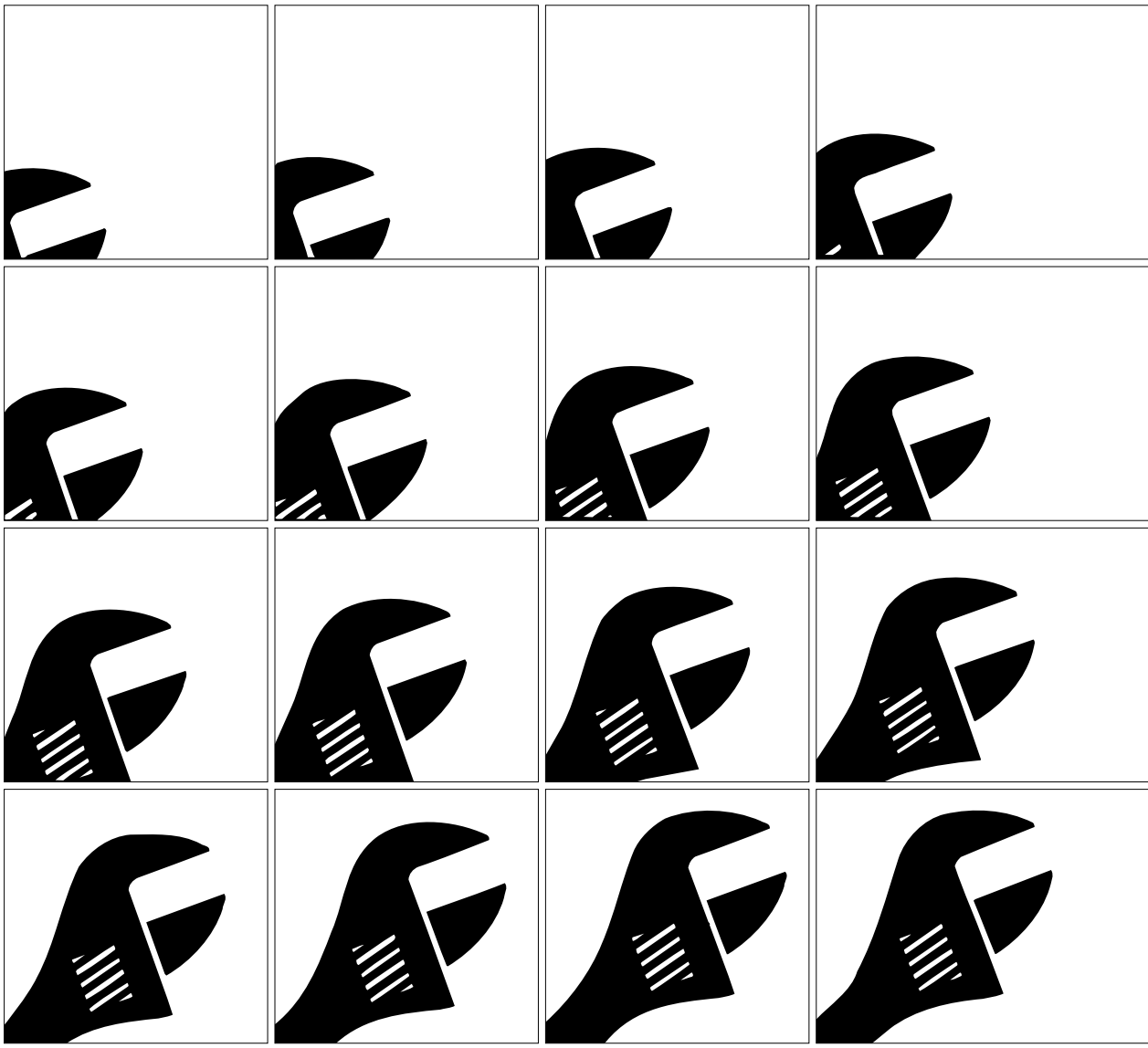

Pub. No. TWME9502-2

MITSUBISHI
FUSO

FH

Service Manual

Foreword

1998 Model Changes

Vehicle Identification Number

Injection Pump Drive Case

MITSUBISHI FUSO TRUCK OF AMERICA, Inc.

Pub No. TWME9502-00

FH

SERVICE MANUAL

FOREWORD

This Service Manual contains maintenance and repair methods for personnel involved in the maintenance and repair of 1998 model Mitsubishi Fuso Truck FH Series.
Read this manual carefully as an aid to providing correct, efficient and fast maintenance.
Please note, however, that due to continuous improvements on the specifications, numbers and description for maintenance might be changed without prior notice.
If you have any question, or encounter a problem, please do not hesitate to contact your nearest Mitsubishi Fuso dealer or distributor.

© Mitsubishi Motors Corporation 1997 May

MITSUBISHI FUSO TRUCK OF AMERICA, Inc.

1998 MODEL CHANGES

Item	’98 Model	⇦	’97 Model
Gr 00 General • The vehicle identification number has changed.	See page 11 in this manual.		—
Gr 01 Maintenance Schedule • The brake is changed from an air over hydraulic brake type to a hydraulic brake type using the fluid pressure of the power steering system.	Gr 01 Maintenance schedule ’98 Minor change (Pub. No. TWME9502-201)		—
Gr 13 Fuel and Engine control • Water separator is changed from a dual type to a single type.	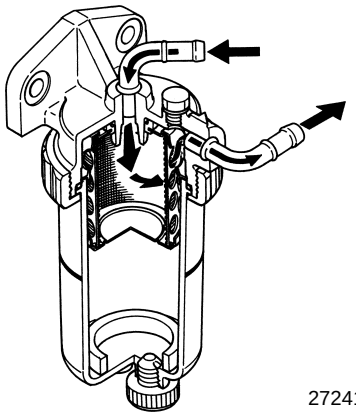 27241		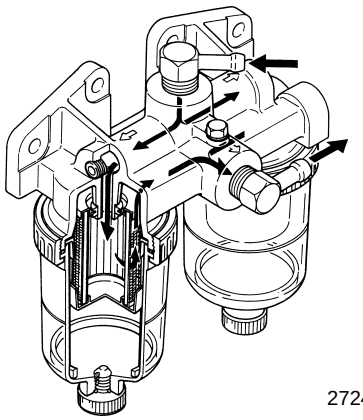 27242

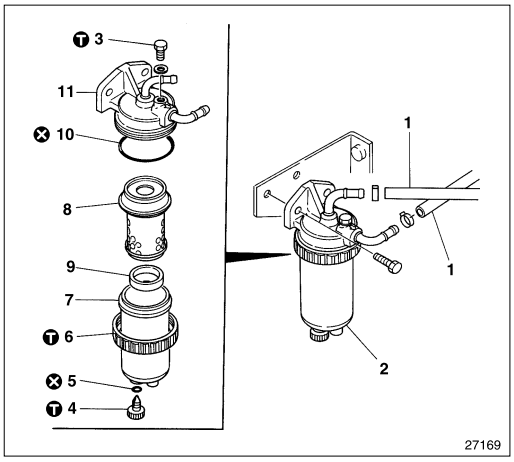

27169

● **Disassembly sequence**

1 Fuel feed hose
2 Water separator assembly
3 Air vent plug
4 Drain plug
5 O-ring
6 Ring nut
7 Case
8 Screen assembly
9 Water level ring
10 O-ring
11 Head

⊗ : Non-reusable parts

WARNING ⚠

- **Fuel ignites easily. Do not get it near flame or heat.**
- **Wipe up any spilled diesel fuel because it can cause a fire.**

● **Assembly sequence**

Follow the disassembly sequence in reverse.

T Tightening torque Unit : N·m {lbf.ft, kgf·m}

Location	Parts to be tightened	Tightening torque	Remarks
3	Air vent plug	8 to 12 {5.8 to 8.7, 0.8 to 1.2}	—
4	Drain plug	3 to 4 {2.2 to 2.9, 0.3 to 0.4}	—
6	Ring nut	23 to 27 {17 to 20, 2.3 to 2.8}	—

Item	'98 Model	⇦	'97 Model
• Air vent cock is added to fuel filter head.	**T 7.8 to 12 N·m {5.8 to 8.7 lbf·ft, 0.8 to 1.2 kgf·m}** 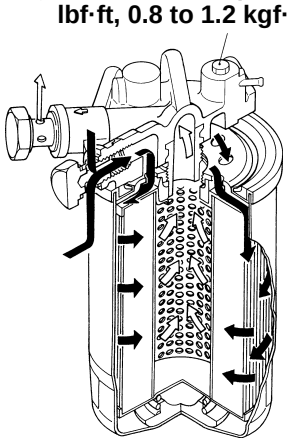 27991		**T 7.8 to 12 N·m {5.8 to 8.7 lbf·ft, 0.8 to 1.2 kgf·m}** 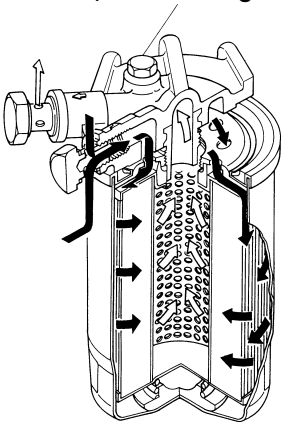 27306
• Injection pump drive is changed from an air compressor drive to an injection pump drive case.	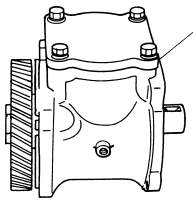 See page 12 to 15 in this manual. 27552		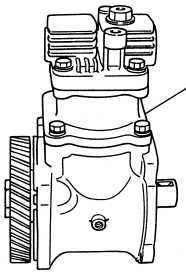 27553
Gr 14 Cooling • Level marks and sight glasses have been added to the surge tank.	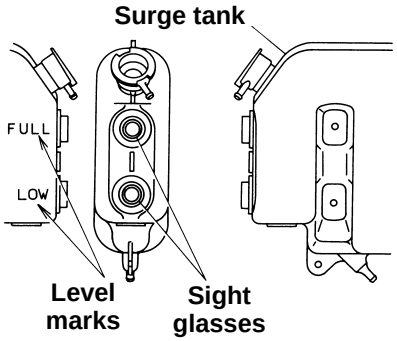 27554		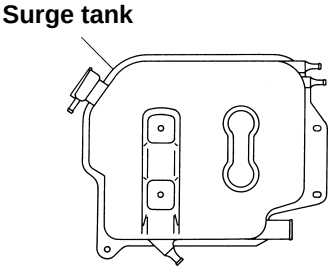 27555
Gr 15 Intake and exhaust • The exhaust brake unit is changed from an air type to a vacuum type. (For details on the exhaust brake unit refer to Gr 35 Brake)	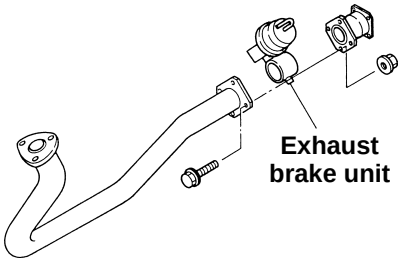 27606		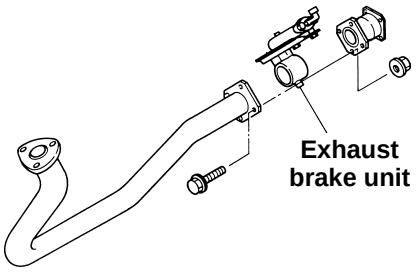 27607

1998 MODEL CHANGES

<table>
<tr><th>Item</th><th>’98 Model</th><th>⇦</th><th>’97 Model</th></tr>
<tr><td rowspan="2">Gr 21 Clutch
• Clutch pedal lever ratio is changed. Also clutch pedal free play is changed.</td><td>Clutch pedal free play (INSPECTION AND ADJUSTMENT MOUNTED IN VEHICLE Section)
 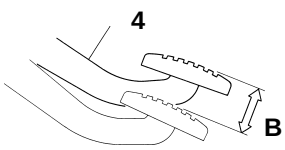

B : 37 to 52 mm {1.46 to 2.05 in.}
11064</td><td colspan="2">Clutch pedal free play (INSPECTION AND ADJUSTMENT MOUNTED IN VEHICLE Section)
 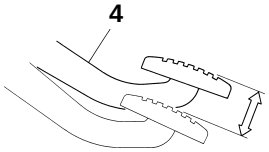

B : 32 to 44 mm {1.26 to 1.73 in.}
11064</td></tr>
<tr><td>Clutch pedal free play (CLUTCH PEDAL Section)
 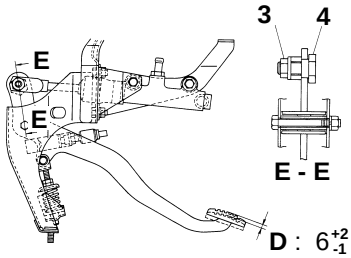

D : 6^{+2}_{-1} mm {0.236 $^{+0.079}_{-0.039}$ in.}
11525</td><td colspan="2">Clutch pedal free play (CLUTCH PEDAL Section)
 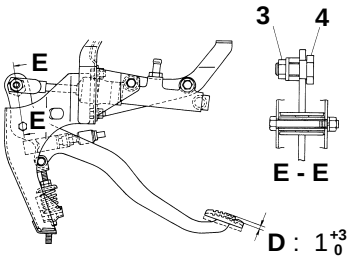

D : 1^{+3}_{0} mm {0.039 $^{+0.12}_{0}$ in.}
11525</td></tr>
<tr><td>Gr 22 Manual Transmission
• Oil specification and viscosity have been added to specifications section.
(Applies to ’96 model and later)</td><td colspan="3">SPECIFICATIONS
<table><tr><th>Item</th><th></th><th>Specifications</th></tr><tr><td>Mode of control</td><td></td><td>Floor shift remote control</td></tr><tr><td>Transmission model</td><td></td><td>M050S5</td></tr><tr><td rowspan="8">Gear ratio</td><td>1st</td><td>6.875</td></tr><tr><td>2nd</td><td>4.189</td></tr><tr><td>3rd</td><td>2.311</td></tr><tr><td>4th</td><td>1.409</td></tr><tr><td>5th</td><td>1.000</td></tr><tr><td>6th</td><td>—</td></tr><tr><td>Reverse</td><td>6.875</td></tr><tr><td rowspan="3">Oil</td><td>Gear oil</td><td>General : API GL-3 SAE80
Warm region : API GL-3 SAE90
Tropical region : API GL-4 SAE90</td></tr><tr><td>Engine oil</td><td>Long period of high-speed driving
: API CC SAE30 or SAE40
: API CC/SF SAE 30 or SAE40</td></tr><tr><td>Quantity L {qts}</td><td>5.7 {6.0}</td></tr><tr><td>Mass kg {lb}</td><td></td><td>120 {265}</td></tr></table></td></tr>
<tr><td>Gr 35 Brake
• Brakes have been changed from an air over hydraulic brake type to a hydraulic brake type using the fluid pressure of the power steering oil pump.
• Exhaust brake is changed from an air type to a vacuum type utilizing the vacuum pump.</td><td>Gr 35 Brake
’98 Minor change
(Pub. No. TWME9502-235)</td><td colspan="2">—</td></tr>
</table>

Item	’98 Model	⇦	’97 Model
Gr 37 Steering • Steering is changed to a power steering system in which the fluid pressure from the oil pump is also used by the brake booster (hydraulic booster).	Gr 37 Steering ’98 Minor change (Pub. No. TWME9502-237)		—

Item	'98 Model ⇦ '97 Model

Gr 42 Cab

- For the changes of brake and power steering fluid line, preliminary work and work from front of cab in removal and installation of cab section are changed.

Preliminary Work < '98 Model >

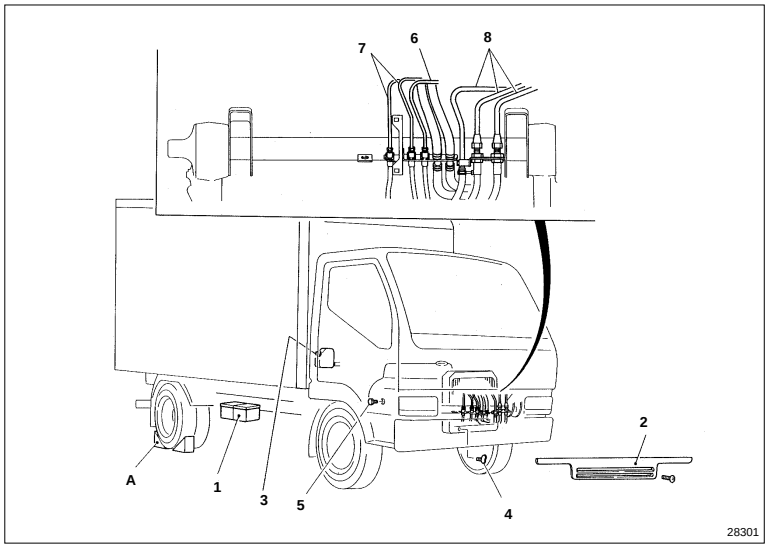

● **Disassembly sequence**

1 Battery (negative terminal) Gr 54
2 Front grille Gr 42
3 Pressure cap Gr 14
4 Radiator drain plug Gr 14
5 Crankcase drain plug Gr 14
6 Clutch fluid pipe
< Manual transmission > Gr 21
7 Brake fluid pipe Gr 35
8 Power steering oil pipe Gr 37

A : Wheel chock

Work items

- Draining, filling, and air bleeding of clutch fluid, brake fluid and power steering fluid Gr 21, Gr 35, Gr 37
- Draining, filling, and air bleeding of coolant Gr 14

⇧

Preliminary Work < '97 Model >

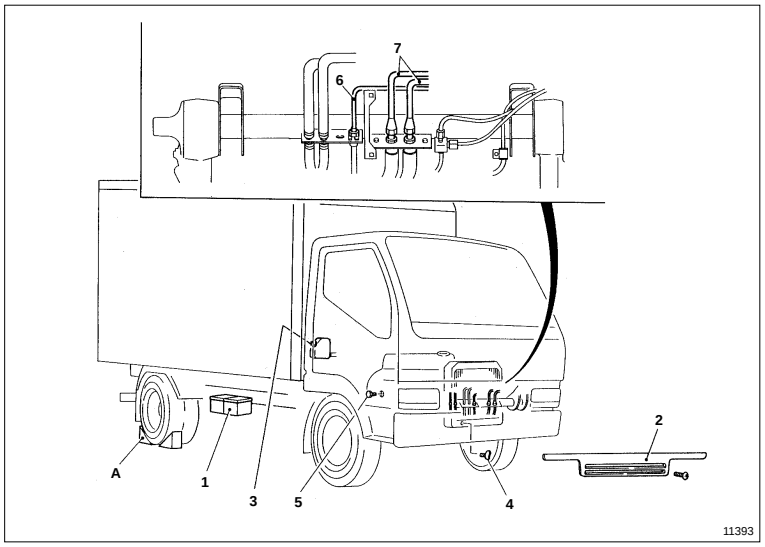

● **Disassembly sequence**

1 Battery (negative terminal) Gr 54
2 Front grille Gr 42
3 Pressure cap Gr 14
4 Radiator drain plug Gr 14
5 Crankcase drain plug Gr 14
6 Clutch fluid pipe
< Manual transmission > Gr 21
7 Brake tube Gr 35

A : Wheel chock

Work items

- Draining, filling, and air bleeding of clutch fluid Gr 21
- Draining, filling, and air bleeding of coolant Gr 14

Item	’98 Model ⇦ ’97 Model

Work from Front of Cab < ’98 Model >

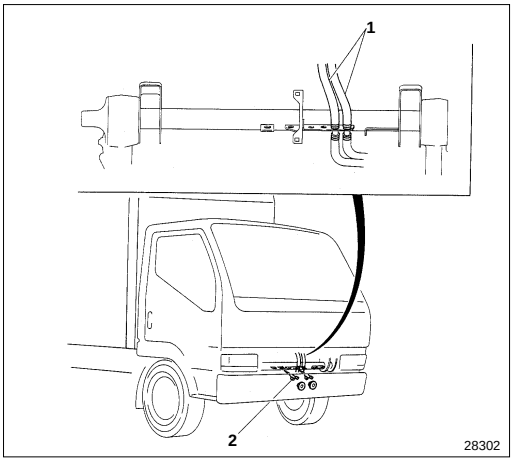

● **Disassembly sequence**

1 Heater hose Gr 55B
2 Horn harness

● **Assembly sequence**

Follow the disassembly sequence in reverse.

⇧

Work from Front of Cab < ’97 Model>

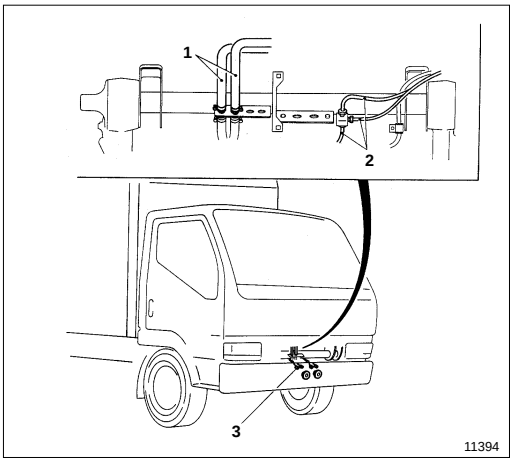

● **Disassembly sequence**

1 Heater hose Gr 55B
2 Air hose Gr 35
3 Horn harness

● **Assembly sequence**

Follow the disassembly sequence in reverse.

Item	'98 Model ⇦	'97 Model
Gr 54 Electrical 1 POWER, CHARGING AND GROUND • As the brake type has been changed, the alternator is changed to a type with vacuum pump.	*mark indicates page numbers in Gr 54 Electrical '98 Minor Changes (Pub.No. TWME9502-254) **Alternator** 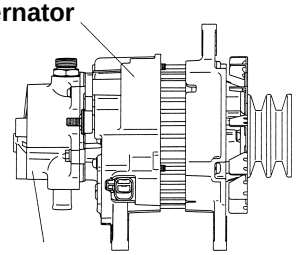 **Vacuum pump** 26202 (Refer to pages *54-1-2 to 5 and page *54-1-8)	**Alternator** 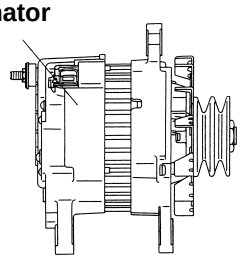 26203
• A high-current fuse for the brake booster (hydraulic booster) has been added.	Fuse capacity : 50 A Refer to page *54-1-6	—
• The following circuits have been changed or have been added (marked ★). (110) POWER CIRCUIT ★(115) RESERVE POWER CIRCUIT (125) BATTERY CHARGING CIRCUIT (130) GROUND	 Refer to page *54-1-14 Refer to page *54-1-22 Refer to page *54-1-24 Refer to page *54-1-26	—
2 STARTING, PREHEATING AND STOPPING ENGINE • The following circuits have been changed. (210) ENGINE STARTING CIRCUIT < Manual transmission > (220) ENGINE PREHEATING CIRCUIT < Automatic transmission >	 Refer to page *54-2-2 Refer to page *54-2-4	—
3 LIGHTING • (320) TAIL LAMP, CLEARANCE LAMP AND LICENSE PLATE LAMP CIRCUITS have been changed.	Refer to page *54-3-2	—

Item	'98 Model ⇦	'97 Model
• (325) STOP LAMP CIRCUIT has been changed and the stop lamp switch is changed from an air type to a vacuum type.	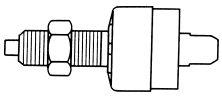 Refer to page *54-3-4 26204	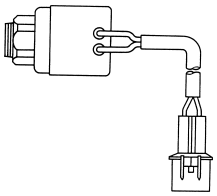 26205
• (352) VAN BODY DOME LIGHT CIRCUIT is changed.	Refer to page *54-3-6	—
4 METER • As a result of changes in the brake type, air pressure gauge and BRAKE AIR warning lamp are eliminated.	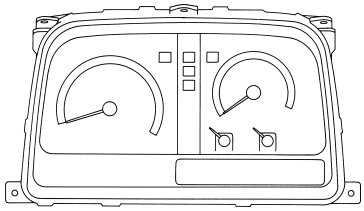 Refer to page *54-4-2 26206	**Air pressure gauge** 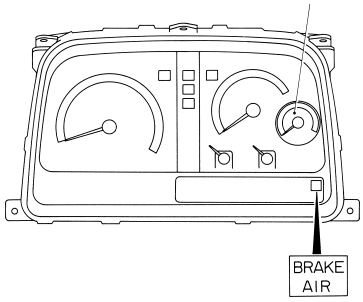 26207
5 INDICATOR AND WARNING • Accompanying changes in the brake type (500), on-vehicle inspection and adjustment item has been changed. Instead of the procedure for the inspection of brake fluid level switch the inspection procedure for power steering fluid level sensor is described.	Refer to page *54-5-6 to 7	—
• The following circuits have been changed or have been added (marked ★). (510) PARKING BRAKE INDICATOR CIRCUIT (515) BRAKE WARNING CIRCUIT (530) WATER LEVEL WARNING CIRCUIT (536) ENGINE OIL PRESSURE WARNING CIRCUIT (537) OVERHEATING WARNING CIRCUIT	 Refer to page *54-5-8 Refer to page *54-5-10 Refer to page *54-5-14 Refer to page *54-5-16 Refer to page *54-5-18	—
(547) AUTOMATIC TRANSMISSION FLUID TEMPERATURE WARNING CIRCUIT ★(549) POWER STEERING FLUID LEVEL WARNING CIRCUIT	Refer to page *54-5-20 Refer to page *54-5-22	—

Item	’98 Model	⇦	’97 Model
⑥ CAB SIDE ELECTRICS • Accompanying the changes in the brake type, the horn is changed from an air type to an electric type and the (616) HORN CIRCUIT has also been changed.	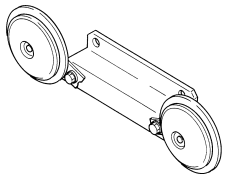 Refer to page *54-6-4 26208		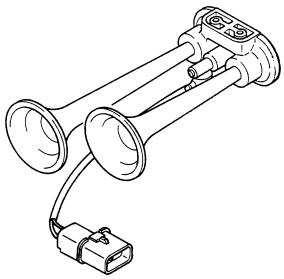 26209
⑦ CHASSIS ELECTRIC • Accompanying changes in the brake type, the exhaust brake 3-way magnetic valve is changed from an air type to a vacuum type valve.	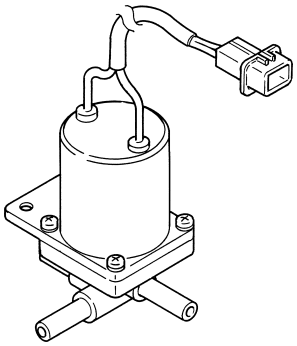 Refer to page *54-7-2 26210		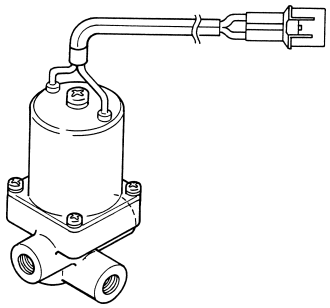 26968
• (710) EXHAUST BRAKE CIRCUIT < Manual transmission > is changed.	Refer to page *54-7-4		—
⑨ OTHERS • (905) Joint connector has been changed.	Refer to page *54-9-2		—

VEHICLE IDENTIFICATION NUMBER : ’98 MODEL

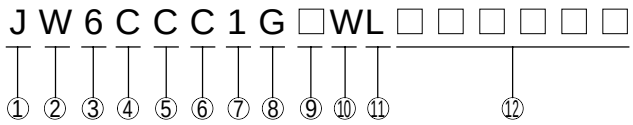

①	Country	J :	Japan
②	Make	W :	Mitsubishi Fuso
③	Vehicle type	6 :	Incomplete Vehicle
④	Gross vehicle weight/Brake system	C :	7258 to 8845 kg {16001 to 19500 lbs}/Hydraulic
⑤	Line	C :	FH211
⑥	Series (Wheelbase)	C :	2.6 to 2.9 m {102.4 to 114.2 in.}
		E :	3.2 to 3.5 m {126.0 to 137.8 in.}
		G :	3.8 to 4.1 m {149.6 to 161.4 in.}
		H :	4.1 to 4.4 m {161.4 to 173.2 in.}
		J :	4.4 to 4.7 m {173.2 to 184.9 in.}
⑦	Cab chassis type	1 :	Chassis cab
⑧	Engine	G :	358 CID Diesel turbocharged and charge air cooled
⑨	Check digit		
⑩	Model year	W :	1998
⑪	Plant	L :	Kawasaki-2
⑫	Plant sequential number		

00-4 ← (’96 model)

INJECTION PUMP DRIVE CASE

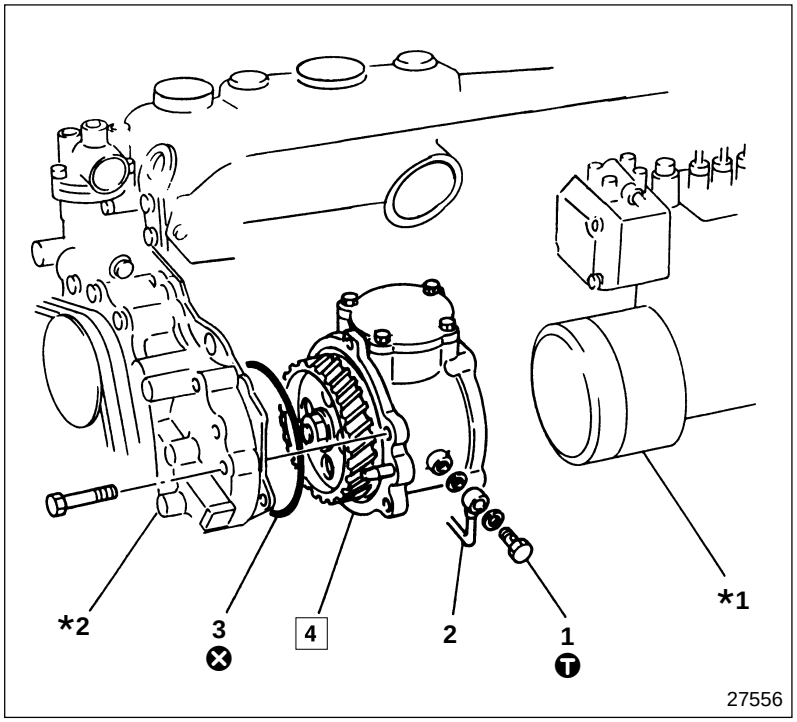

● **Removal sequence**

1 Eye bolt
2 Oil pipe
3 O-ring
4 Air injection pump drive case assembly 📖 P14

***1** : Injection pump assembly Gr 13
***2** : Timing gear case
⊗ : Non-reusable parts

● **Installation sequence**

Follow the removal sequence in reverse.

Ⓣ Tightening torque

Unit : N·m {lbf.ft, kgf·m}

Location	Parts to be tightened	Tightening torque	Remarks
1	Eye bolt	21 {15, 2.1}	—

◆ Service procedure

4 **Installation of injection pump drive case assembly**

- Position No.1 cylinder of the engine at top dead center in the compression cycle. Gr 11
- Align marking line **A** with notch **B**, then install injection pump drive case assembly **4** on timing gear case ***2**.

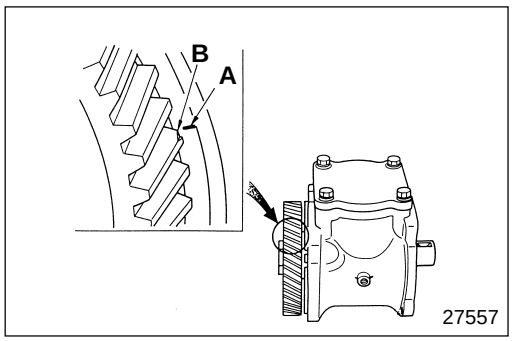

M E M O

INJECTION PUMP DRIVE CASE

Injection Pump Drive Case Assembly

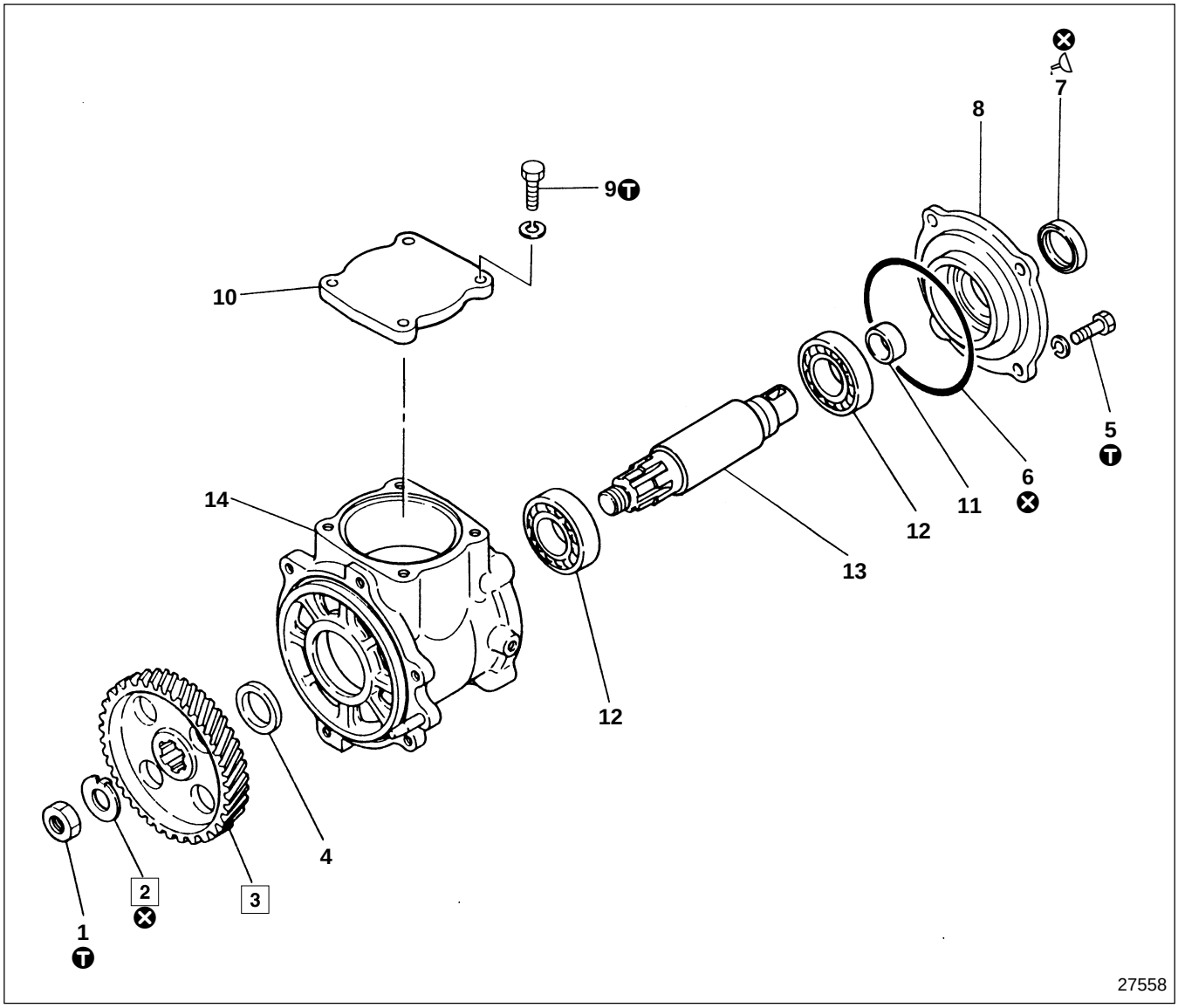

● **Disassembly sequence**

1 Nut
2 Lock washer
3 Drive gear
4 Collar
5 Bolt
6 O-ring
7 Oil seal
8 Bearing holder
9 Bolt
10 Cover
11 Sleeve
12 Bearing
13 Shaft
14 Crankcase

⊗ : Non-reusable parts

● **Assembly sequence**

Follow the disassembly sequence in reverse.

Tightening torque

Unit : N·m {lbf.ft, kgf·m}

Location	Parts to be tightened	Tightening torque	Remarks
1	Nut (Drive gear mounting)	166.7 to 210.8 {120 to 155, 17.0 to 21.5}	—
5	Bolt (Bearing holder mounting)	13.7 to 17.7 {10 to 13, 1.4 to 1.8}	—
9	Bolt (Cyinder head assembly mounting)	24.5 to 29.4 {18 to 22, 2.5 to 3.0}	—

Lubricant

Location	Points of application	Specified lubricant	Quantity
7	Oil seal lip	Engine oil	As required

◆ Service procedure

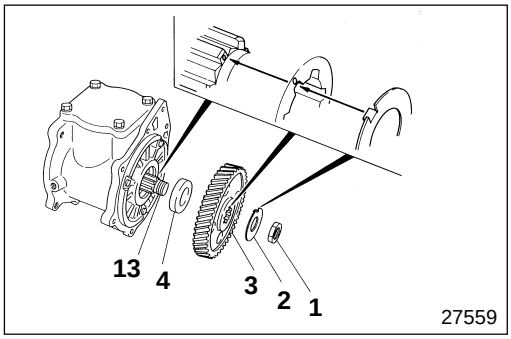

2 **3** **Installation of lock washer and drive gear**

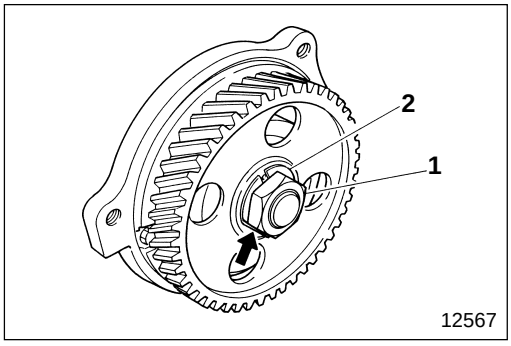

After installation, bend lock washer **2** to nut **1** side.

MITSUBISHI FUSO

Service Manual

Table of Contents

BACK

HOME

MODEL CHANGES

FH 1997

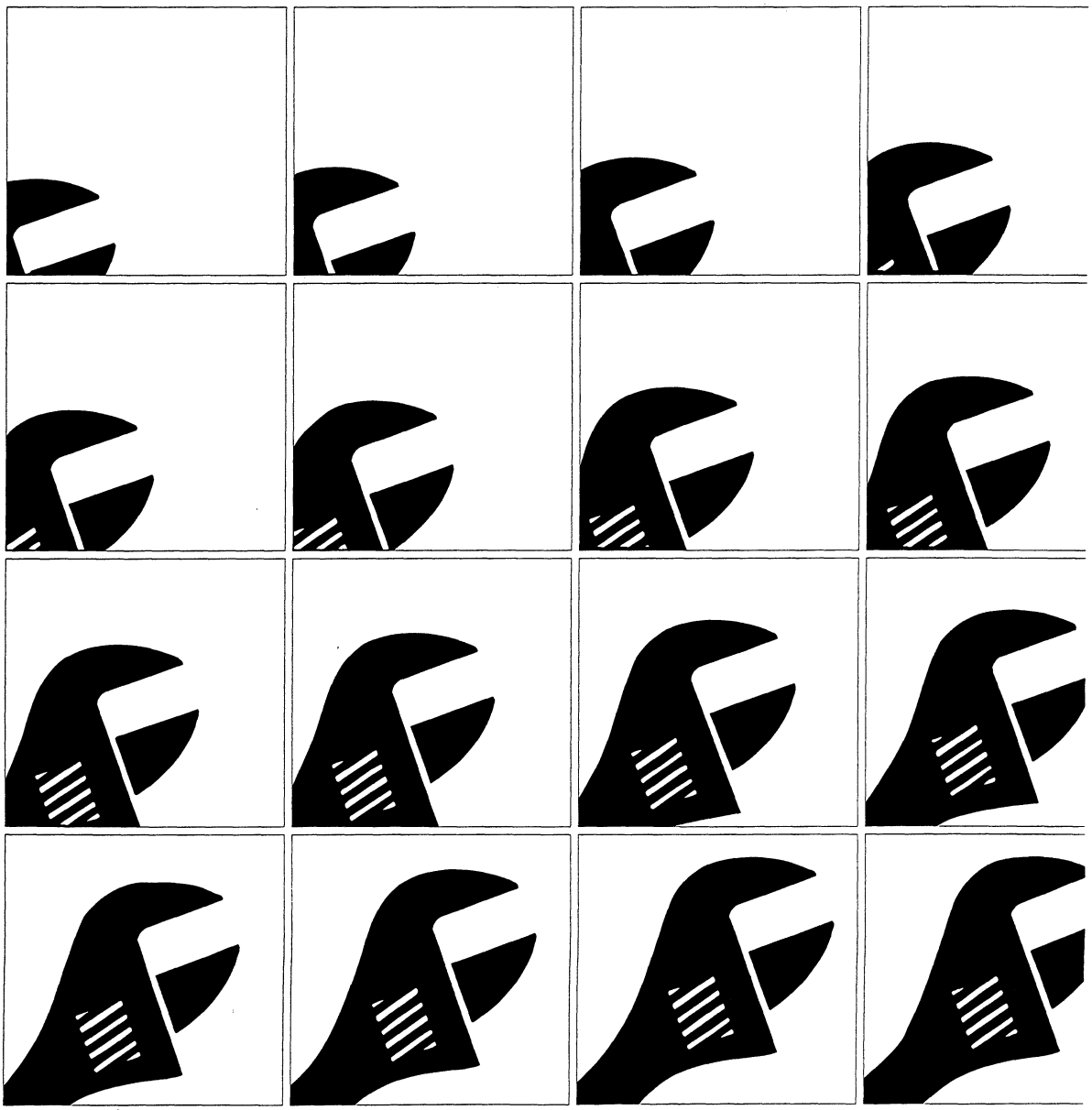

Pub. No. TWME9502-1

MITSUBISHI
FUSO

FH

Service Manual

Foreword

1997 Model Changes

Cab Interior Fitting

220-Engine Preheating and Cold Start Circuit <Manual Transmission>

220-Engine Preheating and Cold Start Circuit <Automatic Transmission>

MITSUBISHI FUSO TRUCK OF AMERICA, Inc.

Pub No. TWME9502-00

FH

SERVICE MANUAL

FOREWORD

This Service Manual contains maintenance and repair methods for personnel involved in the maintenance and repair of 1997 model Mitsubishi Fuso Truck FH series.
Read this manual carefully as an aid to providing correct, efficient and fast maintenance.
Please note, however, that due to continuous improvements on the specifications, numbers and description for maintenance might be changed without prior notice.
If you have any question, or encounter a problem, please do not hesitate to contact your nearest Mitsubishi Fuso dealer or distributor.

© Mitsubishi Motors Corporation 1996 July

MITSUBISHI FUSO TRUCK OF AMERICA, Inc.

1997 MODEL CHANGES

Item	'97 Model ⇦	'96 Model
Gr 13 Fuel and engine control • Seals have been added to injection pumps to fit within the legal restriction. **CAUTION⚠** **Injection pumps should not be adjusted by anyone other than the specified ZEXEL service stations.**	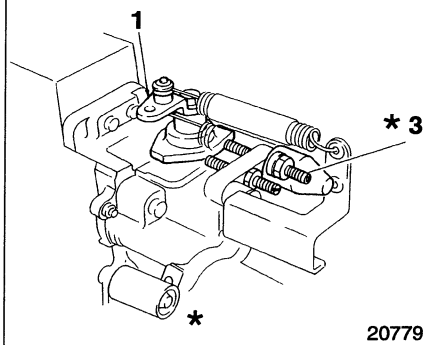 20779 *** : Sealed part**	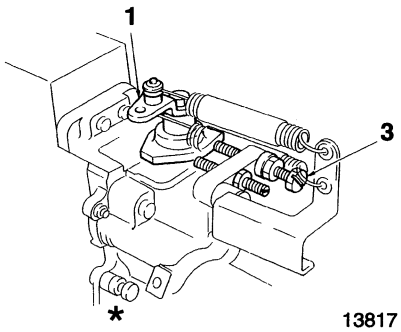 13817 *** : Sealed part**
Gr 15 Intake and exhaust • The intake silencer on the air inlet pipe assembly has been eliminated.	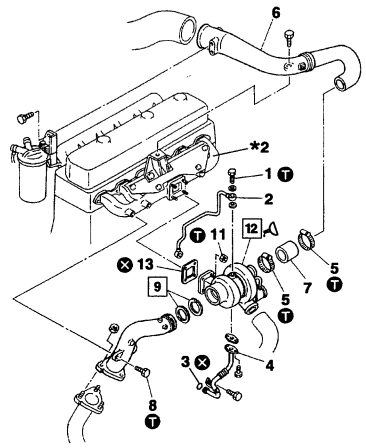 20768 **6** Air inlet pipe assembly (without intake silencer)	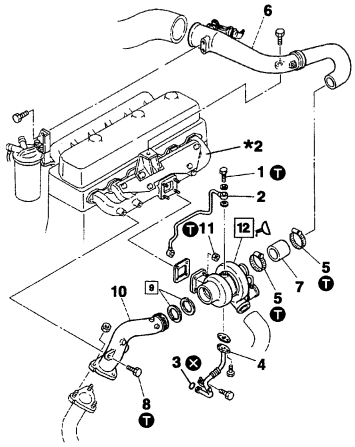 12684 **6** Air inlet pipe assembly (with intake silencer)
Gr 34 Rear suspension • The shock absorber and stabilizer on the rear suspension have been eliminated.	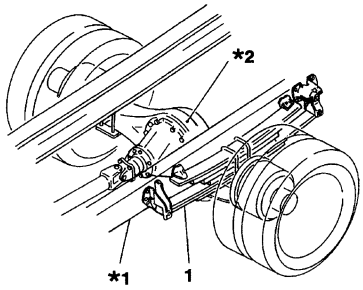 20780	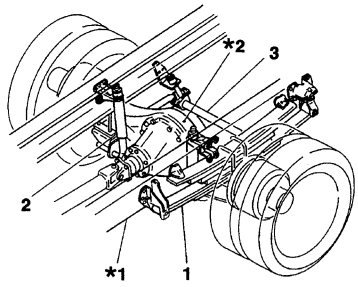 **2** Shock absorber **3** Stabilizer 00495

Item	'97 Model ⇦	'96 Model
Gr 42 Cab • The trim inside the cab has been changed from the full trim type to the semi trim type.	See pages 4 to 5 in this manual	–
Gr 54 Electrical • The sub-starter switch and circuit have been eliminated.	The circuit now is the same as the engine starter circuit described in Gr 54 ('96 Model).	–
• The cold starter switch, cold starter 3-way magnetic valve (automatic transmission only), and cold start indicator lamp have been eliminated.	See pages 6 to 9 in this manual	

CAB INTERIOR FITTING

Trim ('97 model)

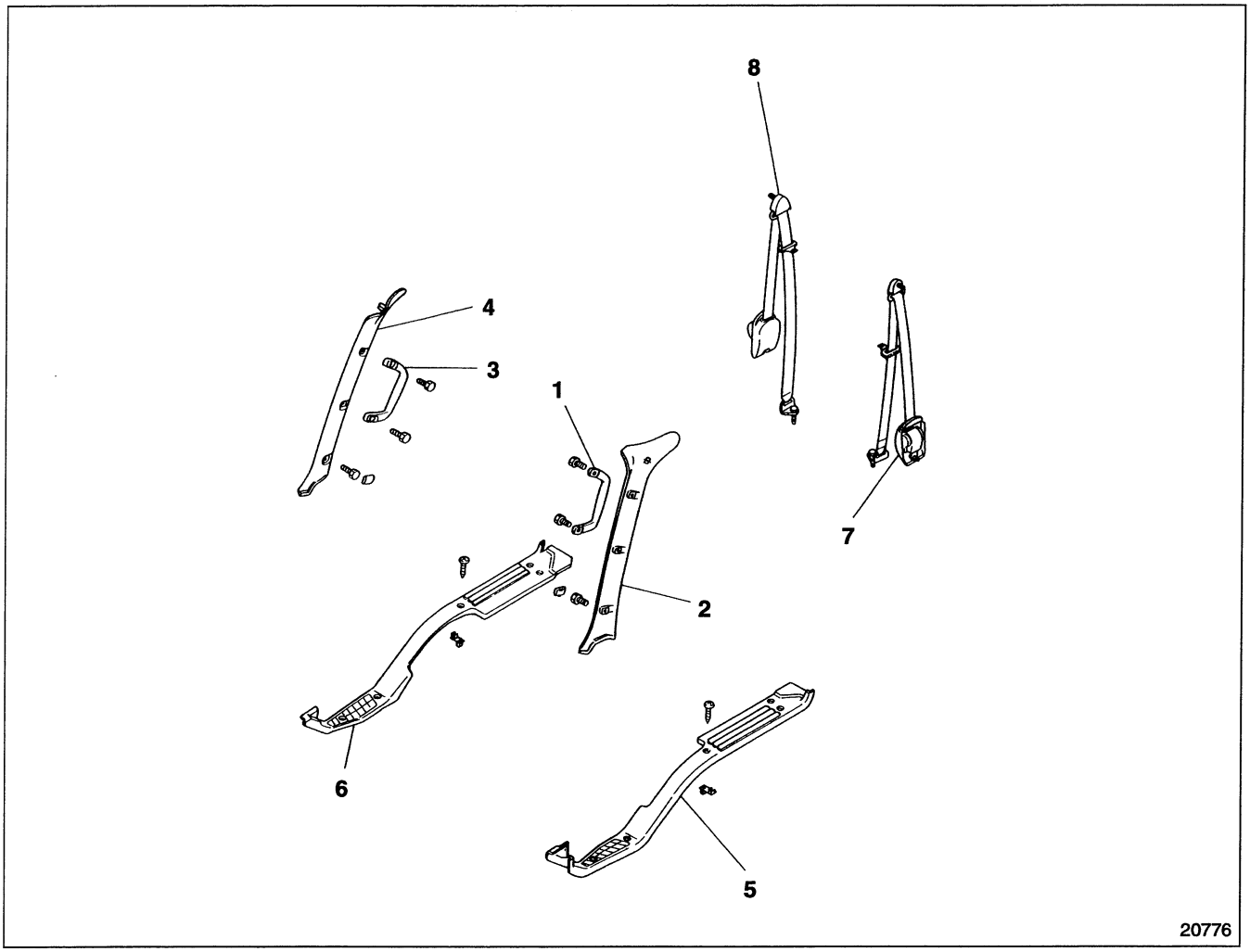

● **Removal sequence**

1 Front pillar grip, LH
2 Front pillar trim, LH
3 Front pillar grip, RH
4 Front pillar trim, RH
5 Scuff plate, LH
6 Scuff plate, RH
7 Seat belt assembly, LH
8 Seat belt assembly, RH

CAUTION⚠

Do not disassemble seat belt assemblies 7, 8 because this might cause malfunction of the emergency locking reactor.

● **Installation sequence**

Follow the removal sequence in reverse.

('96 model) → *42-49*

MEMO

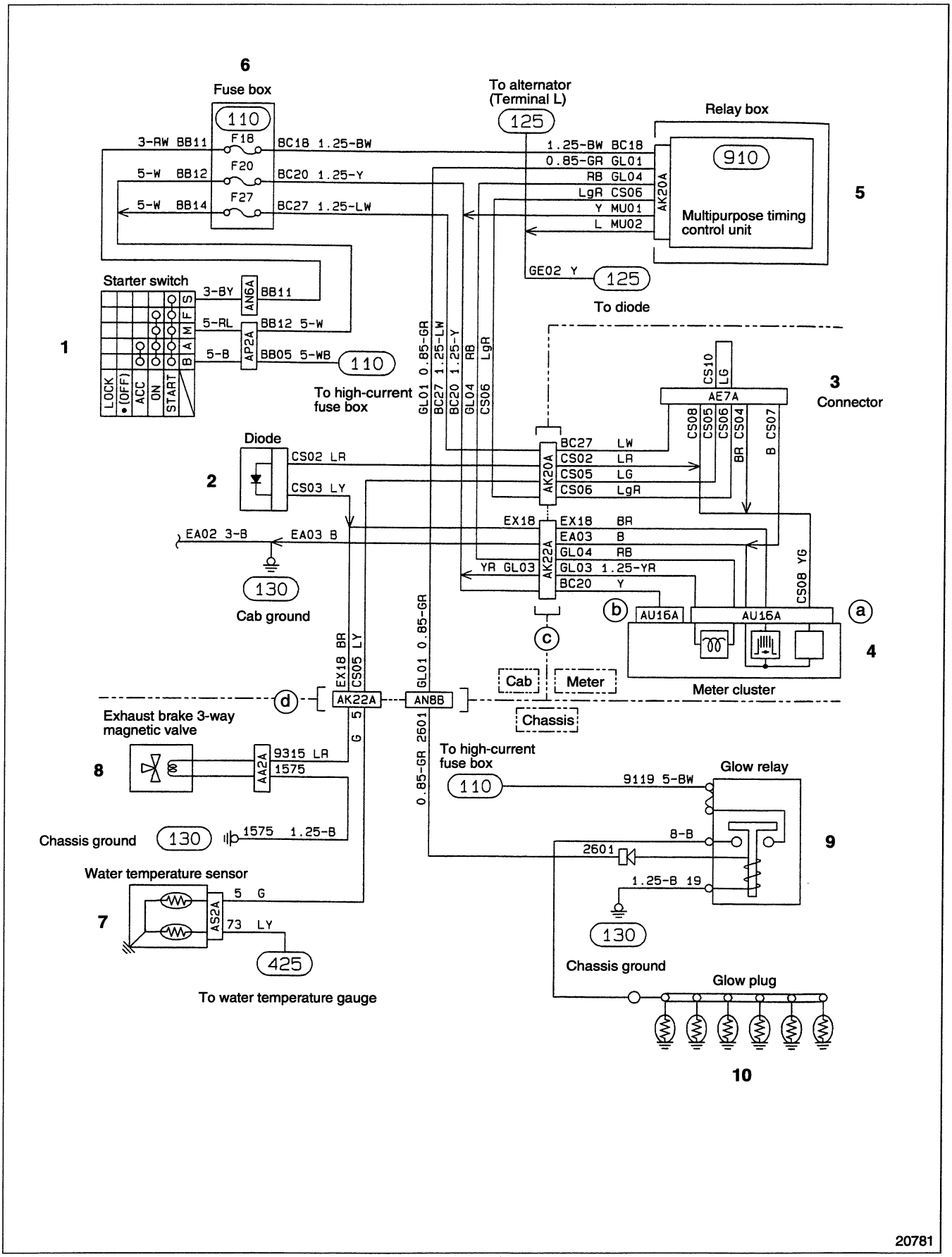
6
Fuse box
110
F18
F20
F27
3-RW BB11
BC18 1.25-BW
5-W BB12
BC20 1.25-Y
5-W BB14
BC27 1.25-LW
To alternator
(Terminal L)
125
Relay box
910
Multipurpose timing control unit
AK20A
1.25-BW BC18
0.85-GR GL01
RB GL04
LgR CS06
Y MU01
L MU02
5
GE02 Y
125
To diode
Starter switch
3-BY
AN6A
BB11
5-RL
BB12 5-W
5-B
AP2A
BB05 5-WB
110
To high-current fuse box
LOCK
• (OFF)
ACC
ON
START
B
A
M
F
S
1
GL01 0.85-GR
BC27 1.25-LW
BC20 1.25-Y
GL04 RB
CS06 LgR
CS10
LG
AE7A
3
Connector
CS08
CS05
CS06
BR CS04
B CS07
Diode
2
CS02 LR
CS03 LY
BC27 LW
CS02 LR
CS05 LG
CS06 LgR
AK20A
EX18
EX18 BR
EA03 B
GL04 RB
GL03 1.25-YR
BC20 Y
AK22A
EA02 3-B
EA03 B
YR GL03
130
Cab ground
CS08 YG
b
AU16A
AU16A
a
4
Meter cluster
c
Cab
Meter
Chassis
d
EX18 BR
CS05 LY
AK22A
AN8B
GL01 0.85-GR
Exhaust brake 3-way magnetic valve
8
9315 LR
1575
AA2A
G 5
0.85-GR 2601
To high-current fuse box
110
9119 5-BW
Glow relay
8-B
2601
1.25-B 19
9
Chassis ground
130
1575 1.25-B
Water temperature sensor
7
5 G
73 LY
AS2A
425
To water temperature gauge
130
Chassis ground
Glow plug
10
20781

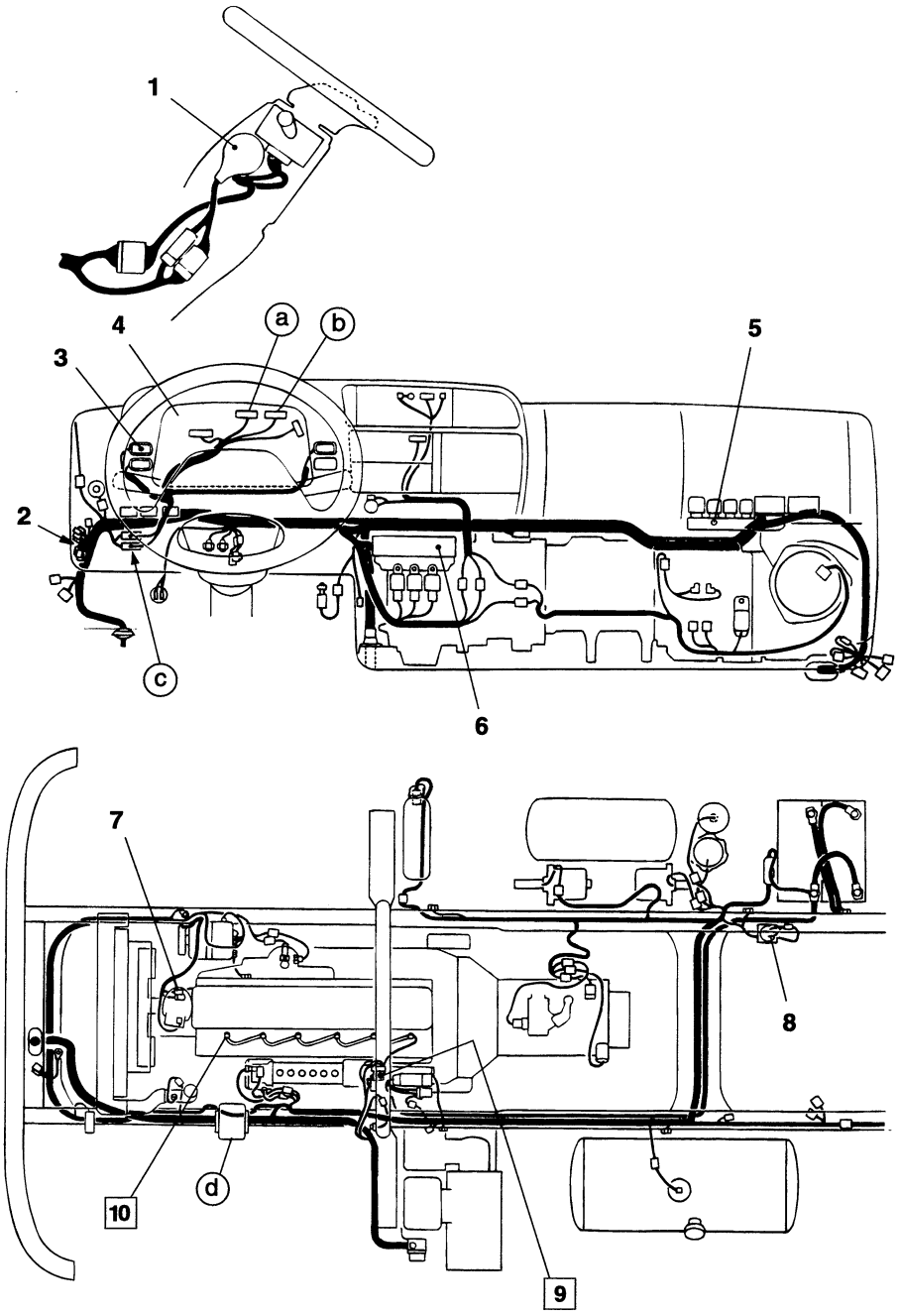

1 Starter switch 📖 (210)
2 Diode
3 Connector
4 Meter cluster 📖 (401)
5 Relay box 📖 (604)
6 Fuse box 📖 (104)
7 Water temperature sensor 📖 (801)
8 Exhaust brake 3-way magnetic valve 📖 (701)
9 Glow relay
10 Glow plug

('96 model) → *54-2-45*

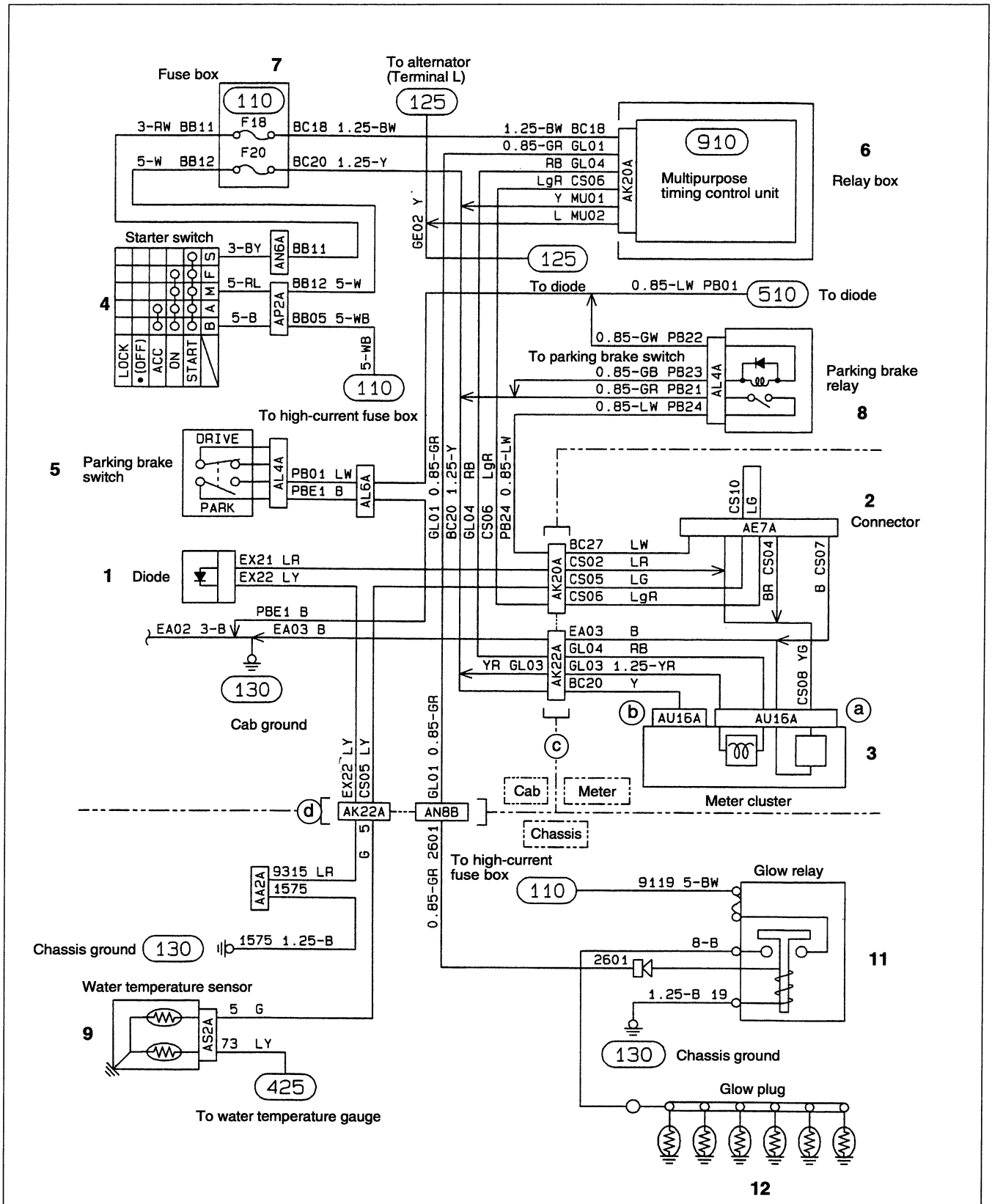
Fuse box
7
110
F18
F20
3-RW BB11
5-W BB12
BC18 1.25-BW
BC20 1.25-Y
To alternator (Terminal L)
125
1.25-BW BC18
0.85-GR GL01
RB GL04
LgR CS06
Y MU01
L MU02
AK20A
910
Multipurpose timing control unit
6
Relay box
GE02 Y
Starter switch
4
LOCK
(OFF)
ACC
ON
START
B A M F S
3-BY
5-RL
5-B
AN6A
AP2A
BB11
BB12 5-W
BB05 5-WB
5-WB
110
To high-current fuse box
125
To diode
0.85-LW PB01
510
To diode
0.85-GW PB22
To parking brake switch
0.85-GB PB23
0.85-GR PB21
0.85-LW PB24
AL4A
Parking brake relay
8
5
Parking brake switch
DRIVE
PARK
PB01 LW
PBE1 B
AL6A
GL01 0.85-GR
BC20 1.25-Y
GL04 RB
CS06 LgR
PB24 0.85-LW
CS10 LG
AE7A
2
Connector
1
Diode
EX21 LR
EX22 LY
BC27 LW
CS02 LR
CS05 LG
CS06 LgR
AK20A
BR CS04
B CS07
PBE1 B
EA02 3-B
EA03 B
EA03 B
GL04 RB
YR GL03
GL03 1.25-YR
BC20 Y
AK22A
CS08 YG
130
Cab ground
b
AU16A
AU16A
a
c
3
Meter cluster
EX22 LY
CS05 LY
GL01 0.85-GR
d
AK22A
AN8B
Cab
Meter
Chassis
G 5
To high-current fuse box
0.85-GR 2601
110
9119 5-BW
Glow relay
AA2A
9315 LR
1575
Chassis ground
130
1575 1.25-B
8-B
2601
11
1.25-B 19
130
Chassis ground
Water temperature sensor
9
AS2A
5 G
73 LY
425
To water temperature gauge
Glow plug
12
20782

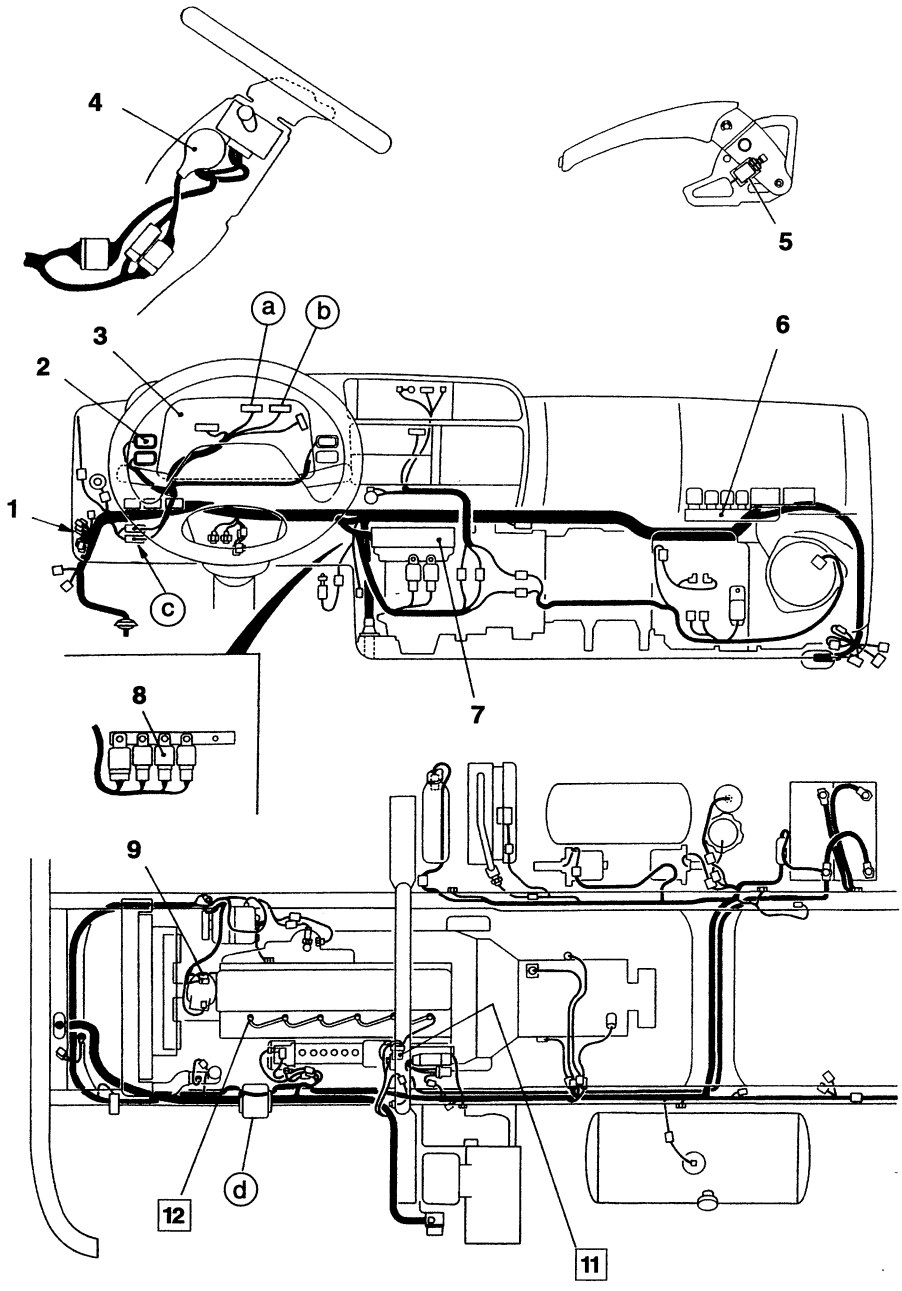

1 Diode
2 Connector
3 Meter cluster 🕮 (401)
4 Starter switch 🕮 (210)
5 Parking brake switch 🕮 (510)
6 Relay box 🕮 (604)
7 Fuse box 🕮 (104)
8 Parking brake relay 🕮 (604)
9 Water temperature sensor 🕮 (801)
11 Glow relay
12 Glow plug

('96 model) → *54-2-49*

MITSUBISHI
FUSO

FH

Service Manual

Group 00
General

Table of Contents

BACK

HOME

MITSUBISHI FUSO TRUCK OF AMERICA, Inc.

Pub No. TWME9502-00

GROUP 00 GENERAL

MODEL CODING SYSTEM 2
POWER TRAIN TABLE 3
CHASSIS NUMBER AND ENGINE NUMBER 3
POWER TRAIN LABEL 4
VEHICLE IDENTIFICATION NUMBER 4
PRECAUTIONS FOR MAINTENANCE OPERATION 6
TABLE OF STANDARD TIGHTENING TORQUES 18
CONNECTOR CONFIGURATION CHART 22

MODEL CODING SYSTEM

Equipment Model Code

Equipment name	Model description	Code description
Engine	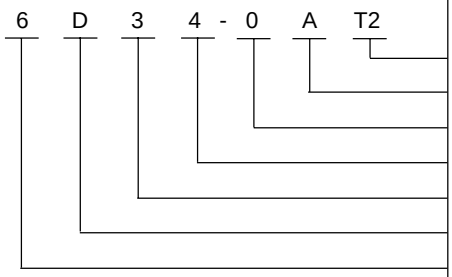	With turbocharger Stands for automobile } These are omitted in the Remodeling sequence } Service Manual Version number Series number Stands for diesel engine No. of cylinders (6 : Six cylinders)
Clutch	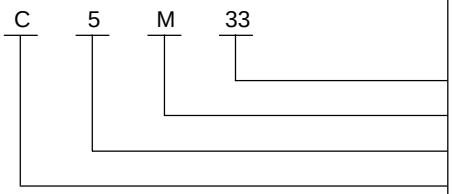	Disc outer diameter Facing material (M : Cera-metallic) Loading capacity of major type (tonnage) Stands for clutch
Transmission	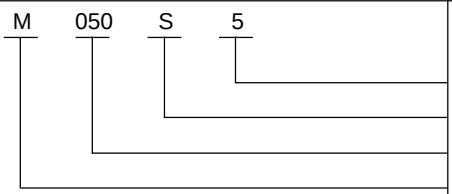	No. of forward speeds Meshing (S : Synchromesh, A : Automatic) Loading capacity of major type (tonnage) Stands for transmission
Propeller shaft	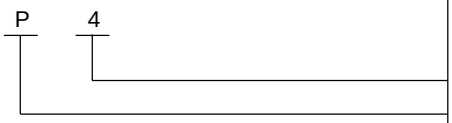	Loading capacity of major type (tonnage) Stands for propeller shaft
Reduction and differential	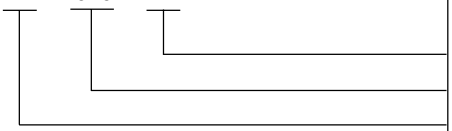	Teeth shape (H : hypoid gear) Loading capacity of major type (tonnage) Stands for reduction and differential

POWER TRAIN TABLE

Model	Engine model	Clutch model	Transmission model	Propeller shaft	Rear axle model	Final reduction and gear ratio
FH211C, E, G, H, J G.V.W. 8160 kg {17995 lb}	6D34T2 175 HP/2900 rpm 325 lbf.ft/2000 rpm (SAE, Gross)	C5M33	M050S5 6.875/1.000	P4	R040T	D040H 4.111
		Torque converter (TC290-1.72)	M4A4 (Allison AT542) 3.454/1.000			

CHASSIS NUMBER AND ENGINE NUMBER

The serial numbers for chassis and engines are assigned to the respective vehicles and engines in manufacturing sequence: every vehicle and engine has its own numbers. These numbers are required for registration and incidental inspection of the vehicle. Please do not fail to mention these numbers to the dealers when ordering spare parts.

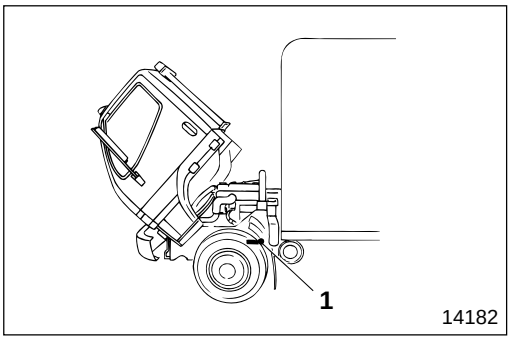

Chassis number

Chassis number **1** is punch-marked on the frame by the left-side front wheel.

Example : FH211C–□□□□□□

Vehicle model

Chassis number

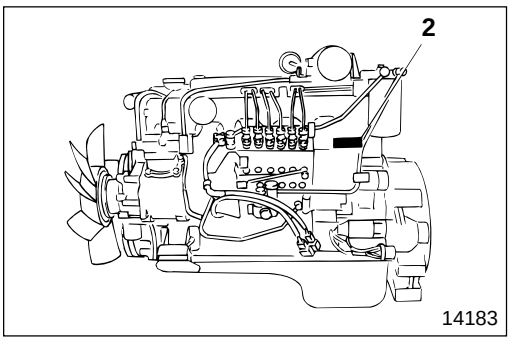

Engine number

Engine number **2** is punch-marked on the left of the crankcase.

Example : 6D34–□□□□□□

Engine number

Engine model

POWER TRAIN LABEL/VEHICLE IDENTIFICATION NUMBER

POWER TRAIN LABEL

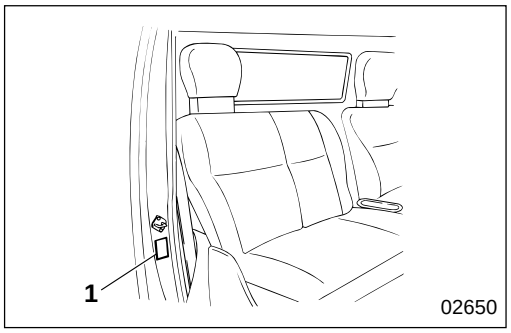

Power train label **1** located in the position illustrated indicates the vehicle model, chassis number and information relevant to the vehicle's power transmission components.

VEHICLE IDENTIFICATION NUMBER

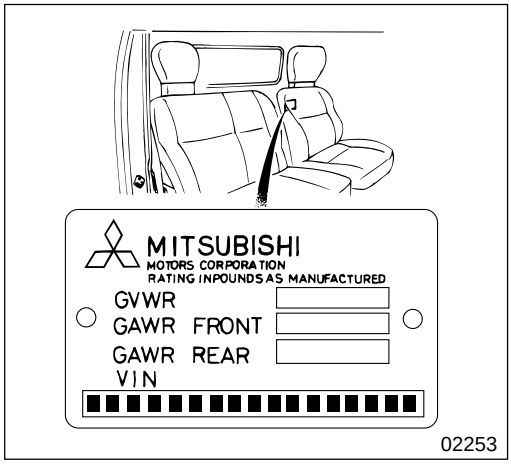

The vehicle identification number is punch-marked on the plate, which is attached in the position as illustrated.
The vehicle identification number consists of a 17-digit set of alphanumeric characters. Each digit represents the following specifications.

J W 6 C C C 1 G □ T L □ □ □ □ □ □

① ② ③ ④ ⑤ ⑥ ⑦ ⑧ ⑨ ⑩ ⑪ ⑫

①	Country	J :	Japan
②	Make	W :	Mitsubishi Fuso
③	Vehicle type	6 :	Incomplete Vehicle
④	Gross vehicle weight/Brake system	C :	7258 to 8845 kg {16001 to 19500 lbs} /Air over hydraulic
⑤	Line	C :	FH211
⑥	Series (Wheelbase)	C :	2.6 to 2.9 m {8.6 to 9.5 ft.}
		E :	3.2 to 3.5 m {10.5 to 11.5 ft.}
		G :	3.8 to 4.1 m {12.5 to 13.4 ft.}
		H :	4.1 to 4.4 m {13.5 to 14.4 ft.}
		J :	4.4 to 4.7 m {14.5 to 15.4 ft.}
⑦	Cab chassis type	1 :	Chassis cab
⑧	Engine	G :	358 CID Diesel turbocharged and charge air cooled
⑨	Check digit		
⑩	Model year	T :	1996
⑪	Plant	L :	Kawasaki-2
⑫	Plant sequential number		

M E M O

PRECAUTIONS FOR MAINTENANCE OPERATION

In order to determine the condition of the vehicle adequately, attend the vehicle beforehand to find and keep record of the accumulated mileage, operating condition, what the customer's demand is, and other information that may be necessary. Prepare the steps to be taken and perform efficient and wasteless maintenance procedure.

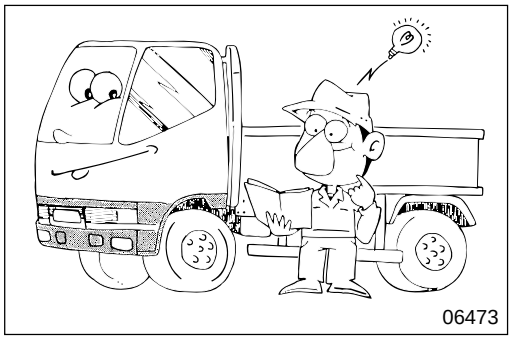
06473

Determine where the fault exists and check for the cause to see whether removal or disassembly of the part is necessary. Then follow the procedure specified by this manual.

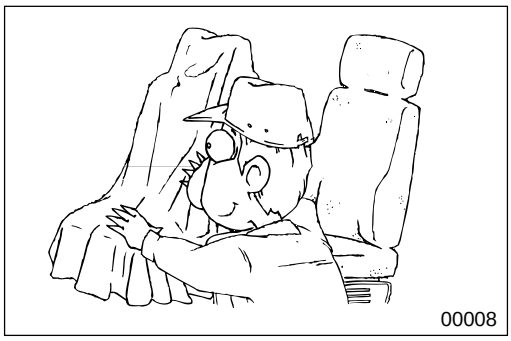
00008

Perform maintenance work at a level area.
Prepare the following.
- To prevent the seats, upholstery, floor and bodywork from being spoiled or scratched, cover with workshop sheet cover(s).

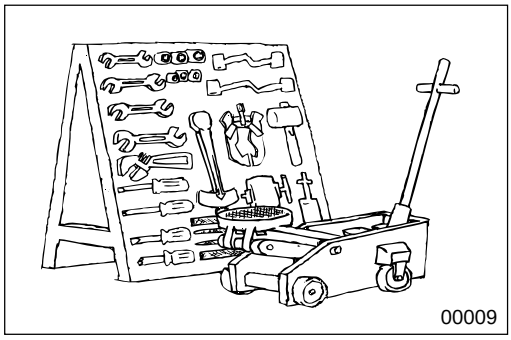
00009

- Prepare general and special tools necessary for the maintenance work.

WARNING⚠

Do not attempt to use tools other than special tools where use of special tools is specified in this manual. This will avoid injury or damage.

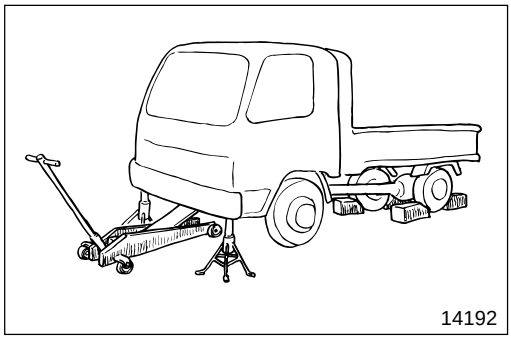
14192

When jacking up the vehicle to work under the vehicle, carry out the following preparatory work:
- Chock the wheels on both sides.
- Jack up the vehicle using a garage jack.
- Support the frame on rigid racks.

WARNING⚠

- **Chock the wheels securely so the vehicle does not move.**
- **Do not remove the chocks until the entire operation is completed.**
- **Supporting a vehicle on a garage jack only is extremely dangerous, so always support the frame on rigid racks.**
- **Leave the garage jack and rigid racks in place until the entire operation is completed. Never remove them during the operation.**

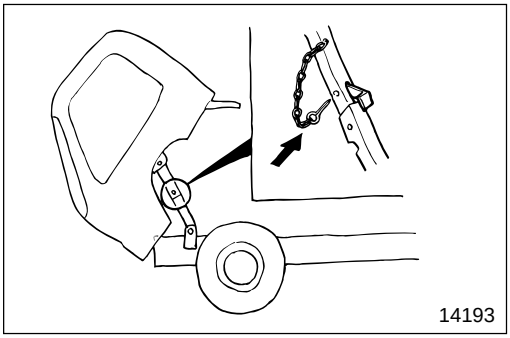

When tilting the cab, be sure to insert the safety pin into the cab stay so that the cab stay remains locked and is not released when the cab is tilted.

Pay special attention to safety when removing or installing heavy items such as engines, transmissions and axles.

When lifting up heavy items using cables, pay special attention to the following points:

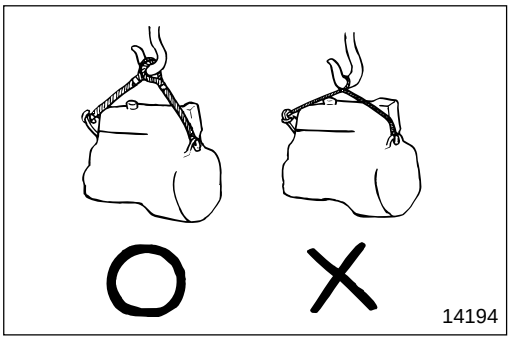

- Check the mass of the item to be lifted and use a cable capable of lifting that mass.

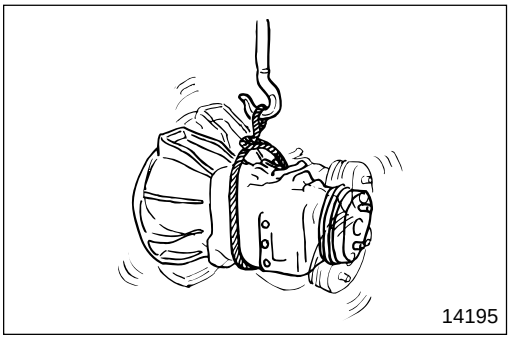

- If you do not have the specified lifting hanger, secure the item using cable taking the point-of-balance of the item into consideration.

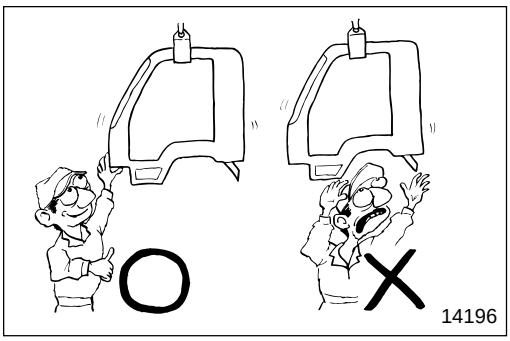

- You must work in a position where you will not be injured even if the cable comes undone and the lifted item falls.

PRECAUTIONS FOR MAINTENANCE OPERATION

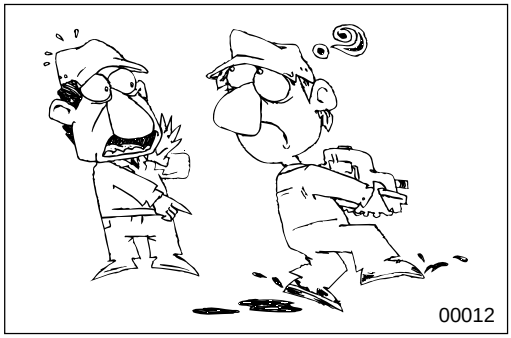

Be particularly careful not to work in shoes that have oily soles and are slippery. When working as a team of two or more, arrange signals in advance and keep confirming safety. Be careful not to accidentally bump switches or levers.

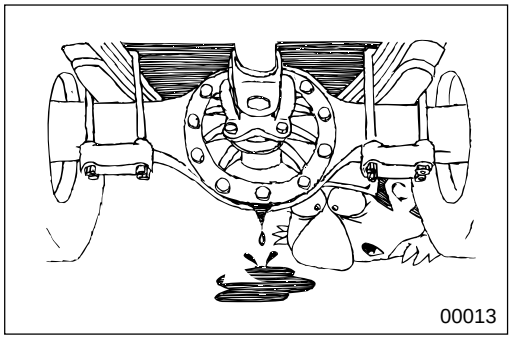

Check for oil leakage before cleaning the area having the fault otherwise you might miss detecting the leakage.

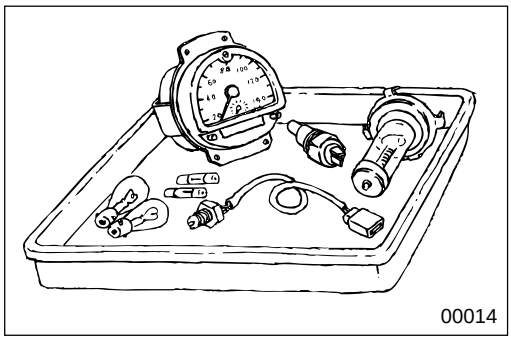

Prepare replacement part(s) beforehand.

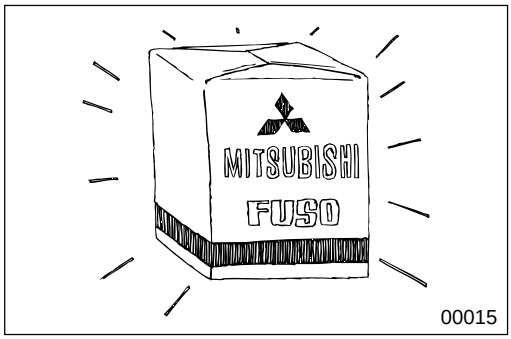

Replace oil seals, packing, O-rings and other rubber parts; gaskets and split pins with new parts whenever any of them has been removed. Use only genuine MITSUBISHI replacement parts.

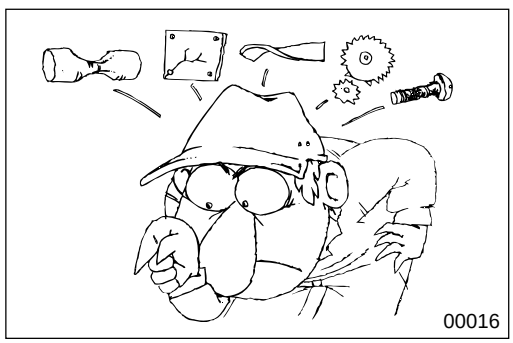

On disassembly, visually inspect all parts for wear and tear, cracks, damage, deformation, degradation, rust, corrosion, smoothness in rotation, fatigue, clogging and any other possible defect.

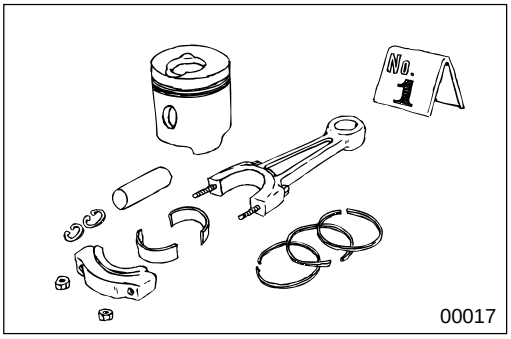

00017

Put alignment marks on part combinations before disassembly and arrange the disassembled parts neatly. This will help avoid mismating of the parts later.
Put the alignment marks, punch marks, etc. where performance and appearance will not be affected.
Cover the area left open after removal of parts to keep it free from dust.

CAUTION⚠

- **Take care to avoid mixing up numerous parts, similar parts, left and right, etc.**
- **Keep new parts for replacement and original (removed) parts separate.**

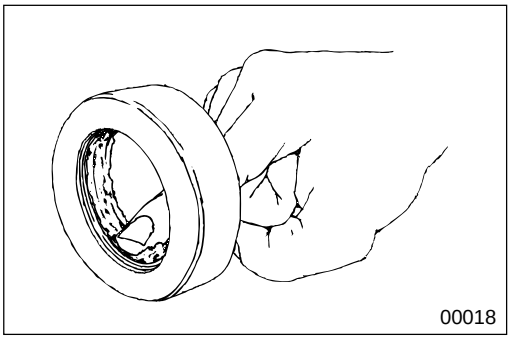
00018

Apply the specified oil or grease to U-packings, oil seals, dust seals and bearings during assembly.
Use only the specified oil, grease, etc. for lubricant, remove the excess immediately after application with a piece of waste, etc.

CAUTION⚠

When the specified lubricant, fluid and sealant is not available, you may use an equivalent.

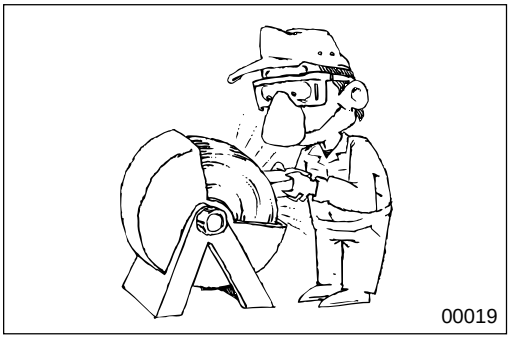
00019

Wear goggles when using a grinder or welder. Pay full attention to safety by wearing gloves when necessary. Watch out for sharp edges, etc. that might injure your hands or fingers.

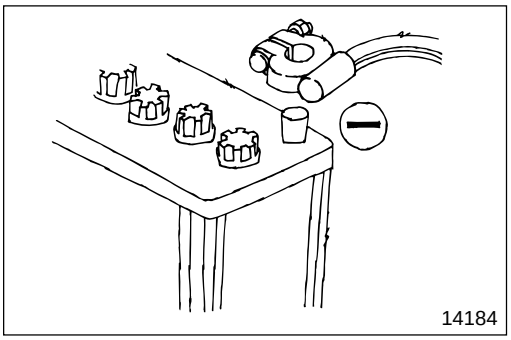
14184

Before carrying out maintenance work on the electric system, disconnect the negative terminals of the batteries to prevent them from short-circuiting and burning-out.

CAUTION⚠

Be sure to turn starter and lighting switches, etc. off before disconnecting or connecting battery terminals, because the semiconductors can be damaged.

PRECAUTIONS FOR MAINTENANCE OPERATION

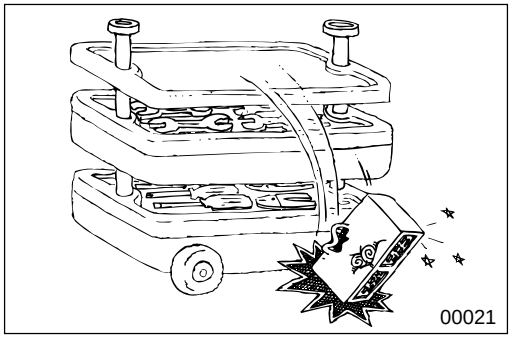

Take care when handling sensors, relays, etc. which are vulnerable to shock and heat. Do not attempt to remove the cover from, or apply paint to, the electronic control unit.

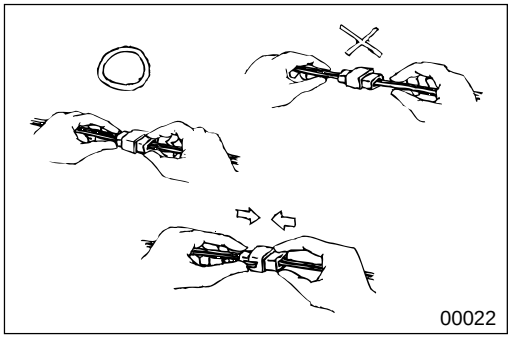

Pull the connector, and not the harness lead, to separate connectors. To separate a lock-type connector, first push toward arrow mark. To reconnect a lock-type connector, press the separated parts until they click together.

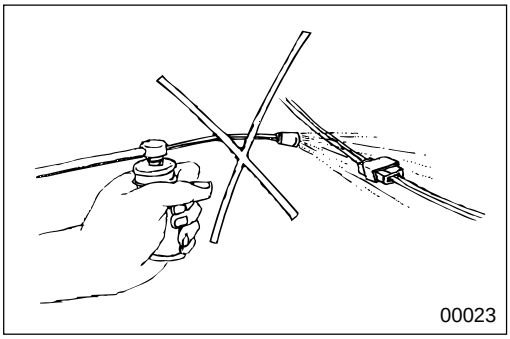

When washing the vehicle, cover the electric system parts and instruments with waterproof material beforehand (Cover with vinyl sheet or the like). Keep water away from harness wire connectors and sensors. If any of them should get wet, wipe them off immediately.

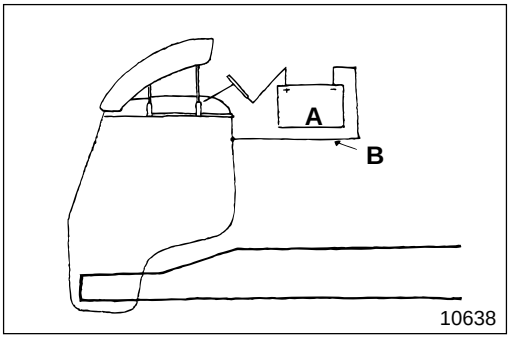

When using an electric welder, such electronic parts that are directly connected to the batteries might be damaged due to the flow of current from the welder that flows through the negative circuit. Parts that have switches might be subject to the same danger if the switches are left on. Therefore, do not fail to observe the following.

A : Welder

B : Connect the negative terminal of the welder as near as possible to the area that is to be welded.

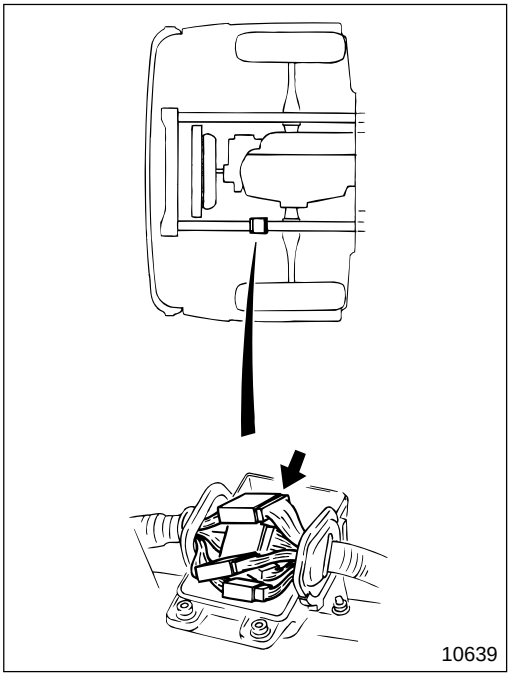
10639

- Disconnect the negative terminals of batteries.
- Disconnect connections between the cab harness wires and the chassis harness wires.

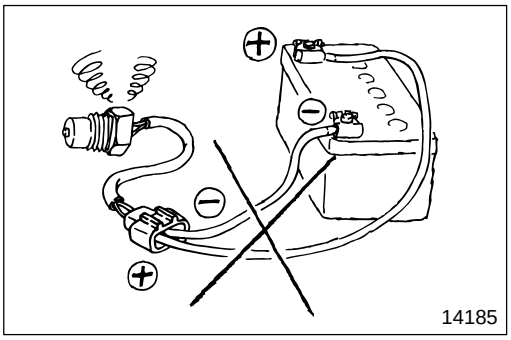
14185

To apply voltage for testing, check that the positive and negative cables are connected properly, then increase voltage gradually from 0 volt. Do not apply voltage higher than the specified value.
In particular, pay close attention to the electronic control unit and sensors, since they are not always fed the battery voltage.

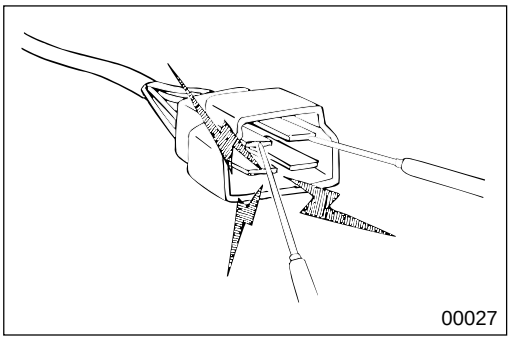
00027

When using testers or the like for continuity tests, be careful not to allow test probes to touch the wrong terminals.

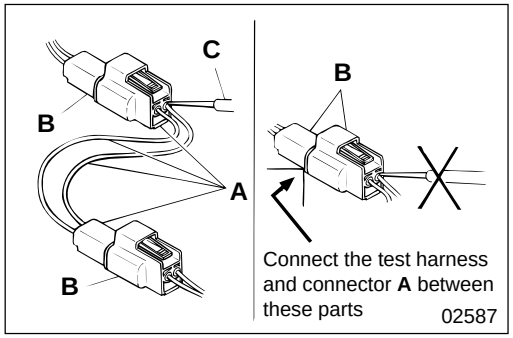

Measurement procedures using connectors

- **Test with connectors engaged (continuity through circuit obtained)**

  < Waterproof connector >

  Prepare a test harness and connectors **A**, then connect if between the two parts of harness **B** that is to be tested. Check the circuit by touching test probe **C** to the test connector.

  Never insert the test probe from the harness side of the waterproof connection, or waterproof performance might be diminished causing corrosion of the connector.

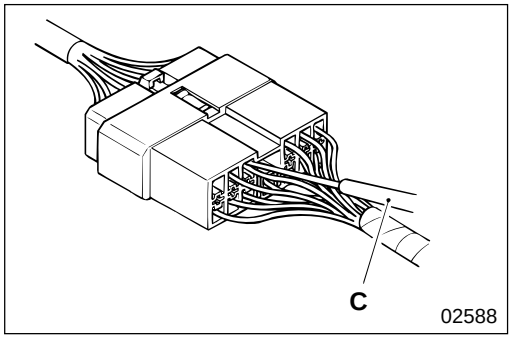

< Non-waterproof connector >

Insert test probe **C** from the harness side of the connector. Where control units, etc. have connectors that are too small to accept the test probe, do not force the test probe into them.

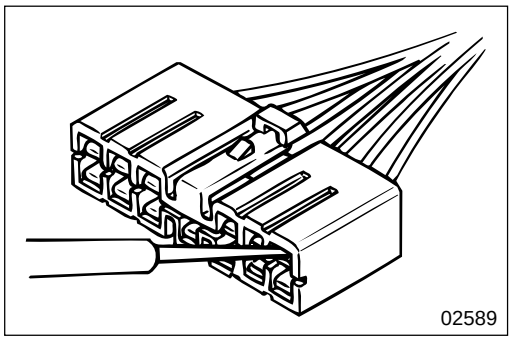

- **Test with connectors disengaged**

  Using female pins

  Insert a test probe into a terminal. However, do not force the probe into the terminal, or it will cause a poor contact.

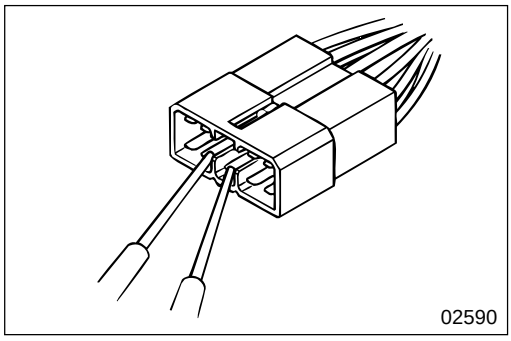

Using male pins

Touch the pins directly using test probes.

CAUTION⚠

Be sure that you do not short circuit the connector pins when you use the test probe because this could damage the internal circuit of the electronic control unit.

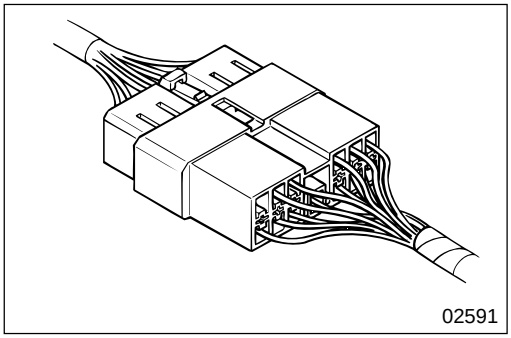

Connector inspection procedures

- **Visual inspection**

  Check for loose connection and poor engagement.

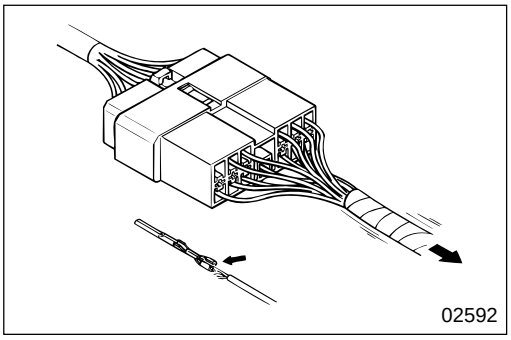

Check if harnesses are broken by pulling gently around the terminals.

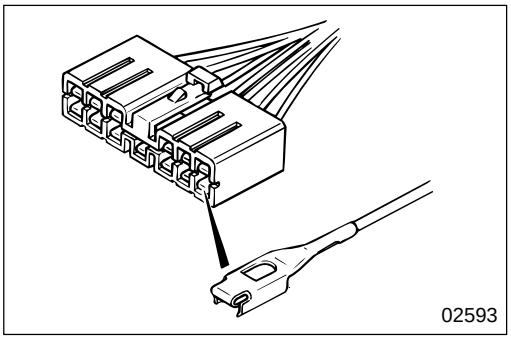

Check for a decrease in contact pressure between the male and female terminals.

Check for poor contact caused by connector pins having fallen out, rusted terminals or foreign particles.

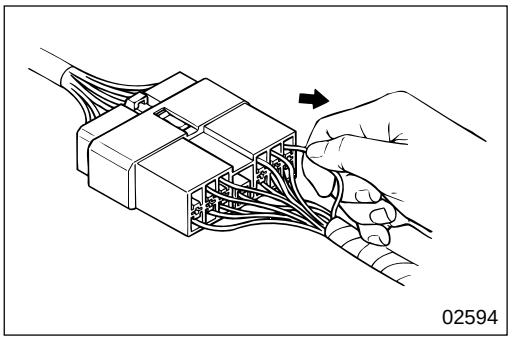

- **Connector pin fall out inspection**

  Damaged connector pin stoppers can cause poor engagement of the terminals (male and female pins) even if the connector body is secured, and might cause some pins to fall out. Check if the pins have fallen out from the connector by pulling each harness gently.

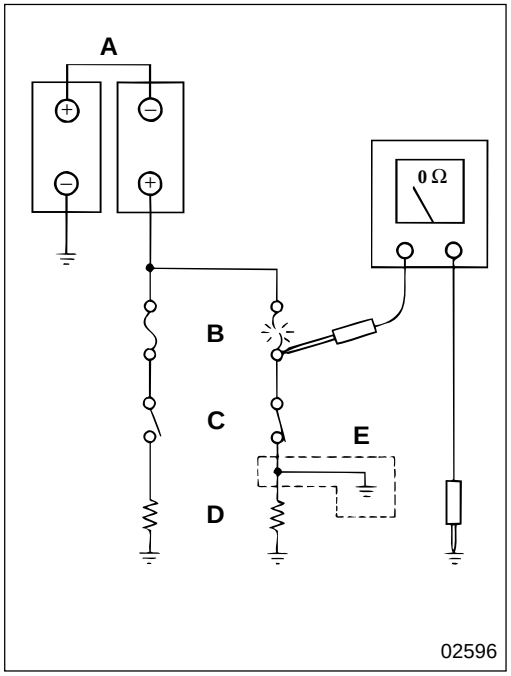

Inspection procedures for blown fuses

Remove fuse **B** and measure resistance between the loaded side of the fuse and ground.
Turn on all circuit switches (connected to the fuse). If the resistance value reading is approximately 0 Ω, a short has occurred between the switch and the loaded point. A value of other than zero may indicate that the fuse was blown by a temporary short but the short is no longer present.

The major causes of a short circuit are as follows:
- Harness stuck onto the vehicle body.
- Harness sheath damaged by friction or heat.
- Water in connectors or circuits.
- Mistakes (accidental short circuits)

  A : Battery
  B : Fuse
  C : Loaded switch
  D : Load
  E : Short circuit

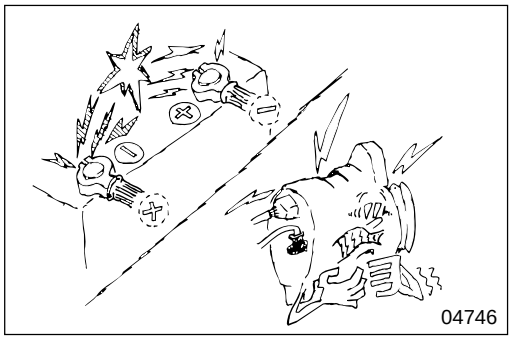

Precautions for handling alternator

When servicing the alternator, pay attention to the following :
- Do not connect the alternator with battery polarities reversed.
  If the alternator is connected with reversed polarities, a large current flow from the battery to the alternator occurs, and the diode or regulator might be damaged.

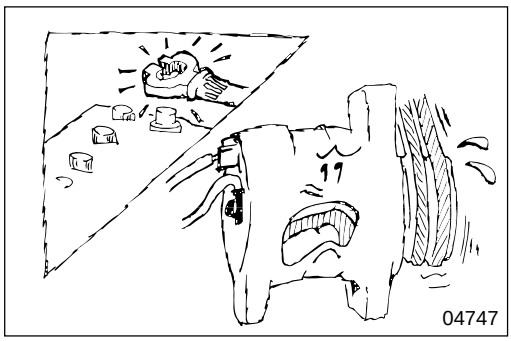

- While the engine is running, do not remove the battery terminals. If the battery terminals are removed at that time, a surge voltage is generated and the diode or regulator might be weakened.

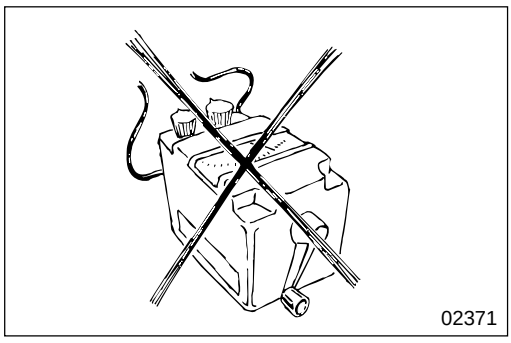

- Do not use a high-voltage tester such as a megger for inspection.
  If a high-voltage tester is used, the diode or regulator might be destroyed.

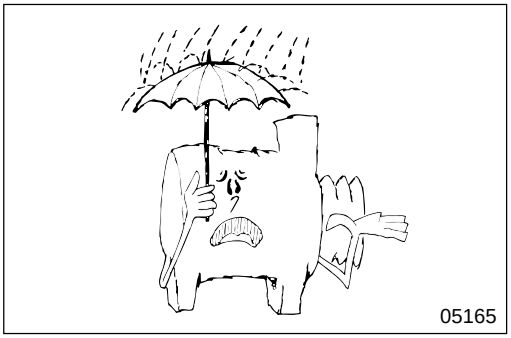

- Do not splash water over the alternator.
  If water is directly splashed over the alternator, individual components will be short-circuited and might be destroyed.

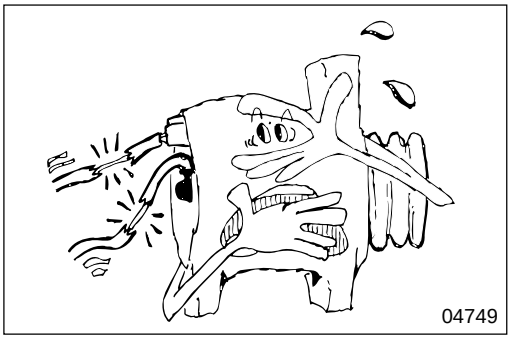

- Do not short-circuit terminal B and terminal L while running the alternator.
  If the terminals are short-circuited while the alternator is running, the diode trio might be destroyed.

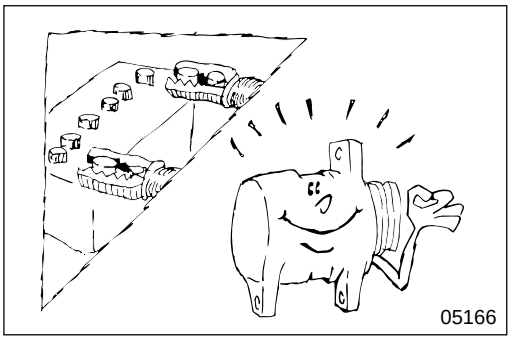

- Disconnect the battery terminals before quick-charging the battery. Quick-charging without disconnecting the battery terminals might damage the diode or regulator.

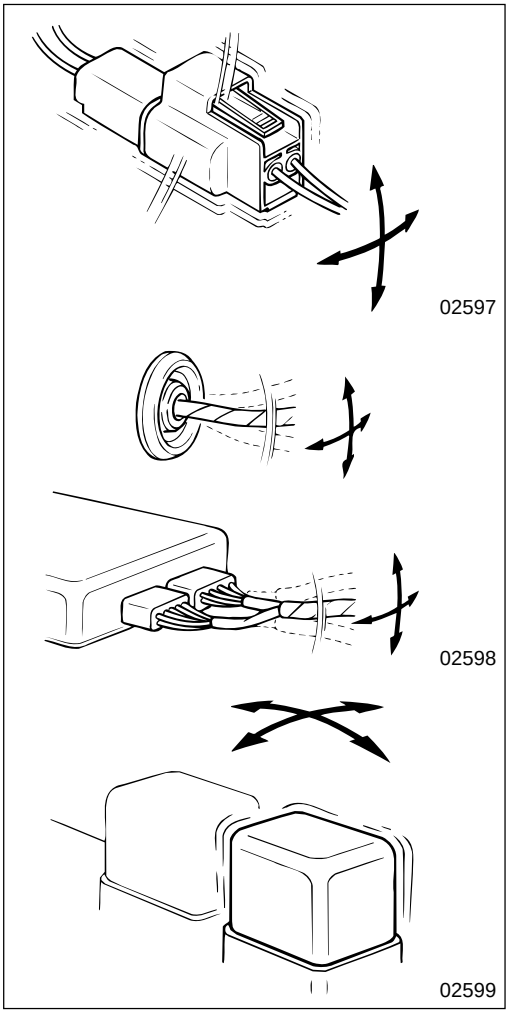

Measures for temporary faults

Temporary faults often occur under certain conditions. So identifying those conditions helps to find possible causes. To find the conditions under which temporary faults occurred, you need to reproduce the faults after interviewing customers in detail about actual driving conditions, weather, frequency of occurence and fault phenomena.
Then determine if the faults were caused by vibration, temperature or other possible elements depending on the actual conditions identified.
If vibration is suspected as a possible cause, inspect individual connectors as follows to check if the fault will occur:

- Shake the connector gently in all four directions of the arrows as illustrated.
- Shake the wiring harness gently in all four directions of the arrows as illustrated.
- Wiggle each sensor or piece of equipment by hand.
- Gently shake the wiring harnesses near movable parts such as suspensions.

The inspection subjects include possible causes related to the diagnosis code outputs and faults, as well as the connectors and other parts in the inspection procedure.

M E M O

TABLE OF STANDARD TIGHTENING TORQUES

- Use specified bolts and nuts and tighten them at specified torques according to the following table, unless otherwise specified.
- Threads and contact seats shall be dry.
- Where there is a difference in strength classification between the nut and bolt (or stud bolt), the torque specified for the bolt shall apply.

Hex-head Bolt and Stud Bolt

Unit : N·m {lbf.ft, kgf·m}

Strength classification	4 T		7 T		8 T	
Repre-sentation / Diameter symbol	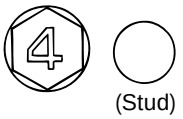 (Stud)		 (Stud)		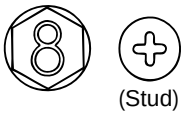 (Stud)	
M 5	2 to 3 {1.4 to 2.2, 0.2 to 0.3}	—	4 to 6 {2.9 to 4.3, 0.4 to 0.6}	—	5 to 7 {3.6 to 5.1, 0.5 to 0.7}	—
M 6	4 to 6 {2.9 to 4.3, 0.4 to 0.6}	—	7 to 11 {5.1 to 8.0, 0.7 to 1.1}	—	8 to 12 {5.8 to 8.7, 0.8 to 1.2}	—
M 8	9 to 14 {6.5 to 10, 0.9 to 1.4}	—	17 to 26 {12 to 19, 1.7 to 2.6}	—	20 to 29 {14 to 22, 2.0 to 3.0}	—
M 10	19 to 28 {14 to 20, 1.9 to 2.8}	18 to 26 {13 to 20, 1.8 to 2.7}	36 to 52 {25 to 40, 3.5 to 5.5}	33 to 49 {25 to 36, 3.5 to 5.0}	45 to 60 {33 to 43, 4.5 to 6.0}	41 to 59 {31 to 50, 4.3 to 6.9}
M 12	35 to 50 {25 to 36, 3.4 to 5.0}	31 to 46 {22 to 34, 3.1 to 4.7}	70 to 95 {51 to 69, 7.0 to 9.5}	65 to 85 {47 to 61, 6.5 to 8.5}	85 to 110 {61 to 80, 8.5 to 11}	75 to 100 {54 to 72, 7.5 to 10}
M 14	60 to 85 {43 to 61, 6.0 to 8.5}	55 to 75 {40 to 54, 5.5 to 7.5}	120 to 160 {87 to 115, 12 to 16}	110 to 140 {80 to 100, 11 to 14}	130 to 180 {94 to 130, 13 to 18}	120 to 160 {87 to 120, 12 to 17}
M 16	90 to 130 {69 to 94, 9.5 to 13}	90 to 120 {65 to 87, 9.0 to 12}	180 to 240 {130 to 175, 18 to 24}	160 to 220 {115 to 160, 16 to 22}	200 to 270 {145 to 195, 20 to 27}	190 to 260 {135 to 190, 19 to 26}
M 18	140 to 190 {100 to 135, 14 to 19}	120 to 160 {87 to 115, 12 to 16}	260 to 340 {180 to 255, 25 to 35}	220 to 290 {160 to 215, 22 to 30}	290 to 390 {215 to 290, 30 to 40}	260 to 340 {190 to 255, 26 to 35}
M 20	190 to 260 {135 to 190, 19 to 26}	170 to 230 {120 to 165, 17 to 23}	350 to 470 {260 to 345, 36 to 48}	320 to 420 {230 to 310, 32 to 43}	410 to 550 {295 to 405, 41 to 56}	370 to 490 {265 to 360, 37 to 50}
M 22	260 to 340 {190 to 255, 26 to 35}	230 to 300 {165 to 225, 23 to 31}	470 to 640 {345 to 470, 48 to 65}	430 to 570 {310 to 420, 43 to 58}	550 to 740 {405 to 540, 56 to 75}	490 to 670 {360 to 490, 50 to 68}
M 24	340 to 450 {255 to 330, 34 to 46}	290 to 390 {210 to 290, 29 to 40}	630 to 840 {455 to 620, 63 to 86}	540 to 730 {395 to 535, 55 to 74}	730 to 980 {535 to 725, 74 to 100}	630 to 840 {460 to 620, 64 to 86}

Hex-head Flange Bolt

Unit : N·m {lbf.ft, kgf·m}

Strength classification	4 T		7 T		8 T	
Repre-sentation / Diameter symbol						
M 6	4 to 6 {2.9 to 4.3, 0.4 to 0.6}	—	8 to 12 {5.8 to 8.7, 0.8 to 1.2}	—	9 to 14 {6.5 to 10, 0.9 to 1.4}	—
M 8	10 to 15 {7.0 to 11, 1.0 to 1.5}	—	19 to 28 {14 to 20, 1.9 to 2.8}	—	22 to 32 {16 to 24, 2.2 to 3.3}	—
M 10	21 to 30 {15 to 22, 2.1 to 3.1}	20 to 28 {14 to 21, 1.9 to 2.9}	39 to 58 {28 to 43, 3.9 to 6.0}	37 to 53 {26 to 39, 3.6 to 5.4}	50 to 65 {36 to 47, 5.0 to 6.5}	45 to 65 {33 to 47, 4.5 to 6.5}
M 12	38 to 54 {27 to 40. 3.8 to 5.5}	35 to 51 {25 to 38, 3.4 to 5.2}	80 to 110 {58 to 80, 8.0 to 11}	70 to 95 {51 to 69, 7.0 to 9.5}	90 to 120 {65 to 87, 9.0 to 12}	85 to 110 {61 to 80, 8.5 to 11}

Hex-head Nut

Unit : N·m {lbf.ft, kgf·m}

Strength classification	4 T		6 T	
Representation / Diameter symbol			   	
	Standard screw	Coarse screw	Standard screw	Coarse screw
M 5	2 to 3 {1.4 to 2.2, 0.2 to 0.3}	—	4 to 6 {2.9 to 4.3, 0.4 to 0.6}	—
M 6	4 to 6 {2.9 to 4.3, 0.4 to 0.6}	—	7 to 11 {5.1 to 8.0, 0.7 to 1.1}	—
M 8	9 to 14 {6.5 to 10, 0.9 to 1.4}	—	17 to 26 {12 to 19, 1.7 to 2.6}	—
M 10	19 to 28 {14 to 20, 1.9 to 2.8}	18 to 26 {13 to 20, 1.8 to 2.7}	36 to 52 {25 to 40, 3.5 to 5.5}	33 to 49 {25 to 36, 3.5 to 5.0}
M 12	35 to 50 {25 to 36, 3.4 to 5.0}	31 to 46 {22 to 34, 3.1 to 4.7}	70 to 95 {51 to 69, 7.0 to 9.5}	65 to 85 {47 to 61, 6.5 to 8.5}
M 14	60 to 85 {43 to 61, 6.0 to 8.5}	55 to 75 {40 to 54, 5.5 to 7.5}	120 to 160 {87 to 115, 12 to 16}	110 to 140 {80 to 100, 11 to 14}
M 16	90 to 130 {69 to 94, 9.5 to 13}	90 to 120 {65 to 87, 9.0 to 12}	180 to 240 {130 to 175, 18 to 24}	160 to 220 {115 to 160, 16 to 22}
M 18	140 to 190 {100 to 135, 14 to 19}	120 to 160 {87 to 115, 12 to 16}	260 to 340 {180 to 255, 25 to 35}	220 to 290 {160 to 215, 22 to 30}
M 20	190 to 260 {135 to 190, 19 to 26}	170 to 230 {120 to 165, 17 to 23}	350 to 470 {260 to 345, 36 to 48}	320 to 420 {230 to 310, 32 to 43}
M 22	260 to 340 {190 to 255, 26 to 35}	230 to 300 {165 to 225, 23 to 31}	470 to 640 {345 to 470, 48 to 65}	430 to 570 {310 to 420, 43 to 58}
M 24	340 to 450 {255 to 330, 34 to 46}	290 to 390 {210 to 290, 29 to 40}	630 to 840 {455 to 620, 63 to 86}	540 to 730 {395 to 535, 55 to 74}

Hex-head Flange Nut

Unit : N·m {lbf.ft, kgf·m}

Strength classification	tion	
4 T / Representation	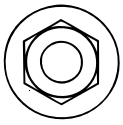	
	Standard screw	Coarse screw
M 6	4 to 6 {2.9 to 4.3, 0.4 to 0.6}	—
M 8	10 to 15 {7.0 to 11, 1.0 to 1.5}	—
M 10	21 to 30 {15 to 22, 2.1 to 3.1}	20 to 28 {14 to 21, 1.9 to 2.9}
M 12	38 to 54 {27 to 40, 3.8 to 5.5}	35 to 51 {25 to 38, 3.4 to 5.2}

TABLE OF STANDARD TIGHTENING TORQUES

Tightening torque for flair nut for general purpose

Unit : N·m {lbf.ft, kgf·m}

Pipe diameter	ø4.76 mm {0.19 in.}	ø6.35 mm {0.25 in.}	ø8 mm {0.31 in.}	ø10 mm {0.39 in.}	ø12 mm {0.47 in.}	ø15 mm {0.59 in.}
Tightening torque	17 {12, 1.7}	25 {19, 2.6}	39 {29, 4.0}	59 {43, 6.0}	88 {65, 9.0}	98 {72, 10.0}

Tightening torque for air piping nylon tube for general purpose {DIN type}

Unit : N·m {lbf.ft, kgf·m}

Standard diameter	6×1 mm {0.24×0.039 in.}	10×1.25 mm {0.39×0.049 in.}	12×1.5 mm {0.47×0.059 in.}	15×1.5 mm {0.59×0.059 in.}
Tightening torque	$20^{+5.9}_{-0}$ $\left\{14^{+4.3}_{-0},\ 2.0^{+0.6}_{-0}\right\}$	$29^{+9.8}_{-0}$ $\left\{22^{+7.2}_{-0},\ 3.0^{+1.0}_{-0}\right\}$	$49^{+9.8}_{-0}$ $\left\{36^{+7.2}_{-0},\ 5.0^{+1.0}_{-0}\right\}$	$54^{+4.9}_{-0}$ $\left\{40^{+7.2}_{-0},\ 5.5^{+1.0}_{-0}\right\}$

Tightening torque for air piping nylon tube for general purpose {SAE type}

Unit : N·m {lbf.ft, kgf·m}

Standard diameter	1/4 in.	3/8 in.	1/2 in.	5/8 in.
Tightening torque	$13^{+3.9}_{-0}$ $\left\{9.4^{+2.9}_{-0},\ 1.3^{+0.4}_{-0}\right\}$	$29^{+4.9}_{-0}$ $\left\{22^{+3.6}_{-0},\ 3.0^{+0.5}_{-0}\right\}$	$49^{+4.9}_{-0}$ $\left\{36^{+3.6}_{-0},\ 5.0^{+0.5}_{-0}\right\}$	$64^{+4.9}_{-0}$ $\left\{47^{+3.6}_{-0},\ 6.5^{+0.5}_{-0}\right\}$

M E M O

CONNECTOR CONFIGURATION CHART

Model (Number shows number of pins)		Connection
AA	AA 1 A	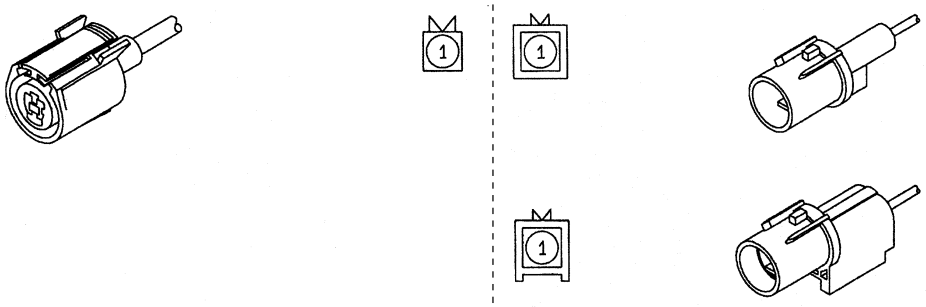
	AA 2 A	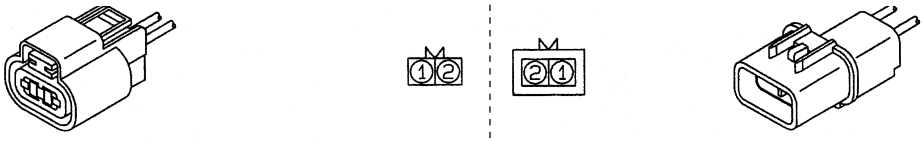
	AA 2 B	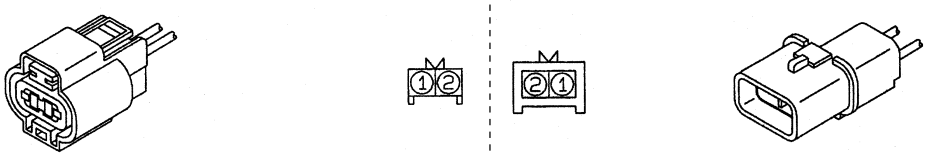
	AA 3 A	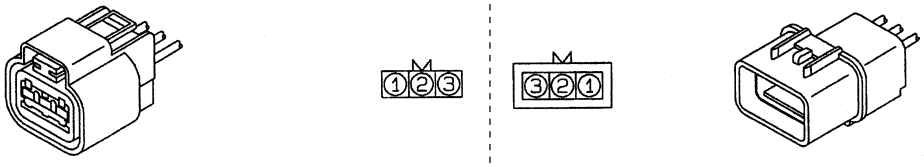
	AA 3 B	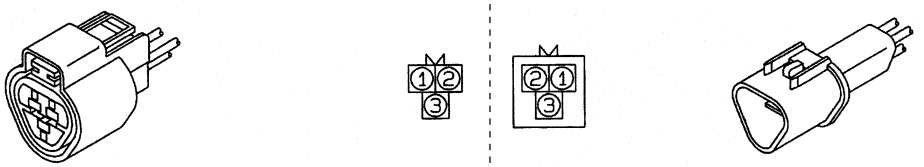
	AA 4 A	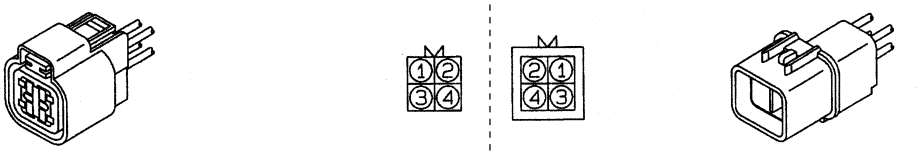
	AA 4 B	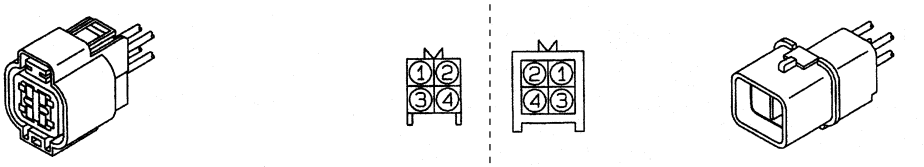
	AA 6 A	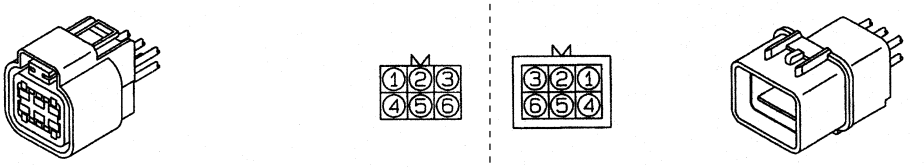

Model (Number shows number of pins)		Connection			
AA	AA 6 B	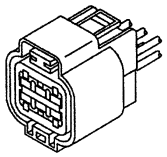		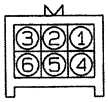	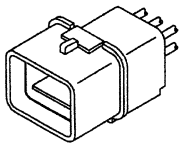
	AA 8 A	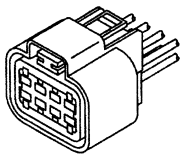	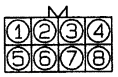	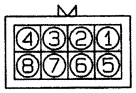	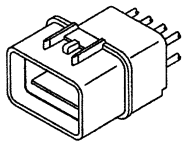
	AA10A	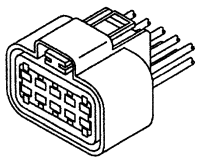	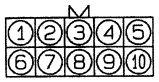	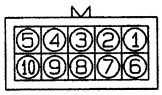	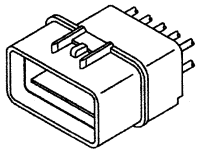
	AA12A	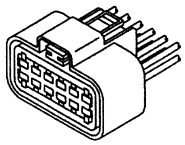	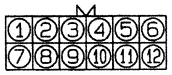	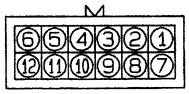	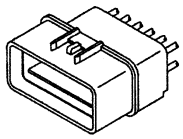
AB	AB 1 A	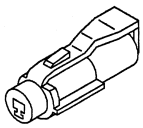			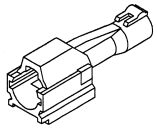
	AB 2 A	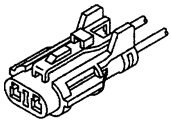	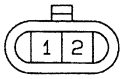	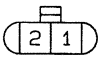	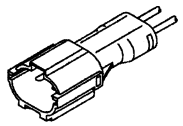
	AB 3 A	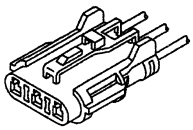	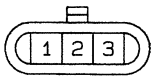	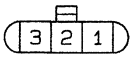	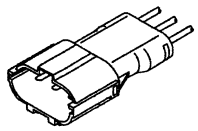
	AB 4 A	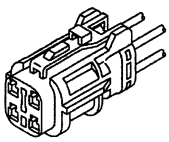	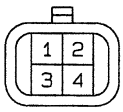	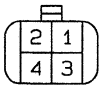	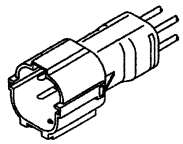
	AB 6 A	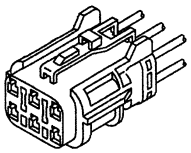	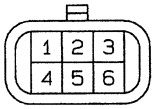	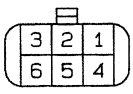	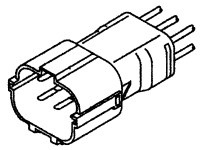

CONNECTOR CONFIGURATION CHART

Model (Number shows number of pins)		Connection			
AC	AC 1 A	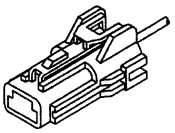			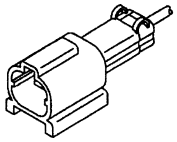
	AC 2 A	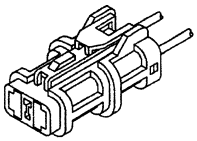			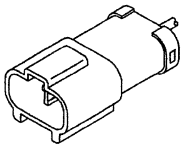
	AC 3 A	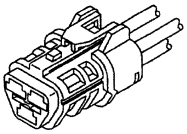		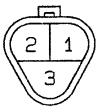	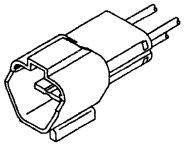
	AC 4 A	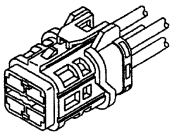	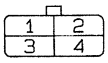	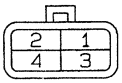	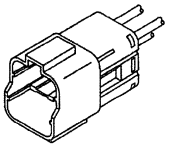
AD	AD 1 A	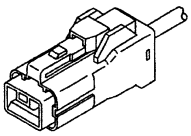			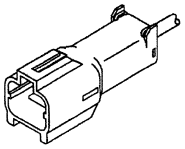
	AD 2 A	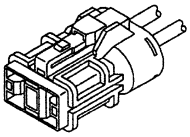	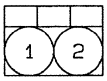	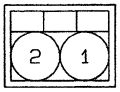	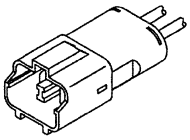
AE	AE 2 A	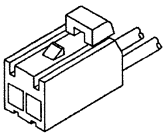			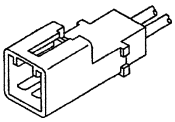
	AE 3 A	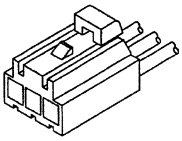	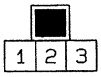	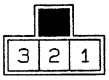	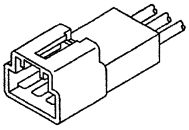
	AE 5 A	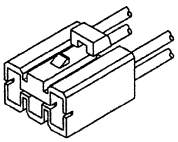	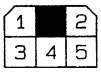	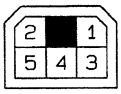	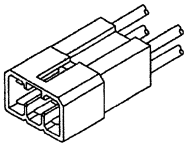

Model (Number shows number of pins)		Connection
AE	AE 7 A	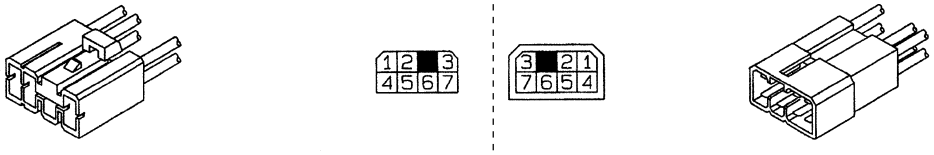
	AE 9 A	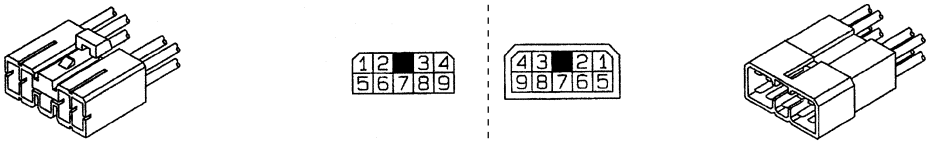
	AE11A	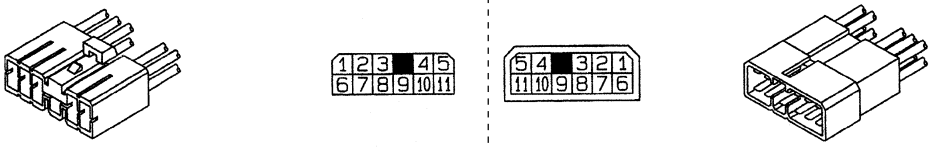
	AE13A	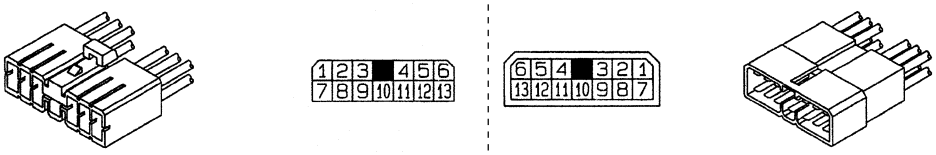
	AE15A	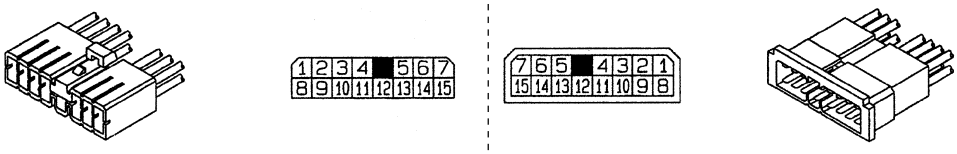
	AE16A (White, Gray, Black)	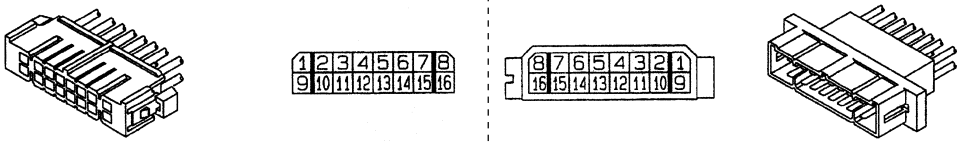
	AE16B (Green)	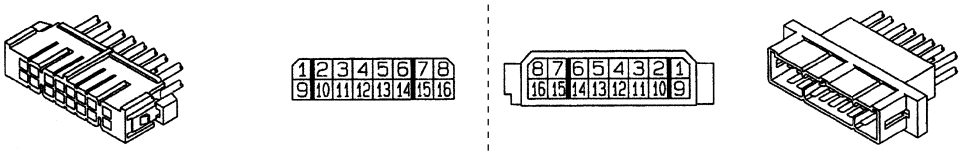
	AE16C (Blue)	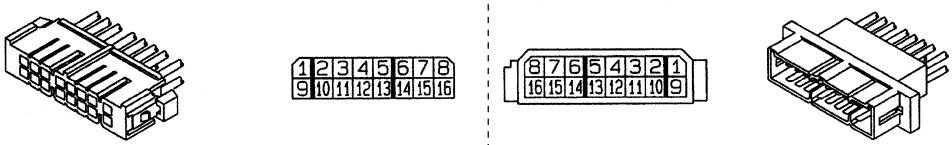
	AE17A	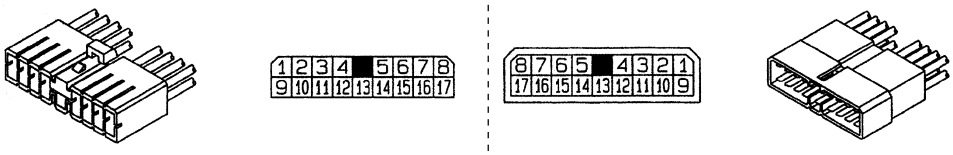

CONNECTOR CONFIGURATION CHART

Model (Number shows number of pins)		Connection
AG	AG16A	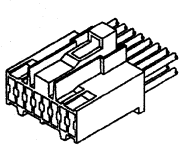 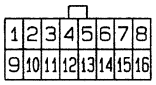
	AG20A	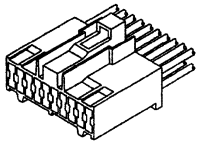 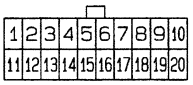
AH	AH10A	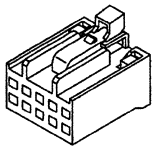 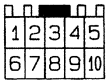 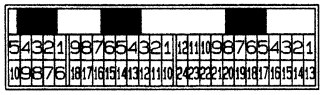 AH10A (AH18A) (AH24A) 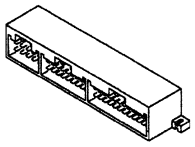
	AH12A	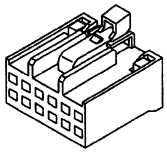 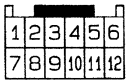 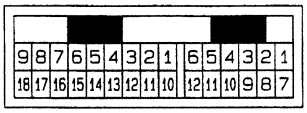 (AH18A) AH12A 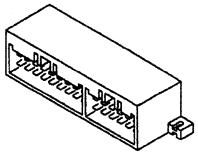
	AH18A	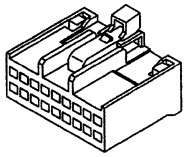 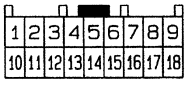 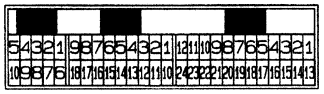 (AH10A) AH18A AH24A 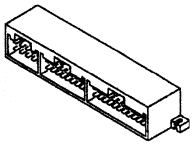

Model (Number shows number of pins)		Connection
AH	AH18B	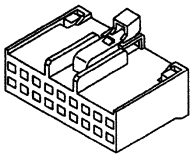 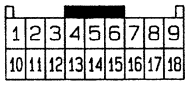 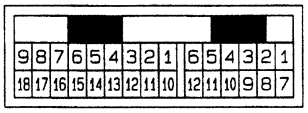 AH18A (AH12A) 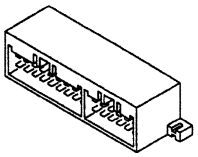
	AH22A	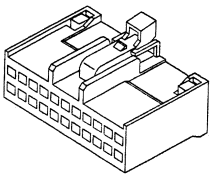 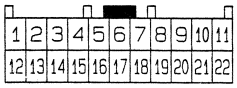 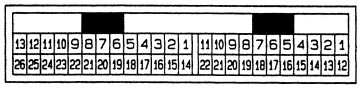 (AH26A) AH22 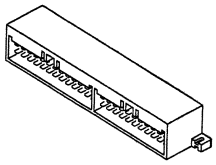
	AH24A	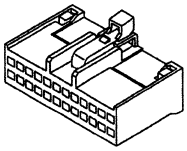 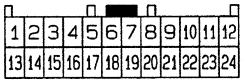 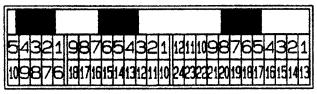 (AH10A) (AH18A) AH24A 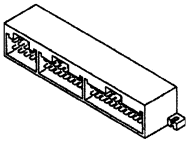
	AH26A	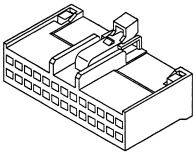 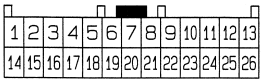 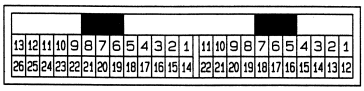 AH26A (AH22) 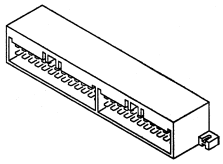

CONNECTOR CONFIGURATION CHART

Model (Number shows number of pins)		Connection
AJ	AJ 2 A	
	AJ 4 A	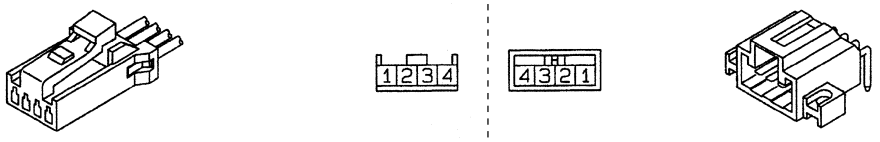
	AJ 8 A	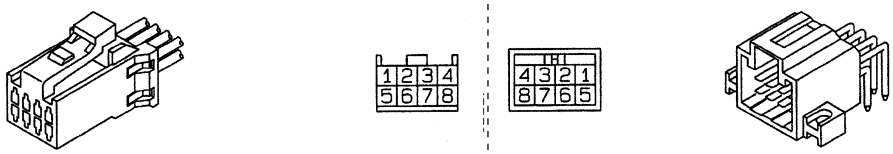
	AJ10A	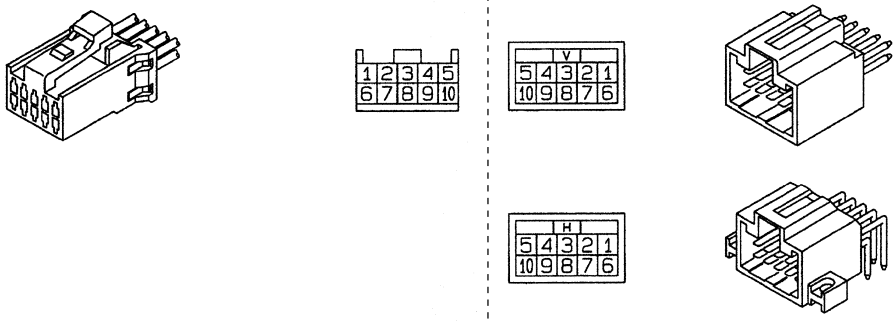
	AJ12A	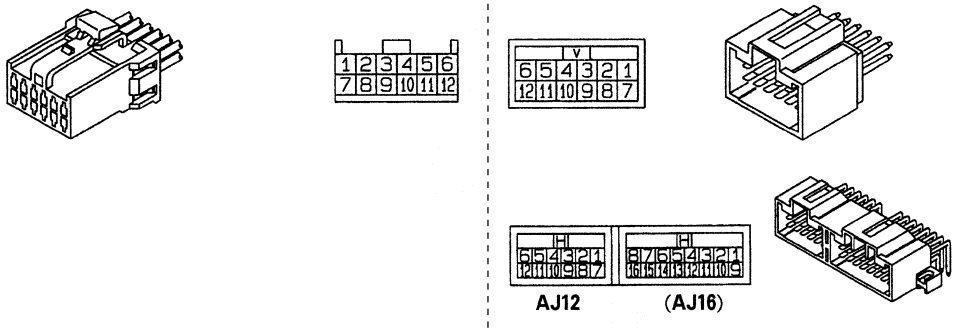

Model (Number shows number of pins)		Connection
AJ	AJ16A	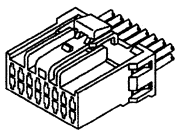 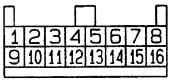 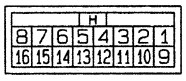 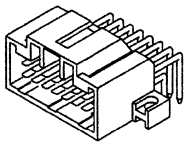 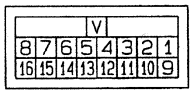 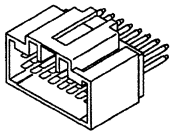 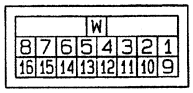 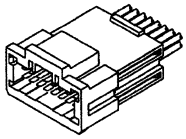 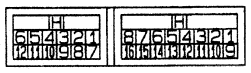 (AJ12A) AJ16A 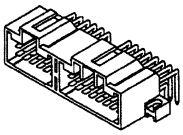 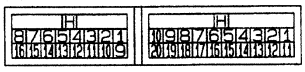 AJ16A (AJ20A) 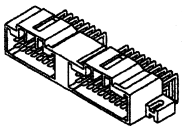

CONNECTOR CONFIGURATION CHART

Model (Number shows number of pins)		Connection
AJ	AJ20A	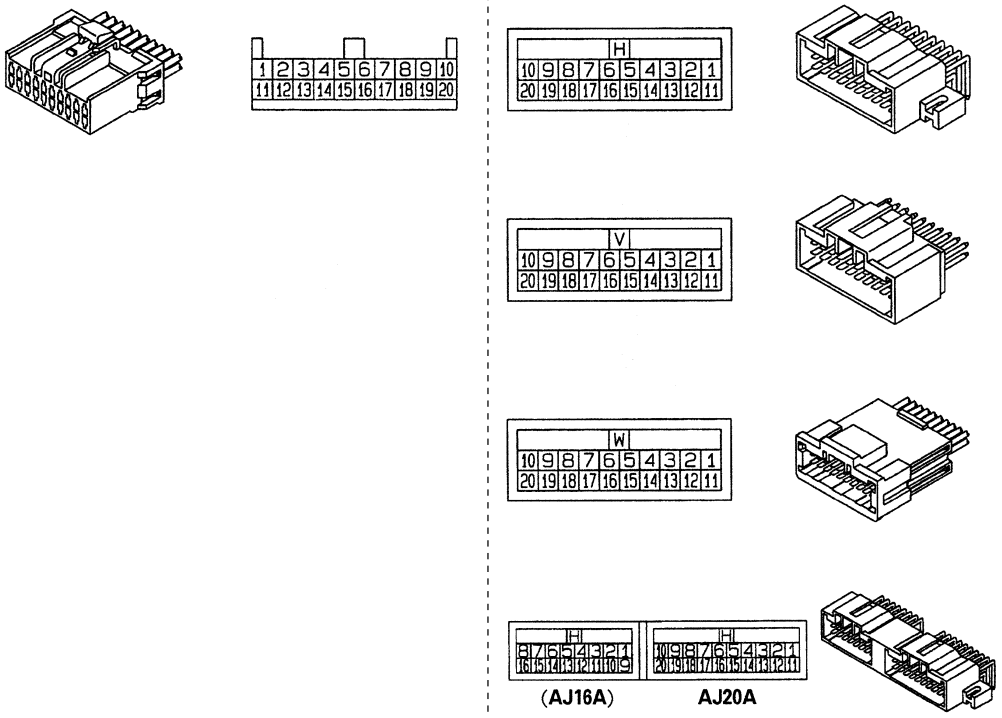
AK	AK 2 A	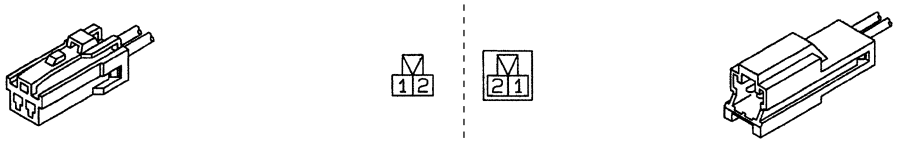
	AK 3 A	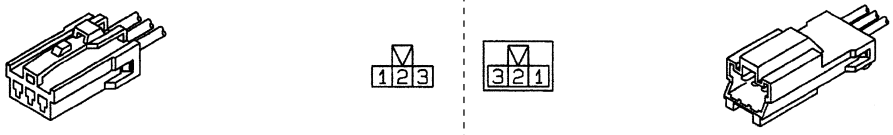
	AK 4 A	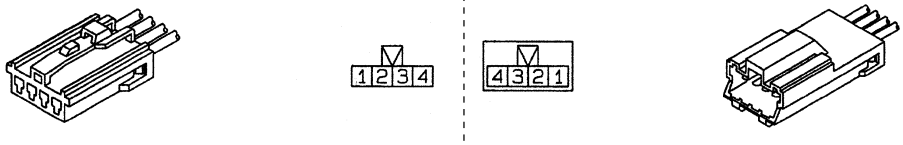
	AK 6 A	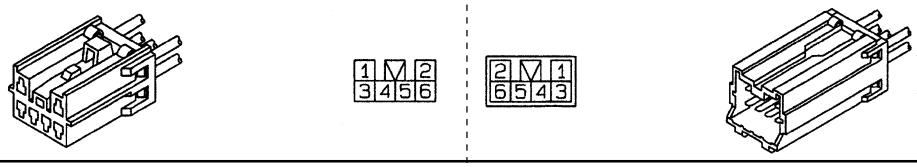

Model (Number shows number of pins)		Connection
AK	AK 8 A	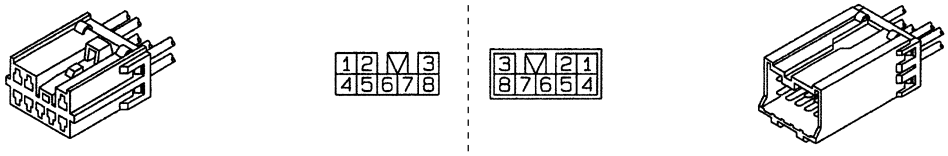
	AK10A	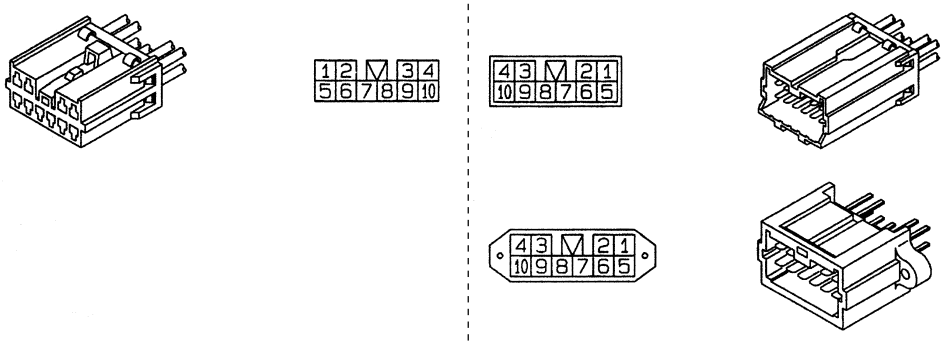
	AK14A	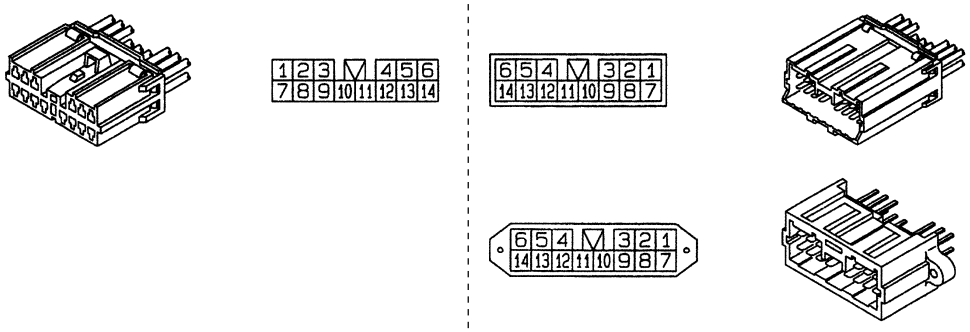
	AK18A	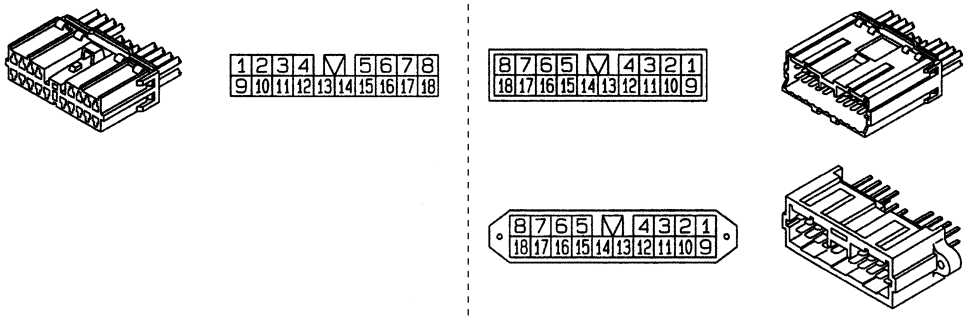
	AK20A	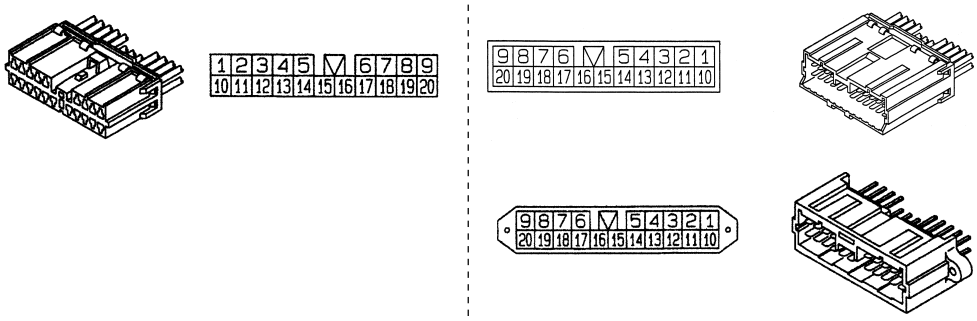

CONNECTOR CONFIGURATION CHART

Model (Number shows number of pins)		Connection
AK	AK20B	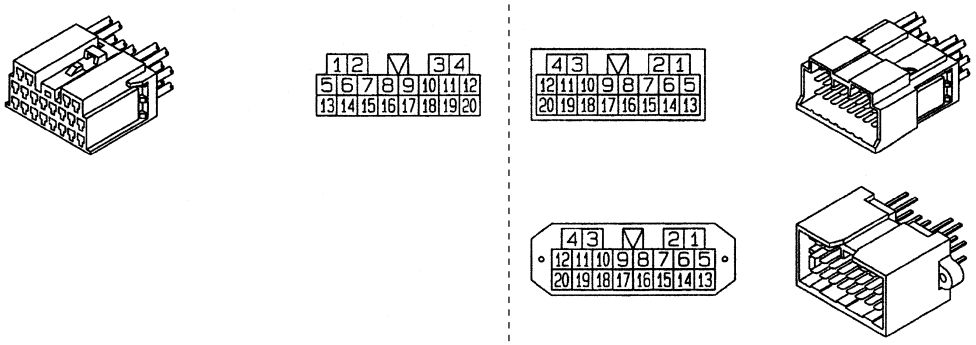
	AK22A	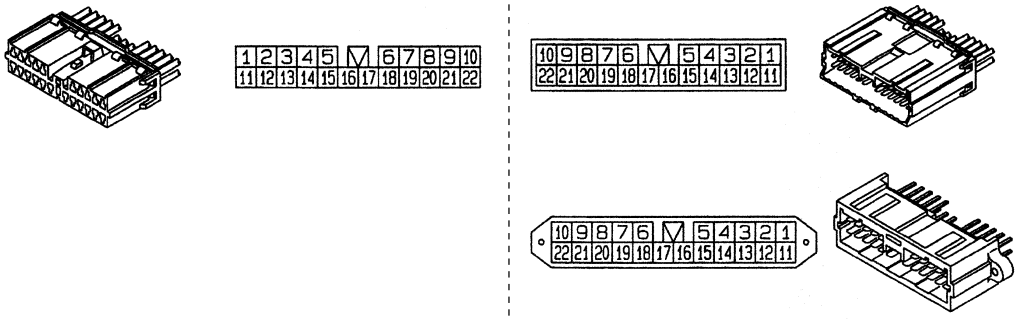
	AK22B	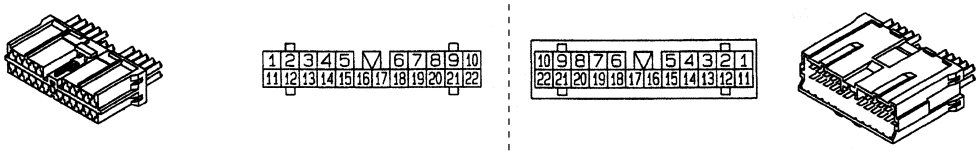
AL	AL 1 A	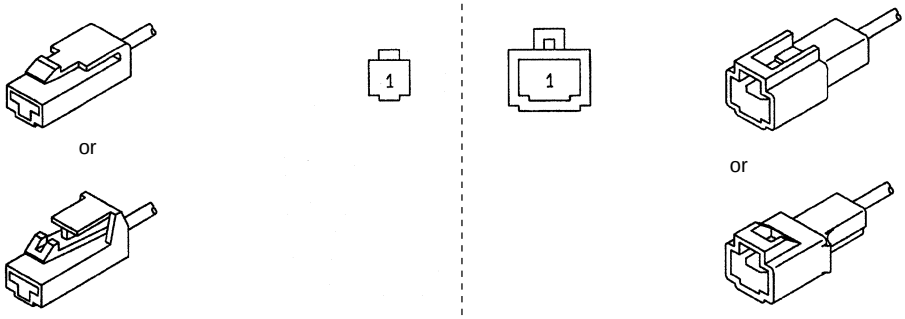
	AL 2 A	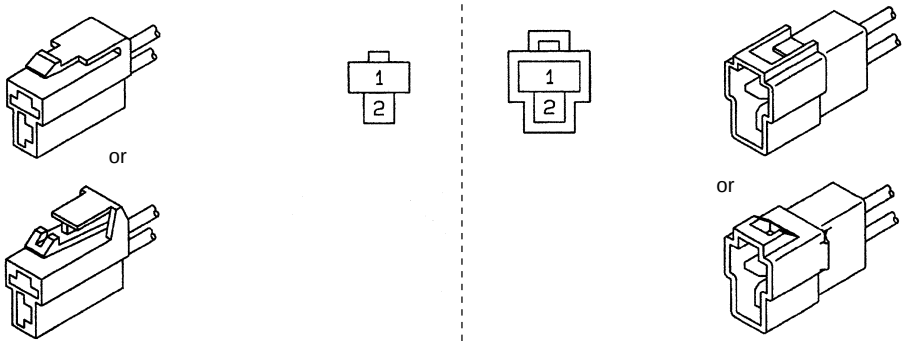

Model (Number shows number of pins)		Connection				
AL	AL 2 B	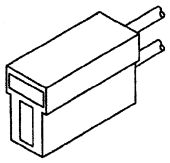			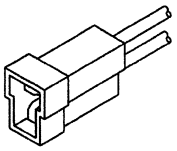	
	AL 3 A	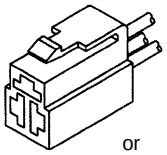 or 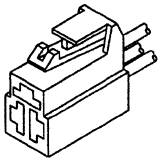		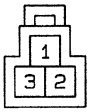	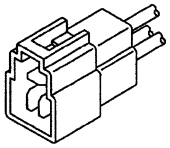 or 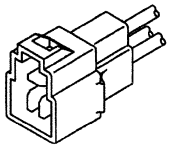	
	AL 3 B	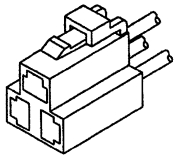		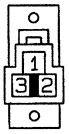	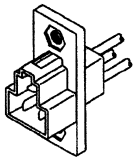	
	AL 3 C	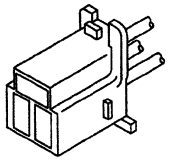			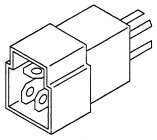	
	AL 3 D	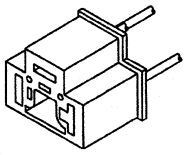 or 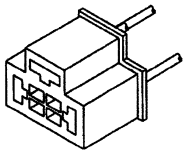				
	AL 3 E	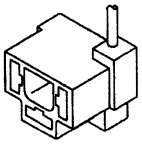 or 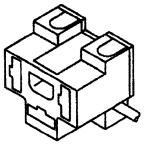	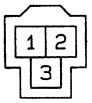			

CONNECTOR CONFIGURATION CHART

Model (Number shows number of pins)		Connection
AL	AL 4 A	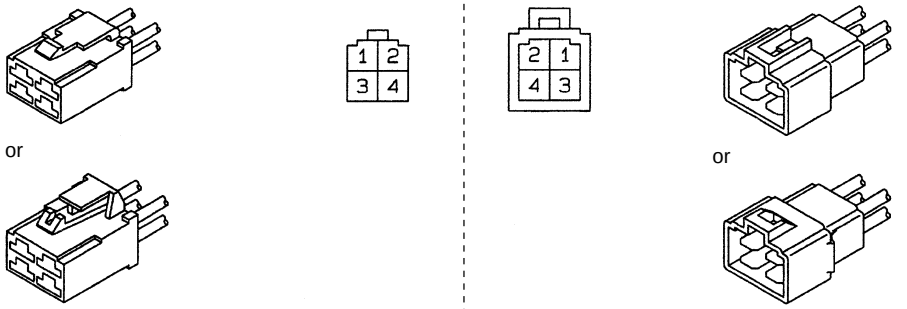
	AL 4 B	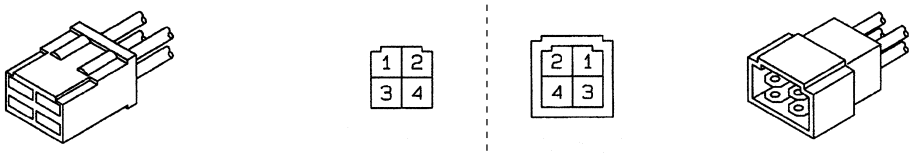
	AL 6 A	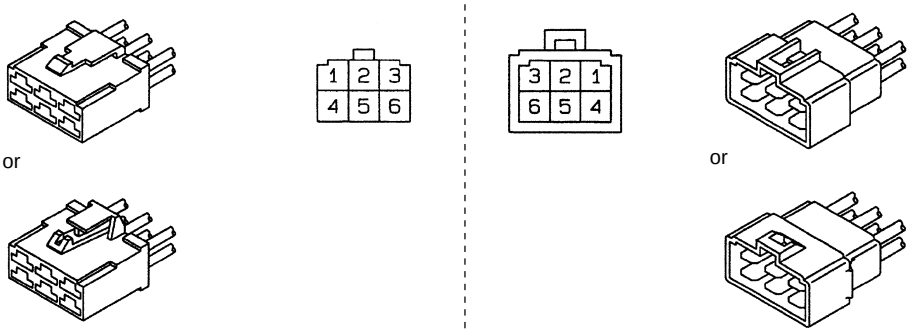
	AL 6 B	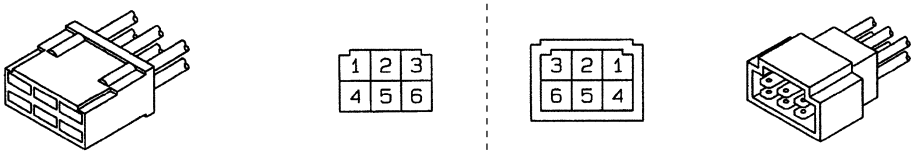
	AL 8 A	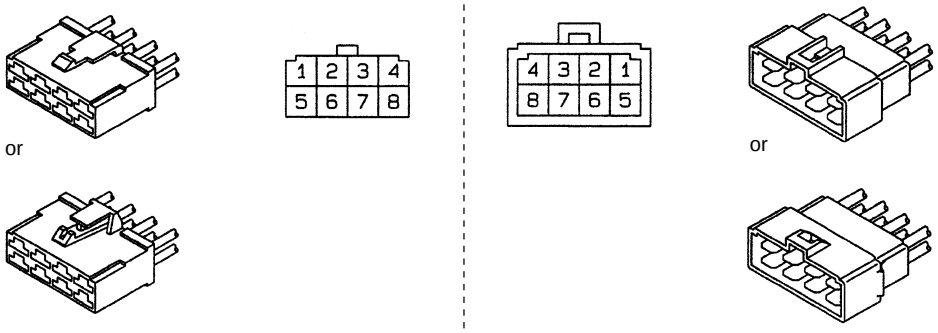
	AL 8 B	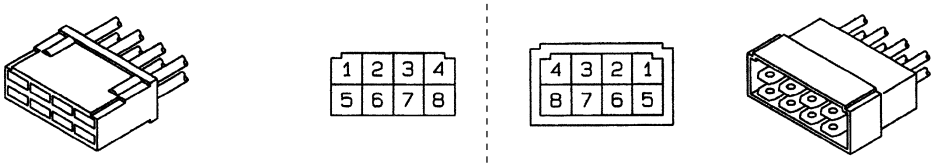

Model (Number shows number of pins)		Connection
AM	AM 2 A	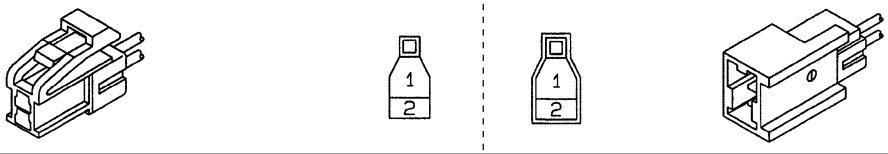
	AM 2 B	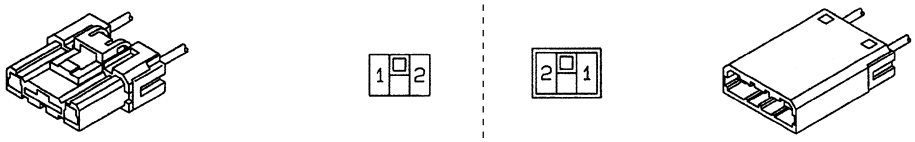
	AM 2 C	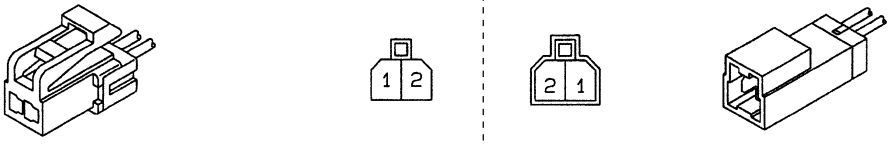
	AM 4 A	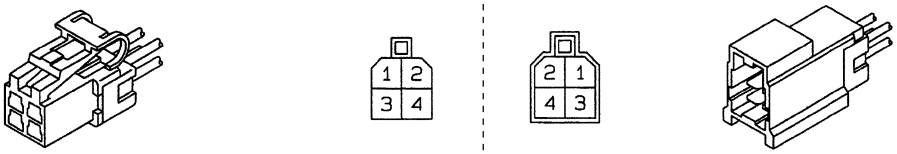
	AM 4 B	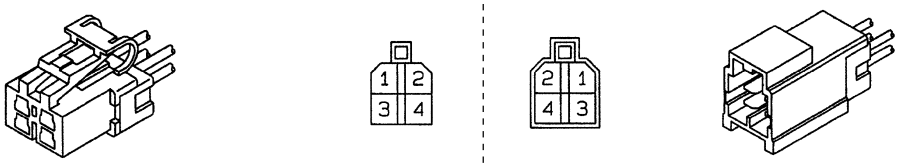
	AM 6 A	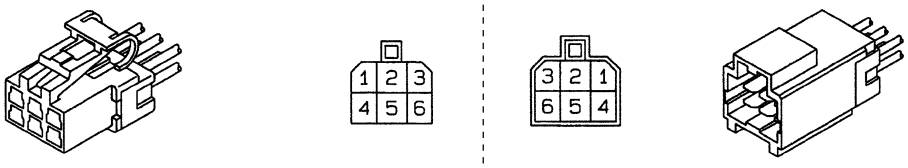
	AM 6 B	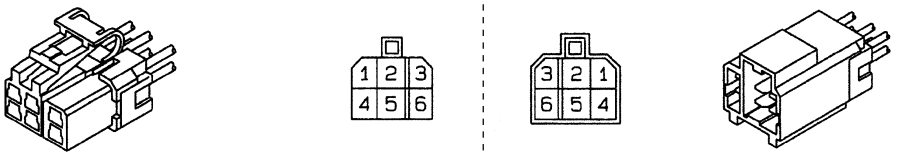
	AM 8 A	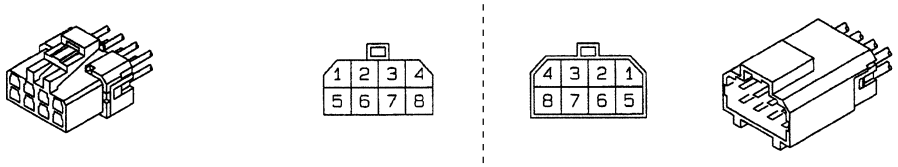
	AM 8 B	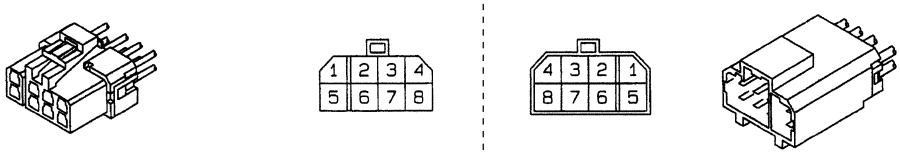

CONNECTOR CONFIGURATION CHART

Model (Number shows number of pins)		Connection			
AM	AM10A	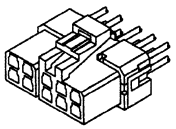	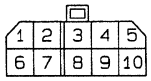	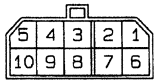	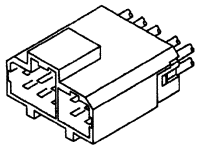
AN	AN 1 A	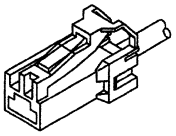			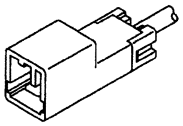
	AN 2 A	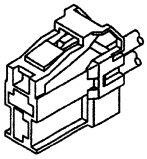			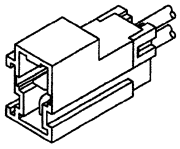
	AN 3 A	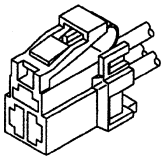	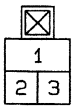	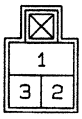	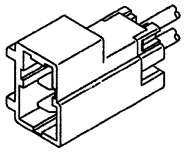
	AN 4 A	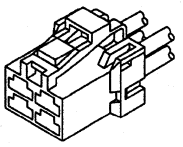	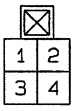	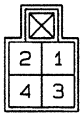	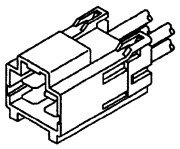
	AN 4 B	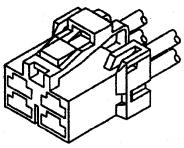	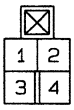	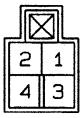	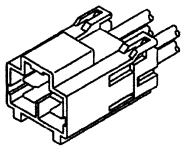
	AN 6 A	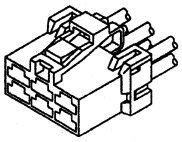	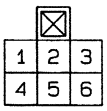	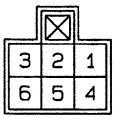	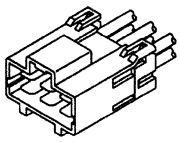
	AN 6 B	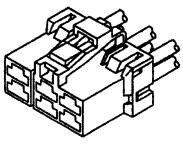	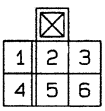	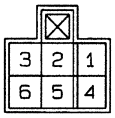	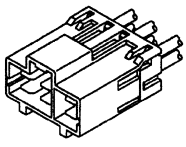
	AN 8 A	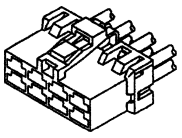	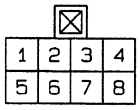	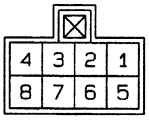	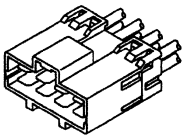

Model (Number shows number of pins)		Connection			
AN	AN 8 B	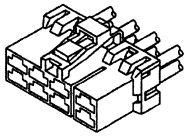	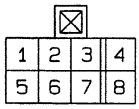	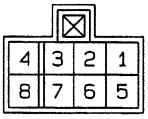	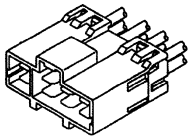
AP	AP 1 A	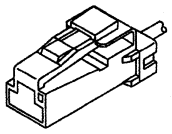	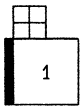	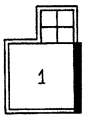	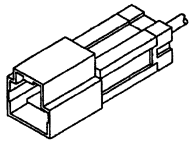
	AP 1 B	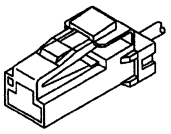	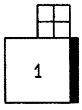	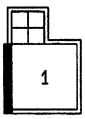	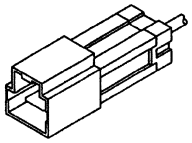
	AP 2 A	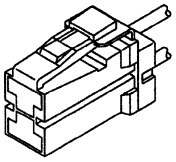	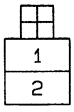	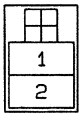	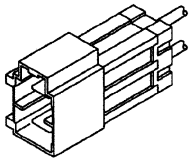
	AP 2 B	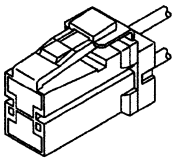	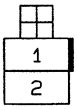	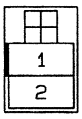	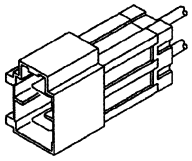
	AP 2 C	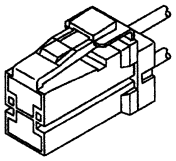	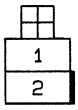	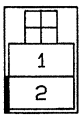	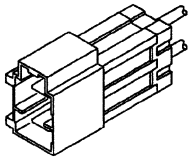
AQ	AQ 3 A	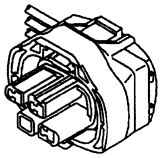			
	AQ 3 B	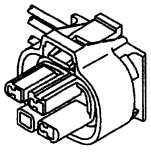			
	AQ13A	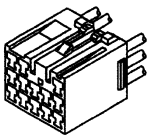	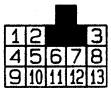	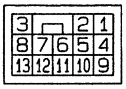	

CONNECTOR CONFIGURATION CHART

Model (Number shows number of pins)		Connection
AQ	AQ15A	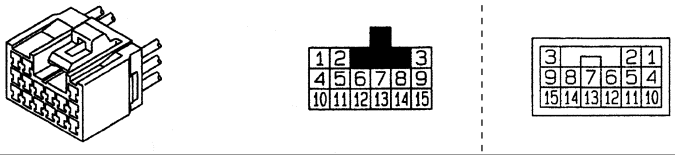
	AQ20A	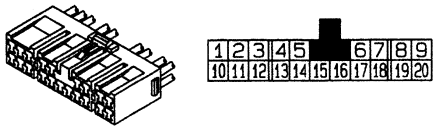
AR	AR 2 A	
	AR 2 B	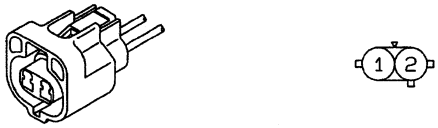
	AR 2 C	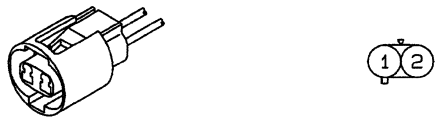
	AR 2 D	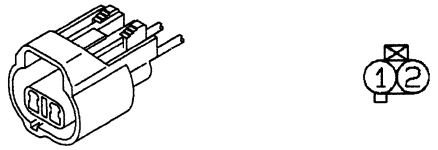
	AR 2 E	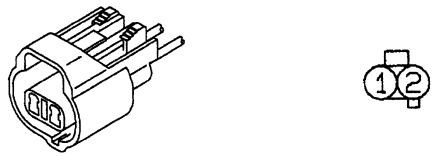
	AR 2 F	

Model (Number shows number of pins)		Connection
AR	AR 3 A	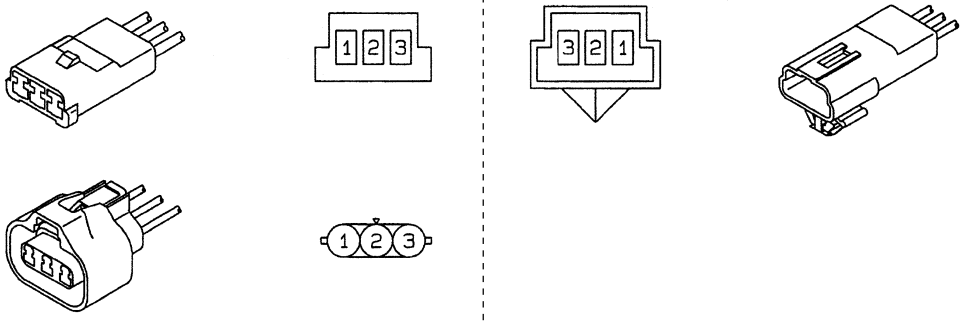
AS	AS 1 A	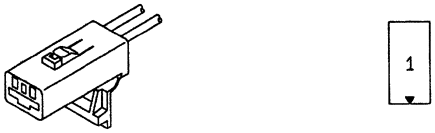
	AS 2 A	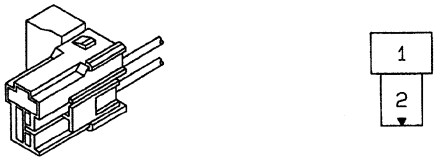
	AS 2 B	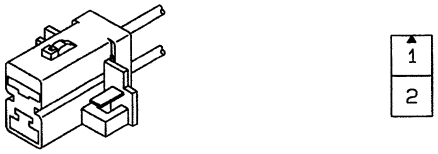
AT	AT 4 A	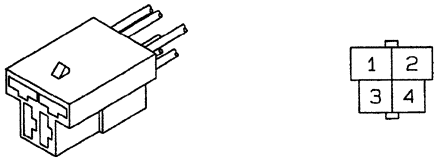
AU	AU 6 A	
	AU 8 A	
	AU10A	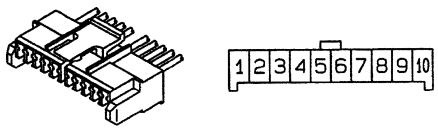

CONNECTOR CONFIGURATION CHART

Model (Number shows number of pins)		Connection
AU	AU12A	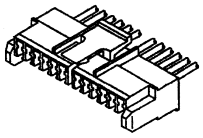 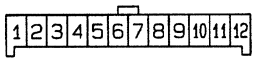
	AU13A	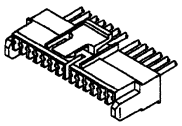 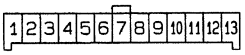
	AU16A	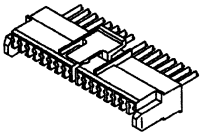 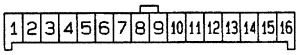
AV	AV 1 A	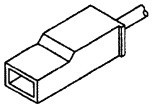 
	AV 2 A	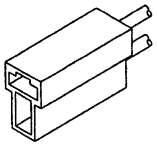 
AW	AW 1 A	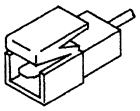   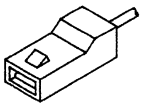
	AW 1 B	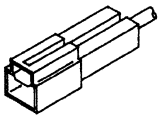   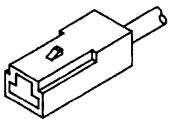
	AW 2 A	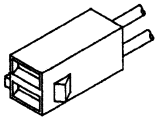   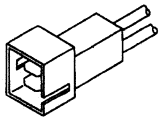
AX	AX 4 A	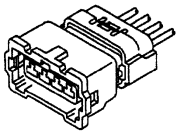  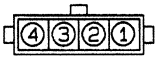 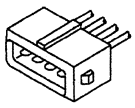

Model (Number shows number of pins)		Connection			
AY	AY 2 A	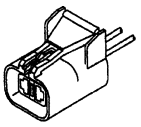			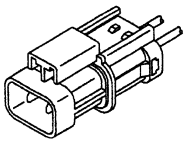
AZ	AZ 2 A	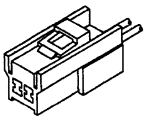			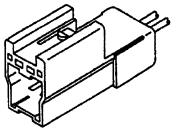
BA	BA 3 A	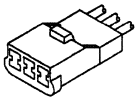	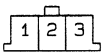	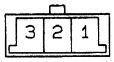	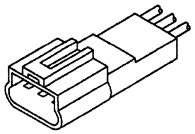
BB	BB 2 A	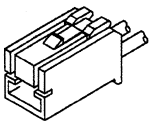			
	BB 3 A	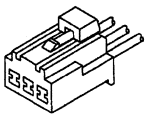	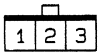	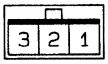	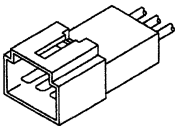
BC	BC 3 A	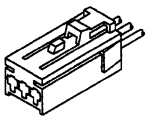	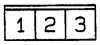	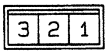	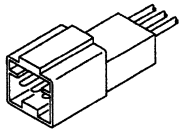
BD	BD 8 A	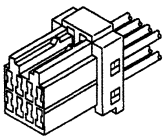	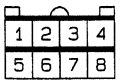	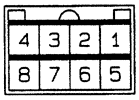	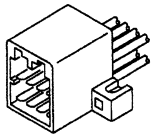
BE	BE 6 A				
BF	BF12A	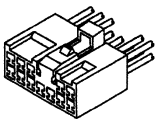	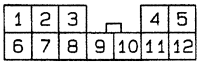	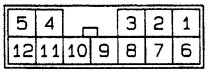	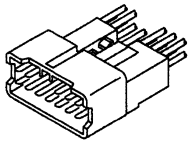

CONNECTOR CONFIGURATION CHART

Model (Number shows number of pins)		Connection
BG	BG16A	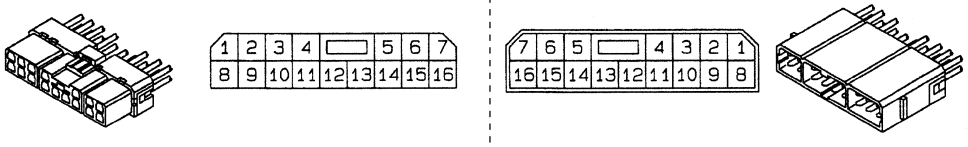
BH	BH 4 A	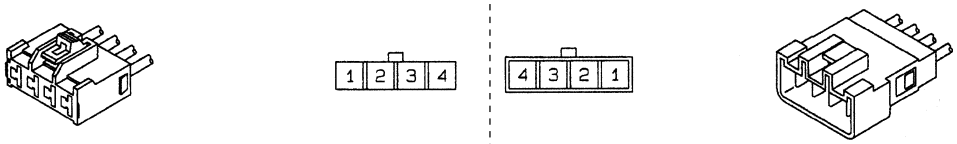
BJ	BJ 9 A	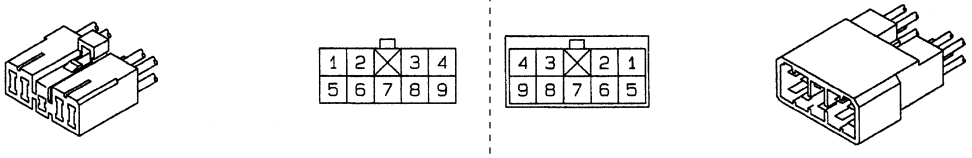
BL	BL 2 A	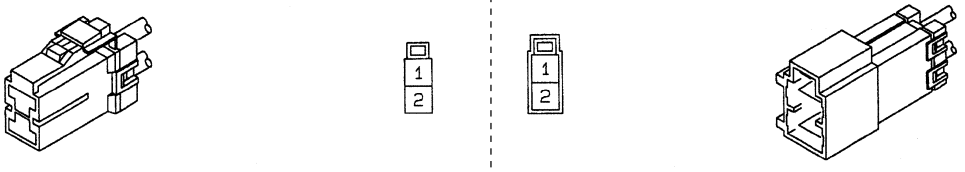
BM	BM 2 A	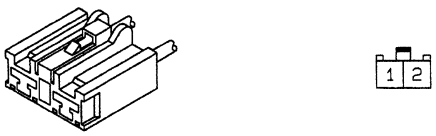
	BM 2 B	
	BM 2 C	
BN	BN 1 A	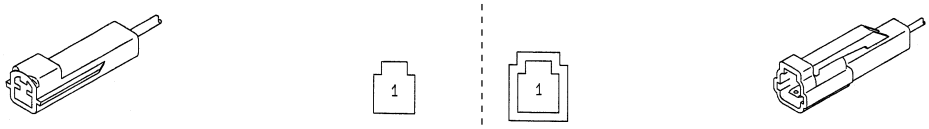

MITSUBISHI FUSO

FH

Service Manual

Group 01 - Maintenance Schedule

Group 01 - 1998 Minor Changes

BACK HOME

MITSUBISHI FUSO TRUCK OF AMERICA, Inc.

Pub No. TWME9502-00

MITSUBISHI
FUSO

FH

Service Manual

Group 01
Maintenance Schedule

'98 Minor Change

Table of Contents

MITSUBISHI FUSO TRUCK OF AMERICA, Inc.

BACK HOME

Pub No. TWME9502-201

MAINTENANCE SCHEDULE

HOW TO READ THE MAINTENANCE SCHEDULE TABLES 01- 2

MAINTENANCE SCHEDULE TABLES 01- 3

MAINTENANCE OPERATIONS 01- 7
- Replacement of Oil Filter 01- 7
- Replacement of Fuel Filter 01- 8
- Draining of Water Separator Condensation 01- 9
- Cleaning of Fuel Feed Pump Gauze Filter 01- 9
- Bleeding of Air from Fuel Line 01- 10
- Adjustment of V-Belt Tension 01- 11
- Cleaning and Replacement of Air Cleaner Element 01- 13
- Inspection of Clutch Pedal Free Play 01- 14
- Tire 01- 14
- Inspection of Brake Pedal Free Play 01- 20
- Inspection of Clearance between Brake Pedal and Floor Panel 01- 20
- Inspection of Brake Lining Thickness 01- 21
- Battery 01- 21
- Fuse 01- 24

LUBRICATION 01- 26
- Engine Oil 01- 27
- Clutch Fluid (Brake Fluid) 01- 29
- Manual Transmission Gear Oil 01- 31
- Automatic Transmission Fluid and Oil Filter 01- 32
- Rear Axle Gear Oil 01- 35
- Power Steering Fluid 01- 36
- Brake Fluid 01- 38
- Greasing Various Areas of Chassis 01- 42

HOW TO READ THE MAINTENANCE SCHEDULE TABLES

Example Table :

*1 : 30000 km/18000 miles or 6 months, whichever occurs first.
*2 : 60000 km/36000 miles or 12 months, whichever occurs first.
Ⓔ : Exhaust emission items
Ⓝ : Noise control items

	Inspection and maintenance (1)	Time of inspection and maintenance (2)					Working procedures (3)	Remarks (4)
				Inspection interval				
		Pre-operation checks	New vehicle at 4000 km/2500 miles	Every 10000 km/ 6000 miles	Every 30000 km/ 18000 miles *1	Every 60000 km/ 36000 miles *2		
ENGINE								
1	Air, fuel, oil or coolant leakage from engine			×			Check engine for air, fuel, oil and coolant leakage	Gr 11, 12, 13, 14
2	Ⓔ Ⓝ Engine starting performance, speed, noise and exhaust gas conditions			×			Check for engine starting performance, idling speed, abnormal engine noise, dark smoke or other abnormal exhaust gas during idling and acceleration. Check engine speed on tachometer	Gr 11, 13, 15
3	Retightening of inlet and exhaust manifold bolts					×	Check manifold bolts for looseness	Gr 15
4	Ⓔ Valve clear…		×			×	Check valve clearance with feeler …	…r 11
5	…			Every 20000 km /12000 miles			Replace element	

(1) This column contains the maintenance and inspection items.
(2) The periods between inspection and service are based on the assumption that the vehicle will be driven approximately 60000 kilometers (36000 miles) per year.
Inspections which must be made are indicated by an "×" or by the appropriate period between servicing.
(3) This column provides a simplified explanation of the operational procedures involved for each inspection or maintenance item.
(4) The Gr. No. refers to the "group number" in this vehicle Service Manual. For visual checks and simple inspections, see the sections labelled "Working Procedures".

*1 : 30000 km/18000 miles or 6 months, whichever occurs first.
*2 : 60000 km/36000 miles or 12 months, whichever occurs first.
Ⓔ : Exhaust emission items
Ⓝ : Noise control items

	Inspection and maintenance	Time of inspection and maintenance					Working procedures	Remarks
		Pre-operation checks	New vehicle at 4000 km/2500 miles	Inspection interval: Every 10000 km/6000 miles	Inspection interval: Every 30000 km/18000 miles *1	Inspection interval: Every 60000 km/36000 miles *2		
ENGINE								
1	Air, fuel, oil or coolant leakage from engine			×			Check engine for air, fuel, oil and coolant leakage	Gr 11, 12, 13, 14
2	Ⓔ Ⓝ Engine starting performance, speed, noise and exhaust gas conditions			×			Check for engine starting performance, idling speed, abnormal engine noise, dark smoke or other abnormal exhaust gas during idling and acceleration. Check engine speed on tachometer	Gr 11, 13, 15
3	Retightening of inlet and exhaust manifold bolts					×	Check manifold bolts for looseness	Gr 15
4	Ⓔ Valve clearance		×			×	Check valve clearance with feeler gauge	Gr 11
5	Ⓔ Oil filter replacement			Every 20000 km/12000 miles On new vehicles, replace the first filter at 10000 km/6000 miles			Replace element	Gr 12
6	Ⓔ Ⓝ Check injection nozzles			Every 90000 km/54000 miles			Check injection nozzles	Gr 13
7	Ⓔ Ⓝ Fuel injection pressure and spray pattern of injection nozzles			Every 250000 km/150000 miles			Remove injection nozzle and check with nozzle tester	Gr 13
8	Ⓔ Ⓝ Fuel injection timing					×	Turn crankshaft in normal running direction and check injection starting timing of No.1 cylinder	Gr 13
9	Ⓔ Cleaning fuel feed pump filter					×	Remove connector from fuel feed pump inlet and clean filter inside connector with gas oil	
10	Ⓔ Fuel filter replacement				×		Replace element	Gr 13
11	Ⓔ Water separator water discharge	×					Loosen water separator drain plug to discharge water	Gr 13
12	Ⓔ Removal of water and sediment from fuel tank			Every 24 months			Remove fuel tank drain plug and remove water and sediment	Gr 13
13	Retightening of fuel tank bracket bolts			×			Check mounting bolts for looseness and retighten to a torque of 34 to 54 N·m {25 to 40 lbf.ft, 3.5 to 5.5 kgf·m}	Gr 13
14	Ⓔ Replacing fuel line in engine compartment			Every 24 months			Replace fuel line in engine compartment	Gr 13
15	Ⓔ Check fuel line outside of engine compartment			Every 24 months			Check fuel line outside of engine compartment. Replace if necessary	Gr 13
16	Ⓔ Ⓝ V-belt tension and damage	×		×			Press midpoint of V-belt firmly with your finger to measure deflection and check for belt damage	Gr 14
17	Coolant level and leakage from cooling system	×					Check coolant level and if level is low, check for coolant leakage	Gr 14
18	Coolant replacement			Every 24 months			Replace with new coolant	Gr 14
19	Installed condition of surge tank cap			×			Check surge tank cap for sealing and mounting condition	Gr 14
20	Ⓔ Cooling system hose clamp position and clamping condition			×			Check clamp position and clamping condition of cooling system hose	Gr 14
21	Ⓔ Turbocharger rotor play			Every 250000 km/150000 miles			Check whether rotor has excessive end play using a dial indicator	Gr 15
22	Ⓔ Ⓝ Cleaning of air cleaner	×					Check air cleaner dust indicator. If the red signal appears, clean the element	Gr 15
23	Ⓔ Ⓝ Air cleaner element replacement			Every 50000 km/30000 miles			Replace element	Gr 15
24	Ⓔ Ⓝ Damage of inlet system, looseness of clamp and loss of parts			×			Check inlet system for damage and check that all parts are installed	Gr 15
25	Ⓝ Looseness and damage of exhaust pipe and muffler			×			Check installation and connections for looseness and damage, check for exhaust gas leakage	Gr 15
26	Starter function					×	Operate starter switch and check the switch functions properly	Gr 54
27	Alternator function					×	Check function with a circuit tester	Gr 54

MAINTENANCE SCHEDULE TABLES

*1 : 30000 km/18000 miles or 6 months, whichever occurs first.
*2 : 60000 km/36000 miles or 12 months, whichever occurs first.
Ⓔ : Exhaust emission items
Ⓝ : Noise control items

Inspection and maintenance		Time of inspection and maintenance					Working procedures	Remarks
		Pre-operation checks	New vehicle at 4000 km/2500 miles	Inspection interval: Every 10000 km/6000 miles	Inspection interval: Every 30000 km/18000 miles *1	Inspection interval: Every 60000 km/36000 miles *2		
POWER TRAIN								
28	Oil leakage from power train			×			Check power train for oil leakage	
29	Clutch pedal play			×			Press clutch lightly and check that play is adequate	Gr 21
30	Clutch function			×			(1) Press the clutch pedal to check for unusual noise or stiffness. Also check if gearshift engages quietly (2) Check the clutch does not slip and engages smoothly	Gr 21
31	Manual transmission gearshift control looseness				×		In NEUTRAL position, check shift lever for looseness. With shift lever in each gear position, check engagement condition and degree of looseness. Also check if control cable is damaged	Gr 22
32	Automatic transmission range selector linkage and throttle (modulator) linkage condition				×		Shifting to each shift range must be done firmly and securely	Gr 23
33	Propeller shaft couplings and bearings looseness		×	×			(1) Check flange yoke bolt and center bearing attaching bolt for looseness (2) Turn propeller shaft manually to check for spline looseness (3) Check looseness between spider and needle roller bearing	Gr 25
FRONT AND REAR AXLES								
34	Axle shaft torsion and cracks					×	Remove axle shaft and check for torsion, bending, and cracks	Gr 27
35	Front wheel hub bearing looseness				×		With front axle jacked up, move the wheel up and down holding the top and bottom of the tire to check for bearing looseness	Gr 26
36	Rear wheel hub bearing damage					×	Disassemble rear wheel and check for hub bearing wear and damage	Gr 27
37	Retightening wheel nuts		×	×			Check wheel nuts for looseness after replacing tires, also after 1000 km/600 miles	Gr 31
38	Disc wheel damage			×			Check disc wheel for corrosion, deformation and cracks	Gr 31
39	Tire inflation pressure, cracking, tread groove depth, abnormal wear, etc.	×		×			(1) Measure inflation pressure with tire gauge, and check that tire tread groove is deep enough (2) Check tire tread and side walls for cracks, damage, uneven wear, stepped wear and other abnormal wear	Gr 31
40	Tire rotation			×			Rotate all tires	Gr 31
SUSPENSION SYSTEM								
41	Looseness, play and damage of suspension system				×		Check suspension system for looseness, play and damage	Gr 33, 34
42	Damage and looseness of leaf springs	×			×		Check leaf springs for damage and looseness	Gr 33, 34
43	Retightening U-bolts		×		×		Check U-bolts for looseness	Gr 33, 34
44	Oil leakage and damage of shock absorbers				×		Check for oil leakage and damage of cylinder, etc.	Gr 33, 34
BRAKING SYSTEM								
45	Fluid leakage from braking system and power steering system			×			Check braking system and power steering system for fluid leakage	Gr 35, 37
46	Looseness, play and damage of braking system parts			×			Check braking system parts for looseness, play and damage	Gr 35
47	Brake pedal play and stroke	×		×			Depress the brake pedal lightly and check that play is not as specified. While the engine is idling, fully depress the brake pedal and check the distance between pedal and floor	Gr 35
48	Brake booster (hydraulic booster) emergency pump	×					With the engine stopped, depress the brake pedal and check the operating sound of the emergency pump	Gr 35

*1 : 30000 km/18000 miles or 6 months, whichever occurs first.
*2 : 60000 km/36000 miles or 12 months, whichever occurs first.
Ⓔ : Exhaust emission items
Ⓝ : Noise control items

	Inspection and maintenance	Time of inspection and maintenance					Working procedures	Remarks
		Pre-operation checks	New vehicle at 4000 km/2500 miles	Inspection interval: Every 10000 km/6000 miles	Inspection interval: Every 30000 km/18000 miles *1	Inspection interval: Every 60000 km/36000 miles *2		
49	Service brake effectiveness	×		×			While driving the vehicle at low speed, check braking effect and check for uneven braking	Gr 35
50	Operation of exhaust brake	×		×			Check exhaust brake operation	Gr 35
51	Exhaust brake vacuum chamber diaphragm replacement			Every 12 months			Check exhaust brake vacuum chamber diaphragm; replace if necessary	Gr 35
52	Brake shoe clearance				×		Measure clearance with feeler gauge	Gr 35
53	Brake lining wear				×		Check lining wear	Gr 35
54	Brake drum wear					×	Disassemble and check drum for wear, cracks and damage	Gr 35
55	Parking brake effectiveness			×			On a slope, check that vehicle can be held stationary	Gr 36
56	Parking brake lever stroke	×		×			With lever fully pulled, check that lever is locked completely and that there is allowance in pulling stroke	Gr 36
57	Parking brake drum and lining wear					×	Disassemble and check drum for wear, cracks and damage and check lining for wear	Gr 36
58	Wheel cylinder piston cup and dust seal replacement			Every 12 months			Check wheel cylinder piston cup and dust seal; replace if necessary	Gr 35
59	Brake hose replacement			Every 12 months			Check brake hose; replace if necessary	Gr 35
60	Brake fluid reservoir tank tube replacement			Every 24 months			Check and replace brake fluid reservoir tank tube	Gr 35
STEERING SYSTEM								
61	Fluid leakage from steering system			×			Check steering system for fluid leakage	Gr 37
62	Steering wheel play	×		×			Turn steering wheel right and left to measure play at steering wheel rim. Measure while engine is running	Gr 37
63	Steering operating condition	×		×			Check steering wheel to see if it vibrates, pulls to one side or requires unusual steering effort	Gr 37
64	Looseness and play of steering system (including hoses and pipes)			×			(1) Check steering system for looseness and play (2) Check power steering hoses and pipes for looseness	Gr 37
65	Wheel alignment					×	Measure toe-in, camber, caster and kingpin inclination angles	Gr 26
66	Right and left turning angles and power steering function					×	Check that stopper bolt is sufficiently tight, without damage, and that steering linkage operates smoothly until blocked by stopper bolt. Also check that steering wheel does not make contact with other parts	Gr 26
67	Power steering booster and oil pump internal rubber parts replacement			Every 48 months			Replace internal rubber parts	Gr 37
68	Power steering hose replacement			Every 48 months			Replace power steering hose	Gr 37
CAB AND FRAME								
69	Looseness and damage of chassis and body			×			(1) Check frame, cross members and other parts for loose rivets (2) Also check for body damage and loose mounting bolts	Gr 41, 42
70	Heater and defroster operation			×			Check operation and installation of defroster	Gr 55
71	Reflection of rearview mirrors and reflectors	×					Check for reflecting condition, stains and damage	Gr 42
72	Door lock function			×			Check door lock mechanism functions properly	Gr 42
73	Seat belt mounting condition			×			Check seat belt for damage, buckle and retracting function and mounting condition	Gr 42
ELECTRICAL SYSTEM								
74	Looseness and damage of electrical wiring and connections			×			Check wiring, connectors and battery terminals for looseness and corrosion	Gr 54

MAINTENANCE SCHEDULE TABLES

*1 : 30000 km/18000 miles or 6 months, whichever occurs first.
*2 : 60000 km/36000 miles or 12 months, whichever occurs first.
Ⓔ : Exhaust emission items
Ⓝ : Noise control items

Inspection and maintenance		Time of inspection and maintenance					Working procedures	Remarks
		Pre-operation checks	New vehicle at 4000 km/2500 miles	Inspection interval: Every 10000 km/6000 miles	Inspection interval: Every 30000 km/18000 miles *1	Inspection interval: Every 60000 km/36000 miles *2		
75	Battery electrolyte level and specific gravity			Every 20000 km/12000 miles			(1) Check electrolyte level (2) Measure electrolyte specific gravity with hydrometer	Gr 54
76	Operation and damage of lighting system	×		×			Check operation, damage and installation of each lighting unit	Gr 54
77	Operation of horn and turn signal lamps	×		×			Check operation, damage and mounting condition. Also check turn signal lamps are operated by turn signal switch	Gr 54
78	Operation and fluid level of windshield wiper and washer	×		×			Check operation, damage and mounting condition. Check if fluid level in washer tank is okay	Gr 42
79	Gauges and pilot lamps function	×		×			Check function of gauges and pilot lamps	Gr 54
80	Switch function					×	Check operation, damage and installation of each switch	Gr 54
OTHER								
81	Road test of vehicle			×			Drive the vehicle to check for overall vehicle operating condition	

This section explains simple maintenance procedures. See the relevant Group in this manual for further details.

Replacement of Oil Filter

Lubricant

Location	Points of application	Specified lubricant	Quantity
2	Inside oil filter	Engine oil	Approximately 1 L {1.1 qts}
	Gasket area of oil filter with thin application	Engine oil	As required

Special tools

Unit : mm {in.}

Location	Tool name and shape	Part No.	Application
2	Oil filter wrench 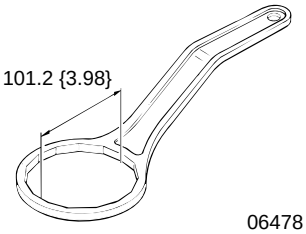 06478	MH061587	Removal of oil filter

WARNING

- **Wipe up any engine oil that has been spilled because it can cause a fire.**
- **Do not touch the engine while it is hot because it will burn you.**

CAUTION

Take care not to spill engine oil on the V-belts, because this would cause them to slip, reducing service life.

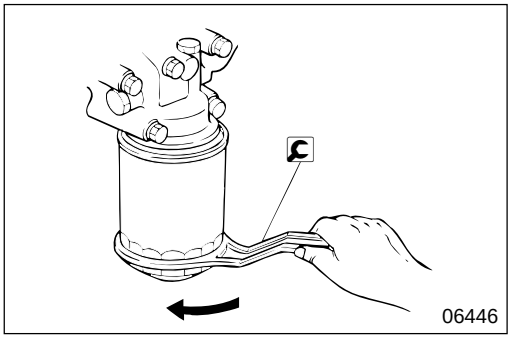
06446

[Removal]

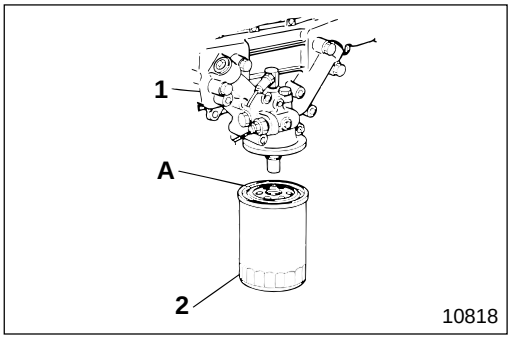

10818

[Installation]

- Clean the surface of oil cooler body **1** that makes contact with oil filter **2**.
- Apply engine oil thinly and evenly to gasket area **A** of oil filter **2**.
- Screw oil filter **2** into oil cooler body **1** until gasket area **A** sits on the body. From this position, tighten further by rotating by three quarters of a turn.
- After installation, run the engine and check that there is no oil leakage from gasket area **A**.
- Check the oil level and if it is low, top it up.

Replacement of Fuel Filter

Lubricant

Location	Points of application	Specified lubricant	Quantity
2	Gasket contact surfaces of fuel filter and fuel filter head	Engine oil	As required

Special tools

Unit : mm {in.}

Location	Tool name and shape	Part No.	Application
2	Filter wrench 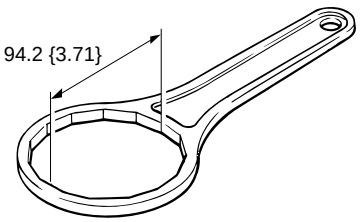 01882	MH061572	Removal of fuel filter

WARNING

- **Fuel ignites easily. Do not get it near flame or heat.**
- **Wipe up any diesel fuel that has been spilled because it can cause a fire.**
- **Do not use an unsuitable filter because it can cause a fire.**

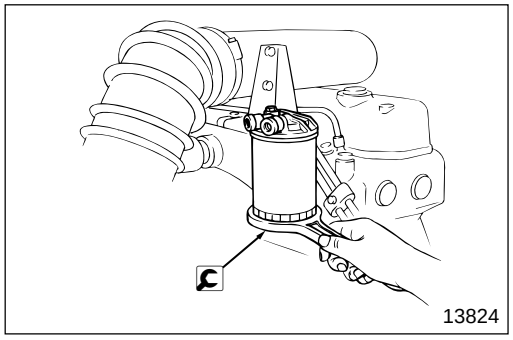
13824

[Removal]

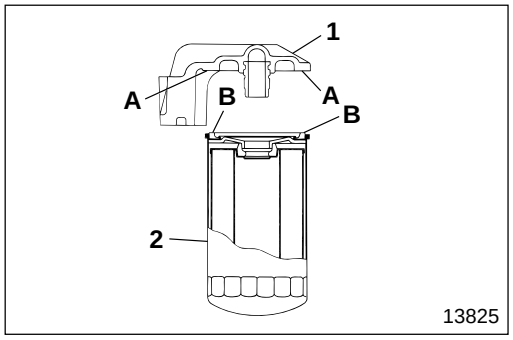

13825

[Installation]

- Install by tightening three quarters to one full turn after contact surface **A** of fuel filter head **1** makes contact with gasket **B** of fuel filter **2**. Be sure to tighten by hand.
- After installation, run the engine and check for fuel leakage.

Draining of Water Separator Condensation

Tightening torque

Unit : N·m {lbf.ft, kgf·m}

Location	Parts to be tightened	Tightening torque	Remarks
2	Drain plug	3 to 4 {2.2 to 2.9, 0.3 to 0.4}	—

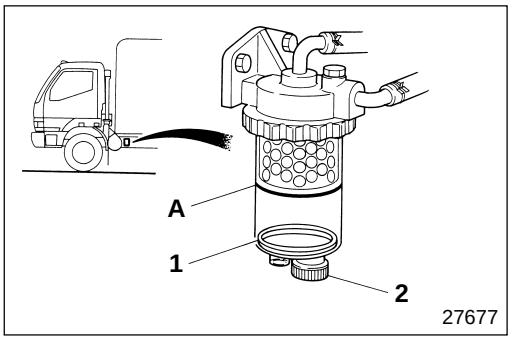

Visually inspect the water separator before driving.
When float **1** reaches red line **A**, drain the condensation as follows:

- Loosen drain plug **2** and drain out the condensation.
- When float **1** has dropped to the bottom, tighten drain plug **2**.
- Carefully wipe the water separator and the surrounding area.
- Check for fuel leakage.

Cleaning of Fuel Feed Pump Gauze Filter

Tightening torque

Unit : N·m {lbf.ft, kgf·m}

Location	Parts to be tightened	Tightening torque	Remarks
2	Eye bolt	25 to 29 {18 to 22, 2.5 to 3}	—

WARNING

- **Fuel ignites easily. Do not get it near flame or heat.**
- **Wipe up any diesel fuel that has been spilled because it can cause a fire.**

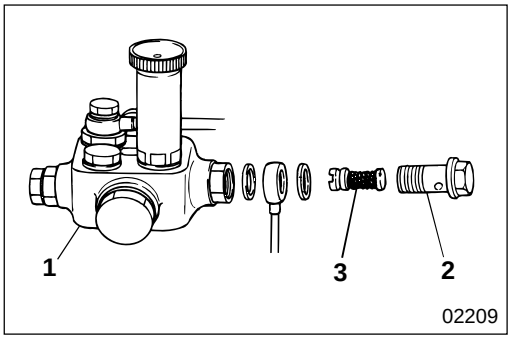

- Remove eye bolt **2** on the inlet side of fuel feed pump **1**.
- Remove gauze filter **3** from eye bolt **2**.
- Clean gauze filter **3** with gas oil.
- Follow the removal sequence in reverse and reinstall gauze filter **3**. Install eye bolt **2** in the fuel feed pump.
- Bleed the air from the fuel line.
- Start the engine and check for fuel leakage.

Bleeding of Air from Fuel Line

Ⓣ Tightening torque

Unit : N·m {lbf.ft, kgf·m}

Location	Parts to be tightened	Tightening torque	Remarks
2	Air vent plug	7.8 to 12 {5.8 to 8.7, 0.8 to 1.2}	—

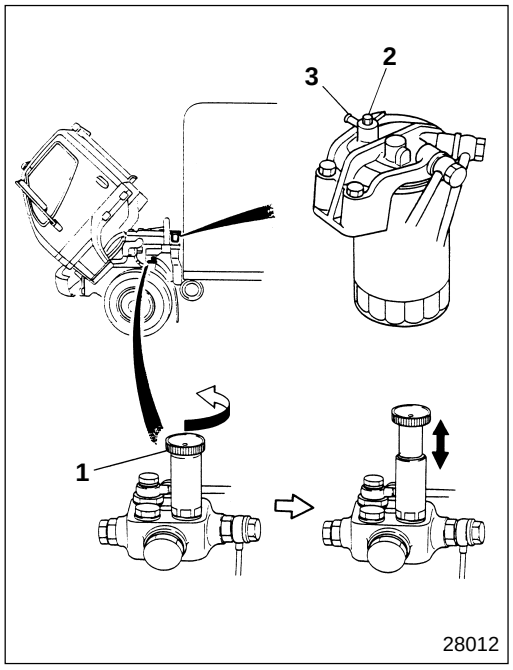

WARNING⚠

- **Fuel ignites easily. Do not get it near flame or heat.**
- **Wipe up any diesel fuel that has been spilled because it can cause a fire.**

- Turn the top of priming pump **1** of the injection pump counterclockwise and pull it up so the top protrudes.
- Loosen air vent plug **2** of the fuel filter and move the top part of priming pump **1** up and down.
- Move priming pump **1** up and down repeatedly until air bubbles are no longer present in the fuel drained from air vent cock **3**.
- When the fuel being drained is free of air bubbles, tighten air vent plug **2**.
- After moving priming pump **1** up and down another five or six times, push the top down and turn clockwise tighten.
- After bleeding the air, carefully wipe up spilled fuel and start the engine.
- Check for fuel leakage.

Adjustment of V-Belt Tension

Newly installed V-belts can stretch during their initial running-in period. To prevent this from becoming a problem, run the engine for several minutes after installing the V-belt, then readjust. Perform this cycle several times.

WARNING⚠

You must take special precautions to prevent the engine from rotating while a V-belt is being inspected or adjusted.

CAUTION⚠

- **Make sure that you turn off the engine before attempting to inspect or adjust the V-belts.**
- **Make sure that you fasten all bolts and nuts securely after adjusting the V-belts. Remember that too much tension can damage the V-belts and bearings.**
- **Do not grease V-belts. This causes them to slip, which reduce service life.**

Service standards

Unit : mm {in.}

Location	Maintenance item		Standard value	Limit	Remedy
1, 2	V-belt tension (Each one)	Fan	12 to 16 {0.47 to 0.63}	—	Adjust
		Air-conditioner	16 to 20 {0.63 to 0.79}		

Special tools

Location	Tool name and shape	Part No.	Application
1, 2	Belt tension gauge  03612	MH062345	Measurement of tension of V-belt

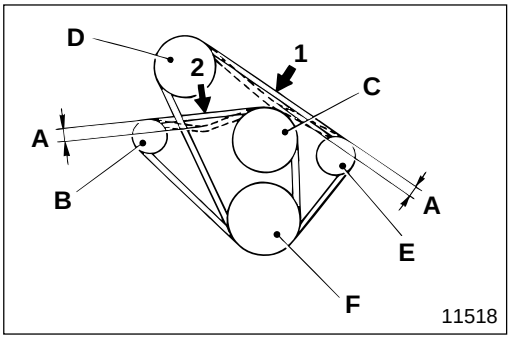

[Inspection]

Measure the extent of flex **A** when the center of V-belts **1**, **2** as illustrated is depressed with a force of 98 N·m {72 lbf.ft, 10 kgf·m}.

B : Alternator pulley
C : Water pump pulley
D : Cooler compressor pulley (Air-conditioner)
E : Tension pulley
F : Crankshaft pulley

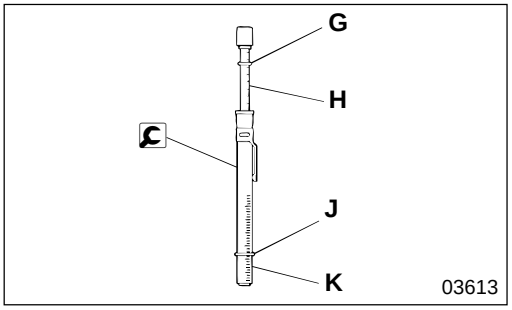

Use of special tool belt tension gauge

- Set upper O-ring **G** of belt tension gauge to 98 N·m {72 lbf.ft, 10 kgf·m} (push load) on graduation **H**.
- Set lower O-ring **J** of belt tension gauge to graduation **K** (maximum flex of belt).

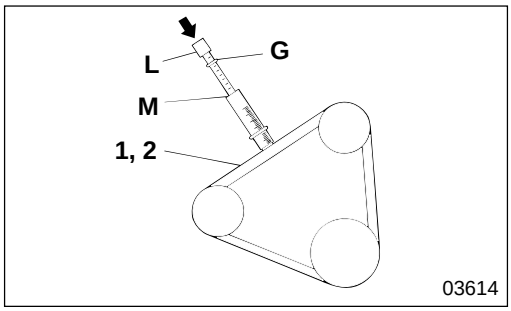

- Place belt tension gauge at the center of V-belts **1**, **2** perpendicularly as illustrated and push top **L** all the way down until upper O-ring **G** hits upper edge **M**.

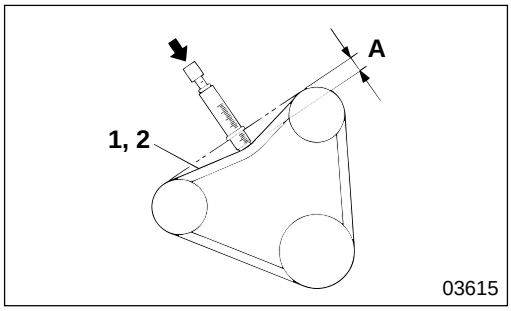

- Measure the extent of flex **A** of V-belts **1**, **2** at this point, and if the measured value deviates from the standard value, adjust as follows:

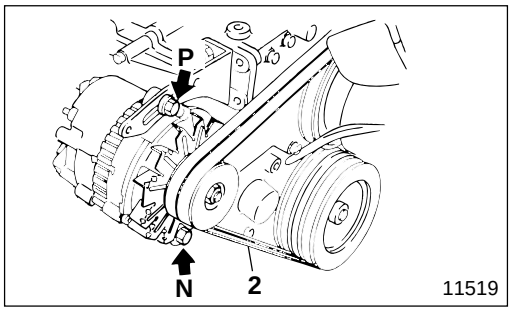

[Adjustment]

(1) Adjustment of tension of V-belt for fan

- Loosen alternator mounting bolts **N** (two points), and adjust the tension of V-belts **2** by moving adjusting bolt **P**.
- After adjustment, tighten the bolts **N**, **P** securely.

CAUTION

- **Bear in mind that excessive tension of V-belts 2 might damage the belts and bearings that engage with the V-belts.**
- **Be sure to replace V-belts 2 as a set to maintain even tension between them.**
- **Be careful not to let oil stick to V-belts 2. If oil gets onto the belts, it causes slipping, resulting in overheating and insufficient battery charging.**

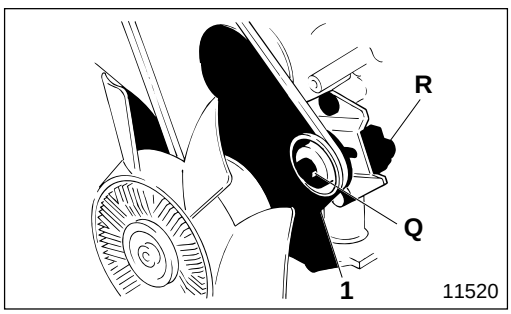

(2) Adjustment of tension of V-belt for air-conditioner

- Loosen tension pulley mounting nut **Q**, and adjust the tension of V-belt **1** moving adjusting bolt **R**.
- After adjustment, tighten mounting nut **Q** securely.

CAUTION

- **Bear in mind that excessive tension of V-belt 1 might damage the belt and bearings that engage with the V-belt.**
- **Be careful not to let oil stick to V-belt 1. If oil gets onto the belt, it causes slipping, resulting in poor performance of the air conditioner.**

Cleaning and Replacement of Air Cleaner Element

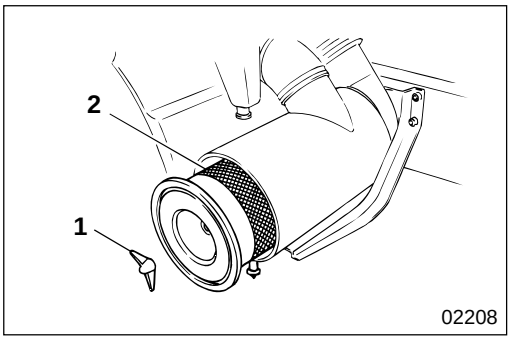

[Removal]
Remove wing nut **1** to remove element **2**.

[Installation]
Install element **2** securely.

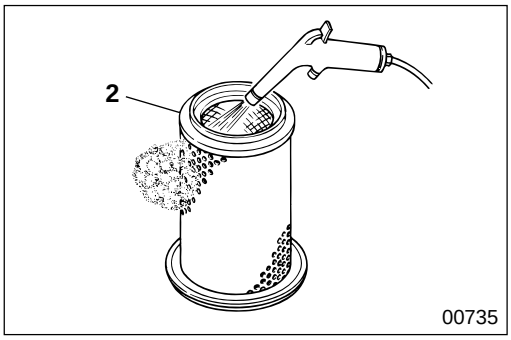

[Cleaning]
- Blow compressed air of 685 kPa {100 lbf/in^2, 7 kgf/cm^2} or less through air cleaner element **2** from the inside.
- When using compressed air, move the blower's nozzle up and down along the pleats of air cleaner element **2** evenly.

CAUTION
- **Do not tap or hit air cleaner element 2 to remove dust.**
- **Do not blow compressed air through air cleaner element 2 from the outside.**

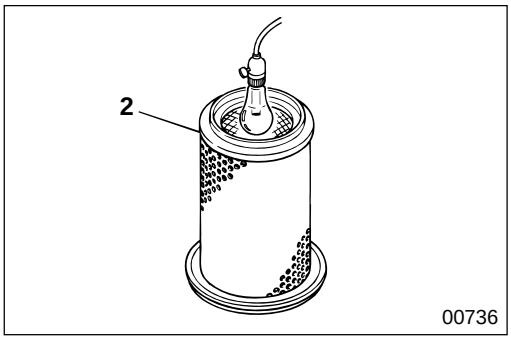

[Inspection]
- Illuminate the inside of air cleaner element **2**.
- If parts of the filter paper are torn or thin, or if the packing of the upper surface of air cleaner element **2** is damaged, replace the air cleaner element.

NOTE

If the dust on air cleaner element 2 is wet due to oil smoke or soot, replace the air cleaner regardless of the scheduled replacement interval.

Inspection of Clutch Pedal Free Play

Service standards

Unit : mm {in.}

Location	Maintenance item	Standard value	Limit	Remedy
1	Clutch pedal free play	37 to 52 {1.46 to 2.05}	—	Adjust or replace

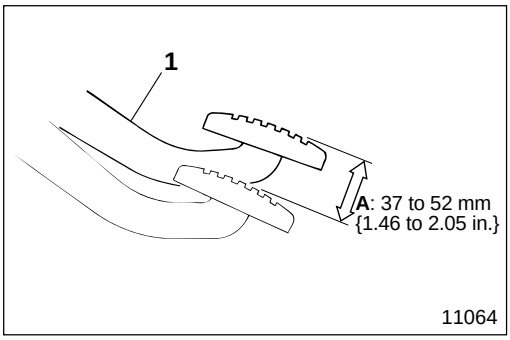

[Confirmation]
Push clutch pedal **1** with your hand and measure the amount of movement **A** (free play) until you meet resistance. If the measured value does not conform to the standard value, adjust by stroke of clutch power cylinder push rod, or replace the clutch disc.

[Clutch operation]
- Check for unusual noises when clutch pedal **1** is pressed while the engine is idling, and also for abnormally heavy clutch operation. Also check to be certain that it is not difficult to shift the vehicle into first and reverse gears.
- Gradually release clutch pedal **1** to set the vehicle in motion.
  Check to be sure there is no slippage, and that the clutch engages smoothly.

Tire

Service standards

Unit : mm {in.}

Location	Maintenance item	Standard value	Limit	Remedy
1	Depth of tire tread grooves	—	1.6 {0.063}	Replace

Tightening torque

Unit : N·m {lbf.ft, kgf·m}

Location	Parts to be tightened	Tightening torque	Remarks
2	Wheel nut	370 to 410 {275 to 305, 38 to 42}	Wet

Lubricant

Location	Points of application	Specified lubricant	Quantity
2	Wheel nut spherical area	Chassis grease [NLGI No.1 (Ca soap)] or Wheel bearing grease [NLGI No.1 (Li soap)]	As required
4	Wheel nut (inner) at thread area and spherical area		
6	Thread area of hub bolt		

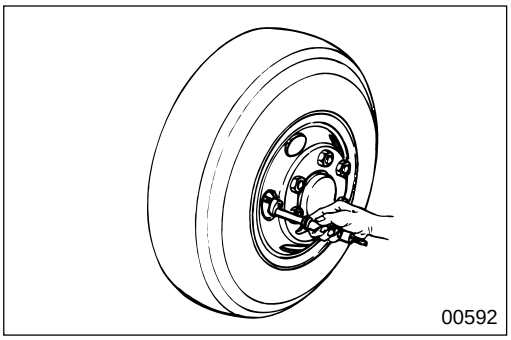
00592

Air pressure

Tire air pressure should be checked before the vehicle is driven, while the tires are still cool.

Tire Size	Air Pressure kPa {Psi, kgf/cm^2}
215/75R 17.5 124/123L	700 {100, 7.00}

CAUTION

- **Make certain that there is no difference in the air pressure between the inner and outer rear tires.**
- **Make certain you use valve caps on the air valves.**
- **It is not necessary to increase the air pressure for high-speed driving.**

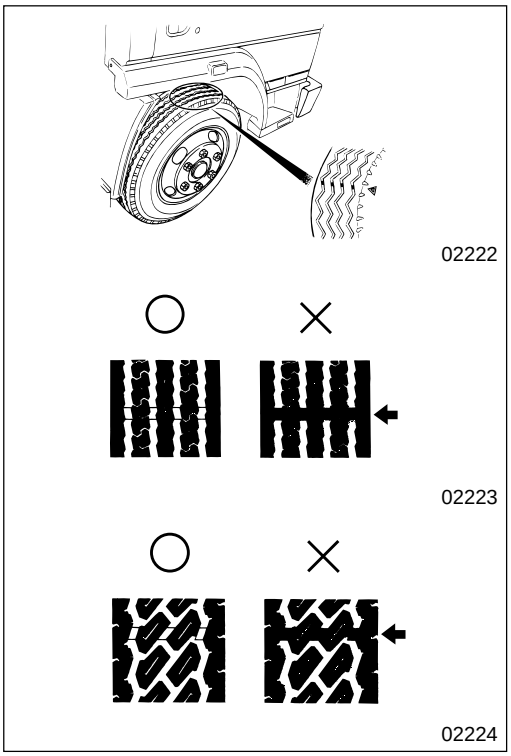
02222

02223

02224

Checking tread depth

- Check all around the tire treads to make sure that the depth of the tread grooves is above the wear limit.
- If the tread grooves are not deep enough, slip sign **A** appears at the position of the ⚠ mark, where the tread groove has worn away.

WARNING

If the depth of the tread grooves is not adequate, the tires will slip on wet roads and present a hazard. Such tires are also extremely dangerous because they are more susceptible to hydroplaning when the vehicle is running at high speeds in the rain. Such tires must be replaced with new ones as soon as possible.

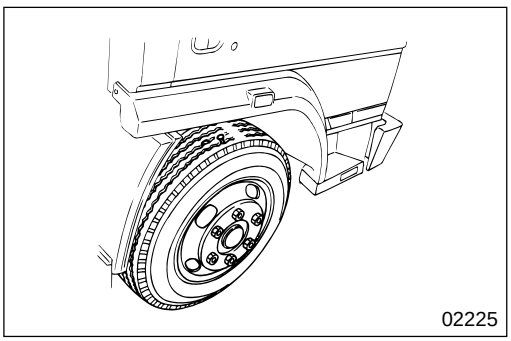
02225

Checking for cracks, damage, and objects embedded in the treads

- Check the tire treads and walls for cracks and damage.
- Check tire treads for uneven wear or other abnormal wear.
- Check if metal objects or nails have penetrated the tires.
- Check for stones embedded between double tires.

WARNING

Badly damaged or worn tires are extremely dangerous, because they can be punctured more easily when the vehicle is running, they must be replaced with new ones as soon as possible.

Removing tires

- Jacking up point
  - For front wheels : Front axle bottom A
  - For rear wheels : Rear axle tube bottom B

< Front wheel >

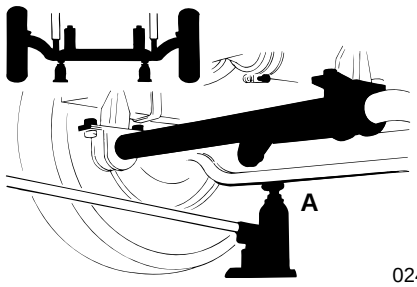

02476

< Rear wheel >

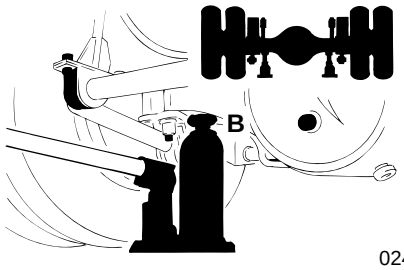

02479

WARNING

- **The jack should be placed on flat, solid ground, and should not be used to raise the vehicle higher than necessary.**
- **Do not use the jack at vehicle locations other than those illustrated.**
- **Keep in mind the danger of a slipping jack. Never crawl under the vehicle while the jack is in use or rock the vehicle. Also, do not start the engine while the vehicle is jacked up.**
- **To increase safety, use supports for the vehicle when it is necessary to leave it jacked up for long periods.**
- **Chock both the tire to be removed and the tire diagonally opposite to it so that they will not rotate when you are removing the tire.**

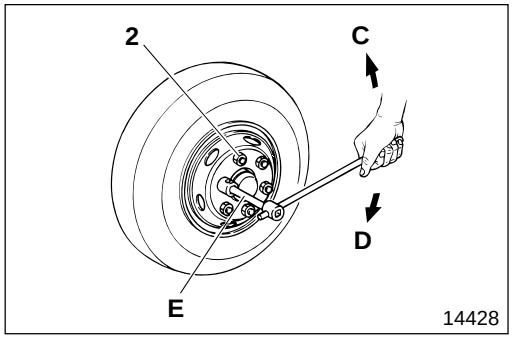

14428

- Loosen wheel nuts **2** slightly. The wheel nuts for right tires **C** have right-hand threads "**R**", and the wheel nuts for left tires **D** have left-hand threads "**L**".

WARNING

Make certain that wheel nut wrench E is fully engaged, all the way to the back of nuts 2. If it is not, it could slip.

CAUTION

Only loosen wheel nuts 2 slightly. Do not remove them.

- Jack up the vehicle carefully, until the tire is slightly off the ground. Remove wheel nuts **2**, then remove the tire.
- When working on the double tires at the rear of the vehicle, first remove the outside tire, then lower the vehicle and loosen the nuts on the inside tire. After doing this, jack the vehicle back up and remove the tire.

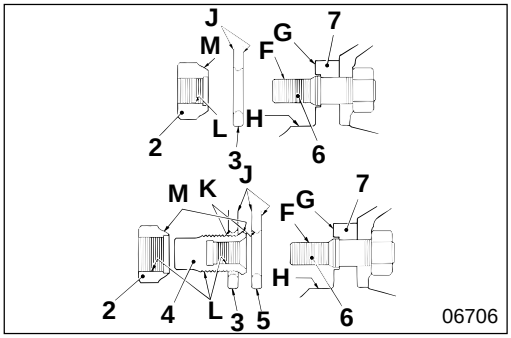

06706

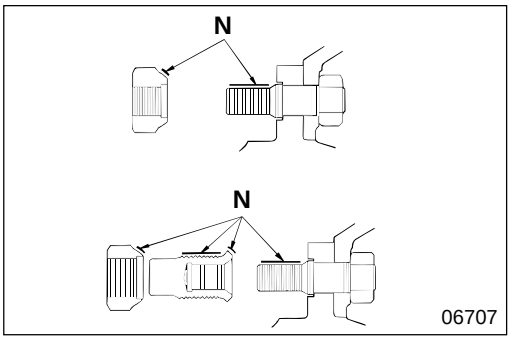

06707

Mounting tires

- To prevent wheel nuts **2**, **4** and hub bolt **6** from becoming loose and to prevent mounting parts (tire assemblies **3**, **5** and hub **7**) from being damaged, remove rust, dust, additional coatings of paint, and foreign particles from the following areas:
  F : Hub bolt thread area
  G : Wheel mounting surface of hub
  H : Wheel alignment area of hub
  J : Disc wheel mating surface
  K : Disc wheel nut mounting surface
  L : Wheel nut thread area
  M : Wheel nut spherical area
  N : Grease application area

WARNING⚠

Never use grease containing molybdenum disulfide, since it can cause loosening of fitted screws.

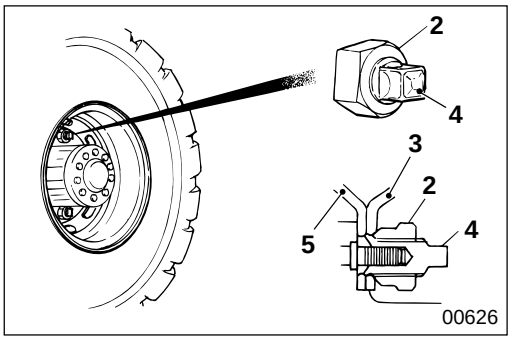

00626

- Put on the double rear tires as follows:
  - After mounting inner tire **5** and fully tightening inner wheel nuts **4**, jack the vehicle up and mount on outer tire **3**, then tighten outer wheel nuts **2**.
  - Even if only outside tire **3** is to be changed, do not mount it until inner wheel nuts **4** have been fastened at the specified torque.
  - Slide the air valves on the inside and outside tires down when mounting the tires.

WARNING⚠

If the threads are scored, or the disc wheel is deformed or cracked, change bolts 6, nuts 2, 4 and disc. Driving the truck before correcting such problems can cause the tire in question to come loose, which could be the source of major accidents.

CAUTION⚠

Check hub bolt 6 threads carefully for scratches before putting the tire on.

- Place the tapered end of wheel nuts **2, 4** towards the disc wheel and fasten temporarily. Center so that there is no eccentricity between bolts **6** and the disc wheel bolt holes.
- Lower the vehicle.

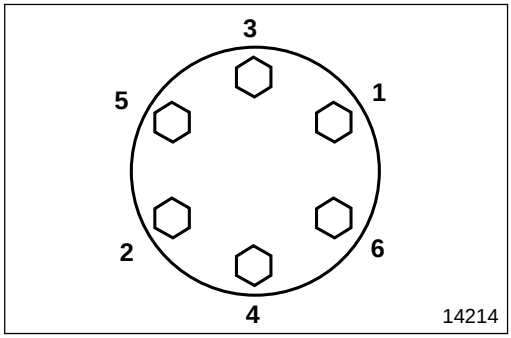

- Tighten the nuts in the order as illustrated, tightening each nut two or three times. To finish, tighten each nut at the specified torque.

WARNING⚠

Always use the specified torque when tightening the wheel nuts. If the wheel nuts are not tightened properly, the wheels could come loose while the vehicle is being driven, which could result in life threatening accidents or the truck being disabled.

CAUTION⚠

Over-tightening the wheel nuts can damage them.

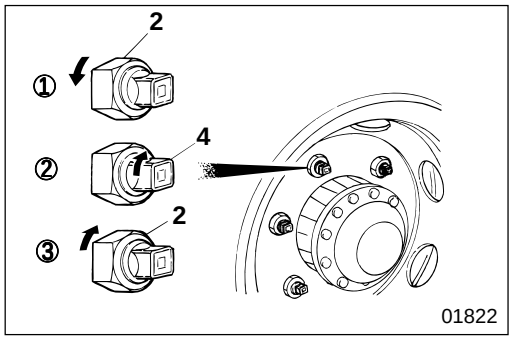

Checking the wheel nuts for looseness

The wheel nuts should be checked for looseness every 10000 km (6000 miles). All nuts should be tightened at the specified torque.

- Check the double rear tires for looseness as follows:

① Loosen outer wheel nuts **2**.
② Tighten inner wheel nuts **4** at specified torque.
③ Tighten outer wheel nuts **2** at specified torque.

CAUTION⚠

If outer wheel nuts 2 are tightened without first being loosened, it might not be possible to tighten them at the specified torque.

Tire rotation

Tires wear differently, according to the location where they are mounted. To make this wear uniform and prolong the life of your tires, they should be rotated every 10000 km (6000 miles) in the rotation order shown below:

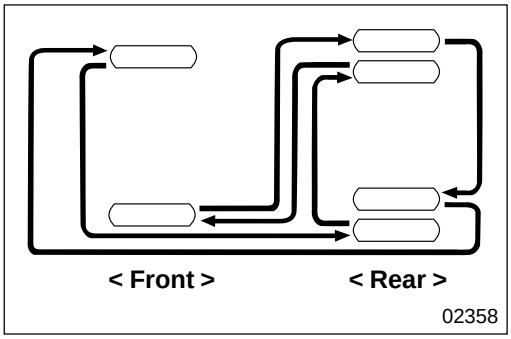

- When the tread patterns for all tires are identical:

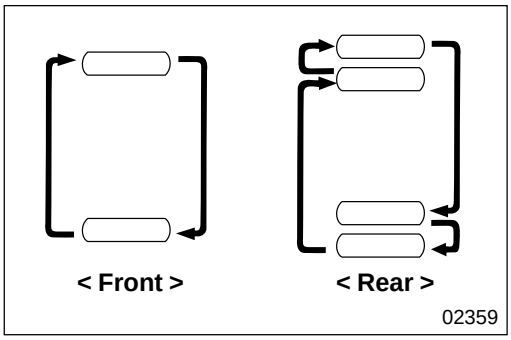

- When the tread patterns are different for the front and rear tires:

CAUTION⚠

- **Always adjust air pressure after running-in new tires.**
- **When using tires of different tread patterns, use rib-type patterns for the front tires and traction type patterns for the rear tires.**
- **Avoid using both radial and biased tires on the same vehicle.**

Inspection of Brake Pedal Free Play

Service standards

Unit : mm {in.}

Location	Maintenance item	Standard value	Limit	Remedy
—	Free play of brake pedal	10 to 15 {0.39 to 0.59}	—	Adjust

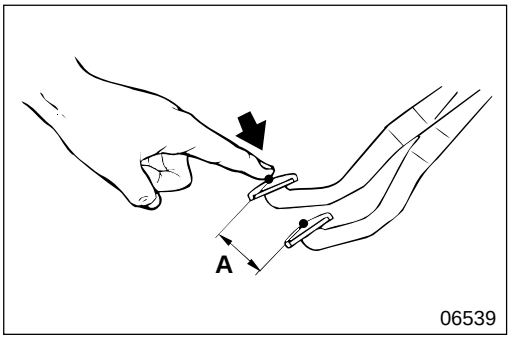

[Inspection]
Check if brake pedal free play **A** confirms to the standard valve with starter switch OFF. If the measured value deviates from the standard value, adjust the position of the brake pedal.

Inspection of Clearance between Brake Pedal and Floor Panel

Service standards

Unit : mm {in.}

Location	Maintenance item	Standard value	Limit	Remedy
—	Clearance between brake pedal and floor panel (with pedal depressed at 490 N {110 lbf, 50 kgf}	52 {2.05} or more	—	Adjust

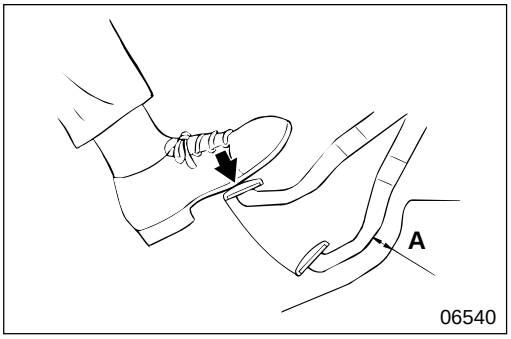

[Inspection]
Depress the brake pedal using 490 N {110 lbf, 50 kgf} when the engine is idling to check if clearance **A** between the brake pedal and the floor panel conforms to the standard value. If the measured value deviates from the standard value, adjust the position of the brake pedal.

Inspection of Brake Lining Thickness

Service standards

Unit : mm {in.}

Location	Maintenance item	Standard value	Limit	Remedy
2	Thickness of brake lining	—	5 {0.20} (Wear limit at side step)	Replace

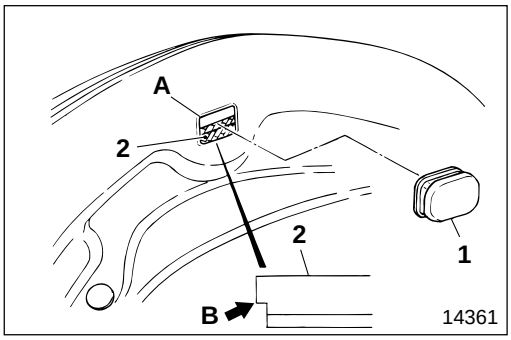

NOTE

Be sure to inspect at two points for each wheel per side.

- Remove check hole plug **1** from the packing plate.
- Inspect through check hole **A** whether brake lining **2** is worn to the point of side shoulder **B** of the brake lining (the limit).
- If the measured value is lower than the limit, replace brake lining **2** on the same axle as a unit.
- After inspection, be sure to reinstall check hole plug **1**.

Battery

DANGER⚠

- **Since flammable hydrogen gas is generated by the battery, be sure to obey the following warnings :**
  - **Do not short-circuit the ⊕ and ⊖ terminals on the battery.**
  - **Keep sparks and lit cigarettes away from the battery.**
  - **Do not wear metal objects on your arms and lean over the battery.**
- **Because the battery electrolyte is diluted sulfuric acid and is corrosive, when handling the battery wear safety glasses and rubber gloves to protect the eyes and hands.**

WARNING⚠

To prevent a short-circuit be sure that disconnected the battery cables do not accidentally touch the battery terminals.

CAUTION⚠

- **Make sure that you disconnect the battery cable ⊖ first when you disconnect the battery cables.**
- **Make sure that all electrical switches of the vehicle are OFF before connecting the battery cables.**
- **Make sure that you connect the battery cable ⊕ before you connect the battery cable ⊖.**

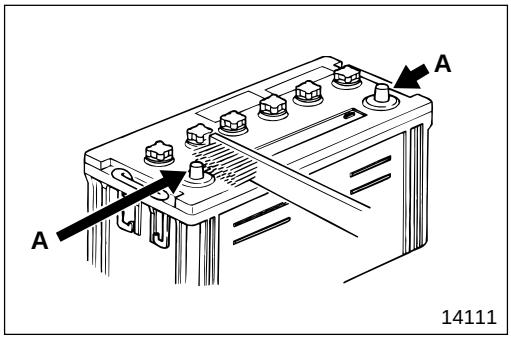

Visual inspection

- If terminal **A** is corroded, scrub off the corrosion from it using a wire brush.
- If cracks or defects are found on the battery, replace it since the cracks or defects can cause liquid spills.

CAUTION ⚠

Make sure you grease the ⊕ side of terminal A because it is easily corroded.

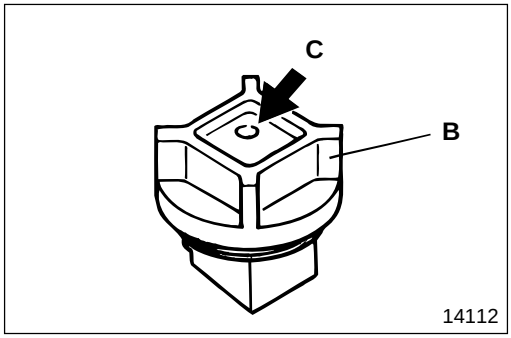

- If bleed hole **C** of vent plug **B** is clogged, clean the hole.

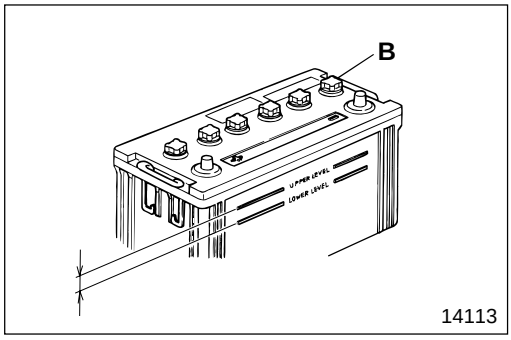

Inspection of fluid level

- Make sure that the battery electrolyte level is between UPPER and LOWER.
- If the level is below LOWER, remove vent plug **B** and fill the battery with distilled water or battery replenisher to UPPER.

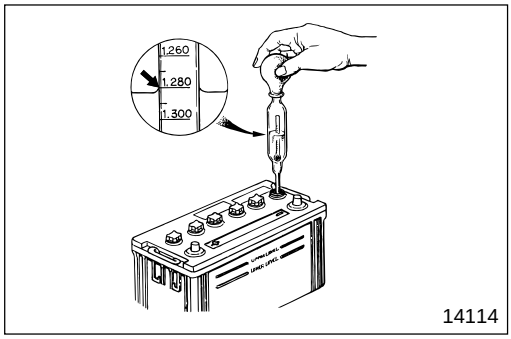

Measurement of specific gravity

Measure the specific gravity of the battery electrolyte. If the measured value is lower than the limit, charge the battery.

NOTE

The specific gravity of the battery electrolyte depends on the liquid temperature. Use the following formula to convert the actual value to the value were the temperature 20°C {68°F}.

$S_{20}\{68\} = S_t + 0.0007\,(t - 20\{68\})$

S_{20}{68}: Specific gravity were the temperature 20°C {68°F}

S_t : Specific gravity actually measured with the temperature at t°C {t°F}

t : Temperature of battery electrolyte

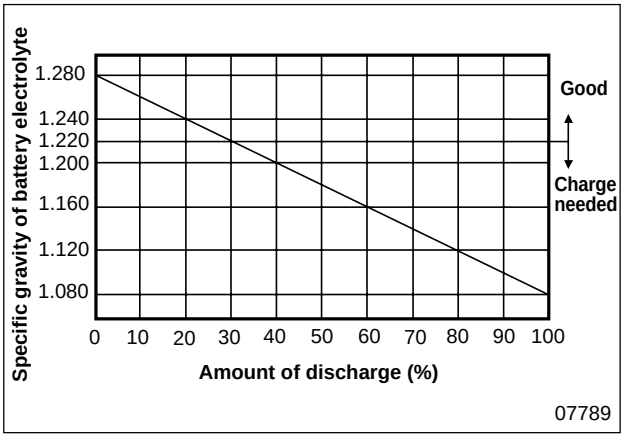

Charging

- Although, as a rule, charging of the battery should be done with the battery removed from the vehicle, if you have to charge the battery while it is on the vehicle, make sure that you stop the engine and disconnect the battery cable ⊖.
- Remove vent plug **B** before charging the battery.
- For the recommended charge time and current, see the following table to avoid overcharging.

	Charge current (A)	Charge time (H)	Upper limit of fluid temperature (°C {°F})
Normal charge	$\frac{\text{Value of 5-hour rating capacity}}{10}$	$\frac{*\text{Amount of discharge (Ah)}}{\text{Charge current (A)}} \times 1.2\text{(to 1.5)}$	45 {113}
Quick charge	$\frac{\text{Value of 5-hour rating capacity}}{1.5}$	0.5	55 {131}

* Amount of discharge (Ah)=5-hour rating capacity (Ah)$\times \frac{\text{Amount of discharge (\%)}}{100}$

- Use the graph shown on the left to calculate the amount of discharge (%).
- Use diluted sulfuric acid, made up of sulfuric acid and refined or distilled water, as the battery electrolyte.
- The specific gravity of fully-charged battery electrolyte is 1.280 with the temperature at 20°C {68°F}.

DANGER⚠

- **Do not let the battery electrolyte level rise and overflow while charging the battery.**
- **Keep naked lights away from the battery while charging it or it might explode.**
- **Be careful not to generate sparks while charging the battery because its dangerous.**
- **After charging the battery, tighten vent plug B, wash away sulfuric acid from the battery using water, and dry the surface.**

Fuse

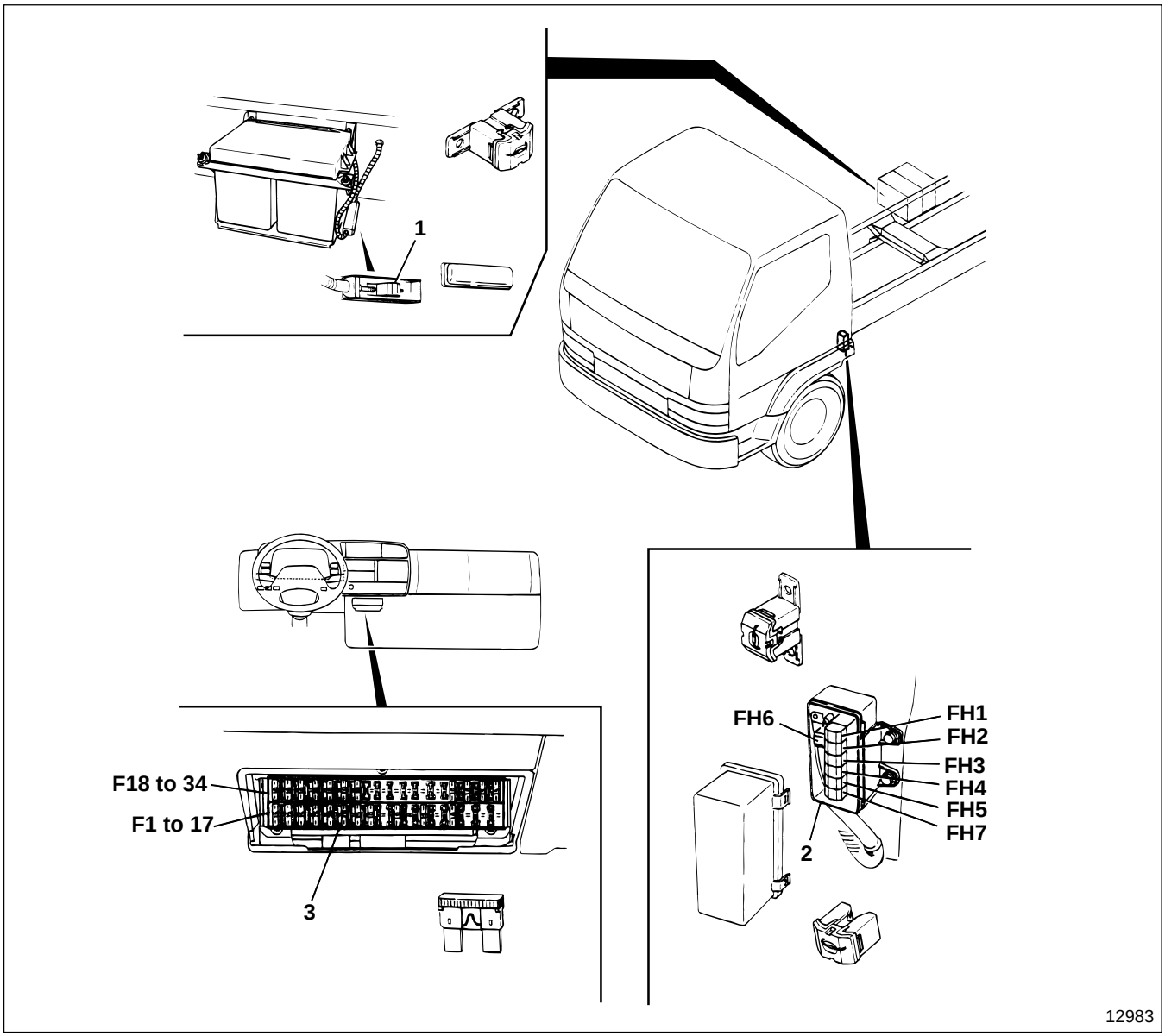

1 Main high-current fuse
2 High-current fuse box
3 Fuse box

CAUTION ⚠

- **If a fuse blows, make sure you identify and remedy the cause, then replace the fuse.**
- **Make sure that you replace the fuse with one having the same rating.**
- **Make sure that you remove the ⊖ terminal of the battery cable before removing main high-current fuse 1 and high-current fuses FH1 to 7.**

Main high-current fuse

Fuse No.	Main load	Capacity
—	High-current fuse box	120 A

High-current fuse box

Fuse No.	Main load	Capacity
FH1	Fuse box (F1 to F4)	50 A
FH2	Fuse box (F5 to F8, F11)	40 A
FH3	Brake booster (Hydraulic booster)	50 A
FH4	Starter switch (Terminal B)	50 A
FH5	Glow relay	50 A
FH6	Alternator	120 A
FH7	Fuse box (F31 to F34)	40 A

Fuse box

Fuse No.	Main load	Capacity
F1	Headlamp, LH	15 A
F2	Headlamp, RH	15 A
F3	Stop lamp, horn	15 A
F4	Turn signal lamp	15 A
F5	Fuel-cut motor	10 A
F6	Cab lamp	10 A
F7	Reserve power (BATT)	10 A
F8	A/T fluid cooler fan relay	—
F9	—	—
F10	—	—
F11	Reserve power (BATT)	10 A
F12	—	—
F13	* Cigarette lighter	15 A
F14	Radio	10 A
F15	Reserve power (ACC)	—
F16	—	10 A
F17	Fuel-cut relay	10 A

Fuse No.	Main load	Capacity
F18	Starter	10 A
F19	Backup lamp	10 A
F20	Meter cluster	10 A
F21	Wiper	10 A
F22	—	—
F23	—	—
F24	—	—
F25	—	—
F26	—	—
F27	Exhaust brake < M/T >	10 A
F28	Transmission PTO	10 A
F29	Pre-stroke cut relay	15 A
F30	* Air-conditioner control	10 A
F31	* Air-conditioner compressor	10 A
F32	* Condenser fan	15 A
F33	Blower fan	25 A
F34	Tail lamp	15 A

* : Fuses are provided for these pieces of equipment only where they are installed.

PTO : Power take-off
A/T : Automatic transmission
M/T : Manual transmission

LUBRICATION

*1 : 30000 km/18000 miles or 6 months, whichever occurs first.
*2 : 60000 km/36000 miles or 12 months, whichever occurs first.
Ⓔ : Exhaust emission items

	Inspection and maintenance	Time of inspection and maintenance					Lubrication procedures	Remarks
		Pre-operation checks	New vehicle at 4000 km/2500 miles	Inspection interval: Every 10000 km/6000 miles	Inspection interval: Every 30000 km/18000 miles *1	Inspection interval: Every 60000 km/36000 miles *2		
1	Ⓔ Engine oil contamination and oil level	×					Engine oil API classification CD, CD/SF, CE, CE/SF or CF-4 Over 30°C {86°F} ..... SAE 40 40 to –5°C {104 to 23°F} ..... SAE 30 15 to -15°C {59 to 5°F} ..... SAE 20W-20 Over -15°C {5°F} ..... SAE 15W-40 Below 0°C {32°F} ..... SAE 10W-30	Gr 12
	Ⓔ Engine oil replacement		×	×				
2	Brake fluid tank fluid level	×		×			Brake fluid (SAE J1703f or FMVSS No.116 DOT3)	Gr 21, 35
	Brake fluid tank fluid replacement					×		
3	Lubrication of clutch fork shaft				×		Wheel bearing grease [NLGI No.2 (Li soap)]	Gr 21
4	Lubrication of clutch shifter			When replacing clutch disc assembly				
5	Manual transmission oil level			×			Gear oil, API classification GL-3 SAE 80 (General) GL-3 SAE 90 (Warm region) GL-4 SAE 90 (Tropical region) Engine oil Long period of high-speed driving API classification CC or CC/SF SAE 30 or SAE 40	Gr 22
	Manual transmission oil replacement		×		×			
6	Automatic transmission fluid level			×			Automatic transmission fluid (DEXRON, DEXRON II type)	Gr 23
	Automatic transmission fluid and filter replacement			Every 40000 km/25000 miles Replace the fluid at the first 10000 km/6000 miles inspection				
7	Axle housing gear oil level			×			Gear oil API classification GL-5 Below 40°C {104°F} ..... SAE 90 Over 40°C {104°F} ..... SAE 140 Use SAE 140 when operating vehicle at high load such as continuous ascent on slopes and when the outside temperature is 10°C {50°F} or more	Gr 27
	Axle housing gear oil replacement		×			×		
8	Hub bearing grease and oil seal replacement					×	Wheel bearing grease [NLGI No.2 (Li soap)]	Gr 26, 27
9	Power steering fluid level			×			Automatic transmission fluid (DEXRON, DEXRON II type)	Gr 37
	Power steering fluid replacement					×		
10	Lubrication of propeller shaft (universal joint, slip joint, center bearing)			×			Wheel bearing [NLGI No.2 (Li soap)]	Gr 25
11	Lubrication of kingpins			×			Chassis grease [NLGI No.1 (Ca soap)]	Gr 26
12	Lubrication of all chassis parts			×				

Engine Oil

Tightening torque

Unit : N·m {lbf.ft, kgf·m}

Location	Parts to be tightened	Tightening torque	Remarks
3	Oil pan drain plug	69 {51, 7}	—

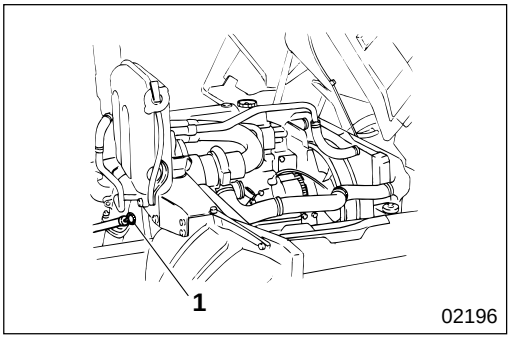

[Inspection]
- Pull out dipstick **1**, wipe off the oil with a cloth.
- Reinsert dipstick **1**, then pull it out carefully.
- Oil level is correct if there is oil sticking to dipstick **1** within the hatched area.
- If the level is low, top it up.
- Tilt the cab.

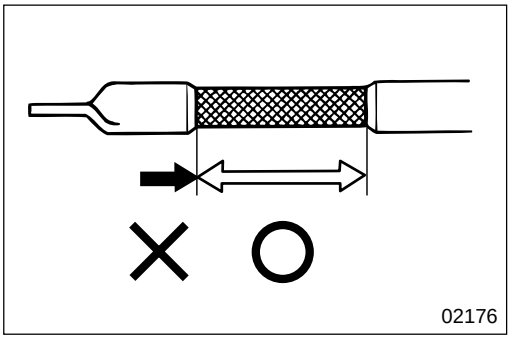

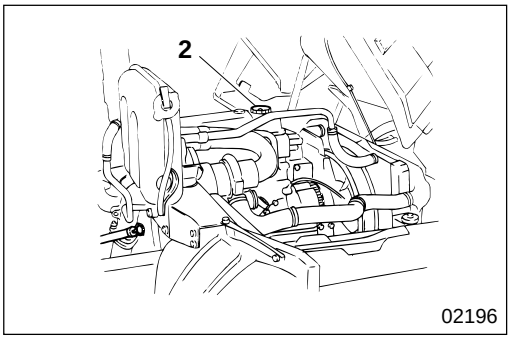

[Replenishment]
- Clean the area surrounding oil filler cap **2** and prevent dust from entering through the filler.
- Remove oil filler cap **2** and top up with engine oil.
- Wait five minutes before checking the oil level.
- Replace filler cap **2**.

WARNING
- **Wipe up any engine oil that has been spilled because it can cause a fire.**
- **Do not touch the engine while it is hot as it will burn you.**

CAUTION

Take care not to spill engine oil on the V-belts, because this would cause them to slip, reducing service life.

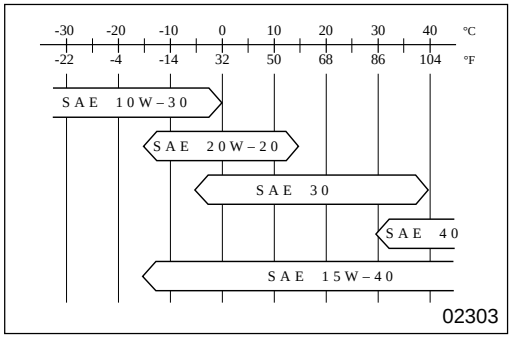

[Replacement]
Since engine oil greatly influences the performance, the life expectancy, and the ability to start the engine, use only oil of the specified grade and viscosity.
The chart illustrates the relationship between oil viscosity and the ambient air temperature.

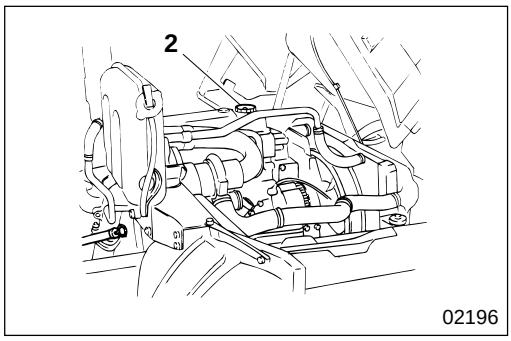

- Clean the area surrounding oil filler cap **2** and prevent dust from entering through the filler.
- Remove oil filler cap **2**.
- Remove oil pan drain plug **3**, and drain the oil. At the same time replace the oil filter.
- After reinstalling drain plug **3**, slowly add engine oil through the oil filler.
- Using the dipstick, check the oil level after more than six minutes have passed.
- Start the engine and let it idle. When the oil has reached all parts, stop the engine. Let 30 minutes pass before checking the oil level again.

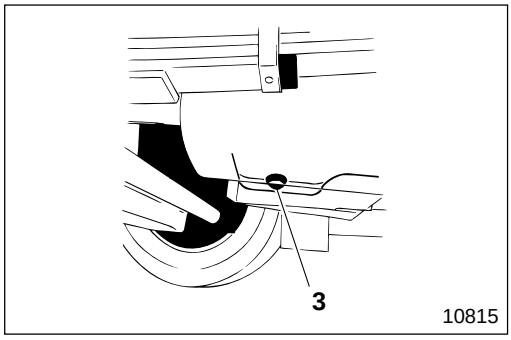

Clutch Fluid (Brake Fluid)

Tightening torque

Unit : N·m {lbf.ft, kgf·m}

Location	Parts to be tightened	Tightening torque	Remarks
2	Air bleeder	25 to 34 {18 to 25, 2.5 to 3.5}	—

Fluid

Location	Points of application	Specified fluid	Quantity
1	Fluid tank	Brake fluid (SAE J1703f or FMVSS No.116 DOT3)	As required

WARNING

- **The clutch fluid system and the brake fluid system use the fluid tank in common.**
- **You must use new brake fluid (SAE J1703f or FMVSS No.116 DOT3). Do not add different quality fluid or mineral oil (gas oil, engine oil, gear oil, automatic transmission fluid, etc.) to the clutch system, because this will cause the rubber parts of the clutch system and brake system to swell, resulting in faulty clutch operation, as well as ineffective braking and brake dragging.**
- **Do not allow foreign particles or water to become mixed into the brake fluid when refilling, because this will result in ineffective clutch and brake operations.**
- **If you use a mug for adding brake fluid, keep it solely for that purpose.**

CAUTION

- **Be careful not to splash brake fluid on related parts as this could damage the paintwork.**
- **Be sure to wipe off brake fluid immediately if you splash it on the paintwork.**

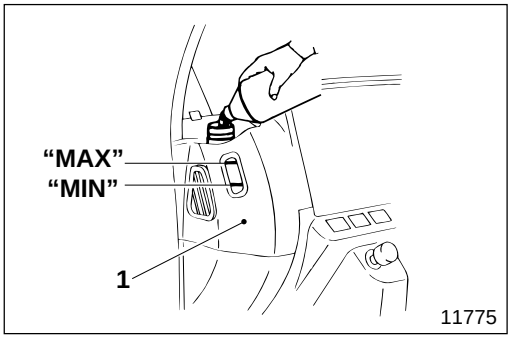

[Inspection and replenishment]

- Inspect the level of the brake fluid in fluid tank **1**. It should fall between the "**MAX**" and "**MIN**" levels.
- If it is below the "**MIN**" level, lift up the lid flap and remove the cap from fluid tank **1**, then supply the specified brake fluid until the level has come up to the "**MAX**" level. Do not fill above the "**MAX**" level.

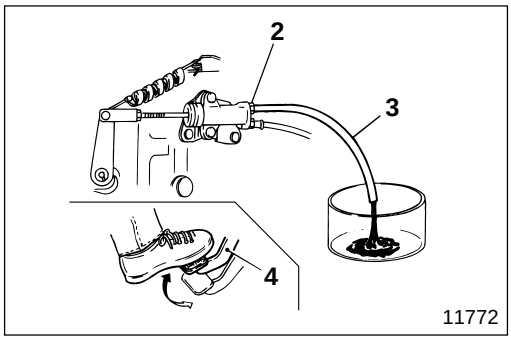

[Replacement]
- Attach vinyl pipe **3** to air bleeder **2** of the clutch power cylinder.
- Loosen air bleeder **2** and depress clutch pedal **4** several times to drain brake fluid completely.

- Supply new brake fluid to the **"MAX"** level of fluid tank **1**. Depress clutch pedal **4** repeatedly until the old brake fluid discharged from vinyl pipe **3** is replaced by the new brake fluid.

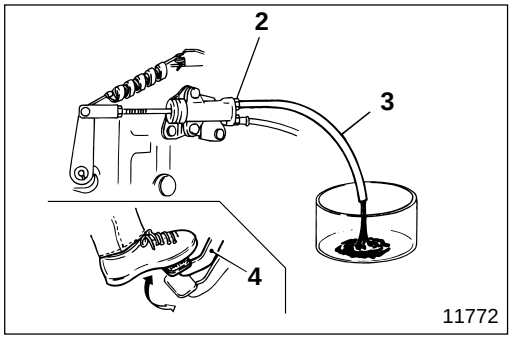

NOTE

Carry out this operation maintaining the brake fluid level in fluid tank 1 between "MAX" and "MIN".

- Attach vinyl pipe **3** to air bleeder **2** of the clutch power cylinder as in the replacement procedure.
- Fill fluid tank **1** with brake fluid, and loosen air bleeder **2** of the clutch power cylinder then depress clutch pedal **4** continuously.
- Keep depressing clutch pedal **4**, and tighten air bleeder **2** when air is bled completely.
- Depress clutch pedal **4** several times again, then keep it depressed at its fullest extent.
- With clutch pedal **4** depressed, loosen air bleeder **2** to drain brake fluid containing air. Release the pedal after tightening the air bleeder.

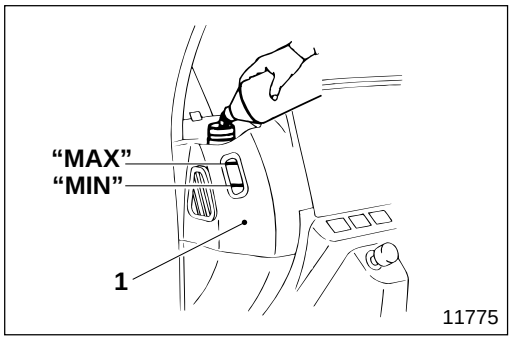

- Repeat this operation until air is no longer present in the fluid being drained.
- When this operation is completed, tighten air bleeder **2** at specified torque.
- Check that brake fluid is at the "**MAX**" level of fluid tank **1**, and supply new brake fluid if necessary.
- Check for brake fluid leakage from each of the parts with clutch pedal **4** depressed.

Manual Transmission Gear Oil

Tightening torque

Unit : N·m {lbf.ft, kgf·m}

Location	Parts to be tightened	Tightening torque	Remarks
1	Inspection plug	69±15 {51±11, 7±1.5}	—
2	Drain plug	69±15 {51±11, 7±1.5}	—

Sealant

Location	Points of application	Specified sealant	Quantity
1	Thread area of inspection plug	THREEBOND 1105D	As required
2	Thread area of drain plug	THREEBOND 1105D	As required

WARNING

The engine is hot immediately after the vehicle stopped, so take care not to burn yourself.

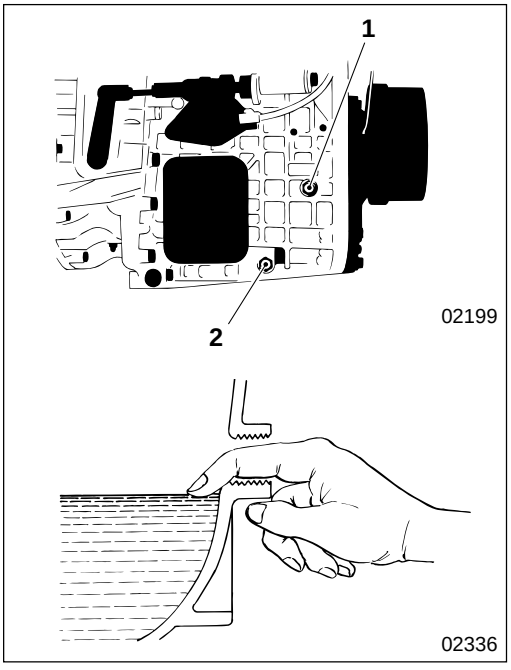

[Inspection and replenishment]

- Remove inspection plug **1** and check whether the oil level is up to the edge of the entrance.
- If the level is low, add oil through the inspection plug hole until the level comes up to the edge of the entrance.

[Replacement]

- Drain the oil after removing inspection plug **1** and drain plug **2**.
- Remove any metal particles sticking to the magnetic part of drain plug **2** before reinstalling the plug.
- Add oil through the inspection plug hole until the level comes up to the edge of the entrance.
- Insert inspection plug **1**.

Automatic Transmission Fluid and Oil Filter

Tightening torque

Unit : N·m {lbf.ft, kgf·m}

Location	Parts to be tightened	Tightening torque	Remarks
4	Drain plug	20 to 27 {15 to 20, 2.05 to 2.75}	—
5	Dipstick guide connector	125 to 135 {91 to 100, 12.55 to 13.76}	—
6	Bolt (Oil pan mounting)	14 to 18 {10 to 13, 1.4 to 1.8]	—
8	Bolt (Oil filter mounting)	14 to 18 {10 to 13, 1.4 to 1.8]	—
12	Oil filter	9.8 to 20 {7 to 14, 1 to 2}	—

Fluid

Location	Points of application	Specified fluid	Quantity
11	Body of O-ring	Automatic transmission fluid (DEXRON or DEXRON II type)	As required
12	Gasket of oil filter with thin application	Automatic transmission fluid (DEXRON or DEXRON II type)	As required

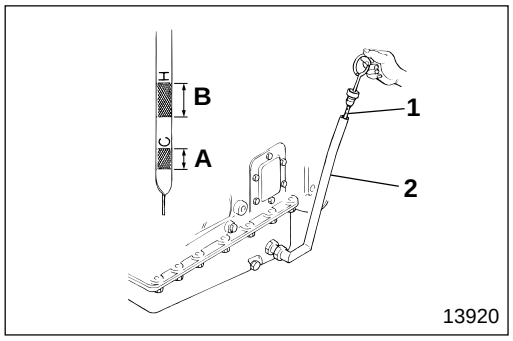

[Inspection and replenishment]

- Park the vehicle on level ground, make sure that the parking brake is fully activated and chock the wheels to keep them from rolling.
- Start the engine and let it idle. To fill the hydraulic circuit with automatic transmission fluid, shift the range selector lever from N → R → N → D → 2 → D → N. Repeat this process five times, finally shifting to N.
- While the engine is still idling, pull out dipstick **1** and wipe off the fluid sticking to it. Reinsert the dipstick, then pull it out again and check the fluid level.
- If the fluid level is inspected right after the engine is started and the fluid temperature is still low (approximately 15 to 49°C {60 to 120°F}), the level should be within area **A** marked COLD on dipstick **1**.
- If the fluid level is inspected after the vehicle has been driven and the fluid temperature is high (approximately 71 to 93°C {160 to 200°F}), the level should be within area **B** marked HOT on dipstick **1**.

WARNING

Take care during the inspection because the engine will be running. Take sufficient care to avoid burns or injuries resulting from contact with moving parts.

NOTE

- **Make sure the vehicle is parked on level ground when you are checking the fluid level.**
- **Make sure the range selector lever is in the N position and the engine is idling when you are checking the fluid level. When the engine is stopped, the fluid level appears higher than it actually is.**
- **Be sure to wipe off the dust from the safety cap and the upper part of dipstick guide 2 before you pull out dipstick 1.**
- **To ensure the fluid is correct, reinspect the fluid level after an actual drive.**

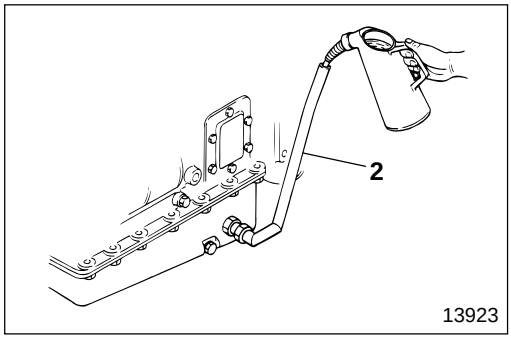

- If the fluid level is low, add automatic transmission fluid (DEXRON or DEXRON II type) through dipstick guide **2** until the correct level on dipstick **1** is reached.

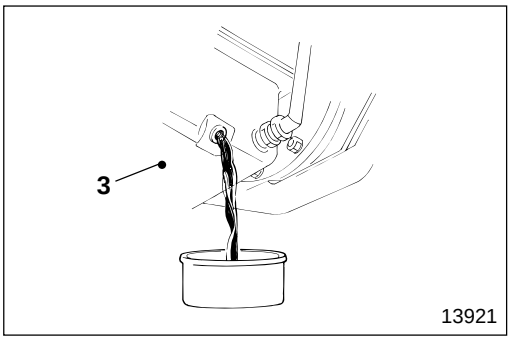

[Replacement]

- Park the vehicle on level ground, chock the wheels and shift the range selector lever to the N position.
- Place a container under oil pan **3**, remove drain plug **4** and drain the fluid.

WARNING⚠

Take care because the fluid temperature immediately after the engine has stopped is very high. To avoid scalds, wait until a safe temperature has been reached before draining the fluid.

NOTE

- **The fluid will drain faster if the engine is first run to raise the fluid temperature.**
- **The fluid cannot be drained from the hydraulic circuit, the torque converter or the oil cooler.**
- **Check the drained fluid for dirt, metal particles and metal fragments.**

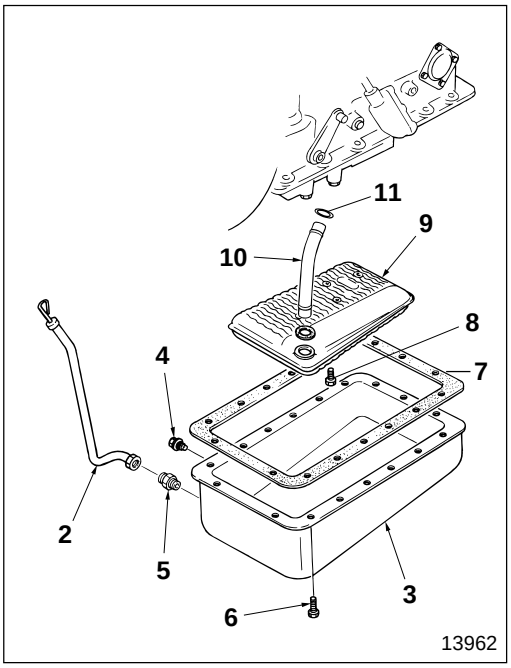

- Remove oil pan **3**, intake pipe **10**, O-ring **11**, gasket **7** and oil filter **9**.
- Clean oil pan **3**.
- Replace O-ring **11**, gasket **7** and oil filter **9**.

2 : Dipstick guide
4 : Drain plug
5 : Dipstick guide connector
6 : Bolt
8 : Bolt

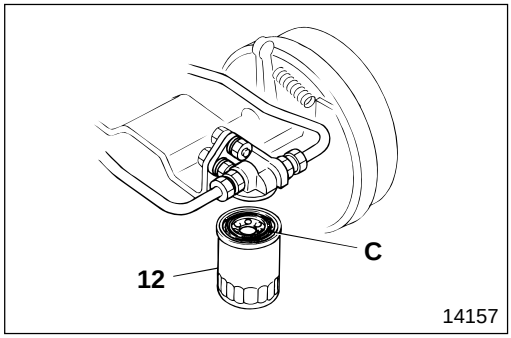

- Remove oil filter **12** (for oil cooler) by turning it counterclockwise.
- Lightly coat gasket **C** with the fluid before installing oil filter **12**. Then tighten the oil filter.

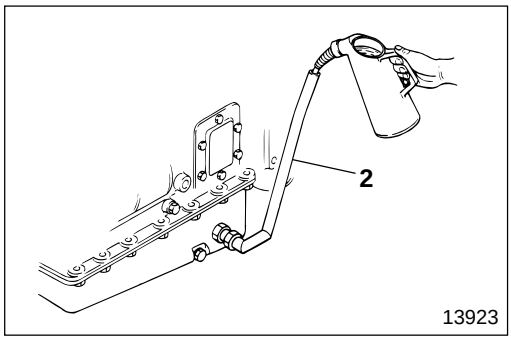

- Supply fluid through dipstick guide **2**.

CAUTION

Make sure that dirt and foreign particles do not become mixed in with the fluid when it is added.

- Shift the range selector lever to the N position, start the engine and let it idle for about one minute.
- After shifting the lever through all positions once, shift it back to N position.

CAUTION

To prevent burning out the interior of the automatic transmission assembly, make sure that the engine is not allowed to race when you do the above.

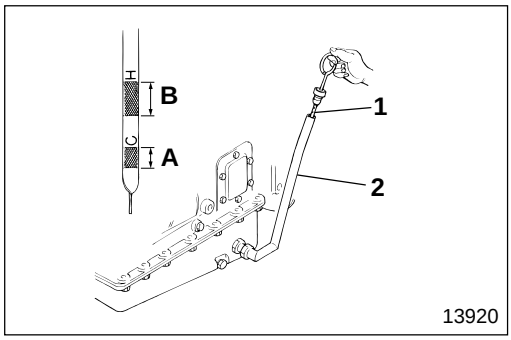

- Check and adjust so that the fluid level is within the specified area on dipstick **1**.

NOTE

- **As the temperature of the fluid rises, so does the fluid level. If you add fluid while the temperature is still low (approximately 15 to 49°C {60 to 120°F}), make sure that the level stays within area A, marked COLD on dipstick 1.**
- **Let the engine idle and, while paying attention to the fluid level, pour in the fluid slowly.**
- **It is sometimes hard to check the fluid level, immediately after supplying fluid, because of the fluid adhering to the interior of dipstick guide 2. If this is the case, check the fluid level several times at intervals.**
- **Be careful not to supply too much fluid because you might mistake the fluid that overflows from the air breather for fluid leakage.**

Rear Axle Gear Oil

Tightening torque

Unit : N·m {lbf.ft, kgf·m}

Location	Parts to be tightened	Tightening torque	Remarks
1	Inspection plug	98 to 115 {72 to 87, 10 to 12}	—
2	Drain plug	98 to 115 {72 to 87, 10 to 12}	—

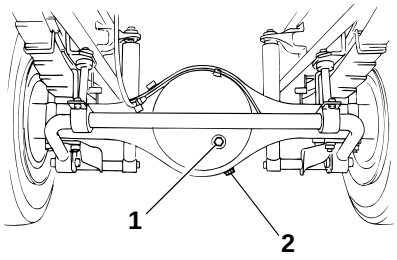

02201

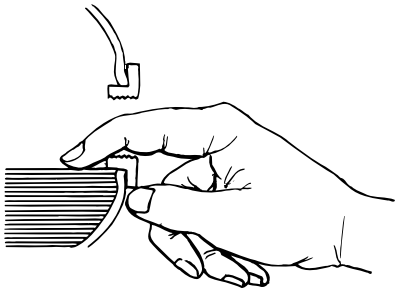

02340

[Inspection and replenishment]

WARNING

The oil temperature is high immediately after the vehicle stopped, so take care not to scald yourself.

- Remove inspection plug **1**, check the oil level and make sure it is up to the edge of the entrance.
- If the oil level is low, add oil through the inspection plug hole until the level comes up to the edge of the entrance.
- Insert inspection plug **1**.

[Replacement]

- Drain the oil after removing inspection plug **1** and drain plug **2**.
- Remove any metal particles sticking to the magnetic part of drain plug **2** before reinstalling the plug.
- Supply oil through the inspection plug hole until the level comes up to the edge of the entrance.
- Reinstall the inspection plug.

LUBRICATION

Power Steering Fluid

Tightening torque

Unit : N·m {lbf.ft, kgf·m}

Location	Parts to be tightened	Tightening torque	Remarks
3	Oil pipe	66.69±12.75 {49±9.4, 6.8±1.3}	—

Fluid

Location	Points of application	Specified fluid	Quantity
1	Power steering oil tank	Automatic transmission fluid (DEXRON or DEXRON II type)	Between "MAX" and "MIN" on the power steering oil tank

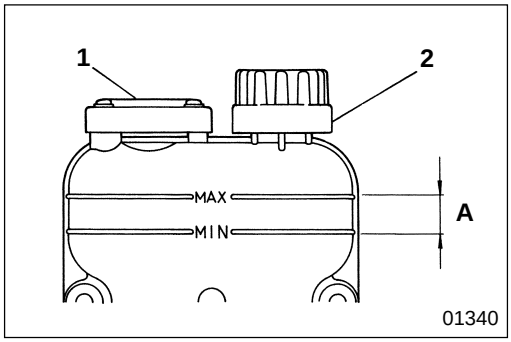

WARNING

Because the brake booster (hydraulic booster) uses power steering fluid, do not let other fluids such as brake fluid, etc. get mixed with the power steering fluid inside the power steering oil tank.

[Inspection and replenishment]

- Straighten the front wheels and stop the engine.
- Inspect the level of the fluid in power steering oil tank **1**. It should fall between fluid level range **A**.
- If it is below the **"MIN"** level, remove filler cap **2** from power steering oil tank **1**, then supply the specified fluid until the level has come up to the **"MAX"** level. Do not fill above the **"MAX"** level.

CAUTION

If the fluid level is far below the recommended range, the fluid may be leaking.

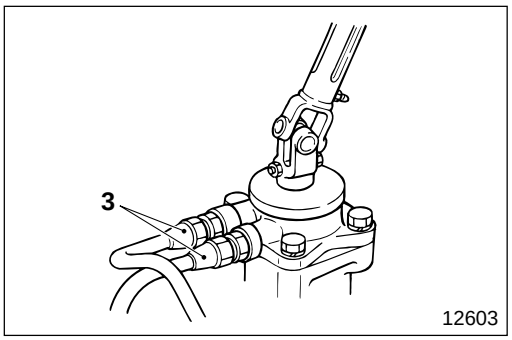

[Replacement]

- Drainage
  - Jack up the front wheels.
  - Disconnect oil pipe **3** connected to the power steering booster.
  - Turn the steering wheel fully left and right repeatedly, and drain the fluid from the power steering booster.
  - After draining the fluid, tighten oil pipe **3** at specified torque.

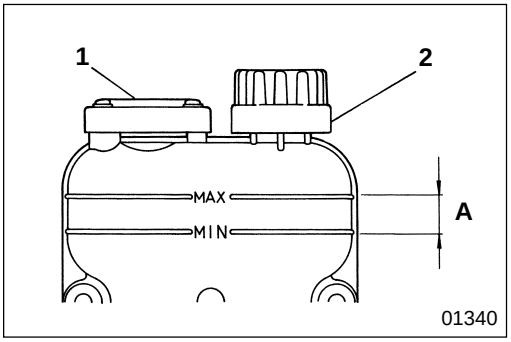

[Supply]

- Supply fluid into power steering oil tank **1** up to filler cap **2**.
- With the engine stopped, jack up the front wheels and turn the steering wheel fully left and right repeatedly. When the fluid level has dropped, add fluid to maintain the fluid level within range **A**.
- Start the engine and letting it idle, turn the steering wheel fully left and right repeatedly. When the fluid level has dropped, add fluid to maintain the fluid level within range **A**. Repeat these steps until the fluid level does not drop.
- Depress the brake pedal fully several times repeatedly, until as in the case of the steering wheel, the fluid level does not drop anymore. (The steering wheel at such time does not need to be operated)
- If there is an abnormal noise, air is still in the system. Turn the steering wheel several times, next depress the brake pedal several times to raise the fluid temperature to approximately 60 to 80°C {140 to 176°F}, then stop the engine and wait for approximately five minutes.
- Lower the front wheels and turn the steering wheel several times to make sure there is no abnormal noise.
- With the engine stopped, depress the brake pedal several times, activate the brake booster (hydraulic booster) emergency pump and bleed air.
- When there is no abnormal noise after the above procedure has been performed, bleeding is completed. Check oil tank **1** fluid level, and pipe and hose connections for fluid leakage.
- After bleeding is completed, inspect brake booster (hydraulic booster) performance (input and output characteristics). Gr 35

LUBRICATION

Brake Fluid

Tightening torque

Unit : N·m {lbf.ft, kgf·m}

Location	Parts to be tightened	Tightening torque	Remarks
2	Air bleeder	7.8 to 12 {5.8 to 8.5, 0.8 to 1.2}	—

Fluid

Location	Points of application	Specified fluid	Quantity
1	Fluid tank	Brake fluid (SAE J1703f or FMVSS No.116 DOT3)	As required

Special tools

Unit : mm {in.}

Location	Tool name and shape	Part No.	Application
2	Vinyl hose 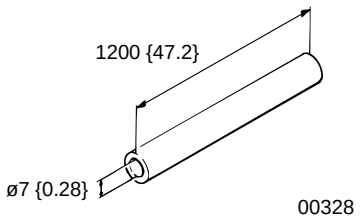	MH033102	Air bleeding

WARNING

- **The clutch fluid system and the brake fluid system use the fluid tank in common.**
- **You must use new brake fluid (SAE J1703f or FMVSS No.116 DOT3). Do not add different quality fluid or mineral oil (gas oil, engine oil, gear oil, automatic transmission fluid, etc.) to the clutch system, because this will cause the rubber parts of the clutch system and brake system to swell, resulting in faulty clutch operation, as well as ineffective braking and brake dragging.**
- **Do not allow foreign particles or water to become mixed into the brake fluid when refilling, because this will result in ineffective clutch and brake operations.**
- **If you use a mug for adding brake fluid, keep it solely for that purpose.**

CAUTION

- **Be careful not to splash brake fluid on related parts as this could damage the paintwork.**
- **Be sure to wipe off brake fluid immediately if you splash it on the paintwork.**

NOTE

Supply and maintain brake fluid level to the "MAX" level of the fluid tank .

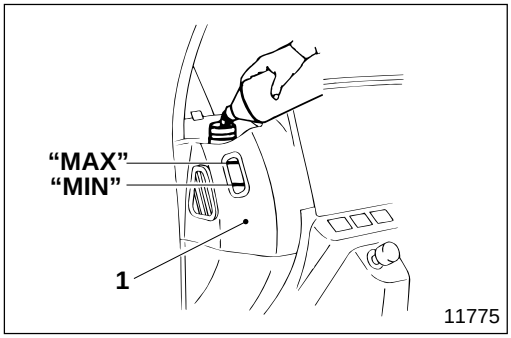

[Inspection and replenishment]

- Inspect the level of the brake fluid in fluid tank **1**. It should fall between the "**MAX**" and "**MIN**" levels.
- If it is below the "**MIN**" level, remove the cap from fluid tank **1**, then supply the specified brake fluid until the level comes up to the "**MAX**" level. Do not fill above the "**MAX**" level.

[Replacement]

- Start engine and let it idle until brake fluid replacement is completed.

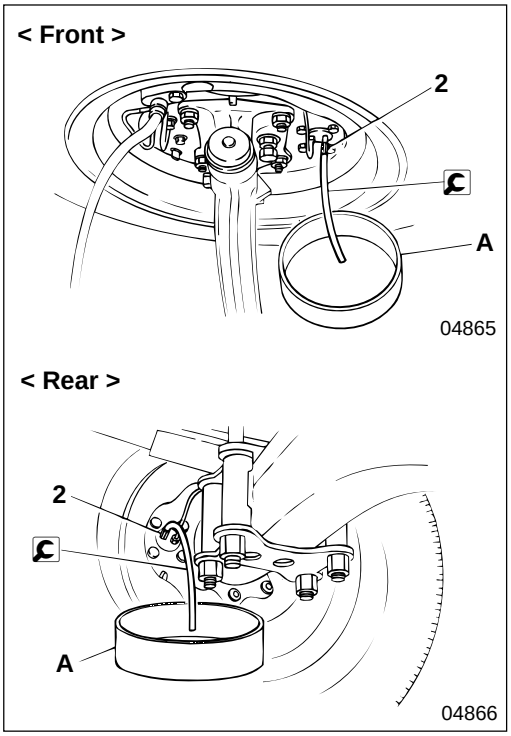

- Attach one end of vinyl hose to air bleeder **2** and place the other end in container **A**.

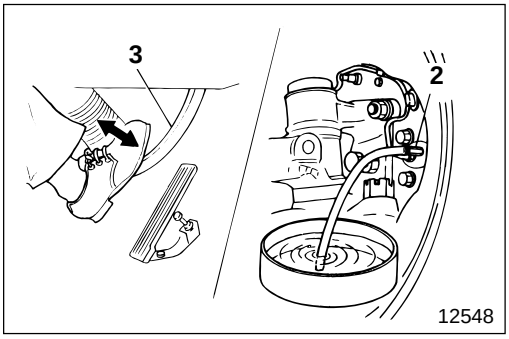

- Loosen air bleeders **2** and depress brake pedal **3** several times to drain brake fluid completely.

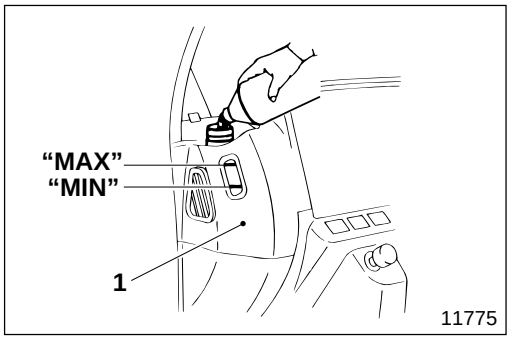

- Maintaining a supply of new brake fluid up to the "**MAX**" level of fluid tank **1**, depress brake pedal **3** repeatedly until the old brake fluid of the brake system is replaced with new fluid.
- Carry out air bleeding of the brake system.

[Air bleeding]

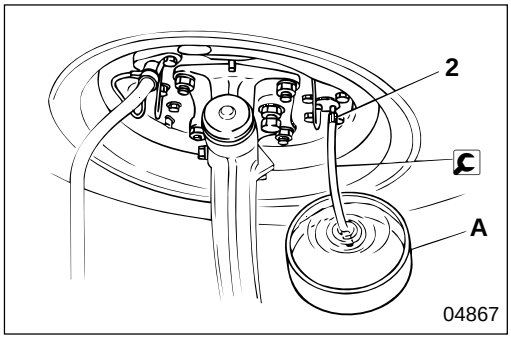

- Start the engine and let it idle until brake fluid replacement is completed.
- Attach one end of vinyl hose to air bleeder **2** of the wheel brake. Place free end in container **A** filled with brake fluid.

- Carry out air bleeding in the following sequence:

Front brake system	Rear brake system
Right-hand side wheel brake	Right-hand side wheel brake
↓	↓
Left-hand side wheel brake	Left-hand side wheel brake

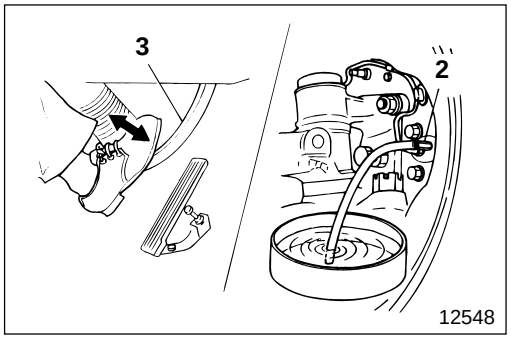

- Depress brake pedal **3** slowly a few times, and with the brake pedal depressed, loosen air bleeder **2** to drain brake fluid containing air.

- Tighten air bleeder **2**, and release brake pedal **3**.
- Repeat this service procedure until air is no longer present in the fluid being drained.
- Tighten air bleeder **2** at specified torque as soon as brake fluid flowing out is free of air bubbles.

- Adjust brake shoe clearance when you have finished air bleeding.
- Check that brake fluid comes up to level "**MAX**" of fluid tank **1**. If it does not, refill with new brake fluid.
- Depress brake pedal **3** a few times and check for any leakage of brake fluid, then test the brakes.

M E M O

● Greasing Various Areas of Chassis

Carefully clean away all dust and dirt from the grease nipples, and use the specified type of grease. The areas to be greased are shown in the following illustration.

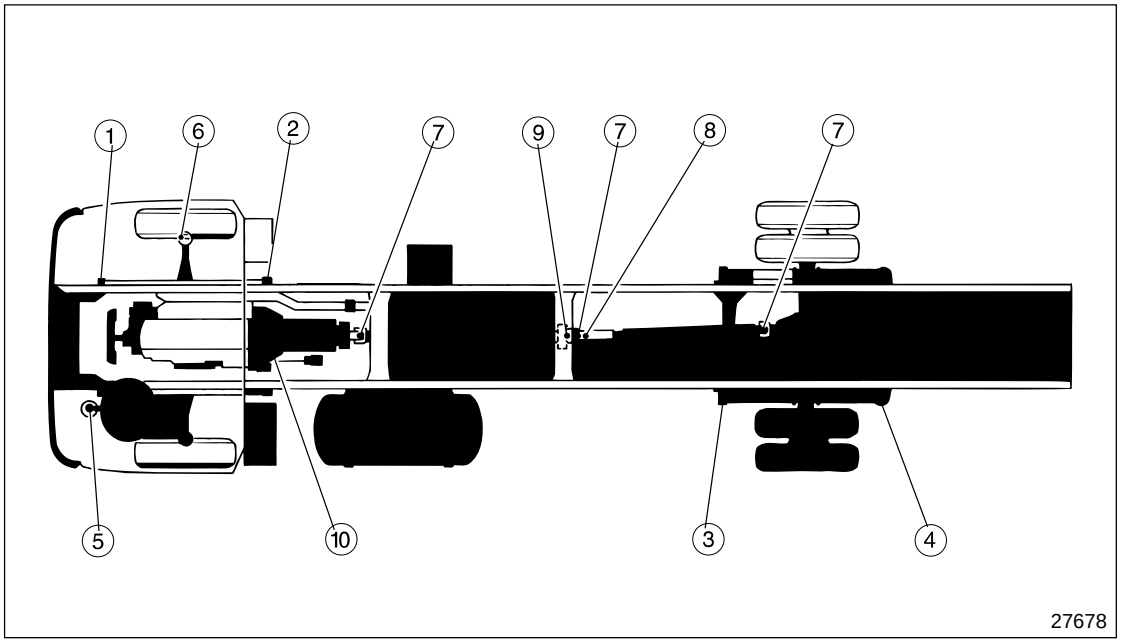

①

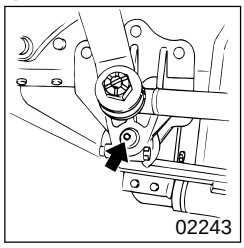

②

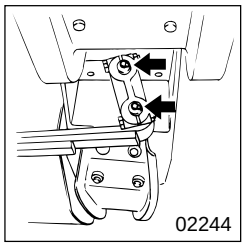

③

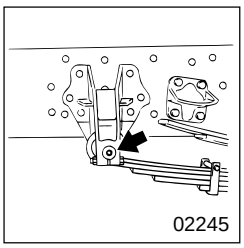

④

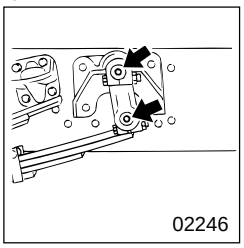

⑤

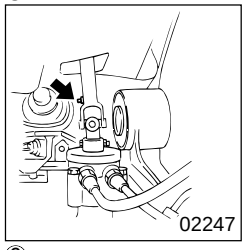

⑥

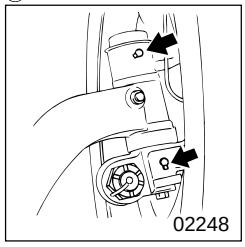

⑦

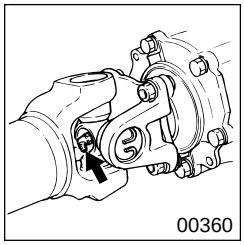

⑧

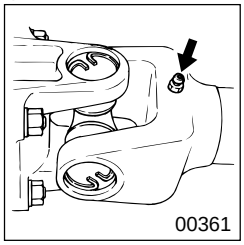

⑨

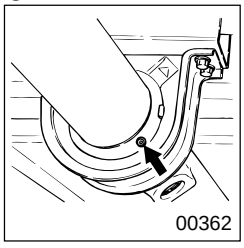

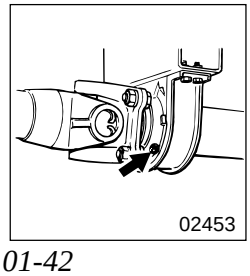

⑩

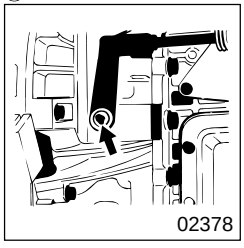

Supply grease to the center bearing until grease overflows from the escape valve at the back of the grease nipple.

① Front spring pin front (left and right, 2 points)
② Front spring pin rear (left and right, 4 points)
③ Rear spring pin front (left and right, 2 points)
④ Rear spring pin rear (left and right, 4 points)
⑤ Steering shaft
⑥ Kingpin bearing (left and right, 4 points)
⑦ Universal joint of propeller shaft
⑧ Slip joint of propeller shaft
⑨ Center bearing of propeller shaft
⑩ Clutch fork shaft (left and right, 2 points)

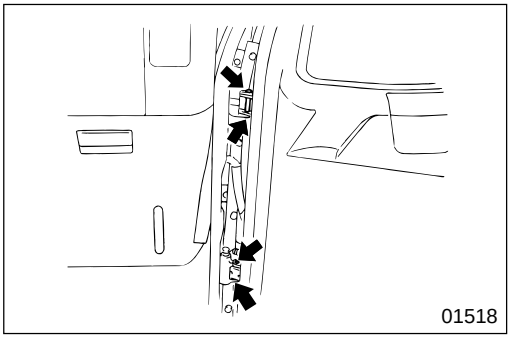

● **Door hinge**

MITSUBISHI
FUSO

FH

Service Manual

Group 01
Maintenance Schedule

Table of Contents

BACK

HOME

MITSUBISHI FUSO TRUCK OF AMERICA, Inc.

Pub No. TWME9502-01

MAINTENANCE SCHEDULE

HOW TO READ THE MAINTENANCE SCHEDULE TABLES 2

MAINTENANCE SCHEDULE TABLES 3

MAINTENANCE OPERATIONS 7
- Replacement of Oil Filter 7
- Replacement of Fuel Filter 8
- Draining of Water Separator Condensation 9
- Cleaning of Fuel Feed Pump Gauze Filter 9
- Bleeding of Air from Fuel Line 10
- Adjustment of V-Belt Tension 11
- Cleaning and Replacement of Air Cleaner Element 13
- Inspection of Clutch Pedal Free Play 14
- Tire 14
- Inspection of Brake Lining Thickness 20
- Battery 20
- Fuse 24

LUBRICATION 26
- Engine Oil 27
- Clutch Fluid (Brake Fluid) 29
- Manual Transmission Gear Oil 31
- Automatic Transmission Fluid and Oil Filter 32
- Rear Axle Gear Oil 35
- Power Steering Fluid 36
- Brake Fluid 38
- Greasing Various Areas of Chassis 42

HOW TO READ THE MAINTENANCE SCHEDULE TABLES

Example Table :

*1 : 30000 km/18000 miles or 6 months, whichever occurs first.
*2 : 60000 km/36000 miles or 12 months, whichever occurs first.
Ⓔ : Exhaust emission items
Ⓝ : Noise control items

	Inspection and maintenance (1)	Time of inspection and maintenance (2)					Working procedures (3)	Remarks (4)
		Pre-operation checks	New vehicle at 4000 km/2500 miles	Inspection interval: Every 10000 km/6000 miles	Every 30000 km/18000 miles *1	Every 60000 km/36000 miles *2		
ENGINE								
1	Air, fuel, oil or coolant leakage from engine			×			Check engine for air, fuel, oil and coolant leakage	Gr 11, 12, 13, 14
2	Ⓔ Ⓝ Engine starting performance, speed, noise and exhaust gas conditions			×			Check for engine starting performance, idling speed, abnormal engine noise, dark smoke or other abnormal exhaust gas during idling and acceleration. Check engine speed on tachometer	Gr 11, 13, 15
3	Retightening of inlet and exhaust manifold bolts					×	Check manifold bolts for looseness	Gr 15
4	Ⓔ Valve clearance		×			×	Check valve clearance with feeler	Gr 11
5				Every 20000 km /12000 miles			Replace element	

(1) This column contains the maintenance and inspection items.
(2) The periods between inspection and service are based on the assumption that the vehicle will be driven approximately 60000 kilometers (36000 miles) per year.
Inspections which must be made are indicated by an "×" or by the appropriate period between servicing.
(3) This column provides a simplified explanation of the operational procedures involved for each inspection or maintenance item.
(4) The Gr. No. refers to the "group number" in this vehicle Service Manual. For visual checks and simple inspections, see the sections labelled "Working Procedures".

*1 : 30000 km/18000 miles or 6 months, whichever occurs first.
*2 : 60000 km/36000 miles or 12 months, whichever occurs first.
Ⓔ : Exhaust emission items
Ⓝ : Noise control items

	Inspection and maintenance	Time of inspection and maintenance					Working procedures	Remarks
		Pre-operation checks	New vehicle at 4000 km/2500 miles	Inspection interval: Every 10000 km/6000 miles	Every 30000 km/18000 miles *1	Every 60000 km/36000 miles *2		
ENGINE								
1	Air, fuel, oil or coolant leakage from engine			×			Check engine for air, fuel, oil and coolant leakage	Gr 11, 12, 13, 14
2	Ⓔ Ⓝ Engine starting performance, speed, noise and exhaust gas conditions			×			Check for engine starting performance, idling speed, abnormal engine noise, dark smoke or other abnormal exhaust gas during idling and acceleration. Check engine speed on tachometer	Gr 11, 13, 15
3	Retightening of inlet and exhaust manifold bolts					×	Check manifold bolts for looseness	Gr 15
4	Ⓔ Valve clearance		×			×	Check valve clearance with feeler gauge	Gr 11
5	Ⓔ Oil filter replacement			Every 20000 km/12000 miles On new vehicles, replace the first filter at 10000 km/6000 miles			Replace element	Gr 12
6	Ⓔ Ⓝ Check injection nozzles			Every 90000 km/54000 miles			Check injection nozzles	Gr 13
7	Ⓔ Ⓝ Fuel injection pressure and spray pattern of injection nozzles			Every 250000 km/150000 miles			Remove injection nozzle and check with nozzle tester	Gr 13
8	Ⓔ Ⓝ Fuel injection timing					×	Turn crankshaft in normal running direction and check injection starting timing of No.1 cylinder	Gr 13
9	Ⓔ Cleaning fuel feed pump filter					×	Remove connector from fuel feed pump inlet and clean filter inside connector with gas oil	
10	Ⓔ Fuel filter replacement				×		Replace element	Gr 13
11	Ⓔ Water separator water discharge	×					Loosen water separator drain plug to discharge water	Gr 13
12	Ⓔ Removal of water and sediment from fuel tank			Every 24 months			Remove fuel tank drain plug and remove water and sediment	Gr 13
13	Retightening of fuel tank bracket bolts			×			Check mounting bolts for looseness and retighten to a torque of 34 to 54 N·m {25 to 40 lbf.ft, 3.5 to 5.5 kgf·m}	Gr 13
14	Ⓔ Replacing fuel line in engine compartment			Every 24 months			Replace fuel line in engine compartment	Gr 13
15	Ⓔ Check fuel line outside of engine compartment			Every 24 months			Check fuel line outside of engine compartment. Replace if necessary	Gr 13
16	Ⓔ Ⓝ V-belt tension and damage	×		×			Press midpoint of V-belt firmly with your finger to measure deflection and check for belt damage	Gr 14
17	Coolant level and leakage from cooling system	×					Check coolant level and if level is low, check for coolant leakage	Gr 14
18	Coolant replacement			Every 24 months			Replace with new coolant	Gr 14
19	Installed condition of surge tank cap			×			Check surge tank cap for sealing and mounting condition	Gr 14
20	Ⓔ Cooling system hose clamp position and clamping condition			×			Check clamp position and clamping condition of cooling system hose	Gr 14
21	Ⓔ Turbocharger rotor play			Every 250000 km/150000 miles			Check whether rotor has excessive end play using a dial indicator	Gr 15
22	Ⓔ Ⓝ Cleaning of air cleaner	×					Check air cleaner dust indicator. If the red signal appears, clean the element	Gr 15
23	Ⓔ Ⓝ Air cleaner element replacement			Every 50000 km/30000 miles			Replace element	Gr 15
24	Ⓔ Ⓝ Damage of inlet system, looseness of clamp and loss of parts			×			Check inlet system for damage and check that all parts are installed	Gr 15
25	Ⓝ Looseness and damage of exhaust pipe and muffler			×			Check installation and connections for looseness and damage, check for exhaust gas leakage	Gr 15
26	Starter function					×	Operate starter switch and check the switch functions properly	Gr 54
27	Alternator function					×	Check function with a circuit tester	Gr 54

MAINTENANCE SCHEDULE TABLES

*1 : 30000 km/18000 miles or 6 months, whichever occurs first.
*2 : 60000 km/36000 miles or 12 months, whichever occurs first.
Ⓔ : Exhaust emission items
Ⓝ : Noise control items

Inspection and maintenance		Time of inspection and maintenance					Working procedures	Remarks
		Pre-operation checks	New vehicle at 4000 km/2500 miles	Inspection interval: Every 10000 km/6000 miles	Every 30000 km/18000 miles *1	Every 60000 km/36000 miles *2		
POWER TRAIN								
28	Air or oil leakage from power train			×			Check power train for air and oil leakage	
29	Clutch pedal play			×			Press clutch lightly and check that play is adequate	Gr 21
30	Clutch function			×			(1) Press the clutch pedal to check for unusual noise or stiffness. Also check if gearshift engages quietly (2) Check the clutch does not slip and engages smoothly	Gr 21
31	Manual transmission gearshift control looseness				×		In NEUTRAL position, check shift lever for looseness. With shift lever in each gear position, check engagement condition and degree of looseness. Also check if control cable is damaged	Gr 22
32	Automatic transmission range selector linkage and throttle (modulator) linkage condition					×	Shifting to each shift range must be done firmly and securely	Gr 23
33	Propeller shaft couplings and bearings looseness		×	×			(1) Check flange yoke bolt and center bearing attaching bolt for looseness (2) Turn propeller shaft manually to check for spline looseness (3) Check looseness between spider and needle roller bearing	Gr 25
FRONT AND REAR AXLES								
34	Axle shaft torsion and cracks					×	Remove axle shaft and check for torsion, bending, and cracks	Gr 27
35	Front wheel hub bearing looseness				×		With front axle jacked up, move the wheel up and down holding the top and bottom of the tire to check for bearing looseness	Gr 26
36	Rear wheel hub bearing damage					×	Disassemble rear wheel and check for hub bearing wear and damage	Gr 27
37	Retightening wheel nuts		×	×			Check wheel nuts for looseness after replacing tires, also after 1000 km/600 miles	Gr 31
38	Disc wheel damage			×			Check disc wheel for corrosion, deformation and cracks	Gr 31
39	Tire inflation pressure, cracking, tread groove depth, abnormal wear, etc.	×		×			(1) Measure inflation pressure with tire gauge, and check that tire tread groove is deep enough (2) Check tire tread and side walls for cracks, damage, uneven wear, stepped wear and other abnormal wear	Gr 31
40	Tire rotation			×			Rotate all tires	Gr 31
SUSPENSION SYSTEM								
41	Looseness, play and damage of suspension system				×		Check suspension system for looseness, play and damage	Gr 33, 34
42	Damage and looseness of leaf springs	×			×		Check leaf springs for damage and looseness	Gr 33, 34
43	Retightening U-bolts		×		×		Check U-bolts for looseness	Gr 33, 34
44	Oil leakage and damage of shock absorbers				×		Check for oil leakage and damage of cylinder, etc.	Gr 33, 34
BRAKING SYSTEM								
45	Discharge of condensed water from air tank	×					Discharge condensed water from air tank by opening drain cock	Gr 35
46	Air pressure and its charging speed	×					After discharging air from air tank, start and run the engine at idle and measure time taken to charge air to specified pressure in air tank	Gr 35
47	Air and fluid leakage from braking system			×			Check braking system for air and fluid leakage	Gr 35
48	Looseness, play and damage of braking system parts			×			Check braking system parts for looseness, play and damage	Gr 35

*1 : 30000 km/18000 miles or 6 months, whichever occurs first.
*2 : 60000 km/36000 miles or 12 months, whichever occurs first.
Ⓔ : Exhaust emission items
Ⓝ : Noise control items

	Inspection and maintenance	Time of inspection and maintenance					Working procedures	Remarks
		Pre-operation checks	New vehicle at 4000 km/2500 miles	Inspection interval: Every 10000 km/6000 miles	Every 30000 km/18000 miles *1	Every 60000 km/36000 miles *2		
49	Operation of brake pedal			×			Depress the brake pedal and release it, checking for the sound of air being released from the brake valve and to ensure that the pedal returns normally without catching	Gr 35
50	Service brake effectiveness	×		×			While driving the vehicle at low speed, check braking effect and check for uneven braking	Gr 35
51	Operation of exhaust brake	×		×			Check exhaust brake operation	Gr 35
52	Exhaust brake control cylinder packing replacement			Every 12 months			Check exhaust brake control cylinder packing; replace if necessary	Gr 35
53	Operation of air dryer			×			Open drain cock of air tank and make sure there is no drainage	Gr 35
54	Check drain from air dryer exhaust port			×			Check to see that oil is not discharged abnormally from exhaust port of air dryer	Gr 35
55	Air dryer disassembly and inspection					×	Disassemble the air dryer and inspect its components. When more than 1/5 of the desiccant is discolored, replace it	Gr 35
	Air dryer desiccant replacement			Every 24 months			Disassemble the air dryer and replace the desiccant and rubber parts	Gr 35
56	Brake shoe clearance				×		Measure clearance with feeler gauge	Gr 35
57	Brake lining wear				×		Check lining wear	Gr 35
58	Brake drum wear					×	Disassemble and check drum for wear, cracks and damage	Gr 35
59	Parking brake effectiveness			×			On a slope, check that vehicle can be held stationary	Gr 36
60	Parking brake lever stroke	×		×			With lever fully pulled, check that lever is locked completely and that there is allowance in pulling stroke	Gr 36
61	Parking brake drum and lining wear					×	Disassemble and check drum for wear, cracks and damage and check lining for wear	Gr 36
62	Wheel cylinder piston cup and dust seal replacement			Every 12 months			Check wheel cylinder piston cup and dust seal; replace if necessary	Gr 35
63	Brake booster packing, cup and rubber parts replacement			Every 12 months			Check brake booster packing, cup and rubber parts; replace if necessary	Gr 35
64	Brake hose replacement			Every 12 months			Check brake hose; replace if necessary	Gr 35
65	Check valve packing and rubber parts replacement			Every 12 months			Check the check valve packing and rubber parts; replace if necessary	Gr 35
66	Brake valve packing and rubber parts replacement			Every 12 months			Check brake valve packing and rubber parts; replace if necessary	Gr 35
67	Air compressor and pressure gauge hoses replacement			Every 24 months			Replace air compressor and pressure gauge hoses	Gr 35
68	Brake booster power cylinder packing replacement			Every 24 months			Replace brake booster power cylinder packing	Gr 35
69	Brake fluid reservoir tank tube replacement			Every 24 months			Check and replace brake fluid reservoir tank tube	Gr 35
STEERING SYSTEM								
70	Fluid leakage from steering system			×			Check steering system for fluid leakage	Gr 37
71	Steering wheel play	×		×			Turn steering wheel right and left to measure play at steering wheel rim. Measure while engine is running	Gr 37
72	Steering operating condition	×		×			Check steering wheel to see if it vibrates, pulls to one side or requires unusual steering effort	Gr 37
73	Looseness and play of steering system (including hoses and pipes)			×			(1) Check steering system for looseness and play (2) Check power steering hoses and pipes for looseness	Gr 37
74	Wheel alignment					×	Measure toe-in, camber, caster and kingpin inclination angles	Gr 26

MAINTENANCE SCHEDULE TABLES

*1 : 30000 km/18000 miles or 6 months, whichever occurs first.
*2 : 60000 km/36000 miles or 12 months, whichever occurs first.
Ⓔ : Exhaust emission items
Ⓝ : Noise control items

Inspection and maintenance		Time of inspection and maintenance					Working procedures	Remarks
		Pre-operation checks	New vehicle at 4000 km/2500 miles	Inspection interval: Every 10000 km/6000 miles	Every 30000 km/18000 miles *1	Every 60000 km/36000 miles *2		
75	Right and left turning angles and power steering function					×	Check that stopper bolt is sufficiently tight, without damage, and that steering linkage operates smoothly until blocked by stopper bolt. Also check that steering wheel does not make contact with other parts	Gr 26
76	Power steering booster and oil pump internal rubber parts replacement			Every 24 months			Replace internal rubber parts	Gr 37
77	Power steering hose replacement			Every 24 months			Replace power steering hose	Gr 37
CAB AND FRAME								
78	Looseness and damage of chassis and body			×			(1) Check frame, cross members and other parts for loose rivets (2) Also check for body damage and loose mounting bolts	Gr 41, 42
79	Heater and defroster operation			×			Check operation and installation of defroster	Gr 55
80	Reflection of rearview mirrors and reflectors	×					Check for reflecting condition, stains and damage	Gr 42
81	Door lock function			×			Check door lock mechanism functions properly	Gr 42
82	Seat belt mounting condition			×			Check seat belt for damage, buckle and retracting function and mounting condition	Gr 42
ELECTRICAL SYSTEM								
83	Looseness and damage of electrical wiring and connections			×			Check wiring, connectors and battery terminals for looseness and corrosion	Gr 54
84	Battery electrolyte level and specific gravity			Every 20000 km/12000 miles			(1) Check electrolyte level (2) Measure electrolyte specific gravity with hydrometer	Gr 54
85	Operation and damage of lighting system	×		×			Check operation, damage and installation of each lighting unit	Gr 54
86	Operation of horn and turn signal lamps	×		×			Check operation, damage and mounting condition. Also check turn signal lamps are operated by turn signal switch	Gr 54
87	Operation and fluid level of windshield wiper and washer	×		×			Check operation, damage and mounting condition. Check if fluid level in washer tank is okay	Gr 42
88	Gauges and pilot lamps function	×		×			Check function of gauges and pilot lamps	Gr 54
89	Switch function					×	Check operation, damage and installation of each switch	Gr 54
OTHER								
90	Road test of vehicle			×			Drive the vehicle to check for overall vehicle operating condition	

This section explains simple maintenance procedures. See the relevant Group in this manual for further details.

Replacement of Oil Filter

Lubricant

Location	Points of application	Kinds	Quantity
2	Inside oil filter	Engine oil	Approximately 1 L {1.1 qts}
	Gasket area of oil filter with thin application	Engine oil	As required

Special tools

Unit : mm {in.}

Location	Tool name and shape	Part No.	Application
2	Oil filter wrench 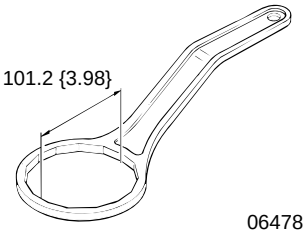 06478	MH061587	Removal of oil filter

WARNING

- **Wipe up any engine oil that has been spilled because it can cause a fire.**
- **Do not touch the engine while it is hot because it will burn you.**

CAUTION

Take care not to spill engine oil on the V-belts, because this would cause them to slip, reducing service life.

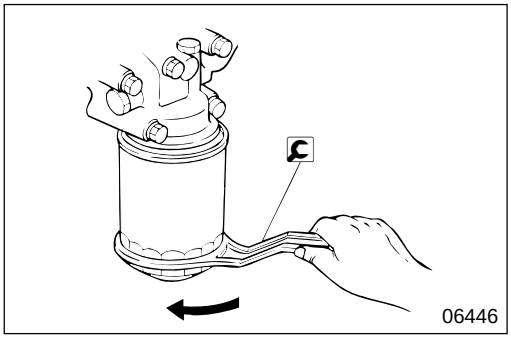
06446

[Removal]

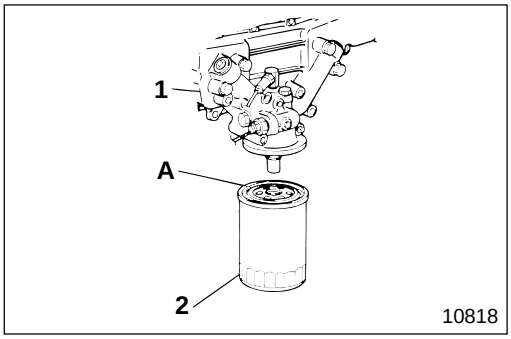

10818

[Installation]

- Clean the surface of oil cooler body **1** that makes contact with oil filter **2**.
- Apply engine oil thinly and evenly to gasket area **A** of oil filter **2**.
- Screw oil filter **2** into oil cooler body **1** until gasket area **A** sits on the body. From this position, tighten further by rotating by three quarters of a turn.
- After installation, run the engine and check that there is no oil leakage from gasket area **A**.
- Check the oil level and if it is low, top it up.

Replacement of Fuel Filter

Lubricant

Location	Points of application	Kinds	Quantity
2	Gasket contact surfaces of fuel filter and fuel filter head	Engine oil	As required

Special tools

Unit : mm {in.}

Location	Tool name and shape	Part No.	Application
2	Filter wrench 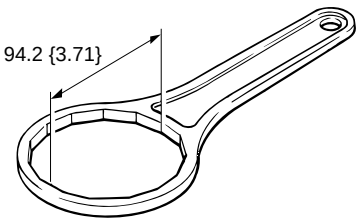 01882	MH061572	Removal of fuel filter

WARNING

- **Fuel ignites easily. Do not get it near flame or heat.**
- **Wipe up any gas oil that has been spilled because it can cause a fire.**
- **Do not use an unsuitable filter because it can cause a fire.**

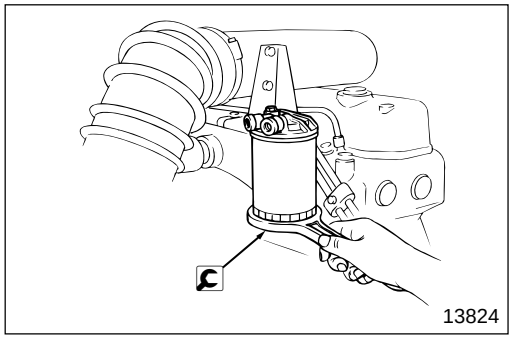
13824

[Removal]

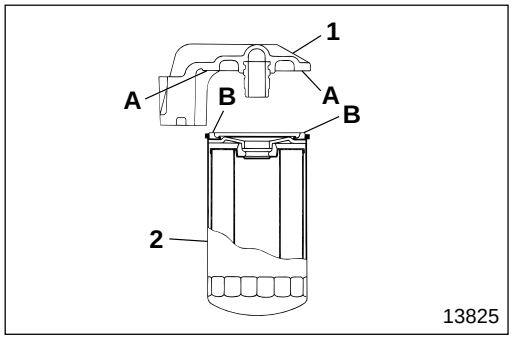

13825

[Installation]

- Install by tightening three quarters to one full turn after contact surface **A** of fuel filter head **1** makes contact with gasket **B** of fuel filter **2**. Be sure to tighten by hand.
- After installation, run the engine and check for fuel leakage.

Draining of Water Separator Condensation

Tightening torque

Unit : N·m {lbf.ft, kgf·m}

Location	Parts to be tightened	Tightening torque	Remarks
2	Drain plug	2.9 to 3.9 {2.2 to 2.9, 0.3 to 0.4}	—

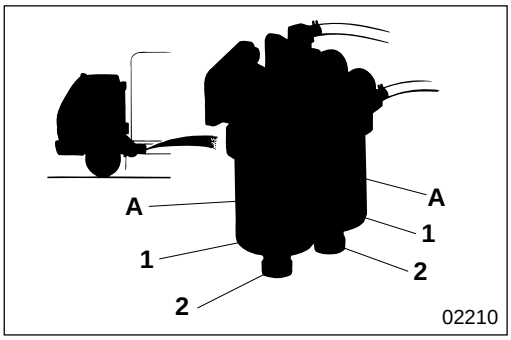

Visually inspect the water separator before driving.
When float **1** reaches red line **A**, drain the condensation as follows:

- Loosen drain plug **2** and drain out the condensation.
- When float **1** has dropped to the bottom, tighten drain plug **2**.
- Carefully wipe the water separator and the surrounding area.
- Check for fuel leakage.

Cleaning of Fuel Feed Pump Gauze Filter

Tightening torque

Unit : N·m {lbf.ft, kgf·m}

Location	Parts to be tightened	Tightening torque	Remarks
2	Eye bolt	25 to 29 {18 to 22, 2.5 to 3}	—

WARNING

- **Fuel ignites easily. Do not get it near flame or heat.**
- **Wipe up any gas oil that has been spilled because it can cause a fire.**

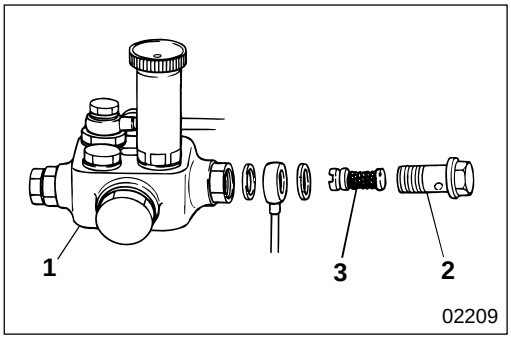

- Remove eye bolt **2** on the inlet side of fuel feed pump **1**.
- Remove gauze filter **3** from eye bolt **2**.
- Clean gauze filter **3** with gas oil.
- Follow the removal sequence in reverse and reinstall gauze filter **3**. Install eye bolt **2** in the fuel feed pump.
- Bleed the air from the fuel line.
- Start the engine and check for fuel leakage.

Bleeding of Air from Fuel Line

Tightening torque

Unit : N·m {lbf.ft, kgf·m}

Location	Parts to be tightened	Tightening torque	Remarks
2	Air vent plug	7.8 to 12 {5.8 to 8.7, 0.8 to 1.2}	—

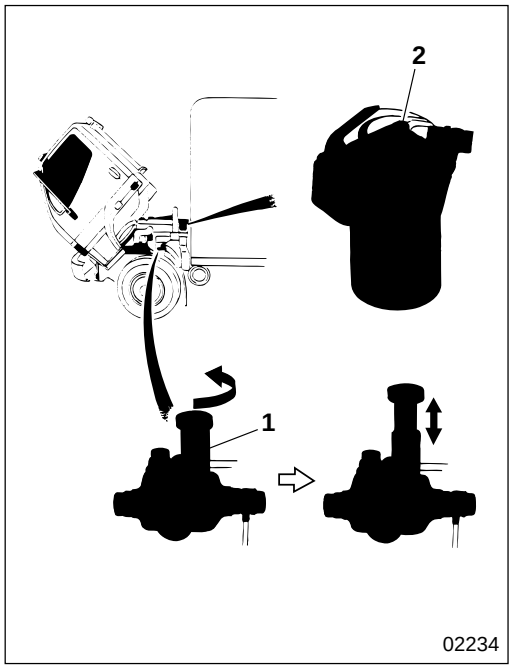

WARNING

- **Fuel ignites easily. Do not get it near flame or heat.**
- **Wipe up any gas oil that has been spilled because it can cause a fire.**

- Turn the top of priming pump **1** of the injection pump counterclockwise and pull it up so the top protrudes.
- Loosen air vent plug **2** of the fuel filter and move the top part of priming pump **1** up and down.
- Move priming pump **1** up and down repeatedly until air bubbles are no longer present in the fuel drained from air vent plug **2**.
- When the fuel being drained is free of air bubbles, tighten air vent plug **2**.
- After moving priming pump **1** up and down another five or six times, push the top down and turn clockwise to drive it in fully.
- After bleeding the air, carefully wipe up spilled fuel and start the engine.
- Check for fuel leakage.

Adjustment of V-Belt Tension

Newly installed V-belts can stretch during their initial running-in period. To prevent this from becoming a problem, run the engine for several minutes after installing the V-belt, then readjust. Perform this cycle several times.

WARNING⚠

You must take special precautions to prevent the engine from rotating while a V-belt is being inspected or adjusted.

CAUTION⚠

- **Make sure that you turn off the engine before attempting to inspect or adjust the V-belts.**
- **Make sure that you fasten all bolts and nuts securely after adjusting the V-belts. Remember that too much tension can damage the V-belts and bearings.**
- **Do not grease V-belts. This causes them to slip, which reduce service life.**

Service standards

Unit : mm {in.}

Location	Maintenance item		Standard value	Limit	Remedy
1, 2	V-belt tension (Each one)	Fan	12 to 16 {0.47 to 0.63}	—	Adjust
		Air-conditioner	16 to 20 {0.63 to 0.79}		

Special tools

Location	Tool name and shape	Part No.	Application
1, 2	Belt tension gauge  03612	MH062345	Measurement of tension of V-belt

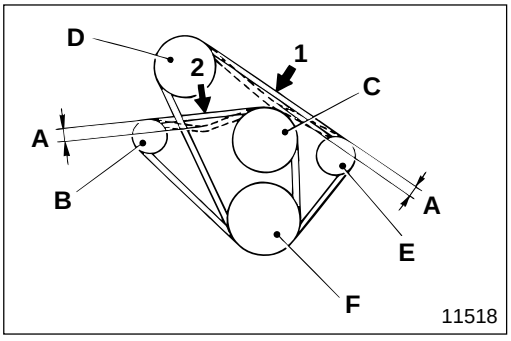

[Inspection]

Measure the extent of flex **A** when the center of V-belts **1**, **2** as illustrated is depressed with a force of 98 N·m {72 lbf.ft, 10 kgf·m}.

- **B** : Alternator pulley
- **C** : Water pump pulley
- **D** : Cooler compressor pulley (Air-conditioner)
- **E** : Tension pulley
- **F** : Crankshaft pulley

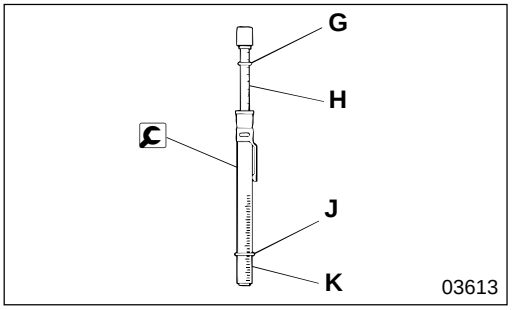

Use of special tool belt tension gauge

- Set upper O-ring **G** of belt tension gauge to 98 N·m {72 lbf.ft, 10 kgf·m} (push load) on graduation **H**.
- Set lower O-ring **J** of belt tension gauge to graduation **K** (maximum flex of belt).

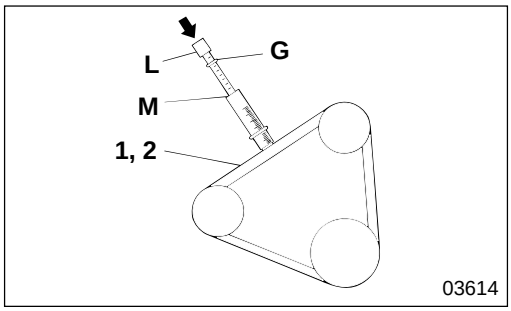

- Place belt tension gauge at the center of V-belts **1**, **2** perpendicularly as illustrated and push top **L** all the way down until upper O-ring **G** hits upper edge **M**.

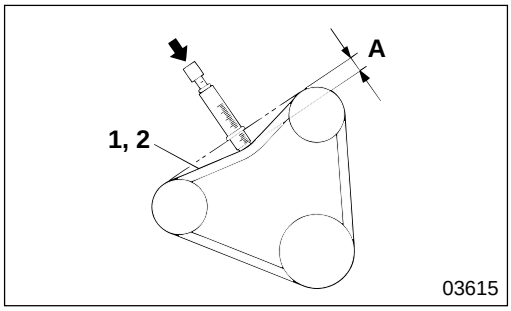

- Measure the extent of flex **A** of V-belts **1**, **2** at this point, and if the measured value deviates from the standard value, adjust as follows:

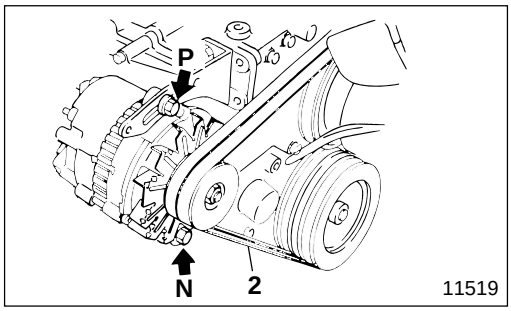

[Adjustment]

(1) Adjustment of tension of V-belt for fan

- Loosen alternator mounting bolts **N** (two points), and adjust the tension of V-belts **2** by moving adjusting bolt **P**.
- After adjustment, tighten the bolts **N**, **P** securely.

CAUTION

- **Bear in mind that excessive tension of V-belts 2 might damage the belts and bearings that engage with the V-belts.**
- **Be sure to replace V-belts 2 as a set to maintain even tension between them.**
- **Be careful not to let oil stick to V-belts 2. If oil gets onto the belts, it causes slipping, resulting in overheating and insufficient battery charging.**

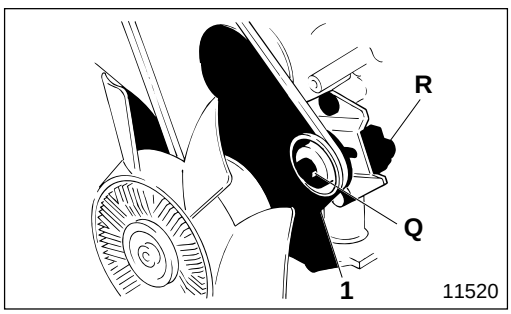

(2) Adjustment of tension of V-belt for air-conditioner

- Loosen tension pulley mounting nut **Q**, and adjust the tension of V-belt **1** moving adjusting bolt **R**.
- After adjustment, tighten mounting nut **Q** securely.

CAUTION

- **Bear in mind that excessive tension of V-belt 1 might damage the belt and bearings that engage with the V-belt.**
- **Be careful not to let oil stick to V-belt 1. If oil gets onto the belt, it causes slipping, resulting in poor performance of the air conditioner.**

Cleaning and Replacement of Air Cleaner Element

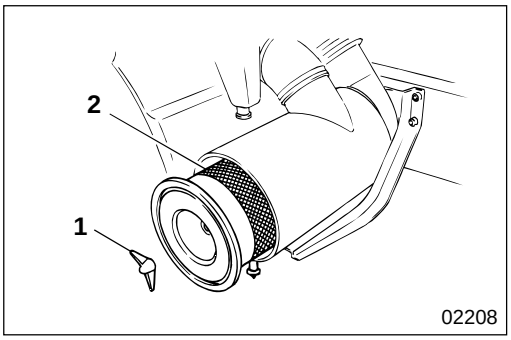

[Removal]
Remove wing nut **1** to remove element **2**.

[Installation]
Install element **2** securely.

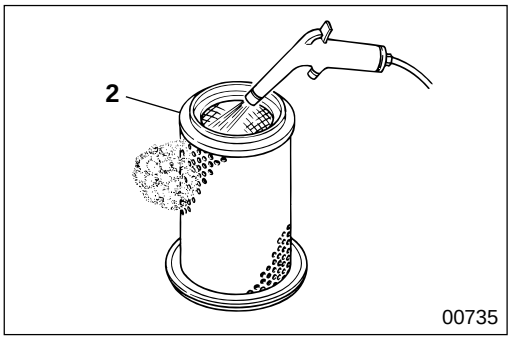

[Cleaning]
- Blow compressed air of 685 kPa {100 lbf/in^2, 7 kgf/cm^2} or less through air cleaner element **2** from the inside.
- When using compressed air, move the blower's nozzle up and down along the pleats of air cleaner element **2** evenly.

CAUTION
- **Do not tap or hit air cleaner element 2 to remove dust.**
- **Do not blow compressed air through air cleaner element 2 from the outside.**

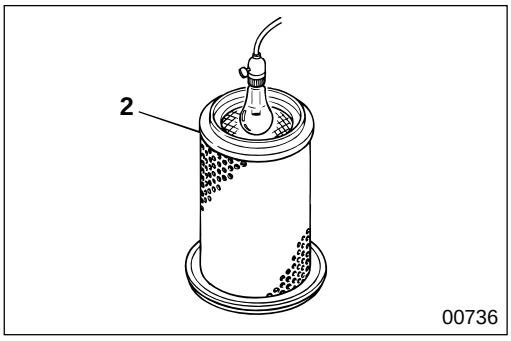

[Inspection]
- Illuminate the inside of air cleaner element **2**.
- If parts of the filter paper are torn or thin, or if the packing of the upper surface of air cleaner element **2** is damaged, replace the air cleaner element.

NOTE

If the dust on air cleaner element 2 is wet due to oil smoke or soot, replace the air cleaner regardless of the scheduled replacement interval.

Inspection of Clutch Pedal Free Play

Service standards

Unit : mm {in.}

Location	Maintenance item	Standard value	Limit	Remedy
1	Clutch pedal free play	32 to 44 {1.26 to 1.73}	—	Adjust or replace

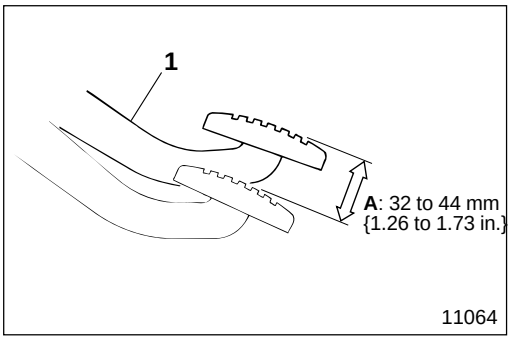

[Confirmation]
Push clutch pedal **1** with your hand and measure the amount of movement **A** (free play) until you meet resistance. If the measured value does not conform to the standard value, adjust by stroke of clutch power cylinder push rod, or replace the clutch disc.

[Clutch operation]
- Check for unusual noises when clutch pedal **1** is pressed while the engine is idling, and also for abnormally heavy clutch operation. Also check to be certain that it is not difficult to shift the vehicle into first and reverse gears.
- Gradually release clutch pedal **1** to set the vehicle in motion.
  Check to be sure there is no slippage, and that the clutch engages smoothly.

Tire

Service standards

Unit : mm {in.}

Location	Maintenance item	Standard value	Limit	Remedy
1	Depth of tire tread grooves	—	1.6 {0.063}	Replace

Tightening torque

Unit : N·m {lbf.ft, kgf·m}

Location	Parts to be tightened	Tightening torque	Remarks
2	Wheel nut	370 to 410 {275 to 305, 38 to 42}	Wet

Lubricant

Location	Points of application	Kinds	Quantity
2	Wheel nut spherical area	Chassis grease [NLGI No.1 (Ca soap)] or Wheel bearing grease [NLGI No.1 (Li soap)]	As required
4	Wheel nut (inner) at thread area and spherical area		
6	Thread area of hub bolt		

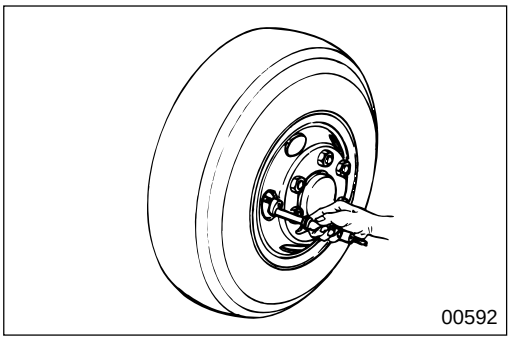
00592

Air pressure

Tire air pressure should be checked before the vehicle is driven, while the tires are still cool.

Tire Size	Air Pressure kPa {Psi, kgf/cm^2}
215/75R 17.5 124/123L	700 {100, 7.00}

CAUTION

- **Make certain that there is no difference in the air pressure between the inner and outer rear tires.**
- **Make certain you use valve caps on the air valves.**
- **It is not necessary to increase the air pressure for high-speed driving.**

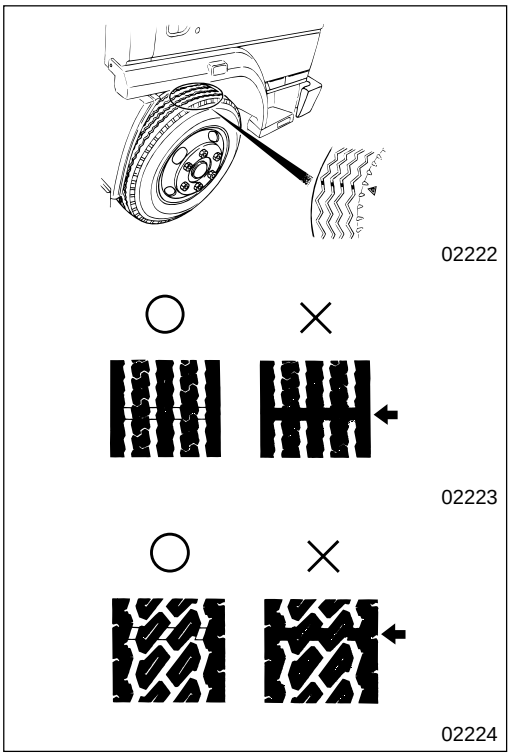
02222

02223

02224

Checking tread depth

- Check all around the tire treads to make sure that the depth of the tread grooves is above the wear limit.
- If the tread grooves are not deep enough, slip sign **A** appears at the position of the ⚠ mark, where the tread groove has worn away.

WARNING

If the depth of the tread grooves is not adequate, the tires will slip on wet roads and present a hazard. Such tires are also extremely dangerous because they are more susceptible to hydroplaning when the vehicle is running at high speeds in the rain. Such tires must be replaced with new ones as soon as possible.

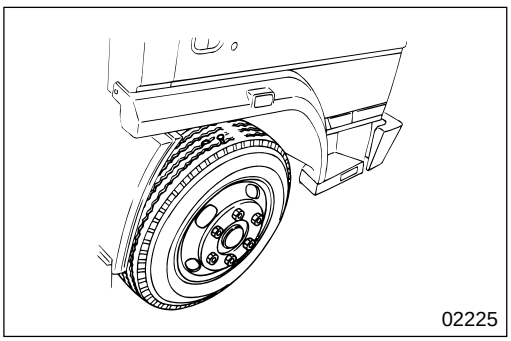
02225

Checking for cracks, damage, and objects embedded in the treads

- Check the tire treads and walls for cracks and damage.
- Check tire treads for uneven wear or other abnormal wear.
- Check if metal objects or nails have penetrated the tires.
- Check for stones embedded between double tires.

WARNING

Badly damaged or worn tires are extremely dangerous, because they can be punctured more easily when the vehicle is running, they must be replaced with new ones as soon as possible.

Removing tires

- Jacking up point
  - For front wheels : Front axle bottom A
  - For rear wheels : Rear axle tube bottom B

< Front wheel >

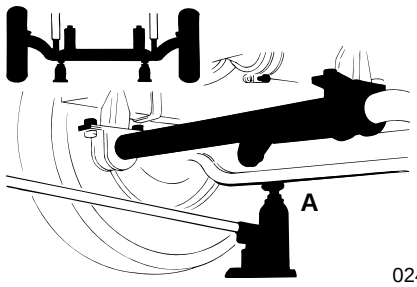

02476

< Rear wheel >

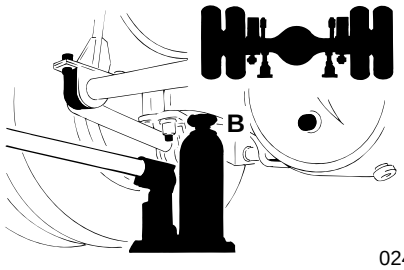

02479

WARNING

- **The jack should be placed on flat, solid ground, and should not be used to raise the vehicle higher than necessary.**
- **Do not use the jack at vehicle locations other than those illustrated.**
- **Keep in mind the danger of a slipping jack. Never crawl under the vehicle while the jack is in use or rock the vehicle. Also, do not start the engine while the vehicle is jacked up.**
- **To increase safety, use supports for the vehicle when it is necessary to leave it jacked up for long periods.**
- **Chock both the tire to be removed and the tire diagonally opposite to it so that they will not rotate when you are removing the tire.**

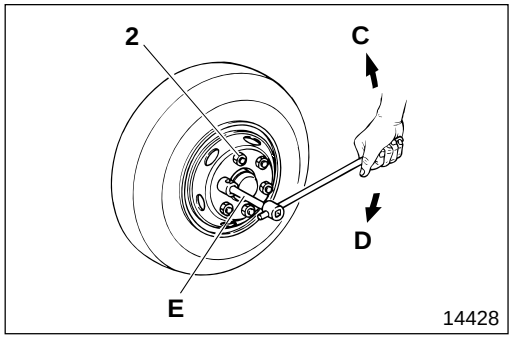

14428

- Loosen wheel nuts **2** slightly. The wheel nuts for right tires **C** have right-hand threads "**R**", and the wheel nuts for left tires **D** have left-hand threads "**L**".

WARNING

Make certain that wheel nut wrench E is fully engaged, all the way to the back of nuts 2. If it is not, it could slip.

CAUTION

Only loosen wheel nuts 2 slightly. Do not remove them.

- Jack up the vehicle carefully, until the tire is slightly off the ground. Remove wheel nuts **2**, then remove the tire.
- When working on the double tires at the rear of the vehicle, first remove the outside tire, then lower the vehicle and loosen the nuts on the inside tire. After doing this, jack the vehicle back up and remove the tire.

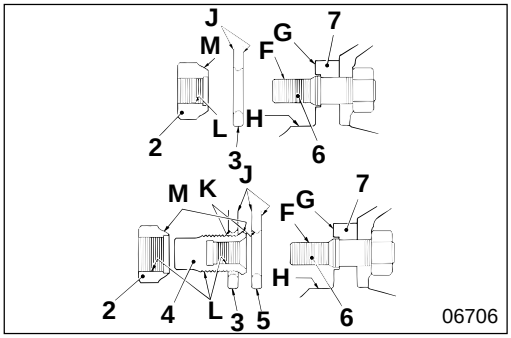

06706

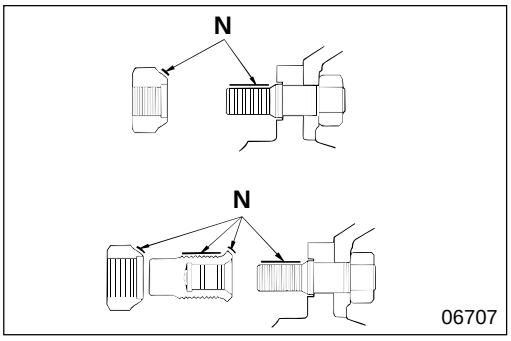

06707

Mounting tires

- To prevent wheel nuts **2**, **4** and hub bolt **6** from becoming loose and to prevent mounting parts (tire assemblies **3**, **5** and hub **7**) from being damaged, remove rust, dust, additional coatings of paint, and foreign particles from the following areas:
  F : Hub bolt thread area
  G : Wheel mounting surface of hub
  H : Wheel alignment area of hub
  J : Disc wheel mating surface
  K : Disc wheel nut mounting surface
  L : Wheel nut thread area
  M : Wheel nut spherical area
  N : Grease application area

WARNING⚠

Never use grease containing molybdenum disulfide, since it can cause loosening of fitted screws.

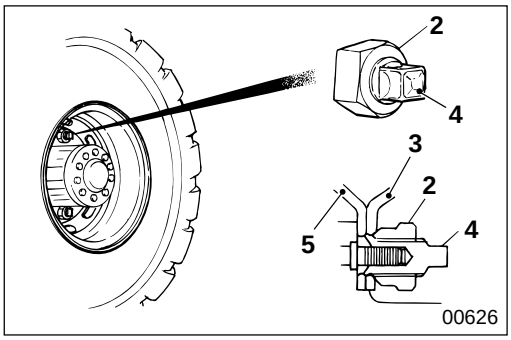

00626

- Put on the double rear tires as follows:
  - After mounting inner tire **5** and fully tightening inner wheel nuts **4**, jack the vehicle up and mount on outer tire **3**, then tighten outer wheel nuts **2**.
  - Even if only outside tire **3** is to be changed, do not mount it until inner wheel nuts **4** have been fastened at the specified torque.
  - Slide the air valves on the inside and outside tires down when mounting the tires.

WARNING⚠

If the threads are scored, or the disc wheel is deformed or cracked, change bolts 6, nuts 2, 4 and disc. Driving the truck before correcting such problems can cause the tire in question to come loose, which could be the source of major accidents.

CAUTION⚠

Check hub bolt 6 threads carefully for scratches before putting the tire on.

- Place the tapered end of wheel nuts **2, 4** towards the disc wheel and fasten temporarily. Center so that there is no eccentricity between bolts **6** and the disc wheel bolt holes.
- Lower the vehicle.

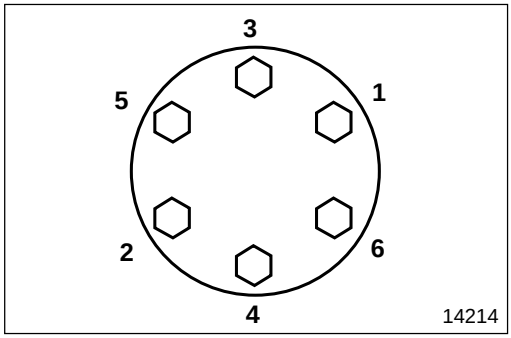

- Tighten the nuts in the order as illustrated, tightening each nut two or three times. To finish, tighten each nut at the specified torque.

WARNING⚠

Always use the specified torque when tightening the wheel nuts. If the wheel nuts are not tightened properly, the wheels could come loose while the vehicle is being driven, which could result in life threatening accidents or the truck being disabled.

CAUTION⚠

Over-tightening the wheel nuts can damage them.

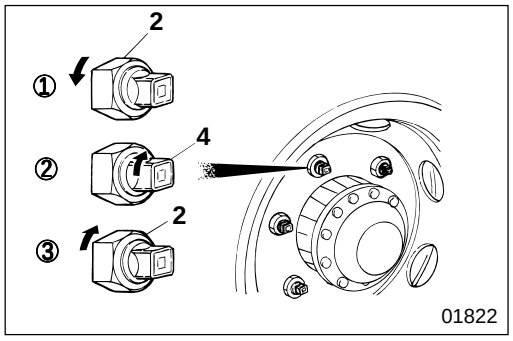

Checking the wheel nuts for looseness

The wheel nuts should be checked for looseness every 10000 km (6000 miles). All nuts should be tightened at the specified torque.

- Check the double rear tires for looseness as follows:

① Loosen outer wheel nuts **2**.
② Tighten inner wheel nuts **4** at specified torque.
③ Tighten outer wheel nuts **2** at specified torque.

CAUTION⚠

If outer wheel nuts 2 are tightened without first being loosened, it might not be possible to tighten them at the specified torque.

Tire rotation

Tires wear differently, according to the location where they are mounted. To make this wear uniform and prolong the life of your tires, they should be rotated every 10000 km (6000 miles) in the rotation order shown below:

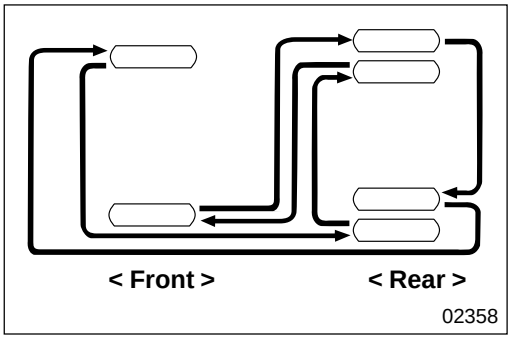

- When the tread patterns for all tires are identical:

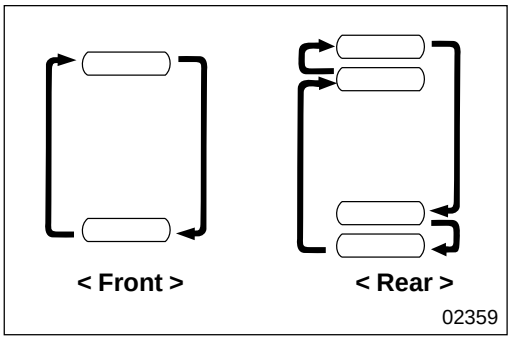

- When the tread patterns are different for the front and rear tires:

CAUTION⚠

- **Always adjust air pressure after running-in new tires.**
- **When using tires of different tread patterns, use rib-type patterns for the front tires and traction type patterns for the rear tires.**
- **Avoid using both radial and biased tires on the same vehicle.**

Inspection of Brake Lining Thickness

Service standards

Unit : mm {in.}

Location	Maintenance item	Standard value	Limit	Remedy
2	Thickness of brake lining	—	5 {0.20} (Wear limit at side step)	Replace

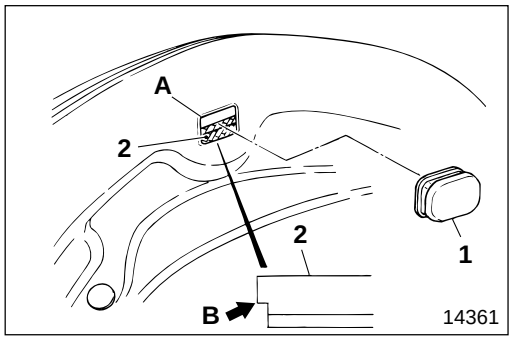

NOTE

Be sure to inspect at two points for each wheel per side.

- Remove check hole plug **1** from the packing plate.
- Inspect through check hole **A** whether brake lining **2** is worn to the point of side shoulder **B** of the brake lining (the limit).
- If the measured value is lower than the limit, replace brake lining **2** on the same axle as a unit.
- After inspection, be sure to reinstall check hole plug **1**.

Battery

DANGER⚠

- **Since flammable hydrogen gas is generated by the battery, be sure to obey the following warnings :**
  - **Do not short-circuit the ⊕ and ⊖ terminals on the battery.**
  - **Keep sparks and lit cigarettes away from the battery.**
  - **Do not wear metal objects on your arms and lean over the battery.**
- **Because the battery electrolyte is diluted sulfuric acid and is corrosive, when handling the battery wear safety glasses and rubber gloves to protect the eyes and hands.**

WARNING⚠

To prevent a short-circuit be sure that disconnected the battery cables do not accidentally touch the battery terminals.

CAUTION⚠

- **Make sure that you disconnect the battery cable ⊖ first when you disconnect the battery cables.**
- **Make sure that all electrical switches of the vehicle are OFF before connecting the battery cables.**
- **Make sure that you connect the battery cable ⊕ before you connect the battery cable ⊖.**

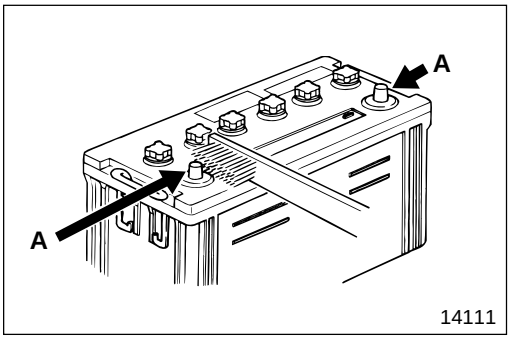

Visual inspection

- If terminal **A** is corroded, scrub off the corrosion from it using a wire brush.
- If cracks or defects are found on the battery, replace it since the cracks or defects can cause liquid spills.

CAUTION

Make sure you grease the ⊕ side of terminal A because it is easily corroded.

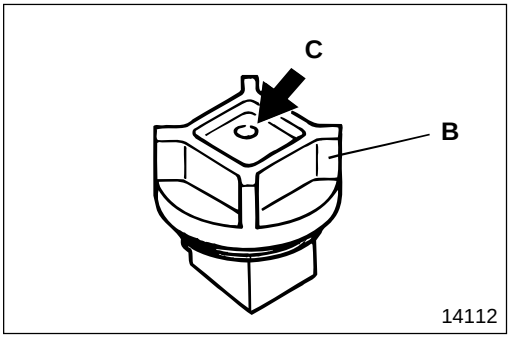

- If bleed hole **C** of vent plug **B** is clogged, clean the hole.

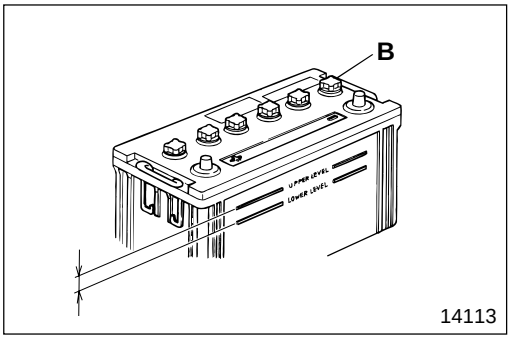

Inspection of fluid level

- Make sure that the battery electrolyte level is between UPPER and LOWER.
- If the level is below LOWER, remove vent plug **B** and fill the battery with distilled water or battery replenisher to UPPER.

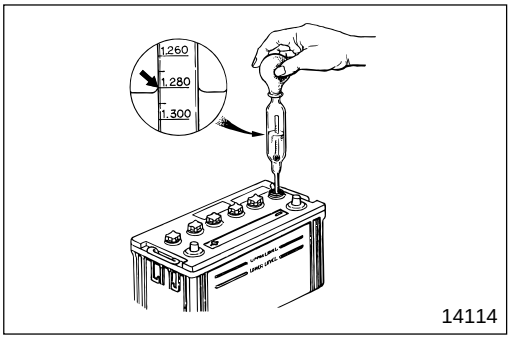

Measurement of specific gravity

Measure the specific gravity of the battery electrolyte. If the measured value is lower than the limit, charge the battery.

NOTE

The specific gravity of the battery electrolyte depends on the liquid temperature. Use the following formula to convert the actual value to the value were the temperature 20°C {68°F}.

$$S_{20}\{68\} = S_t + 0.0007\,(t - 20\{68\})$$

$S_{20}\{68\}$: Specific gravity were the temperature 20°C {68°F}

S_t : Specific gravity actually measured with the temperature at t°C {t°F}

t : Temperature of battery electrolyte

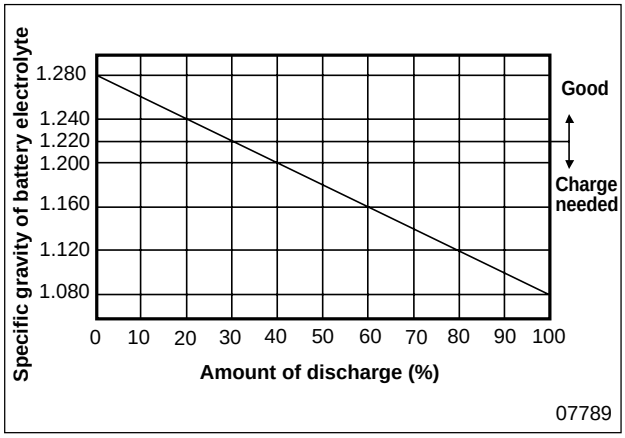

Charging

- Although, as a rule, charging of the battery should be done with the battery removed from the vehicle, if you have to charge the battery while it is on the vehicle, make sure that you stop the engine and disconnect the battery cable ⊖.
- Remove vent plug **B** before charging the battery.
- For the recommended charge time and current, see the following table to avoid overcharging.

	Charge current (A)	Charge time (H)	Upper limit of fluid temperature (°C {°F})
Normal charge	Value of 5-hour rating capacity / 10 {113}	*Amount of discharge (Ah) / Charge current (A) ×1.2(to 1.5)	45
Quick charge	Value of 5-hour rating capacity / 1.5 {131}	0.5	55

* Amount of discharge (Ah)=5-hour rating capacity (Ah)× Amount of discharge (%) / 100

- Use the graph shown on the left to calculate the amount of discharge (%).
- Use diluted sulfuric acid, made up of sulfuric acid and refined or distilled water, as the battery electrolyte.
- The specific gravity of fully-charged battery electrolyte is 1.280 with the temperature at 20°C {68°F}.

DANGER⚠

- **Do not let the battery electrolyte level rise and overflow while charging the battery.**
- **Keep naked lights away from the battery while charging it or it might explode.**
- **Be careful not to generate sparks while charging the battery because its dangerous.**
- **After charging the battery, tighten vent plug B, wash away sulfuric acid from the battery using water, and dry the surface.**

M E M O

Fuse

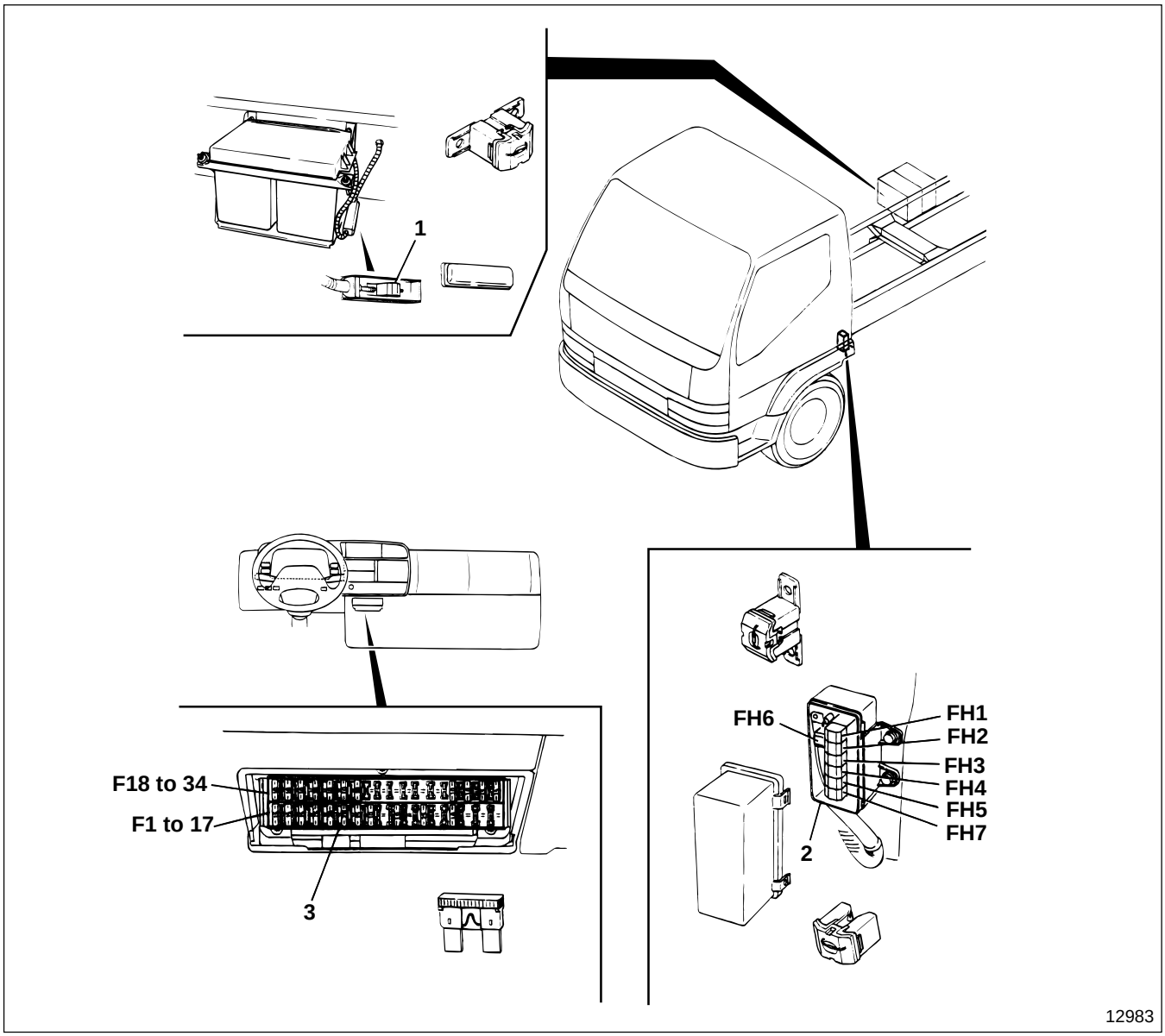

1 Main high-current fuse
2 High-current fuse box
3 Fuse box

CAUTION ⚠

- **If a fuse blows, make sure you identify and remedy the cause, then replace the fuse.**
- **Make sure that you replace the fuse with one having the same rating.**
- **Make sure that you remove the ⊖ terminal of the battery cable before removing main high-current fuse 1 and high-current fuses FH1 to 7.**

Main high-current fuse

Fuse No.	Main load	Capacity
—	High-current fuse box	120 A

High-current fuse box

Fuse No.	Main load	Capacity
FH1	Fuse box (F1 to F4)	50 A
FH2	Fuse box (F5 to F8)	50 A
FH3	Fuse box (F9 to F12)	40 A
FH4	Starter switch (Terminal B)	40 A
FH5	Glow relay	50 A
FH6	Alternator	120 A
FH7	Fuse box (F31 to F34)	40 A

Fuse box

Fuse No.	Main load	Capacity
F1	Headlamp, LH	15 A
F2	Headlamp, RH	15 A
F3	Stop lamp, horn	15 A
F4	Turn signal lamp	15 A
F5	Fuel-cut motor	10 A
F6	Cab lamp	10 A
F7	Reserve power (BATT)	10 A
F8	—	—
F9	—	—
F10	—	—
F11	—	—
F12	—	—
F13	* Cigarette lighter	15 A
F14	Radio	10 A
F15	—	—
F16	—	—
F17	Fuel-cut relay	10 A

Fuse No.	Main load	Capacity
F18	Starter	10 A
F19	Backup lamp	10 A
F20	Meter cluster	10 A
F21	Wiper	10 A
F22	Air dryer	10 A
F23	—	—
F24	—	—
F25	—	—
F26	—	—
F27	Exhaust brake	10 A
F28	Transmission PTO	10 A
F29	Pre-stroke cut relay	15 A
F30	* Air-conditioner control	10 A
F31	* Air-conditioner compressor	10 A
F32	* Condenser fan	15 A
F33	Blower fan	25 A
F34	Tail lamp	15 A

* : Fuses are provided for these pieces of equipment only where they are installed.

PTO : Power take-off

LUBRICATION

*1 : 30000 km/18000 miles or 6 months, whichever occurs first.
*2 : 60000 km/36000 miles or 12 months, whichever occurs first.
Ⓔ : Exhaust emission items

	Inspection and maintenance	Time of inspection and maintenance					Lubrication procedures	Remarks
		Pre-operation checks	New vehicle at 4000 km/2500 miles	Inspection interval: Every 10000 km/6000 miles	Every 30000 km/18000 miles *1	Every 60000 km/36000 miles *2		
1	Ⓔ Engine oil contamination and oil level	×					Engine oil API classification CD, CD/SF, CE, CE/SF or CF-4 Over 30°C {86°F} ..... SAE 40 40 to –5°C {104 to 23°F} ..... SAE 30 15 to -15°C {59 to 5°F} ..... SAE 20W-20 Over -15°C {5°F} ..... SAE 15W-40 Below 0°C {32°F} ..... SAE 10W-30	Gr 12
	Ⓔ Engine oil replacement		×	×				
2	Clutch fluid tank fluid level	×		×			Brake fluid (SAE J1703f or FMVSS No.116 DOT3)	Gr 21
	Clutch fluid tank fluid replacement					×		
3	Lubrication of clutch fork shaft				×		Wheel bearing grease [NLGI No.2 (Li soap)]	Gr 21
4	Lubrication of clutch shifter			When replacing clutch disc assembly				
5	Manual transmission oil level			×			Gear oil, API classification GL-3 SAE 80 (General) GL-3 SAE 90 (Warm region) GL-4 SAE 90 (Tropical region)	Gr 22
	Manual transmission oil replacement		×		×			
6	Automatic transmission fluid level			×			Automatic transmission fluid (DEXRON, DEXRON II type)	Gr 23
	Automatic transmission fluid and filter replacement			Every 40000 km/25000 miles Replace the fluid at the first 10000 km/6000 miles inspection				
7	Axle housing gear oil level			×			Gear oil API classification GL-5 Below 40°C {104°F} ..... SAE 90 Over 40°C {104°F} ..... SAE 140 Use SAE 140 when operating vehicle at high load such as continuous ascent on slopes and when the outside temperature is 10°C {50°F} or more	Gr 27
	Axle housing gear oil replacement		×			×		
8	Hub bearing grease and oil seal replacement					×	Wheel bearing grease [NLGI No.2 (Li soap)]	Gr 26, 27
9	Brake fluid tank fluid level	×		×			Brake fluid (SAE J1703f or FMVSS No.116 DOT3)	Gr 35
	Brake fluid tank fluid replacement					×		
10	Power steering fluid level			×			Automatic transmission fluid (DEXRON, DEXRON II type)	Gr 37
	Power steering fluid replacement					×		
11	Lubrication of propeller shaft (universal joint, slip joint, center bearing)			×			Wheel bearing [NLGI No.2 (Li soap)]	Gr 25
12	Lubrication of kingpins			×			Chassis grease [NLGI No.1 (Ca soap)]	Gr 26
13	Lubrication of all chassis parts			×				

Engine Oil

Tightening torque

Unit : N·m {lbf.ft, kgf·m}

Location	Parts to be tightened	Tightening torque	Remarks
3	Oil pan drain plug	69 {51, 7}	—

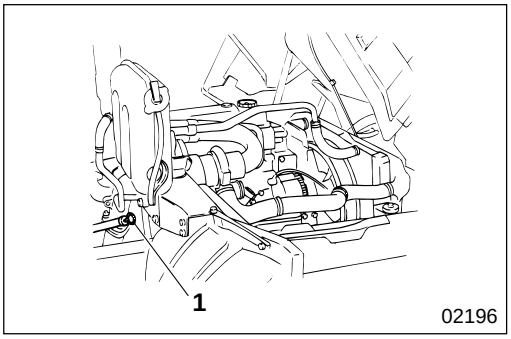

[Inspection]
- Pull out dipstick **1**, wipe off the oil with a cloth.
- Reinsert dipstick **1**, then pull it out carefully.
- Oil level is correct if there is oil sticking to dipstick **1** within the hatched area.
- If the level is low, top it up.
- Tilt the cab.

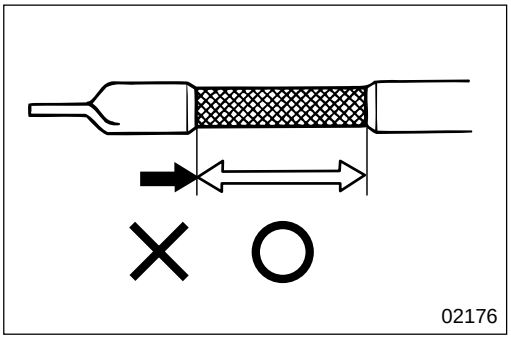

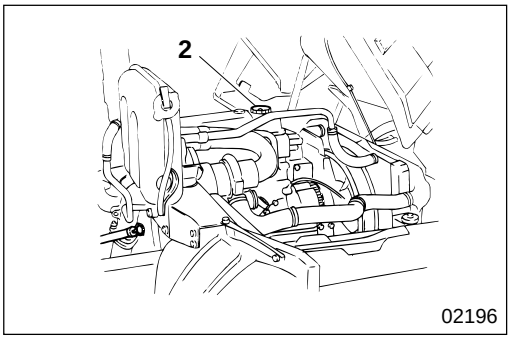

[Replenishment]
- Clean the area surrounding oil filler cap **2** and prevent dust from entering through the filler.
- Remove oil filler cap **2** and top up with engine oil.
- Wait five minutes before checking the oil level.
- Replace filler cap **2**.

WARNING
- **Wipe up any engine oil that has been spilled because it can cause a fire.**
- **Do not touch the engine while it is hot as it will burn you.**

CAUTION

Take care not to spill engine oil on the V-belts, because this would cause them to slip, reducing service life.

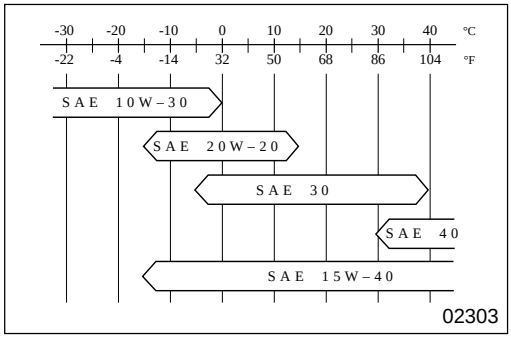

[Replacement]
Since engine oil greatly influences the performance, the life expectancy, and the ability to start the engine, use only oil of the specified grade and viscosity.
The chart illustrates the relationship between oil viscosity and the ambient air temperature.

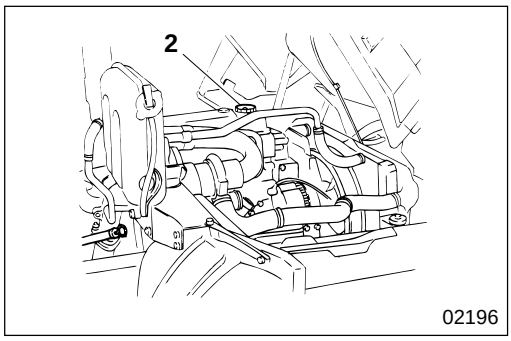

- Clean the area surrounding oil filler cap **2** and prevent dust from entering through the filler.
- Remove oil filler cap **2**.
- Remove oil pan drain plug **3**, and drain the oil. At the same time replace the oil filter.
- After reinstalling drain plug **3**, slowly add engine oil through the oil filler.
- Using the dipstick, check the oil level after more than six minutes have passed.
- Start the engine and let it idle. When the oil has reached all parts, stop the engine. Let 30 minutes pass before checking the oil level again.

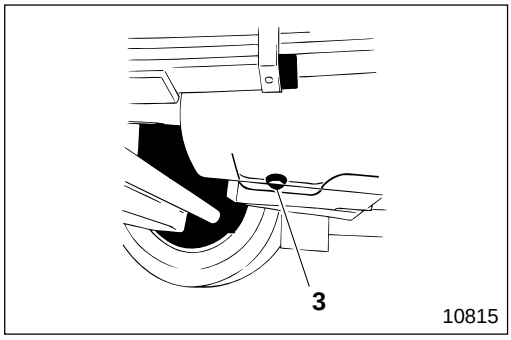

Clutch Fluid (Brake Fluid)

Tightening torque

Unit : N·m {lbf.ft, kgf·m}

Location	Parts to be tightened	Tightening torque	Remarks
2	Air bleeder	25 to 34 {18 to 25, 2.5 to 3.5}	—

Fluid

Location	Points of application	Kinds	Quantity
1	Fluid tank	Brake fluid (SAE J1703f or FMVSS No.116 DOT3)	As required

CAUTION

- **Be careful not to splash brake fluid on related parts as this could damage the paintwork.**
- **Be sure to wipe off brake fluid immediately if you splash it on the paintwork.**
- **You must use new brake fluid (SAE J1703f or FMVSS No.116 DOT3). Do not add different quality fluid or mineral oil (gas oil, engine oil, gear oil, automatic transmission fluid, etc.) to the clutch system, because this will cause the rubber parts of the clutch system to swell, resulting in faulty clutch operation.**
- **Do not allow foreign particles or water to become mixed into the brake fluid when refilling, because this will cause faulty clutch operation.**
- **If you use a mug for adding brake fluid, keep it solely for that purpose to prevent contamination from different quality fluids or mineral oils.**

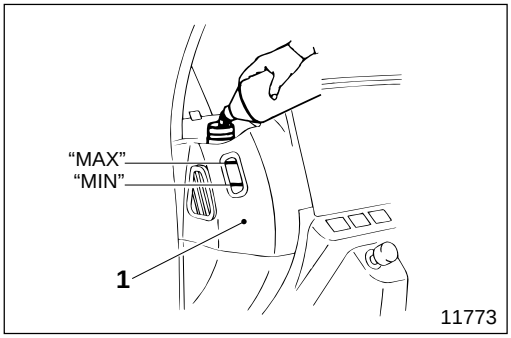

[Inspection and replenishment]

- Inspect the level of the brake fluid in fluid tank **1**. It should fall between the "**MAX**" and "**MIN**" levels.
- If it is below the "**MIN**" level, lift up the lid flap and remove the cap from fluid tank **1**, then supply the specified brake fluid until the level has come up to the "**MAX**" level. Do not fill above the "**MAX**" level.

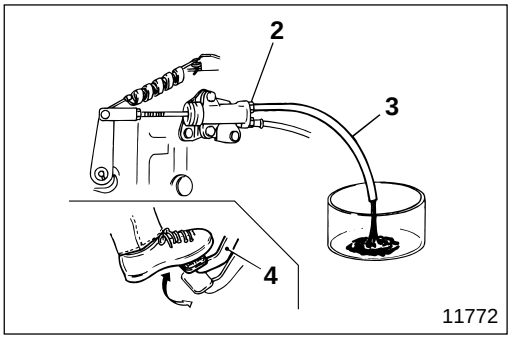

[Replacement]

- Attach vinyl pipe **3** to air bleeder **2** of the clutch power cylinder.
- Loosen air bleeder **2** and depress clutch pedal **4** several times to drain brake fluid completely.

- Supply new brake fluid to the “MAX” level of fluid tank **1**. Depress clutch pedal **4** repeatedly until the old brake fluid discharged from vinyl pipe **3** is replaced by the new brake fluid.

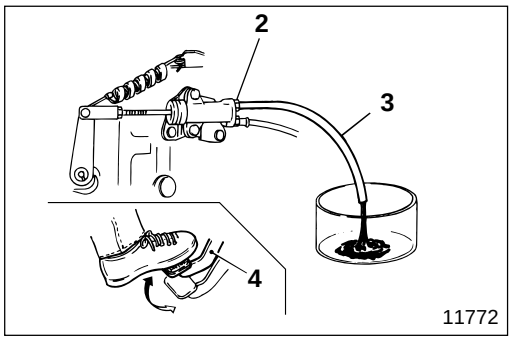

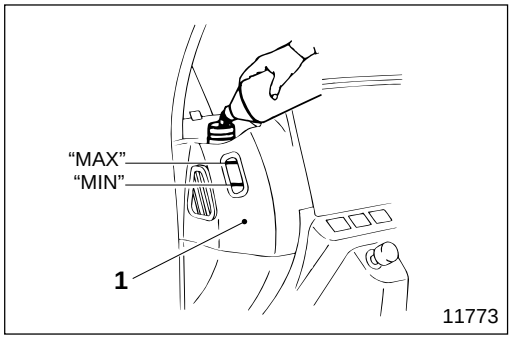

NOTE

Carry out this operation maintaining the brake fluid level in fluid tank 1 between “MAX” and “MIN”.

- Attach vinyl pipe **3** to air bleeder **2** of the clutch power cylinder as in the replacement procedure.
- Fill fluid tank **1** with brake fluid, and loosen air bleeder **2** of the clutch power cylinder then depress clutch pedal **4** continuously.
- Keep depressing clutch pedal **4**, and tighten air bleeder **2** when air is bled completely.
- Depress clutch pedal **4** several times again, then keep it depressed at its fullest extent.
- With clutch pedal **4** depressed, loosen air bleeder **2** to drain brake fluid containing air. Release the pedal after tightening the air bleeder.

- Repeat this operation until air is no longer present in the fluid being drained.
- When this operation is completed, tighten air bleeder **2** at specified torque.
- Check that brake fluid is at the “**MAX**” level of fluid tank **1**, and supply new brake fluid if necessary.
- Check for brake fluid leakage from each of the parts with clutch pedal **4** depressed.

Manual Transmission Gear Oil

Tightening torque

Unit : N·m {lbf.ft, kgf·m}

Location	Parts to be tightened	Tightening torque	Remarks
1	Inspection plug	69±15 {51±11, 7±1.5}	—
2	Drain plug	69±15 {51±11, 7±1.5}	—

Sealant

Location	Points of application	Kinds	Quantity
1	Thread area of inspection plug	THREEBOND 1105D	As required
2	Thread area of drain plug	THREEBOND 1105D	As required

WARNING

The engine is hot immediately after the vehicle stopped, so take care not to burn yourself.

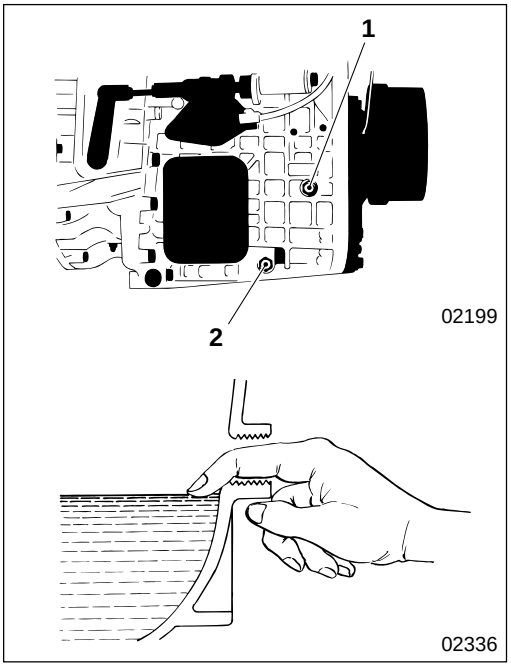

[Inspection and replenishment]

- Remove inspection plug **1** and check whether the oil level is up to the edge of the entrance.
- If the level is low, add oil through the inspection plug hole until the level comes up to the edge of the entrance.

[Replacement]

- Drain the oil after removing inspection plug **1** and drain plug **2**.
- Remove any metal particles sticking to the magnetic part of drain plug **2** before reinstalling the plug.
- Add oil through the inspection plug hole until the level comes up to the edge of the entrance.
- Insert inspection plug **1**.

Automatic Transmission Fluid and Oil Filter

Tightening torque

Unit : N·m {lbf.ft, kgf·m}

Location	Parts to be tightened	Tightening torque	Remarks
4	Drain plug	20 to 27 {15 to 20, 2.05 to 2.75}	—
5	Dipstick guide connector	125 to 135 {91 to 100, 12.55 to 13.76}	—
6	Bolt (Oil pan mounting)	14 to 18 {10 to 13, 1.4 to 1.8]	—
8	Bolt (Oil filter mounting)	14 to 18 {10 to 13, 1.4 to 1.8]	—
12	Oil filter	9.8 to 20 {7 to 14, 1 to 2}	—

Fluid

Location	Points of application	Kinds	Quantity
11	Body of O-ring	Automatic transmission fluid (DEXRON or DEXRON II type)	As required
12	Gasket of oil filter with thin application	Automatic transmission fluid (DEXRON or DEXRON II type)	As required

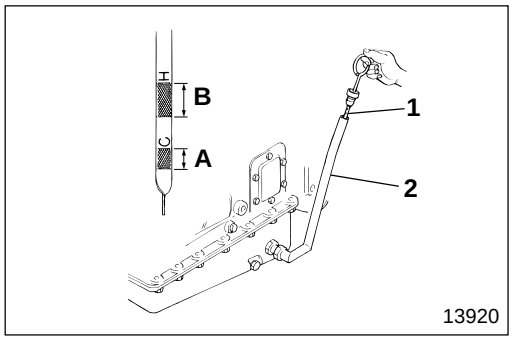

13920

[Inspection and replenishment]

- Park the vehicle on level ground, make sure that the parking brake is fully activated and chock the wheels to keep them from rolling.
- Start the engine and let it idle. To fill the hydraulic circuit with automatic transmission fluid, shift the range selector lever from N → R → N → D → 2 → D → N. Repeat this process five times, finally shifting to N.
- While the engine is still idling, pull out dipstick **1** and wipe off the fluid sticking to it. Reinsert the dipstick, then pull it out again and check the fluid level.
- If the fluid level is inspected right after the engine is started and the fluid temperature is still low (approximately 15 to 49°C {60 to 120°F}), the level should be within area **A** marked COLD on dipstick **1**.
- If the fluid level is inspected after the vehicle has been driven and the fluid temperature is high (approximately 71 to 93°C {160 to 200°F}), the level should be within area **B** marked HOT on dipstick **1**.

WARNING

Take care during the inspection because the engine will be running. Take sufficient care to avoid burns or injuries resulting from contact with moving parts.

NOTE

- **Make sure the vehicle is parked on level ground when you are checking the fluid level.**
- **Make sure the range selector lever is in the N position and the engine is idling when you are checking the fluid level. When the engine is stopped, the fluid level appears higher than it actually is.**
- **Be sure to wipe off the dust from the safety cap and the upper part of dipstick guide 2 before you pull out dipstick 1.**
- **To ensure the fluid is correct, reinspect the fluid level after an actual drive.**

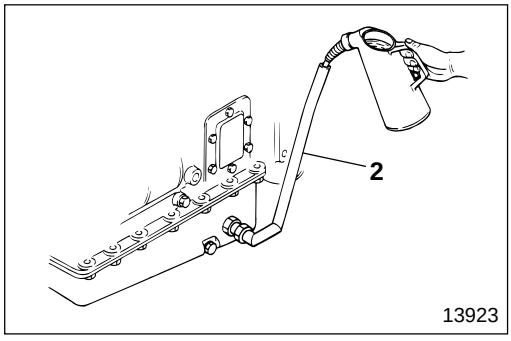

13923

- If the fluid level is low, add automatic transmission fluid (DEXRON or DEXRON II type) through dipstick guide **2** until the correct level on dipstick **1** is reached.

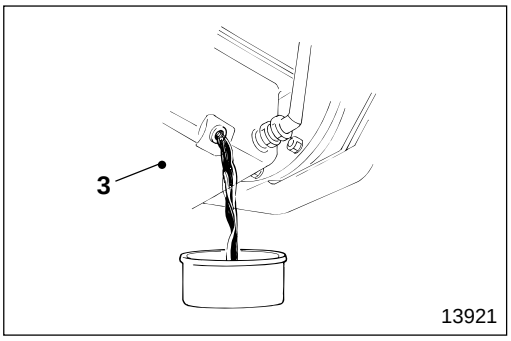

[Replacement]

- Park the vehicle on level ground, chock the wheels and shift the range selector lever to the N position.
- Place a container under oil pan **3**, remove drain plug **4** and drain the fluid.

WARNING ⚠

Take care because the fluid temperature immediately after the engine has stopped is very high. To avoid scalds, wait until a safe temperature has been reached before draining the fluid.

NOTE

- **The fluid will drain faster if the engine is first run to raise the fluid temperature.**
- **The fluid cannot be drained from the hydraulic circuit, the torque converter or the oil cooler.**
- **Check the drained fluid for dirt, metal particles and metal fragments.**

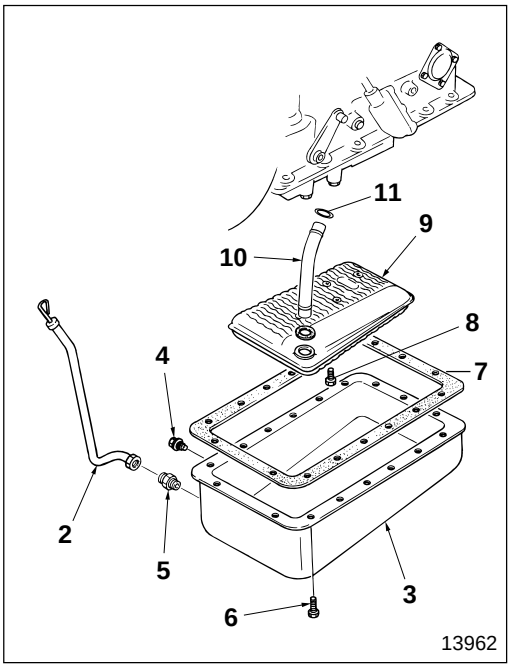

- Remove oil pan **3**, intake pipe **10**, O-ring **11**, gasket **7** and oil filter **9**.
- Clean oil pan **3**.
- Replace O-ring **11**, gasket **7** and oil filter **9**.

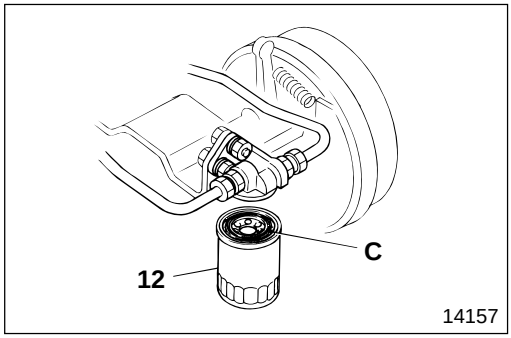

- Remove oil filter **12** (for oil cooler) by turning it counterclockwise.
- Lightly coat gasket **C** with the fluid before installing oil filter **12**. Then tighten the oil filter.

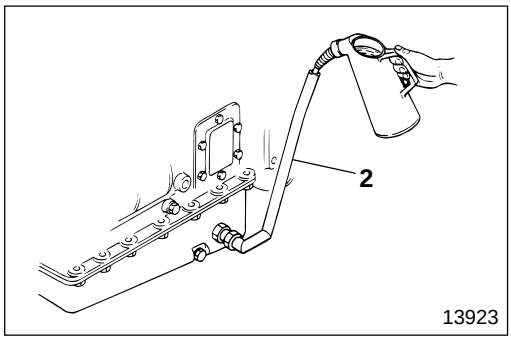

- Supply fluid through dipstick guide **2**.

CAUTION

Make sure that dirt and foreign particles do not become mixed in with the fluid when it is added.

- Shift the range selector lever to the N position, start the engine and let it idle for about one minute.
- After shifting the lever through all positions once, shift it back to N position.

CAUTION

To prevent burning out the interior of the automatic transmission assembly, make sure that the engine is not allowed to race when you do the above.

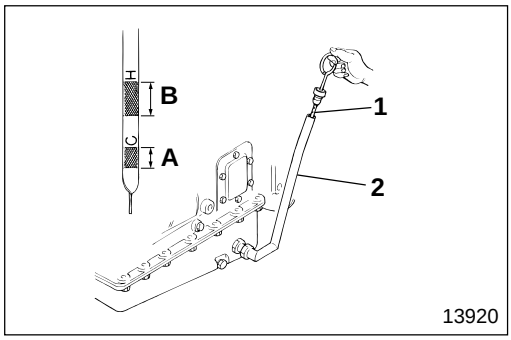

- Check and adjust so that the fluid level is within the specified area on dipstick **1**.

NOTE

- **As the temperature of the fluid rises, so does the fluid level. If you add fluid while the temperature is still low (approximately 15 to 49°C {60 to 120°F}), make sure that the level stays within area A, marked COLD on dipstick 1.**
- **Let the engine idle and, while paying attention to the fluid level, pour in the fluid slowly.**
- **It is sometimes hard to check the fluid level, immediately after supplying fluid, because of the fluid adhering to the interior of dipstick guide 2. If this is the case, check the fluid level several times at intervals.**
- **Be careful not to supply too much fluid because you might mistake the fluid that overflows from the air breather for fluid leakage.**

Rear Axle Gear Oil

Tightening torque

Unit : N·m {lbf.ft, kgf·m}

Location	Parts to be tightened	Tightening torque	Remarks
1	Inspection plug	98 to 115 {72 to 87, 10 to 12}	—
2	Drain plug	98 to 115 {72 to 87, 10 to 12}	—

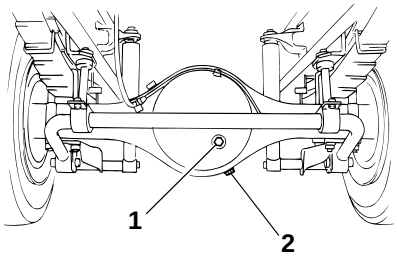

02201

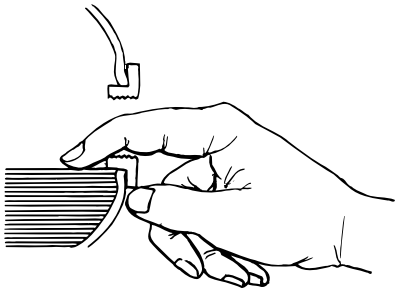

02340

[Inspection and replenishment]

WARNING

The oil temperature is high immediately after the vehicle stopped, so take care not to scald yourself.

- Remove inspection plug **1**, check the oil level and make sure it is up to the edge of the entrance.
- If the oil level is low, add oil through the inspection plug hole until the level comes up to the edge of the entrance.
- Insert inspection plug **1**.

[Replacement]

- Drain the oil after removing inspection plug **1** and drain plug **2**.
- Remove any metal particles sticking to the magnetic part of drain plug **2** before reinstalling the plug.
- Supply oil through the inspection plug hole until the level comes up to the edge of the entrance.
- Reinstall the inspection plug.

LUBRICATION

Power Steering Fluid

Tightening torque

Unit : N·m {lbf.ft, kgf·m}

Location	Parts to be tightened	Tightening torque	Remarks
4	Oil pipe	66.69±12.75 {49±9.4, 6.8±1.3}	—

Fluid

Location	Points of application	Kinds	Quantity
1	Power steering oil tank	Automatic transmission fluid (DEXRON or DEXRON II type)	Between end and **F** on filler cap dipstick

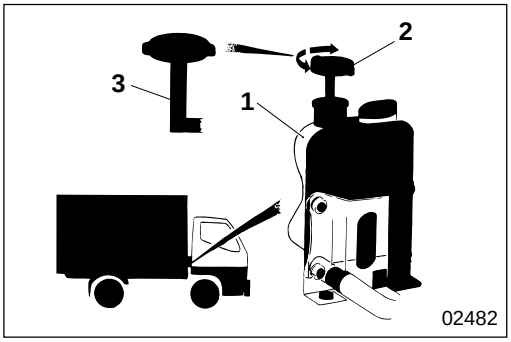

[Inspection and replenishment]

- Straighten the front wheels and stop the engine.
- Remove filler cap **2** of power steering oil tank **1** by turning the filler cap counterclockwise.
- Wipe off the fluid sticking to dipstick **3** on filler cap **2**. Replace the filler cap.

NOTE

Check the fluid level without screwing on filler cap 2.

- Carefully lit up filler cap **2** and check the fluid sticking to dipstick **3** to make sure that the fluid is at a point between the end and **F** on the dipstick. If the level is low, add fluid.
- After inspection install filler cap **2** by turning it clockwise.

WARNING ⚠

Close filter cap 2 firmly; otherwise power steering fluid will leak and could catch fire. Also wipe up spilled fluid.

CAUTION ⚠

If the fluid level is far below the recommended range, the fluid may be leaking.

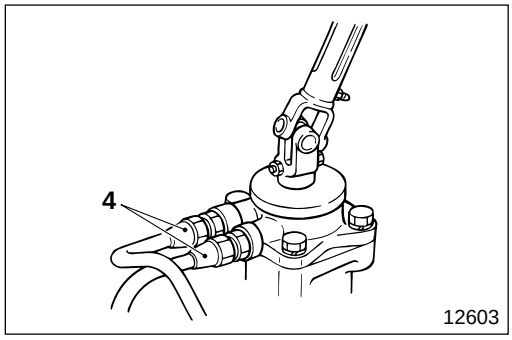

[Replacement]

- Drainage
  - Jack up the front wheels.
  - Disconnect oil pipe **4** connected to the power steering booster.
  - Turn the steering wheel fully left and right repeatedly, and drain the fluid from the power steering booster.
  - After draining the fluid, tighten oil pipe **4** at specified torque.

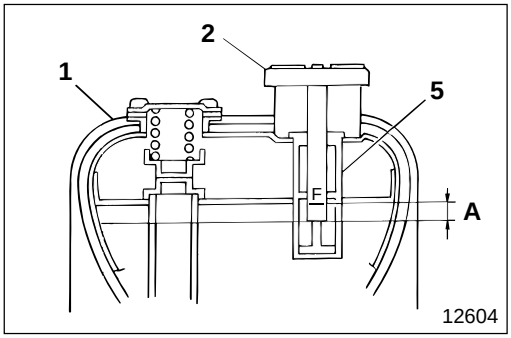

[Supply]

- Pour fluid into power steering oil tank **1** up to the inner port of strainer **5**.
- With the engine stopped, jack up the front wheels and turn the steering wheel fully left and right repeatedly. When the fluid level has dropped, add fluid to maintain the fluid level within range **A**.

NOTE

Check the fluid level without screwing on filler cap 2.

- Start the engine and letting it idle, turn the steering wheel fully left and right repeatedly. When the fluid level has dropped, add fluid to maintain the fluid level within range **A**. Repeat these steps until the fluid level does not drop.
- If there is an abnormal noise, air is still in the system. Turn the steering wheel several times to raise the fluid temperature to approximately 60 to 80°C {140 to 176°F}, then stop the engine and wait for approximately five minutes.
- Lower the front wheels and turn the steering wheel several times. If there is no noise, bleeding is completed.
- When bleeding is finished, check fluid level of power steering oil tank **1**, and pipe and hose connections for fluid leakage.

LUBRICATION

Brake Fluid

Tightening torque

Unit : N·m {lbf.ft, kgf·m}

Location	Parts to be tightened	Tightening torque	Remarks
—	Air bleeder (Airmaster)	6.9 to 12.7 {5.1 to 9.4, 0.7 to 1.3}	—
—	Air bleeder (Wheel brake)	7.8 to 12 {5.8 to 8.5, 0.8 to 1.2}	—

Fluid

Location	Points of application	Kinds	Quantity
—	Fluid tank	Brake fluid (SAE J1703f or FMVSS No.116 DOT3)	As required

Special tools

Unit : mm {in.}

Location	Tool name and shape	Part No.	Application
—	Vinyl hose 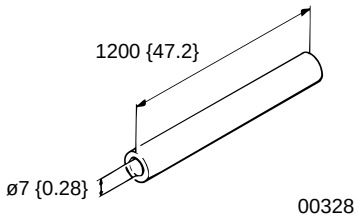	MH033102	Air bleeding

WARNING

- **You must use new brake fluid (SAE J1703f or FMVSS No.116 DOT3).**
- **Do not add different quality fluid or mineral oil (gas oil, engine oil, gear oil, automatic transmission fluid, etc.) to the brake system, because this will cause the rubber parts of the brake system to swell, resulting in brake dragging or ineffective braking.**
- **Be sure not to allow dirt or water to become mixed into brake fluid when refilling, because this will cause the brake to malfunction.**
- **If you use a mug for adding brake fluid, keep it solely for that purpose to prevent contamination from different quality fluids or mineral oils.**

CAUTION

- **Be careful not to splash brake fluid on related parts as this could damage the paintwork.**
- **Be sure to wipe off brake fluid immediately if you splash it on the paintwork.**

NOTE

Supply brake fluid to maintain the “H” level of the brake fluid tank always.

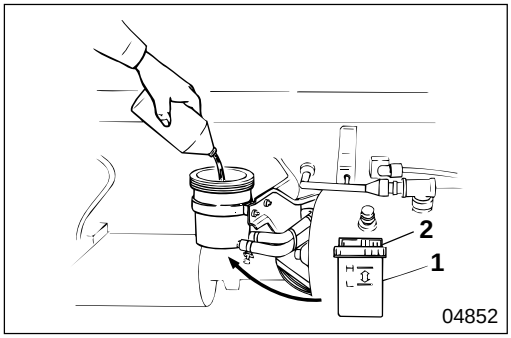

[Inspection and replenishment]
Inspect the level of the brake fluid in fluid tank **1**. It should fall between the "**L**" and "**H**" levels. If it is below the "**L**" level, remove cap **2** from the fluid tank, then supply the specified brake fluid until the level comes up to the "**H**" level. Do not fill above the "**H**" level.

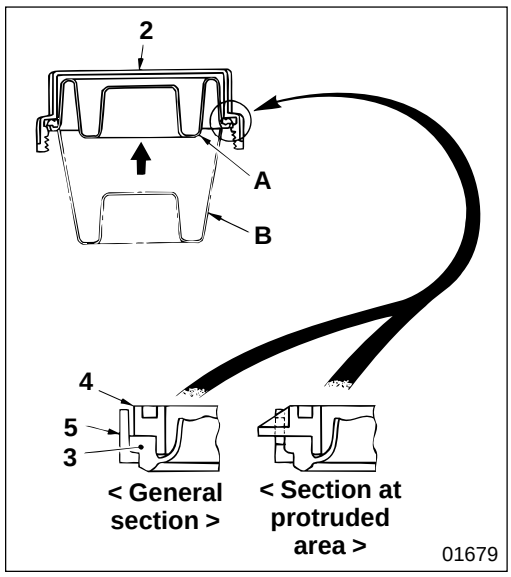

- If diaphragm **3** is not in its normal posture when the brake fluid is supplied, correct it to its normal posture, and install cap **2**. If brake fluid leaks from the cap area after you have supplied brake fluid, check whether the diaphragm is assembled as illustrated.

  4 : Slide ring
  5 : Ring cover
  A : Correct condition of diaphragm when brake fluid is being supplied
  B : Condition when diaphragm is extended when brake fluid has decreased

[Replacement]
- Start engine and let it idle until brake fluid replacement is completed.

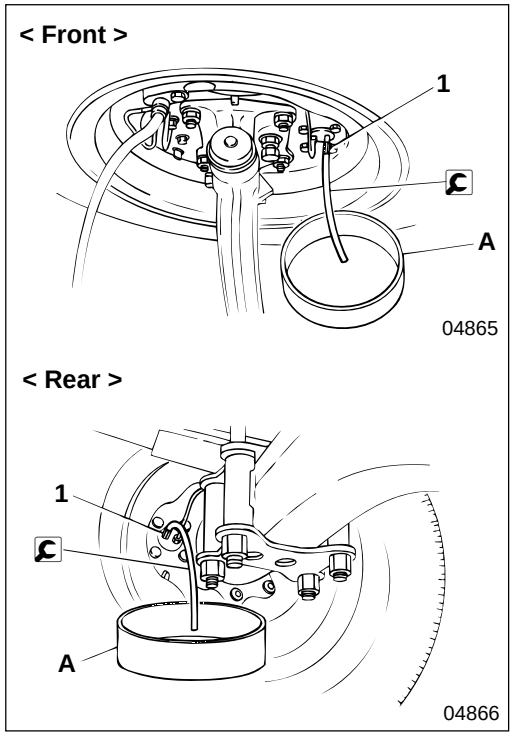

- Attach one end of vinyl hose to air bleeder **1** and place the other end in container **A**.

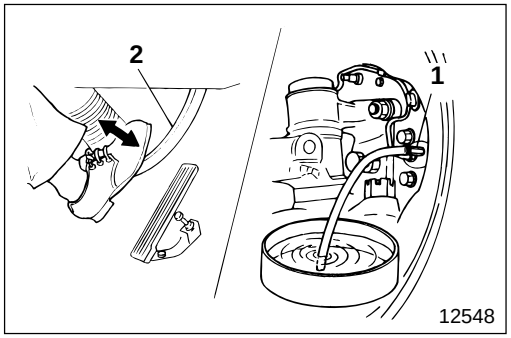

- Loosen air bleeders **1** and depress brake pedal **2** several times to drain brake fluid completely.

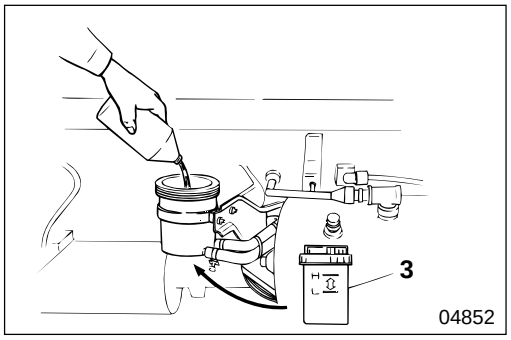

- Maintaining a supply of new brake fluid up to the "**H**" level of fluid tank **3**, depress the brake pedal repeatedly until the old brake fluid of the brake system is replaced with new fluid.
- Carry out air bleeding of the brake system.

[Air bleeding]

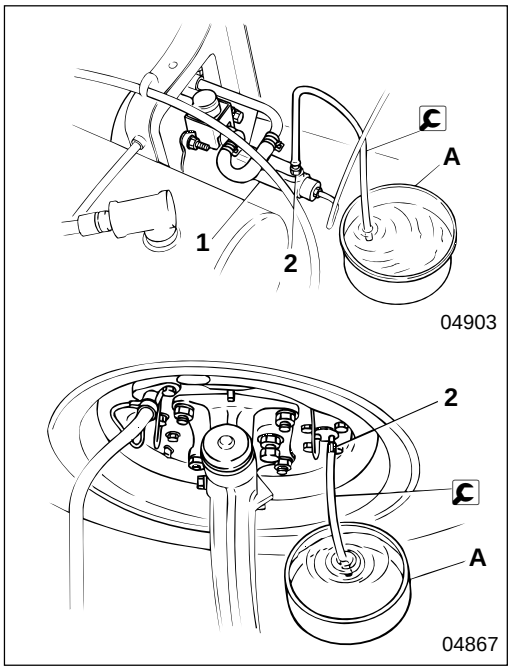

- Start the engine and let it idle until brake fluid replacement is completed.
- Attach one end of vinyl hose to front or rear airmaster **1**. Then, attach one end of another vinyl hose to air bleeder **2** of the wheel brake. Finally, place both free ends in container **A** filled with brake fluid.

- Carry out air bleeding in the following sequence:

Front brake system	Rear brake system
Airmaster for front	Airmaster for rear
Right-hand side wheel brake	Right-hand side wheel brake
Left-hand side wheel brake	Left-hand side wheel brake

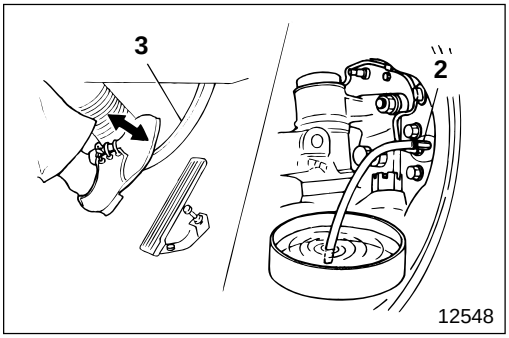

- Depress brake pedal **3** slowly a few times, and with the brake pedal depressed, loosen air bleeder **2** to drain brake fluid containing air.

- Tighten air bleeder **2**, and release brake pedal **3**.
- Repeat this service procedure until air is no longer present in the fluid being drained.
- Tighten air bleeder **2** at specified torque as soon as brake fluid flowing out is free of air bubbles.

- Adjust brake shoe clearance when you have finished air bleeding.
- Check that brake fluid comes up to lebel "**H**" of the fluid tank. If it does not, refill with new brake fluid.
- Depress brake pedal **3** a few times and check for any leakage of brake fluid, then test the brakes.
- When you test the brakes, if the brake warning lamp within the meter cluster lights, it means that air has not been bled completely. Redo air bleeding.

● Greasing Various Areas of Chassis

Carefully clean away all dust and dirt from the grease nipples, and use the specified type of grease. The areas to be greased are shown in the following illustration.

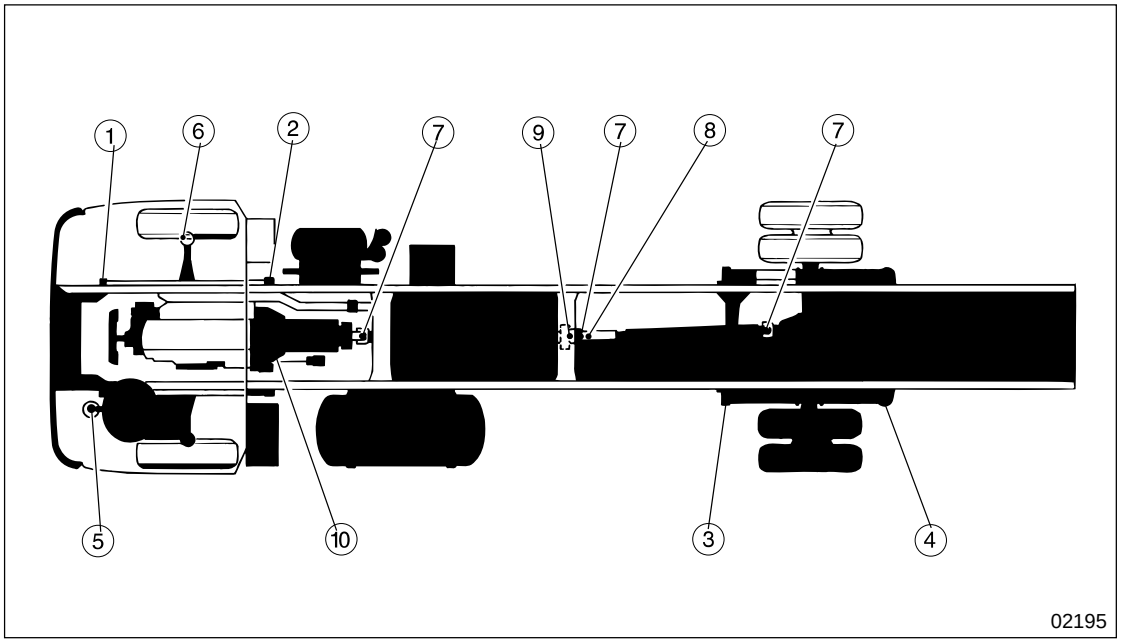

① 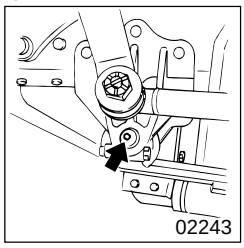

② 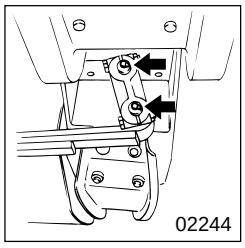

③ 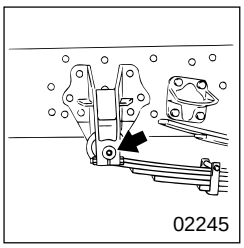

④ 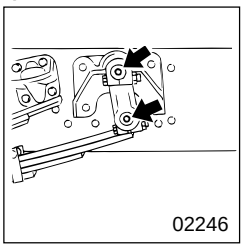

⑤ 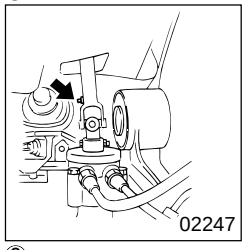

⑥ 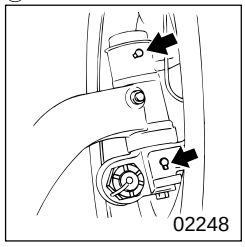

⑦ 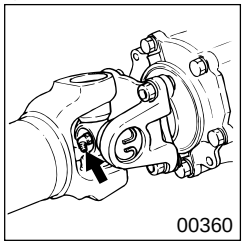

⑧ 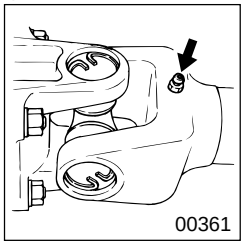

⑨ 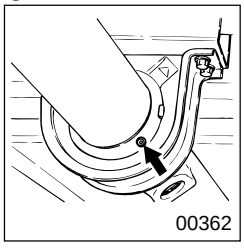

⑩ 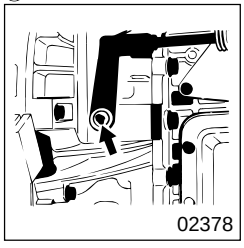

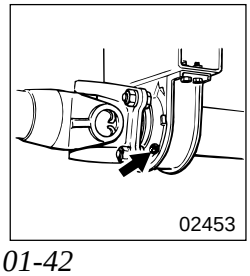

Supply grease to the center bearing until grease overflows from the escape valve at the back of the grease nipple.

① Front spring pin front (left and right, 2 points)
② Front spring pin rear (left and right, 4 points)
③ Rear spring pin front (left and right, 2 points)
④ Rear spring pin rear (left and right, 4 points)
⑤ Steering shaft
⑥ Kingpin bearing (left and right, 4 points)
⑦ Universal joint of propeller shaft
⑧ Slip joint of propeller shaft
⑨ Center bearing of propeller shaft
⑩ Clutch fork shaft (left and right, 2 points)

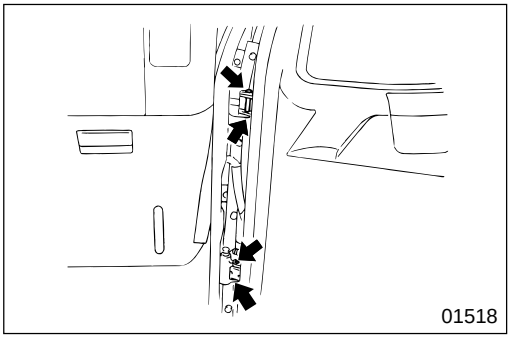

● **Door hinge**

MITSUBISHI
FUSO

FH

Service Manual

Group 10
Removal and Installation of Engine

Table of Contents

MITSUBISHI FUSO TRUCK OF AMERICA, Inc.

BACK HOME

Pub No. TWME9502-10

GROUP 10 REMOVAL AND INSTALLATION OF ENGINE

REMOVAL AND INSTALLATION OF ENGINE

- **Charge and Discharge of Engine Coolant, Removal and Installation of Hoses 2**
- **Removal and Installation of Engine Related Parts 4**
- **Removal and Installation of Engine 6**

REMOVAL AND INSTALLATION OF ENGINE

Charge and Discharge of Engine Coolant, Removal and Installation of Hoses

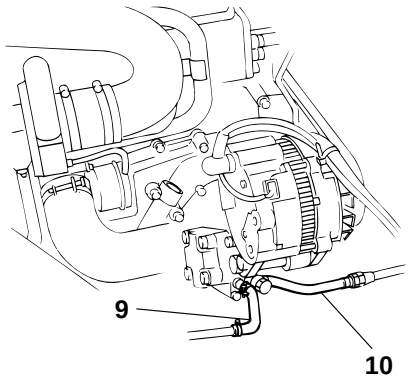

13257

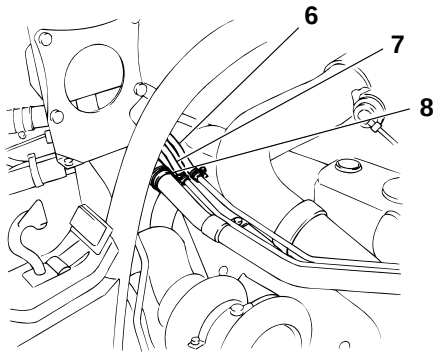

13258

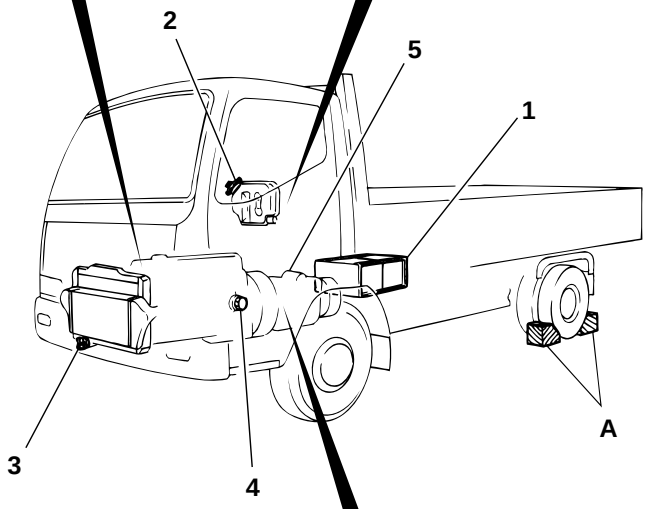

13259

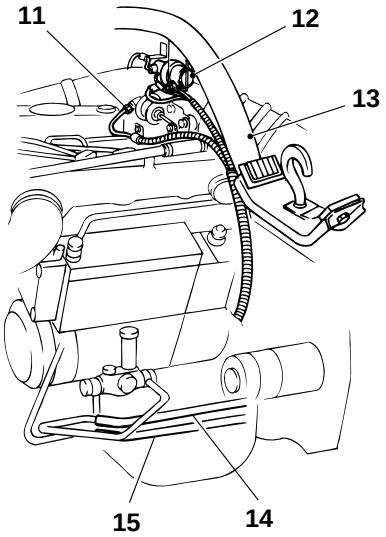

13260

● **Work before removal and after installation**

P10-3

● **Removal sequence**

1 Battery cable ⊖
2 Pressure cap (Surge tank)
3 Radiator drain plug Gr 14
4 Crankcase drain plug Gr 14
5 Transmission assembly Gr 22, 23
6 Air hose Gr 14
7 Suction hose Gr 14
8 Supply hose Gr 14
9 Power steering oil hose
10 Power steering oil hose
11 Nylon tube (Intake silencer)
12 Glow relay
13 Cab bridge Gr 42
14 Fuel feed hose
15 Fuel return hose

A : Wheel chock

WARNING⚠

- **You must insert blanking plugs into fuel feed hose 14 and fuel return hose 15 after you remove them and secure them at a higher level than the fuel tank to prevent fuel from flowing out of them. Otherwise a fire might be caused.**
- **You must make sure that the engine coolant is cold before draining it so as not to scald yourself.**
- **It is dangerous to open pressure cap 2, when the coolant temperature is high, without taking due care because the hot water would spray out. Be sure to cover the pressure cap with a cloth and loosen slowly to bleed the pressure before opening fully.**

● **Installation sequence**

Follow the removal sequence in reverse.

◆ Service procedure

● **Work before removal and after installation**

- Discharge, charge, and air bleeding of engine coolant Gr 14
- Discharge, charge, and air bleeding of oil Gr 37
- Air bleeding of fuel system Gr 13

REMOVAL AND INSTALLATION OF ENGINE

Removal and Installation of Engine Related Parts

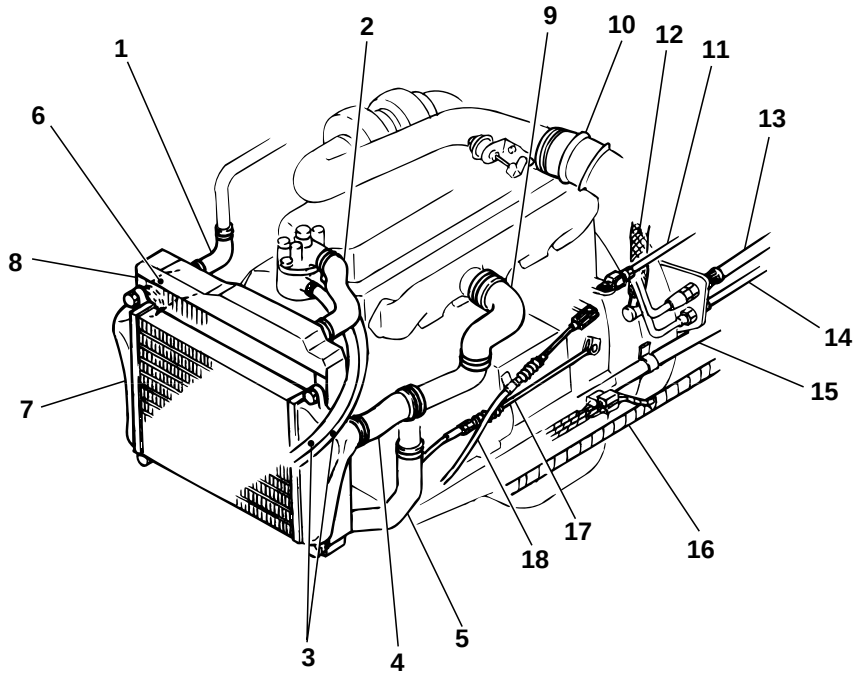

13261

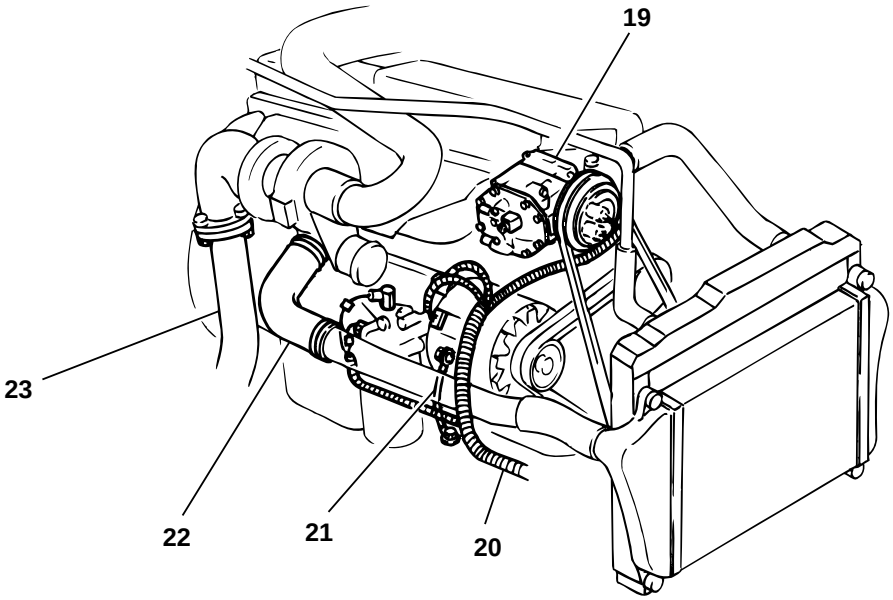

13262

● **Removal sequence**

1 Supply hose Gr 14
2 Inlet hose Gr 14
3 Heater hose Gr 55B
4 Air intake hose Gr 15
5 Outlet hose Gr 14
6 Air intake hose Gr 15
7 Intercooler Gr 15
8 Radiator Gr 14
9 Air intake hose Gr 15
10 Air intake hose Gr 15
11 Modulator cable Gr 23
12 Harness (Ground)
13 Air outlet hose
14 Air unloader hose
15 Harness (Starter)
16 Harness (Chassis harness)
17 Engine stop cable Gr 13
18 Accelerator control cable Gr 13
19 Cooler compressor Gr 55A
20 Harness (Chassis harness)
21 Harness (Ground)
22 Air intake hose Gr 15
23 Front pipe Gr 15

NOTE

- **For vehicles fitted with an air-conditioner do not disconnect the hose that goes to the air-conditioner from cooler compressor 19 when you remove it otherwise you will have to recharge the air-conditioner with refrigerant.**
- **After removing cooler compressor 19 tie it to the frame temporarily.**

● **Installation sequence**

Follow the removal sequence in reverse.

REMOVAL AND INSTALLATION OF ENGINE

Removal and Installation of Engine

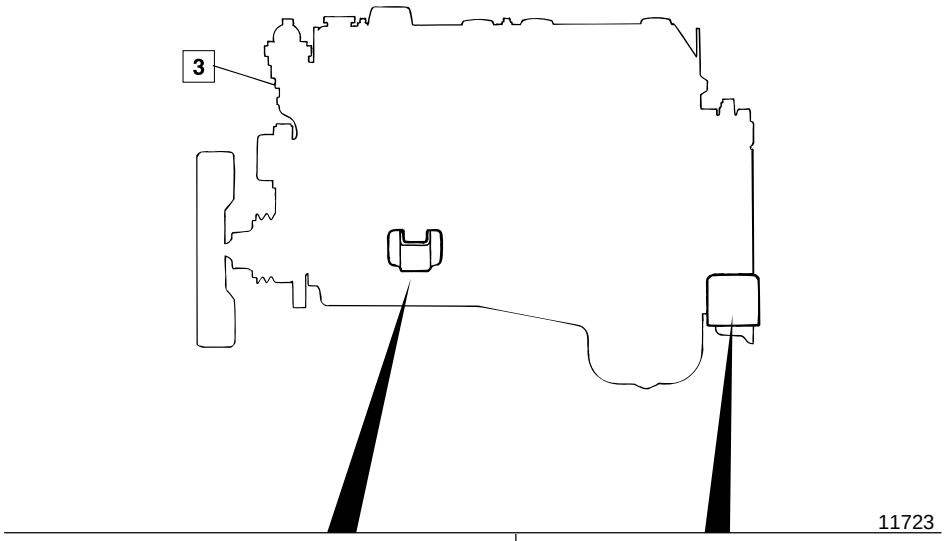

11723

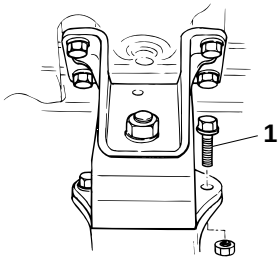

11724

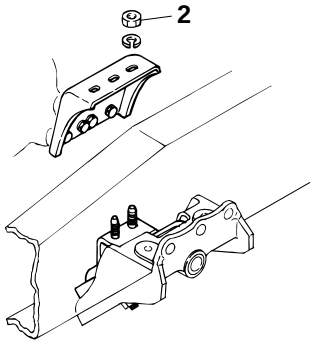

11725

● **Removal sequence**

1 Bolt
2 Nut
3 Engine assembly

WARNING⚠

When you lift engine assembly 3, you must use lifting gear that is strong enough to lift the mass of the engine (approximately 550 kg {1210 lb}).

● **Installation sequence**

Follow the removal sequence in reverse.

◆ Service procedure

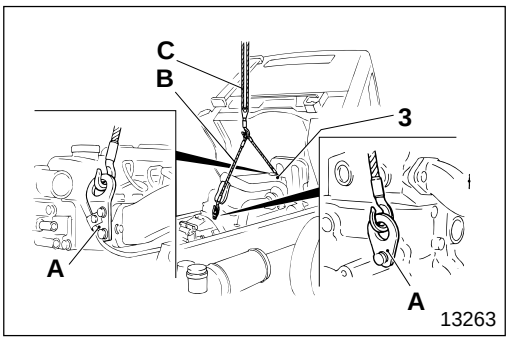

3 Removal of engine assembly

- Hook lifting gear **B** to two hangers **A** on engine assembly **3** and lift the engine using crane **C** until the lifting gear becomes taut.
- Make sure that wiring and hoses are disconnected.

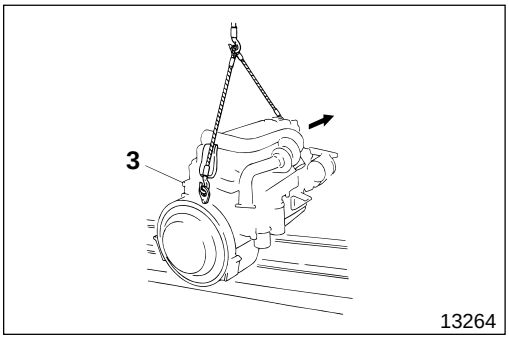

- Lower engine assembly **3** slowly so that it does not hit the frame or cab.
- When the lower part of engine assembly **3** appears from the frame, turn the engine assembly 90° to remove it.

MITSUBISHI
FUSO

FH

Service Manual

Group 11
Engine

Table of Contents

BACK

HOME

MITSUBISHI FUSO TRUCK OF AMERICA, Inc.

Pub No. TWME9502-11

GROUP 11 ENGINE

SPECIFICATIONS 2

STRUCTURE AND OPERATION 3

TROUBLESHOOTING 6

INSPECTION AND ADJUSTMENT MOUNTED IN VEHICLE
- Inspection of Engine Compression 7
- Inspection and Adjustment of Valve Clearance 9

CYLINDER HEAD AND VALVE MECHANISM 10

TIMING GEAR 24

CAMSHAFT 28

PISTON, CONNECTING ROD AND CYLINDER SLEEVE 34

FLYWHEEL 48

CRANKSHAFT AND CRANKCASE 52

SPECIFICATIONS

Item	Specifications
Engine model	6D34T2
Type	6-cylinder in-line, water-cooled 4-cycle diesel
Combustion chamber type	Direct injection type
Valve mechanism	Overhead valve (OHV) type
Maximum output HP/rpm (SAE Gross)	175/2900
Maximum torque lbs.ft/rpm (SAE Gross)	325/2000
Bore×stroke mm {in.}	ø104×115 {4.09×4.53}
Total displacement cm^3 {cu. in.}	5861 {357.7}
Compression ratio	18

Engine Body

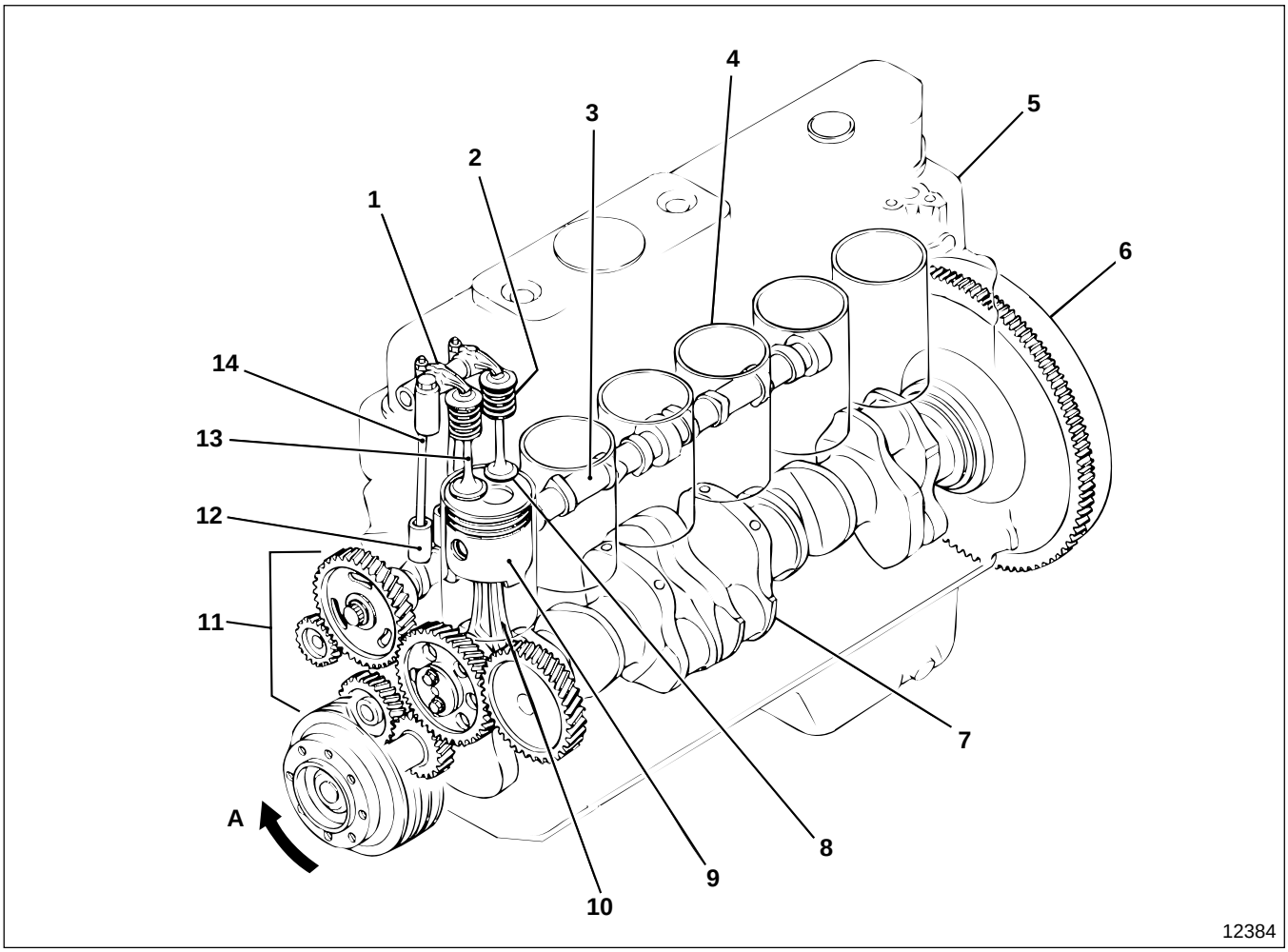

1 Rocker arm
2 Valve spring
3 Camshaft
4 Cylinder sleeve
5 Cylinder head
6 Flywheel
7 Crankshaft
8 Exhaust valve
9 Piston
10 Connecting rod
11 Timing gear
12 Tappet
13 Inlet valve
14 Push rod

A : Direction of rotation

Connecting Rod

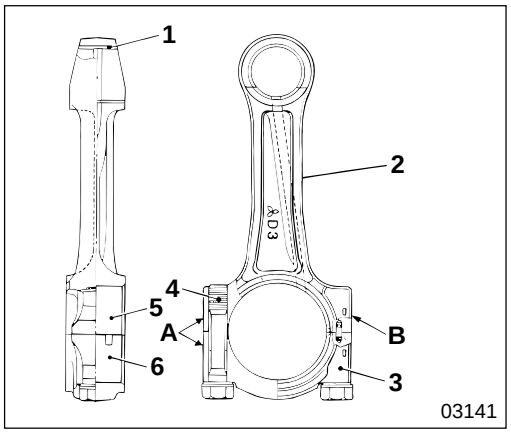

1 Connecting rod bushing
2 Connecting rod
3 Connecting rod cap
4 Connecting rod bolt
5 Upper connecting rod bearing
6 Lower connecting rod bearing

A : Alignment mark
B : Mass mark
(A, B, C, D, E, F, G)

Piston

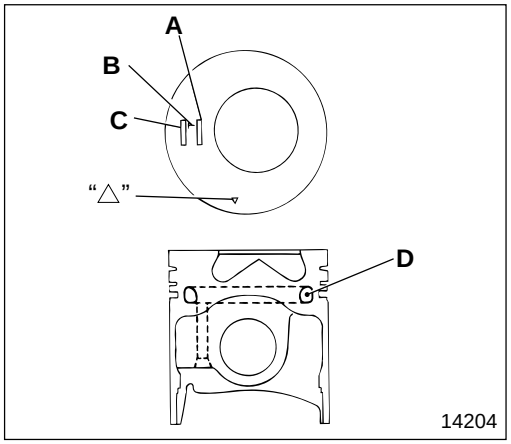

A : Stamped mass
B : Stamped "T"
C : Part number
D : Free space for piston cooling
△ : Front mark

Timing Gear

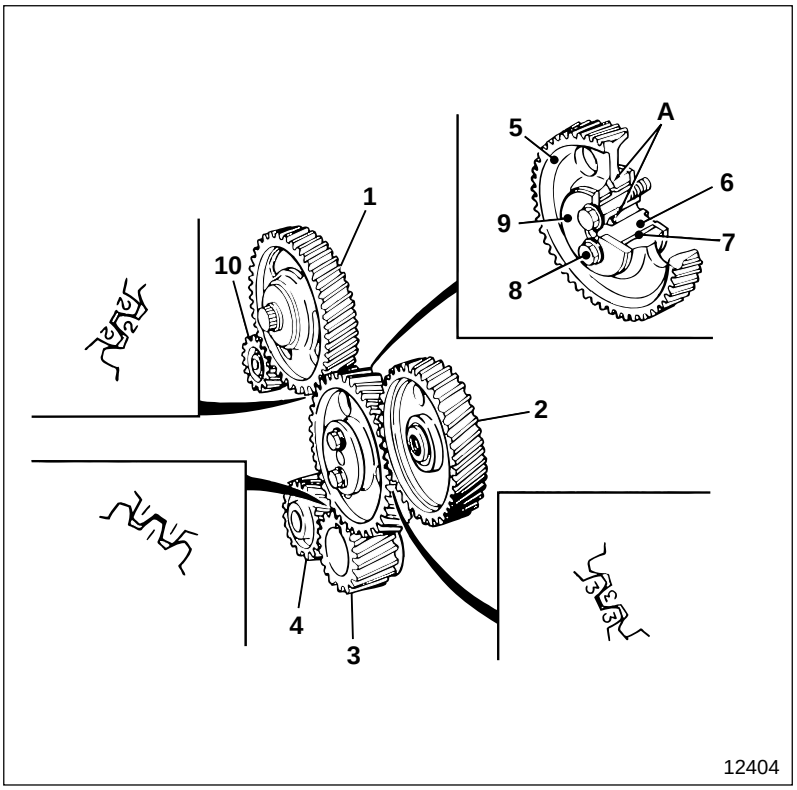

1 Camshaft gear
2 Injection pump gear
3 Crankshaft gear
4 Oil pump gear
5 Idler gear
6 Idler shaft
7 Idler bushing
8 Bolt
9 Thrust plate
10 Power steering oil pump gear

A : Oil hole

Alignment marks "**1**", "**2**", "**3**" are punch-marked on each timing gear to ensure proper engagement of the gears at installation.

Symptoms / Possible causes	Decrease of power	Engine noise abnormal	Remarks
Oil viscosity unsuitable	○		Gr 12
Fuel incorrect or unsuitable	○		
Valve clearance faulty	○	○	
Head gasket faulty	○	○	
Valve and valve seat worn, and carbon deposits	○	○	
Valve spring fatigued	○	○	
Piston ring worn or damaged	○	○	
Piston ring grooves worn or damaged	○	○	
Injection timing faulty	○	○	Gr 13
Injection pump malfunctioning	○	○	Gr 13
Cooling system malfunctioning	○		Gr 14
Injection nozzle malfunctioning	○	○	Gr 13
Fuel system sucking air	○		Gr 13
Air cleaner mesh clogged	○		Gr 15
Muffler clogged	○		Gr 15
Pipe and hose installation faulty		○	
Ancillary equipment (injection pump, alternator, etc.) or installation faulty		○	Gr 13 Gr 54
V-belt loose or damaged		○	Gr 14
Crankshaft pulley mounted incorrectly		○	
Air cleaner or muffler malfunctioning		○	Gr 15
Rocker shaft and bracket faulty		○	
Rocker shaft bracket lubrication faulty		○	
Timing gear backlash faulty		○	
Timing gear system and idler shaft lubrication faulty		○	
Connecting rod small end bushing worn and piston pin worn		○	
Crankshaft pin and big end bearing of connecting rod worn or damaged		○	
Crankshaft journal and main bearing worn or damaged		○	
Crankshaft and camshaft end play excessive		○	
Tappet and camshaft worn		○	

Inspection of Engine Compression

Service standards

Location	Maintenance item		Standard value	Limit	Remedy
—	Engine Compression	Each cylinder (200 rpm)	2550 kPa {370 lbf/in^2, 26 kgf/cm^2}	1960 kPa {285 lbf/in^2, 20 kg/cm^2}	Inspect
		Pressure difference between each cylinder	—	within 390 kPa {57 lbf/in^2, 4 kgf/cm^2}	Inspect

Special tools

Unit : mm {in.}

Location	Tool name and shape	Part No.	Application
—	Compression gauge adapter 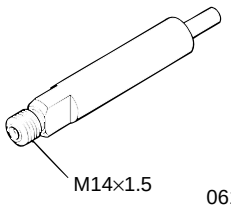 06197	MH061460	Measurement of engine compression

The decrease of engine compression is a signal that it is time to overhaul the engine. It is strongly recommended that this item is inspected periodically and that you record the history of deterioration in engine performance as this will help you to diagnose causes of future irregularities.
When the vehicle is still new or immediately after installation of new parts, there may be a slight increase in engine compression, but normal performance will be restored soon.

- Before inspection make sure that engine oil, starter and battery are in normal condition.
- Before inspecting the vehicle do the following:
  - Run the engine to bring the temperature of the coolant up to approximately 75 to 85°C {167 to 185°F}.
  - Turn all the lights and accessory equipment OFF.
  - Put transmission in neutral. (N range for automatic transmission)
  - Set the steering wheel at center and straight position.

INSPECTION AND ADJUSTMENT MOUNTED IN VEHICLE

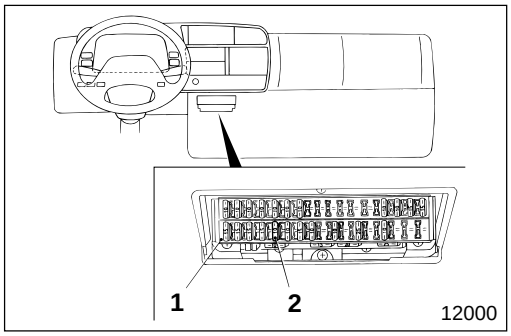

- Remove fuse **2** for the fuel-cut motor from fuse box **1** inside the cab to prevent the fuel from being injected when the engine is cranked by the starter.

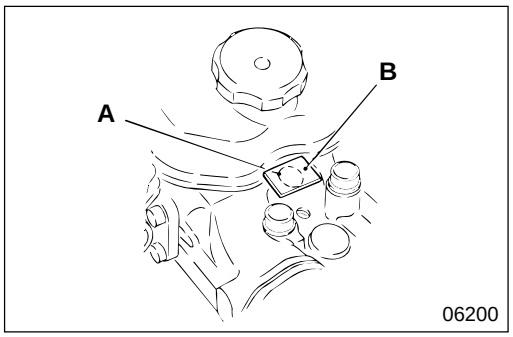

- Remove all the injection nozzles. Gr 13
- Check that no foreign particles are sticking to waste cloth **B** covering injection nozzle mounting hole **A** after cranking the engine.

WARNING

You must stay clear of injection nozzle mounting hole A when you crank the engine during this inspection. Assume that all cylinders have cracked, and that coolant, engine oil, fuel, etc. have seeped into the cylinder chambers. If this is the state when the engine is cranked, there is an extreme danger of these substances being injected out of the injection nozzle mounting hole at high temperature.

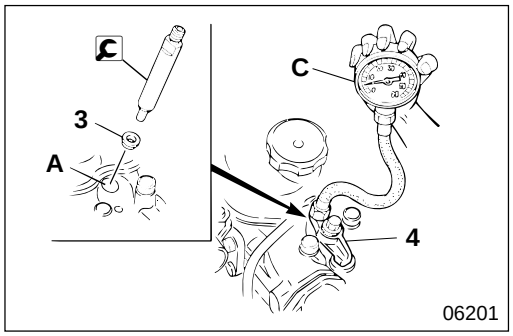

- Mount gasket **3** and compression gauge adaptor in injection nozzle mounting hole **A** and fasten them with nozzle bridge **4**, then mount compression gauge **C**.
- Measure engine compression while cranking the engine.
- Measure engine compression of cylinders and calculate the difference among the cylinders.
- If the engine compression and pressure difference between each cylinder deviate from the limit, reinspect by pouring a small amount of engine oil into injection nozzle mounting hole **A**.
  - When pressure is high : It is likely that either wear or damage of the slide-contact area of both the piston ring and the cylinder inner surface has taken place.
  - When pressure is low : It is likely that burning of the valve, faulty contact of valve surfaces and/or faults in the cylinder head gasket have developed.

Inspection and Adjustment of Valve Clearance

Service standards

Unit : mm {in.}

Location	Maintenance item	Standard value	Limit	Remedy
—	Valve clearance (When engine is cold)	0.4 {0.016}	—	Adjust

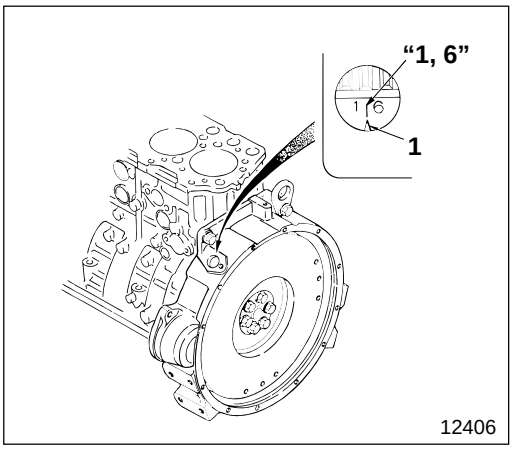

Inspect and adjust the valve clearance while the engine is cold in the following way.

[Inspection]

- Crank the engine to move No.1 or No.6 piston to top dead center, and align stamped marks "**1**, **6**" on the flywheel with pointer **1** on the flywheel housing.

NOTE

The cylinder whose push rod is not pushing up the inlet/outlet rocker is the one whose piston is at top dead center.

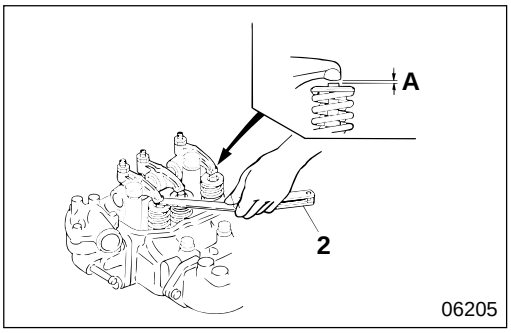

- Measure valve clearance **A** when either No.1 or No.6 piston is at top dead center in accordance with the following tabulated sequence of each valve.

Piston No.	1		2		3		4		5		6	
Valve arrangement	In-take	Ex-haust	In-take	Ex-haust	In-take	Ex-haust	In-take	Ex-haust	In-take	Ex-haust	In-take	Ex-haust
No.1 piston at top dead center	○	○	○	×	×	○	○	×	×	○	×	×
No.6 piston at top dead center	×	×	×	○	○	×	×	○	○	×	○	○

NOTE

Be sure when taking measurements using feeler gauge 2 that some resistance is felt when inserting the gauge. If the gauge can be inserted freely without any resistance, an accurate measurement cannot be obtained.

- If the measured value deviates from the limit, adjust as follows:

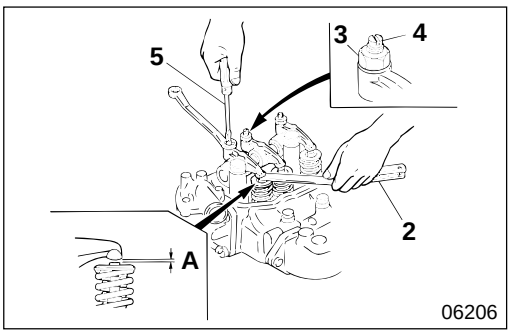

[Adjustment]

- Adjust valve clearance **A** so that feeler gauge **2** encounters some resistance when it is inserted. Do this by loosening lock nut **3** and turning adjusting screw **4**.
- After adjusting, tighten adjusting screw **4** using screwdriver **5** and tighten lock nut **3**. Reinspect valve clearance **A** using feeler gauge **2**.

CYLINDER HEAD AND VALVE MECHANISM

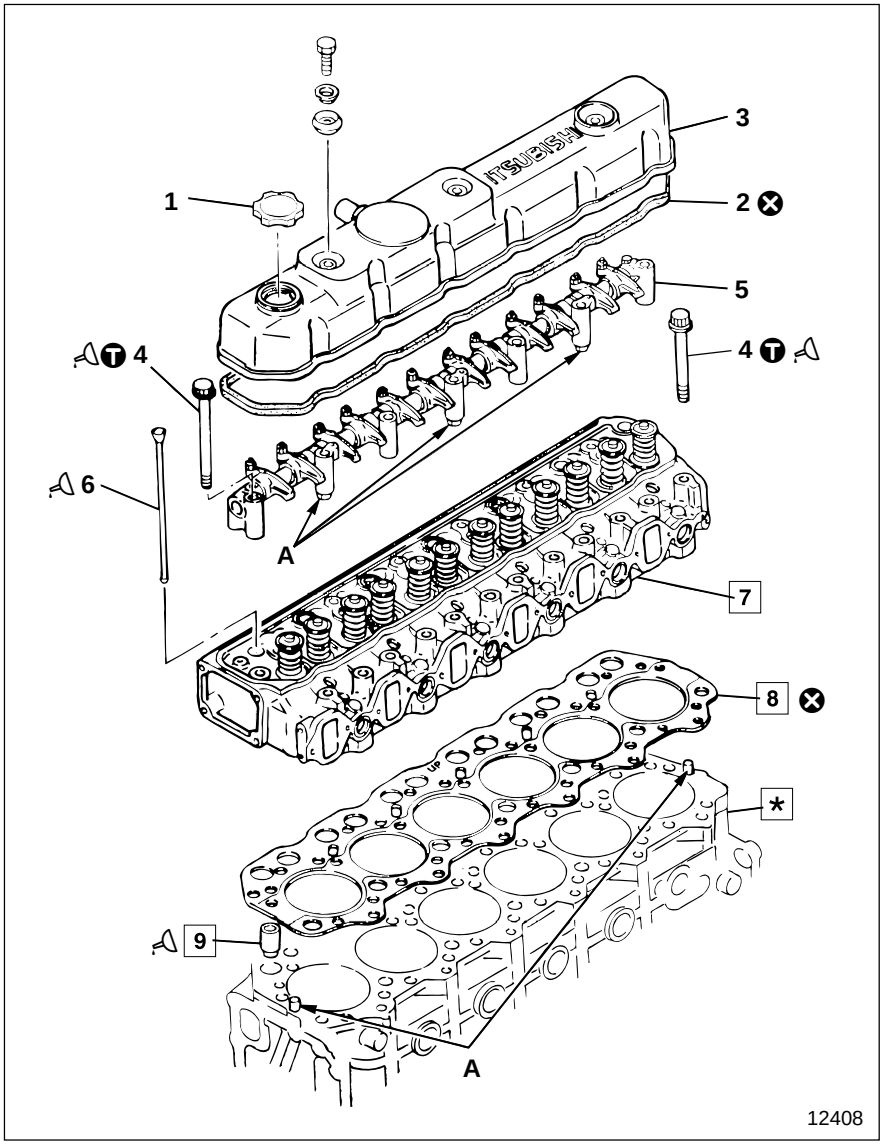

● **Disassembly sequence**

1 Oil filler cap
2 Rocker cover gasket
3 Rocker cover
4 Cylinder head bolt
5 Rocker and bracket assembly 🕮 P11-14
6 Push rod
7 Cylinder head and valve assembly 🕮 P11-16
8 Cylinder head gasket
9 Tappet

* : Crankcase 🕮 P11-52
A : Positioning pin
⊗ **:** Non-reusable parts

● **Assembly sequence**

Follow the disassembly sequence in reverse.

Service standards

Unit : mm {in.}

Location	Maintenance item	Standard value (Basic diameter in [ ])	Limit	Remedy
6	Push rod deflection	—	0.4 {0.016}	Replace
9, *	Clearance between tappet and crankcase tappet hole	[28] 0.05 to 0.09 {[1.10] 0.0020 to 0.0035}	0.2 {0.0079}	Replace

Ⓣ Tightening torque

Unit : N·m {lbf.ft, kgf·m}

Location	Parts to be tightened	Tightening torque	Remarks
4	Cylinder head bolt	145 {110, 15}+90°	Wet Reuse up to three times

Lubricant

Location	Points of application	Kinds	Quantity
4	Thread area of cylinder head bolt	Engine oil	As required
6	Both ends of push rod	Engine oil	As required
9	External periphery of tappet	Engine oil	As required

Special tools

Location	Tool name and shape	Part No.	Application
7	Socket wrench 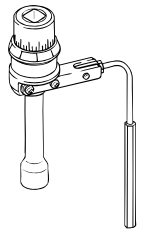 01984	MH061560	Installation of cylinder head and valve assembly
9	Tappet extractor 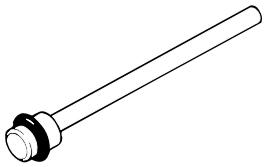 03320	MH063329	Removal of tappet

◆ Service procedure

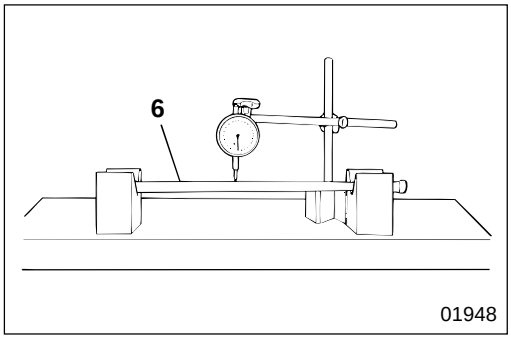

01948

6 **Push rod deflection**

If the measured value is higher than the limit, replace push rod **6**.

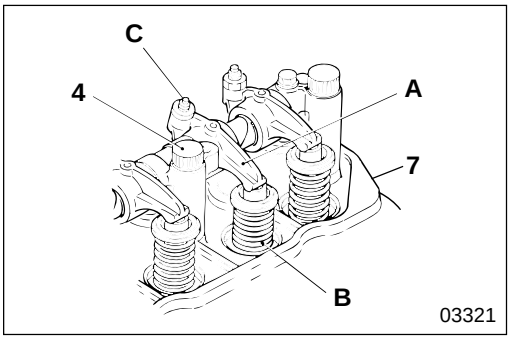

03321

7 **Cylinder head and valve assembly**

[Removal]

- Before undoing cylinder head bolts **4**, first loosen adjusting screw **C** of rocker **A** that pushes down valve spring **B**.

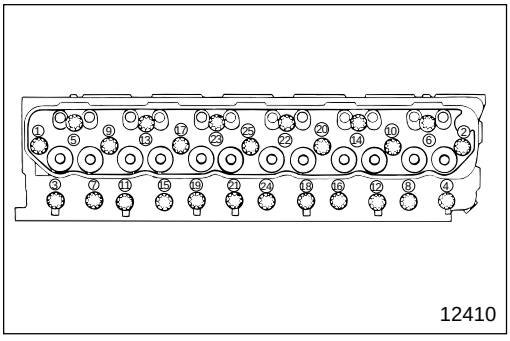
12410

- First loosen cylinder head bolts **4** in the numbered order as illustrated, then remove them.

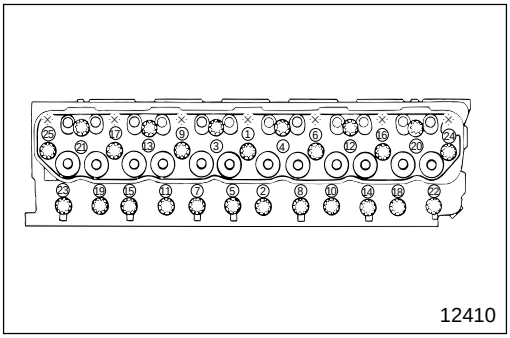

[Installation]

- Center punch the heads of cylinder head bolts **4** before installation.

CAUTION

If there are already three center-punch marks, replace the cylinder head bolt with a new one.

- After tightening cylinder head bolts **4** at specified torque in the numbered order as illustrated, tighten further as follows:
  ·⁜· : Tightened simultaneously with rocker and bracket assembly

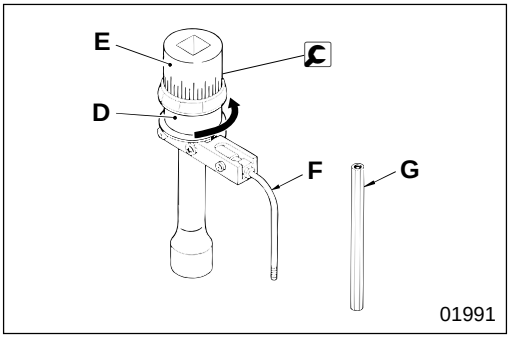

- Turn socket wrench holder **D** counterclockwise and keep the spring in the wrench compressed.
  E : Socket
  F : Rod
  G : Rod (for connection)

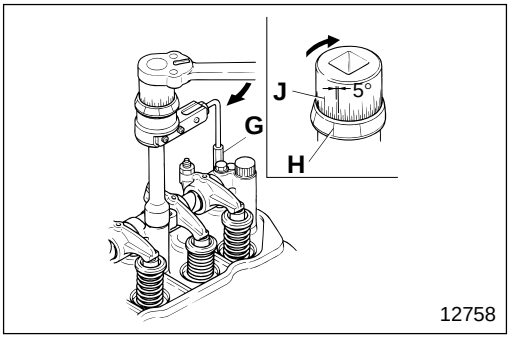

- Set socket wrench holder **D** so that the repercussive force of the spring presses rod **G** (for connection) against adjacent parts such as, the rocker shaft bracket or the injection pipe.
- Select a scale that is convenient for reading graduation **H** on holder **D**.
- Tighten further by turning socket **H** clockwise by 90° (setting is in 5° increments), referring to graduation **J** on the selected scale.

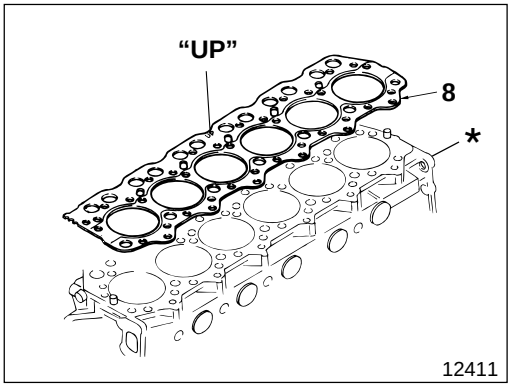

8 **Cylinder head gasket**

[Removal]

CAUTION

Be careful not to scratch the cylinder head or crankcase * when you remove cylinder head gasket 8.

[Installation]

- Install cylinder head gasket **8** onto crankcase * in the direction as illustrated.

CAUTION

Be sure to measure the amount of protrusion whenever a piston or connecting rod is replaced, since replacement changes the amount of protrusion.

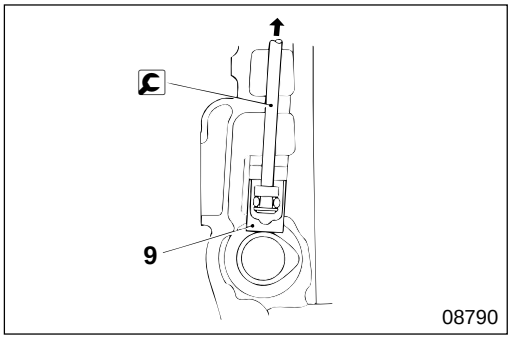

9 **Removal of tappet**

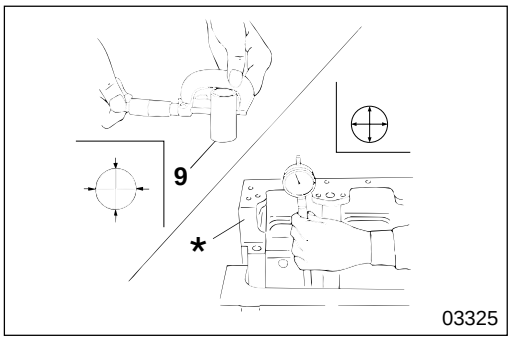

9 ***** **Clearance between tappet and crankcase tappet hole**

If the measured value is higher than the limit, replace the faulty parts.

CYLINDER HEAD AND VALVE MECHANISM

Rocker and Bracket Assembly

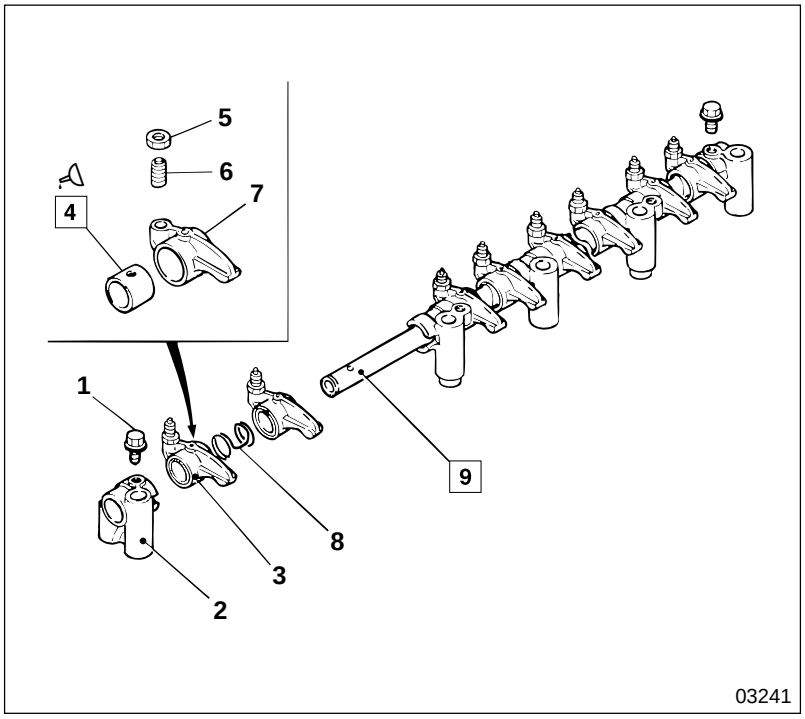

● **Disassembly sequence**

1 Set bolt
2 Rocker shaft bracket
3 Rocker assembly
4 Rocker bushing
5 Lock nut
6 Adjusting screw
7 Rocker
8 Rocker shaft spring
9 Rocker shaft

● **Assembly sequence**

Follow the disassembly sequence in reverse.

Service standards

Unit : mm {in.}

Location	Maintenance item	Standard value (Basic diameter in [ ])	Limit	Remedy
4, 9	Clearance between rocker bushing and rocker shaft	[19] 0.06 to 0.11 {[0.75] 0.0024 to 0.0043}	0.2 {0.0079}	Replace

Lubricant

Location	Points of application	Kinds	Quantity
4	Inner surface of rocker bushing	Engine oil	As required

Special tools

Unit : mm {in.}

Location	Tool name and shape	Part No.	Application
4	Rocker bushing puller 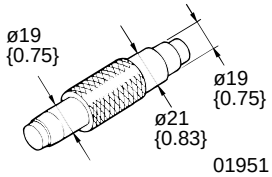	MH061378	Removal and installation of rocker bushing

◆ Service procedure

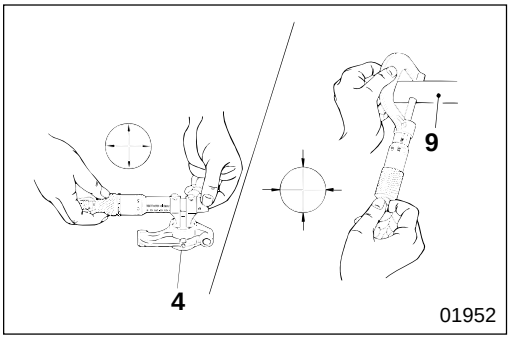

4 **9** **Rocker bushing and rocker shaft**

[Inspection]
If the clearance is higher than the limit, replace the faulty parts.

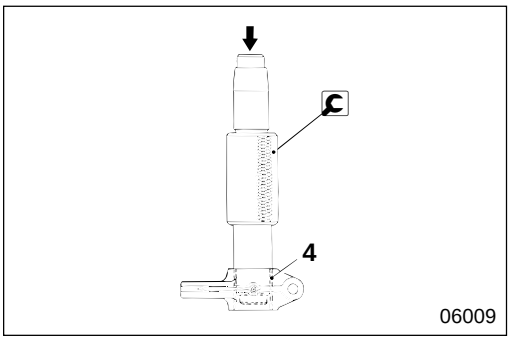

Rocker bushing

[Removal]

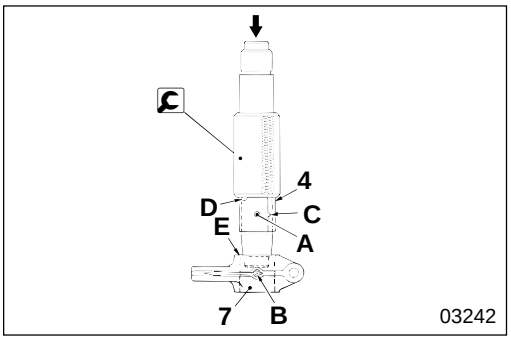

[Press-fitting]

- Align oil hole **A** of rocker bushing **4** with oil hole **B** of rocker **7**.
- Position clinch **C** and split **D** of rocker bushing **4** in the direction as illustrated.
- Press-fit rocker bushing **4** from chamfered side **E** of rocker **7**.

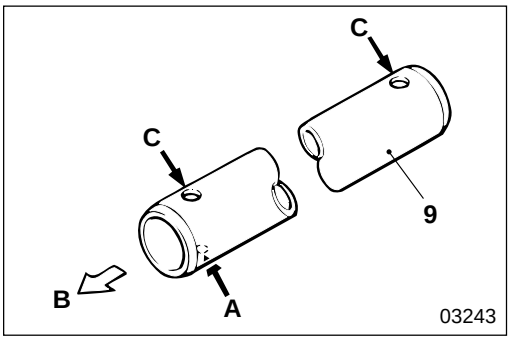

9 **Installation of rocker shaft**

When installing rocker shaft **9**, bring oil passage hole for lubrication **A** to front side **B**.

C : Fixing hole of the set bolt.

CYLINDER HEAD AND VALVE MECHANISM

Cylinder Head and Valve Assembly

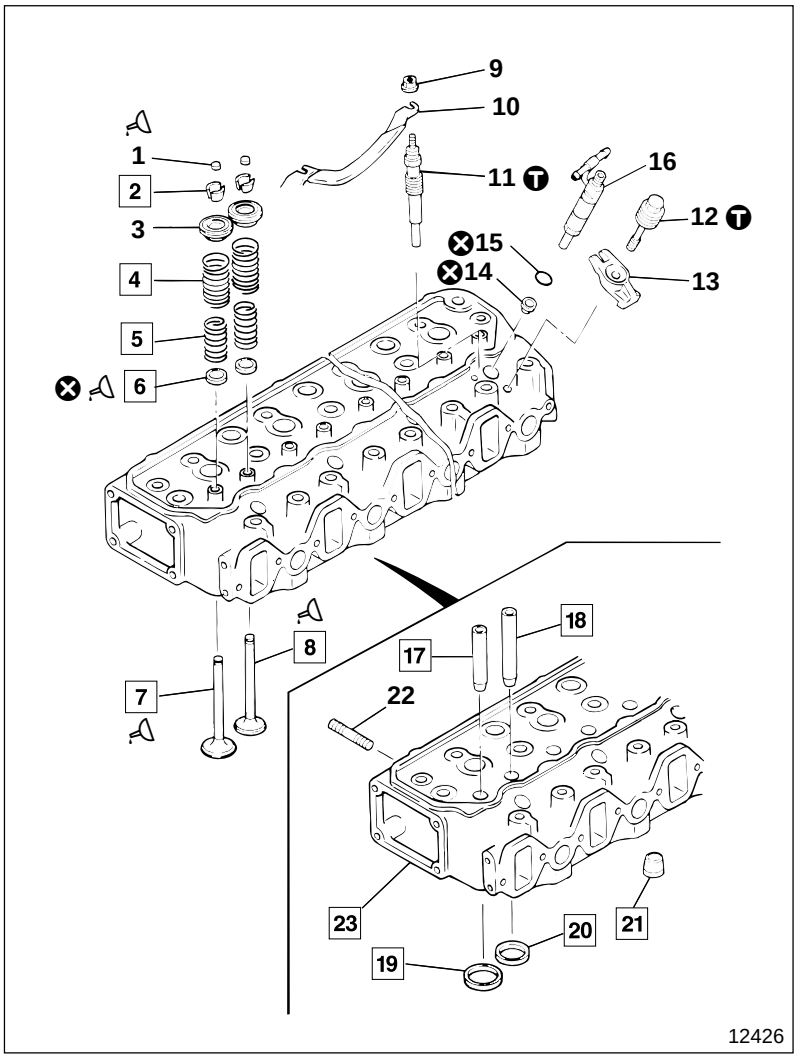

● **Disassembly sequence**

1 Valve cap
2 Valve cotter
3 Upper retainer
4 Outer valve spring
5 Inner valve spring
6 Valve stem seal
7 Inlet valve
8 Exhaust valve
9 Nut
10 Connecting plate
11 Glow plug Gr 54
12 Bolt
13 Nozzle bridge
14 Nozzle tip gasket
15 O-ring
16 Injection nozzle Gr 13
17 Inlet valve guide
18 Exhaust valve guide
19 Inlet valve seat
20 Exhaust valve seat
21 Water director
22 Stud
23 Cylinder head

⊗ : Non-reusable parts

CAUTION⚠

Be careful of the protrusion of glow plug 11 and injection nozzle 16 from the bottom surface of cylinder head 23.

● **Assembly sequence**

Follow the disassembly sequence in reverse.

NOTE

When inlet valve 7 and exhaust valve 8 have been removed, replace valve stem seal 6.

Service standards

Unit : mm {in.}

Location	Maintenance item		Standard value (Basic diameter in [ ])	Limit	Remedy
4	Outer valve spring	Without load	66.1 {2.60}	63.0 {2.48}	Replace
		Installed load (Installed length 47.25 {1.86})	273±12 N {62±2.6 lbf, 27.9±1.2 kgf}	230 N {52 lbf, 23.7 kgf}	Replace
		Tilt	—	2.5 {0.098}	Replace
5	Inner valve spring	Without load	60.0 {2.36}	52.1{2.05}	Replace
		Installed load (Installed length 40.3 {1.59})	119±4.4 N {27±1.0 lbf, 12.1±0.45 kgf}	79 N {18 lbf, 8.1 kgf}	Replace
		Tilt	—	2 {0.079}	Replace
7	Inlet valve	Stem diameter	8.96 to 8.97 {0.3529 to 0.3531}	8.85 {0.348}	Replace
		Valve recess from the cylinder head bottom surface	0.75 to 1.25 {0.030 to 0.049}	1.5 {0.059}	Inspect each part
		Valve margin	1.5 {0.059}	1.2 {0.047}	Correct or replace
		Valve seat angle	45°±15'	—	Correct or replace
7, 17	Clearance between inlet valve stem and inlet valve guide		[9] 0.04 to 0.06 {[0.35] 0.0016 to 0.0024}	0.15 {0.0059}	Replace
8	Exhaust valve	Outer diameter of stem	8.93 to 8.94 {0.3515 to 0.3519}	8.85 {0.348}	Replace
		Valve recess from the cylinder head bottom surface	0.75 to 1.25 {0.030 to 0.049}	1.7 {0.067}	Inspect each part
		Valve margin	1.5 {0.059}	1.2 {0.047}	Correct or replace
		Valve seat angle	45°±15'	—	Correct or replace
8, 19	Clearance between exhaust valve stem and exhaust valve guide		[9] 0.07 to 0.1 {[0.35] 0.0028 to 0.0039}	0.2 {0.0079}	Replace
19	Seat width of inlet valve seat		2±0.2 {0.079±0.0079}	2.8 {0.11}	Correct or replace
20	Seat width of exhaust valve seat		2±0.2 {0.079±0.0079}	2.8 {0.11}	Correct or replace
23	Cylinder head	Distortion of bottom	0.05 {0.0020} or less	0.2 {0.0079}	Correct or replace
		Height from top to bottom	95±0.1 {3.74±0.0039}	94.6 {3.72}	Replace

Tightening torque

Unit : N·m {lbf.ft, kgf·m}

Location	Parts to be tightened	Tightening torque	Remarks
11	Glow plug	15 to 20 {11 to 14, 1.5 to 2.0}	—
12	Bolt (Nozzle bridge mounting)	25 {18, 2.5}	—

Lubricant

Location	Points of application	Kinds	Quantity
1	Slide contact areas of valve cap and rocker	Engine oil	As required
6	Lip of valve stem seal	Engine oil	As required
7, 8	Valve stem	Engine oil	As required

Special tools

Unit : mm {in.}

Location	Tool name and shape	Part No.	Application
2	Valve lifter 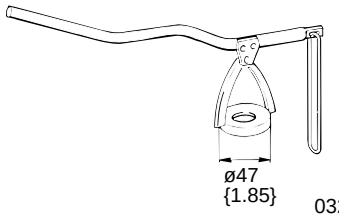 03265	30091-08500	Removal and installation of valve cotter
6	Valve stem seal installer 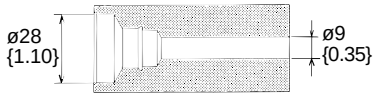 01957	MH061293	Installation of valve stem
7, 8	Valve lapper 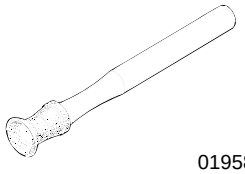 01958	30091-07500	Fitting of valve and valve guide
17, 18	Valve guide remover 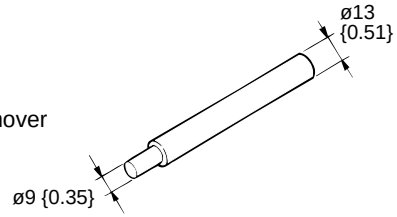 01959	MH061066	Removal of valve guide
	Valve guide installer 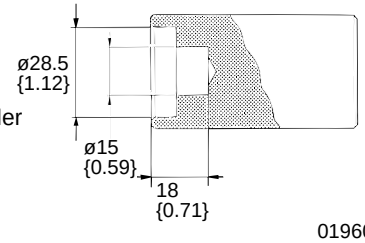 01960	MH061998	Press-fitting of valve guide
19, 20	**A** : Caulking tool body **B** : Caulking ring | | **C** dimension | | Inlet | ø47.6 {1.87} | | Exhaust | ø40.6 {1.60} | 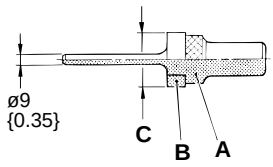 01961	**A** : MH061067 **B** : MH061275 (Inlet) MH061069 (Exhaust)	Press-fitting of valve seat

◆ Service procedure

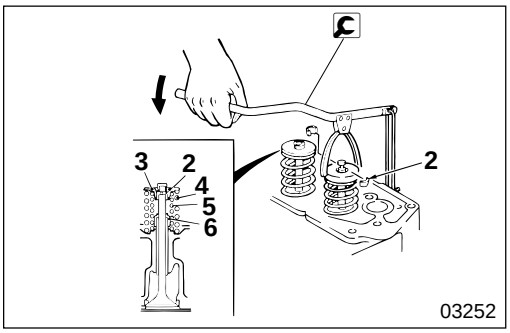

2 **Valve cotter**

[Removal]
Remove valve cotter **2** making sure that valve springs **4**, **5** are squarely and evenly pressed down by 🔧 valve lifter.

[Installation]
Follow the removal procedure in reverse.

CAUTION⚠

Be sure not to press down on valve springs 4, 5 too hard because this would cause upper retainer 3 to contact valve stem seal 6 and damage it.

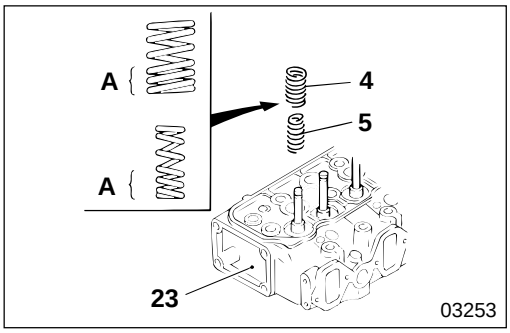

4 **5** **Installation of outer and inner valve springs**

Install outer springs **4** and inner springs **5** in cylinder head **23** in the direction as illustrated.

A : Closely wound area

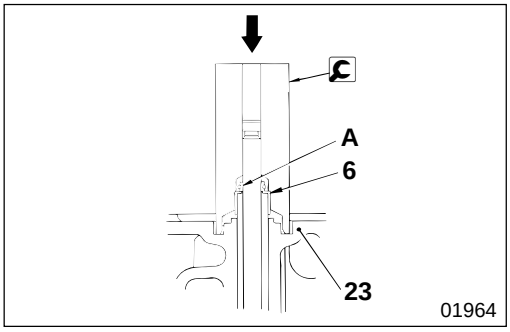

6 **Installation of valve stem seal**

- Apply engine oil to lip **A** of valve stem seal **6**.
- Tap down 🔧 valve stem seal installer until it hits cylinder head **23**.

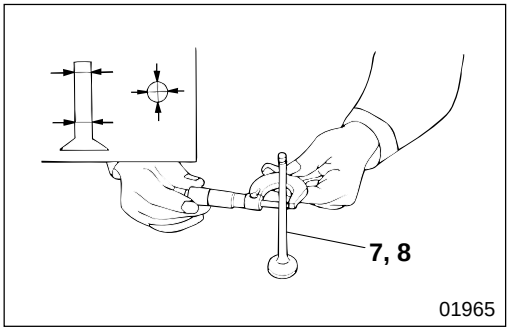

7 **8** **Inlet valve and exhaust valve**

[Inspection]

(1) Inspection of stems

If the measured value is lower than the limit or in the case of excessive wear, replace valves **7**, **8**.

CAUTION⚠

Be sure to lap valve seats 19, 20 when valves 7, 8 are replaced with new ones. 🕮 **P11-21**

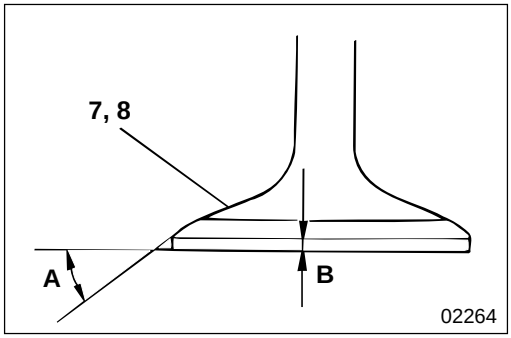

(2) Valve seat angle and valve margin

If the measured value is higher than the limit, correct or replace valves **7**, **8**.

A : Valve seat angle
B : Valve margin

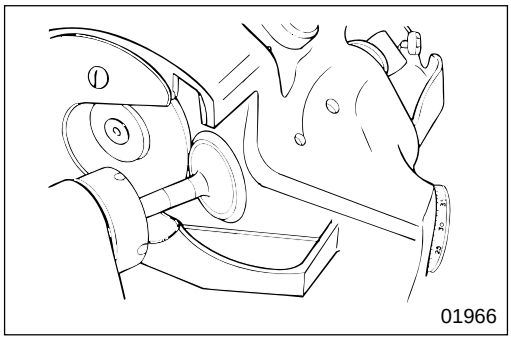

[Correction]

NOTE

- **Be sure to keep the grinding work as light as possible.**
- **Be sure to replace valves 7, 8 after grinding if valve margin deviates from the limit.**
- **Be sure to lap valve 7, 8 and valve seats 19, 20 after grinding.** **P11-21**

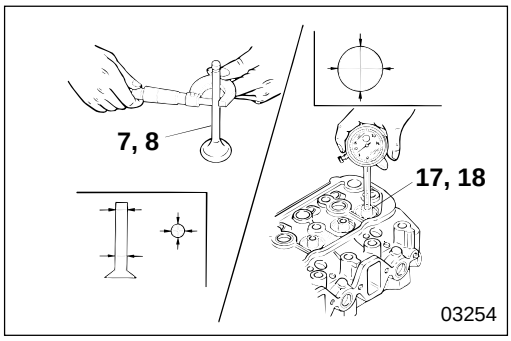

7 **8** **17** **18** **Valve and valve guide**

[Inspection]

When the clearance is higher than the limit, replace the faulty parts.

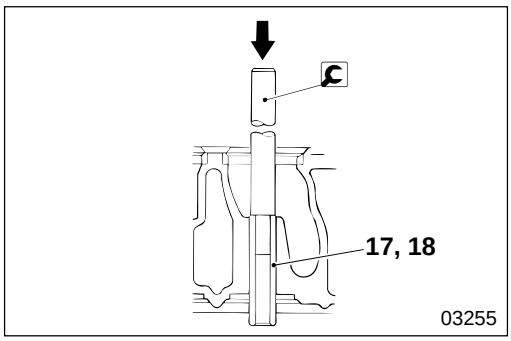

Valve guide

[Removal]

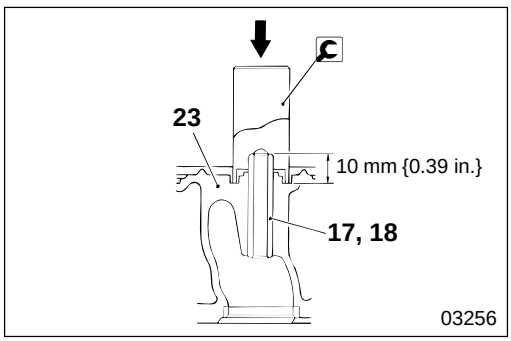

[Installation]

- Tap down valve guides **17**, **18** with valve guide installer until it hits cylinder head **23**.

CAUTION

- **The length of fit of valve guides 17, 18 is standardized. Be sure to use valve guide installer.**
- **Be sure to distinguish between valve guides 17, 18. Exhaust valve guide 18 is longer.**

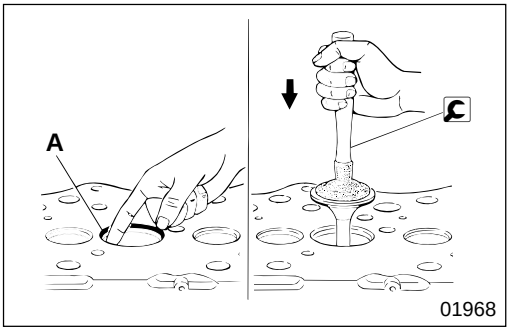

7 **8** **19** **20** **Valve and valve seat**

[Inspection]

- Apply red lead evenly to entire surface **A** of valve seats **19**, **20** that contact valves **7**, **8**.
- Fit valves **7**, **8** to valve seats **19**, **20** and tap once without rotating.

NOTE

Be sure to carry out inspection under the condition that valves 7, 8 and all parts of valve guides 17, 18 are normal.

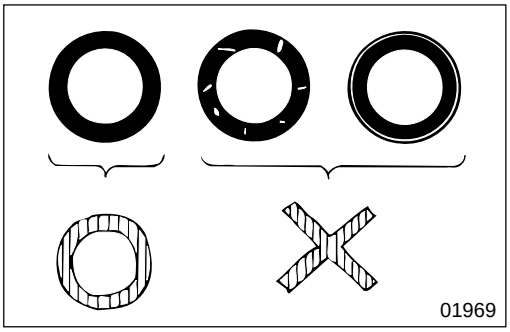

- Check how much red lead has transferred to valves **7**, **8** to determine the contact of the valve and the seat. According to the degree of abnormality, take proper measures to correct it.

Contact conditions	Correction measures
Minor fault	Valve lapping
Major fault	Repair of valve and seat or replacement of both

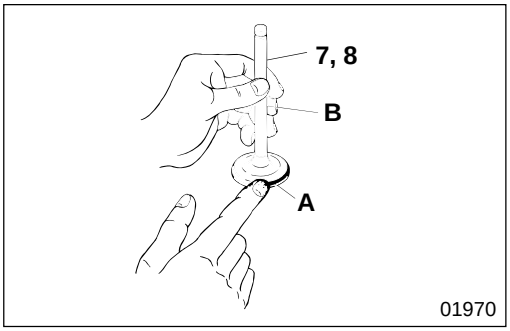

[Correction]

Valve polishing is done in the following manner:

- Apply valve lapping compound thinly to contact surface **A** of valves **7**,**8** with valve seats **19**, **20**.

CAUTION ⚠

Take care not to smear stems B of valves 7, 8 with the compound.

NOTE

- **Start with medium grit compound (120 to 150 grit) and for finishing up, use finer grit (200 grit or finer).**
- **Mixing with a small amount of engine oil will make the compound consistent and make even application easier.**

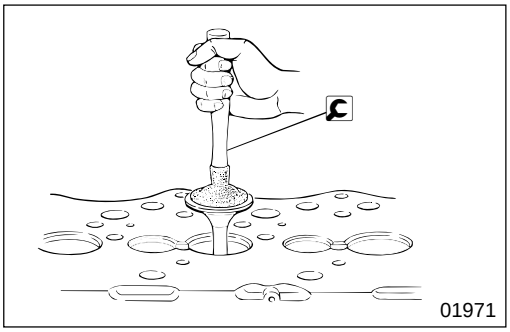

- Tap valves **7**, **8** against valve seats **19**, **20** several times while rotating the valves slightly at each strike.
- Clean off the compound with gas oil.
- Apply engine oil to contact surface **A** of valve seats **19**, **20** and smooth the surface.
- Check the contact of valves **7**, **8** and valve seats **19**, **20**.
- If contact does not take place completely around the seat, replace valve seats **19**, **20**.

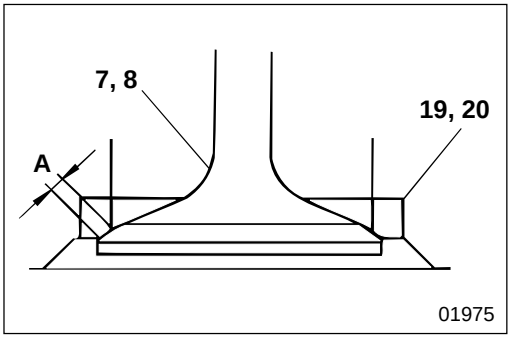

19 **20** **Valve seat**

[Inspection]

(1) Valve seat width

If the measured value is higher than the limit, replace valve seats **19**, **20**.

A : Valve seat width

NOTE

Be sure to lap and fit valves 7, 8 and valve seats 19, 20 after correction or replacement.

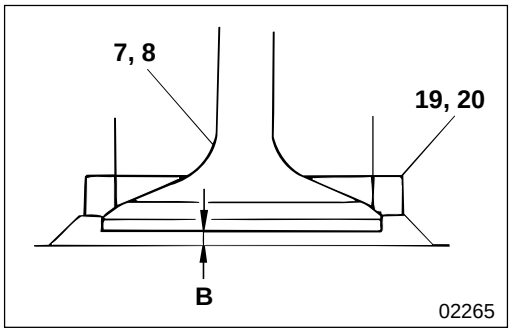

(2) Extent of valve recess from the bottom surface of cylinder head

If the measured value is higher than the limit, correct or replace the faulty parts.

B : Extent of valve recess

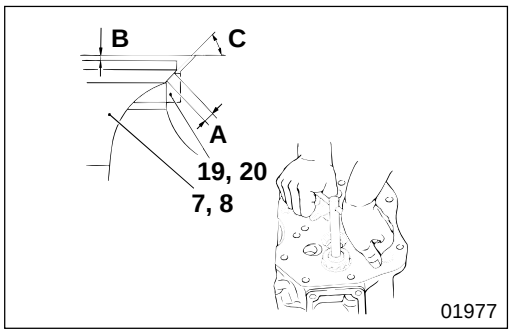

[Correction]

- Grind valve seats **19**, **20** using valve seat cutter or valve seat grinder.
- After grinding, do another light abrasion using 400 grit emery paper placed between the cutter and the seat.
- Adjust the seat width **A** of valves **7**, **8** using 15° or 75° cutter to make seat width conform to the standard value.

C : Valve seat angle

CAUTION ⚠

Be sure that as a result of grinding, recess B of valves 7, 8 does not become higher than the limit.

- After correction is done, be sure to carry out lapping and fitting on valves **7**, **8** and valve seats **19**, **20**.

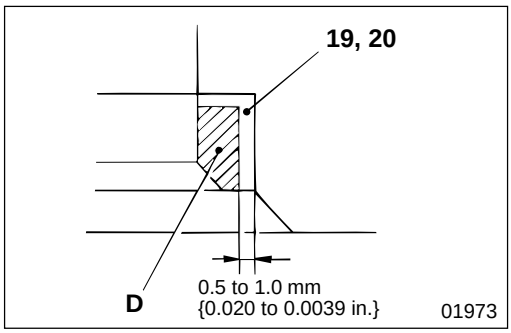

[Removal]

- Valve seats **19**, **20** have been set in by the cooling-off-process, and have to be thinned by grinding off the inner side for removal under normal temperature.

D : Part to be ground

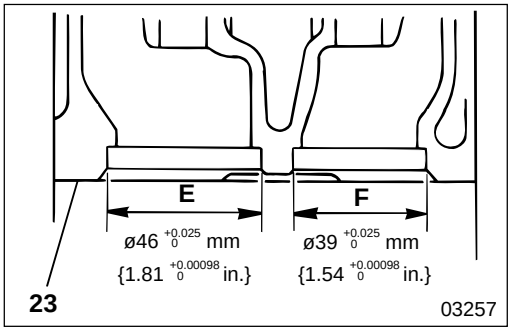

[Installation]

- Make sure that the diameter of valve seat hole of cylinder head **23** conforms to the standard value.
  E : Inlet valve seat hole diameter
  F : Exhaust valve seat hole diameter

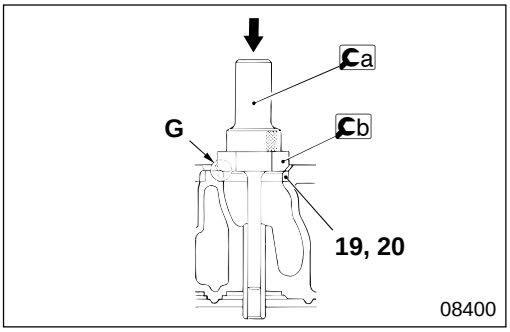

- Immerse valve seats **19**, **20** in liquid nitrogen and cool them substantially. Press-fit into the cylinder head using Ca caulking tool body and Cb caulking rings inlet and exhaust.

CAUTION

Be sure, when press-fitting, to place the chamfered side G of Cb caulking rings inlet and exhaust against valve seats 19, 20.

- After installation of valve seats **19**, **20**, work until they contact valves **7**, **8** smoothly.

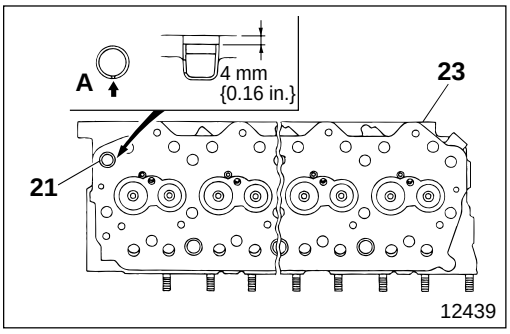

21 Installation of water director

- With indent **A** set in the direction as illustrated, press-fit water director **21** into cylinder head **23** to the specified depth.

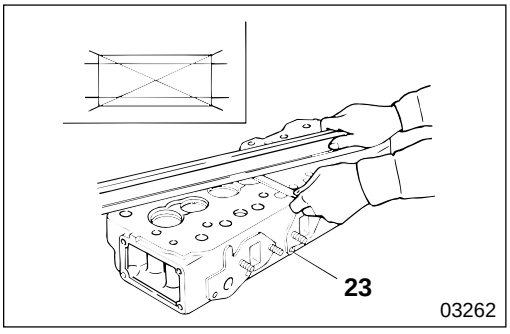

23 Inspection of cylinder head

Measure the extent of distortion of the bottom of cylinder head **23**, and if the measured value is higher than the standard value, grind using a surface grinder.

CAUTION

Be sure to keep the amount of grinding within the limit of the height of cylinder head 23.

TIMING GEAR

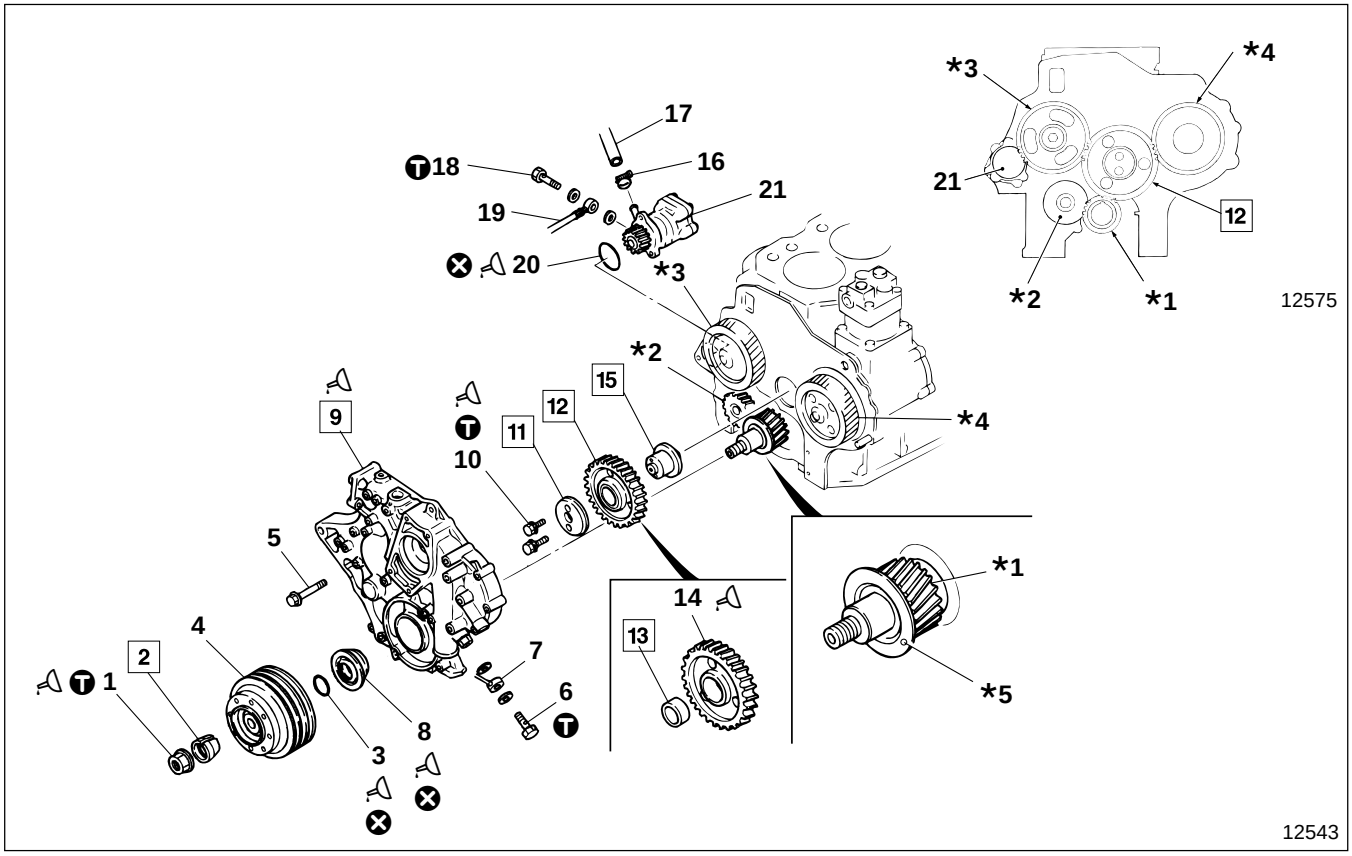

● **Inspection before disassembly**

P11-26

● **Disassembly sequence**

1 Nut
2 Taper cone
3 O-ring
4 Crankshaft pulley
5 Bolt
6 Eye bolt
7 Air and water suction pipe Gr 12
8 Front oil seal
9 Timing gear case
10 Bolt
11 Thrust plate
12 Idler gear assembly
13 Idler gear bushing
14 Idler gear
15 Idler gear shaft
16 Clamp
17 Oil hose Gr 37
18 Bolt
19 Oil hose Gr 37
20 O-ring
21 Power steering oil pump Gr 37

***1** : Crankshaft gear P11-52
***2** : Oil pump gear Gr 12
***3** : Camshaft gear P11-28
***4** : Air compressor gear Gr 35
***5** : Front oil seal slinger P11-52

⊗ : Non-reusable parts

NOTE

Do not remove front oil seal 8, unless it is faulty.

● **Assembly sequence**

Follow the disassembly sequence in reverse.

Service standards

Unit : mm {in.}

Location	Maintenance item		Standard value (Basic diameter in [ ])	Limit	Remedy
—	Backlash of gears	Idler gear assembly and crankshaft gear	0.07 to 0.15 {0.0023 to 0.0059}	0.3 {0.012}	Replace
		Idler gear assembly and camshaft gear	0.07 to 0.17 {0.0023 to 0.0067}	0.3 {0.012}	
		Idler gear assembly and injection pump gear	0.07 to 0.17 {0.0023 to 0.0067}	0.3 {0.012}	
		Crankshaft gear and oil pump gear	0.10 to 0.18 {0.0039 to 0.0071}	0.3 {0.012}	
		Camshaft gear and power steering oil pump gear	0.08 to 0.16 {0.0031 to 0.0063}	0.3 {0.012}	
—	End play of idler gear		0.05 to 0.15 {0.0020 to 0.0059}	0.3 {0.012}	Inspect
13, 15	Clearance between idler gear bushing and idler shaft		[45] 0.03 to 0.06 {[1.77] 0.0012 to 0.0024}	0.1 {0.0039}	Replace

Tightening torque

Unit : N·m {lbf.ft, kgf·m}

Location	Parts to be tightened	Tightening torque	Remarks
1	Nut (Taper cone mounting)	490 {360, 50}	Wet
6	Eye bolt (Air and water sunction pipe mounting)	25 {19, 2.6}	—
10	Bolt (Thrust plate mounting)	24 {17, 2.4}	—
18	Bolt (Oil hose mounting)	125 {94, 13}	—

Lubricant and sealant

Location	Points of application	Kinds	Quantity
1	Thread area of nut	Engine oil	As required
3, 20	Entire body of O-ring	Engine oil	As required
8	Front oil seal lip	Engine oil	As required
9	Mounting surface of timing gear case	THREEBOND 1207C	As required
10	Thread area of bolt	Engine oil	As required

Special tools

Unit : mm {in.}

Location	Tool name and shape	Part No.	Application
2	Cone puller 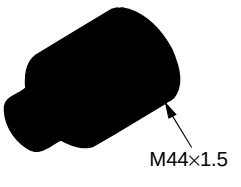 12708	MH062496	Removal of taper cone
13	Idler gear bushing puller 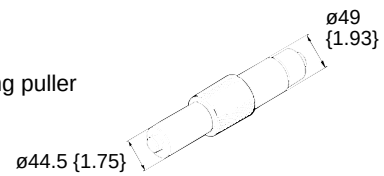 03532	MH062224	Removal and installation of idler gear bushing

◆ Service procedure

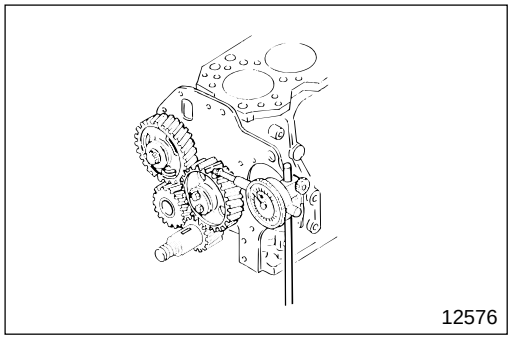

● **Inspection before disassembly**

(1) Backlash of each gear

Measure three or more locations on the pairing gears and if the measurements are higher than the limit, replace the faulty parts.

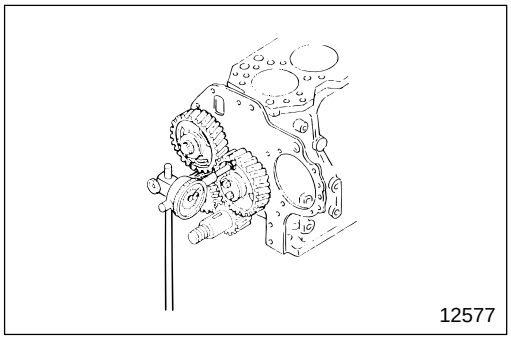

(2) End play of idler gear

If the measured value is higher than the limit, replace the faulty parts.

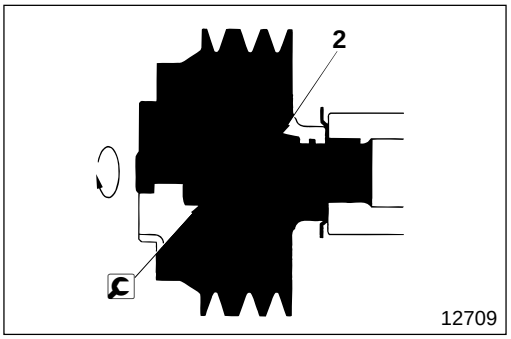

2 **Removal of taper cone**

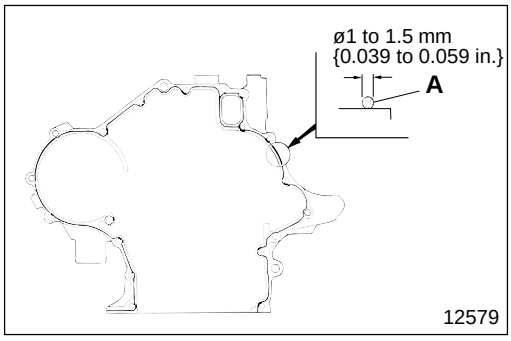

9 **Installation of timing gear case**

Apply sealant **A** to the mounting surface of timing gear case **9** evenly without break. After applying sealant, within three minutes, mount to the front plate.

CAUTION⚠

- **Be sure to clean and wipe off oily substances from the surface where sealant A is to be applied.**
- **Make sure that sealant A is not transferred to other areas while the mounting work is being done.**
- **Be sure to reapply sealant A if the bolts are loosened or removed by any cause whatsoever after mounting.**
- **Do not start the engine within an hour of mounting.**

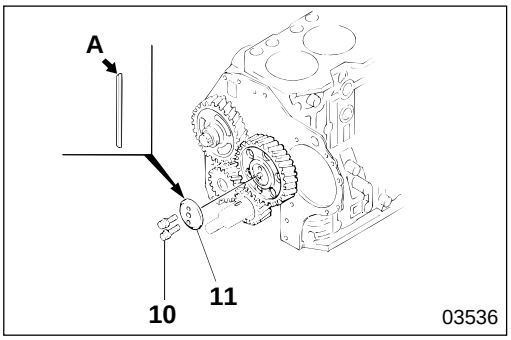

11 **Installation of thrust plate**

A : Chamfered side

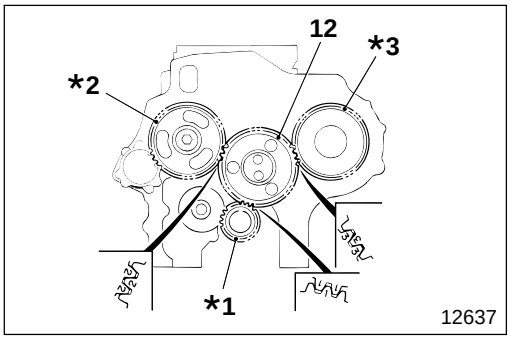

12 **Installation of idler gear assembly**

Install idler gear assembly **12** by matching alignment marks **"1"**, **"2"**, **"3"** on the gears that engage with those on the assembly.

***1** : Crankshaft gear
***2** : Camshaft gear
***3** : Air compressor gear

NOTE

When aligning each gear with its alignment mark, make sure that pistons No.1, 6 are higher than top dead center.

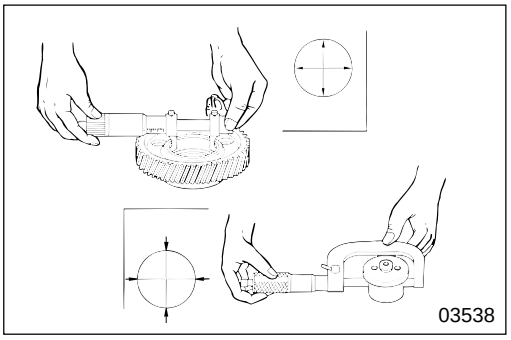

13 **15** **Idler gear bushing and idler shaft**

[Inspection]
If the clearance is higher than the limit, replace the faulty parts.

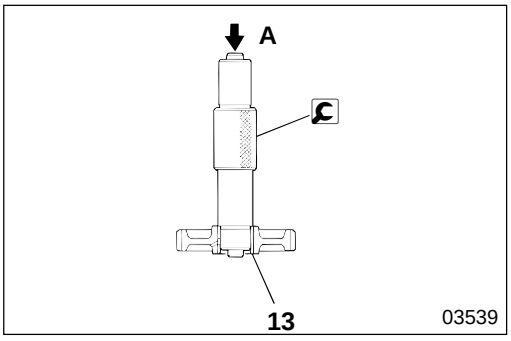

Idler gear bushing

[Removal]
A : Press

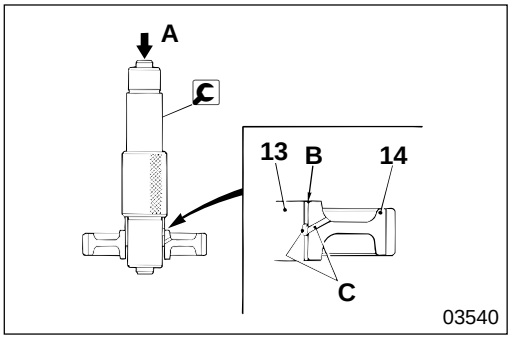

[Press-fitting]

- Press-fit idler gear bushing **13** from chamfered side **B** of idler gear **14** and align oil holes **C** of the idler gear and the bushing.
- After press-fitting, finish the fitting by bringing the clearance between idler gear bushing **13** and the idler shaft to the standard value.

CAMSHAFT

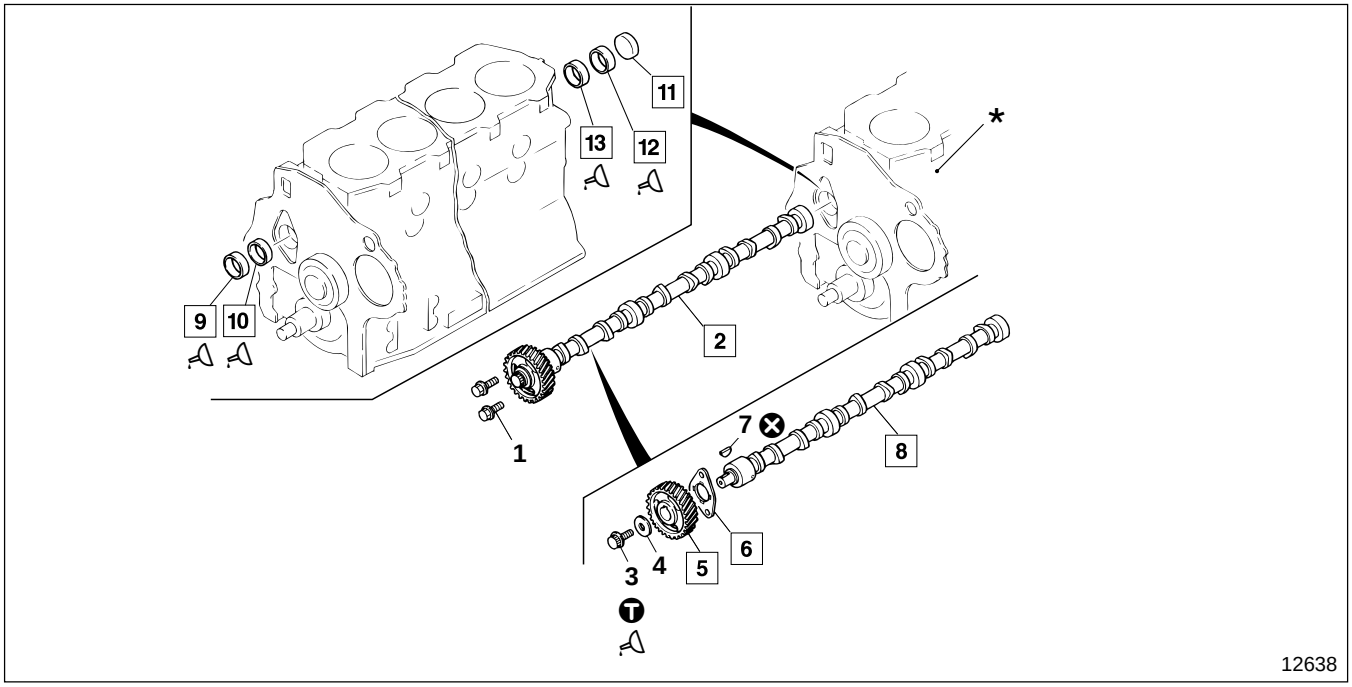

● **Disassembly sequence**

1 Bolt
2 Camshaft assembly
3 Bolt
4 Washer
5 Camshaft gear
6 Thrust plate
7 Key
8 Camshaft
9 No.1 camshaft bushing
10 No.2 camshaft bushing
11 Sealing cap
12 No.4 camshaft bushing
13 No.3 camshaft bushing

* : Crankcase 📖 P11-52
⊗ : Non-reusable parts

NOTE

Do not remove camshaft gear 5 unless it is faulty.

● **Assembly sequence**

Follow the disassembly sequence in reverse.

Service standards

Unit : mm {in.}

Location	Maintenance item			Standard value (Basic diameter in [ ])	Limit	Remedy
—	End play of camshaft			0.05 to 0.22 {0.0020 to 0.0087}	0.3 {0.012}	Inspect
8	Camshaft	Difference between long and short diameters	Inlet	7.195±0.05 {0.28±0.0020}	6.70 {0.26}	Replace (Long diameter 47.105 {1.85} Short diameter 39.910 {1.57})
			Exhaust	7.321±0.05 {0.29±0.0020}	6.82 {0.27}	Replace (Long diameter 46.979 {1.84} Short diameter 39.658 {1.56})
		Bend		0.02 {0.00079} or less	0.05 {0.0020}	Replace
9, 10, 12, 13	Clearance between camshaft and camshaft bushing		No.1 to No.3	[54.5] 0.03 to 0.08 {[2.15] 0.0012 to 0.0031}	0.15 {0.0059}	Repair or replace
			No.4	[53] 0.03 to 0.08 {[2.09] 0.0012 to 0.0031}	0.15 {0.0059}	

T Tightening torque

Unit : N·m {lbf.ft, kgf·m}

Location	Parts to be tightened	Tightening torque	Remarks
3	Bolt (Camshaft gear mounting)	175 {130, 18}	Wet

Lubricant

Location	Points of application	Kinds	Quantity
3	Thread area of bolt	Engine oil	As required
9, 10 12, 13	Inner surface of camshaft bushing	Engine oil	As required

Special tools

Unit : mm {in.}

Location	Tool name and shape	Part No.	Application
5	Gear puller 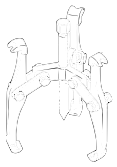 02065	MH061326	Removal of camshaft gear
	Plug 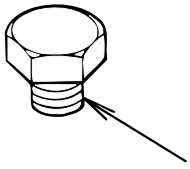 M14×1.5 03543	MF665004	Blind plug for removal of camshaft gear
9, 10, 12, 13	Camshaft bushing installer and extractor 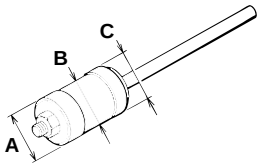 02083	MH061276	Removal and press-fitting of camshaft bushing

	A, C Dimension	B Dimension
No. 1	ø58.5 {2.30}	ø54.5 {2.15}
No. 2	ø58 {2.28}	ø54.5 {2.15}
No. 3		
No. 4	ø57 {2.24}	ø53 {2.09}

◆ Service procedure

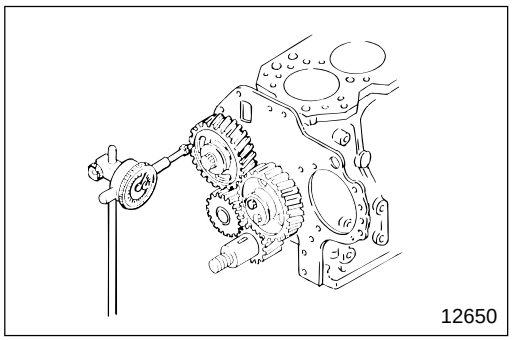
12650

● Inspection before disassembly

Camshaft end play

If the measured value is higher than the limit, replace the faulty parts.

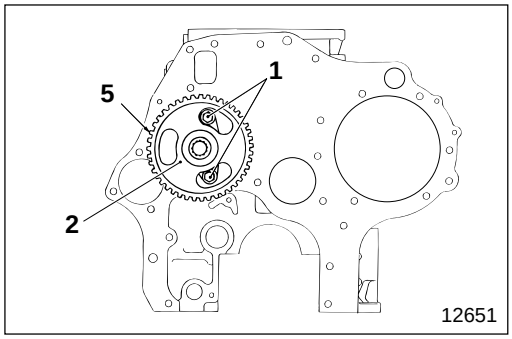

12651

2 Camshaft assembly

[Removal]

Remove camshaft assembly **2** by undoing bolts **1** through the holes in camshaft gear **5**.

CAUTION

Be careful not to damage the camshaft bushings when you remove camshaft assembly 2.

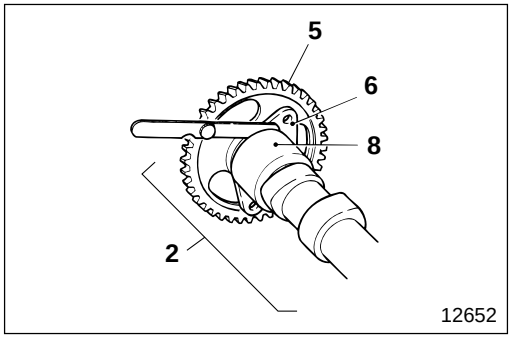

[Installation]
- Before installing camshaft assembly **2**, measure the end play between thrust plate **6** and camshaft **8**.
- If the measured value is higher than the limit, replace the faulty parts.
- Install the camshaft assembly by matching the alignment mark on camshaft gear **5** with the alignment mark on the idler gear. 🕮 P11-

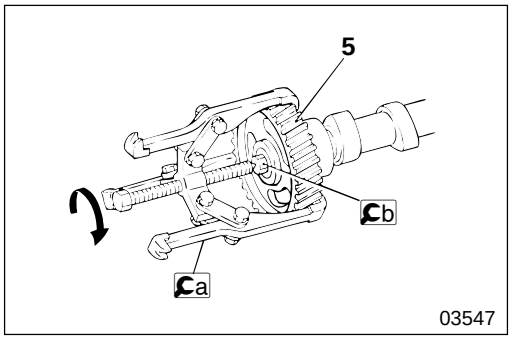

5 **Camshaft gear**

[Removal]
- Never remove camshaft gear **5** by striking, hitting, or hammering it.

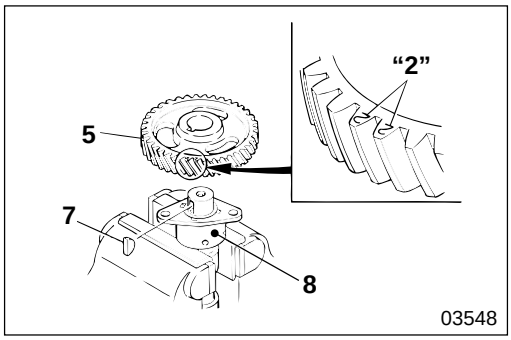

[Installation]
- Install camshaft gear **5** onto camshaft **8** in the direction as illustrated.
- Be sure when finishing the installation to install key **7**.

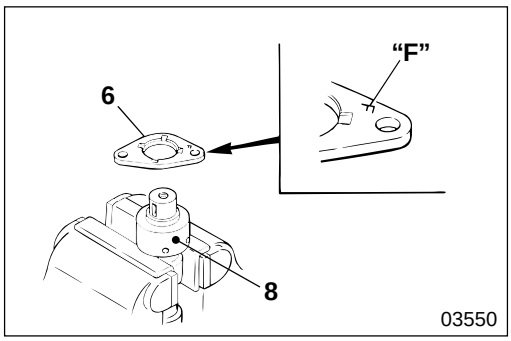

6 **Installation of thrust plate**

Install thrust plate **6** onto camshaft **8** in the direction as illustrated.

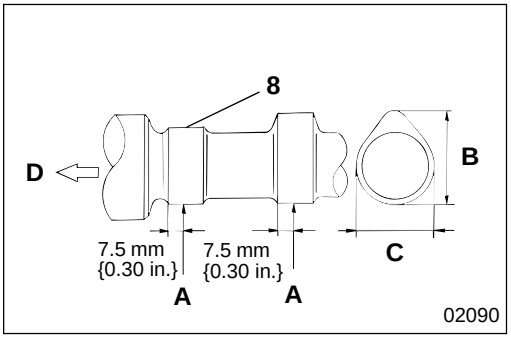

8 Inspection of camshaft

(1) Difference between long diameter and short diameter

If the measured value is lower than the limit, replace camshaft **8**.

NOTE

Measure at point A, as illustrated, because the cam is tapered.

B : Long diameter
C : Short diameter
D : Front of the engine

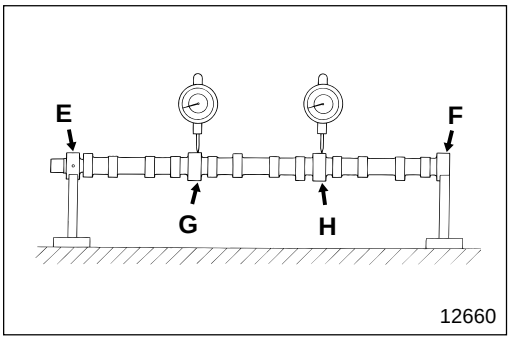

(2) Degree of bend

To measure deflection, support camshaft **8** at area **E** of No.1 journal, and area **F** of No.4 journal . Then, measure the amount of deflection at area **G** of No.2 journal, and area **H** of No.3 journal. If any of the measured values is higher than the limit, replace the camshaft.

NOTE

Degree of bend of camshaft 8 is a half of the indicated value of the gauge after rotating the shaft 360°.

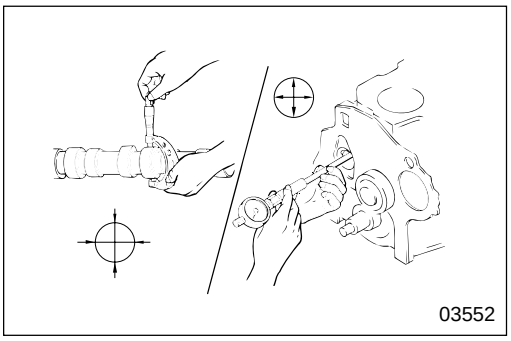

8 to 10 12 13 Camshaft and camshaft bushing

[Inspection]
If the clearance is greater than the limit, replace the faulty parts.

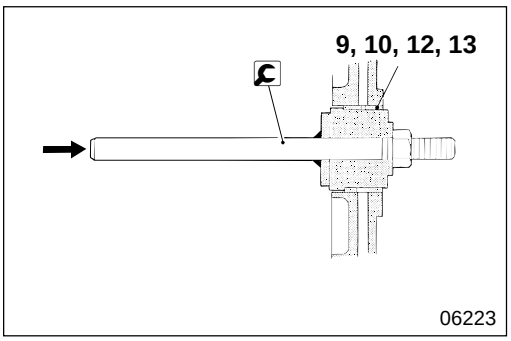

Camshaft bushing

[Removal]
Remove No.3 camshaft bushing **13**, and No.4 camshaft bushing **12** from the rear end of the crankcase.

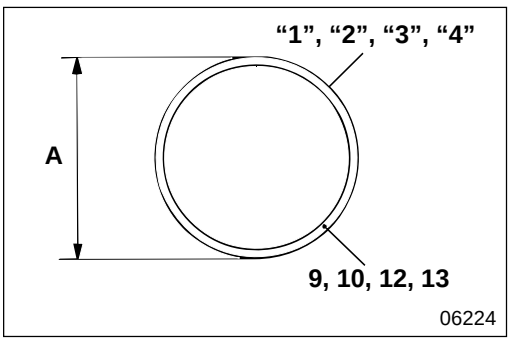

[Press-fitting]

- Identify, by referring to the table below, No.1 to No.4 camshaft bushings by noting marks **"1"**, **"2"**, **"3"**, **"4"** on camshaft bushings **9**, **10**, **12**, **13**. If you cannot identify the mark, measure outer diameter **A** of the bushing and refer to the table below.

Bushing No. (from the front of the engine)	Mark	Outer diameter A (mm {in.})
No.1	1	ø58.50 {2.30}
No.2	2	ø58.06 {2.28}
No.3	3	ø57.5 {2.26}
No.4	4	ø57.06 {2.25}

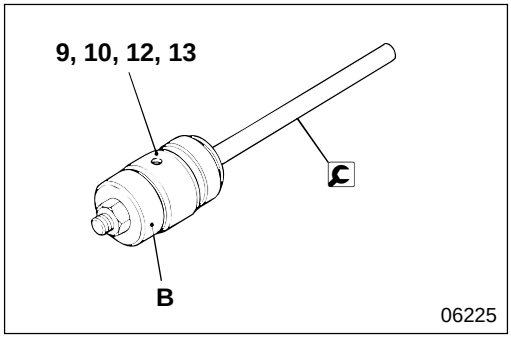

- For press-fitting, mount guide **B** to camshaft bushing installer and extractor.
- Install camshaft bushings **9**, **10**, **12**, **13** in descending order, from No.4 to No.1.
- Install No.4 camshaft bushing **12** from the rear end of the engine, and No.3 to No.1 camshaft bushings **9**, **10**, **13** from the front end of the engine.

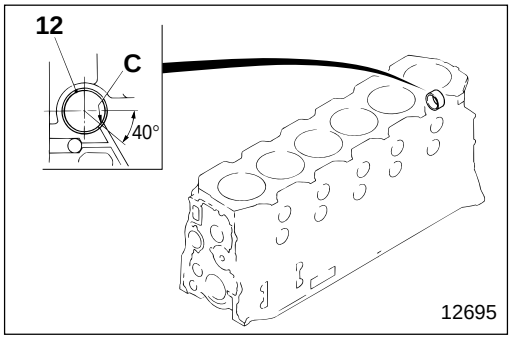

- Align oil hole **C** of No.4 camshaft bushing **12** in the direction as illustrated.

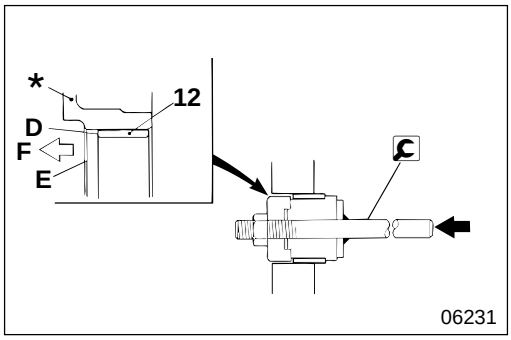

- Press in until surface **D** of No.4 camshaft bushing **12** is flush with chamfered part **E** of crankcase *.
  F : Front of the engine

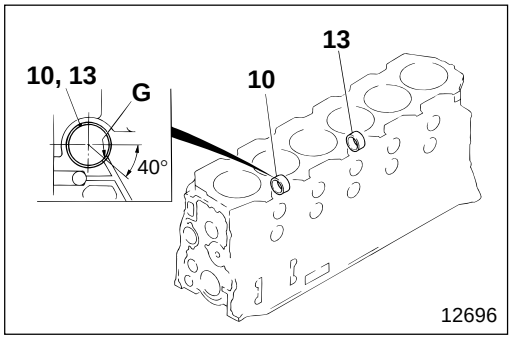

- Align oil hole **G**, of No.2 to No.3 camshaft bushings **10**, **13**, in the direction as illustrated, and press-fit in the order of No.3, 2.

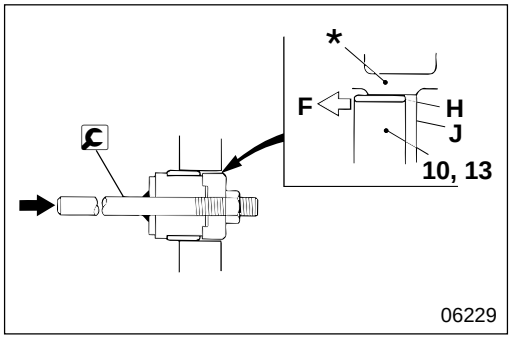

- Press in until surface **H** of No.2 to No.3 camshaft bushings **10**, **13** is flush with surface **J** of crankcase *.
  F : Front of the engine

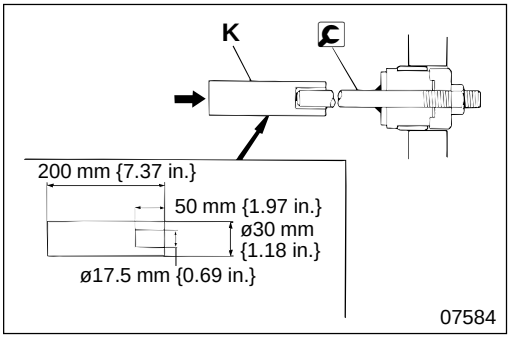

- For press-fitting of No.3 camshaft bushing **13**, use tool **K** as illustrated.

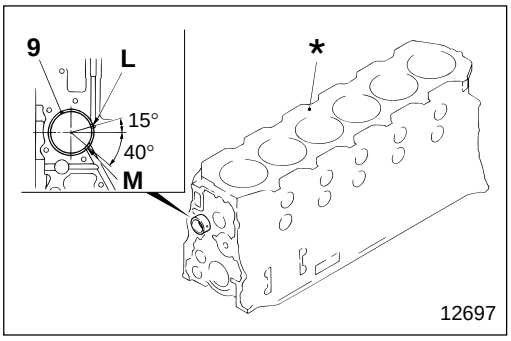

- Align oil holes **L**, **M** of No.1 camshaft bushing **9** in the direction as illustrated.
  L : ø3 mm {0.11 in.}
  M : ø8 mm {0.31 in.}
  ***** : Crankcase

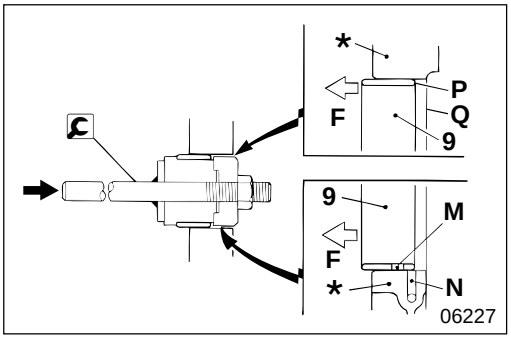

- Align oil hole **M** of No.1 camshaft bushing **9** with oil hole **N** of crankcase ***** and press in until camshaft bushing surface **P** is flush with crankcase surface **Q**.
  F : Front of the engine

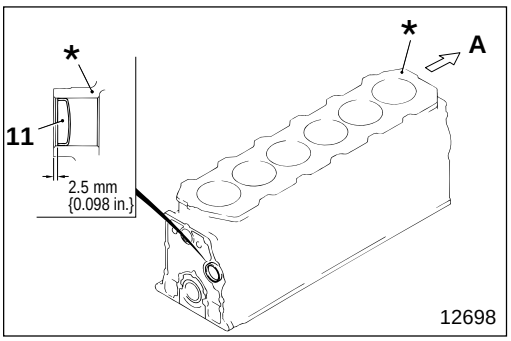

11 **Installation of sealing cap**

Press-fit sealing cap **11** into crankcase ***** to the specified depth.
A : Front of the engine

PISTON, CONNECTING ROD AND CYLINDER SLEEVE

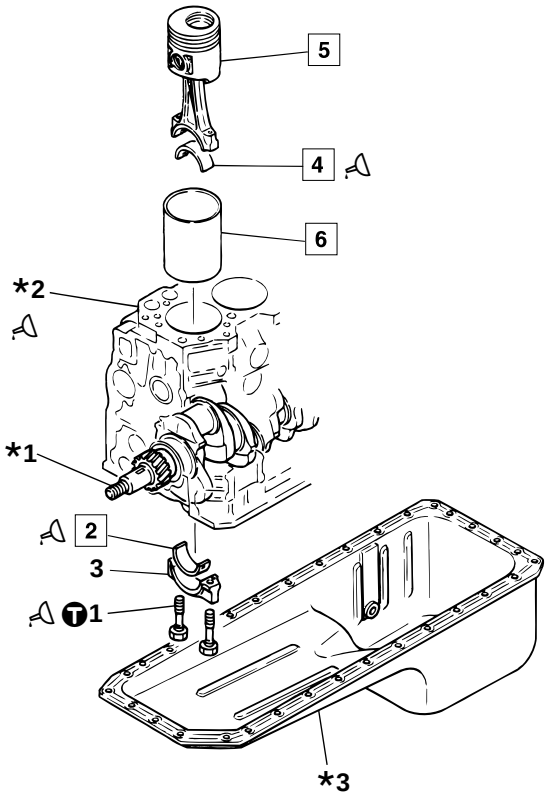

12702

● **Disassembly sequence**

1 Bolt
2 Lower connecting rod bearing
3 Connecting rod cap
4 Upper connecting rod bearing
5 Piston and connecting rod assembly
P11-42
6 Cylinder sleeve

***1** : Crankshaft P11-52
***2** : Crankcase P11-52
***3** : Oil pan Gr 12

● **Assembly sequence**

Follow the disassembly sequence in reverse.

Service standards

Unit : mm {in.}

Location	Maintenance item		Standard value (Basic diameter in [ ])	Limit	Remedy
—	Extent of piston protrusion		0.43 to 0.69 {0.017 to 0.027}	—	Inspect
—	End play of connecting rod		0.15 to 0.45 {0.0059 to 0.018}	0.6 {0.024}	Inspect
2, 4	Connecting rod bearing	Oil clearance	[60] 0.04 to 0.09 {[2.36] 0.0016 to 0.0035}	0.2 {0.0079}	Replace
		Expansion	—	Upper : less than 64.5 {2.54} Lower : less than 64.27 {2.53}	
5, 6	Clearance between piston and connecting rod assembly and cylinder sleeve		[104] 0.07 to 0.11 {[4.094] 0.0028 to 0.0043}	—	Adjust or replace with oversizes
6	Cylinder sleeve	Inner diameter	104 to 104.03 {4.094 to 4.095}	104.25 {4.10}	Adjust or replace with oversizes
		Circular accuracy	0.01 {0.00039} or less	—	
		Cylindrical accuracy	0.03 {0.0012} or less	—	
6, *2	Interference between cylinder sleeve and crankcase	Standard	0.17 to 0.23 {0.0067 to 0.0091}	—	Replace with oversizes
		Oversize	0.19 to 0.21 {0.0075 to 0.0083}	—	Replace

Tightening torque

Unit : N·m {lbf.ft, kgf·m}

Location	Parts to be tightened	Tightening torque	Remarks
1	Bolt	30 {22, 3}+90°±5°	Wet

Lubricant

Location	Points of application	Kinds	Quantity
1	Thread area of bolt	Engine oil	As required
2, 4	Inner surface of bearing	Engine oil	As required
***2**	Sleeve hole of crankcase	Spindle oil (ISO VG 32)	As required

PISTON, CONNECTING ROD AND CYLINDER SLEEVE

Special tools

Unit : mm {in.}

Location	Tool name and shape	Part No.	Application
5	Socket wrench 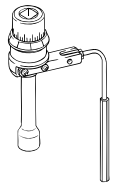 01984	MH061560	Installation of piston and connecting rod assembly
	A : Piston guide clamp **B** : Piston guide lever 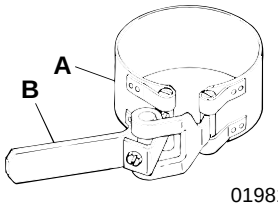 01981	**A** : MH061890 **B** : MF061658	
6	Cylinder sleeve installer 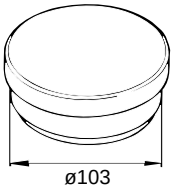 03377	MH062228	Installation of cylinder sleeve

◆ Service procedure

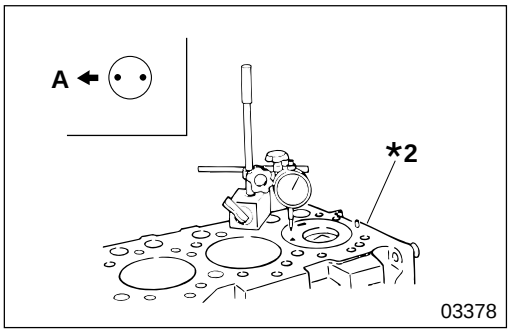

03378

● **Inspection before disassembly**

(1) Extent of piston protrusion from the upper surface of crankcase *2

NOTE

Always inspect the extent of piston protrusion because it affects the engine performance greatly.

- Measure piston protrusion at two points on the top of the piston, and produce the average value.
  A : Front of the engine
- If the average valve deviates from the limit, inspect clearance of the related parts.

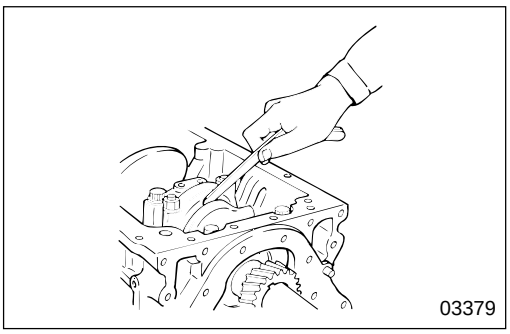
03379

(2) End play of connecting rod

- Measure the end play of each connecting rod.
- If the measured value is higher than the limit, replace the faulty parts.

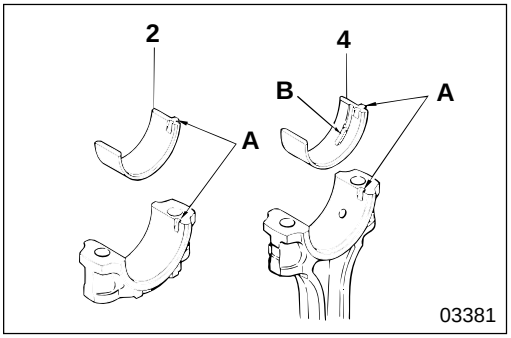

2 **4** **Connecting rod bearing**

[Installation]
Install connecting rod bearings **2**, **4** by matching lugs **A** to the connecting rods.

CAUTION

Be sure to distinguish between upper and lower connecting rod bearings 2, 4. The upper bearing has oil opening B while the lower bearing has no oil opening.

[Inspection]

CAUTION

- **Do not forcibly open or expand connecting rod bearings 2, 4.**
- **When either upper or lower connecting rod bearings 2, 4 needs replacing, replace as a set.**

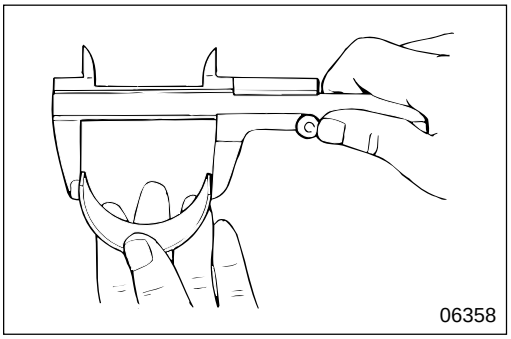

(1) Expansion at free state

If the measured value is lower than the limit, replace connecting rod bearings **2**, **4**.

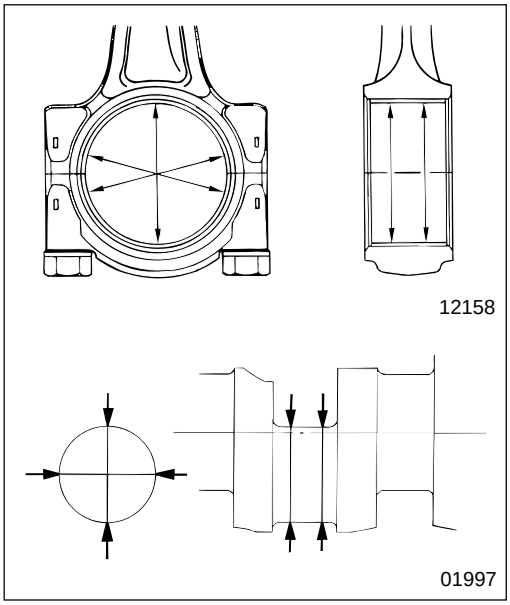

(2) Clearance between connecting rod bearing and crankshaft

If the clearance between connecting rod bearing **2**, **4** and crankshaft ***1** is lower than the limit, replace the faulty parts.

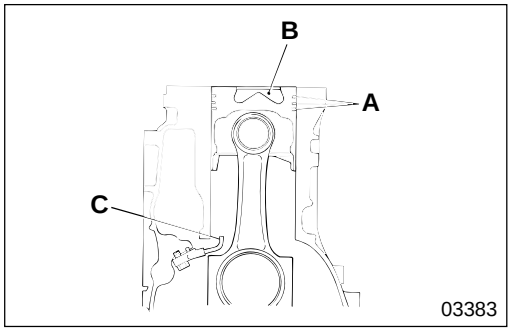

5 **Installation of piston and connecting rod assembly**

CAUTION

- **Be sure to fit piston ring A in the correct position.**
  P11-46
- **Be careful not to scratch or damage head B of the piston (a part of the combustion chamber).**
- **Make sure that the connecting rod does not hit oil jet C.**

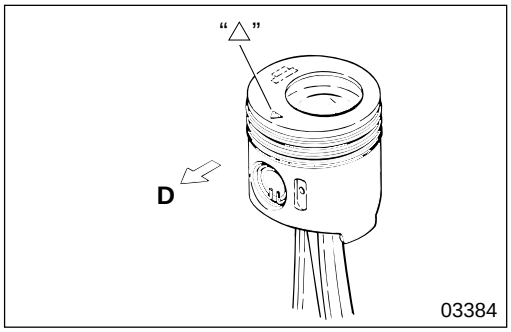

- Install piston front mark "△" directed towards the front of the engine using the following procedure.
  D : Front of the engine

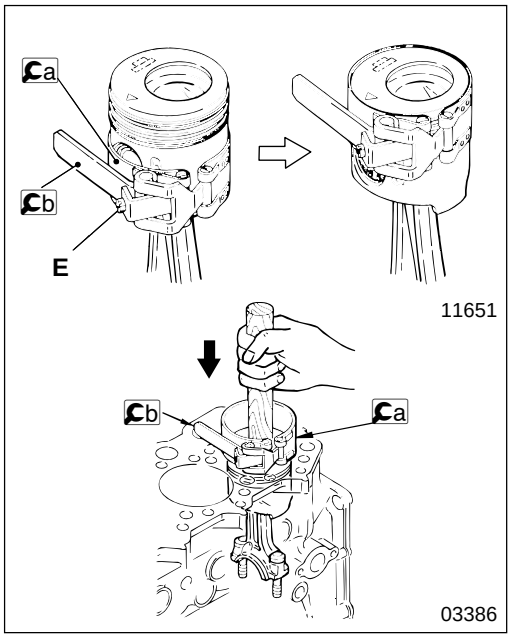

- Match the inner diameter of a piston guide clamp to the outer diameter of the piston skirt by turning adjusting bolt **E** of b piston guide lever.
- After adjusting, set a piston guide clamp and b piston guide lever at the top of the piston so that the clamp is flush with the top of the piston.

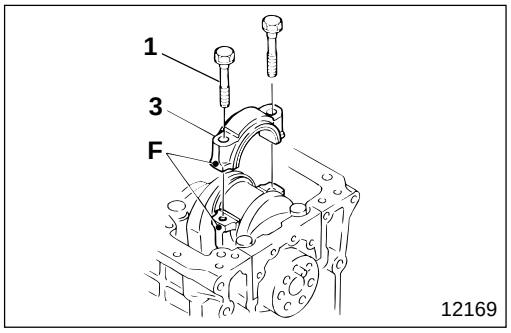

- After the piston is inserted, align alignment marks **F** on the connecting rod with the alignment marks on connecting rod cap **3** and tighten bolt **1** at specified torque. Then tighten the bolt further as follows:

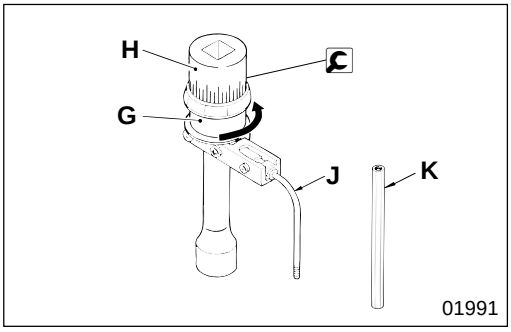

- Turn socket wrench holder **G** counterclockwise and keep the spring in the wrench compressed.
  H : Socket
  J : Rod
  K : Rod (for connection)

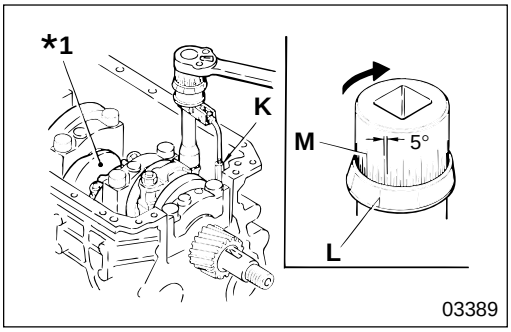

- Set socket wrench holder **G** so that the repercussive force of the spring presses rod **K** (for connection) against crankshaft ***1**.
- Select a scale that is convenient for reading graduation **L** on holder **G**.
- Tighten further by turning socket **H** clockwise by 90°±5° (setting is in 5° increments), referring to graduation **M** on the selected scale.

NOTE

After installation of connecting rod cap 3, inspect the following points :

- **End play of the connecting rod : 🕮 P11-36**
- **Piston protrusion : 🕮 P11-36**

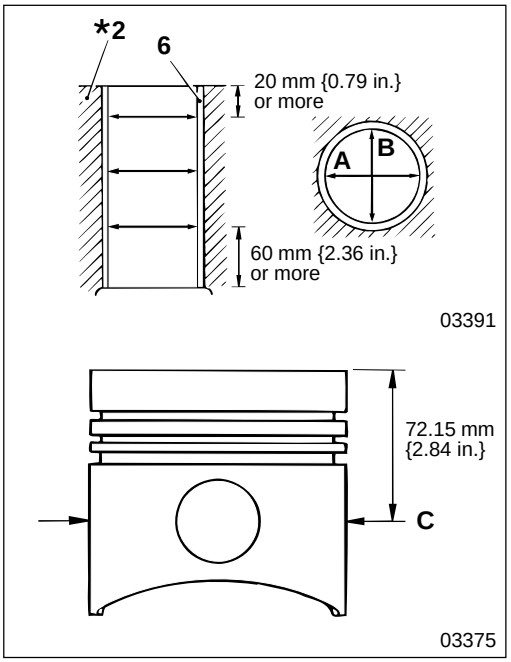

5 **6** **Piston and connecting rod assembly, and cylinder sleeve**

[Inspection]

- If the inner diameter of cylinder sleeve **6** is higher than the limit, bore the cylinder sleeve oversize and use an oversized piston.
  A : In the direction of the crankshaft axis
  B : At right angles to the crankshaft axis

- If the clearance between piston **5** and cylinder sleeve **6** deviates from the standard value, even when the inner diameter of the cylinder sleeve is within the limit, replace the piston.

[Selection of oversized piston]

Extent of oversize : 0.50, 1.00 mm {0.020, 0.039 in.}

- Determine the extent of oversize by measuring the inner diameters of all the cylinders and calculating the maximum wear amount of all the cylinders.
- Measure the outer diameter of the oversized piston to be used.
  C : Position to measure the outer diameter of the piston

- Bore cylinder sleeve **6** and hone it to make the clearance between piston **5** and the cylinder sleeve conform to the standard value.

NOTE

- **Even if only one cylinder sleeve 6 requires boring, all the other cylinder sleeves must be bored to the identical oversize.**
- **Piston rings must be replaced with the corresponding oversized ones.**

PISTON, CONNECTING ROD AND CYLINDER SLEEVE

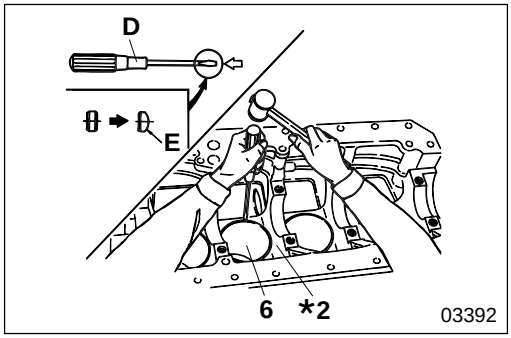

Cylinder sleeve

[Removal]

- Mount a boring machine on crankcase ***2** and center. Centering must be done at the lower part of cylinder sleeve **6** which is less unevenly worn.
- Bore until the thickness of cylinder sleeve **6** is approximately 0.5 mm {0.020 in.}.
- Insert tool **D** (a modified screwdriver) between crankcase ***2** and cylinder sleeve **6**, break the sleeve by tapping it gently, then remove.

CAUTION

Make sure when inserting tool D that round part E is facing crankcase *2.

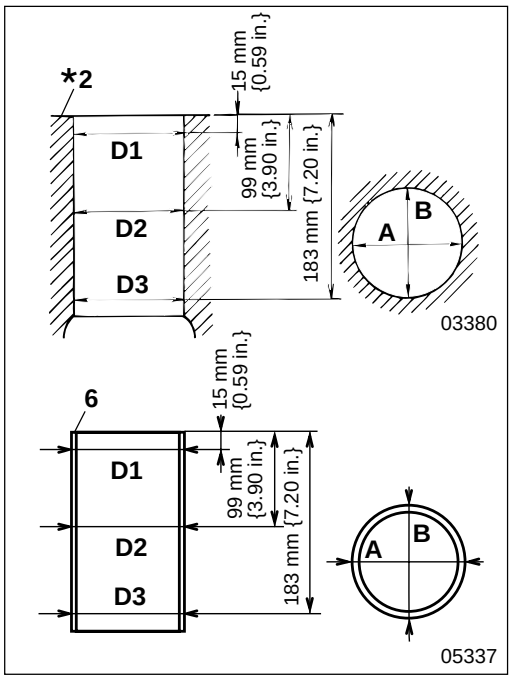

[Installation]

- Inspect sleeve hole of crankcase ***2** before installing cylinder sleeve **6**. If there are irregularities, such as defects or insufficient interference, correct them by boring.

NOTE

- **Pull out cylinder sleeve 6 of all cylinders and bore the sleeve holes perfectly round when you bore the sleeve holes of crankcase *2.**
- **Apply spindle oil (ISO VG 32) when you push cylinder sleeve 6 into the sleeve hole of crankcase *2.**

Inspection of interference must be carried out as follows.

- Measure the inner diameter of the sleeve hole of crankcase ***2** and the outer diameter of cylinder sleeve **6** at the specified positions illustrated.
- Take the average value at the top, middle and bottom (**D1**, **D2**, **D3**) and across the diameter (**A**, **B**). If the interference is lower than the limit, bore the sleeve hole of crankcase ***2** oversize.

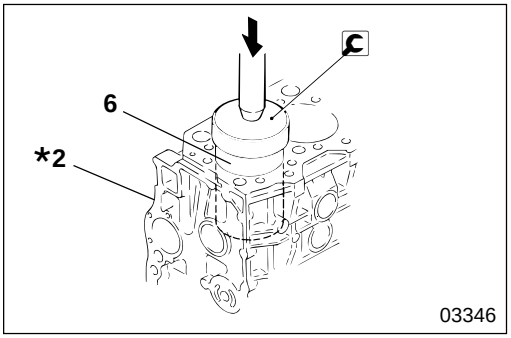

< If interference is sufficient >

- Press-fit cylinder sleeve **6** into crankcase ***2** from the chamfered end using cylinder sleeve installer.

NOTE

Align the top of cylinder sleeve 6 with the top of crankcase *2 when press-fitting.

- After press-fitting, make the inner diameter of cylinder sleeve **6** conform to the standard value by honing the surface.

< If interference is insufficient >

- Prepare cylinder sleeve **6** which is 0.5 mm {0.020 in.} oversize in diameter.
- Hone crankcase ***2**, making the clearance between the outer diameter of cylinder sleeve **6** and the sleeve hole of crankcase ***2** conform to the standard value.
- Press-fit cylinder sleeve **6** into crankcase ***2** from the chamfered end using cylinder sleeve installer.

NOTE

Align the upper face of cylinder sleeve 6 with the upper face of crankcase *2 when press-fitting.

- After press-fitting, make the inner diameter of cylinder sleeve **6** conform to the standard value by honing the surface.

PISTON, CONNECTING ROD AND CYLINDER SLEEVE

Piston and Connecting Rod Assembly

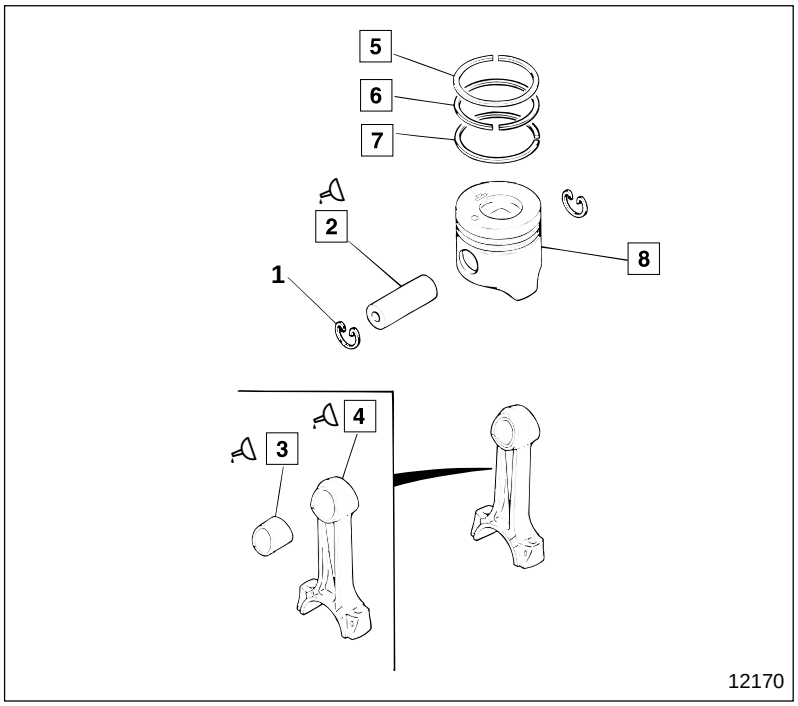

● **Disassembly sequence**

1 Snap ring
2 Piston pin
3 Connecting rod bushing
4 Connecting rod
5 1st compression ring
6 2nd compression ring
7 Oil ring
8 Piston

● **Assembly sequence**

Follow the disassembly sequence in reverse.

Service standards

Unit : mm {in.}

Location	Maintenance item		Standard value (Basic diameter in [ ])	Limit	Remedy
2, 3	Clearance between piston pin and connecting rod bushing		[36] 0.03 to 0.04 {[1.42] 0.0012 to 0.0016}	0.1 {0.0039}	Replace
2, 8	Clearance between piston and piston pin		[36] 0.007 to 0.021 {[1.42] 0.00028 to 0.00083}	0.05 {0.0020}	Replace
4	Degree of bend and distortion of connecting rod		—	0.05 {0.0020}	Repair or replace
5 to 7	Deviation of piston ring fitted position	1st compression ring	0.3 to 0.45 {0.012 to 0.018}	1.5 {0.059}	Replace
		2nd compression ring	0.4 to 0.55 {0.016 to 0.022}		
		Oil ring	0.25 to 0.45 {0.0098 to 0.018}		
5 to 8	Clearance between piston ring and piston ring groove	1st compression ring	0.02 to 0.10 {0.00079 to 0.0039}	0.2 {0.0079}	Replace
		2nd compression ring	0.05 to 0.08 {0.0020 to 0.0031}	0.15 {0.0059}	
		Oil ring	0.03 to 0.06 {0.0012 to 0.0024}		

Lubricant

Location	Points of application	Kinds	Quantity
2	Exterior of piston pin	Engine oil	As required
3	Exterior of connecting rod bushing	Engine oil	As required
4	Bushing attachment area of connecting rod	Engine oil	As required

Special tools

Unit : mm {in.}

Location	Tool name and shape	Part No.	Application
3	Connecting rod bushing puller kit 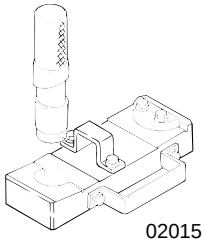 02015	MH062225	Removal and installation of connecting rod bushing
5 to 7	Piston ring tool 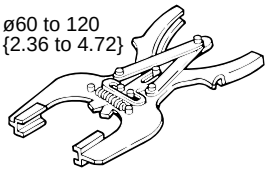 02013	MH060014	Removal and installation of piston ring

◆ Service procedure

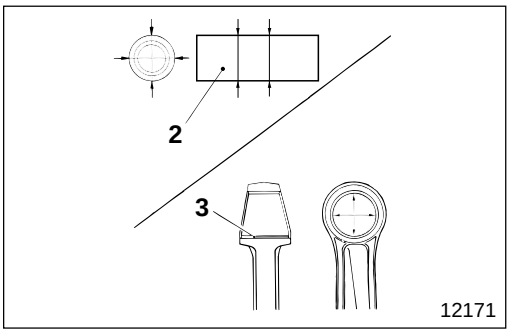

12171

2 **3** **Piston pin and connecting rod bushing**

[Inspection]
If the clearances are higher than the limit, replace the faulty parts.

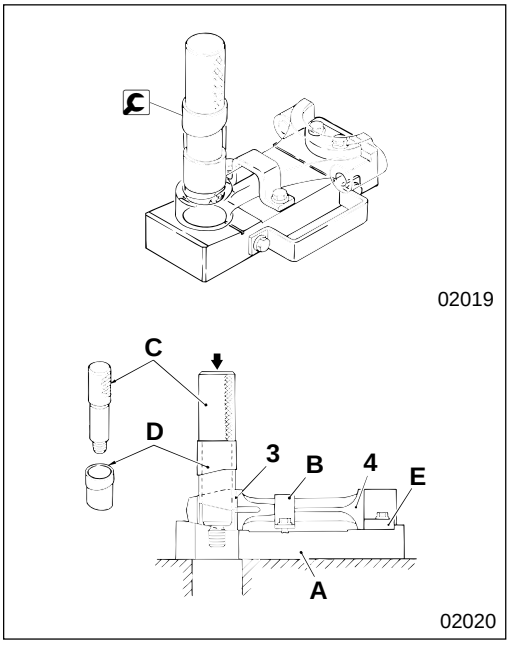

02019
02020

Connecting rod bushing

Use 🔧 connecting rod bushing puller kit to replace connecting rod bushing **3**.
(Components of 🔧 connecting rod bushing puller kit)
A : Base **B** : Bracket **C** : Puller **D** : Collar **E** : Plate **F** : Collar **G** : Nut

[Pulling-out]

- Remove upper connecting rod bearing from the big end of connecting rod **4**.
- Place connecting rod **4** on base **A** and fix it to the base at two points, bracket **B** and plate **E**.
- Fit collar **D** in puller **C** in the direction as illustrated, and pull out connecting rod bushing **3** with a gradual load of approximately 49 kN {11020 lbf, 5000 kgf}.

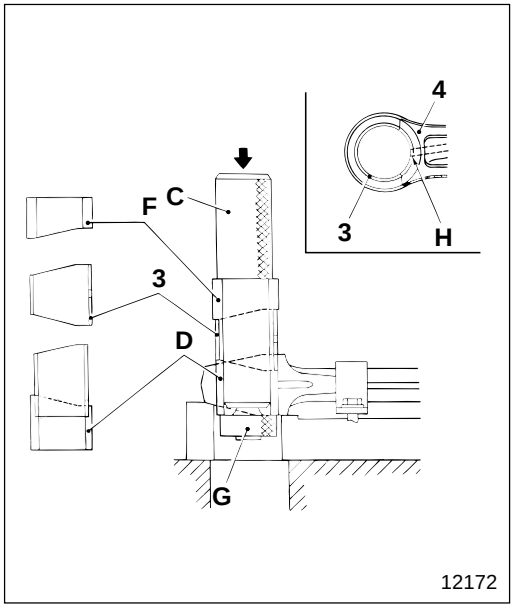

[Press-fitting]
- Apply engine oil to the exterior peripheral area of connecting rod bushing **3** and the inner area of the bushing fitting ring of connecting rod **4**.
- Fit collar **F**, connecting rod bushing **3** and collar **D** in puller **C** in the arrangement and direction as illustrated and mount them with nut **G**.
- Align oiling holes **H** of connecting rod bushing **3** and connecting rod **4**, and gradually press in the bushing with approximately 49 kN {11023 lbf, 5000 kgf} load.
- After press-fitting, ream connecting rod bushing **3** to make its clearance with piston pin **2** conform to the standard value.

NOTE

After press-fitting bushing 3, insert piston pin 2 and make sure that the rod moves smoothly without any excessive play.

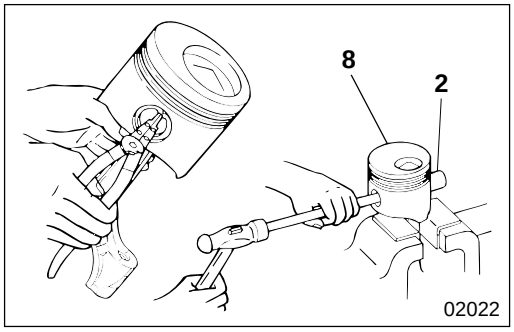

2 **4** **8** **Piston pin and connecting rod and piston**

[Disassembly]
- Drift out piston pin **2** using a rod.
- When removal of piston pin **2** is difficult, warm piston **8** using a piston heater or hot water.

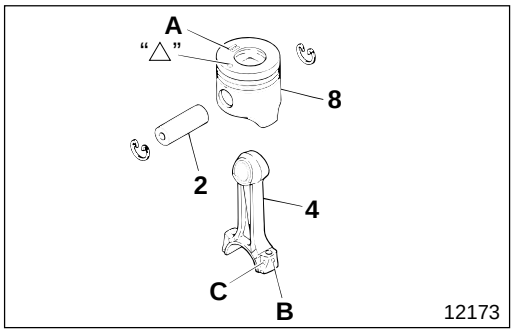

[Installation]
- Apply engine oil to piston pin **2** and assemble connecting rod **4** and piston **8** in the direction as illustrated.
  A : Piston mass (Mass of piston is marked)
  B : Connecting rod mass mark (Alphabetical: A, B, C, D, E, F, G)

  C : Mounting base of connecting rod cap
  △ : Front mark

- When piston pin **2** insertion is difficult, warm piston **8** using a piston heater or hot water.

CAUTION⚠
- **Make sure that the total mass error of all pistons 8 in one engine is 10 g {0.35oz} or less.**
- **Be sure to install connecting rods 4, to be used in one engine, that have identical mass mark B.**
- **Be sure that after inserting piston pin 2 the connecting rod operates smoothly without excessive play.**

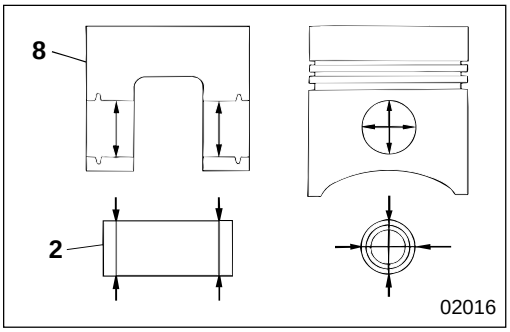

2 **8** **Clearance between piston pin and piston**

If the clearance is higher than the limit, replace the faulty parts.

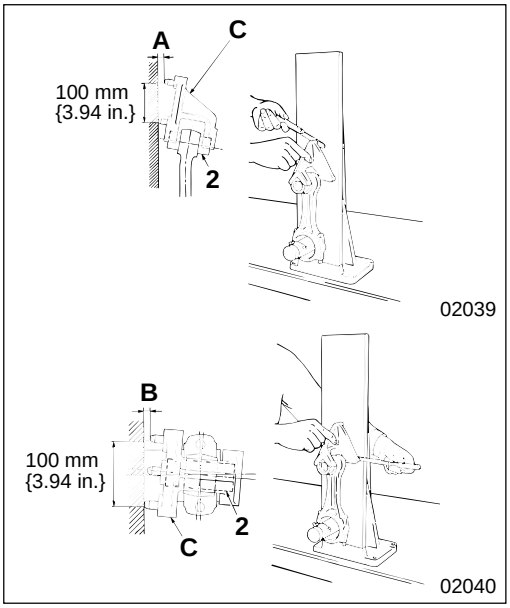

4 **Degree of bend or distortion of connecting rod**

- Mount connecting rod bushing **3** and piston pin **2** to connecting rod **4**.
- Measure degree of bend **A** and distortion **B** of connecting rod **4**. If the measured value is higher than the limit, repair or replace the connecting rod.
  C : Connecting rod aligner (Measuring instrument)

NOTE

- **When making measurements by mounting connecting rod 5 to connecting rod aligner C, make sure that the upper connecting rod bearing and the lower connecting rod bearing are mounted on the rod.**
- **Mount the connecting rod cap by tightening the bolt at specified torque.** 🕮 **P11-34**

PISTON, CONNECTING ROD AND CYLINDER SLEEVE

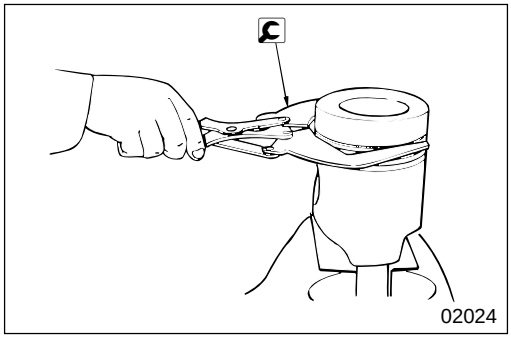

5 to **8** **Piston ring and piston**

Piston ring

[Removal]

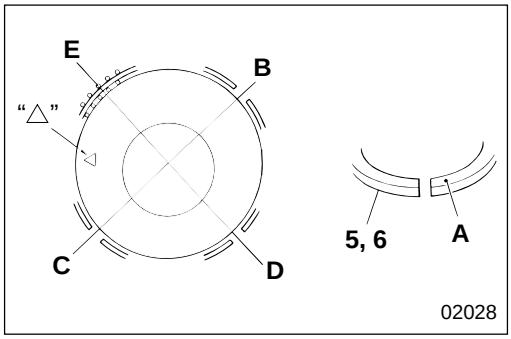

[Installation]

- Install oil ring **8** so that split **D** and the butting joint of expander spring **E** come to the points as illustrated.
- Compression rings **5** and **6** have a manufacturer's mark **A** at the split, and installation should be made with the mark outward.
  B : The split of the 1st compression ring
  C : The split of the 2nd compression ring
  D : Oil ring slit
  E : Oil ring expander spring butt joint
  △ : Front mark of piston

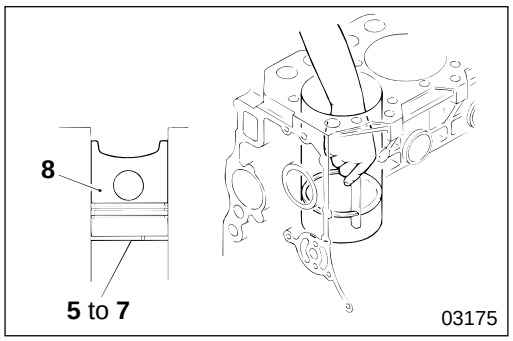

[Inspection]

(1) Clearance of piston ring slit

- Install piston rings **5** to **7** into the crankcase cylinder sleeve using the head of piston **8** to level the piston ring.
- Measure the clearance of the piston ring split while keeping them level and stationary. If the measured value is higher than the limit, replace the piston ring.

NOTE

- **Use piston 8 to ensure that piston rings 5 to 7 are kept level when inserting them into the crankcase cylinder sleeve.**
- **Insert piston rings 5 to 7 into the lower part of the crankcase cylinder sleeve, where the area is less worn, when measuring clearance of piston ring split 5 to 7.**
- **Exchange the whole set of piston rings 5 to 7 as a set if any of the rings is faulty.**

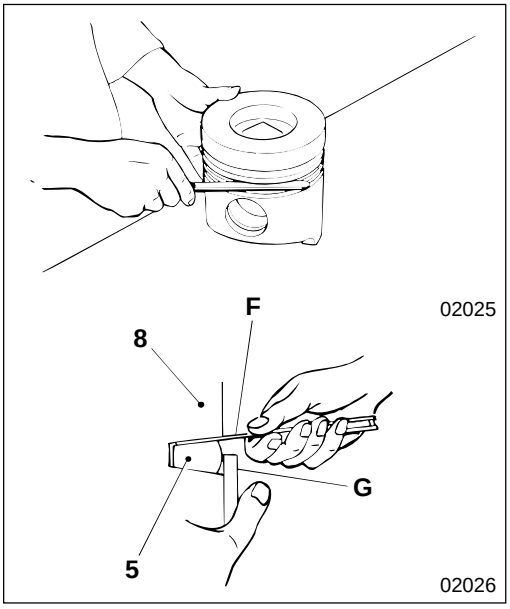

(2) Clearance between piston ring and ring groove

- If the measured value is higher than the limit, replace the faulty parts.
- Measure using feeler gauge **F**, by pressing 1st compression ring **5** against piston **8** with straight edge **G**.

NOTE

- **Measurement has to be conducted around the whole periphery of piston 8 after removing carbon deposits.**
- **Be sure to exchange the whole set of piston rings 5 to 7 as a set if any of the rings is faulty.**

FLYWHEEL

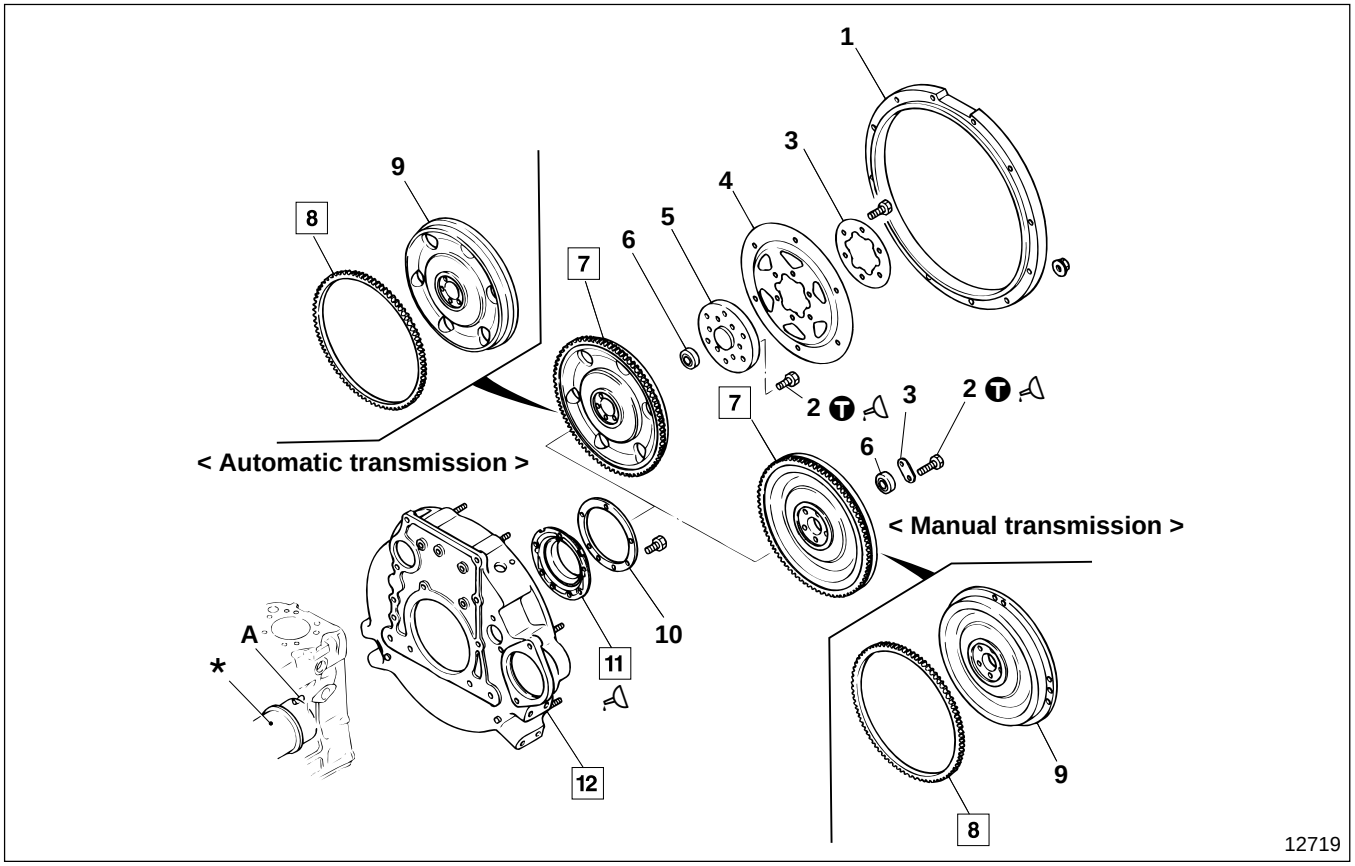

● **Disassembly sequence**

1 Flywheel housing adaptor
< Automatic transmission >
2 Bolt
3 Plate < Manual transmission >
Wear plate
< Automatic transmission >
4 Flex plate
< Automatic transmission >
5 Flywheel adaptor
< Automatic transmission >
6 Bearing
7 Flywheel assembly
8 Ring gear
9 Flywheel
10 Washer plate
11 Rear oil seal
12 Flywheel housing

***** : Crankshaft assembly 🕮 P11-52
A : Positioning pin

● **Assembly sequence**

Follow the disassembly sequence in reverse.

NOTE

Be sure to check wobble of flywheel 9 after installing flywheel assembly 7. 🕮 **P11-49**

Service standards

Unit : mm {in.}

Location	Maintenance item		Standard value	Limit	Remedy
7	Flywheel assembly < Manual transmission >	Height from bolt mounting surface to friction surface	20 {0.787}	19 {0.748}	Correct or replace
		Distortion of friction surface	0.050 {0.002} or less	0.2 {0.008}	Correct or replace
		Wobble of friction surface when installed	—	0.2 {0.008}	Correct or replace
12	Eccentricity of flywheel housing when install		—	0.2 {0.008}	Inspect or replace

Tightening torque

Unit : N·m {lbf.ft, kgf·m}

Location	Parts to be tightened	Tightening torque	Remarks
2	Bolt (Flywheel mounting)	39 {29, 4} +45° ±5°	Wet

Lubricant and sealant

Location	Points of application	Kinds	Quantity
2	Thread area of bolt	Engine oil	As required
11	Lip area of rear oil seal	Engine oil	As required
	Crankcase mounting surface of rear oil seal	THREEBOND 1207C	As required

◆ Service procedure

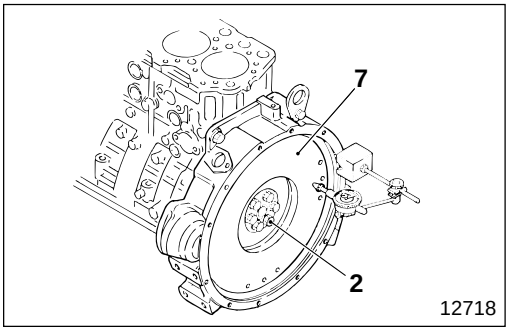

7 **Flywheel assembly**

[Inspection]

(1) Wobble

If the measured value is higher than the limit, check the fastening of bolt **2**, the attachment surface of crankshaft assembly, and depending on the condition found, either repair or replace flywheel assembly **7**.

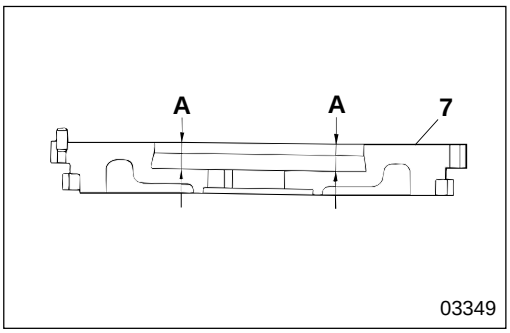

(2) Height of friction surfaces

If the measured value is lower than the limit, repair or replace flywheel assembly **7**.

A : Height from bolt mounting surface to friction surface

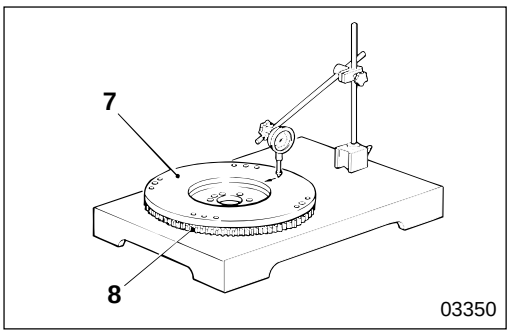

(3) Distortion of friction surface

If the measured value is lower than the limit, repair or replace flywheel assembly **7**.

NOTE

If any fault is found in ring gear 8, replace it first, then begin the inspection.

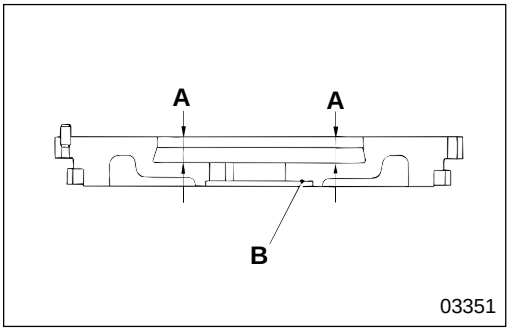

[Correction]

Make sure when grinding the friction surfaces for correction, that height **A** is not lower than the limit while maintaining the degree of parallel with surface **B** within 0.1 mm {0.0039 in.}.

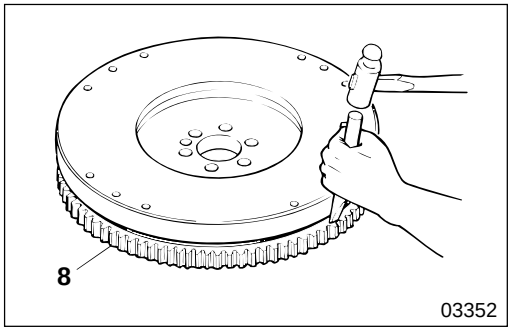

8 **Ring gear**

[Inspection]
Check and see if there is any damage, wear or other fault, and if any fault is found, replace ring gear **8**.
[Removal]
- Heat up ring gear **8** evenly using an acetylene torch.
- Hammer the outer edge of ring gear **8** evenly until it drops off.

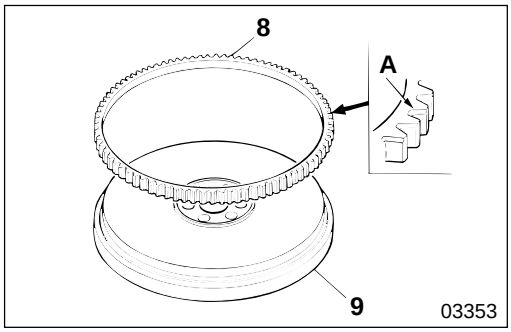

[Installation]
- Heat up ring gear **8** using a piston heater to approximately 100°C {212°F} for three minutes.
- With the side of the chamfered teeth of ring gear **8** facing you, mount it on flywheel **9**.
  A : Chamfered ring gear side

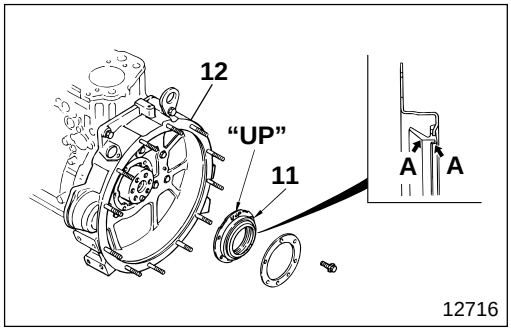

11 **Mounting of rear oil seal**

- Apply engine oil to lip area **A** of rear oil seal **11**.
- Install rear oil seal **11** in flywheel housing **12** in the direction as illustrated.

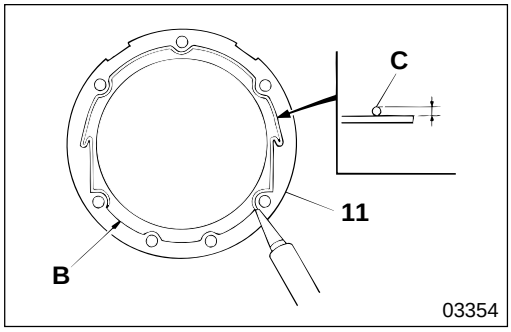

- Apply sealant **C** along line **B** on rear oil seal **11** evenly without break
- After applying sealant **C**, within three minutes, mount rear oil seal **11**.

CAUTION ⚠

- **Do not start the engine within an hour of installing rear oil seal 11.**
- **Be sure to reapply sealant C if the bolts (for mounting rear oil seal 11) are loosened or removed by any cause whatsoever after mounting.**

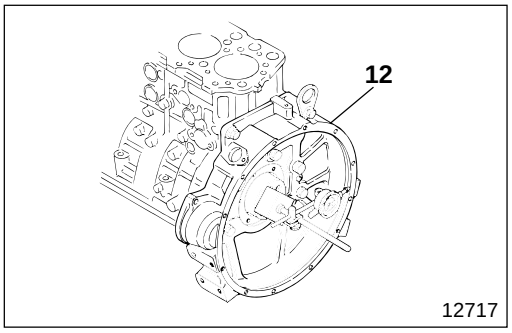

12 **Inspection of flywheel housing**

Mount of eccentricity
- If the measured value is higher than the limit, reassemble flywheel housing **12**.
- After reassembly, if the measured value is still higher than the limit, replace the faulty parts.

M E M O

CRANKSHAFT AND CRANKCASE

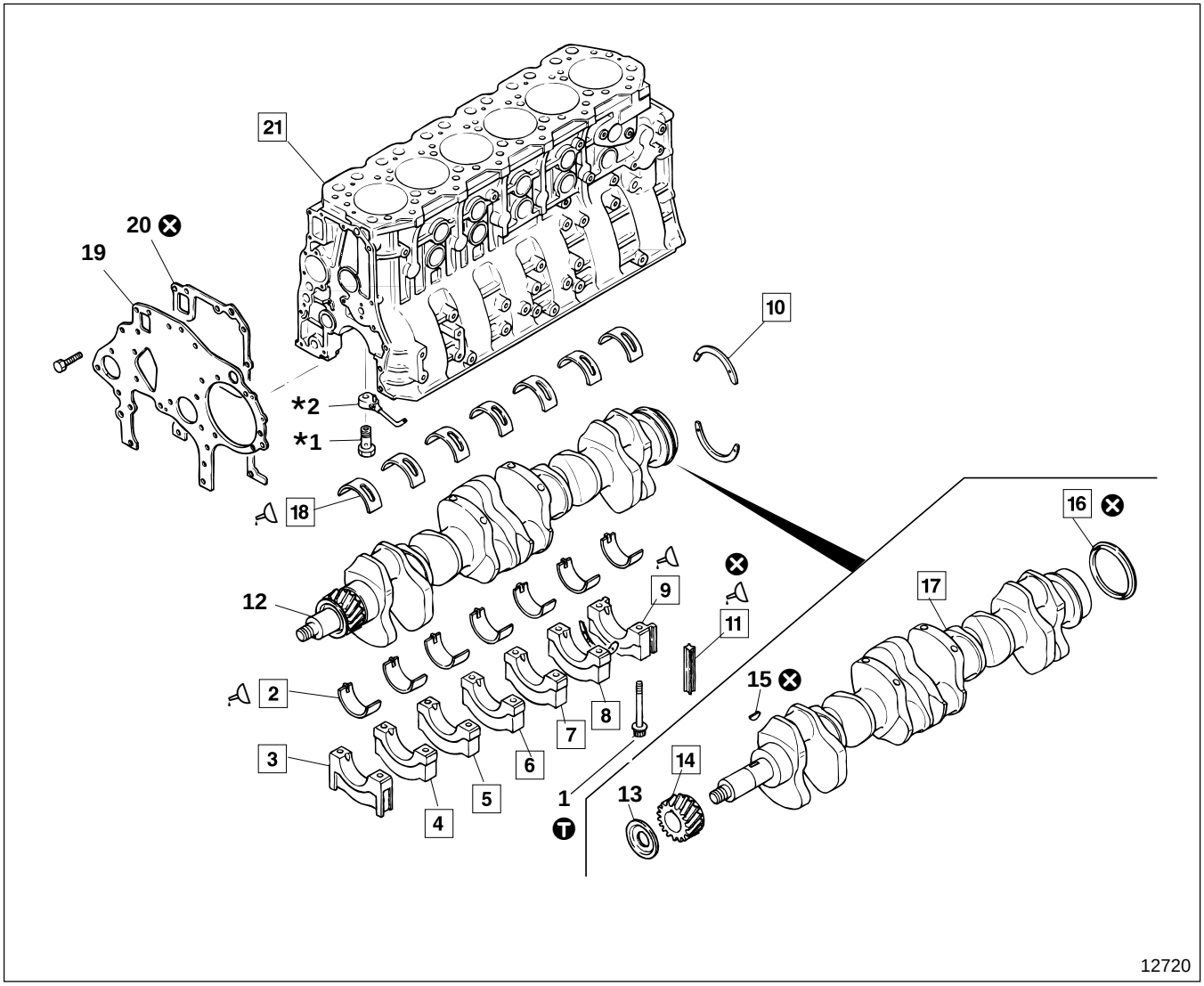

● **Inspection before disassembly**

P11-54

● **Disassembly sequence**

1 Bolt
2 Main bearing, lower
3 No.1 main bearing
4 No.2 main bearing
5 No.3 main bearing
6 No.4 main bearing
7 No.5 main bearing
8 No.6 main bearing
9 Rear main bearing
10 Thrust plate
11 Side seal
12 Crankshaft assembly
13 Front oil seal slinger
14 Crankshaft gear
15 Key
16 Rear oil seal slinger
17 Crankshaft
18 Main bearing, upper
19 Front plate
20 Gasket
21 Crankcase

***1** : Check valve Gr 12
***2** : Oil jet Gr 12
⊗ : Non-reusable parts

CAUTION

Do not remove crankshaft gear 14, check valve *1 or oil jet *2 unless it is faulty.

● **Assembly sequence**

Follow the disassembly sequence in reverse.

Service standards

Unit : mm {in.}

Location	Maintenance item			Standard value (Basic diameter in [ ])	Limit	Remedy
—	Camshaft end play			0.10 to 0.26 {0.003 to 0.010}	0.4 {0.010}	Inspect
2, 18	Main bearing	Oil clearance		[78] 0.03 to 0.09 {[3.07] 0.0012 to 0.0035}	0.15 {0.0059}	Replace
		Free tension		—	less than 82.5 {3.25}	Replace
17	Crankshaft	Bend		0.02 {0.00079} or less	0.05 {0.0020}	Replace
		Pin and journal	Circular accuracy	0.01 {0.00039} or less	0.03 {0.0012}	Correct or replace
			Cylindrical accuracy	0.006 {0.00024} or less	—	Correct or replace
21	Distortion of crankcase top surface			0.07 {0.0028} or less	0.2 {0.0079}	Correct or replace

Tightening torque

Unit : N·m {lbf.ft, kgf·m}

Location	Parts to be tightened	Tightening torque	Remarks
1	Bolt (Main bearing cap mounting)	59 {43, 6}+90°	Wet Reuse up to three times

Lubricant and sealant

Location	Points of application	Kinds	Quantity
2, 18	Interior of main bearing	Engine oil	As required
9	Pack side seal driving-in groove of rear main bearing	THREEBOND 1207C	As required
11	Side seal tip	THREEBOND 1207C	As required

Special tools

Unit : mm {in.}

Location	Tool name and shape	Part No.	Application
3 to **9**	Socket wrench 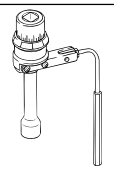 01984	MH061560	Installation of main bearing cap
9	Bearing cap extractor 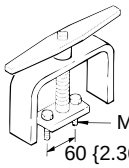 03516	MH061083	Removal of rear main bearing cap
14	Gear puller 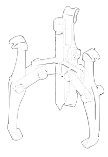 02065	MH061326	Removal of crankshaft gear
16	Rear oil seal slinger installer 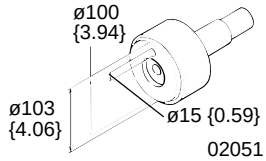 02051	MH062677	Installation of rear oil seal slinger

◆ Service procedure

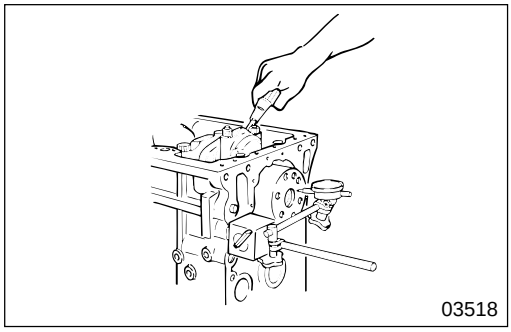

● **Inspection before disassembly**

Crankshaft assembly end play
If the measured value is higher than the limit, replace thrust plates **10** with oversized ones. 🕮 P11-56
< Available oversize ones >
+0.15, +0.30, +0.45 mm
{+0.0059, +0.012, +0.018 in.}

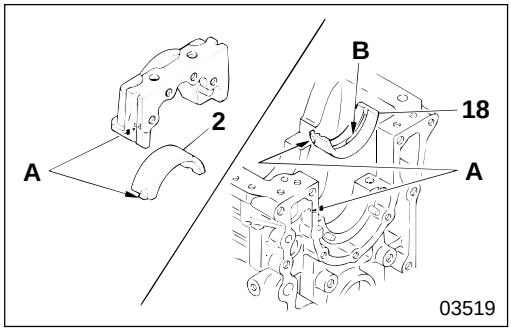

2 **18** **Main bearing**

[Installation]
When installing main bearings **2**, **18**, align lugs **A**.

CAUTION⚠

Be sure to distinguish between main bearings 2, 18. The upper bearing has oil opening B while the lower bearing has no oil opening.

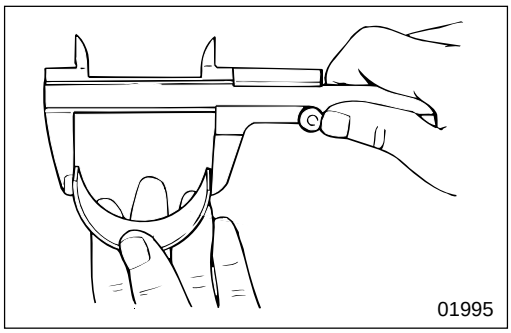

[Inspection]

CAUTION⚠

- **Do not forcibly expand main bearings 2, 18.**
- **Be sure to replace both upper and lower main bearings 2, 18 as a pair when replacement is necessary.**

(1) Expansion at free state

If the measured value is lower than the limit, replace main bearings **2**, **18**.

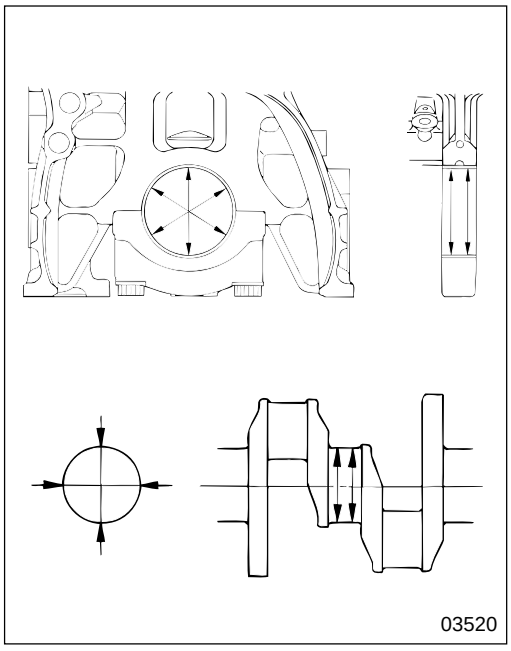

(2) Clearance between main bearing and crankshaft

If the measured value is lower than the limit, replace faulty parts.

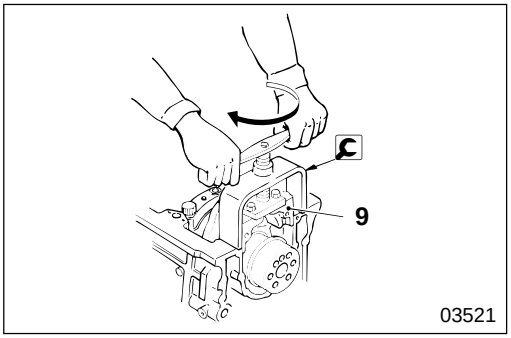

3 to **9** **Main bearing cap**

[Removal]
Use bearing cap extractor to remove rear main bearing cap **9** because side seal **11** is installed between crankcase **21** and the rear main bearing.

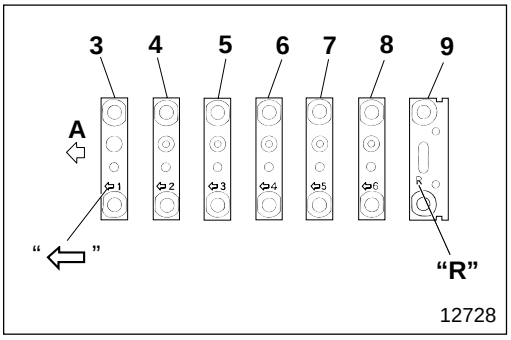

[Installation]
- Install main bearing caps **3** to **9** in the direction as illustrated.
  A : Front of engine

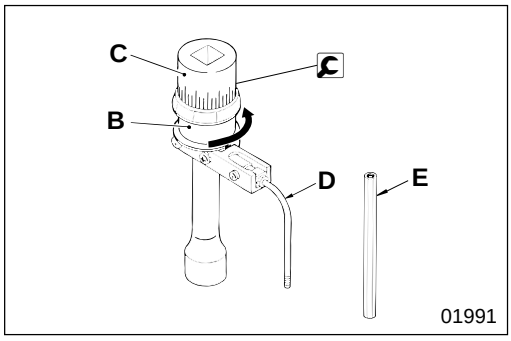

- Center punch the head of bolt **1** before installation.

CAUTION

If there are already three center-punch marks, replace the cylinder head bolt with a new one.

- After tightening bolt **1** at specified torque, tighten further as follows:
- Turn socket wrench holder **B** counterclockwise and keep the spring in the wrench compressed.
  C : Socket
  D : Rod
  E : Rod (for connection)

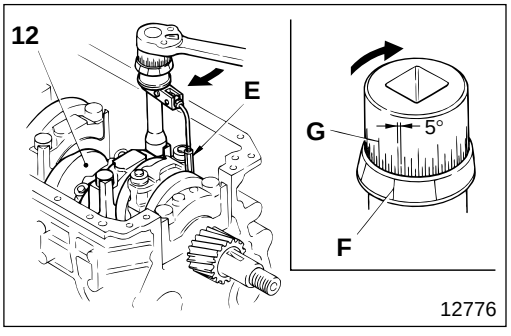

- Set socket wrench holder **B** so that the repercussive force of the spring presses rod **E** (for connection) against crankshaft assembly **12**.
- Select a scale that is convenient for reading graduation **F** on holder **B**.
- Tighten further by turning socket **C** clockwise by 90° (setting is in 5° increments), referring to graduation **G** on the selected scale.
- After installation, check the following points :
  - Crankshaft assembly **12** can be rotated easily by hand.
  - The end play of crankshaft assembly **12**. P11-54

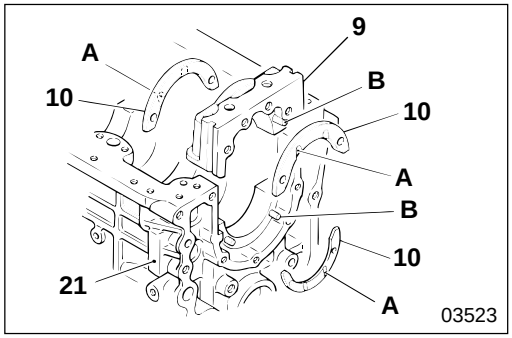

10 **Installation of thrust plate**

Install thrust plates **10** on both ends of rear main bearing **9** and the rear end of crankcase **21** in the direction as illustrated.

A : Oil groove
B : Positioning pin

CAUTION

When installing oversized thrust plates 10, mount them on the front and rear of rear main bearing cap 9. It is not necessary that the thrust plates used are all of the same size, but use the same-size-combination of thrust plates for mounting on the rear of crankcase 21 and on the rear of the rear bearing cap.

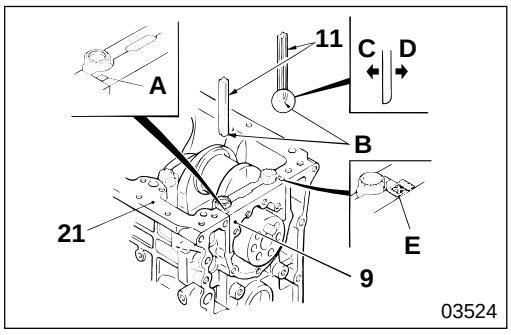

11 **Installation of side seal**

- Supply sealant in side seal mounting groove **A** of rear main bearing cap **9**.
- Apply sealant at end **B** of side seal **11**.
- Press in side seal **11** between rear main bearing cap **9** and crankcase **21** in the direction as illustrated.
  C : Rear main bearing cap side
  D : Crankcase side
- After pressing in, apply sealant to side seal mounting **E** of rear main bearing cap **9**.

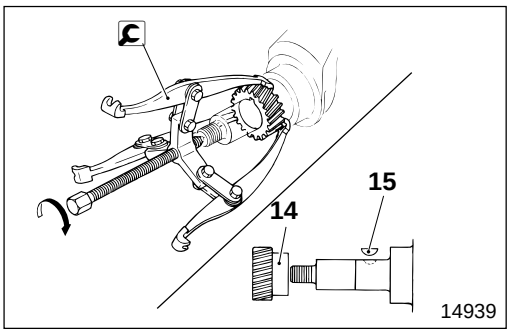

14 **Crankshaft gear**

[Removal]
Never remove crankshaft gear **14** by striking, hitting or hammering it.

[Installation]
Before installing heat up crankshaft gear **14** using a piston heater or similar device to approximately 100°C {212°F}.

NOTE

Install key 15 to prevent rotation.

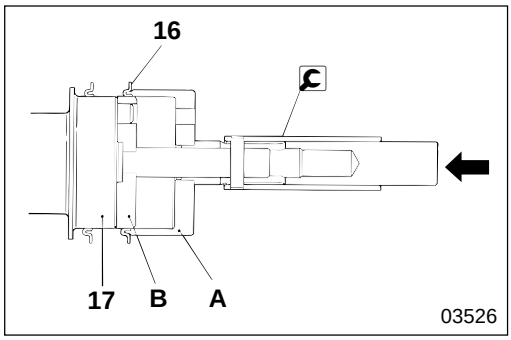

16 **Installation of rear oil seal slinger**

Install rear oil seal slinger **16** using oil seal slinger installer. Strike installer **A** until it hits guide **B** positively.

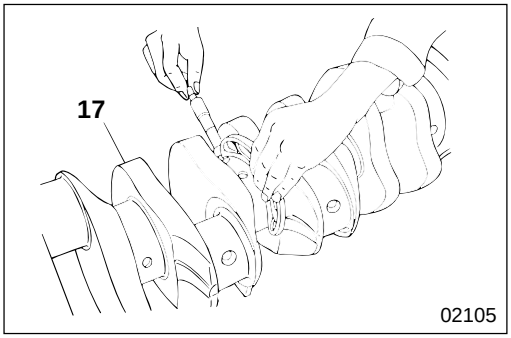

17 Crankshaft

[Inspection]

(1) Cylindrical and circular accuracy of the journal and the pin

If the measured value is higher than the limit, grind and correct crankshaft **17** to convert it to the undersize specifications or replace it.

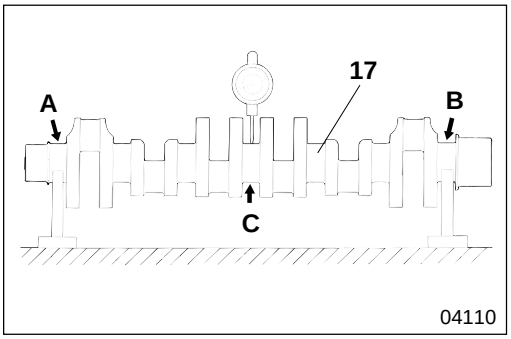

(2) Degree of bend

The degree of bend of crankshaft **17** is measured at No.4 journal **C** by supporting No.1 journal **A** and No.7 journal **B.** If the measured value is higher than the limit, replace the crankshaft.

NOTE

The degree of bend of crankshaft 17 is half of the indicated value of the gauge after rotating the shaft 360°.

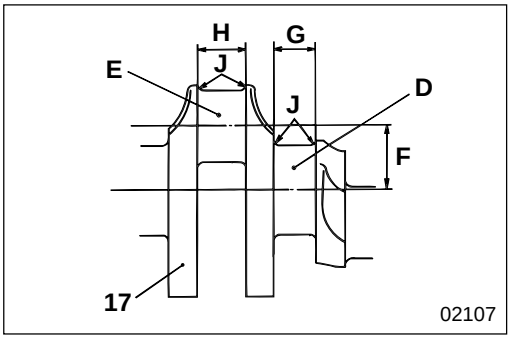

[Correction]

NOTE

Be sure to replace main bearings 2, 18 with those that meet the undersize specifications after crankshaft 17 is corrected by grinding.

- Set **F**, distance between the center line of the journal **D** and that of the pin **E**, constant.
  F : 57.5±0.075 mm {2.26±0.0030 in.}
- Set the width of journal **G** and pin **H** so they are constant.
  G : 35 mm {1.38 in.} (32 mm {1.26 in.} for No.1 journal)
  H : $41\ ^{+0.2}_{0}$ mm
  {$1.61\ ^{+0.0079}_{0}$ in.}

- Finish the fillet **J** smoothly.
  J : R4±0.2 mm {0.0079 in.}
- Check and confirm that there has been no cracking caused by grinding using the magnetic particle inspection method (Magnafluxing). Also make sure the surface hardness has not deteriorated (Shore hardness to be maintained at not less than Hs 75).
- When grinding **K**, set crankshaft **17** and grinder **L** so that they both rotate counterclockwise as viewed from the front of the crankshaft.
- To finish grinding **M** using a grindstone or emery paper **N,** rotate crankshaft **17** clockwise.

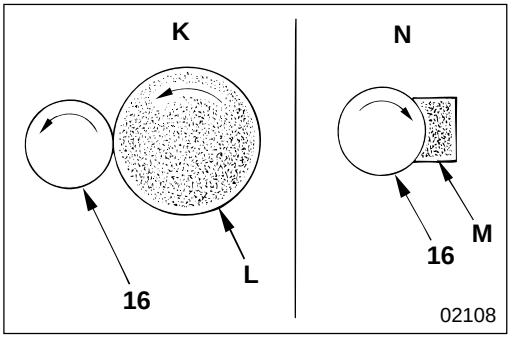

Undersize specifications of crankshaft

Unit : mm {in.}

	Undersize scales			
	0.25 {0.0098}	0.50 {0.020}	0.75 {0.030}	1.00 {0.039}
Finish outer diameter of journal	77.69 to 77.70 {3.058 to 3.059}	77.44 to 77.45 {3.048 to 3.049}	77.19 to 77.21 {3.038 to 3.039}	76.94 to 76.95 {3.0291 to 3.0295}
Finish outer diameter of pin	64.69 to 64.71 {2.546 to 2.547}	64.44 to 64.46 {2.5370 to 2.5377}	64.19 to 64.21 {2.5271 to 2.5279}	63.94 to 63.96 {2.517 to 2.518}
Circular accuracy	0.01 {0.00039} or less			
Cylindrical accuracy	0.006 {0.00024} or less			

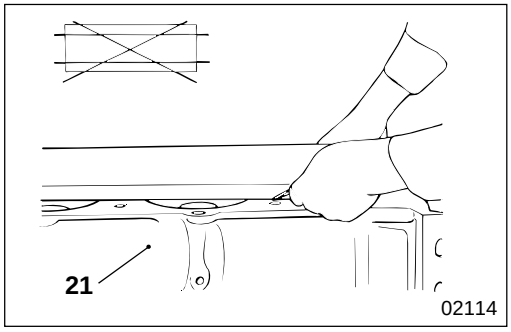

21 **Crankcase top surface distortion**

If the measured value is higher than the limit, grind and correct using a surface grinder.

CAUTION⚠

When grinding crankcase 21 be sure that the extent of piston protrusion does not deviate from the standard value.
Piston protrusion : P11-36

MITSUBISHI
FUSO

FH

Service Manual

Group 12
Lubrication

Table of Contents

BACK

HOME

MITSUBISHI FUSO TRUCK OF AMERICA, Inc.

Pub No. TWME9502-12

GROUP 12 LUBRICATION

SPECIFICATIONS 2

STRUCTURE AND OPERATION 3

TROUBLESHOOTING 11

INSPECTION AND ADJUSTMENT MOUNTED IN VEHICLE

- Replacement of Oil Filter 12
- Replacement of Engine Oil 13
- Measurement of Oil Pressure 14

OIL PAN, OIL STRAINER AND OIL JET 16

OIL PUMP 18

OIL COOLER AND OIL FILTER 22

SPECIFICATIONS

Item			Specifications
Mode of lubrication			Oil pump type
Oil filter type			Spin-on filter paper type
Oil cooler type			Shell and plate type (Multiple-plate type)
Engine oil	Grade		Grade CD or above as per API classification
	Quantity of oil L {qts}	Oil pan	Approximately 9.5 {10}
		Oil filter	Approximately 1 {1.1}

Lubrication System (Flow of Oil)

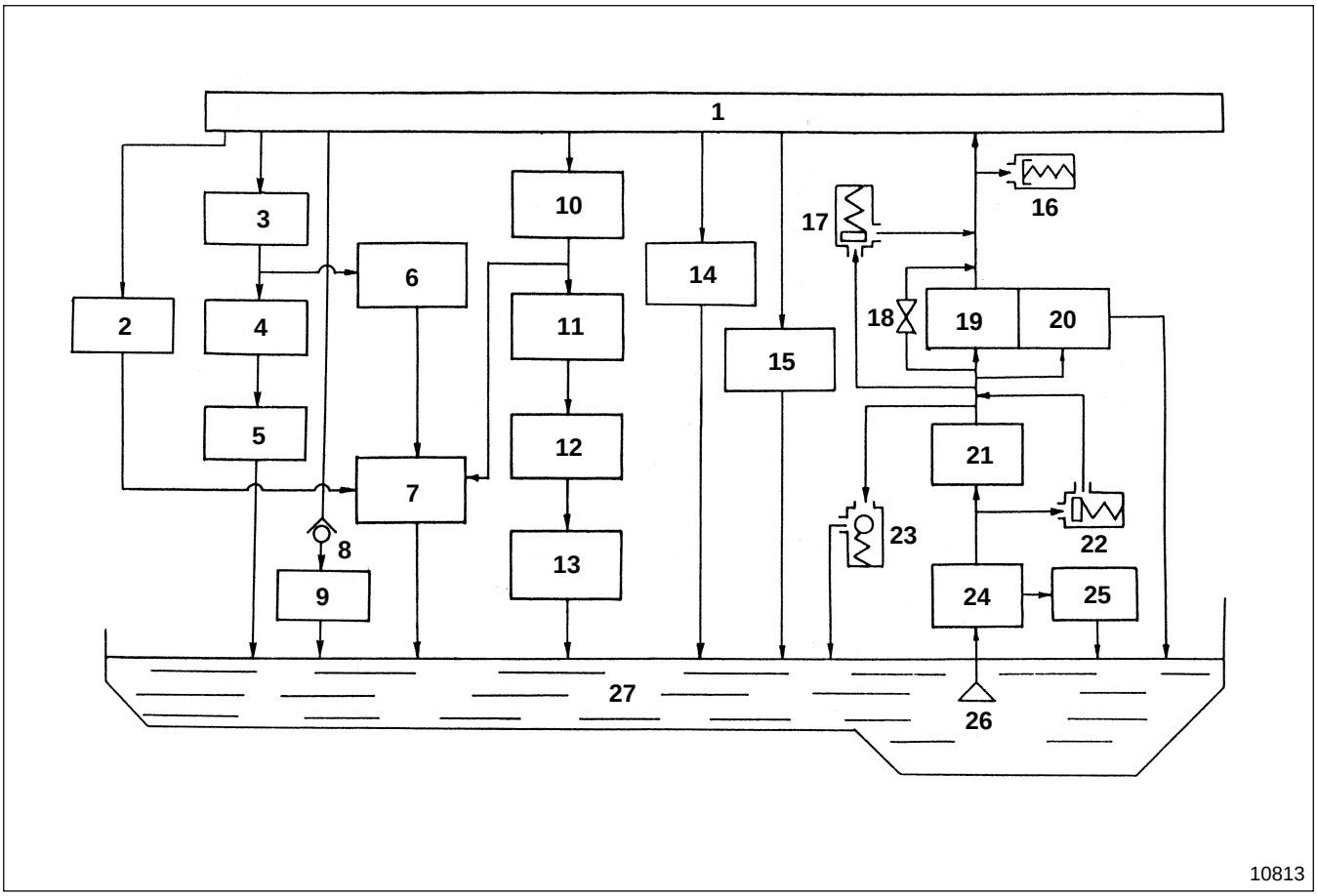

1 Main oil gallery
2 Air compressor
3 Crankshaft main bearing
4 Connecting rod bearing
5 Connecting rod busing
6 Idler gear bushing
7 Timing gear
8 Check valve for oil jet
9 Piston
10 Camshaft bushing
11 Rocker bushing
12 Push rod
13 Tappet
14 Injection pump
15 Turbocharger
16 Engine oil pressure switch
17 Engine oil bypass alarm switch
18 Bypass valve (Built-in within oil pump)
19 Full-flow filter element
20 Bypass filter element
21 Oil cooler
22 Bypass valve
23 Regulator valve
24 Oil pump
25 Relief valve (Built-in within oil pump)
26 Oil strainer
27 Oil pan

Oil Pump

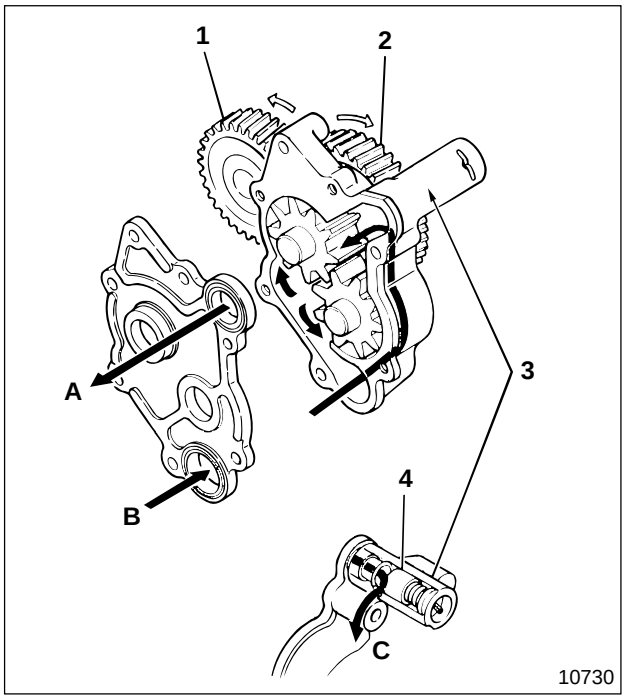

1 Crankshaft gear
2 Oil pump gear
3 Oil pump
4 Relief valve

A : To oil cooler
B : From oil strainer
C : To oil pan

Oil pump **3** is a gear type, driven by rotation of the crankshaft transmitted by crankshaft gear **1** that engages oil pump gear **2**. Relief valve **4** is installed on the oil pump and when the oil pump discharge pressure becomes higher than the standard pressure level, part of the engine oil is returned to the oil pan by relief action of the valve, protecting the lubricating system from breakdown caused by excessive oil pressure.

Oil Cooler and Oil Filter

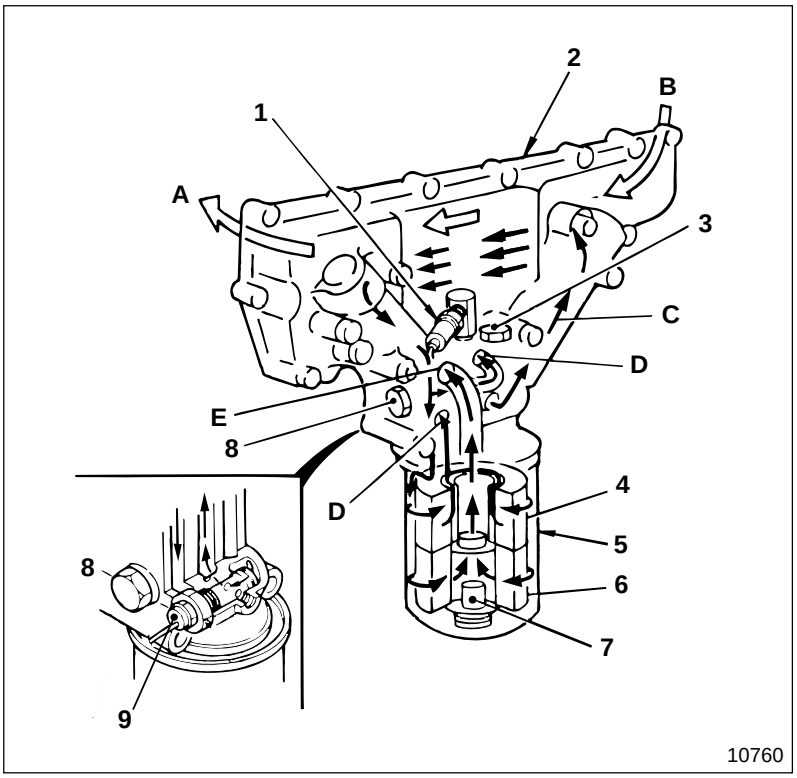

1 Engine oil pressure switch
2 Oil cooler
3 Regulator valve
4 Bypass filter element
5 Oil filter
6 Full-flow filter element
7 Bypass valve
8 Bypass valve
9 Engine oil bypass alarm switch

A : Coolant exit port
B : Coolant entry port
C : To oil cooler
D : To oil pan
E : To main oil gallery

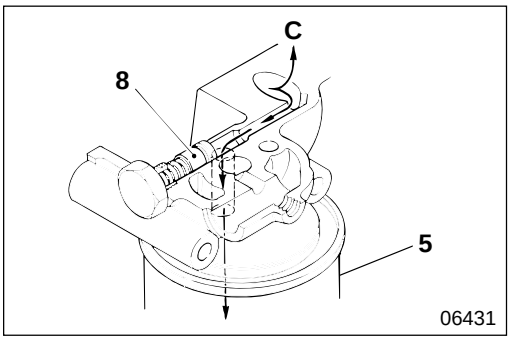

Operation of bypass valve

When the viscosity of the engine oil is high at low temperatures, or when oil cooler **2** element is clogged, flow resistance is high, and if this happens, bypass valve **8** opens to let the engine oil return directly to oil filter **5** without going through the oil cooler.

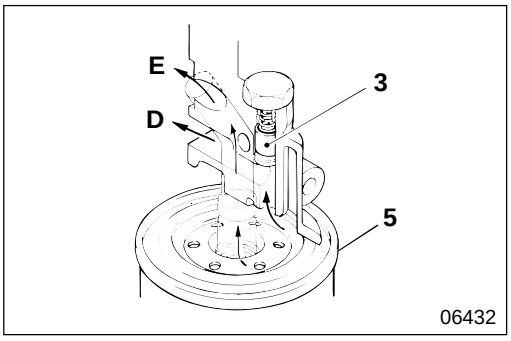

Operation of regulator valve

When the oil pressure in the main oil gallery becomes higher than standard, regulator valve **3** opens to let part of the oil return to oil pan **D**, thereby regulating the oil pressure.

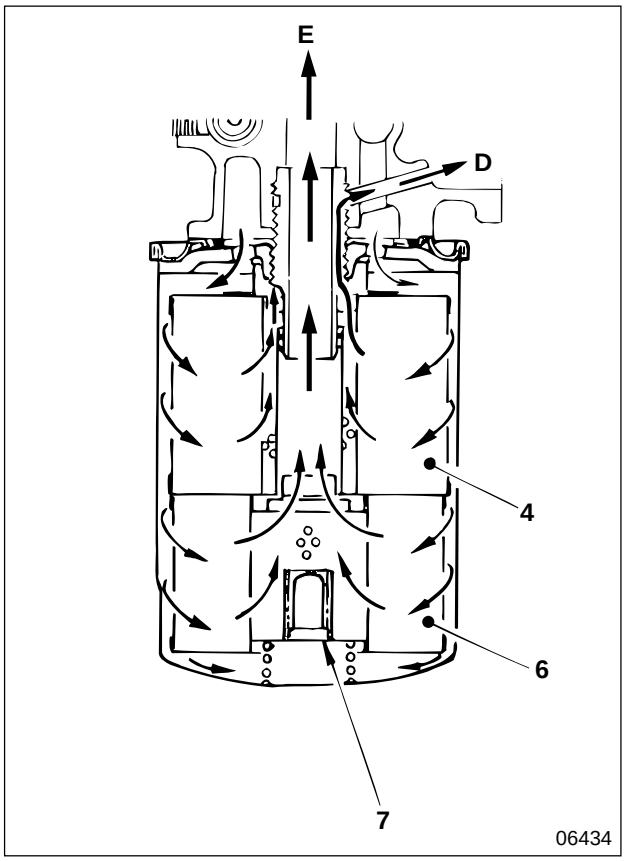

● **Oil filter element**

This oil filter uses a spin-on, filter paper type element, that integrates full-flow filter element **6** and bypass filter element **4**. When the filter element is clogged, bypass valve **7**, installed at the base of the filter, opens to let the oil bypass the element and flow directly to main oil gallery **E**, preventing engine seizure.

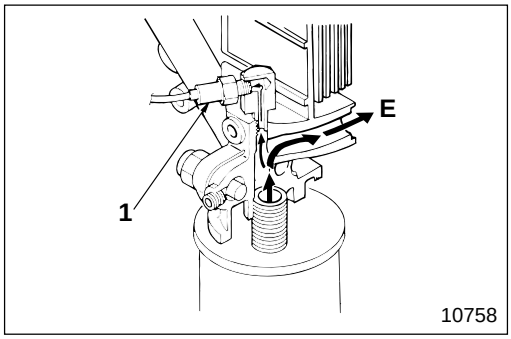

Operation of engine oil pressure switch

When pressure for delivering the oil to main oil gallery **E** becomes lower than standard, the built-in electric contact point of engine oil pressure switch **1** closes to light warning lamp in the meter cluster, warning the driver that the oil pressure is abnormal.

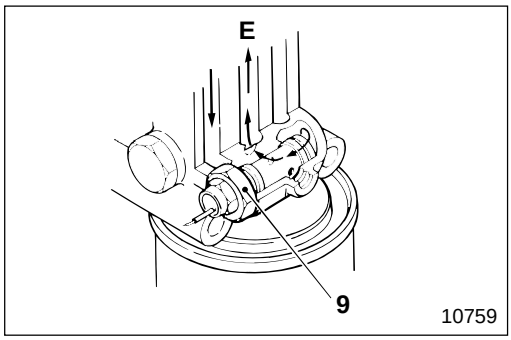

Operation of engine oil bypass alarm switch

- When the oil filter element is clogged, the engine oil level becomes low and might cause seizure of engine parts, engine oil bypass alarm switch **9** is installed to prevent this.
- When the oil filter element is clogged, engine oil bypass alarm switch **9** lets the oil flow directly to main oil gallery **E**, bypassing full-flow filter element **6**. When the engine oil bypass alarm switch is activated it lights the warning lamp, warning the driver that the oil filter element is clogged.

Lubrication of Related Parts

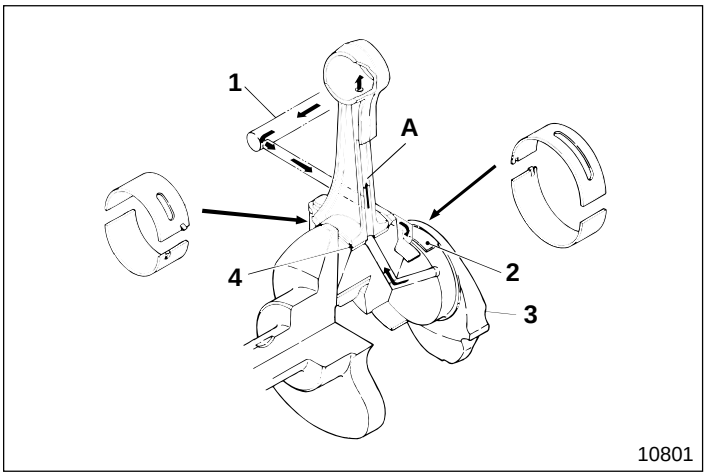

10801

● **Main bearing and connecting rod bearing**

1 Main oil gallery
2 Main bearing
3 Crankshaft
4 Connecting rod bearing

A : Connecting rod oil passage

Engine oil supplied through the oil passage drilled in crankshaft **3** flows through connecting rod oil passage **A** to lubricate the small end of the connecting rod.

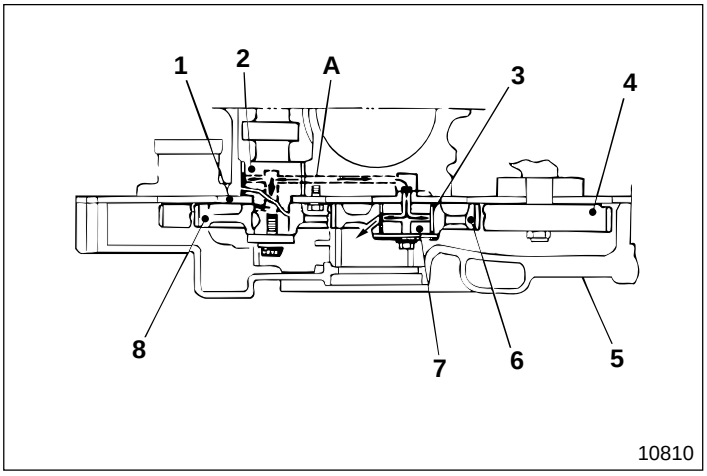

10810

● **Timing gear**

1 Thrust plate
2 Camshaft
3 Idler gear bushing
4 Air compressor gear
5 Timing gear case
6 Idler gear
7 Idler shaft
8 Camshaft gear

A : From main oil gallery

Engine oil from main oil gallery **A** flows through the inside of camshaft **2** and idler shaft **6** and lubricates each gear.

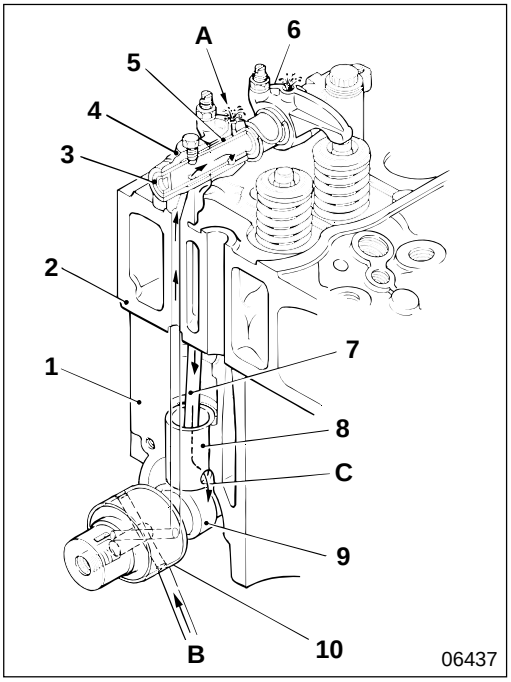

● **Valve mechanism**

1 Crankcase
2 Cylinder head
3 Rocker shaft
4 Rocker shaft bracket
5 Rocker bushing
6 Rocker
7 Push rod
8 Tappet
9 Camshaft
10 No. 1 camshaft bushing

A : Rocker oil hole
B : From main oil gallery
C : To oil pan

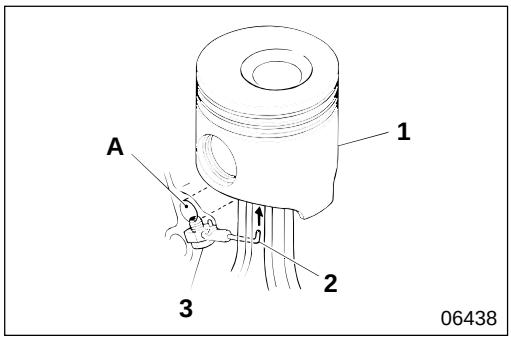

● **Oil jet**

1 Piston
2 Oil jet
3 Check valve

A : Main oil gallery

An oil jet **2** is installed, in the lower part of main oil gallery **A**, for each cylinder and cools piston **1** by injecting engine oil toward the inside of the piston. The oil jet is fitted with check valve **3** which opens and closes at standard oil pressure levels. This prevents a decrease of oil volume at low oil pressure as well as a decrease of oil pressure itself.

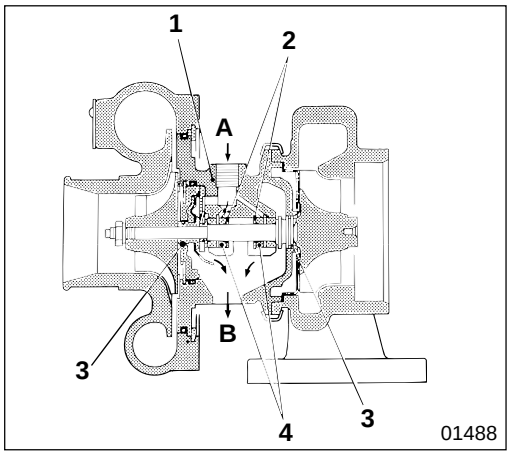

● **Turbocharger**

1 Bearing housing
2 Snap ring
3 Piston ring
4 Bearing

A : From main oil gallery
B : To oil pan

Engine oil is delivered from the main oil gallery to bearing housing **1** through the oil pipe to lubricate bearing **4**. Piston ring **3** installed at both ends of the turbine wheel shaft works as an oil seal.

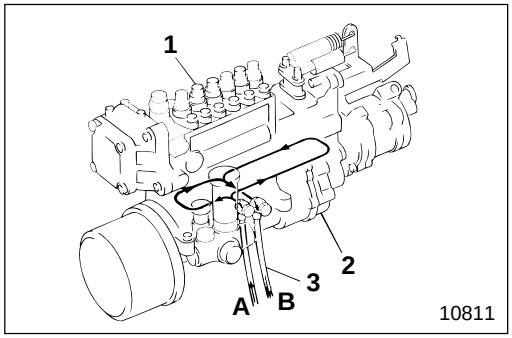

● **Injection pump**

1 Injection pump
2 Governor
3 Oil return pipe

A : From main oil gallery
B : To oil pan

Engine oil that has lubricated injection pump **1** and governor **2** returns to the oil pan through oil return pipe **3**.

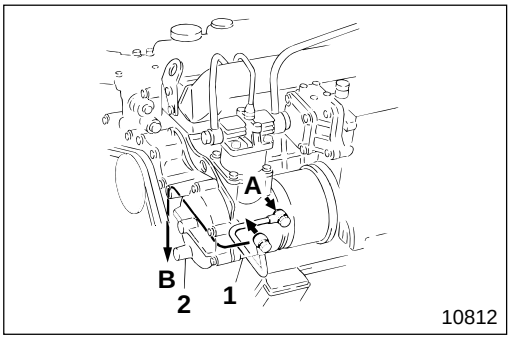

● **Air compressor**

1 Air compressor
2 Timing gear case

A : From main oil gallery
B : To oil pan

Engine oil from the main oil gallery lubricates the inside of air compressor **1** and returns to the oil pan through timing gear case **2**.

Lubrication System Electric Circuit

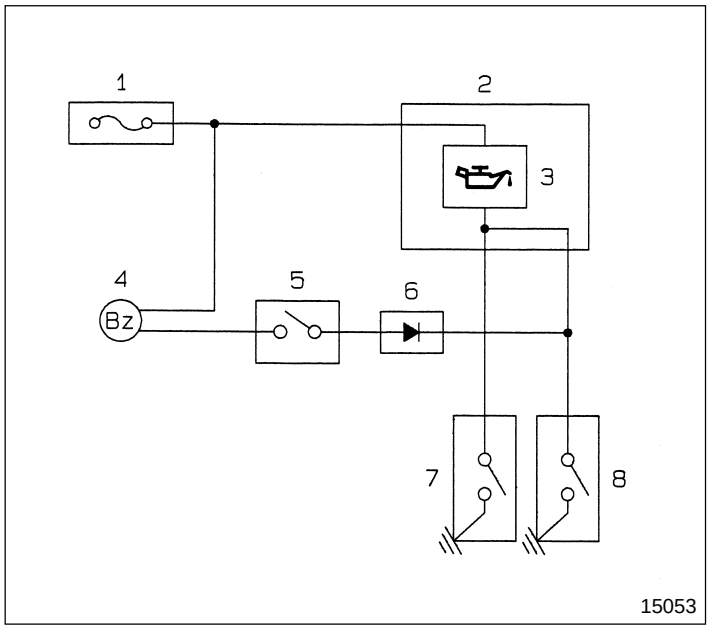

1 Fuse box
2 Meter cluster
3 Engine oil pressure/clogged oil filter warning lamp
4 Warning buzzer
(Buzzer does not work when parking brake is engaged.)
5 Parking brake switch
6 Diode
7 Engine oil bypass alarm switch
8 Engine oil pressure switch

Possible causes \ Symptoms		Engine hard to start	Overheating	Oil pressure low	Oil consumption excessive (Oil leakage)	Remarks
Oil cooler	Oil cooler element installation faulty		○	○	○	
	Gasket faulty		○	○	○	
	O-ring faulty		○	○	○	
	Oil cooler element clogged		○	○		
	Oil cooler element damaged		○	○	○	
	Bypass valve spring fatigued		○			
	Regulator valve spring fatigued			○		
Oil pump	Malfunctioning		○	○		
	Oil pump gear interfering with oil pump case or cover	○		○		
	Relief valve spring fatigued			○		
Oil filter	Installation faulty				○	
	Element clogged		○	○		
	Gasket faulty			○		
Oil strainer installation faulty or clogged			○	○		
Crankshaft front oil seal faulty					○	Gr 11
Crankshaft rear oil seal faulty					○	Gr 11
Timing gear case installation faulty					○	Gr 11
Oil jet for piston cooling faulty			○			
Oil working its way up into combustion chamber					○	
Oil working its way down into combustion chamber					○	
Oil viscosity too high		○				
Oil quality unsuitable			○			
Oil deteriorated			○			
Fuel mixed with oil			○			

Replacement of Oil Filter

Special tools

Unit : mm {in.}

Location	Tool name and shape	Part No.	Application
2	Oil filter wrench 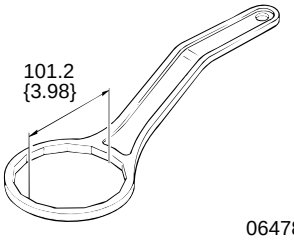 06478	MH061587	Removal of oil filter

WARNING

- **Wipe up any engine oil that has been spilled because it can cause a fire.**
- **Do not touch the engine while it is hot because it will burn you.**
- **When replacing oil filter 2, take care not to spill oil on the V-belt.**

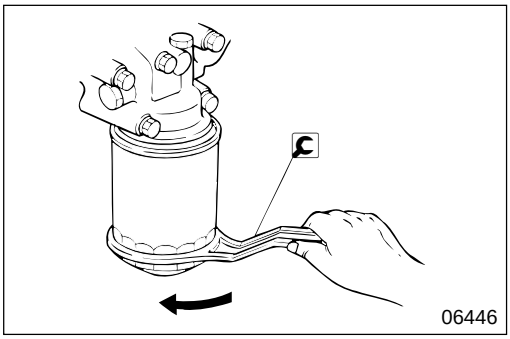

[Removal]

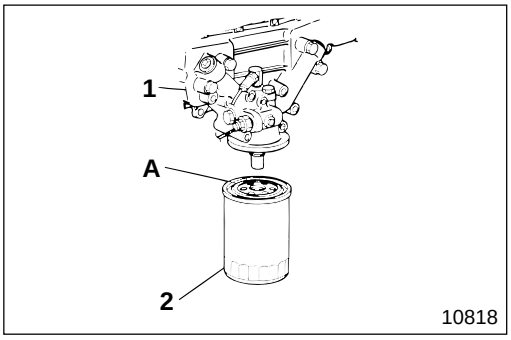

[Installation]

- Clean the surface of oil cooler body **1** that makes contact with oil filter **2**.
- Apply engine oil thinly and evenly to gasket area **A** of oil filter **2**.
- Screw in oil filter **2** to oil cooler body **1** until gasket area **A** sits on the body. From this position, tighten further by rotating by five eighths of a turn.
- After installation, run the engine and check that there is no oil leakage from gasket area **A**.
- Check the oil level and if it is low, top it up.

Replacement of Engine Oil

Tightening torque

Unit : N·m {lbf.ft, kgf·m}

Location	Parts to be tightened	Tightening torque	Remarks
2	Oil pan drain plug	69 {51, 7}	—

Lubricant

Location	Points of application	Kinds	Quantity
—	Oil pan	Engine oil (Grade CD or above as per API Classification)	Approximately 9.5 L {10 qts}
—	Oil filter	Engine oil (Grade CD or above as per API Classification)	Approximately 1 L {1.1 qts}

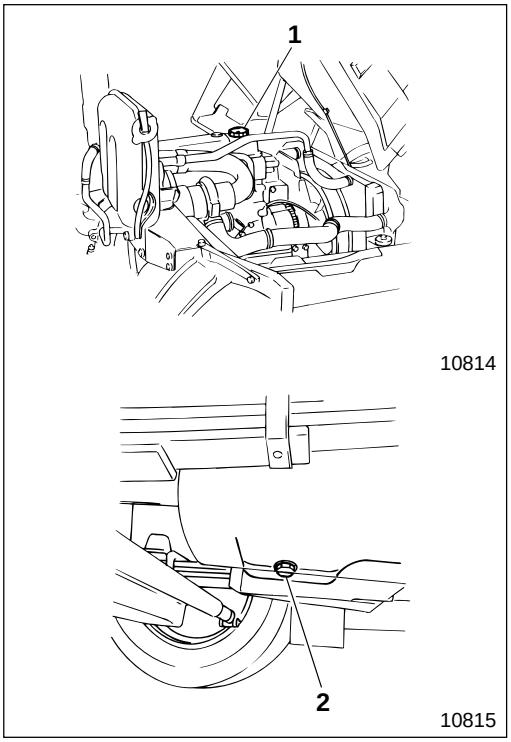

[Draining]
After warming-up the engine, remove oil filler cap **1** and remove drain plug **2** of the oil pan and drain the engine oil.

[Refilling]
Tighten drain plug **2** of the oil pan at specified torque and fill with the specified quantity of engine oil.

WARNING

- **Wipe up any engine oil that has been spilled because it can cause a fire.**
- **Do not touch the engine while it is hot because it will burn you.**
- **When replacing engine oil take care not to spill oil on the V-belt.**

INSPECTION AND ADJUSTMENT MOUNTED IN VEHICLE

Measurement of Oil Pressure

Service standards

Location	Maintenance item		Standard value	Limit	Remedy
—	Oil pressure (Oil temperature 70 to 90°C {158 to 194°F})	At no-load minimum revolution	145 kPa {21 lbf/in^2, 1.5 kgf/cm^2}	49 kPa {7.1 lbf/in^2, 0.5 kgf/cm^2}	Inspect
		At no-load maximum revolution	295 to 490 kPa {43 to 71 lbf/in^2, 3 to 5 kgf/cm^2}	195 kPa {28 lbf/in^2, 2 kgf/cm^2}	

Tightening torque

Unit : N·m {lbf.ft, kgf·m}

Location	Parts to be tightened	Tightening torque	Remarks
2	Engine oil pressure switch	15 to 22 {11 to 16, 1.5 to 2.2}	When engine is cold

Sealant

Location	Points of application	Kinds	Quantity
2	Thread area of engine oil pressure switch	Teflon tape	3 1/2 turns

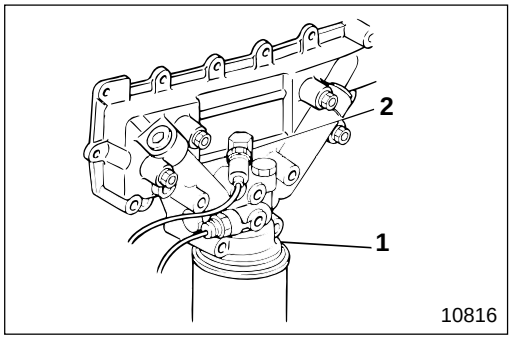

- Remove oil pressure switch **2** from oil cooler **1**.
- Mount the oil pressure gauge after installing adaptor **3** onto oil cooler **1**.
- Warm up the engine until the oil temperature reaches 70 to 90°C {158 to 194°F}.
- Measure oil pressure at no-load minimum revolution and at no-load maximum revolution. If the measured values are lower than the limit, overhaul the lubricating system.

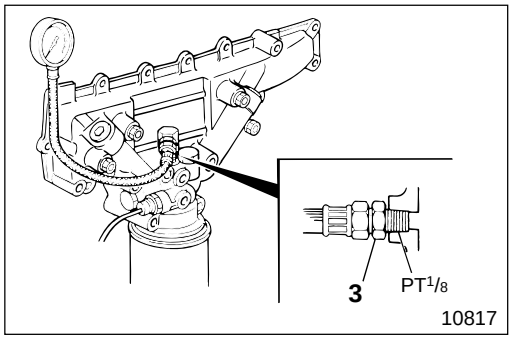

- After measurement, install engine oil pressure switch **2** and tighten at specified torque.

CAUTION

Be sure to install oil pressure switch 2 when the engine is cold.

Inspection of engine oil pressure switch

Gr 54

M E M O

OIL PAN, OIL STRAINER AND OIL JET

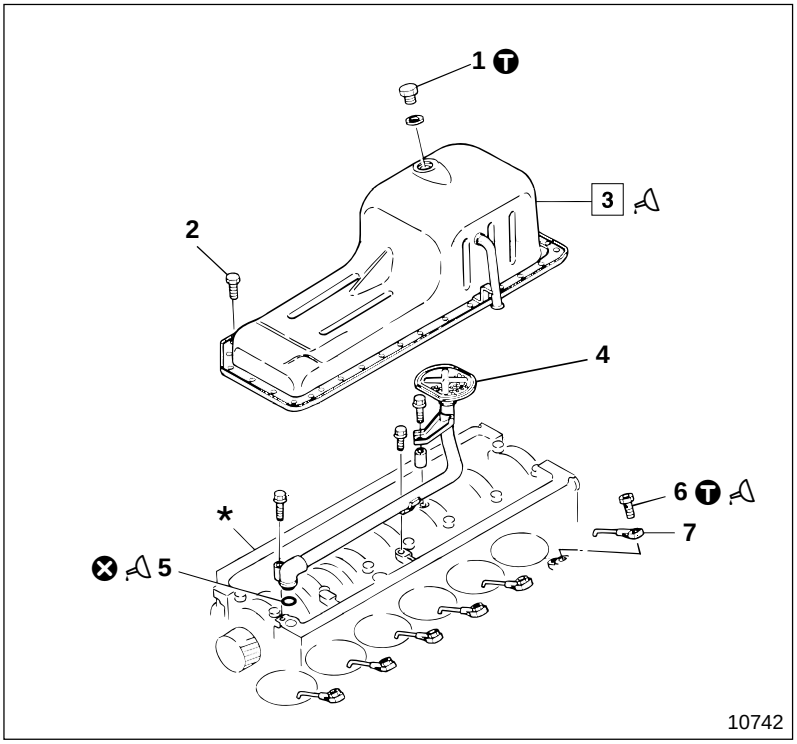

● **Disassembly sequence**

1 Drain plug
2 Bolt
3 Oil pan
4 Oil strainer
5 O-ring
6 Check valve
7 Oil jet

***** : Crankcase
⊗ : Non-reusable parts

● **Assembly sequence**

Follow the disassembly sequence in reverse.

CAUTION ⚠

Make sure that you do not tighten check valve 10 higher than the specified torque. Overtightening will cause damage to the check valve, resulting in serious overheating damage to the engine.

Ⓣ Tightening torque

Unit : N·m {lbf.ft, kgf·m}

Location	Parts to be tightened	Tightening torque	Remarks
1	Drain plug	69 {51, 7}	—
6	Check valve	29 {22, 3 }	Wet

Lubricant and sealant

Location	Points of application	Kinds	Quantity
3	Oil pan to crankcase connecting surface	THREEBOND 1207C	As required
5	Body of O-ring	Engine oil	As required
6	Thread area of check valve	Engine oil	As required

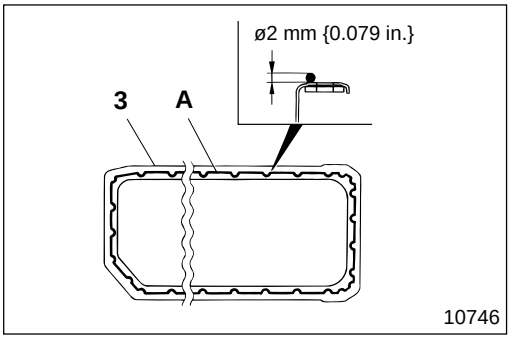

◆ Service procedure

3 **Installation of oil pan**

< When using sealant >

- Apply sealant **A** to lower connecting surface of oil pan **3** as illustrated evenly without break.
- After applying sealant **A**, within three minutes, mount oil pan **3** to crankcase *****.

CAUTION ⚠

- **Be sure to clean and wipe off oily substances from the surface where sealant A is to be applied.**
- **Make sure that sealant A is not transferred to other areas while the mounting work is being done.**
- **Do not start the engine within an hour of mounting oil pan 3.**
- **Be sure to reapply sealant A if bolts 2 (for mounting oil pan 3) are loosened or removed by any cause whatsoever after mounting.**

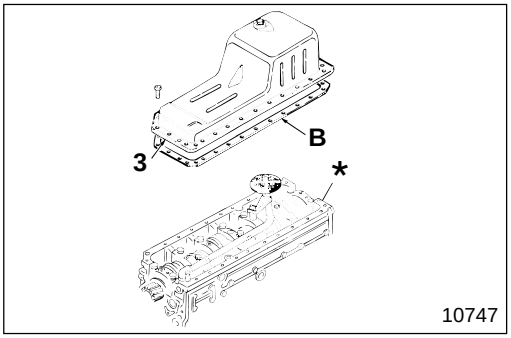

< When not using sealant >

NOTE

If sealant is not available, install oil pan 3 to crankcase * using sheet gasket B.

OIL PUMP

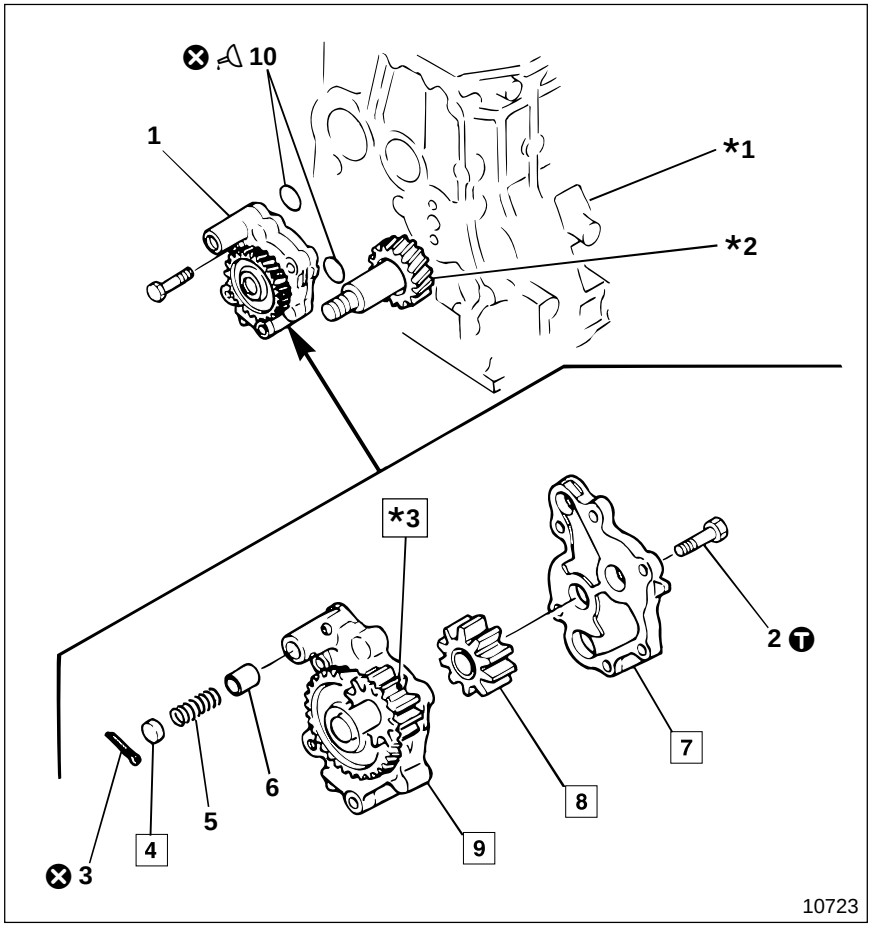

● **Disassembly sequence**

1 Oil pump assembly
2 Bolt
3 Split pin
4 Seat
5 Spring
6 Relief valve
7 Oil pump cover
8 Driven gear assembly
9 Oil pump case assembly
10 O-ring

***1** : Crankcase Gr 11
***2** : Crankshaft gear
***3** : Drive gear

⊗ : Non-reusable parts

● **Assembly sequence**

Follow the disassembly sequence in reverse.

Service standards

Unit : mm {in.}

Location	Maintenance item	Standard value (Basic diameter in [ ])	Limit	Remedy
—	Backlash between oil pump gear and crankshaft gear Gr 11	0.09 to 0.18 {0.0035 to 0.0071}	0.3 {0.012}	Replace
5	Relief valve spring load (Installed length 38 {1.50})	225 N {51 lbf, 23.15 kgf}	—	Replace
6	Relief valve opening pressure	1080±98 kPa {155±14 lbf/in^2, 11±1.0 kgf/cm^2}	—	—
7, *3	Clearance between gear shaft and oil pump cover	[20] 0.04 to 0.07 {[0.79] 0.0016 to 0.0028}	0.15 {0.0059}	Replace
8, 9	Clearance between gear shaft and driven gear	[20] 0.04 to 0.07 {[0.79] 0.0016 to 0.0028}	0.15 {0.0059}	Replace
8, 9, *3	Difference between height of each gear and depth of oil pump case	0.01 to 0.07 {0.00039 to 0.0028}	0.18 {0.0071}	Replace
	Clearance between tooth tip of each gear and oil pump case	0.10 to 0.19 {0.0039 to 0.0075}	0.2 {0.0079}	Replace

Ⓣ Tightening torque

Unit : N·m {lbf.ft, kgf·m}

Location	Parts to be tightened	Tightening torque	Remarks
2	Bolt (Oil pump cover mounting)	9.8±2.0 {7.2±1.4, 1.0±0.2}	—

Lubricant

Location	Points of application	Kinds	Quantity
10	Body of O-ring	Engine oil	As required

◆ Service procedure

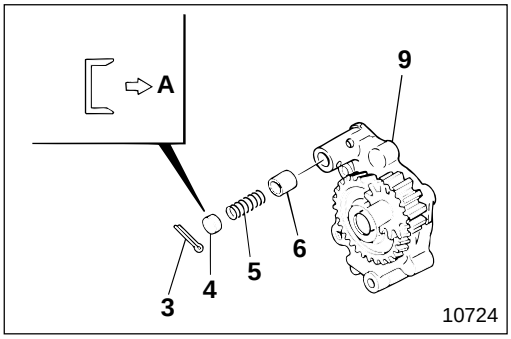

4 **Installation of seat**

A : Oil pump case assembly side

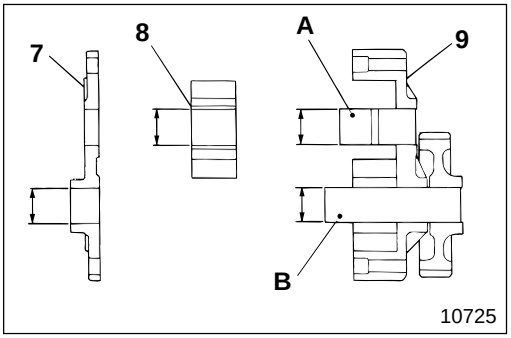

7 **to** **9** **Inspection of oil pump cover, driven gear assembly, and oil pump case assembly**

- Measure the clearance between oil pump cover **7** and drive gear shaft **B**, and between driven gear assembly **8** and driven gear shaft **A**.
- If the measured value is lower than the limit, replace the faulty parts.

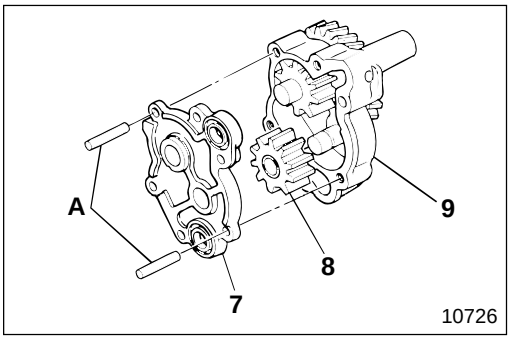

7 **9** **Installation of oil pump cover and oil pump case assembly**

- Prepare two pins **A** of 9 mm {0.35 in.} in outer diameter and position oil pump cover **7** and oil pump case assembly **9** as illustrated.

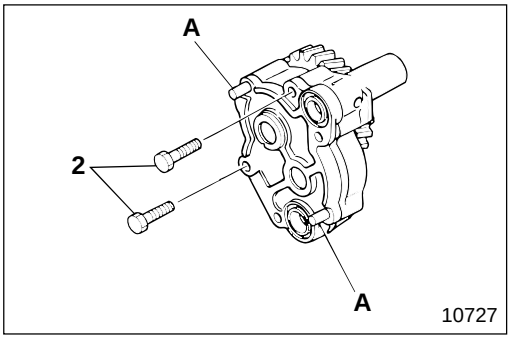

- Tighten the illustrated bolts **2** at specified torque.

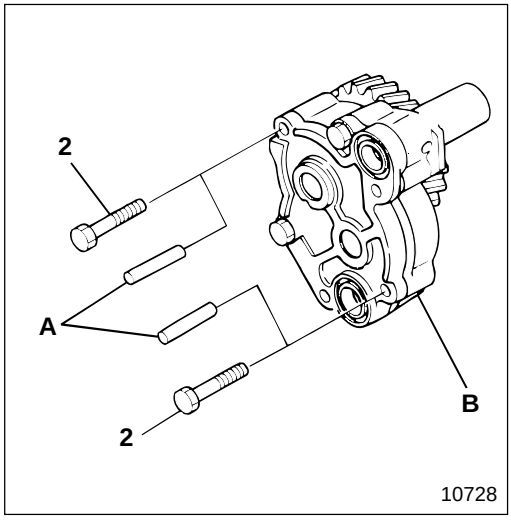

- Remove pins **A**, replacing them with bolts **2** and tighten at specified torque.

NOTE

Confirm smooth movement by rotating oil pump gear B by hand. If it catches, disassemble and reassemble it.

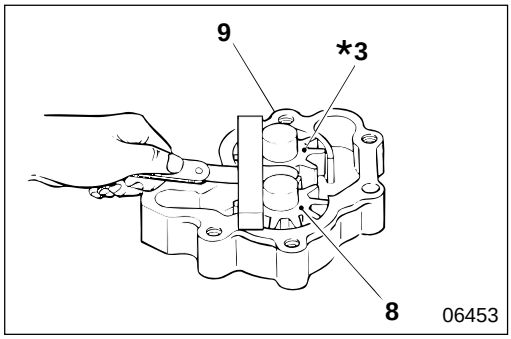

8 9 *3 Inspection of driven gear assembly, and oil pump case assembly

(1) Difference between height of each gear and depth of oil pump case

If the measured value is higher than the limit, replace the faulty parts.

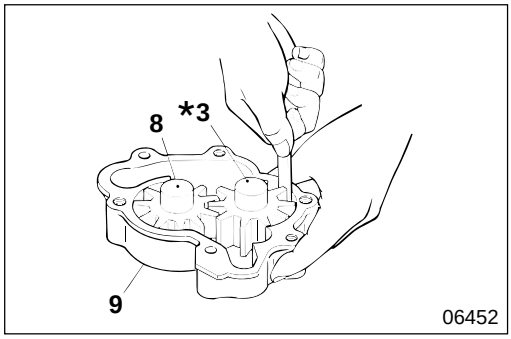

(2) Clearance between tooth tip and oil pump case

If the measured value is higher than the limit, replace the faulty parts.

M E M O

OIL COOLER AND OIL FILTER

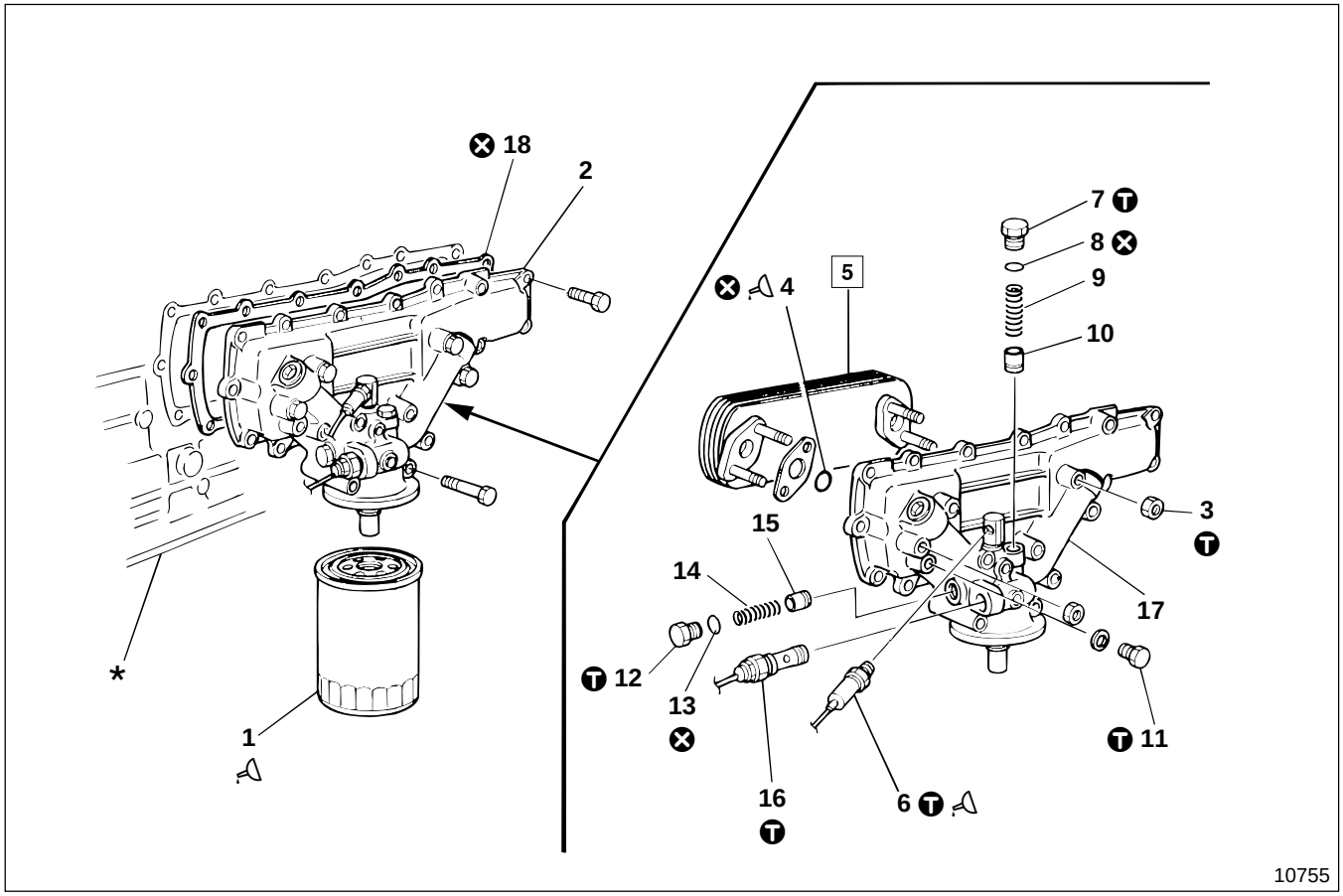

● **Disassembly sequence**

1 Oil filter P12-12
2 Oil cooler assembly
3 Nut
4 O-ring
5 Oil cooler element
6 Engine oil pressure switch Gr 54
7 Plug
8 O-ring
9 Spring
10 Regulator valve
11 Drain plug
12 Plug
13 O-ring
14 Spring
15 Bypass valve
16 Engine oil bypass alarm switch Gr 54
17 Oil cooler body
18 Gasket

* : Crankcase assembly Gr 11
⊗ : Non-reusable parts

● **Assembly sequence**

Follow the disassembly sequence in reverse.

Service standards

Location	Maintenance item	Standard value	Limit	Remedy
5	Oil cooler element air leakage (Air pressure 980 kPa {140 lbf/in^2, 10 kgf/cm^2}, 15 seconds)	0 cm^3 {0 cu. in.}	—	Replace
10	Regulator valve opening pressure	440±29 kPa {64±4.3 lbf/in^2, 4.5±0.3 kgf/cm^2}	—	Replace
15	Bypass valve opening pressure	390±29 kPa {57±4.3 lbf/in^2, 4.0±0.3 kgf/cm^2}	—	Replace
16	Engine oil bypass alarm switch	190+60/-0 kPa {27+8.3/-0 lbf/in^2, 1.9+0.6/-0 kgf/cm^2}	—	Replace

Tightening torque

Unit : N-m {lbf.ft, kgf-m}

Location	Parts to be tightened	Tightening torque	Remarks
3	Nut (oil cooler element mounting)	19.5±5 {14±3.6, 2.0±0.5}	—
6	Engine oil pressure switch	15 to 22 {11 to 16, 1.5 to 2.2}	When engine is cold
7	Plug (Regulator valve spring mounting)	19.5±5 {14±3.6, 2.0±0.5}	—
11	Drain plug (Oil cooler)	34 {25, 3.5}	—
12	Plug (Bypass valve spring mounting)	19.5±5 {14±3.6, 2.0±0.5}	—
16	Engine oil bypass alarm switch	12 to 18 {8.7 to 13, 1.2 to 1.8}	—

Lubricant and sealant

Location	Points of application	Kinds	Quantity
1	Gasket area of oil filter with thin application P12-12	Engine oil	As required
4	Body of O-ring	Engine oil	As required
6	Thread area of engine oil pressure switch	Teflon tape	3 1/2 turns

◆ Service procedure

● Cleaning

- Check and see if any carbon deposits or sludge have developed in the oil passage of oil cooler element **5** or its bypass. Clean any deposits off thoroughly with cleaning solvent.
- Also clean any water scale or fur found in oil cooler element **5** or oil cooler body **17**.

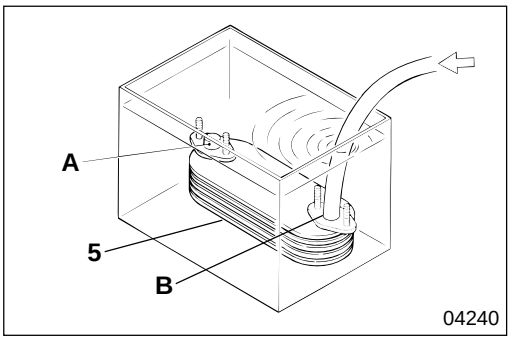

5 **Inspection of oil cooler element**

- Immerse oil cooler element **5** in a water tank after plugging exit port **A** and connecting the hose to engine oil entry port **B**.
- Apply air pressure of 980 kPa {140 lbf/in^2, 10 kgf/cm^2} via the hose and see if there is any air leakage from any part of oil cooler element **5**.
- If you see any leakage, replace oil cooler element **5**.

MITSUBISHI FUSO

FH

Service Manual

Group 13 - Fuel and Engine Control

Group 13 - 1999 Minor Changes

BACK HOME

MITSUBISHI FUSO TRUCK OF AMERICA, Inc.

Pub No. TWME9502-00

MITSUBISHI
FUSO

FH

Service Manual

Group 13
Fuel and Engine Control

'99 Minor Change

Table of Contents

MITSUBISHI FUSO TRUCK OF AMERICA, Inc.

BACK HOME

Pub No. TWME9502-313

GROUP 13 FUEL AND ENGINE CONTROL

SPECIFICATIONS ..... 13 - 2

STRUCTURE AND OPERATION ..... 13 - 4

TROUBLESHOOTING ..... 13 -34

READING AND ERASING DIAGNOSIS CODES ..... 13 -38

SERVICE PROCEDURES USING MUT-II ..... 13 -44

INSPECTION BASED ON DIAGNOSIS CODE ..... 13 -46

ON-VEHICLE INSPECTION AND ADJUSTMENT

- Checking and Adjusting Injection Timing ..... 13 -50
- Bleeding Air from Fuel System ..... 13 -51
- Cleaning Gauze Filter ..... 13 -51
- Replacing Fuel Filter ..... 13 -52

ENGINE CONTROL ..... 13 -53

FUEL TANK ..... 13 -58

FUEL FILTER ..... 13 -59

WATER SEPARATOR ..... 13 -60

INJECTION PUMP ..... 13 -62

INJECTION PUMP DRIVE CASE ..... 13 -68

INJECTION NOZZLE ..... 13 -72

INSPECTION OF OTHER DEVICES ..... 13 -76

ELECTRIC CIRCUIT AND PART INSTALLATION LOCATIONS ..... 13 -88

SPECIFICATIONS

Injection Pump

Item	Specifications
Manufacturer	ZEXEL
Body model	MD-TICS (Pre-stroke control type)
Governor type	RED-III electronically controlled governor
Feed pump model	KD
Automatic timer model	SPG mechanical type

Injection Nozzle

Item	Specifications
Manufacturer	ZEXEL
Model and type	DLLA hole type 1-spring nozzle
Nozzle orifice quantity	5
Orifice diameter mm {in.}	ϕ 0.23 {0.0091}

Fuel Filter Type

Item	Specifications
Filter type	Spin-on type

M E M O

Fuel System (Flow of Fuel)

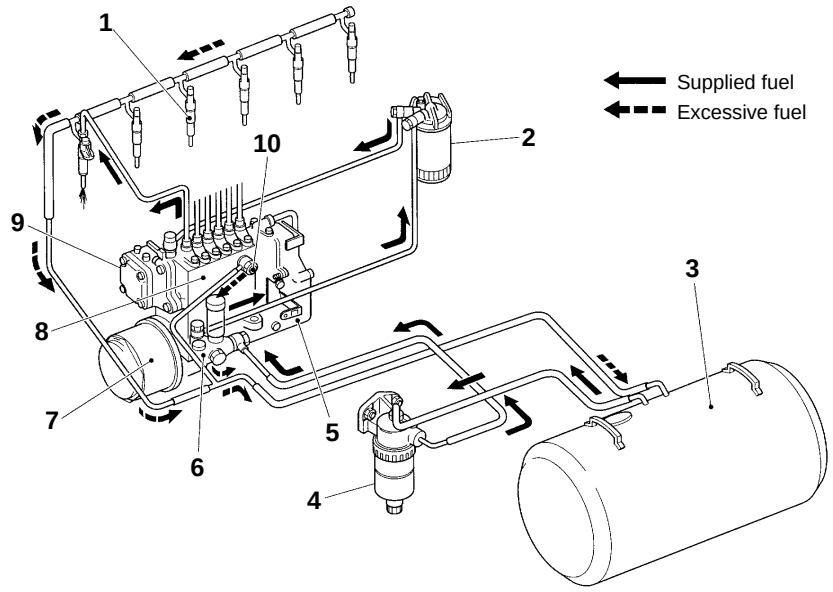

Ⓟ 31102

1 Injection nozzle
2 Fuel filter
3 Fuel tank
4 Water separator
5 Governor
6 Feed pump
7 Automatic timer
8 Injection pump
9 Pre-stroke actuator
10 Overflow valve

Fuel in fuel tank **3** is sucked up by feed pump **6** which is driven by the cam action of injection pump **8** and is filtered through fuel filter **2** which removes dirt and other foreign particles.
Filtered fuel is sent to the injection pump where the fuel pressure is boosted and injected through injection nozzle **1** into the combustion chamber.
When fuel pressure is higher than the specified value, overflow valve **10** opens to let the fuel return to the fuel tank.

Engine Control

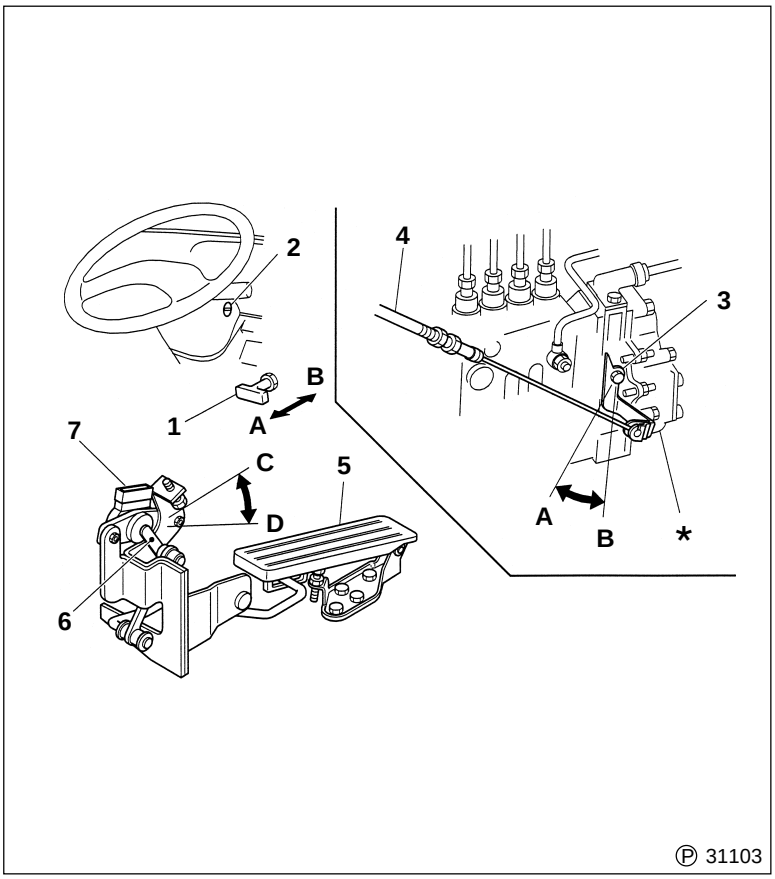

1 Emergency engine stop handle
2 Starter switch
3 Engine stop lever
4 Engine stop cable
5 Accelerator pedal assembly
6 Lever
7 Accelerator pedal position sensor

***** : Electronic governor

A : Engine-stop position
B : Engine start-up position
C : Full-load position
D : Idling position

● **Accelerator switch**

The accelerator switch is integrated in the accelerator pedal position sensor **7**. It detects the pressing of accelerator pedal assembly **5**.

● **Accelerator pedal position sensor**

Accelerator pedal position sensor **7** detects the movement of accelerator pedal assembly **5**, and sends an electric signal to the electronic governor control unit. Lever **6** of the accelerator pedal position sensor is constantly pulled by the return spring towards idle position **D**.

● **Emergency engine stop button**

In normal condition, turn starter switch **2** to the ACC position to electrically shut down the engine operation.
In the case the engine does not stop when the starter switch is turned to the ACC position due to malfunction of the electronic governor system or other cause, stop the engine by pulling emergency engine stop handle **1** to move stop lever **3** of electronic governor ***** to engine stop position **A**.

CAUTION ⚠

When the engine is stopped by pulling engine stop handle 1, set starter switch 2 to the ACC or LOCK position to reset the control unit computer.
Restarting the engine without resetting the computer results in unstable engine speed control.

Fuel Gauge Electric Circuit

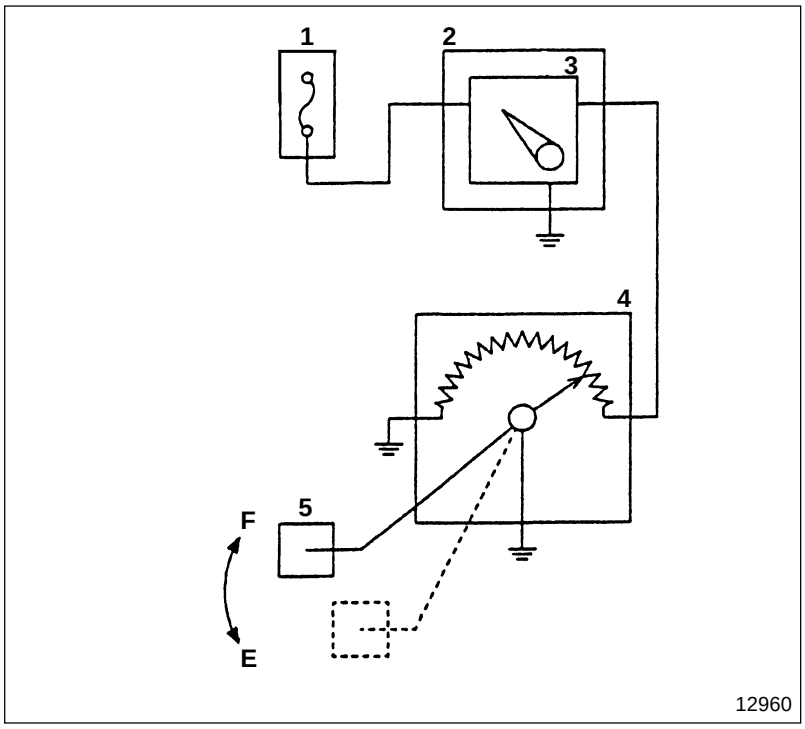

1 Fuse box
2 Meter cluster
3 Fuel gauge
4 Fuel gauge sending unit
5 Float

The fuel gauge circuit indicates the amount of fuel remaining in the fuel tank by means of a gauge.

Water Separator

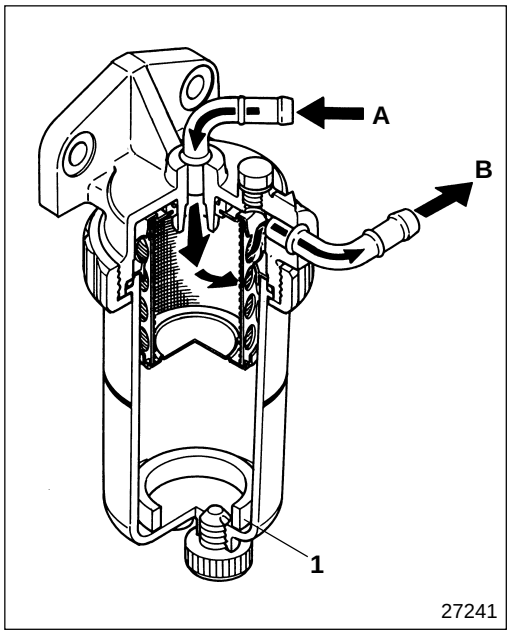

1 Water level ring

A : From fuel tank
B : To feed pump

The water separator is installed between the fuel tank and the feed pump. Any water present in the fuel is separated by the baffle plate and the screen assembly.

Fuel Filter

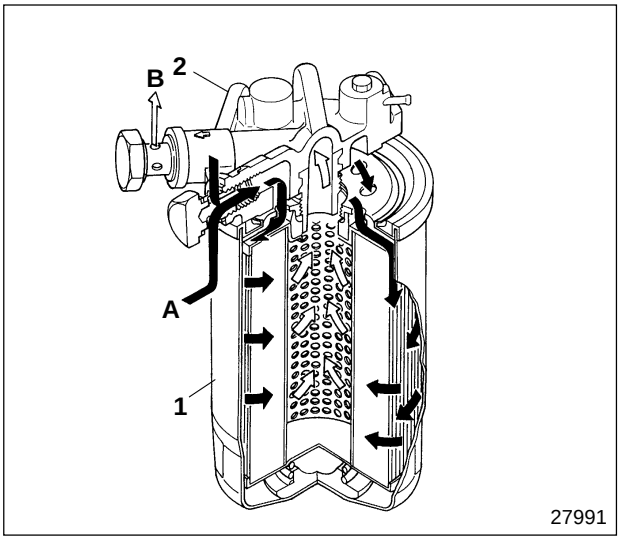

1 Fuel filter
2 Fuel filter head

A : From feed pump
B : To injection pump

Pressurized fuel is delivered from the feed pump of the injection pump to the fuel filter which separates water from the fuel. Dirt and other foreign particles are removed from the fuel by fuel filter **1**.

Configuration of Electronic Governor and Pre-stroke Control Injection Pump System

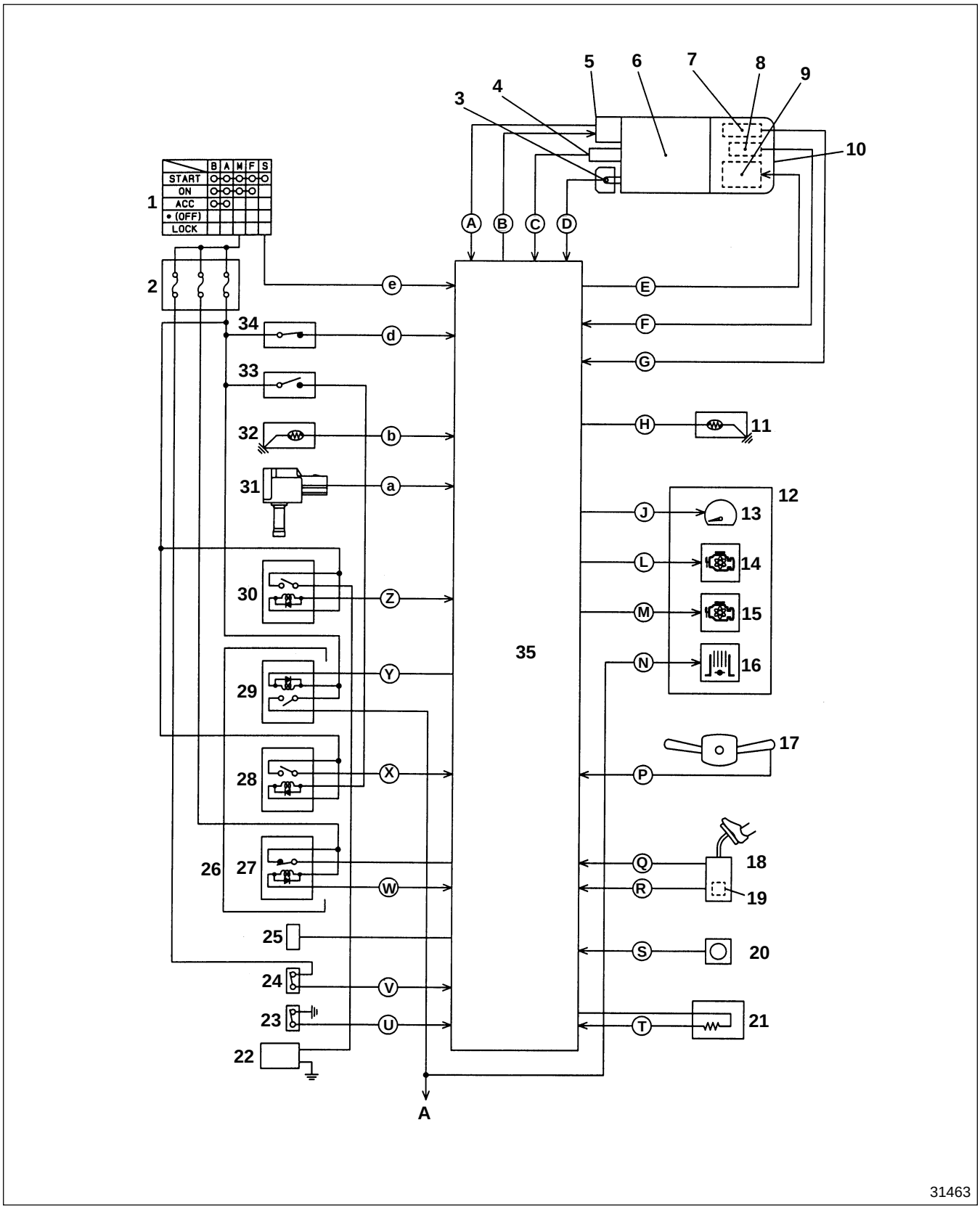

A : To exhaust brake 3-way magnetic valve Gr 54

Part		Main function/operation	Data signal
1	Starter switch	Sensing of start signal	ⓔ : Start signal
2	Fuse box	—	—
3	Engine speed sensor	Sensing of engine speed	Ⓓ : Engine speed signal
4	Sub control rack position sensor	Sensing of control rack position	Ⓒ : Control rack position signal (backup)
5	Pre-stroke actuator • Pre-stroke position sensor • Drive unit	— —	Ⓐ : Pre-stroke position signal Ⓑ : Actuator drive signal
6	Pre-stroke control type injection pump	Alteration of pre-stroke (advancement of fuel injection timing)	—
7	Control rack position sensor	Sensing of control rack position	Ⓖ : Control rack position signal
8	Backup engine speed sensor	Sensing of engine speed	Ⓕ : Engine speed signal (backup)
9	Linear DC motor	Activation of rack	Ⓔ : Linear DC motor drive signal
10	Electronic governor	—	—
11	Boost temperature sensor	Detection of engine intake air temperature	Ⓗ : Boost temperature signal
12	Meter cluster	—	—
13	Tachometer	—	Ⓙ : Tachometer drive signal
14	Warning lamp (Orange)	Indication of system faults and diagnosis codes	Ⓛ : Lamp illumination signal
15	Warning lamp (Red)		Ⓜ : Lamp illumination signal
16	Indicator lamp	—	Ⓝ : Lamp illumination signal
17	Auxiliary brake switch	ON/OFF switching of Exhaust brake	Ⓟ : Exhaust brake ON signal
18	Accelerator pedal position sensor	Sensing of accelerator pedal depression amount	Ⓠ : Accelerator pedal position signal
19	Accelerator pedal switch	Turns OFF when accelerator pedal is depressed	Ⓡ : Accelerator pedal depression signal
20	Idling speed adjustment potentiometer	Shortening of warmup time	Ⓢ : Warmup time shortening signal
21	Fuel injection rate adjustment resistor	Correction of fuel injection rate	Ⓣ : Injection volume correction signal
22	Modulator	—	—
23	Diagnosis switch	Generation of diagnosis codes	Ⓤ : Diagnosis code signal
24	Memory clear switch	Eraser of diagnosis codes	Ⓥ : Diagnosis code eraser signal
25	MUT-II connector (16 pin)	Connection of MUT-II	—
26	Relay box	—	—
27	Pre-stroke cut relay	Closes contacts upon plunger pre-stroke operation	Ⓦ : Pre-stroke operation signal
28	Transmission neutral relay	Contact closed when transmission is in neutral	Ⓧ : Transmission neutral signal
29	Exhaust brake relay	Closes contacts upon exhaust brake operation	Ⓨ : Exhaust brake operation signal
30	Accelerator relay	Contact closed when modulator is activated	Ⓩ : Modulator operation signal
31	Boost pressure sensor	Sensing of boost pressure	ⓐ : Boost pressure signal
32	Coolant temperature sensor	Sensing of engine coolant temperature	ⓑ : Coolant temperature signal
33	Transmission neutral switch	Turns OFF when transmission neutral is selected	—
34	Clutch pedal switch	Turns OFF when clutch pedal is depressed	ⓓ : Clutch pedal depression signal
35	Electronic governor control unit	Control of overall system	—

- The electronic governor and pre-stroke control injection pump system combines an electronic governor **10** with an injection pump **6** that has an electronically controlled pre-stroke adjustment feature.
- The injection pump's plunger lift speed varies in accordance with the engine speed, causing concomitant variations in the injection pipe pressure.
- Variations in the injection pipe pressure make it difficult to achieve an optimum spray from the injection nozzles and the optimum air/fuel mixture.
- To compensate for changes in the injection pipe pressure, the injection pump plunger pre-stroke is increased at low and mid- range speeds, thus ensuring that fuel injection takes place late in the cam lift, when plunger movement is relatively fast.
- At high speeds, the plunger pre-stroke is decreased, thus ensuring that fuel injection takes place in early in the cam lift, when plunger movement is relatively slow. Excessive increases in injection pipe pressure are thus prevented.
- By adjusting the plunger pre-stroke in this manner, the pre-stroke control injection pump **6** ensures that the spray and air/ fuel mixture are always optimally suited to combustion.
- The overall benefits are higher engine torque and cleaner exhaust emissions than are possible with a conventional injection pump.
- Control operations are performed by the electronic governor control unit **35**, which receives data from sensors on the engine and other vehicle components, processes them, and issues appropriate drive signals to the pre-stroke actuator **5** (located at the rear of the injection pump) and to the linear DC motor **9** (located inside the electronic governor).

The system's control functions (including auxiliary functions) are shown in the following table.

Item	Operation	Data source	
		Sensor(s)	Data signal(s)
Fuel injection rate control	The fuel injection rate is optimized to match engine operating conditions. P13-12	3, 7, 18, 19, 21, 31	Ⓓ, Ⓖ, Ⓠ, Ⓡ, Ⓣ, ⓐ
Pre-stroke control	The timing sleeve position is altered, thereby changing the pre-stroke and advancing the fuel injection timing. P13-13	3, 5, 7, 18, 32	Ⓓ, Ⓐ, Ⓑ, Ⓖ, Ⓠ, ⓑ
* Control rack preliminary operation	In cold weather and other conditions that are unfavorable for engine startup, the control rod is caused to move slightly in the fuel increase direction, thus enhancing startability. This operation takes place when the starter switch is turned ON.	1, 18, 19, 32	ⓔ, Ⓠ, Ⓡ, ⓑ
* Warmup time shortening function	In cold weather, the engine's idling speed is increased to shorten the time required for warmup. P13-14	18, 19, 20	Ⓠ, Ⓡ, Ⓢ
* Overrun prevention function	In the event of an abnormal increase in engine speed, the control rack is pulled in the fuel decrease direction to prevent the engine from overrunning.	3	Ⓓ
* Emergency vehicle operation function (used in event of control rack position sensor fault)	In the event of a fault in the control rack position sensor **7**, the control rack position is sensed by the sub control rack position sensor **4**. If both rack position sensors develop faults, thus preventing detection of the rack position and optimization of the fuel injection rate, the fuel injection rate is controlled in accordance with engine speed signals only. P13-16	3, 4, 7	Ⓓ, Ⓒ, Ⓖ
* Auxiliary brake control function	The auxiliary braking devices (exhaust brake) are controlled by the electronic governor control unit **35**. (In a conventional system, the auxiliary braking devices are controlled by switches, relays, and dedicated controllers.) P13-17	3, 16, 18, 19, 28, 33, 34	Ⓓ, Ⓝ, Ⓠ, Ⓡ, Ⓧ, ⓓ
* Fault diagnosis function	The status of each system sensor is monitored continuously during engine operation. In the event of a fault, a warning lamp is illuminated to alert the driver and data related to the fault are stored in memory. P13-36	ALL	ALL
* Fail-safe function	In the event of a fault, a backup mode is selected and remedial action is taken in accordance with the type of fault. P13-40	ALL	ALL
* Reverse engine operation prevention function	In the event of reverse engine operation, the control rack is pulled in the fuel decrease direction to stop the engine	3	Ⓓ

* : Auxiliary function

System Block Diagram

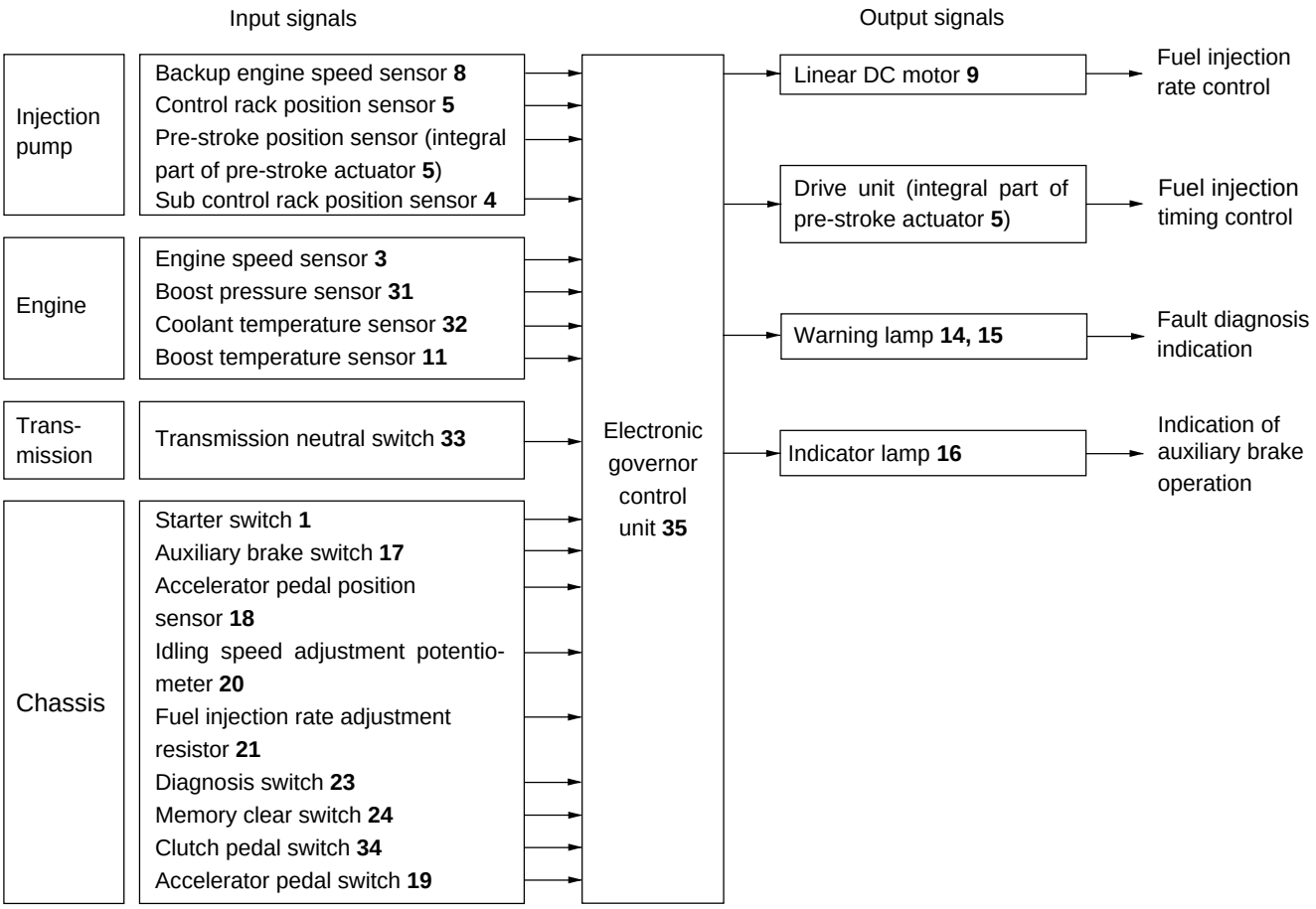

● Fuel Injection Rate Control

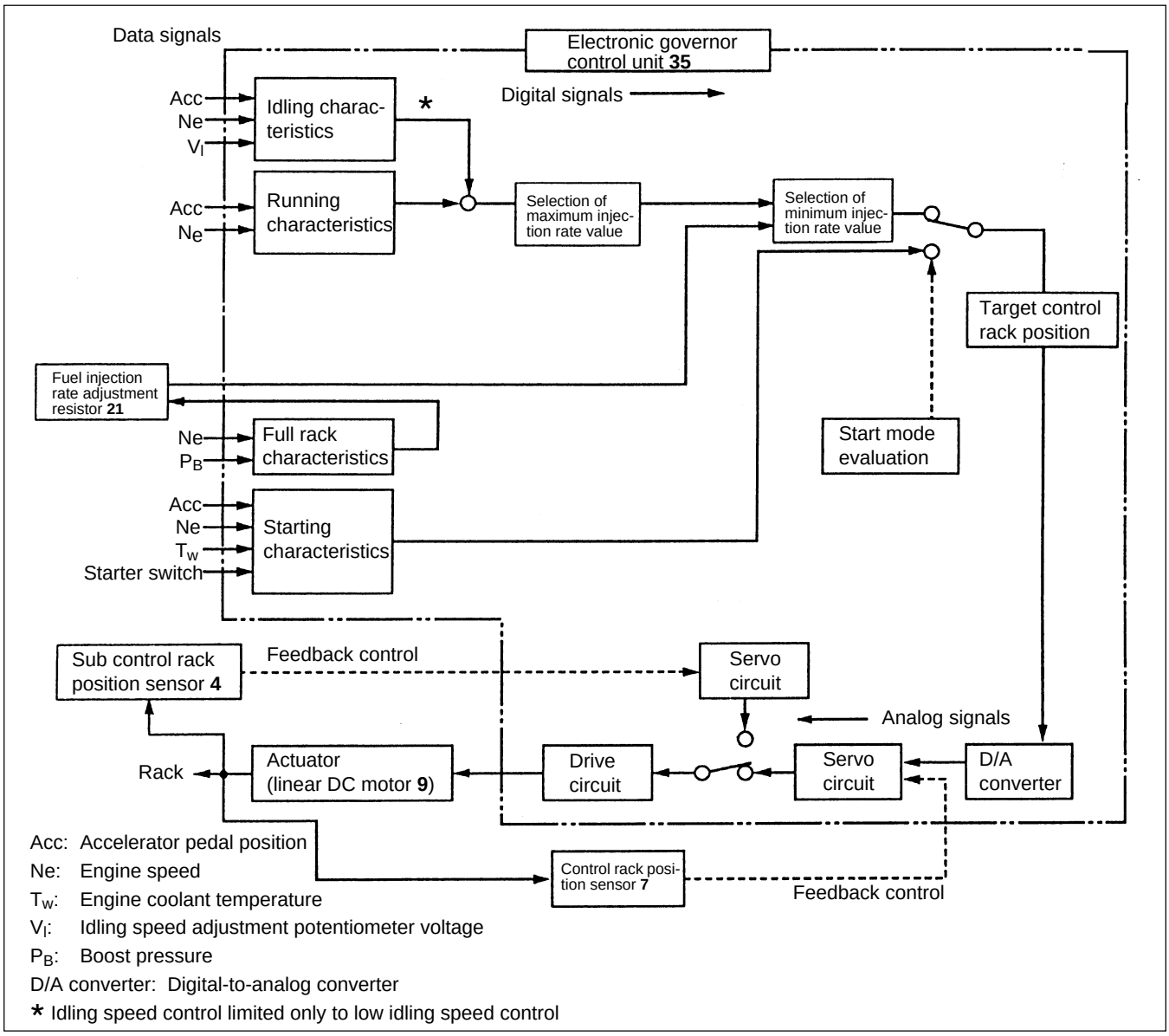

Operation of electronic governor control unit 35

- During engine operation, control is effected in accordance with the idling characteristics and running characteristics. The maximum fuel injection rate value is selected in accordance with the output signals.
- After this selection, the control unit calculates and determines the minimum injection rate to prevent the injection rate selected in accordance with the full rack characteristics from exceeding the maximum injection rate. The target control rack position is thus determined. (During engine startup, control is effected in accordance with the starting characteristics with the target rack position determined directly in accordance with the data signals.)
- The determined control rack position signal is converted into a continuous analog signal. By way of the servo circuit and drive circuit, the signal is applied to the linear DC motor **9**, which moves the rack.

Operation of control rack position sensor 7

- The control rack position sensor **7** monitors the operation of the linear DC motor **9**. In accordance with the position of the control rack, the sensor determines whether the linear DC motor is operating in accordance with the target, and it transmits feedback signals to the electronic governor control unit **35**.
- In accordance with the feedback signals, the electronic governor control unit **35** calculates the actual control rack position. If the actual position differs from the target, the control unit issues a correction command.
- Through repetition of this process, the system ensures that the control rack position complies with the target at all times.

● Pre-stroke control

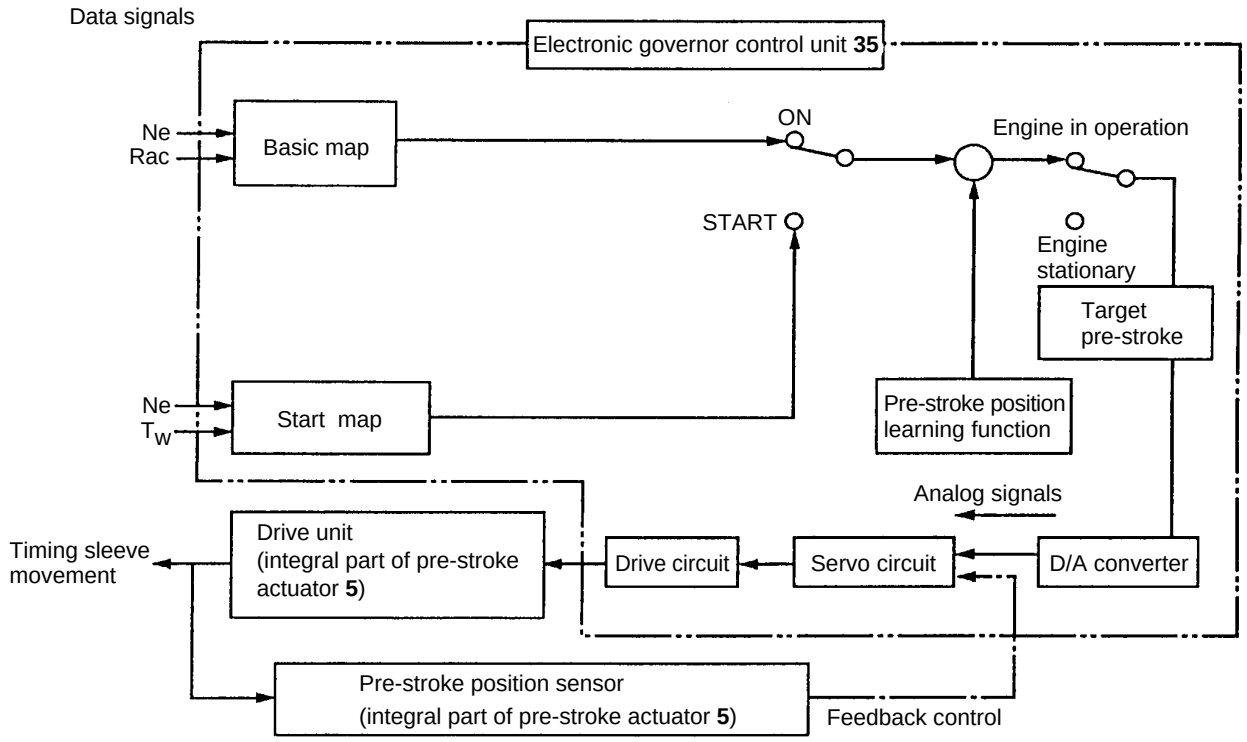

Rac: Control rack position
Ne: Engine speed
T_W: Engine coolant temperature
D/A converter: Digital-to-analog converter

Operation of electronic governor control unit 35

- During engine operation, control is effected in accordance with the basic map.
- The pre-stroke position learning function compensates for pre-stroke position sensor adjustment errors and other injection pump errors using the pre-stroke position sensor output voltage, thereby enabling determination of the target pre-stroke.
- The determined target pre-stroke value is converted into a continuous analog signal. By way of the servo circuit and drive circuit, the signal is applied to the drive unit. The drive unit moves the timing sleeve to alter the pre-stroke.
- During engine startup, control is effected in accordance with the start map.

Operation of pre-stroke position sensor (integral part of pre-stroke actuator 5)

- The pre-stroke position sensor monitors the operation of the drive unit. In accordance with the position of the timing sleeve, the sensor determines whether pre-stroke control is being performed in accordance with the target, and it transmits feedback signals to the electronic governor control unit **35**.
- In accordance with the feedback signals, the electronic governor control unit **35** calculates the actual timing sleeve position. If the actual position differs from the target, the control unit issues a correction command.
- Through repetition of this process, the system ensures that the timing sleeve position complies with the target at all times. The appropriate pre-stroke is achieved as a result.

● Warmup time shortening function

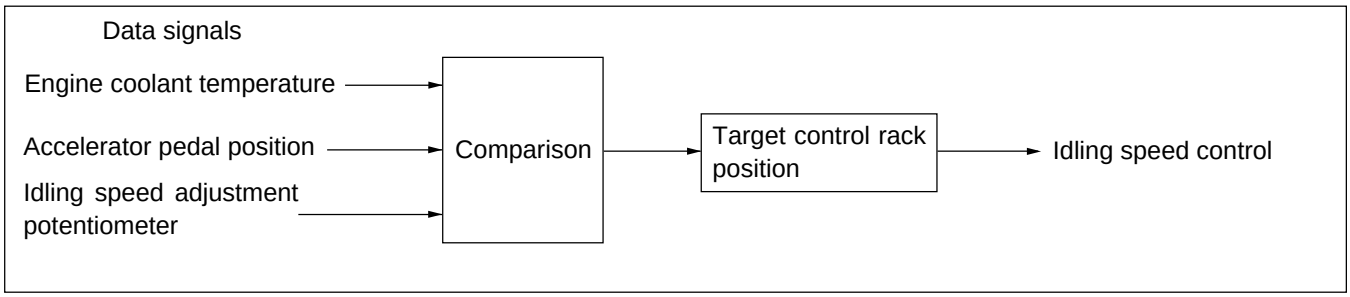

The warmup time shortening function increases the engine's idling speed in accordance with the coolant temperature, thereby shortening the time required for the engine to warm up. Control is effected automatically or manually in accordance with the position of the idling speed adjustment potentiometer **20**. Automatic control is selected by pushing the potentiometer, and manual control is selected by pulling it.

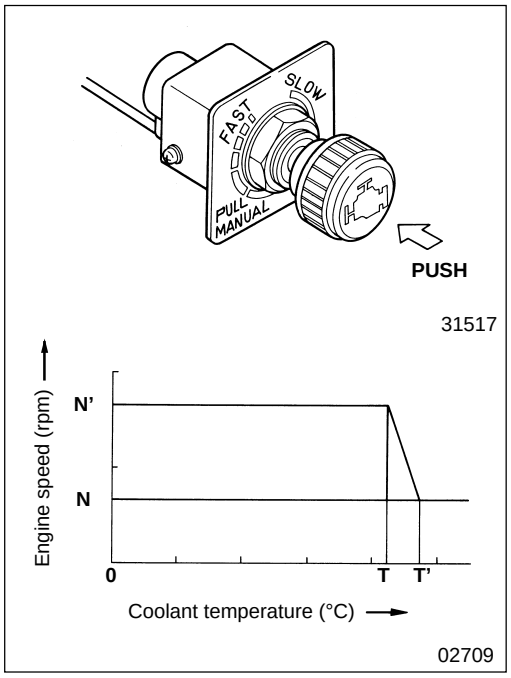

Automatic control (Potentiometer pushed)

- Automatic control is selected when the idling speed adjustment potentiometer **20** is pushed.
- When the coolant temperature is low, the engine's idling speed is automatically increased to shorten the time required for warmup.
- If the coolant temperature increases from **T** to **T'** (see the graph), the engine speed is decreased from **N'** to **N**, thus returning to its standard idling level.

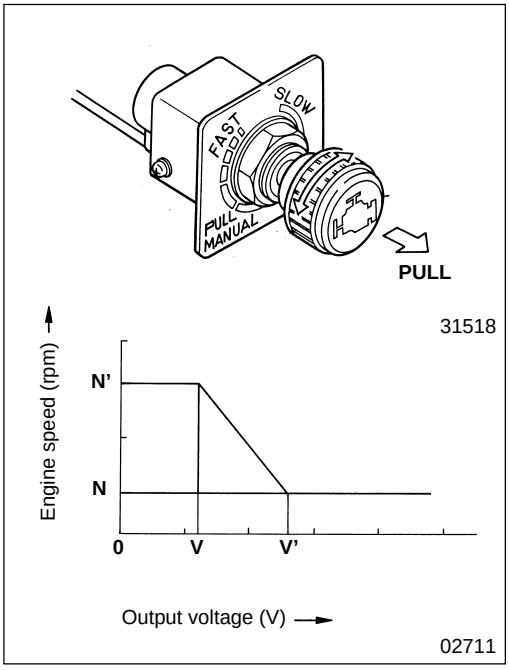

Manual control (Potentiometer pulled)

- When the idling speed adjustment potentiometer **20** is pulled, the automatic mechanism is deselected. The driver can then adjust the idling speed as desired by rotating the potentiometer. (Rotation of the potentiometer causes the potentiometer's output voltage to change accordingly.)
- With the output voltage between **0** and **V**, the engine speed stays at the **N** to **N'** level.
- If the output voltage is increased from **V** to **V'** (see the graph), the engine speed decreases from **N'** until it reaches its standard idling level **N**.

● Emergency vehicle operation function (Used of event in control rack position sensor fault)

Fault in Control rack position sensor 7

In the event of a fault in the control rack position sensor **7**, detection of the control rack position is performed using the sub control rack position sensor **4**. This enables more-or-less normal vehicle operation.

Fault in control rack position sensor 7 and sub control rack position sensor 4

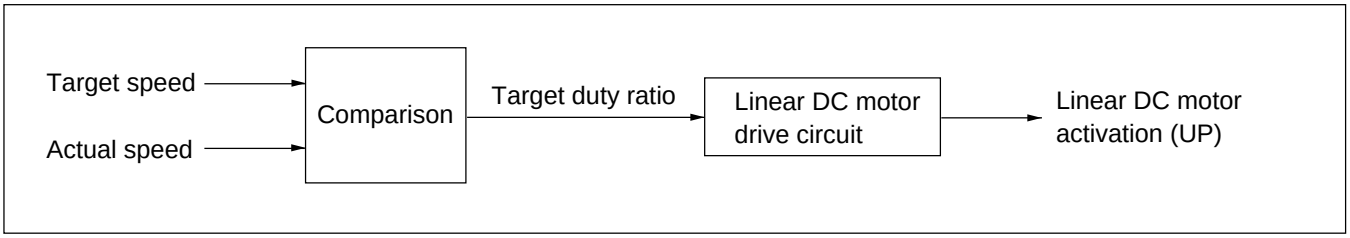

In the event of faults in both the control rack position sensor **7** and sub control rack position sensor **4**, the position of the rack, which is controlled by the linear DC motor **9**, cannot be sensed directly. The fuel injection rate cannot be controlled normally with the engine in this condition. As an emergency measure, therefore, control operations are performed in accordance with engine speed data signals only. For this function, target engine speeds for given degrees of accelerator pedal depression are pre-programmed into the electronic governor control unit **35**. Control is effected as follows:

- The target engine speed is compared with the actual engine speed (this is indicated by the engine speed sensor **3**).
- The target duty ratio is determined in accordance with the result of the comparison. In accordance with the target duty ratio, a drive signal is transmitted to the UP-side (speed increasing side) circuit to effect control over the engine speed. If the target engine speed exceeds the actual engine speed or vice versa, the UP-side circuit's ON time period is altered such that the target engine speed is maintained.

The target duty ratio is the ratio of the time periods during which the linear DC motor's UP-side and DOWN-side (speed decreasing side) circuits are energized. It is calculated as follows:

$$\text{Duty ratio} = \frac{\text{UP-side circuit ON time period}}{\text{UP-side circuit ON time period + DOWN-side circuit ON time period}} \times 100\%$$

CAUTION ⚠

When this function is activated, the warning lamp 14, 15 flashes to indicate that the engine must be inspected immediately. 🕮 **P13-36**

● Auxiliary brake control function

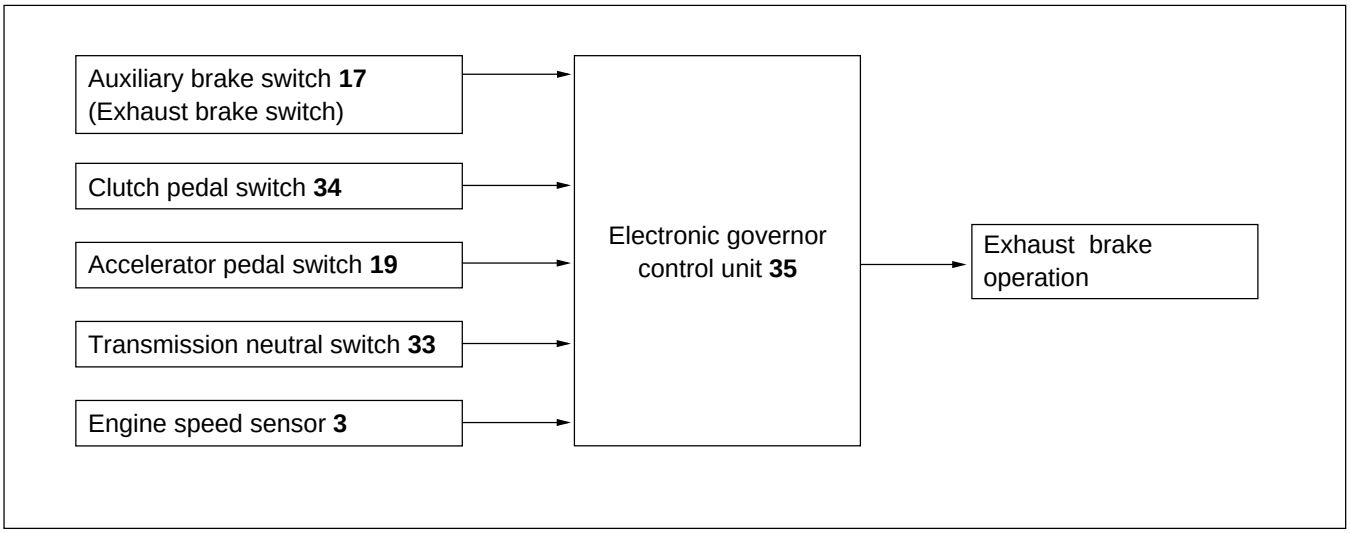

The auxiliary brake control function acts upon the auxiliary braking devices, i.e., the exhaust brake, when the following conditions are satisfied:

- Clutch pedal switch **34**: OFF (clutch pedal released)
- Accelerator pedal switch **19**: ON (accelerator pedal released)
- Transmission neutral switch **33**: ON (transmission not in neutral)

Electronic Governor Control Unit

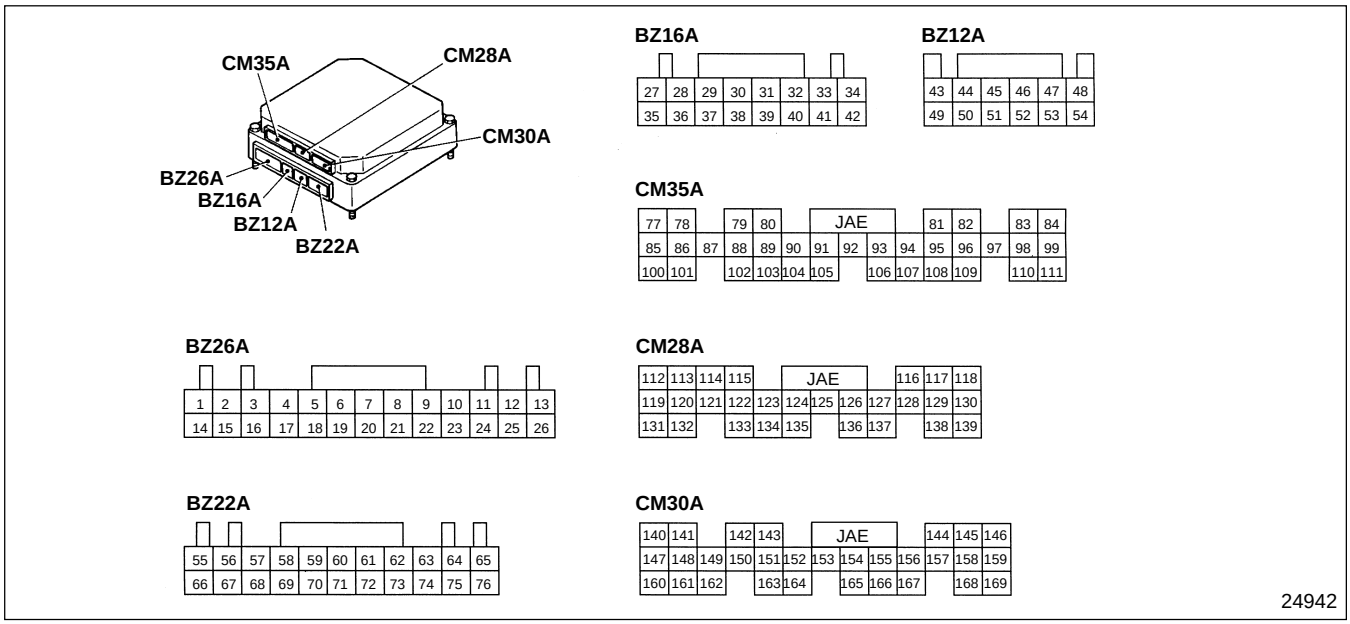

24942

Connector	Terminal	Connected to	
BZ 26A	1	Linear DC motor	⊕
	2		⊖
	3	—	
	4		
	5	Warning lamp	(Red)
	6		(Orange)
	7	DDS-3 (CLK)	
	8	—	
	9		
	10	Memory clear switch	
	11	Diagnosis switch	
	12	Control unit power supply (starter switch terminal M)	
	13	Control unit GND (analog GND)	
	14	Linear DC motor	⊕
	15		⊖
	16	—	
	17		
	18		
BZ 26A	19	Pre-stroke cut relay	
	20	DDS-3	(DATA)
	21		(STB)
	22	—	
	23	Start signal	
	24	—	
	25	Control unit power supply (starter switch terminal M)	
	26	Control unit GND	
BZ 16A	27	—	
	28		
	29		
	30	Idling speed adjustment potentiometer (SIG)	
	31	Accelerator pedal position sensor II (SIG)	
	32	Boost temperature sensor (SIG)	
	33	Accelerator pedal switch	
	34	—	
	35	Idling speed adjustment potentiometer (+5V)	
	36	—	
BZ 16A	37	—	
	38	Idling speed adjustment potentiometer (GND)	
	39	Accelerator pedal position sensor II (GND)	
	40	—	
	41		
	42		
BZ 12A	43	Boost pressure sensor (SIG)	
	44	Accelerator pedal position sensor I	(SIG)
	45		(+5V)
	46	Engine speed sensor (SIG)	
	47	Backup engine speed sensor (SIG)	
	48	—	
	49	Boost pressure sensor (GND)	
	50	Accelerator pedal position sensor I (GND)	
	51	Boost pressure sensor (+5V)	
	52	Engine speed sensor (GND)	
	53	Backup engine speed sensor (GND)	
	54	—	

Connector	Terminal	Connected to	
BZ 22A	55	—	
	56		
	57	Control rack position sensor	(OSC)
	58		(MDL)
	59		(GND)
	60		(SHIELD)
	61	—	
	62	Pre-stroke position sensor	(OSC)
	63		(MDL)
	64	Pre-stroke actuator ⊖	
	65	Pre-stroke cut relay (+24V)	
	66	Control unit GND	
	67	—	
	68	Control rack position sensor	(OSC)
	69		(MDL)
	70		(GND)
	71		(SHIELD)
	72	—	
	73	Pre-stroke position sensor	(GND)
	74		(SHIELD)
	75	Pre-stroke actuator ⊕	
	76	Pre-stroke power supply (GND)	
CM 35A	77	—	
	78		
	79		
	80		
	81		
	82		
	83		
	84		
	85	Exhaust brake relay	
	86		
	87	—	
	88		
	89		
	90		
	91		
	92		
	93		

Connector	Terminal	Connected to	
CM 35A	94	—	
	95		
	96		
	97		
	98	MUT-II (K-line)	
	99	—	
	100	Control unit GND (power GND)	
	101		
	102	—	
	103		
	104		
	105	Sub control rack position sensor	(OSC)
	106		(MDL)
	107		(GND)
	108		(SHIELD)
	109	—	
	110		
	111		
CM 28A	112	—	
	113	Exhaust brake switch	
	114	—	
	115		
	116		
	117		
	118		
	119	Fuel injection rate adjustment resistor (SIG)	
	120	—	
	121		
	122		
	123		
	124		
	125	Coolant temperature sensor (SIG)	
	126	—	
	127		
	128		
	129	Accelerator relay	
	130	—	
	131		

Connector	Terminal	Connected to	
CM 28A	132	Tachometer output	(SIG)
	133		(SIG)
	134	—	
	135		
	136	Tachometer output	(GND)
	137		(GND)
	138	—	
	139		
CM 30A	140		
	141		
	142		
	143	Accelerator pedal position sensor II (+5V)	
	144	Fuel injection rate adjustment resistor (GND)	
	145	—	
	146		
	147		
	148		
	149		
	150		
	151		
	152		
	153		
	154	Transmission neutral relay	
	155	—	
	156		
	157	Clutch pedal switch	
	158	—	
	159		
	160		
	161		
	162		
	163		
	164		
	165		
	166		
	167	Idle up prohibit switch	
	168	—	
	169		

Electronic governor control unit

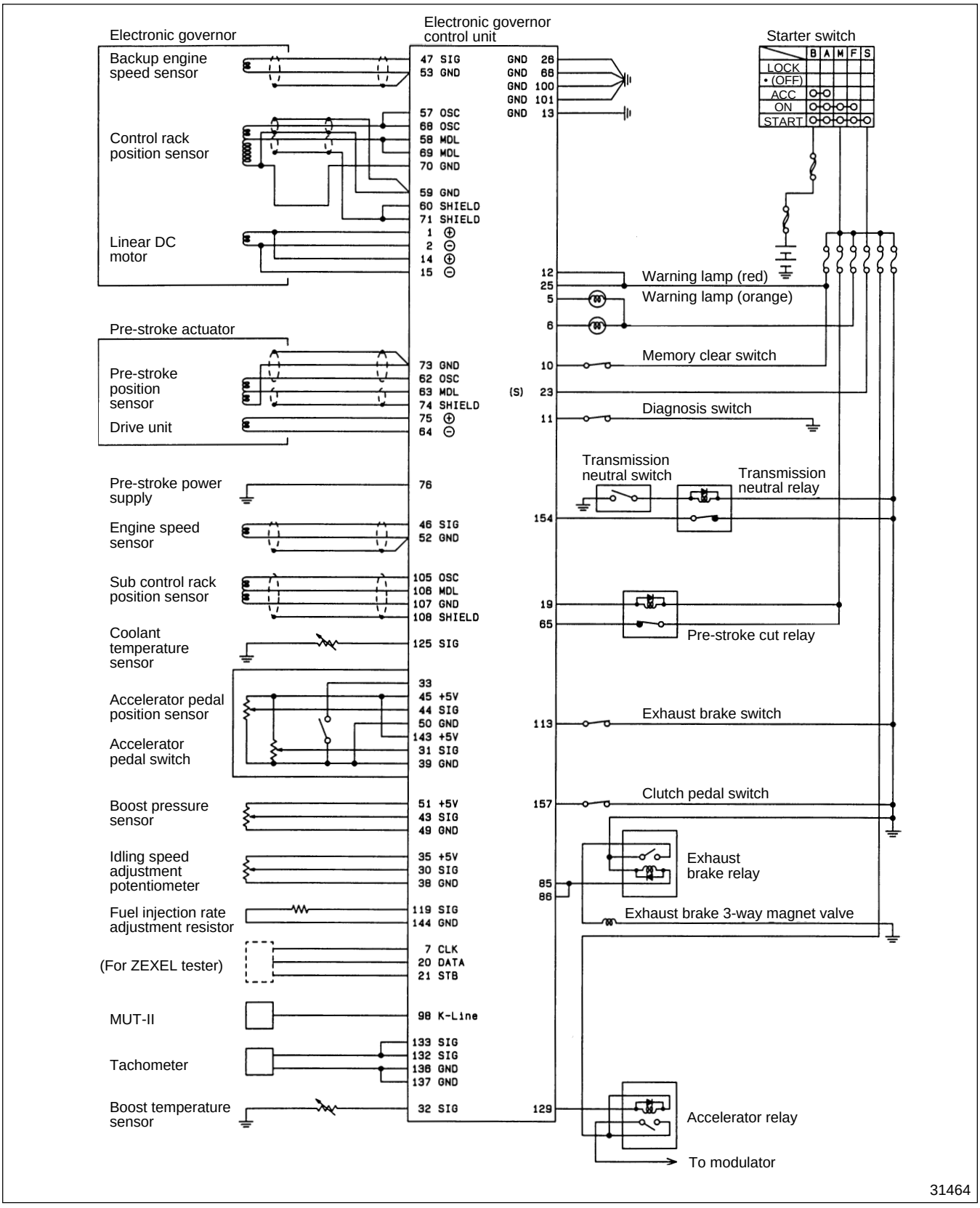

Engine speed sensor

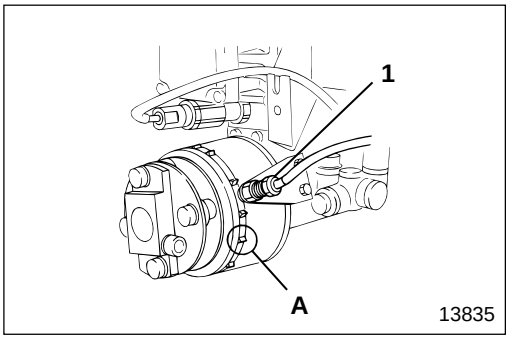

- The engine speed sensor **1** is a pickup type. It converts the rotation speed of a injection pump into electric signals.
- Signals generated by the engine speed sensor are fed to the electronic governor control unit which uses them as correction values in its calculation of the target pre-stroke position.

A : Timer housing protrusion

Coolant temperature sensor

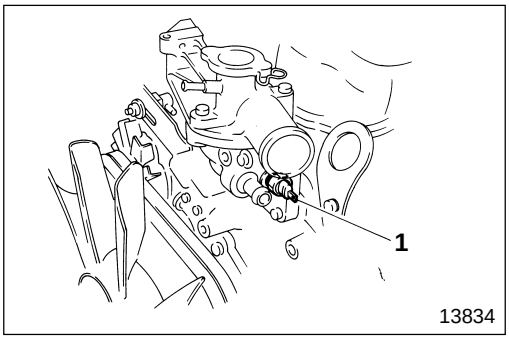

- The coolant temperature sensor **1** is a thermistor type. It converts the engine coolant temperature into electric signals.
- Signals generated by the coolant temperature sensor are fed to the electronic governor control unit which uses them as correction values in its calculation of the target rack position.

Sub control rack position sensor

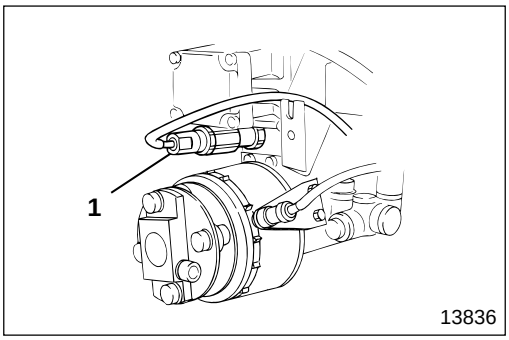

- The sub control rack position sensor **1** provides backup detection of the control rack position in the event of a fault in the control rack position sensor.
- The sub control rack position sensor **1** converts the degree of control rack movement into electric signals.
- Signals generated by the sub control rack position sensor are fed to the electronic governor control unit which uses them as correction values in its calculation of the target rack position.

Boost pressure sensor

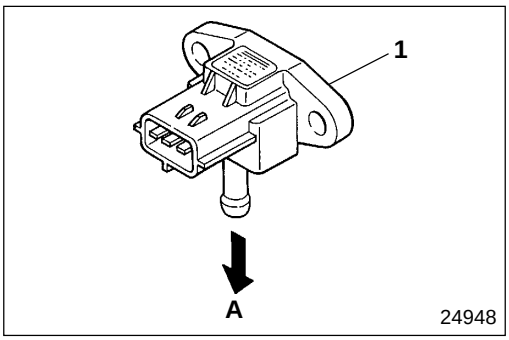

The boost pressure sensor **1** feeds boost pressure information to the electronic governor control unit. During turbocharged engine operation, it enables the full rack signal (maximum fuel injection rate value) characteristics to be selected by the control unit in accordance with the engine speed.

A : To intake manifold

Boost Air temperature sensor

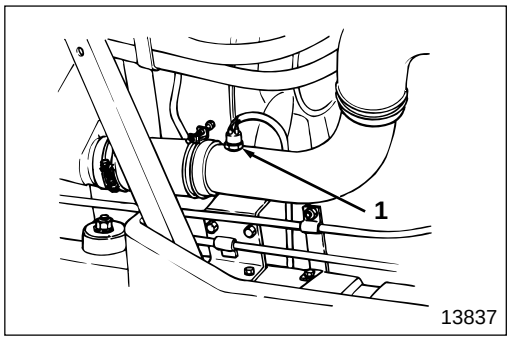

- Boost air temperature sensor **1** is a thermistor type that converts the intake air temperature, immediately after its passage through the intercooler, into an electric signal.
- This electric signal is transmitted to the pre-stroke control unit as the boost air temperature signal, which is used as the correction value by the electronic governor control unit to determine the desired pre-stroke position value.

Accelerator pedal position sensor and accelerator pedal switch

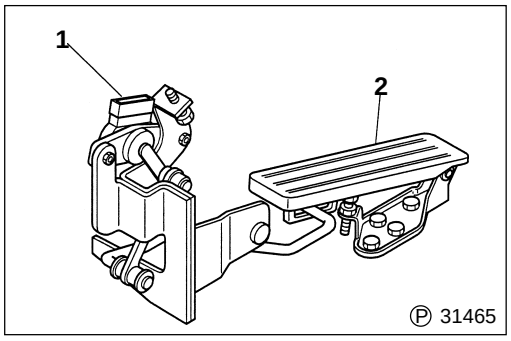

- The accelerator pedal position sensor **1** provides the electronic governor control unit with information on the degree to which the accelerator pedal **2** is depressed.
- The accelerator pedal switch detects whether the accelerator pedal is currently depressed or released.
  Accelerator switch is integrated in accelerator pedal position sensor **1**.

Pre-stroke position sensor

P13-13

Idling speed adjustment potentiometer

P13-14

Linear DC motor

P13-28

Control rack position sensor

P13-28

Backup engine speed sensor

P13-29

Pre-stroke Control Injection Pump Unit

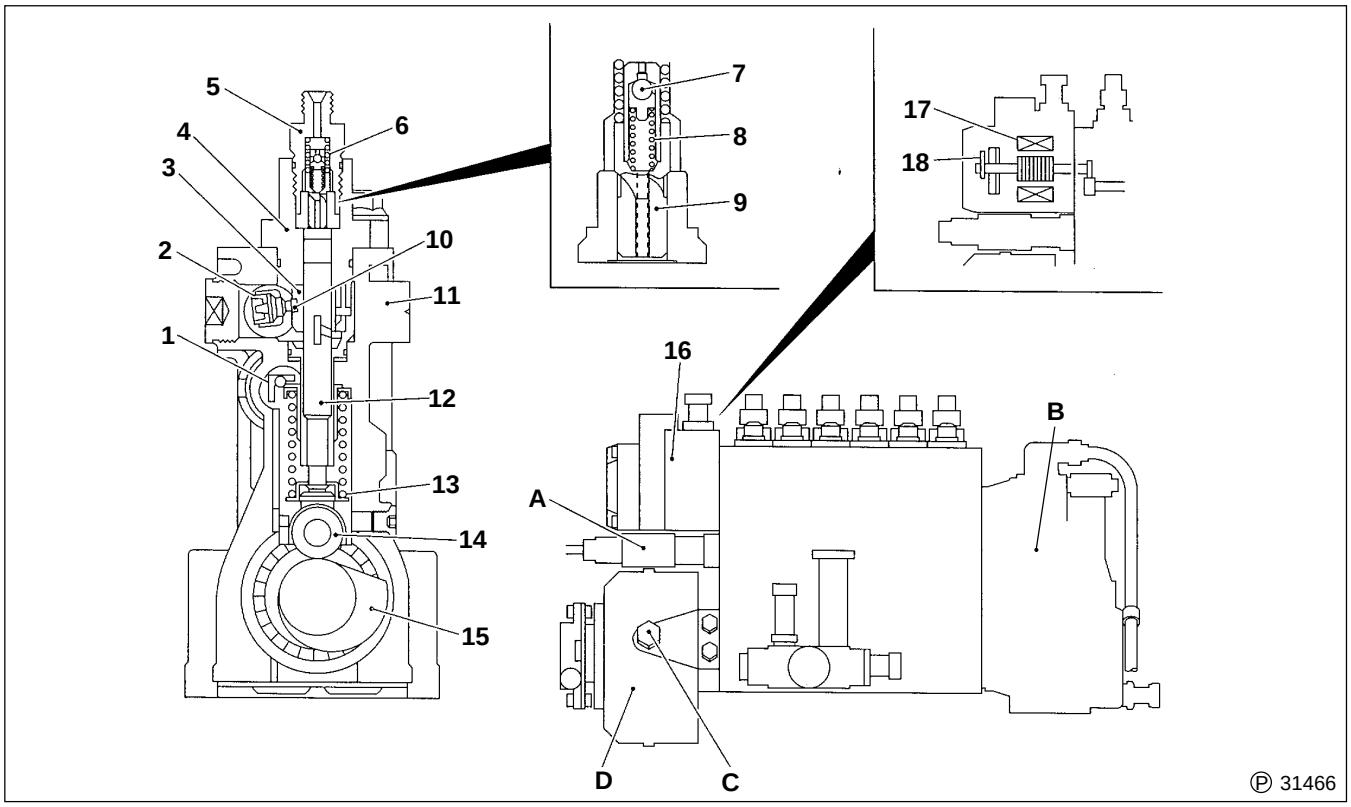

1 Control rod
2 Timing rod
3 Timing sleeve
4 Plunger barrel
5 Delivery valve holder
6 Delivery valve spring
7 Ball
8 Spring
9 Delivery valve
10 Pin
11 Pump housing
12 Plunger
13 Plunger spring
14 Tappet
15 Camshaft
16 Pre-stroke actuator
17 Drive unit
18 Pre-stroke position sensor

A : Sub-control rod position sensor
B : Electronic governor
C : Engine speed sensor
D : Mechanical timer

- The injection pump is provided with a mechanism that enables variation of the plunger pre-stroke.
- Variation of the plunger pre-stroke enables the creation of air/fuel mixture and spray conditions that are optimally suited to combustion. The overall benefits are higher engine torque and cleaner exhaust emissions than are possible with a conventional injection pump.

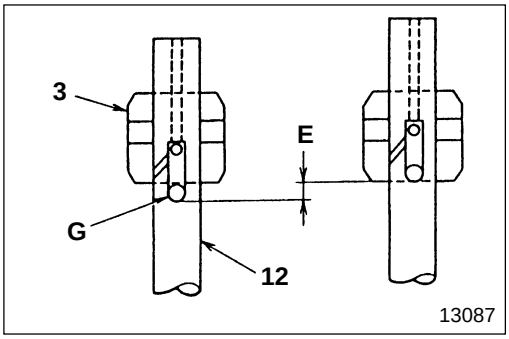

Pre-stroke

The term “pre-stroke” refers to the stroke dimension **E** of a plunger **12** from the plunger’s bottom dead center position to the point at which its fuel inlet hole **G** is closed by the timing sleeve **3** and fuel feed begins. This stroke dimension is constant in a conventional injection pump.

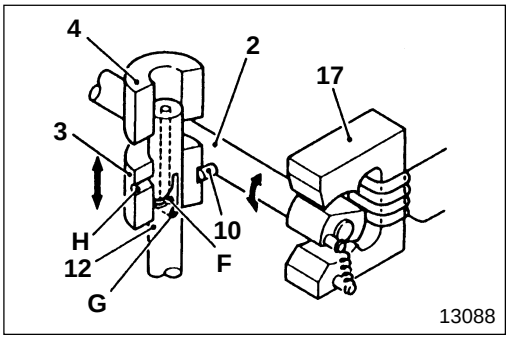

Variable pre-stroke mechanism

F : Lead
G : Inlet hole
H : Outlet hole

- In contrast to the fixed plunger barrel arrangement of a conventional injection pump, each plunger barrel **4** in the pre-stroke control type injection pump incorporates a vertically moveable timing sleeve **3**.
- Movement of the timing sleeve is effected by the timing rod **2**, pin **10**, and drive unit **17**.
- When the drive unit **17** rotates the timing rod **2**, the pin **10** moves the timing sleeve **3** up or down accordingly.
- Since the timing sleeve **3** incorporates a fuel outlet hole **H**, the pre-stroke changes in accordance with the movement of the timing sleeve.

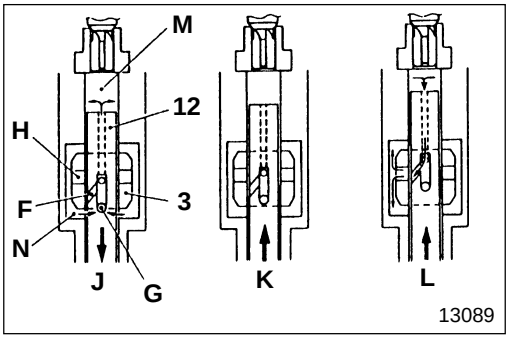

Fuel feed action

J : Fuel intake
K : Start of pressurization
L : End of pressure feed

- As the plunger **12** moves downward from its top dead center position and its inlet hole **G** opens, fuel flows into the pressure chamber **M** owing to the vacuum pressure created by the plunger’s downward movement and the fuel pressure produced by the feed pump.
- When the plunger **12** moves upward but its lift dimension is still small, the fuel in the pressure chamber **M** escapes into the sump **N** through the inlet hole **G** in the plunger. Thus, the pressure in the pressure chamber does not increase.
- As the plunger **12** moves further upward and the inlet hole **G** is closed by the timing sleeve **3**, the fuel starts to be pressurized. The pressure increases as the plunger moves upward, and the injection pump starts to feed the pressurized fuel to each injector.
- When the lead **F** in the plunger **12** becomes aligned with the outlet hole **H** in the timing sleeve **3**, the fuel in the pressure chamber **M** returns to the sump **N**, thus completing the pressure feed cycle.
- Adjustment of the injected fuel volume is achieved by rotation of the plunger **12**, which alters the position of the outlet hole **H** in the timing sleeve **3** relative to the lead **F** in the plunger.

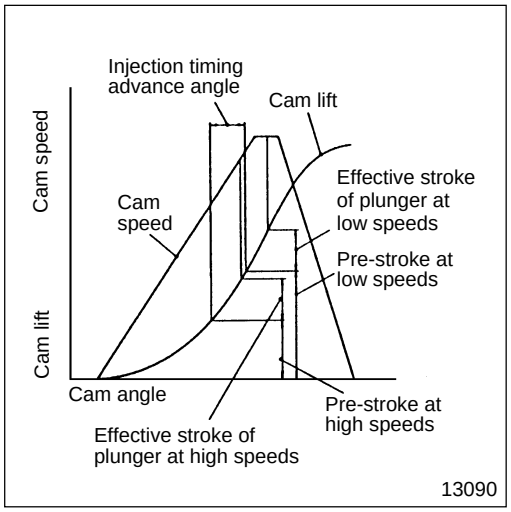

Fuel injection timing and fuel injection characteristics

- Changes in the position of the timing sleeve **3** cause concomitant changes in the pre-stroke, which in turn alter the fuel injection timing.
- A decrease in the pre-stroke causes the fuel inlet hole **G** in the plunger **12** to close earlier such that the fuel injection timing is advanced.
- This arrangement provides highly responsive control over the injection timing and thus enhances the engine's cold startability.

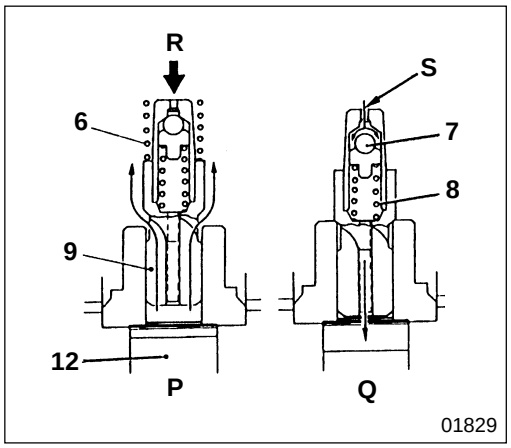

Delivery valve

P : Start of pressure feed
Q : End of pressure feed

- The delivery valve **9** keeps constant the residual pressure **R** in the injection pipe at all engine speeds. This operation prevents the generation of bubbles in the fuel (this is known as "cavitation") and thus enables fuel injection at a high pressure.
- When the plunger **12** moves upward and the pressure of the fuel pushed by the plunger overcomes the residual pressure **R** in the injection pipe and the preset force of the delivery valve spring **2**, the delivery valve is pushed upward and delivery of the pressurized fuel begins.
- As soon as fuel delivery is complete, the fuel in the injection pipe rapidly returns to the plunger side and the delivery valve closes.
- Surplus fuel slowly returns through the orifice **S**, thus reducing the pressure in the injection pipe.
- When the preset force of the spring **8** in the delivery valve **9** is exactly offset by the pressure in the injection pipe, the ball **7** closes the orifice **S**, thus ensuring that the residual pressure **R** in the injection pipe remains constant.

M E M O

Electronic Governor

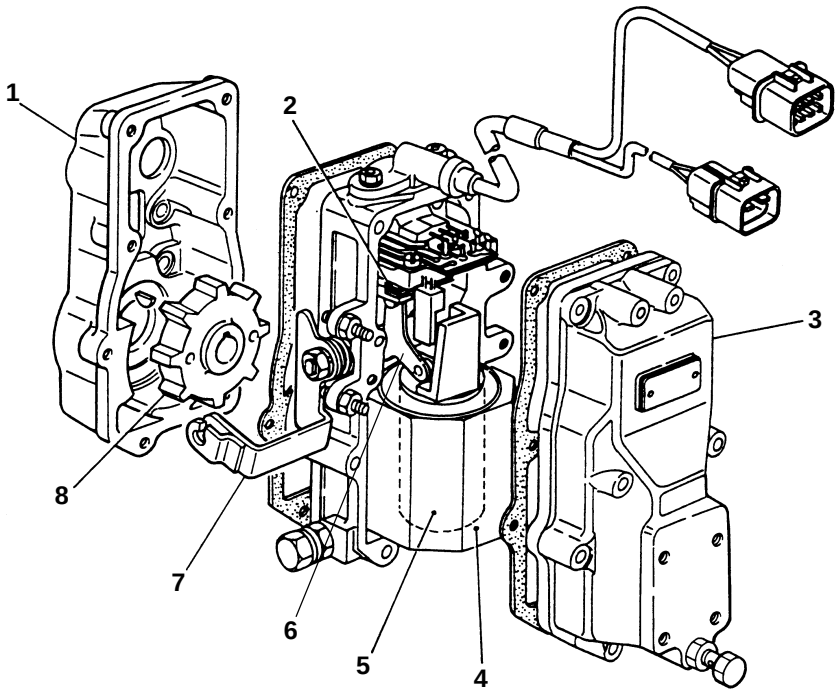

31467

1 Housing
2 Control rack position sensor
3 Cover
4 Coil assembly
5 Linear DC motor
6 Link
7 Emergency engine stop lever
8 Sensing gear

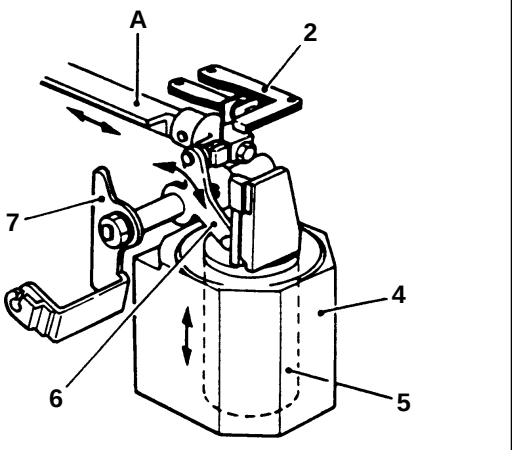

31468

● Linear DC motor

The linear DC motor **5** moves the coil assembly **4** vertically in accordance with signals from the electronic governor control unit. Via the link **6**, this movement is transmitted to the control rack **A**, which moves longitudinally to increase and decrease the fuel quantity.

● Control rack position sensor

The control rack position sensor **2** senses whether the control rack **A** is moved to the correct position by the linear DC motor **5**. In the event of a discrepancy between the actual control rack position and the target control rack position (this is determined by the electronic governor control unit), the control unit instructs the linear DC motor to perform a corrective movement.

● **Emergency engine stop lever**

The emergency engine stop lever **7** is connected to the link **6**. Via a cable, it enables the link to be moved from the driver's seat. In the event of a system fault that prevents the engine from being stopped normally, operation of the emergency engine stop lever forces the control rack **A** to move to the position at which fuel injection is terminated. This operation takes place irrespective of the position of the linear DC motor **5**.

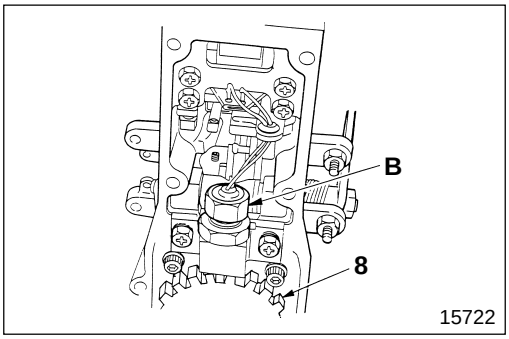

● **Backup engine speed sensor**

The backup engine speed sensor **B** is fitted inside the governor. It converts the rotation speed of the sensing gear **8** into electric signals and feeds the signals to the electronic governor control unit to provide an indication of the engine speed.

Feed Pump

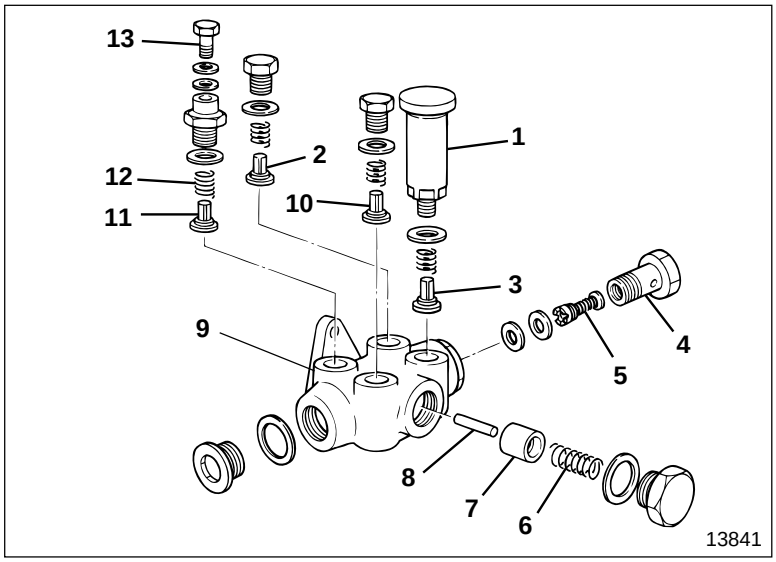

1 Priming pump
2 Check valve
3 Check valve
4 Eye bolt on fuel inlet side
5 Gauze filter
6 Piston spring
7 Piston
8 Push rod
9 Feed pump housing
10 Check valve
11 Check valve
12 Check valve spring
13 Eye bolt on fuel outlet side

- The feed pump is a double-action type pump which, with four check valves operating, sucks and discharges fuel during both strokes of pistons **7**.
- Push rod **8** makes contact with the injection pump camshaft directly, moving piston **7**.
- Priming pump **1** can be manually operated, when the injection pump is not operating, to suck up fuel and thus can be used for air bleeding.
- Gauze filter **5** eliminates large foreign particles from the fuel sucked up from the fuel tank to prevent clogging of the feed pump. This gauze filter must be cleaned with diesel fuel periodically.

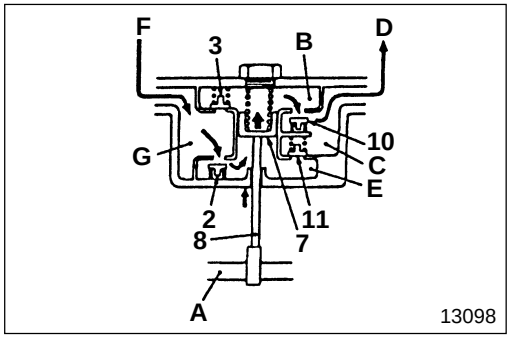

The rotation of injection pump camshaft **A**, pushes up push rod **8** and piston **7**, and the pressure in inner chamber **B** increases. This closes check valve **3**, and check valve **10** opens to let the fuel in inner chamber **B** flow through outer chamber **C** to fuel filter **D**.
When the pressure in inner chamber **E** decreases, check valve **11** closes, and check valve **2** opens to let fuel flow from fuel tank **F** through outer chamber **G** to inner chamber **E**.

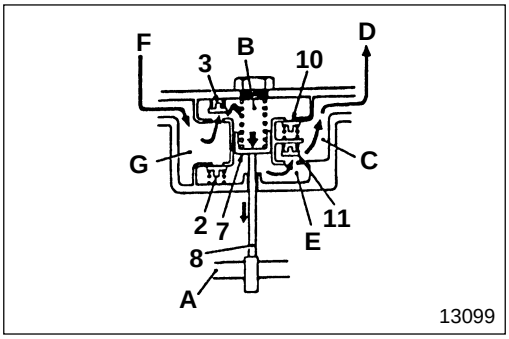

When injection pump camshaft **A** rotates further, it pushes down push rod **8** and piston **7**, and the pressure in inner chamber **E** increases. This closes check valve **2**, and check valve **11** opens to let the fuel in inner chamber **E** flow through outer chamber **C** to fuel filter **D**.
When the pressure in inner chamber **B** decreases, check valve **10** closes, and check valve **3** opens to let fuel from fuel tank **F** flow through outer chamber **G** to inner chamber **B**.

Automatic Timer

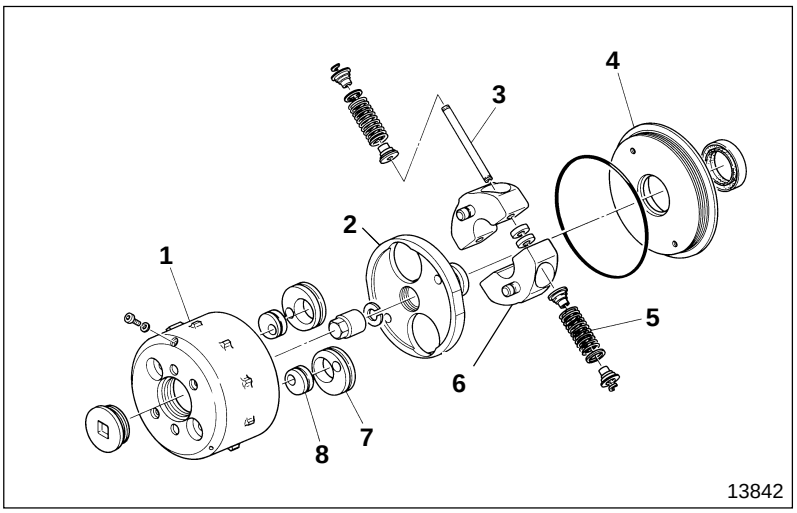

1 Timer housing
2 Timer holder
3 Pilot pin
4 Cover
5 Timer spring
6 Flyweight
7 Eccentric cam (Large)
8 Eccentric cam (Small)

- The mechanical type automatic timer changes fuel injection timing automatically when the engine revolution reaches the specified rate.
- The automatic timer controls the retard of fuel injection timing. The pre-stroke control unit controls the advance of fuel injection timing.

Injection Nozzle

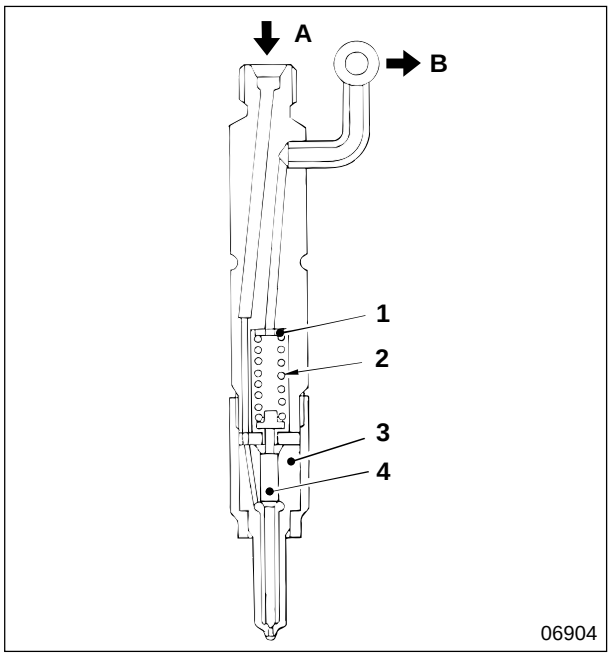

1 Washer
2 Spring
3 Nozzle tip
4 Needle valve

A : From injection pump
B : To fuel tank

- As the pressure of the fuel delivered from the injection pump overcomes the repercussive force of spring **2**, needle valve **4** is pushed up to allow the fuel to spray out the opening at the tip of the nozzle.
- Injection pressure can be adjusted by increasing or decreasing the number of washers **1**.

M E M O

Possible causes \ Symptoms		Engine will not start	Engine difficult to start	Engine knocks	Unstable engine output	Insufficient engine output	Engine maximum speed too high	Unstable engine idling	Engine stops soon after starting	Engine does not reach maximum speed	Engine will not stop	Accelerator pedal too stiff	Defective fuel supply	Warning lamp illuminates	Remarks
Defective pre-stroke injection pump system														○	
Injection pump proper	Defective injection pump proper	○	○	○	○	○	○	○	○	○	○				*
	Defective mounting (poorly adjusted injection timing)		○		○	○		○							
	Defective overflow valve operation	○	○			○		○					○		
Defective pre-stroke actuator				○	○	○		○							
Fuel feed pump	Gauze filter clogged	○	○			○		○	○				○		
	Check valve not operating	○											○		
	Sticky piston	○											○		
	Sticky push rod	○											○		
	Defective check valve operation	○	○		○			○					○		
	Piston worn		○		○			○					○		
Defective governor				○	○	○	○	○	○	○	○				*
Injection nozzles	Sticky needle valve	○													
	Valve opening pressure too low	○								○					
	Blocked injection orifice	○		○		○		○		○					
	Poor airtightness in nozzle	○		○		○		○		○					
	Valve opening pressure too high			○											
	Broken spring				○	○									
	Defective sliding action in needle valve				○										
	Defective valve opening pressure				○										
	Weakness/deterioration in spring							○							
Fuel filter	Clogged filter	○			○			○	○						
Fuel tank empty		○													
Fuel pipes blocked and/or fuel leaking from connections		○													
Air or water in fuel system		○			○			○	○						
Low-quality fuel in use			○	○		○		○							

* : Must be serviced by ZEXEL service station.

Symptoms / Possible causes		Engine will not start	Engine difficult to start	Engine knocks	Unstable engine output	Insufficient engine output	Engine maximum speed too high	Unstable engine idling	Engine stops soon after starting	Engine does not reach maximum speed	Engine will not stop	Accelerator pedal too stiff	Defective fuel supply	Warning lamp illuminates	Remarks
Engine control	Incorrect accelerator pedal stopper bolt adjustment					○				○					
	Rusted accelerator pedal arm											○			
	Defective accelerator pedal position sensor													○	
Cracked fuel pipe													○		
Leaky fuel tank													○		
Incorrect oil viscosity			○												Gr 12
Incorrect valve clearance			○					○							Gr 11
Defective cylinder head gasket			○					○							Gr 11
Wear and/or carbon deposits on valve and valve seat			○					○							Gr 11
Weakness/deterioration in valve spring			○					○							Gr 11
Worn/damaged piston ring(s)			○					○							Gr 11
Worn/damaged piston ring groove(s)			○					○							Gr 11
Worn piston and cylinder liner			○												Gr 11
Cooling system malfunctioning			○					○							Gr 14
Defective starter switch			○												Gr 54

TROUBLESHOOTING

Fault Diagnosis Function

- While the starter switch is in the ON position, the fault diagnosis function continuously monitors relevant sensors for faults.
  In the event that a fault is detected, the function illuminates a warning lamp (red or orange) in the meter cluster to alert the driver, memorizes the location of the fault, and switches to a backup mode.
- The memorized fault location can be read as a diagnosis code using an MUT-II or the diagnosis switch.

Warning lamp illumination

	(Orange)	(Red)
1. Safety-critical error (vehicle must not be driven)	OFF	ON
2. Non-safety-critical error (vehicle can be driven despite poor control feeling)	ON	OFF

CAUTION

- **The fault diagnosis function requires a battery voltage of 12 V or higher.**
- **In the event of fault detection, check the harnesses and connectors for looseness. Before undoing any connector, turn the starter switch to the LOCK position and wait for 20 seconds.**
- **After rectifying a fault, delete the fault code using the MUT-II or memory clear switch.**
- **As a general rule, inspections should be performed with the starter switch in the LOCK position. If any inspection requires that the starter switch be in the ON position, be careful to avoid short circuits between connector terminals and with the vehicle body.**
- **All component resistances shown in this manual assume a temperature range of 10 to 35°C {50 to 95°F}. In practice, component values may not comply with standard values owing to temperature effects and/or to inaccuracy in the test instrument.**
- **After the rectification of a fault, the system's ability to return to normal operation automatically depends upon the diagnosis code, i.e., the fault location. When the system returns to normal operation, the warning lamp goes out.**
- **When the system returns to normal operation after the rectification of a fault, the diagnosis code remains stored in electronic governor control unit.**

Inspection Procedure

Inspection of the electronic governor and pre-stroke control injection pump system can be performed most effectively using an MUT-II. Types of system inspection can, in accordance with fault systems and diagnosis codes, be broadly classified as follows:

- Inspections based on diagnosis codes stored in the control unit
- Inspections based on symptoms
- Inspections of intermittent faults

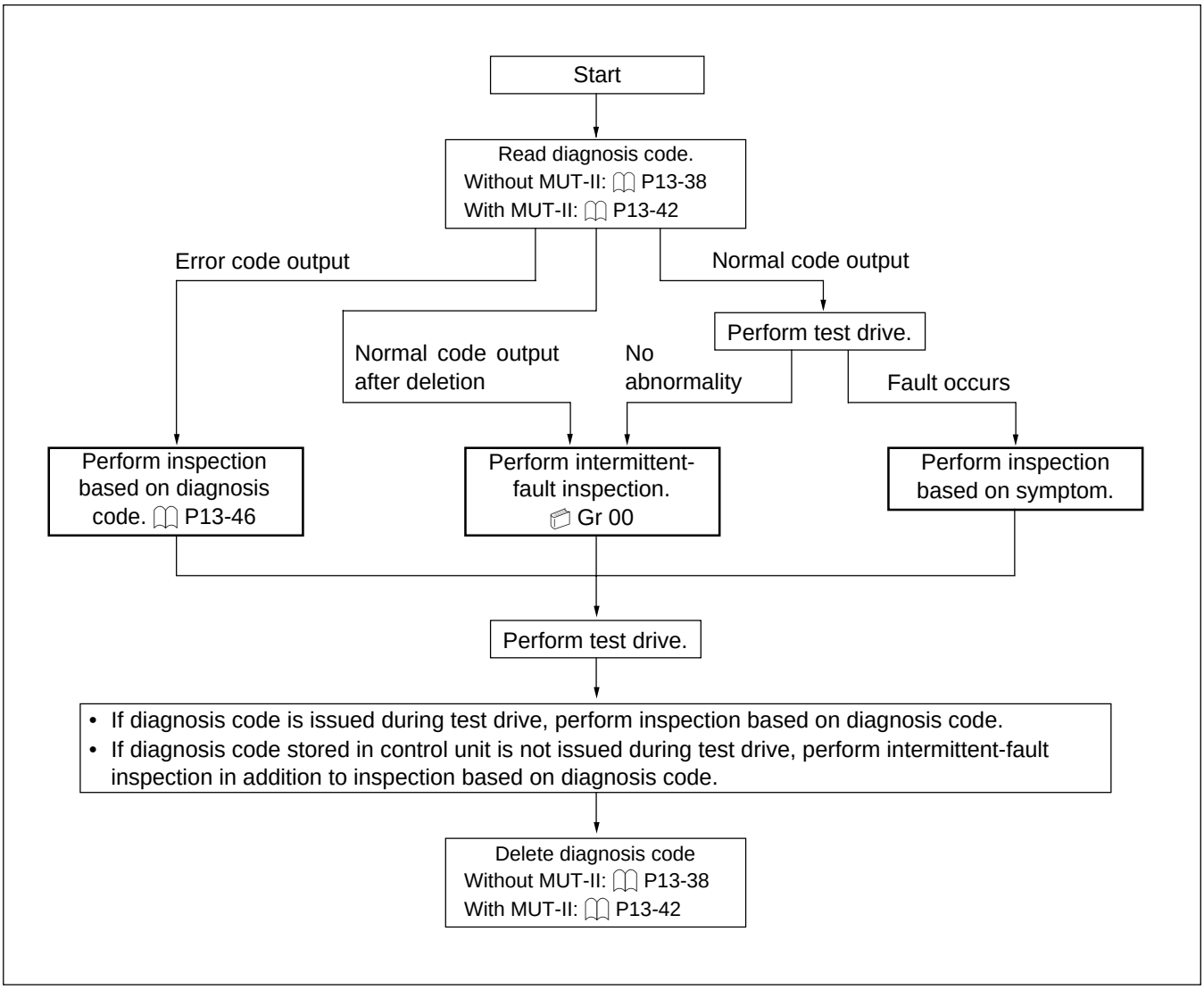

READING AND ERASING DIAGNOSIS CODES

Without MUT-II

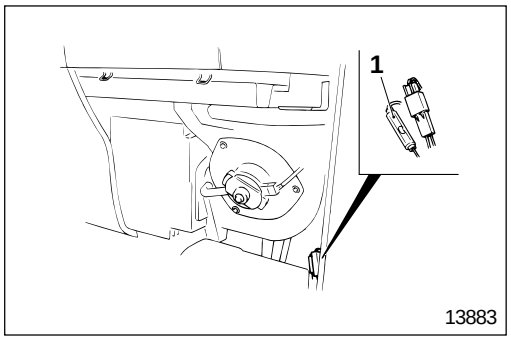

Current diagnosis code

- Turn ON the starter switch.
- Disconnect the diagnosis switch **1**.

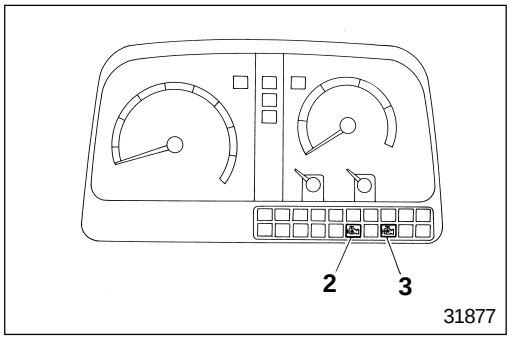

- The diagnosis code is indicated by flashing of the warning lamp **2** (red) or warning lamp **3** (orange).

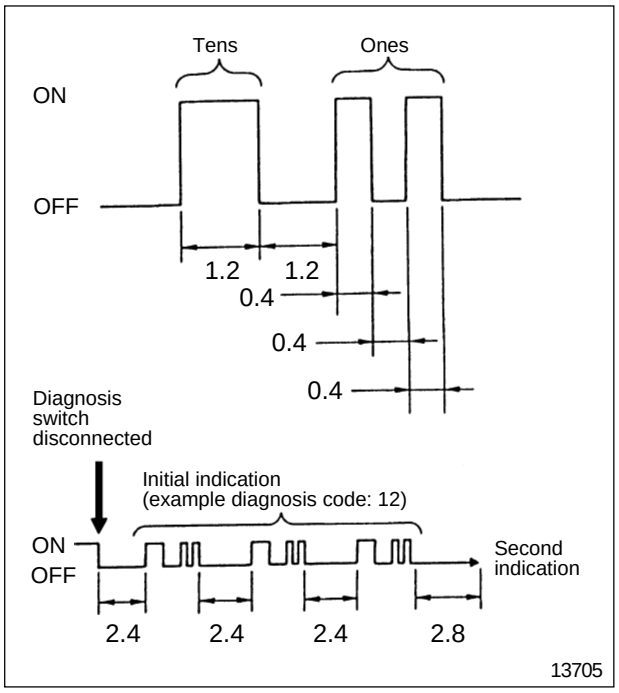

Diagnosis code indication

- Diagnosis codes are indicated by the numbers and durations of the warning lamp flashes.
  - Flashes for units of ten and units of one have different lengths, as follows:
    Units of ten: 1.2 seconds
    Units of one: 0.4 second
  - For each diagnosis code, units of ten are given first, followed by units of one. For a code that has no units of ten, only units of one are given.
- Each diagnosis code is indicated three times. If there are no new codes, the sequence is then repeated from the beginning with each code indicated three times.
- When the diagnosis switch **1** is connected, the control unit immediately stops the indication of codes.

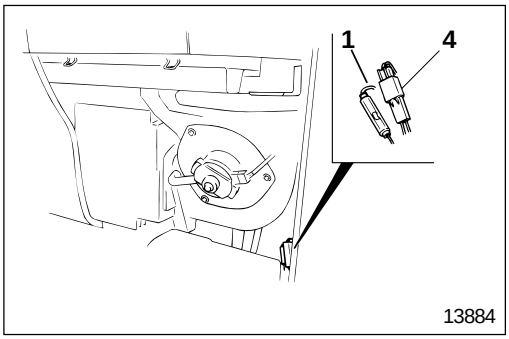

Past diagnosis codes

With the diagnosis switch **1** disconnected, disconnect the memory clear switch **4** after reading the current diagnosis code(s). The warning lamp will begin to flash again, this time to indicate any past diagnosis code(s). Verify the fault location in accordance with the code(s).

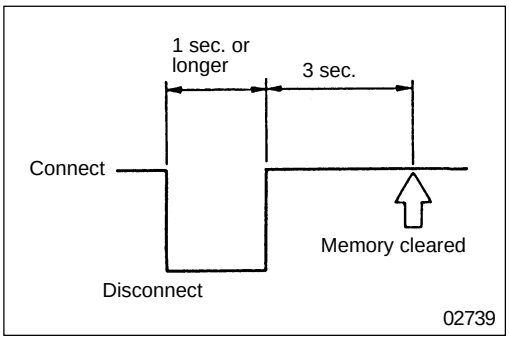

Diagnosis code eraser

To erase all stored diagnosis codes from the control unit, disconnect and reconnect the memory clear switch **4**.

CAUTION

- **Stored codes are cleared only by disconnection and reconnection of the memory clear switch 4.**
- **To prevent the memory contents from being cleared after the indication of stored codes, turn OFF the starter switch with the memory clear switch 3 disconnected then connect the memory clear switch.**

READING AND ERASING DIAGNOSIS CODES

Diagnosis codes table

Diagnosis code	Fault location	Warning lamp	Electronic control unit countermeasure(s) in the case of failure (back-up mode)	Drive ability
01	Normal	—	—	○
03	Pre-stroke actuator learning function	Orange	Provides control with “0” as correction value.	○
06	Sub-control rack position sensor	Orange	Normal control using the main control rack position sensor	○
11	Governor servo	Red	*1 Engine stopped by the pull-down function.	×
12	Pre-stroke servo	Orange	Pre-stroke control stop engine revolution speed limit (approximately 1800 rpm)	△
13	Pre-stroke sensor	Orange	Pre-stroke control stop engine revolution speed limit (approximately 1800 rpm)	△
14	Back-up engine speed sensor	Orange	Control using the main engine speed sensor	○
15	Engine speed sensor	Orange	Calculate the engine revolution speed from the pulse count of the back-up engine speed sensor.	○
14+15	Both the back-up engine sensor and the main engine speed sensors are faulty upon start-up.	Red	Do not start the engine.	×
16	Accelerator pedal position sensor II	Orange	Control using the accelerator pedal sensor I	○
21	Water temperature sensor	Orange	Set the water temperature to 80 °C {176°F}.	○
22	Control rack position sensor	Orange	Switch to the sub-control rack position sensor control.	△
24	Accelerator pedal position sensor I	Orange	Control using the accelerator pedal position sensor II.	○
24+16	Both accelerator pedal position sensor I and accelerator pedal position sensor II are faulty	Red	Set the maximum accelerator depression angle to 30 degrees even if the accelerator pedal is depressed.	△
31	Idling adjustment volume	Orange	Set to auto idling.	○
32	Boost pressure sensor	Orange	Set the boost pressure to 0 kpa {0 mmHg, 0 in. Hg}.	△*2
33	RAM (ECU internal memory circuit)	Red	Do not start the engine.	×
41	Boost temperature sensor	Orange	Normal control assuming the boost temperature is 80 °C {176 °F}.	○
45	Reverse engine operation	Orange	*1 Engine stopped by the pull-down function.	×*2
65	Accelerator switch	Orange	Limited accelerator depressing angle (Approximately 30%)	○

*1 : The pull-down function indicates the rack pull-back action. In the event of an engine over-run or severe accident, the rack is pulled back immediately to the no-injection direction in order to protect the engine.

*2 : Driveable if the starter switch is turned OFF once and then restarted again.

○ : Driveable
△ : Back-up mode driving possible
× : Undriveable

M E M O

READING AND ERASING DIAGNOSIS CODES

With MUT-II

Special tools

Location	Tool name and shape	Part No.	Application
—	MUT-II PLUS 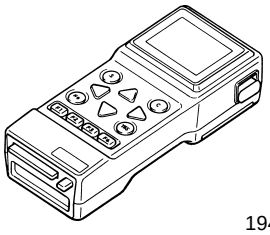 19492	MB991496-A	Inspection of electronic governor and pre-stroke control injection pump system
—	MUT Communication Harness 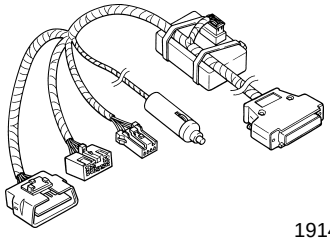 19141	MK327601	
—	ROM Pack (MRT-E4) 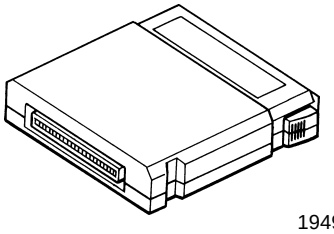 19493	MK327927	

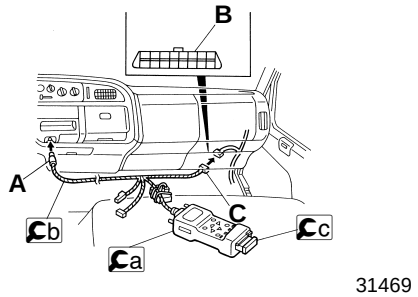

31469

Connecting the MUT-II

- Turn the starter switch to the LOCK position.
- Connect the b MUT Communication Harness to the a MUT-II, and insert the c ROM Pack.
- Plug connector **A** into the cigarette lighter socket.
- Fit connector **C** onto MUT connector **B** (16 pin) in the relay box.

NOTE

Instructions for operation of the MUT-II are given in the separate MUT-II Reference Manual.

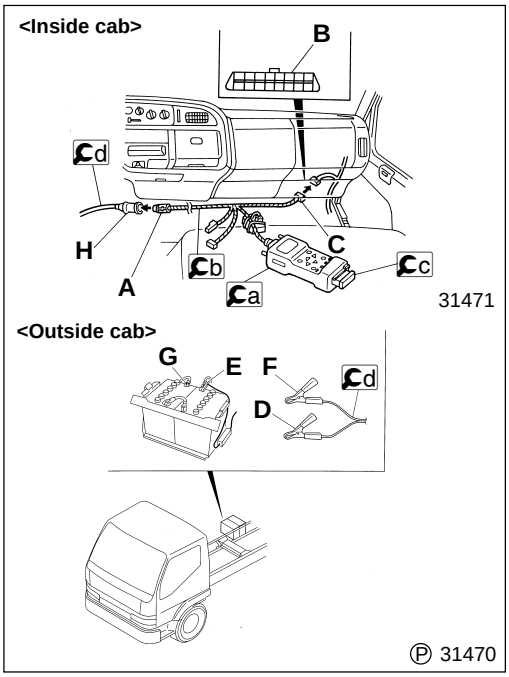

- To verify the service data “START SIG”, connect the MUT-II as follows:
- Turn the starter switch to the LOCK position.
- Connect the b MUT Communication Harness to the a MUT-II, and insert the c ROM Pack.
- Attach the (+) clamp **D** (red) of the d Battery Clamp Harness to the battery’s (+) terminal **E**. Attach the (–) clamp **F** (black) of the d Battery Clamp Harness to the battery’s (–) terminal **G**.
- Fit the connector **A** into the socket **H** of the d Battery Clamp Harness.
- Fit connector **C** onto MUT connector **B** (16 pin) in the relay box.

CAUTION ⚠

Connect the (+) clamp D (red) of the b Battery Clamp Harness before connecting the (–) clamp F (black).

Current diagnosis codes
- Turn the starter switch to the ON position.
- Determine the fault location(s) in accordance with the MUT-II diagnosis code(s).

Past diagnosis codes
- Turn the starter switch to the ON position.
- Determine the fault location(s) in accordance with the past MUT-II diagnosis code(s).

Diagnosis code erasure
- Turn the starter switch to the ON position.
- Using the MUT-II, erase all diagnosis codes stored in the control unit.

Diagnosis codes

Diagnosis codes are indicated as shown in the following table. For details of these codes, refer to the “Without MUT-II” section. 🕮 P13-40

Display item			
Diagnosis code	Fault	Diagnosis code	Fault
03	PS OFFSET	**22**	RACK SNSR
06	SUB RACK SNSR	**24**	ACCEL. SNSR-1
11	GOV. SERVO	**31**	IDLE VOLUME
12	PS SERVO	**32**	BST PRES SNSR
13	PS SNSR	**33**	RAM
14	SUB NE SNSR	**41**	BST TEMP SNSR
15	NE SNSR	**45**	ENG. REVERSE
16	ACCEL. SNSR-2	**65**	ACCEL SW
21	WTR TEMP SNSR		

SERVICE PROCEDURES USING MUT-II

Service operations can be performed most effectively using the following MUT-II functions:

● Reading of diagnosis codes

Using the diagnosis code function, it is possible to read diagnosis codes stored in the control unit.

● Erasure of diagnosis codes

By selecting the diagnosis code erasure function from the special function menu, it is possible to erase diagnosis codes stored in the control unit.

● Indication of service data

When required for service operations, data in the control unit's random-access memory can be displayed as numeric values or graphs.

Service data

MUT-II display			Inspection procedure	
No.	Data signal	Type of data	Inspection condition	Evaluation criterion
11	ENGINE SPEED	▮▮▮▮. rpm	Gradual acceleration (during engine operation)	Synchronization with tachometer
12	TARGET RACK	▮▮.▮▮ mm	Starter switch ON	3 mm
13	REAL RACK	▮▮.▮▮ mm	Starter switch ON	3 mm
14	ACCEL. VOLT	▮.▮▮▮ V	Accelerator pedal gradually depressed from throttle-fully-open to throttle-fully-closed position	1 to 3 V
15	WATER TEMP	▮▮▮.▮ °F	Engine cold Engine warming up Engine stopped after warmup	Same as ambient temperature Gradual increase Gradual decrease
16	BOOST PRESS	▮▮▮▮. mmHg	Engine running at high idling speed	270 mmHg or higher
17	PS ANG. DIFF.	▮▮.▮▮ deg	400 < Ne ≦ 2,000 Ne: Engine speed	–5.5° or greater 5.5° or smaller
18	SUPPLY VOLT	▮▮.▮▮ V	Starter switch ON	16 Volts
19	ACCEL. STROKE	▮▮▮.▮ %	Throttle completely closed Pedal gradually depressed Throttle completely open	0 % Gradual increase 100 %
20	BOOST TEMP	▮▮▮.▮ °F	Engine cold Engine warming up Engine stopped after warmup	Same as ambient temperature Gradual increase Gradual decrease
21	START SIG	ON/OFF	Engine cranked using starter switch	ON
33	ACCEL. SW	ON/OFF	Accelerator pedal depressed	OFF
34	DIAGNOSIS SW	ON/OFF	Diagnosis switch turned ON/OFF	ON/OFF
35	DIAG. RESET SW	ON/OFF	Memory clear switch turned ON/OFF	ON/OFF
37	CLUTCH SW	ON/OFF	Clutch pedal depressed	ON
38	NEUTRAL SW	ON/OFF	Transmission in neutral	OFF
42	EXH. BRAKE SW	ON/OFF	Switch ON	ON
51	A/C SW	ON/OFF	Air conditioner switch turned ON or OFF	ON/OFF
61	EXH. BRAKE SIG	ON/OFF	Exhaust brake operating	ON
75	IDLE UP CNCL	ON/OFF	Idle up prohibited (other than N range)	ON

M E M O

INSPECTION BASED ON DIAGNOSIS CODE

Diagnosis code	Diagnosis code display condition (s)	Cause	Remedy
03	Indicated that pre-stroke learning function has not been executed.	Faulty timing rod, timing sleeve or other parts in the injection pump assembly.	Repair or replace the injection pump assembly. *
		Faulty adjusment or pre-stroke position sensor	Repair or replace the injection pump.*
		Faulty electronic governor control unit	Replace the electronic governor control unit
06	Displayed if the output voltage of the control rack position sensor is less than 0.06 V or more than 3.5 V.	Open or short in harness wire or poor connector contact between the sub-control rack position sensor and the electronic governor control unit	Inspect the harness and the connector 🕮 P13-88
		Open, short, or poor connector contact in the sub-control rack position sensor	Inspect the sub-control rack position sensor 🕮 P13-83
		Faulty electronic governor control unit	Replace the electronic governor control unit
11	Displayed if the difference between the target control rackposition and the actual control rack position is ± 1mm {0.039 in.}.	Open or short in harness wire or poor connector contact between the linear DC motor and the electronic governor control unit	Inspect the harness and the connector 🕮 P13-88
		Open or shorted wire in the linear DC motor connector	Inspect the linear DC motor 🕮 P13-82
		Poor adjustment of the emergency engine stop cable (The lever is pulled in the stop direction)	Inspect the emergency engine stop button 🕮 P13-84
		Faulty injection pump assembly rack movement or poor governor actuator link	Repair or replace the injection pump assembly. *
		Faulty electronic governor control unit	Replace the electronic governor control unit
12	Displayed if the difference between the target timing rod angle and the actual timing rod angle is ± 2°.	Open or short in harness wire or poor connector contact between the pre-stroke actuator, pre-stroke cut relay, and electronic governor control unit	Inspect the harness and the connector 🕮 P13-88
		Open or shorted wire in the pre-stroke cut relay	Inspect the pre-stroke cut relay 🕮 P13-79
		Faulty pre-stroke actuator	Repair or replace the injection pump assembly. *
		Faulty timing rod, timing sleeve, etc. in the injection pump assembly	Repair or replace the injection pump assembly. *
		Faulty electronic governor control unit	Replace the electronic governor control unit

* : Contact your MFTA representative for current injection pump repair and replacement procedures.

Diagnosis code	Diagnosis code display condition (s)	Cause	Remedy
13	Displayed if the output voltage of the pre-stroke position sensor is less than 0.9 V or more than 3.4 V.	Open or short in harness wire or poor connector contact between the pre-stroke position sensor and the electronic governor control unit	Inspect the harness and the connector 🕮 P13-88
		Open or shorted pre-stroke position sensor coil	Inspect the pre-stroke actuator 🕮 P13-83
		Faulty electronic governor control unit	Replace the electronic governor control unit
14	Displayed if the pulse count of the back-up engine speed sensor is less than that of the main engine speed sensor.	Open or short in harness wire or poor connector contact between the back-up engine speed sensor and the electronic governor control unit	Inspect the harness and the connector 🕮 P13-88
		Faulty back-up engine speed sensor	Repair or replace the injection pump assembly. *
		Faulty electronic governor control unit	Replace the electronic governor control unit
15	Displayed if the pulse count of the main engine speed sensor is less than that of the back-up engine speed sensor.	Open or short in harness wire or poor connector contact between the speed sensor and the electronic governor control unit	Inspect the harness and the connector 🕮 P13-88
		Open or shorted wire or improperly assembled coil in the engine speed sensor main unit	Inspect the engine speed sensor main unit 🕮 P13-84
		Faulty electronic governor control unit	Replace the electronic governor control unit
16	Displayed if the output voltage of the accelerator pedal position sensor is less than 0.5 V or more than 4.5 V.	Open or short in harness wire or poor connector contact between the accelerator pedal position sensor II and the electronic governor control unit	• Inspect the accelerator position sensor using MUT-II 🕮 P13-44 • Inspect the harness and the connector 🕮 P13-88
		Internal malfunction or faulty adjustment of the lever portion of the accelerator pedal position sensor II	• Inspect the accelerator pedal position sensor 🕮 P13-54 • Inspect the accelerator pedal position sensor using MUT-II 🕮 P13-44
		Faulty electronic governor control unit	Replace the electronic governor control unit
21	—	Open or short in harness wire or poor connector contact between the coolant temperature sensor and the electronic governor control unit	Inspect the harness and the connector 🕮 P13-88
		Faulty coolant temperature sensor	• Inspect the coolant temperature sensor 🕮 P13-80 • Inspect the coolant temperature sensor using MUT-II 🕮 P13-44
		Faulty electronic governor control unit	Replace the electronic governor control unit

***** : Contact your MFTA representative for current injection pump repair and replacement procedures.

INSPECTION BASED ON DIAGNOSIS CODE

Diagnosis code	Diagnosis code display condition (s)	Cause	Remedy
22	Displayed if the output voltage of the control rack position sensor I is less than 0.5 V or more than 4.5 V.	Open or short in harness wire or poor connector contact between the control rack position sensor and the electronic governor control unit	Inspect the harness and the connector 🕮 P13-88
		Open or shorted wire in the coil or poor control rack position sensor contact	• Inspect the control rack position sensor 🕮 P13-81 • Inspect the control rack position sensor using MUT-II 🕮 P13-44
		Faulty movement of the injection pump assembly control hook or poor governor actuator link.	Repair or replace the injection pump assembly. *
		Faulty electronic governor control unit	Replace the electronic governor control unit
24	Displayed if the output voltage of the accelerator pedal position sensor I is less than 0.5 V or more than 4.5 V.	Open or short in harness wire or poor connector contact between the accelerator pedal position sensor and the electronic governor control unit	• Inspect the accelerator position sensor using MUT-II 🕮 P13-44 • Inspect the harness and the connector 🕮 P13-88
		Internal malfunction or poor adjustment of the accelerator pedal position sensor I lever	• Inspect the accelerator position sensor I 🕮 P13-54 • Inspect the accelerator pedal position sensor using MUT-II 🕮 P13-44
		Faulty electronic governor control unit	Replace the electronic governor control unit
31	Displayed if the output voltage of the idling adjustment volume is less than 0.6 V or mor than 4.6 V.	Stuck idling speed adjustment potentio-meter knob (between PUSH and PULL)	Reset the knob to PUSH or PULL
		Open or short in harness wire or poor connector contact between the idling speed adjustment potentiometer and the electronic governor control unit	Inspect the harness and the connector 🕮 P13-88
		Open wire in the switch portion of the idling speed adjustment potentiometer or faulty internal movement	Inspect the idling speed adjustment potentiometer 🕮 P13-79
		Faulty electronic governor control unit	Replace the electronic governor control unit
32	Displayed if the output voltage of the boost pressure sensor is less than 0.5 V or more than 4.8 V.	Open or short in harness wire or poor connector contact between the boost pressure sensor and the electronic governor control unit	Inspect the harness and the connector 🕮 P13-88
		Internal malfunction of boost pressure sensor	• Inspect the boost pressure sensor using MUT-II 🕮 P13-44 • Inspect the boost pressure sensor 🕮 P13-80
		Clogged boost hose or faulty assembly	Inspect the boost hose
		Faulty electronic governor control unit	Replace the electronic governor control unit

***** : Contact your MFTA representative for current injection pump repair and replacement procedures.

Diagnosis code	Diagnosis code display condition (s)	Cause	Remedy
33	Displayed if the electronic governor control unit is faulty.	Faulty electronic governor control main unit	In order to reset the electronic governor control unit, temporarily turn the starter switch OFF and erase the diagnostic codes by pressing the memory clear switch P13-39 Replace the electronic governor control unit if the diagnostic codes persist after performing the above procedure
41	Displayed if the output voltage of the boost temperature sensor is more than 4.9 V.	Open or short in harness wire and poor connector contact between the boost temperature sensor and the electronic governor control unit	Inspect the harness and the connector P13-88
		Open or shorted wire or poor assembly of the boost temperature sensor coil	• Inspect the boost temperature sensor P13-80 • Inspect the boost temperature sensor using MUT-II P13-44
		Faulty electronic governor control unit	Replace the electronic governor control unit
45	—	Faulty phase of engine speed sensor and backup engine speed sensor	• Inspect the engine speed sensor P13-84 • Repair or replace the injection pump assembly. *
65	Faulty accelerator switch	Open or short in harness wire or poor connector contact between the accelerator switch and theelectronic governor control unit	Inspect the harness and the connector P13-88
		Open or shorted wire in the accelerator switch	Inspect the accelerator switch (Accelerator switch is built in the accelerator pedal position switch.) P13-54
		Faulty electronic governor control unit	Replace the electronic governor control unit

* : Contact your MFTA representative for current injection pump repair and replacement procedures.

ON-VEHICLE INSPECTION AND ADJUSTMENT

Checking and Adjusting Injection Timing

Service standards

Location	Maintenance item	Standard value	Limit	Remedy
—	Fuel injection timing (BTDC)	3° ± 0.5°	—	Adjust

Tightening torque

Unit : N·m {lbf.ft, kgf·m}

Location	Parts to be tightened	Tightening torque	Remarks
5	Adjusting bolt	59 to 64 {43 to 47, 6 to 6.5}	—

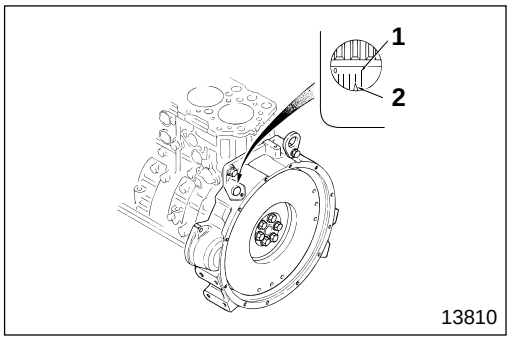

[Inspection]

- Turn the crankshaft more than 180° in the direction of engine rotation. Check if notch **1** on the flywheel and pointer **2** on the flywheel housing show the standard fuel injection timing.

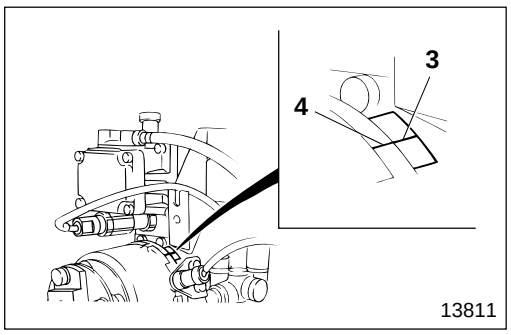

- When pointer **3** on the injection pump and notch **4** on the automatic timer align, the fuel injection timing is standard.
- If the fuel injection timing is not standard, adjust as follows.

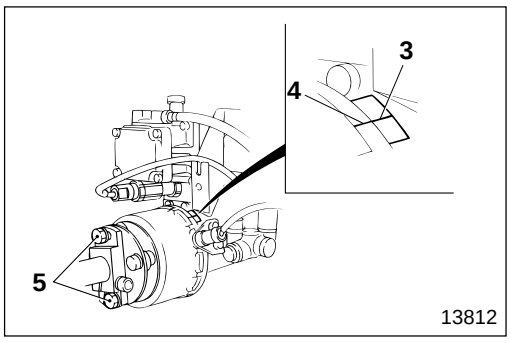

[Adjustment]

- Loosen adjusting bolts **5** and turn the automatic timer to align pointer **3** and notch **4**.
- Tighten adjusting bolts **5** at specified torque.
- Reinspect the fuel injection timing.

CAUTION ⚠

Do not loosen any bolts other than adjusting bolts 5.

Bleeding Air from Fuel System

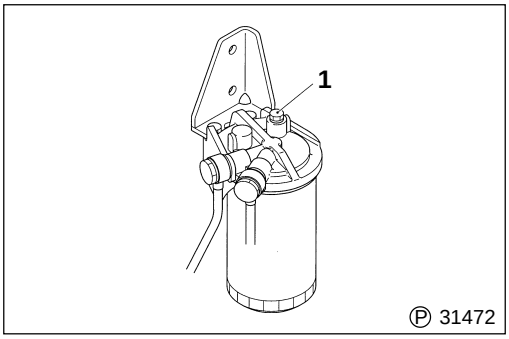

- Loosen the fuel filter air plug **1**.

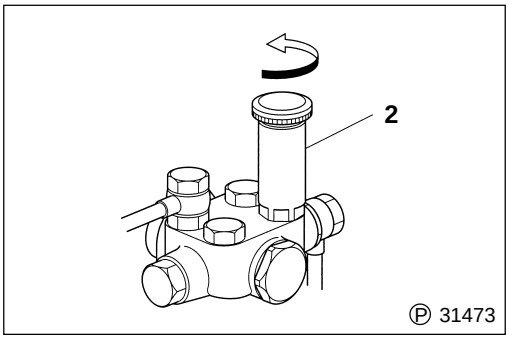

- Turn the priming pump knob **2** counterclockwise until it pops up.
- Move the priming pump knob **2** up and down to feed fuel through the fuel filter.
- When fuel emerging from the fuel filter air plug **1** no longer contains air bubbles, tighten the air plug securely.

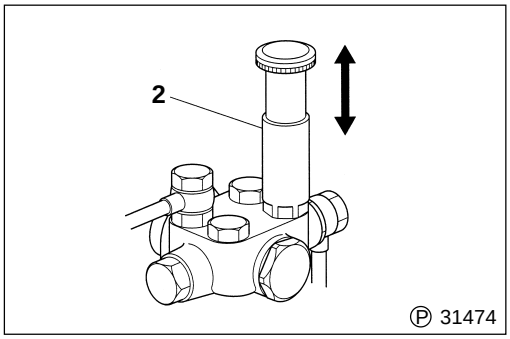

- Move the priming pump knob **2** up and down five or six more times. Then, press the knob down and screw it clockwise to lock it in position.
- Wipe up all spilled fuel, then start the engine.
- Check that no fuel leakage occurs.

WARNING

- **Be sure to wipe up all spilled fuel. Unless it is wiped up, it could catch fire.**
- **Fuel is highly flammable. Keep it away from flames and sources of heat.**

Cleaning Gauze Filter

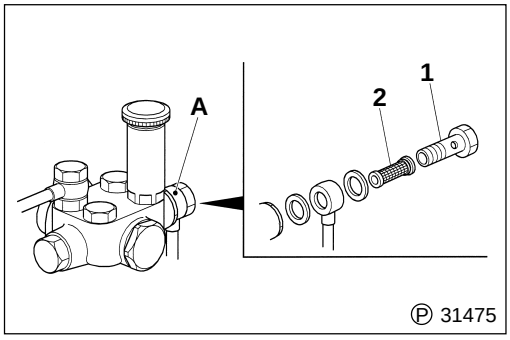

- Remove the eyebolt **1** from the suction port side **A** of the fuel feed pump.
- Remove the gauze filter **2** from the eyebolt **1**.
- Clean the gauze filter **2** in diesel fuel.
- Refit the gauze filter **2** and eyebolt **1** in the opposite order to that in which they were removed.
- Bleed all air out of the fuel system. P13-51
- Start the engine and check that no fuel leakage occurs.

WARNING

- **To minimize the risk of fire, wipe up any spilled fuel.**
- **Fuel is highly flammable. Keep it away from flames and sources of heat.**
- **After refitting the gauze filter, check that no fuel leakage occurs.**

Replacing Fuel Filter

Lubricant

Location	Points of application	Specified lubricant	Quantity
1	Gasket between fuel filter and fuel filter head	Engine oil	As required

Special tool

Unit : mm {in.}

Location	Tool name and shape	Part No.	Application
1	Filter wrench 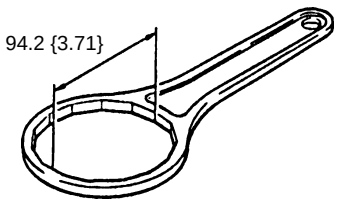 01882	MH061572	Fuel filter removal

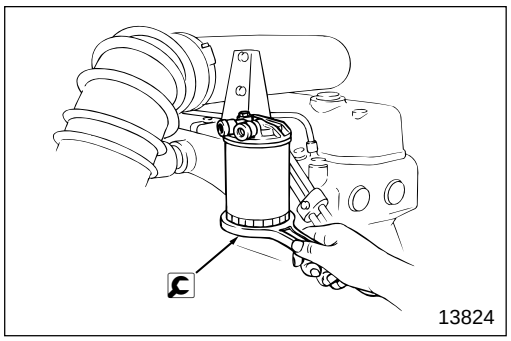
13824

[Removal]

: Filter Wrench

WARNING

- **Fuel is highly flammable. Keep it away from flames and sources of heat.**
- **To minimize the risk of fire, wipe up any spilled fuel.**

[Installation]

WARNING

Use of an unsuitable fuel filter 1 can lead to fuel leaks and fires. Be sure to use a genuine filter.

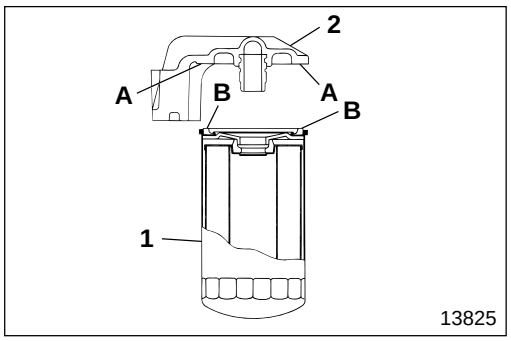

13825

- To fit the fuel filter **1**, turn it until the gasket **B** touches surface **A** of the fuel filter head **2**. Then, tighten the filter by 1 to $1\frac{1}{8}$ turn. Be sure to turn the filter by hand.
- Bleed all air out of the fuel system. P13-51

WARNING

After fitting the fuel filter 1, start the engine and check that no fuel leakage occurs. Any leaking fuel could cause a fire.

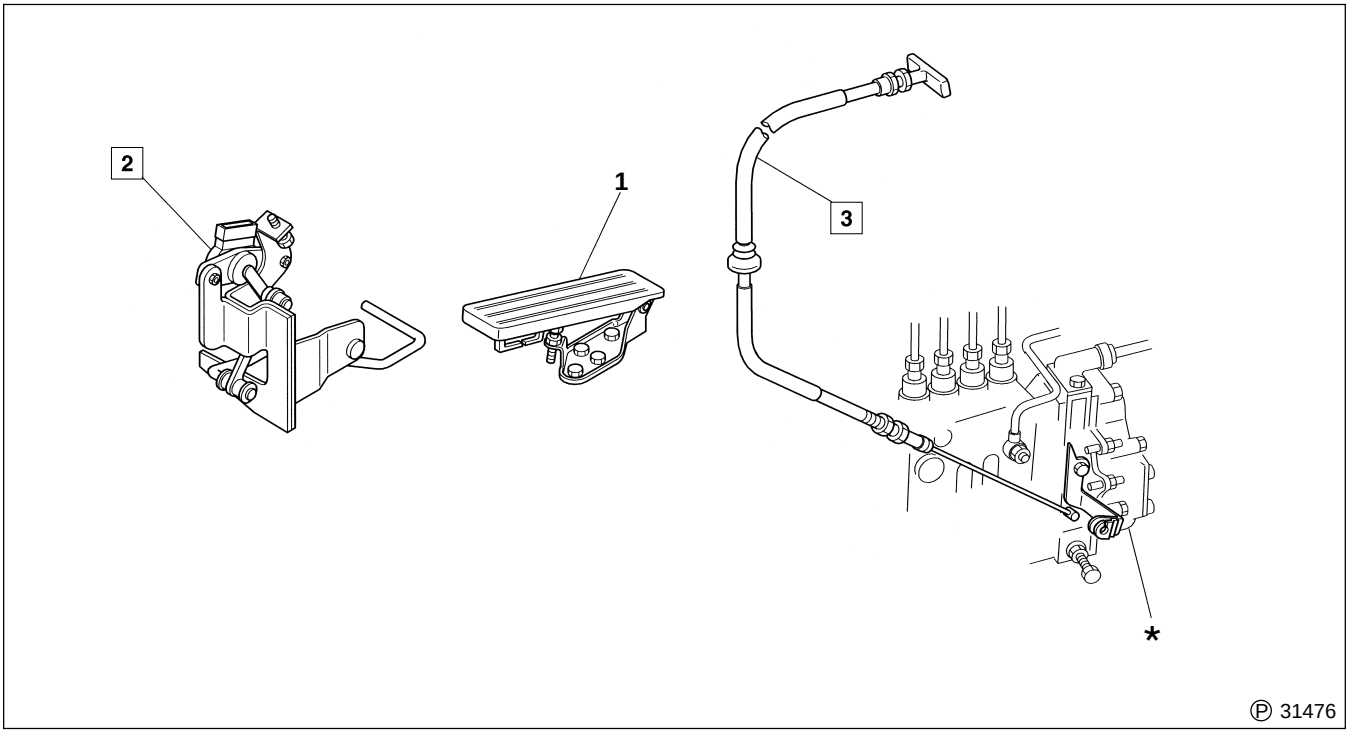

● **Removal sequence**

1 Accelerator pedal assembly
2 Accelerator pedal position sensor assembly
3 Emergency engine stop cable
***** : Injection pump assembly

● **Installation sequence**

Follow the removal sequence in reverse.

Service standards

Location	Maintenance item			Standard value	Limit	Remedy
4	Output voltage of accelerator pedal position sensor 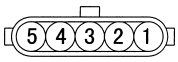 Ⓟ 31477	Sensor II: ① – ④	Idle position	0.85 ± 0.1 V	—	Adjust or replace
		Sensor I: ④ – ⑤	Full-load position	4.15 ± 0.1 V	—	Adjust or replace
	Output voltage of accelerator switch 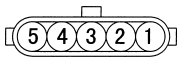 Ⓟ 31477		Electrical conduction between terminals ② and ③ of accelerator switch	1.00 ± 0.24 V	—	Adjust or replace

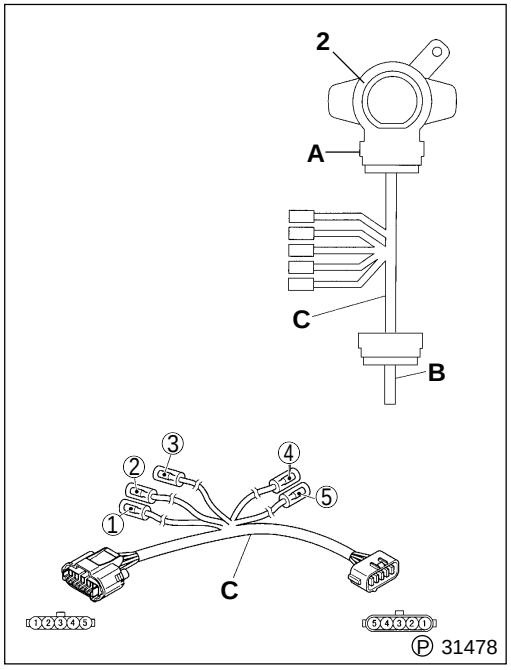

2 **Inspection of accelerator pedal position sensor assembly**

- Disconnect connector **A** of accelerator pedal position sensor **2** from harness **B** on the cab side. Prepare inspection harness **C,** and connect it between the above two connectors. (Not required with MUT-II PLUS)
- Set the starter switch to the **ON** position.
- Measure the output voltages of accelerator pedal position sensor **4** and the accelerator switch according to the table below. Adjust, if necessary.

Item	Connector terminal					
	Accelerator position sensor inspection harness					
	Sensor II		Sensor I		Accelerator switch	
	①	④	④	⑤	②	③
Output voltage ***a** (Idle position)	⊖	⊕	⊖	⊕		
Output voltage ***b** (Full-load position)	⊖	⊕	⊖	⊕		
Output voltage ***c** (Accelerator switch activating point)					⊖	⊕

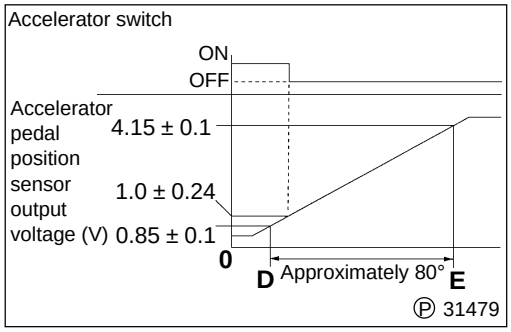

***a** : Measure voltage with accelerator pedal at idle position.
***b** : Measure voltage with the accelerator pedal at full-load position.
***c** : Press accelerator pedal gradually from idle position. Measure voltage when electrical conduction stops between connector terminals ② and ③ of accelerator pedal position sensor **2**.
D : Idle position
E : Full-load position

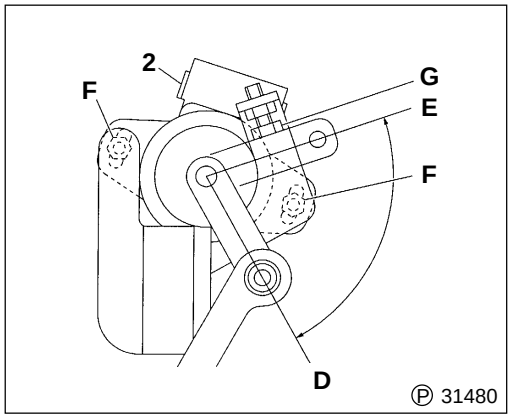

- If measured value ***a** and ***b** deviate from the standard values, adjust the following adjusting bolts.

Adjustment item	Adjusting bolt
***a** Idle position output voltage	Screw **F**
***b** Full-load position output voltage	Full-load stopper bolt **G**

- If the measured output voltage at accelerator switch activating point ***c** deviates from the standard value, replace accelerator pedal position sensor **2**.

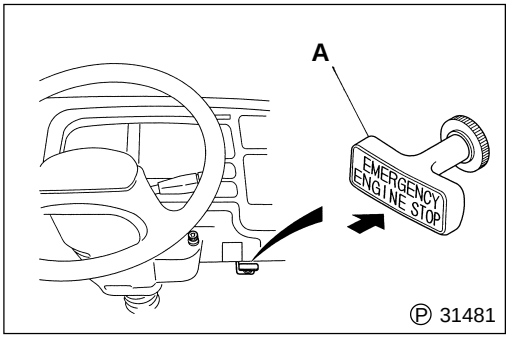

5 **Installation of emergency engine stop cable**

- Mount stop button **A** on emergency engine stop cable **5** and press the button firmly in position.

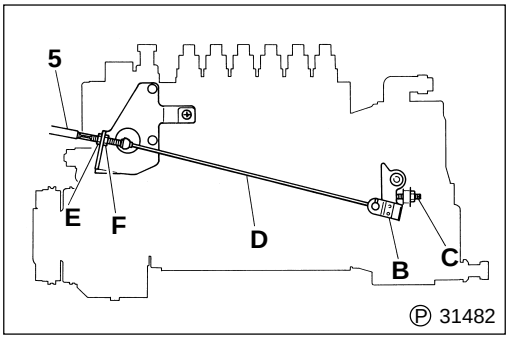

- With stop lever **B** of the governor contacting stopper bolt **C**, adjust nut **E** so that inner cable **D** of emergency stop cable **5** is taut. Then, tighten nut **F** to secure it in place.
- After installation, start the engine. Pull the stop button to make sure that the engine stops operating.

Accelerator Pedal Assembly

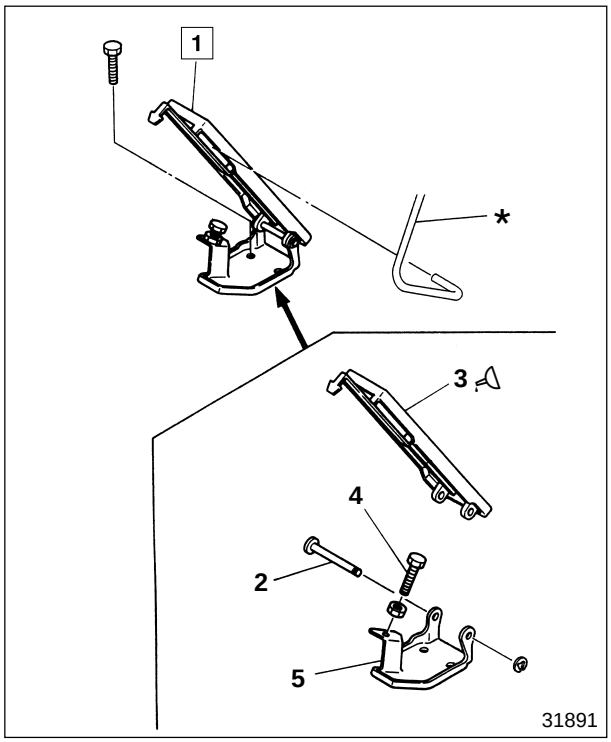

● **Disassembly sequence**

1 Accelerator pedal assembly
2 Clevis pin
3 Accelerator pedal
4 Stopper bolt
5 Accelerator pedal bracket

***** : Accelerator pedal position sensor assembly P13-53

● **Assembly sequence**

Follow the disassembly sequence in reverse.

Lubricant

Location	Points of application	Specified lubricant	Quantity
3	Slide-contacting surfaces of accelerator pedal and bracket	Chassis grease [NLGI No.1 (Ca soap)]	As required

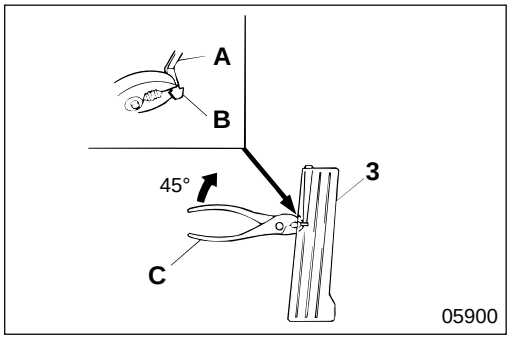

◆ Service procedure

1 **Removal of accelerator pedal assembly**

Pinch hook **B** of stopper **A** of accelerator pedal **3** using pliers **C** and rotating approximately 45° pull out the stopper towards the front of the vehicle.

CAUTION

Take care not to damage stopper A itself during removal, do not pull it out too forcibly.

Accelerator Pedal Position Sensor Assembly

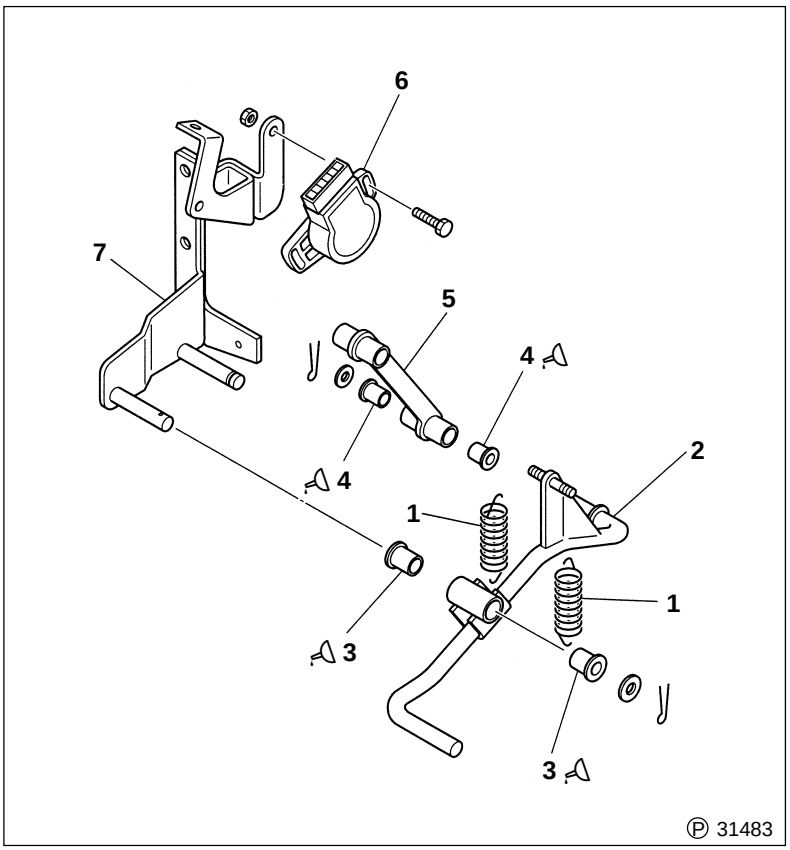

● **Removal sequence**

1 Return spring
2 Accelerator control arm
3 Bushing
4 Bushing
5 Accelerator control extension
6 Accelerator pedal position sensor
7 Bracket

● **Installation sequence**

Follow the removal sequence in reverse.

Lubricant

Location	Points of application	Specified lubricant	Quantity
3, 4	Slide-contacting surfaces of bushing and support assembly	Chassis grease [NLGI No.1 (Ca soap)]	As required

FUEL TANK

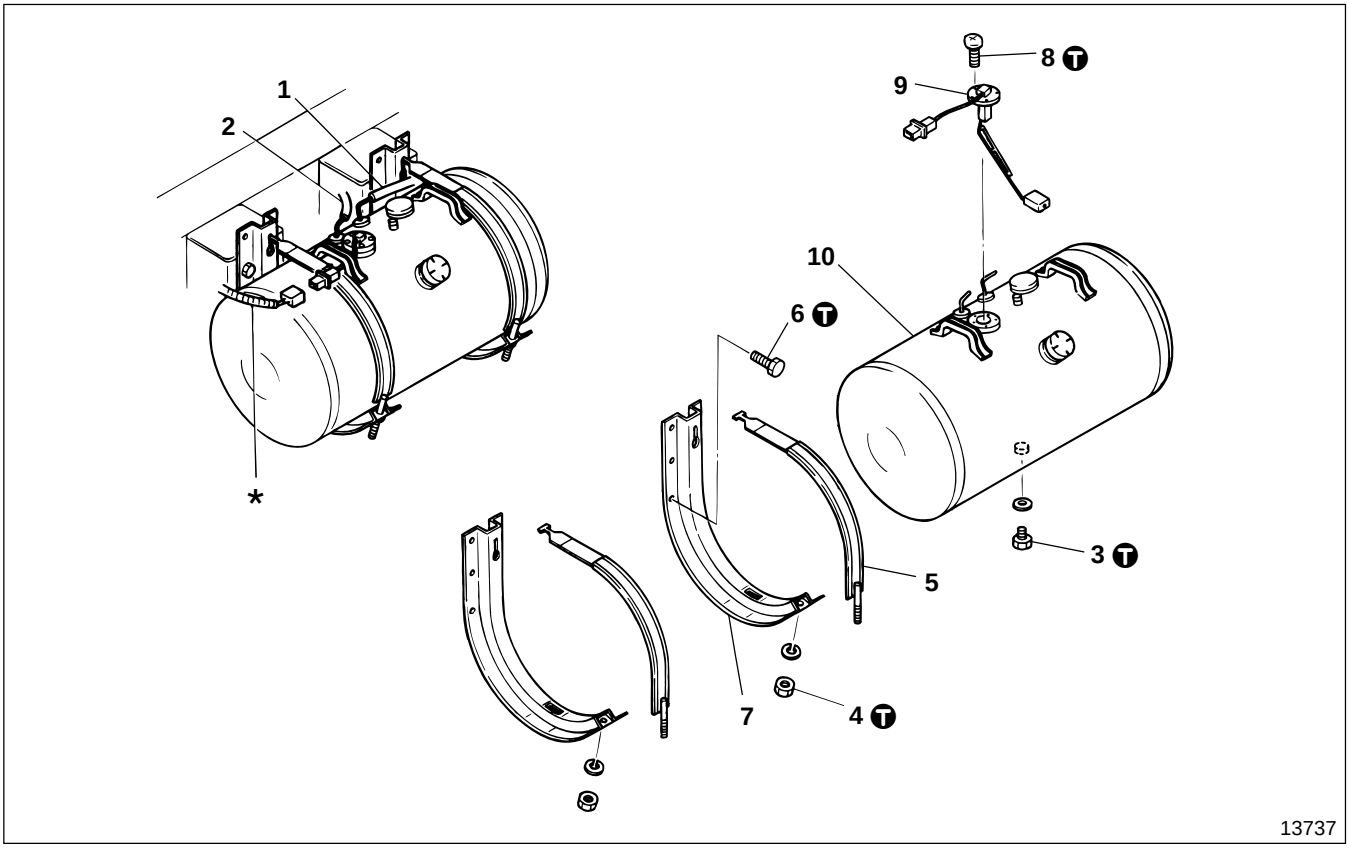

● **Work before removal**

WARNING ⚠

- **Keep drop lights away because of the risk of explosion.**
- **Wipe up any spilled fuel because it can cause a fire.**

NOTE

Drain fuel before working on the job.

● **Removal sequence**

1 Suction hose
2 Return hose
3 Drain plug
4 Nut
5 Fuel tank band
6 Bolt
7 Fuel tank bracket
8 Screw
9 Fuel gauge sending unit Gr 54
10 Fuel tank

* : Chassis harness Gr 54

● **Installation sequence**

Follow the removal sequence in reverse.

T Tightening torque

Unit : N·m {lbf.ft, kgf·m}

Location	Parts to be tightened	Tightening torque	Remarks
3	Drain plug	59 to 98 {43 to 72, 6 to 10}	—
4	Nut (Fuel tank band mounting)	5.9 to 9.8 {4.3 to 7.2, 0.6 to 1.0}	—
6	Bolt (Fuel tank bracket mounting)	34 to 54 {25 to 40, 3.5 to 5.5}	—
8	Screw (Fuel gauge sending unit mounting)	1.0 to 1.5 {0.7 to 1.1, 0.1 to 0.15}	—

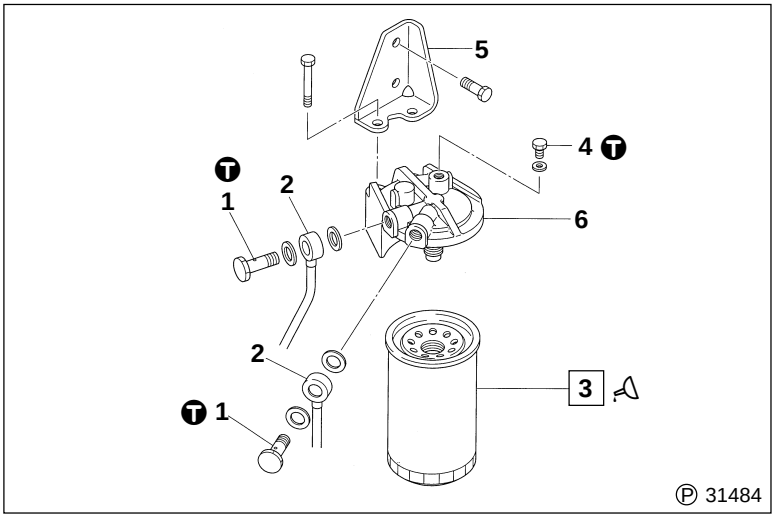

● **Disassembly sequence**

1 Eye bolt
2 Fuel feed pipe
3 Fuel filter
4 Air vent plug
5 Bracket
6 Fuel filter head

● **Assembly sequence**

Follow the disassembly sequence in reverse.

Tightening torque

Unit : N·m {lbf.ft, kgf·m}

Location	Parts to be tightened	Tightening torque	Remarks
1	Eye bolt	25 to 34 {18 to 25, 2.5 to 3.5}	—
4	Air vent plug	7.8 to 12 {5.8 to 8.7, 0.8 to 1.2}	—

Lubricant

Location	Points of application	Specified lubricant	Quantity
3	Gasket contact surfaces of fuel filter and fuel filter head	Engine oil	As required

Special tools

Unit : mm {in.}

Location	Tool name and shape	Part No.	Application
3	Filter wrench 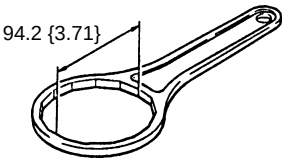 01882	MH061572	Removal of fuel filter

WATER SEPARATOR

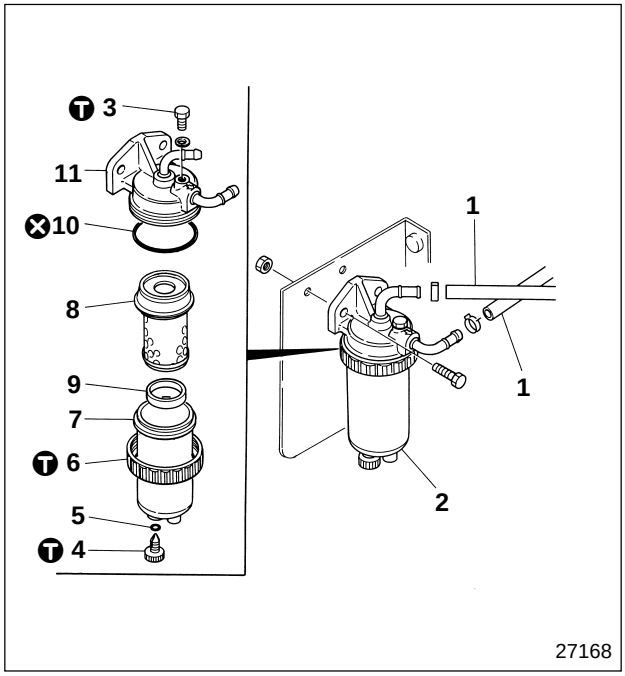

● **Disassembly sequence**

1 Fuel hose
2 Water separator assembly
3 Air vent plug
4 Drain plug
5 O-ring
6 Ring nut
7 Case
8 Screen assembly
9 Water level ring
10 O-ring
11 Head

⊗ : Non-reusable part

● **Assembly sequence**

Follow the disassembly sequence in reverse.

● **Operations after assembly**

Bleed all air out of the fuel system. P13-51

WARNING ⚠

- **Fuel is highly flammable. Keep it away from flames and sources of heat.**
- **After assembling the water separator, start the engine and check that no fuel leakage occurs. Any leaking fuel could cause a fire.**

Ⓣ Tightening torque

Unit : N·m {lbf.ft, kgf·m}

Location	Parts to be tightened	Tightening torque	Remarks
3	Air vent plug	8 to 12 {5.8 to 8.7, 0.8 to 1.2}	—
4	Drain plug	3 to 4 {2.2 to 2.9, 0.3 to 0.4}	—
6	Ring nut	23 to 27 {17 to 20, 2.3 to 2.8}	—

M E M O

INJECTION PUMP

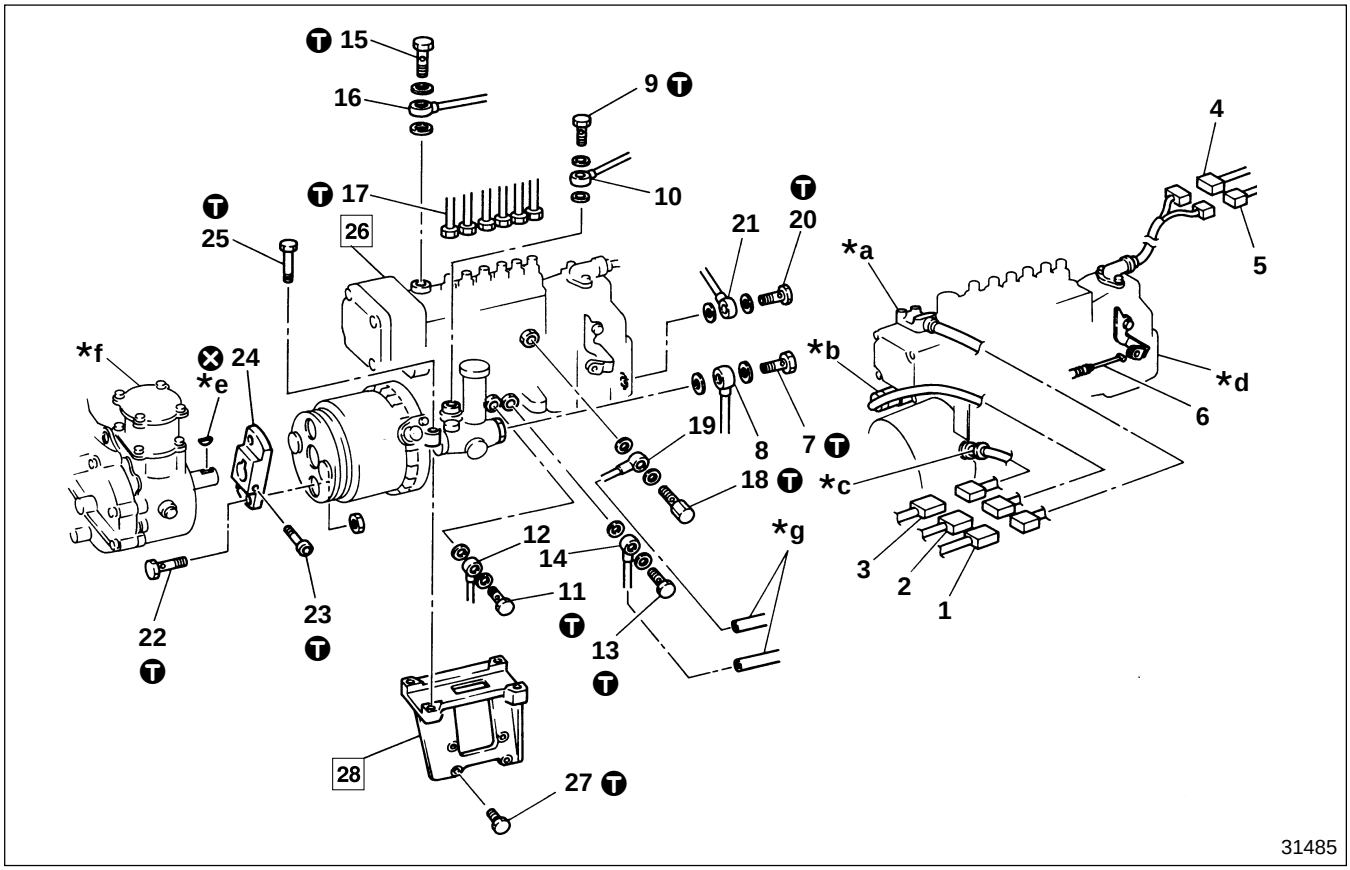

● **Removal sequence**

1 Harness (6 pin)
2 Harness (4 pin)
3 Harness (3 pin)
4 Harness (10 pin)
5 Harness (3 pin)
6 Emergency engine stop cable 🕮 P13-53
7 Eye bolt
8 Fuel suction pipe
9 Eye bolt
10 Fuel feed pipe
11 Eye bolt
12 Oil feed pipe
13 Eye bolt
14 Oil return pipe
15 Eye bolt
16 Fuel feed pipe
17 Injection pipe
18 Overflow valve
19 Fuel return pipe
20 Eye bolt
21 Oil return pipe
22 Bolt
23 Cotter bolt
24 Driving coupling
25 Bolt
26 Injection pump assembly
27 Bolt
28 Injection pump bracket

***a** : Pre-stroke actuator 🕮 P13-13, 24
***b** : Sub control rod position sensor 🕮 P13-21
***c** : Engine speed sensor 🕮 P13-21
***d** : Electronic governor 🕮 P13-28
***e** : Key
***f** : Injection pump drive case 🕮 P13-68
***g** : Fuel hose
⊗ : Non-reusable parts

WARNING ⚠

- **Fuel ignites easily. Do not get it near flame or heat.**
- **Wipe up any spilled fuel because it can cause a fire.**

CAUTION ⚠

- **Be sure to protect all openings by covering them after removal of hoses and pipes because the engine performance is adversely affected if dirt and foreign particles enter injection pump assembly 26.**
- **Do not hold the control lever when lifting injection pump assembly 26. Also, do not remove the control lever because removal of the lever might cause poor performance of the pump.**
- **Do not remove injection pump bracket 28 unless it is faulty.**
- **Make sure you connect fuel hose *g at a high position because fuel in the fuel tank would leak out if the end of the fuel hose were at a position lower than the tank.**

● **Installation sequence**

Follow the removal sequence in reverse.

Service standards

Unit : mm {in.}

Location	Maintenance item	Standard value	Limit	Remedy
28	Injection pump bracket (eccentricity of injection pump centering tool to air compressor crankshaft)	0.2 {0.0079} or less	—	Adjust

Tightening torque

Unit : N·m {lbf.ft, kgf·m}

Location	Parts to be tightened		Tightening torque	Remarks
7, 9, 15	Eye bolt (Fuel suction pipe and fuel feed pipe mounting)		25 to 29 {18 to 22, 2.5 to 3}	—
11, 20	Eye bolt (Oil feed pipe and Oil return pipe mounting)		12 to 15 {8.7 to 11, 1.2 to 1.5}	—
13	Eye bolt (Oil return pipe mounting)		20 to 29 {14 to 22, 2 to 3}	—
17	Injection pipe mounting		29 to 49 {22 to 36, 3 to 5}	—
18	Overflow valve mounting		20 to 29 {14 to 22, 2 to 3}	—
22	Bolt (Driving coupling mounting)		59 to 64 {43 to 47, 6 to 6.5}	—
23	Cotter bolt		83 to 93 {61 to 69, 8.5 to 9.5}	—
25	Bolt (Injection pump assembly mounting)	Primary tightening	4.9 {3.6, 0.5}	—
		Secondary tightening	25 {18, 25}	—
27	Bolt (Injection pump bracket mounting)		33 to 55 {25 to 41, 3.4 to 5.6}	—

Special tools

Unit : mm {in.}

Location	Tool name and shape	Part No.	Application
28	Injection pump centering tool 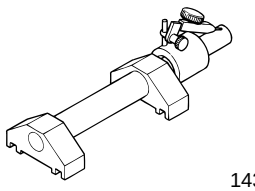 14311	MH063336	Positioning of injection pump bracket

◆ Service procedure

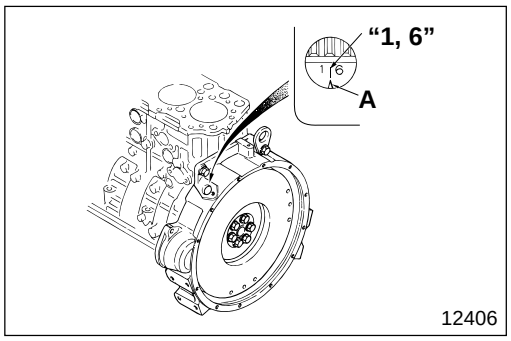

26 **Installation of injection pump assembly**

- Turn the engine to bring No.1 cylinder piston to top dead center in the compression cycle, and align mark "**1, 6**" of the flywheel with pointer **A** on the flywheel housing.

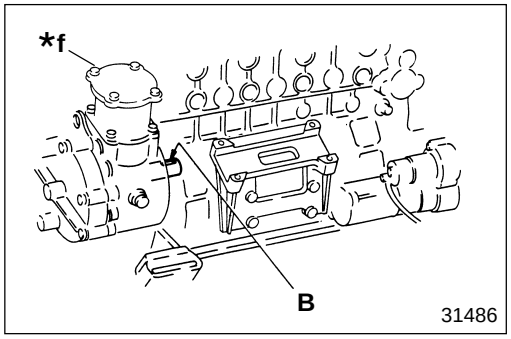

- In this state, make sure that keyway **B** in the crankshaft of injection pump drive case ***f** faces upward.
- If keyway **B** is not facing upward, turn the engine crankshaft by one turn.

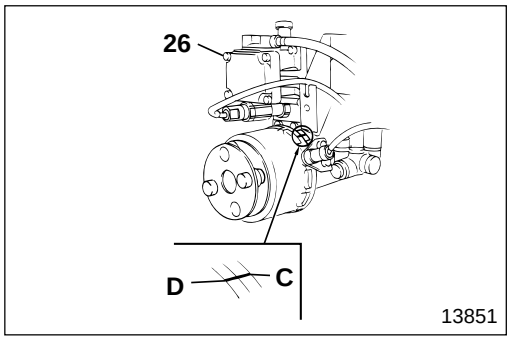

- Align pointer **C** on injection pump assembly **26** with notch **D** on the automatic timer.

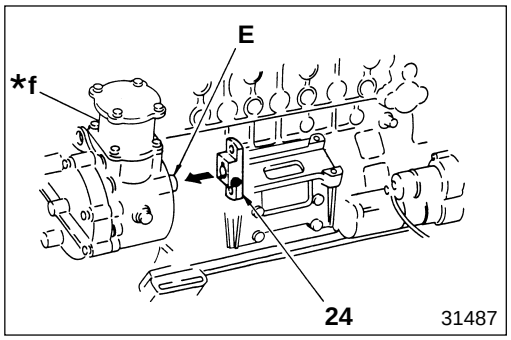

- Install driving coupling **24** to crankshaft **E** of injection pump drive case ***f** and place the driving coupling on the air compressor side.
- Install injection pump assembly **26** on the injection pump bracket.

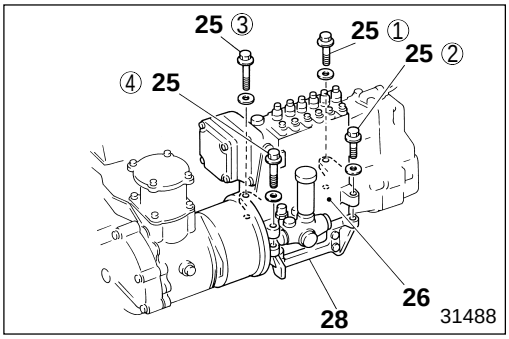

- Install injection pump assembly **26** on injection pump bracket **28**.
- Tighten bolts **25** in the order as illustrated at specified torque for primary tightening.
- Retighten bolts **25** in the order as illustrated at specified torque for secondary tightening.

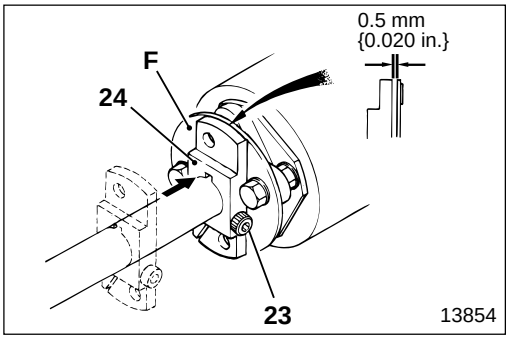

- Move driving coupling **24** to adjust the clearance between the driving coupling and coupling plate **F** as illustrated, then tighten cotter bolt **23** at specified torque.

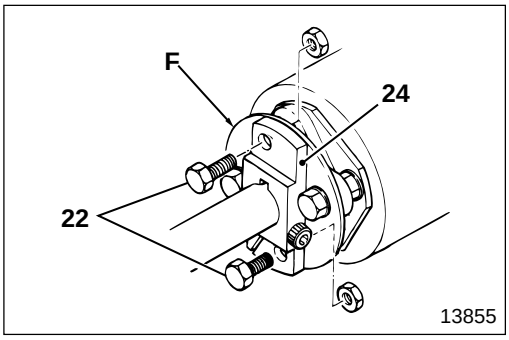

- Attach driving coupling **24** and coupling plate **F** using bolts **22** and tighten the bolts temporarily.
- In this state, adjust the fuel injection timing.
  Adjustment of fuel injection timing : P13-50
  After adjusting the fuel injection timing, tighten bolts **22** at specified torque.

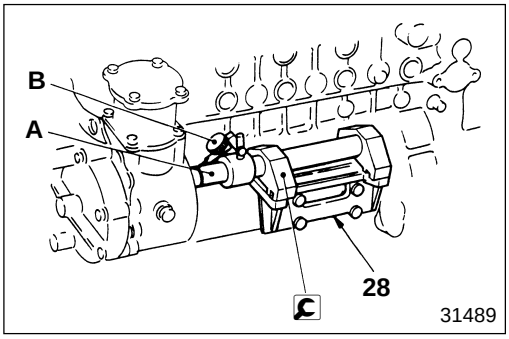

28 **Injection pump bracket**

[Inspection]

- Attach dial gauge **B** to arbor **A** of injection pump centering tool and adjust to gauge to zero setting.

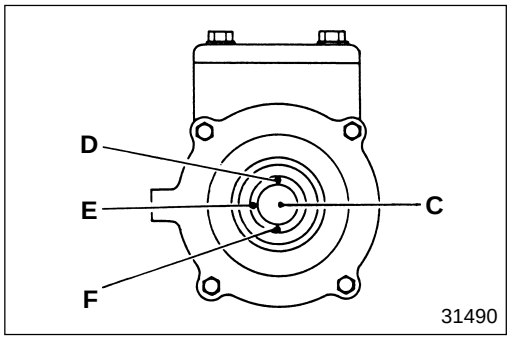

- Slide dial gauge **B** toward injection pump drive case ***f** and measure the eccentricity of crankshaft **C** against arbor **A** at points **D**, **E** and **F**.
- If the measured value is higher than the standard value, adjust as follows.

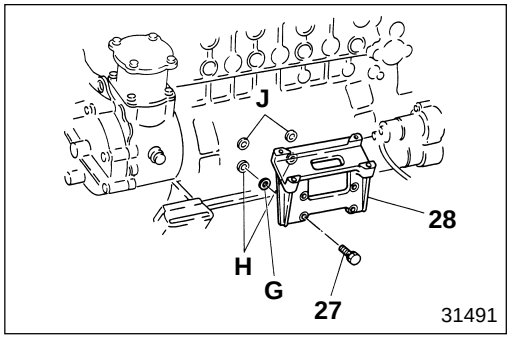

[Adjustment]

- When the measured value at point **E** is higher than the standard value:
  Insert shims **G** into four points equally.
- When the measured value at point **D** is higher than the standard value:
  Insert shims **G** into lower side **H**.
- When the measured value at point **F** is higher than the standard value:
  Insert shims **G** into upper side **J**.

CAUTION ⚠

Insert shims G observing the following conditions:

- **Number of shims per point is three or less.**
- **The same number of shims should be used for the front and the rear.**
- **The difference in number of shims used for bottom and top is none or one.**

- Tighten bolt **27** at specified torque, then reinspect.

M E M O

INJECTION PUMP DRIVE CASE

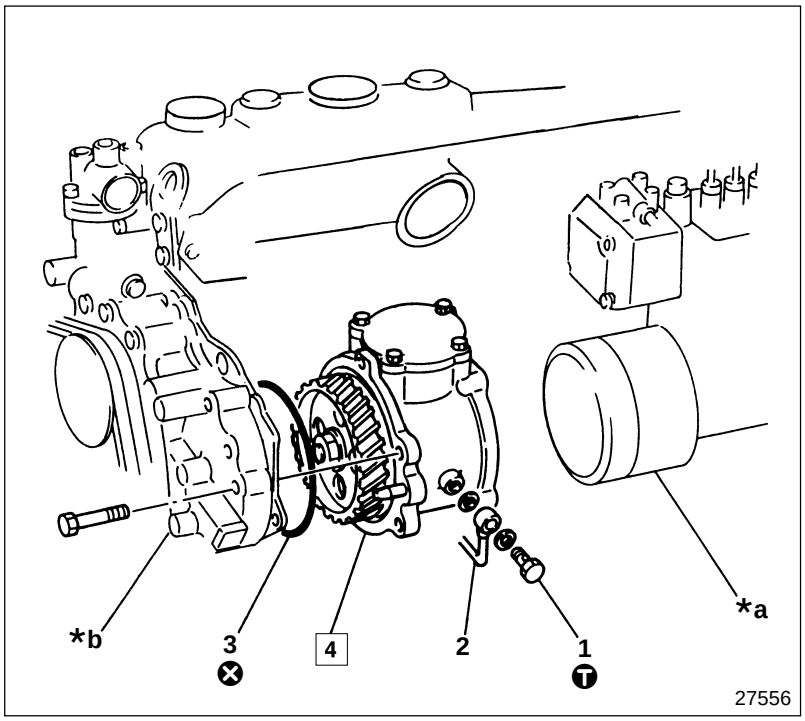

● **Removal sequence**

1 Eye bolt
2 Oil pipe
3 O-ring
4 Injection pump drive case assembly 📖 P13-70

***a** : Injection pump assembly 📖 P13-62
***b** : Timing gear case Gr 11
⊗ : Non-reusable parts

● **Installation sequence**

Follow the removal sequence in reverse.

Ⓣ Tightening torque

Unit : N·m {lbf.ft, kgf·m}

Location	Parts to be tightened	Tightening torque	Remarks
1	Eye bolt	21 {15, 2.1}	—

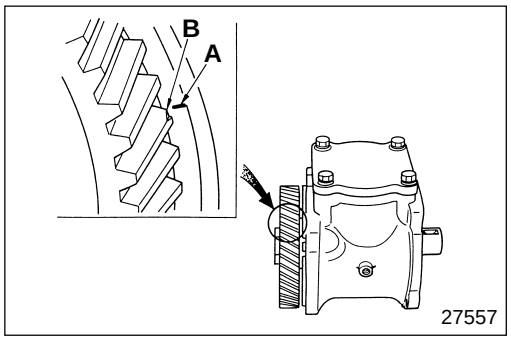

◆ Service procedure

4 **Installation of injection pump drive case assembly**

- Position No.1 cylinder of the engine at top dead center in the compression cycle. Gr 11
- Align marking line **A** with notch **B**, then install injection pump drive case assembly **4** on timing gear case ***b**.

M E M O

INJECTION PUMP DRIVE CASE

Injection Pump Drive Case Assembly

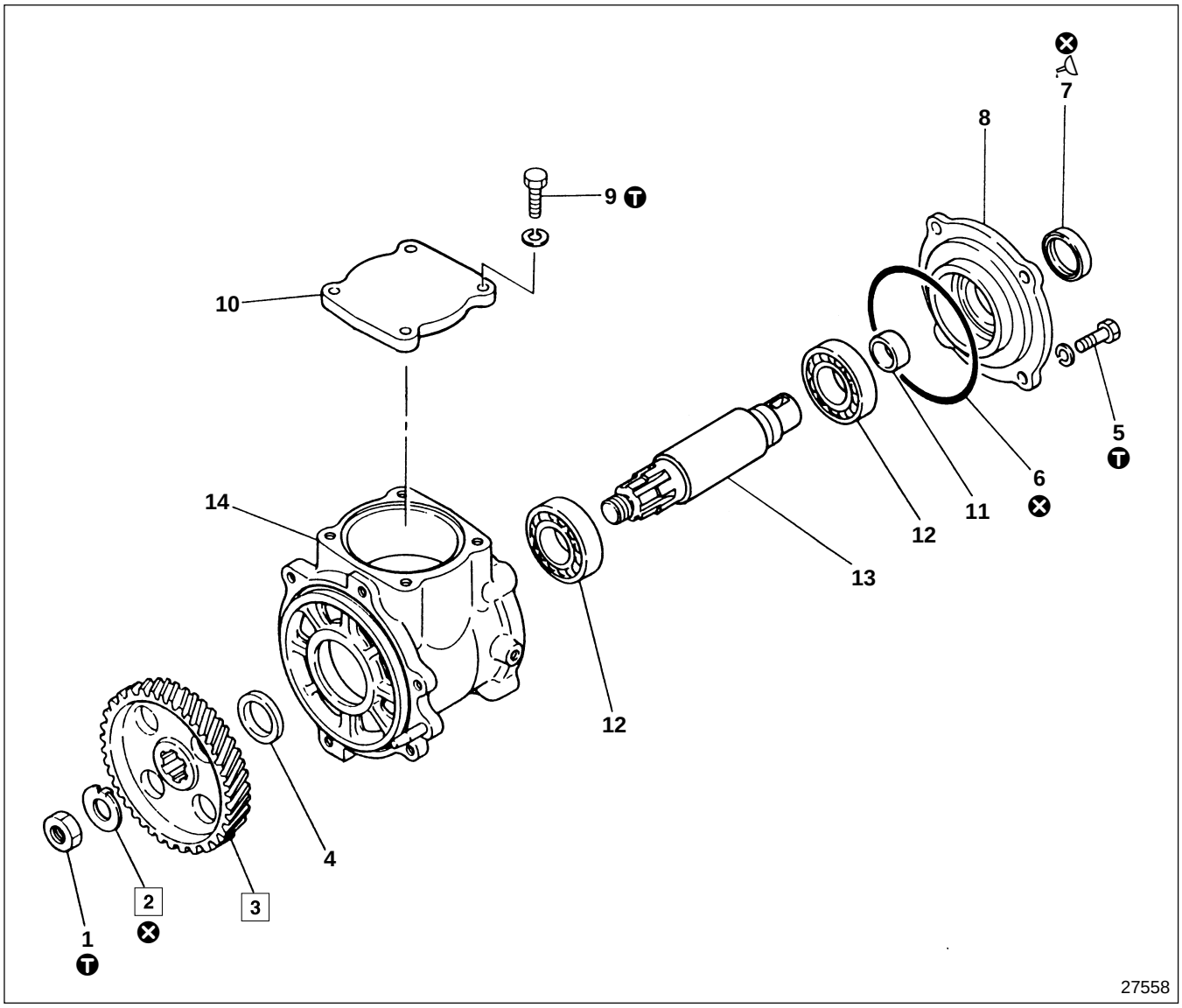

● **Disassembly sequence**

1 Nut
2 Lock washer
3 Drive gear
4 Collar
5 Bolt
6 O-ring
7 Oil seal
8 Bearing holder
9 Bolt
10 Cover
11 Sleeve
12 Bearing
13 Shaft
14 Crankcase

⊗ : Non-reusable parts

● **Assembly sequence**

Follow the disassembly sequence in reverse.

Tightening torque

Unit : N·m {lbf.ft, kgf·m}

Location	Parts to be tightened	Tightening torque	Remarks
1	Nut (Drive gear mounting)	166.7 to 210.8 {120 to 155, 17.0 to 21.5}	—
5	Bolt (Bearing holder mounting)	13.7 to 17.7 {10 to 13, 1.4 to 1.8}	—
9	Bolt (Cylinder head assembly mounting)	24.5 to 29.4 {18 to 22, 2.5 to 3.0}	—

Lubricant

Location	Points of application	Specified lubricant	Quantity
7	Oil seal lip	Engine oil	As required

◆ Service procedure

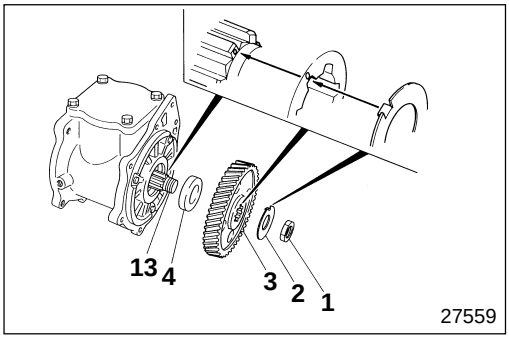

2 **3** **Installation of lock washer and drive gear**

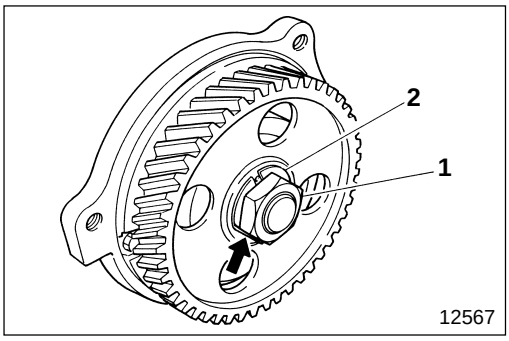

After installation, bend lock washer **2** to nut **1** side.

INJECTION NOZZLE

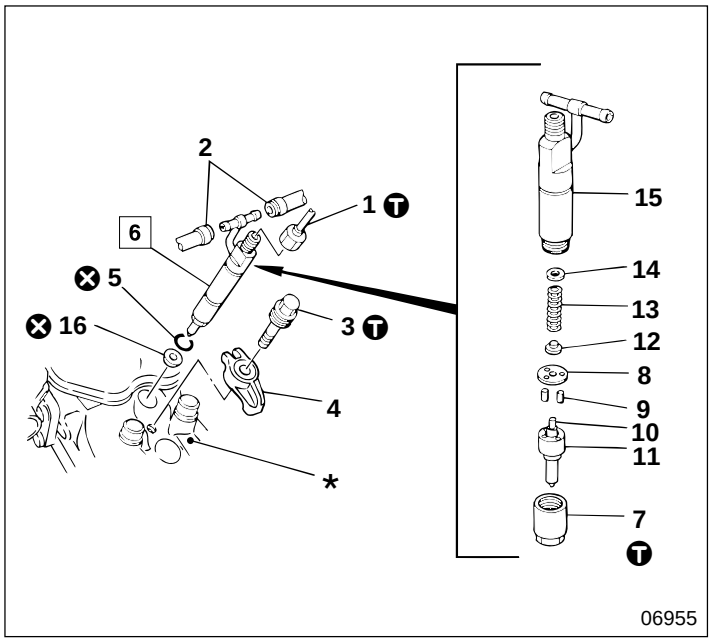

● **Inspection before disassembly**

P13-73

● **Disassembly sequence**

1 Injection pipe
2 Leak-off pipe
3 Bolt
4 Bridge
5 O-ring
6 Injection nozzle assembly
7 Retaining nut
8 Tip packing
9 Straight pin
10 Needle valve
11 Nozzle
12 Pressure pin
13 Spring
14 Adjusting shim
15 Nozzle holder
16 Nozzle gasket

* : Cylinder head Gr 11
⊗ : Non-reusable parts

● **Assembly sequence**

Follow the disassembly sequence in reverse.

WARNING ⚠

Wipe up any spilled fuel because it can cause a fire.

CAUTION ⚠

- **Be sure not to touch slide-contact area of needle valve 10 because any scratches or corrosion might spoil the airtightness of nozzle 11. It must be handled with utmost care.**
- **Never change the combination of needle valve 10 and nozzle 11 for each cylinder.**
  Be sure to protect all openings by covering them after removal of hoses and pipes because the engine performance is adversely affected if dirt and foreign particles enter injection nozzle assembly 6.

NOTE

Remove carbon deposits and clean injection nozzle assembly 6 before working on it, then test the injection pressure and jet spray condition, and check for fuel leakage before disassembly. If no fault is found, do not disassemble.

Service standards

Location	Maintenance item	Standard value	Limit	Remedy
6	Valve opening pressure	21.6 MPa {3130 lbf/in^2, 220 kgf/cm^2}	—	Adjust

T Tightening torque

Unit : N·m {lbf.ft, kgf·m}

Location	Parts to be tightened	Tightening torque	Remarks
1	Union nut (Injection pipe mounting)	25 {18, 2.5}	—
3	Bolt (Bridge mounting)	25 {18, 2.5}	—
7	Retaining nut	34 to 44 {25 to 33, 3.4 to 4.5}	—

Special tools

Location	Tool name and shape	Part No.	Application
—	Nozzle cleaning tool	★105789-0010	Cleaning of injection nozzle assembly

★ ZEXEL code number

◆ Service procedure

● Inspection before disassembly

Attach injection nozzle assembly **6** to nozzle tester **A**, and conduct the following inspection.

WARNING ⚠

Never touch the spray from nozzle 11 or let your hands get too close to the spray point during the test.

NOTE

Before inspection, bleed the air out in a couple of bursts by pressing nozzle tester A lever.

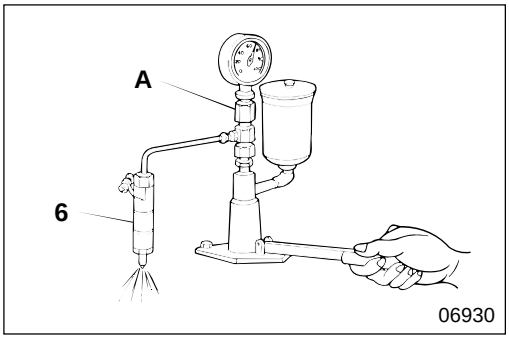

(1) Valve opening pressure

- Raise the pressure of nozzle tester **A** by operating the lever, an measure the pressure that the gauge registers when the pressure is released which will be observed by the sudden movement of the gauge indicator.
- If the measured value deviates from the standard value, disassemble the nozzle and clean, and adjust it using adjusting shims **14**.
- Variation of 0.05 mm {0.0020 in.} thickness in adjusting shims **14** causes a difference of 735 kPa {105 lbf/in^2, 7.5 kgf/cm^2} of pressure, for example, to alter the pressure for 98 kPa {14 lbf/in^2, 1 kgf/cm^2}, a thickness of 0.0067 mm {0.00026 in.} is required.
- If the performance cannot reach the standard value even after adjustment, replace injection nozzle assembly **6**.

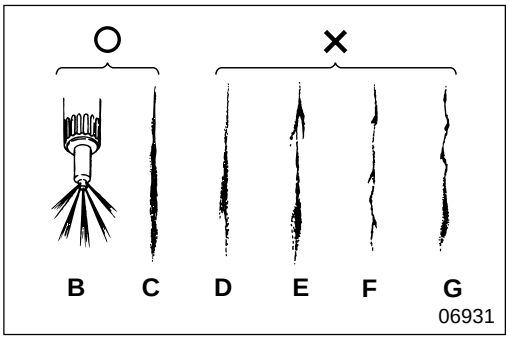

(2) Spray condition

- Test injection spray condition by quick lever actions of nozzle tester **A**, 4 to 6 actions per second.
  - **B** : Even spray from all five orifices (Good)
  - **C** : Even and symmetrical spray (Good)
  - **D** : Asymmetrical spray (Faulty)
  - **E** : Spray direction deviates from the nozzle axis line (Faulty)
  - **F** : Thin and insufficient spray (Faulty)
  - **G** : Irregular spray (Faulty)
- If faulty spray cannot be corrected, disassemble injection nozzle assembly **6** and clean every part and repeat the test.
  If faulty spray still occurs after repeating test, replace the injection nozzle assembly.
- Make sure that there is no post-spray dripping after injection.

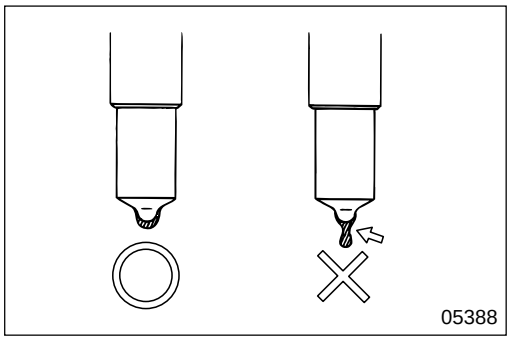

(3) Fuel air tightness and leakage at related contact points

- Maintain interior pressure of nozzle at 1960 kPa {285 lbf/in^2, 20 kgf/cm^2} lower than the valve opening pressure, and check and see if any fuel seeps out of the nozzle tip within 10 seconds.
- If any fault is found, disassemble injection nozzle assembly **6** and clean every part and repeat the test. If any fault is still found, replace the injection nozzle assembly.

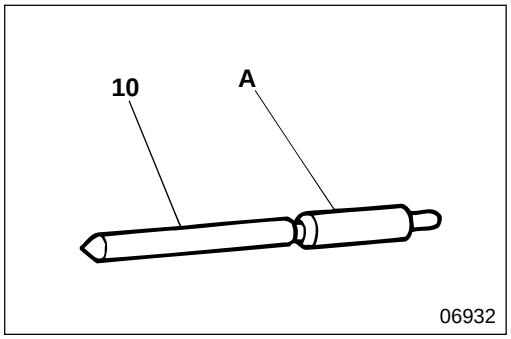

6 Injection nozzle assembly

[Disassembly]

CAUTION

- **Be sure not to touch sliding part A of needle valve 10 with your hands.**
- **Never change the combination of removed needle valve 10 and nozzle 11 for each cylinder.**

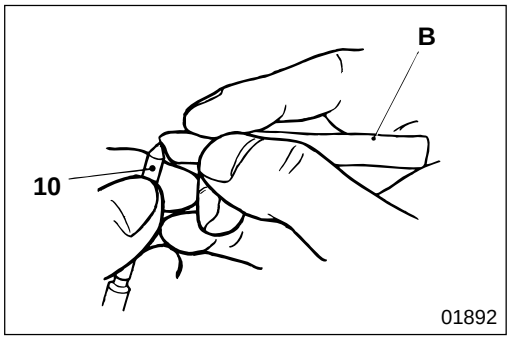

[Cleaning]

Clean needle valve **10** and nozzle **11** with diesel fuel (cleaning solvent). Remove carbon deposits with cleaning tool in the following manner:

- Clean needle valve **10** by removing carbon deposits from its tip using cleaning bar **B** of cleaning tool.

CAUTION

Never use a wire brush or hard steel for cleaning.

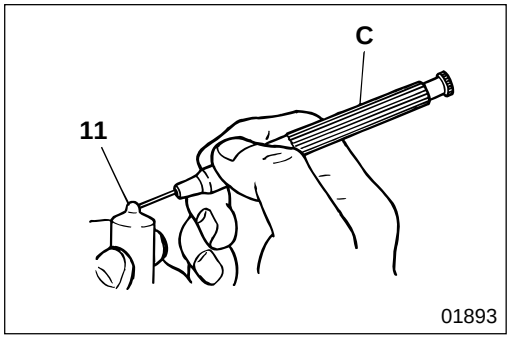

- To clean nozzle **11**, remove carbon deposits from the orifices of the nozzle using needle cleaner **C** of cleaning tool, by inserting it into the orifices and turning it.
  Needle cleaner diameter : ø 0.25 mm {0.0098 in.} or less

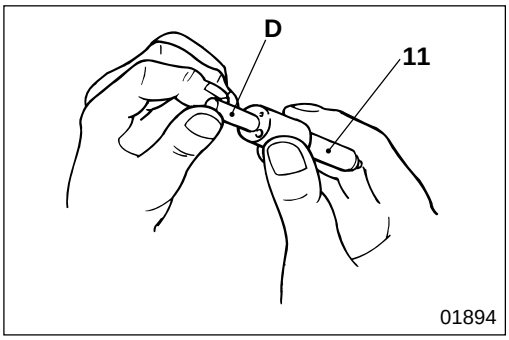

- Clean the seat of nozzle **11** using cleaning needle **D** of [C] cleaning tool.
- Use FUSO carbon remover to remove hard-to-remove, burnt-on carbon deposits.

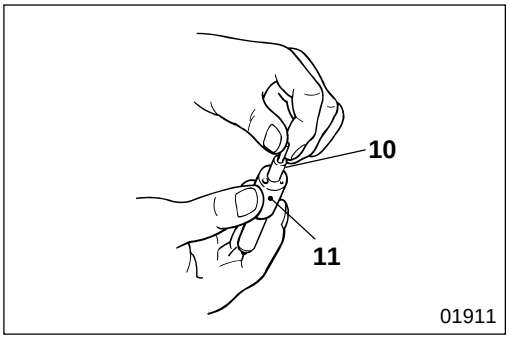

[Inspection]

- Immerse needle valve **10** and nozzle **11** in diesel fuel (cleaning solvent) and clean them thoroughly.
- Check and see if needle value **10** drops by its own weight into the nozzle from the position where a third of its length is pulled out. (Repeat this several times rotating the needle valve.)
- If needle valve **10** does not drop smoothly, repeat cleaning and repeat the test. If any fault is still found, replace both the needle valve and nozzle **11** together as a set.

INSPECTION OF OTHER DEVICES

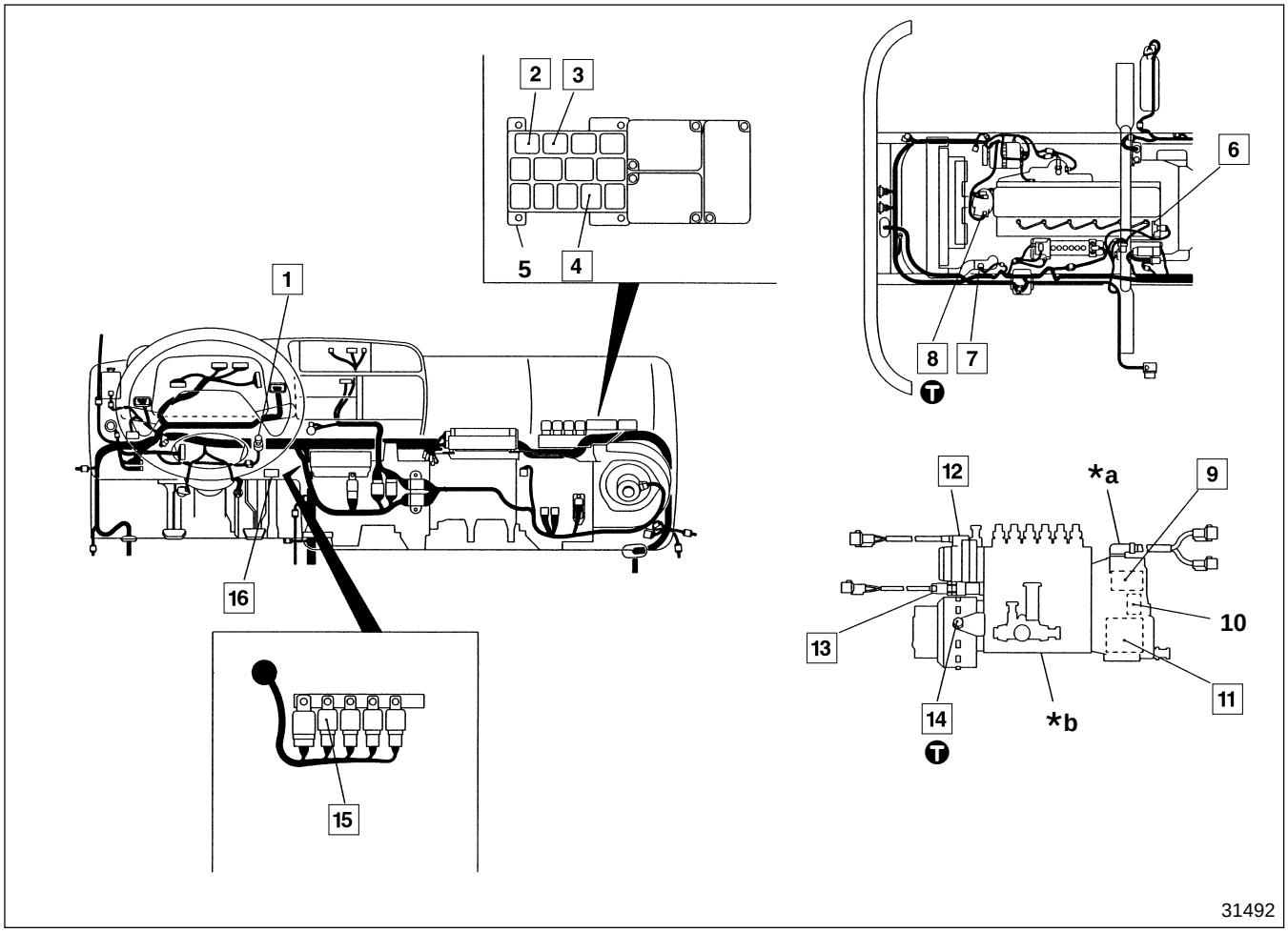

1 Idling speed adjustment potentiometer
2 Pre-stroke cut relay
3 Transmission neutral relay
4 Exhaust brake relay
5 Relay box
6 Boost pressure sensor
7 Boost temperature sensor
8 Engine coolant temperature sensor
9 Control rack position sensor
10 Backup engine speed sensor
11 Linear DC motor
12 Pre-stroke actuator
13 Sub control rack position sensor
14 Engine speed sensor
15 Accelerator relay < A/T >
16 Emergency engine stop button

***a** : Electronic governor
***b** : Injection pump assembly
M/T : Manual transmission
A/T : Automatic transmission

Service standards

Location	Maintenance item			Standard value	Limit	Remedy
1	Output voltage of idling speed adjustment potentiometer  16184	②–③	Knob pulled	1 to 3 V	—	Replace
			Knob pushed	3.6 to 4.3 V	—	
7	Resistance value of boost temperature sensor		0°C {32°F}	5880 ± 588 Ω	—	Replace
			20°C {68°F}	2455 ± 245 Ω	—	
			80°C {176°F}	322 ± 32 Ω	—	
8	Engine coolant temperature sensor	Between terminal and body	20°C {68°F}	(3.25 kΩ)	—	Replace
			40°C {104°F}	(1.5 kΩ)	—	
			60°C {140°F}	(620 ± 62 kΩ)	—	
9	Resistances of control rack position sensor	<Connector : 3 pin>  16165	③–④ <3 pin>	31.5 to 36.5 Ω	—	Repair or replace the injection pump assembly. *
			③–⑨ <10 pin>	18.0 to 21.0 Ω	—	
		<Connector : 10 pin> 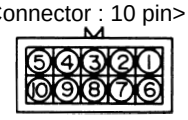 16160	④–⑨	13.5 to 15.5 Ω	—	
		<Governor actuator> 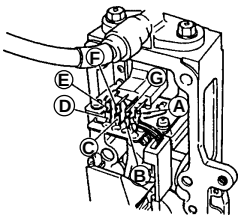 24816	Ⓖ–Ⓒ	31.5 to 36.5 Ω	—	
			Ⓖ–Ⓕ	18.0 to 21.0 Ω	—	
			Ⓒ–Ⓕ	13.5 to 15.5 Ω	—	
11	Resistances of linear DC motor	<Connector : 3 pin>  16165	①–②	9.0 to 9.8 Ω	—	Repair or replace the injection pump assembly. *
		<Connector : 10 pin> 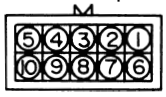 16160	①–②		—	Repair or replace the injection pump assembly. *
		<Governor actuator> 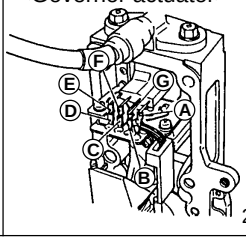 24816	Ⓐ–Ⓑ		—	Repair or replace the injection pump assembly. *

The values in ( ) are reference values.

* : Contact your MFTA representative for current injection pump repair and replacement procedures.

INSPECTION OF OTHER DEVICES

Unit : mm {in.}

Location	Maintenance item		Standard value	Limit	Remedy
12	Resistances of pre-stroke actuator (measured at connector) 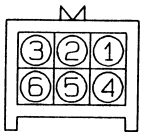 13714	②–③	5.5 to 6.1 Ω	—	Repair or replace the injection pump assembly. *
		①–③	11.0 to 12.2 Ω	—	
		①–②	5.5 to 6.1 Ω	—	
		④–⑤	2.45 to 2.95 Ω	—	
13	Resistances of sub control rack position sensor  13725	①–④	92.5 to 101.5 Ω	—	Repair or replace the injection pump assembly. *
		①–③	92.5 to 101.5 Ω	—	
		③–④	185 to 203 Ω	—	
14	Resistances of engine speed sensor (at 25°C {77°F}) 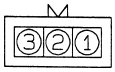 14013	①–②	2.1 to 2.5 kΩ	—	Replace
	Gap between the engine speed sensor and timer housing protrusion		0.8 to 1 {0.031 to 0.039}	—	Adjust

* : Contact your MFTA representative for current injection pump repair and replacement procedures.

Tightening torque

Unit : N·m {lbf.ft, kgf·m}

Location	Parts to be tightened	Tightening torque	Remarks
8	Coolant temperature sensor	34 ± 6.9 {25 ± 5, 3.5 ± 0.7}	—
14	Engine speed sensor lock nut	24 to 35 {17 to 26, 2.4 to 3.6}	—

◆ Service procedure

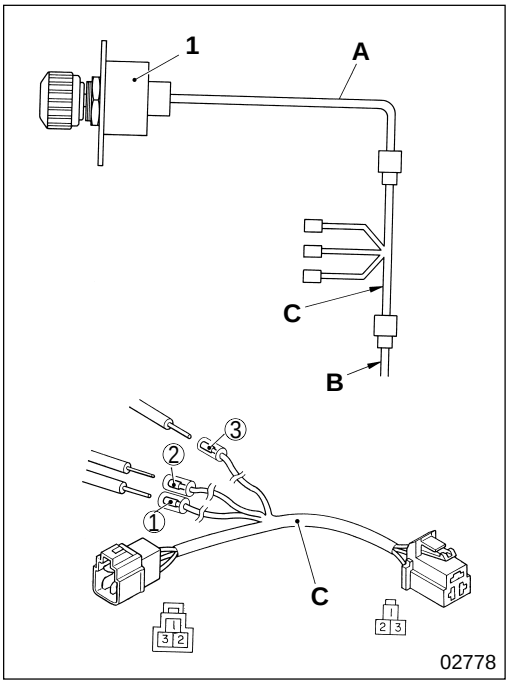

1 **Inspection of idling speed adjustment potentiometer**

- Disconnect the harness **A** of the idling speed adjustment potentiometer **1** from the cab-side harness **B**. Then, connect an inspection harness **C** between harnesses **A** and **B.** (The inspection harness must be made specially for this procedure.)
- Turn the starter switch to the ON position.
- Check the output voltages of the idling speed adjustment potentiometer **1** in accordance with the following table.

Item	Connector terminal		
	Accelerator pedal position sensor inspection harness		
	①: Power supply (+)	②: GND (–)	③: Output (+)
Output voltage with knob pulled		⊖	⊕
Output voltage with knob pushed			

Output characteristics

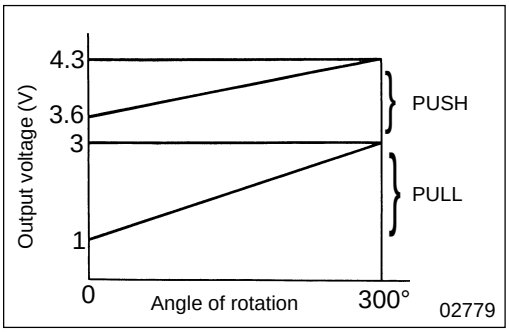

- If the output voltages are out of specification, replace the idling speed adjustment potentiometer **1**.

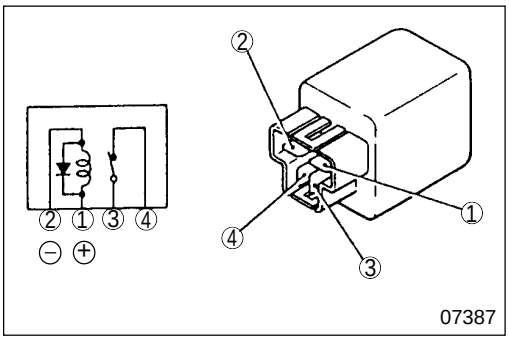

2 **3** **Inspection of pre-stroke cut relay and transmission neutral relay (normally-closed type with 4 pin connector)**

- Perform continuity checks in accordance with the following table.

	①	②	③	④
Not energized	○——○		○——○	
Energized	⊕	⊖	〔⊢ - - -⊣〕	

○——○ : Continuity exists between terminals.
⊕——⊖ : Terminals across which 12 V DC is applied
〔⊢ - - -⊣〕 : Continuity no longer exists between terminals

- Replace the relay if any abnormality is evident.

INSPECTION OF OTHER DEVICES

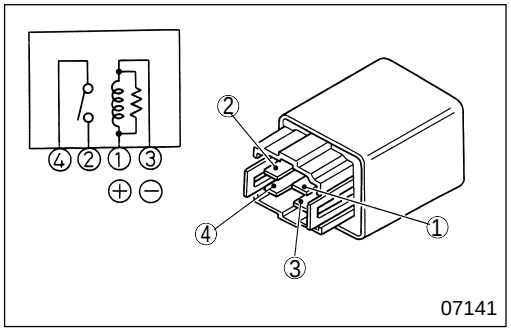

4 **15** **Inspection of exhaust brake relay and accelerator relay**

- Check the electrical conduction and operation according to the table below.

	①	②	③	④
Electric current not supplied	○		○	
Electric current supplied	⊕	○	⊖	○

○—○ Electric conduction between terminals.
⊕—⊖ Terminals applied with 12 VDC.

- If an abnormality is found, replace the relay.

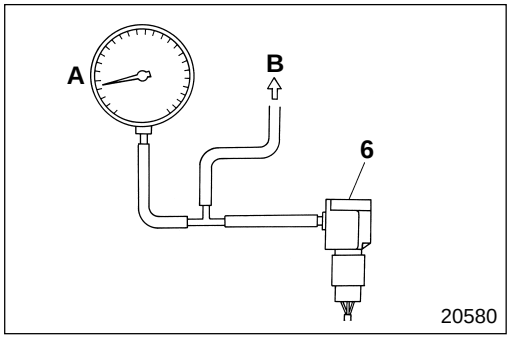

6 **Inspection of boost pressure sensor**

- Install pressure gauge **A** for boost pressure measurement as shown in the diagram.
- Connect the MUT-II 📖 P13-42
- Set the MUT-II for boost pressure measurement
- Start the engine. Compare the value displayed on the MUT-II and the value indicated by pressure gauge **A**. If the values are different, replace boost pressure sensor **6**.
  B : To the inlet manifold

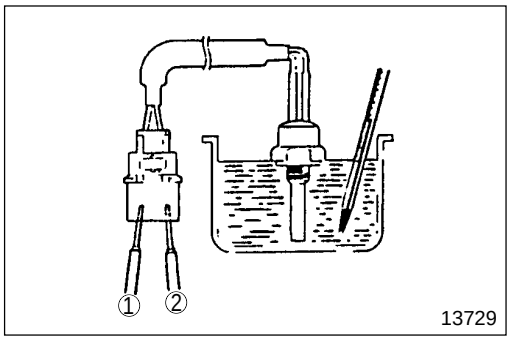

7 **Inspection of boost temperature sensor**

- Place boost temperature sensor **7** in glycerin in a container.
- Raise the glycerin temperature to the specified values and stir the glycerin.
- Measure the resistance between terminals ① and ②.
- If the measured value deviates from the standard value, replace boost temperature sensor **7**. Gr 15

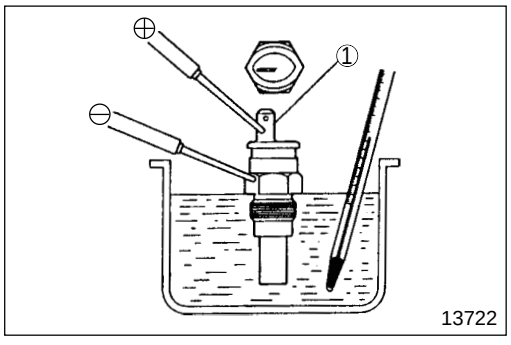

8 **Inspection of engine coolant temperature sensor**

- Put the engine coolant temperature sensor **8** in a container of engine oil.
- Heat the oil to each of the specified temperatures. Stir the oil to ensure that it heats up evenly.
- At each of the specified temperatures, measure the resistance between the terminal ① and body of the engine coolant temperature sensor **8**.
- If the measurements are out of specification, replace the engine coolant temperature sensor **8**.

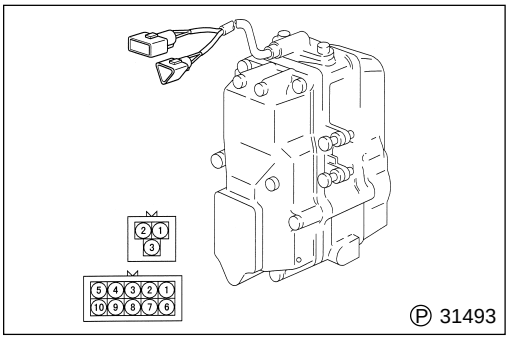

9 Inspection of control rack position sensor

Perform the following inspections. If any abnormality is evident, have inspection and repair performed by the nearest MFTA Dealer.

● **Measurements on connectors**

Measure the resistances between the following terminals: 3 pin connector's ③ and 10 pin connector's ④; 10 pin connector's ③ and ⑨; ④ and ⑨.

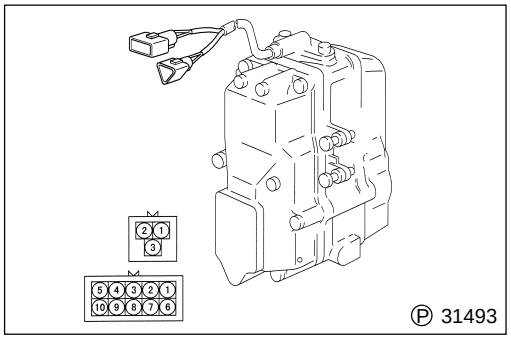

11 Inspection of linear DC motor

Perform the following inspections. If any abnormality is evident, have inspection and repair performed by the nearest MFTA Dealer.

(1) Measurements on connectors

Measure the resistance between terminals ① and ② on each connector.

12 Inspection of pre-stroke actuator

Perform the following inspections. If any abnormality is evident, have inspection and repair performed by the nearest MFTA Dealer.

CAUTION ⚠

The pre-stroke actuator 12 must be inspected when the engine is cold.

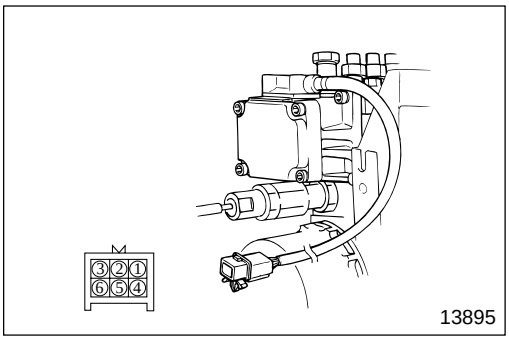

(1) Measurements on connectors

Measure the resistance between terminals ② and ③; ① and ③; ① and ②; ④ and ⑤.

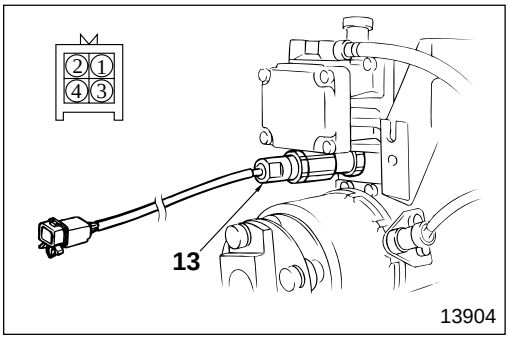

13 Inspection of sub control rack position sensor

- Measure the resistances between the following terminals: ① and ④; ① and ③; ③ and ④.
- If any resistance is out of specification, replace the sub control rack position sensor **13**.
- Have replacement performed by the nearest MFTA Dealer.

INSPECTION OF OTHER DEVICES

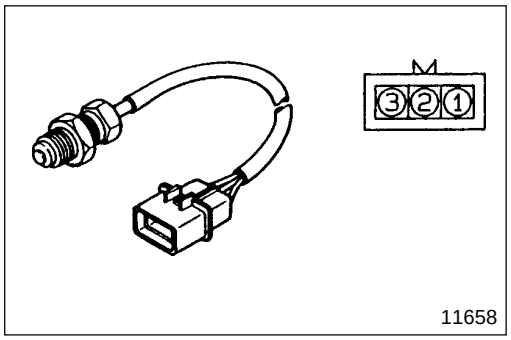

14 Engine speed sensor

[Inspection]

(1) Main Unit

- Measure the resistance between terminals ① and ②.
- If the measured value deviates from the standard value, replace engine speed sensor **14**.

CAUTION

Be sure to check the tightening torque of engine speed sensor 14. If the tightening torque is insufficient, the sensor may not output a signal.

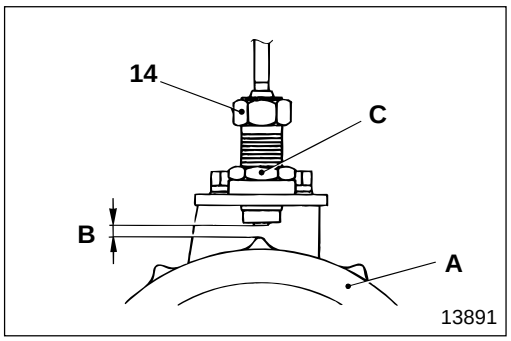

(2) Clearance between protrusions

If the clearance between engine speed sensor **14** and timer housing protrusion **A** deviates from the standard value, adjust by following the procedure below.

[Adjustment]

- Loosen lock nut **C**, and rotate engine speed sensor **14** to adjust the clearance.
- After adjustment, tighten lock nut **C** to the specified torque.

CAUTION

If clearance B between engine speed sensor 14 and timer housing protrusion A is too large, the sensor may not output a signal. If the clearance is too small, the sensor may contact the protrusions.

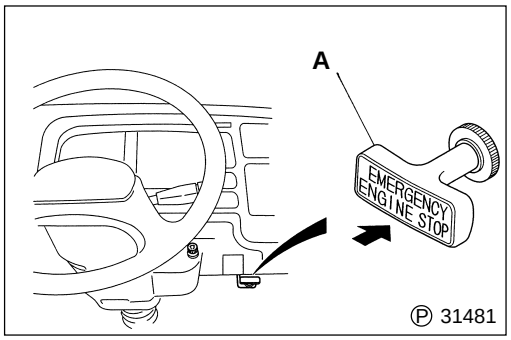

16 Inspection of emergency engine stop button

- Push emergency engine stop button **16** all the way.
- In this step, make sure that stop lever **A** of the governor is in contact with stopper bolt **B**.
- If the stop lever does not contact the stopper bolt, turn nut **C** until they contact, and tighten nut **D** to secure it in place.
- Inner wire **E** of stop cable **F** should be taut. If not, make adjustment.

CAUTION

Be careful not to make the tension of inner wire E too high, since excess tension prevents stop lever A from fully contacting stopper bolt B.

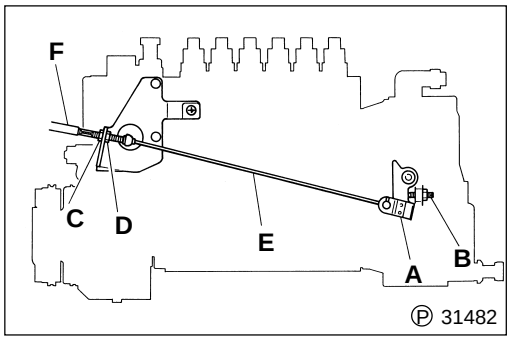

M E M O

ELECTRIC CIRCUIT AND PART INSTALLATION LOCATIONS

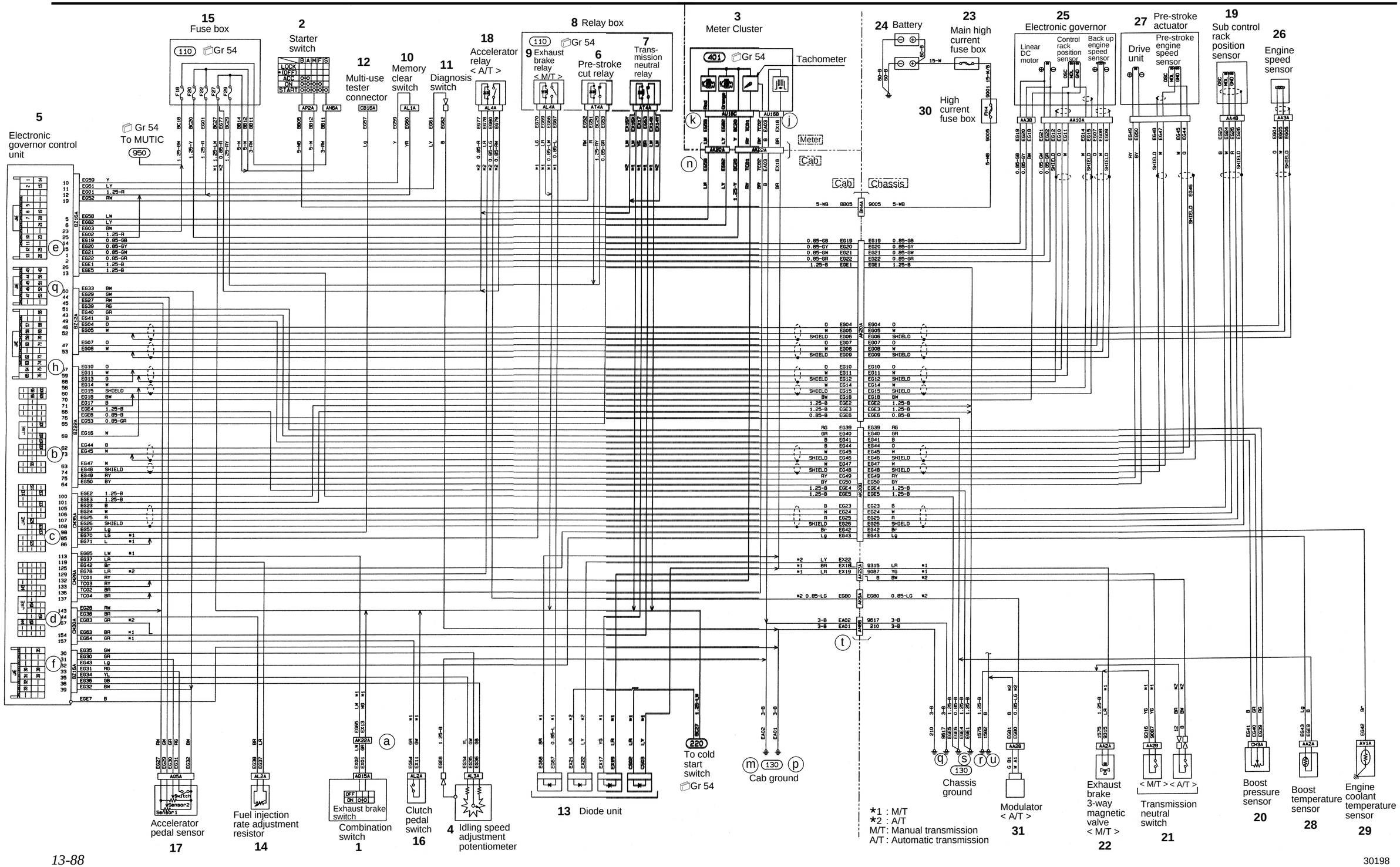

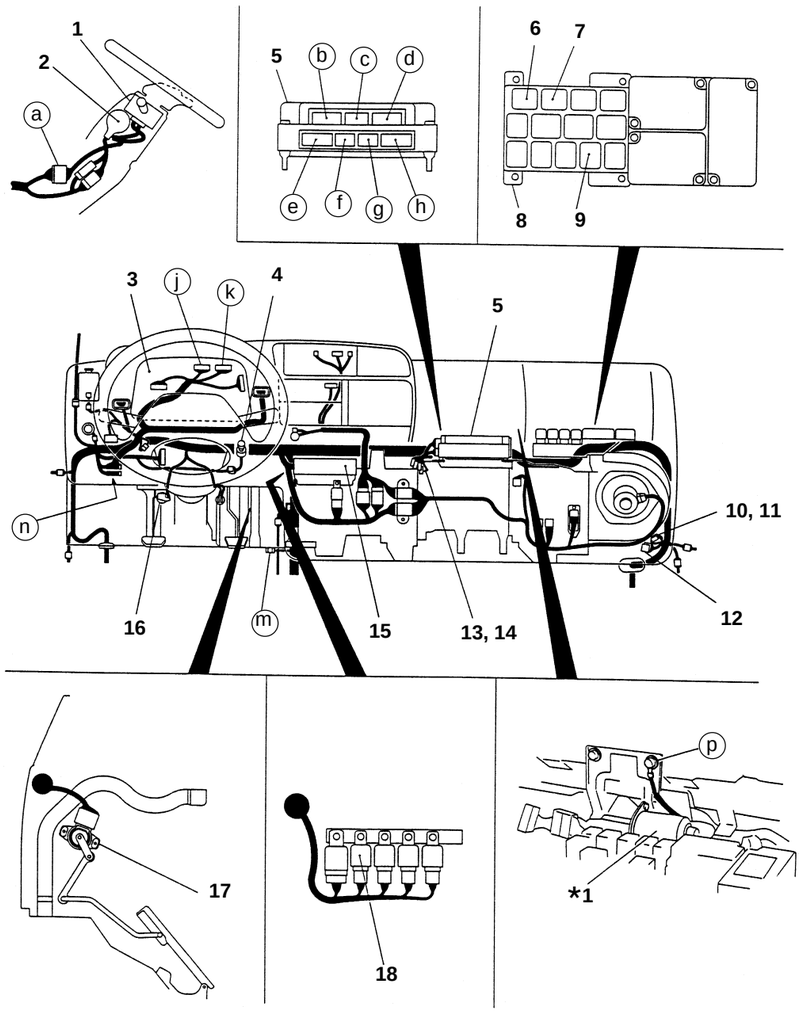

< Manual transmission >

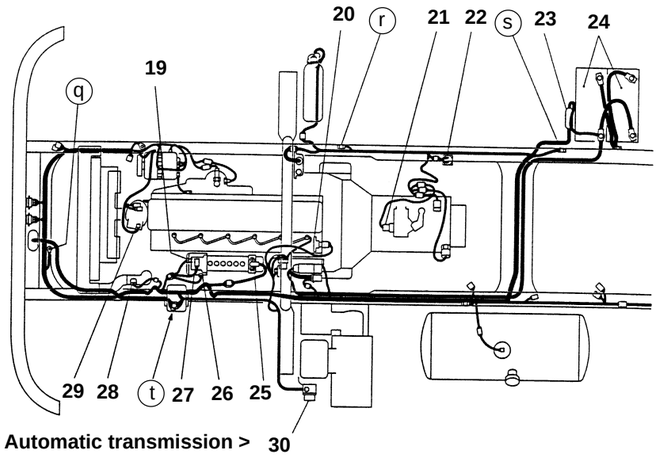

< Automatic transmission >

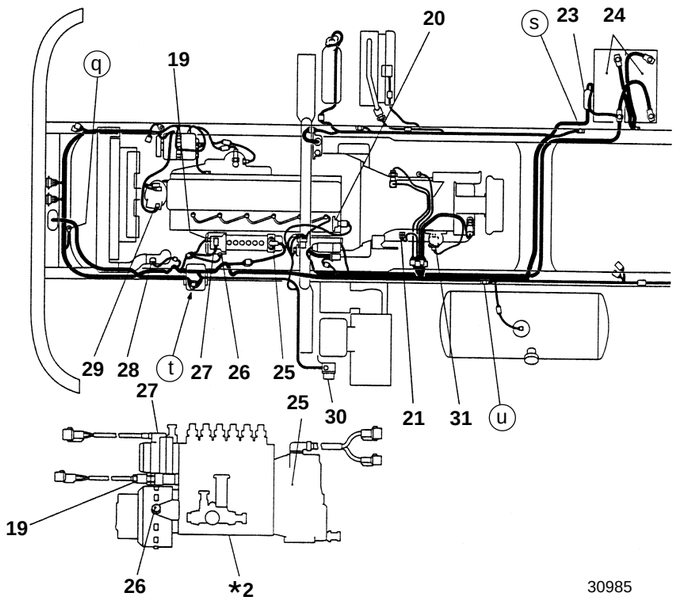

30985

1 Combination switch
2 Starter switch
3 Meter cluster
4 Idling speed adjustment potentiometer
5 Electronic governor control unit
6 Pre-stroke cut relay
7 Transmission neutral relay
8 Relay box
9 Exhaust brake relay
10 Memory clear switch
11 Diagnosis switch
12 Multi-use tester connector
13 Diode unit
14 Fuel injection rate adjustment resistor
15 Fuse
16 Clutch pedal switch
17 Accelerator pedal sensor
18 Accelerator relay < A/T >
19 Sub control rack position sensor
20 Boost pressure sensor
21 Transmission neutral switch
22 Exhaust brake 3-way magnetic valve < M/T >
23 Main high current fuse box
24 Battery
25 Electronic governor
26 Engine speed sensor
27 Pre-stroke actuator
28 Boost temperature sensor
29 Engine water temperature sensor
30 High current fuse box
31 Modulator

***1** : Wiper motor
***2** : Injection pump assembly
M/T : Manual transmission
A/T : Automatic transmission

MITSUBISHI
FUSO

FH

Service Manual

Group 13
Fuel and Engine Control

Table of Contents

BACK

HOME

MITSUBISHI FUSO TRUCK OF AMERICA, Inc.

Pub No. TWME9502-13

GROUP 13 FUEL AND ENGINE CONTROL

SPECIFICATIONS 2

STRUCTURE AND OPERATION 4

TROUBLESHOOTING 24

INSPECTION AND ADJUSTMENT MOUNTED IN VEHICLE

- Inspection and Adjustment of Fuel Injection Timing 28
- Inspection and Adjustment of No-Load Minimum and Maximum Revolution 29

PRE-STROKE CONTROL INJECTION PUMP SYSTEM

- Troubleshooting Procedure 30
- Electric Circuit and Position of Parts Installation 36
- Inspection by Individual Diagnosis Code 38
- Inspection of Temporary Faults 56

ENGINE CONTROL 58

FUEL TANK 63

WATER SEPARATOR 64

FUEL FILTER 66

INJECTION PUMP 68

INJECTION NOZZLE 74

SPECIFICATIONS

Injection Pump

Item	Specifications
Manufacturer	ZEXEL
Body model	MD–TICS (Pre-stroke control type)
Governor type	RLD all-speed mechanical governor with boost compensator
Feed pump model	KD
Automatic timer model	SPG mechanical timer

Injection Nozzle

Item	Specifications
Manufacturer	ZEXEL
Model and type	DLLA hole type 1-spring model
Number of orifices	5
Orifice diameter mm {in.}	ø0.25 {0.0098}

Fuel Filter Type

Item	Specifications
Filter type	Spin-on type

M E M O

Fuel System (Flow of Fuel)

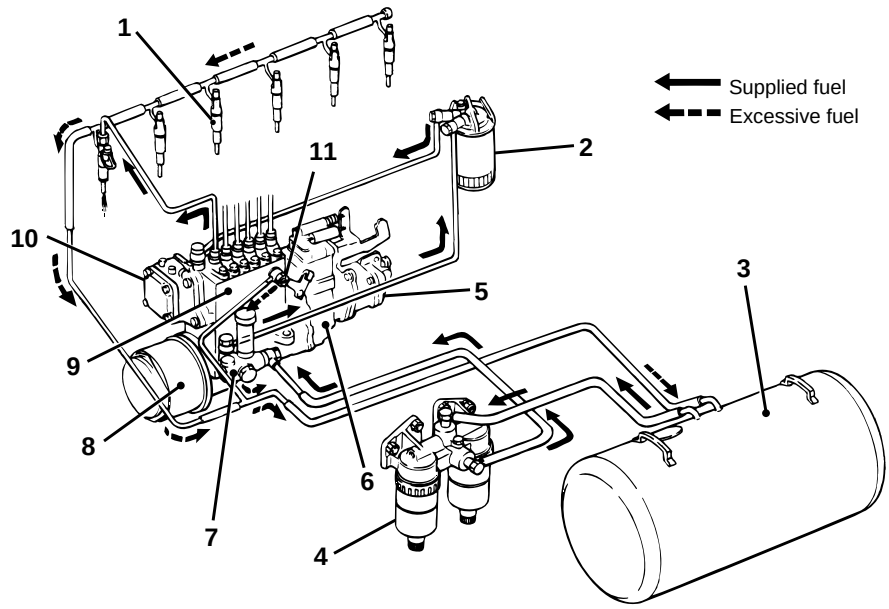

1 Injection nozzle
2 Fuel filter
3 Fuel tank
4 Water separator
5 Boost compensator
6 Governor
7 Feed pump
8 Automatic timer
9 Injection pump
10 Pre-stroke actuator
11 Overflow valve

Fuel in fuel tank **3** is sucked up by feed pump **7** which is driven by the cam action of injection pump **9** and is filtered through fuel filter **2** which removes dirt and other foreign particles.
Filtered fuel is sent to the injection pump where the fuel pressure is boosted and injected through injection nozzle **1** into the combustion chamber.
When fuel pressure is higher than the specified value, overflow valve **11** opens to let the fuel return to the fuel tank.

Engine Control

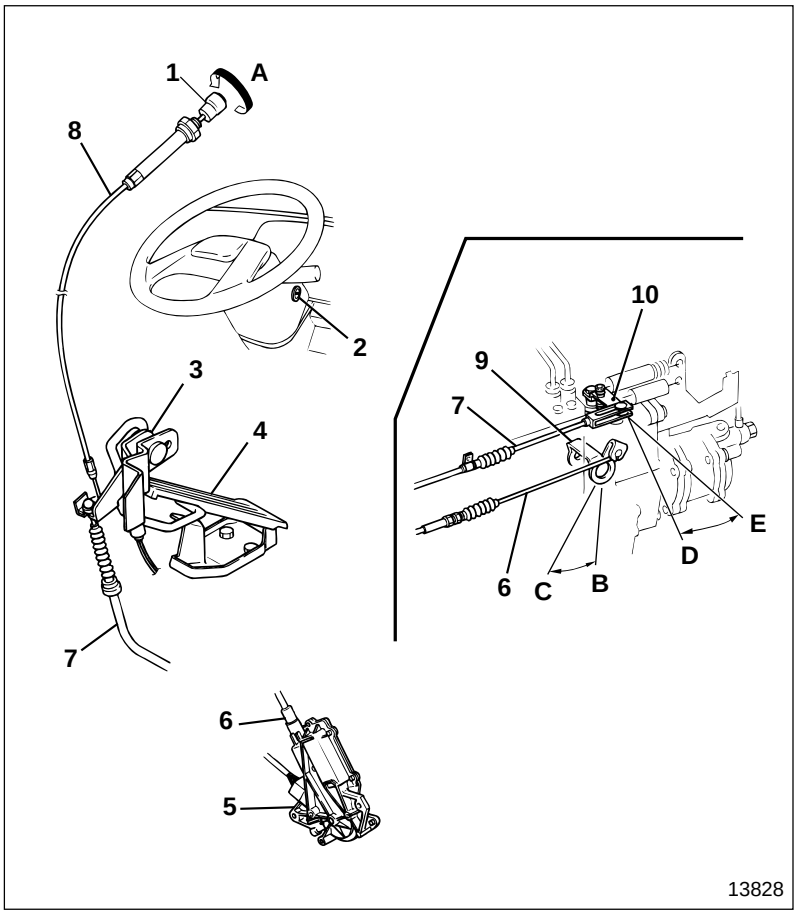

1 Idling control knob
2 Starter switch
3 Accelerator arm assembly
4 Accelerator pedal assembly
5 Fuel-cut motor
6 Engine-stop cable
7 Accelerator control cable
8 Idling control cable
9 Engine-stop lever
10 Idling control lever

A : Idling revolution rising
B : Engine-stop position
C : Engine start-up position
D : Full-load position
E : Idling position

(1) Idling control knob

Idling control knob **1** is for making fine adjustment to the idling revolution of the engine. Turning the knob clockwise raises the revolution. It works in the same way as accelerator pedal assembly **4** does when it is depressed.

(2) Fuel-cut motor

Fuel-cut motor **5** is connected to starter switch **2**, and it is activated by the starter switch being turned ON (or to S). This brings engine-stop lever **9** of the governor to engine-stop position **B** (or engine start-up position **C**), and stops (or starts) the engine. P13-6

(3) Accelerator pedal

When accelerator pedal assembly **4** is freed from foot pressure, the governor return spring forces idling control lever **10** to idling position **E**, restoring the pedal to its original position.

Engine Stopping Circuit

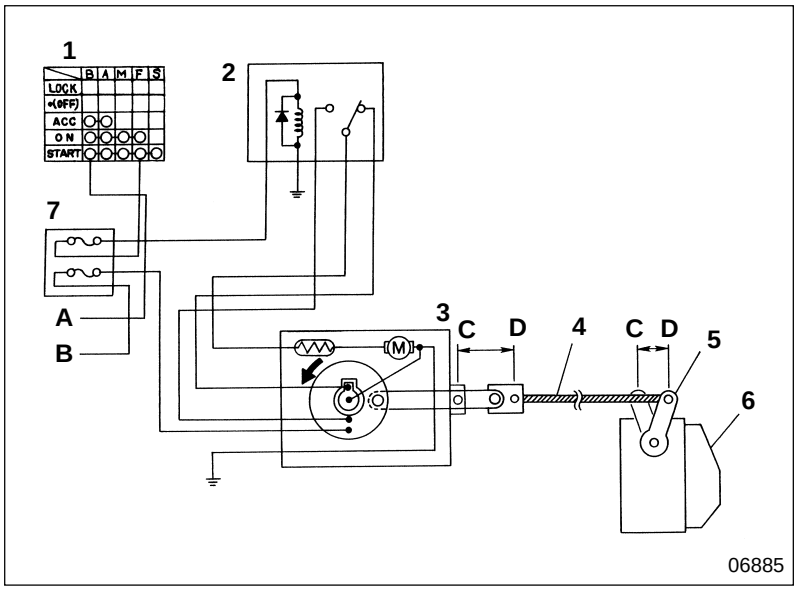

1 Starter switch
2 Fuel-cut relay
3 Fuel-cut motor
4 Engine-stop cable
5 Engine-stop lever
6 Governor
7 Fuse box

A : Power source
B : Power source
C : Engine-stop position
D : Engine start-up position

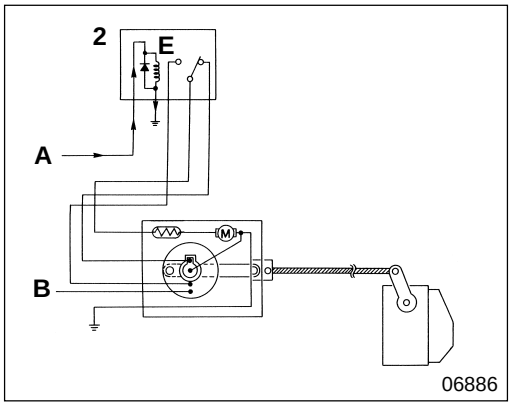

● **At engine start-up (starter switch ON)**

- Electric current flows as illustrated, and coil **E** of fuel-cut relay **2** is magnetized.

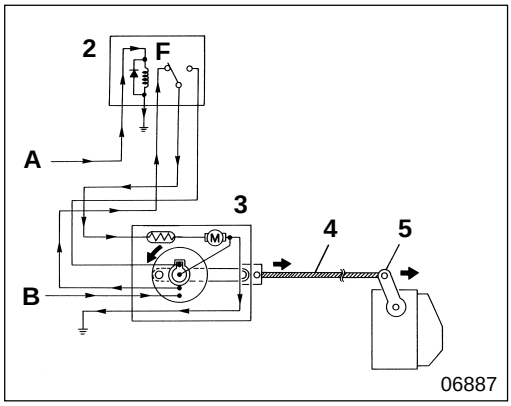

- Contact point **F** of fuel-cut relay **2** closes, and fuel-cut motor **3** is activated.
- Engine-stop cable **4** is pushed out, and engine-stop lever **5** moves to engine start-up position.

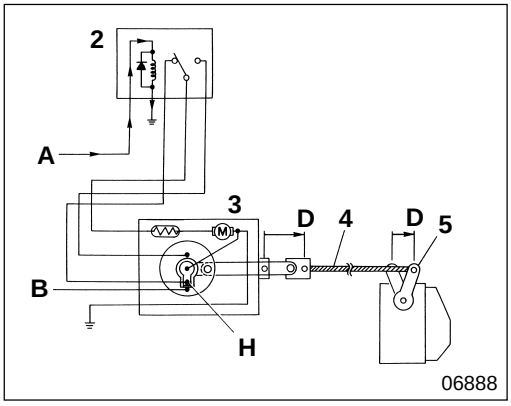

- Engine-stop lever **5** moves to engine start-up position **D**, and fuel is ready to flow. Contact point **H** of fuel-cut motor **3** opens, and the fuel-cut motor stops.

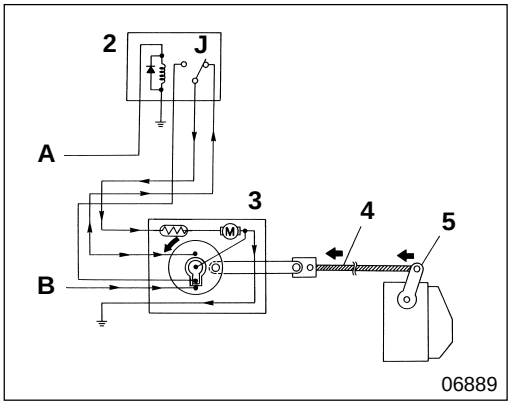

● **When engine is at standstill (starter switch OFF)**

- Electric current from the starter switch is broken, and contact point **J** of fuel-cut relay **2** closes, and fuel-cut motor **3** is activated.
- Engine-stop cable **4** is pulled to bring engine-stop lever **5** to engine-stop position.

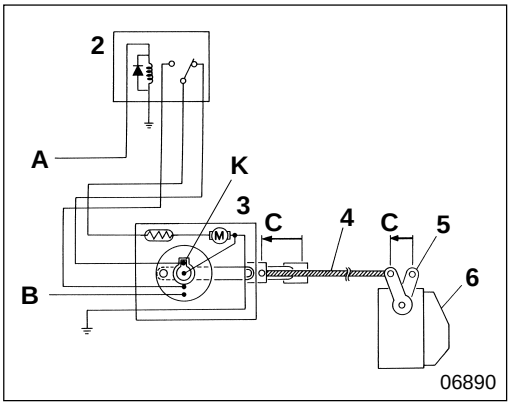

- When engine-stop lever **5** reaches engine-stop position **C**, fuel flow stops and the engine stops. Simultaneously, contact point **K** of fuel-cut motor **3** opens, and the fuel-cut motor stops.

Fuel Gauge Electric Circuit

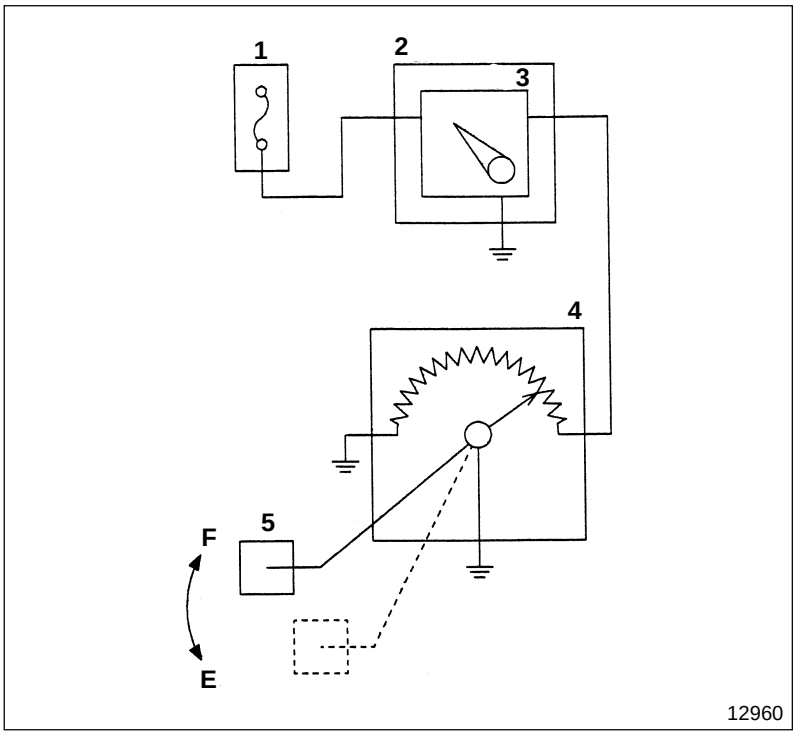

1 Relay and fuse box
2 Meter cluster
3 Fuel gauge
4 Fuel gauge unit
5 Float

The fuel gauge circuit indicates the amount of fuel remaining by means of a gauge.

Water Separator

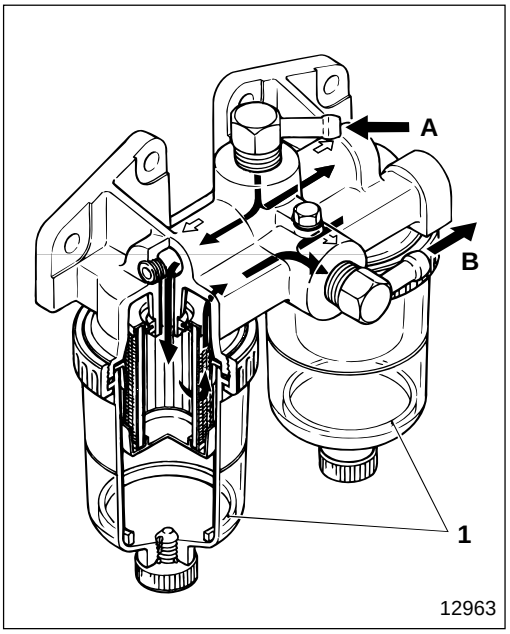

1 Water level ring

A : From fuel tank
B : To feed pump

The water separator is installed between the fuel tank and the feed pump. Any water present in the fuel is separated by the baffle plate and the screen assembly.

Fuel Filter

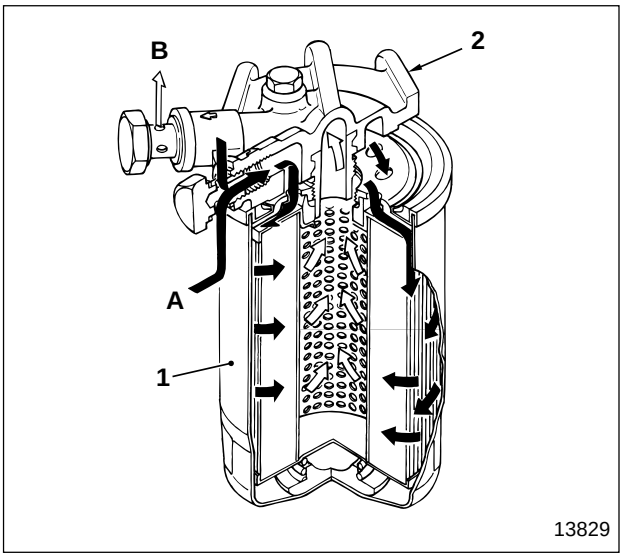

1 Fuel filter
2 Fuel filter head

A : From feed pump
B : To injection pump

Pressurized fuel is delivered from the feed pump of the injection pump to the fuel filter which separates water from the fuel. Dirt and other foreign particles are removed from the fuel by fuel filter **1**.

Structure of Pre-stroke Control Injection Pump System

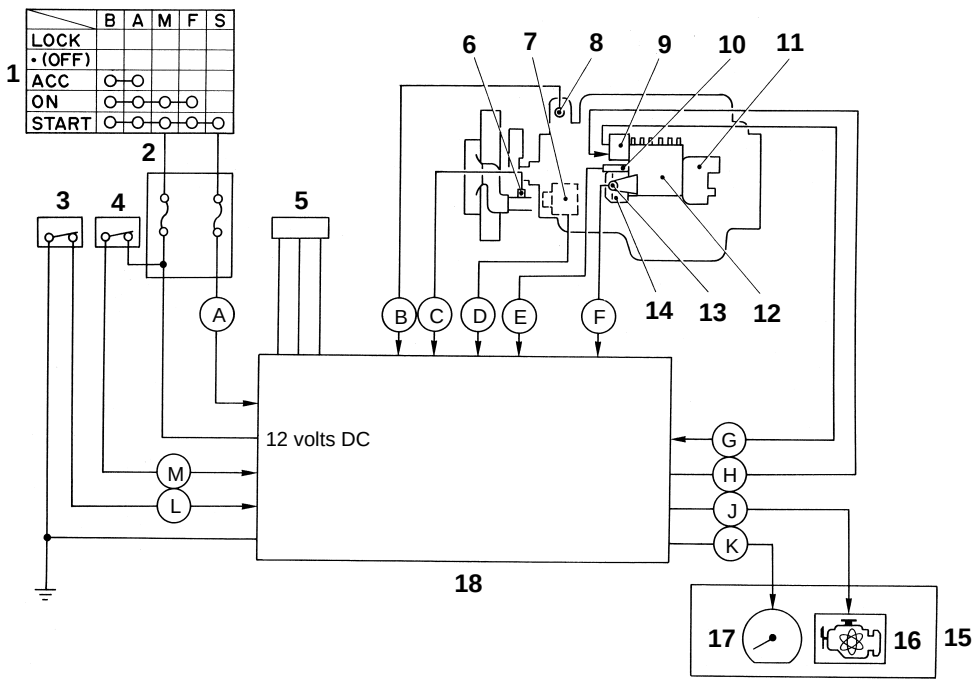

Part name	Main function	Main signal
1 Starter switch	Detection of start signal	Ⓐ : Start signal
2 Fuse box		
3 Diagnosis switch	Transmission of diagnosis code signal	Ⓛ : Diagnosis code signal
4 Memory clear switch	Clearing of diagnosis code	Ⓜ : Diagnosis code clearing signal
5 Multi-use tester connector	Connection of multi-use tester	
6 Boost air temperature sensor	Detection of engine intake air temperature	Ⓒ : Boost air temperature signal
7 Alternator	Detection of engine revolution	Ⓓ : Alternator L terminal signal
8 Water temperature sensor	Detection of engine coolant temperature	Ⓑ : Engine coolant temperature signal
9 Pre-stroke actuator		
• Pre-stroke position sensor		Ⓖ : Pre-stroke position signal
• Drive unit		Ⓗ : Actuator drive signal
10 Control rod position sensor	Detection of control rod position	Ⓔ : Control rod position signal
11 Mechanical governor	Control of fuel injection quantity (Mechanical control)	
12 Pre-stroke control injection pump	Change of pre-stroke (Advance fuel injection timing)	
13 Engine revolution sensor	Detection of engine revolution	Ⓕ : Engine revolution signal
14 Mechanical timer	Retards fuel injection timing (Mechanical control)	
15 Meter cluster		
16 Warning lamp	Indication of system abnormality, indication of diagnosis code	Ⓙ : Lamp lighting signal
17 Tachometer		Ⓚ : Tachometer drive signal
18 Pre-stroke control unit	Control of entire system	

- The pre-stroke control injection pump system uses, in the injection pump body, electronically controlled pre-stroke control injection pump **12**, mechanical governor **11**, and mechanical timer **14**.
- The lifting speed of the plunger in the injection pump varies with the engine revolution. Because of this, the pressure in the injection pipe also changes.
- This change of pressure in the injection pipe means the appropriate state of fuel injection and air/fuel mixture from the injection nozzle is no longer obtainable.
- In low- and medium-range engine revolution, the amount of pre-stroke is made larger so that the fuel is injected at the point the plunger lifting speed increases during the second half of cam lift. 🕮 P13-18
- On the other hand, in high-range engine revolution, the amount of pre-stroke is made smaller so that the fuel is injected while the plunger lifting speed remains low during the first half of cam lift. This prevents the pressure in the injection pipe from becoming excessively high.
- Because of this variation in the amount of pre-stroke, pre-stroke control injection pump **12** can obtain the appropriate injection state and air/fuel mixture for combustion.
- Thus, engine torque is larger than engines that use a normal injection pump. Also, the exhaust gas emission is cleaner.
- Control is achieved by making the pre-stroke adjustable in conjunction with the drive of pre-stroke actuator **9**, which is mounted on the rear of the injection pump body. This pre-stroke actuator is activated by commands received from pre-stroke control unit **18**, which processes data signals received from the various sensors installed on the engine and vehicle body.
  This system also has a trouble diagnosis function and a fail-safe function. The following table shows control items.

Control item	Control description	Information source	
		Sensor	Data signal
Pre-stroke control	Adjusts the fuel injection timing by changing the timing sleeve position to change the pre-stroke	6 to 10, 13	Ⓐ to Ⓗ
Trouble diagnosis function	Checks and diagnoses the status of the sensors of the pre-stroke control injection pump system while the engine is running. Warns the driver, via warning lamp **16**, if any trouble occurs, and memorizes the data on the trouble 🕮 P13-13	ALL	ALL
Fail-safe function	When trouble occurs, backup mode is activated and countermeasures for the trouble are taken 🕮 P13-13	ALL	ALL
* Fuel injection quantity control	Controlled by mechanical governor **11** 🕮 P13-20	—	—
* Fuel injection timing control (retard)	Controlled by mechanical timer **14** 🕮 P13-22	—	—

* : This is not controlled by the pre-stroke control injection pump system but by ordinary mechanical control.

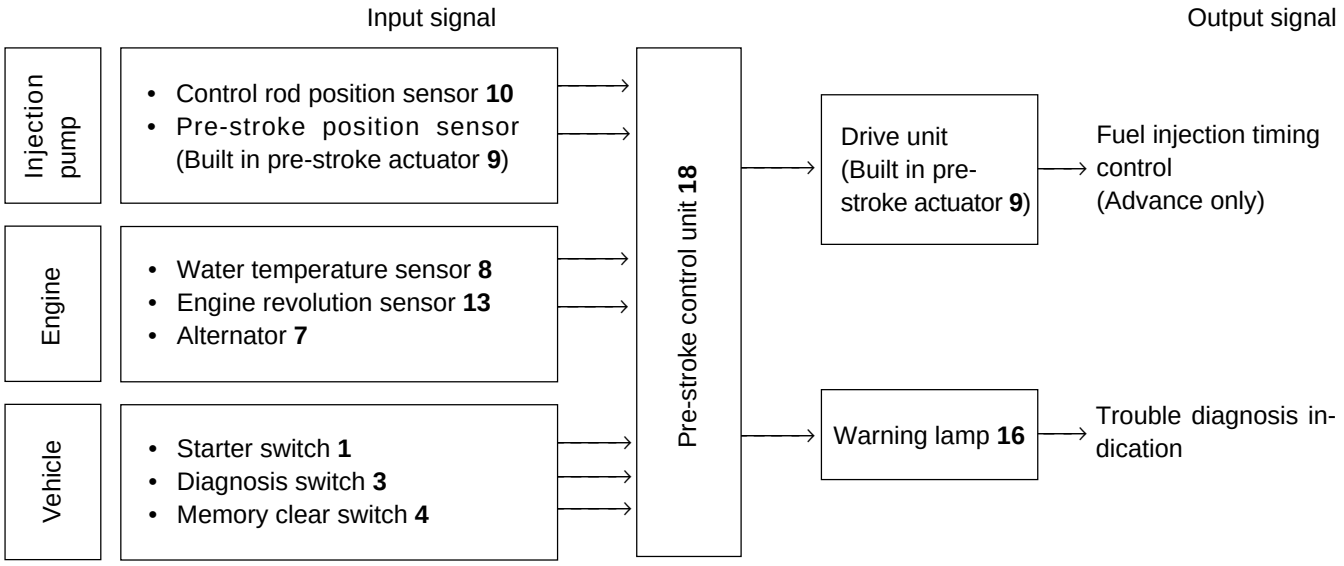

● Pre-stroke control

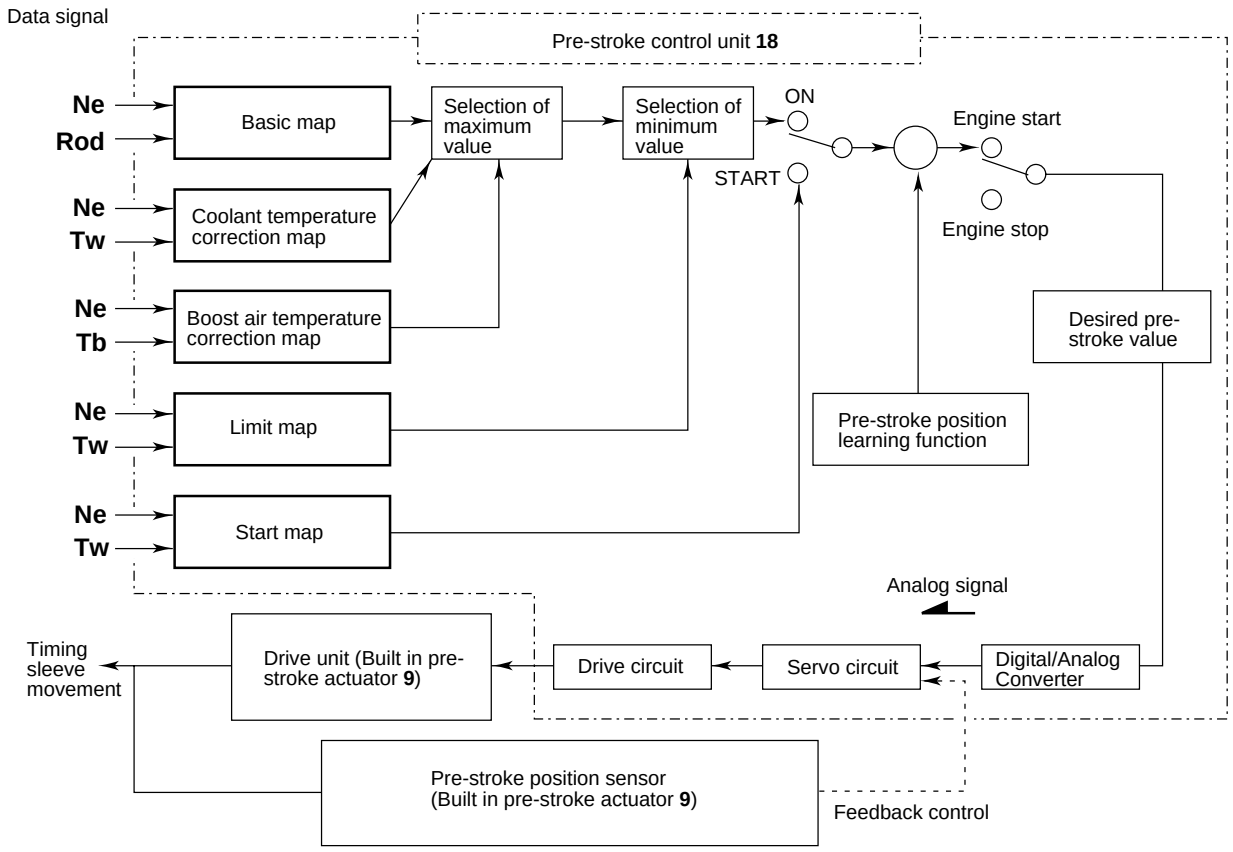

Ne : Engine revolution **Rod** : Control rod position
Tw : Engine coolant temperature **Tb** : Engine intake air temperature
Digital/Analog converter : Converts digital signals into analog signals

Control by Pre-stroke Control Unit 18

- The control unit commands the system while the engine is running, and selects the maximum value of the desired pre-stroke value based on data signals received from the basic map, coolant temperature correction map, and boost air temperature correction map.
- After the maximum value has been selected, the limit map selects and processes the minimum value so that the desired pre-stroke value does not exceed the maximum value.
- The desired pre-stroke value is further determined by the pre-stroke position learning function. This corrects any deviation in positional adjustment by the pre-stroke position sensor and any deviation by the injection pump, correcting the output voltage of the pre-stroke position sensor.
- The pre-stroke thus determined is converted into continuous analog signals by the Digital/Analog converter and transmitted through the servo circuit and drive circuit to actuate the drive unit. The drive unit moves the timing sleeve position to change the pre-stroke.
- Control at the time of engine start up is handled by the start map.

Control by Pre-stroke Position Sensor (built in pre-stroke actuator 9)

- The pre-stroke position sensor monitors the operating condition of the drive unit by feeding back signals to pre-stroke control unit **18** and judging whether the pre-stroke is controlled in accordance with the desired value by noting the timing sleeve position.
- When pre-stroke control unit **18** receives the feedback signals, it computes the actual measured value of the timing sleeve position, and if there is any difference between the desired and actual values, it issues a correction command.
- This operation is repeated to constantly maintain the timing sleeve position at the desired position, thus determining the final pre-stroke.

● Trouble diagnosis function, fail-safe function

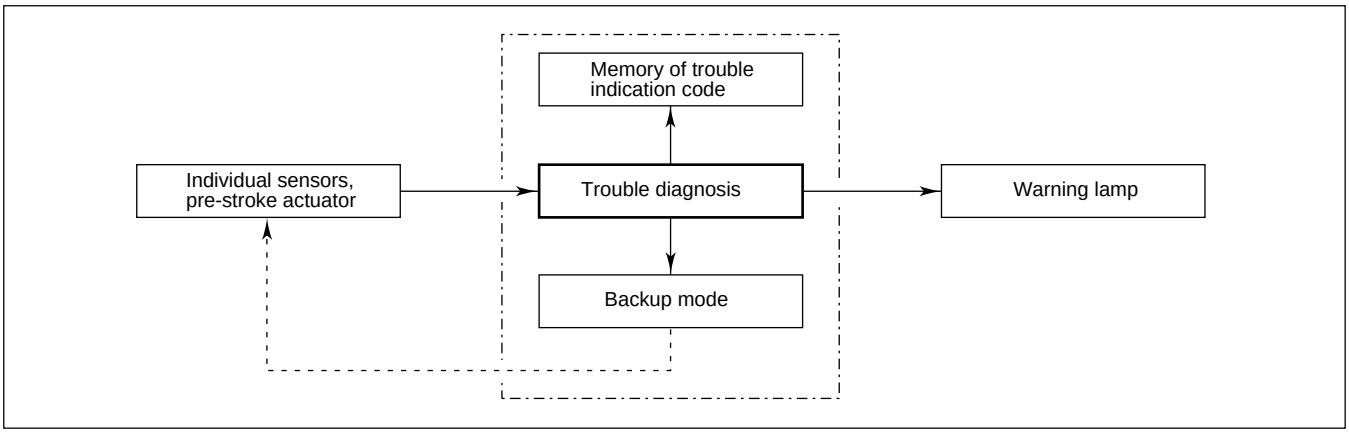

- The trouble diagnosis function detects and diagnoses troubles reported by the various sensors and the pre-stroke actuator, while the engine is running. If any trouble occurs, this function warns the driver by lighting warning lamp and at the same time stores the trouble point in memory as a diagnosis code.
- The fail-safe function is put into operation simultaneously and the trouble is treated accordingly in the backup mode.
- In the backup mode, the pre-stroke control starts when trouble occurs. If the trouble does not affect the operation of the engine, fixed data from the backup mode is used to treat the trouble. If the trouble dangerously affects the operation of the engine, the pre-stroke control stops.
- If the function goes into backup mode, the function stays in that mode until the starter switch is set to LOCK. When a normal signal is returned, control of the system returns and warning lamp goes off.
- There are two kinds of diagnosis code, current and previous.
  - Current diagnosis code : Indicates data when the engine has been running with the starter switch set to ON since the abnormality occurred.
  - Previous diagnosis code : Indicates previous data when the engine was stopped with the starter switch set to ACC or LOCK after the abnormality occurred.

Table of diagnosis codes

Diagnosis code	Abnormal item	Countermeasures taken by pre-stroke control unit (Backup mode)
01	Normal	—
03	Pre-stroke learning function	Controls with correction value assumed to be 0
04	Pre-stroke actuator power source	Stoppage of pre-stroke control
05	Engine revolution sensor (No pulse)	Controls with engine revolution assumed to be 0
12	Pre-stroke servo system	Stoppage of pre-stroke control
13	Pre-stroke position sensor	Stoppage of pre-stroke control
15	Engine revolution sensor (Wiring breakage)	Controls with engine revolution assumed to be 0
21	Water temperature sensor	Controls with water temperature assumed to be 80˚C {176˚F}
22	Control rod position sensor	Controls with control rod position assumed to be full load
41	Boost air temperature sensor	Controls with boost air temperature assumed to be 80˚C {176˚F}

It is possible to run the vehicle even if the pre-stroke control develops an abnormality. However, do not run the vehicle for a long period of time, run it only for the time necessary to obtain repairs.

Pre-stroke Control Unit

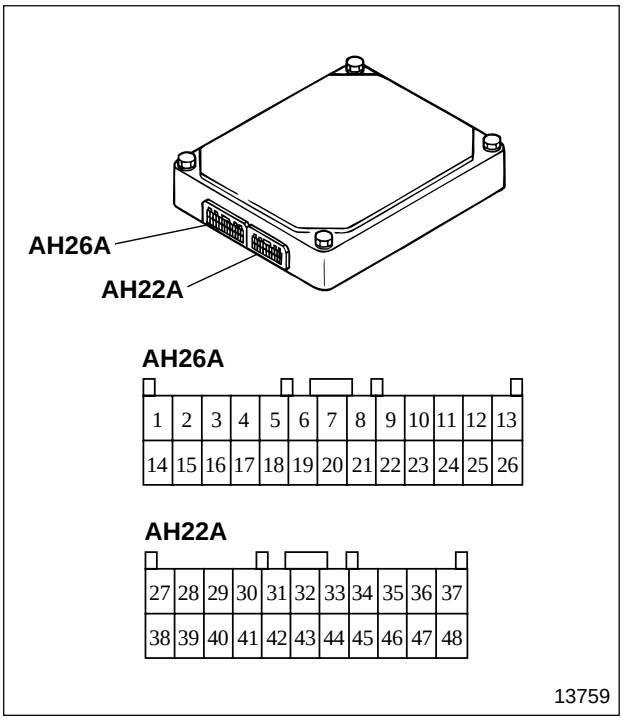

- The pre-stroke control unit monitors and computes data signals received from the various sensors and, using its internal computer, converts the computed results into control signals (pre-stroke actuator drive signals).
- These signals operate the various instruments to control the system.

Connector AH26A		Connector AH22A	
Terminal No.	Connecting destinations	Terminal No.	Connecting destinations
1	Drive unit ⊖	27	Pre-stroke cut relay (Contact point)
2	—	28	Multi-use Tester (SEL)
3	—	29	Diagnosis switch
4	Boost air temperature sensor	30	—
5	Water temperature sensor	31	Tachometer (SIG)
6	Pre-stroke position sensor (OSC)	32	Multi-use tester (SIG)
7	Pre-stroke position sensor (MDL)	33	DDS-III (DATA)
8	Control rod position sensor (OSC)	34	DDS-III (CLOCK)
9	Control rod position sensor (MDL)	35	DDS-III (STB)
10	Engine revolution sensor (SIG)	36	—
11	—	37	Control unit power source (12 volts DC)
12	—	38	Pre-stroke actuator power source ⊖
13	—	39	Alternator terminal L
14	Drive unit ⊕	40	Starter switch terminal S
15	—	41	—
16	Pre-stroke cut relay (Coil)	42	Tachometer (GND)
17	—	43	—
18	—	44	—
19	Pre-stroke position sensor (GND)	45	Warning lamp
20	Pre-stroke position sensor (SHIELD)	46	Ground
21	Control rod position sensor (GND)	47	Ground (CASE GND)
22	—	48	Ground (POWER GND)
23	Engine revolution sensor (GND)	—	—
24	—	—	—
25	—	—	—
26	Memory clear switch	—	—

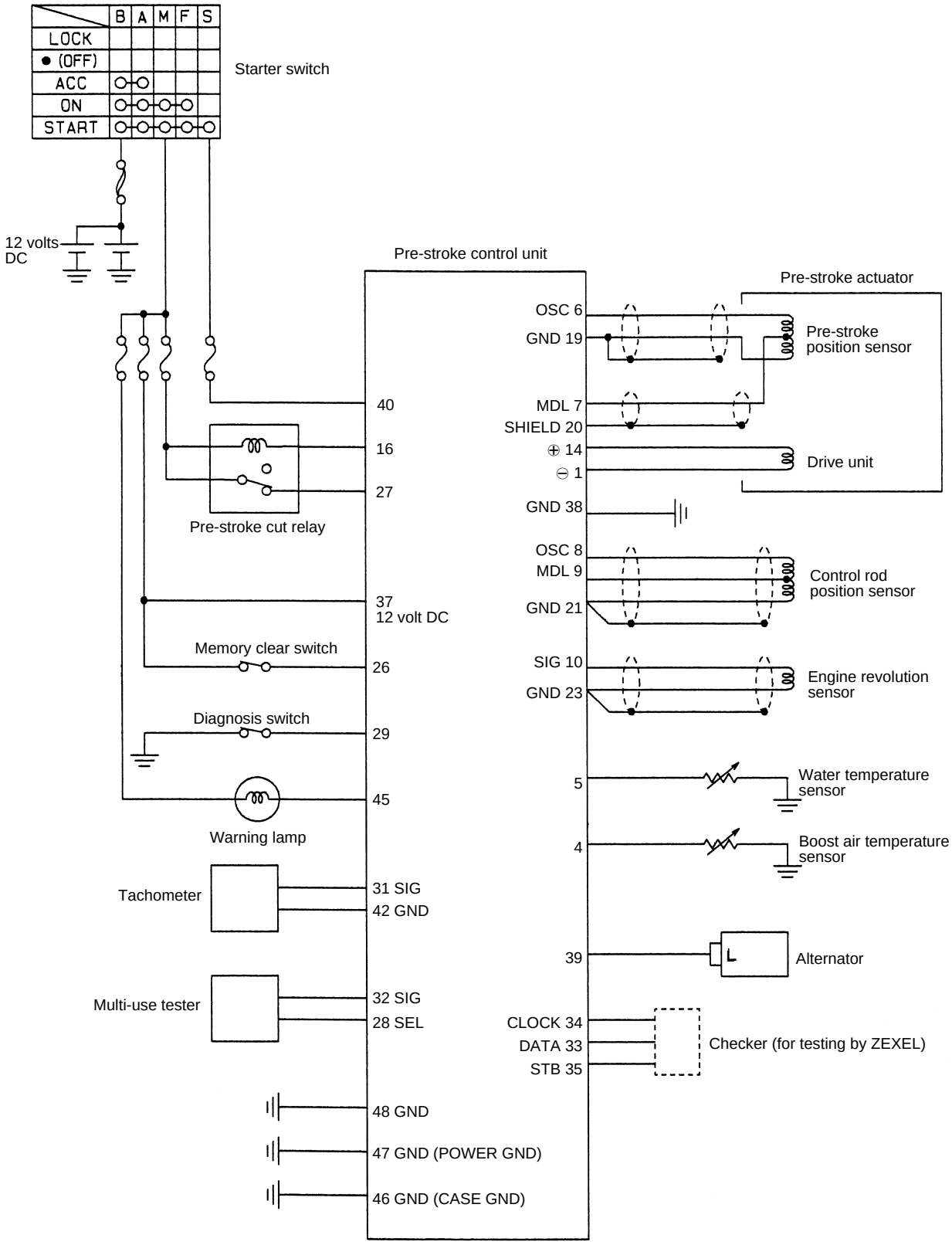
B A M F S
LOCK
● (OFF)
ACC
ON
START
Starter switch
12 volts DC
Pre-stroke control unit
Pre-stroke actuator
OSC 6
GND 19
Pre-stroke position sensor
MDL 7
SHIELD 20
⊕ 14
⊖ 1
Drive unit
GND 38
OSC 8
MDL 9
GND 21
Control rod position sensor
SIG 10
GND 23
Engine revolution sensor
5
Water temperature sensor
4
Boost air temperature sensor
39
L
Alternator
CLOCK 34
DATA 33
STB 35
Checker (for testing by ZEXEL)
40
16
27
Pre-stroke cut relay
37
12 volt DC
Memory clear switch
26
Diagnosis switch
29
45
Warning lamp
Tachometer
31 SIG
42 GND
Multi-use tester
32 SIG
28 SEL
48 GND
47 GND (POWER GND)
46 GND (CASE GND)
12978

Engine Revolution Sensor

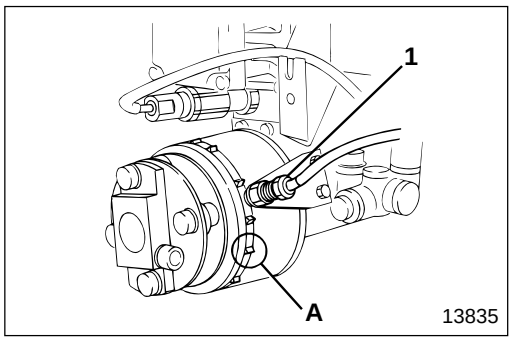

- Engine revolution sensor **1** is a pick-up type that detects the revolution of the injection pump and converts the revolution value into an electric signal.
- This electric signal is transmitted to the pre-stroke control unit as the engine revolution signal, which is used as the correction value by the control unit to determine the desired pre-stroke position value.

  A : Timer housing protrusion

Water Temperature Sensor

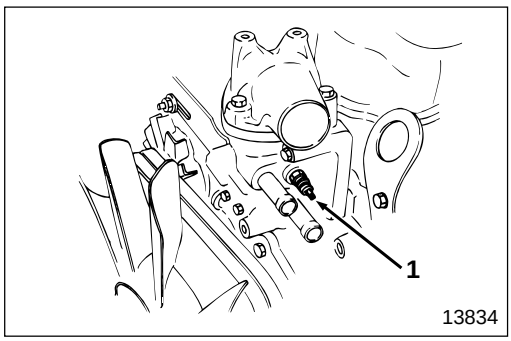

- Water temperature sensor **1** is a thermistor type that converts the coolant temperature into an electric signal.
- This electric signal is transmitted to the pre-stroke control unit as the engine coolant temperature signal, which is used as the correction value by the control unit to determine the desired pre-stroke position value.

Boost Air Temperature Sensor

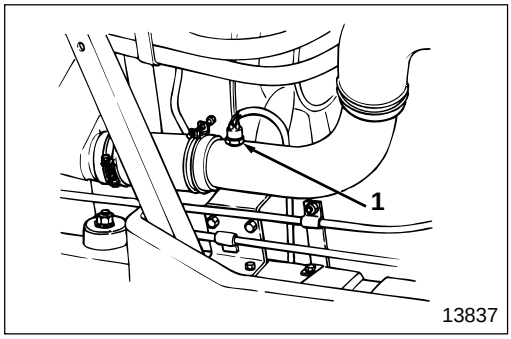

- Boost air temperature sensor **1** is a thermistor type that converts the intake air temperature, immediately after its passage through the intercooler, into an electric signal.
- This electric signal is transmitted to the pre-stroke control unit as the boost air temperature signal, which is used as the correction value by the control unit to determine the desired pre-stroke position value.

Control Rod Position Sensor

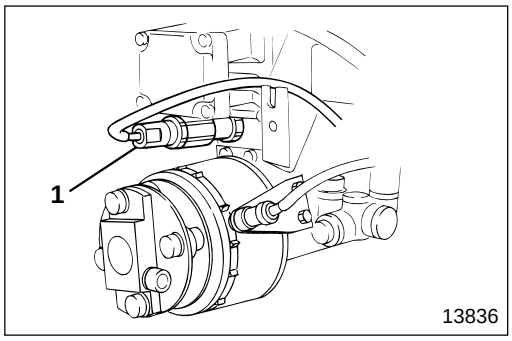

- Control rod position sensor **1** is a resistor type that converts the amount of movement of the control rod into an electric signal.
- This electric signal is transmitted to the pre-stroke control unit as the control rod position signal, which is used as the correction value by the control unit to determine the desired pre-stroke position value.

Pre-stroke Position Sensor P13-10, 12

Injection Pump Body

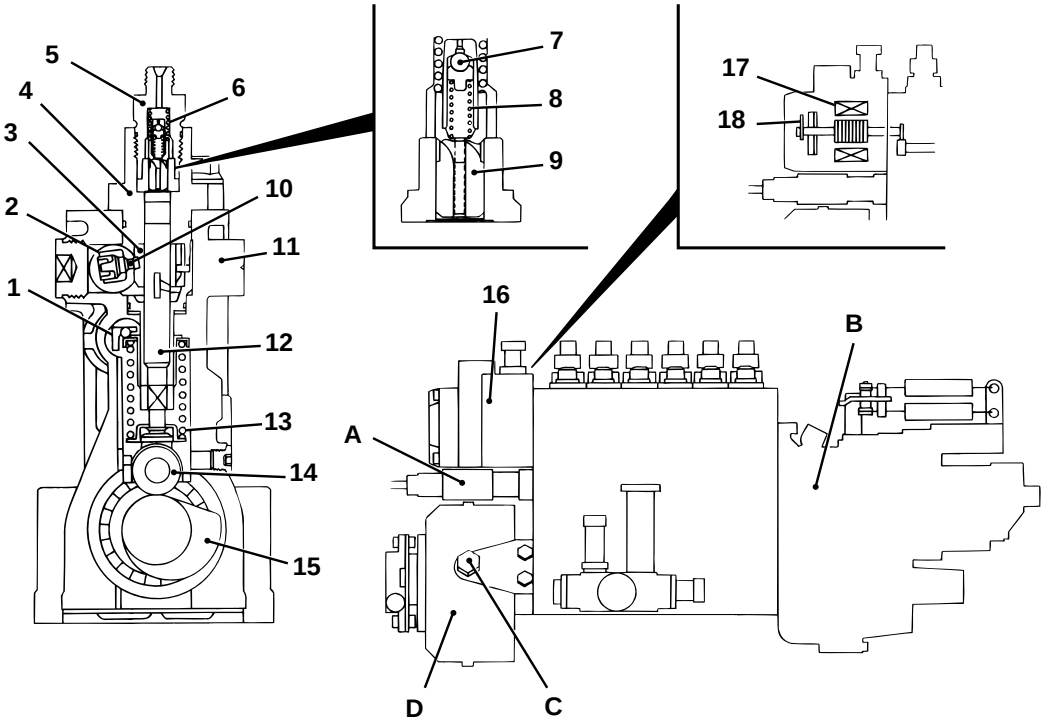

1 Control rod
2 Timing rod
3 Timing sleeve
4 Plunger barrel
5 Delivery valve holder
6 Delivery valve spring
7 Ball
8 Spring
9 Delivery valve
10 Pin
11 Pump housing
12 Plunger
13 Plunger spring
14 Tappet
15 Camshaft
16 Pre-stroke actuator
17 Drive unit
18 Pre-stroke position sensor

A : Control rod position sensor P13-16
B : Mechanical governor P13-20
C : Engine revolution sensor P13-16
D : Mechanical timer P13-22

- The injection pump has a variable pre-stroke mechanism.
- Because of the variation in the amount of pre-stroke, the appropriate injection state and air/fuel mixture for combustion can be obtained, thus the engine torque is larger than when a normal injection pump is used and the exhaust gas emission is cleaner.

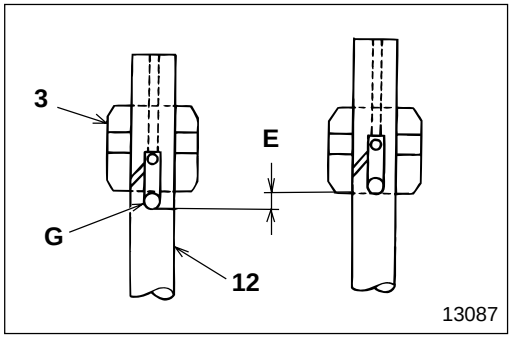

Pre-stroke

Pre-stroke is stroke **E** whose range is from the bottom dead point of plunger **12** to the starting point of pressurized delivery of fuel, at which point suction port **G** is closed by timing sleeve **3**. An ordinary injection pump has a fixed stroke length.

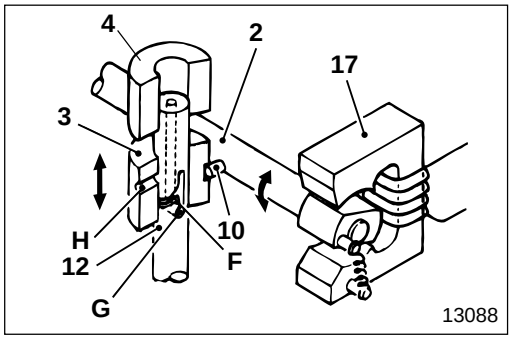

Pre-stroke variable mechanism

F : Indent
G : Suction port
H : Exhaust port

- In a conventional injection pump, plunger barrel **4** is fixed. In the pre-stroke control injection pump system, vertically movable timing sleeve **3** is fitted in the fixed plunger barrel.
- Timing rod **2**, pin **10** and drive unit **17** are installed to operate timing sleeve **3**.
- The operation of drive unit **17** rotates timing rod **2**, causing pin **10** to move timing sleeve **3** vertically.
- As timing sleeve **3** is fitted with fuel exhaust port **H**, the pre-stroke changes in accordance with the movement of the timing sleeve.

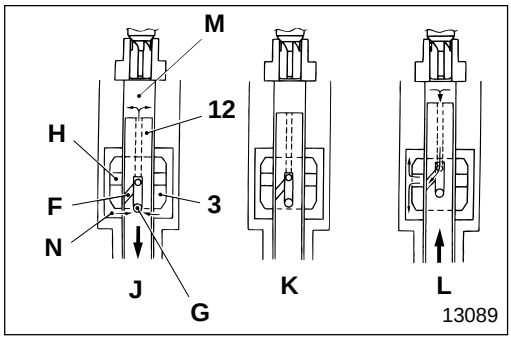

Pressurized fuel delivery

J : Ongoing suction
K : Start of pressurization
L : Delivery ends

- When suction port **G** opens as plunger **12** moves down from the top dead point, fuel is delivered into pressure chamber **M** by both the negative pressure caused by the downward movement of the plunger and the pressure of the fuel itself delivered by the feed pump.
- When the lift of plunger **12** is low enough, the pressure in pressure chamber **M** does not increase as the fuel in pressure the chamber flows via suction port **G** into fuel reservoir **N**, even if the plunger lifts.
- As plunger **12** lifts further and suction port **G** is closed by timing sleeve **3**, pressurization of the fuel starts. The pressure increases as the plunger lifts further, making the injection pump start pressurized fuel delivery.
- When indent **F** on plunger **12** meets exhaust port **H** of timing sleeve **3**, the fuel in pressure chamber **M** is pushed back to fuel reservoir **N**, stopping pressurized fuel delivery.
- Adjustment of the fuel quantity to be injected is made by changing the relative meeting position of exhaust port **H** of timing sleeve **3** and indent **F**, by the rotation of plunger **12**.

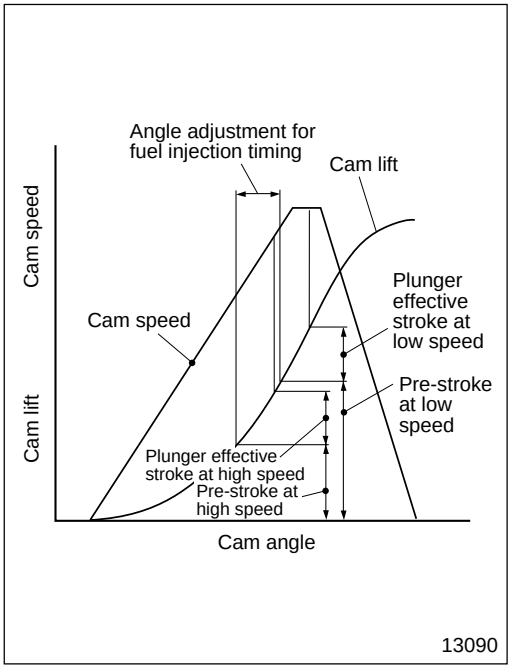

Fuel injection timing and fuel injection characteristics

- The pre-stroke changes according to changes in the position of timing sleeve **3**, whereby the fuel injection timing can be advanced or retarded.
- By making the pre-stroke smaller, suction port **G** of plunger **12** closes early, making the fuel injection timing quicker accordingly.
  Retard of fuel injection timing is not controlled by the variable pre-stroke mechanism, but by mechanical timer **D**.
- By making the pre-stroke larger, suction port **G** of plunger **12** closes late, making the fuel injection timing slower accordingly.
  The quick response of the fuel injection timing improves engine start-up performance at low temperatures.

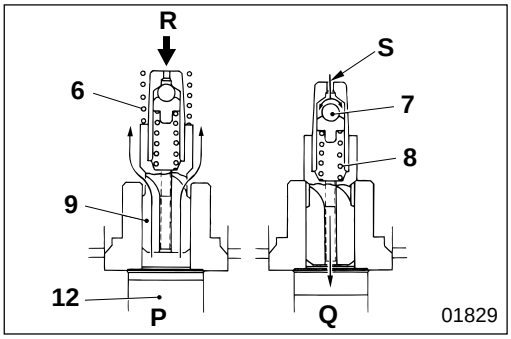

Delivery valve

P : Start of pressurized delivery
Q : End of pressurized delivery

- Delivery valve **9** keeps residual pressure **R** in the injection pipe at a certain level throughout the entire engine revolution range preventing cavitation and allowing high-pressure injection.
- When the fuel pressure on plunger **12** side, as the plunger is lifted, overcomes the combined force of residual pressure **R** in the injection pipe and the repercussive force of delivery valve spring **6** of the plunger, delivery valve **9** is pushed up and pressurized fuel delivery starts.
- Fuel in the injection pipe returns quickly to plunger **12** side the moment pressurized delivery from the plunger ends, and the delivery valve is closed.
- The excess fuel is returned slowly through orifice **S**, reducing the pressure in the injection pipe.
- When the repercussive force of spring **8** in delivery valve **9** equalizes with the pressure in the injection pipe, ball **7** closes orifice **S** and residual pressure **R** in the injection pipe is kept at a specified level.

Governor

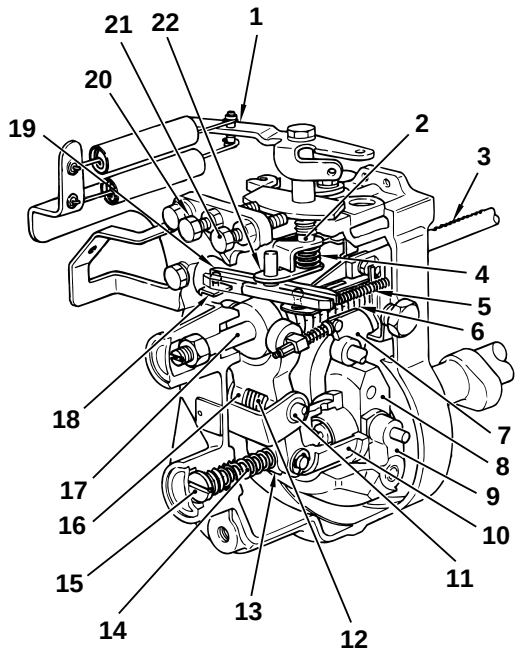

13839

1 Control lever
2 Adjusting lever shaft
3 Control rod
4 Cancel spring B
5 Start spring
6 Governor spring
7 Torque cam
8 Flyweight holder
9 Flyweight
10 Sleeve
11 Tension lever shaft
12 Cancel spring A
13 Shifter
14 Idling spring
15 Idling screw
16 Tension lever
17 Governor shaft
18 Guide lever
19 Floating lever
20 Idling set bolt
21 Full-speed set bolt
22 Supporting lever

The governor is a mechanical type that uses centrifugal force generated by flyweights **9**, its characteristics are between those of a minimum/maximum speed governor and those of an all-speed governor. Because there is no repercussive force from governor spring **6** or control lever **1**, when the accelerator pedal is depressed, the repercussive force transmitted to the accelerator pedal, via the control lever, is quite light, making accelerator pedal operation easy.

Boost Compensator

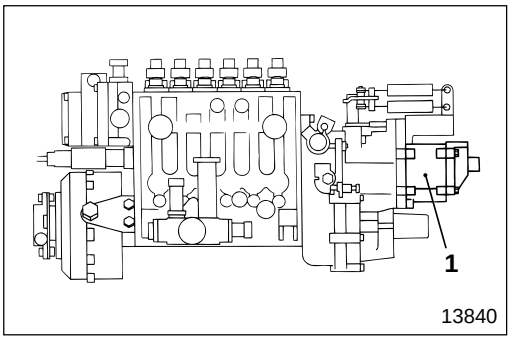

Boost compensator **1** is a device that automatically adjusts the quantity of fuel to be injected to suit the increase in the intake air mass delivered into the engine cylinders by the turbocharger.

Feed Pump

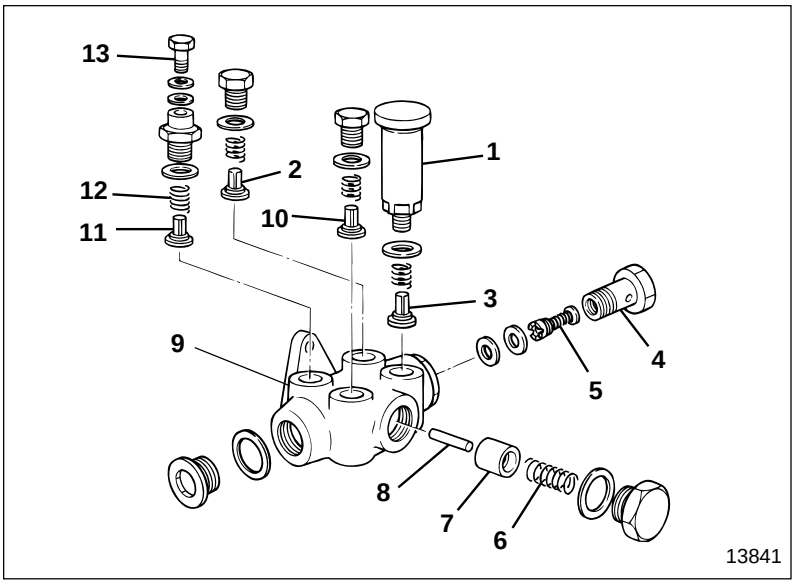

1 Priming pump
2 Check valve
3 Check valve
4 Eye bolt on fuel inlet side
5 Gauze filter
6 Piston spring
7 Piston
8 Push rod
9 Feed pump housing
10 Check valve
11 Check valve
12 Check valve spring
13 Eye bolt on fuel outlet side

- The feed pump is a double-action type pump which, with four check valves operating, sucks and discharges fuel during both strokes of pistons **7**.
- Push rod **8** makes contact with the injection pump camshaft directly, moving piston **7**.
- Priming pump **1** can be manually operated, when the injection pump is not operating, to suck up fuel and thus can be used for air bleeding.
- Gauze filter **5** eliminates large foreign particles from the fuel sucked up from the fuel tank to prevent clogging of the feed pump. This gauze filter must be cleaned with gas oil periodically.

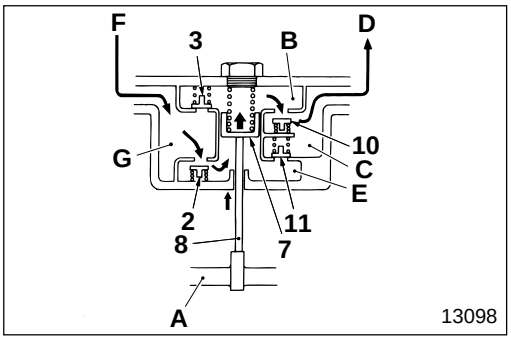

The rotation of injection pump camshaft **A**, pushes up push rod **8** and piston **7**, and the pressure in inner chamber **B** increases. This closes check valve **3**, and check valve **10** opens to let the fuel in inner chamber **B** flow through outer chamber **C** to fuel filter **D**.
When the pressure in inner chamber **E** decreases, check valve **11** closes, and check valve **2** opens to let fuel flow from fuel tank **F** through outer chamber **G** to inner chamber **E**.

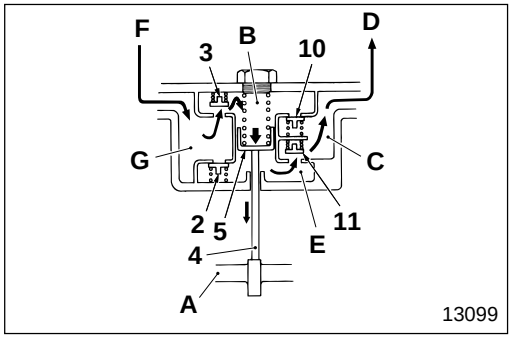

When injection pump camshaft **A** rotates further, it pushes down push rod **4** and piston **5**, and the pressure in inner chamber **E** increases. This closes check valve **2**, and check valve **11** opens to let the fuel in inner chamber **E** flow through outer chamber **C** to fuel filter **D**.
When the pressure in inner chamber **B** decreases, check valve **10** closes, and check valve **3** opens to let fuel from fuel tank **F** flow through outer chamber **G** to inner chamber **B**.

Automatic Timer

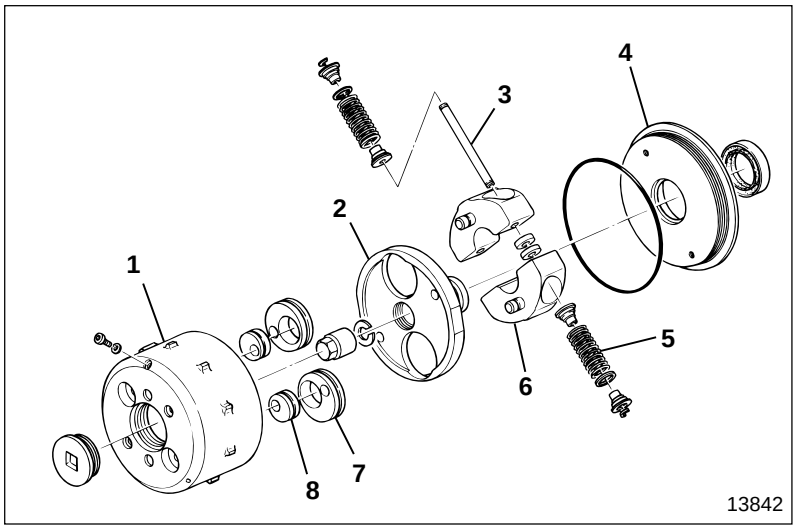

1 Timer housing
2 Timer holder
3 Pilot pin
4 Cover
5 Timer spring
6 Flyweight
7 Eccentric cam (Large)
8 Eccentric cam (Small)

- The mechanical type automatic timer changes fuel injection timing automatically when the engine revolution reaches the specified rate.
- The automatic timer controls the retard of fuel injection timing. The pre-stroke control unit controls the advance of fuel injection timing.

Injection Nozzle

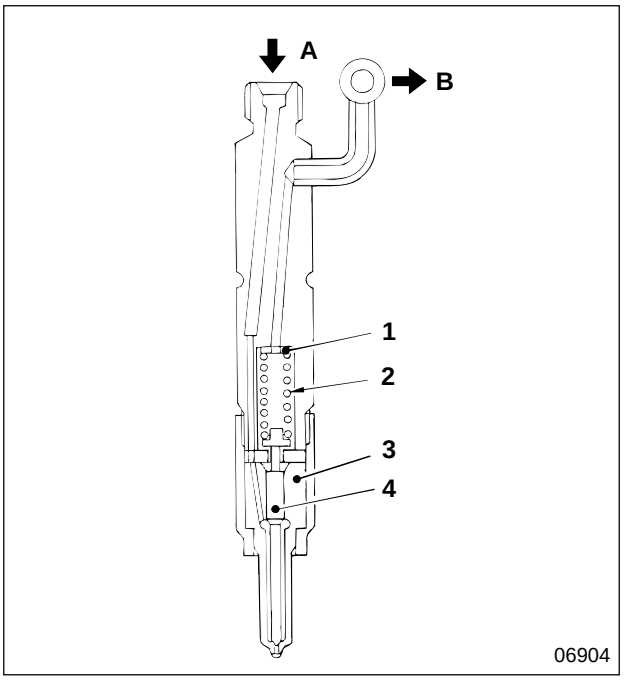

1 Washer
2 Spring
3 Nozzle tip
4 Needle valve

A : From injection pump
B : To fuel tank

- As the pressure of the fuel delivered from the injection pump overcomes the repercussive force of spring **2**, needle valve **4** is pushed up to allow the fuel to spray out the opening at the tip of the nozzle.

- Injection pressure can be adjusted by increasing or decreasing the number of washers **1**.

Possible causes \ Symptoms		Engine does not start	Engine hard to start	Engine knocks	Engine output inconsistent	Engine output does not develop full power	Engine maximum revolution too high	Engine idling unstable	Engine starts but stalls	Engine revolution does not reach specified maximum speed	Engine does not stop	Accelerator pedal hard to depress	Fuel supply insufficient
Injection pump body	Pre-stroke control faulty (Warning lamp lights) 📖 P13-30		○	○	○	○							
	Plunger stuck	○											
	Control rod stuck	○											
	Delivery valve stuck	○											
	Tappet worn	○											
	Camshaft worn	○											
	Injection timing adjusted incorrectly		○		○	○		○					
	Plunger worn					○		○					
	Delivery valve seated incorrectly					○							
	Injection timing too fast			○									
	Plunger sliding stroke short				○								
	Plunger spring damaged				○			○					
	Control rod not moving smoothly	○	○		○		○	○					
	Tappet worn, not moving smoothly				○								
	Delivery valve spring damaged				○	○							
	Airtightness incorrect due to delivery valve holder loosened				○	○							
	Control pinion loosened							○					
	Plunger spring setting faulty							○					
	Delivery valve holder tightened excessively							○					
	Injection amount of each cylinder uneven		○					○					
	Overflow valve stuck	○	○		○								
Fuel feed pump	Gauze filter clogged	○						○	○				
	Check valve malfunctioning	○											
	Piston stuck	○											
	Push rod stuck	○											
	Push rod worn	○											
	Check valve sliding movement faulty		○		○			○					
	Piston worn		○		○			○					

Possible causes \ Symptoms		Engine does not start	Engine hard to start	Engine knocks	Engine output inconsistent	Engine output does not develop full power	Engine maximum revolution too high	Engine idling unstable	Engine starts but stalls	Engine revolution does not reach specified maximum speed	Engine does not stop	Accelerator pedal hard to depress	Fuel supply insufficient
Governor	Full-speed stopper position short of standard value					○							
	Governor spring weak					○				○			
	Control lever position adjusted incorrectly				○	○				○			
	Flyweight malfunctioning						○						
	Idling spring weak							○					
	Linkage bent							○					
	Linkage friction excessive or linkage too loose							○					
	Round nut loosened							○					
	Idling set bolt adjusted incorrectly							○					
	Control lever sliding movement faulty											○	
	Stop mechanism damaged										○		
Injection nozzle	Needle valve stuck	○											
	Valve opening pressure too low	○								○			
	Injection nozzle clogged	○		○		○		○		○			
	Nozzle airtightness incorrect	○		○		○		○		○			
	Valve opening pressure too high			○									
	Spring fractured				○	○							
	Needle valve sliding movement faulty				○								
	Valve opening pressure faulty				○								
	Spring fatigued							○					
Fuel filter	Filter clogged	○			○			○	○				
No fuel in fuel tank		○											
Fuel pipe clogged or fuel leakage from connections		○											
Air or water in fuel system		○			○			○	○				
Low-quality fuel being used			○	○		○		○					

Possible causes \ Symptoms		Engine does not start	Engine hard to start	Engine knocks	Engine output inconsistent	Engine output does not develop full power	Engine maximum revolution too high	Engine idling unstable	Engine starts but stalls	Engine revolution does not reach specified maximum speed	Engine does not stop	Accelerator pedal hard to depress	Fuel supply insufficient
Engine control	Accelerator pedal stopper bolt adjusted incorrectly					○				○			
	Accelerator pedal arm rusted											○	
	Accelerator control cable connection faulty											○	
	Accelerator control cable sliding movement faulty											○	
	Engine stop cable damaged or stretched										○		
	Engine stop cable adjusted incorrectly										○		
Fuel pipe cracked													○
Fuel tank airtightness incorrect													○
Oil viscosity unsuitable	Gr 12		○										
Valve clearance incorrect	Gr 11		○					○					
Head gasket faulty	Gr 11		○					○					
Valve and valve seat worn and carbon deposits	Gr 11		○					○					
Valve spring fatigued	Gr 11		○					○					
Piston ring worn or damaged	Gr 11		○					○					
Piston ring groove worn or damaged	Gr 11		○					○					
Piston and cylinder worn	Gr 11		○										
Cooling system malfunctioning	Gr 14		○					○					
Starter switch faulty	Gr 54		○										
Glow relay faulty	Gr 54		○										
Multipurpose timing control unit faulty	Gr 54		○										
Fuel-cut motor faulty	Gr 54	○									○		
Fuel-cut relay faulty	Gr 54	○									○		

M E M O

INSPECTION AND ADJUSTMENT MOUNTED IN VEHICLE

Inspection and Adjustment of Fuel Injection Timing

Service standards

Location	Maintenance item	Standard value	Limit	Remedy
—	Fuel injection timing (BTDC)	5°±0.5°	—	Adjust

Tightening torque

Unit : N·m {lbf.ft, kgf·m}

Location	Parts to be tightened	Tightening torque	Remarks
5	Adjusting bolt	59 to 64 {43 to 47, 6 to 6.5}	—

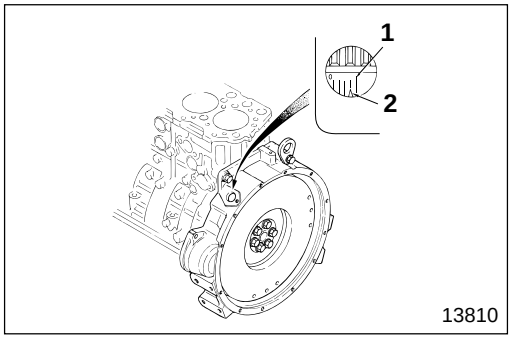

[Inspection]

- Crank the crankshaft more than 180° in the forward running direction. Check if notch **1** on the flywheel and pointer **2** on the flywheel housing show the standard fuel injection timing.

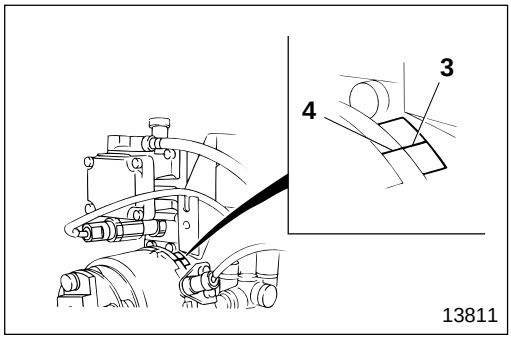

- When pointer **3** on the injection pump and notch **4** on the automatic timer align, the fuel injection timing is standard.
- If the fuel injection timing is not standard, adjust as follows.

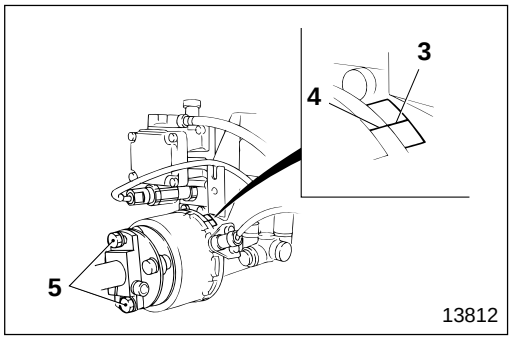

[Adjustment]

- Loosen adjusting bolts **5** and turn the automatic timer to align pointer **3** and notch **4**.
- Tighten adjusting bolts **5** at specified torque.
- Reinspect the fuel injection timing.

CAUTION

Do not loosen any bolts other than adjusting bolts 5.

Inspection and Adjustment of No-load Minimum and Maximum Revolution

Service standards

Location	Maintenance item		Standard value	Limit	Remedy
—	No-load minimum revolution (Idling revolution)	Manual transmission	650 to 700 rpm	—	Adjust
		Automatic transmission	700 to 750 rpm	—	Adjust
—	No-load maximum revolution		3650 to 3750 rpm	—	Adjust

● **Before inspecting the vehicle do the following :**

- Run the engine to bring the coolant temperature up to approximately 80 to 90°C {176 to 194°F}.
- Turn all the lights and accessory equipment OFF.
- Put transmission in neutral. (For automatic transmission, put transmission in **N** range.)
- Set the steering wheel at center and straight position.

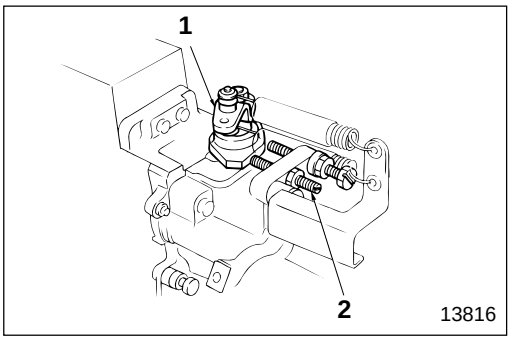

(1) No-load minimum revolution (Idling revolution)

- Make sure that control lever **1** strikes idling set bolt **2**, and in this state, check and see if the minimum revolution is within the standard value.
- If the minimum revolution deviates from the standard value, adjust using idling set bolt **2**.
- After adjustment increase the revolution from between 2800 rpm to 3400 rpm once, and check the minimum revolution.

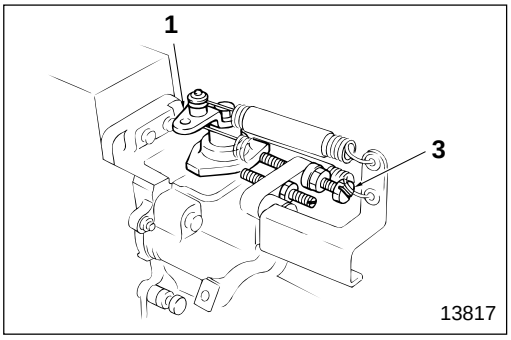

(2) No-load maximum revolution

- Make sure that control lever **1** strikes full-speed set bolt **3**, and in this condition, check and see if the maximum revolution is within the standard value.
- If the maximum revolution deviates from the standard value, adjust using full-speed set bolt **3**.

NOTE

Ensure that the engine does not stall or hunt when control lever 1 is moved from the full-speed position to the idling position quickly. If performance is faulty, adjust it to within standard values.

PRE-STROKE CONTROL INJECTION PUMP SYSTEM

Troubleshooting Procedure

The pre-stroke control type injection pump system has a trouble diagnosis function, this function is used for troubleshooting.

This means you have to read the diagnosis code memorized in the pre-stroke control unit, and carry out an inspection based on this code. There are two ways of reading the code; with a multi-use tester, and without a multi-use tester.

In the case of trouble that does not have a diagnosis code, the normal 01 code is indicated, and it is necessary to carry out a check depending on the situation. In this case, inspect the electric circuits and their relative devices.

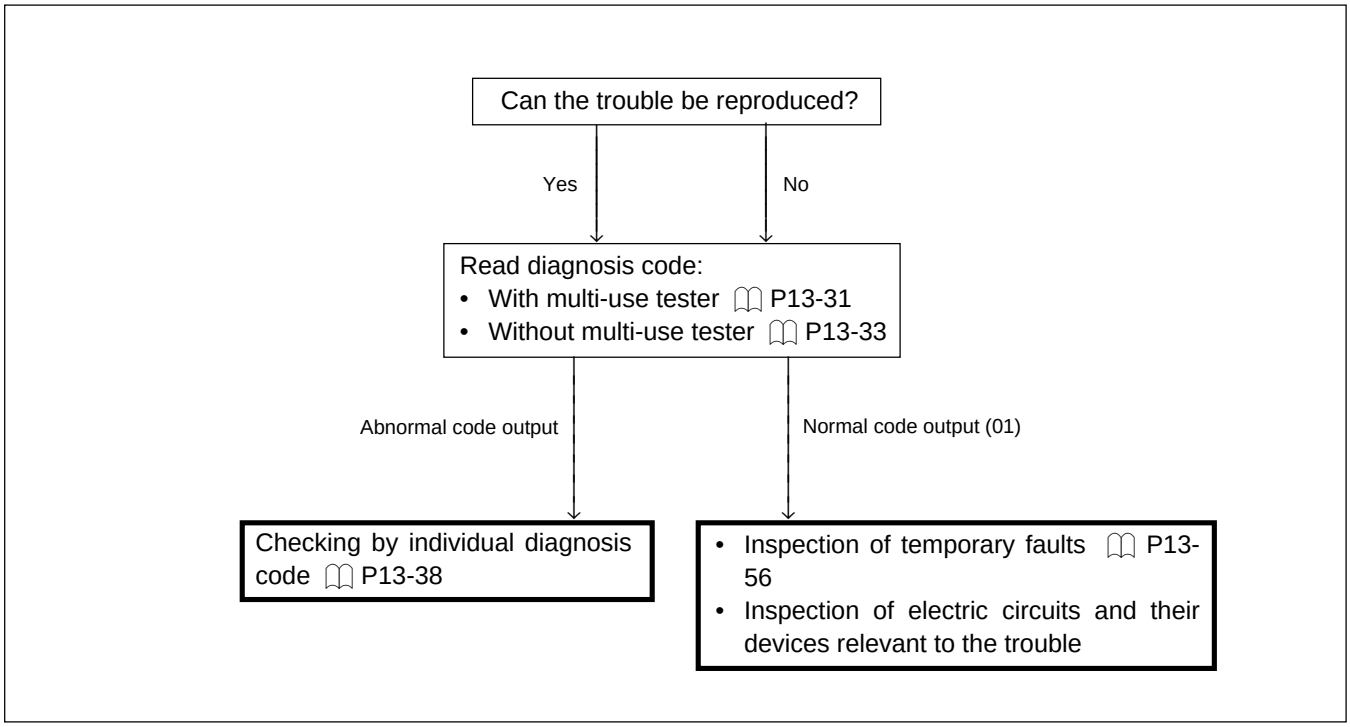

● Inspection with multi-use tester

Special tools

Tool name and shape	Part No.	Application
Multi-use tester sub-assembly 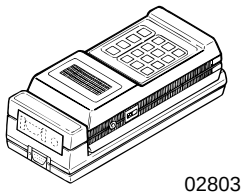 02803	MC858999	Inspection of system
Multi-use tester harness 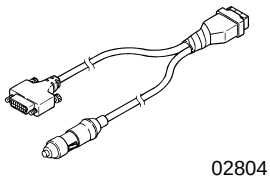 02804	MB991231	
ROM pack 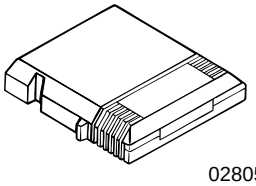 02805	MC858989	

● Inspection flow chart

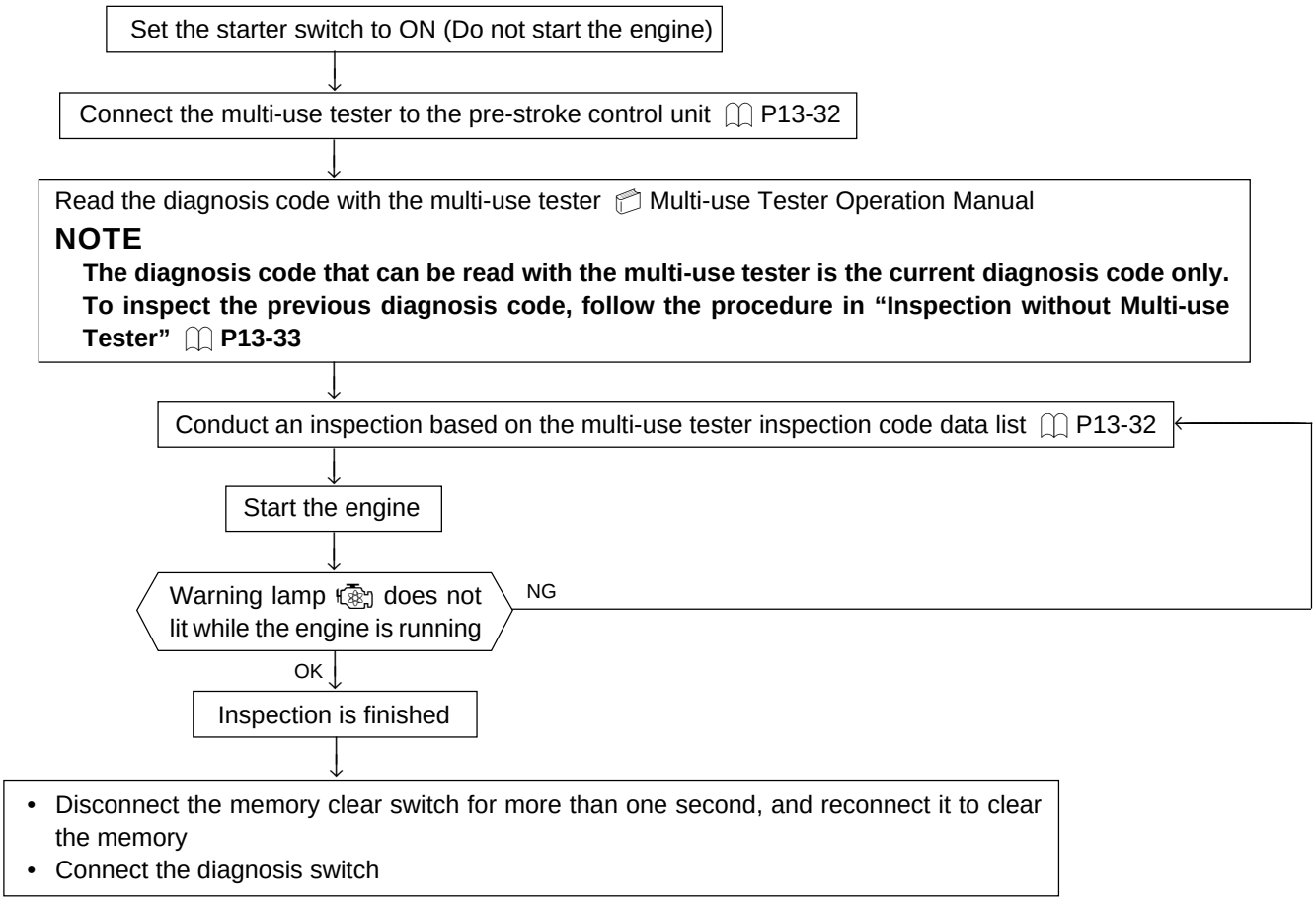

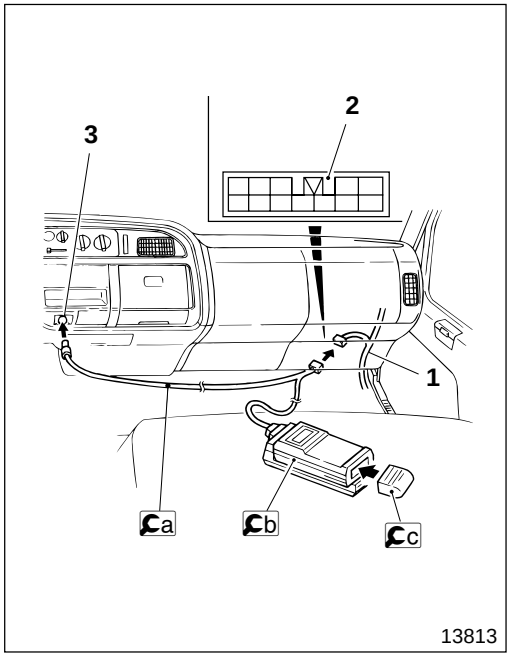

● **Connection of Multi-use Tester to Pre-Stroke Control Unit**

- Set the starter switch to LOCK.
- Connect a multi-use tester harness to multi-use tester connector **2** of cab harness **1** and to cigarette lighter socket **3**.
- Connect a multi-use tester harness to b multi-use tester sub-assembly.
- Connect c ROM pack to b multi-use tester sub-assembly.

NOTE

Refer to the Multi-use Tester Operation Manual for details regarding the operation of the multi-use tester.

● **Inspection with Multi-use Tester**

Inspection using service data is possible as well as by diagnosis code indication (self-diagnosis) using the multi-use tester. This enables you to compare the indicated figures (service data) that represent the data signals from the various sensors on the vehicle with the judgement standards, and judge whether they are good or bad. The service data code is indicated as well as the diagnosis code.

Self-diagnosis			Inspection using Service Data				
Indicated on multi-use tester			Indicated on multi-use tester			Inspection procedure	
Diagnosis code	Trouble item (Inspected instrument)	Inspection procedure	Service data code	Data signal name	Service data	Condition at inspection	Judgement standard
03	PS OFFSET	🕮 P13-38	—				
04	PS VOLTAGE		—				
05	NE NO PULS		—				
12	PS SERVO		12	PS ANG DIFF	■■.■■ deg	Engine running	Within ±5.5 deg
13	PS SNSR		—			400<Ne≦2000 Ne : Engine revolution	Within ±2°CA
15	NE SNSR		15	ENGINE SPEED	■■ rpm	Racing	Synchronization with tachometer
—			16	CTRL ROD ADJ	■■ V	Starter switch set to ON	Within ±0.04 V
21	WTR TEMP SNSR		21	WATER TEMP	■■ °F	While engine is cool While engine is warmed up Engine is stopped after warming up	Equivalent to ambient temperature Gradually rising temperature Gradual falling temperature
22	CTRL ROD SNSR		22	CTRL ROD VOLT	■■ V	Engine running	3 V or less
41	BST TEMP SNSR		41	BOOST TEMP	■■ °F	At high idling	4.9 V or less

● Inspection without multi-use tester

● Inspection flow chart

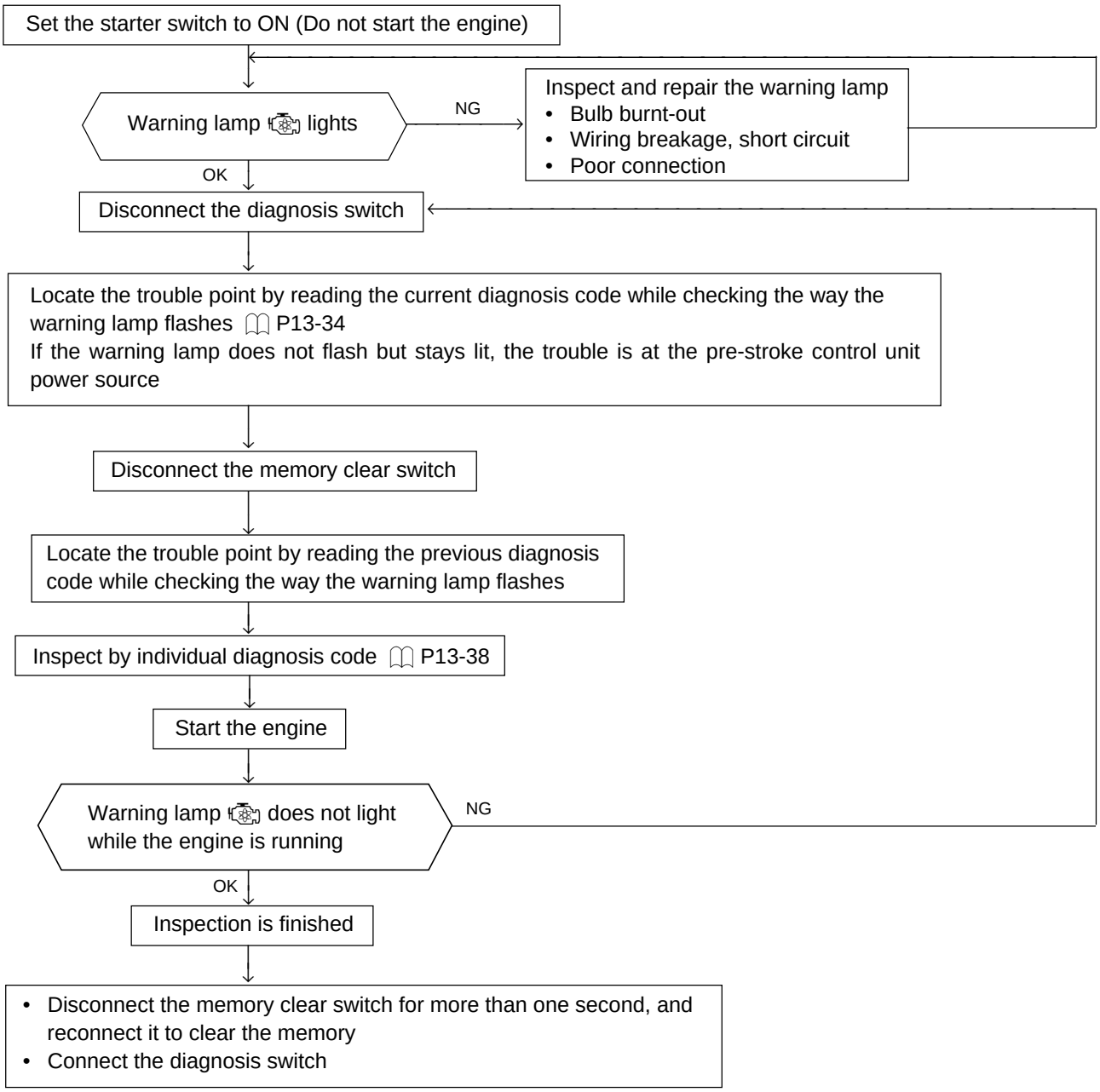

● **Reading of Diagnosis Code with Warning Lamp**

CAUTION

- **Make sure you read the current diagnosis codes first, then read the previous diagnosis codes.**
- **You must take care not to disconnect memory clear switch 2 (1-pin connector) before removing diagnosis switch 1 (1-pin connector without locking device) because this would make it impossible for the system to indicate the current diagnosis code.**
- **Note that if memory clear switch 2 is reconnected after being disconnected, it will clear all the diagnosis codes.**

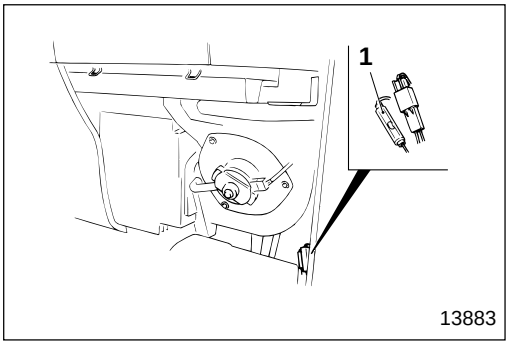

Current diagnosis code

- When diagnosis switch **1** is disconnected, the pre-stroke control unit starts diagnosis of the trouble and indicates the current diagnosis codes by flashing warning lamp within the meter cluster.

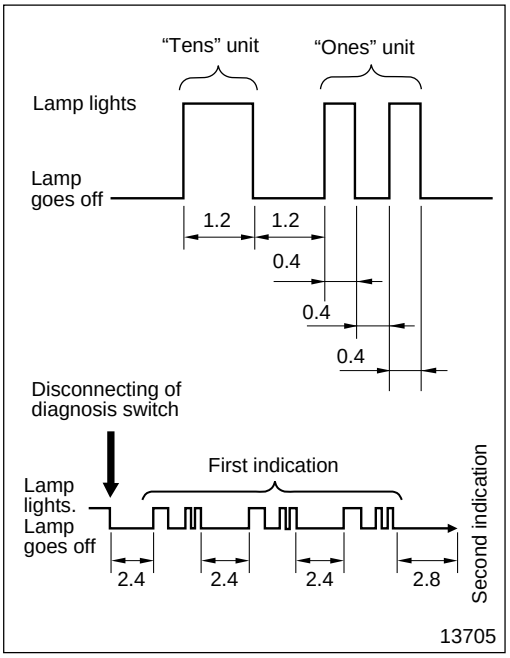

- The diagnosis codes are read by the number of flashes and the duration of flashes of warning lamp.
  - The flash duration differs for the "tens" unit and the "ones" unit.
    "Tens" unit : Every 1.2 seconds
    "Ones" unit : Every 0.4 seconds
  - The number of flashes indicates the numeral for each unit.
  - The diagnosis code indication shows the "tens" unit first, then the "ones" unit. However, when the "tens" unit begins with a zero, only the "ones" unit is shown.
- A diagnosis code is shown by the repetition of three consecutive indications. After the code indication, if another code does not exist, the indication returns to the first code and is again shown three times.
- When diagnosis switch **1** is connected, the pre-stroke control unit immediately terminates code indication.

Previous diagnosis code

After reading the current diagnosis codes (with diagnosis switch **1** disconnected), disconnect memory clear switch **2**. Warning lamp starts flashing again. This flashing indicates the previous diagnosis codes, and by interpreting these codes, the location of the trouble is determined.

Diagnosis code	Warning lamp flashing pattern
01 (Normal)	
03 (Pre-stroke learning faulty)	
04 (Pre-stroke actuator power source faulty)	
05 (Engine revolution sensor no pulse faulty)	
12 (Pre-stroke servo system faulty)	
13 (Pre-stroke position sensor faulty)	
15 (Engine revolution sensor wiring breakage faulty)	
21 (Water temperature sensor faulty)	
22 (Control rod position sensor faulty)	
41 (Boost air temperature sensor faulty)	

13970

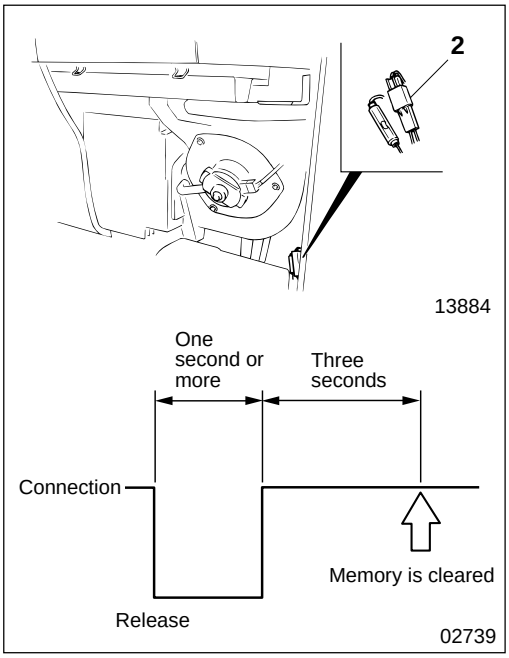

Clearing diagnosis codes

By disconnecting memory clear switch **2** once and reconnecting it, all the diagnosis codes memorized in the pre-stroke control unit are cleared.

CAUTION

Clearing of diagnosis codes must be done using memory clear switch 2.

PRE-STROKE CONTROL INJECTION PUMP SYSTEM

Electric Circuit and Position of Parts Installation

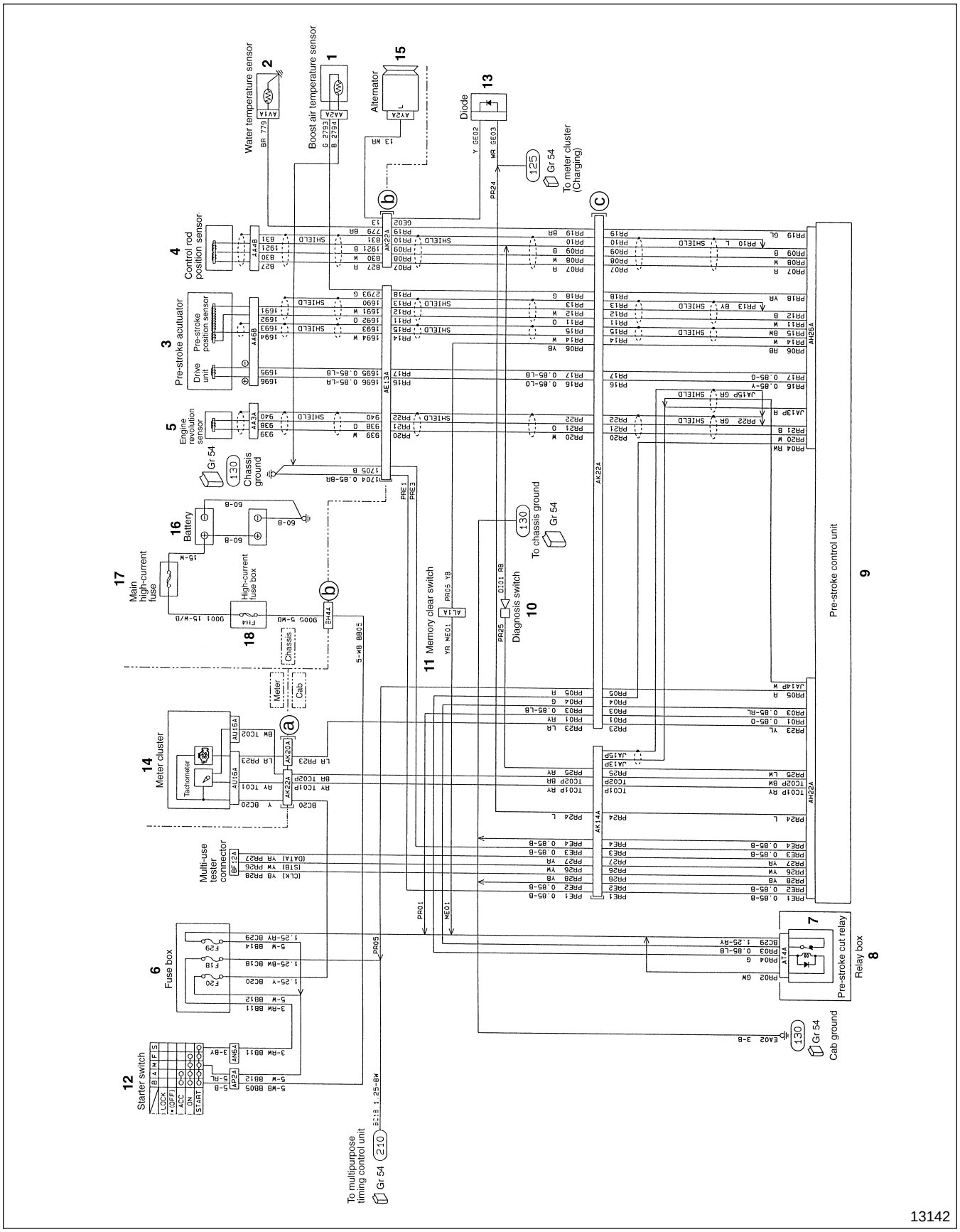

13142

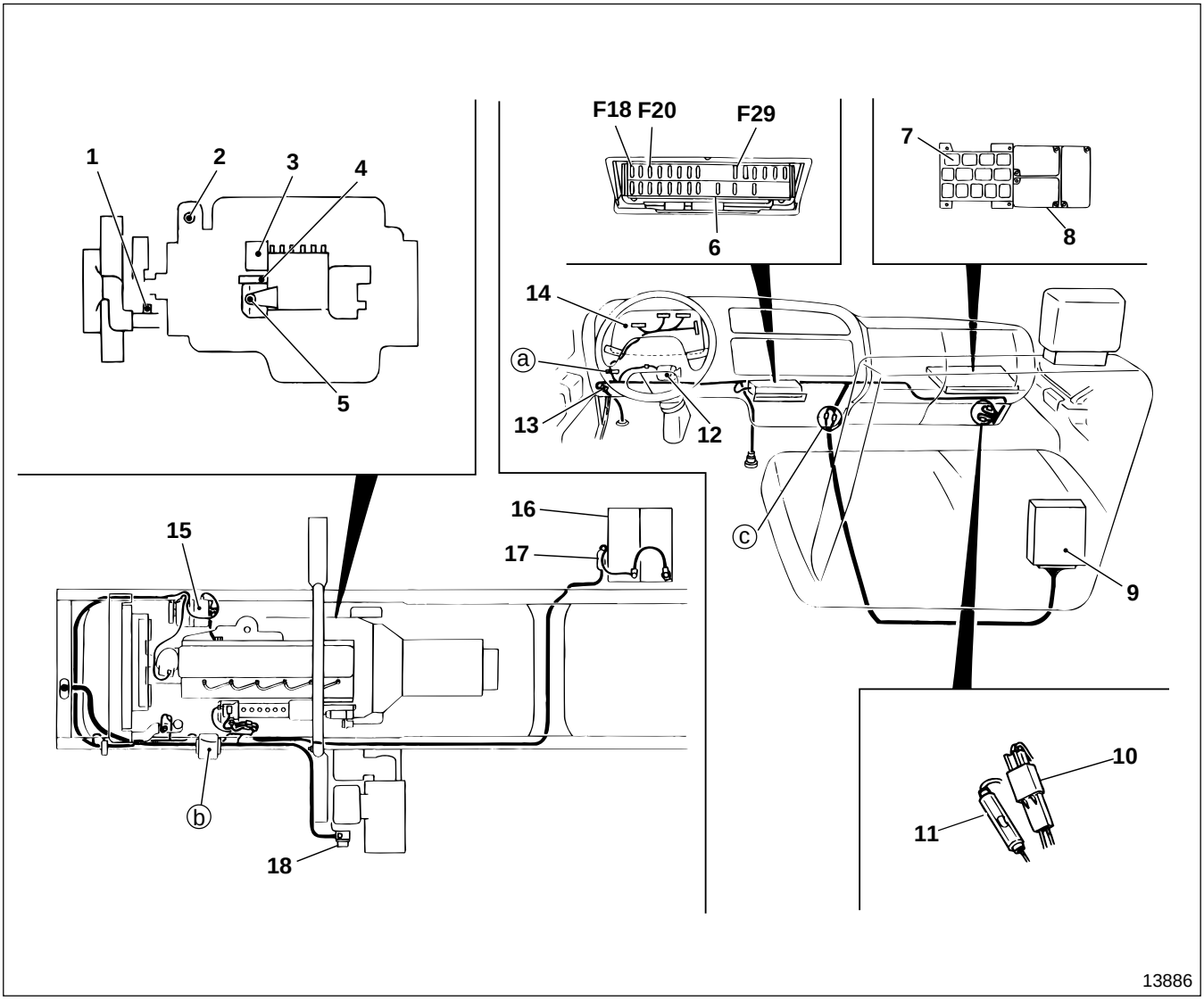

1 Boost air temperature sensor
2 Water temperature sensor
3 Pre-stroke actuator (Pre-stroke position sensor is built in)
4 Control rod position sensor
5 Engine revolution sensor
6 Fuse box
7 Pre-stroke cut relay
8 Relay box
9 Pre-stroke control unit
10 Diagnosis switch
11 Memory clear switch
12 Starter switch
13 Diode
14 Meter cluster
15 Alternator
16 Battery
17 Main high-current fuse
18 High-current fuse box

Inspection by Individual Diagnosis Code

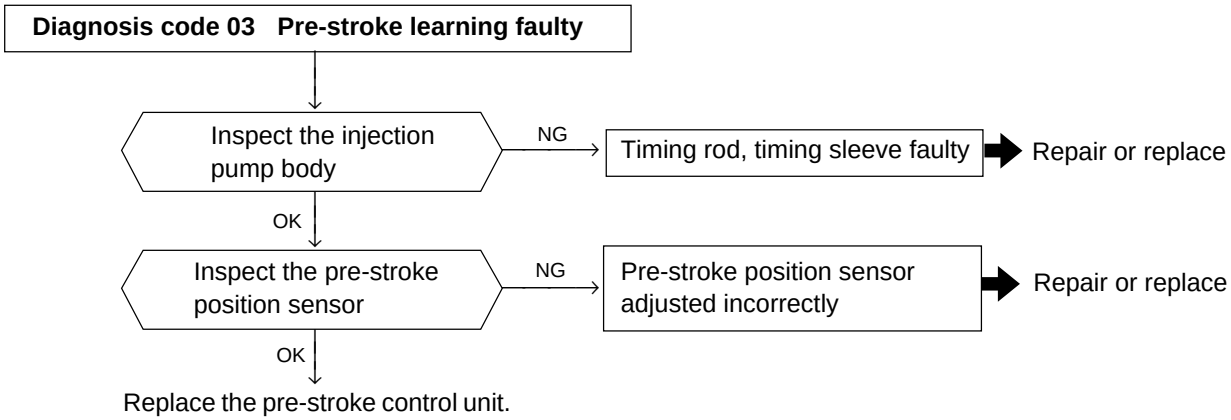

When diagnosis code 03 is indicated, inspect the injection pump body and the pre-stroke position sensor. However, special tools and equipment are necessary for this work, so it is recommended that the work be carried out by a ZEXEL service station. If the inspection result shows normal, replace the pre-stroke control unit.

M E M O

PRE-STROKE CONTROL INJECTION PUMP SYSTEM

Diagnosis code 04 Pre-stroke actuator power source faulty

- Inspect the harness and connector — NG → • Wiring breakage, harness short circuit • Connector not connected properly → Repair or replace
- OK
- Inspect the pre-stroke cut relay 🕮 P13-41 — NG → • Wiring breakage, coil short circuit • Installation faulty → Repair, adjust or replace
- OK
- Replace the pre-stroke control unit.

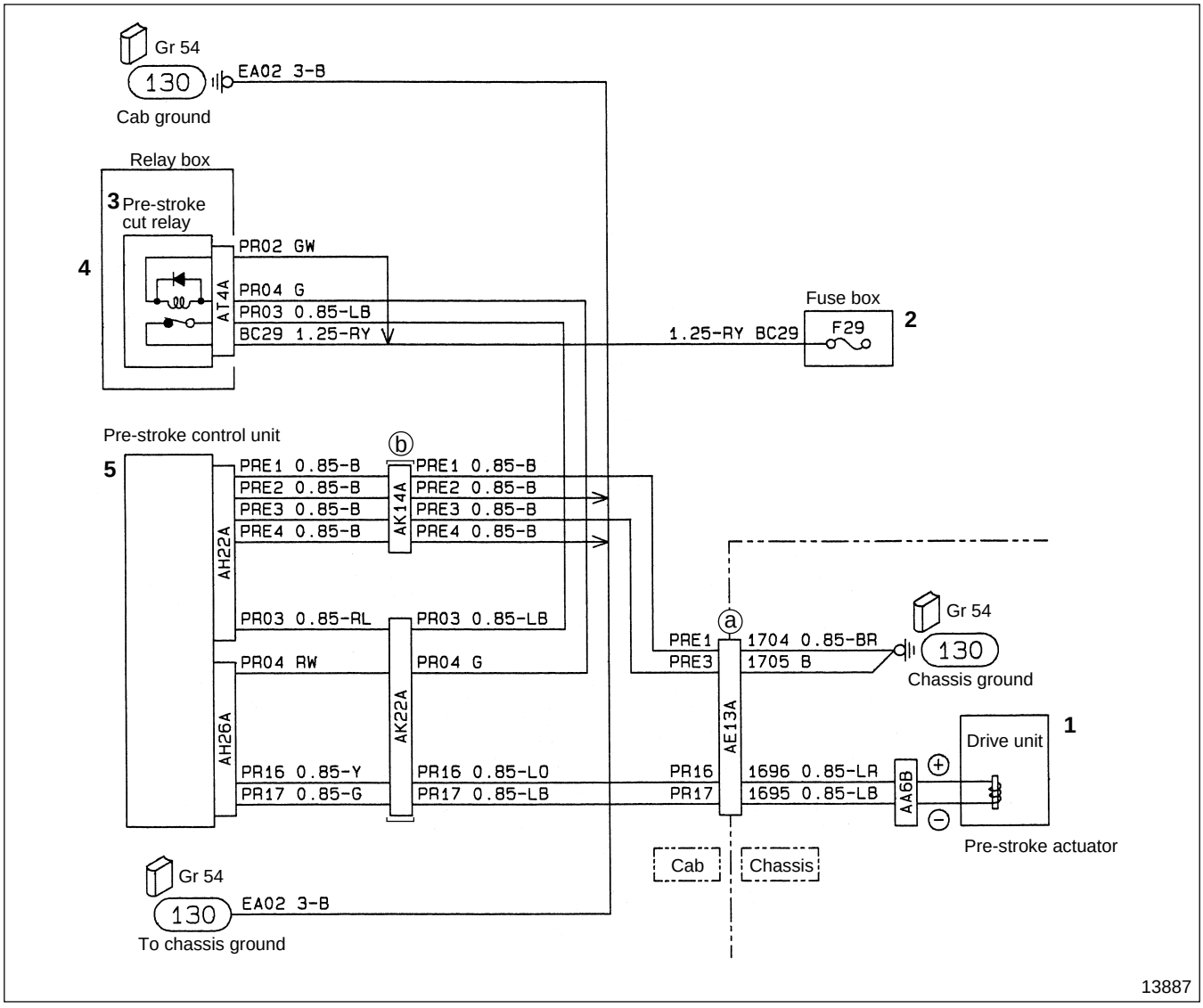

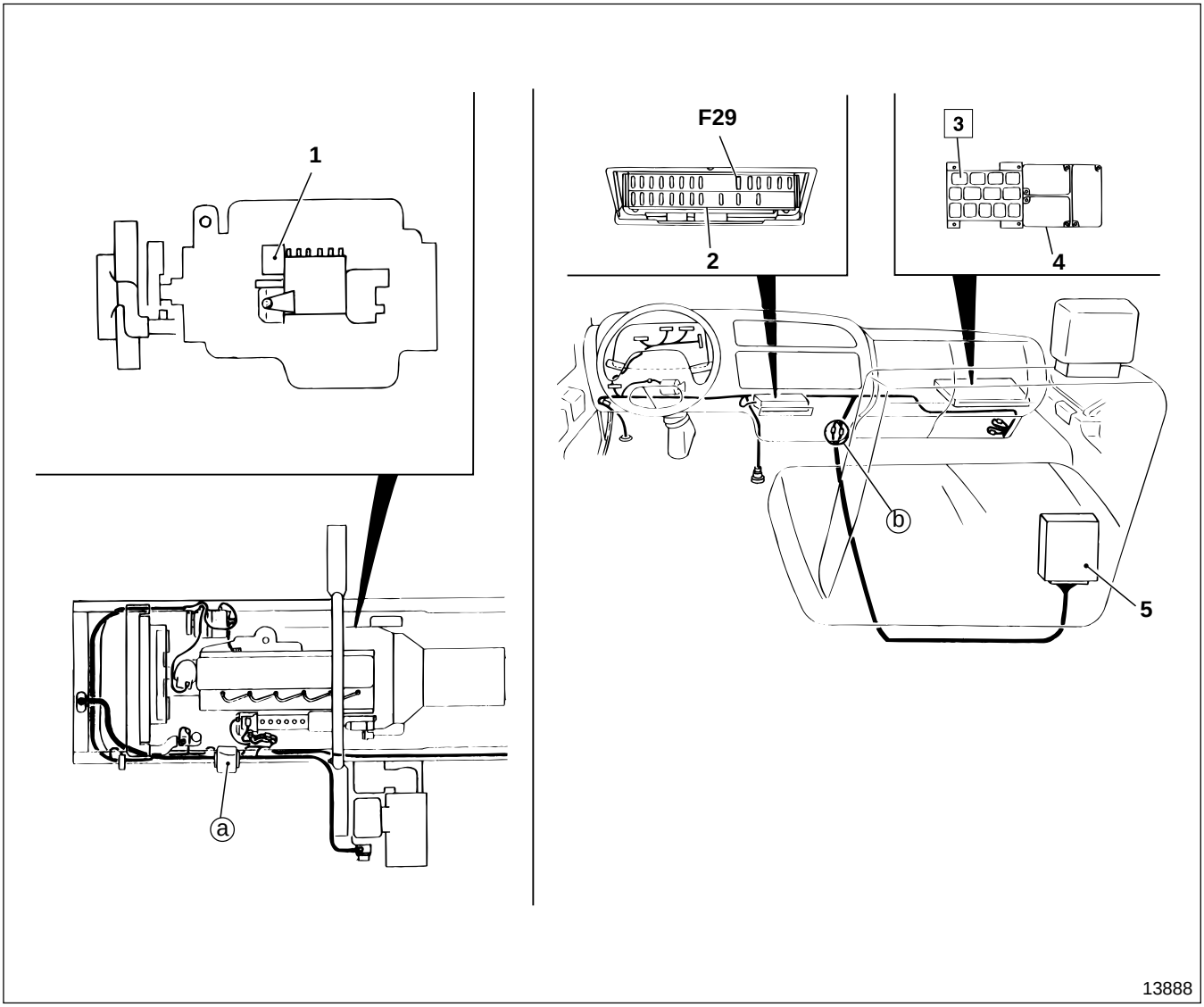

1 Pre-stroke actuator
2 Fuse box
3 Pre-stroke cut relay
4 Relay box
5 Pre-stroke control unit

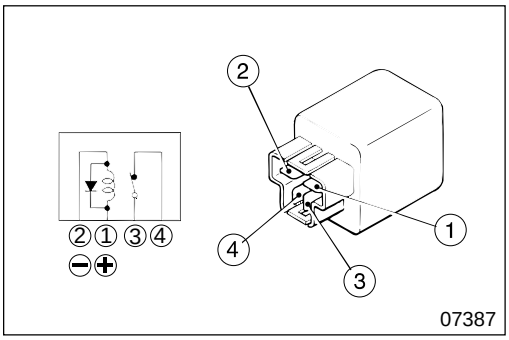

◆ Service procedure

3 **Inspection of pre-stroke cut relay**

- Follow the table below to inspect continuity.

	①	②	③	④
No current	○	○		
			○	○
Current	⊕	⊖	◌	◌

○—○ : There is continuity between terminals ○ and ○.
⊕—⊖ : Indicates that 12 volts DC is applied to the line between the terminals.
◌—◌ : Indicates that continuity is lost between the terminals.

- If any fault is found, replace pre-stroke cut relay **3**.

PRE-STROKE CONTROL INJECTION PUMP SYSTEM

Diagnosis code 05 Engine revolution sensor faulty
(No pulse error : Output signal from the sensor is weak or unstable)

Inspect the harness and connector
NG → • Wiring breakage, harness short circuit • Connector not connected properly → Repair or replace
OK ↓

Inspect the engine revolution sensor. P13-44
Inspect the output voltage of alternator terminal L Gr 54
NG → • Wiring breakage, coil short circuit • Installation faulty → Repair, adjust or replace
OK ↓

Replace the pre-stroke control unit.

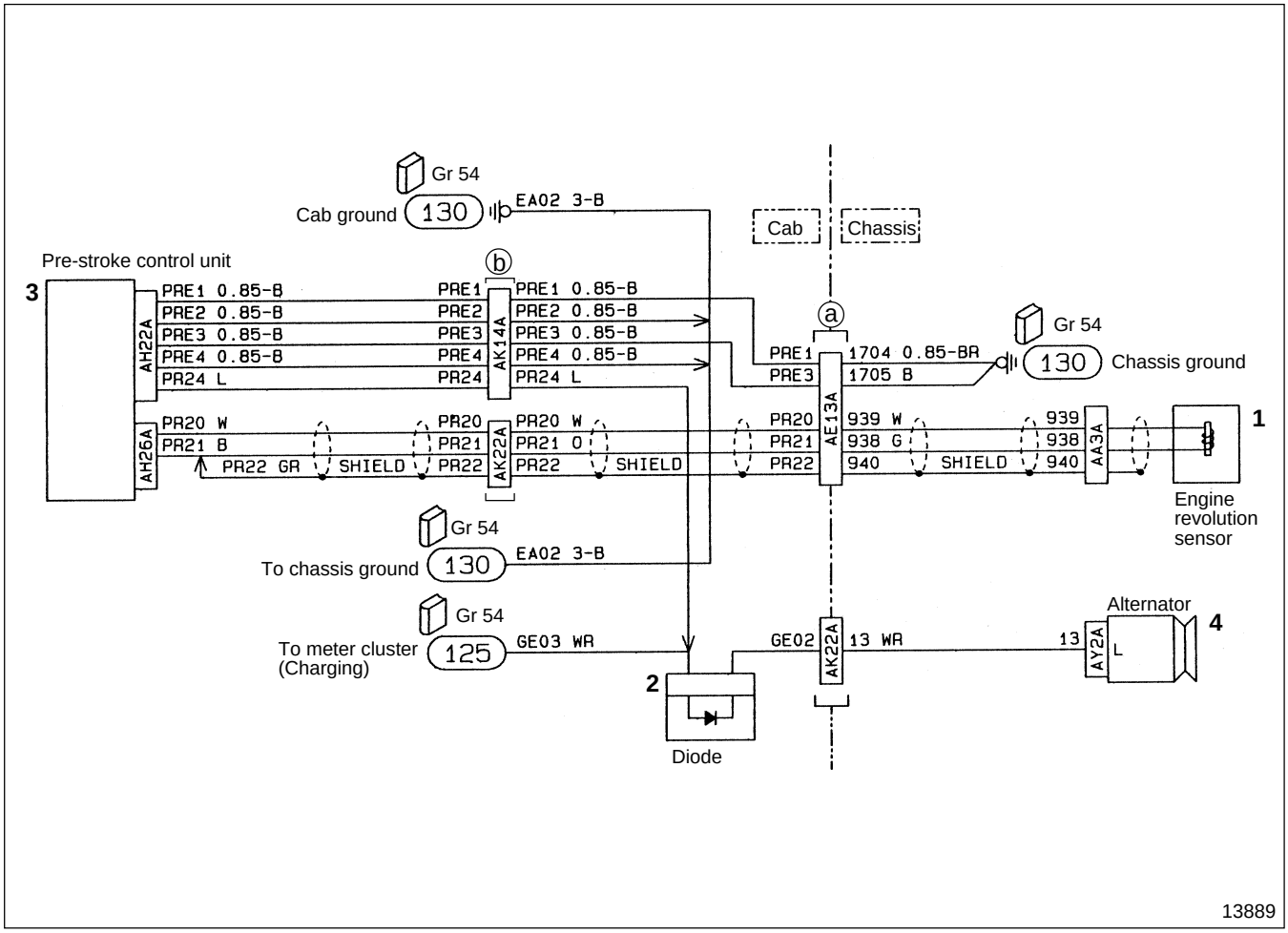

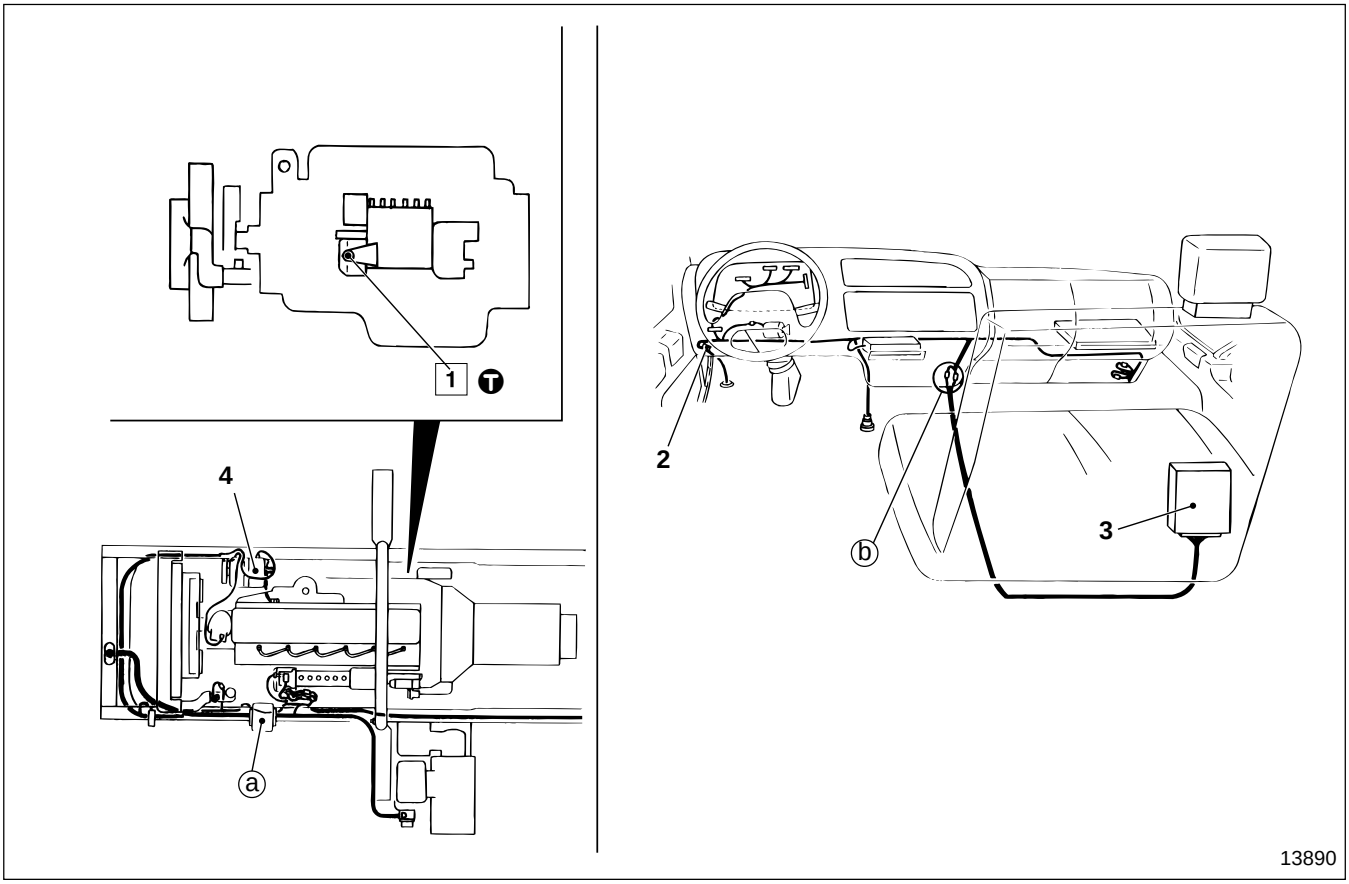

1 Engine revolution sensor
2 Diode
3 Pre-stroke control unit
4 Alternator

Service standards

Unit : mm {in.}

Location	Maintenance item		Standard value	Limit	Remedy
1	Resistance value of engine revolution sensor (at 25˚C {77˚F}) 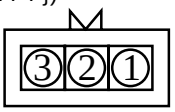 14013	①–②	2.3±0.2 kΩ	—	Replace
	Clearance between engine revolution sensor and timer housing protrusion		0.5 to 2.0 {0.02 to 0.079}	—	Adjust

Ⓣ Tightening torque

Unit : N·m {lbf.ft, kgf·m}

Location	Parts to be tightened	Tightening torque	Remarks
1	Lock nut of engine revolution sensor	24 to 35 {17 to 26, 2.4 to 3.6}	—

◆ Service procedure

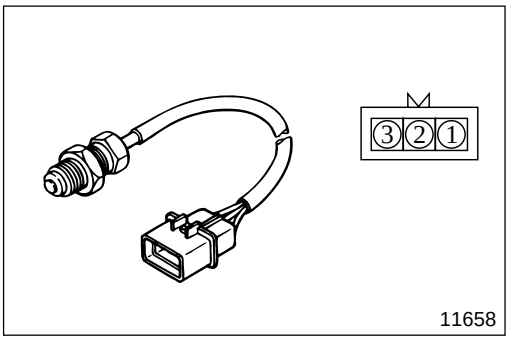

1 Engine revolution sensor

[Inspection]

(1) Sensor body

- Measure the resistance between terminals ① and ②.
- If the measured value deviates from the standard value, replace engine revolution sensor **1**.

CAUTION

Be sure to adjust the clearance between engine revolution sensor 1 and the protrusion on the timer housing after replacing the engine revolution sensor.

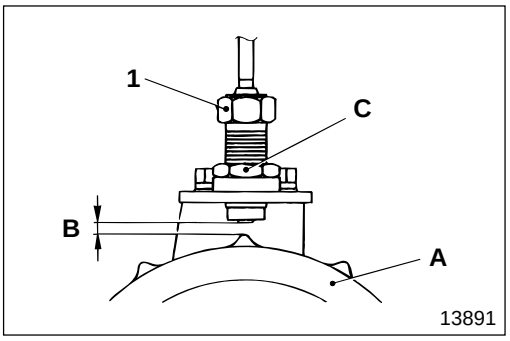

(2) Clearance to protrusion

If clearance **B** between engine revolution sensor **1** and protrusion **A** on the timer housing deviates from the standard value, adjust the clearance as follows.

[Adjustment]

- Loosen lock nut **C** and rotate engine revolution sensor **1** to adjust.
- After adjustment, fix by tightening lock nut **C** at specified torque.

NOTE

If the clearance between engine revolution sensor 1 and protrusion A on the timer housing is too large, the signal might not be output. If the clearance is too small, the engine revolution sensor might hit the protrusion.

M E M O

PRE-STROKE CONTROL INJECTION PUMP SYSTEM

Diagnosis code 12 Pre-stroke servo system faulty

Inspect the harness and connector — NG → • Wiring breakage, harness short circuit • Connector not connected properly → Repair or replace

OK

Inspect the pre-stroke actuator 🕮 P13-48 — NG → • Copper plate mounting nut loose • Wiring breakage, coil short circuit • Rotor rotation faulty • Spring faulty → ★ Repair, adjust or replace

OK

★ Inspect the injection pump body — NG → Timing rod, timing sleeve faulty → ★ Repair, adjust or replace

OK

Replace the pre-stroke control unit.

★ : To be carried out by a ZEXEL service station

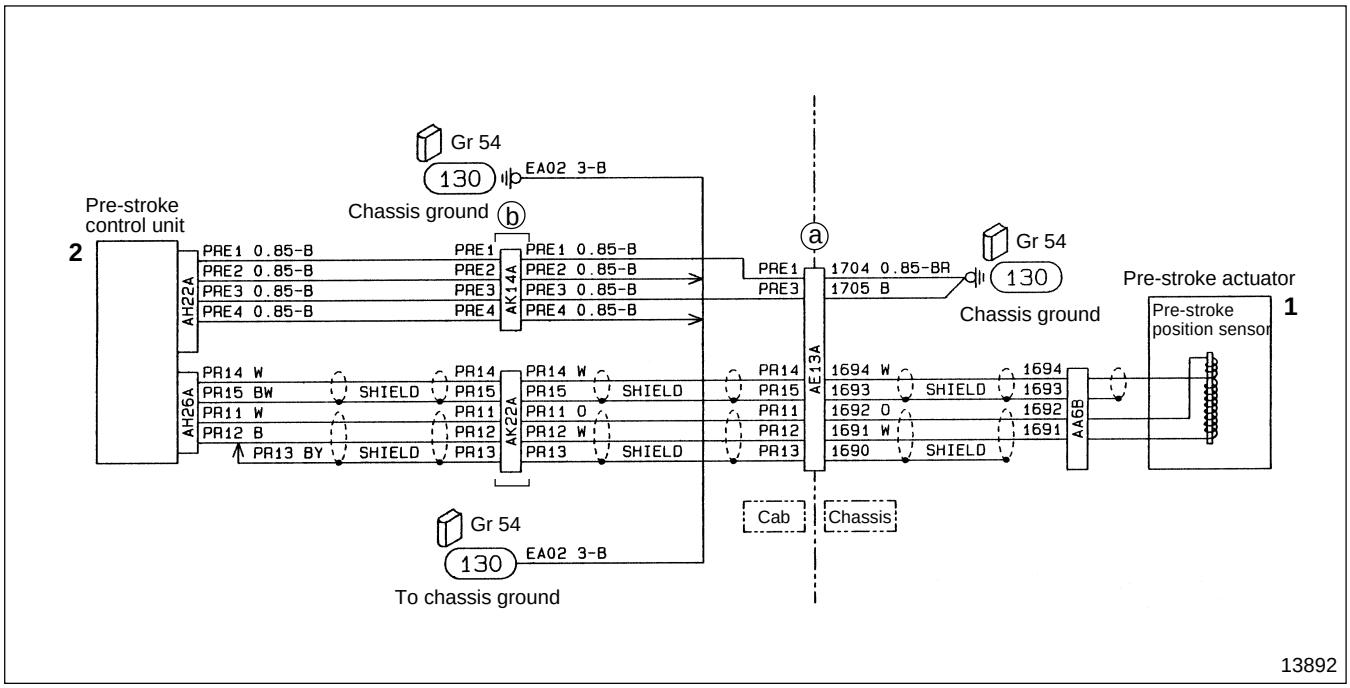

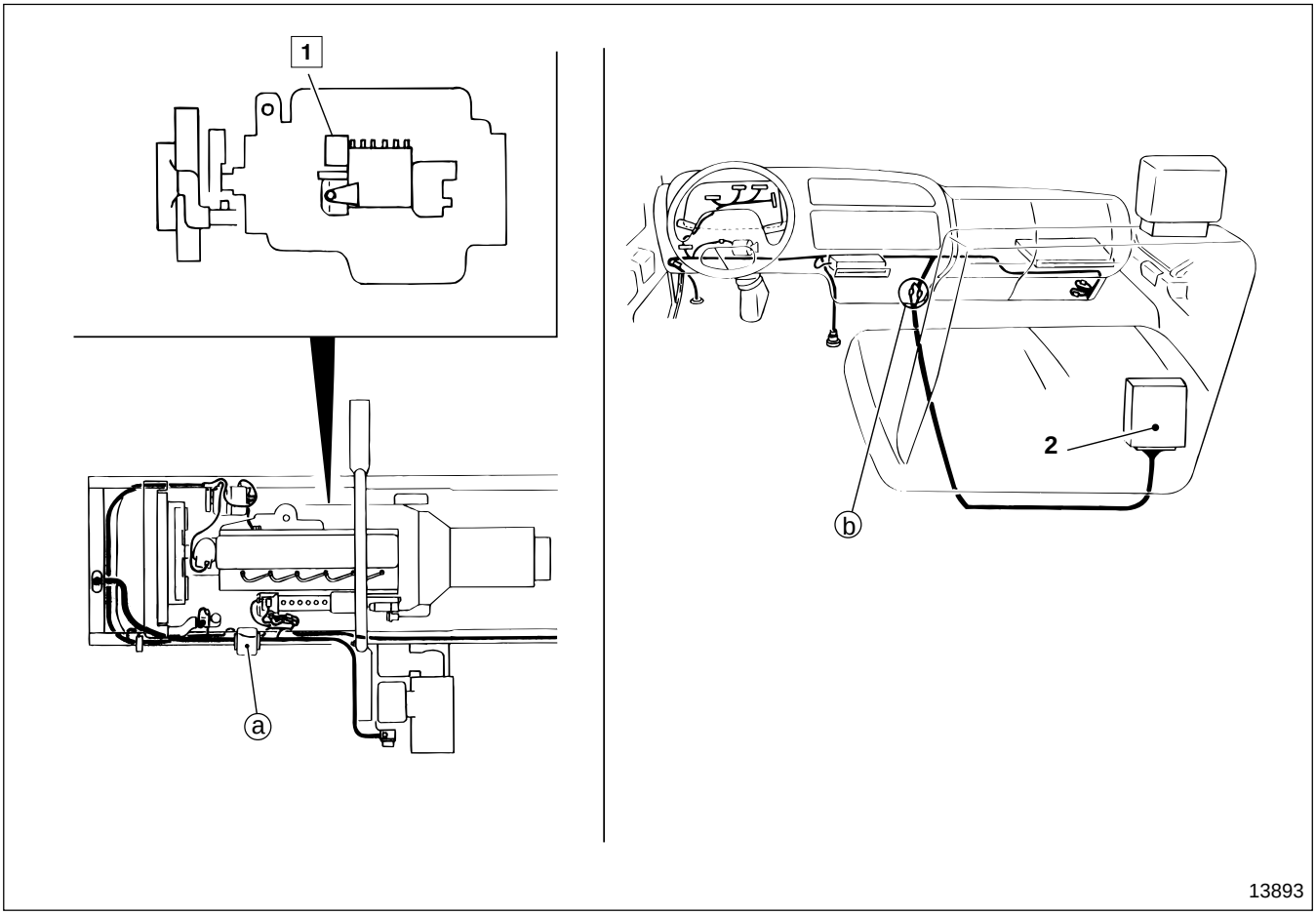

1 Pre-stroke actuator
2 Pre-stroke control unit

Service standards

Location	Maintenance item		Standard value	Limit	Remedy
1	Resistance value of pre-stroke actuator (at connector point) 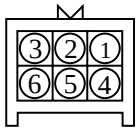 13714	②-③	5.5 to 6.1 Ω	—	Replace (to be carried out by a ZEXEL service station)
		①-③	11.0 to 12.2 Ω	—	
		①-②	5.5 to 6.1 Ω	—	
		④-⑤	1.0 to 1.3 Ω	—	
	Resistance value of pre-stroke actuator (Actuator body) 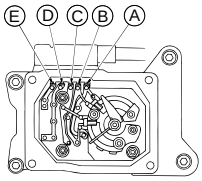 13789	Ⓐ-Ⓒ	11.0 to 12.2 Ω	—	Replace (to be carried out by a ZEXEL service station)
		Ⓑ-Ⓒ	5.5 to 6.1 Ω	—	
		Ⓐ-Ⓑ	5.5 to 6.1 Ω	—	
		Ⓓ-Ⓔ	1.0 to 1.3 Ω	—	

◆ Service procedure

1 Inspection of pre-stroke actuator

Inspect the following points and if any fault is found, have the unit inspected and repaired by a ZEXEL service station.

NOTE

Inspection of pre-stroke actuator 1 must be carried out when the engine is cold.

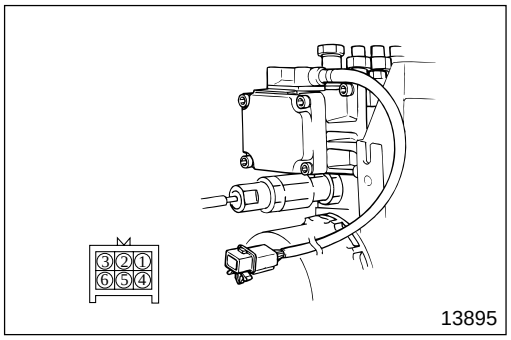

13895

(1) Inspection at connector point

- Measure resistance between terminals ②-③, ①-③, ①-② and ④-⑤.

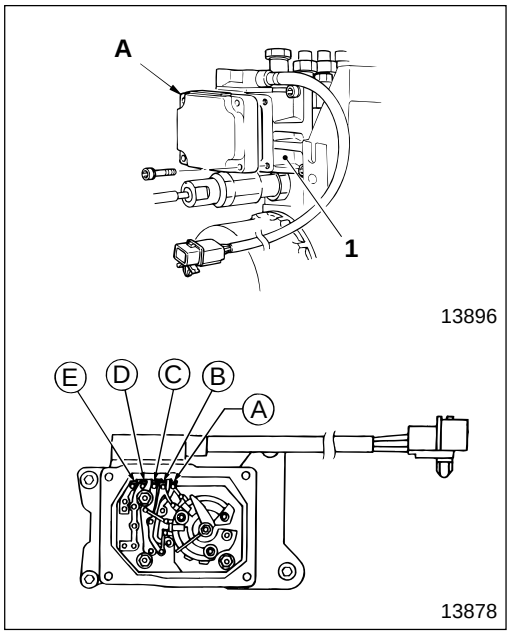

13896
13878

(2) Inspection of pre-stroke actuator body

- Remove cover **A** from pre-stroke actuator **1**.

CAUTION ⚠

- **Remove only cover A from pre-stroke actuator 1, never remove the actuator body itself. If the actuator is removed, it requires special tools to replace and adjust it.**
- **When removing cover A, do not exert excessive force on pre-stroke actuator 1 with your hands or by treading on it, etc.**

- Measure resistance between terminals Ⓐ-Ⓒ, Ⓑ-Ⓒ, Ⓐ-Ⓑ and Ⓓ-Ⓔ.

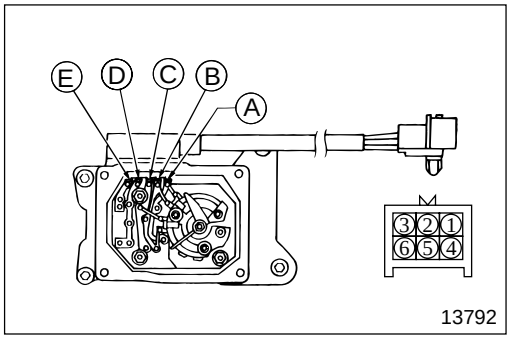

13792

(3) Inspection of continuity between pre-stroke actuator and connector

Make sure that continuity exists between terminals as listed in the table below.

Connector terminal	Pre-stroke actuator body	Application
④	Ⓓ	Pre-stroke actuator driving power source ⊖
⑤	Ⓔ	Pre-stroke actuator driving power source ⊕
⑥	GND	Shield
①	Ⓒ	Pre-stroke position sensor (GND)
②	Ⓑ	Pre-stroke position sensor (MDL)
③	Ⓐ	Pre-stroke position sensor (OSC)

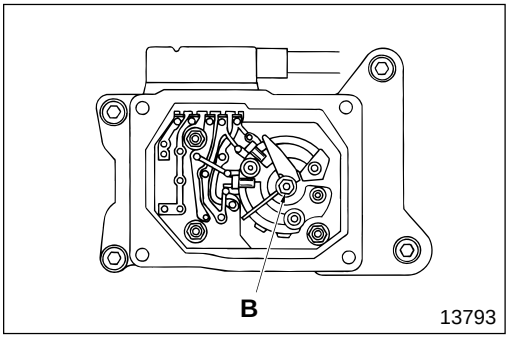

(4) Inspection of copper plate mounting nut

Check that copper plate mounting nut **B** was not loosened when the cover of pre-stroke actuator **1** was removed.
If nut **B** is loose, tighten it.

Diagnosis code 13 Pre-stroke position sensor faulty

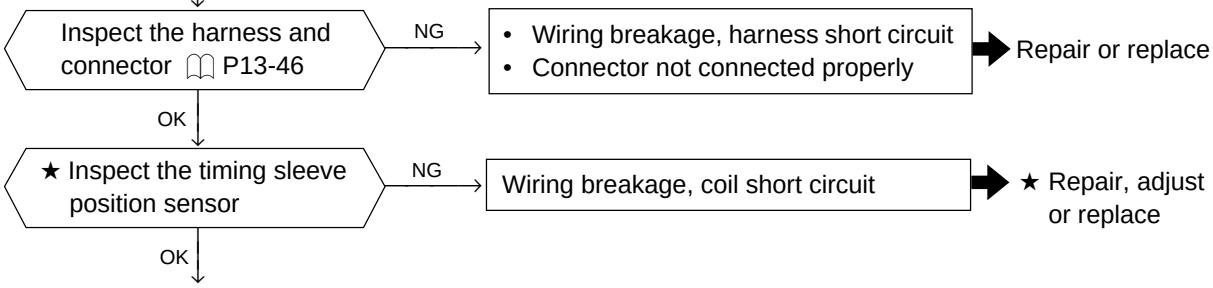

★ : To be carried out by a ZEXEL service station

Diagnosis code 15 Engine revolution sensor faulty
(Wiring breakage error : No output signal transmitted by the sensor)

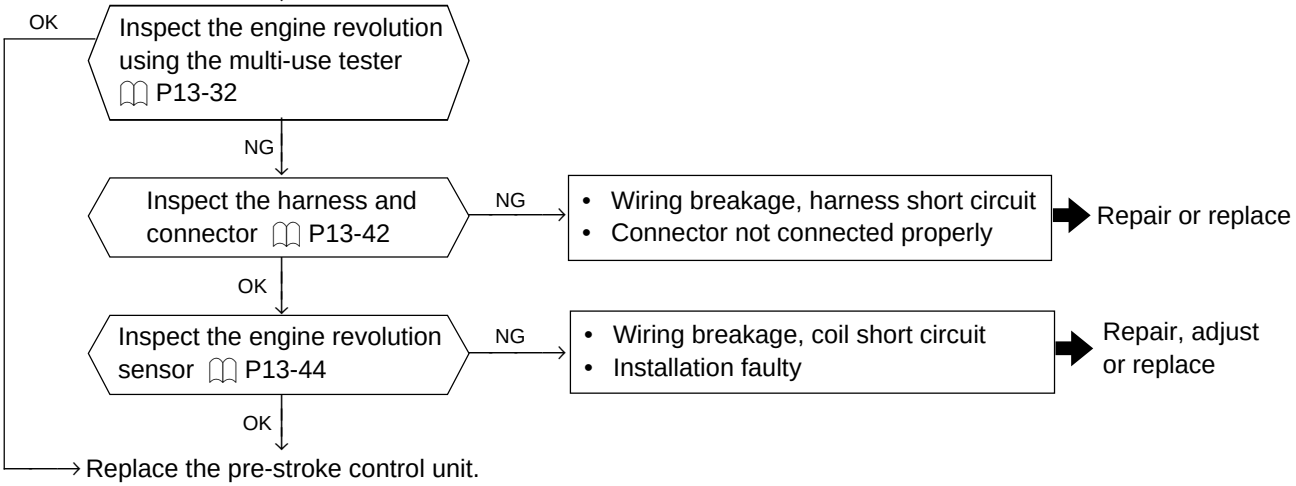

PRE-STROKE CONTROL INJECTION PUMP SYSTEM

Diagnosis code 21 Water temperature sensor faulty

OK: Inspect the engine coolant temperature using the multi-use tester 🕮 P13-32

NG: Inspect the harness and connector

NG:
- Wiring breakage, harness short circuit
- Connector not connected properly

→ Repair or replace

OK: Inspect the water temperature sensor 🕮 P13-51

NG:
- Wiring breakage, coil short circuit
- Installation faulty

→ Repair, adjust or replace

OK → Replace the pre-stroke control unit.

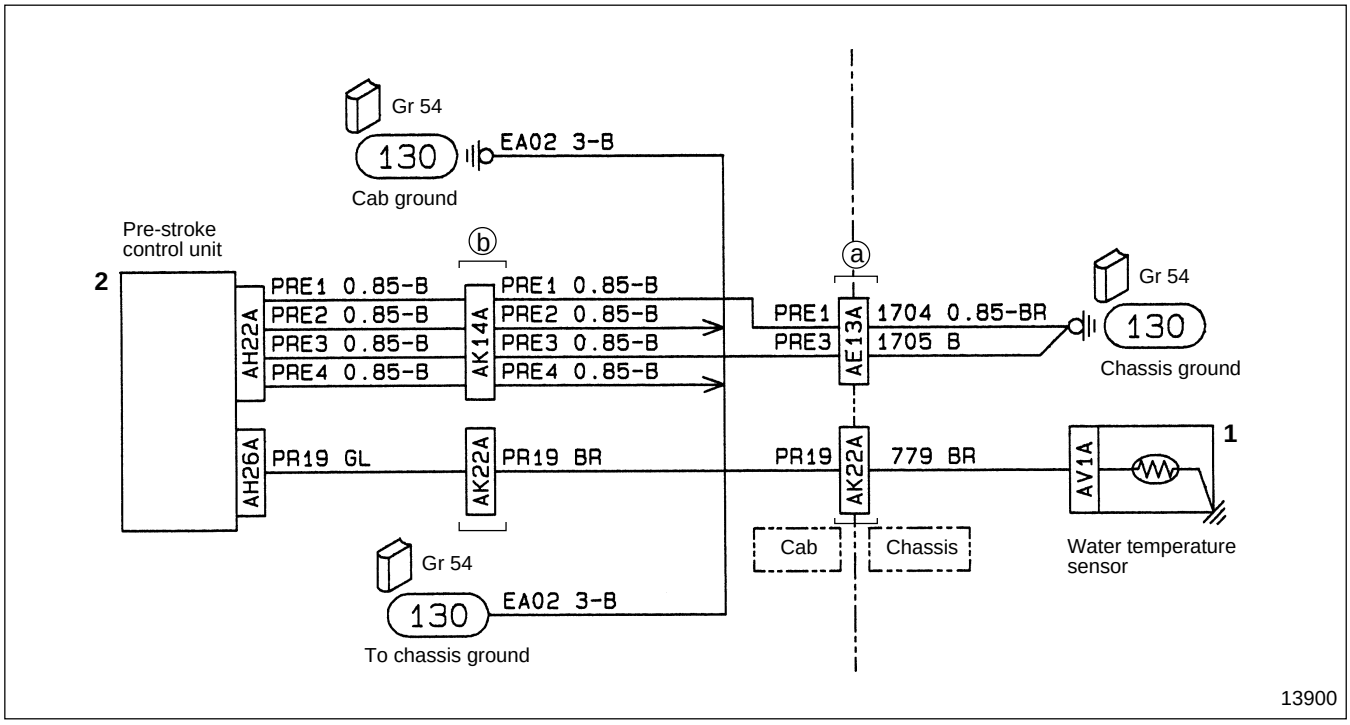

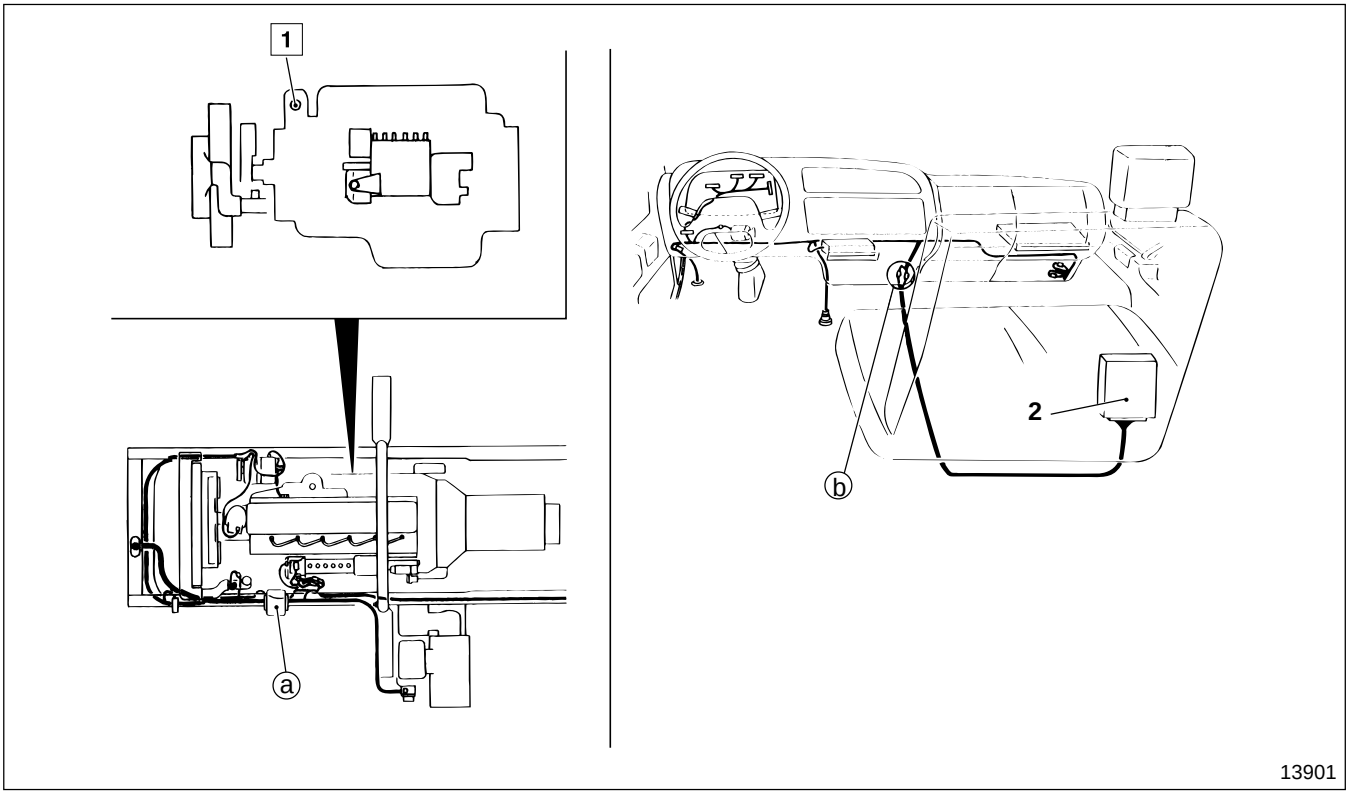

1 Water temperature sensor
2 Pre-stroke control unit

Service standards

Location	Maintenance item		Standard value	Limit	Remedy
1	Resistance value of water temperature sensor	20˚C {68˚F}	3250 Ω	—	Replace
		40˚C {104˚F}	1500 Ω	—	Replace
		60˚C {140˚F}	620±62 Ω	—	Replace

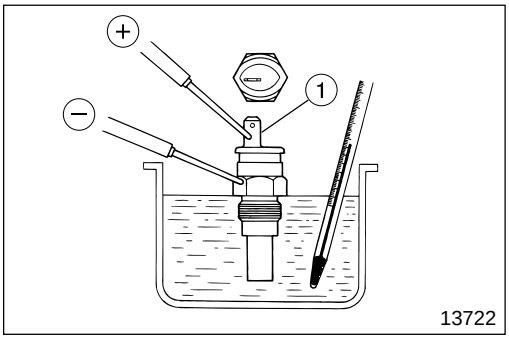

◆ Service procedure

1 **Inspection of water temperature sensor**

- Place water temperature sensor **1** in engine oil in a container.
- Raise the oil temperature to the specified values and stir the oil.
- Measure the resistance between terminal ① and the body.
- If the measured value deviates from the standard value, replace water temperature sensor **1**. Gr 14

Diagnosis code 22 Control rod position sensor faulty

OK

Inspect the control rod position sensor power output voltage using the multi-use tester P13-32

NG

Inspect the harness and connector — NG →
- Wiring breakage, harness short circuit
- Connector not connected properly

→ Repair or replace

OK

Inspect the control rod position sensor P13-53 — NG →
- Wiring breakage, coil short circuit
- Installation faulty

→ ★ Repair, adjust or replace

OK

→ Replace the pre-stroke control unit.

★ : To be carried out by a ZEXEL service station

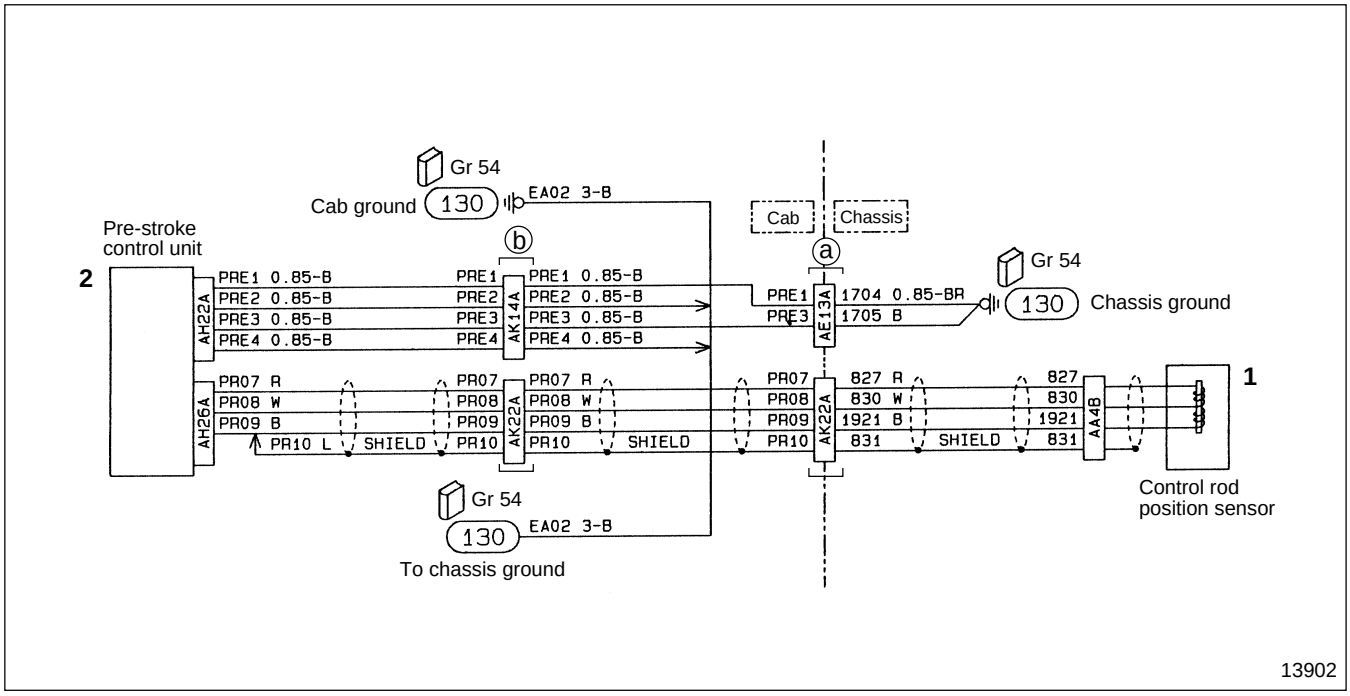

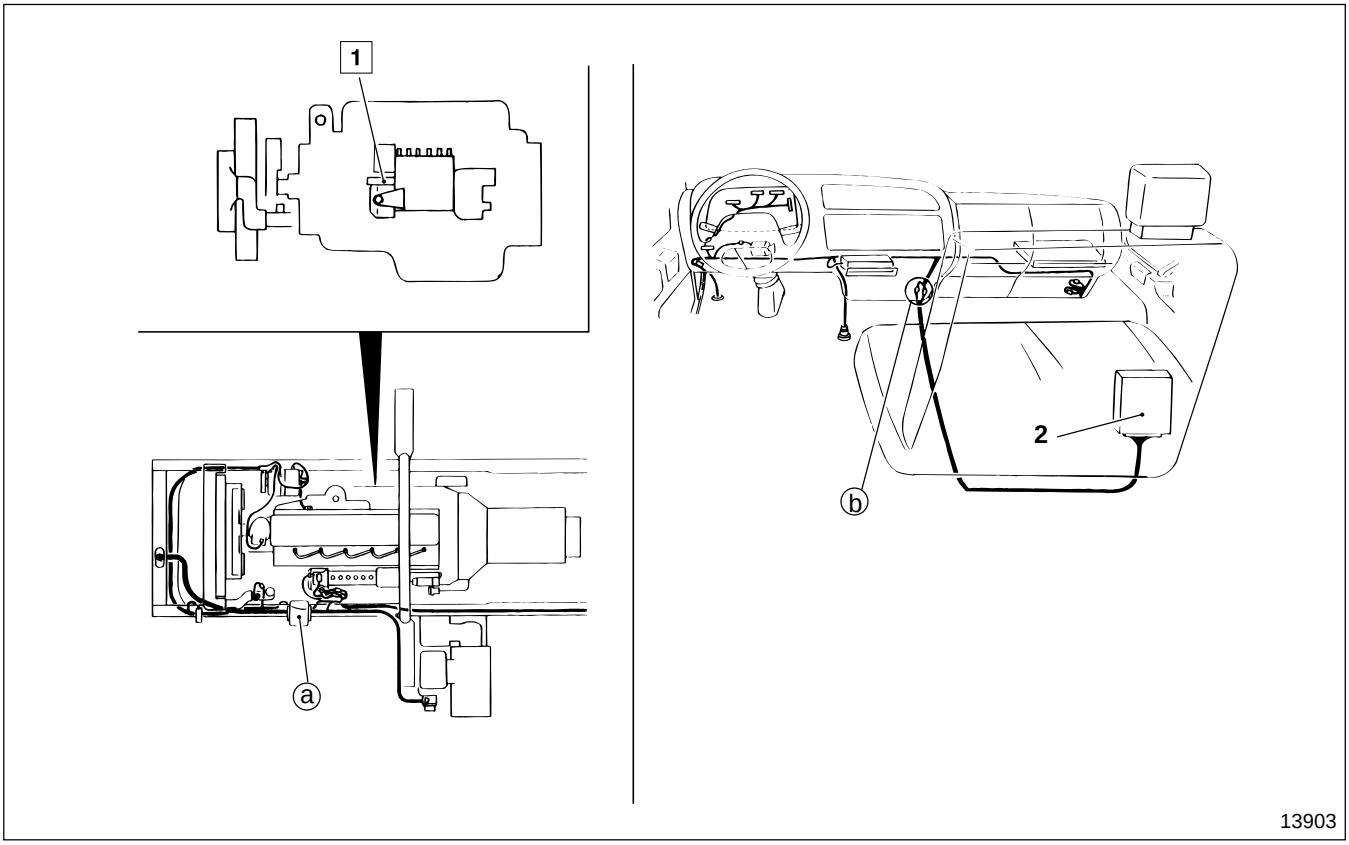

1 Control rod position sensor
2 Pre-stroke control unit

Service standards

Location	Maintenance item		Standard value	Limit	Remedy
1	Resistance value of control rod position sensor 2 1 4 3 13725	①-④	92.5 to 101.5 Ω	—	Replace (To be carried out by a ZEXEL service station)
		①-③	92.5 to 101.5 Ω	—	
		③-④	185 to 203 Ω	—	

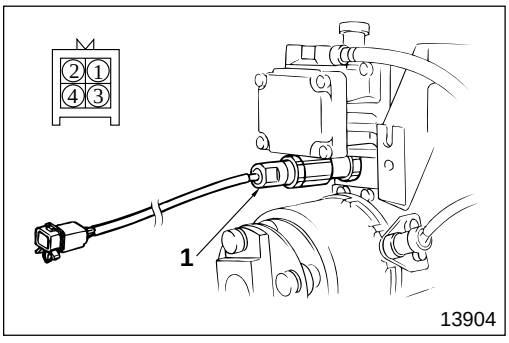

◆ Service procedure

1 **Inspection of control rod position sensor**

- Measure resistance between terminals ①-④, ①-③ and ③-④.
- If the measured value deviates from the standard value, replace control rod position sensor **1**.
- Replacement work is to be carried out by a ZEXEL service station.

PRE-STROKE CONTROL INJECTION PUMP SYSTEM

Diagnosis code 41 Boost air temperature sensor faulty

- Inspect the engine intake air temperature using the multi-use tester 🕮 P13-32
  - OK → Replace the pre-stroke control unit.
  - NG → Inspect the harness and connector
    - NG → • Wiring breakage, harness short circuit • Connector not connected properly → Repair or replace
    - OK → Inspect the boost air temperature sensor 🕮 P13-55
      - NG → • Wiring breakage, coil short circuit • Installation faulty → Repair, adjust or replace
      - OK → Replace the pre-stroke control unit.

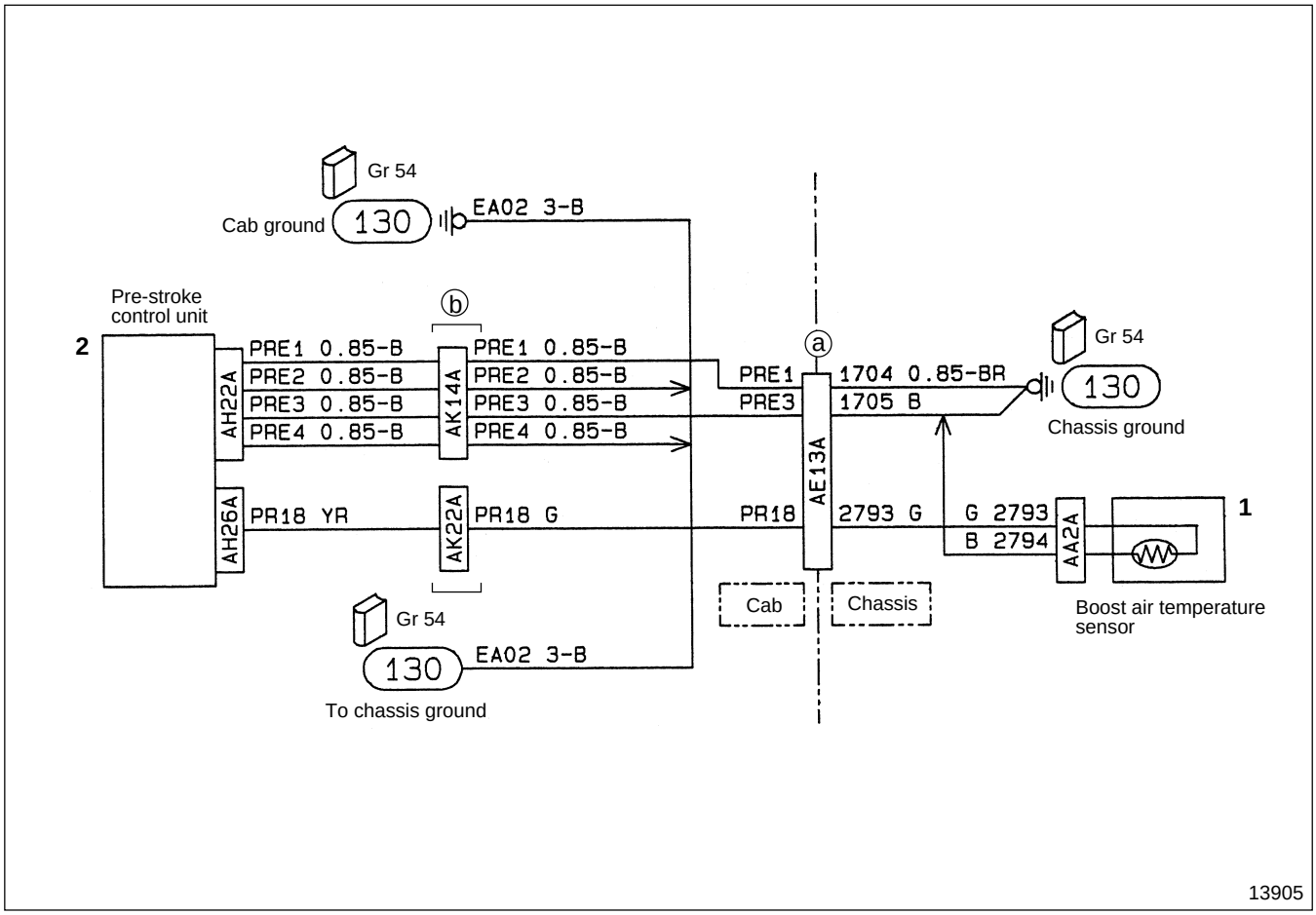

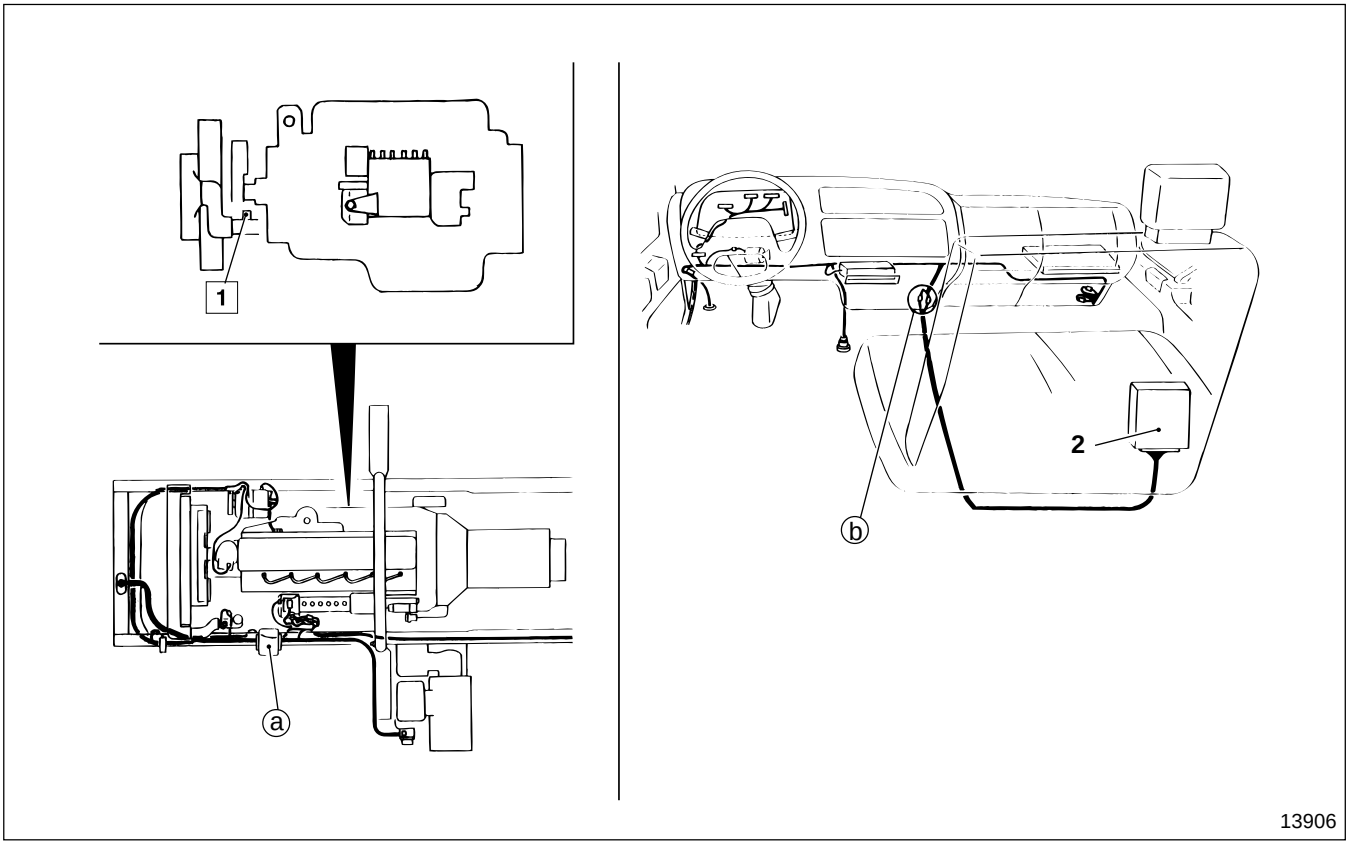

1 Boost air temperature sensor
2 Pre-stroke control unit

Service standards

Location	Maintenance item		Standard value	Limit	Remedy
1	Resistance value of boost air temperature sensor	0˚C {32˚F}	5880±588 Ω	—	Replace
		20˚C {68˚F}	2455±245 Ω	—	Replace
		80˚C {176˚F}	322±32 Ω	—	Replace

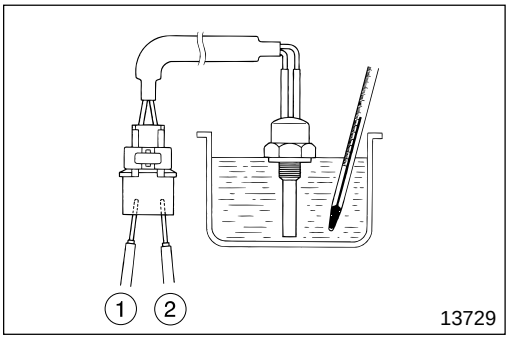

◆ Service procedure

1 **Inspection of boost air temperature sensor**

- Place boost air temperature sensor **1** in rape seed oil in a container.
- Raise the oil temperature to the specified values and stir the oil.
- Measure the resistance between terminals ① and ②.
- If the measured value deviates from the standard value, replace boost air temperature sensor **1**. Gr 15

Inspection of Temporary Faults

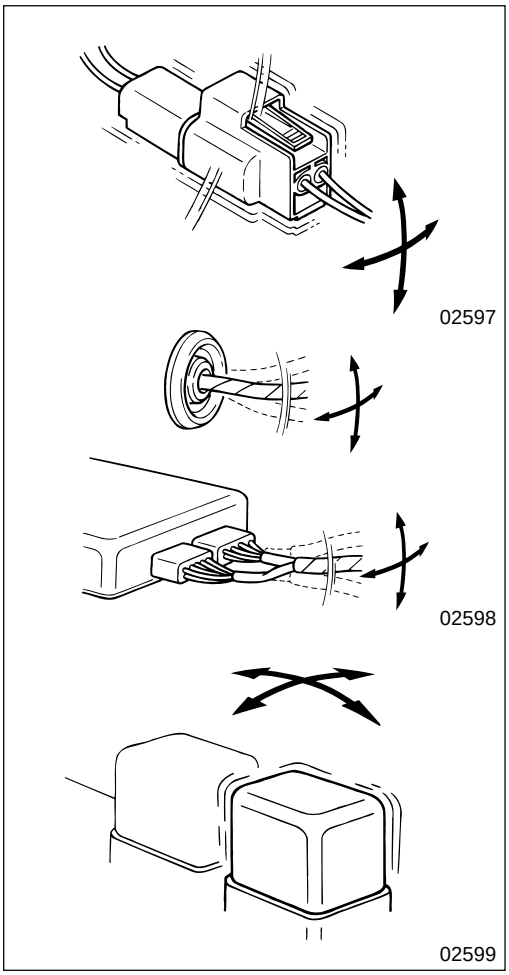

Temporary faults often occur under certain conditions. So identifying those conditions helps to find possible causes. To find the conditions under which temporary faults occurred, you need to reproduce the faults after interviewing customers in detail about actual driving conditions, weather, frequency of occurence and fault phenomena.
Then determine if the faults were caused by vibration, temperature or other possible elements depending on the actual conditions identified.
If vibration is suspected as a possible cause, inspect individual connectors as follows to check if the fault will occur:

- Shake the connector gently in all four directions of the arrows as illustrated.
- Shake the wiring harness gently in all four directions of the arrows as illustrated.
- Wiggle each sensor or piece of equipment by hand.
- Gently shake the wiring harnesses near movable parts such as suspensions.

The inspection subjects include possible causes related to the diagnosis code outputs and faults, as well as the connectors and other parts in the inspection procedure.

M E M O

ENGINE CONTROL

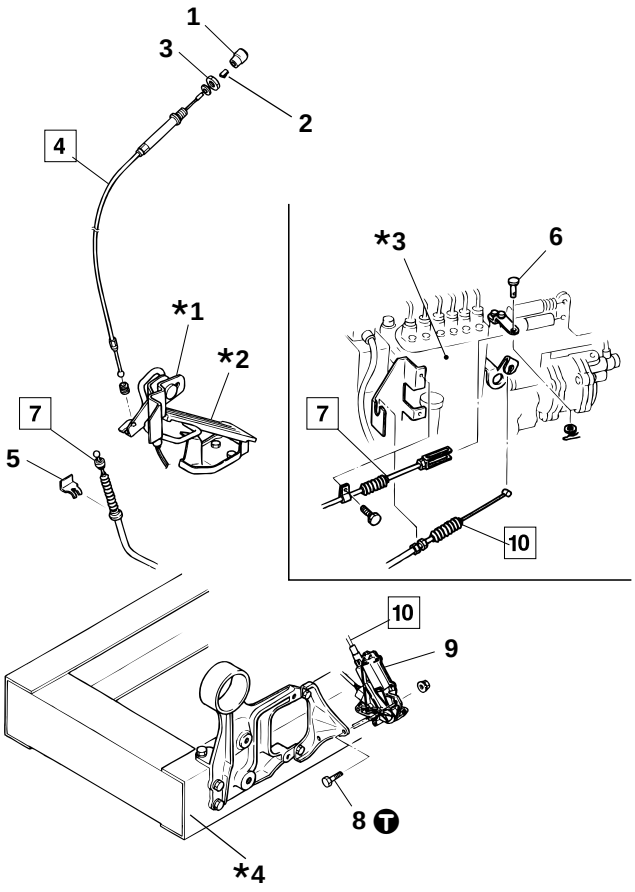

13818

● **Disassembly sequence**

1 Idling control knob
2 Clip
3 Nut
4 Idling control cable
5 Cable clip
6 Clevis pin
7 Accelerator control cable
8 Bolt
9 Fuel-cut motor Gr 54
10 Engine stop cable

***1** : Accelerator arm assembly P13-62
***2** : Accelerator pedal assembly P13-61
***3** : Injection pump assembly P13-68
***4** : Frame Gr 41

● **Assembly sequence**

Follow the disassembly sequence in reverse.

CAUTION⚠

Be sure when laying and routing cables, not to let them contact metal edges.

Tightening torque

Unit : N·m {lbf.ft, kgf·m}

Location	Parts to be tightened	Tightening torque	Remarks
8	Bolt (Fuel-cut motor mounting)	4.9 to 5.9 {3.6 to 4.3, 0.5 to 0.6}	—

◆ Service procedure

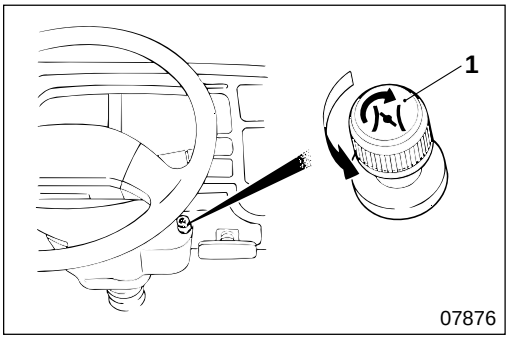

4 Installation of idling control cable

- Rotate idling control knob **1** counterclockwise until the inner cable protrudes at its maximum.

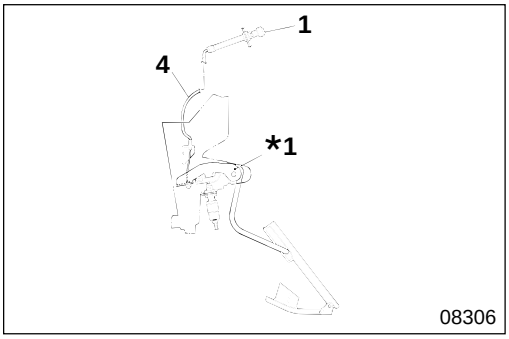

- While maintaining this state, install accelerator arm assembly ***1**.

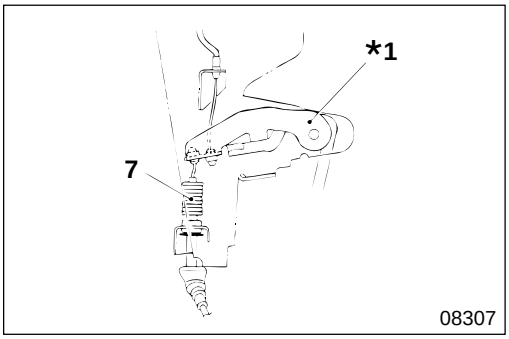

7 Accelerator control cable

[Installation]

- Mount accelerator control cable **7** to accelerator arm assembly ***1**.

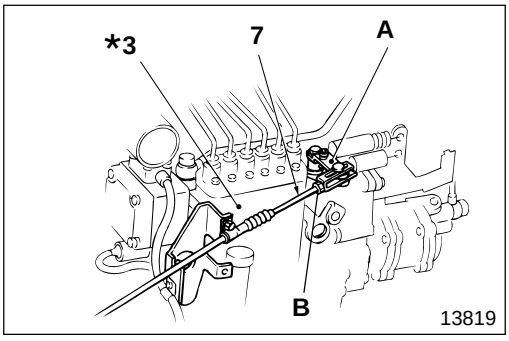

- Make sure that the accelerator pedal does not move by turning idling control knob **1** clockwise as far as it will go.
- Mount the engine end of accelerator control cable **7** to control lever **A** of injection pump assembly ***3**.
- Tighten the accelerator control cable **7** using adjustor nut **B** so that the accelerator pedal does not move.

NOTE

When mounting accelerator control cable 7, do not move control lever A.

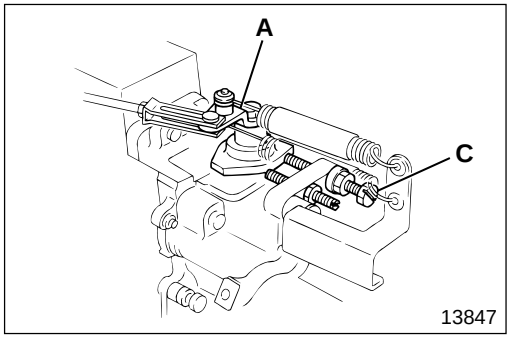

[Adjustment]

- Turn the starter switch ON, and press down on the accelerator pedal until control lever **A** hits stopper bolt **C**.

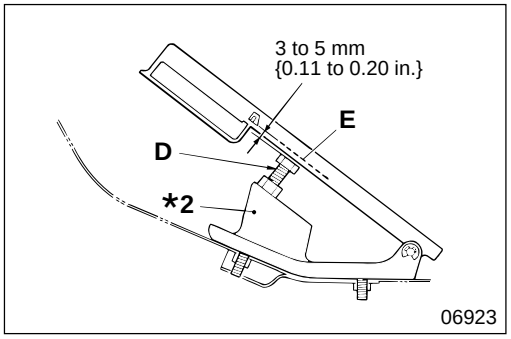

- Adjust the height of stopper bolt **D** of accelerator pedal assembly ***2** in such a manner that the clearance between stopper bolt contact surface **E** and the stopper bolt conforms to the specified value.

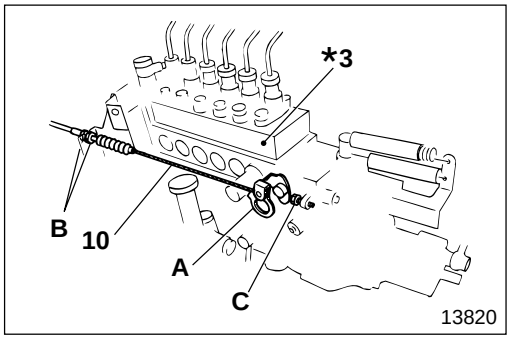

10 **Installation of engine stop cable**

- Mount engine stop cable **10** to stop lever **A** of injection pump assembly ***3**.
- Turn the starter switch to ACC or LOCK. Fasten using mounting nut **B** while keeping stop lever **A** pressed against stopper bolt **C**.
- After installation, start the engine using the starter switch, and make sure that the engine stops when the switch is turned to ACC.

Accelerator Pedal Assembly

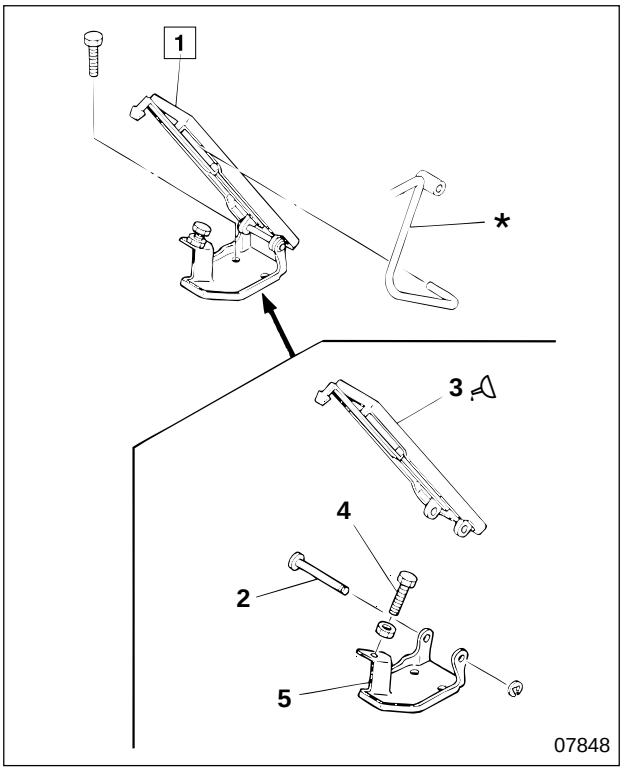

● **Disassembly sequence**

1 Accelerator pedal assembly
2 Clevis pin
3 Accelerator pedal
4 Stopper bolt
5 Accelerator pedal bracket

* : Accelerator arm assembly P13-62

● **Assembly sequence**

Follow the disassembly sequence in reverse.

Lubricant

Location	Points of application	Kinds	Quantity
3	Slide-contacting surfaces of accelerator pedal and bracket	Chassis grease [NLGI No.1 (Ca soap)]	As required

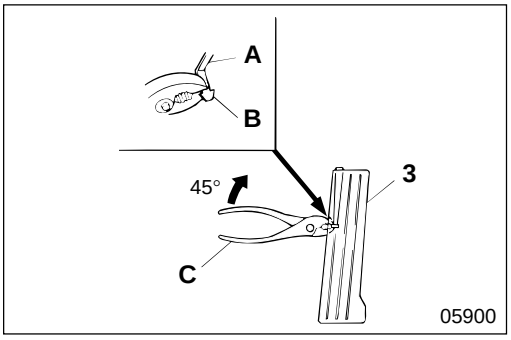

◆ Service procedure

1 **Removal of accelerator pedal assembly**

Pinch hook **B** of stopper **A** of accelerator pedal **3** using pliers **C** and rotating approximately 45° pull out the stopper towards the front of the vehicle.

CAUTION

Take care not to damage stopper A itself during removal, do not pull it out too forcibly.

Accelerator Arm Assembly

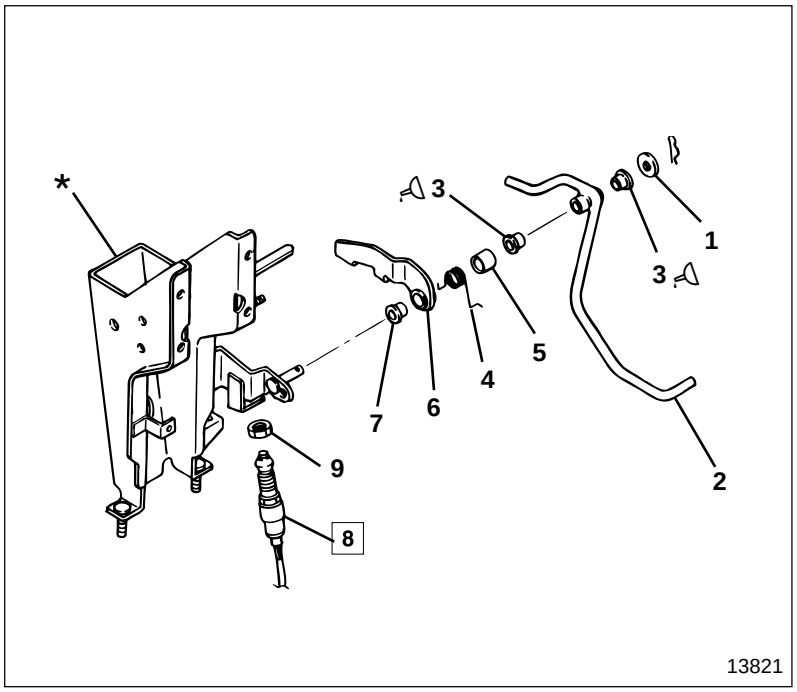

● **Disassembly sequence**

1 Washer
2 Accelerator arm
3 Bushing
4 Spring
5 Collar
6 Accelerator lever
7 Bushing
8 Accelerator switch Gr 35, 54
9 Nut

***** : Support assembly Gr 35

● **Assembly sequence**

Follow the disassembly sequence in reverse.

Lubricant

Location	Points of application	Kinds	Quantity
3	Slide-contacting surfaces of bushing and support assembly	Chassis grease [NLGI No.1 (Ca soap)]	As required

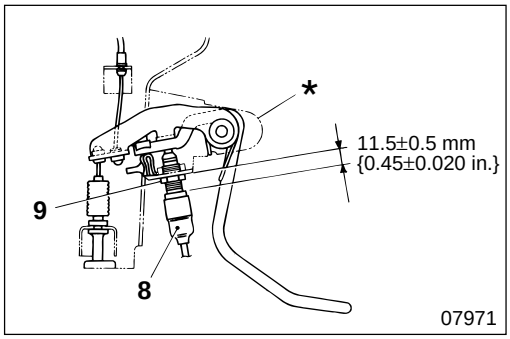

◆ Service procedure

8 **Installation of accelerator switch**

- Screw in accelerator switch **8** and fasten with nut **9** in such a way that the clearance between the accelerator switch and support assembly ***** is set to the standard value.
- Inspect and adjust the exhaust brake system. Gr 35

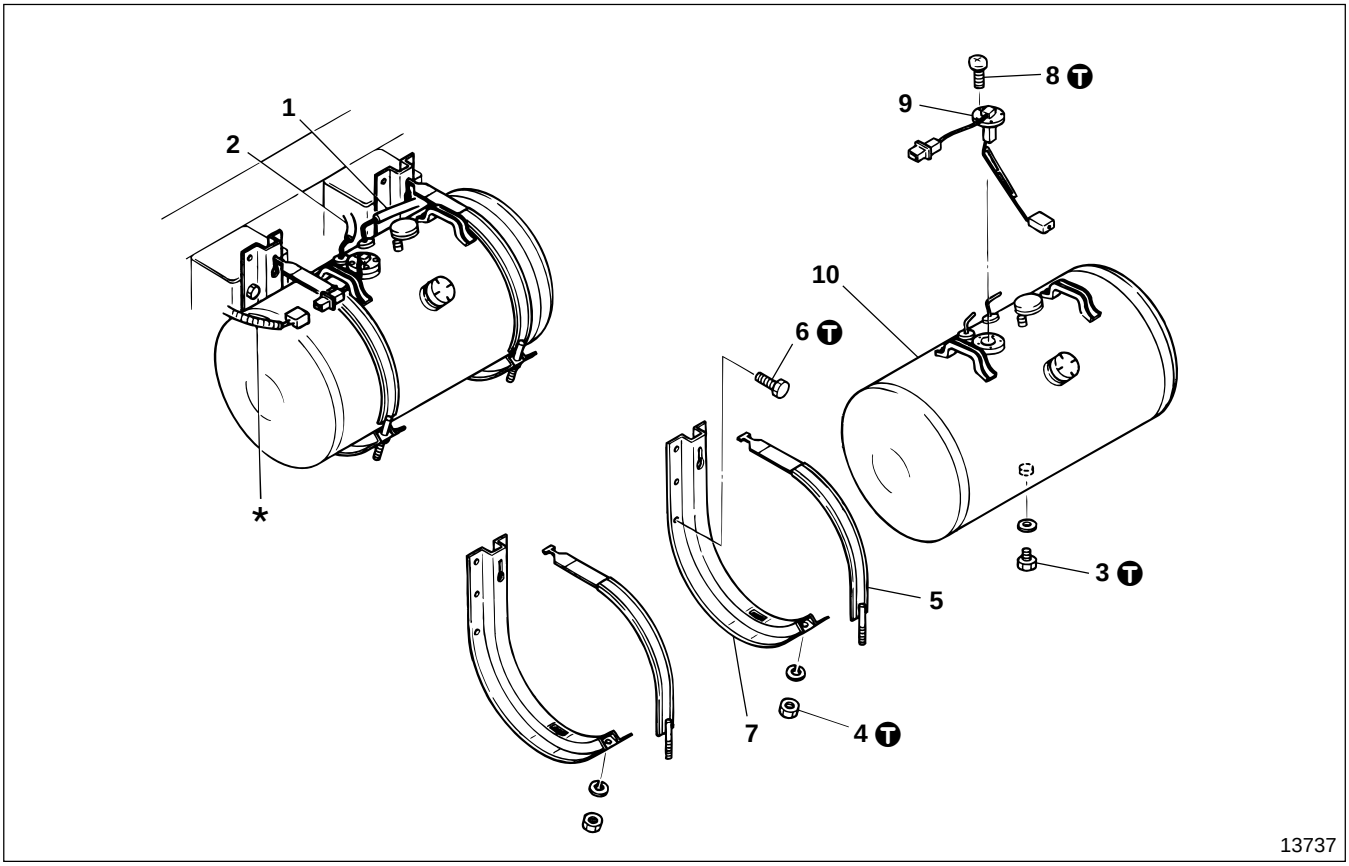

● **Work before removal**

WARNING⚠

- **Keep naked lights away because of the risk of explosion.**
- **Wipe up any spilled fuel because it can cause a fire.**

NOTE

Drain fuel before working on the job.

● **Removal sequence**

1 Suction hose
2 Return hose
3 Drain plug
4 Nut
5 Fuel tank band
6 Bolt
7 Fuel tank bracket
8 Screw
9 Fuel gauge unit Gr 54
10 Fuel tank

***** : Chassis harness Gr 54

● **Installation sequence**

Follow the removal sequence in reverse.

T Tightening torque

Unit : N·m {lbf.ft, kgf·m}

Location	Parts to be tightened	Tightening torque	Remarks
3	Drain plug	59 to 98 {43 to 72, 6 to 10}	—
4	Nut (Fuel tank band mounting)	5.9 to 9.8 {4.3 to 7.2, 0.6 to 1.0}	—
6	Bolt (Fuel tank bracket mounting)	34 to 54 {25 to 40, 3.5 to 5.5}	—
8	Screw (Fuel gauge unit mounting)	1.0 to 1.5 {0.7 to 1.1, 0.1 to 0.15}	—

WATER SEPARATOR

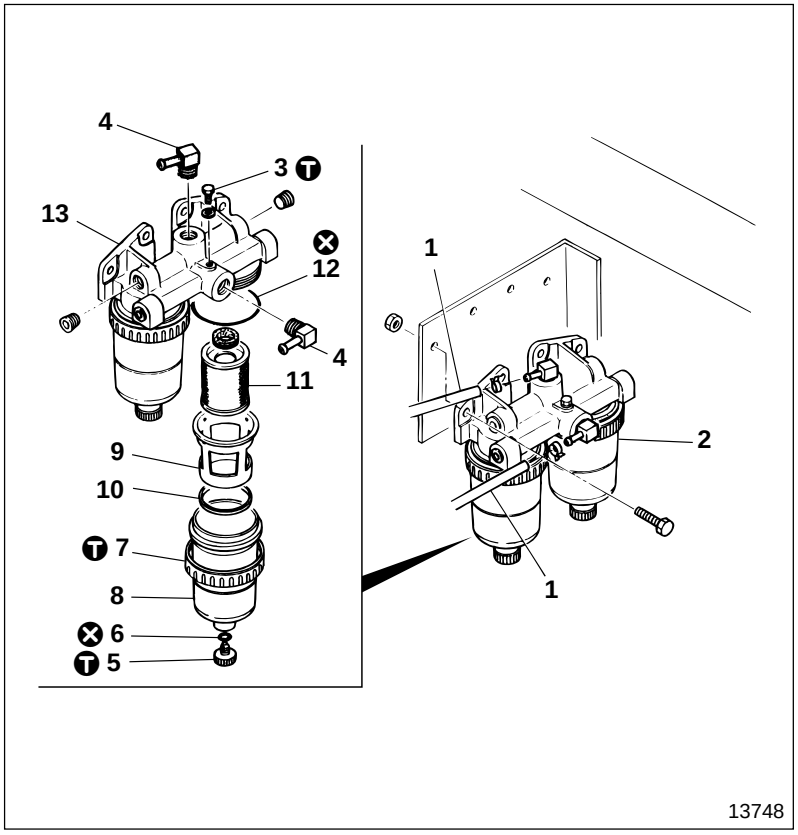

● **Disassembly sequence**

1 Fuel feed hose
2 Water separator assembly
3 Air vent plug
4 Connector
5 Drain plug
6 O-ring
7 Ring nut
8 Case
9 Baffle plate and screen assembly
10 Water level ring
11 Clean screen
12 O-ring
13 Head

⊗ : Non-reusable parts

WARNING

- **Fuel ignites easily. Do not get it near flame or heat.**
- **Wipe up any spilled gas oil because it can cause a fire.**

● **Assembly sequence**

Follow the disassembly sequence in reverse.

Ⓣ Tightening torque

Unit : N·m {lbf.ft, kgf·m}

Location	Parts to be tightened	Tightening torque	Remarks
3	Air vent plug	7.8 to 12 {5.8 to 8.7, 0.8 to 1.2}	—
5	Drain plug	2.9 to 3.9 {2.2 to 3.9, 0.3 to 0.4}	—
7	Ring nut	5.9 to 7.8 {4.3 to 5.8, 0.6 to 0.8}	—

M E M O

FUEL FILTER

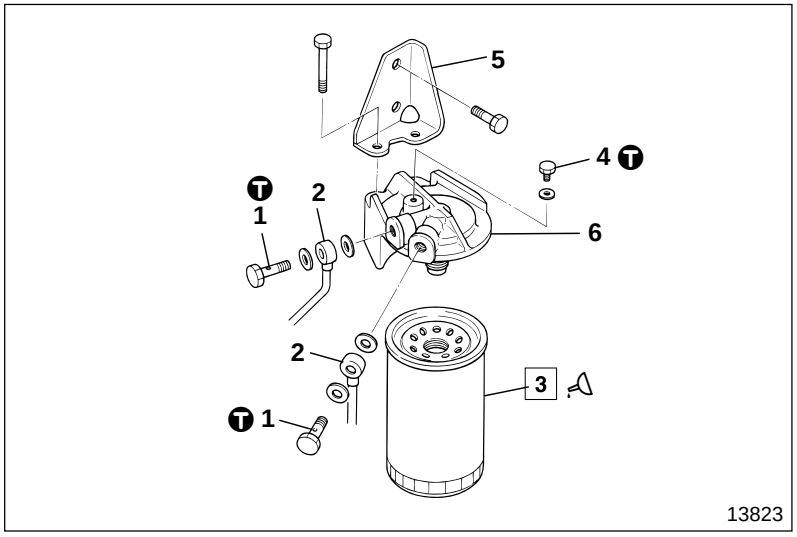

● **Disassembly sequence**

1 Eye bolt
2 Fuel feed pipe
3 Fuel filter
4 Air vent plug
5 Bracket
6 Fuel filter head

● **Assembly sequence**

Follow the disassembly sequence in reverse.

T Tightening torque

Unit : N·m {lbf.ft, kgf·m}

Location	Parts to be tightened	Tightening torque	Remarks
1	Eye bolt	25 to 34 {18 to 25, 2.5 to 3.5}	—
4	Air vent plug	7.8 to 12 {5.8 to 8.7, 0.8 to 1.2}	—

Lubricant

Location	Points of application	Kinds	Quantity
3	Gasket contact surfaces of fuel filter and fuel filter head	Engine oil	As required

Special tools

Unit : mm {in.}

Location	Tool name and shape	Part No.	Application
3	Filter wrench 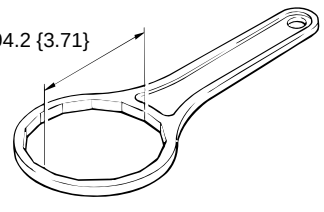 01882	MH061572	Removal of fuel filter

◆ Service procedure

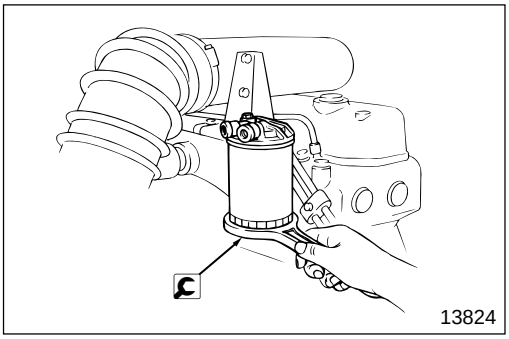

3 **Fuel filter**

WARNING⚠

- **Fuel ignites easily. Do not get it near flame or heat.**
- **Wipe up any spilled gas oil because it can cause a fire.**

[Removal]

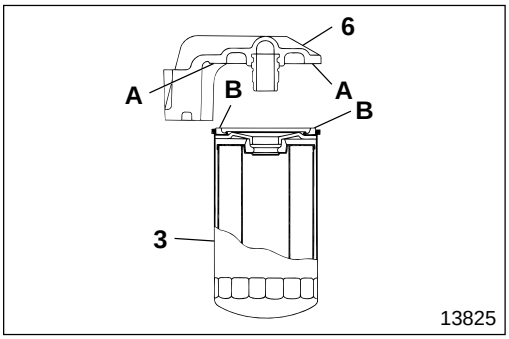

[Installation]

WARNING⚠

You must use a genuine replacement part filter because using unsuitable fuel filter 3 can cause fuel leakage and a fire.

- Install by tightening by three-quarters to one full turn after contact surface **A** of fuel filter head **6** contacts gasket **B** of fuel filter **3**. Be sure to tighten by hand.
- After installation, run the engine to check for fuel leakage.

INJECTION PUMP

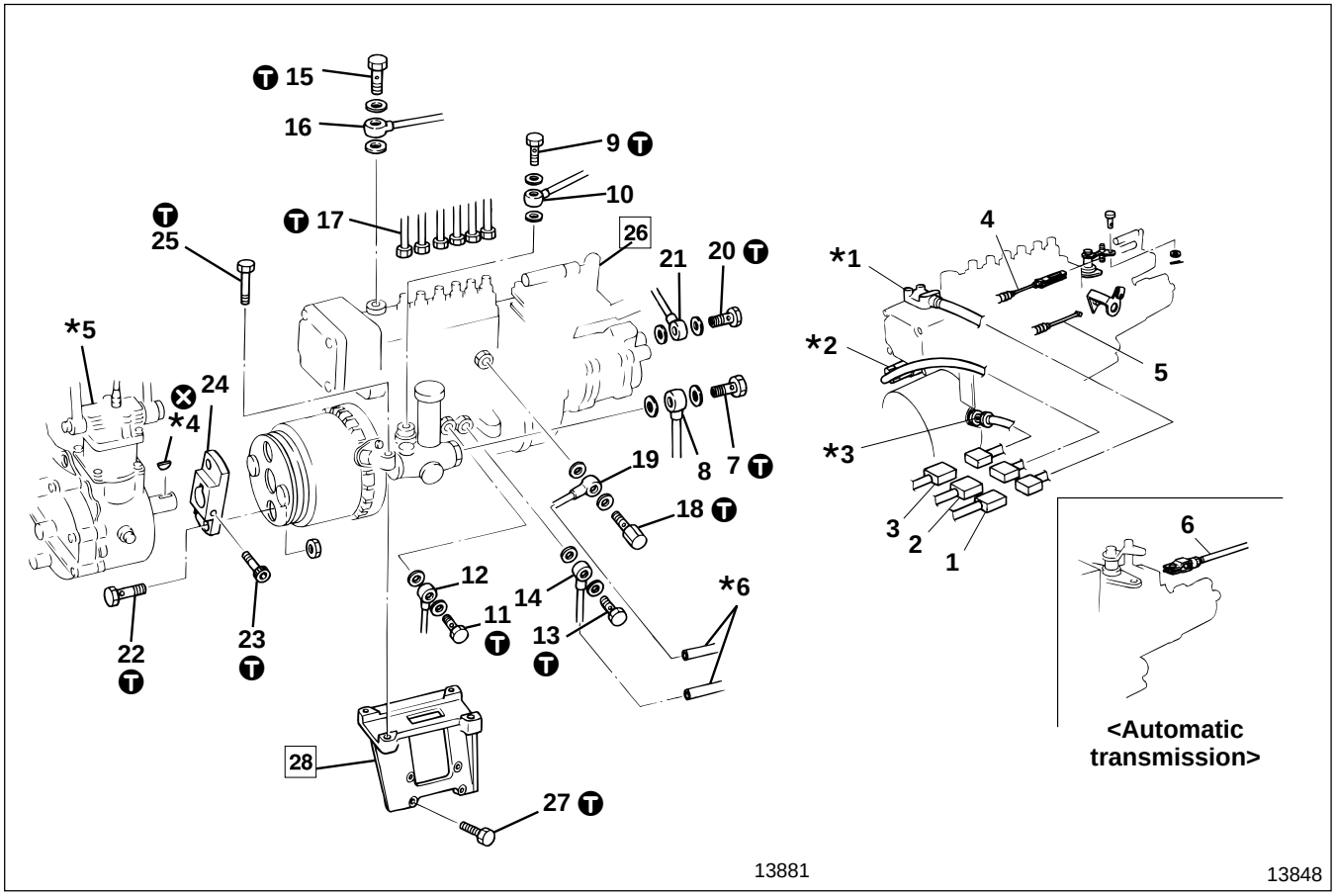

● **Removal sequence**

1 Harness (Pre-stroke actuator)
2 Harness (Control rod position sensor)
3 Harness (Engine revolution sensor)
4 Accelerator control cable P13-58
5 Engine stop cable P13-58
6 Modulator control rod < Automatic transmission > Gr 23
7 Eye bolt
8 Fuel suction pipe
9 Eye bolt
10 Fuel feed pipe
11 Eye bolt
12 Oil feed pipe
13 Eye bolt
14 Oil return pipe
15 Eye bolt
16 Fuel feed pipe
17 Injection pipe
18 Overflow valve
19 Fuel return pipe
20 Eye bolt
21 Boost hose
22 Bolt
23 Cotter bolt
24 Driving coupling
25 Bolt
26 Injection pump assembly
27 Bolt
28 Injection pump bracket

***1** : Pre-stroke actuator P13-10, 12
***2** : Control rod position sensor P13-16
***3** : Engine revolution sensor P13-16
***4** : Key Gr 35A, B
***5** : Air compressor Gr 35A, B
***6** : Fuel hose

⊗ : Non-reusable parts

WARNING⚠

- **Fuel ignites easily. Do not get it near flame or heat.**
- **Wipe up any spilled fuel because it can cause a fire.**

CAUTION⚠

- **Be sure to protect all openings by covering them after removal of hoses and pipes because the engine performance is adversely affected if dirt and foreign particles enter injection pump assembly 26.**
- **Do not hold the control lever when lifting injection pump assembly 26. Also, do not remove the control lever because removal of the lever might cause poor performance of the pump.**
- **Do not remove injection pump bracket 28 unless it is faulty.**
- **Make sure you connect fuel hose *6 at a high position because fuel in the fuel tank would leak out if the end of the fuel hose were at a position lower than the tank.**

● **Installation sequence**

Follow the removal sequence in reverse.

Service standards

Unit : mm {in.}

Location	Maintenance item	Standard value	Limit	Remedy
28	Injection pump bracket (eccentricity of injection pump centering tool to air compressor crankshaft)	0.2 {0.0079} or less	—	Adjust

Tightening torque

Unit : N·m {lbf.ft, kgf·m}

Location	Parts to be tightened		Tightening torque	Remarks
7, 9, 15	Eye bolt (Fuel suction pipe and fuel feed pipe mounting)		25 to 29 {18 to 22, 2.5 to 3}	—
11, 20	Eye bolt (Oil feed pipe and boost hose mounting)		12 to 15 {8.7 to 11, 1.2 to 1.5}	—
13	Eye bolt (Oil return pipe mounting)		20 to 29 {14 to 22, 2 to 3}	—
17	Injection pipe mounting		29 to 49 {22 to 36, 3 to 5}	—
18	Overflow valve mounting		20 to 29 {14 to 22, 2 to 3}	—
22	Bolt (Driving coupling mounting)		59 to 64 {43 to 47, 6 to 6.5}	—
23	Cotter bolt		83 to 93 {61 to 69, 8.5 to 9.5}	—
25	Bolt (Injection pump assembly mounting)	Primary tightening	4.9 {3.6, 0.5}	—
		Secondary tightening	25 {18, 25}	—
27	Bolt (Injection pump bracket mounting)		33 to 55 {25 to 41, 3.4 to 5.6}	—

Special tools

Unit : mm {in.}

Location	Tool name and shape	Part No.	Application
28	Injection pump centering tool 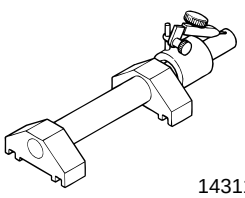 14311	MH063336	Positioning of injection pump bracket

◆ Service procedure

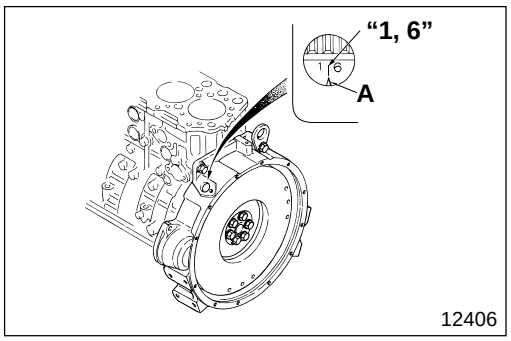

26 **Installation of injection pump assembly**

- Crank the engine to bring No. 1 cylinder piston to top dead center in the compression cycle, and align mark "**1**, **6**" of the flywheel with pointer **A** on the flywheel housing.

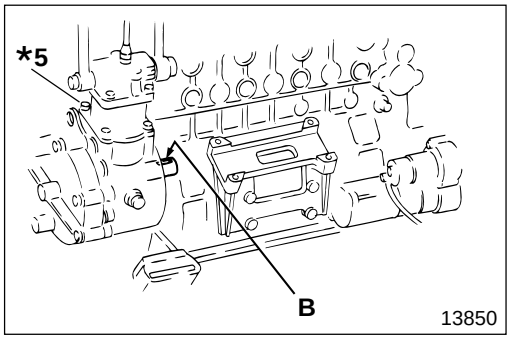

- In this state, make sure that keyway **B** in the crankshaft of air compressor ***5** faces upward.
- If keyway **B** is not facing upward, turn the engine crankshaft by one turn.

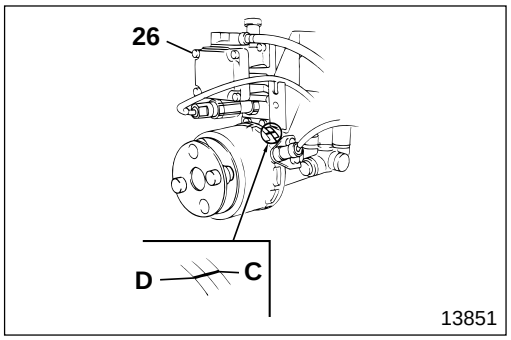

- Align pointer **C** on injection pump assembly **26** with notch **D** on the automatic timer.

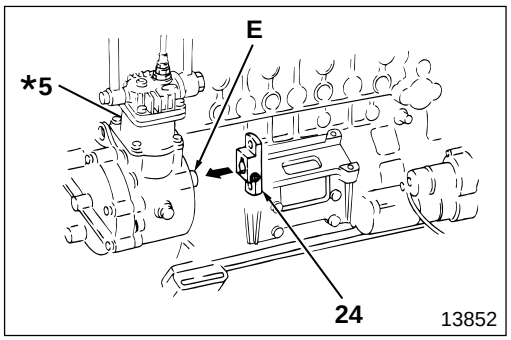

- Install driving coupling **24** to crankshaft **E** of air compressor ***5** and place the driving coupling on the air compressor side.
- Install injection pump assembly **26** on the injection pump bracket.

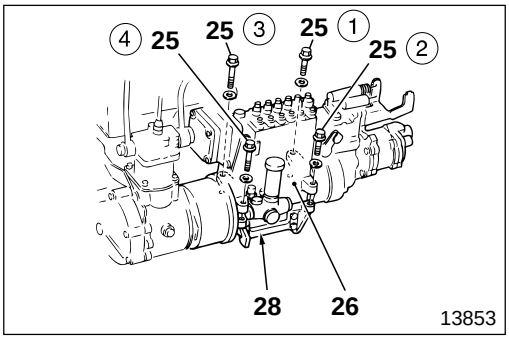

- Install injection pump assembly **26** on injection pump bracket **28**.
- Tighten bolts **25** in the order as illustrated at specified torque for primary tightening.
- Retighten bolts **25** in the order as illustrated at specified torque for secondary tightening.

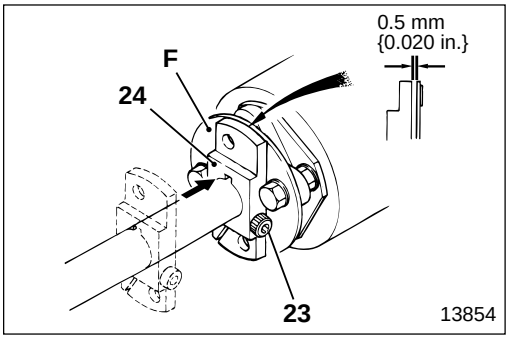

- Move driving coupling **24** to adjust the clearance between the driving coupling and coupling plate **F** as illustrated, then tighten cotter bolt **23** at specified torque.

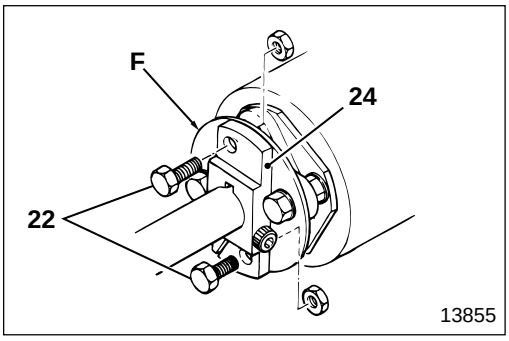

- Attach driving coupling **24** and coupling plate **F** using bolts **22** and tighten the bolts temporarily.

- In this state, adjust the fuel injection timing.
  Adjustment of fuel injection timing : P13-28
  After adjusting the fuel injection timing, tighten bolts **22** at specified torque.

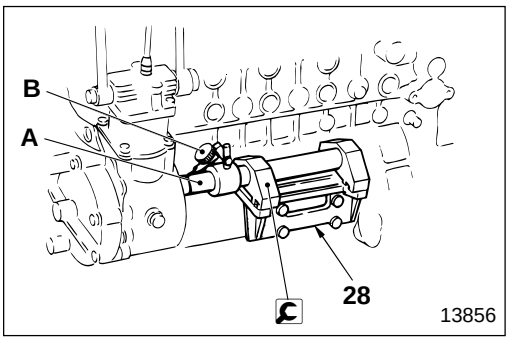

28 **Injection pump bracket**

[Inspection]

- Attach dial gauge **B** to arbor **A** of injection pump centering tool and adjust to carry out zero point adjustment.

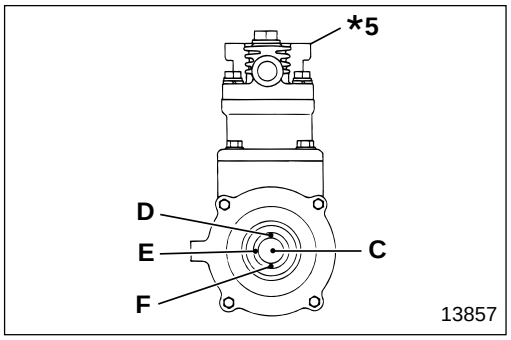

- Slide dial gauge **B** toward air compressor ***5** and measure the eccentricity of crankshaft **C** against arbor **A** at points **D**, **E** and **F**.
- If the measured value is higher than the standard value, adjust as follows.

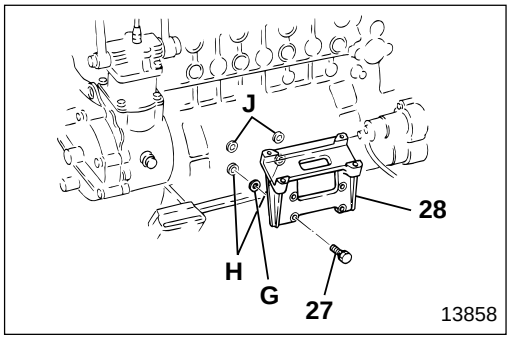

[Adjustment]

- When the measured value at point **E** is higher than the standard value:
  Insert shims **G** into four points equally.
- When the measured value at point **D** is higher than the standard value:
  Insert shims **G** into lower side **H**.
- When the measured value at point **F** is higher than the standard value:
  Insert shims **G** into upper side **J**.

CAUTION⚠

Insert shims G observing the following conditions:

- **Number of shims per point is three or less.**
- **The same number of shims should be used for the front and the rear.**
- **The difference in number of shims used for bottom and top is none or one.**

- Tighten bolt **27** at specified torque, then reinspect.

M E M O

INJECTION NOZZLE

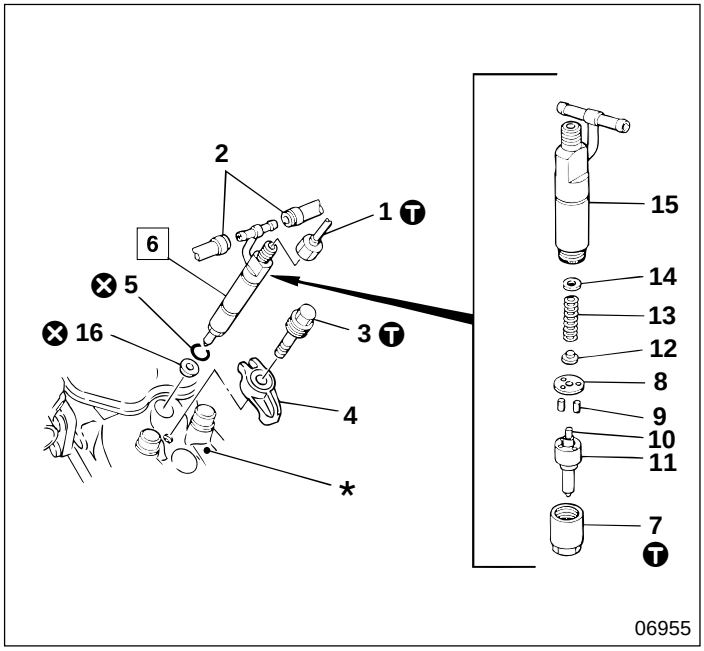

● **Inspection before disassembly**

P13-75

● **Disassembly sequence**

1 Injection pipe
2 Leak-off pipe
3 Bolt
4 Bridge
5 O-ring
6 Injection nozzle assembly
7 Retaining nut
8 Tip packing
9 Straight pin
10 Needle valve
11 Nozzle
12 Pressure pin
13 Spring
14 Adjusting shim
15 Nozzle holder
16 Nozzle gasket

* : Cylinder head Gr 11
⊗ : Non-reusable parts

● **Assembly sequence**

Follow the disassembly sequence in reverse.

WARNING

Wipe up any spilled fuel because it can cause a fire.

CAUTION

- **Be sure not to touch the slide-contact area of needle valve 10 because any scratches or corrosion might spoil the airtightness of nozzle 11. It must be handled with utmost care.**
- **Never change the combination of needle valve 10 and nozzle 11 for each cylinder.**
- **Be sure to protect all openings by covering them after removal of hoses and pipes because the engine performance is adversely affected if dirt and foreign particles enter injection nozzle assembly 6.**

NOTE

Remove carbon deposits and clean injection nozzle assembly 6 before working on it, then test the injection pressure and jet spray condition, and check for fuel leakage before disassembly. If no fault is found, do not disassemble.

Service standards

Location	Maintenance item	Standard value	Limit	Remedy
6	Valve opening pressure	21.6 MPa {3130 lbf/in^2, 220 kgf/cm^2}	—	Adjust

T Tightening torque

Unit : N·m {lbf.ft, kgf·m}

Location	Parts to be tightened	Tightening torque	Remarks
1	Union nut (Injection pipe mounting)	25 {18, 2.5}	—
3	Bolt (Bridge mounting)	25 {18, 2.5}	—
7	Retaining nut	34 to 44 {25 to 33, 3.4 to 4.5}	—

Special tools

Location	Tool name and shape	Part No.	Application
—	Nozzle cleaning tool	★105789-0010	Cleaning of injection nozzle assembly

★ ZEXEL code number

◆ Service procedure

● Inspection before disassembly

Attach injection nozzle assembly **6** to nozzle tester **A**, and conduct the following inspection.

WARNING

Never touch the spray from nozzle 11 or let your hands get too close to the spray point during the test.

NOTE

Before inspection, bleed the air out in a couple of bursts by pressing nozzle tester A lever.

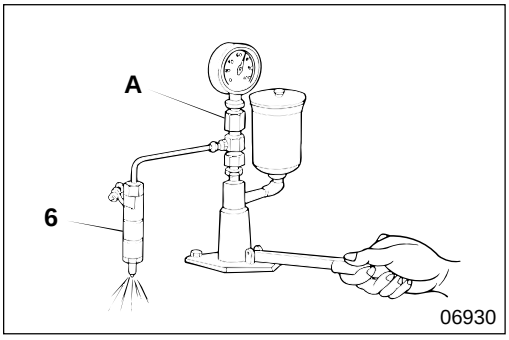

(1) Valve opening pressure

- Raise the pressure of nozzle tester **A** by operating the lever, and measure the pressure that the gauge registers when the pressure is released which will be observed by the sudden movement of the gauge indicator.
- If the measured value deviates from the standard value, disassemble the nozzle and clean, and adjust it using adjusting shims **14**.
- Variation of 0.05 mm {0.0020 in.} thickness in adjusting shims **14** causes a difference of 735 kPa {105 lbf/in^2, 7.5 kgf/cm^2} of pressure, for example, to alter the pressure for 98 kPa {14 lbf/in^2, 1 kgf/cm^2}, a thickness of 0.0067 mm {0.00026 in.} is required.
- If the performance cannot reach the standard value even after adjustment, replace injection nozzle assembly **6**.

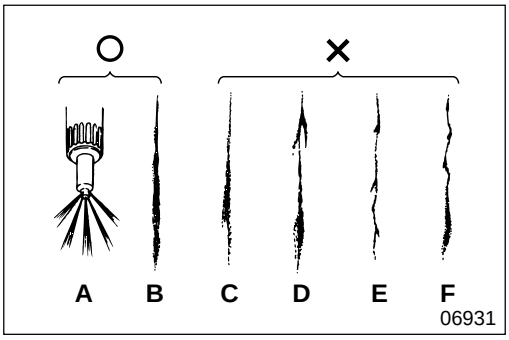

(2) Spray condition

- Test injection spray condition by quick lever actions of nozzle tester **A**, 4 to 6 actions per second.
  - **A** : Even spray from all five orifices (Good)
  - **B** : Even and symmetrical spray (Good)
  - **C** : Asymmetrical spray (Faulty)
  - **D** : Spray direction deviates from the nozzle axis line (Faulty)
  - **E** : Thin and insufficient spray (Faulty)
  - **F** : Irregular spray (Faulty)
- If faulty spray cannot be corrected, disassemble injection nozzle assembly **6** and clean every part and repeat the test.
  If faulty spray still occurs after repeating test, replace the injection nozzle assembly.
- Make sure that there is no post-spray dripping after injection.

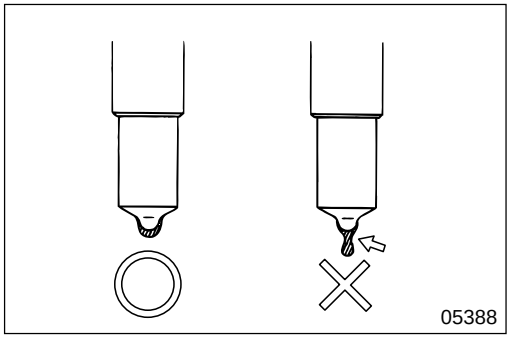

(3) Fuel air tightness and leakage at related contact points

- Maintain interior pressure of nozzle at 1960 kPa {285 lbf/in^2, 20 kgf/cm^2} lower than the valve opening pressure, and check and see if any fuel seeps out of the nozzle tip within 10 seconds.
- If any fault is found, disassemble injection nozzle assembly **6** and clean every part and repeat the test. If any fault is still found, replace the injection nozzle assembly.

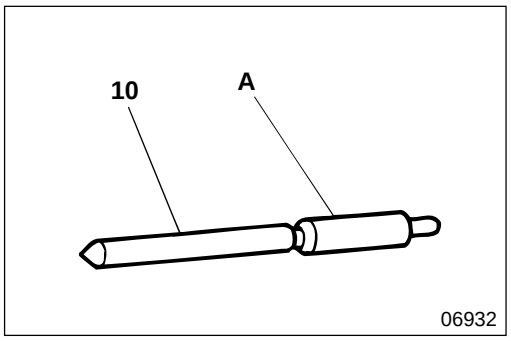

6 Injection nozzle assembly

[Disassembly]

CAUTION

- **Be sure not to touch sliding part A of needle valve 10 with your hands.**
- **Never change the combination of removed needle valve 10 and nozzle 11 for each cylinder.**

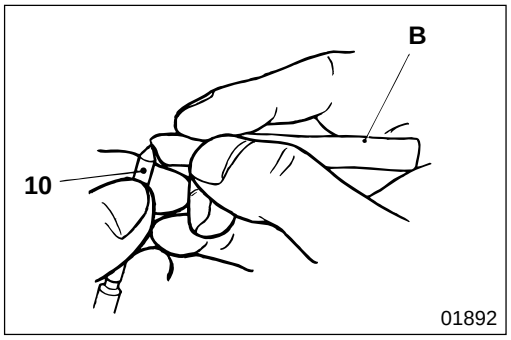

[Cleaning]

Clean needle valve **10** and nozzle **11** with gas oil (cleaning solvent).

Remove carbon deposits with cleaning tool in the following manner:

- Clean needle valve **10** by removing carbon deposits from its tip using cleaning bar **B** of cleaning tool.

CAUTION

Never use a wire brush or hard steel for cleaning.

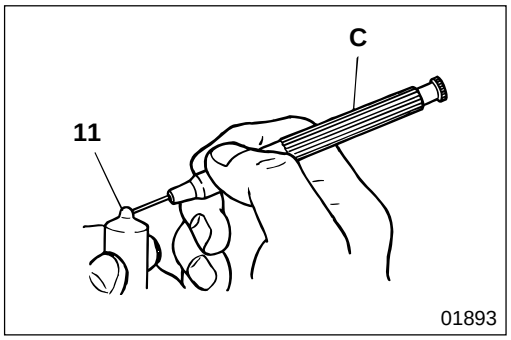

- To clean nozzle **11**, remove carbon deposits from the orifices of the nozzle using needle cleaner **C** of cleaning tool, by inserting it into the orifices and turning it.
  Needle cleaner diameter : ø0.25 mm {0.0098 in.} or less

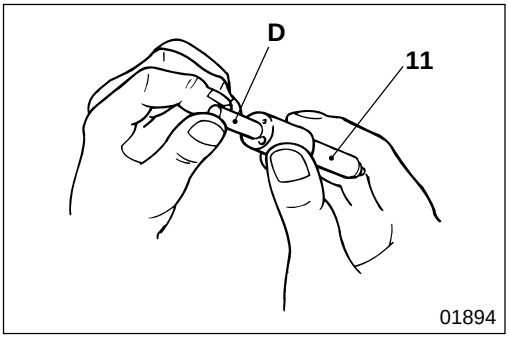

- Clean the seat of nozzle **11** using cleaning needle **D** of cleaning tool.
- Use FUSO carbon remover to remove hard-to-remove, burnt-on carbon deposits.

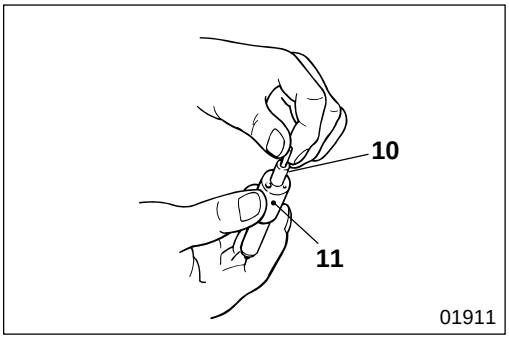

[Inspection]

- Immerse needle valve **10** and nozzle **11** in gas oil (cleaning solvent) and clean them thoroughly.
- Check and see if needle value **10** drops by its own weight into the nozzle from the position where a third of its length is pulled out. (Repeat this several times rotating the needle valve.)
- If needle valve **10** does not drop smoothly, repeat cleaning and repeat the test. If any fault is still found, replace both the needle valve and nozzle **11** together as a set.

MITSUBISHI
FUSO

FH

Service Manual

Group 14
Cooling

Table of Contents

BACK

HOME

MITSUBISHI FUSO TRUCK OF AMERICA, Inc.

Pub No. TWME9502-14

GROUP 14 COOLING

SPECIFICATIONS 2

STRUCTURE AND OPERATION 2

TROUBLESHOOTING 6

INSPECTION AND ADJUSTMENT MOUNTED IN VEHICLE

- Replacing Coolant and Cleaning Cooling System 8
- Air Bleeding of Cooling System 10
- Gas Leakage Test 10

RADIATOR AND FAN SHROUD 12

SURGE TANK 16

COOLING FAN AND V-BELT 18

WATER PUMP 21

THERMOSTAT 22

SPECIFICATIONS/STRUCTURE AND OPERATION

SPECIFICATIONS

Item	Specifications
Kind of cooling system	Forced water circulation system
Water pump type	Belt-driven involute type
Thermostat type	Wax-pellet, bottom bypass type (with jiggling valve)
Automatic cooling fan coupling type	Continuous control type
Radiator type	Tube and corrugated fin type
Coolant capacity L {qts}	21 {22}

STRUCTURE AND OPERATION

Cooling System (Flow of Coolant)

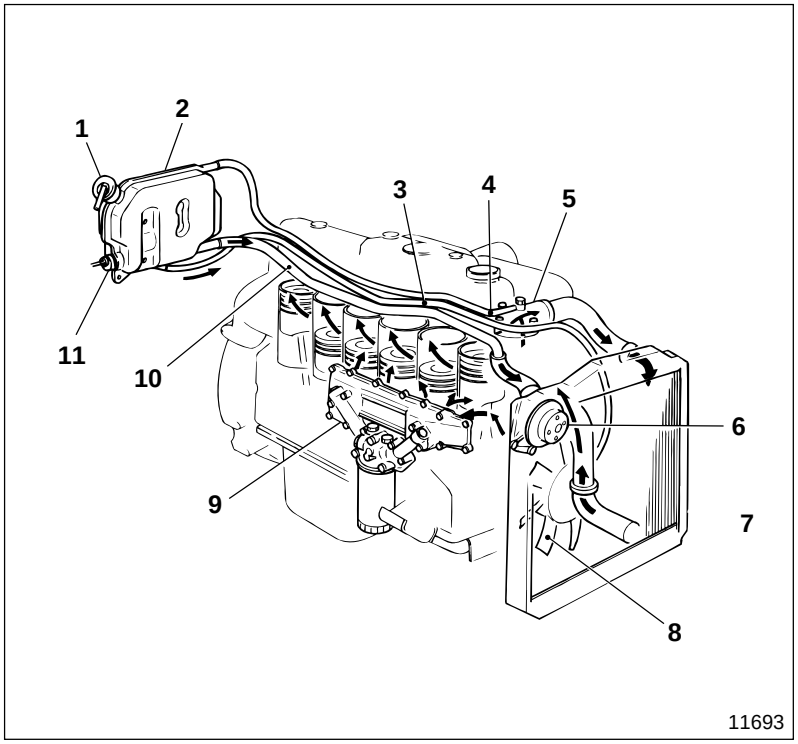

1 Pressure cap
2 Surge tank
3 Suction pipe
4 Air pipe
5 Thermostat
6 Water pump
7 Radiator
8 Cooling fan
9 Oil cooler
10 Water inlet pipe
11 Water level sensor

Surge tank **2** is installed at a higher position than radiator **7** and automatically adds coolant when the coolant level in the radiator drops.

Water Pump

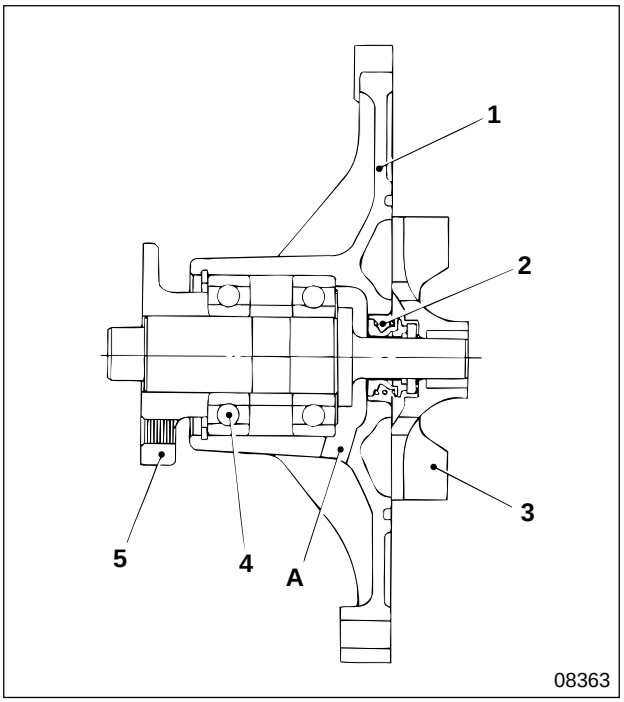

1 Case
2 Unit seal
3 Impeller
4 Ball bearing
5 Flange

A : Drain hole

Thermostat

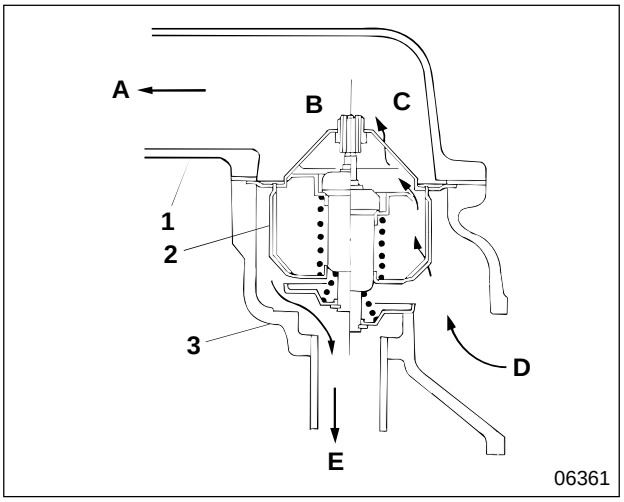

1 Thermostat cover
2 Thermostat
3 Thermostat case

A : To radiator
B : When low coolant temperature
C : When high coolant temperature
D : From cylinder head
E : To water pump

Thermostat **2** is a bottom bypass type that uses wax pellets as its regulating element. As the wax changes its form from solid to liquid according to changes in temperature, the volume of the wax changes. Therefore, the position of the valve, changed by the coolant temperature, regulates the flow of the coolant to the radiator and water pump (bypass side) and controls the coolant temperature.

Cooling System Electric Circuit

● Water temperature gauge circuit

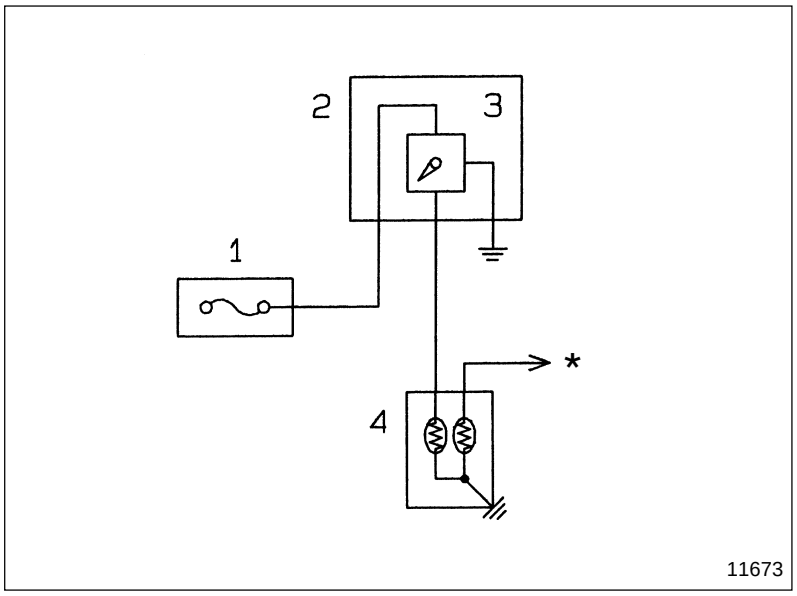

1 Fuse box
2 Meter cluster
3 Water temperature gauge
4 Water temperature sensor

***** : To cold start switch

● Water level sensor and overheating circuit

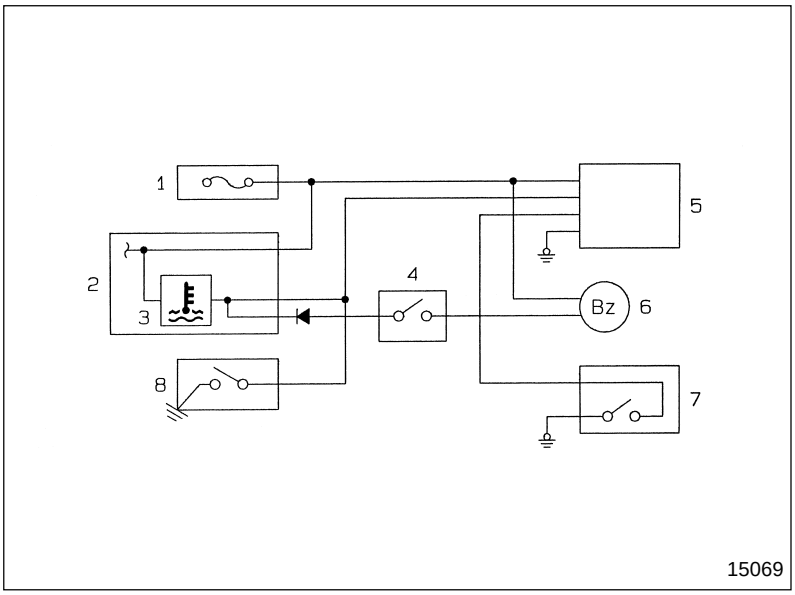

1 Fuse box
2 Meter cluster
3 Water level warning lamp
4 Parking brake switch
5 Water level control unit
6 Buzzer
(Buzzer does not work when the parking brake is engaged.)
7 Water level sensor
8 Overheating switch

When this circuit detects insufficient coolant or extremely high coolant temperature, it lights water level warning lamp **3** and sounds buzzer **6** to warn the driver of the abnormal conditions.

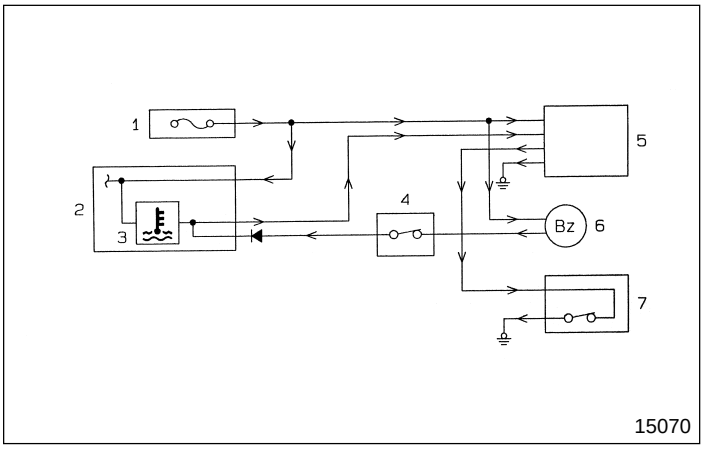

When water level sensor is activated

- 1→5→7→Ground
- Water level control unit **5** detects insufficient coolant.
- 1→3→5→Ground, 1→6→5→Ground
- When the sensor is activated, water level warning lamp **3** lights up and buzzer **6** sounds.

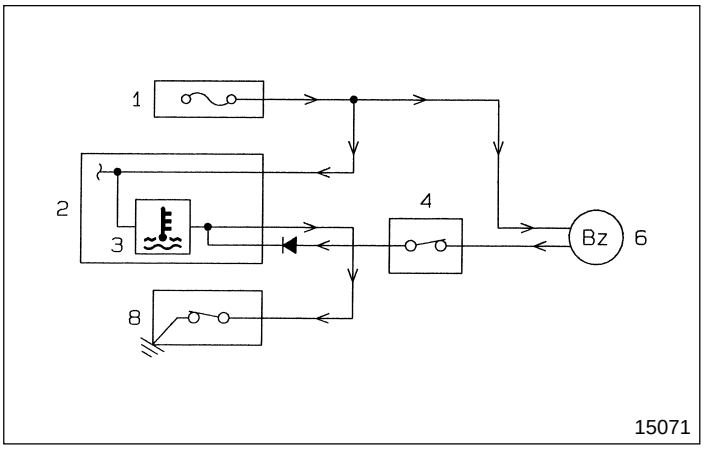

When overheating switch is activated

- 1→3→8→Ground, 1→6→8→Ground
- When the switch is activated, water level warning lamp **3** lights up and buzzer **6** sounds.

TROUBLESHOOTING

Possible causes \ Symptoms		Overheating (Low cooling effect)	Overcooling	Noise occurs	Coolant loss excessive	Remarks
V-belt	Loose or damaged	○		○		
	Tension excessive			○		
	Oily	○				
Water pump	Water pump installation faulty	○		○	○	
	Unit bearing faulty	○		○		
	Impeller faulty	○		○		
	Unit seal faulty	○			○	
	Unit bearing-to-flange and to-impeller fitting loose	○		○		
Thermostat	Case installation faulty	○			○	
	Valve opening temperature too high, valve remains closed	○				
	Valve opening temperature too low, valve remains open		○			
	Gasket faulty	○			○	
	Water level sensor leaking water	○			○	
Radiator	Space between core and fin clogged	○				
	Core cracked or soldered part separated	○			○	
Surge tank	Pressure cap airtightness poor	○				
	Water level sensor leaking water	○			○	
Cooling fan	Fan shroud installation faulty	○		○		
Automatic cooling fan coupling	Bearing faulty	○		○		
	Bimetal damaged	○				
	Bimetal contaminated with foreign particles	○	○			
	Silicon oil leaking	○		○		
Oil cooler	Oil cooler mounted incorrectly	○			○	🕮 Gr 12
	Gasket faulty	○			○	🕮 Gr 12
Cylinder head	Cylinder head mounted incorrectly	○			○	🕮 Gr 11
	Gasket faulty	○			○	🕮 Gr 11
Coolant quantity insufficient		○				
Coolant passage furred and clogged		○				
Water hose installation faulty		○			○	
Exterior temperature extremely cold			○			

M E M O

Replacing Coolant and Cleaning Cooling System

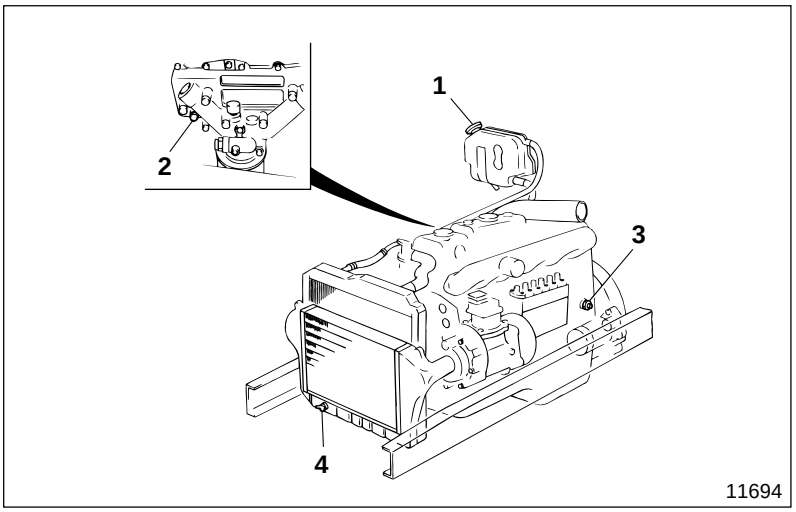

1 Pressure cap
2 Oil cooler drain plug
3 Crankcase drain plug
4 Radiator drain plug

Tightening torque

Unit : N·m {lbf.ft, kgf·m}

Location	Parts to be tightened	Tightening torque	Remarks
2	Oil cooler drain plug	34 to 39 {25 to 29, 3.5 to 4.0}	—
3	Crankcase drain plug	98 {12, 10}	—

Using the radiator for a long period of time without cleaning it will cause overheating because rust and scale deposits will accumulate inside the cooling system. Periodical cleaning is recommended.

● **Draining coolant**

First loosen pressure cap **1,** to lower the pressure in the cooling system, before draining coolant.

WARNING

- **You must make sure that the engine coolant is cold before draining it so as not to scald yourself.**
- **It is dangerous to open pressure cap 1, when the coolant temperature is high, without taking due care because the hot water would spray out. Be sure to cover the pressure cap with a cloth and loosen slowly to bleed the pressure before opening fully.**

● **Cleaning procedure**

- Keep the coolant temperature at approximately 90°C {194°F} so that the thermostat valve remains open and the coolant continues to circulate in the radiator.
- For the sake of convenience you can raise the coolant temperature quickly by covering the front of the radiator with corrugated cardboard or something similar.
- Set the temperature adjusting lever of the heater controller at maximum so that the coolant can circulate freely in the heater piping area.
- In cases where a great amount of rust has accumulated it often happens that as a result of cleaning the radiator starts leaking. Conduct a thorough check for leakage after cleaning.
- Soft water to be used should have the following properties.

CAUTION

Do not use hard water as it causes scale and rust.

Required properties of soft water

Total hardness	300 ppm or less	Total dissolved solids	500 ppm or less
Sulfate SO_4^-	100 ppm or less	pH	6 to 8
Chloride Cl^-	100 ppm or less		

Method of cleaning the cooling system depends on its condition.

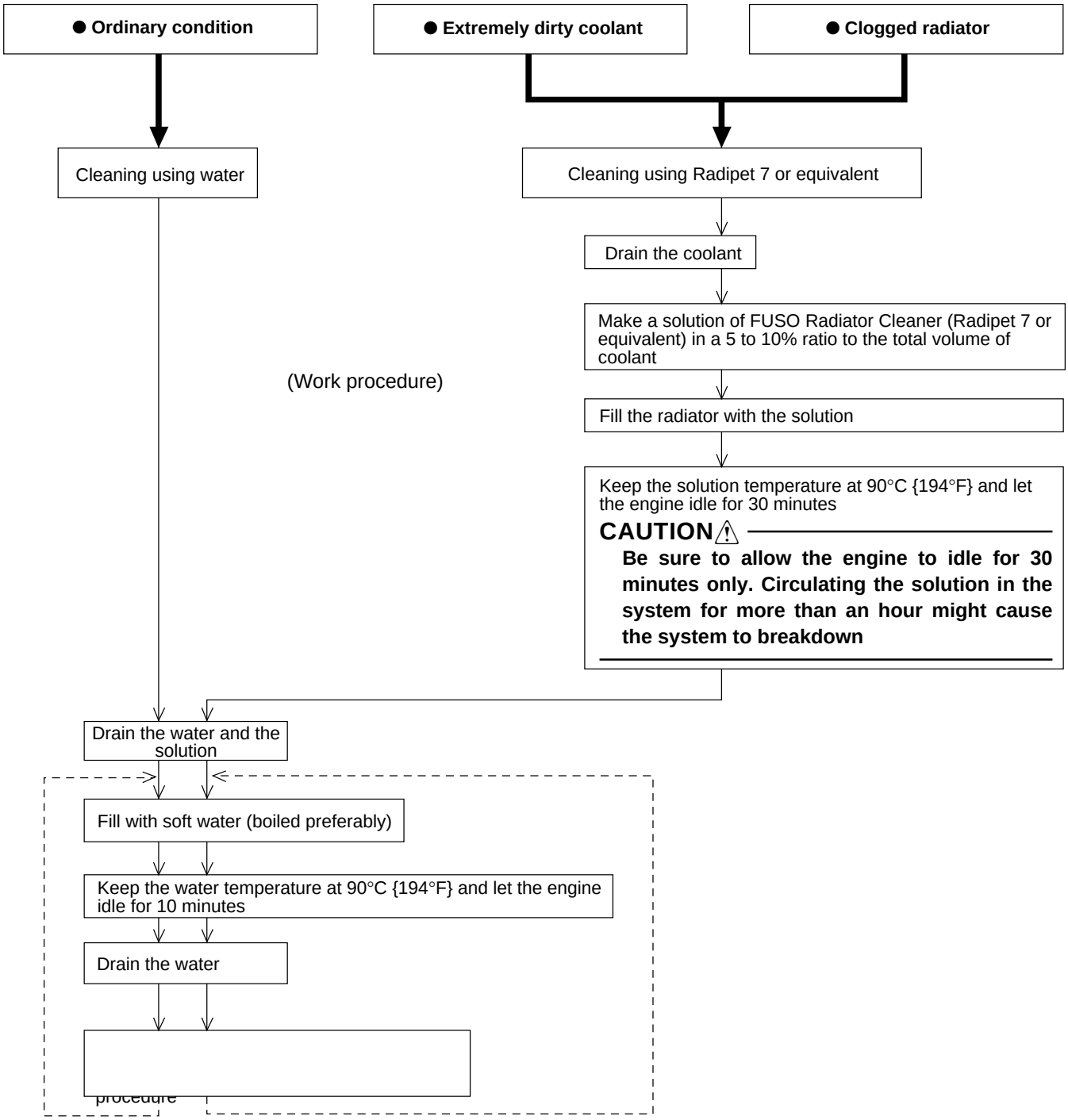

DANGER

If FUSO DIESEL LONG LIFE COOLANT solution gets in your eyes accidentally, you must immediately rinse your eyes with copious amounts of water, and be sure to consult a doctor.

WARNING

FUSO DIESEL LONG LIFE COOLANT is inflammable. Do not put it near naked lights.

NOTE

- **After cleaning with solution, fill with coolant as quickly as possible.**
- **To prevent freezing of the coolant and corrosion of the cooling system, use specified coolant solution of FUSO DIESEL LONG LIFE COOLANT. (See the Owner's Handbook for use of these materials.)**

Air Bleeding of Cooling System

- Remove the pressure cap and keep the coolant temperature at 90°C {194°F} while letting the engine idle and bleed the air out completely. Keep the temperature adjusting lever of the heater controller at maximum so that the coolant can circulate freely in the heater piping area.
- After completing adequate air bleeding of the cooling system, refill coolant sufficiently enough for the surge tank.

Gas Leakage Test

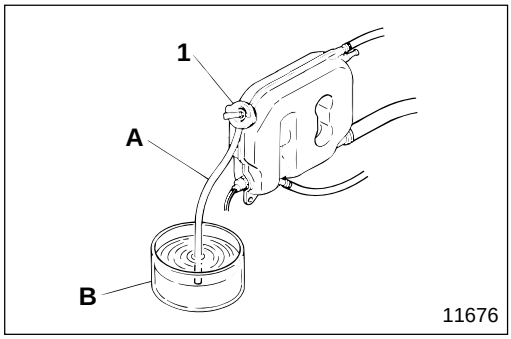

Air or exhaust gas in the coolant increases corrosion and rusting in the system. Therefore, carry out the following test:

- Remove surge tank pressure cap **1** and check if the coolant level comes up to the lip of the tank.
- Put the end of overflow pipe **A** into water tank **B**.

WARNING⚠

Be sure that the coolant temperature is low enough so that hot coolant does not spout out when you loosen pressure cap 1.

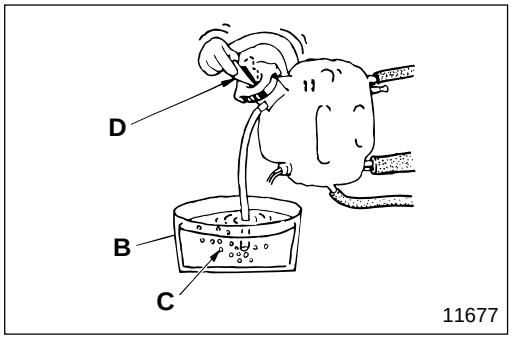

- Run the engine to bring the coolant temperature to approximately 90°C {194°F}.
- Lift lever **D** of pressure cap **1**.
- If air bubbles **C** continuously rise in water tank **B**, it is an indication that air or exhaust gas has gotten into the coolant.
- If it is air, it is possible that the cylinder head bolts, the water pump mounting bolts or the hose connections are loose, or that the hose is damaged.
- If it is exhaust gas, it is possible that the cylinder head gaskets are damaged, or that the cylinder head is cracked.

M E M O

RADIATOR AND FAN SHROUD

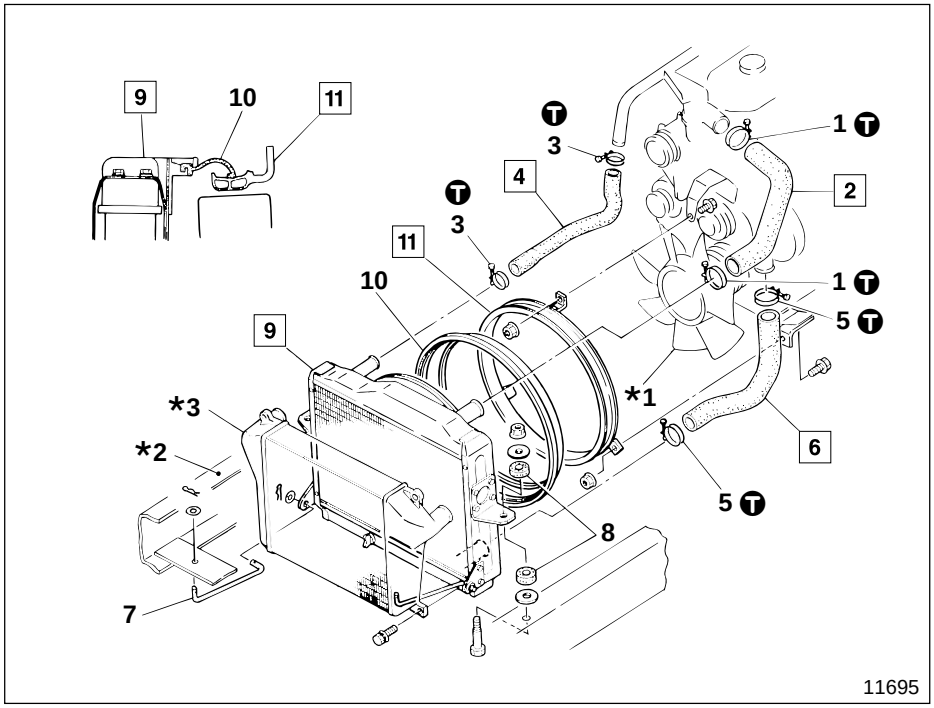

● **Removal sequence**

1 Hose clamp
2 Outlet hose
3 Hose clamp
4 Supply hose
5 Hose clamp
6 Inlet hose
7 Support rod
8 Rubber sheet
9 Radiator assembly
📖 P14-14
10 Shroud seal
11 Fan shroud

***1** : Cooling fan
***2** : Frame
***3** : Intercooler Gr 15

● **Installation sequence**

Follow the removal sequence in reverse.

Service standards

Unit : mm {in.}

Location	Maintenance item	Standard value	Limit	Remedy
11, *1	Clearance between fan shroud and cooling fan tip	4.5 to 8.3 {0.18 to 0.33}	—	Adjust

T Tightening torque

Unit : N·m {lbf.ft, kgf·m}

Location	Parts to be tightened	Tightening torque	Remarks
1, 3, 5	Hose clamp	3.9 {2.9, 0.4}	—

Special tools

Unit : mm {in.}

Location	Tool name and shape	Part No.	Application
11	Tip clearance spacer 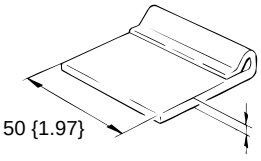	MC019470	Adjustment of clearance between fan shroud and cooling fan

◆ Service procedure

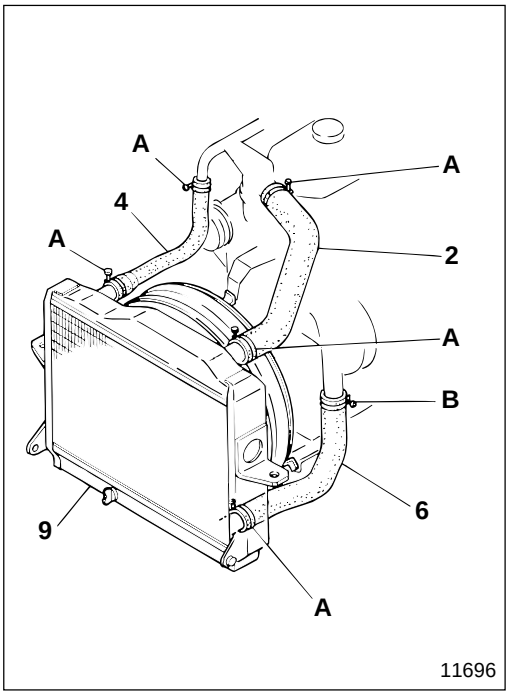

2 **4** **6** **Installation of hose**

The depth of hose installation is as follows.

A : 35 mm {1.38 in.}

B : 40 mm {1.58 in.}

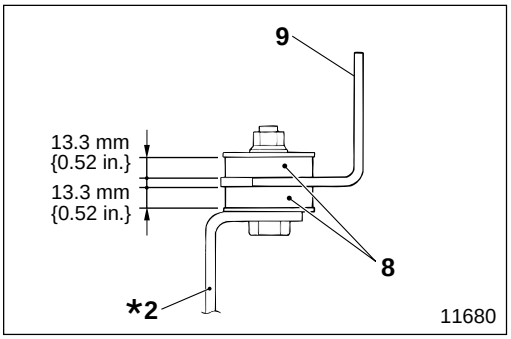

9 **Installation of radiator assembly**

Tighten nuts until the thickness of rubber sheet **8** conforms to the specified value.

***2** : Frame

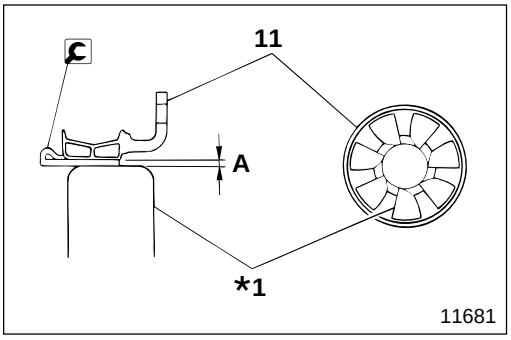

11 **Installation of fan shroud**

Adjust using 🔧 tip clearance spacer so that clearance **A** conforms to the standard value all around the periphery.

***1** : Cooling fan

RADIATOR AND FAN SHROUD

Radiator Assembly

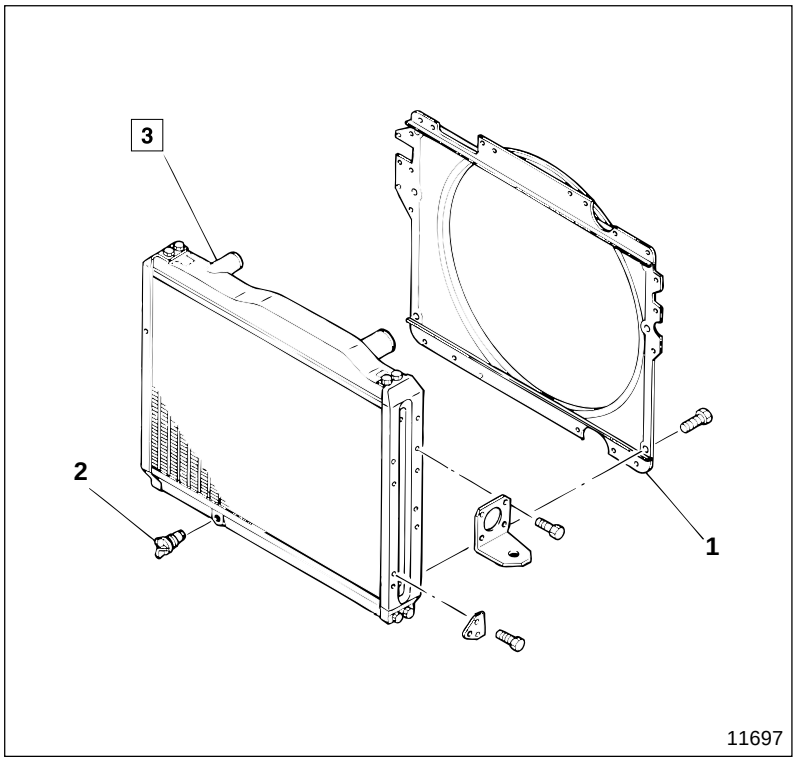

● **Disassembly sequence**

1 Radiator shroud
2 Drain cock
3 Radiator

● **Assembly sequence**

Follow the disassembly sequence in reverse.

Service standards

Location	Maintenance item	Standard value	Limit	Remedy
3	Radiator air leakage (Air pressure of 150 kPa {21 lbf/in^2, 1.5 kg/cm^2})	0 cm^3 {0 cu. in.}	—	Correct or replace

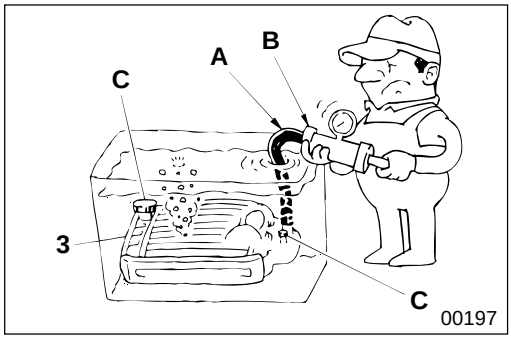

◆ Service procedure

3 **Inspection of radiator**

- Install radiator cap tester **B** by connecting hose **A** to the upper tank, and insert plug **C**.
- Plug lower tank opening with plug **C**, and immerse the radiator in a water tank.
- Apply specified air pressure of 150 kPa {21 lbf/in^2, 1.5 kg/cm^2} using cap tester **B**, and check if there is any air leakage.
- If you find air leakage, correct or replace radiator **3**.

M E M O

SURGE TANK

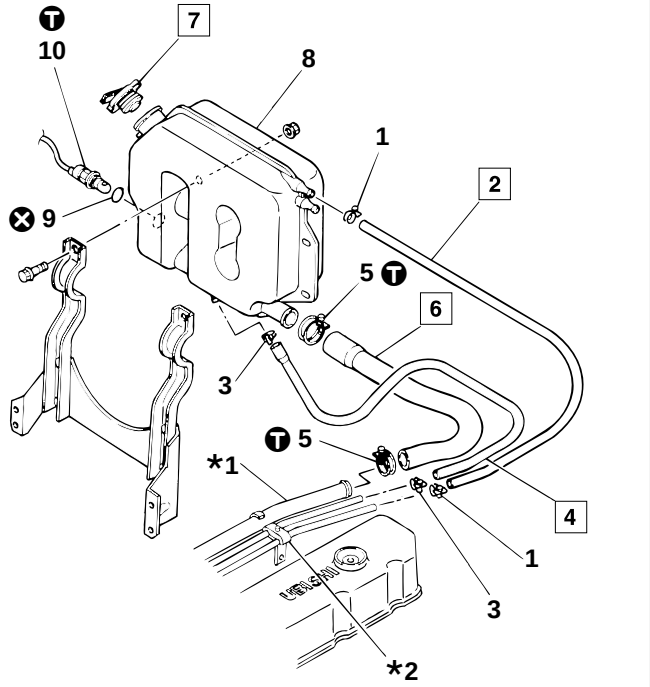

11396

● **Disassembly sequence**

1 Clamp
2 Air hose
3 Clamp
4 Water hose
5 Clamp
6 Supply hose
7 Pressure cap
8 Surge tank
9 O-ring
10 Water level sensor Gr 54

***1** : Water inlet pipe
***2** : Air and water suction pipe
⊗ : Non-reusable parts

● **Assembly sequence**

Follow the disassembly sequence in reverse.

Service standards

Location	Maintenance item	Standard value	Limit	Remedy
7	Pressure cap valve opening pressure	69±15 kPa {10±2.1 lbf/in², 0.7±0.15 kgf/cm²}	—	Replace

T Tightening torque

Unit : N·m {lbf.ft, kgf·m}

Location	Parts to be tightened	Tightening torque	Remarks
5	Clamp	3.9 {2.9, 0.4}	—
10	Water level sensor	2.9 to 3.9 {2.2 to 2.9, 0.3 to 0.4}	—

◆ Service procedure

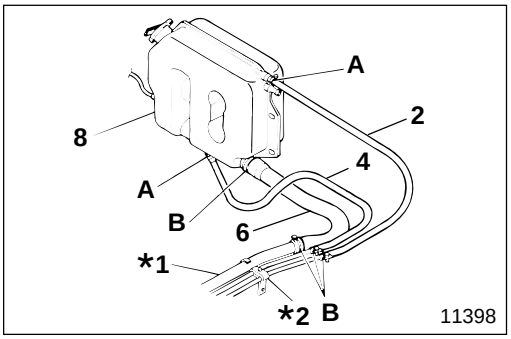

2 4 6 Installation of hose

The depth of hose installation is as follows.

A : 15 mm {0.59 in.}
B : 30 mm {1.18 in.}

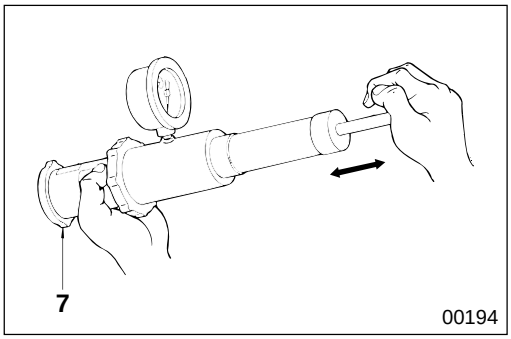

7 Inspection of pressure cap

(1) Pressure valve opening pressure

If the measured value deviates from the standard value, replace pressure cap **7**.

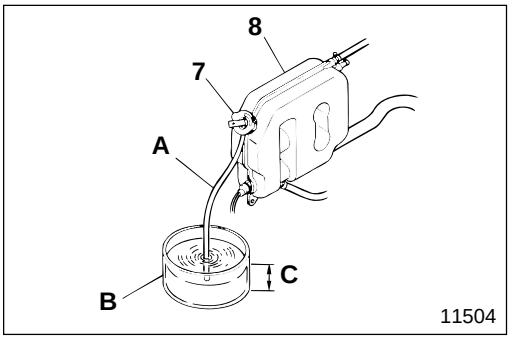

(2) Inspection of vent valve

- Check that the coolant level comes up to the lip of surge tank **8**. If the level is low, add coolant.
- Tighten pressure cap **7**.
- Put the end of overflow hose **A** into water tank **B**.
- Check coolant level **C** of water tank **B**.
- Run the engine at a high revolution to increase the coolant temperature.
- Stop the engine when some of the coolant in surge tank **8** has overflown into water tank **B**.
- Leave things for a while.
- Check the time it takes for the coolant temperature to return to the ambient temperature, and check whether coolant level **C** in the tank is the same as before running the engine.
- If the coolant level has not returned to that before running engine, replace pressure cap **7**.

NOTE

Do not remove pressure cap 7 before the coolant temperature decreases to the ambient temperature. If you do the coolant will not return to reservoir tank A because negative pressure in the radiator is lost.

COOLING FAN AND V-BELT

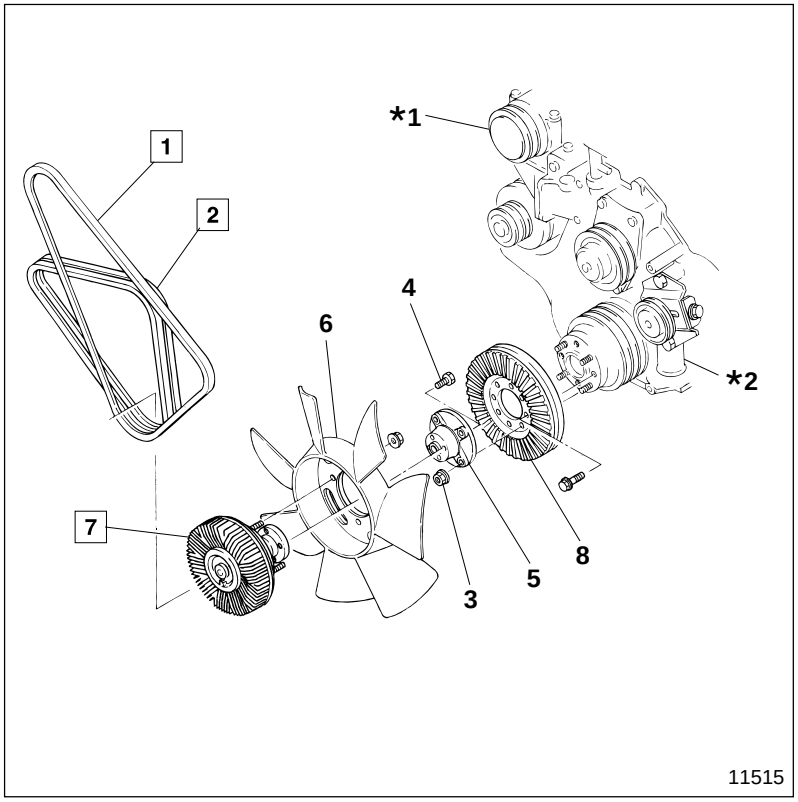

● **Removal sequence**

1 V-belt (Air-conditioner)
2 V-belt (Fan)
3 Nut
4 Bolt
5 Fan spacer
6 Cooling fan
7 Automatic cooling fan coupling
8 Torsional damper

***1** : Cooler compressor
***2** : Tension pulley

● **Installation sequence**

Follow the removal sequence in reverse.

CAUTION⚠

- **Be sure to replace automatic cooling fan coupling 7 as an assembly if it is faulty because it is a unit construction.**
- **Be sure to replace V-belts 2 as a set to maintain even tension between them.**

Service standards

Unit : mm {in.}

Location	Maintenance item	Standard value	Limit	Remedy
1	V-belt tension (Air-conditioner)	16 to 20 {0.63 to 0.79}	—	Adjust
2	V-belt tension (Fan)	12 to 16 {0.47 to 0.63}	—	Adjust

Special tools

Location	Tool name and shape	Part No.	Application
1, 2	Belt tension gauge  03612	MH062345	Measurement of tension of V-belt

◆ Service procedure

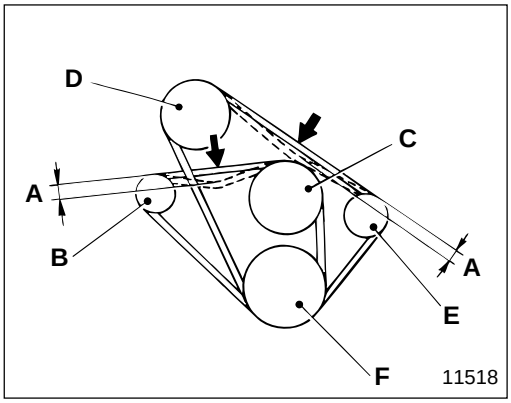

1 **2** **V-belt**

[Inspection]
Measure the extent of flex **A** when the center of V-belts **1**, **2** as illustrated is depressed with a force of approximately 98 N {72 lbf, 10 kgf}.

B : Alternator pulley
C : Water pump pulley
D : Cooler compressor pulley (Air-conditioner)
E : Tension pulley
F : Crankshaft pulley

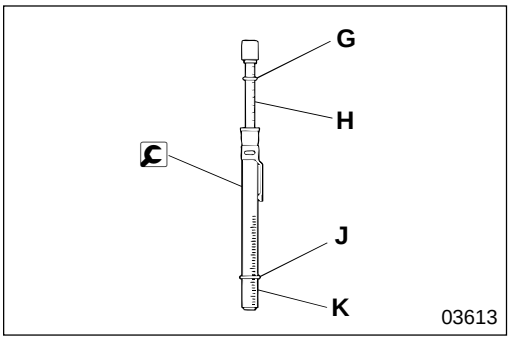

● **Use of special tool belt tension gauge**

- Set upper O-ring **G** of belt tension gauge to 98 N {72 lbf, 10 kgf} (push load) on graduation **H**.
- Set lower O-ring **J** of belt tension gauge to graduation **K** (maximum flex of belt).

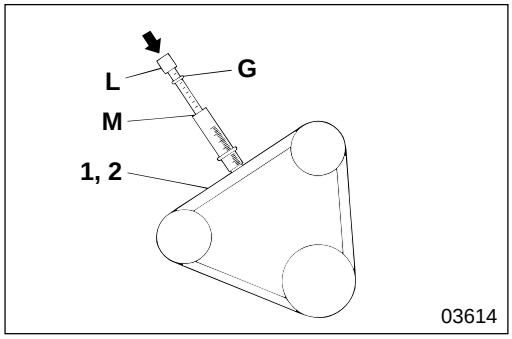

- Place belt tension gauge at the center of V-belts **1**, **2** perpendicularly as illustrated and push top **L** all the way down until upper O-ring **G** hits upper edge **M**.

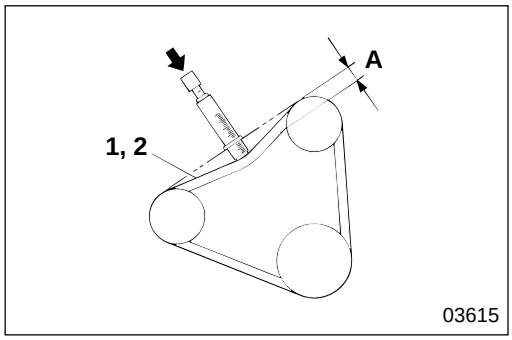

- Measure the extent of flex **A** of V-belts **1**, **2** at this point, and if the measured value deviates from the standard value, adjust as follows.

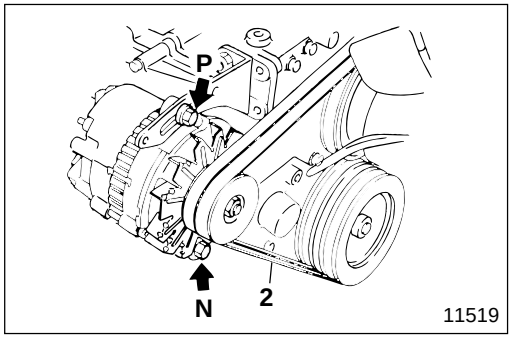

[Adjustment]

(1) Adjustment of V-belt tension for fan

- Loosen alternator mounting bolts **N** (two places), and adjust the tension of V-belts **2** using adjusting bolt **P**.
- After adjustment, tighten the bolts and nuts securely.

CAUTION

- **Bear in mind that excessive tension of V-belts 2 might damage the belts and bearings that engage with the V-belts.**
- **Be sure to replace V-belts 2 as a set to maintain even tension between them.**
- **Be careful not to let oil stick to V-belts 2, if oil gets onto the belts, it causes slipping, resulting in overheating and insufficient battery charging.**

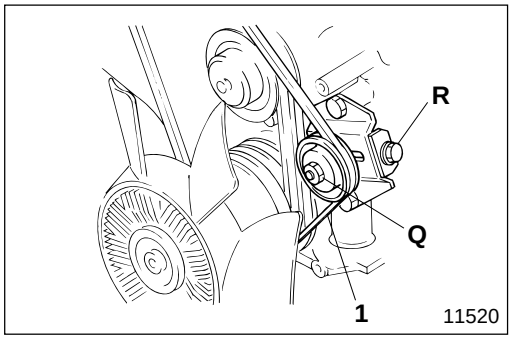

(2) Adjustment V-belt tension for air-conditioner

- Loosen tension pulley mounting nut **Q**, and adjust the tension of V-belt **1** using adjusting bolt **R**.
- After adjustment, tighten the bolt **R** and nut **Q** securely.

CAUTION

- **Bear in mind that excessive tension of V-belt 1 might damage the belt and bearings that engage with the V-belt.**
- **Be careful not to let oil stick to V-belt 1, if oil gets onto the belt, it causes slipping, resulting in poor performance of the air conditioner.**

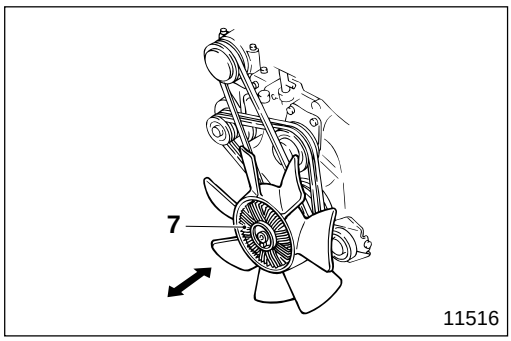

7 Automatic cooling fan coupling

[Inspection]

Carry out the following inspection of automatic cooling fan coupling **7** and if any fault is found, replace the unit.

- Check for any leakage of lubricating oil sealed in the coupling body.
- Rotate automatic cooling fan coupling **7** by hand, and check for any irregularity in rotation related to the coupling bearing or any abnormal noise.
- Check for any excessive play of automatic cooling fan coupling **7** in the axial direction when the engine is cool.

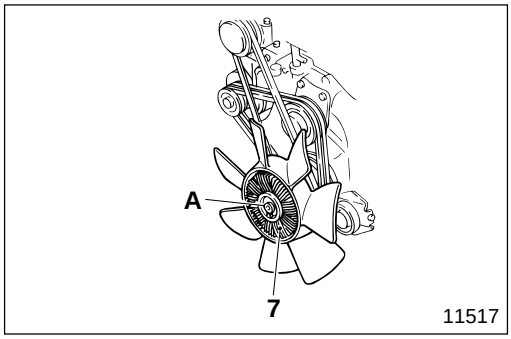

[Cleaning]

- If there are any foreign particles sticking to bimetal **A**, remove them by brushing lightly.

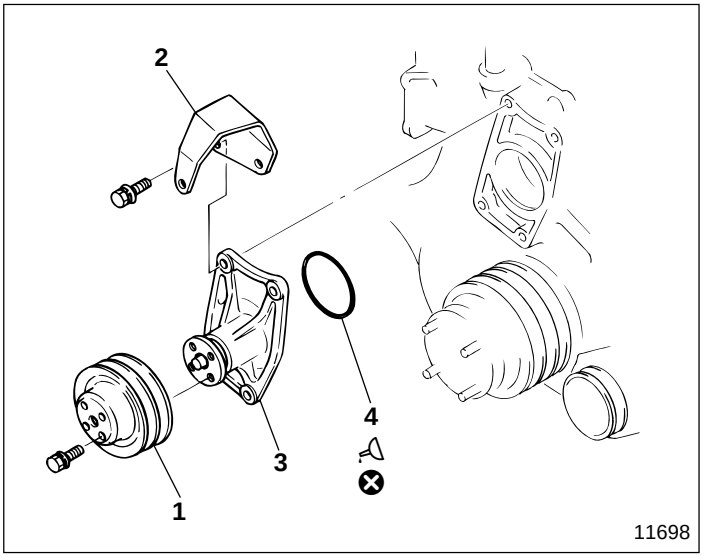

● **Removal sequence**

1 Water pump pulley
2 Upper shroud stay
3 Water pump
4 O-ring

⊗ : Non-reusable parts

● **Installation sequence**

Follow the removal sequence in reverse.

CAUTION

- **Be sure to replace water pump 3 as an assembly if it is faulty because it is a unit construction.**
- **Never apply engine oil to the O-ring because it will cause the O-ring to swell.**

Lubricant

Location	Points of application	Kinds	Quantity
4	Periphery of O-ring	Soapy water	As required

THERMOSTAT

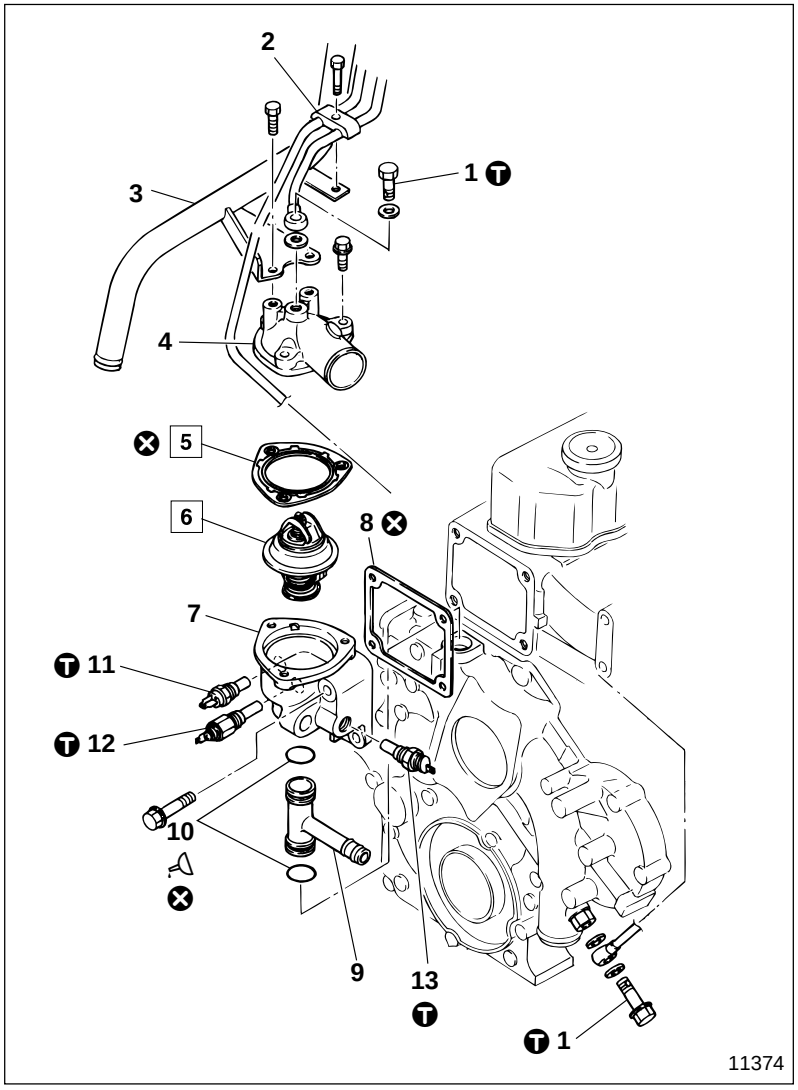

● **Disassembly sequence**

1 Eye bolt
2 Air and water suction pipe
3 Water inlet pipe
4 Thermostat cover
5 Thermostat cover gasket
6 Thermostat
7 Thermostat case
8 Thermostat case gasket
9 Bypass pipe
10 O-ring
11 Water temperature sensor (Water temperature gauge and multi-purpose timing control unit) Gr 54
12 Overheating switch Gr 54
13 Water temperature sensor (Pre-stroke control type injection pump) Gr 54

⊗ : Non-reusable parts

● **Assembly sequence**

Follow the disassembly sequence in reverse.

CAUTION ⚠

Never apply engine oil to O-ring 10 because it will cause the O-ring to swell.

Service standards

Unit : mm {in.}

Location	Maintenance item		Standard value	Limit	Remedy
6	Thermostat	Valve opening temperature	82±2°C {180±3.6°F}	—	Replace
		Extent of valve lift (95°C {203°F})	10 {0.39} or more	—	Replace

T Tightening torque

Unit : N·m {lbf.ft, kgf·m}

Location	Parts to be tightened	Tightening torque	Remarks
1	Eye bolt	25 {19, 2.6}	—
11	Water temperature sensor	34±6.9 {25±5.1, 3.5±0.7}	—
12	Overheating switch	27 to 41 {20 to 30, 2.8 to 4.2}	—
13	Water temperature sensor	34±6.9 {25±5.1, 3.5±0.7}	—

Lubricant

Location	Points of application	Kinds	Quantity
10	O-ring	Soapy water	As required

◆ Service procedure

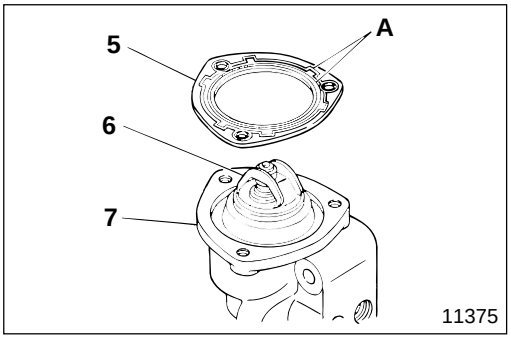

5 **Mounting of thermostat cover gasket**

Mount thermostat cover gasket **5** on thermostat case **7** in the direction as illustrated.

A : Sealant application surface

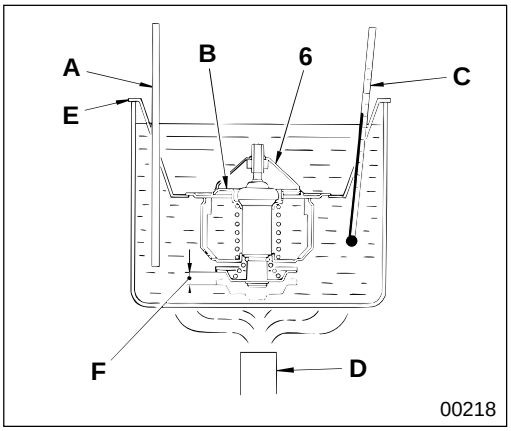

6 **Thermostat**

[Inspection]

Stir the water using stick **A** to maintain an even water temperature in the container, then carry out the following tests. If the measured value deviates from the standard value, replace thermostat **6**.

(1) Valve opening temperature

- Hold thermostat **6** with wire **E** so as not to get the thermostat too close to heat **D**.
- Heat the water gradually to raise the temperature to the valve opening temperature.
- Maintain this temperature for five minutes and make sure that valve **B** has opened.
- Make sure that valve **B** has closed when the water temperature has dropped to 65°C {149°F}.

  C : Water temperature gauge

(2) Extent of valve lift

Measure valve lift **F**, while maintaining the water temperature a little higher than the valve opening temperature, with valve **B** fully open for five minutes.

MITSUBISHI
FUSO

FH

Service Manual

Group 15
Intake and Exhaust

Table of Contents

BACK

HOME

MITSUBISHI FUSO TRUCK OF AMERICA, Inc.

Pub No. TWME9502-15

GROUP 15 INTAKE AND EXHAUST

SPECIFICATIONS 2

STRUCTURE AND OPERATION 2

TROUBLESHOOTING 5

INSPECTION AND ADJUSTMENT MOUNTED IN VEHICLE

- Measurement of Turbo Boost Pressure 6

AIR DUCT AND AIR CLEANER 8

TURBOCHARGER 12

INTERCOOLER 17

INTAKE MANIFOLD 18

EXHAUST MANIFOLD 19

EXHAUST PIPE AND MUFFLER 20

SPECIFICATIONS/STRUCTURE AND OPERATION

SPECIFICATIONS

Items		Specifications
Air cleaner element		Cyclone paper filter type
Turbocharger	Model	TD06
	Manufacturer	MITSUBISHI HEAVY INDUSTRIES
Intercooler type		Air-cooled, tube and corrugated fin type

STRUCTURE AND OPERATION

Air Cleaner

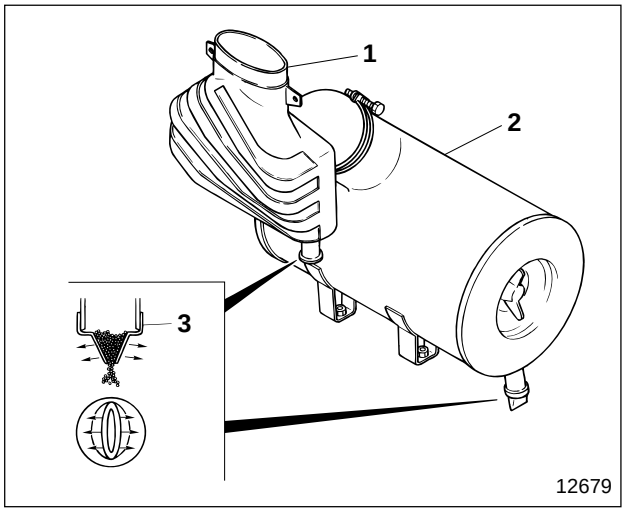

1 Air lower duct
2 Air cleaner assembly
3 Evacuator valve

- Air cleaner assembly **2** uses a single element.
- Evacuator valves **3** are fitted with air lower duct **1** and air cleaner assembly **2**.
- Evacuator valves **3** automatically vent dust and dirt by the repercussive force of the rubber of the valve that overcomes the inner negative pressure when the engine revolution falls below the specified revolution.

Turbocharger

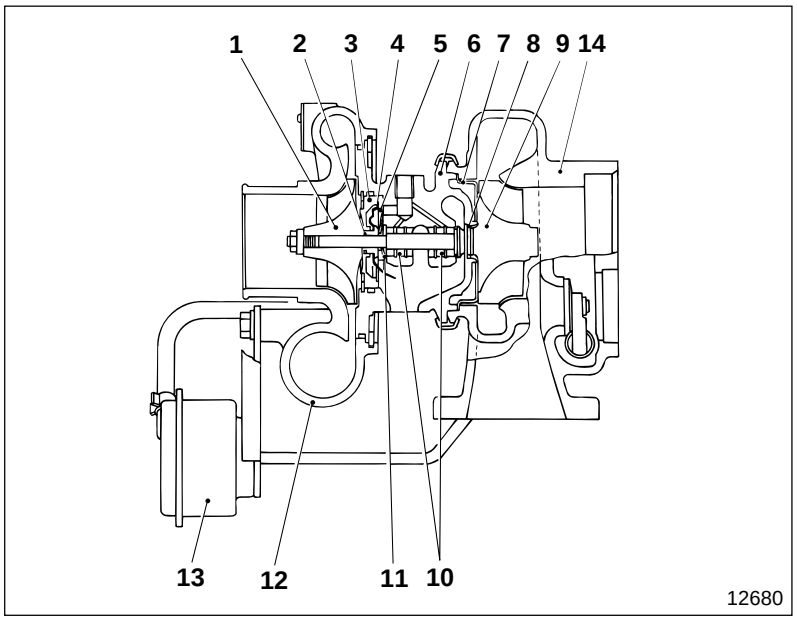

1 Compressor wheel
2 Thrust sleeve
3 Insert
4 Oil deflector
5 Thrust bearing
6 Bearing housing
7 Turbine backplate
8 Piston ring
9 Shaft and turbine wheel
10 Bearing
11 Thrust bearing
12 Compressor cover
13 Actuator
14 Turbine housing assembly

1 to **11** : Cartridge assembly

Waste gate mechanism

- The waste gate mechanism relieves the boost pressure of excess exhaust gas using actuator **13**. This controls the boost pressure appropriately and prevents the turbocharger from overrunning, and prevents excessive pressure in the intake manifold.
- The boost pressure is fed into chamber **A** of actuator **13** from compressor cover **12** via a rubber hose. When boost pressure **C**, acting on the chamber, is lower than the preset value, the actuator does not operate and waste gate valve **B** remains closed, therefore exhaust gas **D** is blown against shaft and turbine wheel **9**.

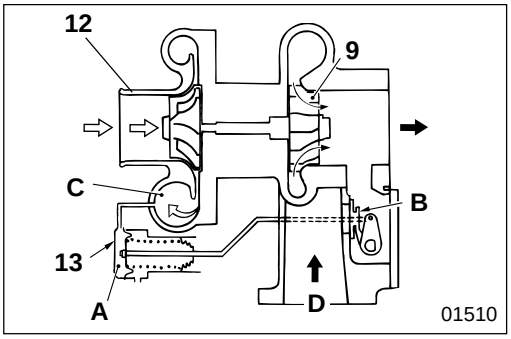

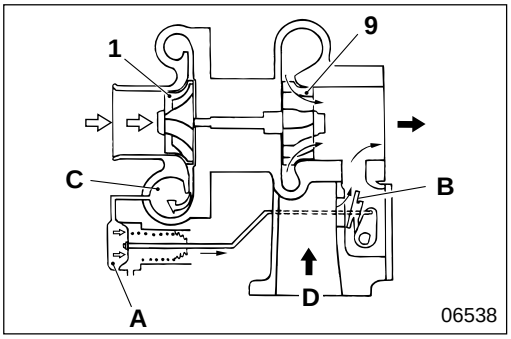

- As the boost pressure acting on chamber **A** increases to become higher than the preset value, waste gate valve **B** is opened and the exhaust gas blown against shaft and turbine wheel **9** decreases. Therefore the rotation of compressor wheel **1** decreases, causing the boost pressure to decrease.

Operation of over-boost valve

- Over-boost valve **E** operates when the boost pressure increases abnormally because of faulty operation of the waste gate mechanism.

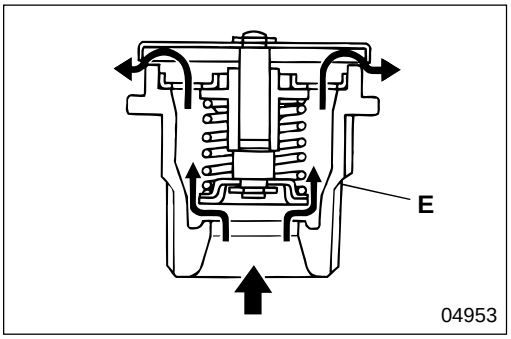

- If boost pressure **C** of over-boost valve **E** increases to become higher than the preset value, the excessive boost pressure is discharged into the atmosphere, protecting the engine from excessive boost pressure. When the valve is operating, a pipe-blowing sound is generated.

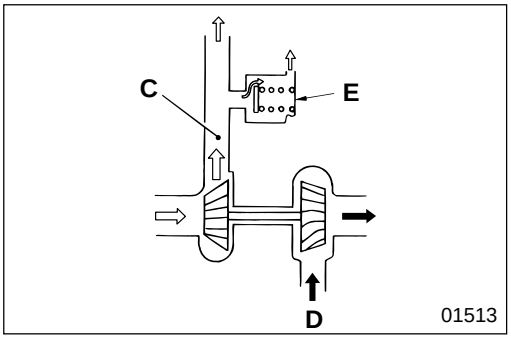

Muffler

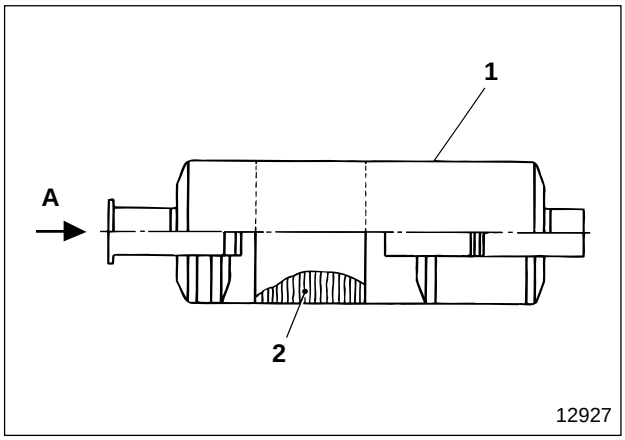

1 Muffler
2 Catalytic converter

A : Exhaust gas intake

Converter **2** is built into muffler **1** to decrease the amount of particulate matter (PM) in the exhaust gas.

Possible causes \ Symptoms			Engine hard to start	Exhaust gas dark	Exhaust gas whitish	Engine output insufficient	Oil consumption excessive	Noise and vibration in intake/exhaust systems	Remarks
Air cleaner	Air cleaner element clogged		○	○		○			
Turbocharger	Cartridge assembly	Bearing faulty		○		○		○	
		Carbon deposits on shaft and turbine wheel		○		○			
		Shaft and turbine wheel interfering with turbine backplate		○		○			
		Shaft and turbine wheel interfering with turbine housing		○		○			
		Shaft and turbine wheel bent		○		○		○	
		Shaft and turbine wheel broken		○		○		○	
		Compressor wheel interfering with compressor housing		○		○			
		Thrust sleeve and thrust bearing seized		○		○		○	
		Compressor wheel broken		○		○		○	
		Engine oil leaking because piston ring and inserter worn		○	○		○		
		Piston rings installation faulty					○		
		Parts not sliding smoothly because oil lubrication pipe and eye bolt clogged		○		○			
		Oil seals damaged because oil return pipe clogged			○		○		
	Compressor housing installation faulty			○		○	○	○	
	Turbine housing installation faulty					○		○	
Intercooler	Foreign particles on intercooler front core					○			
Actuator	Butterfly valve does not open			○	○	○			
	Butterfly valve opening and closing adjusted incorrectly			○	○	○			
Front pipe, muffler and tail pipe deformed								○	
Front pipe, muffler and tail pipe installation faulty								○	
Valve clearance faulty				○					Gr 11
Head gasket faulty				○					Gr 11
Valve and valve seat worn and carbon deposits				○					Gr 11
Valve spring fatigued				○					Gr 11
Piston ring worn and damaged				○					Gr 11
Piston ring groove worn and damaged				○					Gr 11
Cooling system malfunctioning				○					Gr 14
Engine oil excessive				○					Gr 12
Main moving parts seized				○					Gr 11
Fuel injection quantity uneven or excessive				○					Gr 13

Measurement of Turbo Boost Pressure

Service standards

Location	Maintenance item	Standard value	Limit	Remedy
—	Boost pressure (Air temperature 20°C {68°F}, Atmospheric pressure 100 kPa {29.9 in. Hg, 760 mmHg})	—	32 kPa {9.45 in. Hg, 240 mmHg}/ 3700 rpm	Inspect and adjust

Special tools

Location	Tool name and shape	Part No.	Application
—	Boost pressure gauge 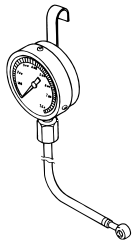 01524	MH061366	Measurement of turbo boost pressure

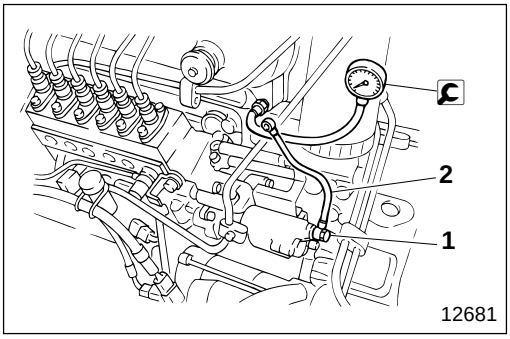

- Before measuring the turbo boost pressure, clean or replace the air cleaner element.
- Slacken off eye bolt **1** of boost compensator and remove boost compensator pipe **2**, then attach boost pressure gauge.
- After warming up the engine, measure the boost pressure at the no-load maximum engine speed. Also, measure the engine speed and the air temperature.

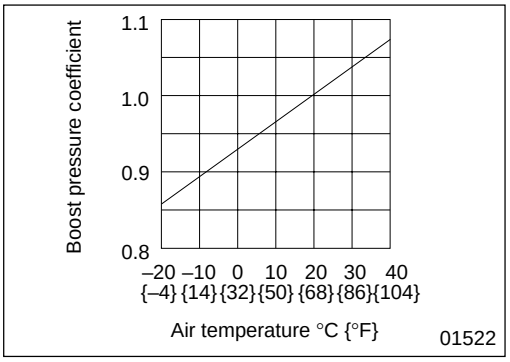

- Correct the boost pressure at standard conditions. (Since the boost pressure varies depending on the air temperature and engine speed.)
  [Correction for air temperature]
  Identify boost pressure coefficient depending on the air temperature from the graph.

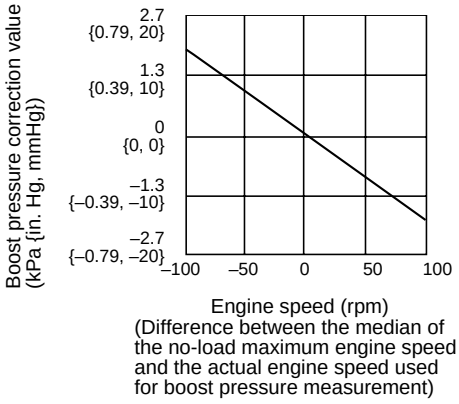

[Correction for engine speed]
Subtract the engine speed actually used for measuring the boost pressure from the median of the no-load maximum engine speed. Identify the boost pressure correction value (**Pa**) according to the graph.
Median value : 3700 rpm

[Calculation of corrected boost pressure]
Given the measured boost pressure to be **P**, corrected boost pressure **Pb** can be calculated from the following equation:

Pb = ktP + Pa

- **Pb** : Corrected boost pressure
- **P** : Measured boost pressure
- **kt** : Boost pressure correcting coefficient depending on air temperature
- **Pa** : Boost pressure correction value

If **Pb** is lower than the limit, the turbocharger must be inspected and adjusted.

AIR DUCT AND AIR CLEANER

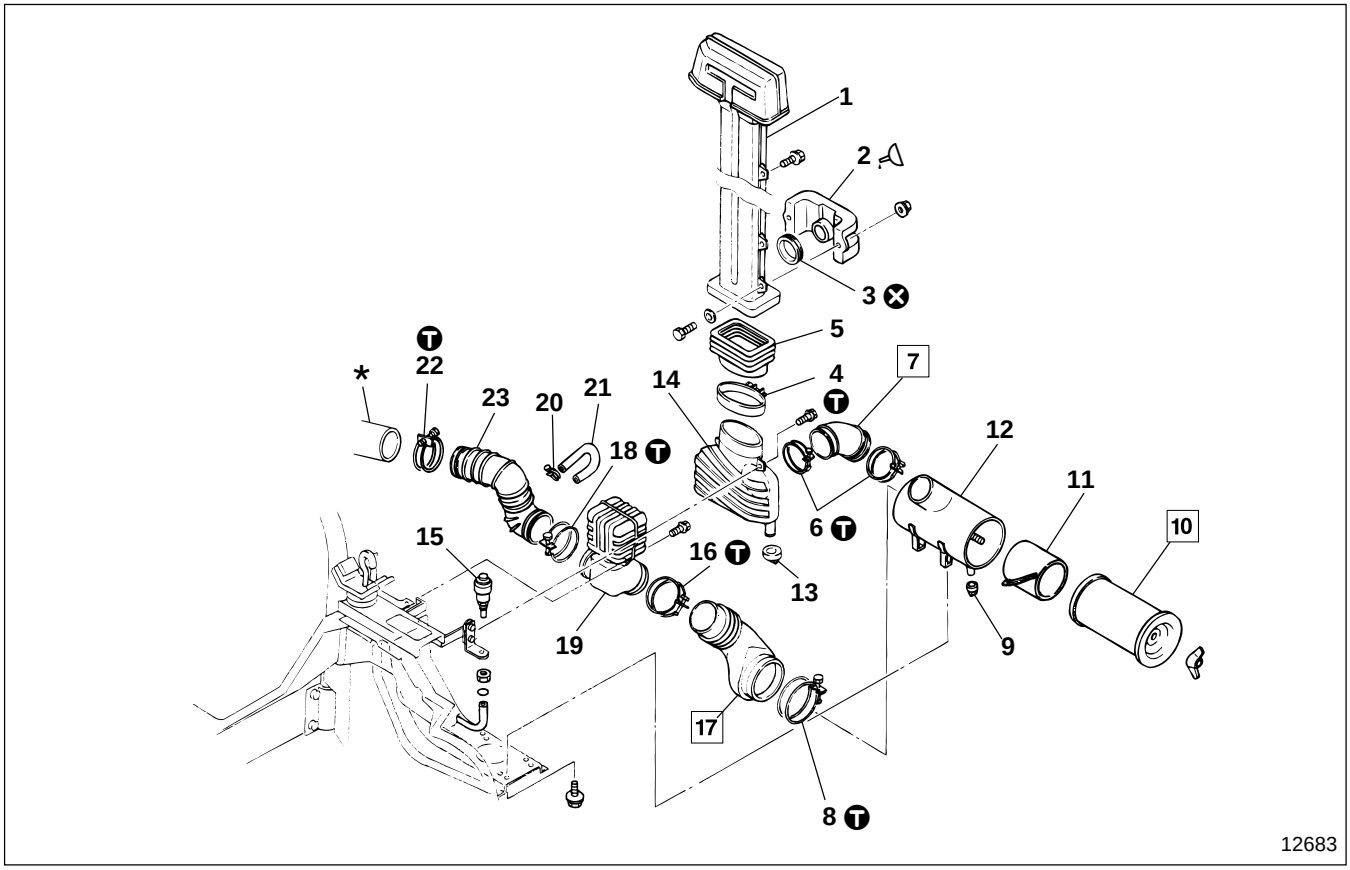

● **Disassembly sequence**

1 Air upper duct
2 Resonator
3 Grommet
4 Clamp
5 Rubber boot
6 Clamp
7 Air intake hose
8 Clamp
9 Evacuator valve
10 Element
11 Adapter vane
12 Body
13 Evacuator valve
14 Air lower duct
15 Dust indicator
16 Clamp
17 Air duct
18 Clamp
19 Air duct
20 Clamp
21 Air suction hose
22 Clamp
23 Air intake hose

***** : Air inlet pipe 📖 P15-9
⊗ : Non-reusable parts

● **Assembly sequence**

Follow the disassembly sequence in reverse.

NOTE

Do not remove adapter vane 11 unless it is faulty.

Ⓣ Tightening torque

Unit : N·m {lbf.ft, kgf·m}

Location	Parts to be tightened	Tightening torque	Remarks
4, 6, 8, 16	Clamp	3.9 to 4.9 {2.9 to 3.6, 0.4 to 0.5}	—
18, 22	Clamp	2.9 to 3.4 {2.2 to 2.5, 0.3 to 0.35}	—

Sealant

Location	Points of application	Kinds	Quantity
2	Grommet installation area of resonator	THREEBOND 1207C	As required

◆ Service procedure

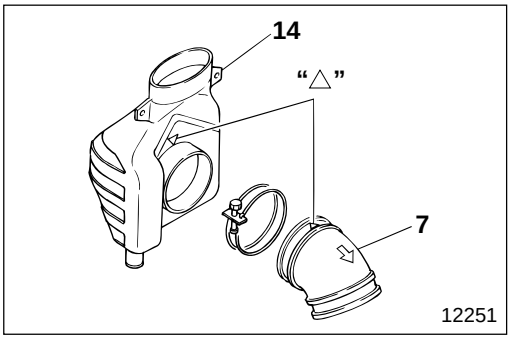

7 **Installation of air intake hose**

△ : Alignment mark

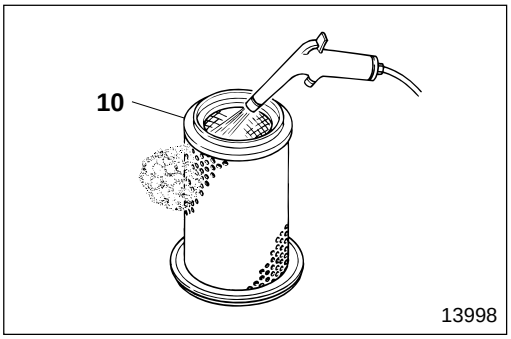

10 **Element**

[Cleaning]

- Blow compressed air of 685 kPa {100 lbf/in^2, 7 kgf/cm^2} or less through element **10** from the inside.
- When using compressed air, move the blower's nozzle up and down along the pleats of element **10** evenly.

CAUTION

- **Do not tap or hit element 10 to remove dust.**
- **Do not blow compressed air through element 10 from the outside.**

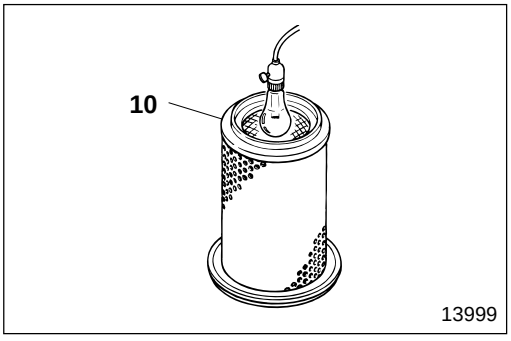

[Inspection]

- Illuminate the inside of element **10**.
- If parts of the filter paper are torn or thin, or if the packing of the upper surface of element **10** is damaged, replace the element.

NOTE

If the dust on air cleaner element 10 is wet due to oil smoke or soot, replace the air cleaner regardless of the scheduled replacement interval.

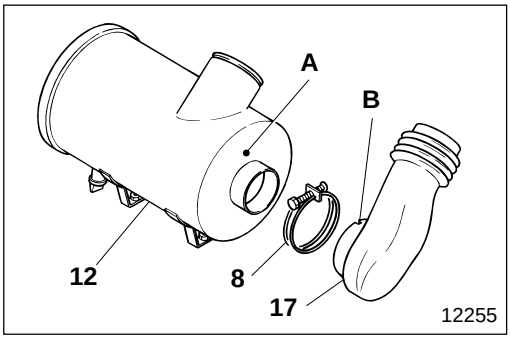

16 **Installation of air duct**

Install air duct **17** in the direction as illustrated.

A : White paint
B : Indent

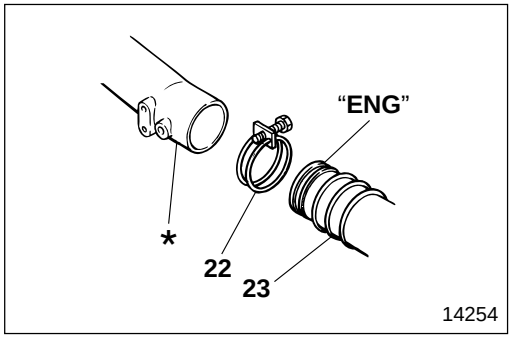

23 **Installation of air intake hose**

ENG : Alignment mark

M E M O

TURBOCHARGER

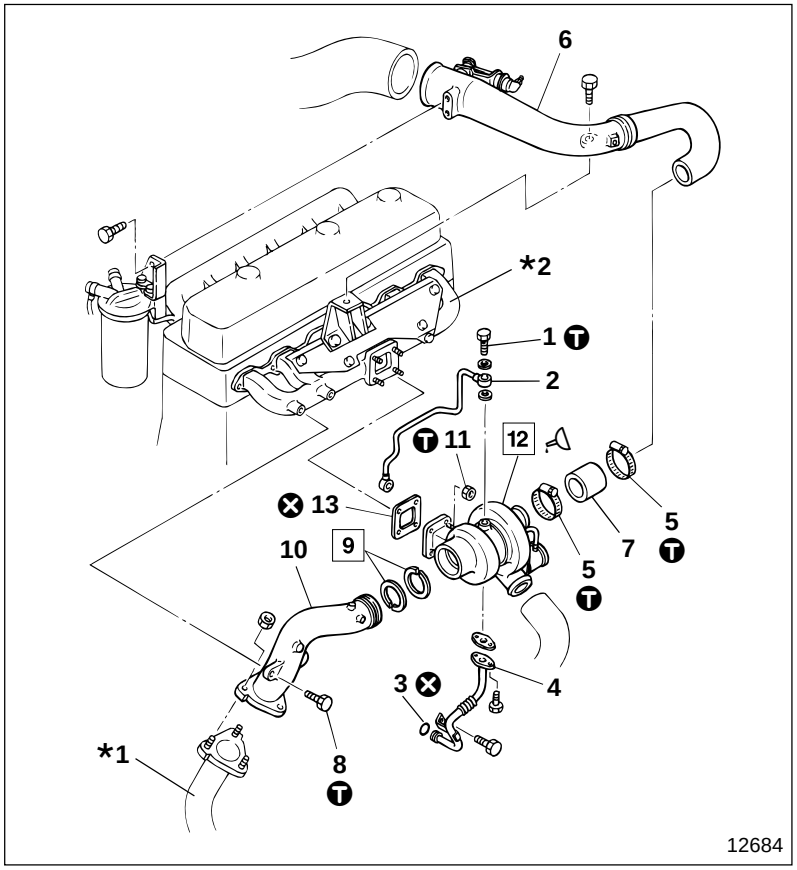

● **Removal sequence**

1 Eye bolt
2 Oil pipe
3 O-ring
4 Oil return pipe
5 Clamp
6 Air inlet pipe assembly Gr 35A, B
7 Rubber hose
8 Bolt
9 Seal ring
10 Exhaust pipe
11 Nut
12 Turbocharger assembly P15-14
13 Gasket

***1** : Front pipe P15-20
***2** : Exhaust manifold P15-19
⊗ : Non-reusable parts

● **Installation sequence**

Follow the removal sequence in reverse.

Ⓣ Tightening torque

Unit : N·m {lbf.ft, kgf·m}

Location	Parts to be tightened	Tightening torque	Remarks
1	Eye bolt	21 {15, 2.1}	—
5	Clamp	4.9 {3.6, 0.5}	—
8	Bolt (Exhaust pipe mounting)	53 {39, 5.4}	—
11	Nut (Turbocharger assembly mounting)	41 {30, 4.2}	—

Lubricant

Location	Points of application	Kinds	Quantity
12	Supply when installing turbocharger assembly	Engine oil	As required

◆ Service procedure

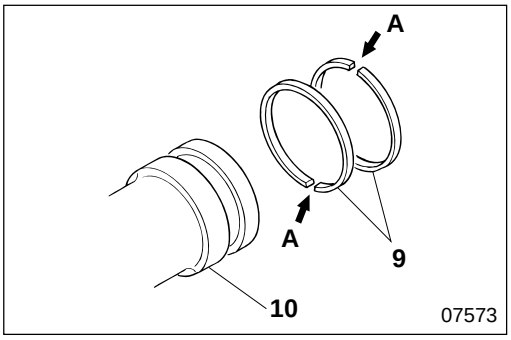

9 **Installation of seal ring**

Offset splits **A** of seal rings **9** at 180°.

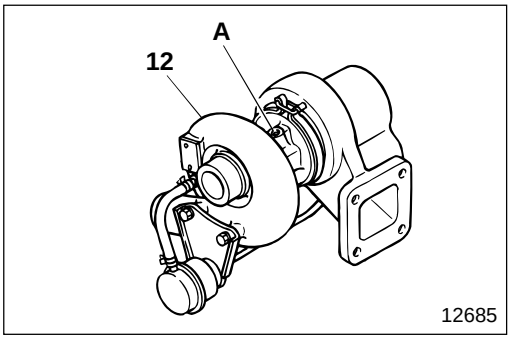

12 **Installation of turbocharger assembly**

When installing turbocharger assembly **12**, supply engine oil via oil port **A** as required to ensure that parts move smoothly.

TURBOCHARGER

Turbocharger Assembly

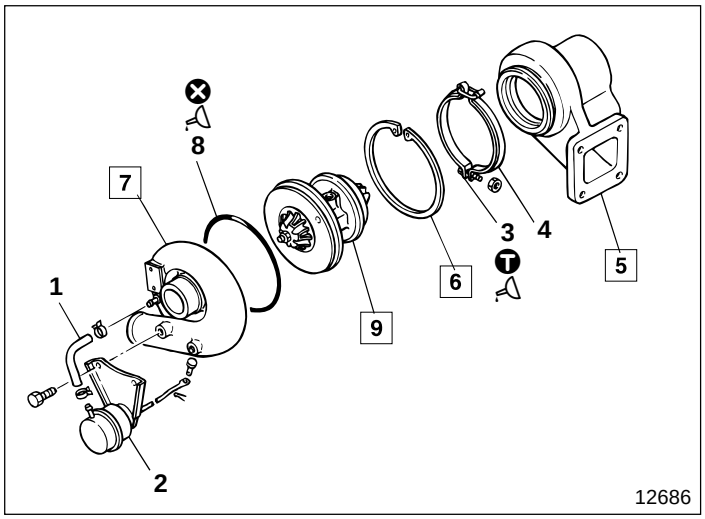

● **Work before disassembly**

P15-15

● **Disassembly sequence**

1 Hose
2 Actuator
3 Bolt
4 Coupling
5 Turbine housing
6 Snap ring
7 Compressor cover
8 O-ring
9 Cartridge assembly

⊗ : Non-reusable parts

● **Assembly sequence**

Follow the disassembly sequence in reverse.

● **Inspection after assembly**

P15-15

NOTE

Since cartridge assembly 9 is a unit construction, if the turbine wheel or the compressor wheel is damaged, or the cartridge assembly does not revolve smoothly, or any other fault is found, replace the assembly as a unit.

Service standards

Unit : mm {in.}

Location	Maintenance item			Standard value	Limit	Remedy
9	Cartridge assembly	Play in the shaft direction		0.05 to 0.09 {0.0020 to 0.0035}	0.1 {0.0039}	Replace
		Play at right angles to the shaft	Turbine wheel side	0.40 to 0.53 {0.016 to 0.021}	0.58 {0.023}	Replace
			Compressor wheel side	0.55 to 0.66 {0.022 to 0.026}	0.72 {0.028}	Replace

Ⓣ Tightening torque

Unit : N·m {lbf.ft, kgf·m}

Location	Parts to be tightened	Tightening torque	Remarks
3	Bolt (Coupling mounting)	3.9 to 4.9 {2.9 to 3.6, 0.4 to 0.5}	—

Lubricant

Location	Points of application	Kinds	Quantity
3	Thread area of bolt	Molybdenum disulfide grease	As required
8	Periphery of O-ring	Engine oil	As required

◆ Service procedure

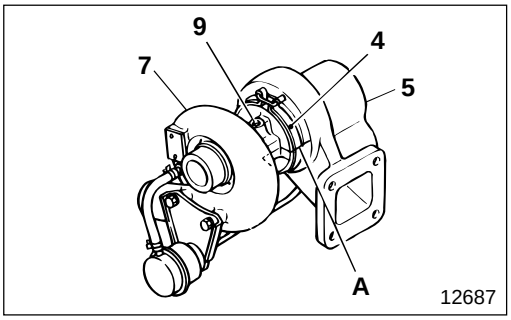

● Work before disassembly

Put alignment marks **A** on coupling **4**, turbine housing **5**, compressor cover **7** and cartridge assembly **9**.

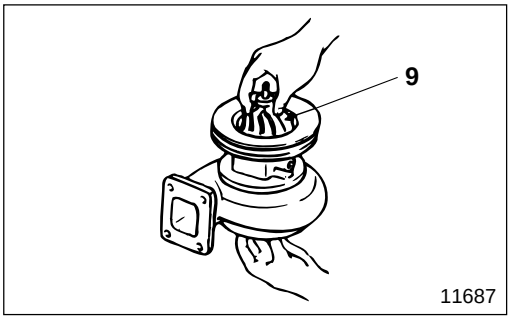

● Inspection after assembly

Turn the turbine wheel and the compressor wheel of cartridge assembly **9** to make sure that they turn smoothly.

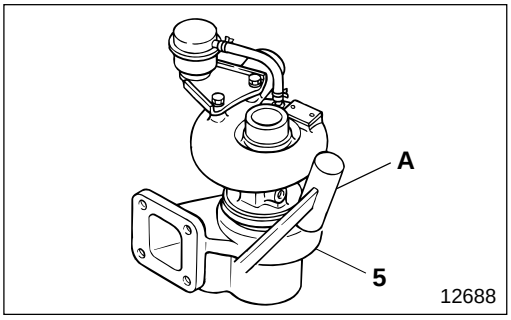

5 Removal of turbine housing

CAUTION

- **When removing turbine housing 5, tap all around the circumference lightly using rubber-headed hammer A so as not to damage the turbine housing.**
- **Do not hit the turbine wheel near turbine housing 5, since the blade of the turbine wheel can be easily bent.**

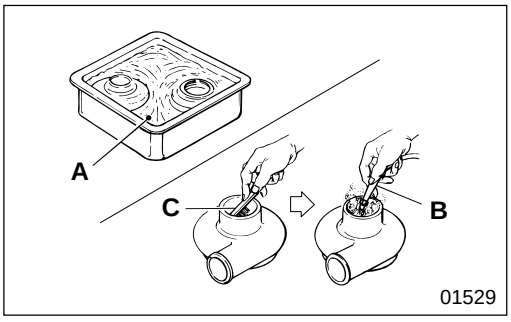

5 7 Cleaning of turbine housing and compressor cover

- Visually inspect related parts before cleaning to check if there are any burns or scratches as these would not be seen after cleaning. If any fault is found, replace the faulty parts.
- Remove any foreign particles before cleaning by scraping them off using plastic scraper or bristle-headed brush **C**. Immerse the disassembled parts in nonflammable solvent **A** (DAIDO KAGAKU KOGYO DAICLEANER T-30), then take them out and blow compressed air **B** on them.

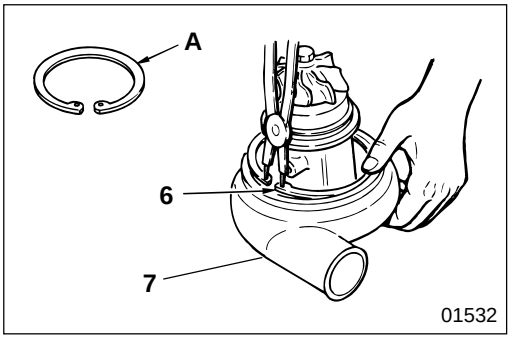

6 Installation of snap ring

Install snap ring **6** into compressor cover **7** with taper surface **A** upward.

WARNING

Use your hand to hold snap ring 6 in place to prevent it from springing out.

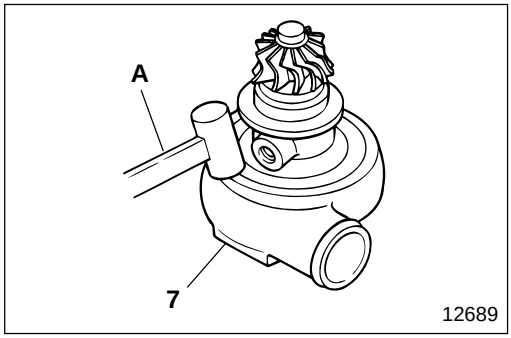

7 **Removal of compressor cover**

CAUTION

- **When removing compressor cover 7, tap all around the circumference lightly so as not to damage the compressor cover.**
- **Avoid hitting the compressor wheel near compressor cover 7, since the blade of the compressor wheel can be easily bent.**

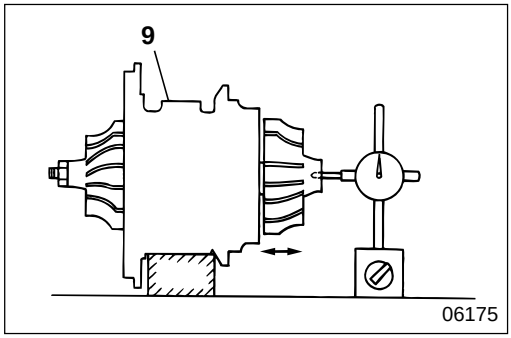

9 **Inspection of cartridge assembly**

(1) Play in the shaft direction of the shaft and turbine wheel assembly

If the measured value deviates from the standard value, replace cartridge assembly **9**.

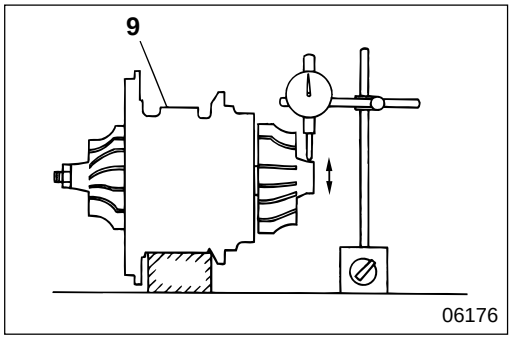

(2) Play at right angles to the shaft of the shaft and turbine wheel assembly

- Play on turbine wheel side
  If the measured value is higher than the limit, replace cartridge assembly **9**.

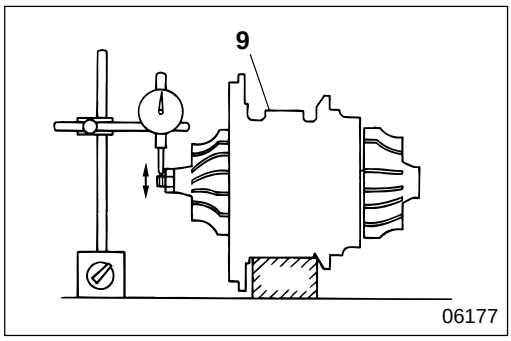

- Play on compressor wheel side
  If measured value is higher than the limit, replace cartridge assembly **9**.

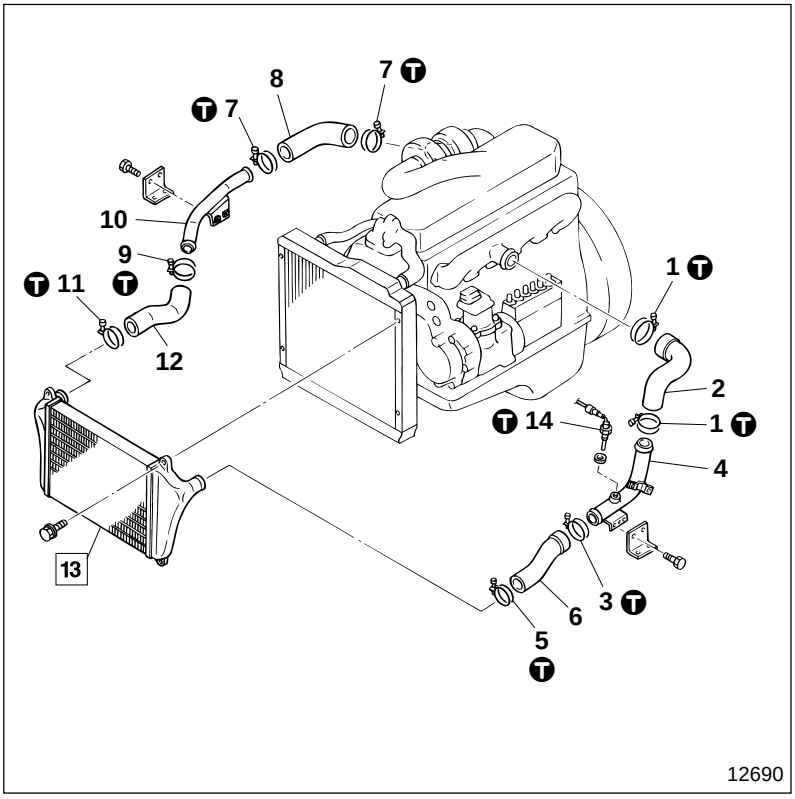

● **Disassembly sequence**

1 Clamp
2 Air inlet hose
3 Clamp
4 Air inlet pipe
5 Clamp
6 Air inlet hose
7 Clamp
8 Air inlet hose
9 Clamp
10 Air inlet pipe
11 Clamp
12 Air inlet hose
13 Intercooler
14 Boost air temperature sensor Gr 13

⊗ : Non-reusable parts

● **Assembly sequence**

Follow the disassembly sequence in reverse.

Service standards

Location	Maintenance item	Standard value	Limit	Remedy
13	Air leakage from intercooler (Air pressure : 150 kPa {21 lbf/in^2, 1.5 kg/cm^2})	0 cm^3 {0 cu. in.}	—	Replace

T Tightening torque

Unit : N·m {lbf.ft, kgf·m}

Location	Parts to be tightened	Tightening torque	Remarks
1, 3, 5, 7, 9, 11	Clamp	2.9 to 3.4 {2.2 to 2.5, 0.3 to 0.35}	—
14	Boost air temperature sensor	14.7±2 {11±1.4, 1.5±0.2}	—

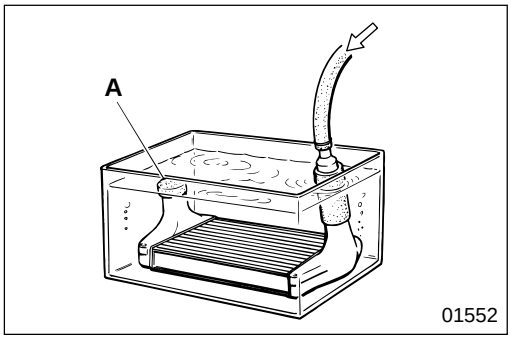

◆ Service procedure

13 **Inspection of intercooler**

- Fit plug **A** on one of the air inlets of intercooler **13** and connect a hose to the other, then lower the intercooler into the water tank. Apply air at the specified pressure (150 kPa {21 lbf/in^2, 1.5 kgf/cm^2}) from the hose side and check for air leaks.
- If air leaks, replace intercooler **13**.

INTAKE MANIFOLD

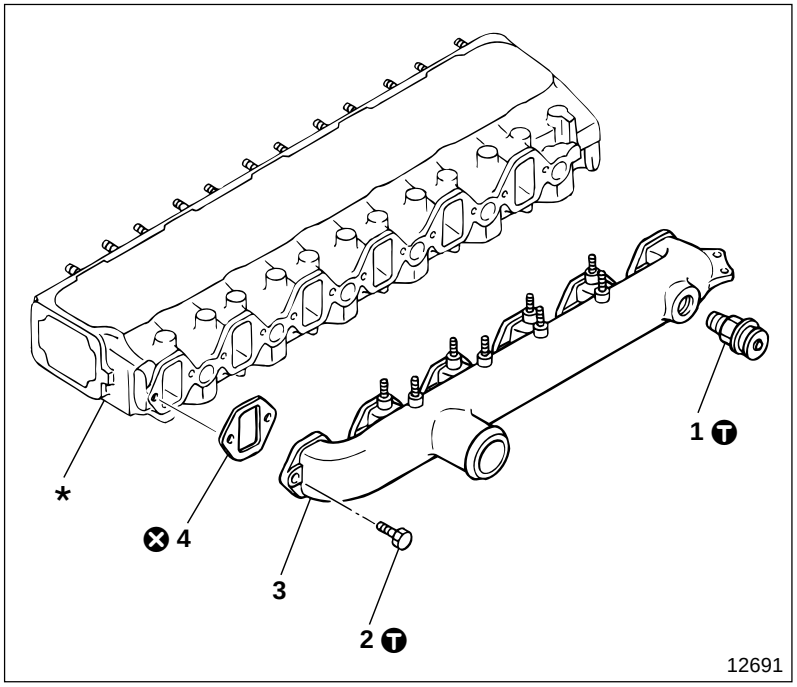

● **Disassembly sequence**

1 Over-boost valve
2 Bolt
3 Intake manifold
4 Gasket

* : Cylinder head Gr 11
⊗ : Non-reusable parts

● **Assembly sequence**

Follow the disassembly sequence in reverse.

T Tightening torque

Unit : N·m {lbf.ft, kgf·m}

Location	Parts to be tightened	Tightening torque	Remarks
1	Over-boost valve	49 {36, 5}	—
2	Bolt (Intake manifold mounting)	17 to 25 {12 to 19, 1.7 to 2.6}	—

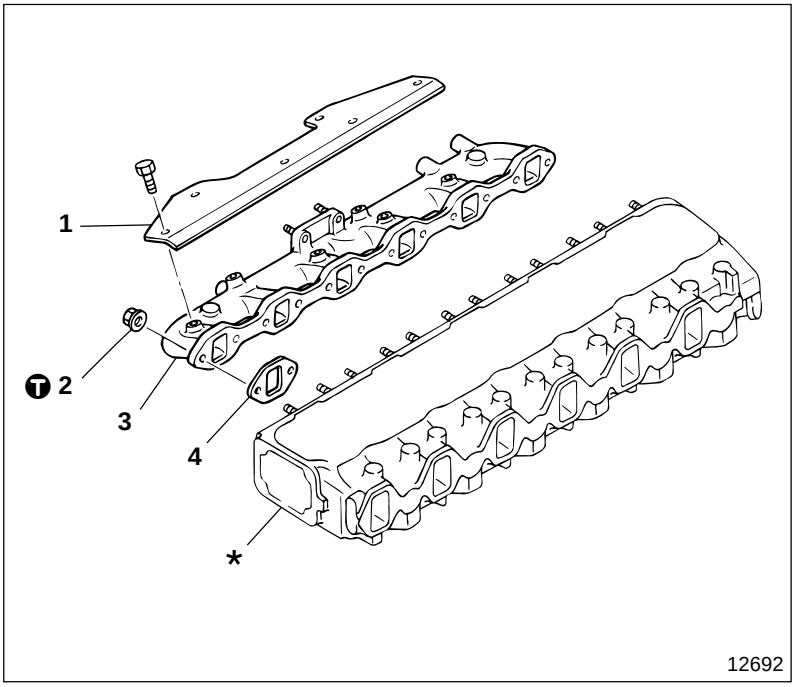

● **Disassembly sequence**

1 Insulator
2 Nut
3 Exhaust manifold
4 Gasket

* : Cylinder head Gr 11
⊗ : Non-reusable parts

● **Assembly sequence**

Follow the disassembly sequence in reverse.

Ⓣ Tightening torque

Unit : N·m {lbf.ft, kgf·m}

Location	Parts to be tightened	Tightening torque	Remarks
2	Nut (Exhaust manifold mounting)	58 {43, 5.9}	—

EXHAUST PIPE AND MUFFLER

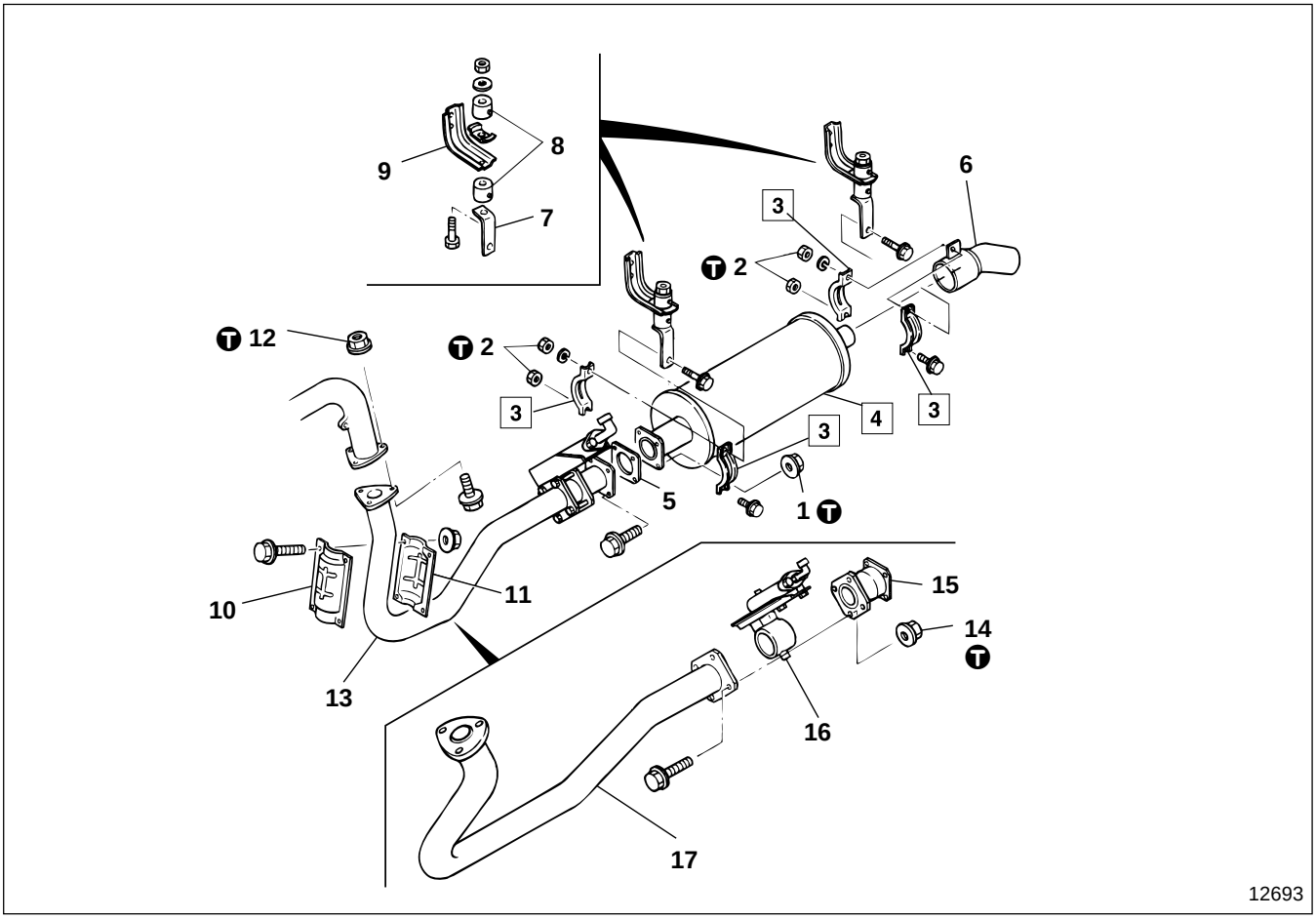

● **Disassembly sequence**

1 Nut
2 Nut
3 Clamp
4 Muffler
5 Gasket
6 Tail pipe
7 Pipe clamp stay
8 Rubber cushion
9 Exhaust pipe hanger
10 Exhaust pipe insulator
11 Exhaust pipe cover
12 Nut
13 Front pipe assembly
14 Nut
15 Center pipe
16 Exhaust brake unit Gr 35A, B
17 Front pipe

● **Assembly sequence**

Follow the disassembly sequence in reverse.

WARNING

- **Never hit or kick muffler 4, or the catalyzer in the muffler will be damaged.**
- **A small amount of water sometimes collects inside muffler 4. Never touch this water, if you do by mistake, wash it off immediately with clean water.**

T Tightening torque

Unit : N·m {lbf.ft, kgf·m}

Location	Parts to be tightened	Tightening torque	Remarks
1	Nut (Muffler mounting)	43 {32, 4.4}	—
2	Nut (Clamp tightening)	20 {14, 2}	—
12	Nut (Front pipe assembly mounting)	58 {43, 5.9}	—
14	Nut (Exhaust brake unit mounting)	58 {43, 5.9}	—

◆ Service procedure

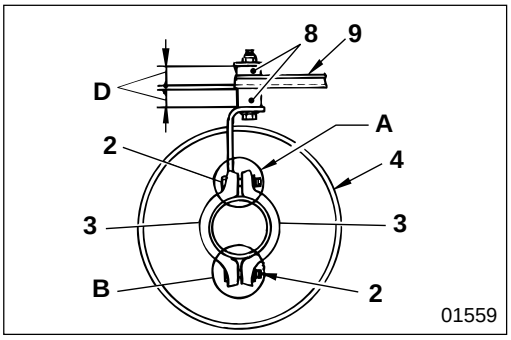

3 8 Installation of clamp and rubber cushion

- Tighten bolt **2** temporally to let clamp **3** move slightly.
- Tighten bolt **2** until it makes contact with area **A** of clamp **3**.
- After tightening area **A**, tighten area **B** using bolt **2**.
- Tighten until dimension **D** of rubber cushion **8** is as follows:
  D : Before tightening 25 mm {0.98 in.}
  After tightening 23 mm {0.91 in.}

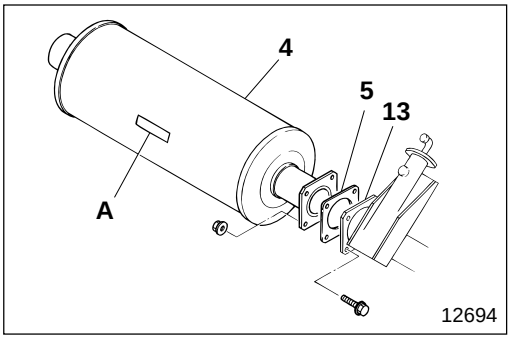

4 Installation of muffler

Install muffler **4** on front pipe assembly **13** in the direction as illustrated.
A : Part No. marked position

MITSUBISHI
FUSO

FH

Service Manual

Group 21
Clutch

Table of Contents

BACK

HOME

MITSUBISHI FUSO TRUCK OF AMERICA, Inc.

Pub No. TWME9502-21

GROUP 21 CLUTCH

SPECIFICATIONS 2

STRUCTURE AND OPERATION 2

TROUBLESHOOTING 5

INSPECTION AND ADJUSTMENT MOUNTED IN VEHICLE
- Clutch Fluid (Brake Fluid) Replacement and Air Bleeding 6
- Clutch Pedal Free Play 8

CLUTCH PEDAL 10

CLUTCH MASTER CYLINDER 14

CLUTCH POWER CYLINDER 16

WORK BEFORE REMOVAL AND INSTALLATION OF CLUTCH BODY 18

CLUTCH BODY 20

CLUTCH CONTROL 30

SPECIFICATIONS/STRUCTURE AND OPERATION

SPECIFICATIONS

Item		Specifications
Clutch	Model	C5M33
Drive type		Strap drive
Clutch disc	Type	Dry, single plate type
Pressure plate	Type	Coil spring type
Control system		Hydraulic pressure type
Clutch master cylinder	Manufacturer	NABCO
Clutch power cylinder	Manufacturer	NABCO

STRUCTURE AND OPERATION

Clutch Control

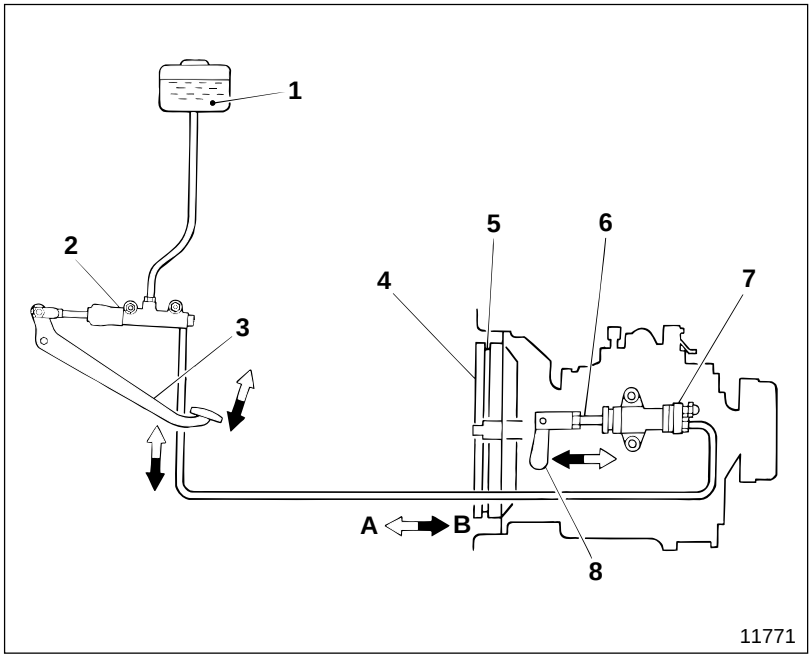

1 Fluid tank
2 Clutch master cylinder
3 Clutch pedal
4 Flywheel
5 Clutch disc
6 Push rod
7 Clutch power cylinder
8 Release fork shaft

A : Engine power transmitted
B : Engine power cut off

Clutch Master Cylinder

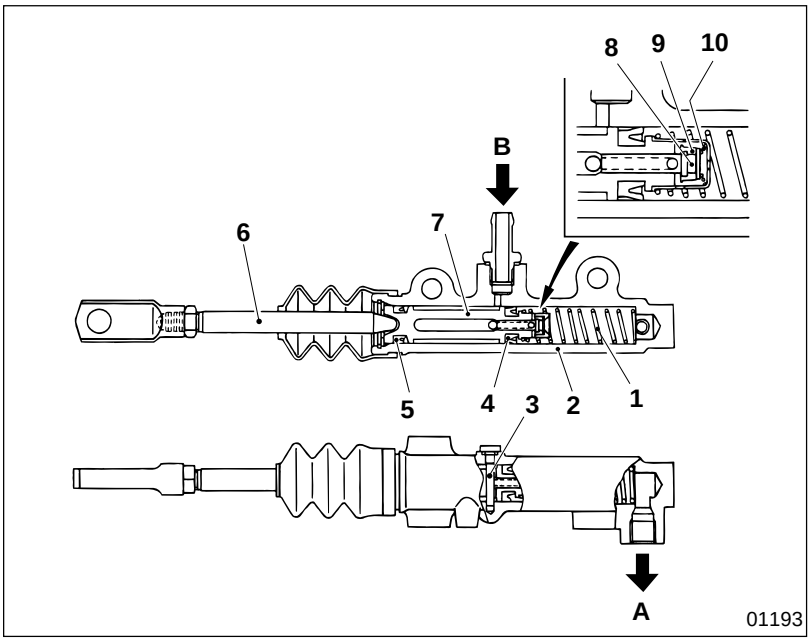

1 Return spring
2 Cylinder
3 Supply valve stopper
4 Primary cup
5 Secondary cup
6 Push rod
7 Piston
8 Supply valve rod
9 Supply valve
10 Supply valve spring

A : To clutch power cylinder
B : From fluid tank

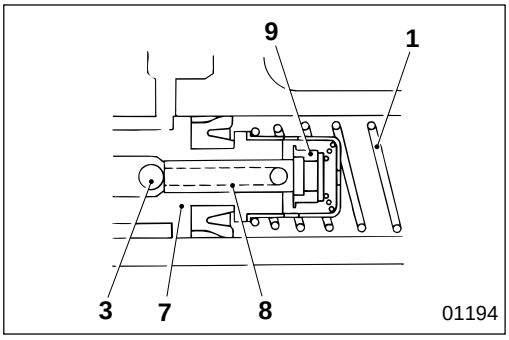

Before clutch pedal is depressed

- As piston **7** is pressed towards the push rod side by return spring **1**, supply valve rod **8** rests against supply valve stopper **3**, and supply valve **9** remains open.
- Thus, the passage between the fluid tank and the clutch is open.

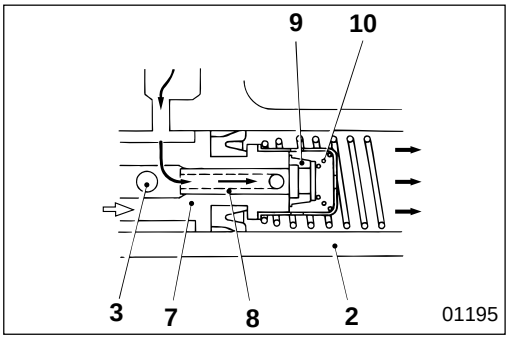

When clutch pedal is depressed

- As push rod **6** pushes piston **7**, supply valve rod **8** moves away from supply valve stopper **3**, and supply valve **9** is closed by the repercussive force of supply valve spring **10**.
- As piston **7** is pressed further, the hydraulic pressure generated within cylinder **2** actuates the clutch power cylinder.
- This results in fluid being supplied in direct proportion to the movement of piston **7**.

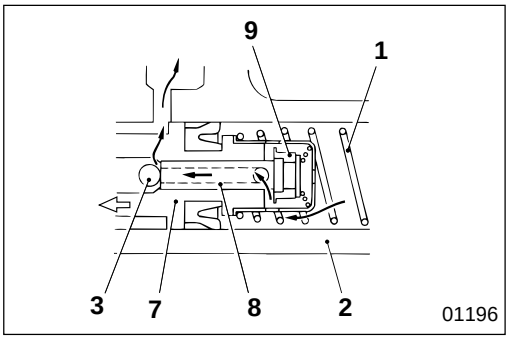

When clutch pedal is released

- As piston **7** is pushed back by the hydraulic pressure from cylinder **2** and the repercussive force of return spring **1**, supply valve rod **8** hits valve stopper **3** and supply valve **9** opens.
- Thus, the fluid in the clutch power cylinder side returns to the fluid tank and the hydraulic pressure drops to zero.

Clutch

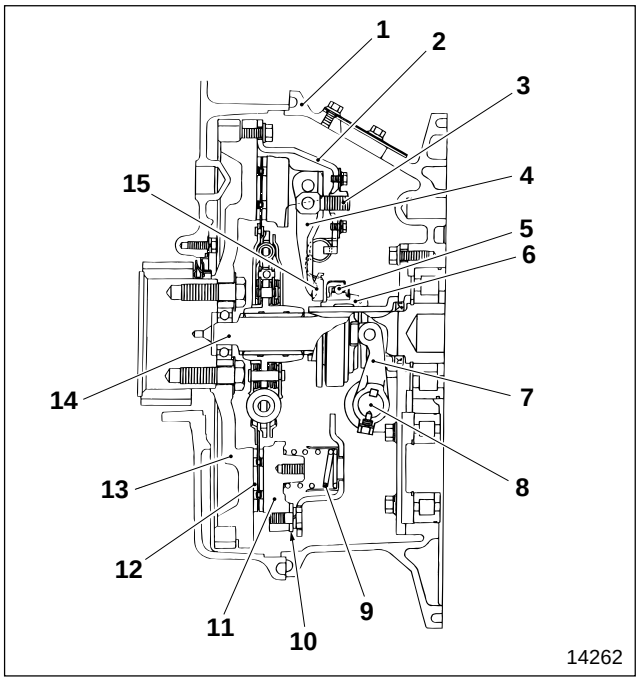

1 Clutch housing
2 Clutch cover
3 Support lever
4 Release lever
5 Release bearing
6 Clutch shifter
7 Release fork
8 Release fork shaft
9 Pressure spring
10 Strap plate
11 Pressure plate
12 Clutch disc
13 Flywheel
14 Drive pinion
15 Release lever plate

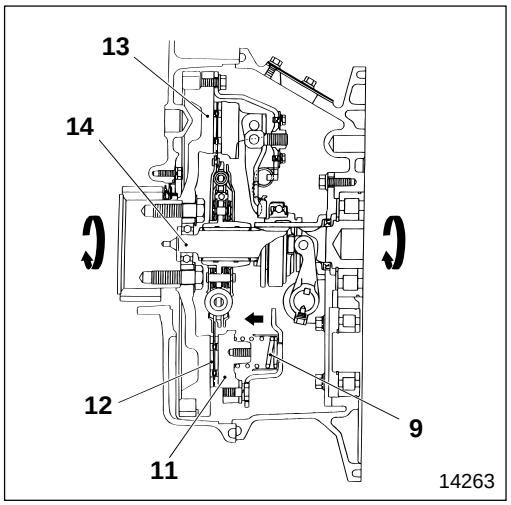

When clutch pedal is released

- Pressure plate **11**, activated by pressure spring **9**, presses clutch disc **12** firmly against flywheel **13**.
- Clutch disc **12** forced against flywheel **13** runs together with the flywheel and transmits power from the engine to transmission drive pinion **14**.

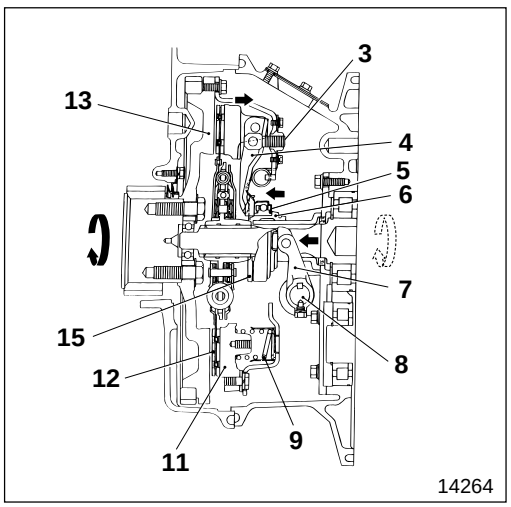

When clutch pedal is depressed

- Hydraulic pressure generated within the clutch master cylinder activates the clutch power cylinder. Thus, release fork shaft **8** actuates release fork **7**, pushing forward release bearing **5** and clutch shifter **6**, which in turn push release lever plate **15** and release lever **4**.
- Release lever **4**, using support lever **3** as a fulcrum, compresses pressure spring **9** and retracts pressure plate **11**, creating a clearance between clutch disc **12** and flywheel **13**, cutting off the transmission of engine power.

Possible causes \ Symptoms		Clutch disengaged but drags	Clutch slips	Clutch does not engage smoothly	Clutch makes noise on disengagement	Clutch makes noise on engagement	Judder when vehicle starting	Remarks
Pressure plate and lever assembly	Release bearing faulty	○			○			
	Release lever heights uneven	○	○	○			○	
	Pressure plate warped or faulty	○	○	○			○	
	Pressure spring fatigued		○	○		○		
	Strap bolts loose						○	
	Strap plate bent				○			
Clutch disc	Disc deformed	○		○			○	
	Disc rivets loose			○			○	
	Disc torsion spring fatigued or fractured		○	○	○	○	○	
	Spline worn	○			○	○	○	
	Spline rusted	○		○				
	Facing worn		○					
	Facing surface hardened		○	○			○	
	Facing oily or greasy		○	○			○	
Clutch pedal	Pedal free play inadequate		○					
	Pedal free play excessive	○						
	Pedal stroke inadequate	○						
	Return spring fatigued		○					
	Pedal friction surfaces faulty			○			○	
Clutch master cylinder	Piston and piston cup sliding movement faulty	○	○	○				
	Spring fatigued	○	○	○				
	Brake fluid port clogged	○	○	○				
Clutch power cylinder	Return spring fatigued	○	○	○				
	Piston and piston cup sliding movement faulty	○	○	○				
	Brake fluid port clogged	○	○	○				
Clutch control	Release bearing faulty						○	
	Clutch shifter sliding movement faulty						○	
	Clutch shifter lubricated incorrectly						○	
	Clutch release fork deformed						○	
Transmission drive pinion spline area worn		○				○		Gr 22
Engine idling speed too slow						○		Gr 13
Engine mounting fatigued							○	Gr 10
Flywheel warped, deformed or stepped wear		○	○	○			○	Gr 11
Flywheel pilot bearing faulty		○			○			
Air mixed in clutch hydraulic system		○						
Clutch hydraulic system leaking		○						

Clutch Fluid (Brake Fluid) Replacement and Air Bleeding

Tightening torque

Unit : N·m {lbf.ft, kgf·m}

Location	Parts to be tightened	Tightening torque	Remarks
1	Air bleeder	25 to 34 {18 to 25, 2.5 to 3.5}	—

Fluid

Location	Points of application	Kinds	Quantity
4	Fluid tank	Brake fluid (SAE J1703f or FMVSS No.116 DOT3)	As required

CAUTION

- **Be careful not to splash brake fluid on related parts as this could damage the paintwork.**
- **Be sure to wipe off brake fluid immediately if you splash it on the paintwork.**
- **You must use new brake fluid (SAE J1703f or FMVSS No. 116 DOT3). Do not add different quality fluid or mineral oil (gas oil, engine oil, gear oil, automatic transmission fluid, etc.) to the clutch system, because this will cause the rubber parts of the clutch system to swell, resulting in faulty clutch operation.**
- **Do not allow foreign particles or water to become mixed into the brake fluid when refilling, because this will cause faulty clutch operation.**
- **If you use a mug for adding brake fluid, keep it solely for that purpose to prevent contamination from different quality fluids or mineral oils.**

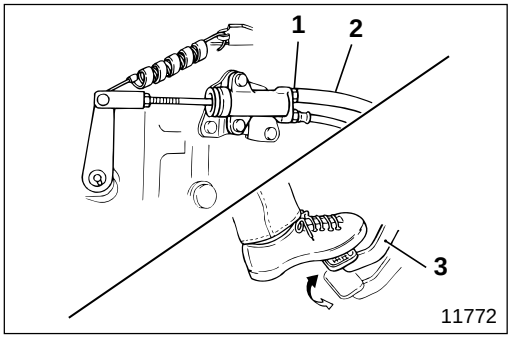

(1) Replacement of brake fluid

- Attach vinyl pipe **2** to air bleeder **1** of the clutch power cylinder.
- Loosen air bleeder **1** and depress clutch pedal **3** several times to drain brake fluid completely.

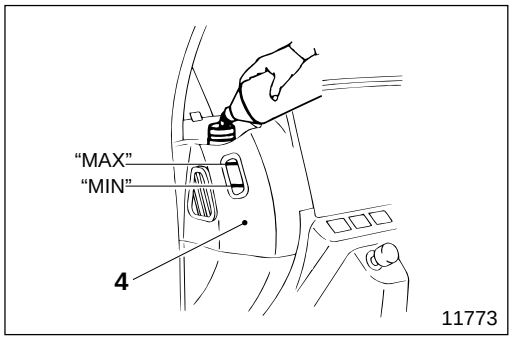

- Supply new brake fluid to the "MAX" level of fluid tank **4**. Depress clutch pedal **3** repeatedly until the old brake fluid discharged from vinyl pipe **2** is replaced by the new brake fluid.

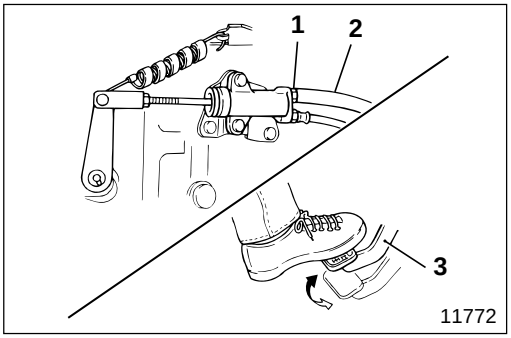

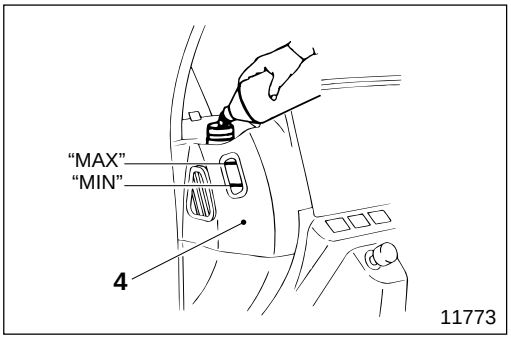

(2) Air bleeding of clutch system

NOTE

Carry out this operation maintaining the brake fluid level in fluid tank 4 between "MAX" and "MIN".

- Attach vinyl pipe **2** to air bleeder **1** of the clutch power cylinder as in the replacement procedure.
- Fill fluid tank **4** with brake fluid, and loosen air bleeder **1** of the clutch power cylinder, then depress clutch pedal **3** continuously.
- Keep depressing clutch pedal **3**, and tighten air bleeder **1** when air is bled completely.
- Depress clutch pedal **3** several times again, then keep it depressed at its fullest extent.
- With the clutch pedal depressed, loosen air bleeder **1** to drain brake fluid containing air. Release the pedal after tightening the air bleeder.
- Repeat this operation until air is no longer present in the fluid being drained.
- When this operation is completed, tighten air bleeder **1** at specified torque.
- Check that brake fluid is at the "MAX" level of fluid tank **4**, and supply new brake fluid if necessary.
- Check for brake fluid leakage from each of the parts with clutch pedal **3** depressed.

Clutch Pedal Free Play

Service standards

Unit : mm {in.}

Location	Maintenance item	Standard value	Limit	Remedy
2	Push rod stroke	3.6 {0.14}	—	Adjust or replace
4	Clutch pedal free play	32 to 44 {1.26 to 1.73}	—	Adjust or replace

Inspect and adjust the free play of the clutch pedal, by noting the stroke of the clutch power cylinder push rod, after the clutch pedal has been correctly adjusted.

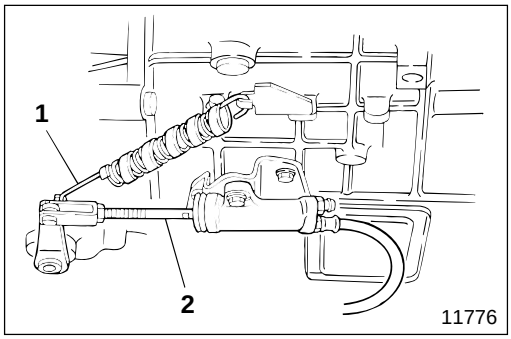

[Inspection]

- Bleed air from the clutch system. P21-7
- Adjust the clutch pedal. P21-11
- Disconnect return spring **1** and check the free play of push rod **2** by hand. If the measured value deviates from the standard value, adjust as follows:

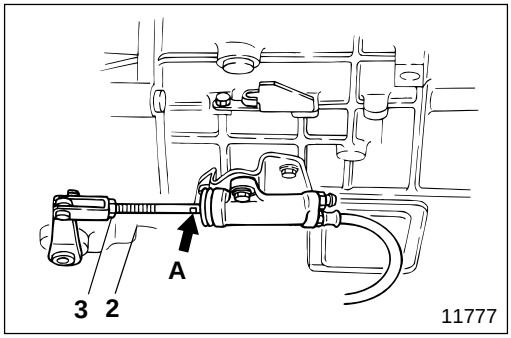

[Adjustment]

- Loosen nut **3** and turn head **A** of push rod **2** to extend the push rod until it stops.
- Then, slacken off head **A** of push rod **2** by the following value and retighten nut **3**.

  Amount of slackening off : Approximately three turns

- If push rod **2** does not return by the above amount, replace the clutch disc because it is worn beyond the limit.

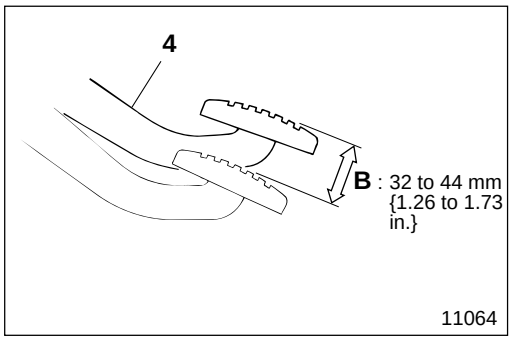

[Confirmation]

Push clutch pedal **4** with your hand until you feel a resistance and measure free play **B**.

If the measured value deviates from the standard value, readjust or replace the clutch disc.

M E M O

CLUTCH PEDAL

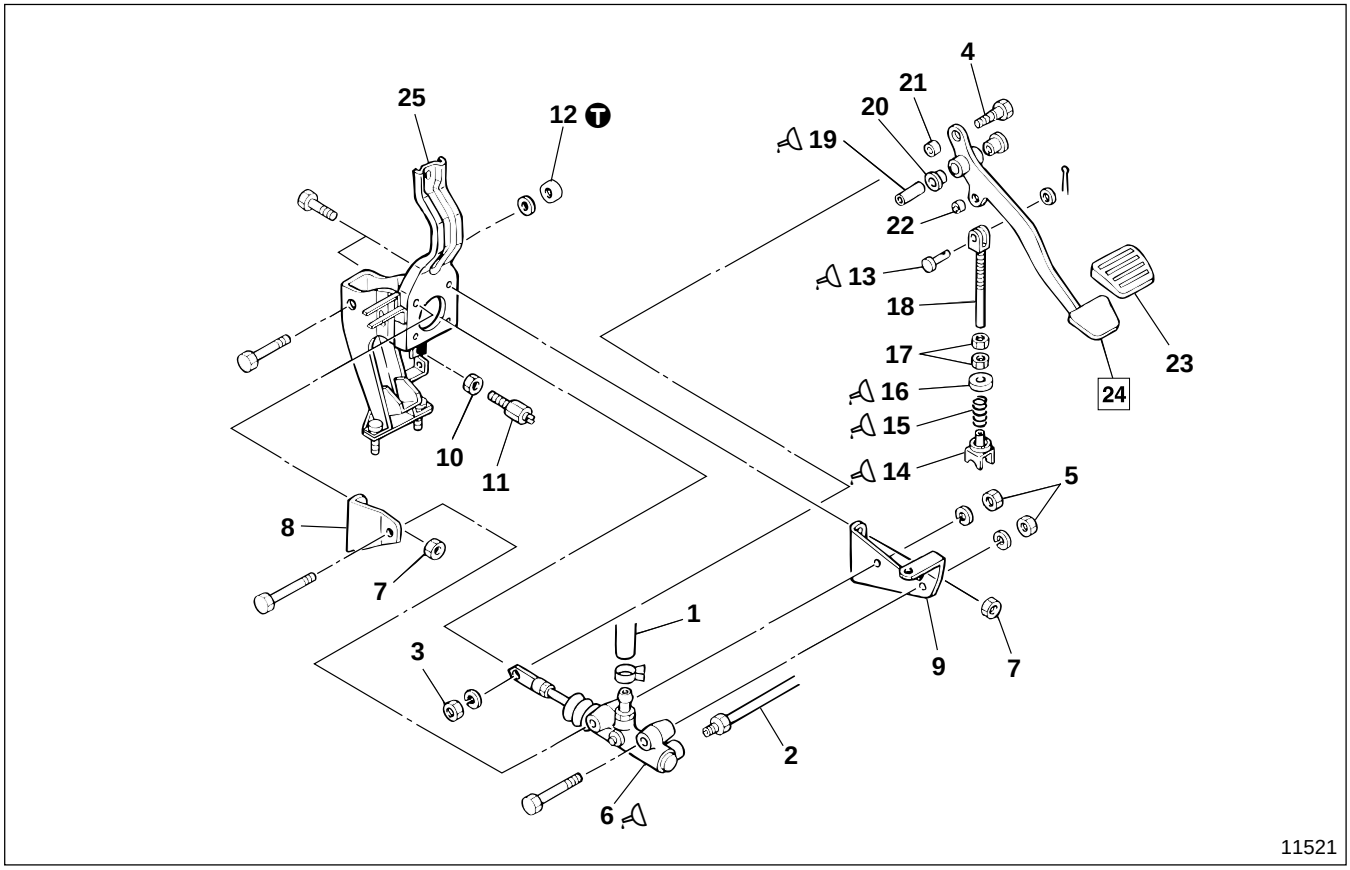

● **Disassembly sequence**

1 Fluid hose
2 Fluid pipe
3 Nut
4 Offset bolt
5 Nut
6 Clutch master cylinder
P21-14
7 Nut
8 Clutch master cylinder bracket, LH
9 Clutch master cylinder bracket, RH
10 Nut
11 Clutch switch
Gr 54
12 Nut
13 Clevis pin
14 Spring holder
15 Return spring
16 Plate
17 Nut
18 Spring assist rod
19 Collar
20 Bushing
21 Bushing
22 Bushing
23 Pedal pad
24 Clutch pedal
25 Clutch pedal support

● **Assembly sequence**

Follow the disassembly sequence in reverse.

● **Adjustment after assembly**

P21-11

Service standards

Unit : mm {in.}

Location	Maintenance item	Standard value (Basic diameter in [ ])	Limit	Remedy
4, 21	Clearance between offset bolt and bushing	[18] 0.06 to 0.36 {[0.71] 0.0024 to 0.014}	—	Replace
15	Installed load of return spring (Installed length 37 {1.46})	185 N {41 lbf, 18.7 kgf}	160 N {36 lbf, 16.5 kgf}	Replace
19, 20	Clearance between collar and bushing	[14] 0.02 to 0.26 {[0.55] 0.00079 to 0.010}	0.3 {0.012}	Replace

Tightening torque

Unit : N·m {lbf.ft, kgf·m}

Location	Parts to be tightened	Tightening torque	Remarks
12	Nut (Clutch pedal mounting)	16.7 to 25.5 {12 to 19, 1.7 to 2.6}	—

Lubricant

Location	Points of application	Kinds	Quantity
6	Offset bolt mounting area	Chassis grease [NLGI No.1 (Ca soap)]	As required
13	Clevis pin	Chassis grease [NLGI No.1 (Ca soap)]	As required
14 to 16	Friction surfaces of spring holder, return spring and plate	Chassis grease [NLGI No.1 (Ca soap)]	As required
19	External surface of collar	Chassis grease [NLGI No.1 (Ca soap)]	As required

◆ Service procedure

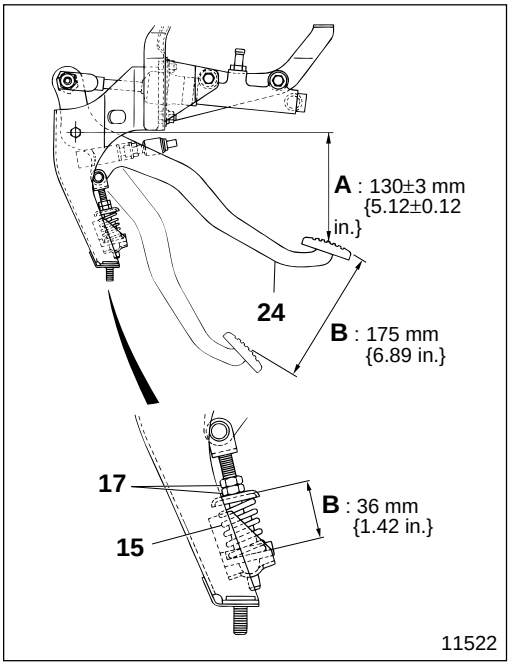

● **Adjustment after assembly**

Adjust return spring **15** to the installed dimension **C** using lock nut **17**, maintaining the installed dimensions **A**, **B** for clutch pedal **24**.

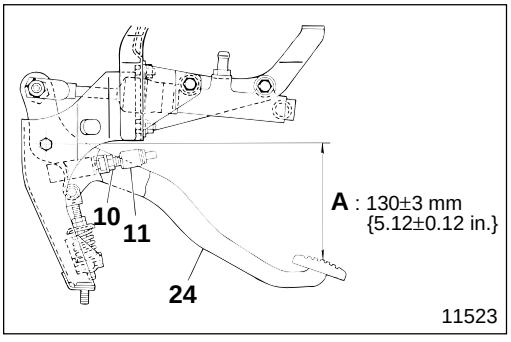

24 **Adjustment of clutch pedal**

- Turn clutch switch **11** to obtain the illustrated dimension **A**, and tighten nut **10**.

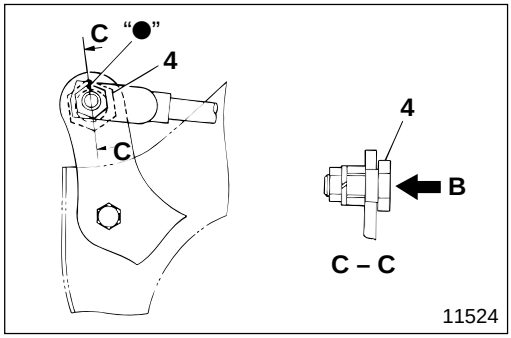

- At this time, temporarily tighten offset bolt **4** at the illustrated position.
  B : "●" Marked side

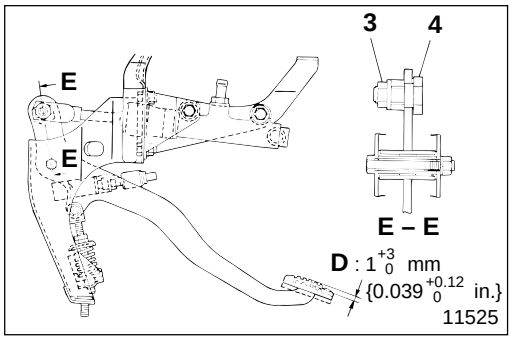

- Then, turn offset bolt **4** to adjust free play **D** of the clutch pedal top to conform to the dimension as illustrated, and tighten using nut **3**.

M E M O

CLUTCH MASTER CYLINDER

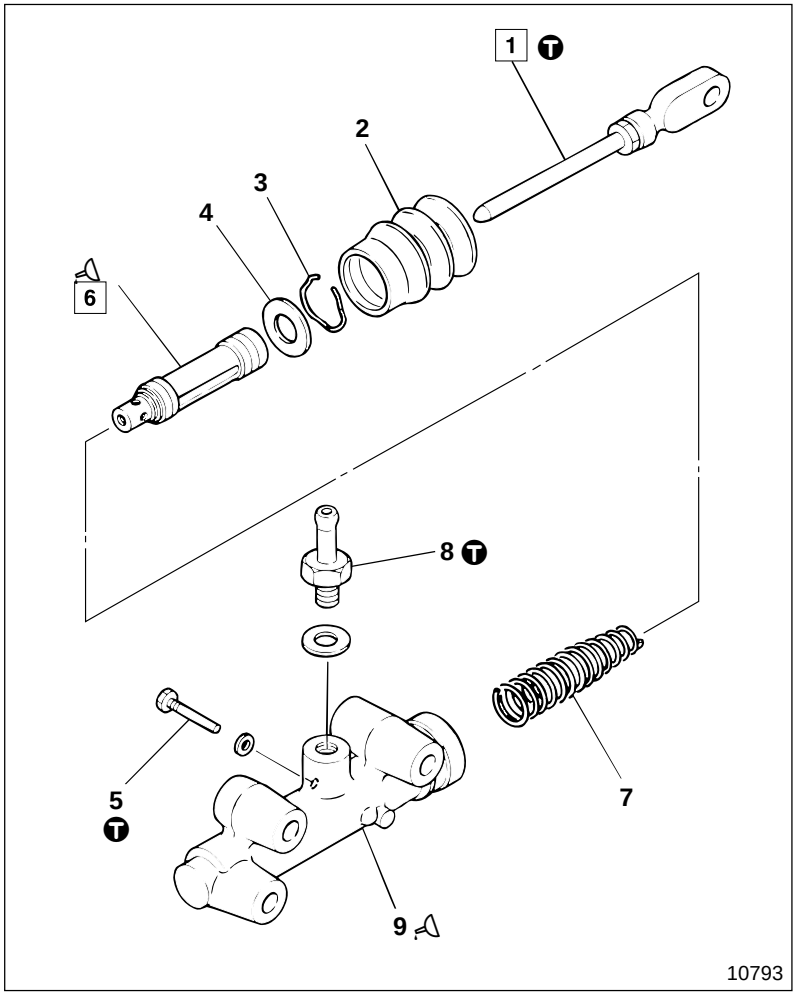

● **Disassembly sequence**

1 Push rod
2 Boot
3 Piston stop ring
4 Piston stop plate
5 Supply valve stopper
6 Piston assembly
7 Return spring
8 Nipple
9 Cylinder

● **Assembly sequence**

Follow the disassembly sequence in reverse.

Repair kit : Piston and boot kit

Service standards

Unit : mm {in.}

Location	Maintenance item	Standard value (Basic diameter in [ ])	Limit	Remedy
6, 9	Clearance between piston assembly and cylinder	[19.05] 0.020 to 0.105 {[0.750] 0.00079 to 0.0041}	0.2 {0.0079}	Replace
7	Free length of return spring	97 {3.82}	92 {3.62}	Replace

Tightening torque

Unit : N·m {lbf.ft, kgf·m}

Location	Parts to be tightened	Tightening torque	Remarks
1	Push rod (Lock nut tightening)	9.8 to 14.7 {7.2 to 11, 1.0 to 1.5}	—
5	Supply valve stopper	1.47 to 2.94 {1.1 to 2.2, 0.15 to 0.3}	—
8	Nipple	24.5 to 34.3 {18 to 25, 2.5 to 3.5}	—

Lubricant

Location	Points of application	Kinds	Quantity
6, 9	Friction surfaces of piston assembly and cylinder body	Rubber grease	As required

◆ Service procedure

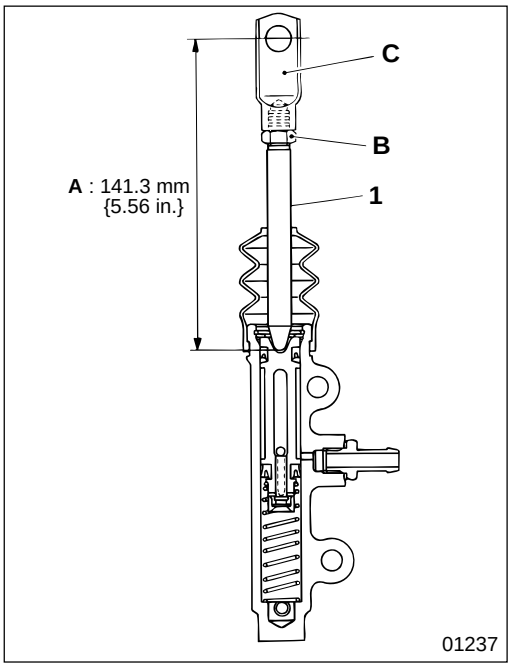

1 Adjustment of push rod length

If dimension **A**, as illustrated, deviates from the standard value, loosen lock nut **B** of push rod **1**, and adjust the length by turning head **C**.
After adjustment, tighten the lock nut at specified torque.

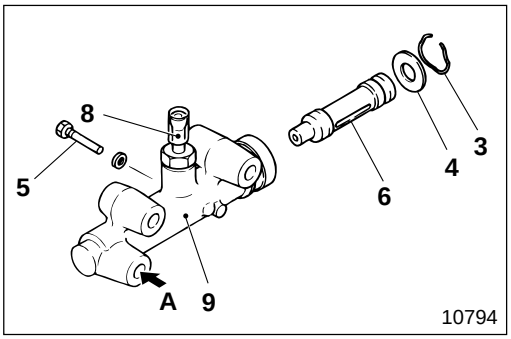

6 Piston assembly

[Removal]

- Remove piston stop ring **3**, piston stop plate **4** and supply valve stopper **5**.
- Block nipple **8** of cylinder **9**, and apply compressed air from **A** as illustrated to remove piston assembly **6**.

WARNING⚠

You must apply compressed air gradually when you remove piston assembly 6. If you applied compressed air strongly at one time, the piston assembly would be violently ejected.

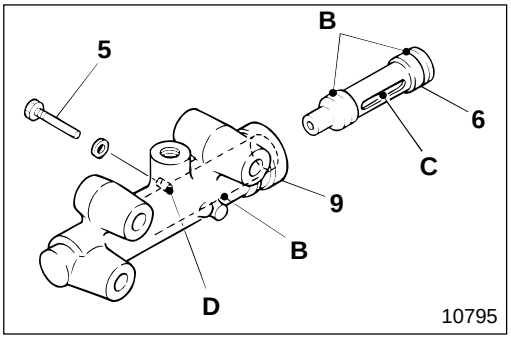

[Installation]

- Before installing the assembly, apply rubber grease to friction surface **B** of piston assembly **6** and cylinder **9**.
- To install the piston, align groove **C** of piston assembly **6** with hole **D** of cylinder **9**, then insert valve stopper **5** to hold the piston in place.

CLUTCH POWER CYLINDER

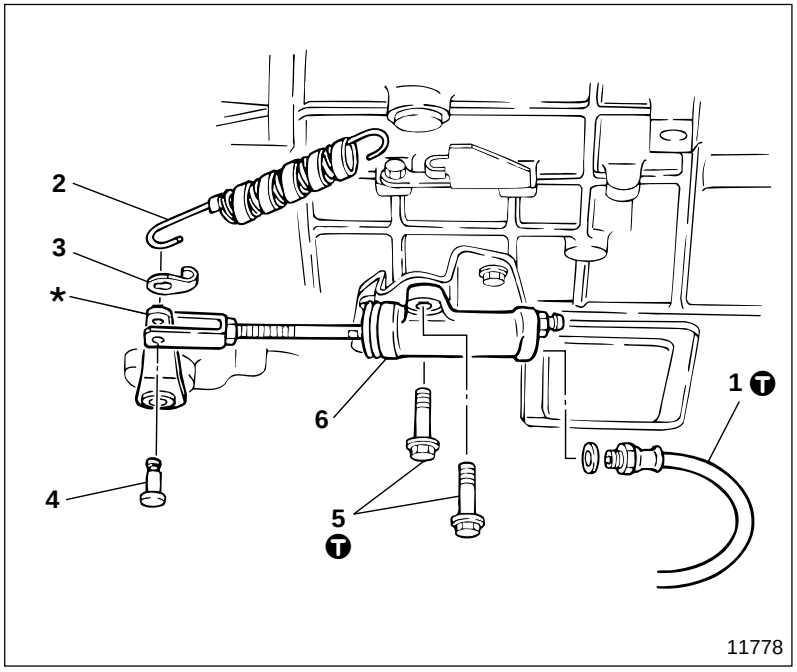

● **Removal sequence**

1 Fluid hose
2 Return spring
3 Return spring claw
4 Clevis pin
5 Bolt
6 Clutch power cylinder assembly
📖 P21-17

***** : Clutch release fork shaft

CAUTION⚠

Make sure you plug the hose opening after disconnection to prevent fluid from running out.

● **Installation sequence**

Follow the removal sequence in reverse.

T Tightening torque

Unit : N·m {lbf.ft, kgf·m}

Location	Parts to be tightened	Tightening torque	Remarks
1	Tightness of fluid hose connection	21 to 31 {15 to 23, 2.1 to 3.2}	—
5	Bolt (Clutch power cylinder assembly mounting)	47 {35, 4.8}	—

Clutch Power Cylinder Assembly

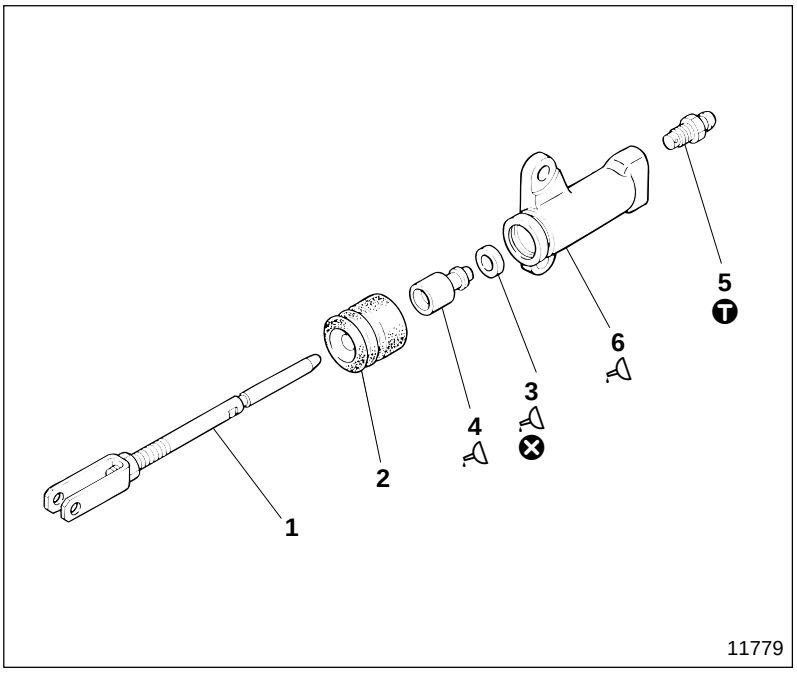

● **Disassembly sequence**

1 Push rod
2 Boot
3 Piston cup
4 Piston
5 Air bleeder
6 Cylinder

⊗ : Non-reusable parts

● **Assembly sequence**

4→3→
6→5→2→1

Service standards

Unit : mm {in.}

Location	Maintenance item	Standard value (Basic diameter in [ ])	Limit	Remedy
4, 6	Clearance between cylinder and piston	[20.64] 0.04 to 0.125 {[0.81] 0.0016 to 0.0049}	0.24 {0.0094}	Replace

Ⓣ Tightening torque

Unit : N·m {lbf.ft, kgf·m}

Location	Parts to be tightened	Tightening torque	Remarks
5	Air bleeder	25 to 34 {18 to 25, 2.5 to 3.5}	—

Lubricant

Location	Points of application	Kinds	Quantity
3	Piston cup circumference	Rubber grease	As required
4	Friction surface of piston	Rubber grease	As required
6	Cylinder bore	Rubber grease	As required

WORK BEFORE REMOVAL AND INSTALLATION OF CLUTCH BODY

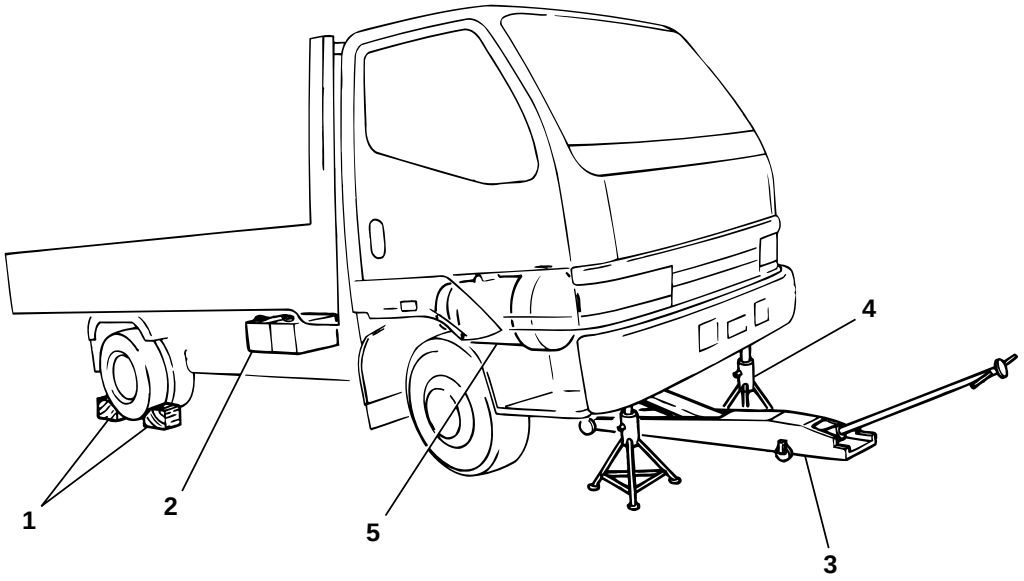

14118

● **Work sequence before removal**

1 Place wheel chocks.
2 Disconnect the negative battery cable. Gr 54
3 Jack up the front axle using a garage jack.
4 Support the front frame on rigid racks.
5 Remove the transmission. Gr 22

WARNING

- **Since the parking brake will be removed, naturally it cannot be used. Therefore, you must chock the wheels securely so the vehicle does not move.**
- **Do not remove the chocks until the entire operation is completed.**
- **Supporting a vehicle on a garage jack only is extremely dangerous, so always support the frame on rigid racks.**
- **Leave the garage jack and rigid racks in place until the entire operation is completed. Never remove them during the operation.**

CAUTION

Keep the transmission in neutral throughout the operation.

● **Work sequence after installation**

Follow the work sequence before removal in reverse.

M E M O

CLUTCH BODY

Clutch Disc

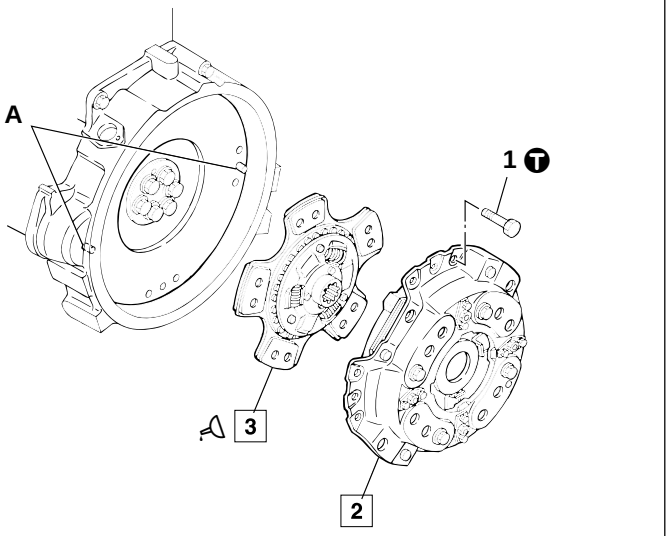

● **Removal sequence**

1 Bolt
2 Pressure plate and lever assembly
P21-24
3 Clutch disc

A : Positioning pins (two points)

WARNING

Be careful when you handle pressure plate and lever assembly 2 because it is rather heavy.

● **Installation sequence**

Follow the removal sequence in reverse.

CAUTION

Be careful not to get oily substances on clutch disc 3 surfaces because this will cause the clutch to slip.

Service standards

Unit : mm {in.}

Location	Maintenance item		Standard value	Limit	Remedy
3	Clutch disc	Lateral runout	1.2 {0.047} or less	—	Replace
		Vertical runout	1.2 {0.047} or less	1.8 {0.071}	Replace
		Play in revolving direction at spline	0.06 to 0.21 {0.0024 to 0.0083}	0.5 {0.02}	Replace
		Depth from facing surface to cup	0.79 to 1.43 {0.031 to 0.056}	0.2 {0.0079}	Replace

Tightening torque

Unit : N·m {lbf.ft, kgf·m}

Location	Parts to be tightened	Tightening torque	Remarks
1	Bolt (Pressure plate and lever assembly mounting)	32 to 49 {24 to 36, 3.3 to 5.0}	—

Lubricant

Location	Points of application	Kinds	Quantity
3	Spline of clutch disc	Molybdenum disulfide grease [NLGI No.2 (Li soap)]	3.2 to 4.2 g {0.11 to 0.15 oz}

Special tools

Unit : mm {in.}

Location	Tool name and shape	Part No.	Application
2	Stopper bolt Washer 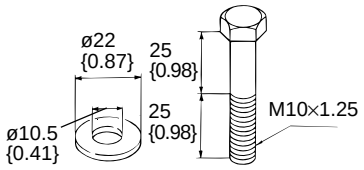 02378	ME521425 < Stopper bolt > ME521426 < Washer >	Removal and installation of pressure plate and lever assembly
3	Clutch alignment arbor 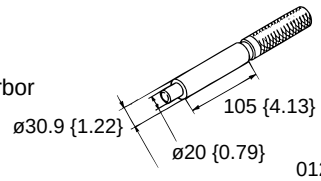 01270	MH061986	Holding of clutch disc

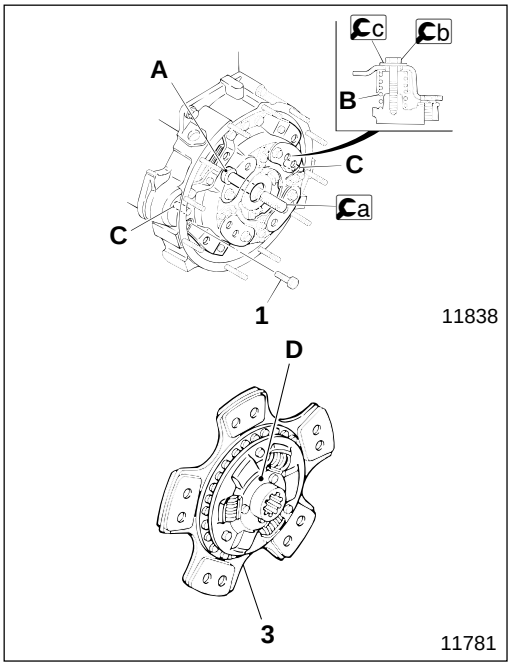

◆ Service procedure

2 Removal and installation of pressure plate and lever assembly

- Insert Ca clutch alignment arbor into flywheel pilot bearing **A** to hold clutch disc **3**.
- Compress pressure springs **B** using Cb stopper bolt and Cc washer, then remove bolt **1**.
- For installation, follow the removal sequence in reverse.
- Install clutch disc **3** so that part No. **D** is visible.
- Tighten bolts **1** gradually, in diagonal order, to specified torque.

CAUTION

- **Make sure you use Cb stopper bolts and Cc washers (four points) when you remove bolt 1. If you do not, pressure springs B might force up pressure plate and lever assembly 2, damaging the strap plate, and separate and fall off knock pin C.**
- **Remember to remove Cb stopper bolts and Cc washers after installation (four points). If the stopper bolts and washers are left on, the clutch will not engage.**

NOTE

Clean flywheel contact surface of clutch disc 3 before installing pressure plate and lever assembly 12.

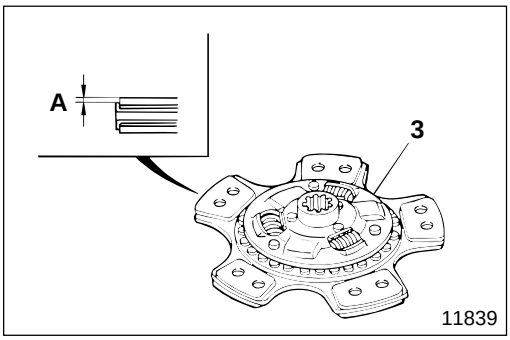

3 Clutch disc

(1) Height of facing

Measure illustrated dimension **A** of clutch disc **3**. If the measured value is lower than the limit, replace the clutch disc.

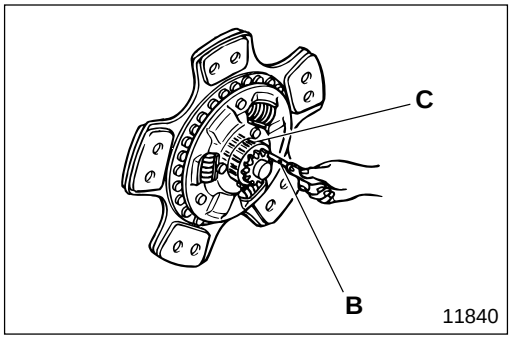

(2) Play in direction of revolution

- First, reshape feeler gauge **B** for insertion into drive pinion spline **C**, and measure play at the spline.
- If the measured value is higher than the limit, replace clutch disc **3** or the drive pinion.
- Carry out the same measurement on new clutch disc **3**. If the measured value is higher than the limit, replace the drive pinion.

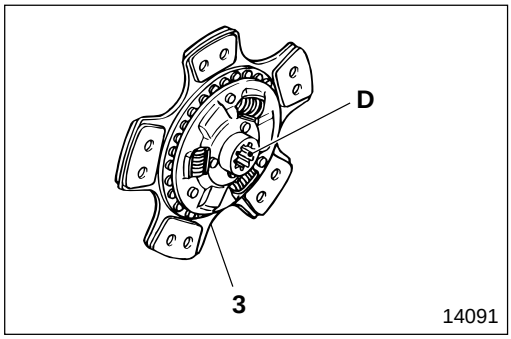

(3) Applying grease

Apply grease evenly to spline **D** and the entire tooth surface of clutch disc **3**. Apply grease to the grease groove of spline up to its large diameter.

CAUTION

Be careful not to apply too much grease because excessive grease causes grease leakage from the spline D and makes the clutch slippery.

M E M O

CLUTCH BODY

Pressure Plate and Lever Assembly

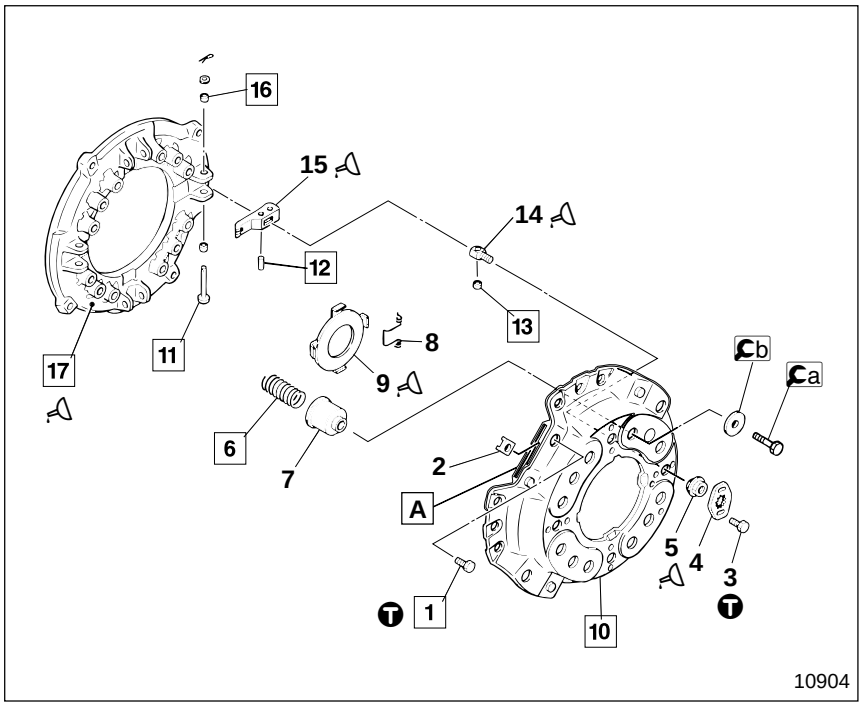

● **Work before disassembly**

P21-26

● **Disassembly sequence**

1 Strap bolt
2 Washer
3 Bolt
4 Lock plate
5 Support nut
6 Pressure spring
7 Pressure spring cap
8 Return spring
9 Release lever plate
10 Clutch cover
11 Release lever pin
12 Support lever pin
13 Bushing
14 Support lever
15 Release lever
16 Bushing
17 Pressure plate

A : Strap plate
a : Stopper bolt
b : Washer

NOTE

Do not remove bushings 13, 16 unless they are faulty.

● **Assembly Sequence**

Follow the disassembly sequence in reverse.
Repair kit : Clutch release lever kit

● **Inspection and adjustment after assembly**

P21-26

Service standards

Unit : mm {in.}

Location	Maintenance item		Standard value (Basic diameter in [ ])	Limit	Remedy
1, A	Clearance between strap bolt and strap plate		0.01 to 0.16 {0.00039 to 0.0063}	0.3 {0.012}	Replace
6	Pressure spring	Installed load (Installed length 49.1 {1.93})	885 N {200 lbf, 90.2 kgf}	750 N {170 lbf, 76.7 kgf}	Replace
		Tilt	2.9 {0.11} or less	5.0 {0.20}	Replace
9	Height of release lever plate		53.8±0.7 {2.12±0.028}	Difference between any two: 0.5 {0.020} or less	Adjust
11, 16	Clearance between release lever pin and bushing		[10] 0.02 to 0.11 {[0.39] 0.00079 to 0.0043}	0.4 {0.016}	Replace
12, 13	Clearance between support lever pin and bushing		[10] 0.02 to 0.12 {[0.39] 0.00079 to 0.0047}	0.4 {0.016}	Replace
17	Pressure plate	Thickness	23.6±0.1 {0.93±0.0039}	21 {0.83}	Replace
		Flatness	0.05 {0.0020} or less	0.2 {0.0079}	Correct or replace
		Inner diameter of strap bolt fitting hole	10.2 to 10.25 {0.402 to 0.404}	10.5 {0.41}	Replace

Tightening torque

Unit : N·m {lbf.ft, kgf·m}

Location	Parts to be tightened	Tightening torque	Remarks
1	Strap bolt (Strap plate mounting)	39 to 59 {29 to 43, 4 to 6}	—
3	Bolt (Lock plate mounting)	5.9 to 7.8 {4.3 to 5.8, 0.6 to 0.8}	—

Lubricant

Location	Points of application	Kinds	Quantity
5	Thread area and spherical surfaces of support nut	Anti-seizure compound	As required
9, 15	Friction surfaces of release lever plate and release lever	Molybdenum disulfide grease [NLGI No.2 (Li soap)]	As required
14, 15	Friction surfaces of support lever and release lever	Molybdenum disulfide grease [NLGI No.2 (Li soap)]	As required
15, 17	Friction surfaces of release lever and pressure plate	Molybdenum disulfide grease [NLGI No.2 (Li soap)]	As required

Special tools

Unit : mm {in.}

Location	Tool name and shape	Part No.	Application
—	Stopper bolt Washer 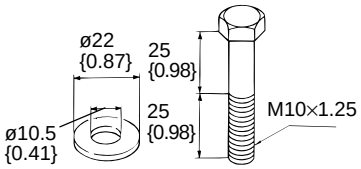 02378	ME521425 < Stopper bolt > ME521426 < Washer >	Disassembly and assembly of pressure plate and lever assembly
9	Clutch master plate 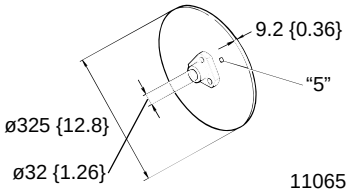 11065	MH062291	Adjust release lever heights
	Clutch alignment arbor 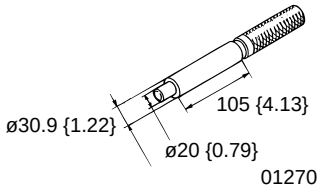 01270	MH061986	Holding of clutch disc
10	Clutch installer 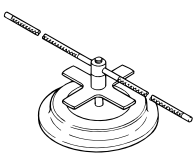 01277	MH061051	Removal and installation of clutch cover

◆ Service procedure

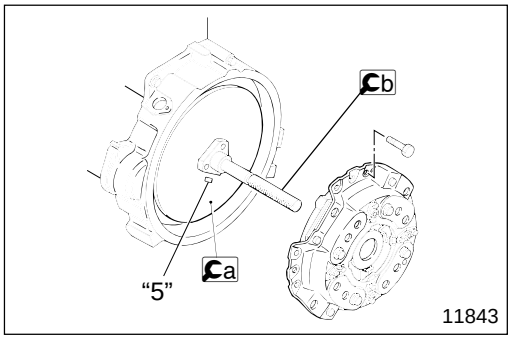

● **Work before disassembly**

Put alignment marks on all parts before disassembly.

● **Inspection and adjustment after assembly**

(1) Measurement of release lever height

- Install the pressure plate and lever assembly using Ca clutch master plate and Cb clutch alignment arbor in place of the clutch disc.
- Install Ca clutch master plate so that identification mark "**5**" is visible.

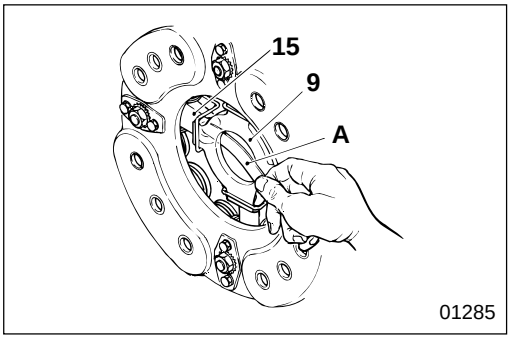

- Make certain that the clearance between release lever **15** and release lever plate **9** is such that a 0.05 mm {0.0020 in.} feeler gauge **A** cannot be inserted between them.
  If there is excessive clearance, press in strongly using your fingers, and return slowly to lessen the clearance.

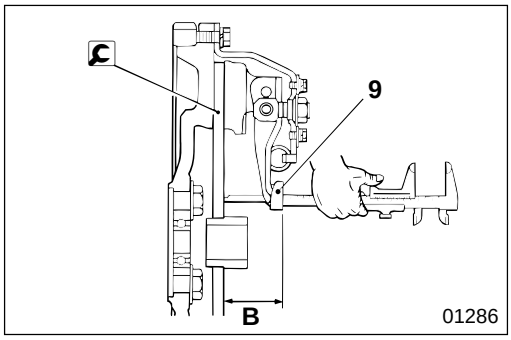

- Measure dimension **B**, C clutch master plate to upper surface of release lever plate **9** (at four points).
  If the measured value does not conform to the standard value, adjust as explained below. Note that even if the measured value is within the standard value, adjustment is necessary if the difference between any two points is higher than 0.5 mm {0.020 in.}.

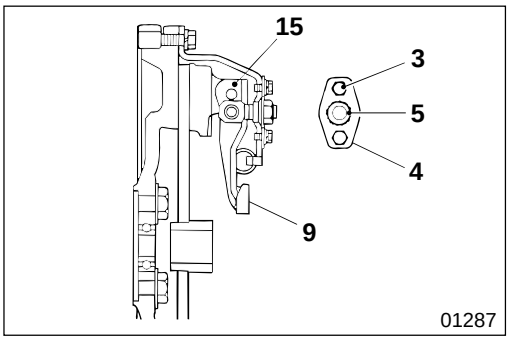

(2) Adjustment of release lever height

Remove bolt **3** and lock plate **4**, then turn support nut **5** to adjust.
After adjustment, install lock plate **4**, then lock support nut **5**, and check the height of release lever plate **9**.

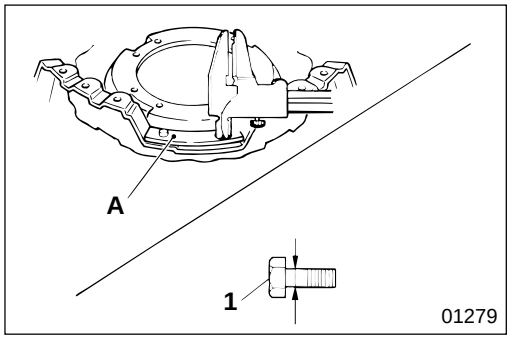

1	A	Clearance between strap bolt and strap plate

If the measured value is higher than the limit, replace the faulty parts.
A : Strap plate

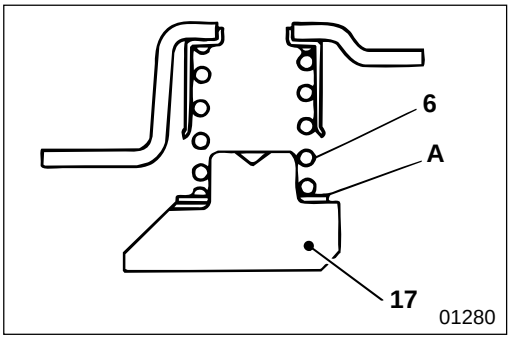

6 Installation of pressure spring

When pressure plate **17** has been corrected by grinding, place adjusting washer **A** equivalent to the correction depth between the plate and pressure spring **6**.

Amount of correction made	Thickness of washers and quantity
Less than 1 mm {0.039 in.}	Not required
1 to 2 mm {0.039 to 0.079 in.}	1×1.2 mm {0.047 in.}
2 to 3 mm {0.079 to 0.12 in.}	2×1.2 mm {0.047 in.}, or 1×2.3 mm {0.091 in.}

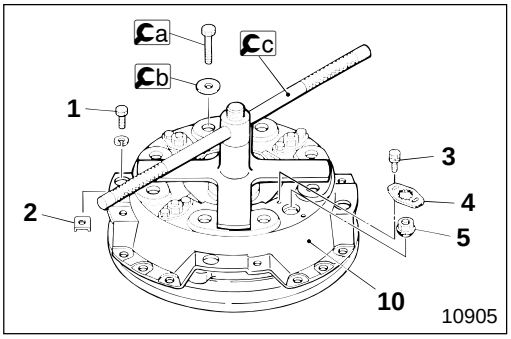

10 Removal and installation of clutch cover

- Compress pressure spring **6** using c clutch installer, and remove a stopper bolt, b washer, strap bolt **1**, washer **2**, bolt **3**, lock plate **4** and support nut **5**.
- Gradually loosen c clutch installer until pressure spring **6** is fully extended, then remove clutch cover **10**.
- For installation, follow the removal procedure in reverse.

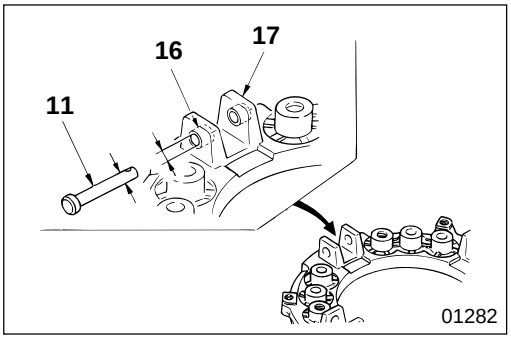

11 16 Clearance between release lever pin and bushing

If the measured value is higher than the limit, replace the faulty parts.

NOTE

Measure the bore of bushing 16 as press-fitted in pressure plate 17.

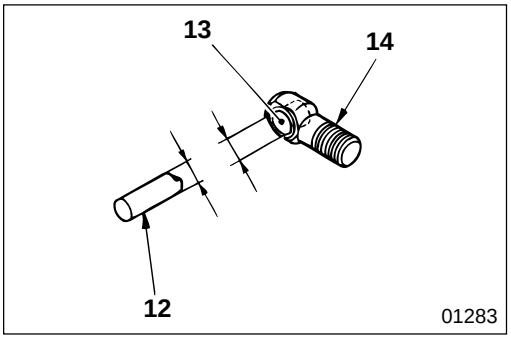

12 13 Clearance between support lever pin and bushing

If the measured value is higher than the limit, replace the faulty parts.

NOTE

Measure the bore of bushing 13 as press-fitted in support lever 14.

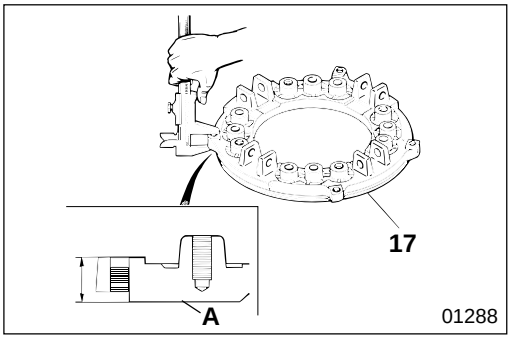

17 Pressure plate

(1) Thickness

Measure friction surface **A** of pressure plate **17** (measuring position must be within the maximum and minimum diameters), and if the measured value is lower than the limit, replace the pressure plate.

Maximum diameter	320 mm {12.6 in.}
Minimum diameter	220 mm {8.66 in.}

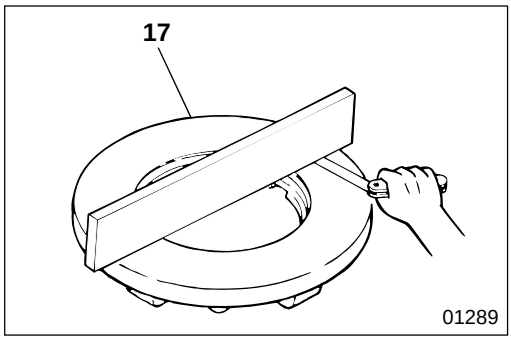

(2) Flatness

If the measured value is higher than the limit, replace pressure plate **17**.

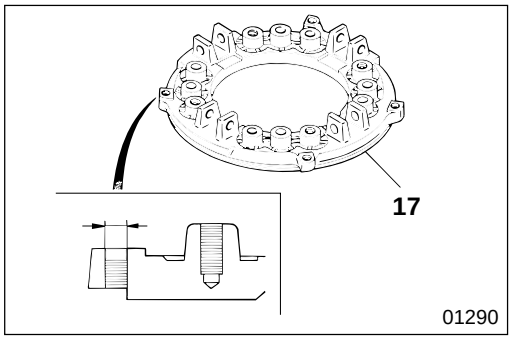

(3) Strap bolt fitting hole inner diameter

If the measured value is higher than the limit, replace pressure plate **17**.

M E M O

CLUTCH CONTROL

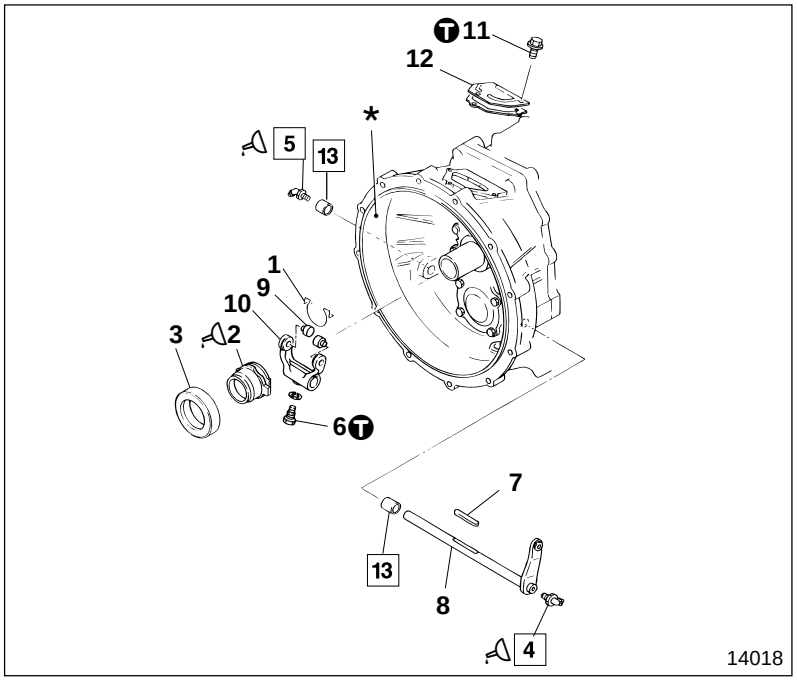

● **Disassembly sequence**

1 Return spring
2 Clutch shifter
3 Release bearing
4 Grease nipple
5 Grease nipple
6 Set screw
7 Key
8 Release fork shaft
9 Cam follower
10 Release fork
11 Bolt
12 Cover
13 Needle roller bearing

***** : Clutch housing
Gr 22

NOTE

Do not remove release bearing 3 or needle roller bearing 13 unless they are faulty.

● **Assembly sequence**

Follow the disassembly sequence in reverse.

Tightening torque

Unit : N·m {lbf.ft, kgf·m}

Location	Parts to be tightened	Tightening torque	Remarks
6	Set screw	21 {15, 2.1}	—
11	Bolt (Clutch housing cover mounting)	9.8 to 15 {7.2 to 11, 1.0 to 1.5}	—

Lubricant

Location	Points of application	Kinds	Quantity
2	Pack the clutch shifter	Wheel bearing grease [NLGI No.2 (Li soap)]	As required
4, 5	Supply via grease nipple	Wheel bearing grease [NLGI No.2 (Li soap)]	As required

Special tools

Unit : mm {in.}

Location	Tool name and shape	Part No.	Application
13	Needle roller bearing installer 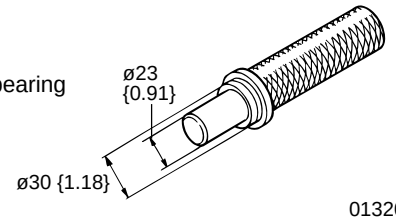	03726-83000	Installation of needle roller bearing

◆ Service procedure

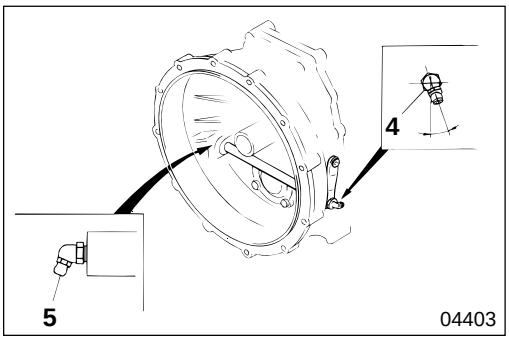

4 **5** **Installation of grease nipple**

NOTE

Install grease nipple 4, 5 so that it faces the direction as illustrated.

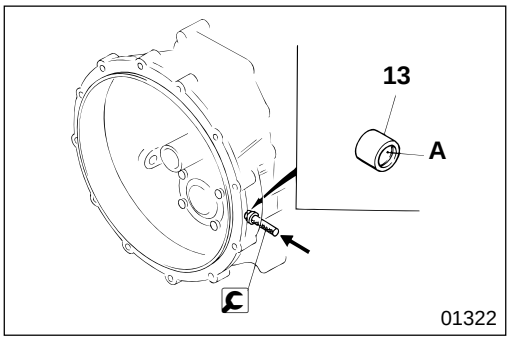

13 **Installation of needle roller bearing**

Install needle roller bearing **13** with yellow sticker **A** facing outside.

CAUTION

Do not damage the bearing by hitting it directly with a hammer during installation.

MITSUBISHI FUSO

BACK HOME

FH

Service Manual

Group 22 - Manual Transmission

Group 22 - <M050S5, S6> '00 Minor Change

MITSUBISHI FUSO TRUCK OF AMERICA, Inc.

Pub No. TWME9502-00

MITSUBISHI
FUSO

FH

Service Manual

Group 22
Manual Transmission
< M050S5, S6 >

'00 Minor Change

Table of Contents

MITSUBISHI FUSO TRUCK OF AMERICA, Inc.

BACK HOME

Pub No. TWME9502-422

GROUP 22 MANUAL TRANSMISSION < M050S5, S6 >

SPECIFICATIONS ..... 22 - 2

STRUCTURE AND OPERATION ..... 22 - 3

TROUBLESHOOTING ..... 22 - 9

WORK BEFORE REMOVAL AND INSTALLATION OF TRANSMISSION ASSEMBLY ..... 22 - 10

REMOVAL AND INSTALLATION OF TRANSMISSION ASSEMBLY ..... 22 - 12

GEAR SHIFTER UPPER AND INTERLOCK PLATE ..... 22 - 15

EXTENSION HOUSING, REAR COVER AND PARKING BRAKE ASSEMBLY ..... 22 - 20

6TH GEAR < S6 > AND REVERSE IDLER GEAR ..... 22 - 24

TRANSMISSION BODY ..... 22 - 32

DRIVE PINION ASSEMBLY ..... 22 - 46

MAINSHAFT ASSEMBLY ..... 22 - 48

COUNTERSHAFT ASSEMBLY ..... 22 - 56

TRANSMISSION CONTROL ..... 22 - 60

SPECIFICATIONS

Item		Specifications	
Mode of control		Floor shift remote control	
Transmission model		M050S5	M050S6
Gear ratio	1st	6.875	6.523
	2nd	4.189	3.975
	3rd	2.311	2.193
	4th	1.409	1.336
	5th	1.000	1.000
	6th	—	0.803
	Reverse	6.875	6.523
Oil	Engine oil	Long period of high-speed driving : API CC SAE30 or SAE40 : API CC/SF SAE30 or SAE40	
	Quantity L {qts}	5.4 {5.7}	6.5 {6.9}
Mass	kg {lb}	122 {270}	137 {300}

Transmission

< S5 >

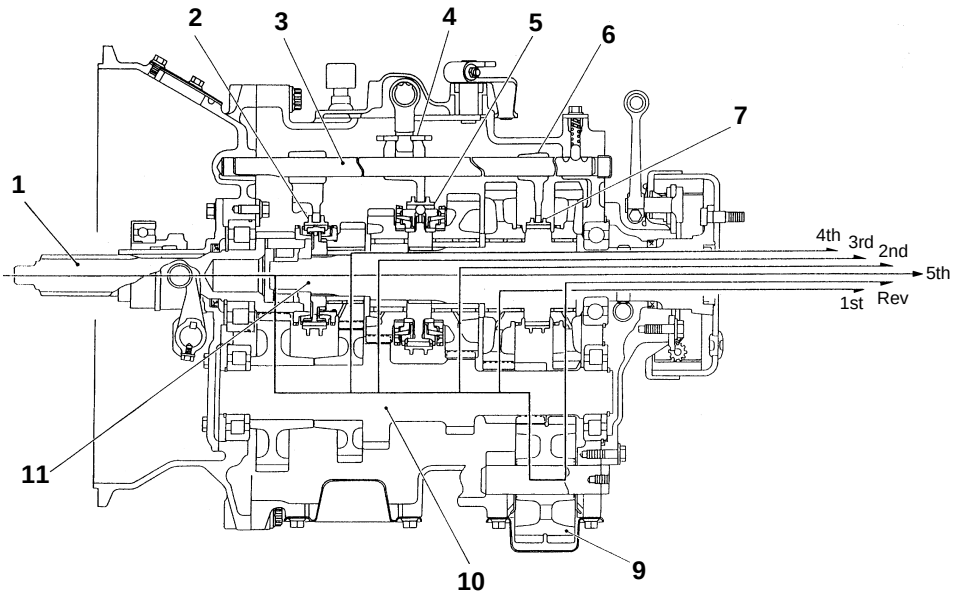

37122

< S6 >

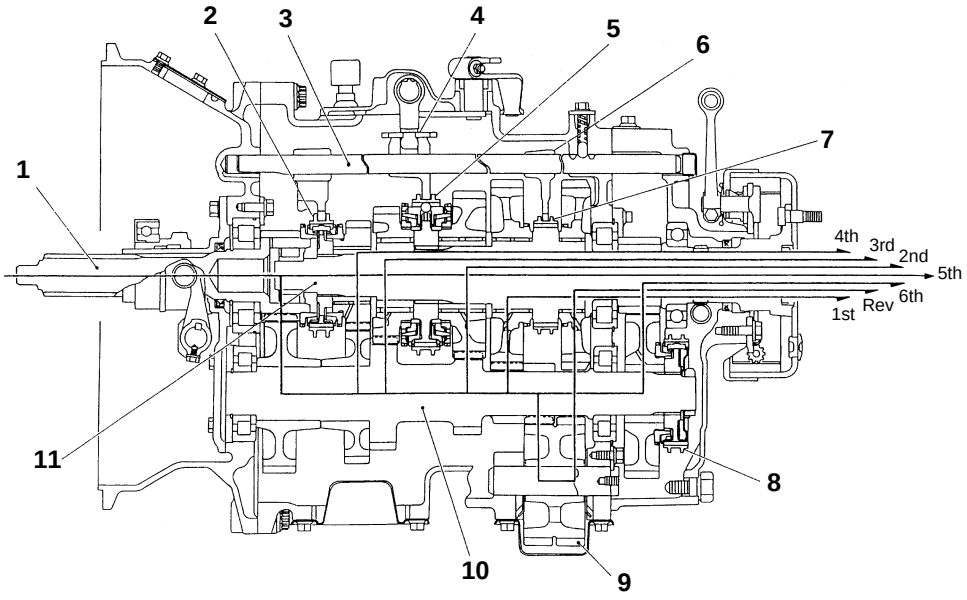

36021

1 Drive pinion
2 4th and 5th synchronizer assembly
3 Shift rail
4 Interlock mechanism
5 2nd and 3rd synchronizer assembly
6 Shift fork
7 1st and reverse constant mesh assembly
8 6th synchronizer assembly < S6 >
9 Reverse idler gear
10 Countershaft
11 Mainshaft

The transmission changes revolution and torque generated by the engine into those that match the vehicle's power requirement (driving force). Revolution and torque are increased or decreased by making a selection from several sets of engaged gears. The transmission uses an interlock mechanism to avoid double engagement.

Synchromesh Mechanism

This vehicle has two synchromesh mechanisms, a single cone type, and a double cone type, and uses the key system. The single or double cone type is used depending on the gear positions as shown below:

Synchromesh type	Parts used
Single cone type	4th, 5th, 6th
Double cone type	2nd and 3rd

Single Cone Type

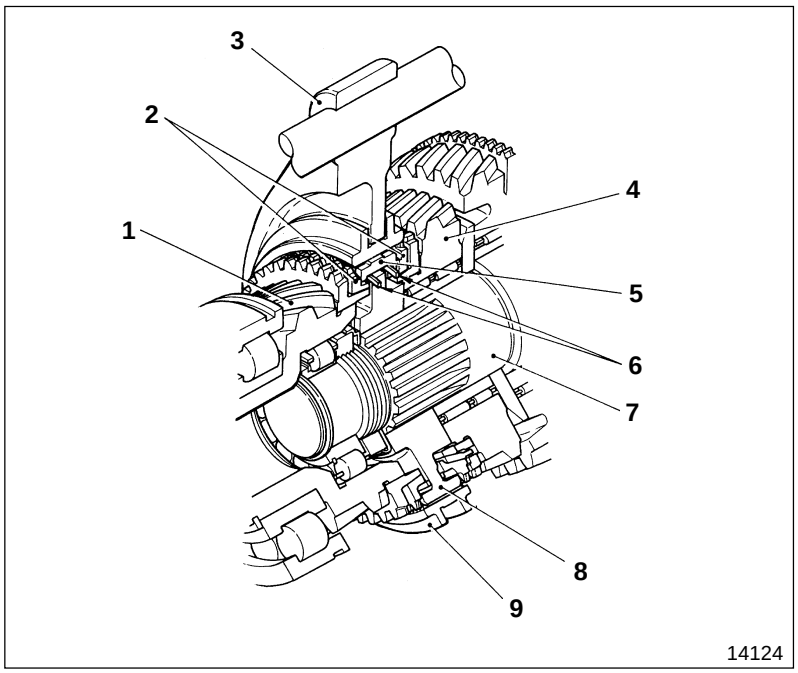

1 Drive pinion
2 Synchronizer ring
3 4th and 5th shift fork
4 4th gear
5 Shifting key
6 Shifting key spring
7 Mainshaft
8 Synchronizer hub
9 Synchronizer sleeve

- The following descriptions are for 4th and 5th gear
  The inside of synchronizer hub **8** engages the spline of mainshaft **7** and rotates with it. The outside of the synchronizer hub has a spline that engages synchronizer sleeve **9** and three keyways.
- Shifting keys **5** are inserted into these keyways. When the gear shift is in neutral, a protrusion in the center of each shifting key engages a groove inside the synchronizer sleeve and the shifting keys are pressed against the inside of the synchronizer sleeve by shifting key springs **6**.
- Synchronizer rings **2** are inserted into drive pinions **1** in the front and rear of synchronizer hub **8**, and the taper cone of 4th gear **4**.
- The internal tapers of synchronizer rings **2** have fine threads, and the outer splines engage synchronizer sleeve **9**. On the hub side of the synchronizer rings are three keyways in which the ends of shifting keys **5** are inserted. These keyways are wider than the width of the shifting keys.
- Synchronizer rings **2** rotate relative to synchronizer sleeve **9** by the amount of play of the keyways.

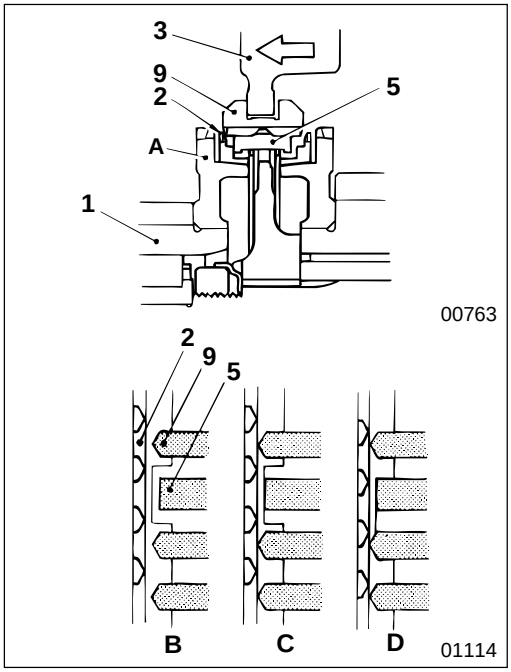

- When the gear shift is in neutral (Figure **B**), moving shift fork **3** in the direction of the arrow as illustrated, moves synchronizer sleeve **9** slightly to the left. At the same time, shifting key **5**, the central protrusion of which engages the synchronizer sleeve, moves to the left and presses synchronizer rings **2** against taper cone **A** of drive pinion **1**. (Figure **C**)
- When the taper surfaces of synchronizer rings **2** make contact with the taper cone of the drive pinion, the taper surfaces of the synchronizer rings act as cone clutches. This frictional torque rotates the synchronizer rings in the rotating direction of the drive pinion by the amount of play between shifting key **5** and the synchronizer rings. The spline chamfers of the synchronizer rings and the spline chamfer of synchronizer sleeve **9** are offset from each other. (Figure **D**)
- The disengagement direction of synchronizer rings **2** is defined by the speed of rotation of the synchronizer—sleeve **9**, and the synchronized—drive pinion **1**. When increasing the vehicle speed by shifting up, disengagement is made in the opposite direction to rotation, and when decreasing the vehicle speed by shifting down, disengagement is made in the rotating direction.

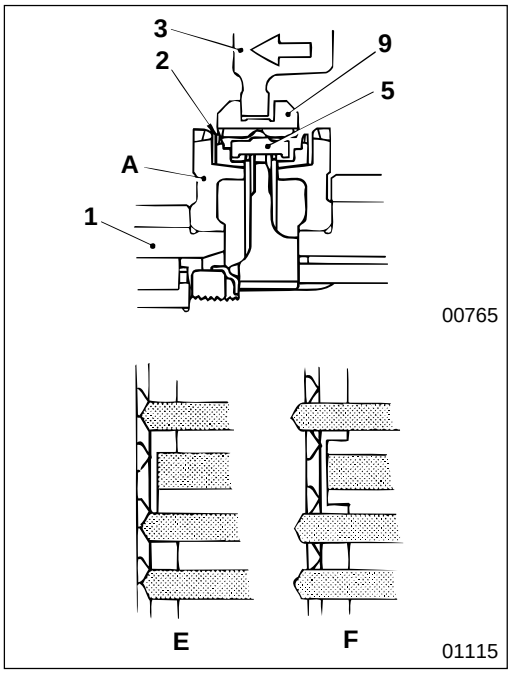

- When synchronizer sleeve **9** moves further to the left, synchronizer rings **2** prevent shifting key **5** from moving, and the synchronizer sleeve disengages from the protrusion of the shifting key.
- Since synchronizer rings **2** remain disengaged, the spline chamfer of synchronizer sleeve **9** presses the spline chamfers of the synchronizer rings, which in turn press the synchronizer rings against taper cone **A** of drive pinion **1**.
- As the frictional torque increases on the taper surfaces, the relative speed of the synchronizer and the synchronized gradually decreases.
  E : In synchronization
  F : After synchronization

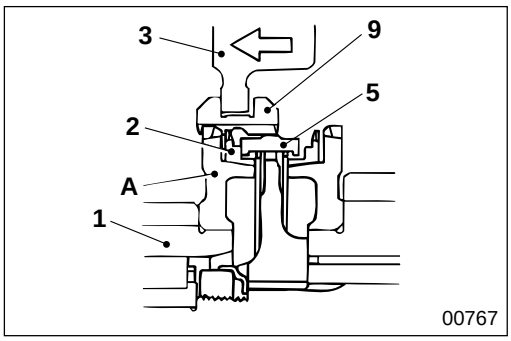

- When synchronizer sleeve **9** and drive pinion **1** rotate at the same speed, synchronizer rings **2** no longer prevent the synchronizer sleeve from moving, and the synchronizer sleeve moves further to the left and smoothly engages the spline of taper cone **A** of drive pinion **1**, transmitting the driving force.

Double Cone Type

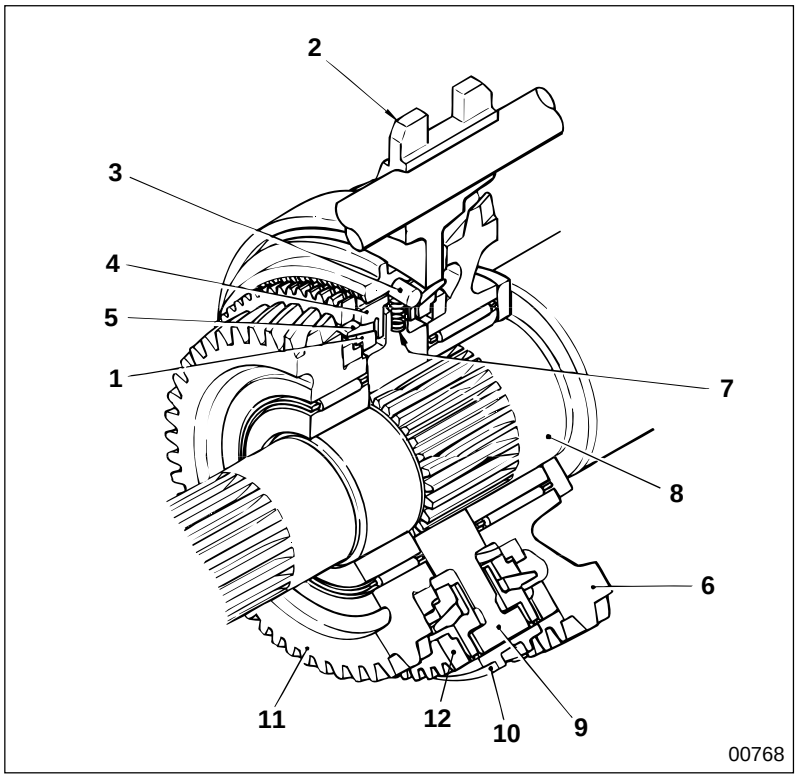

1 Synchronizer inner ring
2 2nd and 3rd shift fork
3 Shifting key
4 Synchronizer outer ring
5 Synchronizer center cone
6 2nd gear
7 Shifting key spring
8 Mainshaft
9 Synchronizer hub
10 Synchronizer sleeve
11 3rd gear
12 Dog clutch

- The following descriptions are for 2nd and 3rd gear
  The synchromesh structure and operation of the double cone type are basically the same as for the single cone type.
- Synchronizer center cone **5** is a taper cone independent of 2nd gear **6** and 3rd gear **11**, (both the inside and outside surfaces are tapered). The synchronizer center cone is between synchronizer inner ring **1** and synchronizer outer ring **4** to increase the synchronization capacity.
- Six protrusions on the outside of center cone **5** fit into corresponding gear holes, in the same manner as the taper cone of the single cone type. The center cone and the gear are installed as if integrated.
  Shifting key **3** is a cylinder installed so that the lengthwise direction of the cylinder is at right angles to the diameter direction of synchronizer hub **9**. Shifting key spring **7** is a coil spring inserted in a hole in the synchronizer hub, this spring presses the shifting key against the inside of synchronizer sleeve **10**.

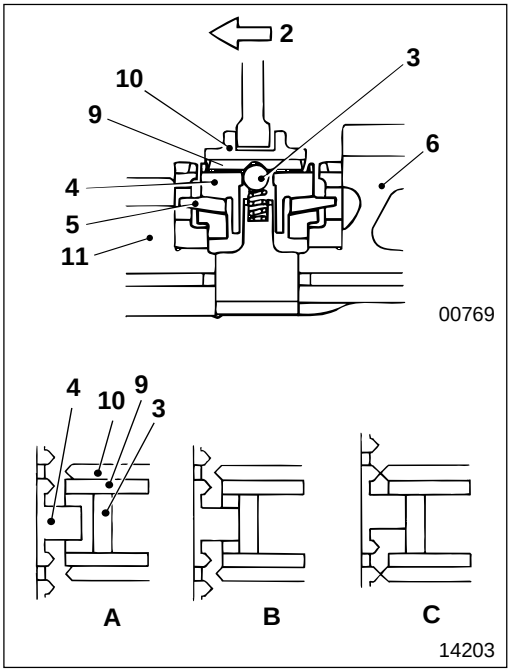

- When the gear shift is in neutral (Figure **A**), moving shift fork **2** in the direction of the arrow as illustrated, moves synchronizer sleeve **10** slightly to the left. At the same time, shifting key **3**, the central protrusion of which engages the synchronizer sleeve, moves to the left and presses synchronizer outer ring **4** against synchronizer center cone **5**. (Figure **B**)
- When the taper surface of synchronizer outer ring **4** makes contact with the taper cone of synchronizer center cone **5**, the taper surface of the synchronizer outer ring acts as a cone clutch. This frictional torque rotates the synchronizer outer ring in the rotating direction of 3rd gear **11** by the amount of play between the synchronizer outer ring and synchronizer hub **9**. The spline chamfer of the synchronizer outer ring and the spline chamfer of synchronizer sleeve **10** are offset from each other. (Figure **C**)
- The disengagement direction of synchronizer outer ring **4** is defined by the speed of rotation of the synchronizer—the sleeve, and the synchronized—3rd gear **11**. When increasing the vehicle speed by shifting up, disengagement is made in the opposite direction to rotation, and when decreasing the vehicle speed by shifting down, disengagement is made in the rotating direction.

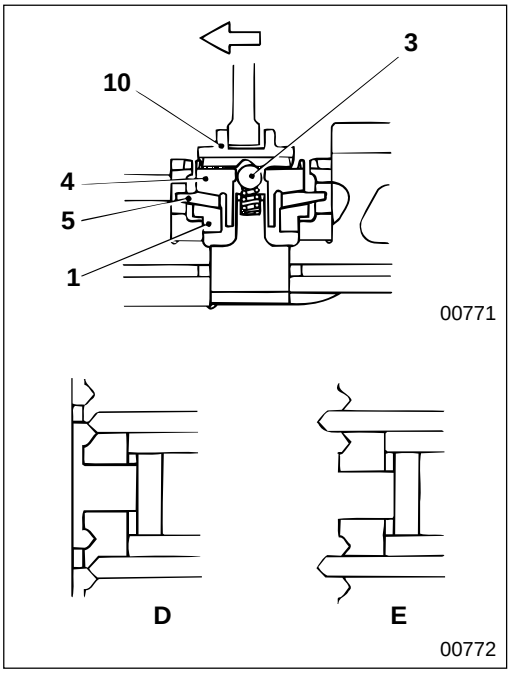

- When synchronizer sleeve **10** moves further to the left, synchronizer outer ring **4** prevents shifting key **3** from moving, and the synchronizer sleeve disengages from the protrusion of the shifting key.
- Since synchronizer outer ring **4** remains disengaged, the spline chamfer of synchronizer sleeve **10** presses the spline chamfer of the synchronizer outer ring, which in turn presses the synchronizer outer ring against the taper cone of synchronizer center cone **5**, and the frictional torque acts on the taper surface.
- As the frictional torque increases on the taper surface of synchronizer inner ring **1**, the relative speed of the synchronizer and the synchronized gradually decreases. The frictional torque acts on both sides of the synchronizer center cone. The double cone type has greater capacity for synchronization than the single cone type.
  D : In synchronization
  E : After synchronization

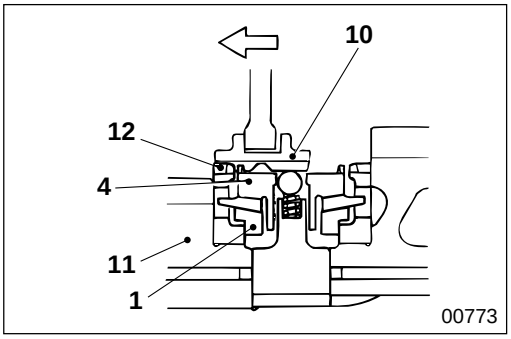

- When synchronizer sleeve **10** and 3rd gear **11** rotate at the same speed, synchronizer outer ring **4** no longer prevents the synchronizer sleeve from moving and the synchronizer sleeve moves further to the left and smoothly engages the spline of dog clutch **12** of the 3rd gear, transmitting the driving force.

Interlock Mechanism

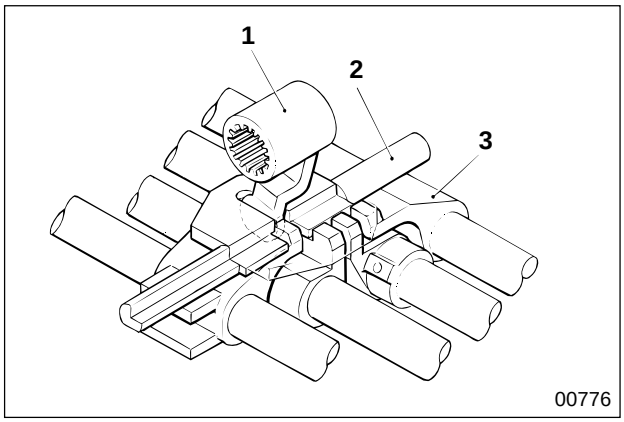

In the interlock mechanism, the rail beneath interlock plate **2** locks jaws **3**, (apart from the jaws shifted by gear shift slide lever **1**), preventing double engagement of gears.

Possible causes \ Symptoms		Gears slip out of engagement	Gears hard to engage	Noise when engine is idling	Noise while cruising	Noise when changing gear
Transmission body faulty	Mainshaft rear lock nut loose	○	○			
	Mainshaft thrust washer worn	○	○			
	Mainshaft bearing worn or damaged	○	○			
	Synchronizer ring and synchronizer sleeve spline worn	○				
	Synchronizer ring and gears taper cone area worn		○			
	Mainshaft pilot bearing worn or damaged			○	○	
	Drive pinion bearing worn or damaged			○		
	Countershaft bearing worn or damaged			○		
	Needle bearings of gears worn or damaged			○	○	
	Mainshaft and countershaft bearings worn or damaged				○	
	Mainshaft and countershaft gears backlash excessive				○	
	Spline of gears worn					○
	Gears damaged				○	
	Gear oil insufficient				○	
Control mechanisms faulty	Control cable joint play	○	○			
	Set board assembly bushings worn	○				
	Shift rail steel ball and groove worn	○				
	Shift rail poppet spring fatigued or damaged	○				
	Shift rail sliding movement faulty		○			
	Shift fork jaws worn		○			
	Shift fork bent		○			
Clutch faulty	Clutch disengagement faulty		○			○
	Clutch pedal play faulty		○			
Synchronizer faulty	Contacting surfaces of synchronizer ring and gear taper cone worn					○
	Shifting key worn					○
	Shifting key spring deteriorated or damaged					○
	Synchronizer sleeve worn or damaged				○	○

Gr 21

WORK BEFORE REMOVAL AND INSTALLATION OF TRANSMISSION ASSEMBLY

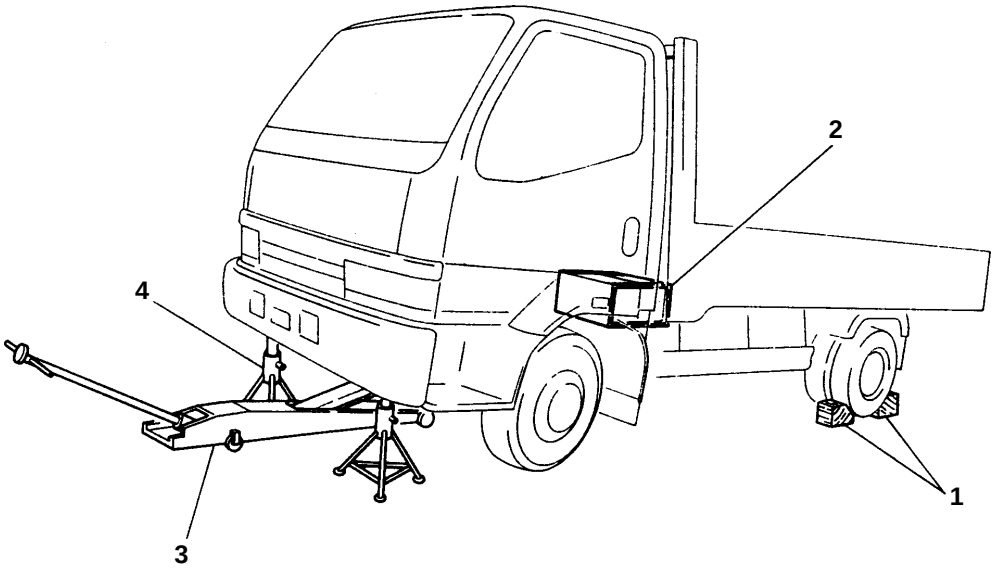

14340

● **Work sequence before removal**

1 Place wheel chocks.
2 Disconnect negative battery cable. Gr 54
3 Jack up the front axle on a garage jack.
4 Support the front frame on jack stands.

WARNING⚠

- **Since the parking brake will be removed, naturally it cannot be used. Therefore, you must chock the wheels securely so the vehicle does not move.**
- **Do not remove the chocks until the entire operation is completed.**
- **Supporting a vehicle on a garage jack only is extremely dangerous, so always support the frame on jack stands.**
- **Leave the garage jack and jack stands in place until the entire operation is completed. Never remove them during the operation.**

CAUTION⚠

Keep the transmission in neutral throughout the operation.

● **Work sequence after installation**

Follow the work sequence before removal in reverse.

M E M O

REMOVAL AND INSTALLATION OF TRANSMISSION ASSEMBLY

Removal and Installation

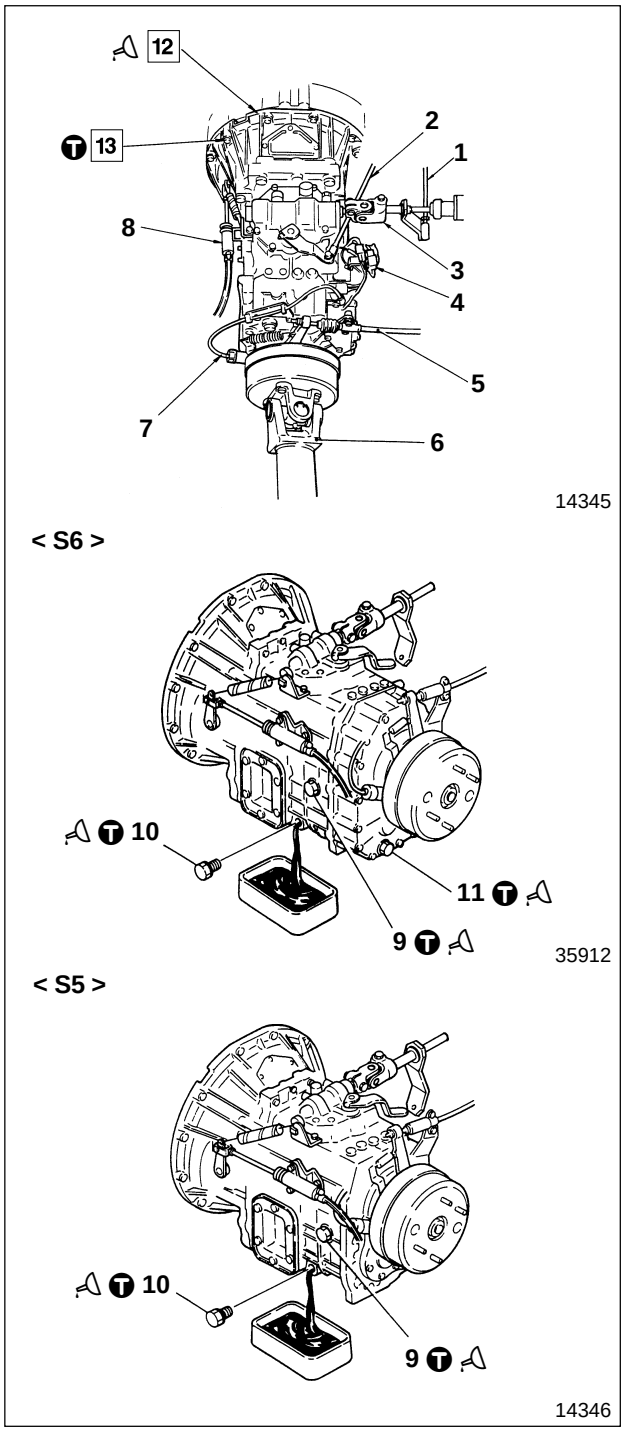

● **Disassembly sequence**

1 Shift cable P22-60
2 Selector cable P22-60
3 Cross shaft P22-64
4 Harness connector
5 Parking brake cable Gr 36
6 Propeller shaft Gr 25
7 Speed sensor Gr 54
8 Clutch slave cylinder Gr 21
9 Inspection plug
10 Drain plug (on transmission case)
11 Drain plug (on extension housing)
12 Nut or bolt
13 Transmission assembly

● **Assembly sequence**

Follow the disassembly sequence in reverse.

Ⓣ Tightening torque

Unit : N·m {lbf.ft, kgf·m}

Location	Parts to be tightened	Tightening torque	Remarks
8	Clutch slave cylinder hose connector	20 {14.8, 2}	—
9	Inspection plug	69±15 {51±11, 7±1.5}	—
10, 11	Drain plug	69±15 {51±11, 7±1.5}	—
12	Nut or bolt (Transmission mounting)	40 {30, 4.1}	—

Lubricant and sealant

Location	Points of application	Kinds	Quantity
9	Thread area of inspection plug	THREEBOND 1105D	As required
10, 11	Thread area of drain plug	THREEBOND 1105D	As required
13	Spline of drive pinion	Molybdenum disulfide grease [NLGI No.2 (Li soap)]	As required

◆ Service procedure

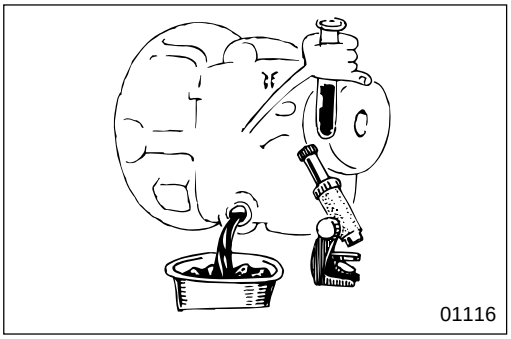

● Oil change

[Draining]
- When draining oil, check the quantity and quality of oil, especially for small pieces of metal and metal dust.
- Clean inspection plug **9** before reinstalling it because it is magnetic.

[Filling]
- Check that drain plugs **10**, **11** are tightened at specified torque.
- Pour in gear oil until the oil overflows from the inspection hole. (For oil quantity, see specifications.) See illustrations on page 22-12.

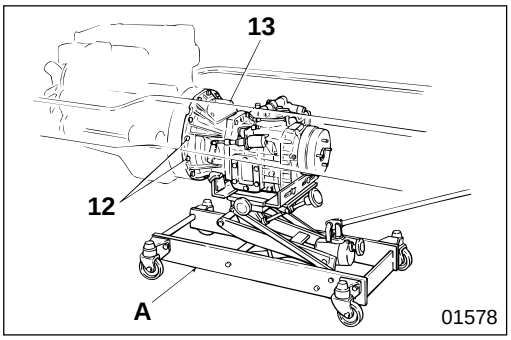

12 Removal of transmission mounting nut or bolt

- Support transmission assembly **13** on transmission jack **A**.
- Loosen transmission mounting nuts or bolts **12**.

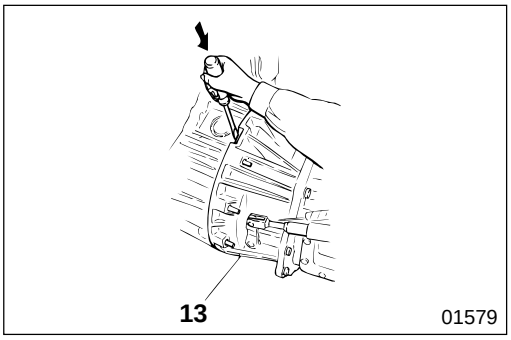

13 Transmission assembly

[Removal]
- Insert a screwdriver into the three removal grooves and pry transmission assembly **13** from the engine.

CAUTION⚠

Make sure that you remove hoses and cables before starting service operations.

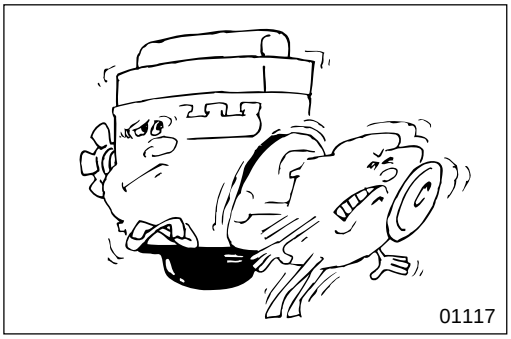

- Move transmission assembly **13** backward until the spline of the drive pinion is detached from the clutch.

CAUTION⚠

Make sure that you pull transmission assembly 13 out in a straight line. If you seesaw the transmission assembly violently, you will damage the spline that connects the drive pinion and the clutch.

REMOVAL AND INSTALLATION OF TRANSMISSION ASSEMBLY

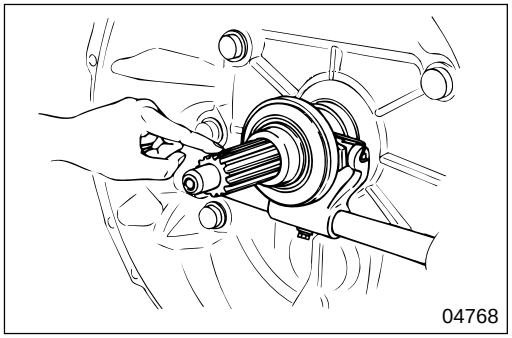

[Installation]
- Check the spline of the drive pinion for rust.
- If rust is found, remove it using a wire brush.
- Rub grease onto the clutch disc sliding surfaces of the drive pinion using your hand.

CAUTION

Make sure that you apply only the necessary amount of grease because too much grease would drip and cause clutch slip.

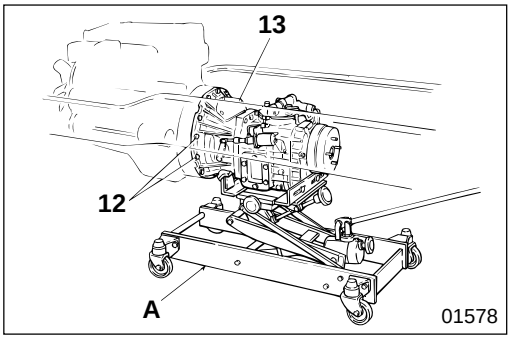

- Support transmission assembly **13** on transmission jack **A**, and insert the transmission assembly into the pilot bearing of the flywheel paying attention to the drive pinion spline.
- Tighten transmission mounting nuts or bolts **12** at specified torque.

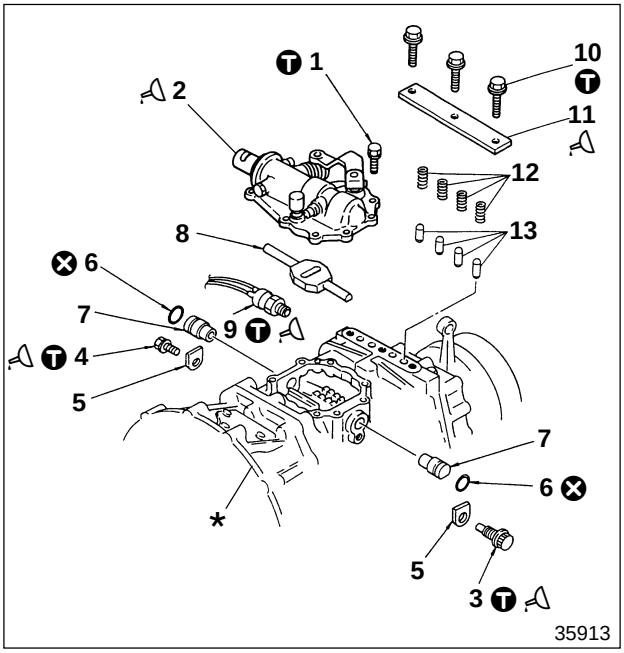

● **Disassembly sequence**

1 Bolt
2 Gear shifter upper assembly P22-16
3 Jaw set bolt
4 Bolt
5 Lock plate
6 O-ring
7 Bushing
8 Detent plate
9 Backup lamp switch Gr 54
10 Bolt
11 Poppet spring plate
12 Poppet spring
13 Detent pin

* : Transmission body
⊗ : Non-reusable parts

● **Assembly sequence**

6→7
8
→5→4→3→9→2→1→13→12→11→10

Service standards

Unit : mm {in.}

Location	Maintenance item	Standard value (Basic diameter in [ ])	Limit	Remedy
7, 8	Clearance between interlock plate axis and bushing	[12 {0.47}] 0.14 to 0.19 {0.0055 to 0.0075}	0.4 {0.016}	Replace
12	Poppet spring load (Installed length 29 {1.14})	78 N {18 lbf, 8 kgf}	67 N {15 lbf, 68 kgf}	Replace

Ⓣ Tightening torque

Unit : N·m {lbf.ft, kgf·m}

Location	Parts to be tightened	Tightening torque	Remarks
1	Bolt (Gear shifter upper mounting)	23 {17, 2.3}	—
3	Jaw set bolt	135 {98, 13.6}	—
4	Bolt (Lock plate mounting)	40 {30, 4.1}	—
9	Backup lamp switch	49 {36, 5.0}	—
10	Bolt (Poppet spring plate mounting)	49 {36, 5.0}	—

Sealant

Location	Points of application	Specified sealant	Quantity
2	Contact surface with transmission case	THREEBOND 1215	As required
3	Thread area of jaw set bolt	THREEBOND 1104J	As required
4	Thread area of bolt	THREEBOND 1104J	As required
9	Thread area of backup lamp switch	THREEBOND 1105D	As required
11	Contact surface with transmission case	THREEBOND 1215	As required

GEAR SHIFTER UPPER AND INTERLOCK PLATE

Gear Shifter Upper Assembly

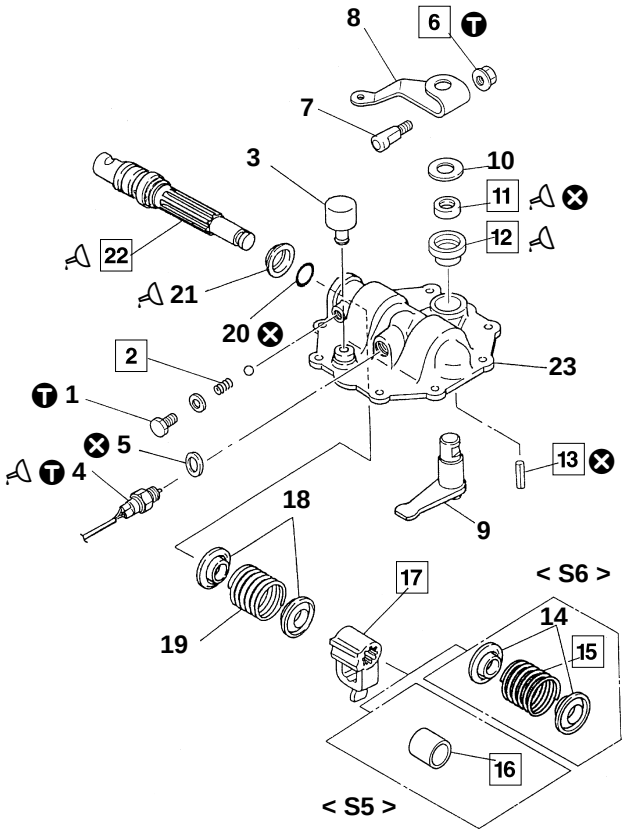

37109

● **Disassembly sequence**

1 Plug
2 Torsion shaft spring
3 Air breather
4 Neutral switch Gr 54
5 Gasket
6 Nut
7 Lock pin
8 Gear selector lever B
9 Gear selector lever A
10 Washer
11 Oil seal
12 Bushing
13 Spring pin
14 Return spring B retainer < S6 >
15 Return spring B < S6 >
16 Gear selector stopper < S5 >
17 Gear shift slide lever
18 Return spring A retainer
19 Return spring A
20 O-ring
21 Dust seal
22 Gear shift lever
23 Selector lever case

⊗ : Non-reusable parts

NOTE

Do not remove bushing 12 except for replacement.

● **Assembly sequence**

23→12→11
21→22→20
→18→19→18→17→14→15→16→14→13→9→10→8→7→6
5→4
→3→2→1

CAUTION ⚠

Be sure when assembling gear selector lever A 9, that you turn the lever so you do not damage the lip area of oil seal 11.

Service standards

Unit : mm {in.}

Location	Maintenance item	Standard value	Limit	Remedy
2	Torsion shaft spring load (Installed length 16.2 {0.64})	50 N {11 lbf, 5.1 kgf}	42 N {9.48 lbf, 4.3 kgf}	Replace
9	Play in axial direction of gear selector lever A	0.3 to 0.6 {0.012 to 0.024}	—	Replace
15	Return spring B load (Installed length 23.6 {0.93})	92 N {21 lbf, 9.4 kgf}	78 N {18 lbf, 8.0 kgf}	Replace
19	Return spring A load (Installed length 27.6 {1.09})	94 N {21 lbf, 9.6 kgf}	80 N {18 lbf, 8.2 kgf}	Replace

Tightening torque

Unit : N·m {lbf.ft, kgf·m}

Location	Parts to be tightened	Tightening torque	Remarks
1	Plug	23 {17, 2.3}	—
4	Neutral switch	34 to 39 {25 to 29, 3.5 to 4.0}	—
6	Nut (Lock pin mounting)	17 {12, 1.7}	—

Lubricant and/or sealant

Location	Points of application	Specified lubricant and/or sealant	Quantity
4	Thread area of neutral switch	THREEBOND 1104J	As required
11	Lip area of oil seal	Wheel bearing grease [NLGI No.2 (Li soap)]	As required
12	Inner surface of gear selector lever A axis bushing and its friction surface	Wheel bearing grease [NLGI No.2 (Li soap)]	As required
	Contact surfaces between bushing outer surface and case	THREEBOND 1215	As required
21	Pack dust seal	Wheel bearing grease [NLGI No.2 (Li soap)]	As required
22	Gear shift lever O-ring groove	Wheel bearing grease [NLGI No.2 (Li soap)]	As required

Special tools

Unit : mm {in.}

Location	Tool name and shape	Part No.	Application
13	Spring pin puller 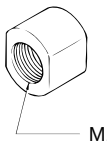 02399	MH062445	Removal of spring pin
	Reverse shaft puller 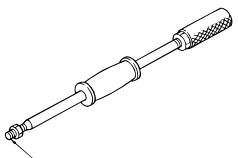 02118	03726-82000	

◆ Service procedure

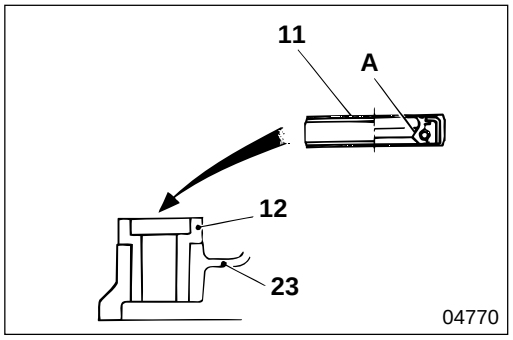

11 Installation of oil seal

- Apply grease to lip area **A** of oil seal **11**.
- Press-fit oil seal **11** into bushing **12** in the direction as illustrated.

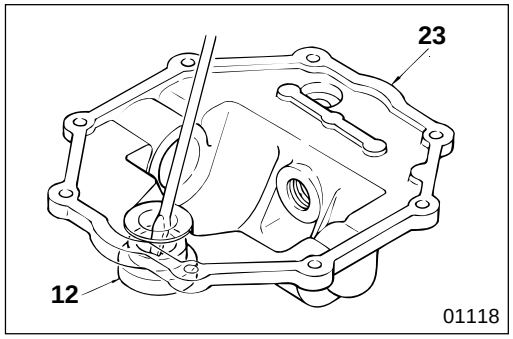

12 Bushing

[Removal]

Remove bushing **12** from selector lever case **23** using a screwdriver.

CAUTION

Be careful not to damage selector lever case 23.

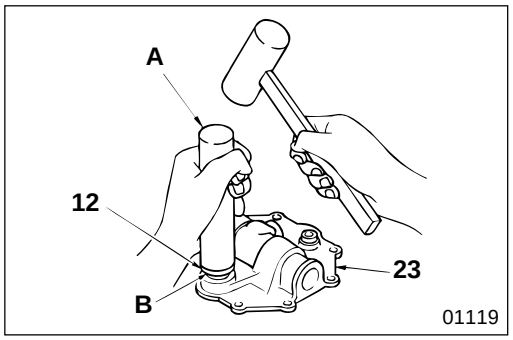

[Installation]

- Clean the inner surface of selector lever case **23**.
- Press-fit bushing **12** into selector lever case **23** using bar **A** (approximately ø40 mm {1.57 in.}).
- When press-fitting bushing **12**, take care not to damage selector lever case **23**.
- After press-fitting, apply sealant to press-fitted side **B** of bushing **12**.

CAUTION

Prevent sealant from sticking to the inner surface of bushing 12.

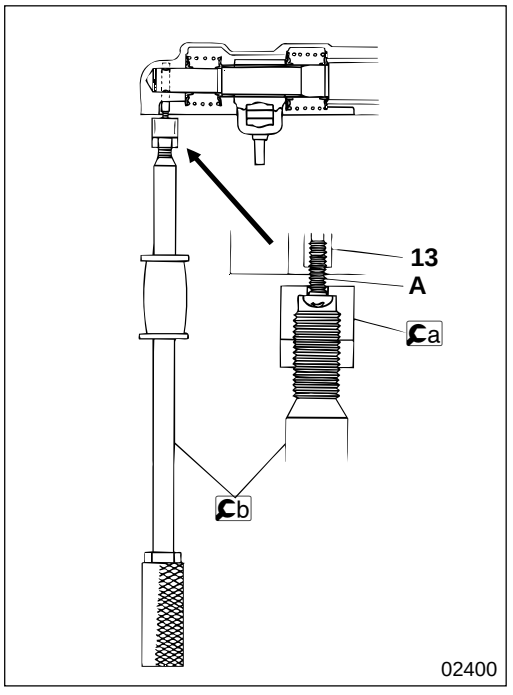

13 Removal of spring pin

- Tap spring pin **13** using an M4 tap.
- Insert a spring pin puller with an M4 thread **A** of appropriate length into spring pin **13**.
- Position b reverse shaft puller on a spring pin puller.
- Remove spring pin **13** from selector lever case **23** using a spring pin puller and b reverse shaft puller.

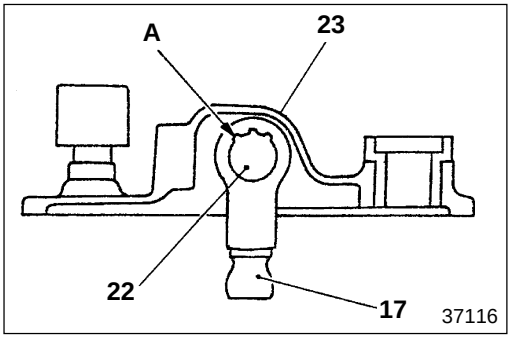

17 **Installation of gear shift slide lever**

When you install gear shift slide lever **17** in gear shift lever **22**, position spline **A** is as illustrated.

EXTENSION HOUSING, REAR COVER AND PARKING BRAKE ASSEMBLY

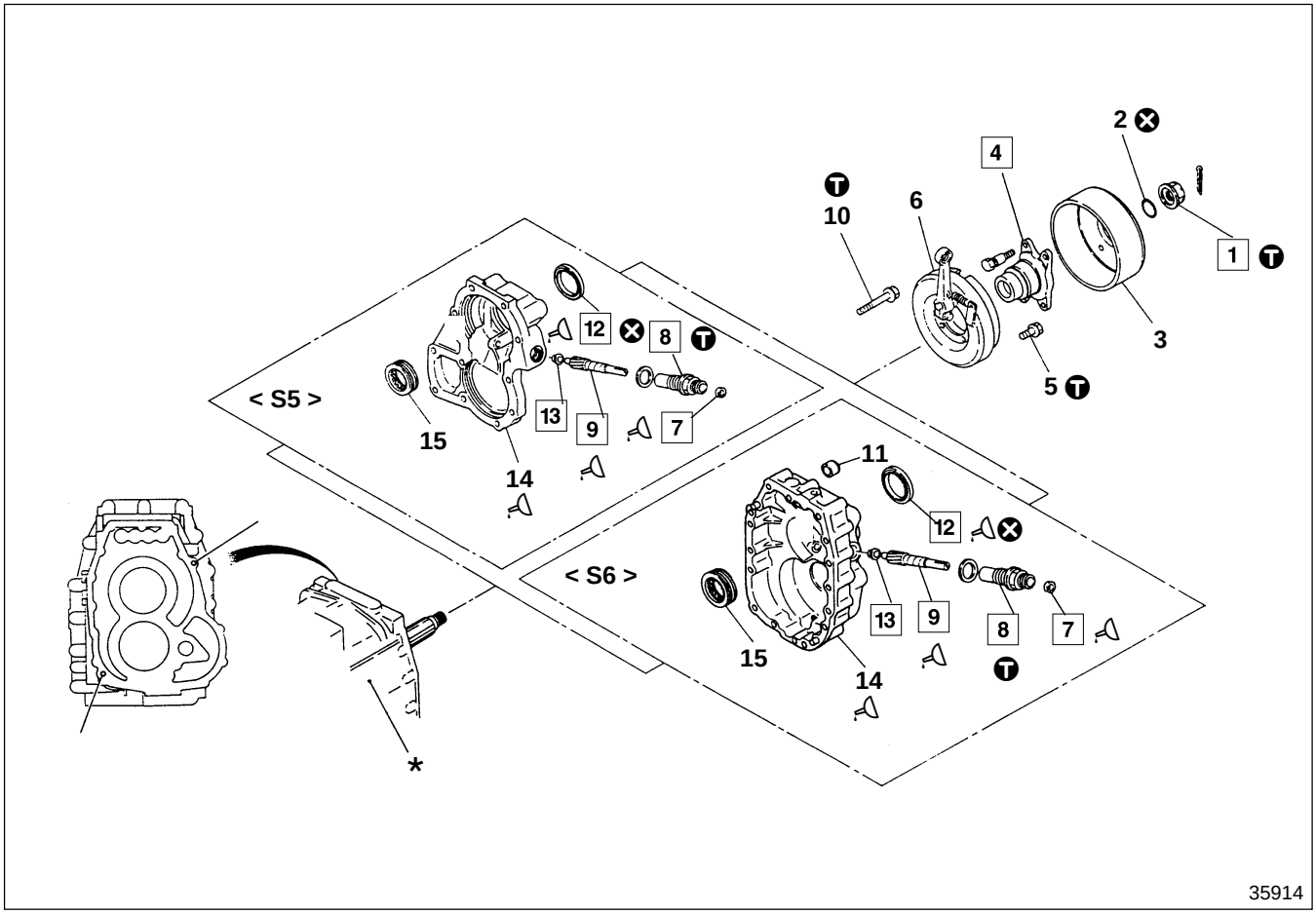

● **Disassembly sequence**

1 Lock nut
2 O-ring
3 Parking brake drum
4 Companion flange
5 Bolt
6 Support plate and shoe assembly Gr 36
7 Oil seal
8 Speedometer gear bushing
9 Speedometer gear
10 Bolt
11 Dust plug < S6 >
12 Oil seal
13 Speedometer gear bushing A
14 Rear cover < S5 >
Extension housing < S6 >
15 Speedometer worm

***** : Transmission body
: Positioning pins
⊗ : Non-reusable parts

● **Assembly sequence**

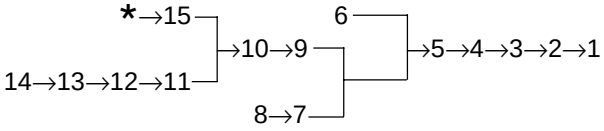

NOTE

Inspect play of speedometer gear 9 before disassembly.

Service standards

Unit : mm {in.}

Location	Maintenance item	Standard value (Basic diameter in [ ])	Limit	Remedy
8, 9	Clearance between speedometer gear bushing and speedometer gear	[12] 0.02 to 0.07 {[0.47] 0.00079 to 0.0028}	0.15 {0.0059}	Replace
9, 15	Play between speedometer gear and speedometer worm	0.13 to 0.29 {0.0051 to 0.011}	0.36 {0.014}	Replace

Tightening torque

Unit : N·m {lbf.ft, kgf·m}

Location	Parts to be tightened	Tightening torque	Remarks
1	Lock nut	245 to 345 {180 to 255, 25 to 35}	—
5	Bolt (Support plate and shoe assembly mounting)	40 {30, 4.1}	—
8	Speedometer gear bushing	145 {110, 15}	—
10	Bolt (Extension housing or rear cover mounting)	40 {30, 4.1}	—

Lubricant and/or sealant

Location	Points of application	Specified lubricant and/or sealant	Quantity
7, 12	Interior and lip area of oil seal	Wheel bearing grease [NLGI No.2 (Li soap)]	As required
9	Friction surface with speedometer gear bushing	Molybdenum disulfide grease [NLGI No.2 (Li soap)]	As required
14	Contact surfaces between rear cover or extension housing and transmission case	THREEBOND 1215	As required

Special tools

Unit : mm {in.}

Location	Tool name and shape	Part No.	Application
1	Socket wrench 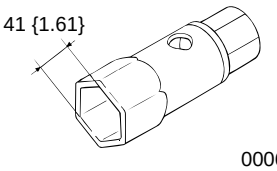	MH061532	Removal and installation of mainshaft rear lock nut
4	Flange puller 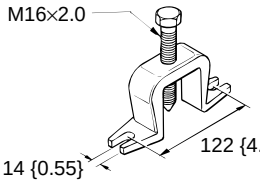	MC881524	Removal of flange at rear of mainshaft
12	Oil seal installer 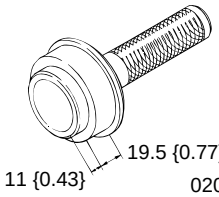	ME624242	Installation of oil seal in rear cover or extension housing

◆ Service procedure

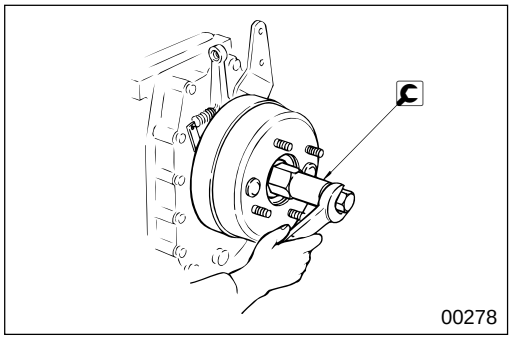

1 **Removal and installation of lock nut**

: Socket wrench

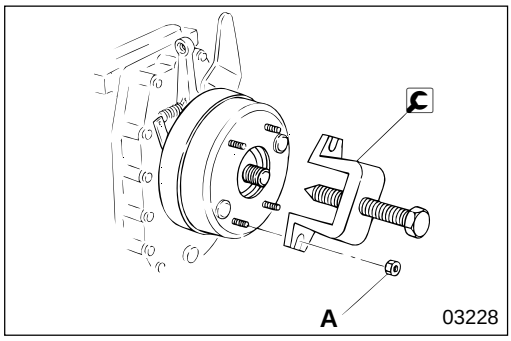

4 **Removal of companion flange**

A : Propeller shaft mounting nut
: Flange puller

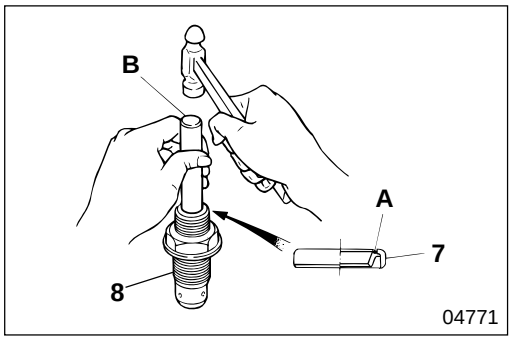

7 **Press-fitting of oil seal**

- Apply grease to inside of oil seal **7** packing **A**.
- Press-fit oil seal **7** into speedometer gear bushing **8** in the direction as illustrated using bar **B** (approximately ø15 mm {0.59 in.}).

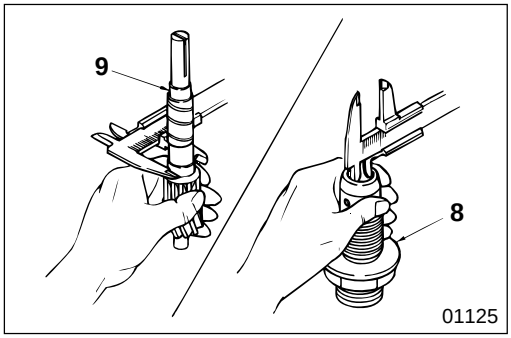

8 **9** **Clearance between speedometer gear bushing and speedometer gear**

If the clearance is higher than the limit, replace the faulty parts.

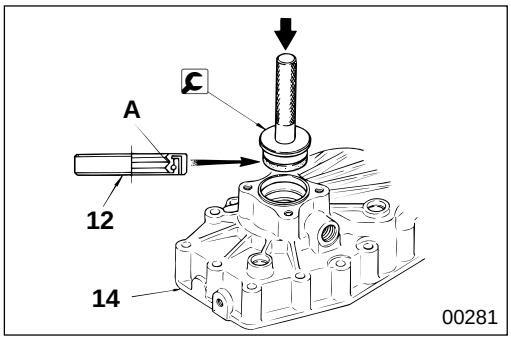

12 **Installation of oil seal**

- Apply grease to lip area **A** of oil seal **12**.
- Press-fit oil seal **12** into extension housing or rear cover **14** in the direction as illustrated using oil seal installer.

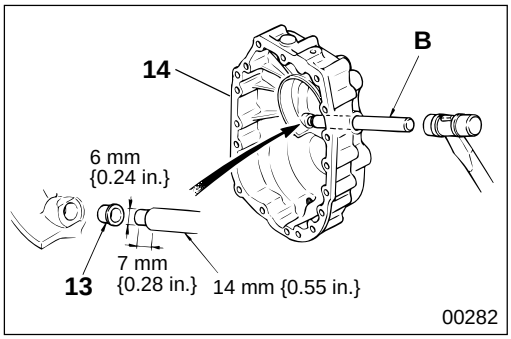

13 **Installation of speedometer gear bushing A**

Press-fit speedometer gear bushing A **13** into extension housing or rear cover **14** using bar **B**, turned to the dimensions as illustrated.

6TH GEAR < S6 > AND REVERSE IDLER GEAR

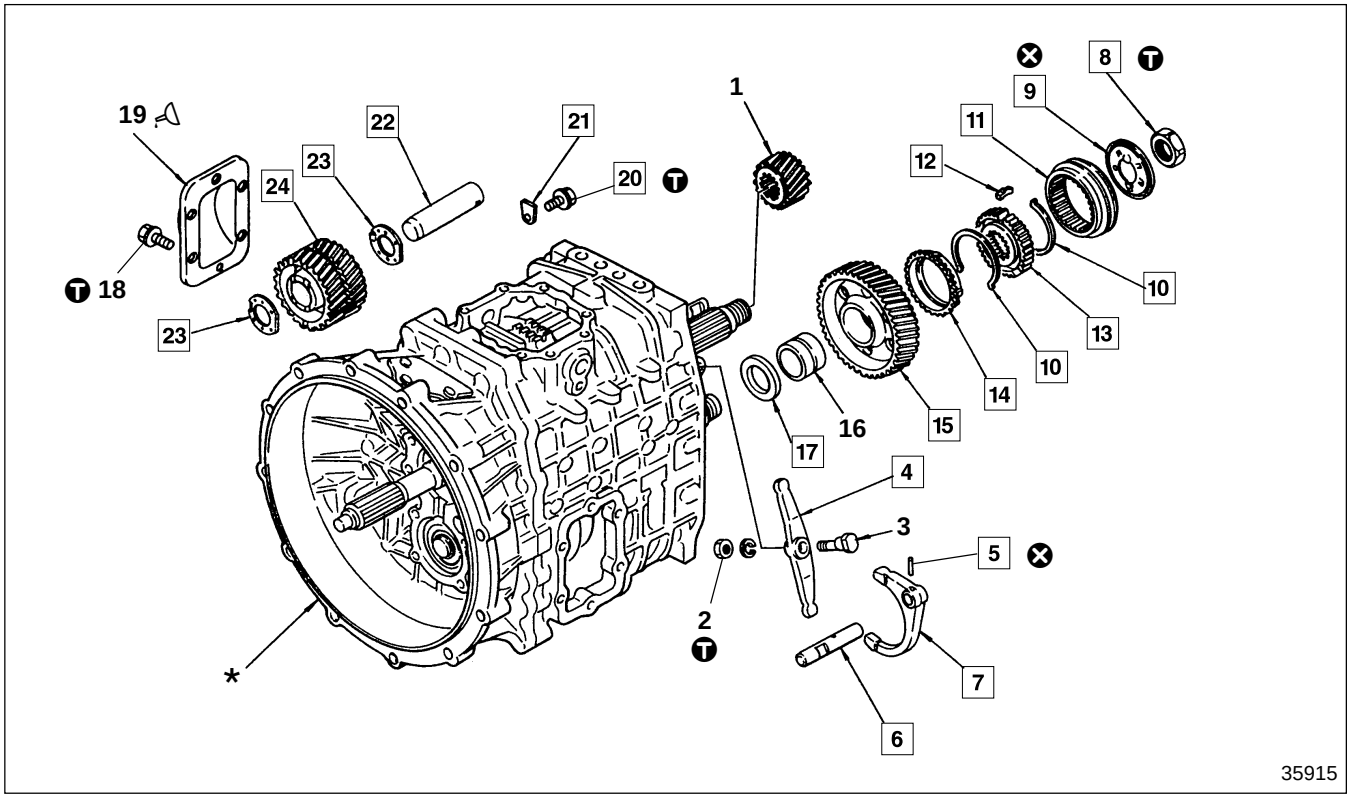

● **Inspection before disassembly**

P22-26

● **Disassembly sequence**

1 Mainshaft O/D gear
2 Nut
3 O/D shift shaft
4 O/D shift lever
5 Spring pin
6 O/D shift rail C
7 O/D gear shift fork
8 Countershaft rear lock nut
9 Shifting Key retainer
10 Shifting key spring
11 Synchronizer sleeve
12 Shifting key
13 Synchronizer hub
14 Synchronizer ring
15 Countershaft O/D gear assembly
16 O/D gear sleeve
17 Thrust washer
18 Bolt
19 Reverse idler gear cover
20 Bolt
21 Reverse shaft lock piece
22 Reverse idler shaft
23 Reverse shaft gear side washer
24 Reverse idler gear

*: Transmission body
1 to 17 is applicable only to S6.
⊗: Non-reusable parts

● **Assembly sequence**

Follow the disassembly sequence in reverse.

Service standards

Unit : mm {in.}

Location	Maintenance item	Standard value	Limit	Remedy
3, 4	Clearance between O/D shaft and O/D shift lever	[16 {0.63}] 0.02 to 0.07 {0.00079 to 0.0028}	0.15 {0.0059}	Replace
4	Bend of O/D shift lever	0.05 {0.0020} or less	0.1 {0.0039}	Replace
6	Bend of O/D shift rail C	0.02 {0.00079} or less	0.04 {0.0016}	Replace
7	Tilt of O/D gear shift fork claw	0.1 {0.0039} or less	0.2 {0.0079}	Replace
7, 11	Clearance between gear shift fork and synchronizer sleeve	0.3 to 0.5 {0.012 to 0.020}	1.0 {0.039}	Replace
11, 13	Play to rotating direction of synchronizer sleeve and synchronizer hub	0.052 to 0.148 {0.0020 to 0.0058}	0.3 {0.012}	Replace
12, 13	Clearance between shifting key and synchronizer hub	0.05 to 0.20 {0.0020 to 0.0079}	0.5 {0.020}	Replace
12, 14	Clearance between shifting key and synchronizer ring	4.75 to 4.95 {0.187 to 0.195}	5.8 {0.228}	Replace
13, *	Fitness to revolving direction of synchronizer hub and countershaft	–0.006 to 0.088 {–0.00024 to 0.0035}	0.2 {0.0079}	Replace
14, 15	Clearance between synchronizer ring and countershaft O/D gear assembly	1.45 to 1.85 {0.057 to 0.073}	0.2 {0.0079}	Replace
15	End play of countershaft O/D gear	0.25 to 0.40 {0.0098 to 0.016}	0.5 {0.020}	Replace
15, 16	Diameter direction after assembling countershaft O/D gear	0.105 to 0.150 {0.0041 to 0.0059}	0.3 {0.012}	Replace
22, 24	Diameter direction after assembling reverse idler gear	—	0.12 {0.0047}	Replace
24	End play of reverse idler gear	0.2 to 0.9 {0.0079 to 0.0035}	1.2 {0.047}	Replace side washer

Tightening torque

Unit : N·m {lbf.ft, kgf·m}

Location	Parts to be tightened	Tightening torque	Remarks
2	Nut (O/D shift shaft and O/D shift lever mounting)	42 {31, 4.3}	—
8	Countershaft rear lock nut	345±49 {253±36, 35±5}	—
18	Bolt (Reverse idler gear cover mounting)	19 {14, 1.9}	—
20	Bolt (Reverse shaft lock piece mounting)	40 {30, 4.1}	—

Sealant

Location	Points of application	Specified sealant	Quantity
19	Reverse idler gear cover installation surface	THREEBOND 1215	As required

6TH GEAR < S6 > AND REVERSE IDLER GEAR

Special tools

Location	Tool name and shape	Part No.	Application
8	Single spanner 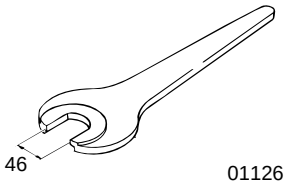	MH061555 < S6 >	Removal and istallation of countershaft rear lock nut
22	Drive pinion and reverse shaft puller 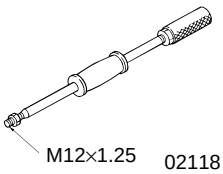	03726-82000	Removal of reverse ilder shaft

◆ Service procedure

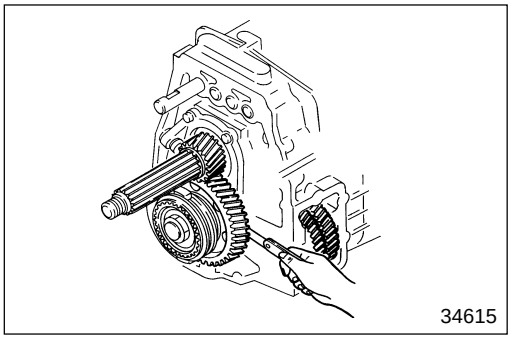

● Inspection before disassembly

(1) End play of various gears < S6 >

- If the measured value is higher than the limit, replace the faulty parts.
- Reinspect play after assembly to check that the measured value is within the limit.

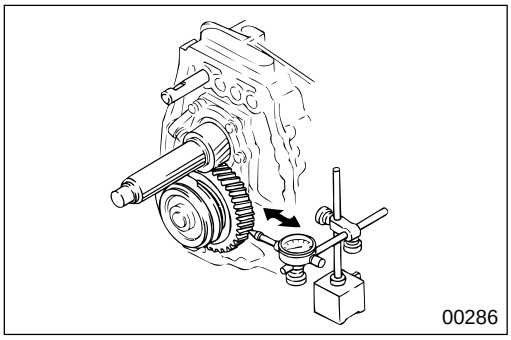

(2) Play of countershaft O/D gear in the diameter direction < S6 >

- If the measured value is higher than the limit, replace the faulty parts.
- Reinspect play after assembly to check that the measured value is within the limit.

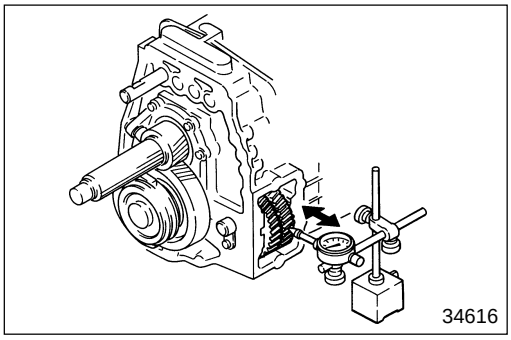

(3) Play of reverse ilder gear in the diameter direction

- If the measured value is higher than the limit, replace the faulty parts.
- Reinspect play after assembly to check that the measured value is within the limit.

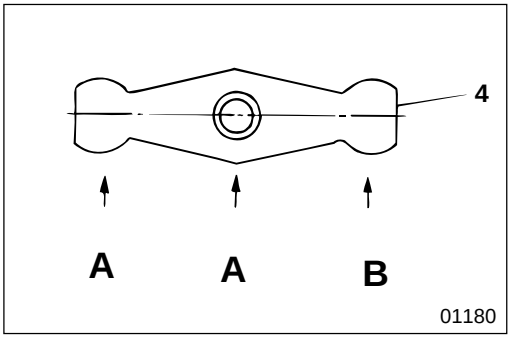

4 **Bend of O/D shift lever**

If bend **B** exeeds the limit on the basis of illustrated **A - A**, replace O/D shift lever **4**.

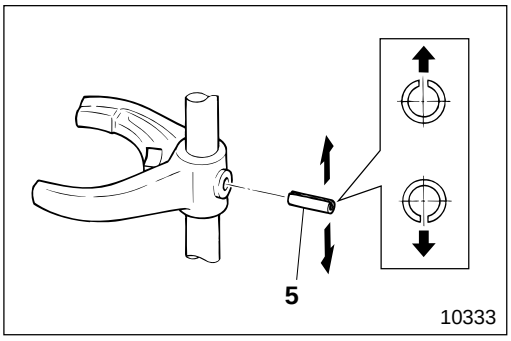

5 **Installation of spring pin**

Install spring pin **5** in O/D gear shift fork **7** in the direction as illustrated.

CAUTION

Make sure you do not drive in spring pin 5 fully, leave 0 to 0.5 mm {0 to 0.020 in.} outside to prevent them from slipping out.

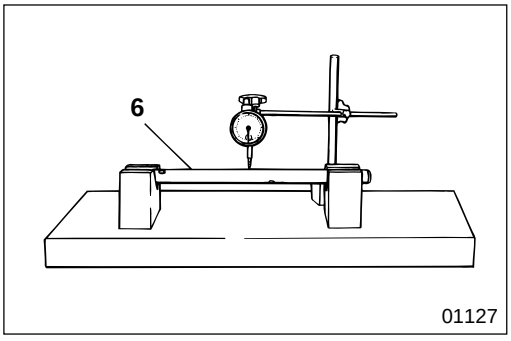

6 **Bend of O/D shift rail C**

If the measured value is higher than the limit, correct or replace O/D shift rail **C6**.

NOTE

Read the dial gauge after turning O/D shift rail C6 one full revolution. The bend is one half of the indicated value.

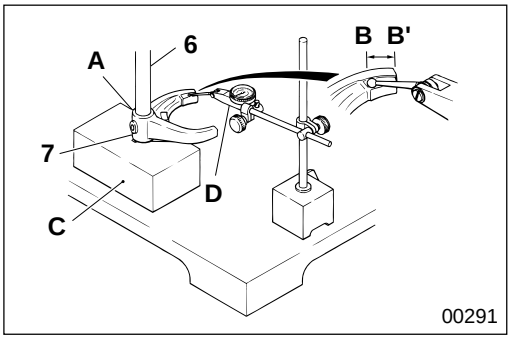

7 **Tilt of O/D gear shift fork claw**

- Measure the tilt (difference between **B** and **B'**) of claw **B-B'** against hole **A** of O/D shift rail C**6** of O/D gear shift fork **7** with the shift rail upright.
- If the measured value is higher than the limit, replace gear shift fork **7**.
  C: V-block
  D: Dial gauge

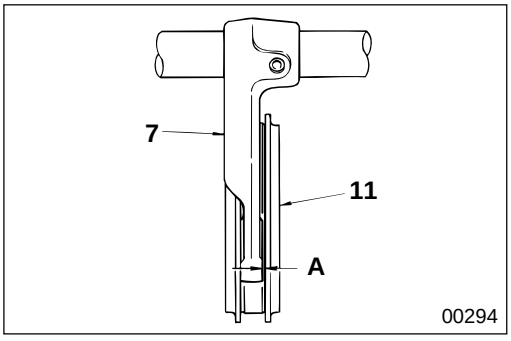

7 **11** **Clearance between O/D gear shift fork and synchronizer sleeve**

- Measure clearance **A** between O/D gear shift fork **7** and synchronizer sleeve **11**.
- If the measured value is higher than the limit, replace the faulty parts.

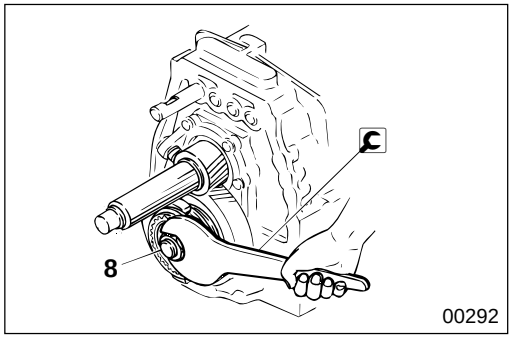

8 **Removal and installation of countershaft rear lock nut**

Have transmissions engaged in two gears to lock counter shaft for this work.
: Single spanner

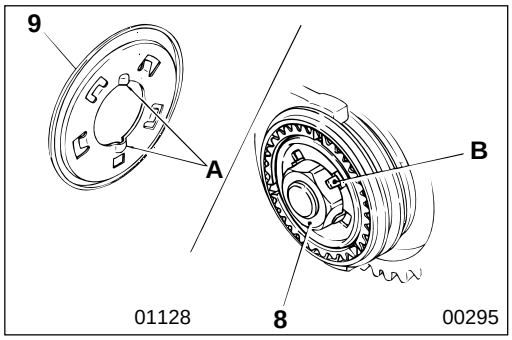

9 **Installation of shifting key retainer**

- Install so that shifting key retainer **9** protrusions **A** (at 2 places) rest in recessions provided on synchronizer hub.
- After tightening of lock nut, stake the areas with slits **B** at 4 places of shifting retainer, toward lock nut **8**.

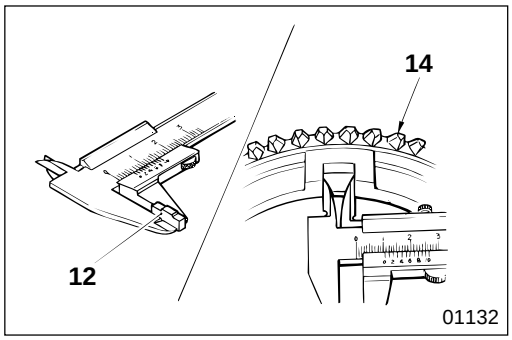

10 **to** **15** **Synchromesh mechanism and countershaft O/D gear assembly**

[Inspection]

(1) Clearance between synchronizer ring 14 and shifting key 12.

If the measured value is higher than the limit, replace the faulty parts.

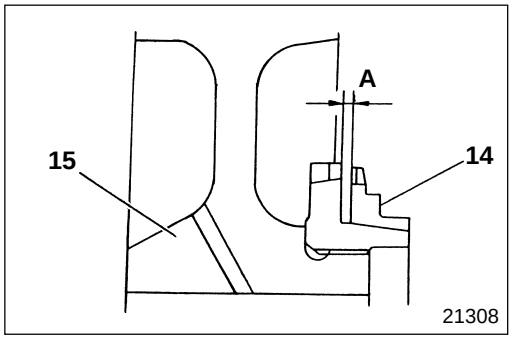

(2) Clearance between synchronizer ring 14 and countershaft O/D gear assembly 15

- Measure clearance **A** between synchronizer ring **14** and the gear cone of countershaft O/D gear assembly **15**.
- When measuring this value, press synchronizer ring **14** evenly, and measure all around the circumference.
- If the measured value is lower than the limit, replace the faulty parts.

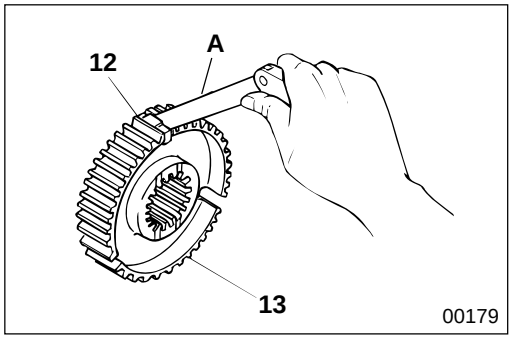

(3) Clearance between shifting key 12 and synchronizer hub 13

If the measured value is higher than the limit, replace the faulty parts.
A : Feeler gauge

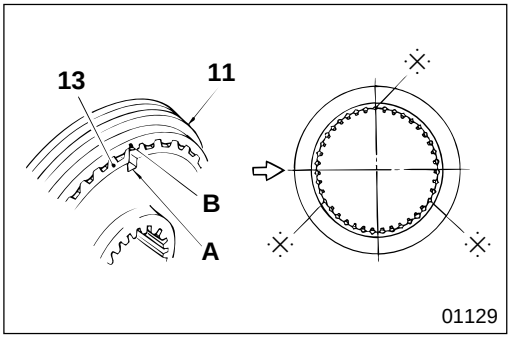

[Installation]

- Align the three keyways **A** of synchronizer hub **13** with the three stub teeth **B** (illustrated by ⋇ mark) of synchronizer sleeve **11** to install the synchronizer hub.
- To reassemble synchronizer hub **13** and synchronizer sleeve **11**, align the alignment marks made during disassembly.

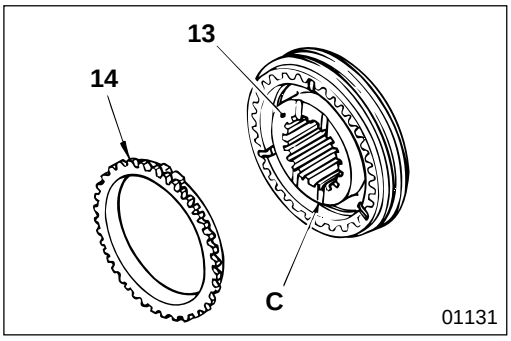

- Assemble synchronizer ring **14** on synchronizer hub **13** with the keyway aligned to the side where oil groove **C** is located.

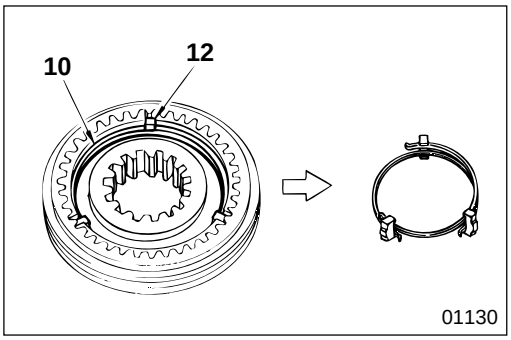

- Insert shifting key **12** into the keyway.
- Install shifting key spring **10** so that its opening is offset from the one of the shifting key.
- Make sure that the openings of shifting key springs do not align with each other.

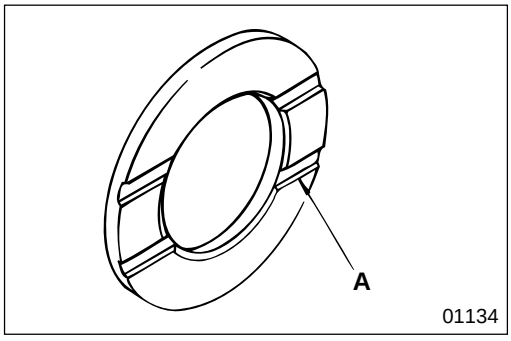

17 Installation of thrust washer

Install with the side having oil grooves **A** facing the side of gear.

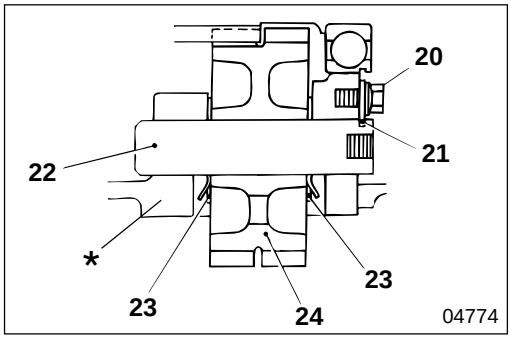

20 to 24 Assembly of reverse idler gear

- Install reverse shaft gear side washer **23** and reverse idler gear **24** in trasmission body *****.
- Install reverse idler shaft **22** in transmission body ***** using a plastic-headed mallet.
- Install reverse shaft lock piece **21** in transmission body ***** with mounting bolt **20**.

6TH GEAR < S6 > AND REVERSE IDLER GEAR

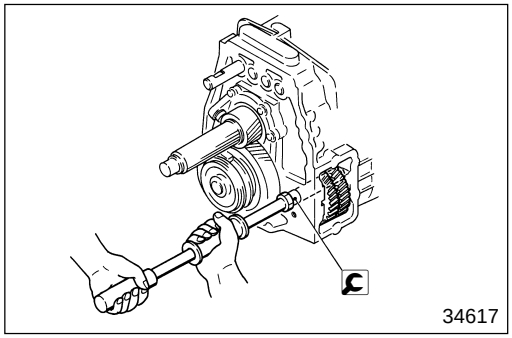

22 **Removal of reverse idler shaft.**

: Drive pinion and reverse shaft puller

M E M O

TRANSMISSION BODY

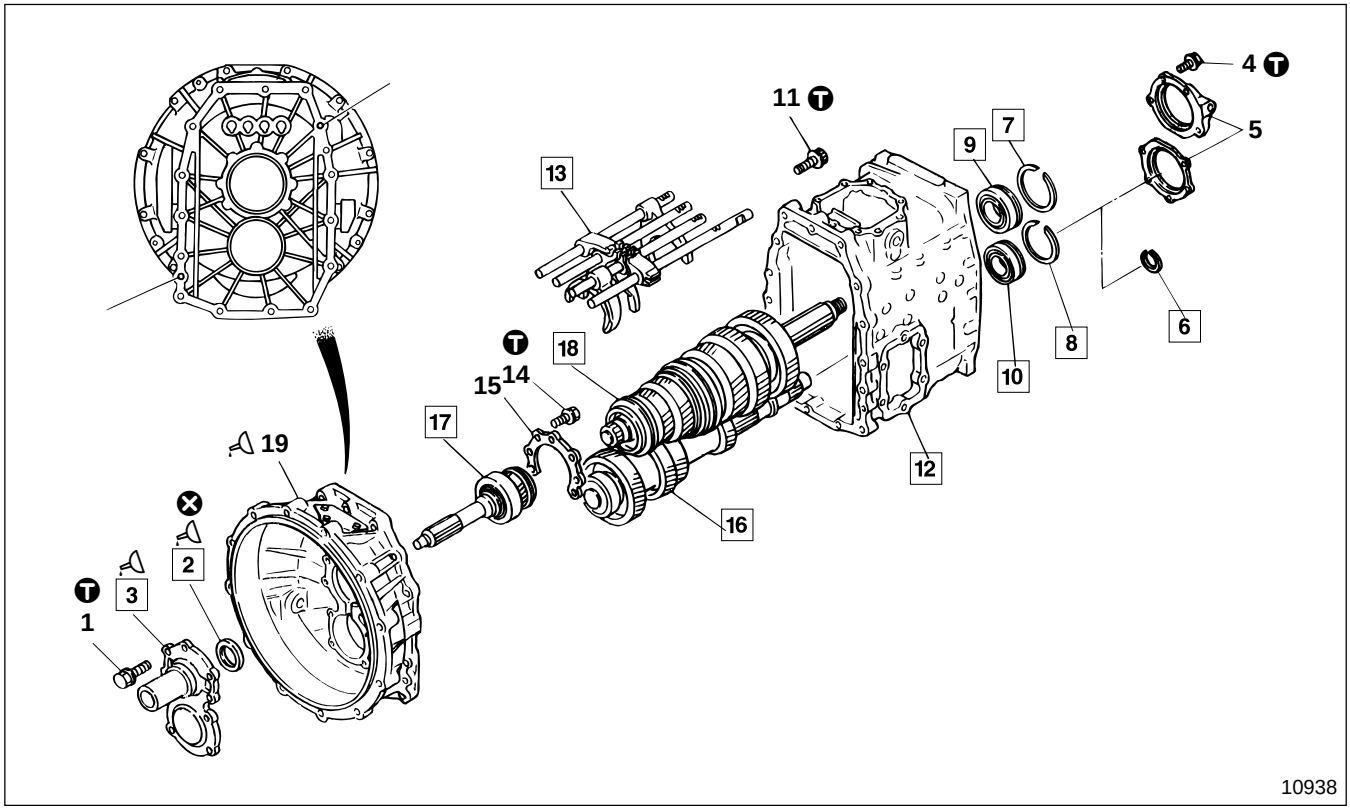

● **Disassembly sequence**

1 Bolt
2 Oil seal
3 Front bearing retainer
4 Bolt < S6 >
5 Rear bearing retainer < S6 >
6 Snap ring < S5 >
7 Snap ring
8 Snap ring
9 Mainshaft rear bearing
10 Countershaft rear bearing
11 Bolt
12 Transmission case
13 Shift rail and shift fork 📖 P22-42
14 Bolt
15 Drive pinion bearing retainer
16 Countershaft assembly 📖 P22-56
17 Drive pinion assembly 📖 P22-46
18 Mainshaft assembly 📖 P22-48
19 Clutch housing assembly

: Positioning pins
⊗ : Non-reusable parts

● **Assembly sequence**

Follow the disassembly sequence in reverse.

NOTE

- **After removing parts 1 to 3, disassemble the transmission assembly with the body laid vertically on its clutch housing side.**
- **Remove parts 13, and 16 to 18 as a group. However, shift rail and shift fork 13 can be disassembled on its own if you are not going to disassemble parts 16 to 18. 📖 P22-42**

Tightening torque

Unit : N·m {lbf.ft, kgf·m}

Location	Parts to be tightened	Tightening torque	Remarks
1	Bolt (Front bearing retainer mounting)	40 {30, 4.1}	—
4	Bolt (Rear bearing retainer mounting)	40 {30, 4.1}	—
11	Bolt (Transmission case mounting)	120 {90, 12.4}	—
14	Bolt (Drive pinion retainer mounting)	40 {30, 4.1}	—

Lubricant and/or sealant

Location	Points of application	Specified lubricant and/or sealant	Quantity
2	Lip area of oil seal	Wheel bearing grease [NLGI No.2 (Li soap)]	As required
3	Contact surface between front bearing retainer and clutch housing assembly	THREEBOND 1215	As required
19	Contact surface between clutch housing assembly and transmission case	THREEBOND 1215	As required

Special tools

Unit : mm {in.}

Location	Tool name and shape	Part No.	Application
2	Oil seal installer **X** 62 {2.44} **Y** 40 {1.57} **Z** 30 {1.18} **a** 10 {0.39} **b** 10 {0.39} 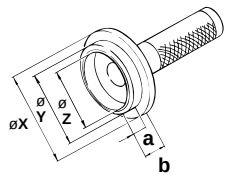 01135	ME624241	Installation of front bearing retainer oil seal
6, 7, 8	Snap ring expander 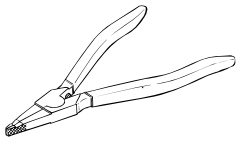 01137	MH061268	Removal of snap rings from mainshaft rear bearing and countershaft front and rear bearings
9	Mainshaft bearing puller 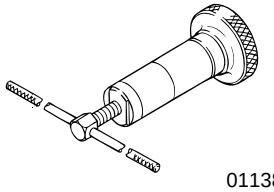 01138	*MH061732	Removal of mainshaft rear bearing

* components of puller and installer kit P22-65

Unit : mm {in.}

Location	Tool name and shape	Part No.	Application
9	Mainshaft bearing installer 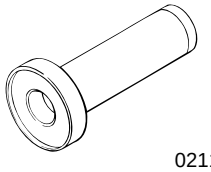 02115	*MH624234	Installation of mainshaft rear bearing
10	Countershaft bearing puller 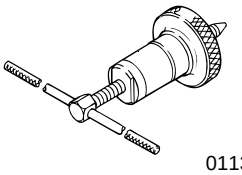 01139	*ME061731	Removal of countershaft rear bearing
	Countershaft bearing installer 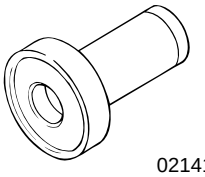 02141	*ME624233	Installation of countershaft bearing
12	Eye bolt  01140	MH062340	Lifting of transmission case
	Gear puller 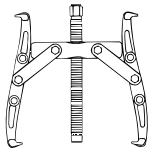 01148	MH062308	Removal of transmission case
16 to 18	Steel lifting band X: 87 {3.43} Y: 175 {6.89} a: 80 {3.15} b: 336 {13.2} 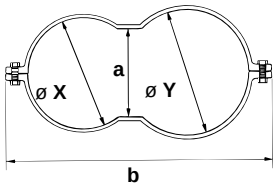 01141	MH062343	Removal and installation of mainshaft assembly, countershaft assembly and drive pinion assembly
	Eye nut  01142	MH062341	

* components of puller and installer kit. P22-65

Location	Tool name and shape	Part No.	Application
16	Countershaft bearing puller 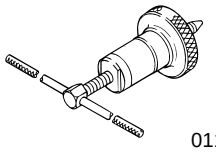 01139	*MH062426	Removal of countershaft front bearing
	Countershaft bearing installer 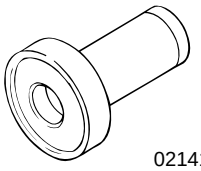 02141	*ME624233	Installation of countershaft front bearing

* components of puller and installer kit. P22-65

◆ Service procedure

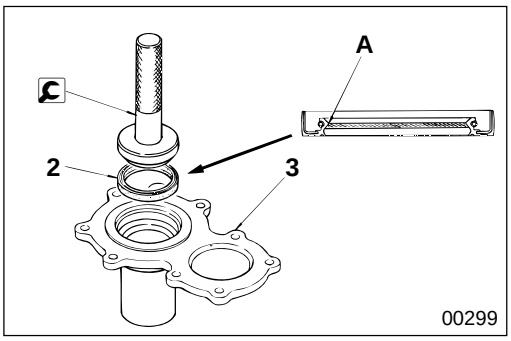

00299

2 Installation of oil seal

- Apply grease to lip area **A** of oil seal **2**.
- Press-fit oil seal **2** into front bearing retainer **3** in the direction as illustrated using oil seal installer.

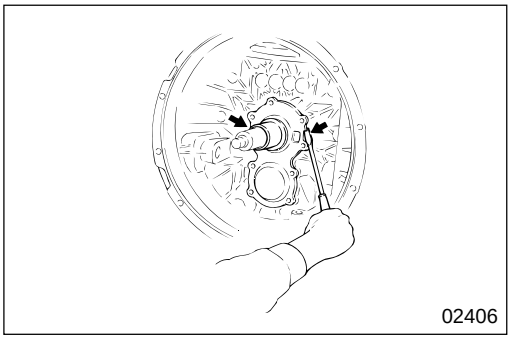
02406

3 Front bearing retainer

[Removal]

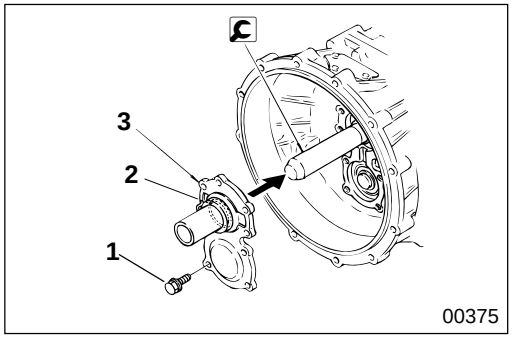

[Installation]
Press-fit front bearing retainer **3** into clutch housing assembly **19** using 🔧 oil seal front guide.

CAUTION⚠

Be careful when installing front bearing retainer 3, that you do not damage oil seal 2 installed on the front bearing retainer.

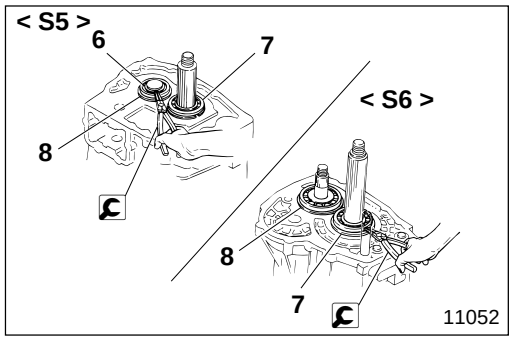

6 to 8 Removal and installation of snap ring

🔧 : Snap ring expander

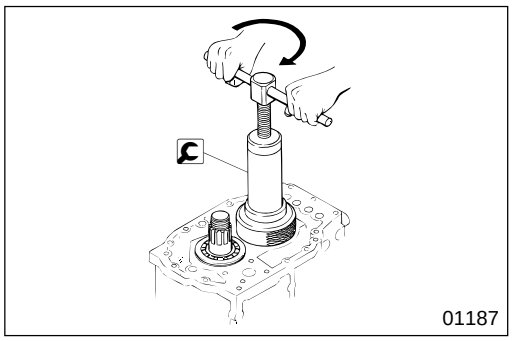

9 Mainshaft rear bearing

[Removal]
🔧 : Mainshaft bearing puller

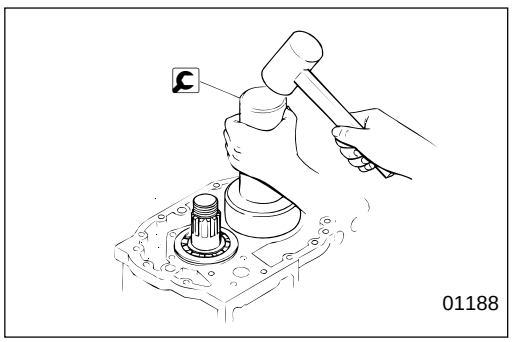

[Installation]
🔧 : Mainshaft bearing installer

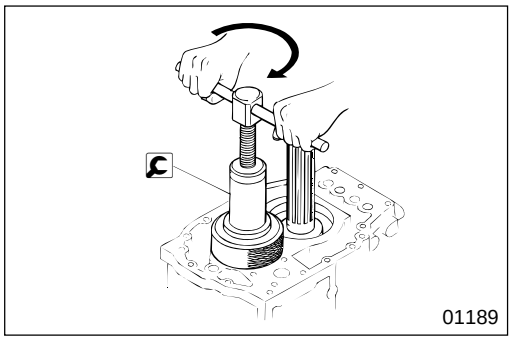

10 Countershaft rear bearing

[Removal]
🔧 : Countershaft bearing puller

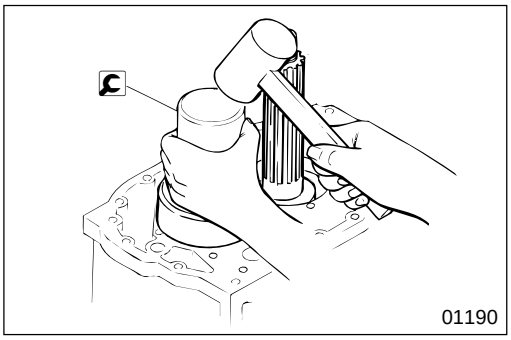

[Installation]

: Countershaft bearing installer

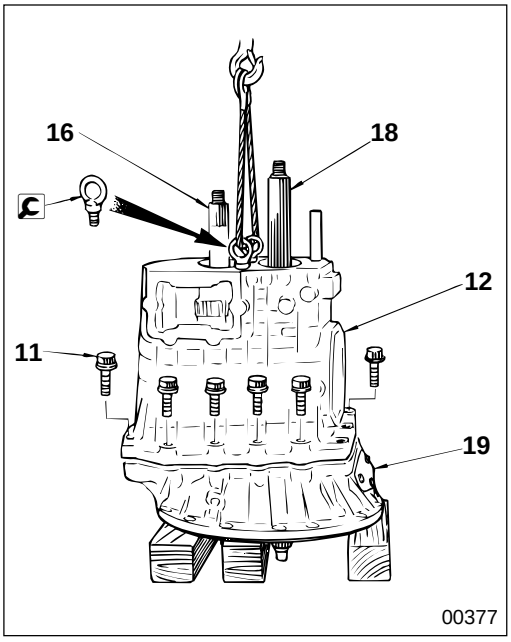

12 Removal and installation of transmission case

[Removal]

● **Remove transmission case 12.**

Method 1

- When lifting up with a crane, install eye bolts on transmission case **12** and pass a steel sling through them.
- After removing bolts **11**, lift transmission case **12** up with a crane and keep hitting the rear ends of clutch housing assembly **19**, mainshaft assembly **18** and countershaft assembly **16**. Use a plastic-headed or copper-headed mallet to remove the transmission case.

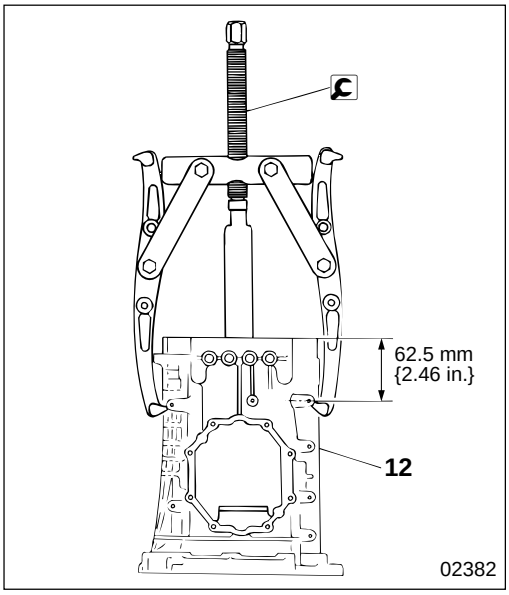

Method 2

- A gear puller can be used instead of a crane.
  Puller installation position

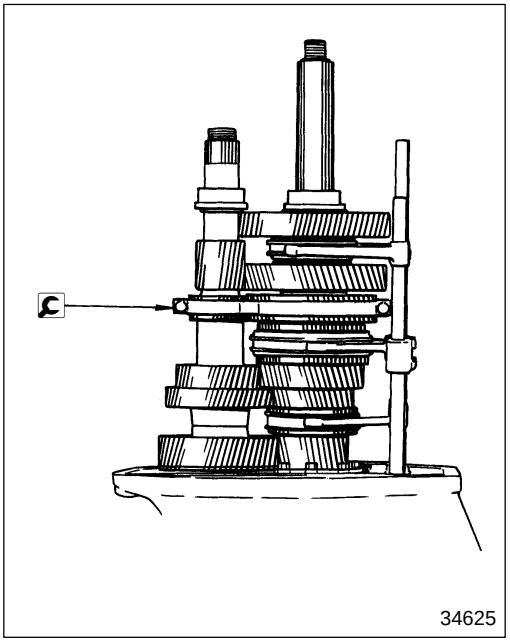

- After removing transmission case **12**, fit the 2nd gear unit using 🔧 steel lifting band to ensure safety.

CAUTION ⚠

Be sure to tighten 🔧 steel lifting band adequately enough to prevent it from coming undone, but not excessively, because excessive tightening would damage the gears, etc.

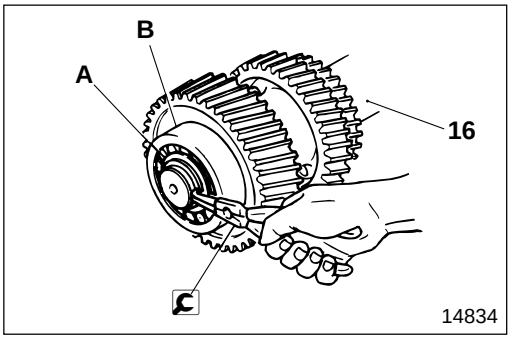

- Remove snap ring **A** from countershaft assembly **16**.
  B : Countershaft front bearing
  🔧 : Snap ring expander

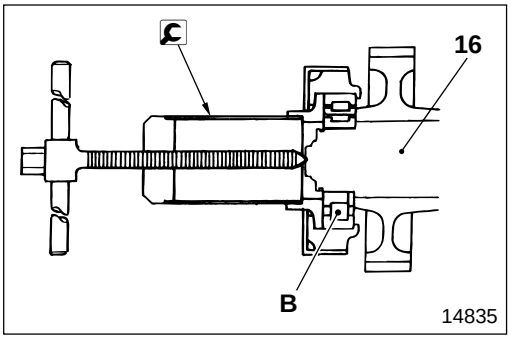

- Remove countershaft bearing **B** from countershaft assembly **16**.
  🔧 : Countershaft bearing puller

[Installation]
Follow the removal sequence in reverse.

CAUTION ⚠

Be careful not to damage mainshaft assembly 18, or rear bearings 9, 10 of countershaft assembly 16 during installation.

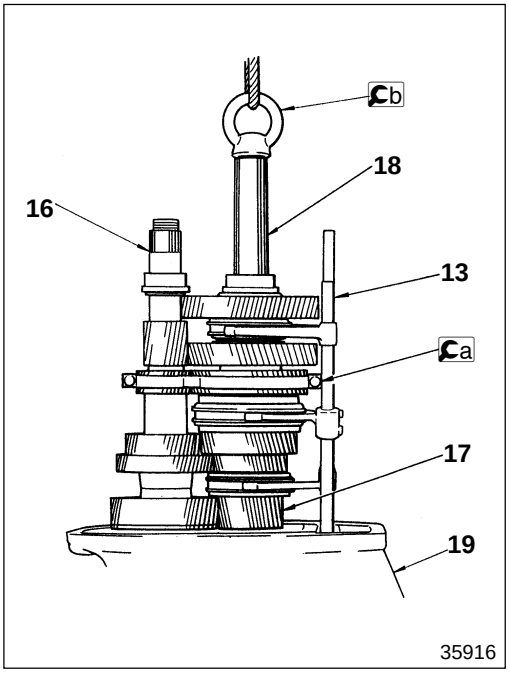

13 **16** **to** **18** **Shift rail and shift fork, countershaft assembly, drive pinion assembly, and mainshaft assembly**

[Removal]
Remove or install shift rail and shift fork **13**, countershaft assembly **16**, drive pinion assembly **17**, and mainshaft assembly **18** as a group.

- Before lifting, after removing the case, install b eye nut at the end of mainshaft **18**, fitted with a steel lifting band.
- Fix shift rail and shift fork **13** to mainshaft assembly **18** with a rubber band.
- Fix a piece of wood to clutch housing assembly **19**, and use a crane to lift the clutch housing together with drive pinion assembly **17** up, at the same time hitting them with a plastic-headed mallet to remove them.

CAUTION

- **Be sure to tighten a steel lifting band adequately enough to prevent it from coming undone, but not excessively, because excessive tightening would damage the gears, etc.**
- **Make sure, when lifting mainshaft assembly 18 or other parts, that you support drive pinion assembly 17 with your hand in order to prevent it from falling when the mainshaft assembly and countershaft assembly 16 come apart.**

[Installation]
Method 1

- Follow the removal sequence in reverse.

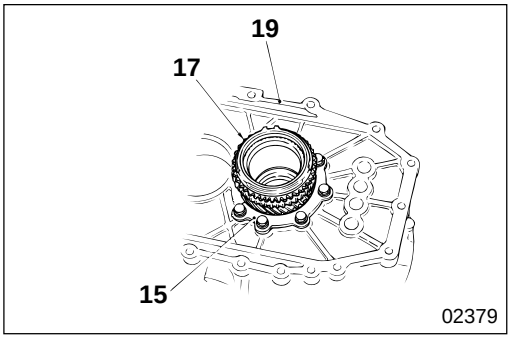

Method 2

- After installing drive pinion assembly **17** in clutch housing assembly **19**, install drive pinion bearing retainer **15**.

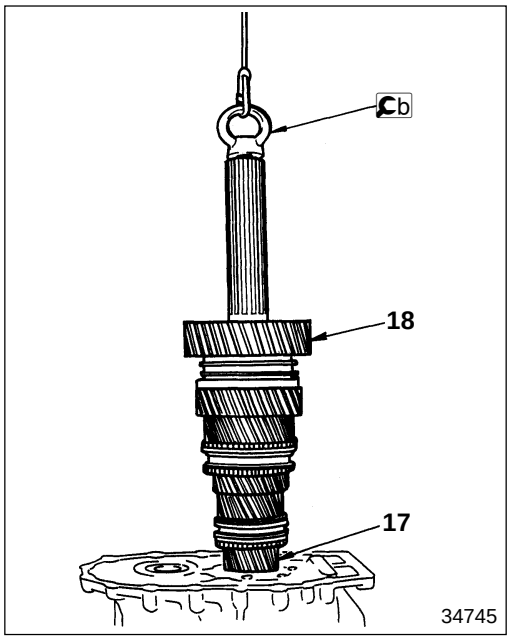

- Install b eye nut at the end of mainshaft assembly **18**.
- Lift mainshaft assembly **18** up using a crane and install the mainshaft assembly on drive pinion assembly **17**.

CAUTION

To prevent mainshaft assembly 18 from falling, support it using a crane.

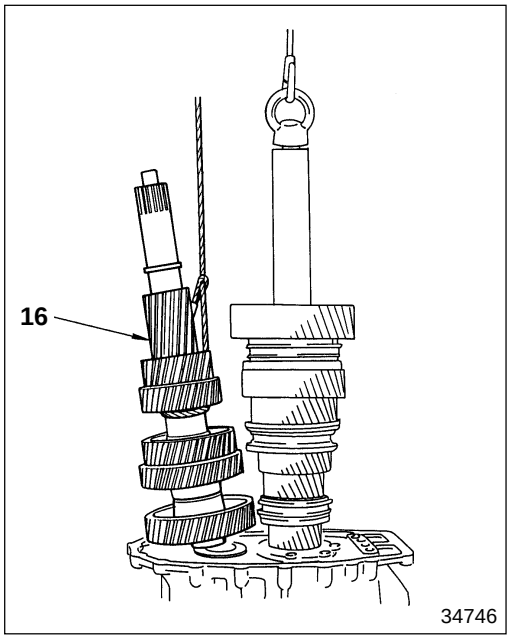

- Install countershaft assembly **16** in clutch housing assembly **19**.

CAUTION

If you use this method of installation, first remove the countershaft front bearing. P22-56

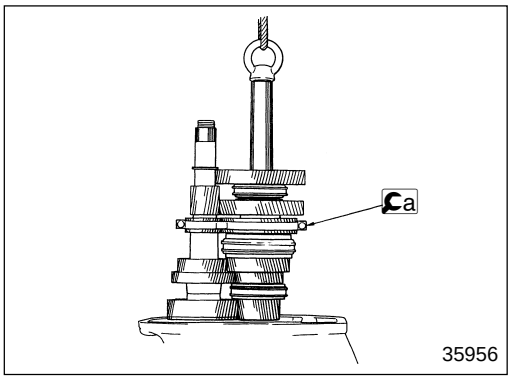

- Fit the 2nd gear unit using a steel lifting band to ensure safety.

CAUTION

Be sure to tighten a steel lifting band adequately enough to prevent it from coming undone, but not excessively, because excessive tightening would damage the gears, etc.

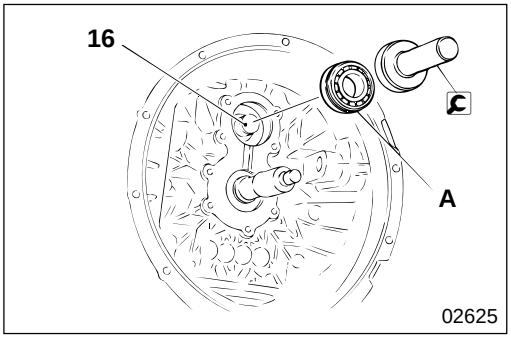

- Install shift rail and shift fork **13** and transmission case **12** in clutch housing assembly **19**.
- Place cluch housing assembly **19** horizontally so that countershaft assembly **16** is uppermost.
- Install the countershaft front bearing **A** into clutch housing assembly **19** using countershaft bearing installer.

CAUTION

Be sure to install the snap ring of the countershaft front bearing.

Shift Rail and Shift Fork

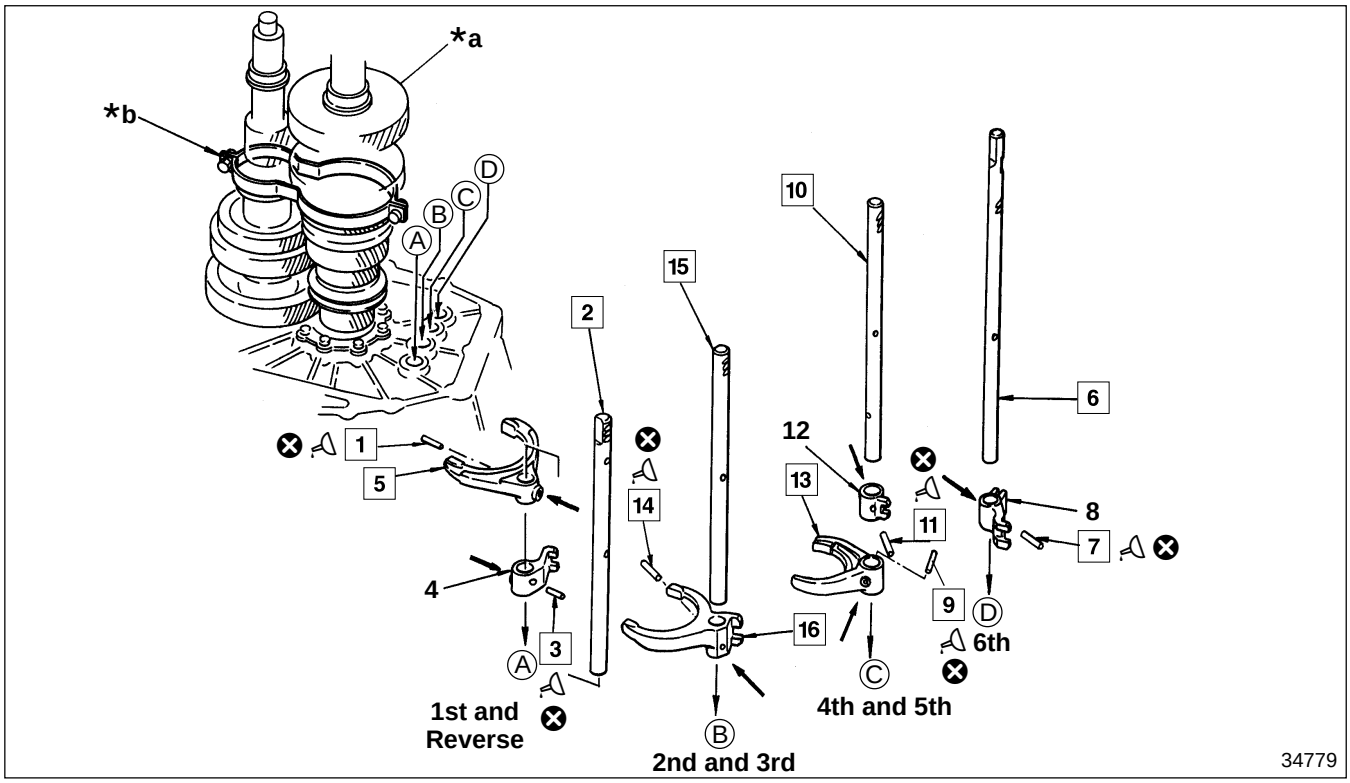

Arrow mark : Removal and installation direction for spring pin

● **Disassembly sequence** (When the mainshaft assembly is not removed or installed and only the shift rail and shift fork is disassembled)

1 Spring pin
2 1st and reverse shift rail
3 Spring pin
4 1st and reverse shift rail jaw
5 1st and reverse shift fork
6 6th shift rail < S6 >
7 Spring pin < S6 >
8 6th shift rail jaw < S6 >
9 Spring pin
10 4th and 5th shift rail
11 Spring pin
12 4th and 5th shift rail jaw
13 4th and 5th shift fork
14 Spring pin
15 2nd and 3rd shift rail
16 2nd and 3rd shift fork

***a** : Mainshaft assembly
***b** : steel lifting band
⊗ : Non-reusable parts

● **Assembly sequence**

Follow the disassembly sequence in reverse. Remove steel lifting band after installing the shift rail and shift fork.

Service standards

Unit : mm {in.}

Location	Maintenance item	Standard value	Limit	Remedy
2, 10, 15	Bend of shift rail	0.039 {0.0015} or less	0.08 {0.0031}	Correct or replace
5, 13, 16	Tilt of shift fork claw	0.1 {0.0039} or less	0.2 {0.0079}	Replace
5, *a	Clearance between 1st and reverse shift fork and synchronizer sleeve	0.3 to 0.5 {0.012 to 0.020}	1.0 {0.039}	Replace
6	Bend of 6th shift rail	0.047 {0.0019} or less	0.09 {0.0035}	Correct or replace
13, *a	Clearance between 4th and 5th shift fork and synchronizer sleeve	0.3 to 0.6 {0.012 to 0.024}	1.0 {0.039}	Replace
16, *a	Clearance between 2nd and 3rd shift fork and synchronizer sleeve	0.2 to 0.4 {0.0079 to 0.016}	1.0 {0.039}	Replace

Sealant

Location	Points of application	Specified sealant	Quantity
1, 3, 7, 9, 11, 14	Spring pin	LOCTITE 601	As required

◆ Service procedure

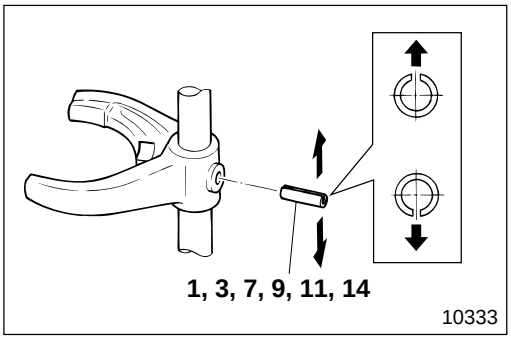

1 **3** **7** **9** **11** **14** **Installation of spring pin**

Install spring pins **1**, **3**, **7**, **9**, **11, 14** in the direction as illustrated.

CAUTION

- **Make sure you do not drive in spring pins 1, 3, 7, 9, 11, 14 fully, leave 0 to 0.5 mm {0 to 0.020 in.} outside to prevent them from slipping out.**
- **Do not remove spring pin 9 for 4th and 5th shift fork 13 (made of aluminum), except when replacing shift fork 13 or shift rail 10.**
- **Note that the length of spring pin 9 differs from that of spring pins 1, 3, 7, 11, 14.**
- **Be careful when driving in spring pins 1, 3, 7, 9, 11, 14 that you do not subject shift rails 2, 6, 10, 15 to excessive strain, because this would cause faults such as bent shift rails.**

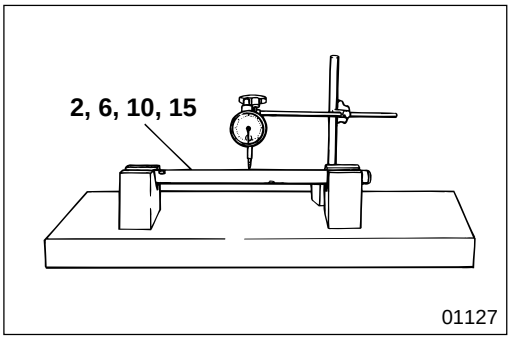

2 **6** **10** **15** **Bend of shift rail**

If the measured value is higher than the limit, correct or replace shift rail **2**, **6**, **10** or **15**.

NOTE

Read the dial gauge after turning shift rails 2, 6, 10, 15 one full revolution. The bend is one half of the indicated value.

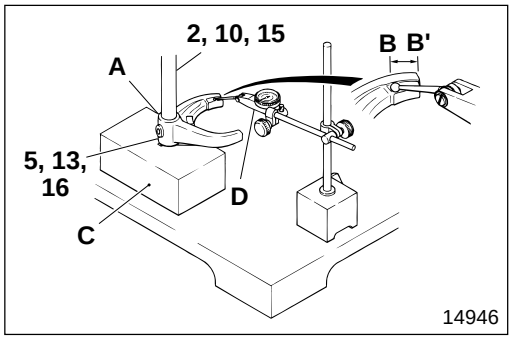

5 13 16 Tilt of shift fork claws

- Measure the tilt (difference between **B** and **B'**) of claw **B**–**B'** against hole **A** of shift rails **2, 10, 15** of shift forks **5, 13, 16** with the shift rails upright.
- If the measured value is higher than the limit, replace shift fork **5**, **13**, or **16**.
  C : V-block
  D : Dial gauge

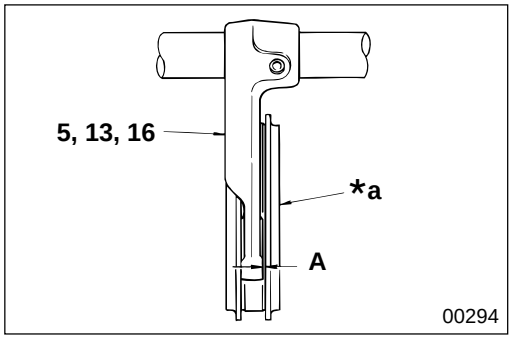

5 13 16 *a Clearance between gear shift fork and synchronizer sleeve of mainshaft

If clearance **A** is higher than the limit, replace the faulty parts.
***a** : Synchronizer ring of mainshaft assembly

M E M O

DRIVE PINION ASSEMBLY

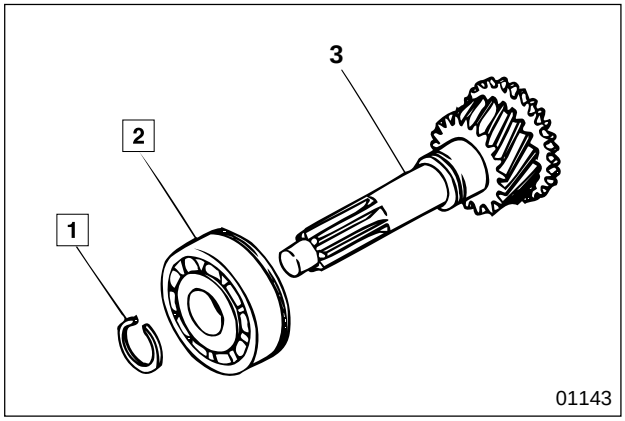

● **Disassembly sequence**

1 Snap ring
2 Drive pinion bearing
3 Drive pinion

● **Assembly sequence**

Follow the disassembly sequence in reverse.

Special tools

Location	Tool name and shape	Part No.	Application
1	Snap ring expander 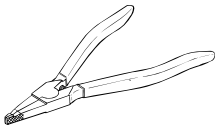 01137	MH061268	Removal and installation of snap ring of drive pinion bearing
2	Drive pinion bearing puller 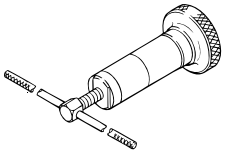 01138	*MH062440	Removal of drive pinion bearing
	Drive pinion bearing installer 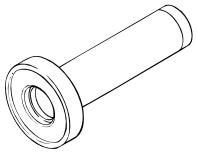 02142	*ME624235	Installation of drive pinon bearing

* components of puller and installer kit P22-65

◆ Service procedure

1 **Removal and installation of snap ring**

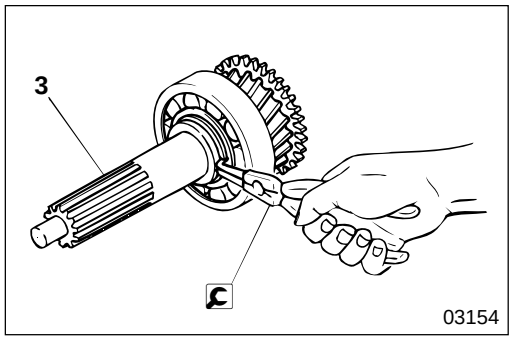

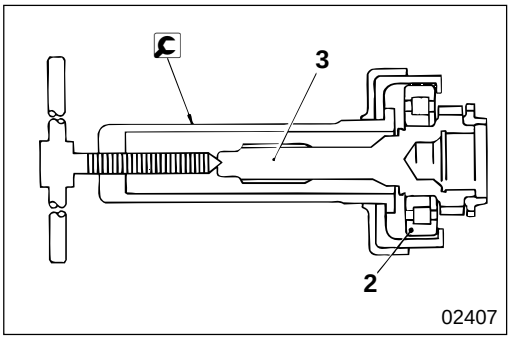

2 Drive pinion bearing

[Removal]

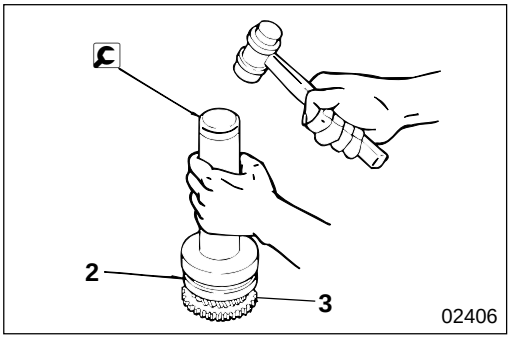

[Installation]

MAINSHAFT ASSEMBLY

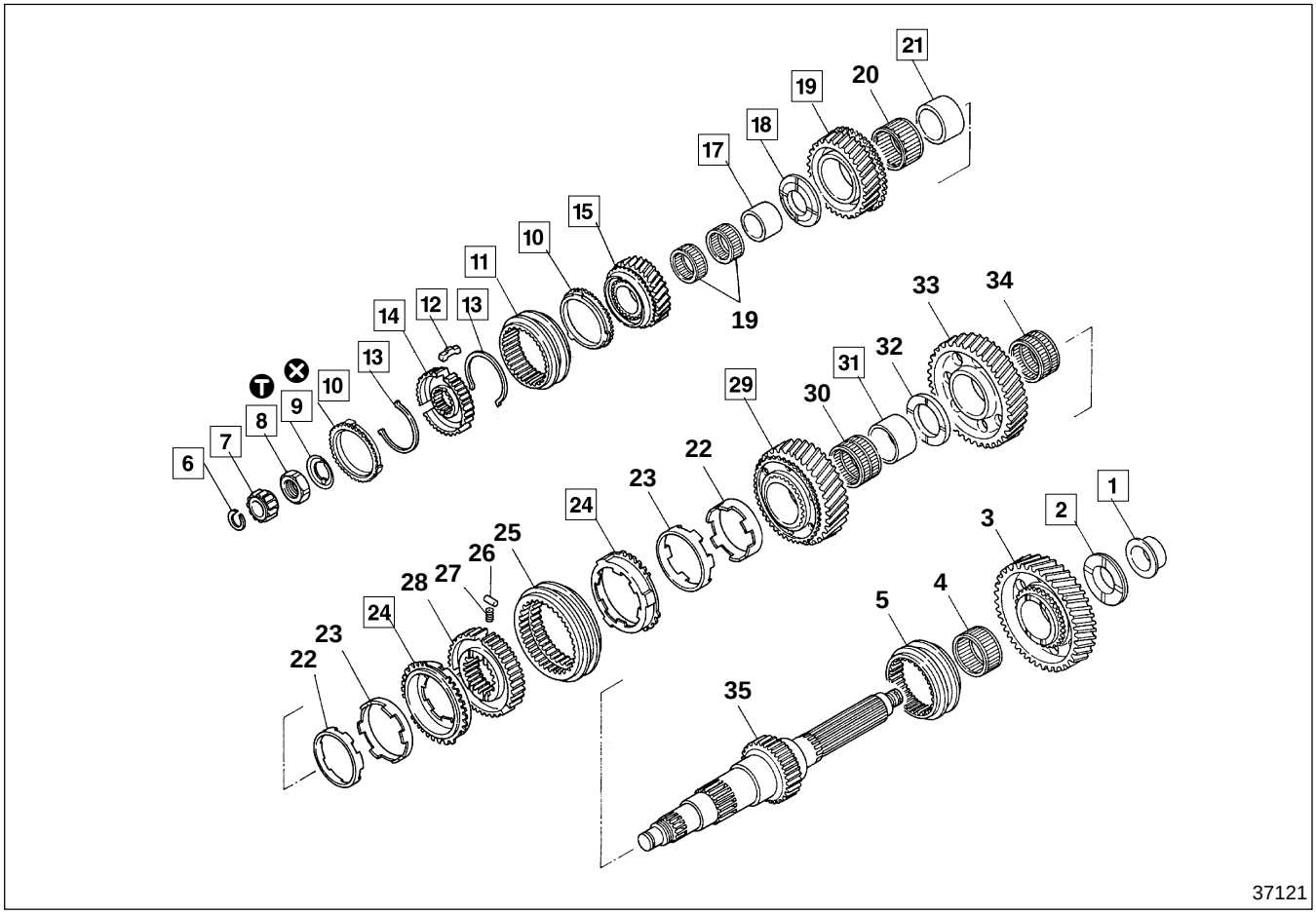

● **Work before disassembly**

P22-51

● **Disassembly sequence**

1 Mainshaft rear bearing inner race < S6 >
2 Reverse gear thrust washer
3 Reverse gear
4 Needle bearing
5 Sleeve
6 Snap ring
7 Pilot bearing
8 Lock nut
9 Lock washer
10 Synchronizer ring
11 Synchronizer sleeve
12 Shifting key
13 Shifting key spring
14 Synchronizer hub
15 4th gear assembly
16 Needle bearing
17 4th gear bearing sleeve
18 3rd and 4th gear thrust washer
19 3rd gear assembly
20 Needle bearing
21 3rd gear bearing sleeve
22 Synchronizer inner ring
23 Synchronizer center cone
24 Synchronizer outer ring
25 Synchronizer sleeve
26 Shifting key
27 Synchronizer spring
28 Synchronizer hub
29 2nd gear assembly
30 Needle bearing
31 2nd gear bearing sleeve
32 1st and 2nd gear thrust washer
33 1st gear
34 Needle bearing
35 Mainshaft

⊗ : Non-reusable part

● **Assembly sequence**

Follow the disassembly sequence in reverse.

Service standards

Unit : mm {in.}

Location	Maintenance item	Standard value (Basic diameter in [ ])	Limit	Remedy
3	End play of reverse gear	0.15 to 0.35 {0.0059 to 0.014}	0.5 {0.020}	Replace gear or thrust washer
3, 4, 35	Play in the diameter direction after assembling reverse gear	—	0.12 {0.0047}	Replace
5, 35	Play in the rotating direction of sleeve and spline of mainshaft	0.052 to 0.148 {0.0020 to 0.0058}	0.3 {0.012}	Replace
7, 35	Play in the diameter direction after assembling pilot bearing	—	0.12 {0.0047}	Replace
10	Clearance between synchronizer ring and cone of drive pinion assembly	1.48 to 1.77 {0.058 to 0.070}	0.2 {0.0079}	Replace
10, 12	Clearance between synchronizer ring keyway and shifting key	4.75 to 4.95 {0.187 to 0.195}	5.8 {0.23}	Replace
10, 15	Clearance between synchronizer ring and cone of 4th gear	1.48 to 1.77 {0.058 to 0.070}	0.2 {0.0079}	Replace
11, 14	Play in the rotating direction of synchronizer sleeve and synchronizer hub	0.052 to 0.148 {0.0020 to 0.0058}	0.3 {0.012}	Replace
12, 14	Clearance between shifting key and synchronizer hub keyway	0.05 to 0.2 {0.0020 to 0.0079}	0.5 {0.020}	Replace
15	End play of 4th gear	0.25 to 0.4 {0.0098 to 0.016}	0.5 {0.020}	Replace gear or thrust washer
15, 16, 17, 35	Play in the diameter direction after assembling 4th gear	—	0.12 {0.0047}	Replace
17	Outer diameter of 4th gear bearing sleeve	$[54]^{-0.030}_{-0.043}$ {$[2.12]^{-0.0012}_{-0.0017}$}	– 0.1 {– 0.0039}	Replace
19	End play of 3rd gear	0.15 to 0.35 {0.0059 to 0.014}	0.5 {0.020}	Replace gear or thrust washer
19, 24	Clearance between cone area of 3rd gear and synchronizer outer ring	1.21 to 1.79 {0.048 to 0.070}	0.2 {0.0079}	Replace
19, 20, 21, 35	Play in the diameter direction after assembling 3rd gear	—	0.12 {0.0047}	Replace
21	Outer diameter of 3rd gear bearing sleeve	$[68]^{-0.030}_{-0.043}$ {$[2.68]^{-0.0012}_{-0.0017}$}	– 0.1 {– 0.0039}	Replace
24, 29	Clearance between synchronizer outer ring and cone area of 2nd gear	1.21 to 1.79 {0.048 to 0.070}	0.5 {0.020}	Replace
29	End play of 2nd gear	0.15 to 0.35 {0.0059 to 0.014}	0.5 {0.020}	Replace gear or thrust washer
29, 30, 31, 35	Play in the diameter direction after assembling 2nd gear	—	0.12 {0.0047}	Replace
31	Outer diameter of 2nd gear bearing sleeve	$[71]^{-0.030}_{-0.043}$ {$[2.8]^{-0.0012}_{-0.0017}$}	– 0.1 {– 0.0039}	Replace
33	End play of 1st gear	0.15 to 0.35 {0.0059 to 0.014}	0.5 {0.020}	Replace gear or thrust washer
33, 34, 35	Play in the diameter direction after assembling 1st gear	—	0.12 {0.0047}	Replace

MAINSHAFT ASSEMBLY

Tightening torque

Unit : N·m {lbf.ft, kgf·m}

Location	Parts to be tightened	Tightening torque	Remarks
8	Lock nut	245 {180, 25}	—

Special tools

Unit : mm {in.}

Location	Tool name and shape	Part No.	Application
1, 17, 21, 31	Gear puller 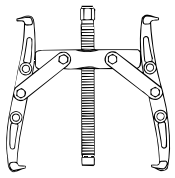 01148	MH062308	Removal of bearing sleeve
6	Snap ring expander 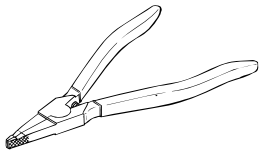 01137	MH061268	Removal and installation of snap ring
7	Pilot bearing puller 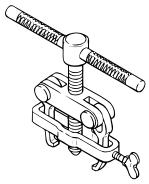 01146	MH061043	Removal of pilot bearing
	Pilot bearing installer 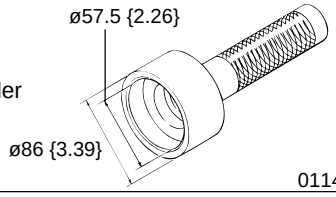 01147	*ME624236	Installation of pilot bearing
8	Single spanner 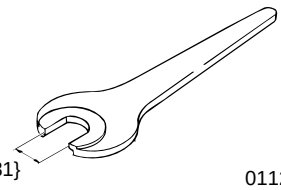 01126	MH061555	Removal and installation of lock nut

* components of puller and installer kit P22-65

◆ Service procedure

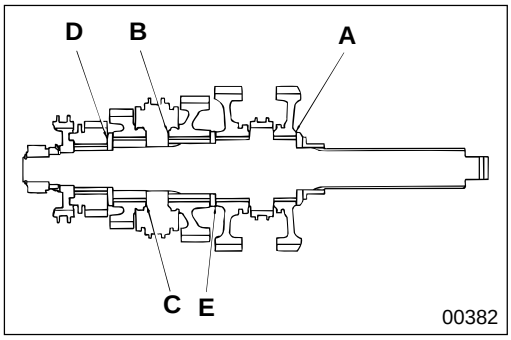

● Work before disassembly

[Inspection]

(1) End play of gears

A : Reverse gear
B : 2nd gear
C : 3rd gear
D : 4th gear
E : 1st gear

If the measured value is higher than the limit, replace the faulty parts.

Also inspect this item after assembly and make sure that the measured value is within the limit.

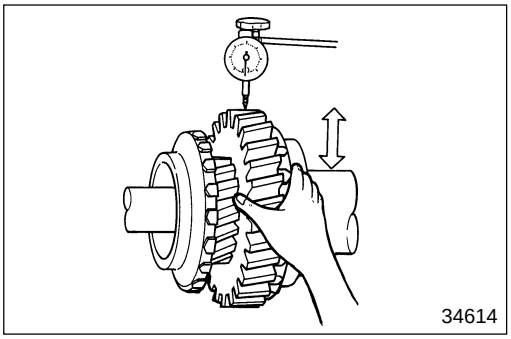

(2) Play of gears in diameter direction

If the measured value is higher than the limit, replace the faulty parts. Also inspect this item after assembly and make sure that the measured value is within the limit.

CAUTION⚠

Be sure when you replace the two needle bearings of a gear, that both needle bearings are from the same color package.

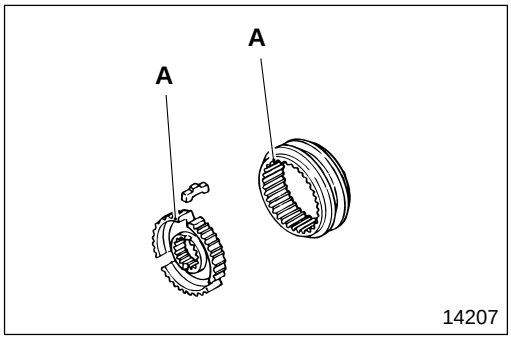

[Alignment marks]

(1) Synchronizer sleeve and synchronizer hub

Before disassembling the synchronizer sleeve and the synchronizer hub, put alignment marks **A** on the places where the shifting keys are installed. When reusing parts, align the alignment marks to assemble.

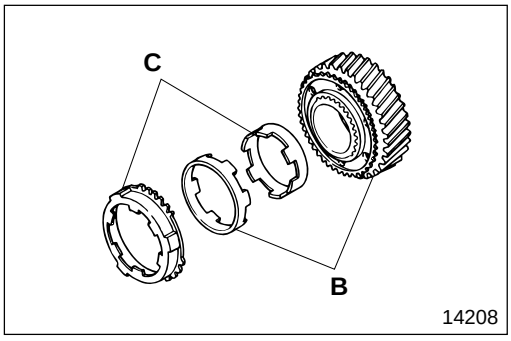

(2) Ring, cone and gear assembly of double cone synchronizer

Before disassembling synchronizer center cone and gear assembly (**B**), and synchronizer center ring and synchronizer outer ring (**C**), put alignment marks on them. When reusing parts, align the alignment marks to assemble.

MAINSHAFT ASSEMBLY

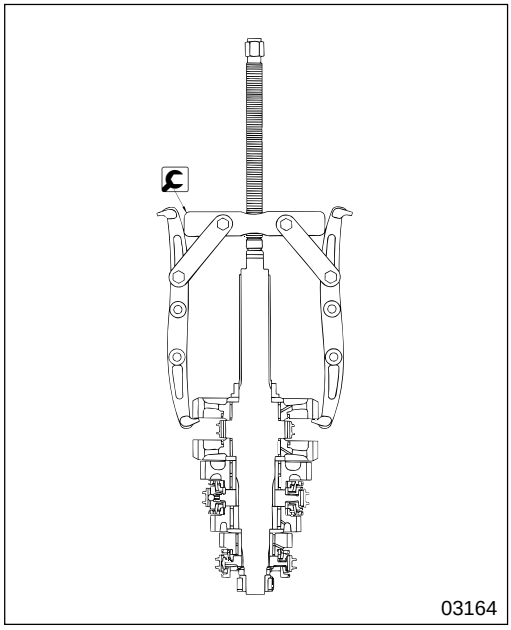

1 **Removal of mainshaft rear bearing inner race < S6 >**

: Gear puller

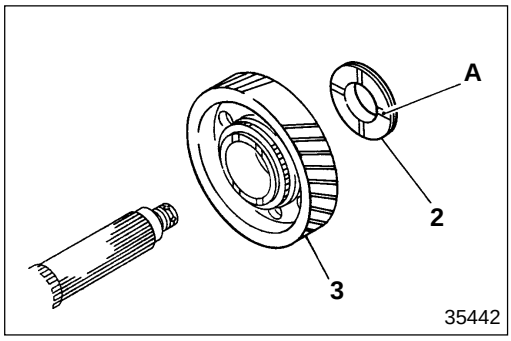

2 **Installation of reverse gear thrust washer**

A : Oil groove

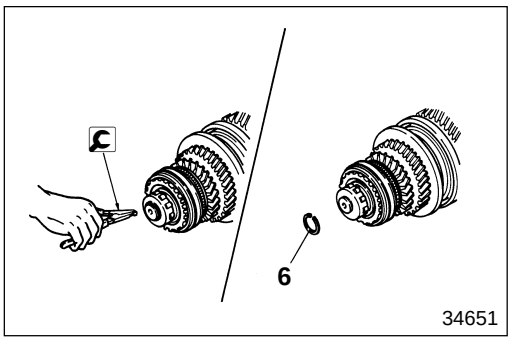

6 **Removal and installation of snap ring**

: Snap ring expander

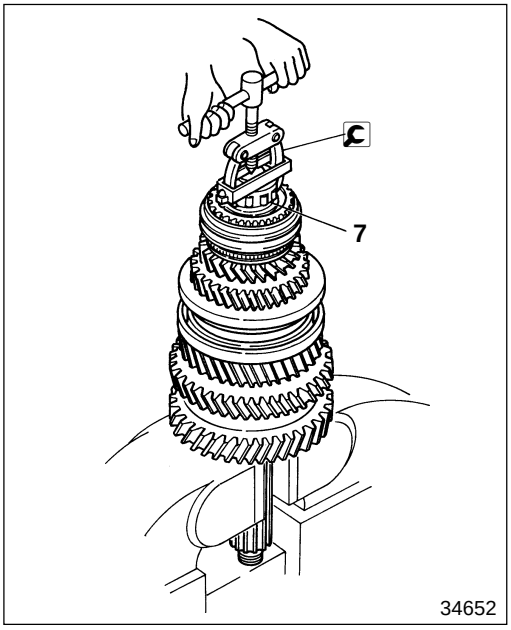

7 **Pilot bearing**

[Removal]

: Pilot bearing puller

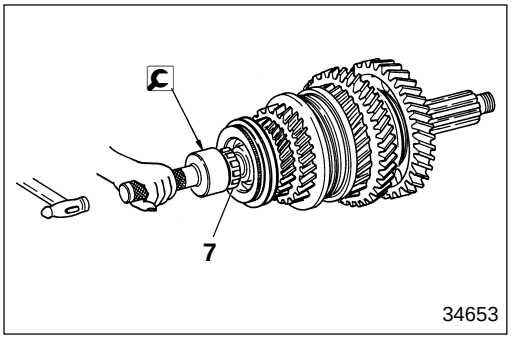

[Installation]

: Pilot bearing installer

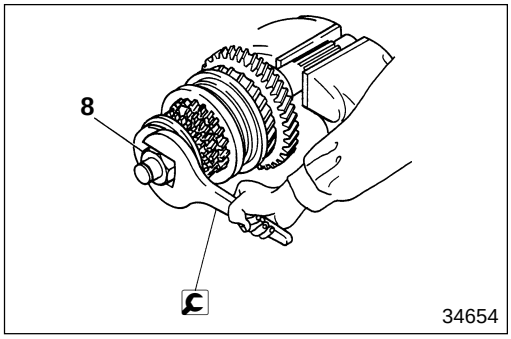

8 **Removal and installation of lock nut**

: Single spanner

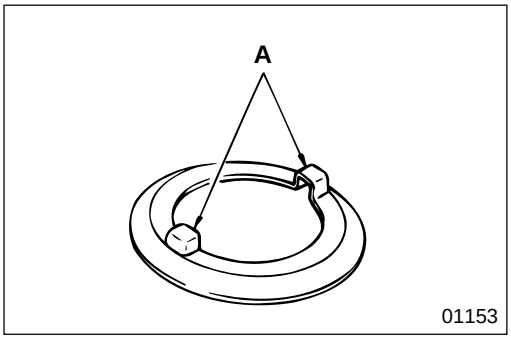

9 **Installation of lock washer**

Install so that protrusions **A** (two points as illustrated) fit into the grooves of synchronizer hub **14**.

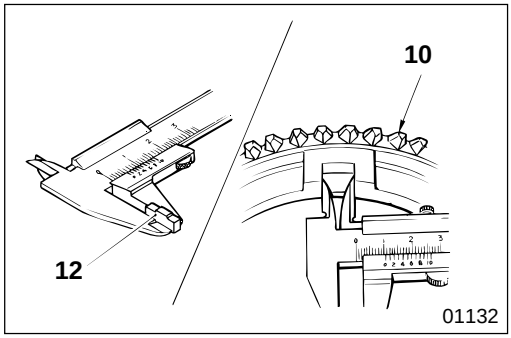

10 to **15** **Synchromesh mechanism and 4th gear**

[Inspection]

(1) Clearance between synchronizer ring 10 and shifting key 12

If the measured value is higher than the limit, replace the faulty parts.

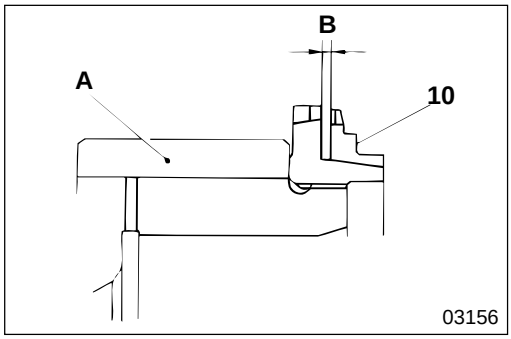

(2) Clearance between synchronizer ring 10 and drive pinion

- Measure clearance **B** between synchronizer ring **10** and the gear cone of drive pinon **A**.
- When measuring this value, press synchronizer ring **10** evenly, and measure all around the circumference.
- If the measured value is lower than the limit, replace the faulty parts.

(3) Clearance between synchronizer ring and 4th gear

- According to the procedure described in (2), measure clearance between synchronizer ring **10** and the gear cone of 4th gear **15**.

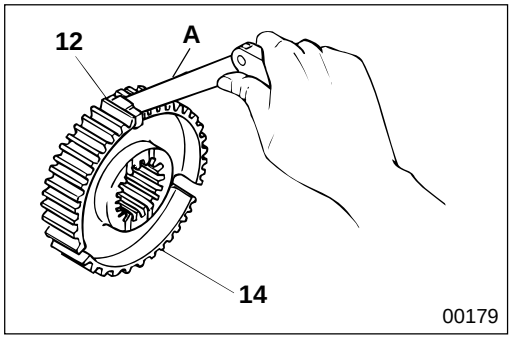

(4) Clearance between shifting key 12 and synchronizer hub 14

If the measured value is higher than the limit, replace the faulty parts.

A : Feeler gauge

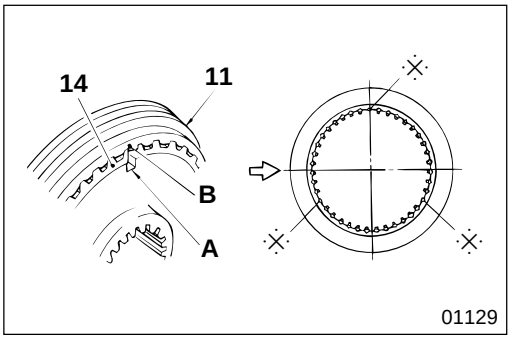

[Installation]

- Align the three keyways **A** of synchronizer hub **14** with the three stub teeth **B** (illustrated by ·⁜· mark) of synchronizer sleeve **11** to install the synchronizer hub.
- To reassemble synchronizer hub **14** and synchronizer sleeve **11**, align the alignment marks made during diassembly.

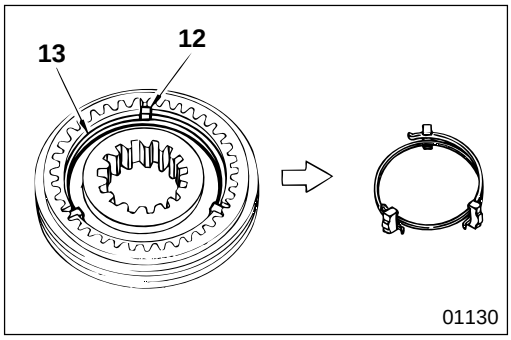

- Insert shifting key **12** into the keyway.
- Install shifting key spring **13** so that its opening is offset from the one of the shifting key.
- Make sure that the openings of shifting key springs do not align with each other.

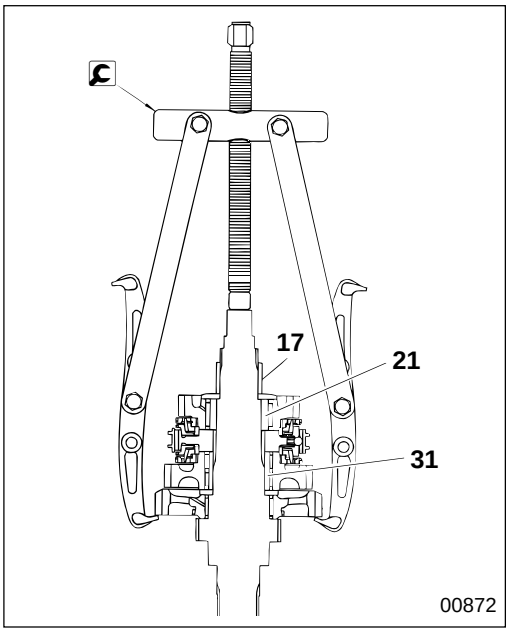

17 **21** **31** **Removal of 4th, 3rd, 2nd gear bearing sleeves**

: Gear puller

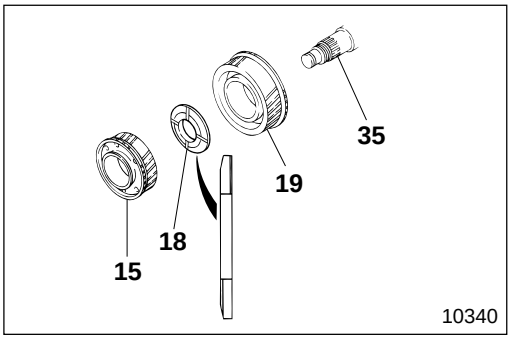

18 **Installation of 3rd and 4th gear thrust washer**

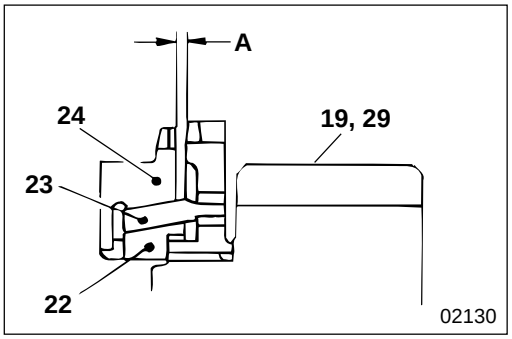

19 **24** **29** **Clearance between synchronizer outer ring and 3rd gear assembly or 2nd gear assembly**

- Measure clearance **A** between synchronizer outer ring **24** and the cone of 3rd gear assembly **19** or 2nd gear assembly **29**.
- When measuring this value, press synchronizer inner ring **22**, synchronizer outer ring **24** and synchronizer center ring **23** evenly and measure all around the circumference.
- If the measured value is higher than the limit, replace the faulty parts.

COUNTERSHAFT ASSEMBLY

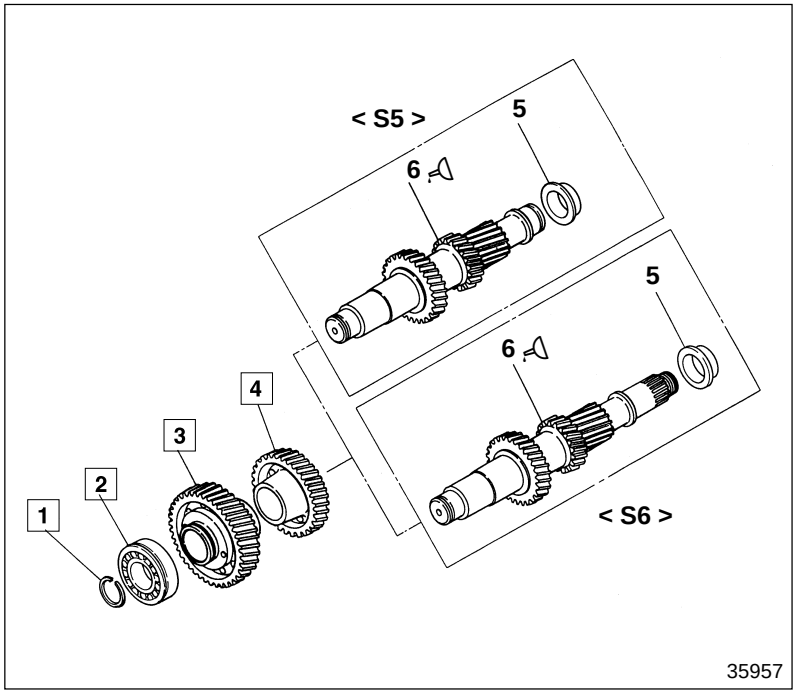

● **Disassembly sequence**

1 Snap ring
2 Countershaft front bearing
3 Countershaft constant mesh gear
4 Countershaft 4th gear
5 Countershaft rear bearing inner race
6 Countershaft

● **Assembly sequence**

Follow the disassembly sequence in reverse.

Sealant

Location	Points of application	Specified sealant	Quantity
6	Gear installation area of countershaft	THREEBOND 1375B	As required

Special tools

Location	Tool name and shape	Part No.	Application
1	Snap ring expander 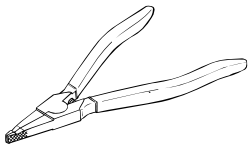 01137	MH061268	Removal and installation of snap rings of countershaft bearing
2	Countershaft bearing puller 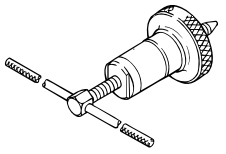 01139	*MH062426	Removal of countershaft front bearing
	Countershaft bearing installer 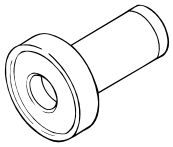 02141	*ME624233	Installation of countershaft front bearing

Unit : mm {in.}

Location	Tool name and shape	Part No.	Application
3, 4	Countershaft gear puller 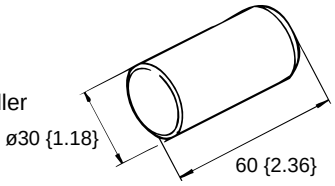	ME624243	Removal of countershaft gear
	Countershaft gear installer 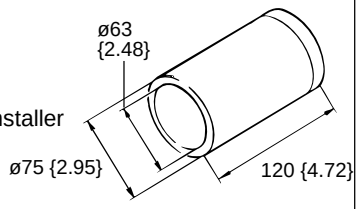	MH061740	Press-fitting of countershaft gear

* components of puller and installer kit 🕮 P22-65

◆ Service procedure

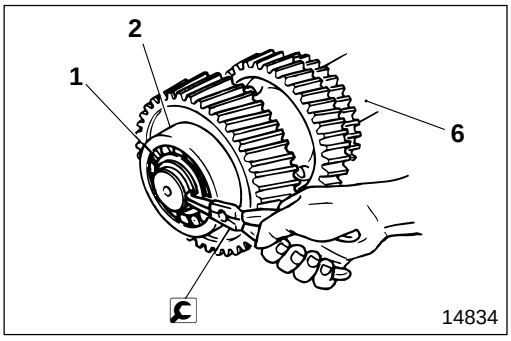

1 Removal and installation of snap ring

: Snap ring expander

COUNTERSHAFT ASSEMBLY

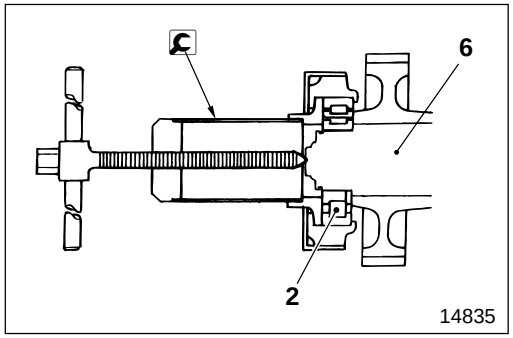

2 **Countershaft front bearing**

[Removal]
: Countershaft bearing puller

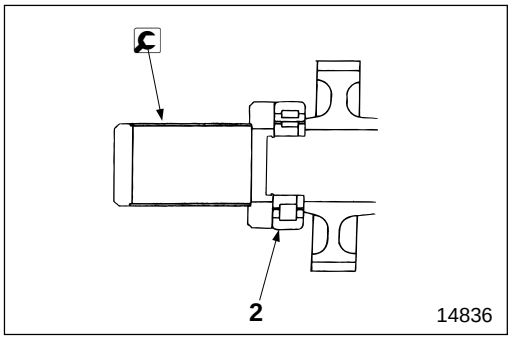

[Installation]
: Countershaft bearing installer

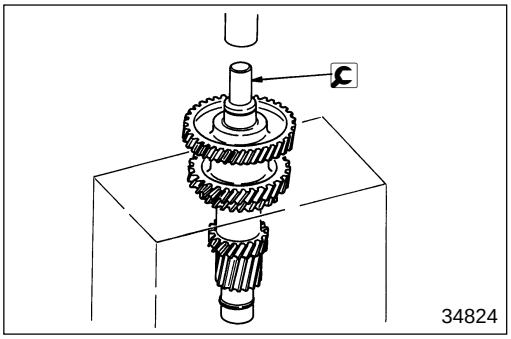

3 **4** **Countershaft constant mesh gear and countershaft 4th gear**

[Removal]
Use a press.
: Countershaft gear puller

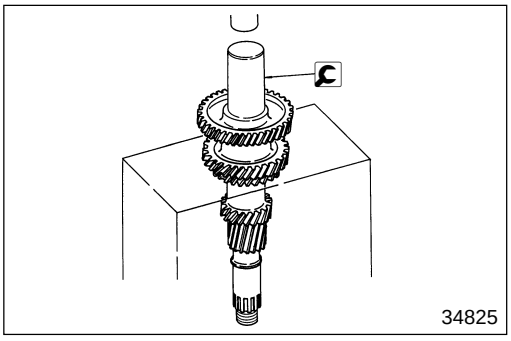

[Installation]
Use a press.
: Countershaft gear installer

M E M O

TRANSMISSION CONTROL

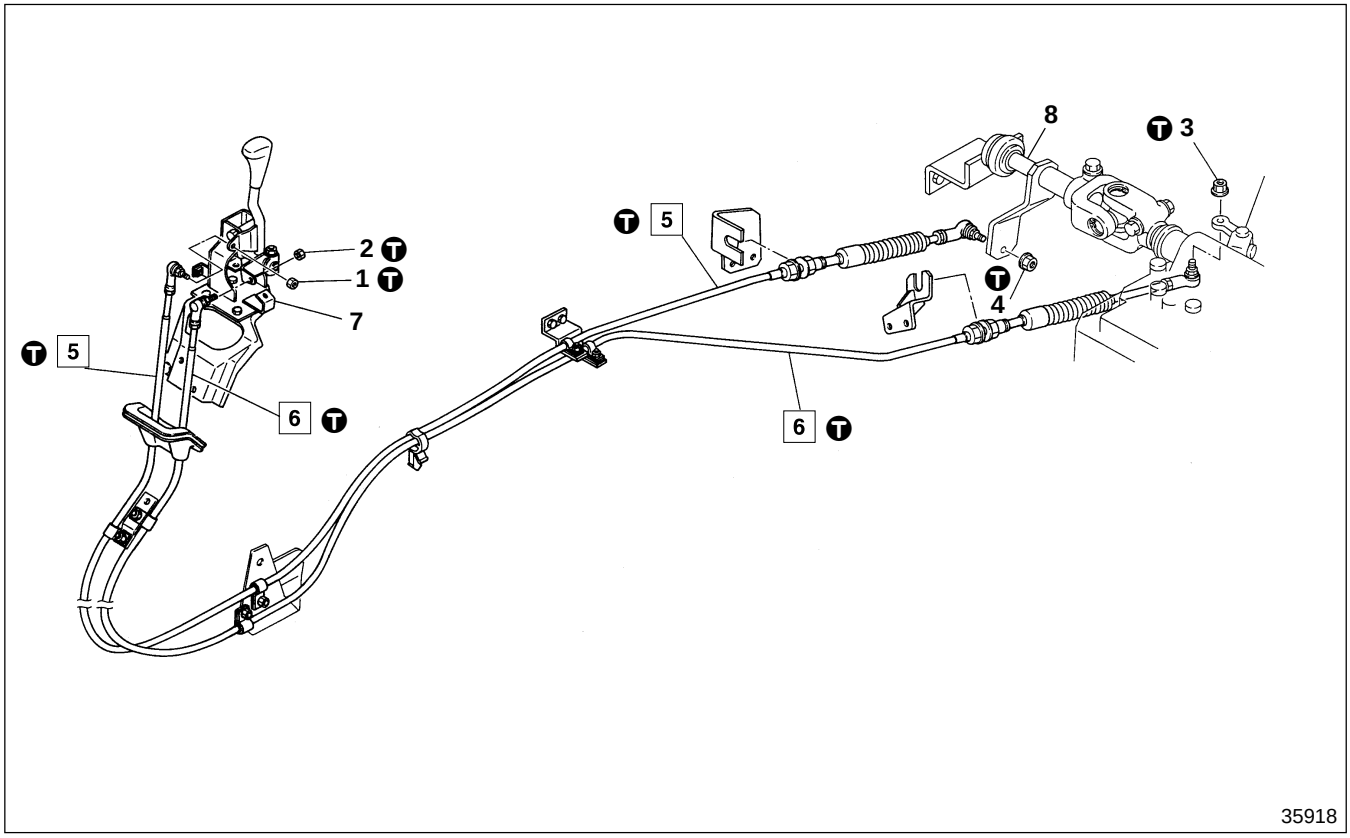

● **Disassembly sequence**

1 Nut
2 Nut
3 Nut
4 Nut
5 Shift cable
6 Selector cable
7 Transmission control lever assembly 🕮 P22-63
8 Cross shaft 🕮 P22-64

● **Assembly sequence**

Follow the disassembly sequence in reverse.

Ⓣ Tightening torque

Unit : N·m {lbf.ft, kgf·m}

Location	Parts to be tightened	Tightening torque	Remarks
1 to 4	Nut (Ball joint or rubber damper mounting)	19 to 24 {14 to 17, 1.9 to 2.4}	—
5, 6	Cable lock nut tightening	59 to 83 {43 to 61, 6 to 8.5}	—

◆ Service procedure

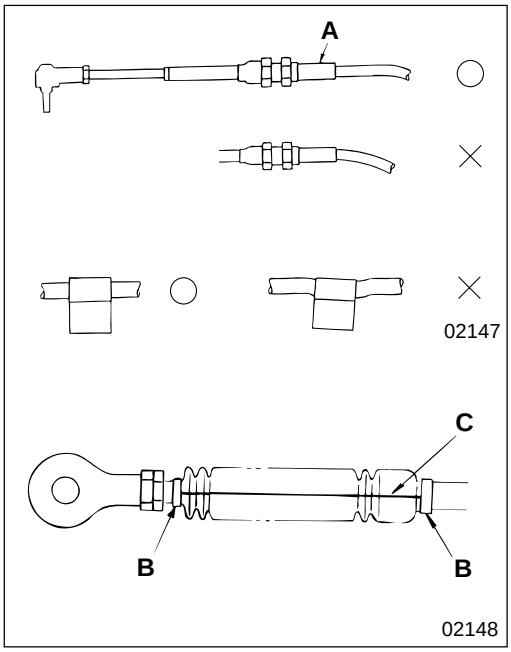

5 6 **Installation of shift cable and selector cable**

CAUTION

- **Be sure to install casing cap A lengthwise.**
- **Make sure the radius of the bend is 200 mm {7.87 in.} or more.**
- **Make sure the cable operates smoothly.**
- **Be sure to install the clamps vertically against the cable.**
- **Make sure you do not twist clamps B at both ends of the boot. Make sure that white line C on the boot is aligned.**
- **Make sure the identification marks on the cable, the ball joint and the rubber damper point in the right direction when you install the cables. Installing the cables with the identification marks in the wrong direction can remarkably reduce the durability of the cables.**

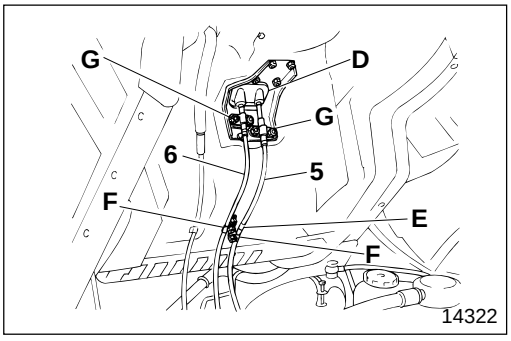

- Install shift cable **5** and selector cable **6** to the frame after having temporarily installed all the clamps.
- Insert shift cable **5** and selector cable **6** through grommet **D** of the cab floor into the inside of the cab, then install clip **F** and clip **G** temporarily by making identification mark **E** on the shift cable come to clip **F** position. (The selector cable has no identification mark.)

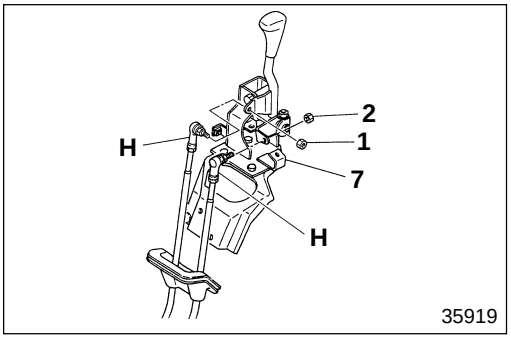

- Lower the cab.
- Install ball joint **H** of the cable to the shift lever and selector lever of transmission control lever assembly **7**.

CAUTION

Make sure that ball joint H faces the correct direction.

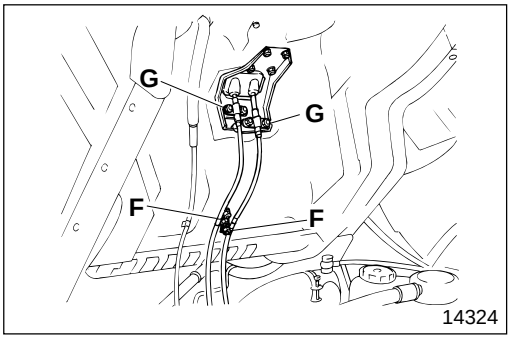

- Tilt the cab up and tighten clip **F** and clip **G** permanently without applying force to the cables.

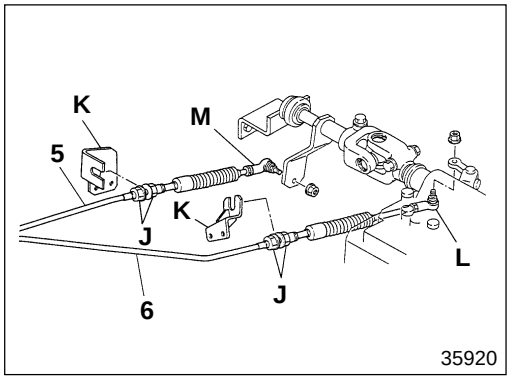

- Install lock nut **J** to bracket **K** temporarily and connect ball joint **L** or rubber damper **M** to the shift lever and selector lever.
- Tighten lock nut **J** permanently without applying force to the cables.

CAUTION ⚠

Make sure that ball joint L and rubber damper M face the correct direction.

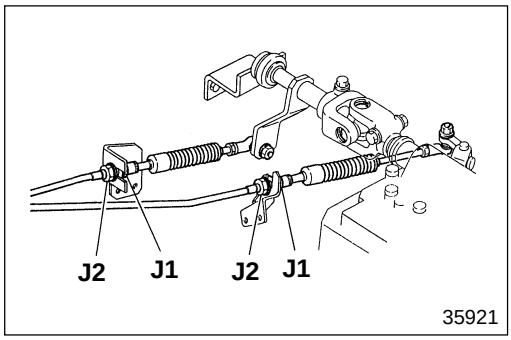

CAUTION ⚠

Make sure not to move lock nut J1 of the transmission side when tightening lock nut J. Tighten lock nut J2.

- Check when you operate the gear shift lever that it shifts and selects each position smoothly.

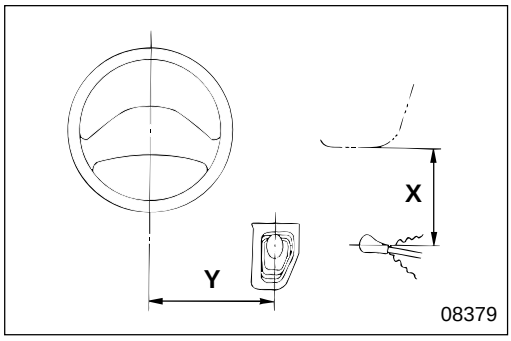

- If the gear shift lever leans to the front or rear, or to the left or right, excessively, adjust the length of the cable.
- When adjusting the gear shift lever, use the distance from the center of the steering wheel or from the instrument panel as the reference distance.

Unit : mm {in.}

Front and rear direction X (Distance from the instrument panel)	Left and right direction Y (Distance from the steering wheel center)
309 {12.17}	350 {13.78} (4th and 5th gear position)

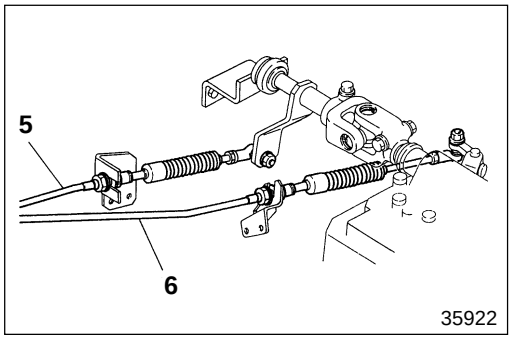

	Shift cable **5**	Selector cable **6**
To front	Shorten	—
To rear	Lengthen	—
To right	—	Lengthen
To left	—	Shorten

Transmission Control Lever Assembly

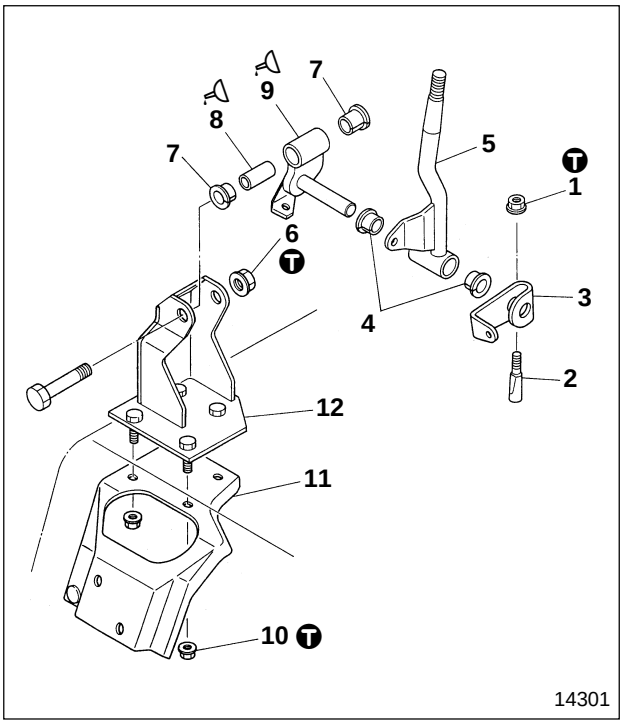

● **Disassembly sequence**

1 Nut
2 Lock pin
3 Select lever
4 Bushing
5 Lever
6 Nut
7 Bushing
8 Collar
9 Shaft assembly
10 Nut
11 Set board bracket
12 Set board

● **Assembly sequence**

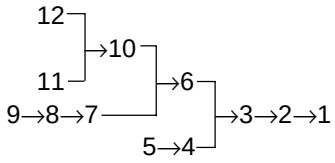

Tightening torque

Unit : N·m {lbf.ft, kgf·m}

Location	Parts to be tightened	Tightening torque	Remarks
1	Nut (Lock pin tightening)	10 to 15 {7.2 to 11, 1.0 to 1.5}	—
6	Nut (Shaft assembly mounting)	29 to 43 {22 to 32, 3.0 to 4.4}	—
10	Nut (Set board bracket and set board assembly mounting)	21 to 30 {15 to 22, 2.1 to 3.1}	—

Lubricant

Location	Points of application	Specified lubricant	Quantity
8	Friction surfaces of collar and bushing	Chassis grease [NLGI No.1 (Ca soap)]	As required
9	Friction surfaces of shaft assembly and bushing	Chassis grease [NLGI No.1 (Ca soap)]	As required

Cross shaft

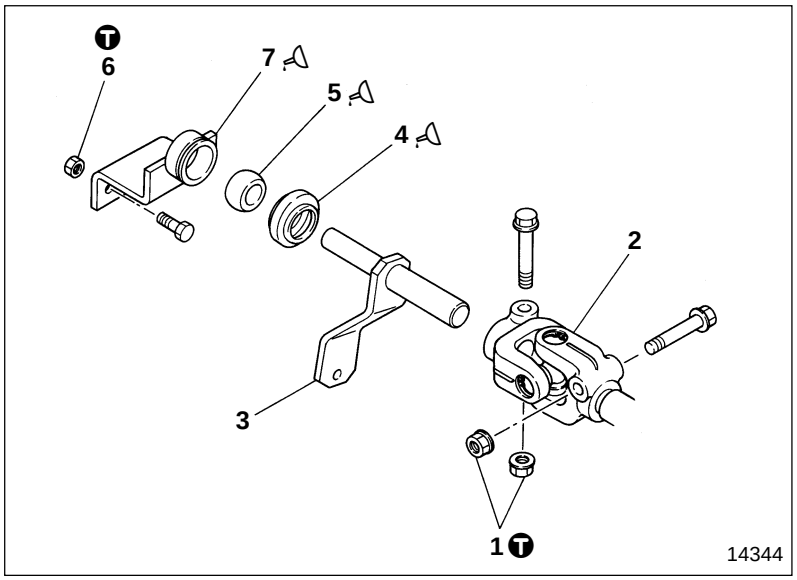

● **Disassembly sequence**

1 Nut
2 Universal joint assembly
3 Cross shaft
4 Dust cover
5 Ball bushing
6 Nut
7 Cross shaft support

● **Assembly sequence**

7→6→1
2→3→4→5→1

Ⓣ Tightening torque

Unit : N·m {lbf.ft, kgf·m}

Location	Parts to be tightened	Tightening torque	Remarks
1	Nut (Universal joint assembly mounting)	85 to 110 {61 to 80, 8.5 to 11.0}	—
6	Nut (Cross shaft support mounting)	34 to 54 {25 to 40, 3.5 to 5.5}	—

Lubricant

Location	Points of application	Specified lubricant	Quantity
4	Pack into the interior of dust cover	Chassis grease [NLGI No.1 (Ca soap)]	As required
5	Friction parts inside and outside of ball bushing	Chassis grease [NLGI No.1 (Ca soap)]	As required
7	Inner periphery of cross shaft support pipe	Chassis grease [NLGI No.1 (Ca soap)]	As required

MITSUBISHI
FUSO

FH

Service Manual

Group 22
Manual Transmission

Table of Contents

BACK

HOME

MITSUBISHI FUSO TRUCK OF AMERICA, Inc.

Pub No. TWME9502-22

GROUP 22 MANUAL TRANSMISSION

SPECIFICATIONS 2

STRUCTURE AND OPERATION 3

TROUBLESHOOTING 10

WORK BEFORE REMOVAL AND INSTALLATION OF TRANSMISSION ASSEMBLY 11

REMOVAL AND INSTALLATION OF TRANSMISSION ASSEMBLY .. 12

GEAR SHIFTER UPPER AND INTERLOCK PLATE 16

REAR COVER AND PARKING BRAKE ASSEMBLY 22

REVERSE IDLER GEAR 26

TRANSMISSION BODY 28

DRIVE PINION ASSEMBLY 40

MAINSHAFT ASSEMBLY 42

COUNTERSHAFT ASSEMBLY 50

TRANSMISSION CONTROL 54

PULLER AND INSTALLER KIT 59

SPECIFICATIONS

Item		Specifications
Mode of control		Floor shift remote control
Transmission model		M050S5
Gear ratio	1st	6.875
	2nd	4.189
	3rd	2.311
	4th	1.409
	5th	1.000
	6th	—
	Reverse	6.875
Oil capacity	L {qts}	5.7 {6.0}
Mass	kg {lb}	120 {265}

Transmission

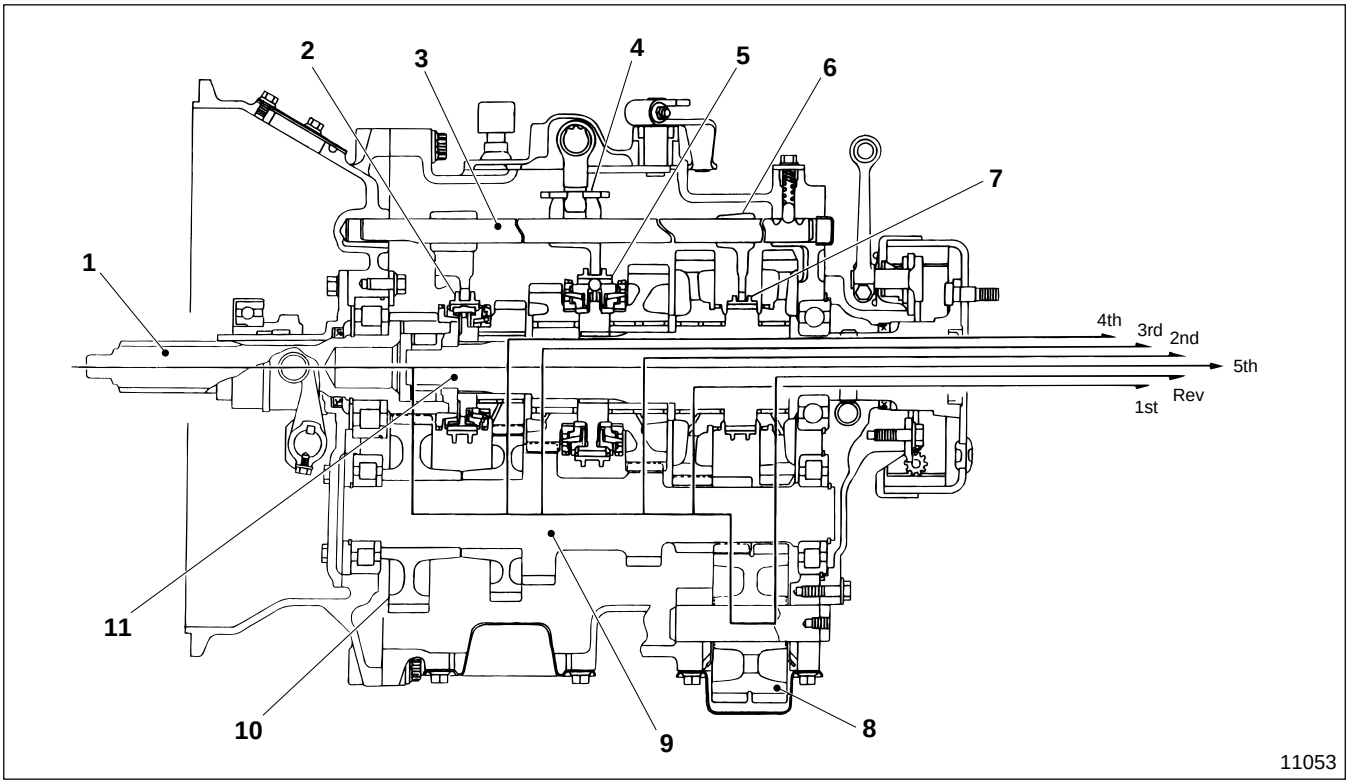

1 Drive pinion
2 4th and 5th synchronizer assembly
3 Shift rail
4 Interlock mechanism
5 2nd and 3rd synchronizer assembly
6 Shift fork
7 1st and reverse constant mesh assembly
8 Reverse idler gear
9 Countershaft
10 Non-backlash mechanism
11 Mainshaft

The transmission changes revolution and torque generated by the engine into those that match the vehicle's power requirement (driving force). Revolution and torque are increased or decreased by making a selection from several sets of engaged gears. The transmission uses an interlock mechanism to avoid double engagement and the non-backlash mechanism reduces the idling noise of the transmission when the engine is idling.

Synchromesh Mechanism

This vehicle has two synchromesh mechanisms, a single cone type, and a double cone type, and uses the key system. The single or double cone type is used depending on the gear positions as shown below:

Synchromesh type	Parts used
Single cone type	5th
Double cone type	2nd and 3rd, 4th

Single Cone Type

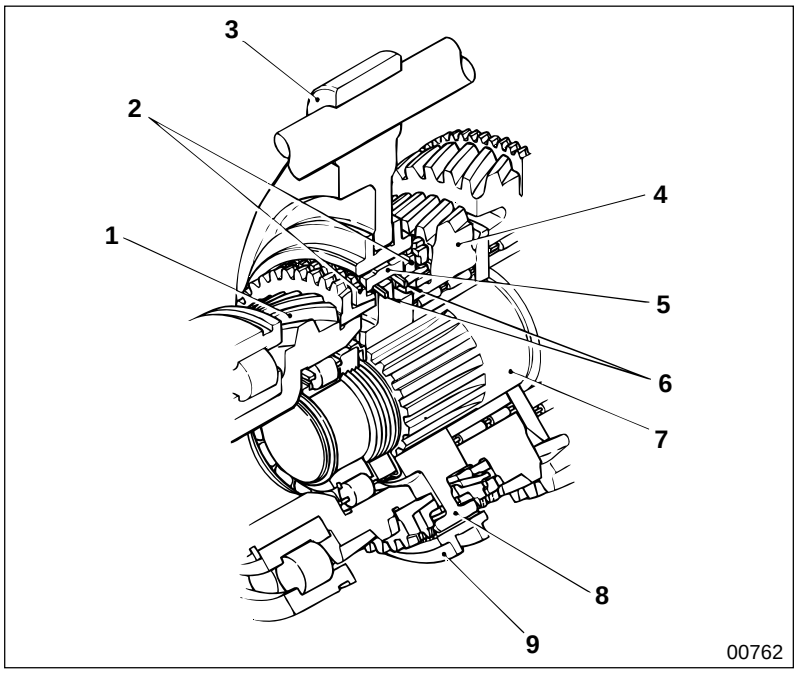

1 Drive pinion (Single cone type)
2 Synchronizer ring
3 4th and 5th shift fork
4 4th gear (Double cone type)
5 Shifting key
6 Shifting key spring
7 Mainshaft
8 Synchronizer hub
9 Synchronizer sleeve

- The following descriptions are for 4th and 5th gear
  The inside of synchronizer hub **8** engages the spline of mainshaft **7** and rotates with it. The outside of the synchronizer hub has a spline that engages synchronizer sleeve **9** and three keyways.
- Shifting keys **5** are inserted into these keyways. When the gear shift is in neutral, a protrusion in the center of each shifting key engages a groove inside the synchronizer sleeve and the shifting keys are pressed against the inside of the synchronizer sleeve by shifting key springs **6**.
- Synchronizer rings **2** are inserted into drive pinions **1** in the front and rear of synchronizer hub **8**, and the taper cone of 4th gear **4**.
- The internal tapers of synchronizer rings **2** have fine threads, and the outer splines engage synchronizer sleeve **9**. On the hub side of the synchronizer rings are three keyways in which the ends of shifting keys **5** are inserted. These keyways are wider than the width of the shifting keys.
- Synchronizer rings **2** rotate relative to synchronizer sleeve **9** by the amount of play of the keyways.

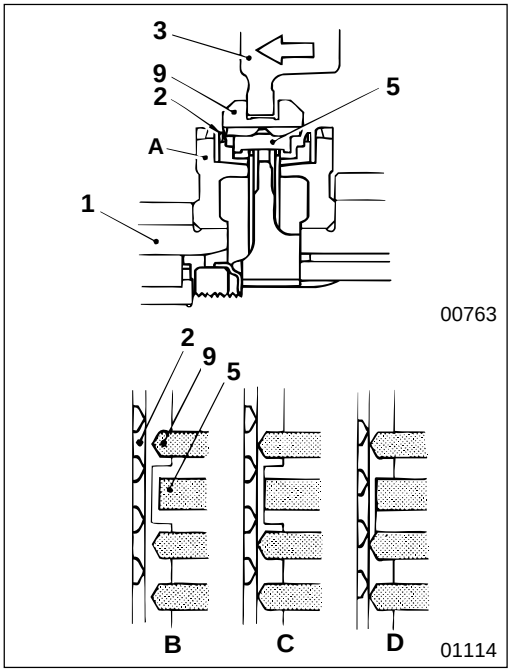

- When the gear shift is in neutral (Figure **B**), moving shift fork **3** in the direction of the arrow as illustrated, moves synchronizer sleeve **9** slightly to the left. At the same time, shifting key **5**, the central protrusion of which engages the synchronizer sleeve, moves to the left and presses synchronizer rings **2** against taper cone **A** of drive pinion **1**. (Figure **C**)
- When the taper surfaces of synchronizer rings **2** make contact with the taper cone of the drive pinion, the taper surfaces of the synchronizer rings act as cone clutches. This frictional torque rotates the synchronizer rings in the rotating direction of the drive pinion by the amount of play between shifting key **5** and the synchronizer rings. The spline chamfers of the synchronizer rings and the spline chamfer of synchronizer sleeve **9** are offset from each other. (Figure **D**)
- The disengagement direction of synchronizer rings **2** is defined by the speed of rotation of the synchronizer—sleeve **9**, and the synchronized—drive pinion **1**. When increasing the vehicle speed by shifting up, disengagement is made in the opposite direction to rotation, and when decreasing the vehicle speed by shifting down, disengagement is made in the rotating direction.

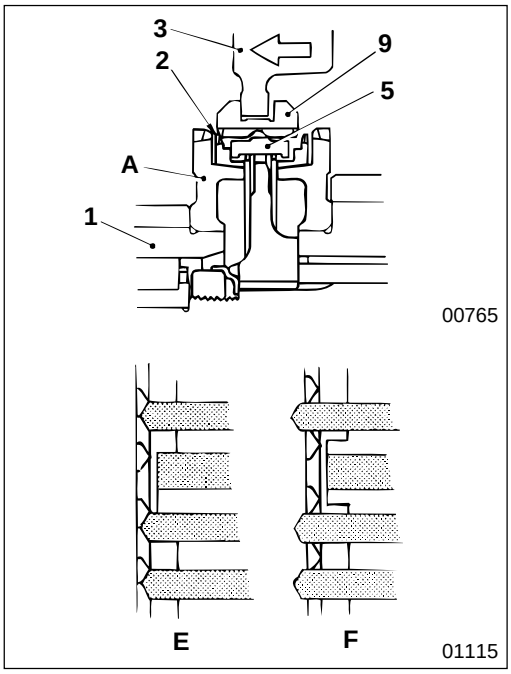

- When synchronizer sleeve **9** moves further to the left, synchronizer rings **2** prevent shifting key **5** from moving, and the synchronizer sleeve disengages from the protrusion of the shifting key.
- Since synchronizer rings **2** remain disengaged, the spline chamfer of synchronizer sleeve **9** presses the spline chamfers of the synchronizer rings, which in turn press the synchronizer rings against taper cone **A** of drive pinion **1**.
- As the frictional torque increases on the taper surfaces, the relative speed of the synchronizer and the synchronized gradually decreases.
  E : In synchronization
  F : After synchronization

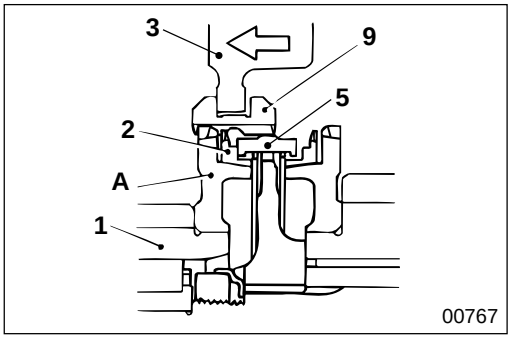

- When synchronizer sleeve **9** and drive pinion **1** rotate at the same speed, synchronizer rings **2** no longer prevent the synchronizer sleeve from moving, and the synchronizer sleeve moves further to the left and smoothly engages the spline of taper cone **A** of drive pinion **1**, transmitting the driving force.

Double Cone Type

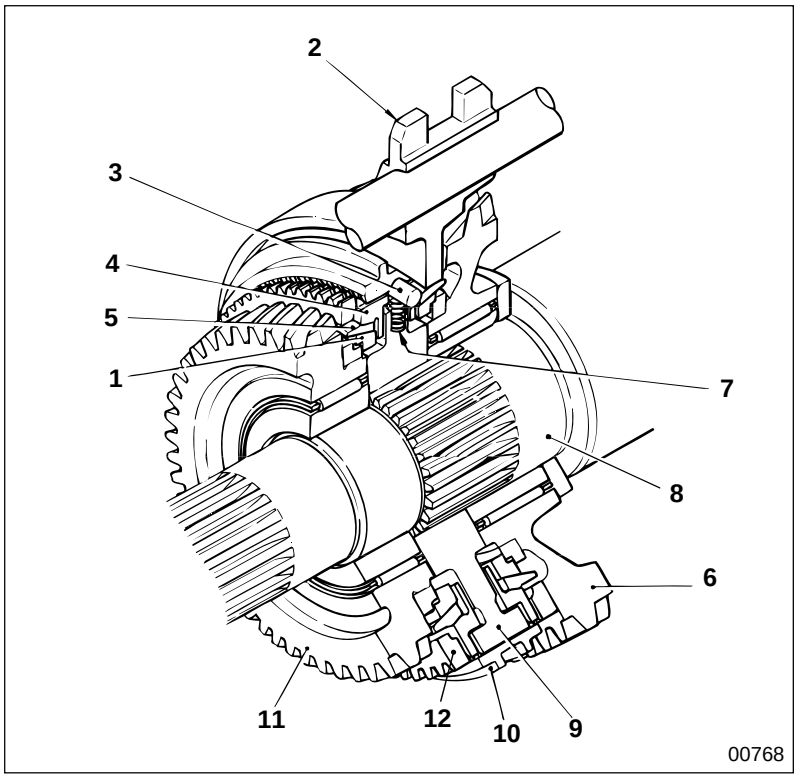

1 Synchronizer inner ring
2 2nd and 3rd shift fork
3 Shifting key
4 Synchronizer outer ring
5 Synchronizer center cone
6 2nd gear
7 Shifting key spring
8 Mainshaft
9 Synchronizer hub
10 Synchronizer sleeve
11 3rd gear
12 Dog clutch

- The following descriptions are for 2nd and 3rd gear
  The synchromesh structure and operation of the double cone type are basically the same as for the single cone type.
- Synchronizer center cone **5** is a taper cone independent of 2nd gear **6** and 3rd gear **11**, (both the inside and outside surfaces are tapered). The synchronizer center cone is between synchronizer inner ring **1** and synchronizer outer ring **4** to increase the synchronization capacity.
- Six protrusions on the outside of center cone **5** fit into corresponding gear holes, in the same manner as the taper cone of the single cone type. The center cone and the gear are installed as if integrated.
  Shifting key **3** is a cylinder installed so that the lengthwise direction of the cylinder is at right angles to the diameter direction of synchronizer hub **9**. Shifting key spring **7** is a coil spring inserted in a hole in the synchronizer hub, this spring presses the shifting key against the inside of synchronizer sleeve **10**.
- The 4th gear uses the double cone type; however, the structure of shifting key **3** and shifting key spring **7** is the same as for the single cone type.

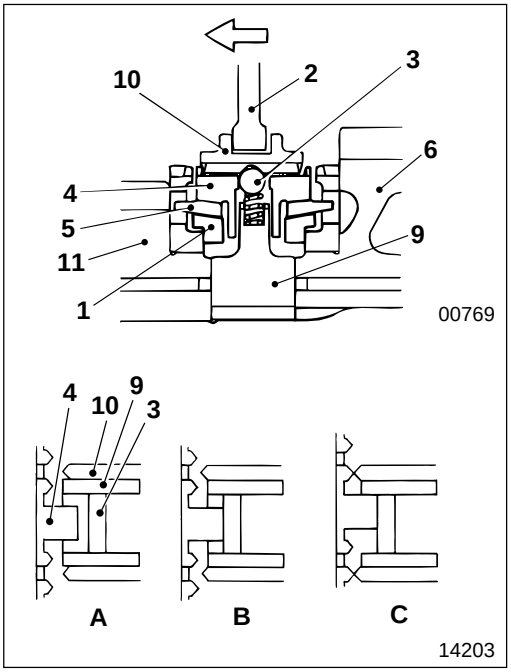

- When the gear shift is in neutral (Figure **A**), moving shift fork **2** in the direction of the arrow as illustrated, moves synchronizer sleeve **10** slightly to the left. At the same time, shifting key **3**, the central protrusion of which engages the synchronizer sleeve, moves to the left and presses synchronizer outer ring **4** against synchronizer center cone **5**. (Figure **B**)
- When the taper surface of synchronizer outer ring **4** makes contact with the taper cone of synchronizer center cone **5**, the taper surface of the synchronizer outer ring acts as a cone clutch. This frictional torque rotates the synchronizer outer ring in the rotating direction of 3rd gear **11** by the amount of play between the synchronizer outer ring and synchronizer hub **9**. The spline chamfer of the synchronizer outer ring and the spline chamfer of synchronizer sleeve **10** are offset from each other. (Figure **C**)
- The disengagement direction of synchronizer outer ring **4** is defined by the speed of rotation of the synchronizer—the sleeve, and the synchronized—3rd gear **11**. When increasing the vehicle speed by shifting up, disengagement is made in the opposite direction to rotation, and when decreasing the vehicle speed by shifting down, disengagement is made in the rotating direction.

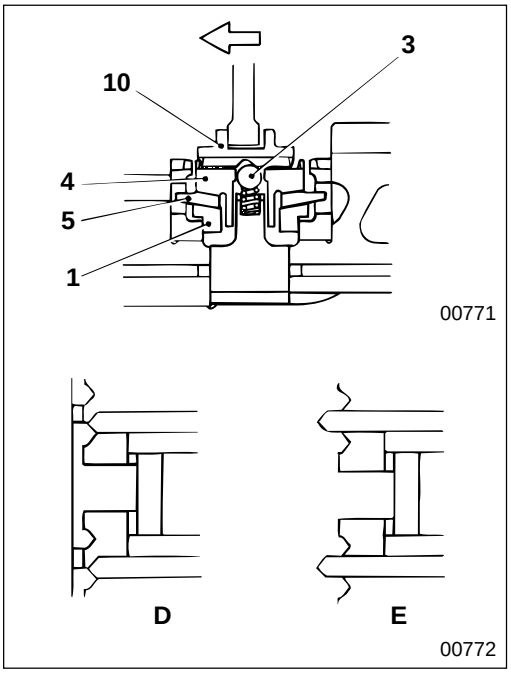

- When synchronizer sleeve **10** moves further to the left, synchronizer outer ring **4** prevents shifting key **3** from moving, and the synchronizer sleeve disengages from the protrusion of the shifting key.
- Since synchronizer outer ring **4** remains disengaged, the spline chamfer of synchronizer sleeve **10** presses the spline chamfer of the synchronizer outer ring, which in turn presses the synchronizer outer ring against the taper cone of synchronizer center cone **5**, and the frictional torque acts on the taper surface.
- As the frictional torque increases on the taper surface of synchronizer inner ring **1**, the relative speed of the synchronizer and the synchronized gradually decreases. The frictional torque acts on both sides of the synchronizer center cone. The double cone type has greater capacity for synchronization than the single cone type.
  E : In synchronization
  F : After synchronization

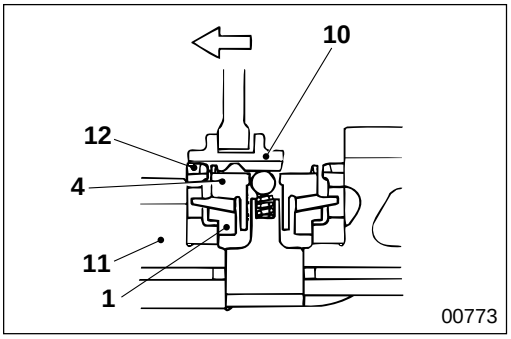

- When synchronizer sleeve **10** and 3rd gear **11** rotate at the same speed, synchronizer outer ring **4** no longer prevents the synchronizer sleeve from moving and the synchronizer sleeve moves further to the left and smoothly engages the spline of dog clutch **12** of the 3rd gear, transmitting the driving force.

Interlock Mechanism

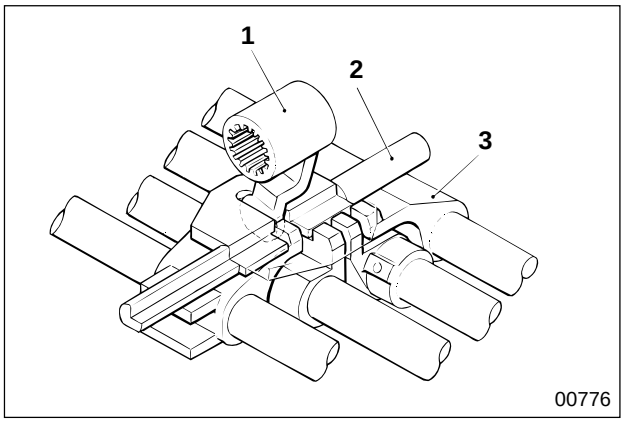

In the interlock mechanism, the rail beneath interlock plate **2** locks jaws **3**, (apart from the jaws shifted by gear shift slide lever **1**), preventing double engagement of gears.

M E M O

Possible causes \ Symptoms		Gears slip out of engagement	Gears hard to engage	Noise when engine is idling	Noise while cruising	Noise when changing gear
Transmission body faulty	Mainshaft rear lock nut loose	○	○			
	Mainshaft thrust washer worn	○	○			
	Mainshaft bearing worn or damaged	○	○			
	Synchronizer ring and synchronizer sleeve spline worn	○				
	Synchronizer ring and gears taper cone area worn		○			
	Mainshaft pilot bearing worn or damaged			○	○	
	Drive pinion bearing worn or damaged			○		
	Countershaft bearing worn or damaged			○		
	Needle bearings of gears worn or damaged			○	○	
	Mainshaft and countershaft bearings worn or damaged				○	
	Mainshaft and countershaft gears backlash excessive				○	
	Spline of gears worn					○
	Gears damaged				○	
	Gear oil insufficient				○	
Control mechanisms faulty	Control cable joint play	○	○			
	Set board assembly bushings worn	○				
	Shift rail steel ball and groove worn	○				
	Shift rail poppet spring fatigued or damaged	○				
	Shift rail sliding movement faulty		○			
	Shift fork jaws worn		○			
	Shift fork bent		○			
Synchronizer faulty	Contacting surfaces of synchronizer ring and gear taper cone worn					○
	Shifting key worn					○
	Shifting key spring deteriorated or damaged					○
	Synchronizer sleeve worn or damaged				○	○

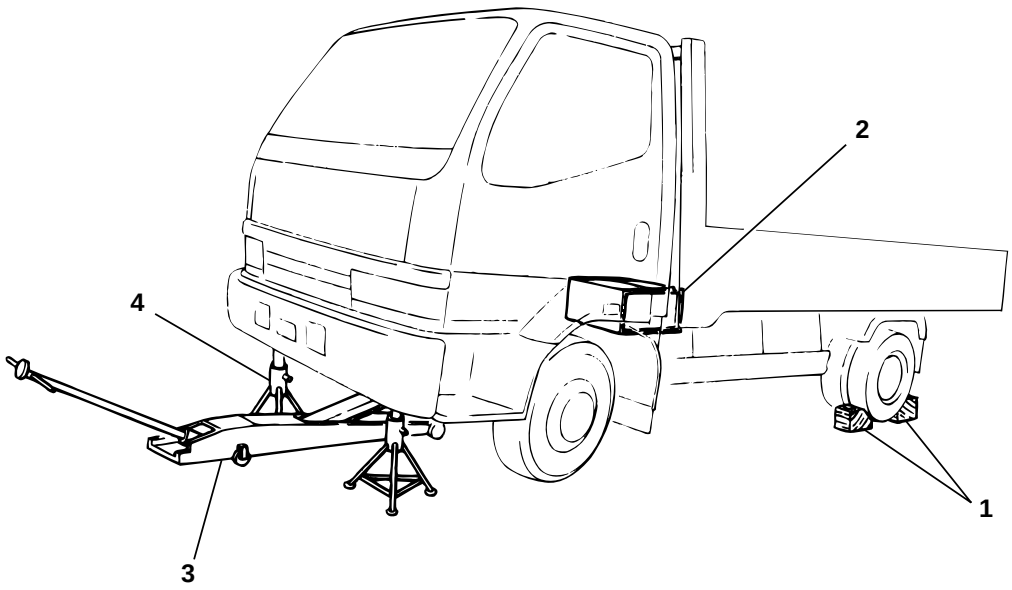

● **Work sequence before removal**

1 Place wheel chocks.
2 Disconnect negative battery cable. Gr 54
3 Jack up the front axle on a garage jack.
4 Support the front frame on rigid racks.

WARNING⚠

- **Since the parking brake will be removed, naturally it cannot be used. Therefore, you must chock the wheels securely so the vehicle does not move.**
- **Do not remove the chocks until the entire operation is completed.**
- **Supporting a vehicle on a garage jack only is extremely dangerous, so always support the frame on rigid racks.**
- **Leave the garage jack and rigid racks in place until the entire operation is completed. Never remove them during the operation.**

CAUTION⚠

Keep the transmission in neutral throughout the operation.

● **Work sequence after installation**

Follow the work sequence before removal in reverse.

REMOVAL AND INSTALLATION OF TRANSMISSION ASSEMBLY

Removal and Installation

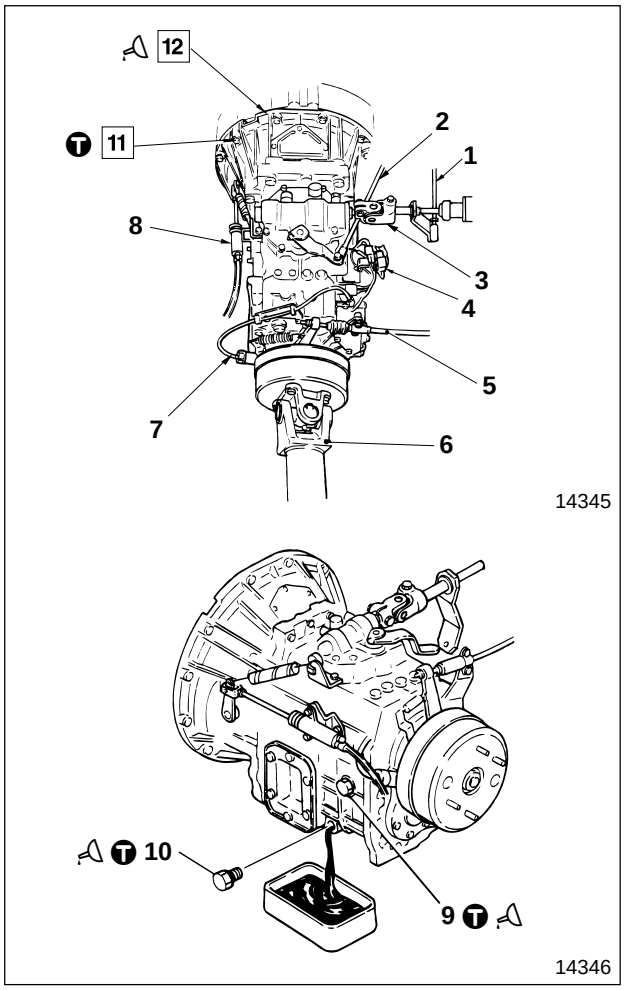

● **Disassembly sequence**

1 Shift cable P22-54
2 Selector cable P22-54
3 Cross shaft P22-58
4 Harness connector
5 Parking brake cable Gr 36
6 Propeller shaft Gr 25
7 Speed sensor Gr 54
8 Clutch power cylinder Gr 21
9 Inspection plug
10 Drain plug
11 Bolt
12 Transmission assembly

● **Assembly sequence**

Follow the disassembly sequence in reverse.

Tightening torque

Unit : N·m {lbf.ft, kgf·m}

Location	Parts to be tightened	Tightening torque	Remarks
9	Inspection plug	69±15 {51±11, 7±1.5}	—
10	Drain plug	69±15 {51±11, 7±1.5}	—
11	Bolt (Transmission mounting)	40 {30, 4.1}	—

Lubricant and sealant

Location	Points of application	Kinds	Quantity
9	Thread area of inspection plug	THREEBOND 1105D	As required
10	Thread area of drain plug	THREEBOND 1105D	As required
12	Spline of drive pinion	Molybdenum disulfide grease [NLGI No.2 (Li soap)]	As required

◆ Service procedure

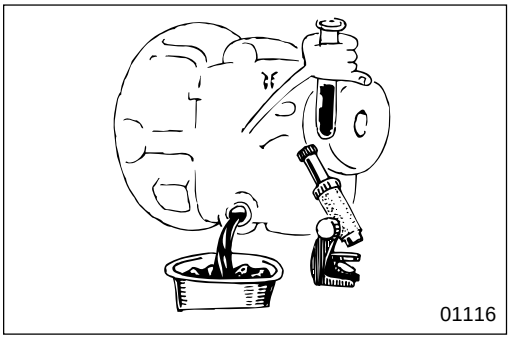
01116

● Oil change

[Draining]
- When draining oil, check the quantity and quality of oil, especially for small pieces of metal and metal dust.
- Clean drain plug **10** before reinstalling it because it is magnetic.

[Filling]
- Check that drain plug **10** are tightened at specified torque.
- Pour in gear oil until the oil overflows from the inspection hole. (For oil quantity, see specifications.)

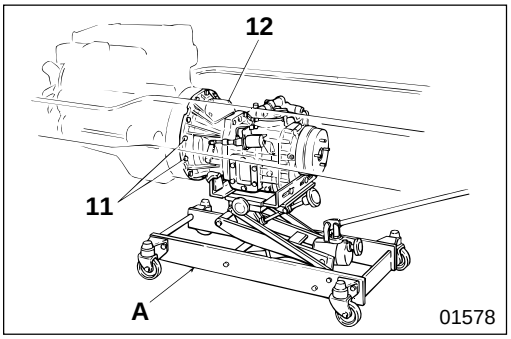

01578

11 Removal of transmission mounting bolt

- Support transmission assembly **12** on transmission jack **A**.
- Tighten transmission mounting bolt **11**.

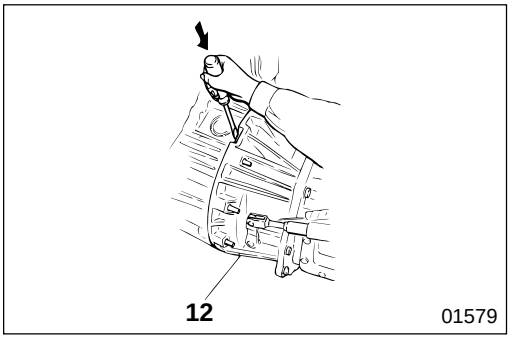

01579

12 Transmission assembly

[Removal]
- Insert a screwdriver into the three removal grooves and pry transmission assembly **12** from the engine.

CAUTION⚠

Make sure that you remove hoses and cables before starting service operations.

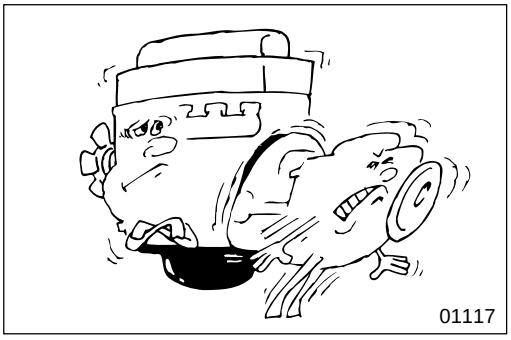
01117

- Move transmission assembly **12** backward until the spline of the drive pinion is detached from the clutch.

CAUTION⚠

Make sure that you pull transmission assembly 12 out in a straight line. If you seesaw the transmission assembly violently, you will damage the spline that connects the drive pinion and the clutch.

REMOVAL AND INSTALLATION OF TRANSMISSION ASSEMBLY

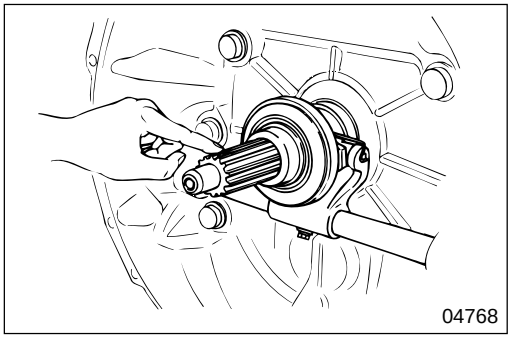

[Installation]
- Check the spline of the drive pinion for rust.
- If rust is found, remove it using a wire brush.
- Rub grease onto the clutch disc sliding surfaces of the drive pinion using your hand.

CAUTION

Make sure that you apply only the necessary amount of grease because too much grease would drip and cause clutch slip.

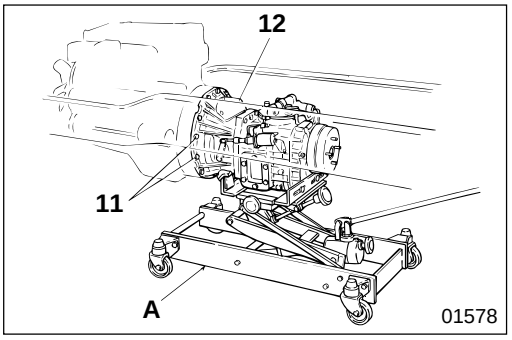

- Support transmission assembly **12** on transmission jack **A**, and insert the transmission assembly into the pilot bearing of the flywheel paying attention to the drive pinion spline.
- Tighten transmission mounting bolt **11** at specified torque.

M E M O

GEAR SHIFTER UPPER AND INTERLOCK PLATE

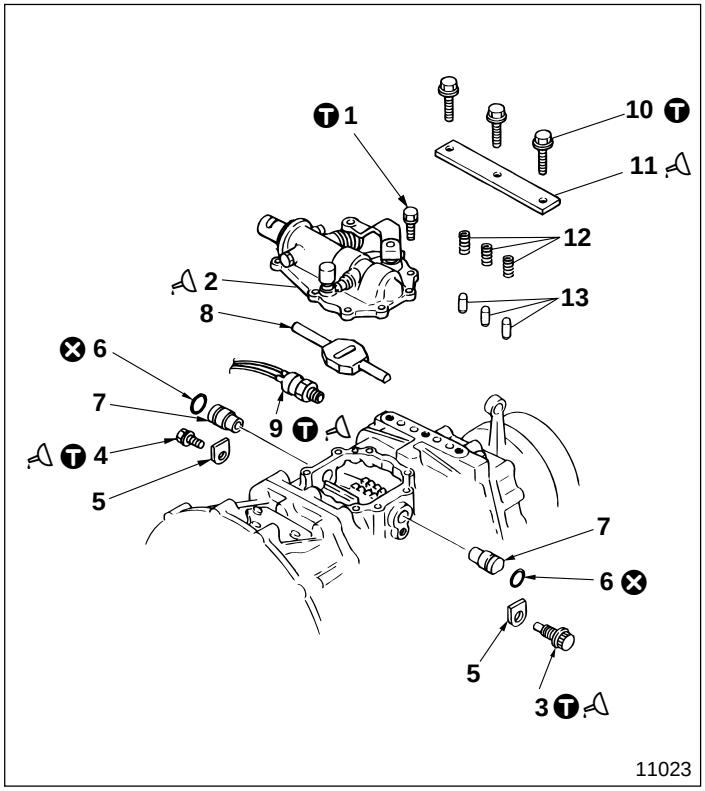

● **Disassembly sequence**

1 Bolt
2 Gear shifter upper assembly P 22-17
3 Jaw set bolt
4 Bolt
5 Lock plate
6 O-ring
7 Bushing
8 Interlock plate
9 Backup lamp switch Gr 54
10 Bolt
11 Poppet spring plate
12 Poppet spring
13 Interlock pin

* : Transmission body
⊗ : Non-reusable parts

● **Assembly sequence**

7→6→5→4→3→9→2→1→13→12→11→10
8→

Service standards

Unit : mm {in.}

Location	Maintenance item	Standard value (Basic diameter in [ ])	Limit	Remedy
7, 8	Clearance between interlock plate axis and bushing	[12] 0.14 to 0.19 {[0.47] 0.0055 to 0.0075}	0.4 {0.016}	Replace
12	Poppet spring load (Installed length 29 {1.14})	78 N {18 lbf, 8 kgf}	67 N {15 lbf, 68 kgf}	Replace

Tightening torque

Unit : N·m {lbf.ft, kgf·m}

Location	Parts to be tightened	Tightening torque	Remarks
1	Bolt (Gear shifter upper mounting)	23 {17, 2.3}	—
3	Jaw set bolt	135 {98, 13.6}	—
4	Bolt (Lock plate mounting)	40 {30, 4.1}	—
9	Backup lamp switch	49 {36, 5.0}	—
10	Bolt (Poppet spring plate mounting)	49 {36, 5.0}	—

Sealant

Location	Points of application	Kinds	Quantity
2	Contact surface with transmission case	THREEBOND 1215	As required
3	Thread area of jaw set bolt	THREEBOND 1104J	As required
4	Thread area of bolt	THREEBOND 1104J	As required
9	Thread area of backup lamp switch	THREEBOND 1105D	As required
11	Contact surface with transmission case	THREEBOND 1215	As required

Gear Shifter Upper Assembly

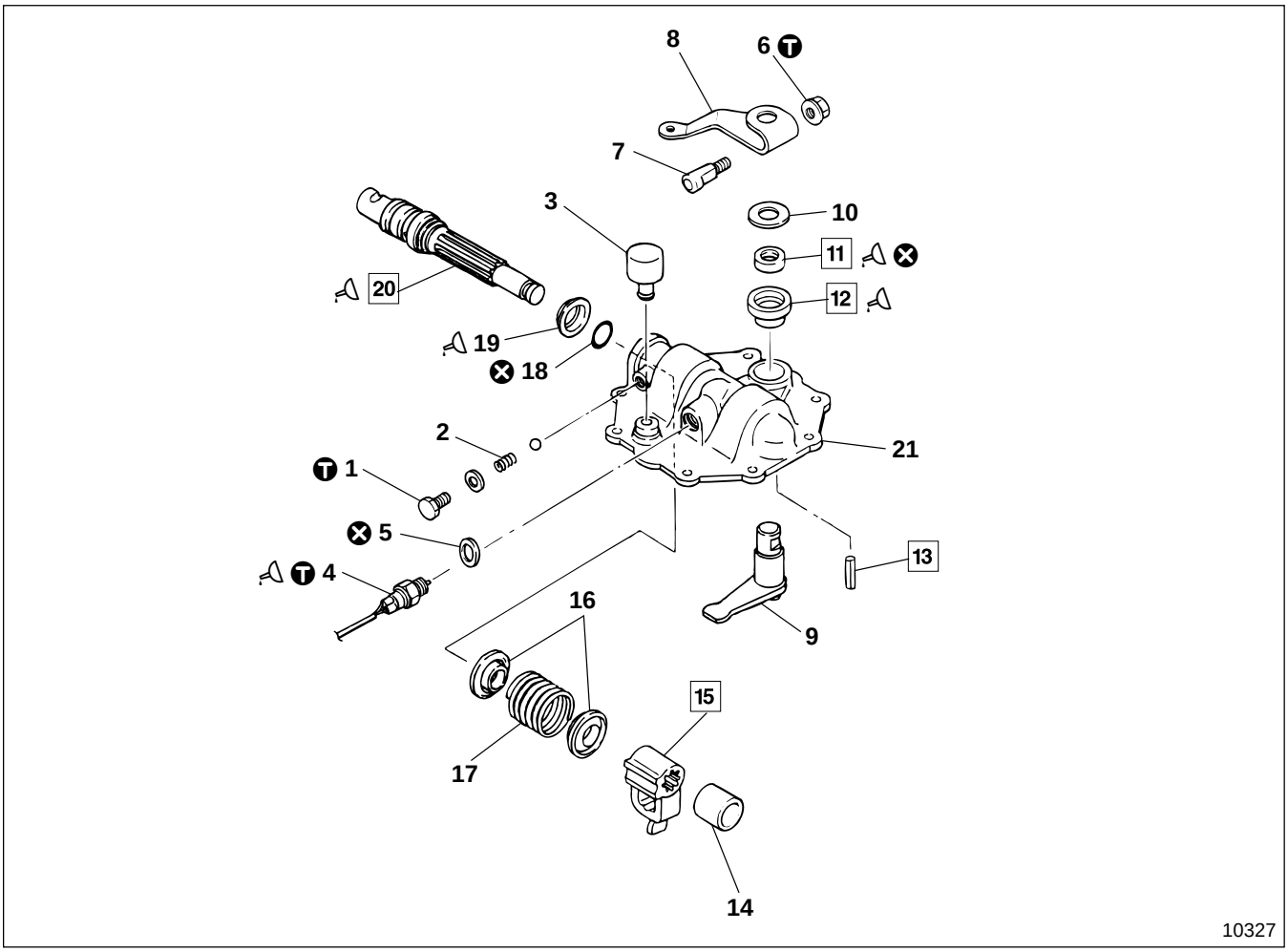

● **Disassembly sequence**

1 Plug
2 Torsion shaft spring
3 Air breather
4 Neutral switch Gr 54
5 Gasket
6 Nut
7 Lock pin
8 Gear selector lever B
9 Gear selector lever A
10 Washer
11 Oil seal
12 Bushing
13 Spring pin
14 Gear selector stopper
15 Gear shift slide lever
16 Return spring A retainer
17 Return spring A
18 O-ring
19 Dust seal
20 Gear shift lever
21 Selector lever case

⊗ : Non-reusable parts

NOTE

Do not remove bushing 12 except for replacement.

● **Assembly sequence**

21→12→11
20→19→18
→16→17→16→15→14→13→9→10→8→7→6
5→4
→3→2→1

CAUTION ⚠

Be sure when assembling gear selector lever A 9, that you turn the lever so you do not damage the lip area of oil seal 11.

GEAR SHIFTER UPPER AND INTERLOCK PLATE

Service standards

Unit : mm {in.}

Location	Maintenance item	Standard value	Limit	Remedy
2	Torsion shaft spring load (Installed length (16.2 {0.64})	50 N {11 lbf, 5.1 kgf}	42 N {9.48 lbf, 4.3 kgf}	Replace
9	Play in axial direction of gear selector lever A	0.3 to 0.6 {0.012 to 0.024}	—	Replace
17	Return spring A load (Installed length 27.6 {1.09})	94 N {21 lbf, 9.6 kgf}	80 N {18 lbf, 8.2 kgf}	Replace

Tightening torque

Unit : N·m {lbf.ft, kgf·m}

Location	Parts to be tightened	Tightening torque	Remarks
1	Plug	23 {17, 2.3}	—
4	Neutral switch	34 to 39 {25 to 29, 3.5 to 4.0}	—
6	Nut (Lock pin mounting)	17 {12, 1.7}	—

Lubricant and sealant

Location	Points of application	Kinds	Quantity
4	Thread area of neutral switch	THREEBOND 1104J	As required
11	Lip area of oil seal	Wheel bearing grease [NLGI No.2 (Li soap)]	As required
12	Inner surface of gear selector lever A axis bushing and its friction surface	Wheel bearing grease [NLGI No.2 (Li soap)]	As required
	Contact surfaces between bushing outer surface and case	THREEBOND 1215	As required
19	Pack dust seal	Wheel bearing grease [NLGI No.2 (Li soap)]	As required
20	Gear shift lever O-ring groove	Wheel bearing grease [NLGI No.2 (Li soap)]	As required

Special tools

Unit : mm {in.}

Location	Tool name and shape	Part No.	Application
13	Spring pin puller 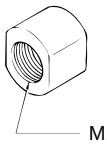 02399	MH062445	Removal of spring pin
	Reverse shaft puller 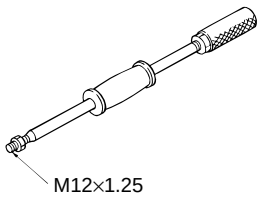 02118	03726-82000	

◆ Service procedure

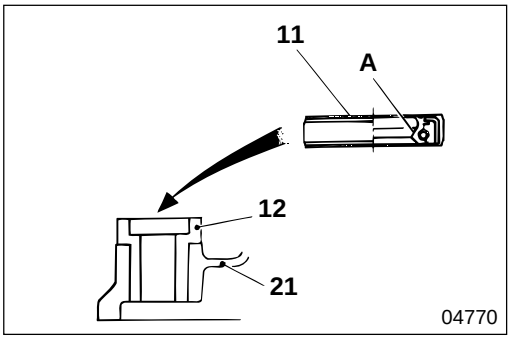

11 Installation of oil seal

- Apply grease to lip area **A** of oil seal **11**.
- Press-fit oil seal **11** into bushing **12** in the direction as illustrated.

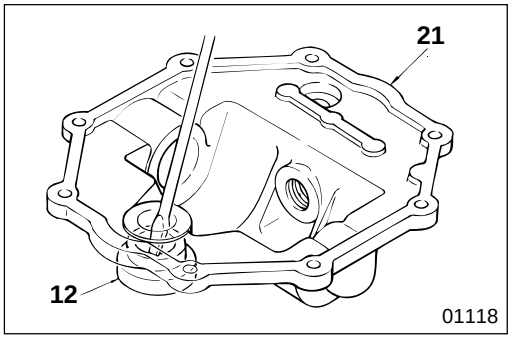

12 Bushing

[Removal]

Remove bushing **12** from selector lever case **21** using a screwdriver.

CAUTION

Be careful not to damage selector lever case 21.

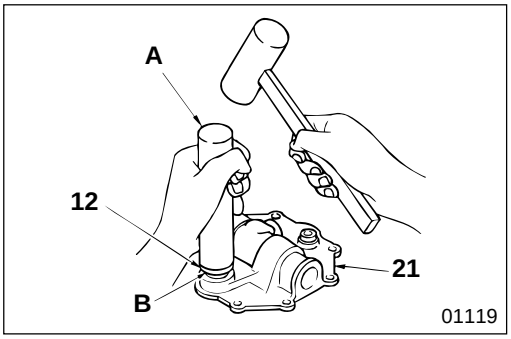

[Installation]

- Clean the inner surface of selector lever case **21**.
- Press-fit bushing **12** into selector lever case **21** using bar **A** (approximately ø40 mm {1.57 in.}).
- When press-fitting bushing **12**, take care not to damage selector lever case **23**.
- After press-fitting, apply sealant to press-fitted side **B** of bushing **12**.

CAUTION

Prevent sealant from sticking to the inner surface of bushing 12.

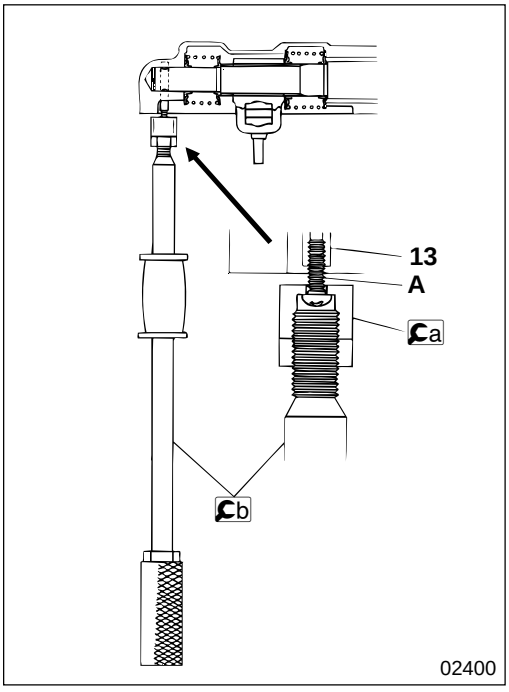

13 Removal of spring pin

- Tap spring pin **13** using an M4 tap.
- Into Ca spring pin puller with an M4 thread **A** of appropriate length into spring pin **13**.
- Position Cb reverse shaft puller on Ca spring pin puller.
- Remove spring pin **13** from selector lever case **21** using Ca spring pin puller and Cb reverse shaft puller.

GEAR SHIFTER UPPER AND INTERLOCK PLATE

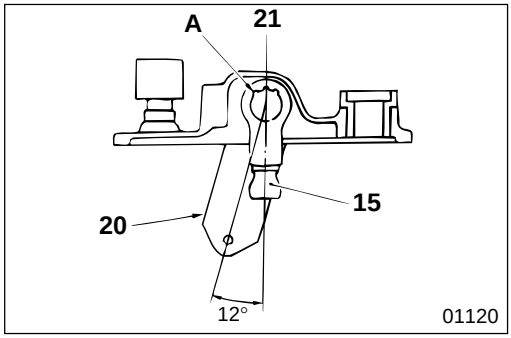

15 **20** **Installation of gear shift slide lever and gear shift lever**

When you install gear shift slide lever **15** in gear shift lever **20**, position spline **A** so that the angle between the slide lever and the shift lever is as illustrated.

M E M O

REAR COVER AND PARKING BRAKE ASSEMBLY

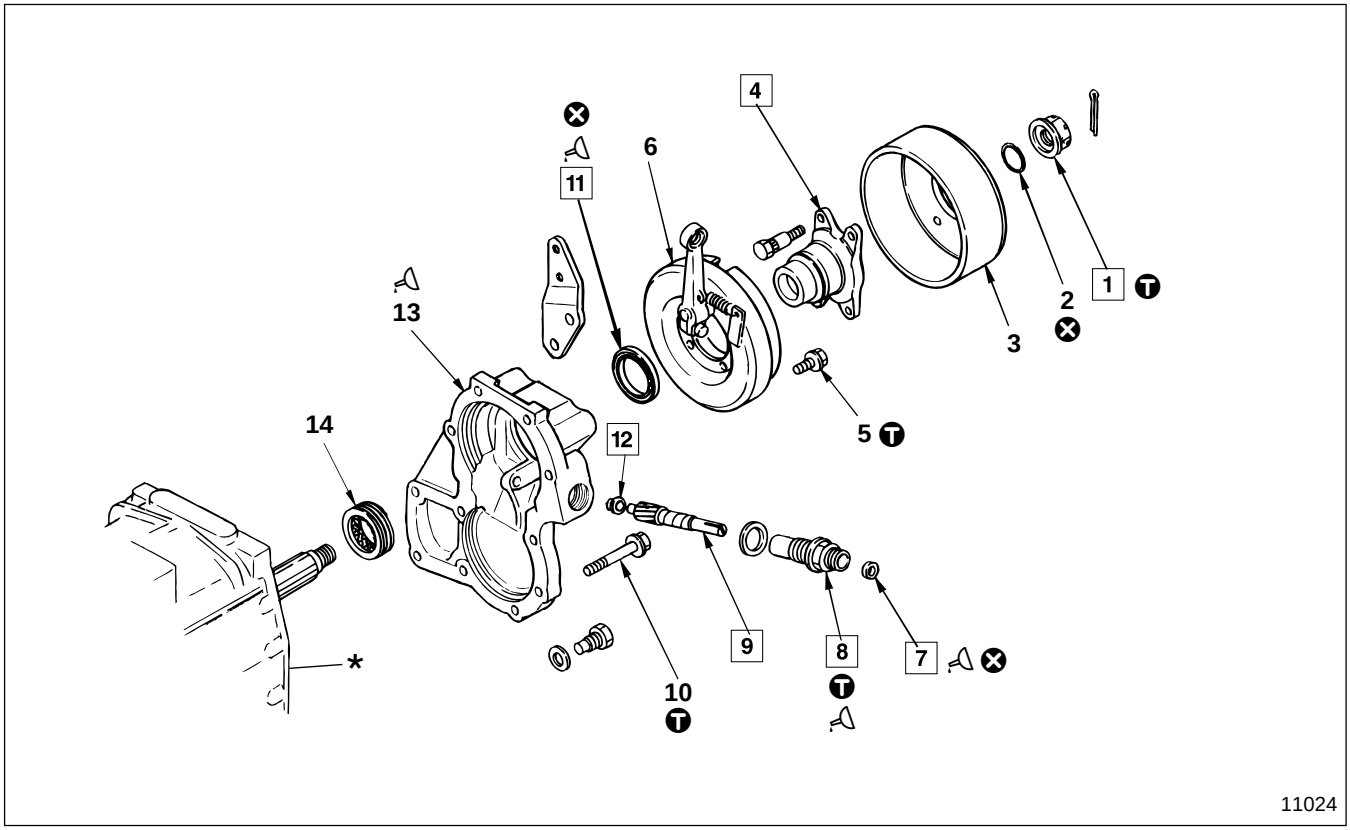

● **Disassembly sequence**

1 Lock nut
2 O-ring
3 Parking brake drum
4 Companion flange
5 Bolt
6 Support plate and shoe assembly Gr 36
7 Oil seal
8 Speedometer gear bushing
9 Speedometer gear
10 Bolt
11 Oil seal
12 Speedometer gear bushimg A
13 Rear cover
14 Speedometer worm

*: Transmission body
⊗: Non-reusable parts

● **Assembly sequence**

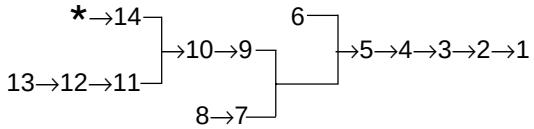

NOTE

Inspect backlash of speedometer gear 9 before disassembly.

Service standards

Unit : mm {in.}

Location	Maintenance item	Standard value (Basic diameter in [ ])	Limit	Remedy
8, 9	Clearance between speedometer gear bushing and speedometer gear	[12] 0.020 to 0.070 {[0.47] 0.00079 to 0.0028}	0.15 {0.0059}	Replace
9, 14	Play between speedometer gear and speedometer worm	0.13 to 0.29 {0.0051 to 0.011}	0.36 {0.014}	Replace

Tightening torque

Unit : N·m {lbf.ft, kgf·m}

Location	Parts to be tightened	Tightening torque	Remarks
1	Lock nut	245 to 345 {180 to 255, 25 to 35}	—
5	Bolt (Support plate and shoe assembly mounting)	40 {30, 4.1}	—
8	Speedometer gear bushing	145 {110, 15}	—
10	Bolt (Rear cover mounting)	40 {30, 4.1}	—

Lubricant and sealant

Location	Points of application	Kinds	Quantity
7, 11	Interior and lip area of oil seal	Wheel bearing grease [NLGI No.2 (Li soap)]	As required
8	Friction surface with speedometer gear bushing	Molybdenum disulfide grease [NLGI No.2 (Li soap)]	As required
13	Mating surfaces of rear cover and transmission case	THREEBOND 1215	As required

Special tools

Unit : mm {in.}

Location	Tool name and shape	Part No.	Application
1	Socket wrench 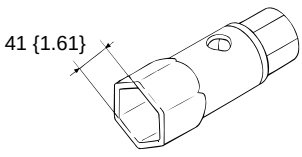	MH061532	Removal and installation of mainshaft rear lock nut
4	Flange puller 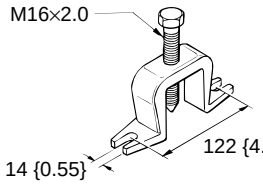	MC881524	Removal of flange at rear of mainshaft
11	Oil seal installer 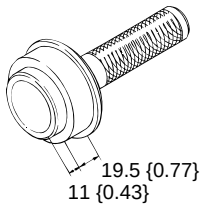	ME624242	Installation of oil seal in rear cover

◆ Service procedure

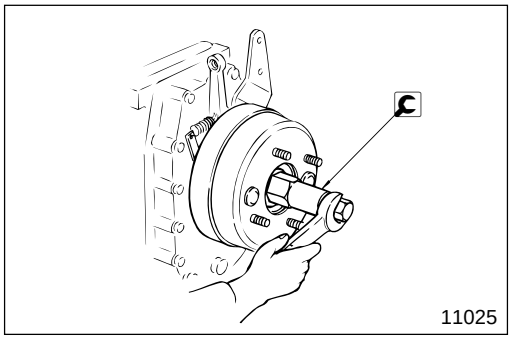

1 **Removal and installation of lock nut**

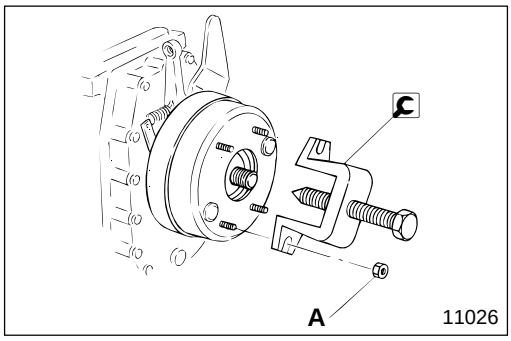

4 **Removal of companion flange**

A : Propeller shaft mounting nut

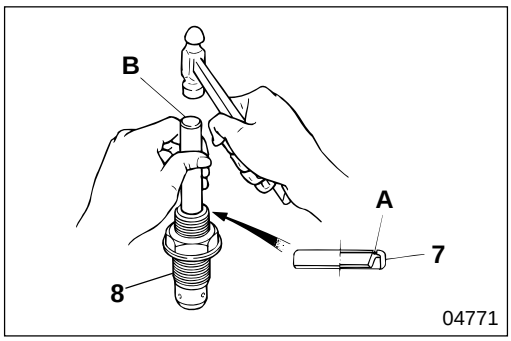

7 **Press-fitting of oil seal**

- Apply grease to inside of oil seal **7** packing **A**.
- Press-fit oil seal **7** into speedometer gear bushing **8** in the direction as illustrated using bar **B** (approximately ø15 mm {0.59 in.}).

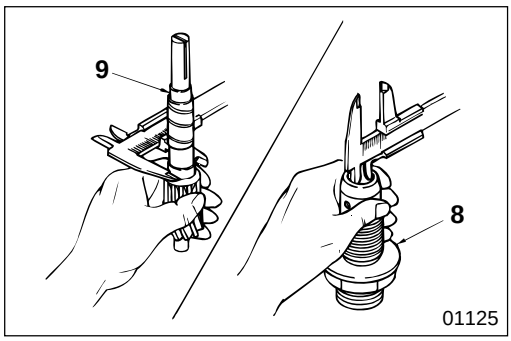

8 **9** **Clearance between speedometer gear bushing and speedometer gear**

If the clearance is higher than the limit, replace the faulty parts.

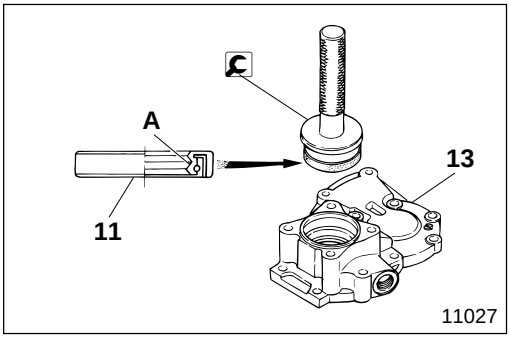

11 **Installation of oil seal**

- Apply grease to lip area **A** of oil seal **11**.
- Press-fit oil seal **11** into rear cover **13** in the direction as illustrated using oil seal installer.

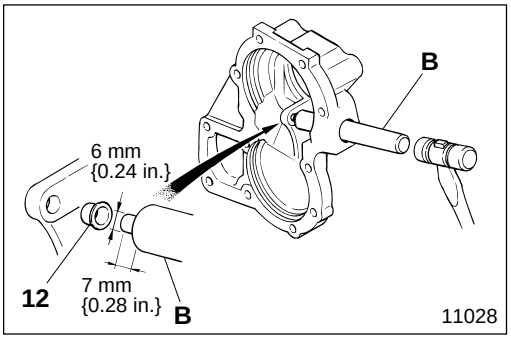

12 **Installation of speedometer gear bushing A**

Install speedometer gear bushing A **12** into rear cover **13** using bar **B**, turned to the dimensions as illustrated.

REVERSE IDLER GEAR

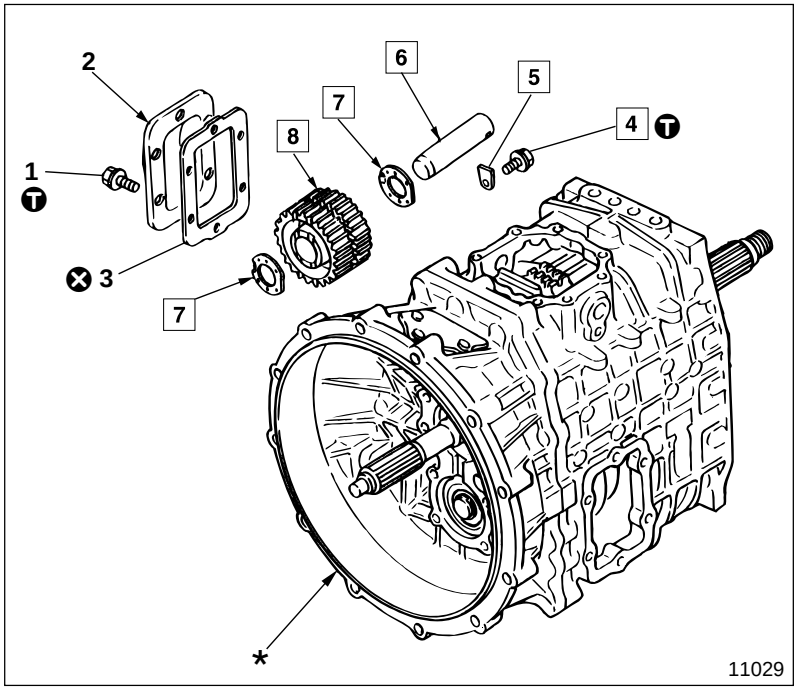

● **Inspection before disassembly**

P22-27

● **Disassembly sequence**

1 Bolt
2 Reverse idler gear cover
3 Gasket
4 Bolt
5 Reverse shaft lock piece
6 Reverse idler shaft
7 Reverse shaft gear side washer
8 Reverse idler gear

* : Transmission body
⊗ : Non-reusable parts

● **Assembly sequence**

Follow the disassembly sequence in reverse.

Service standards

Unit : mm {in.}

Location	Maintenance item	Standard value	Limit	Remedy
6, 8	Diameter direction after assembling reverse idler gear	—	0.12 {0.0047}	Replace
8	End play of reverse idler gear	0.2 to 0.9 {0.0079 to 0.035}	1.2 {0.047}	Replace

Ⓣ Tightening torque

Unit : N·m {lbf.ft, kgf·m}

Location	Parts to be tightened	Tightening torque	Remarks
1	Bolt (Reverse idler gear cover mounting)	19 {14, 1.9}	—
4	Bolt (Reverse shaft lock piece mounting)	40 {30, 4.1}	—

Special tools

Unit : mm {in.}

Location	Tool name and shape	Part No.	Application
6	Drive pinion and reverse shaft puller 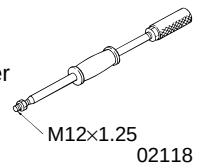 02118	03726-82000	Removal of reverse idler shaft

◆ Service procedure

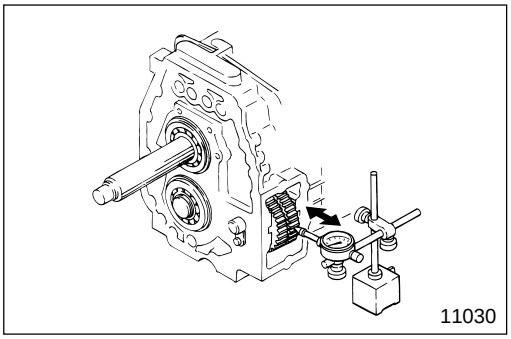

● Inspection before disassembly

Play of reverse idler gear in the diameter direction

- If the measured value is higher than the limit, replace the faulty parts.
- Reinspect play after assembly to check that the measured value is within the limit.

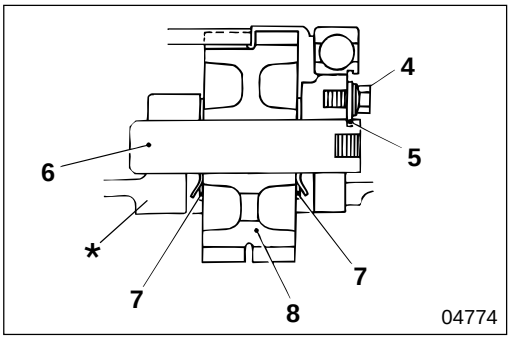

4 to 8 Assembly of reverse idler gear

- Install reverse shaft gear side washer **7** and reverse idler gear **8** in transmission body *.
- Install reverse idler shaft **6** in transmission body * using a plastic-headed mallet.
- Install reverse shaft lock piece **5** in transmission body * with mounting bolt **4**.

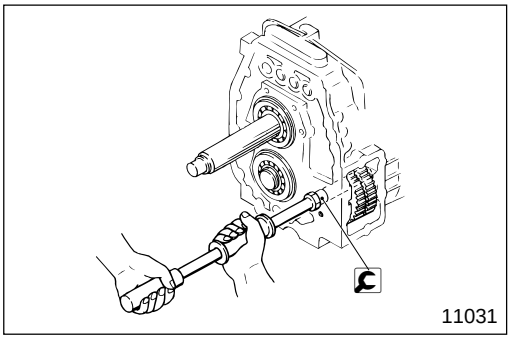

6 Removal of reverse idler shaft

TRANSMISSION BODY

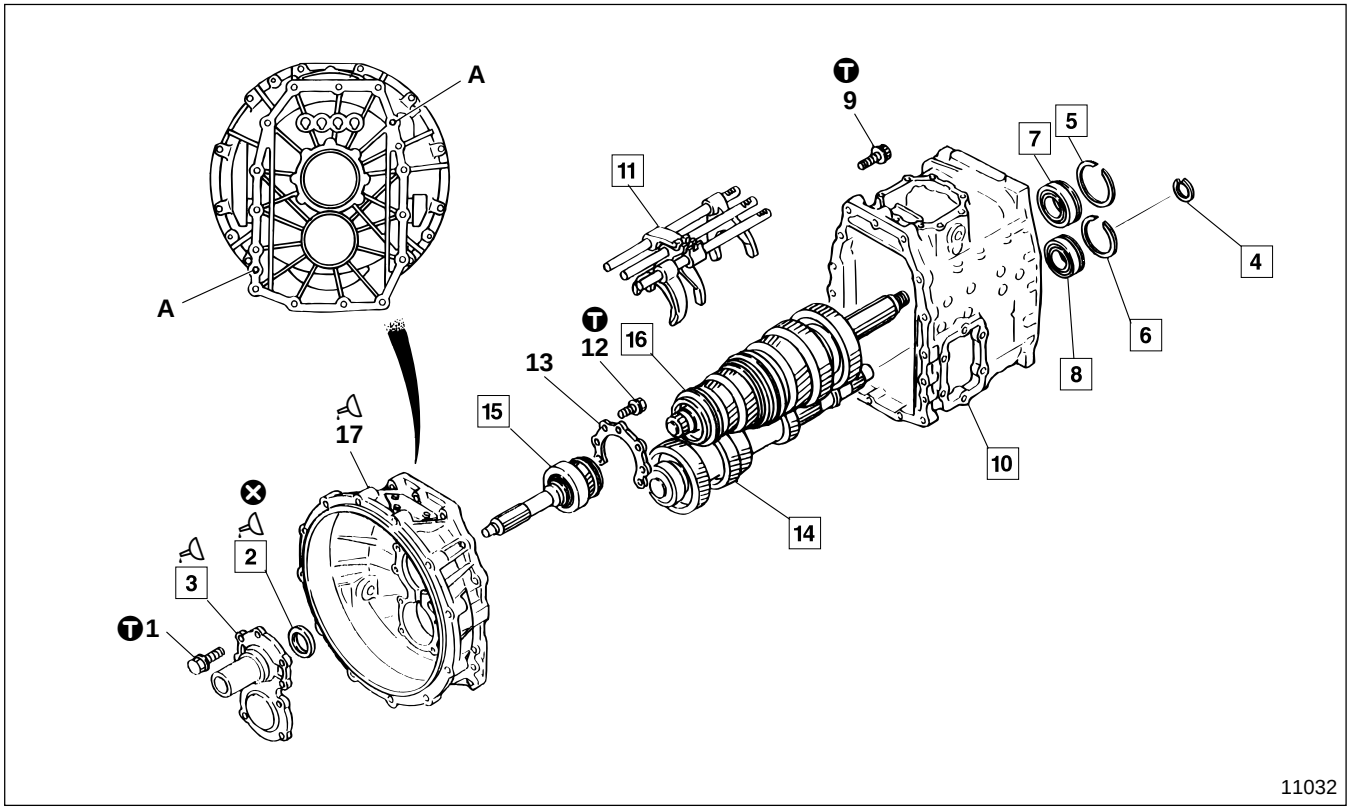

● **Disassembly sequence**

1 Bolt
2 Oil seal
3 Front bearing retainer
4 Snap ring
5 Snap ring
6 Snap ring
7 Mainshaft rear bearing
8 Countershaft rear bearing
9 Bolt
10 Transmission case
11 Shift rail and shift fork 🕮 P22-38
12 Bolt
13 Drive pinion bearing retainer
14 Countershaft assembly 🕮 P22-50
15 Drive pinion assembly 🕮 P22-40
16 Mainshaft assembly 🕮 P22-42
17 Clutch housing assembly

A : Positioning pin (two points)
⊗ : Non-reusable parts

● **Assembly sequence**

Follow the disassembly sequence in reverse.

NOTE

- **After removing parts 1 to 3, disassemble the transmission assembly with the body laid vertically on its clutch housing side.**
- **Remove parts 11, and 14 to 16 as a group. However, shift rail and shift fork 11 can be disassembled on its own if you are not going to disassemble parts 14 to 16. 🕮 P22-38**

Tightening torque

Unit : N·m {lbf.ft, kgf·m}

Location	Parts to be tightened	Tightening torque	Remarks
1	Bolt (Front bearing retainer mounting)	40 {30, 4.1}	—
9	Bolt (Transmission case mounting)	120 {90, 12.4}	—
12	Bolt (Drive pinion retainer mounting)	40 {30, 4.1}	—

Lubricant and sealant

Location	Points of application	Kinds	Quantity
2	Lip area of oil seal	Wheel bearing grease [NLGI No.2 (Li soap)]	As required
3	Contact surface between front bearing retainer and clutch housing assembly	THREEBOND 1215	As required
17	Contact surface between clutch housing assembly and transmission case	THREEBOND 1215	As required

Special tools

Unit : mm {in.}

Location	Tool name and shape	Part No.	Application
2	Oil seal installer **X** 62 {2.44} **Y** 40 {1.57} **Z** 30 {1.18} **a** 10 {0.39} **b** 10 {0.39} 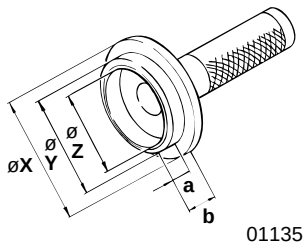 01135	ME624241	Installation of front bearing retainer oil seal
3	Oil seal front guide 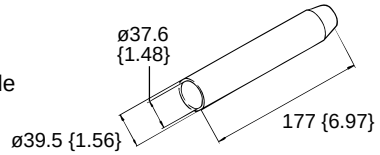 01136	MH061990	Installation of front bearing retainer
4, 5, 6	Snap ring expander 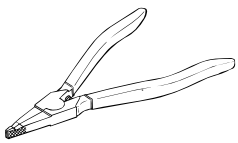 01137	MH061268	Removal of snap rings from mainshaft rear bearing and countershaft front and rear bearings
7	Mainshaft bearing puller 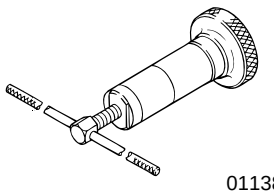 01138	*MH061732	Removal of mainshaft rear bearing

* components of puller and installer kit P22-59

TRANSMISSION BODY

Unit : mm {in.}

Location	Tool name and shape	Part No.	Application
7	Mainshaft bearing installer 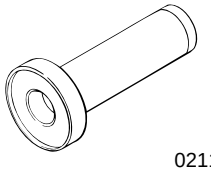 02115	*MH624234	Installation of mainshaft rear bearing
8	Countershaft bearing puller 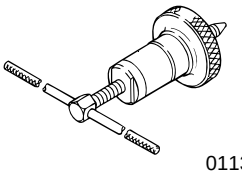 01139	*ME061731	Removal of countershaft rear bearing
	Countershaft bearing installer 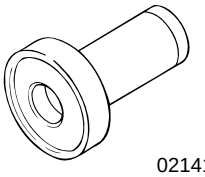 02141	*ME624233	Installation of countershaft bearing
10	Eye bolt  01140	MH062340	Lifting of transmission case
	Gear puller 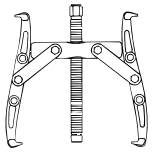 01148	MH062308	Removal of transmission case
14 to 16	Steel lifting band 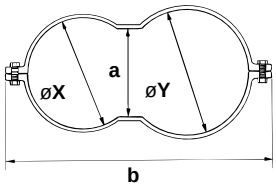 <table><tr><td>**X**</td><td>87 {3.43}</td></tr><tr><td>**Y**</td><td>175 {6.89}</td></tr><tr><td>**a**</td><td>80 {3.15}</td></tr><tr><td>**b**</td><td>336 {13}</td></tr></table> 01141	MH062343	Removal and installation of mainshaft assembly, countershaft assembly and drive pinion assembly
	Eye nut  01142	MH062341	

* components of puller and installer kit P22-59

Location	Tool name and shape	Part No.	Application
14	Countershaft bearing puller 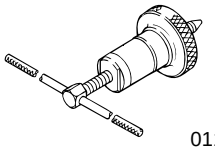 01139	*MH062426	Removal of countershaft front bearing
	Countershaft bearing installer 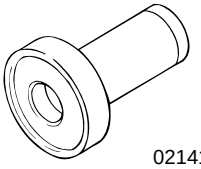 02141	*ME624233	Installation of countershaft front bearing

* components of puller and installer kit P22-59

◆ Service procedure

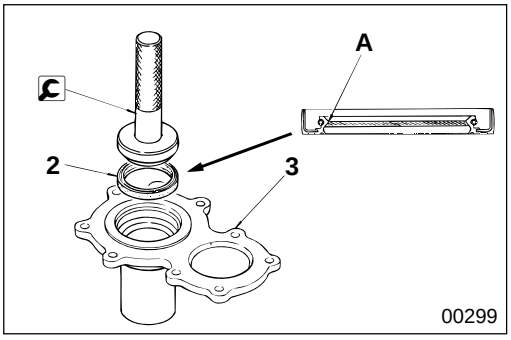

00299

2 Installation of oil seal

- Apply grease to lip area **A** of oil seal **2**.
- Press-fit oil seal **2** into front bearing retainer **3** in the direction as illustrated using oil seal installer.

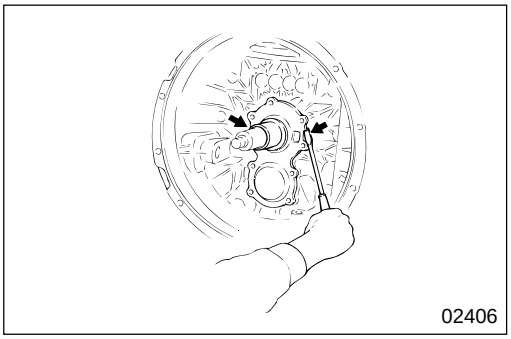
02406

3 Front bearing retainer

[Removal]

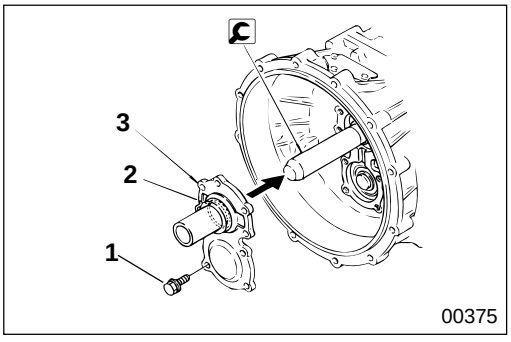

00375

[Installation]

Press-fit front bearing retainer **3** into clutch housing assembly **19** using oil seal front guide.

CAUTION

Be careful when installing front bearing retainer 3, that you do not damage oil seal 2 installed on the front bearing retainer.

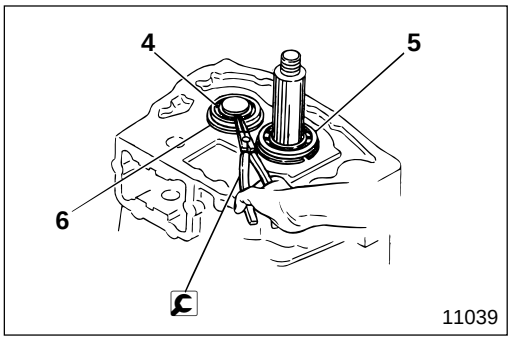

4 to **6** **Removal and installation of snap ring**

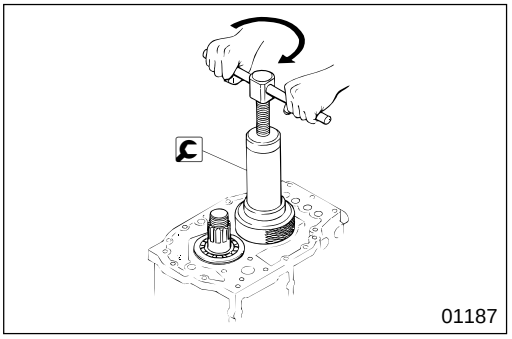

7 **Mainshaft rear bearing**

[Removal]

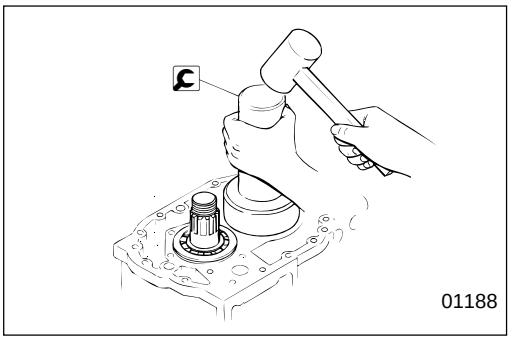

[Installation]

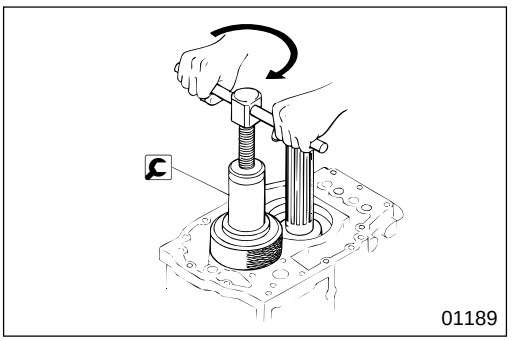

8 **Countershaft rear bearing**

[Removal]

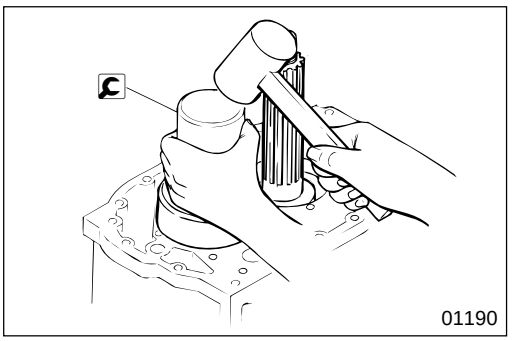

[Installation]

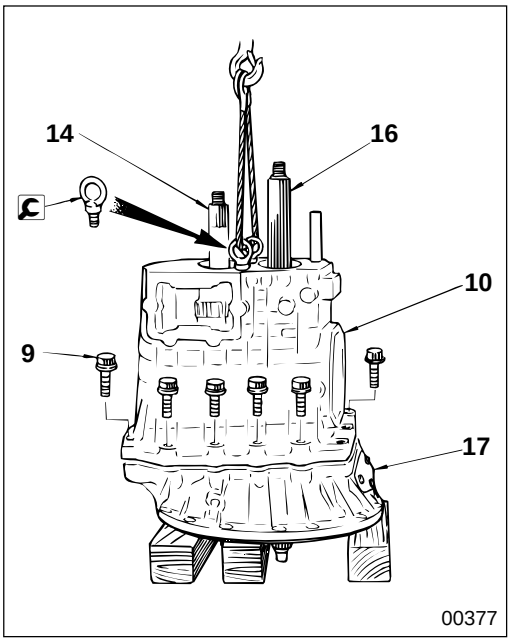

10 Removal and installation of transmission case

[Removal]

● **Remove transmission case 10.**

Method 1

- When lifting up with a crane, install eye bolts on transmission case **10** and pass a steel sling through them.
- After removing bolts **9**, lift transmission case **10** up with a crane and keep hitting the rear ends of clutch housing assembly **17**, mainshaft assembly **16** and countershaft assembly **14**. Use a plastic-headed or copper-headed mallet to remove the transmission case.

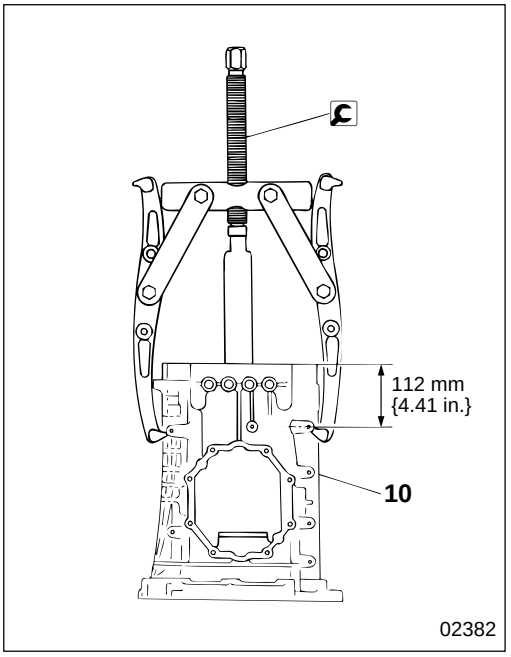

Method 2

- A gear puller can be used instead of a crane.

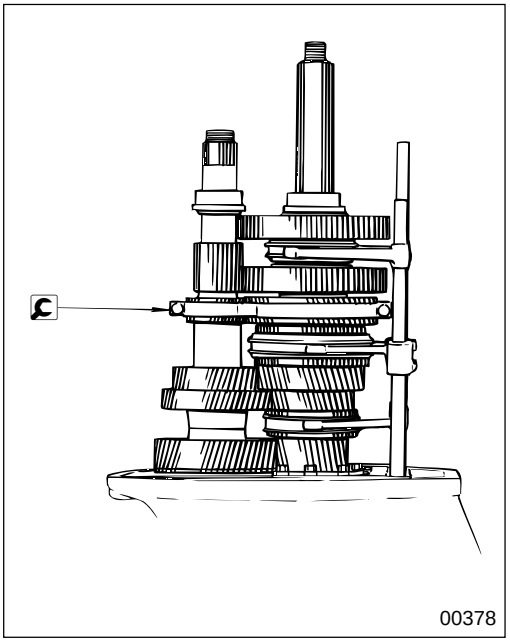

- After removing transmission case **10**, fit the 2nd gear using steel lifting band to ensure safety.

CAUTION

Be sure to tighten steel lifting band adequately enough to prevent it from coming undone, but not excessively, because excessive tightening would damage the gears, etc.

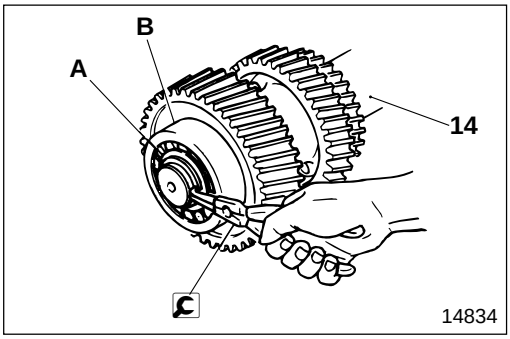

- Remove snap ring **A** from countershaft assembly **14**.
  B : Countershaft front bearing

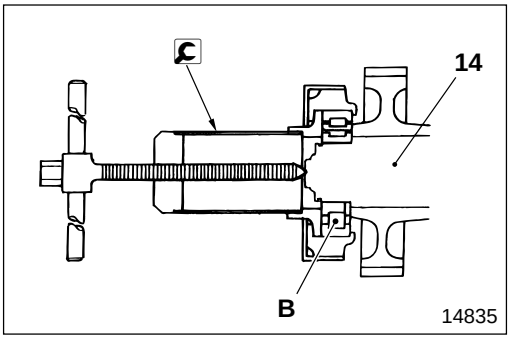

- Remove countershaft bearing **B** from countershaft assembly **14**.

[Installation]
Follow the removal sequence in reverse.

CAUTION

Be careful not to damage mainshaft assembly 16, or rear bearings 7, 9 of countershaft assembly 14 during installation.

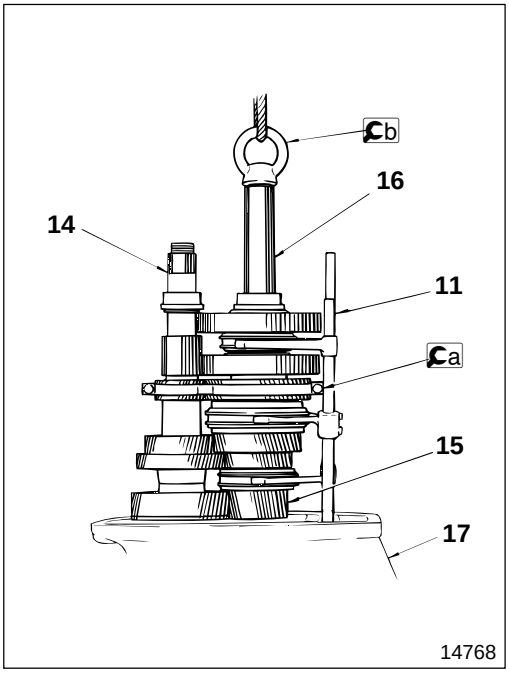

11 **14** **to** **16** **Shift rail and shift fork, countershaft assembly, drive pinion assembly, and mainshaft assembly**

[Removal]
Remove or install shift rail and shift fork **11**, countershaft assembly **14**, drive pinion assembly **15**, and mainshaft assembly **16** as a group.

- Before lifting, after removing the case, install b eye nut at the end of mainshaft **18**, fitted with a steel lifting band.
- Fix shift rail and shift fork **11** to mainshaft assembly **16** with a rubber band.
- Fix a piece of wood to clutch housing assembly **17**, and use a crane to lift the clutch housing together with drive pinion assembly **15** up, at the same time hitting them with a plastic-headed mallet to remove them.

CAUTION

- **Be sure to tighten a steel lifting band adequately enough to prevent it from coming undone, but not excessively, because excessive tightening would damage the gears, etc.**
- **Make sure, when lifting mainshaft assembly 16 or other parts, that you support drive pinion assembly 15 with your hand in order to prevent it from falling when the mainshaft assembly and countershaft assembly 14 come apart.**

[Installation]
Method 1

- Follow the removal sequence in reverse.

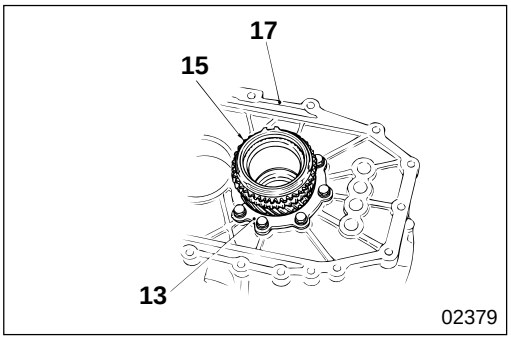

Method 2

- After installing drive pinion assembly **15** in clutch housing assembly **17**, install drive pinion bearing retainer **13**.

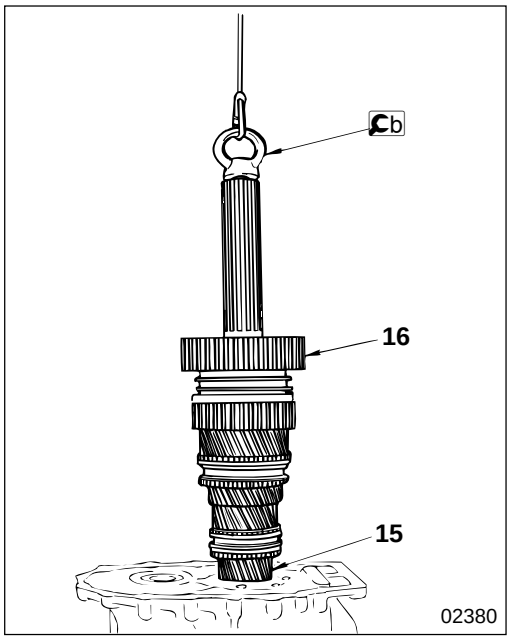

- Install b eye nut at the end of mainshaft assembly **16**.
- Lift mainshaft assembly **16** up using a crane and install the mainshaft assembly on drive pinion assembly **15**.

CAUTION

To prevent mainshaft assembly 16 from falling, support it using a crane.

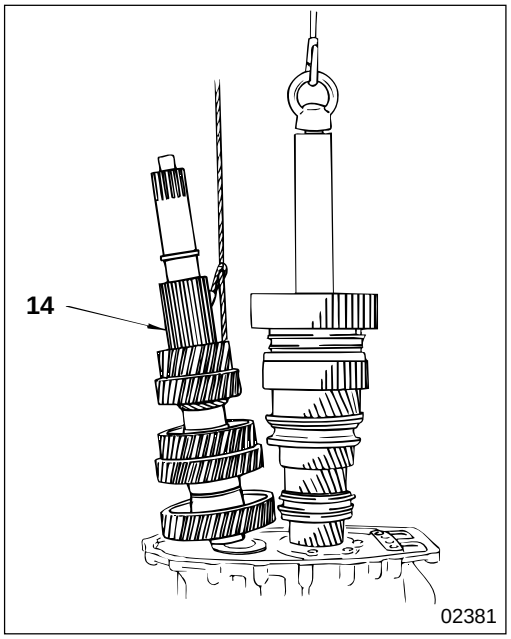

- Install countershaft assembly **14** in clutch housing assembly **17**.

CAUTION

If you use this method of installation, first remove the countershaft front bearing. P22-52

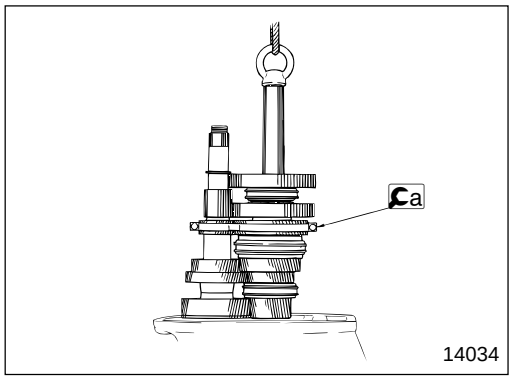

- Fit the 2nd gear unit using a steel lifting band to ensure safety.

CAUTION

Be sure to tighten a steel lifting band adequately enough to prevent it from coming undone, but not excessively, because excessive tightening would damage the gears, etc.

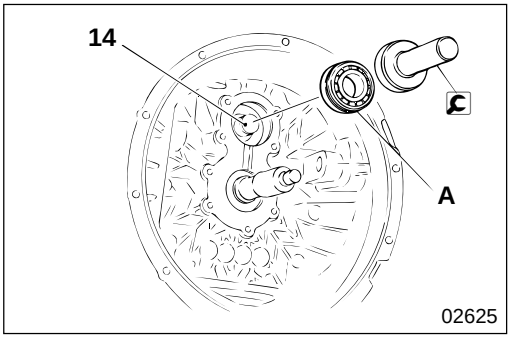

- Install shift rail and shift fork **11** and transmission case **10** in clutch housing assembly **17**.
- Place clutch housing assembly **17** horizontally so that countershaft assembly **14** is uppermost.
- Install the countershaft front bearing **A** into clutch housing assembly **17** using countershaft bearing installer.

CAUTION

Be sure to install the snap ring of the countershaft front bearing.

Shift Rail and Shift Fork

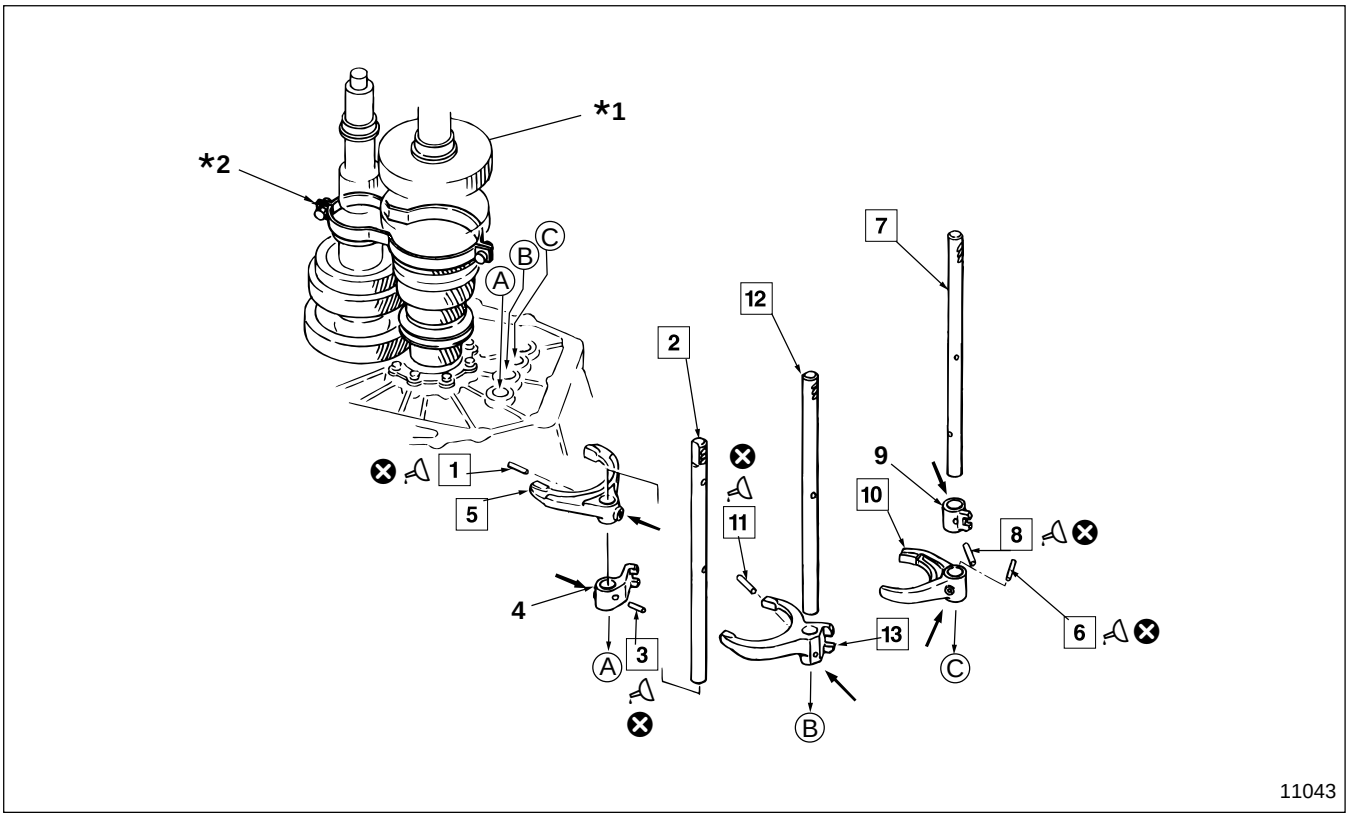

Arrow mark : Removal and installation direction for spring pin

● **Disassembly sequence**

(When the mainshaft assembly is not removed or installed and only the shift rail and shift fork is disassembled)

1 Spring pin
2 1st and reverse shift rail
3 Spring pin
4 1st and reverse shift rail jaw
5 1st and reverse shift fork
6 Spring pin
7 4th and 5th shift rail
8 Spring pin
9 4th and 5th shift rail jaw
10 4th and 5th shift fork
11 Spring pin
12 2nd and 3rd shift rail
13 2nd and 3rd shift fork

***1** : Mainshaft assembly
***2** : steel lifting band
⊗ : Non-reusable parts

● **Assembly sequence**

Follow the disassembly sequence in reverse. Remove steel lifting band after installing the shift rail and shift fork.

Service standards

Unit : mm {in.}

Location	Maintenance item	Standard value	Limit	Remedy
2, 7, 12	Bend of shift rail	0.039 {0.0015} or less	0.08 {0.0031}	Correct or replace
5, 10, 13	Tilt of shift fork claw	0.1 {0.0039} or less	0.2 {0.0079}	Replace
5, *1	Clearance between 1st and reverse shift fork and synchronizer sleeve	0.3 to 0.5 {0.012 to 0.020}	1.0 {0.039}	Replace
10, *1	Clearance between 4th and 5th shift fork and synchronizer sleeve	0.3 to 0.6 {0.012 to 0.024}	1.0 {0.039}	Replace
13, *1	Clearance between 2nd and 3rd shift fork and synchronizer sleeve	0.2 to 0.4 {0.0079 to 0.016}	1.0 {0.039}	Replace

Sealant

Location	Points of application	Kinds	Quantity
1, 3, 6, 8, 11	Spring pin	LOCTITE 601	As required

◆ Service procedure

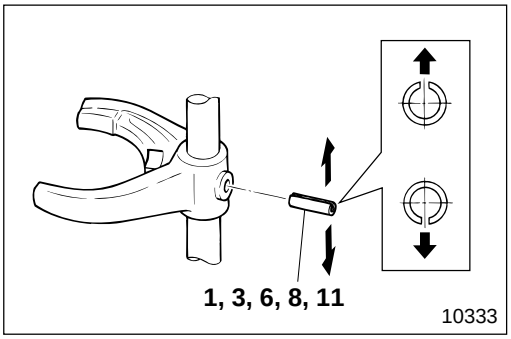

1 **3** **6** **8** **11** **Installation of spring pin**

Install spring pins **1**, **3**, **6**, **8**, **11** in the direction as illustrated.

CAUTION

- **Make sure you do not drive in spring pins 1, 3, 6, 8, fully, leave 0 to 0.5 mm {0 to 0.020 in.} outside to prevent them from slipping out.**
- **Do not remove spring pin 6 for 4th and 5th shift fork 10 (made of aluminum), except when replacing shift fork 10 or shift rail 7.**
- **Note that the length of spring pin 6 differs from that of spring pins 1, 3, 8, 11.**
- **Be careful when driving in spring pins 1, 3, 6, 8, 11, that you do not subject shift rails 2, 7, 12 to excessive strain, because this would cause faults such as bent shift rails.**

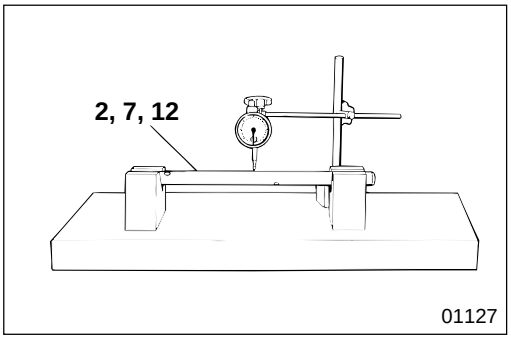

2 **7** **12** **Bend of shift rail**

If the measured value is higher than the limit, correct or replace shift rail **2**, **7**, or **12**.

NOTE

Read dial gauge after turning shift rails 2, 7, 12 one full revolution. The bend is one half of the indicated value.

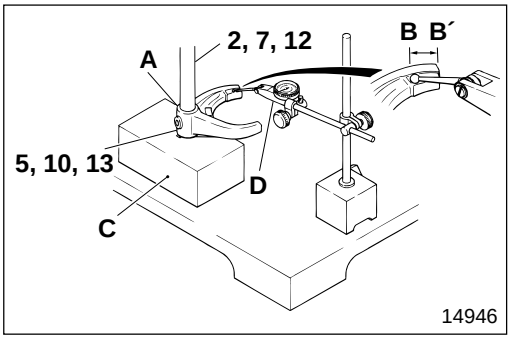

5 **10** **13** **Tilt of shift fork claws**

- Measure the tilt (difference between **B** and **B´**) of claw **B-B´** against hole **A** of shift rails **2**, **7**, **12** of shift forks **5**, **10**, **13** with the shift rails upright.
- If the measured value is higher than the limit, replace shift forks **5**, **10**, or **13**.

C : V-block
D : Dial gauge

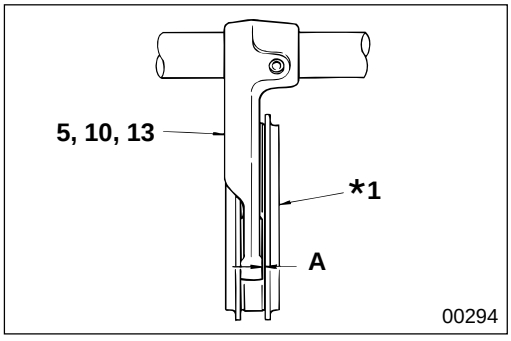

5 **10** **13** ***1** **Clearance between gear shift fork and synchronizer sleeve of mainshaft**

If clearance **A** is higher than the limit, replace the faulty parts.

***1** : Synchronizer ring of mainshaft assembly

DRIVE PINION ASSEMBLY

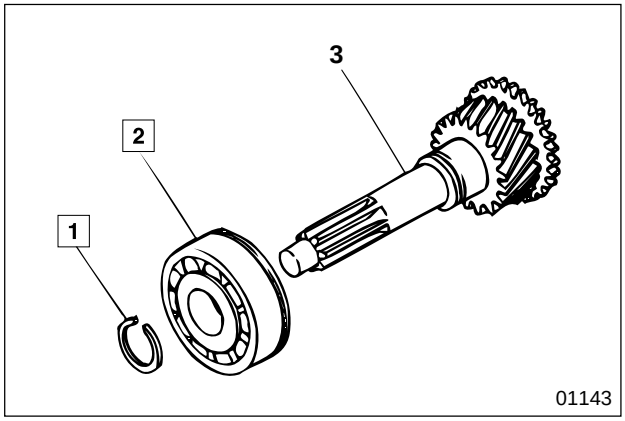

● **Disassembly sequence**

1 Snap ring
2 Drive pinion bearing
3 Drive pinion

● **Assembly sequence**

Follow the disassembly sequence in reverse.

Special tools

Location	Tool name and shape	Part No.	Application
1	Snap ring expander 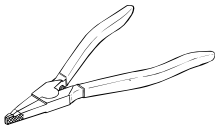 01137	MH061268	Removal and installation of snap ring of drive pinion bearing
2	Drive pinion bearing puller 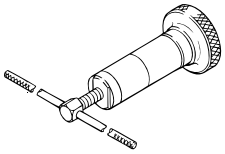 01138	*MH062440	Removal of drive pinion bearing
	Drive pinion bearing installer 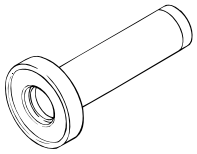 02142	*ME624235	Installation of drive pinon bearing

* components of puller and installer kit P22-59

◆ Service procedure

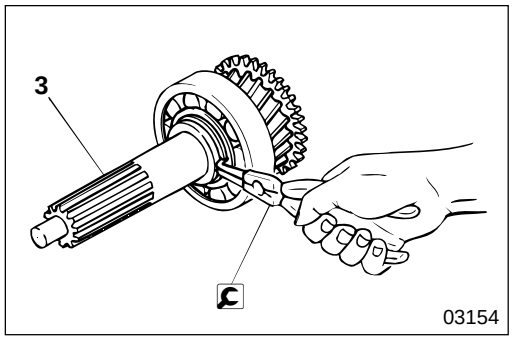

1 **Removal and installation of snap ring**

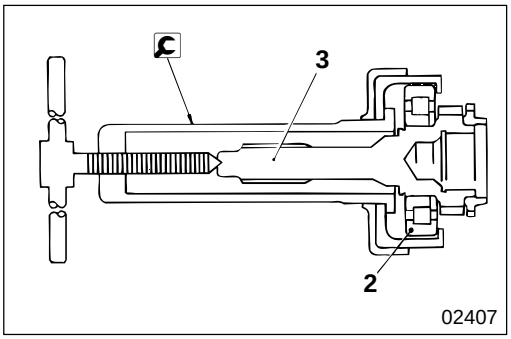

2 Drive pinion bearing

[Removal]

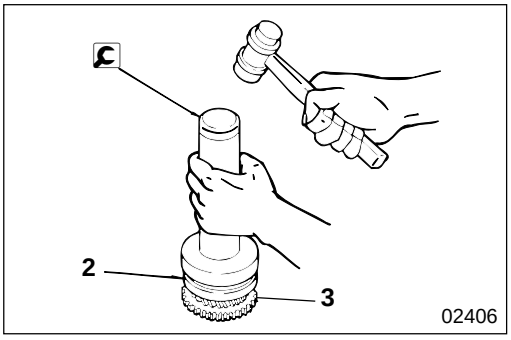

[Installation]

MAINSHAFT ASSEMBLY

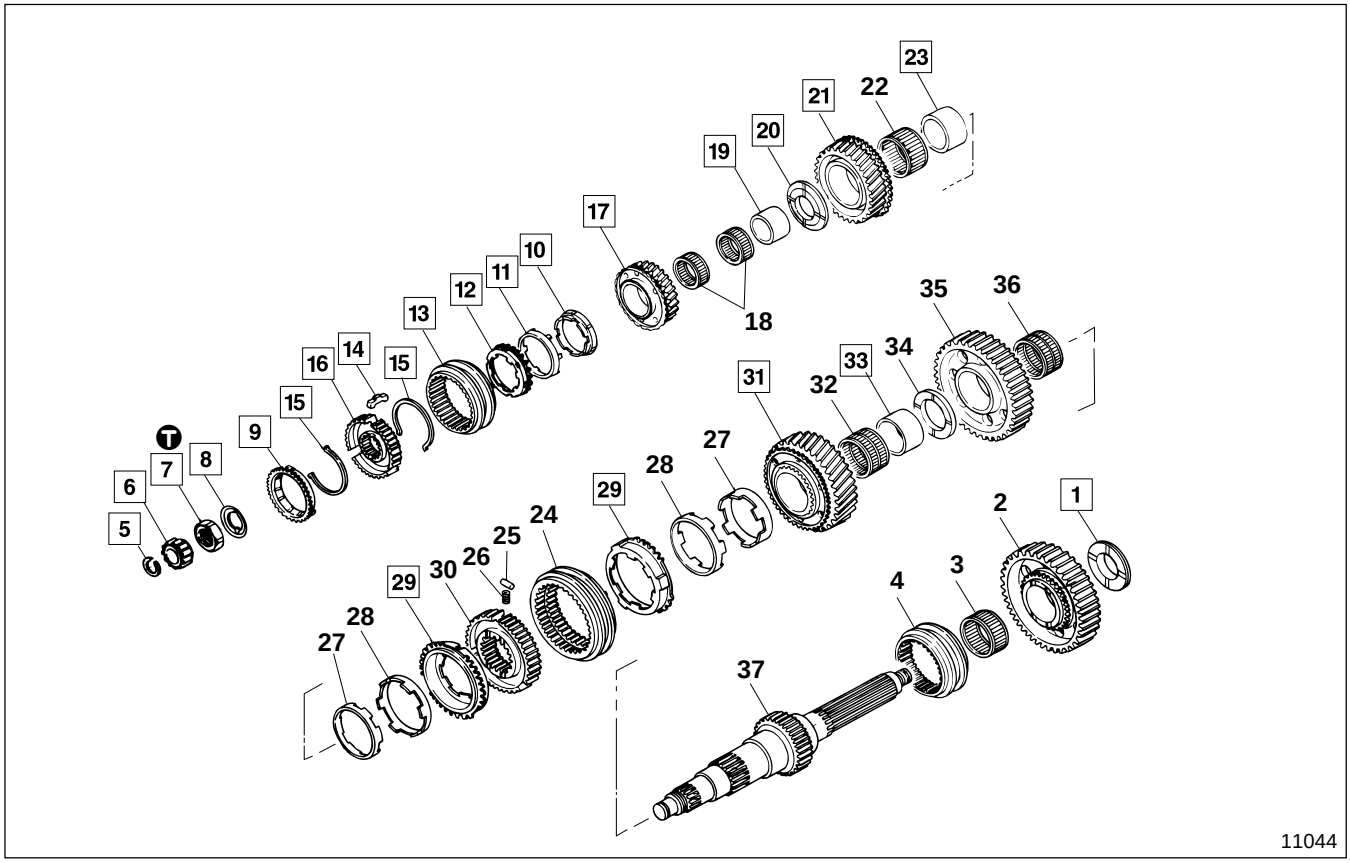

● **Work before disassembly**

P22-45

● **Disassembly sequence**

1 Reverse gear thrust washer
2 Reverse gear
3 Needle bearing
4 Sleeve
5 Snap ring
6 Pilot bearing
7 Lock nut
8 Lock washer
9 Synchronizer ring
10 Synchronizer inner ring
11 Synchronizer center cone
12 Synchronizer outer ring
13 Synchronizer sleeve
14 Shifting key
15 Shifting key spring
16 Synchronizer hub
17 4th gear assembly
18 Needle bearing
19 4th gear bearing sleeve
20 3rd and 4th gear thrust washer
21 3rd gear assembly
22 Needle bearing
23 3rd gear bearing sleeve
24 Synchronizer sleeve
25 Shifting key
26 Synchronizer spring
27 Synchronizer inner ring
28 Synchronizer center cone
29 Synchronizer outer ring
30 Synchronizer hub
31 2nd gear assembly
32 Needle bearing
33 2nd gear bearing sleeve
34 1st and 2nd gear thrust washer
35 1st gear
36 Needle bearing
37 Mainshaft

● **Assembly sequence**

37→36→35→34→33→32→31
30→29→28→27→24→26→25
→23→22→21→20→19→18→17
16→15→13→14→15→12→11→10→9
→8→7→6→5→4→3→2→1

Service standards

Unit : mm {in.}

Location	Maintenance item	Standard value (Basic diameter in [ ])	Limit	Remedy
2	End play of reverse gear	0.15 to 0.35 {0.0059 to 0.014}	0.5 {0.020}	Replace gear or thrust washer
2, 3, 37	Play in the diameter direction after assembling reverse gear	—	0.12 {0.0047}	Replace
4, 37	Play in the rotating direction of sleeve and spline of mainshaft	0.052 to 0.148 {0.0020 to 0.0058}	0.3 {0.012}	Replace
6, 37	Play in the diameter direction after assembling pilot bearing	—	0.12 {0.0047}	Replace
9	Clearance between synchronizer ring and cone of drive pinion assembly	1.48 to 1.77 {0.058 to 0.070}	0.2 {0.0079}	Replace
9, 14	Clearance between synchronizer ring keyway and shifting key	4.75 to 4.95 {0.187 to 0.195}	5.8 {0.23}	Replace
12, 14	Clearance between synchronizer outer ring keyway and shifting key	4.75 to 4.95 {0.187 to 0.195}	5.8 {0.23}	Replace
12, 17	Clearance between synchronizer outer ring and cone area of 4th gear	1.5 to 2.0 {0.059 to 0.079}	0.2 {0.0079}	Replace
13, 16	Play in the rotating direction of synchronizer sleeve and synchronizer hub	0.052 to 0.148 {0.0020 to 0.0058}	0.3 {0.012}	Replace
14, 16	Clearance between shifting key and synchronizer hub keyway	0.05 to 0.2 {0.0020 to 0.0079}	0.5 {0.020}	Replace
17	End play of 4th gear	0.25 to 0.4 {0.0098 to 0.016}	0.5 {0.020}	Replace gear or thrust washer
17, 18, 19, 37	Play in the diameter direction after assembling 4th gear	—	0.12 {0.0047}	Replace
19	Outer diameter of 4th gear bearing sleeve	$[54]^{-0.030}_{-0.043}$ {$[2.12]^{-0.0012}_{-0.0017}$}	– 0.1 {– 0.0039}	Replace
21	End play of 3rd gear	0.15 to 0.35 {0.0059 to 0.014}	0.5 {0.020}	Replace gear or thrust washer
21, 29	Clearance between cone area of 3rd gear and synchronizer outer ring	1.21 to 1.79 {0.048 to 0.070}	0.2 {0.0079}	Replace
21, 22, 23, 37	Play in the diameter direction after assembling 3rd gear	—	0.12 {0.0047}	Replace
23	Outer diameter of 3rd gear bearing sleeve	$[68]^{-0.030}_{-0.043}$ {$[2.68]^{-0.0012}_{-0.0017}$}	– 0.1 {– 0.0039}	Replace
29, 31	Clearance between synchronizer outer ring and cone area of 2nd gear	1.21 to 1.79 {0.048 to 0.070}	0.5 {0.020}	Replace
31	End play of 2nd gear	0.15 to 0.35 {0.0059 to 0.014}	0.5 {0.020}	Replace gear or thrust washer
31, 32, 33, 37	Play in the diameter direction after assembling 2nd gear	—	0.12 {0.0047}	Replace
33	Outer diameter of 2nd gear bearing sleeve	$[71]^{-0.030}_{-0.043}$ {$[2.8]^{-0.0012}_{-0.0017}$}	– 0.1 {– 0.0039}	Replace
35	End play of 1st gear	0.15 to 0.35 {0.0059 to 0.014}	0.5 {0.020}	Replace gear or thrust washer
35, 36, 37	Play in the diameter direction after assembling 1st gear	—	0.12 {0.0047}	Replace

MAINSHAFT ASSEMBLY

Tightening torque

Unit : N·m {lbf.ft, kgf·m}

Location	Parts to be tightened	Tightening torque	Remarks
7	Lock nut	245 {180, 25}	—

Special tools

Unit : mm {in.}

Location	Tool name and shape	Part No.	Application
5	Snap ring expander 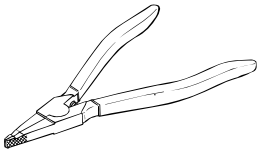 01137	MH061268	Removal and installation of snap ring
6	Pilot bearing puller 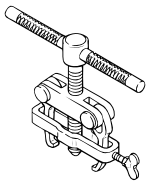 01146	MH061043	Removal of pilot bearing
	Pilot bearing installer 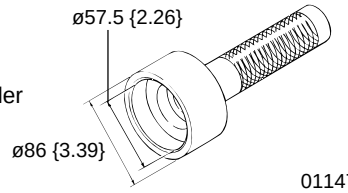 01147	*ME624236	Installation of pilot bearing
7	Single spanner 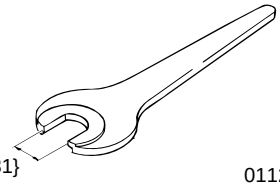 01126	MH061555	Removal and installation of lock nut
19, 23, 33	Gear puller 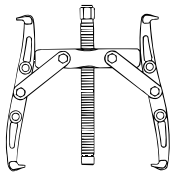 01148	MH062308	Removal of mainshaft rear bearing inner race and bearing sleeves

* components of puller and installer kit P22-59

◆ Service procedure

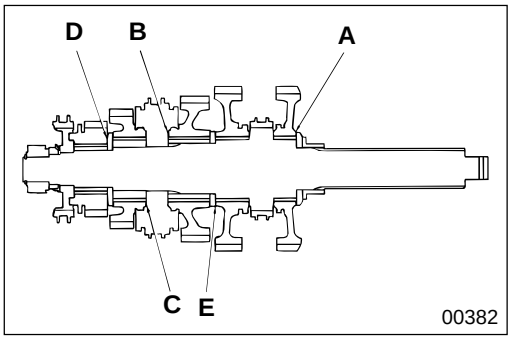

● **Work before disassembly**

[Inspection]

(1) End play of gears

A : Reverse gear
B : 2nd gear
C : 3rd gear
D : 4th gear
E : 1st gear

If the measured value is higher than the limit, replace the faulty parts. Also inspect this item after assembly and make sure that the measured value is within the limit.

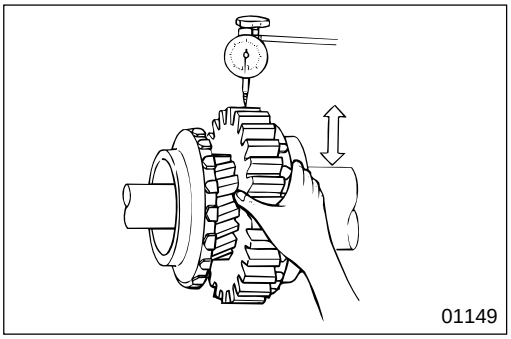

(2) Play of gears in diameter direction

If the measured value is higher than the limit, replace the faulty parts. Also inspect this item after assembly and make sure that the measured value is within the limit.

CAUTION⚠

Be sure when you replace the two needle bearings of a gear, that both needle bearings are from the same color package.

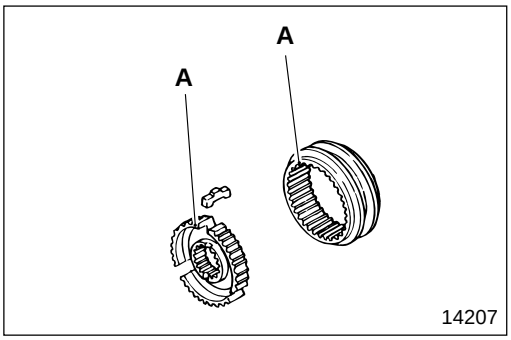

[Alignment marks]

(1) Synchronizer sleeve and synchronizer hub

Before disassembling the synchronizer sleeve and the synchronizer hub, put alignment marks **A** on the places where the shifting keys are installed. When reusing parts, align the alignment marks to assemble.

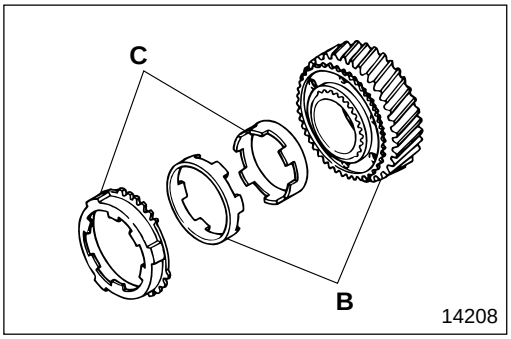

(2) Ring, cone and gear assembly of double cone synchronizer

Before disassembling synchronizer center cone and gear assembly (**B**), and synchronizer center ring and synchronizer outer ring (**C**), put alignment marks on them. When reusing parts, align the alignment marks to assemble.

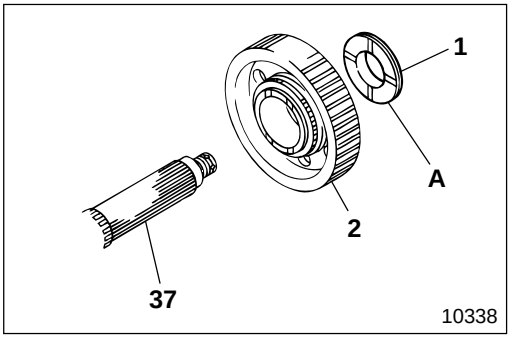

1 **Installation of reverse gear thrust washer**

A : Oil groove

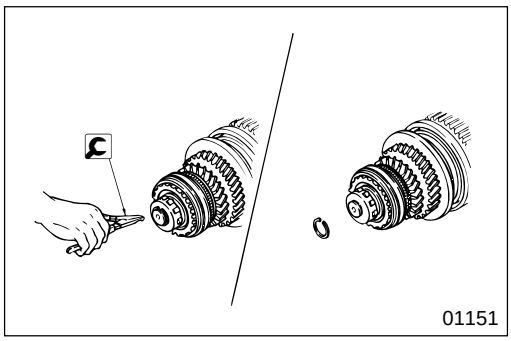

5 **Removal and installation of snap ring**

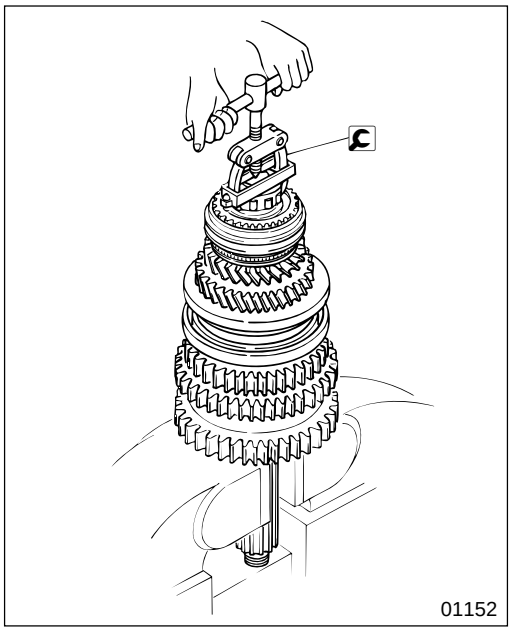

6 **Pilot bearing**

[Removal]

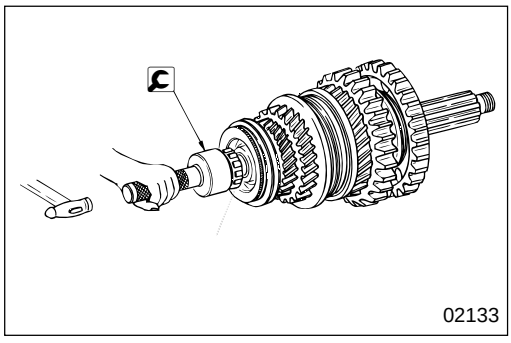

[Installation]

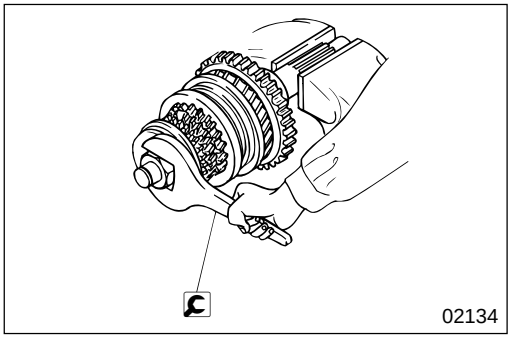

7 **Removal and installation of lock nut**

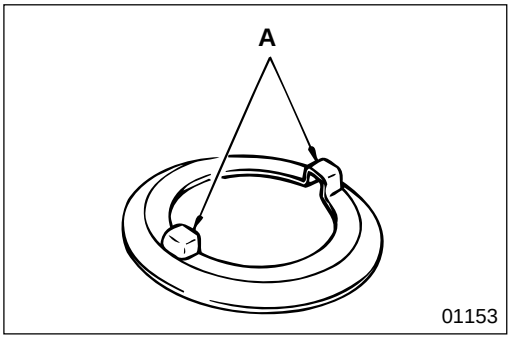

8 **Installation of lock washer**

Install so that protrusions **A** (two points as illustrated) fit into the grooves of synchronizer hub **16**.

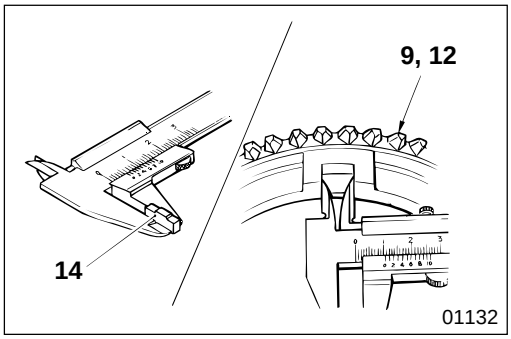

9 **to** **17** **Synchromesh mechanism and 4th gear**

[Inspection]

(1) Clearance between synchronizer ring 9 or outer ring 12 and shifting key 14

If the measured value is higher than the limit, replace the faulty parts.

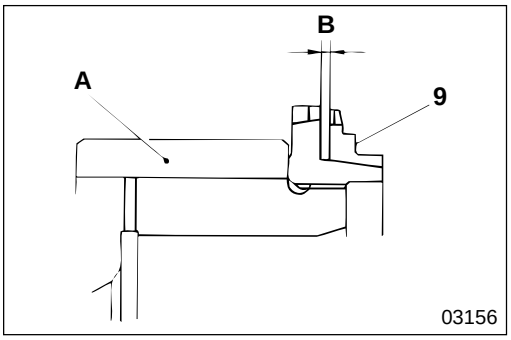

(2) Clearance between synchronizer ring 9 and drive pinion

- Measure clearance **B** between synchronizer ring **9** and the gear cone of drive pinon **A**.
- When measuring this value, press synchronizer ring **9** evenly, and measure all around the circumference.
- If the measured value is lower than the limit, replace the faulty parts.

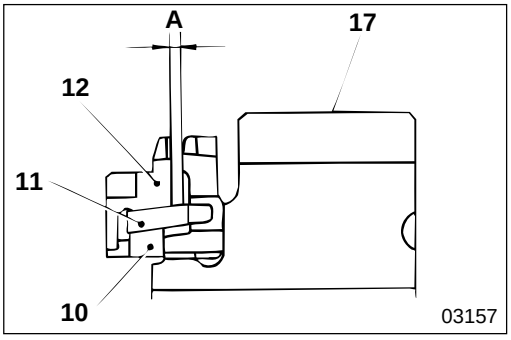

(3) Clearance between synchronizer outer ring and 4th gear

- Measure clearance **A** between synchronizer outer ring **12** and the gear cone of 4th gear **17**.
- When measuring this value, press synchronizer inner ring **10**, center cone **11**, and the outer ring evenly and measure all around the circumference.
- If the measured value is lower than the limit, replace the faulty parts.

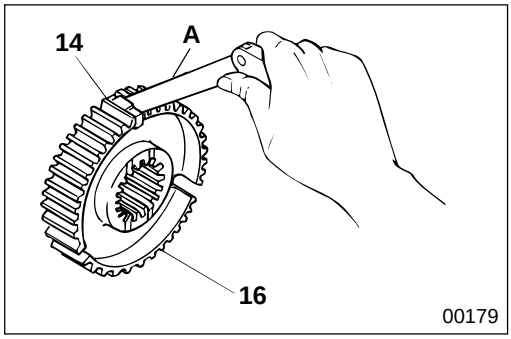

(4) Clearance between shifting key 14 and synchronizer hub 16

If the measured value is higher than the limit, replace the faulty parts.

A : Feeler gauge

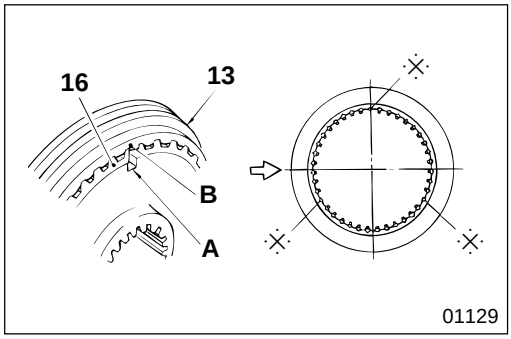

[Installation]

- Align the three keyways **A** of synchronizer hub **16** with the three stub teeth **B** (illustrated by ⁜ mark) of synchronizer sleeve **13** to install the synchronizer hub.
- To reassemble synchronizer hub **16** and synchronizer sleeve **13**, align the alignment marks made during disassembly.

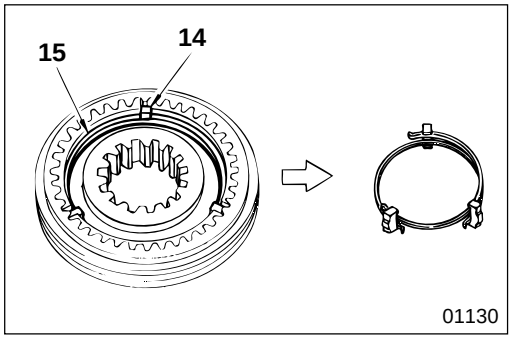

- Insert shifting key **14** into the keyway.
- Install shifting key spring **15** so that its opening is offset from the one of the shifting key.
- Make sure that the openings of shifting key springs do not align with each other.

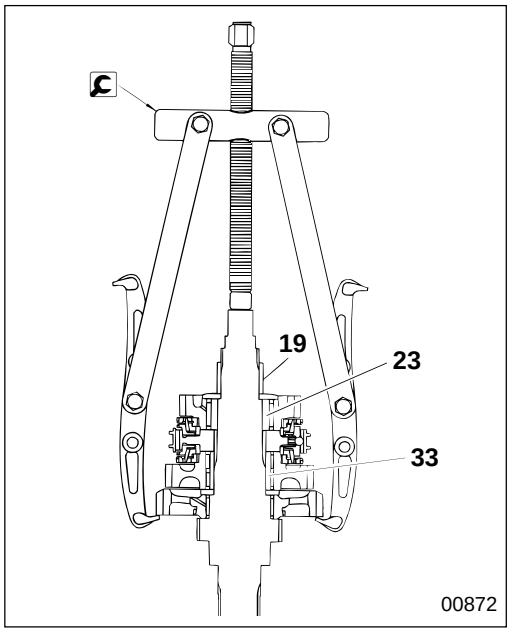

19 **23** **33** **Removal of 4th, 3rd, 2nd gear bearing sleeves**

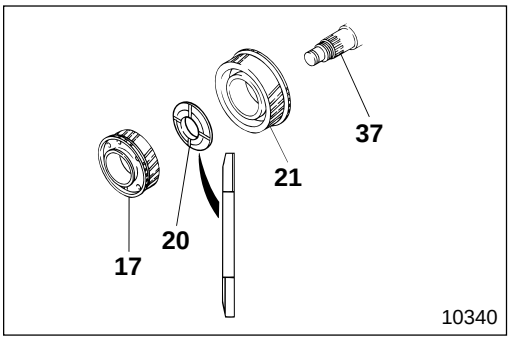

20 **Installation of 3rd and 4th gear thrust washer**

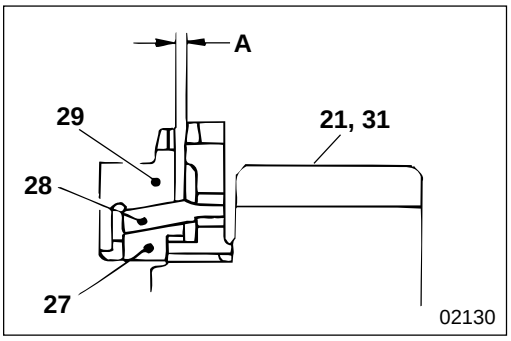

21 **29** **31** **Clearance between synchronizer outer ring and 3rd gear assembly or 2nd gear assembly**

- Measure clearance **A** between synchronizer outer ring **29** and the cone of 3rd gear assembly **21** or 2nd gear assembly **31**.
- When measuring this value, press synchronizer inner ring **27**, synchronizer outer ring **29** and synchronizer center ring **28** evenly and measure all around the circumference.
- If the measured value is higher than the limit, replace the faulty parts.

COUNTERSHAFT ASSEMBLY

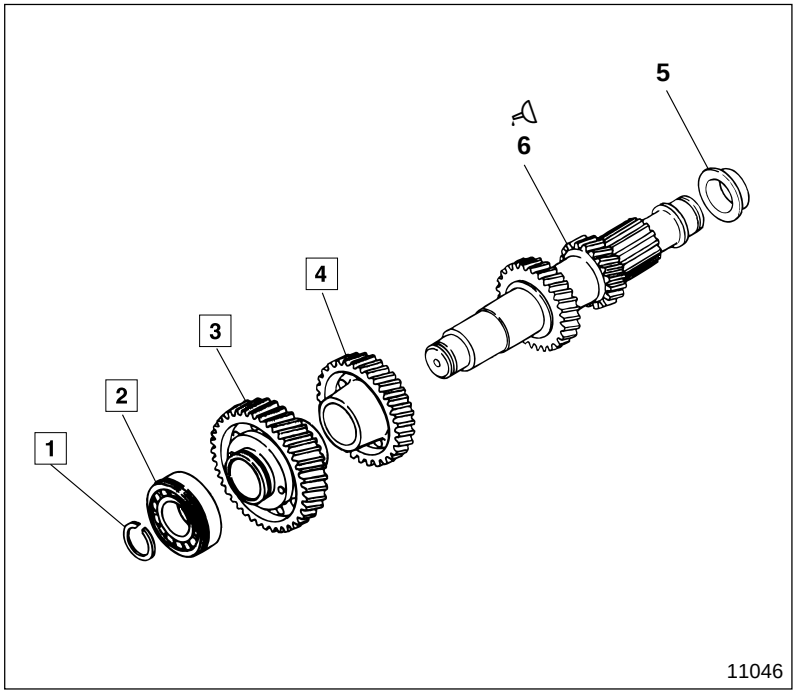

● **Disassembly sequence**

1 Snap ring
2 Countershaft front bearing
3 Countershaft constant mesh gear
4 Countershaft 4th gear
5 Countershaft rear bearing inner race
6 Countershaft

● **Assembly sequence**

Follow the disassembly sequence in reverse.

Sealant

Location	Points of application	Kinds	Quantity
6	Gear installation area of countershaft	THREEBOND 1375B	As required

Special tools

Location	Tool name and shape	Part No.	Application
1	Snap ring expander 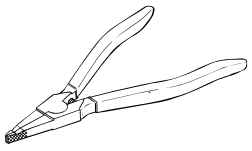 01137	MH061268	Removal and installation of snap rings of countershaft bearing
2	Countershaft bearing puller 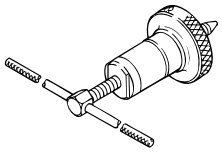 01139	*MH062426	Removal of countershaft front bearing
	Countershaft bearing installer 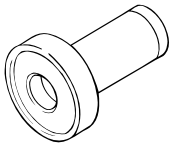 02141	*ME624233	Installation of countershaft front bearing

Unit : mm {in.}

Location	Tool name and shape	Part No.	Application
3, 4	Countershaft gear puller 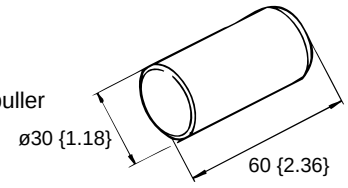	ME624243	Removal of countershaft gear
	Countershaft gear installer 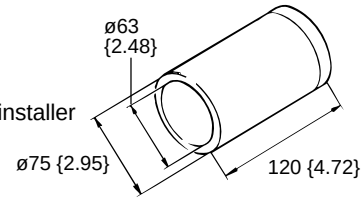	MH061740	Press-fitting of countershaft gear

* components of puller and installer kit P22-59

◆ Service procedure

1 Removal and installation of snap ring

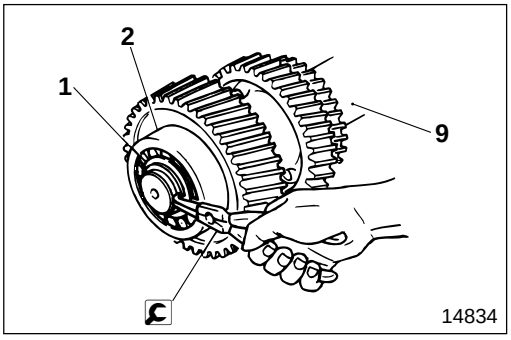

COUNTERSHAFT ASSEMBLY

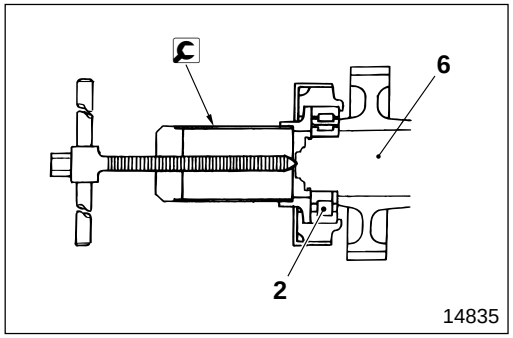

2 **Countershaft front bearing**

[Removal]

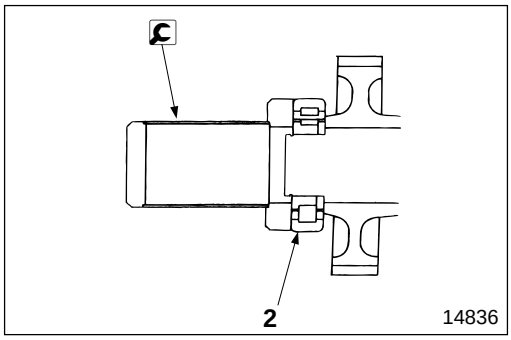

[Installation]

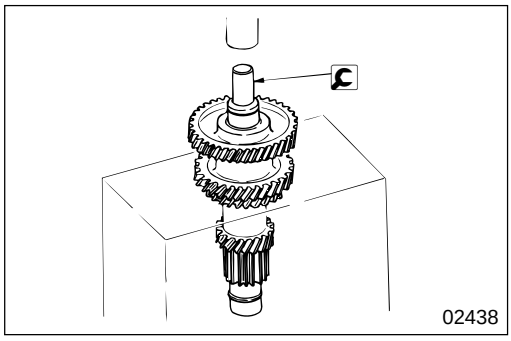

3 **4** **Countershaft constant mesh gear and countershaft 4th gear**

[Removal]
Use a press.

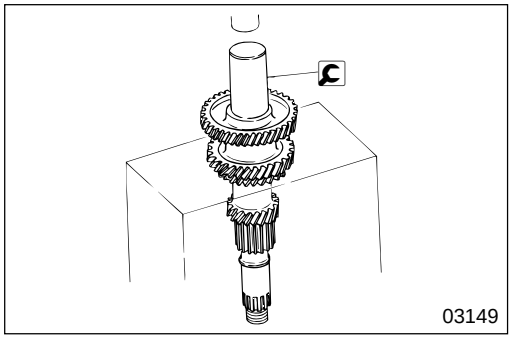

[Installation]
Use a press.

M E M O

TRANSMISSION CONTROL

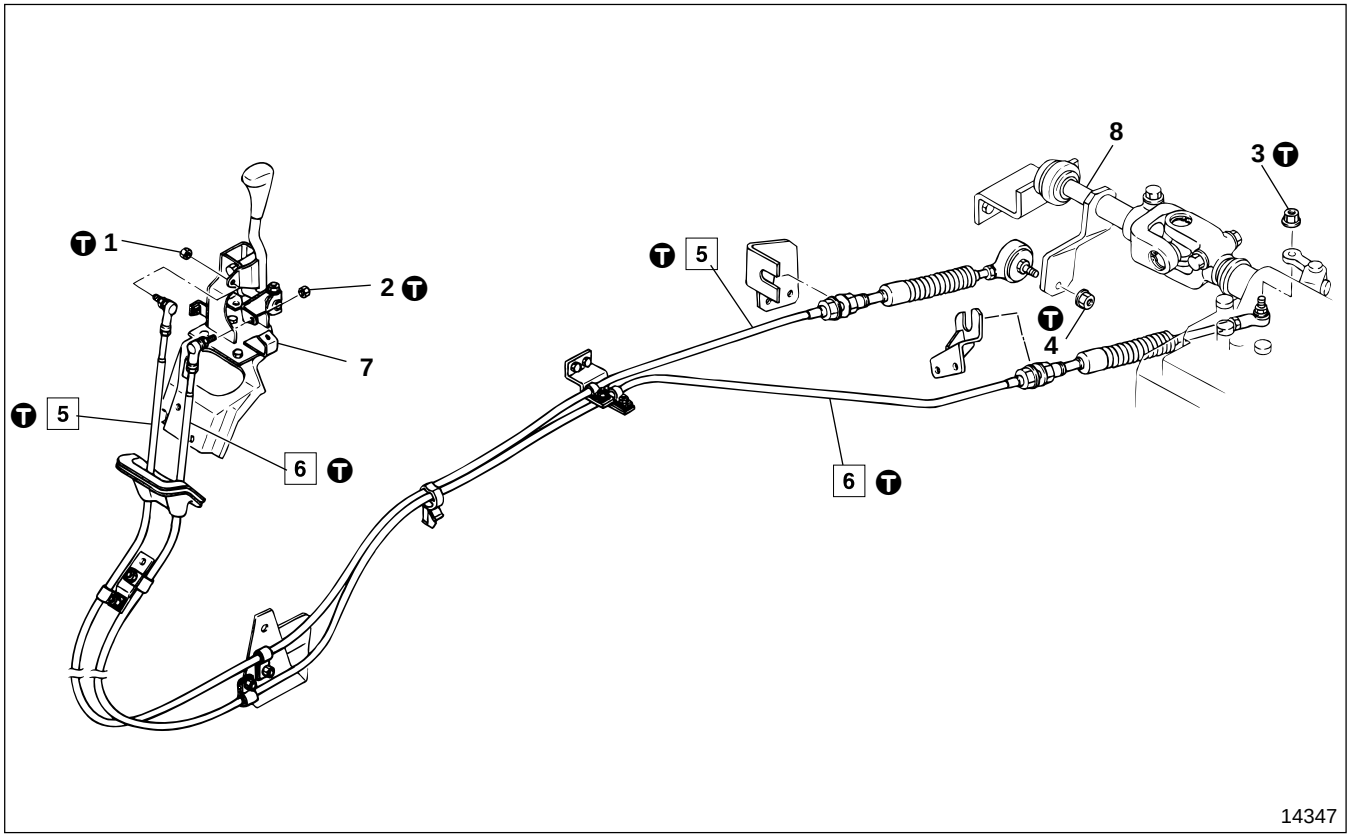

● **Disassembly sequence**

1 Nut
2 Nut
3 Nut
4 Nut
5 Shift cable
6 Selector cable
7 Transmission control lever assembly 📖 P22-57
8 Cross shaft 📖 P22-58

● **Assembly sequence**

Follow the disassembly sequence in reverse.

Ⓣ Tightening torque

Unit : N·m {lbf.ft, kgf·m}

Location	Parts to be tightened	Tightening torque	Remarks
1 to 4	Nut (Ball joint or rubber damper mounting)	19 to 24 {14 to 17, 1.9 to 2.4}	—
5, 6	Cable lock nut tightening	59 to 83 {43 to 61, 6 to 8.5}	—

◆ Service procedure

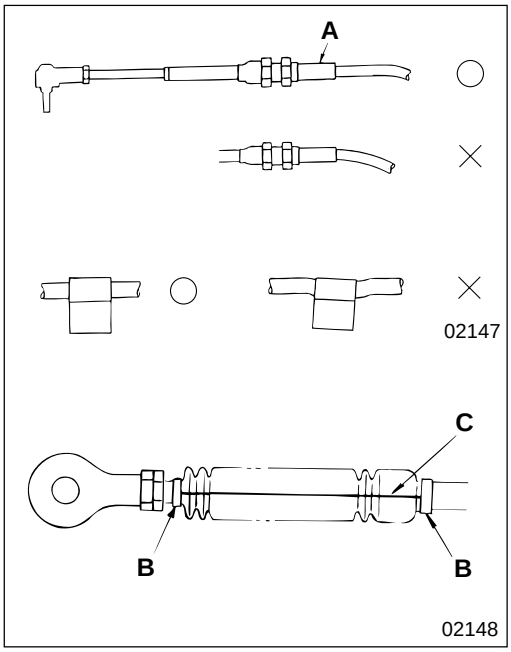

5 **6** **Installation of shift cable and selector cable**

CAUTION

- **Be sure to install casing cap A lengthwise.**
- **Make sure the radius of the bend is 200 mm {7.87 in.} or more.**
- **Make sure the cable operates smoothly.**
- **Be sure to install the clamps vertically against the cable.**
- **Make sure you do not twist clamps B at both ends of the boot. Make sure that white line C on the boot is aligned.**
- **Make sure the identification marks on the cable, the ball joint and the rubber damper point in the right direction when you install the cables. Installing the cables with the identification marks in the wrong direction can remarkably reduce the durability of the cables.**

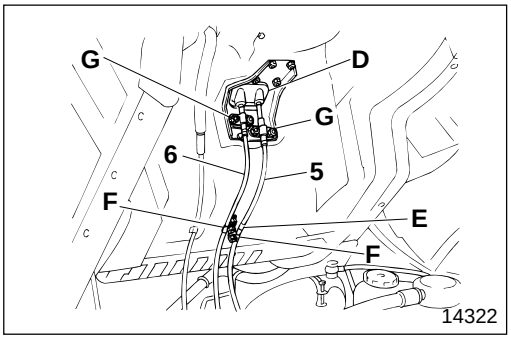

- Install shift cable **5** and selector cable **6** to the frame after having temporarily installed all the clamps.
- Insert shift cable **5** and selector cable **6** through grommet **D** of the cab floor into the inside of the cab, then install clip **F** and clip **G** temporarily by making identification mark **E** on the shift cable come to clip **F** position. (The selector cable has no identification mark.)

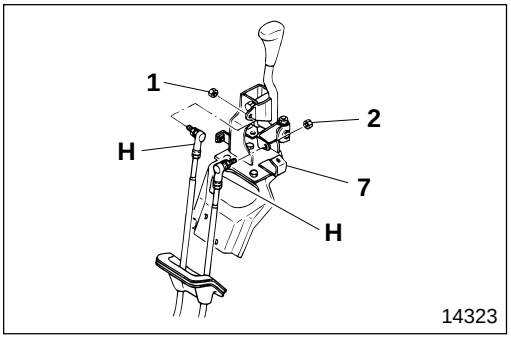

- Lower the cab.
- Install ball joint **H** of the cable to the shift lever and selector lever of transmission control lever assembly **7**.

CAUTION

Make sure that ball joint H faces the correct direction.

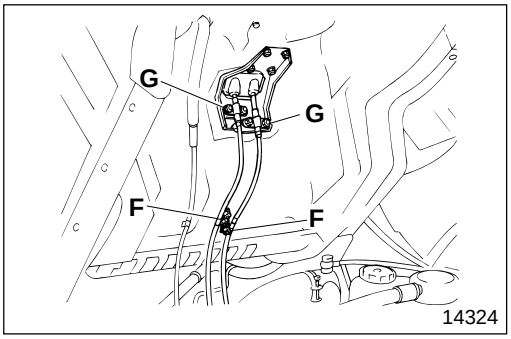

- Tilt the cab up and tighten clip **F** and clip **G** permanently without applying force to the cables.

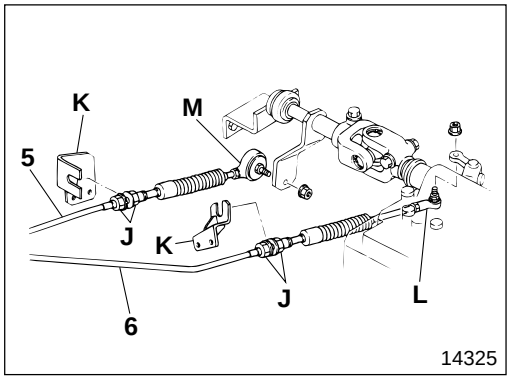

- Install lock nut **J** to bracket **K** temporarily and connect ball joint **L** or rubber damper **M** to the shift lever and selector lever.
- Tighten lock nut **J** permanently without applying force to the cables.

CAUTION ⚠

Make sure that ball joint L and rubber damper M face the correct direction.

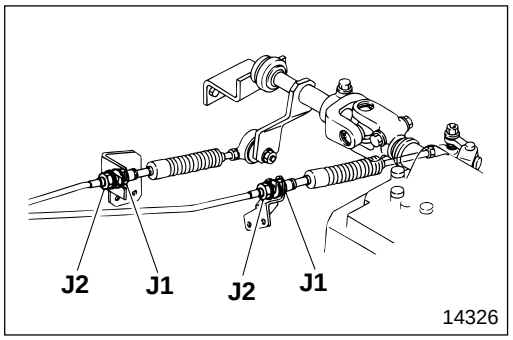

CAUTION ⚠

Make sure not to move lock nut J1 of the transmission side when tightening lock nut J. Tighten lock nut J2.

- Check when you operate the gear shift lever that it shifts and selects each position smoothly.

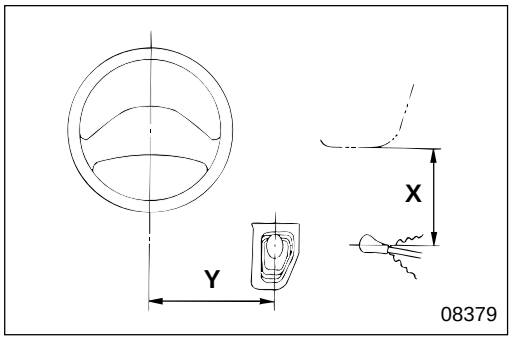

- If the gear shift lever leans to the front or rear, or to the left or right, excessively, adjust the length of the cable.
- When adjusting the gear shift lever, use the distance from the center of the steering wheel or from the instrument panel as the reference distance.

Unit : mm {in.}

Front and rear direction X (Distance from the instrument panel)	Left and right direction Y (Distance from the steering wheel center)
309 {12.17}	350 {13.78} (4th and 5th gear position)

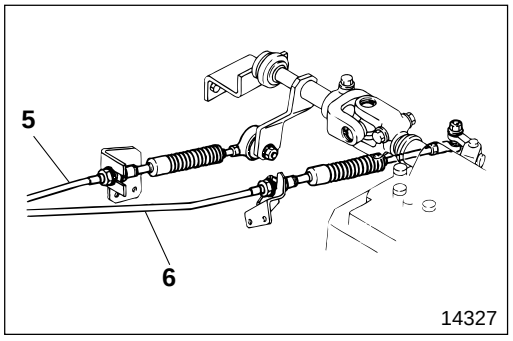

	Shift cable **5**	Selector cable **6**
To front	Shorten	—
To rear	Lengthen	—
To right	—	Lengthen
To left	—	Shorten

Transmission Control Lever Assembly

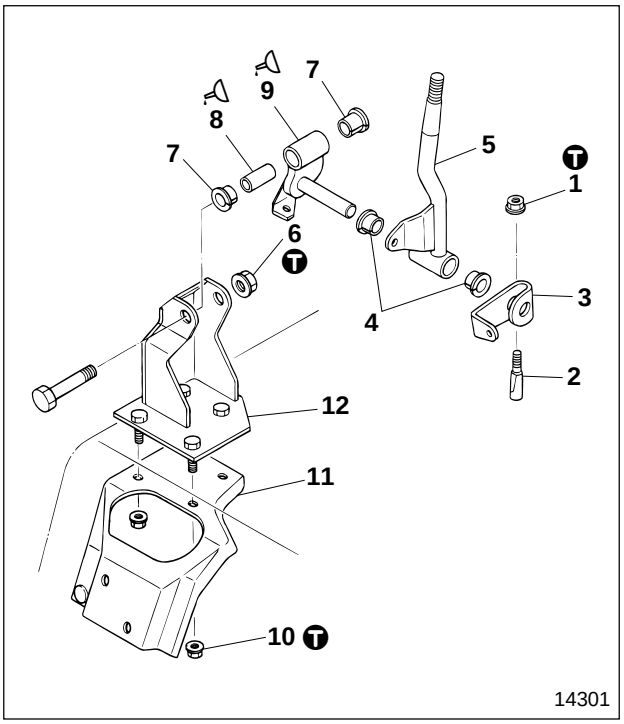

● **Disassembly sequence**

1 Nut
2 Lock pin
3 Select lever
4 Bushing
5 Lever
6 Nut
7 Bushing
8 Caller
9 Shaft assembly
10 Nut
11 Set board bracket
12 Set board

● **Assembly sequence**

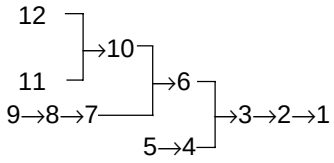

T Tightening torque

Unit : N·m {lbf.ft, kgf·m}

Location	Parts to be tightened	Tightening torque	Remarks
1	Nut (Lock pin tightening)	10 to 15 {7.2 to 11, 1.0 to 1.5}	—
6	Nut (Shaft assembly mounting)	38 to 54 {27 to 40, 3.8 to 5.5}	—
10	Nut (Set board bracket and set board assembly mounting)	21 to 30 {15 to 22, 2.1 to 3.1}	—

Lubricant

Location	Points of application	Kinds	Quantity
8	Friction surfaces of collar and bushing	Chassis grease [NLGI No.1 (Ca soap)]	As required
9	Friction surfaces of shaft assembly and bushing	Chassis grease [NLGI No.1 (Ca soap)]	As required

Cross shaft

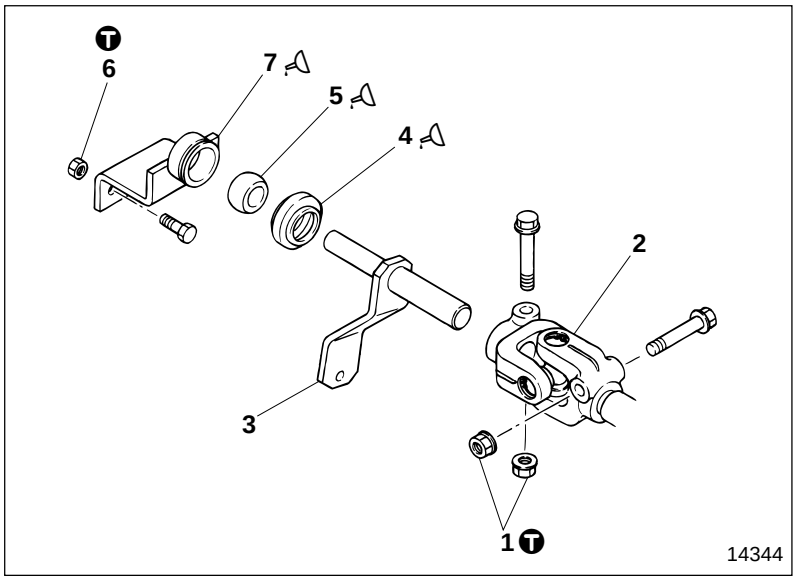

● **Disassembly sequence**

1 Nut
2 Universal joint assembly
3 Cross shaft
4 Dust cover
5 Ball bushing
6 Nut
7 Cross shaft support

● **Assembly sequence**

7→6→1
2→3→4→5→1

Ⓣ Tightening torque

Unit : N·m {lbf.ft, kgf·m}

Location	Parts to be tightened	Tightening torque	Remarks
1	Nut (Universal joint assembly mounting)	85 to 110 {61 to 80, 8.5 to 11.0}	—
6	Nut (Cross shaft support mounting)	34 to 54 {25 to 40, 3.5 to 5.5}	—

Lubricant

Location	Points of application	Kinds	Quantity
4	Pack into the interior of dust cover	Chassis grease [NLGI No.1 (Ca soap)]	As required
5	Friction parts inside and outside of ball bushing	Chassis grease [NLGI No.1 (Ca soap)]	As required
7	Inner periphery of cross shaft support pipe	Chassis grease [NLGI No.1 (Ca soap)]	As required

Puller and installer kit No.	Component	Part No.	Bearing puller used for: Removal of countershaft rear bearing (MH061731)	Removal of mainshaft rear bearing (MH061732)	Removal of countershaft front bearing (MH062426)	Removal of drive pinion bearing (MH062440)
MH062425	Handle	MH061162	○	○	○	○
	Bolt	ME624232	○	○	○	○
	Body	MH061734	○		○	
	Body	MH061735		○		○
	Protector	ME624229	○	○		
	Protector	MH062428			○	○
	Claw	ME624226	○			
	Claw	ME624227		○		
	Claw	MH062427			○	
	Claw	MH062430				○
	Installer	ME624233				
	Installer	ME624234				
	Installer	ME624235				
	Installer	ME624236				

The puller and installer kit consists of principal bearing pullers and installers selected from the special tools used for servicing of manual transmission vehicles in this group. For an installer use a component of this kit independently, and for a puller use the components of this kit in combination.

MITSUBISHI
FUSO

FH

Service Manual

Group 23
Automatic Transmission

Table of Contents

BACK

HOME

MITSUBISHI FUSO TRUCK OF AMERICA, Inc.

Pub No. TWME9502-23

GROUP 23 AUTOMATIC TRANSMISSION

SPECIFICATIONS 2

STRUCTURE AND OPERATION 3

TROUBLESHOOTING 6

INSPECTION AND ADJUSTMENT MOUNTED IN VEHICLE 8

WORK BEFORE REMOVAL AND INSTALLATION OF AUTOMATIC TRANSMISSION ASSEMBLY 11

REMOVAL AND INSTALLATION OF AUTOMATIC TRANSMISSION ASSEMBLY 12

OIL SEAL AND SPEEDOMETER WORM 16

OIL PAN AND OIL FILTER 19

AUTOMATIC TRANSMISSION CONTROL 20

OIL COOLER 26

OIL FILTER 28

SPECIFICATIONS

Item			Specifications
Type			M4A4 (Allison AT542)
Torque converter	Type		3-element, 1-stage, 2-phase
	Stall torque ratio		1.72
Transmission	Type		Planetary gear type 4 forward speeds, 1 reverse speed
	Gear ratio	1st	3.454
		2nd	2.253
		3rd	1.407
		4th	1.000
		Reverse	5.024
Range selector pattern			R—(N)—D—3—2—1 (Engine can be started in (N) position only)
Recommended fluid	Fluid quantity (except oil cooler piping L {qts}		Automatic transmission fluid (DEXRON or DEXRON II type) 14 {15} When oil is replaced: 8.5 {9.0}
Mass < Wet > kg {lb}			167 {368}
Transmission control			Floor shift remote control, cable type

Automatic Transmission Assembly

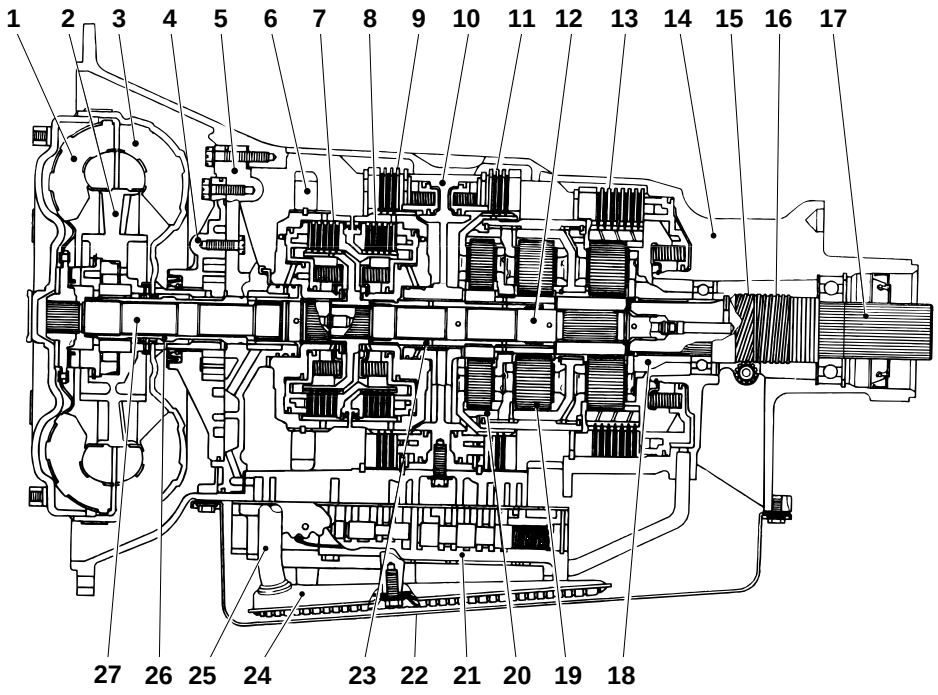

1 Turbine
2 Stator
3 Impeller
4 Oil pump assembly
5 Front support
6 Power take-off drive gear
7 Forward clutch
8 4th clutch
9 3rd clutch
10 Center support
11 2nd clutch
12 Mainshaft
13 1st and reverse clutch
14 Transmission case
15 Governor drive gear
16 Speedometer sensor drive gear
17 Output shaft
18 Rear planetary gear set
19 Center planetary gear set
20 Front planetary gear set
21 Control valve assembly
22 Oil pan
23 Sun gear shaft
24 Oil filter
25 Intake pipe
26 Stator shaft
27 Turbine shaft

The automatic transmission consists of a torque converter and a fully automatic 4-speed gear system.

● **Torque converter**

The torque converter is driven by the engine crankshaft, and functions as the input device for the transmission. The torque converter also acts as the fluid coupling, absorbing shock during engine start up and gear shifting.

● **Transmission (4 forward speeds, 1 reverse speed)**

The transmission is accomplished by three sets of planetary gears **18**, **19**, **20** and five sets of oil pressure-operated, wet-type multiple disc clutches **7**, **8**, **9**, **11**, **13**. These oil-cooled clutch discs are self-adjusting to compensates for wear.

● **Oil pressure control area**

This oil pressure control area consists of oil pump **4**, control valve assembly **21** that controls the changeover between clutches **7**, **8**, **9**, **11**, and **13**, the modulator that monitors the amount the accelerator pedal is depressed, and the governor that monitors the vehicle speed. Gear shift is made automatically and depends on how much the accelerator pedal is depressed and how fast the vehicle is travelling.

Automatic Transmission Control

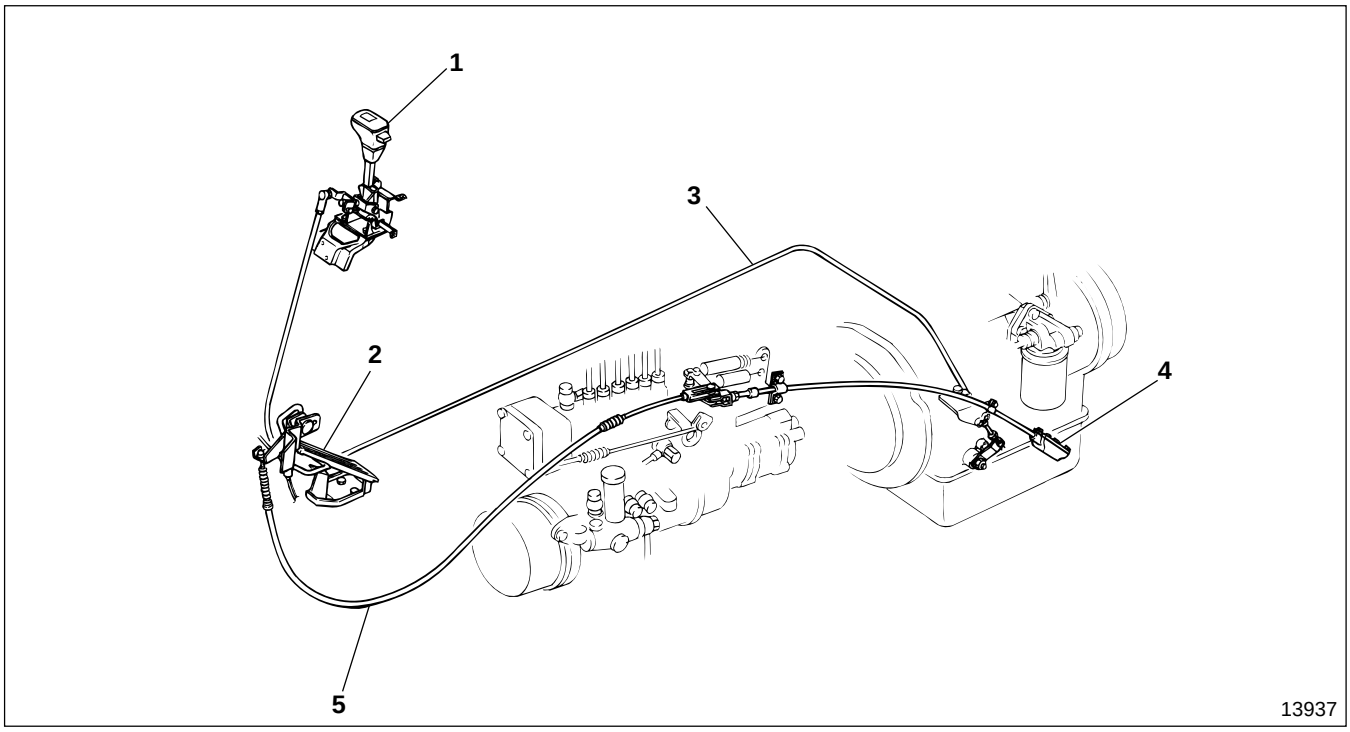

1 Range selector lever
2 Accelerator pedal
3 Selector cable
4 Modulator
5 Accelerator control cable

Selector Lever

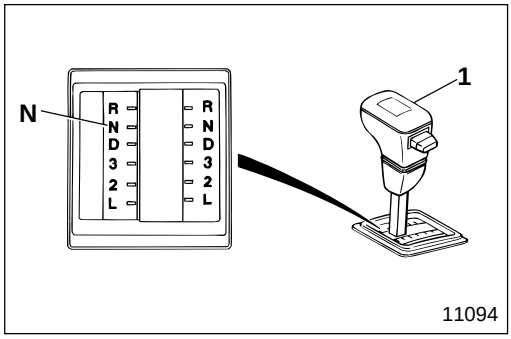

Range selector lever **1** selects the most suitable range for the operating conditions, ensuring optimum service from the automatic transmission. Safety features are incorporated that make sure that the engine cannot be started when the range selector lever is in any position other than neutral (N).

N : Neutral

Modulator

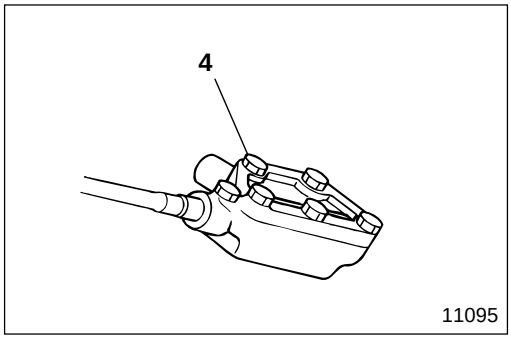

Modulator **4** converts the amount the accelerator pedal is depressed into hydraulic pressure.

Oil Cooler

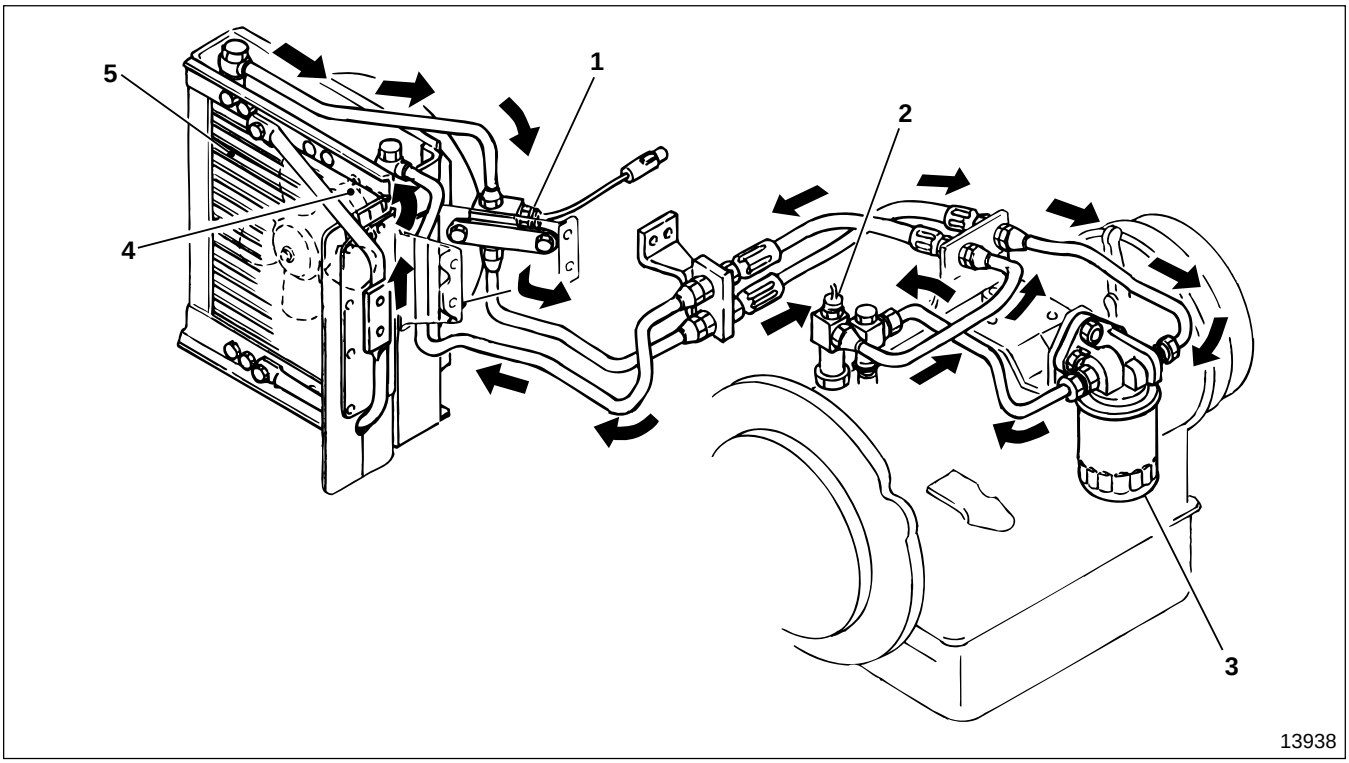

1 Automatic transmission fluid thermostat switch (Oil cooler fan)
2 Automatic transmission fluid temperature switch (Warning lamp)
3 Oil filter
4 Blower assembly
5 Oil cooler

Oil Temperature Warning System

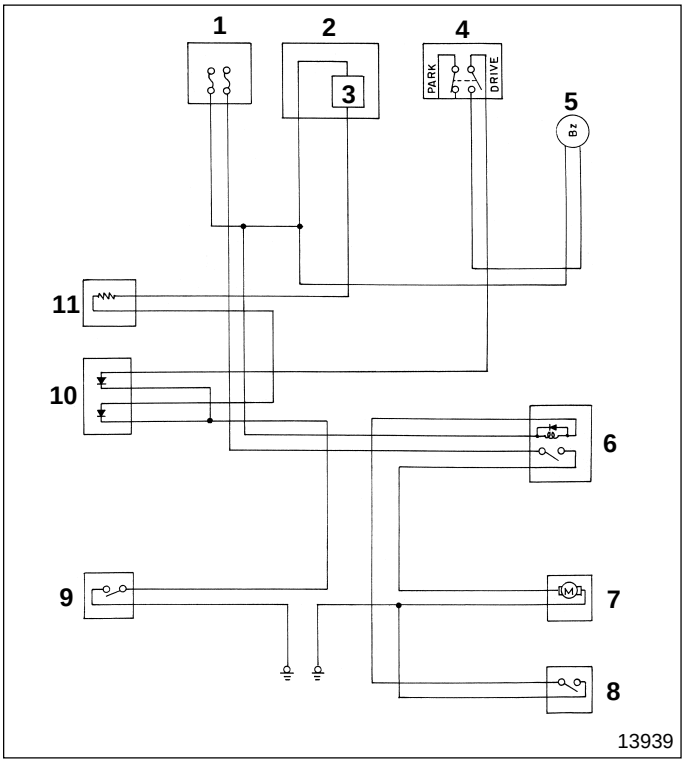

1 Relay and fuse box
2 Meter cluster
3 Indicator lamp
4 Parking brake switch
5 Warning buzzer
6 Automatic transmission fluid cooler fan relay
7 Automatic transmission fluid cooler fan motor
8 Automatic transmission fluid thermostat switch
9 Automatic transmission fluid temperature switch
10 Diode
11 Resistor

TROUBLESHOOTING

Possible causes	Symptoms	Excessive shock when shifting from Ⓝ to Ⓓ	Engagement interval too long when shifting from Ⓝ to Ⓓ	Engine races when shifting up	Does not shift up	Kick down impossible or shifting down abnormal	Abnormal shifting	Slips out of gear while driving forward	Slips out of gear in Ⓡ position
Engine faulty	Engine idling speed too fast	○							
	Engine idling speed too slow		○						
Incorrect adjustment of cables	Selector cable adjusted incorrectly		○		○		○	○	○
	Modulator cable adjusted incorrectly	○				○			
Automatic transmission fluid unsuitable situation	Fluid level too low		○	○	○		○	○	○
	Oil filter clogged		○	○			○	○	○
	Air mixed in fluid		○	○			○	○	
	Fluid level too high								
	Oil cooler pipe damaged or deteriorated								
	Oil cooler fan malfunctioning								
Internal malfunction of automatic transmission assembly	Fluid pressure too low		○	○	○		○	○	○
	Valve body abnormality or leakage	○	○	○	○	○	○	○	○
	Oil pump malfunctioning		○				○	○	○
	Output shaft bearing or bushing damaged								
	Governor abnormal				○	○	○		
	Clutch damaged or malfunctioning		○	○	○		○	○	○
	Breather clogged								
	Fluid pressure too high	○							
	Clutch plate clearance insufficient								
	Clutch dragging								
	Planetary gear damaged or stuck								

Possible causes \ Symptoms		Slips out of gear while in any position	Vehicle does not move irrespective of selector position	Vehicle does not move while selector in forward position	Vehicle does not move while selector in Ⓡ position	Vehicle moves while selector is in Ⓝ position	Scraping or squeaking noise	Humming noise	Trouble in fluid supply. Automatic transmission fluid spouting from filler tube	Excessive shock when shifting	Shift up too slow	Automatic transmission overheating
Engine faulty	Engine idling speed too fast											○
	Engine idling speed too slow											
Incorrect adjustment of cables	Selector cable adjusted incorrectly				○	○						○
	Modulator cable adjusted incorrectly									○	○	
Automatic transmission fluid unsuitable situation	Fluid level too low	○	○	○				○				○
	Oil filter clogged	○	○						○			
	Air mixed in fluid	○						○	○			
	Fluid level too high								○			
	Oil cooler pipe damaged or deteriorated											○
	Oil cooler fan malfunctioning											○
Internal malfunction of automatic transmission assembly	Fluid pressure too low	○	○	○	○					○		○
	Valve body abnormality or leakage	○	○	○	○	○		○		○	○	
	Oil pump malfunctioning	○	○									○
	Output shaft bearing or bushing damaged						○					
	Governor abnormal										○	
	Clutch damaged or malfunctioning			○	○						○	
	Breather clogged								○			
	Fluid pressure too high									○		
	Clutch plate clearance insufficient											○
	Clutch dragging					○						
	Planetary gear damaged or stuck		○	○	○		○					

INSPECTION AND ADJUSTMENT MOUNTED IN VEHICLE

Inspection of Automatic Transmission Fluid

(1) Inspection of characteristics

If the automatic transmission fluid smells burnt or if it contains metal particles or sludge as a result of internal friction and wear of metal or other material, the transmission assembly must be completely overhauled. Make sure you carefully examine the automatic transmission fluid on the dipstick. If you find the quality questionable, take a sample and examine it more closely.

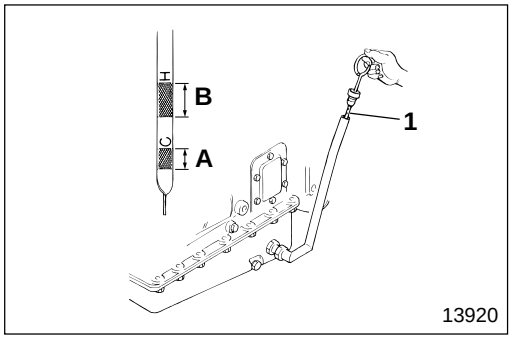

(2) Inspection of automatic transmission fluid level

- Park the vehicle on level ground, make sure that the parking brake is fully activated and chock the wheels to keep them from rolling.
- Start the engine and let it idle. To fill the hydraulic circuit with automatic transmission fluid, shift the range selector lever from N → R → N → D → 2 → D → N. Repeat this process five times, finally shifting to N.
- While the engine is still idling, pull out dipstick **1** and wipe off the fluid sticking to it. Reinsert the dipstick, then pull it out again and check the fluid level.
- If the fluid level is inspected right after the engine is started and the fluid temperature is still low (approximately 15 to 49°C {60 to 120°F}), the level should be within area **A** marked COLD on the dipstick.
- If the fluid level is inspected after the vehicle has been driven and the fluid temperature is high (approximately 71 to 93°C {160 to 200°F}), the level should be within area **B** marked HOT on dipstick **1**.

WARNING⚠

Take care during the inspection because the engine will be running. Take sufficient care to avoid burns or injuries resulting from contact with moving parts.

NOTE

- **Make sure the vehicle is parked on level ground when you are checking the fluid level.**
- **Make sure the range selector lever is in the N position and the engine is idling when you are checking the fluid level. When the engine is stopped, the fluid level appears higher than it actually is.**
- **Be sure to wipe off the dust from the safety cap and the upper part of dipstick guide 2 before you pull out dipstick 1.**
- **To ensure the fluid is correct, reinspect the fluid level after an actual drive.**

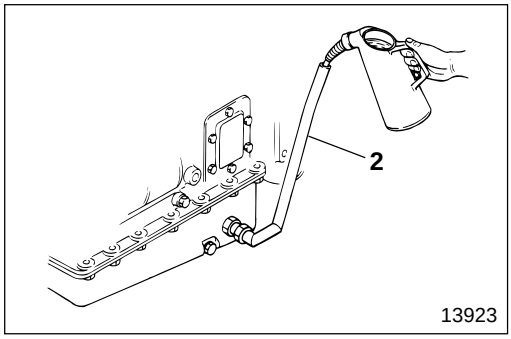

- If the fluid level is low, add automatic transmission fluid (DEXRON or DEXRON II type) through dipstick guide **2** until the correct level on dipstick **1** is reached.

Replacement of Automatic Transmission Fluid

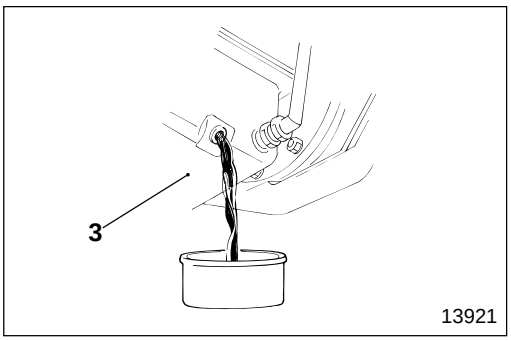

(1) Draining

- Park the vehicle on level ground, chock the wheels and shift the range selector lever to the **N** position.
- Place a container under oil pan **3**, remove the drain plug and drain the fluid.
- Clean oil pan **3** and the drain plug. Replace the oil filter. P23-19
- Replace the outer oil filter. P23-28

WARNING

Take care because the fluid temperature immediately after the engine has stopped is very high. To avoid scalds, wait until a safe temperature has been reached before draining the fluid.

NOTE

- **The fluid will drain faster if the engine is first run to raise the fluid temperature.**
- **The fluid cannot be drained from the hydraulic circuit, the torque converter or the oil cooler.**
- **Check the drained fluid for dirt, metal particles and metal fragments.**

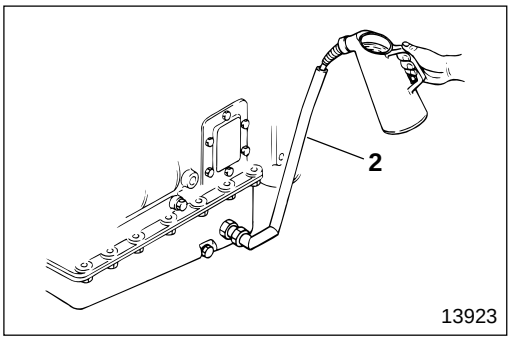

(2) Supply

- Install oil filter, oil pan **3** and drain plug. P 23-19
- Add 8.5 L {9.0 qts} of fluid via dipstick guide **2**.

CAUTION

Make sure that dirt and foreign particles do not become mixed in with the fluid when it is added.

- Shift the range selector lever to the N position, start the engine and let it idle for about one minute.
- After shifting the lever through all positions once, shift it back to N position.

CAUTION

To prevent burning out the interior of the automatic transmission assembly, make sure that the engine is not allowed to race when you do the above.

INSPECTION AND ADJUSTMENT MOUNTED IN VEHICLE

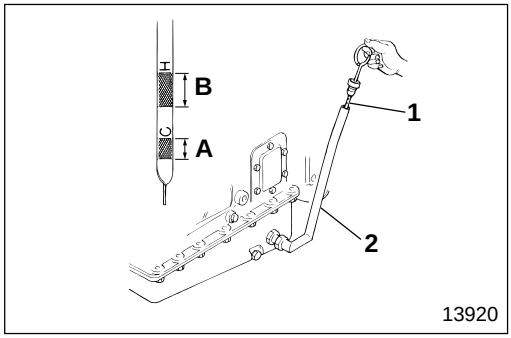

- Check and adjust so that the fluid level is within the specified area on dipstick **1**.

NOTE

- **As the temperature of the fluid rises, so does the fluid level. If you add fluid while the temperature is still low (approximately 15 to 49°C {60 to 120°F}), make sure that the level stays within area A, marked COLD on dipstick 1.**
- **Let the engine idle and, while paying attention to the fluid level, pour in the fluid slowly.**
- **It is sometimes hard to check the fluid level, immediately after supplying fluid, because of the fluid adhering to the interior of dipstick guide 2. If this is the case, check the fluid level several times at intervals.**
- **Be careful not to supply too much fluid because you might mistake the fluid that overflows from the air breather for fluid leakage.**

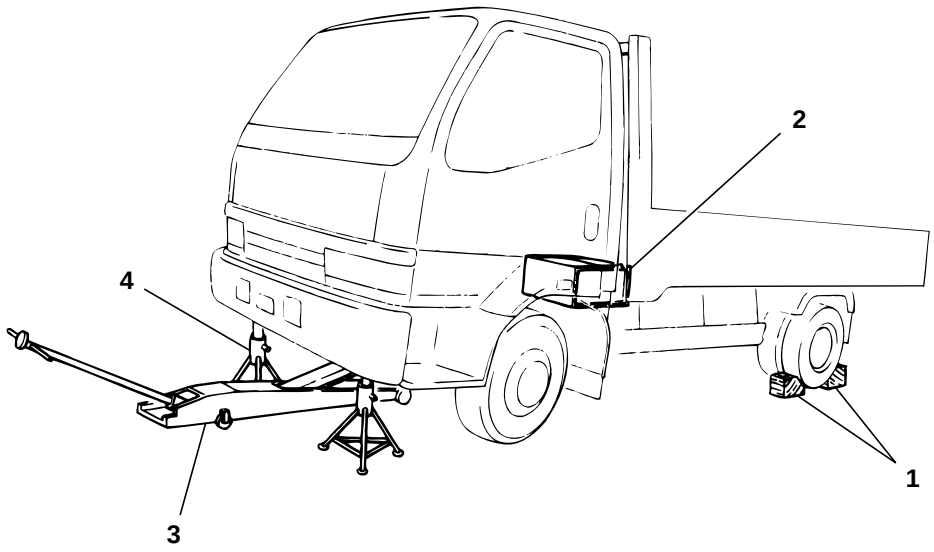

14340

● **Work sequence before removal**

1 Place wheel chocks.
2 Disconnect the negative battery cable Gr 54
3 Jack up the front axle with a garage jack.
4 Support the front frame on rigid racks.

WARNING⚠

- **The parking brake will be removed so naturally it cannot be used. Chock the wheels securely so the vehicle does not move.**
- **Do not remove the chocks until the entire operation is completed.**
- **Supporting a vehicle on a garage jack only is extremely dangerous, so always support the frame on rigid racks.**
- **Leave the garage jack and rigid racks in place until the entire operation is completed. Never remove them during the operation.**

CAUTION⚠

Be sure to keep the automatic transmission in neutral throughout the operation.

● **Work sequence after installation**

Follow the work sequence before removal in reverse.

REMOVAL AND INSTALLATION OF AUTOMATIC TRANSMISSION ASSEMBLY

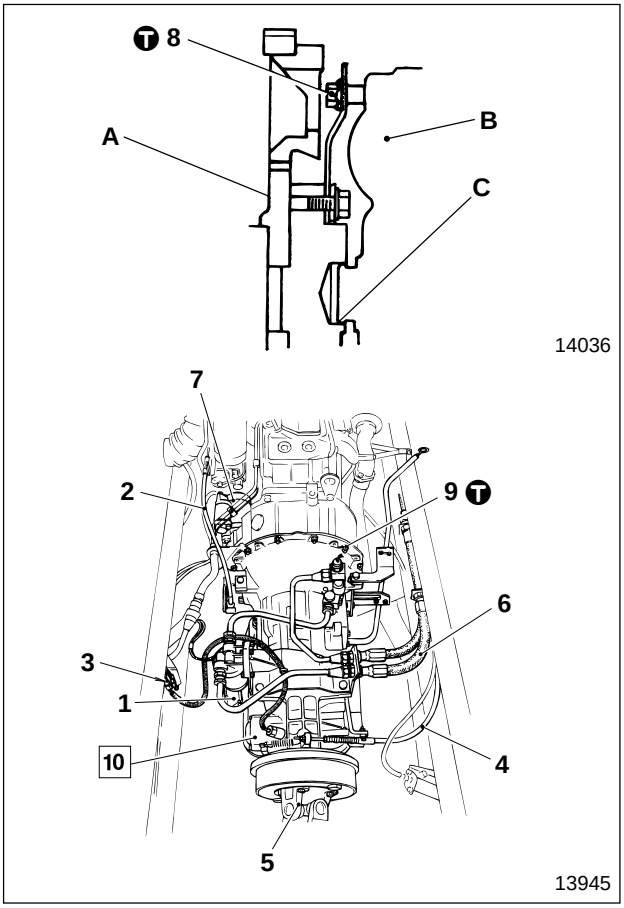

● **Removal Sequence**

1 Modulator
2 Selector cable
3 Harness connector
4 Parking brake cable Gr 36
5 Propeller shaft Gr 25
6 Oil cooler hose
7 Starter Gr 54
8 Bolt
9 Nut
10 Automatic transmission assembly

A : Flywheel
B : Torque converter
C : Torque converter pilot area

● **Installation sequence**

Follow the removal sequence in reverse.

Tightening torque

Unit : N·m {lbf.ft, kgf·m}

Location	Parts to be tightened	Tightening torque	Remarks
8	Bolt (Torque converter and flywheel mounting)	51 to 61 {38 to 45, 5.20 to 6.22}	—
9	Nut (Automatic transmission assembly mounting)	39 to 58 {28 to 43, 3.9 to 6.0}	—

Lubricant

Location	Points of application	Kinds	Quantity
10	Torque converter pilot area (area C)	Molybdenum disulfide grease [NLGI No.2 (Li soap)]	As required

Special tools

Location	Tool name and shape	Part No.	Application
10	Converter installer 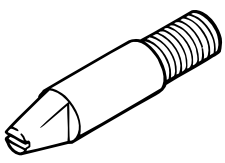 03726	ME633437	Automatic transmission assembly installation guide

◆ Service procedure

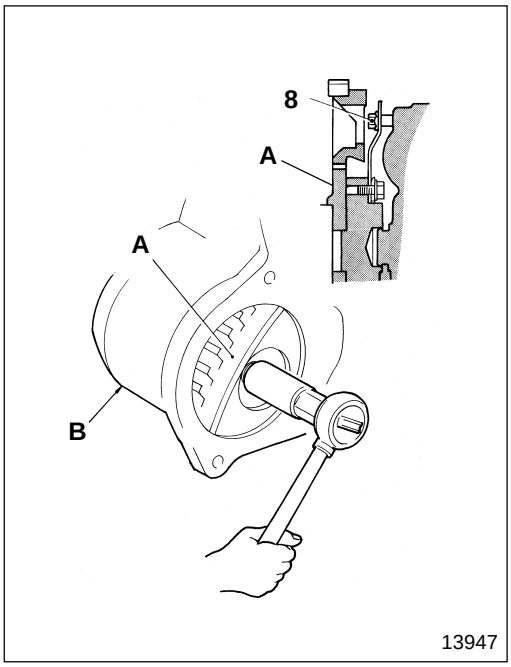

10 **Automatic transmission assembly**

[Removal]

- Rotate flywheel **A** and remove bolts **8** in sequence.
  B : Starter housing

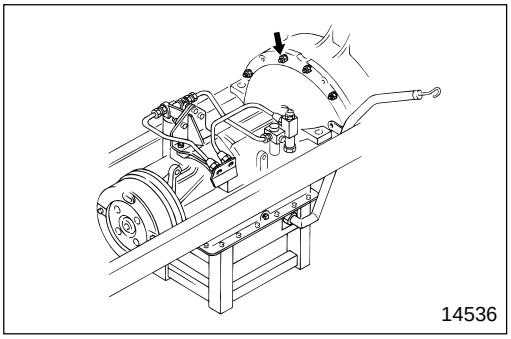

- Use a square bar or a similar object to support the oil pan of automatic transmission assembly **10**, then remove it by pulling it out backward.

CAUTION

- **Be careful not to apply force unevenly to any of the oil pan parts.**
- **Be careful not to let the torque converter fall from the transmission body because as a single unit the torque converter can come loose easily.**

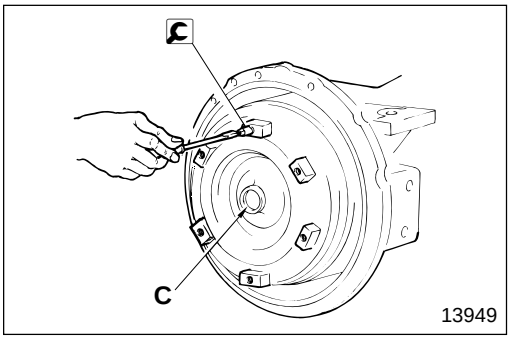

[Installation]

- Apply molybdenum disulfide grease to torque converter pilot area **C**.
- Mount torque converter installer in the tapped hole on the torque converter periphery.

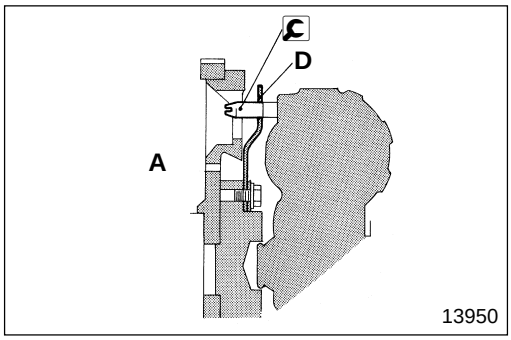

- Install the automatic transmission assembly to the engine flywheel housing, by aligning torque converter installer with the hole in flexplate **D** of flywheel **A**.

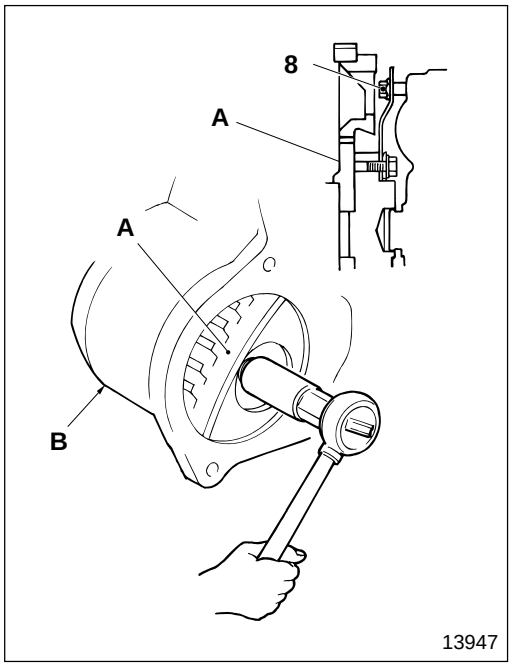

- Rotate flywheel **A** and tighten bolts **8**, in sequence, through the working hole of starter housing **B** (6 points).
- Remove the converter installer and replace it with bolt **8**.
- First tighten all six bolts **8** temporarily, then tighten at specified torque.

NOTE

Be careful not to drop bolts 8 into the gap between flywheel A and the torque converter.

M E M O

OIL SEAL AND SPEEDOMETER WORM

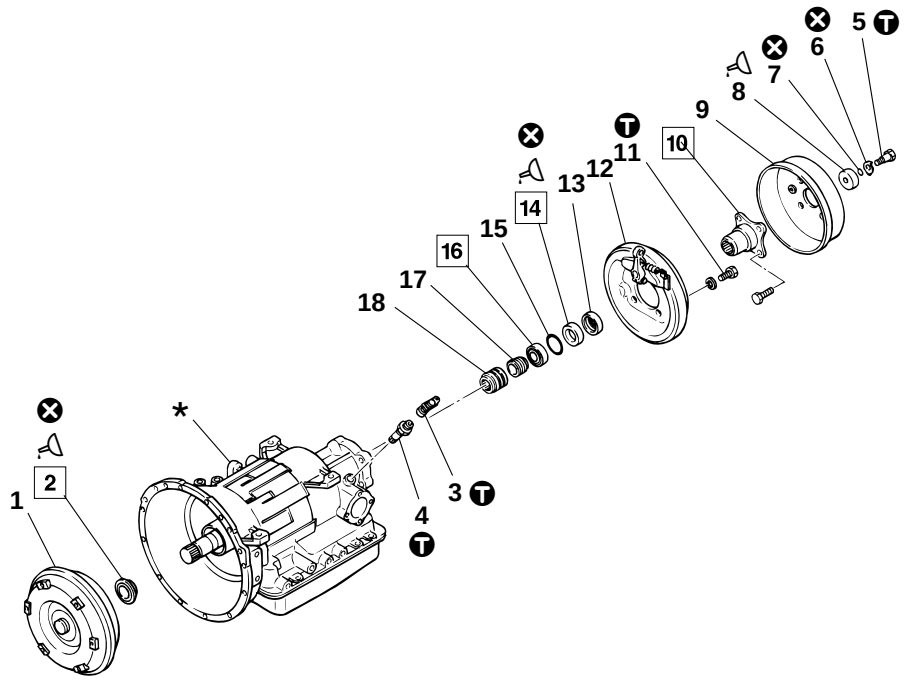

● **Disassembly sequence**

1 Torque converter
2 Oil seal
3 Speedometer gear adapter
4 Speedometer gear
5 Flange set bolt
6 Lock washer
7 O-ring
8 Retainer washer
9 Parking brake drum
10 Companion flange
11 Bolt
12 Support plate and shoe assembly
13 Seal plate
14 Oil seal
15 Snap ring
16 Bearing
17 Spacer
18 Speedometer worm

***** : Automatic transmission assembly
⊗ : Non-reusable parts

● **Assembly sequence**

Follow the disassembly sequence in reverse.

Service standards

Unit : mm {in.}

Location	Maintenance item	Standard value	Limit	Remedy
4, 18	Backlash between speedometer gear and speedometer worm	0.13 to 0.29 {0.0051 to 0.011}	0.36 {0.014}	Replace

Ⓣ Tightening torque

Unit : N·m {lbf.ft, kgf·m}

Location	Parts to be tightened	Tightening torque	Remarks
3	Speedometer gear adapter	55 to 82 {41 to 61, 5.6 to 8.4}	—
4	Speedometer gear	61 to 68 {45 to 50, 6.22 to 6.93}	—
5	Flange set bolt	140 to 160 {100 to 120, 14.1 to 16.72}	—
11	Bolt (Support plate and shoe assembly mounting)	110 to 130 {81 to 97, 11.22 to 13.46}	—

Lubricant and sealant

Location	Points of application	Kinds	Quantity
2	Lip area of oil seal	Wheel bearing grease [NLGI No.2 (Li soap)]	As required
	Oil seal periphery	THREEBOND 1215	As required
8	Retainer washer periphery	THREEBOND 1215	As required
14	Lip area of oil seal	Wheel bearing grease [NLGI No.2 (Li soap)]	As required
	Oil seal periphery	THREEBOND 1215	As required

Special tools

Unit : mm {in.}

Location	Tool name and shape	Part No.	Application
2	**A**=ø116.84 {4.60} **B**=ø107.19 {4.22} **C**=ø73.91 {2.91} **D**=ø45.97 {1.81} Pump seal installer 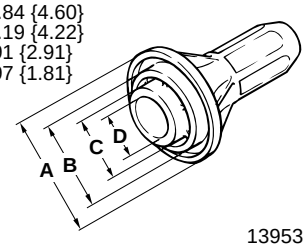 13953	ME633191	Installation of front side oil seal
14	**A**=ø78.6 {3.09} **B**=ø47.5 {1.87} **C**=ø39.6 {1.56} Rear oil seal installer 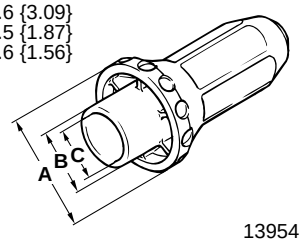 13954	ME633192	Installation of rear side oil seal
16	Bearing remover set 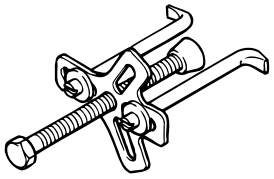 13955	ME633221	Removal of bearing
	A=ø80.96 {3.19} **B**=ø45.339 {1.78} Rear bearing installer 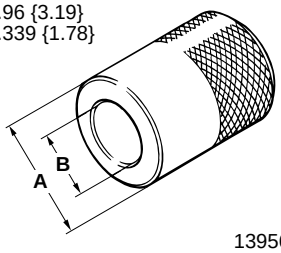 13956	ME633220	Installation of bearing

OIL SEAL AND SPEEDOMETER WORM

◆ Service procedure

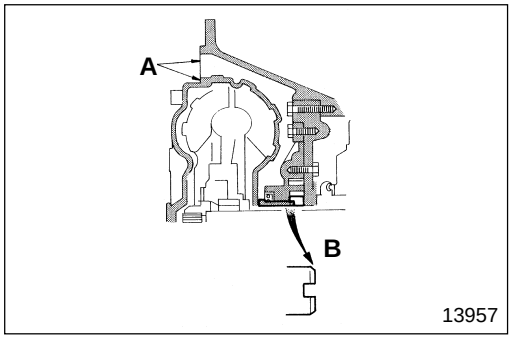

1 **Installation of torque converter**

Align the hub groove of torque converter **1** with the claw of the oil pump, then insert until the welded part on the converter periphery and the housing flange almost coincide.

CAUTION
Be careful not to scratch the oil seal.

A : Guide to insertion position (Align faces)
B : Align claw position

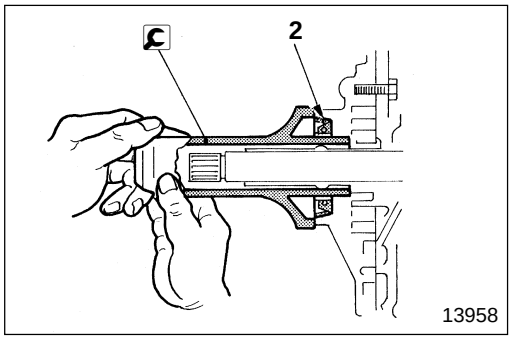

2 **Installation of oil seal**

- Apply grease to the lip area, and apply sealant to the periphery of oil seal **2**.
- Use 🔧 pump seal installer and install oil seal **2**.

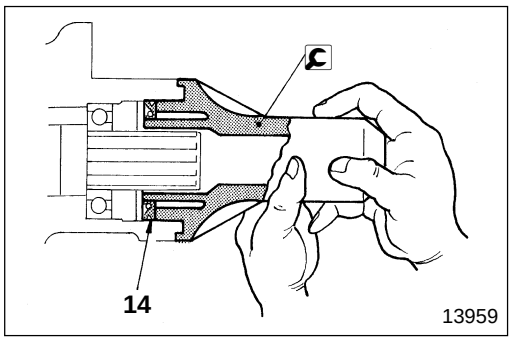

14 **Installation of oil seal**

- Apply grease to the lip area, and apply sealant to the periphery of oil seal **14**.
- Use 🔧 rear oil seal installer and install oil seal **14**.

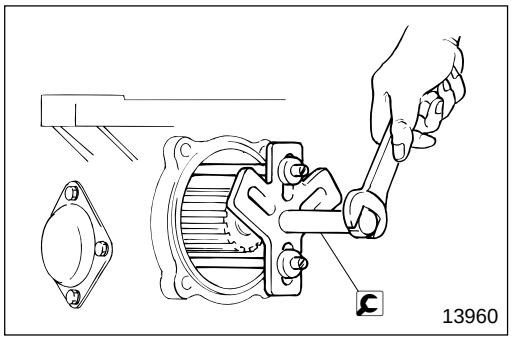

16 **Bearing**

[Removal]

- Insert the claw on the tip of 🔧 bearing remover set rod between the bearing race of bearing **16**.
- Insert the bolt of 🔧 bearing remover set into the automatic transmission output shaft, then remove bearing **16** by tightening the bearing remover.

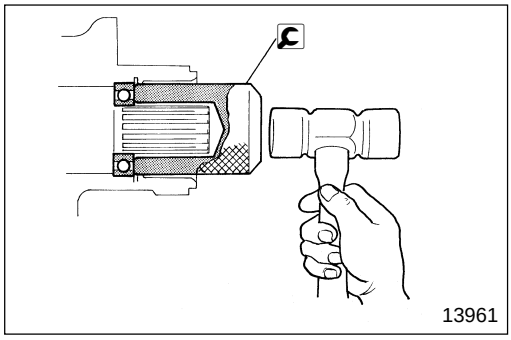

[Installation]

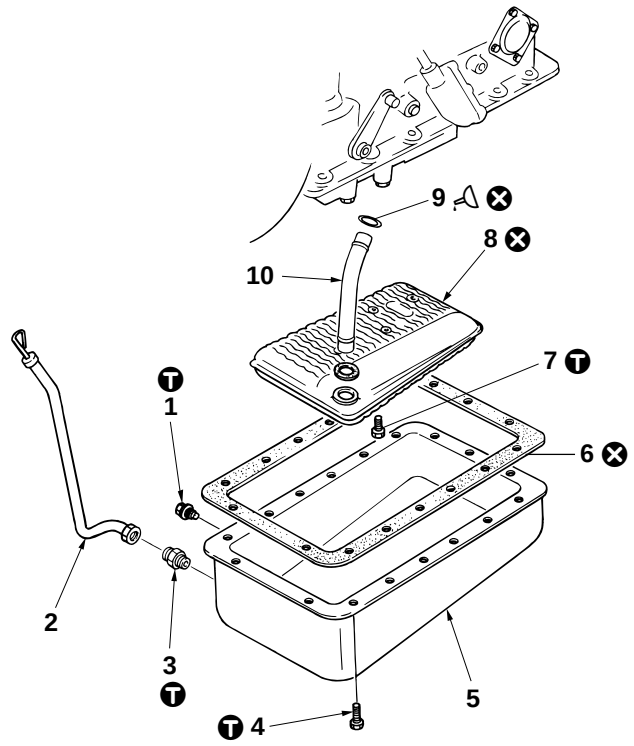

13962

● **Removal sequence**

1 Drain plug
2 Dipstick and dipstick guide
3 Dipstick guide connector
4 Bolt
5 Oil pan
6 Gasket
7 Bolt
8 Oil filter
9 Seal ring
10 Intake pipe

⊗ : Non-reusable parts

● **Installation sequence**

Follow the removal sequence in reverse.

Repair kit : Oil filter and gasket kit

Ⓣ Tightening torque

Unit : N·m {lbf.ft, kgf·m}

Location	Parts to be tightened	Tightening torque	Remarks
1	Drain plug	20 to 27 {15 to 20, 2.05 to 2.75}	—
3	Dipstick guide connector	125 to 135 {91 to 100, 12.55 to 13.76}	—
4	Bolt (Oil pan mounting)	14 to 18 {10 to 13, 1.4 to 1.8}	—
7	Bolt (Oil filter mounting)	14 to 18 {10 to 13, 1.4 to 1.8}	—

Fluid

Location	Points of application	Kinds	Quantity
9	Seal ring	Automatic transmission fluid (DEXRON or DEXRON II type)	As required

Selector Cable

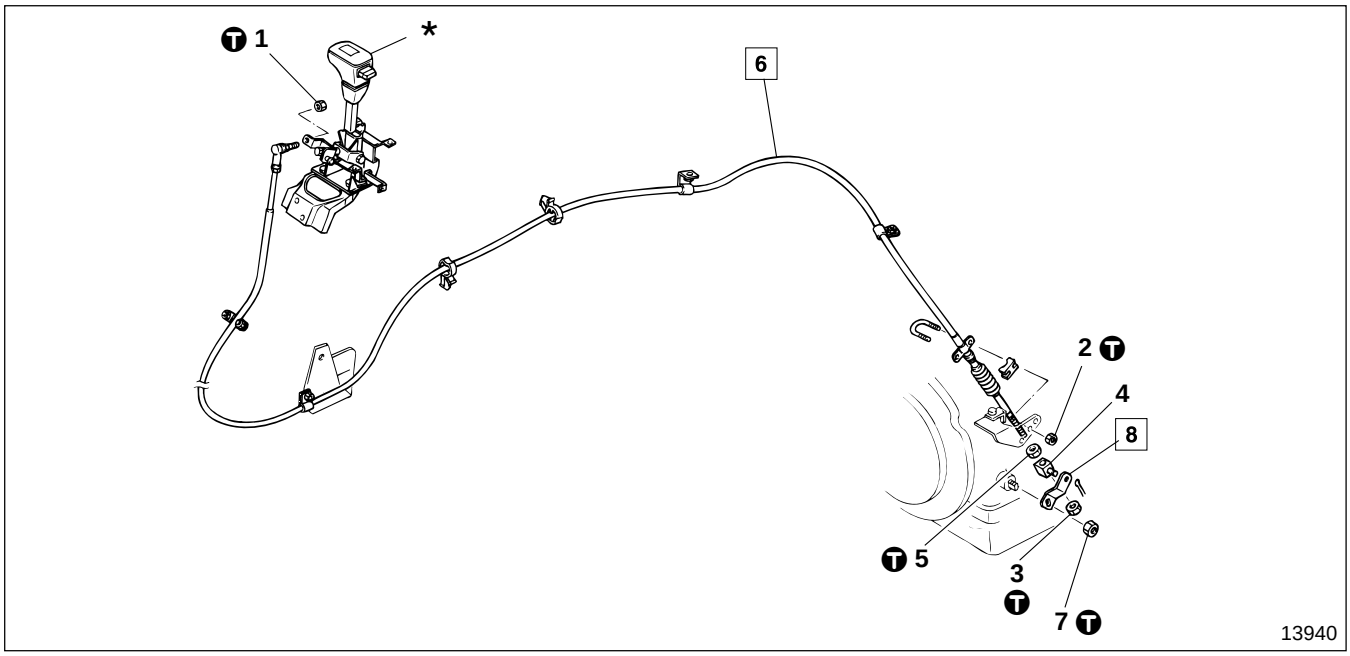

● **Removal sequence**

1 Nut
2 Nut
3 Nut
4 Adjuster
5 Nut
6 Selector cable
7 Nut
8 Selector lever

***** : Range selector lever 🕮 P23-22

● **Installation sequence**

*→6→1→5→4→3→2
8→7→2

● **Inspection after installation**

🕮 P23-21

T Tightening torque

Unit : N·m {lbf.ft, kgf·m}

Location	Parts to be tightened	Tightening torque	Remarks
1	Nut (Selector cable mounting)	18.6 to 23.5 {14 to 17, 1.9 to 2.4}	—
2	Nut (U-bolt mounting)	21 to 30 {16 to 22, 2.15 to 3.05}	—
3, 5	Nut (Selector cable mounting)	4 to 6 {3.0 to 4.4, 0.41 to 0.61}	—
7	Nut (Selector lever mounting)	23.5±3.4 {17±2.5, 2.4±0.35}	—

◆ Service procedure

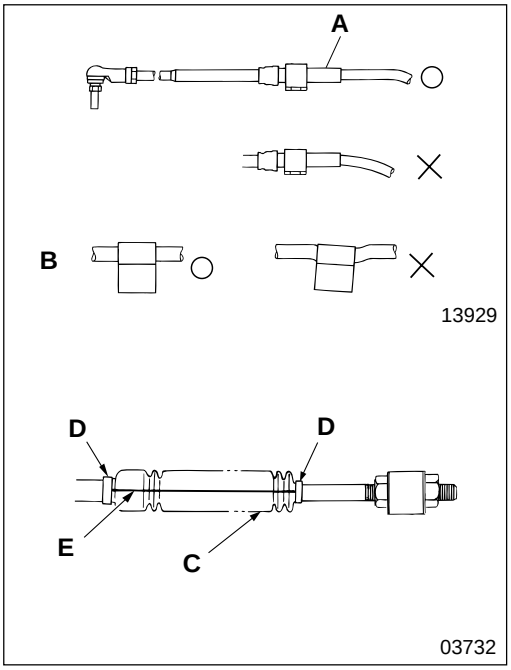

6 Installation of selector cable

NOTE

- **Make sure casing cap A is installed in a straight line.**
- **Cable bend radius must be 20 cm {7.87 in.} or more.**
- **Make sure the cable is straight.**
- **Install the clamp at right angles to the cable. (Figure B)**
- **Do not twist clamps D at the ends of boot C. Install so that white line E on the boot is a straight line. (Figure E)**

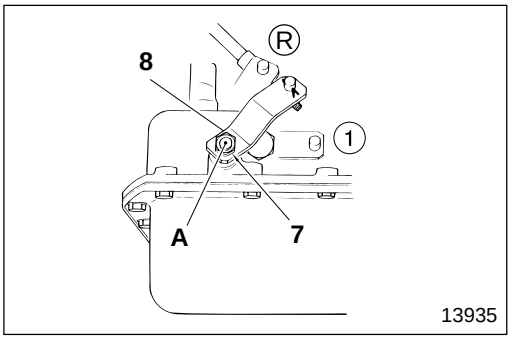

8 Installation of selector lever

If selector lever **8** has been removed, rotate selector shaft **A** and move it to an intermediate position between, but other than, ① and Ⓡ, then tighten nut **7**.

CAUTION ⚠

Be careful not to overtighten nut 7, it might cause the internal lever to malfunction.

● Inspection after installation

- Make sure that when the range selector lever * on the driver's side is operated, the detent positions of selector lever **8** on the automatic transmission side agree with the corresponding positions of the range selector lever on the driver's side. Also make sure that the range selector lever on the driver's side and the selector lever on the automatic transmission side are both operating smoothly.
- Make sure the modulator cable moves smoothly.
- Make sure the starter switch can be operated only in the neutral position, and is disabled for all other positions.
- Make sure the backup lamps light when the selector is in the reverse (R) position.
  (The lamps do not light when the engine is stopped.)

Range Selector Lever

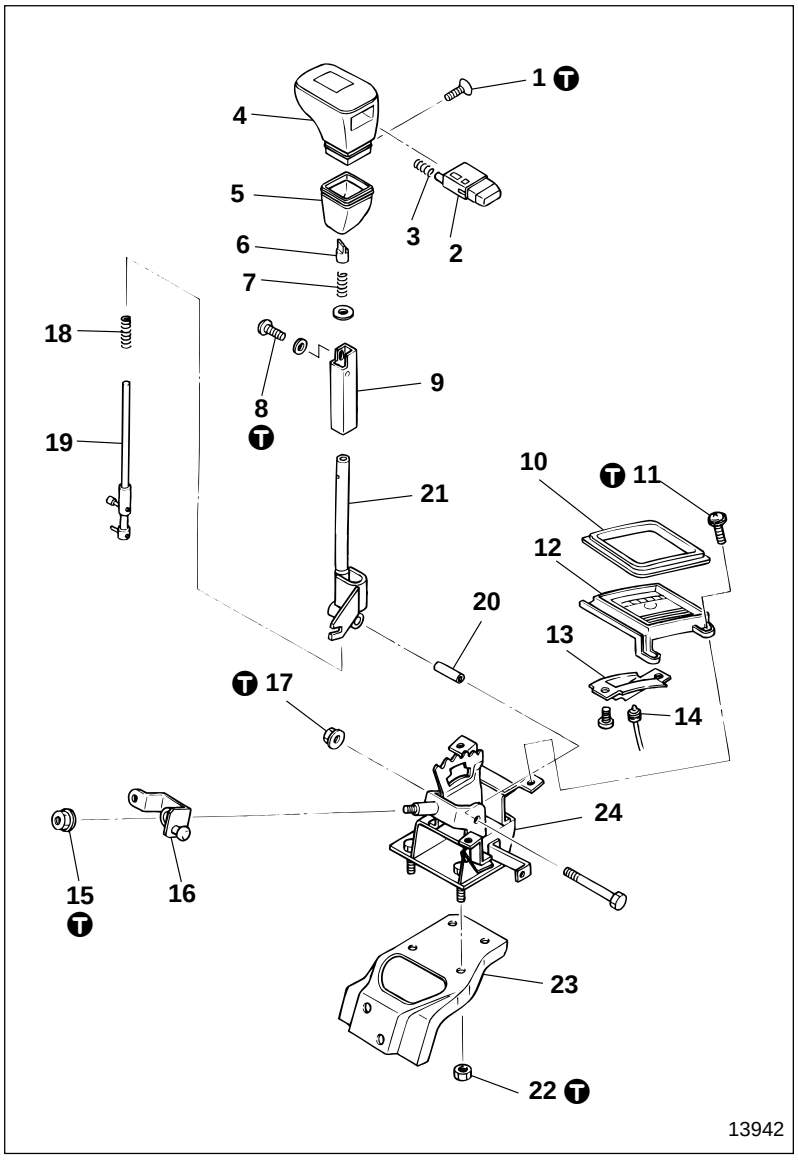

● **Disassembly sequence**

1 Screw
2 Push button
3 Spring
4 Knob assembly
5 Cover
6 Sleeve
7 Spring
8 Screw
9 Pipe
10 Indicator rubber
11 Screw
12 Panel assembly
13 Holder
14 Indicator lamp
15 Nut
16 Range selector lever B
17 Nut
18 Spring
19 Rod assembly
20 Pipe
21 Range selector lever A
22 Nut
23 Set board bracket
24 Set board assembly

● **Assembly Sequence**

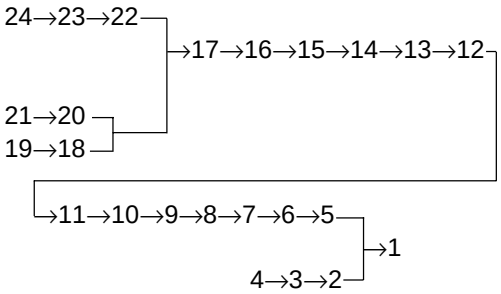

T Tightening torque

Unit : N·m {lbf.ft, kgf·m}

Location	Parts to be tightened	Tightening torque	Remarks
1	Screw (Knob assembly mounting)	2 {1.4, 0.2}	—
8	Screw (Pipe mounting)	2 {1.4, 0.2}	—
11	Screw (Panel assembly mounting)	2 {1.4, 0.2}	—
15	Nut (Range selector lever B mounting)	9.8 to 15 {7.2 to 11, 1.0 to 1.5}	—
17	Nut (Range selector lever A mounting)	9.8 to 15 {7.2 to 11, 1.0 to 1.5}	—
22	Nut (Setboard bracket mounting)	21 to 30 {16 to 22, 2.15 to 3.05}	—

Lubricant

Location	Points of application	Kinds	Quantity
—	All sliding areas	Chassis grease [NLGI No.1 (Ca soap)]	As required

M E M O

Modulator Assembly and Neutral Start Switch

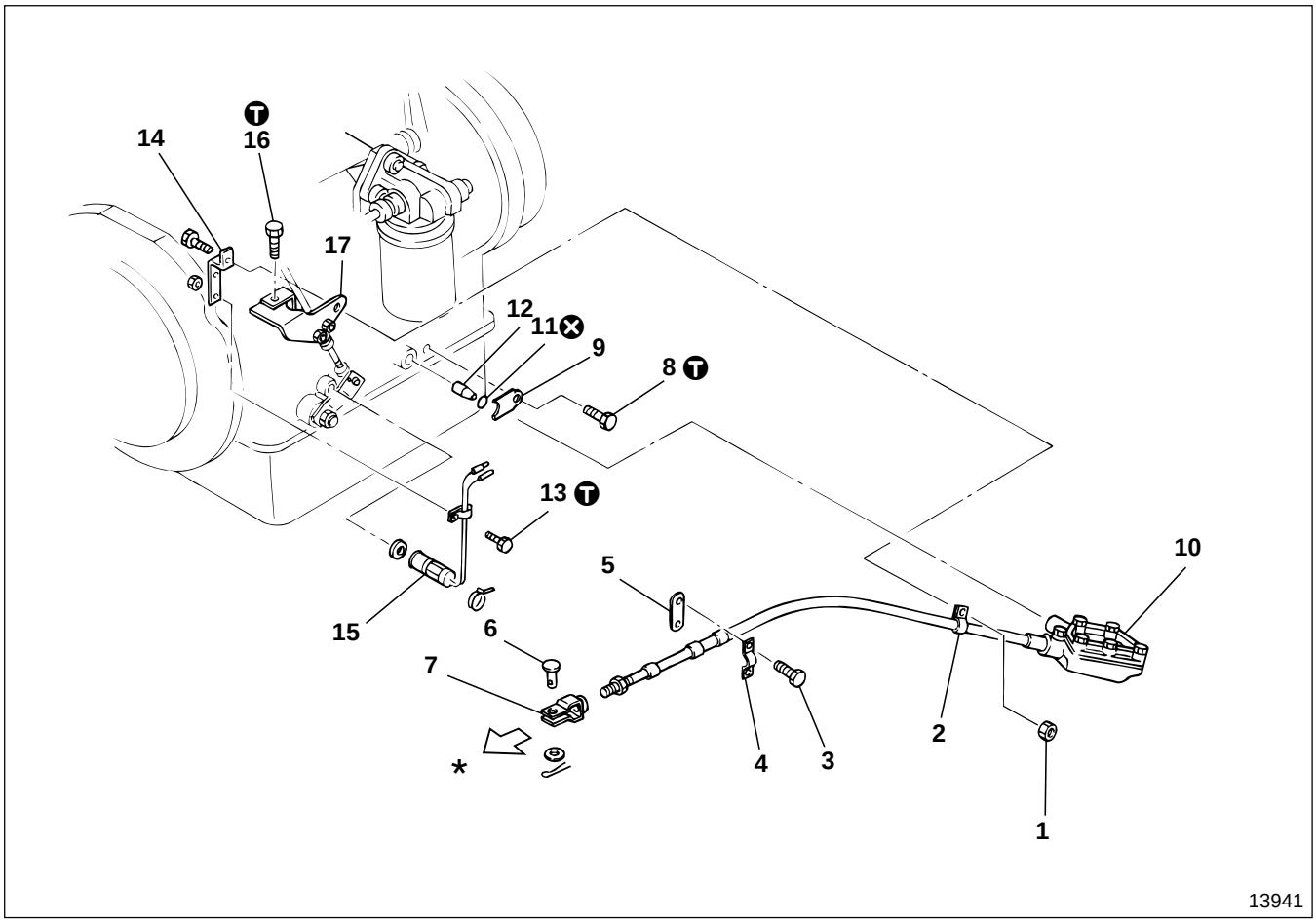

● **Removal sequence**

1 Nut
2 Clip
3 Screw
4 Clamp
5 Shim
6 Clevis pin
7 Clevis
8 Bolt
9 Retainer
10 Modulator assembly
📖 P23-25
11 O-ring
12 Valve rod
13 Bolt
14 Bracket
15 Neutral start switch Gr 54
16 Bolt
17 Bracket

*: To injection pump Gr 13
⊗ : Non-reusable parts

● **Installation sequence**

17→16→15→14→13→12→11→9→8→7→6→5→4→3→2→1
10→9→8→7→6→5→4→3→2→1

Ⓣ Tightening torque

Unit : N·m {lbf.ft, kgf·m}

Location	Parts to be tightened	Tightening torque	Remarks
8	Bolt (Retainer mounting)	17±2.5 {13±1.8, 1.75±0.25}	—
13	Bolt (Clamp mounting)	3.9 to 5.9 {2.9 to 4.3, 0.4 to 0.6}	—
16	Bolt (Bracket mounting)	59 to 83 {43 to 61, 6.0 to 8.5}	—

Modulator Assembly

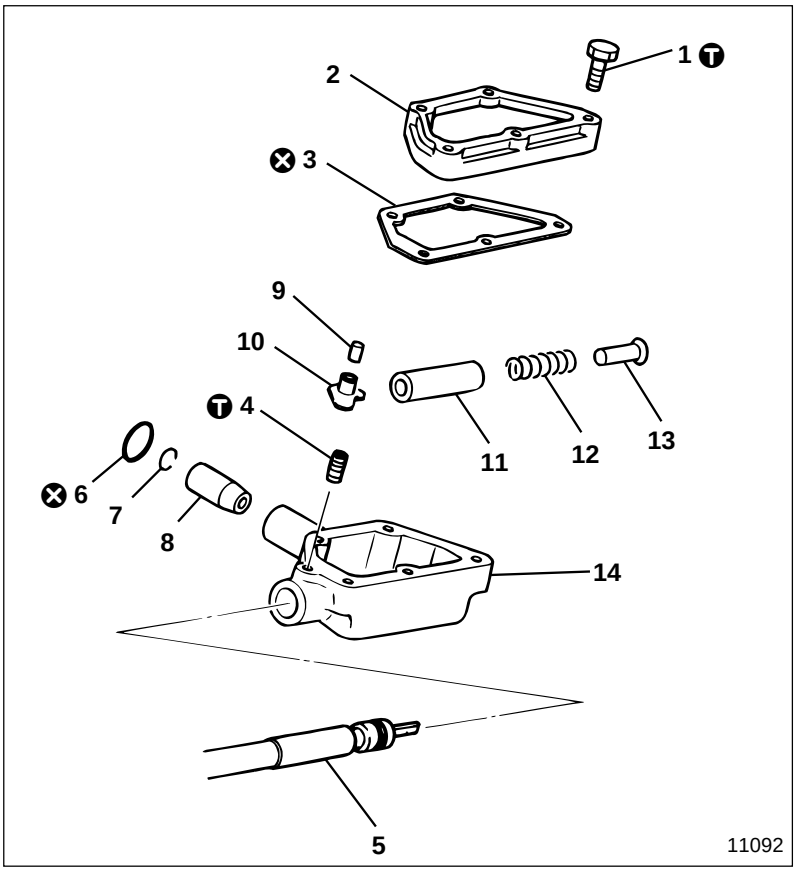

● **Disassembly sequence**

1 Screw
2 Cover
3 Gasket
4 Set screw
5 Cable assembly
6 O-ring
7 Snap ring
8 Plunger
9 Dwell pin
10 Lever
11 Retainer
12 Spring
13 Thimble
14 Housing

⊗ : Non-reusable parts

● **Assembly sequence**

Follow the disassembly sequence in reverse.

Ⓣ Tightening torque

Unit : N·m {lbf.ft, kgf·m}

Location	Parts to be tightened	Tightening torque	Remarks
1	Screw (Cover mounting)	4.8±0.3 {3.5±0.2, 0.49±0.03}	—
4	Set screw (Cable assembly mounting)	2.5±0.3 {1.9±0.2, 0.26±0.03}	—

OIL COOLER

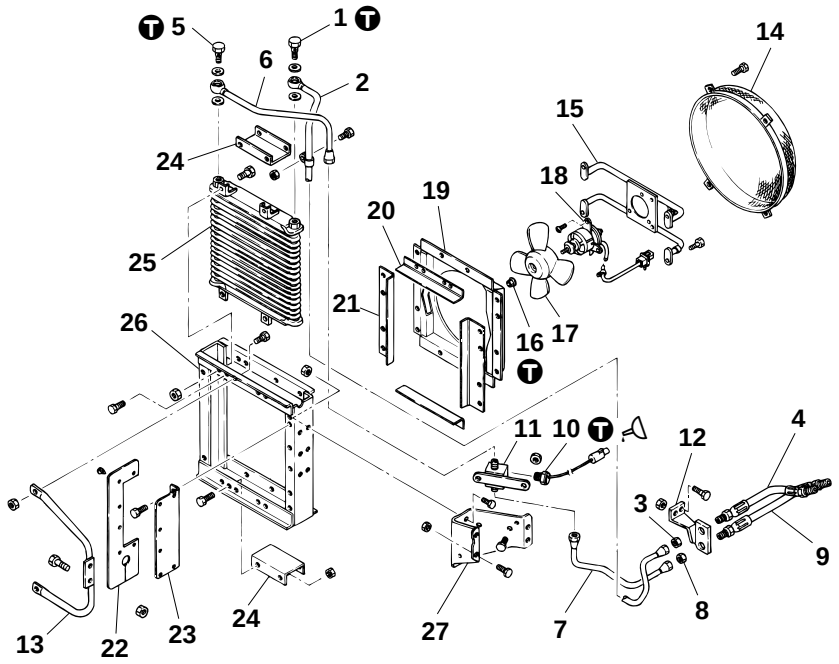

● **Removal sequence**

1 Eye bolt
2 Oil pipe
3 Nut
4 Oil hose
5 Eye bolt
6 Oil pipe
7 Oil pipe
8 Nut
9 Oil hose
10 Automatic transmission fluid thermostat switch Gr 54
11 Connector
12 Hose bracket
13 Oil cooler stay
14 Fan cover
15 Fan motor bracket
16 Nut
17 Fan assembly
18 Motor assembly Gr 54
19 Fan shroud
20 Fan shroud A
21 Fan shroud B
22 Baffle plate
23 Baffle plate bracket
24 Stay
25 Oil cooler
26 Oil cooler bracket
27 Oil cooler support

● **Installation sequence**

Follow the removal sequence in reverse.

Tightening torque

Unit : N·m {lbf.ft, kgf·m}

Location	Parts to be tightened	Tightening torque	Remarks
1, 5	Eye bolt	59 to 88 {43 to 65, 6 to 9}	—
10	Automatic transmission fluid thermostat switch	29 to 39 {22 to 29, 3 to 4}	—
16	Nut (Fan assembly mounting)	4.2 to 5.2 {3.1 to 3.8, 0.43 to 0.53}	—

Sealant

Location	Points of application	Kinds	Quantity
10	Automatic transmission fluid thermostat switch	THREEBOND 1110B	As required

M E M O

OIL FILTER

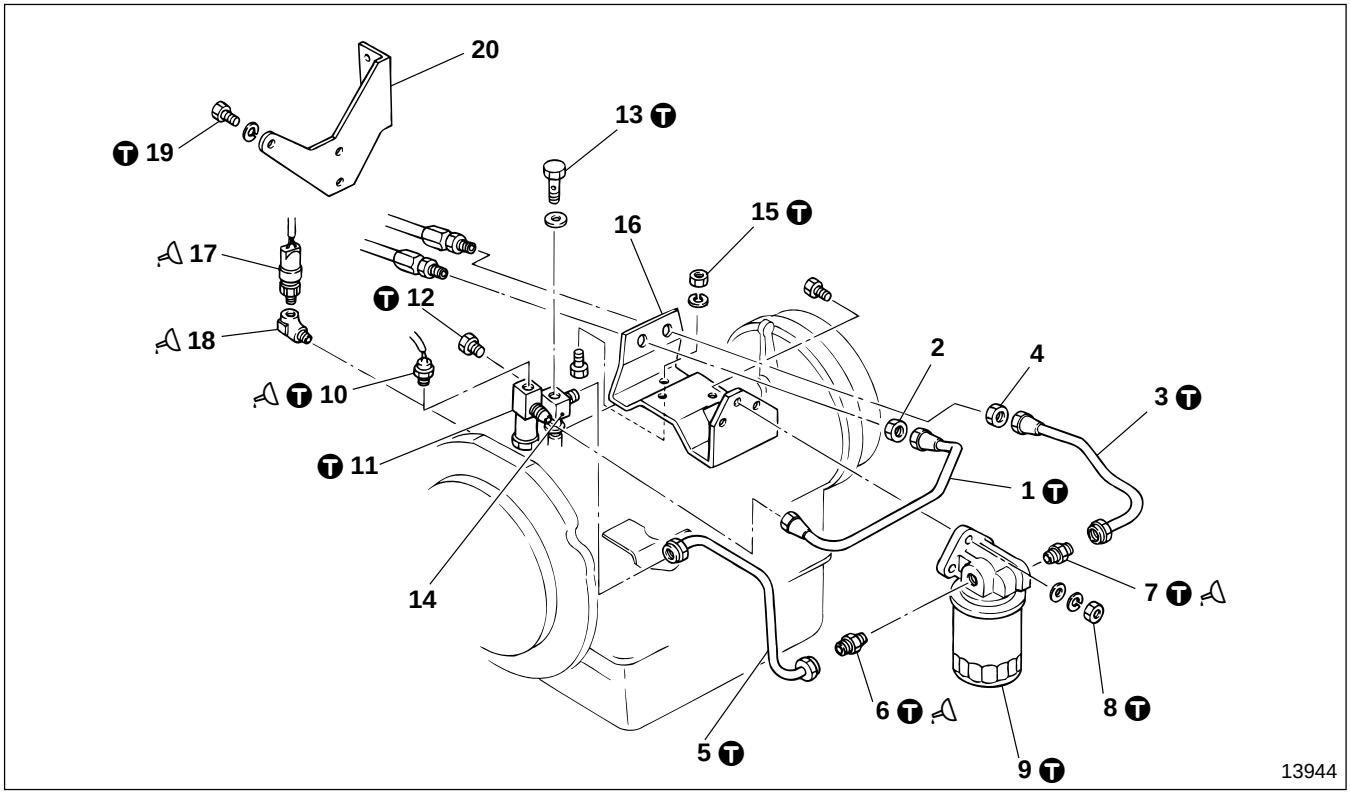

● **Removal sequence**

1 Oil pipe
2 Nut
3 Oil pipe
4 Nut
5 Oil pipe
6 Connector
7 Connector
8 Nut
9 Oil filter
10 Automatic transmission fluid temperature switch Gr 54
11 Connector
12 Plug
13 Eye bolt
14 Union joint
15 Nut
16 Oil filter bracket
17 Backup lamp switch Gr 54
18 Connector
19 Bolt
20 Hand brake cable bracket

● **Installation sequence**

Follow the removal sequence in reverse.

T Tightening torque

Unit : N·m {lbf.ft, kgf·m}

Location	Parts to be tightened	Tightening torque	Remarks
1, 3, 5	Oil pipe	69 to 93 {51 to 69, 7.0 to 9.5}	—
6, 7	Connector	59 to 98 {43 to 72, 6 to 10}	—
8	Nut (Oil filter mounting)	21 {15, 2.13}	—
9	Oil filter (Cartridge mounting)	9.8 to 20 {7.2 to 14, 1 to 2}	—
10	Automatic transmission fluid temperature switch	29 to 39 {22 to 29, 3 to 4}	—
11	Connector	39 to 49 {29 to 36, 4 to 5}	—
12	Plug	34±7.8 {25±5.8, 3.5±0.8}	—
13	Eye bolt	74±15 {54±11, 7.5±1.5}	—
15	Nut (Oil filter bracket mounting)	115 to 155 {87 to 115, 12 to 16}	—
19	Bolt (Hand brake cable bracket mounting)	58 to 68 {43 to 50, 5.9 to 6.9}	—

Sealant

Location	Points of application	Kinds	Quantity
6, 7, 17, 18	Connector and thread area of backup lamp switch	THREEBOND 1207B	As required
10	Thread area of automatic transmission fluid temperature switch	THREEBOND 1110B	As required

MITSUBISHI
FUSO

FH

Service Manual

Group 25
Propeller Shaft

Table of Contents

BACK

HOME

MITSUBISHI FUSO TRUCK OF AMERICA, Inc.

Pub No. TWME9502-25

GROUP 25 PROPELLER SHAFT

SPECIFICATIONS 2
STRUCTURE AND OPERATION 2
TROUBLESHOOTING 3
REMOVAL AND INSTALLATION OF PROPELLER SHAFT 4
REAR PROPELLER SHAFT 6
FRONT PROPELLER SHAFT 10
BALANCING PROPELLER SHAFT 14

SPECIFICATIONS/STRUCTURE AND OPERATION

SPECIFICATIONS

Item			Specifications
Propeller shaft	Model		P4
Pipe	Outer diameter×Wall thickness	mm {in.}	90×2.6 {3.54×0.10}
Universal joint	Spider outer diameter	mm {in.}	26.7 {1.05}
Needle bearing	Outer diameter	mm {in.}	3.0 {0.12}
	Length of needle roller	mm {in.}	21.8 {0.86}
	Quantity of needle rollers		31
Slip yoke joint	Spline diameter	mm {in.}	48 {1.89}
Center bearing	Model No.		6209
	Inner diameter×Outer diameter	mm {in.}	45×85 {1.77×3.35}

STRUCTURE AND OPERATION

Swing of Propeller Shaft

< Universal joint >

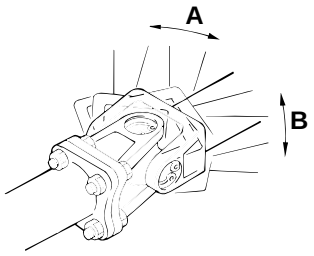

< Slip yoke joint >

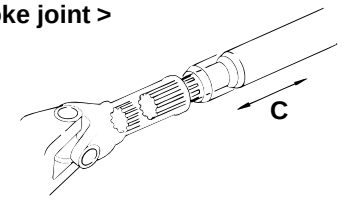

00815

A : Lateral swing
B : Longitudinal swing
C : Fore-and-aft movement

Relative positions of transmission and rear axle vary depending on the fluctuation of the road surface and load carried when operating the vehicle.
The universal joint and the slip yoke joint are provided to absorb these influences.

Configuration of Propeller Shaft Connection

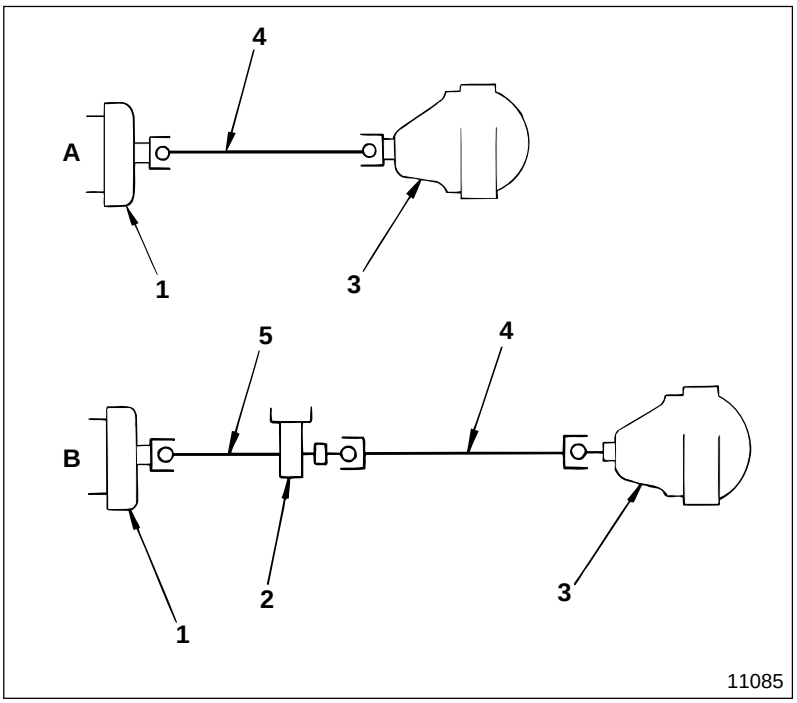

1 Parking brake drum
2 Center bearing
3 Rear axle
4 Rear propeller shaft
5 Front propeller shaft

A : Single-shaft connection
B : Twin-shaft connection

TROUBLESHOOTING

Symptoms / Possible causes		Propeller shaft vibrating		Noise from propeller shaft		
		Vibration at high speed	Vibration at low speed	Noise when starting or while coasting	Noise while cruising	Clicking noise
Flange yoke assembly direction incorrect		○				
Companion flange tightening torque excessive						○
Slip yoke joint	Lubrication insufficient				○	
	Spline play excessive		○	○		
Universal joint	Clearance in spider axial direction excessive		○		○	
	Needle bearing lubricated insufficiently				○	
	Needle bearing worn	○		○	○	
Center bearing < Twin-shaft connection >	Lubrication insufficient				○	
	Seized, worn, or rotation faulty	○			○	
	Cushion rubber deteriorating or deformed			○		
	Bracket mounting bolt loose			○		
Propeller shaft	Mounting bolt loose	○		○		
	Bent	○				
	Dynamic balance adjusted incorrectly	○				
Transmission gear selection too high			○			

REMOVAL AND INSTALLATION OF PROPELLER SHAFT

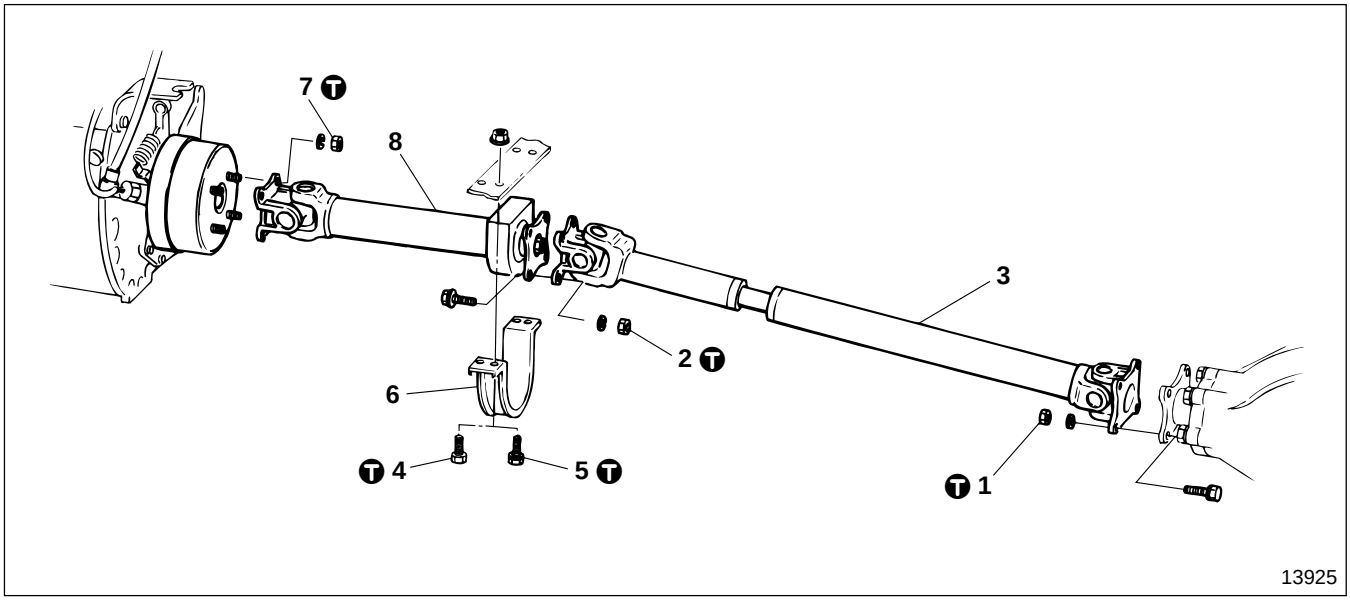

● **Work before removal**

P25-4

● **Removal sequence**

1 Nut
2 Nut
3 Rear propeller shaft
P25-6
4 Bolt
5 Bolt
6 Center bearing bracket
7 Nut
8 Front propeller shaft
P25-10

● **Installation sequence**

Follow the removal sequence in reverse.

Ⓣ Tightening torque

Unit : N·m {lbf.ft, kgf·m}

Location	Parts to be tightened	Tightening torque	Remarks
1	Nut (Propeller shaft mounting at rear axle side)	85 {61, 8.5}	—
2	Nut (Propeller shaft mounting at center bearing side)	85 {61, 8.5}	—
4	Bolt (Center bearing bracket mounting)	39 to 59 {28 to 43, 3.9 to 6.0}	—
5	Bolt (Center bearing bracket mounting)	36 to 52 {25 to 40, 3.5 to 5.5}	With spring washer
7	Nut (Propeller shaft mounting at propeller shaft side)	85 {61, 8.5}	—

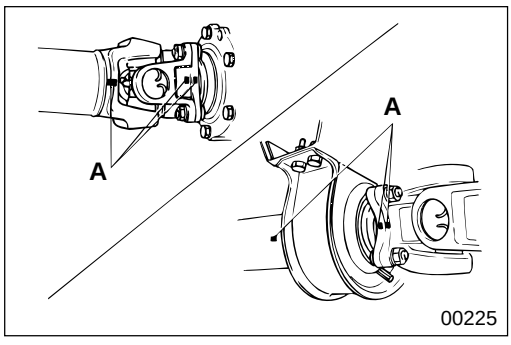

◆ Service procedure

● **Work before removal**

WARNING⚠

- **Since the propeller shaft will be removed, the parking brake cannot be used. Therefore, you must chock the wheels securely so the vehicle does not move.**
- **Do not remove the chocks until the entire operation is completed.**

Remember to make alignment marks **A** before removal.

M E M O

REAR PROPELLER SHAFT

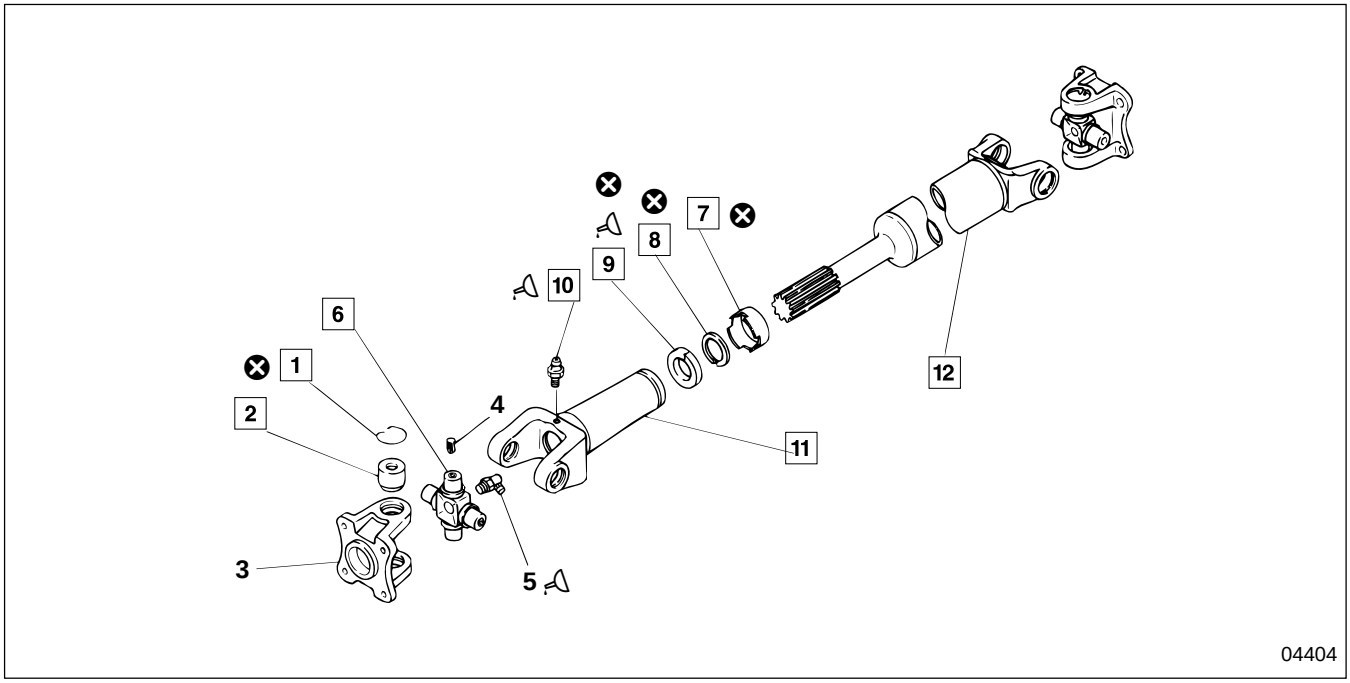

● **Inspection before disassembly**

P25-7

● **Disassembly sequence**

1 Snap ring
2 Needle bearing
3 Flange yoke
4 Grease keeper
5 Grease nipple
6 Spider
7 Dust cap
8 Retainer
9 Cork seal
10 Grease nipple
11 Slip yoke joint
12 Rear propeller shaft

⊗ : Non-reusable parts

● **Assembly sequence**

Follow the disassembly sequence in reverse.
Repair kit : Universal joint spider kit

Service standards

Unit : mm {in.}

Location	Maintenance item	Standard value (Basic diameter in [ ])	Limit	Remedy
1 to 6	Clearance in axial direction of spider	0 to 0.25 {0 to 0.0098}	—	Adjust
2, 6	Clearance between needle bearing and spider	[26.7] 0.02 to 0.07 {[1.05] 0.00079 to 0.0028}	0.2 {0.0079}	Replace
11, 12	Play to revolving direction between slip yoke joint and rear propeller shaft	0.07 to 0.18 {0.0028 to 0.0071}	0.3 {0.012}	Replace
12	Bend of rear propeller shaft (Center)	—	0.6 {0.024}	Correct or replace

Lubricant

Location	Points of application	Kinds	Quantity
5	Supply via grease nipple	Wheel bearing grease [NLGI No. 2 (Li soap)]	Pack until grease overflows from spider dust cover
9	Inner surface of cork seal	Wheel bearing grease [NLGI No. 2 (Li soap)]	As required
10	Supply via grease nipple	Wheel bearing grease [NLGI No. 2 (Li soap)]	Pack until grease overflows from dust plug hole

Special tools

Location	Tool name and shape	Part No.	Application
1	Snap ring repressor 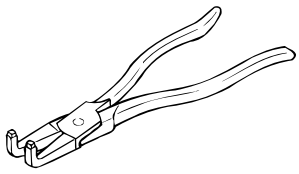 00227	MH061001	Removal and installation of snap ring

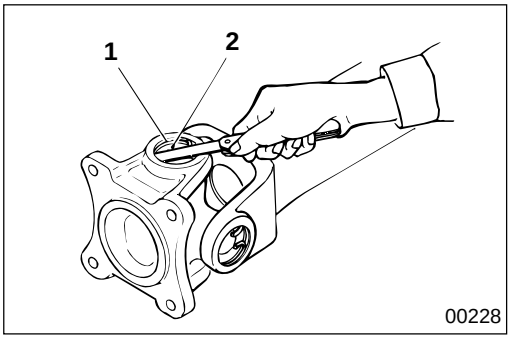

00228

◆ Service procedure

● **Inspection before disassembly**

Clearance in axial direction for spider

Press needle bearing **2** downward firmly, and measure the clearance between snap ring **1** and the needle bearing. If the measured value is higher than the standard value, adjust it by changing the thickness of the snap ring.

- Available snap ring thicknesses

Part name	Thickness	Identification color
Snap ring A	2.5 mm {0.098 in.}	Green
Snap ring B	2.6 mm {0.10 in.}	Red

NOTE

For snap ring 1, it is recommended that you use rings with the same thickness on both ends to ensure balanced revolution.

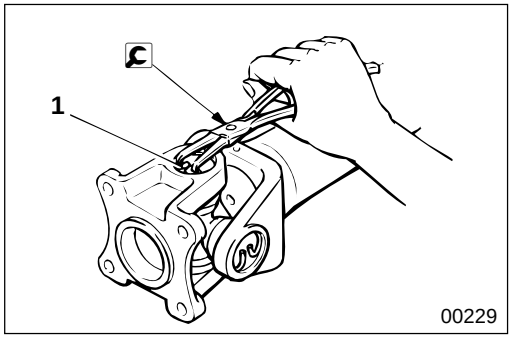

1 **Removal and installation of snap ring**

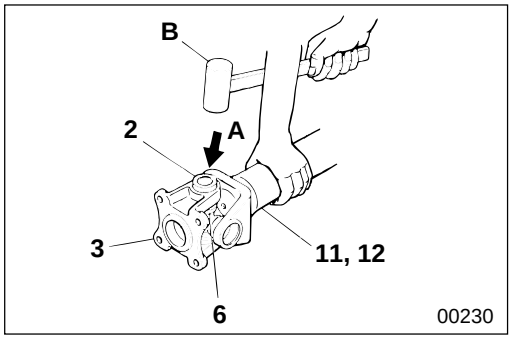

2 **Removal of needle bearing**

- Make alignment marks on needle bearing **2** and spider **6**.
- Make alignment marks across flange yoke **3**, slip yoke joint **11** and rear propeller shaft **12**.
- Hit the yoke lightly at shoulder area **A** so that needle bearing **2** bounces out due to reaction.
  B : Mallet

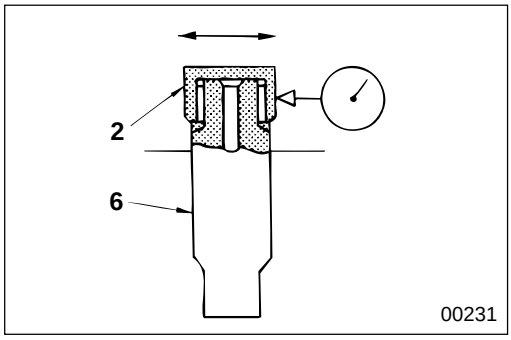

2 **6** **Clearance between needle bearing and spider**

Measure the play towards the diameter direction between needle bearing **2** and spider **6**. If the measured value is higher than the limit, replace with universal joint spider kit.

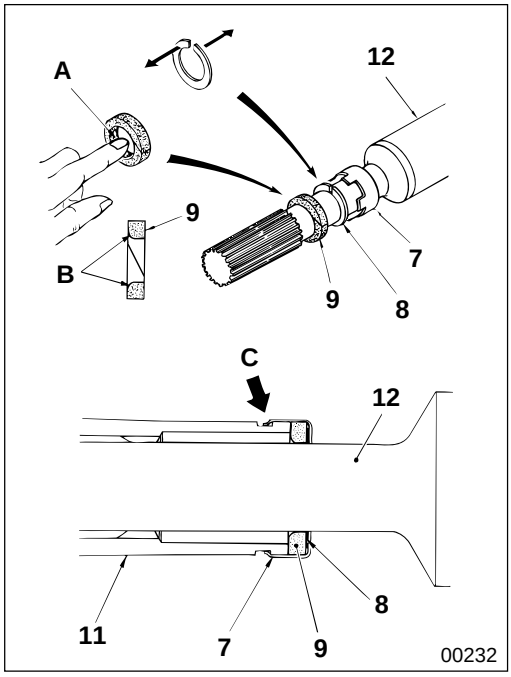

7 **to** **9** **Assembly of dust cap, retainer and cork seal**

- Insert dust cap **7** into rear propeller shaft **12** and expand retainer **8** carefully to mount it on the propeller shaft. Then, release the retainer and allow it to return to its original shape.
- Apply grease to inner surface **A** of cork seal **9**, face its chamfered side **B** towards the spline and mount in the same way as retainer **8**.
- Press cork seal **9**, compressing it by 1 to 2 mm {0.039 to 0.079 in.}, against slip yoke joint **11**, then caulk pawl area **C**.

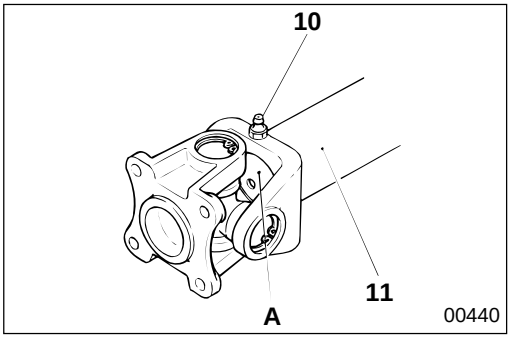

10 **Supply of grease via grease nipple**

Pack grease via grease nipple **10** until grease starts overflowing from the hole in dust plug **A** of slip yoke joint **11**.

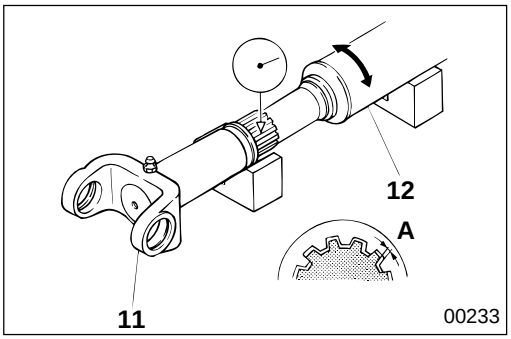

11 **12** **Play between slip yoke joint and rear propeller shaft spline in rotaring direction**

Measure play **A** between slip yoke joint **11** and rear propeller shaft **12** at the spline area. If the measured value is higher than the limit, replace the faulty parts.

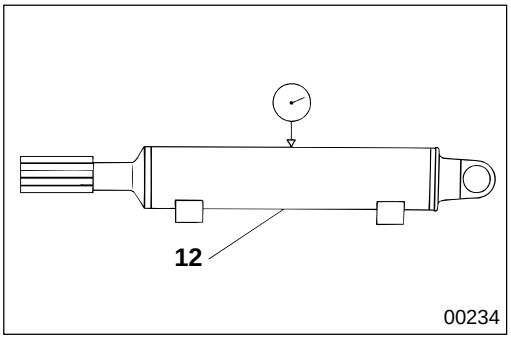

12 **Bend of rear propeller shaft**

Measure bend of rear propeller shaft **12** at its center. If the measured value is higher than the limit, correct or replace it.

CAUTION

Be sure to check for cracks at the welded area after straightening has been done by means of a press.

NOTE

To measure the bend of rear propeller shaft 12, turn it one full revolution and read the dial gauge indicator. The bend is one half of the indicated value.

FRONT PROPELLER SHAFT

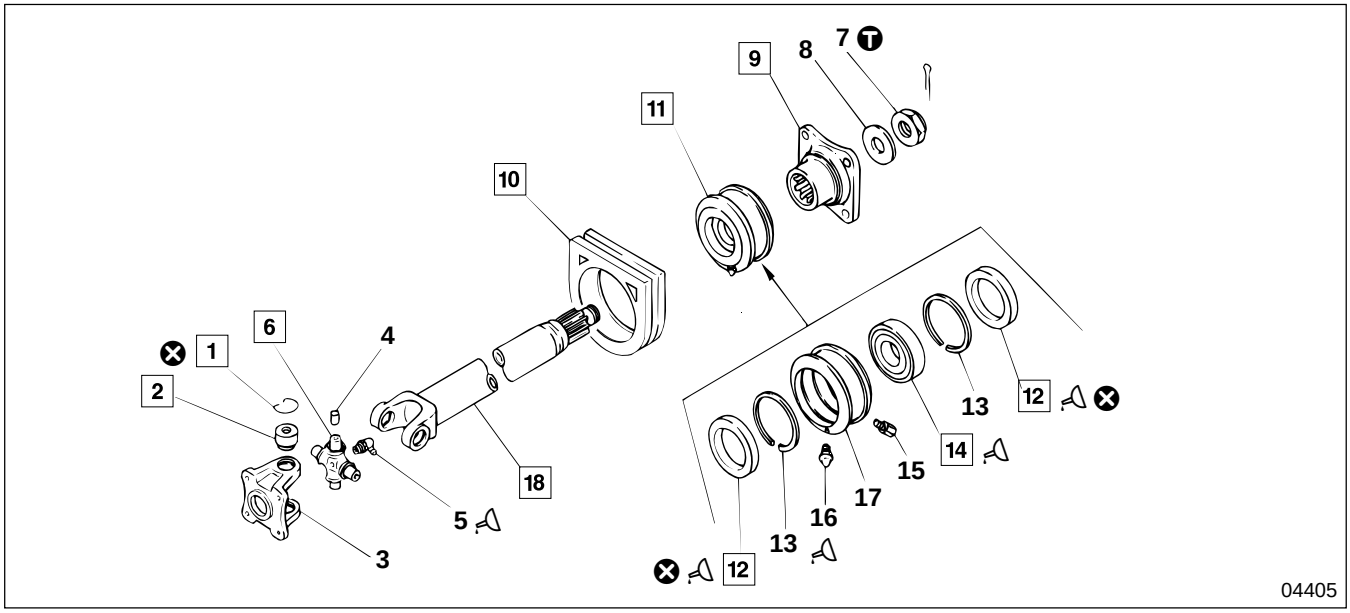

● **Inspection before disassembly**

P25-11

● **Disassembly sequence**

1 Snap ring
2 Needle bearing
3 Flange yoke
4 Grease keeper
5 Grease nipple
6 Spider
7 Nut
8 Washer
9 Companion flange
10 Cushion rubber
11 Center bearing
12 Oil seal
13 Snap ring
14 Center bearing
15 Relief valve
16 Grease nipple
17 Center bearing case
18 Front propeller shaft

⊗ : Non-reusable parts

● **Assembly sequence**

Follow the disassembly sequence in reverse.

Repair kit : Universal joint spider kit

Service standards

Unit : mm {in.}

Location	Maintenance item	Standard value (Basic diameter in [ ])	Limit	Remedy
1 to 6	Clearance of spider is axial direction	0 to 0.25 {0 to 0.0098}	—	Adjust
2, 6	Clearance between needle bearing and spider	[26.7] 0.02 to 0.07 {[1.05] 0.00079 to 0.0028}	0.2 {0.0079}	Replace
18	Bend of front propeller shaft (Center)	—	0.6 {0.024}	Correct or replace

Ⓣ Tightening torque

Unit : N·m {lbf.ft, kgf·m}

Location	Parts to be tightened	Tightening torque	Remarks
7	Nut (Companion flange mounting)	200 to 340 {145 to 255, 20 to 35}	—

Lubricant

Location	Points of application	Kinds	Quantity
5	Supply via grease nipple	Wheel bearing grease [NLGI No. 2 (Li soap)]	Pack until grease overflows from spider dust cover
12	Lip area of oil seal	Wheel bearing grease [NLGI No. 2 (Li soap)]	As required
14	Pack area of center bearing assembly that houses ball bearings	Wheel bearing grease [NLGI No. 2 (Li soap)]	As required
16	Supply via grease nipple	Wheel bearing grease [NLGI No. 2 (Li soap)]	Pack until grease overflows from relief valve

Special tools

Unit : mm {in.}

Location	Tool name and shape	Part No.	Application
1	Snap ring expander 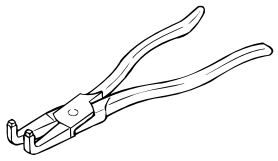 00227	MH061001	Removal and installation of snap ring
9	Flange puller 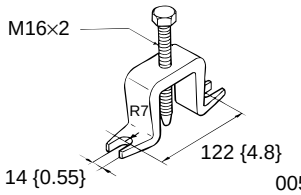 00552	MC881524	Removal of companion flange
17	Gear puller 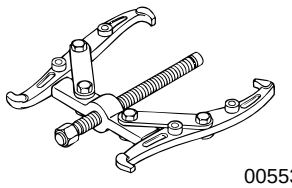 00553	MH061102	Removal of center bearing

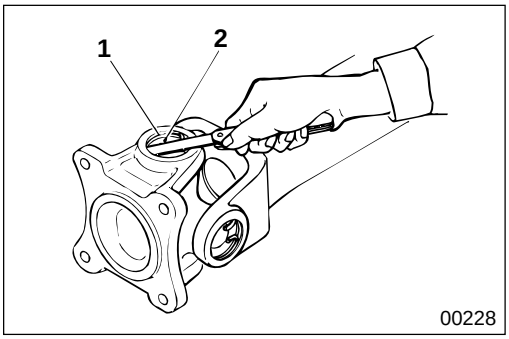

00228

◆ Service procedure

● **Inspection before disassembly**

Clearance in axial direction for spider

Press needle bearing **2** downward firmly, and measure the clearance between snap ring **1** and the needle bearing. If the measured value is higher than the standard value, adjust it by changing the thickness of the snap ring.

- Available snap ring thicknesses

Part name	Thickness	Identification color
Snap ring A	2.5mm {0.098 in.}	Green
Snap ring B	2.6mm {0.10 in.}	Red

NOTE

For snap ring 1, it is recommended that you use rings with the same thickness on both ends to ensure balanced revolution.

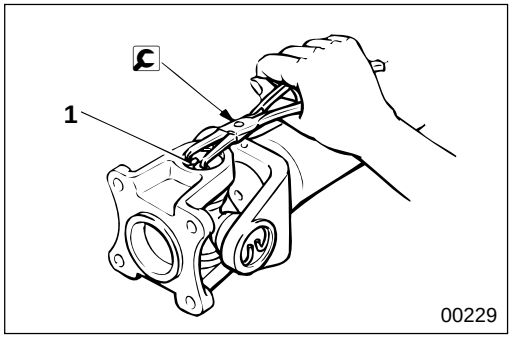

1 **Removal and installation of snap ring**

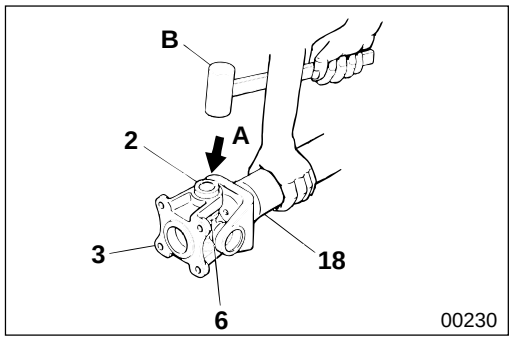

2 **Removal of needle bearing**

- Make alignment marks on needle bearing **2** and spider **6**.
- Make alignment marks across flange yoke **3** and front propeller shaft **18**.
- Hit the yoke lightly at shoulder area **A** so that needle bearing **2** bounces out due to reaction.
  B : Mallet

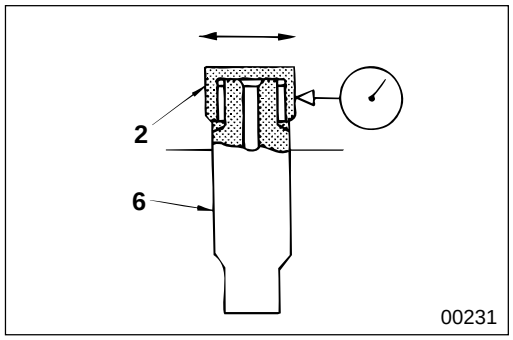

2 **6** **Clearance between needle bearing and spider**

Measure the play towards the diameter direction between needle bearing **2** and spider **6**. If the measured value is higher than the limit, replace with universal joint spider kit.

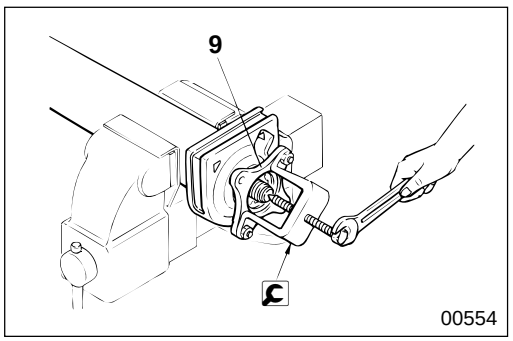

9 **Removal of companion flange**

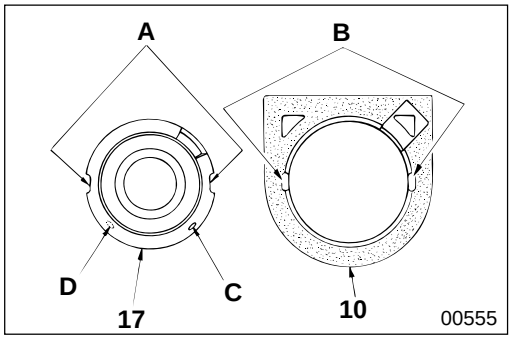

10 **Installation of cushion rubber**

- Align part **A** of center bearing case **17** to part **B** of cushion rubber **10**, and fit them together. When it is hard to fit them together, apply some soapy water to facilitate the fitting work.
- Assemble center bearing case **17** so that grease nipple mounting hole **D** faces downward.

C : Relief valve mounting hole
D : Grease nipple mounting hole

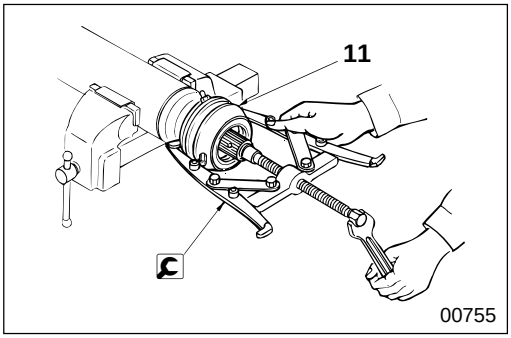

11 **Removal of center bearing assembly**

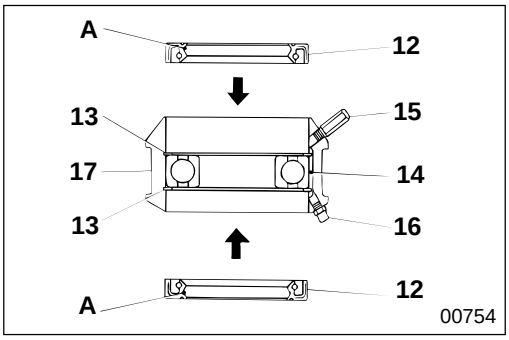

12 **Installation of oil seal**

- Apply grease to oil seal **12** lip area **A** and install to the direction as illustrated.
- Install oil seal **12** flush with center bearing case **17** end surface.

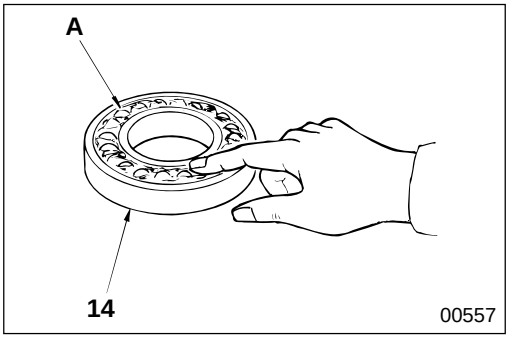

14 **Packing grease in center bearing**

Pack grease into the area that houses ball bearings **A** of center bearing **14**.

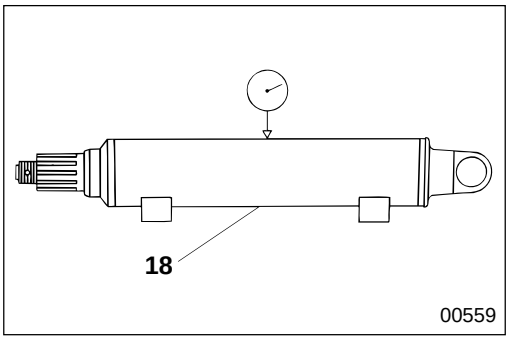

18 **Bend of front propeller shaft**

Measure bend of front propeller shaft **18** at its center. If the measured value is higher than the limit, connect or replace it.

CAUTION

Be sure to check for cracks at the welded area after straightening has been done by means of a press.

NOTE

To measure the bend of front propeller shaft 18, turn it one full revolution and read the dial gauge indicator. The bend is one half of the indicated value.

BALANCING PROPELLER SHAFT

Adjustment after Assembly

(1) After correction of propeller shaft deflection, or replacement of flange yoke and universal joint, adjust the amount of balance of the completed propeller shaft assembly on a balancing machine, and adjust by adding balance piece(s) so that the amount comes within the permissible limit.

(2) For correction of dynamic balance, use the polar coordination method.

(3) Permissible amount of unbalance
0.49 N·cm {0.0036 lbf.ft, 50 gf·cm}/1600 rpm (Pipe outer periphery)

(4) Method of correction by way of the polar coordination method

• Balance piece attachment point

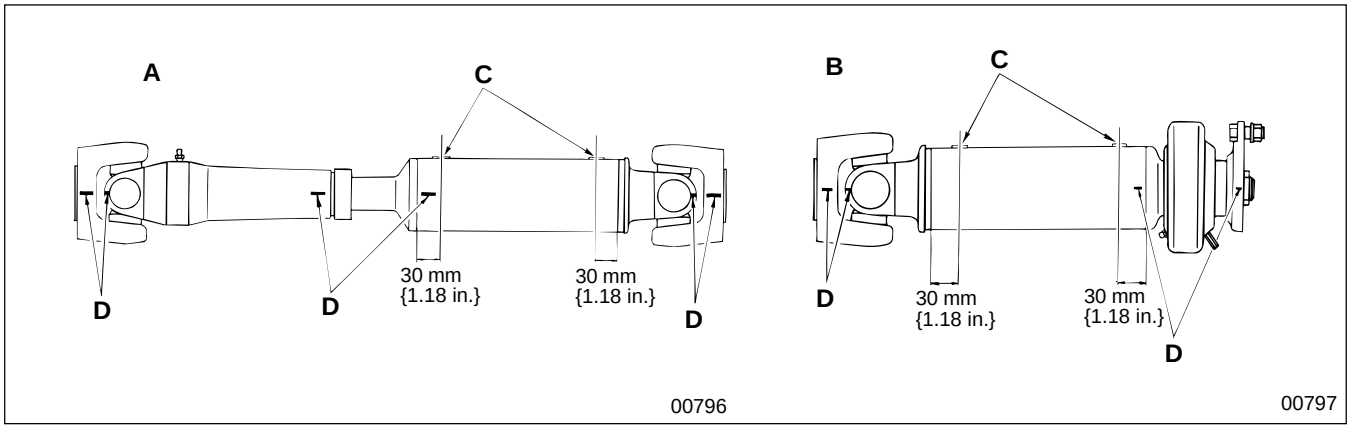

A : Rear propeller shaft
B : Front propeller shaft
C : Balance piece attachment point
D : Alignment mark

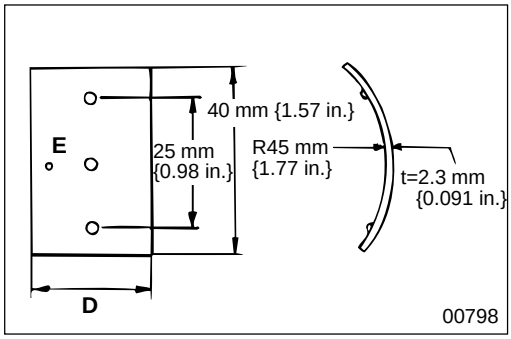

• Balance pieces available

Part name	Mass {oz}	Dimension D mm {in.}
Balance piece G	10 {0.35}	14 {0.55}
Balance piece A	20 {0.71}	28 {1.1}
Balance piece B	40 {1.41}	55.7 {2.19}
Balance piece C	60 {2.36}	83.5 {3.29}
Balance piece H	30 {1.06}	42 {1.65}

E : Mass punch mark

NOTE

- **Maximum balance piece allowed for one point is 120 g {4.23 oz}.**
- **Use a combination that keeps balance pieces to the minimum.**

MITSUBISHI
FUSO

FH

Service Manual

Group 26
Front Axle

Table of Contents

BACK

HOME

MITSUBISHI FUSO TRUCK OF AMERICA, Inc.

Pub No. TWME9502-26

GROUP 26 FRONT AXLE

SPECIFICATIONS 2

STRUCTURE AND OPERATION 2

INSPECTION AND ADJUSTMENT MOUNTED IN VEHICLE
- Adjustment of Wheel Alignment 4
- Adjustment of Steering Angle 8
- Measurement of Side Slip 8

WORK BEFORE REMOVAL AND INSTALLATION OF FRONT AXLE . 9

WHEEL HUB AND BRAKE DRUM 10

FRONT AXLE, KNUCKLE AND KINGPIN 18

SPECIFICATIONS/STRUCTURE AND OPERATION

SPECIFICATIONS

Item		Specifications
Front axle	Model	F040T
	Type	I section, reverse Elliot type
Kingpin	Outer diameter × Length mm {in.}	35×195 {1.38×7.68}
Tread	mm {in.}	1785 {70.3}
Mass	kg {lb}	Approximately 185 {405}

STRUCTURE AND OPERATION
Front Axle, Knuckle and Kingpin

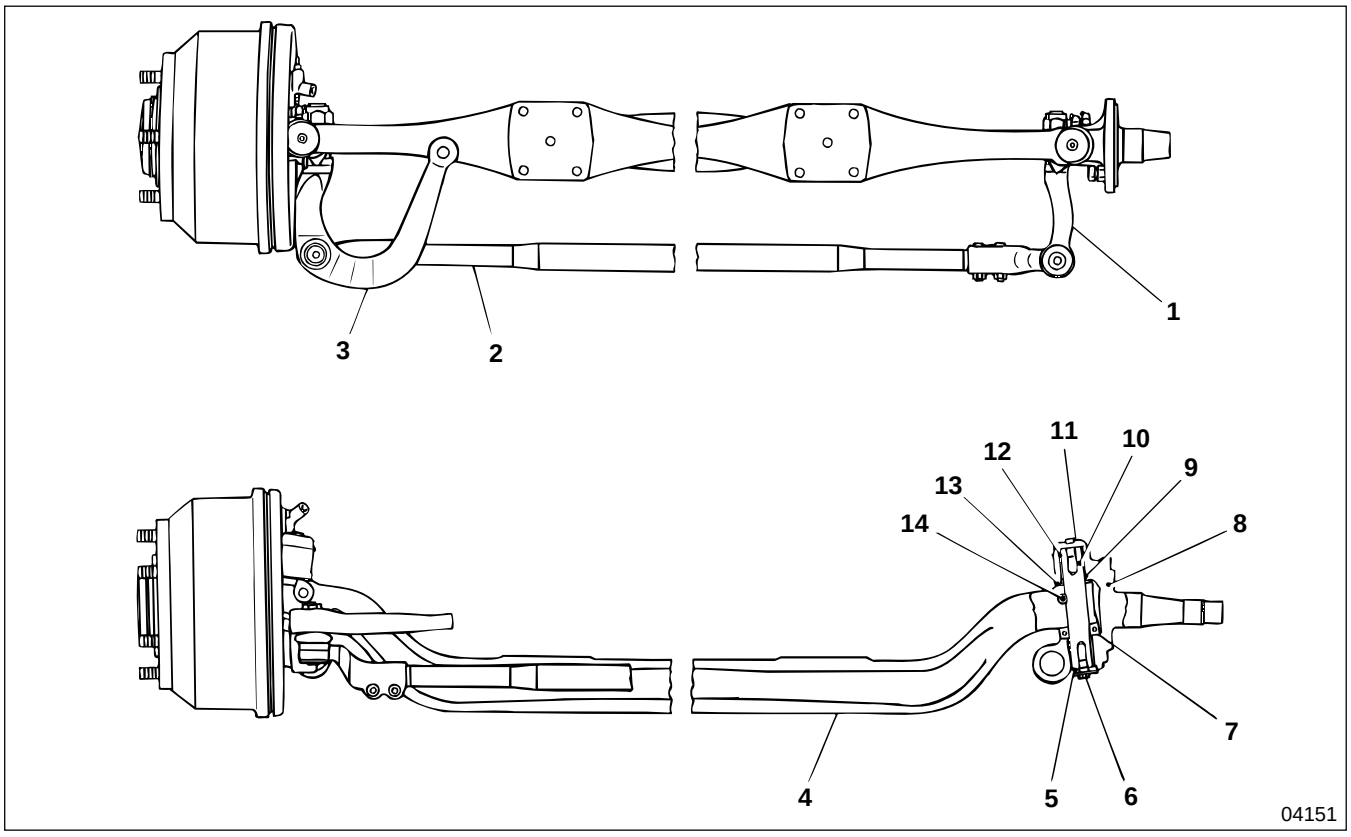

1 Tie rod arm
2 Tie rod assembly
3 Knuckle arm
4 Front axle
5 Dust seal
6 Lower kingpin cover
7 Bearing
8 Knuckle
9 Oil seal
10 Kingpin
11 Kingpin cap
12 Bushing
13 Thrust washer
14 Set bolt

Wheel Hub and Brake Drum

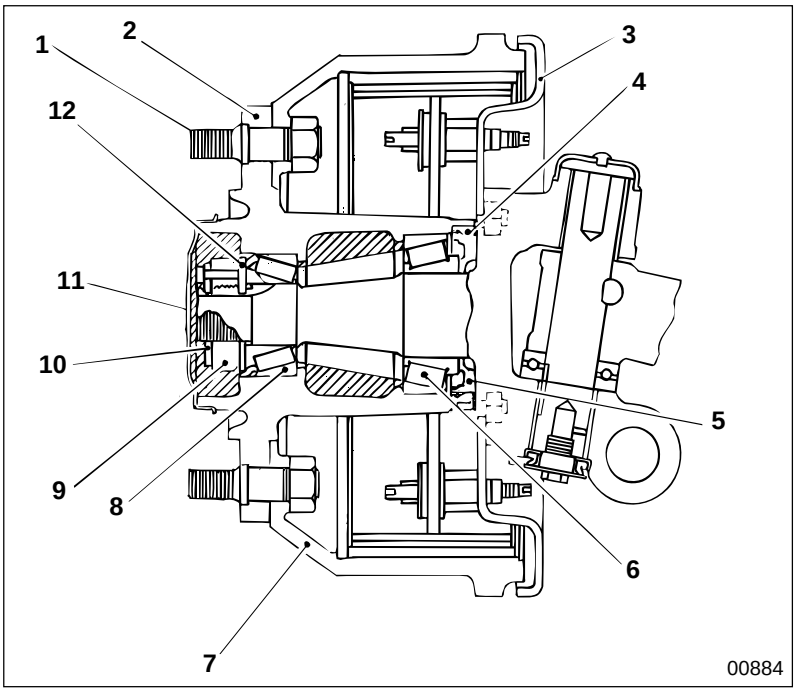

1 Hub bolt
2 Front wheel hub
3 Front brake assembly
4 Oil seal
5 Knuckle retainer
6 Inner bearing
7 Front brake drum
8 Outer bearing
9 Lock nut
10 Lock plate
11 Wheel hub cap
12 Lock washer

INSPECTION AND ADJUSTMENT MOUNTED IN VEHICLE

Adjustment of Wheel Alignment

Service standards

Unit : mm {in.}

Location	Maintenance item		Standard value	Limit	Remedy
—	Wheel alignment	Toe-in (With tires on the ground)	0±1 {0±0.039}	—	Adjust
		Camber	1°30'±1°00'	—	Adjust
		Caster	2°30' $^{+1°30'}_{-1°00'}$	—	Adjust
		Kingpin inclination angle	7°00'	7°00'±30'	Replace

Tightening torque

Unit : N·m {lbf.ft, kgf·m}

Location	Parts to be tightened	Tightening torque	Remarks
1	Nut (Tie rod end clamp fastening)	78 {58, 8}	Wet

NOTE

- **Measure the wheel alignment when the vehicle is empty and level.**
- **Be sure that each part of the front axle has been serviced perfectly before adjusting the wheel alignment.**

Before adjusting the wheel alignment, check for the following faults:

- Play in front wheel hub
- Play or looseness in kingpin
- Play or looseness in the joint between the tie rod and the knuckle arm
- Looseness of any fasteners
- Permanently set or damaged leaf springs
- Incorrect tire pressure
- Power steering booster backlash adjustment incorrect

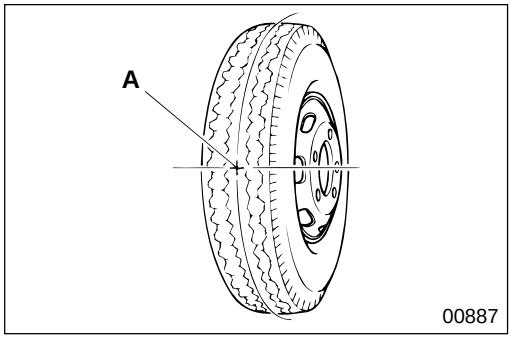

(1) Measurement and adjustment of toe-in

- Point the front wheels forward exactly in running order.
- Put mark **A** on the left and right front tires at the height of front wheel axis and in the middle of the tire width.

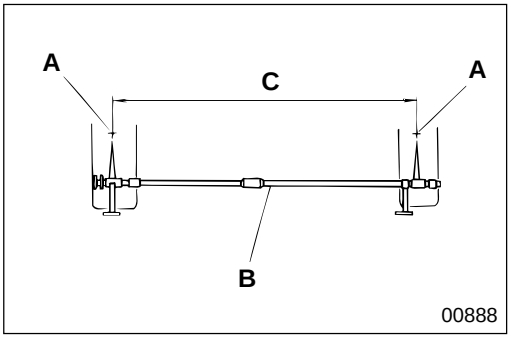

- Align the two points of toe-in gauge **B** to the respective marks **A** on the front tires. Measure the distance **C** between the marks at the front of the vehicle.

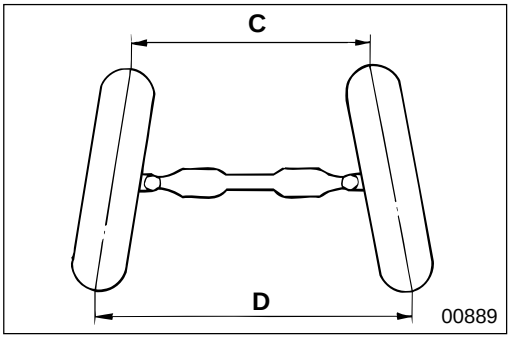

- Rotate the tires 180° and measure distance **D** between the marks at the rear of the vehicle with the tires on the ground.
- Check if the difference between distances **C** and **D** is within the standard value.

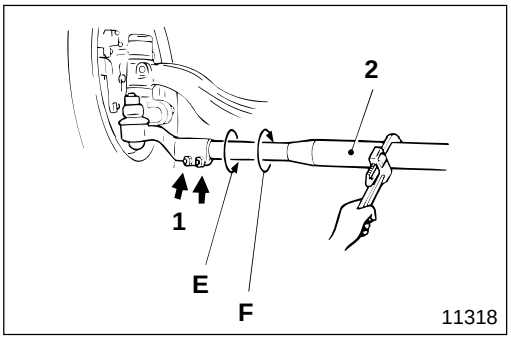

- If the measured value deviates from the standard value, with the tires pointed forward, loosen the left and right pairs of nuts **1**. (Total four nuts)
- Adjust the toe-in to the standard value by turning tie rod **2** with a pipe wrench.
  E : To adjust toe-in outward.
  F : To adjust toe-in inward.
  (★ : If tie rod **2** does not swing after the adjustment on 🕮 P26-6, redo from this item.)

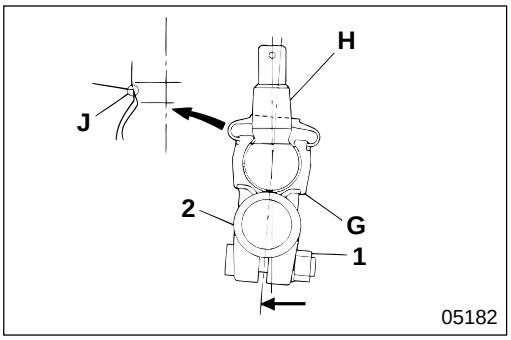

- When tightening nuts **1**, push down and hold tie rod **2** backward or forward in the longitudinal direction of the vehicle so that left and right tie rod ends **G** are in contact (**J** as illustrated) with ball studs **H** at the same time.
- Tighten nuts **1** without allowing tie rod ends **G** to move backward or forward in the longitudinal direction of the vehicle.
- If you have to do the above work on your own; after you tighten nuts on one side of tie rod end **G**, when you tighten the nuts on the other end of the tie rod, make sure you keep the tie rod pushed down in the same direction.

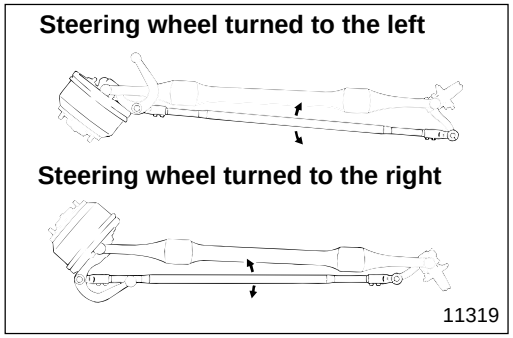

- After adjustment, turn the steering wheel to the left (until the knuckle stopper bolt is contacted), then shake tie rod **2** backward and forward in the longitudinal direction of the vehicle and see if the tie rod moves. Do the same with the steering wheel turned to the right.
  (If the tie rod can be moved, it means that tie rod end **G** and ball stud **H** are in simultaneous contact.)

WARNING⚠

You must be careful not to catch your hand when turning the steering wheel to the left or right, since the tie rod moves.

- If tie rod **2** does not swing, redo the procedure from the item marked ★. 🕮 P26-5

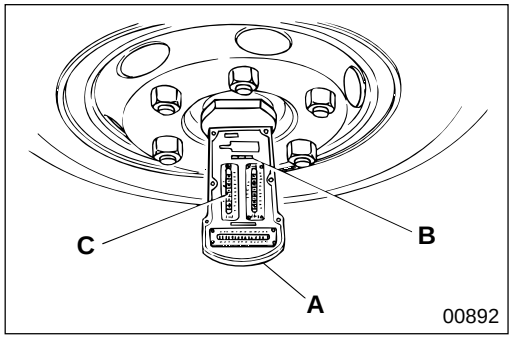

(2) Measurement of camber

- Point the front wheels exactly forward.
- Remove the hub caps.
- Wipe off grease from the knuckle end, and attach camber/caster/kingpin gauge **A** to the knuckle.
- While keeping the bubble in level **B** centered, measure the camber angle by reading the scale mark at the center of the bubble on camber scale **C**.
  Follow this procedure to measure the camber angles on the left and right sides.

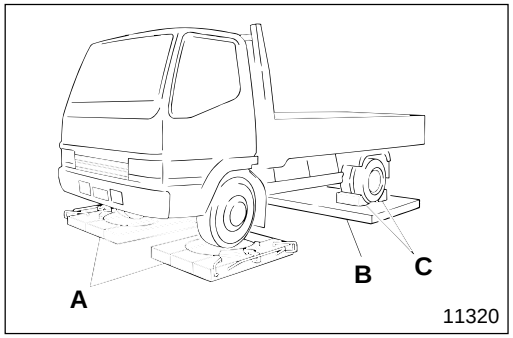

(3) Measurement of caster and kingpin inclination angle

- Prepare a platform **B** having the same height as turning radius gauges **A** and place the platform under the rear wheels so that the vehicle is kept level.
- Keep the turning radius gauges **A** locked.
- Jack up the vehicle and set the left and right wheels so that the ground contact area of both front tires and the turntables of turning radius gauges **A** meet at their respective centers.

WARNING⚠

- **After jacking up the vehicle, chock the rear wheels securely with chocks C.**
- **Do not remove chocks C until the entire operation is completed.**

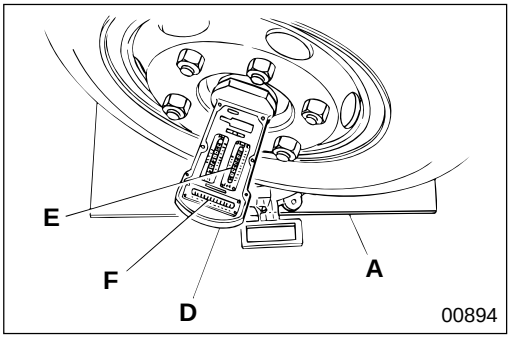

- Unlock turning radius gauge **A**, and set the scale to 0°.
- As in measuring camber explained previously, attach camber/caster/kingpin gauge **D** tightly to the front wheel hub and keep the bubble centered.
- Apply the brake to the front wheels and turn the steering wheel slowly from the 0° point on the scale of turning radius gauge **A**, until direction changes 20° to the left for the left front wheel and 20° to the right for the right front wheel.

NOTE

It is not possible to obtain an exact reading of camber unless the brake is applied to the front wheels because the tires might rotate slightly.

- At the 20° point, align the bubbles in caster scale **E** and kingpin scale **F** to 0° by turning the adjuster.

NOTE

Kingpin scale F has scales for left and right; use the left scale when adjusting the left wheel, and the right scale when adjusting the right wheel.

- Turn the steering wheel slowly until the left front wheel changes its direction 20° to the right, or until the right front wheel changes its direction 20° to the left, past the 0° point of turning radius gauge **A** scale. At this point read the scale marks at the center of the bubbles on caster scale **E** and kingpin scale **F**. The scale marks indicate the caster and kingpin inclination angles.

INSPECTION AND ADJUSTMENT MOUNTED IN VEHICLE

Adjustment of Steering Angle

Service standards

Location	Maintenance item		Standard value	Limit	Remedy
—	Steering angle	Inside (Outside: reference)	54° (38°52´)	—	Adjust

Tightening torque

Unit : N·m {lbf.ft, kgf·m}

Location	Parts to be tightened	Tightening torque	Remarks
2	Lock nut (Knuckle stopper bolt fastening)	71±12 {52±9, 7.25±1.25}	—

NOTE

Be sure that wheel alignment is adjusted perfectly before adjusting the steering angle.

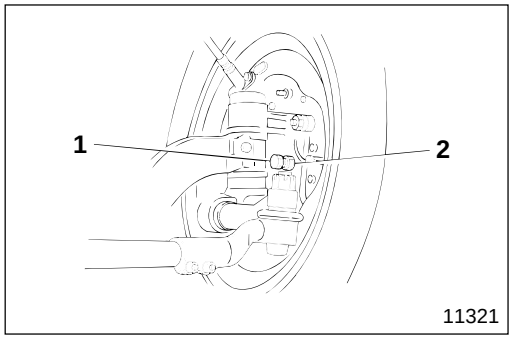

- To adjust the steering angle, set the turning radius gauges and platform in the same way as for caster and kingpin inclination angle measurement.
- Turn the steering wheel to the left or right completely, and from the position where the turning radius gauge is aligned to 0°, adjust knuckle stopper bolt **1**. Adjust so that the steering angle is within the standard inside steering angle value, to the left for the left front wheel, and to the right for the right front wheel. Then, tighten lock nut **2** at specified torque.

Measurement of Side Slip

NOTE

Be sure that wheel alignment is adjusted fully before measuring side slip.

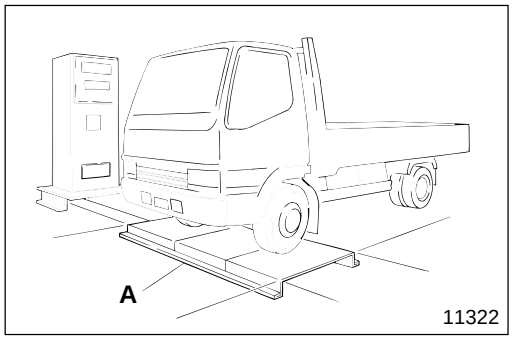

- Point the front wheels exactly forward.
- Maintain this position and slowly move vehicle forward, over side slip tester **A**, as slowly as possible.

NOTE

Make sure, when measuring side slip, that the wheels point exactly forward when the vehicle passes over side slip tester A. Do not allow the wheels to veer from side-to-side.

- The side slip is indicated by side slip tester **A** after the vehicle has passed through the tester. Readjust wheel alignment if slippage is 3 mm {0.12 in.} or more per meter {3.28 ft.}.

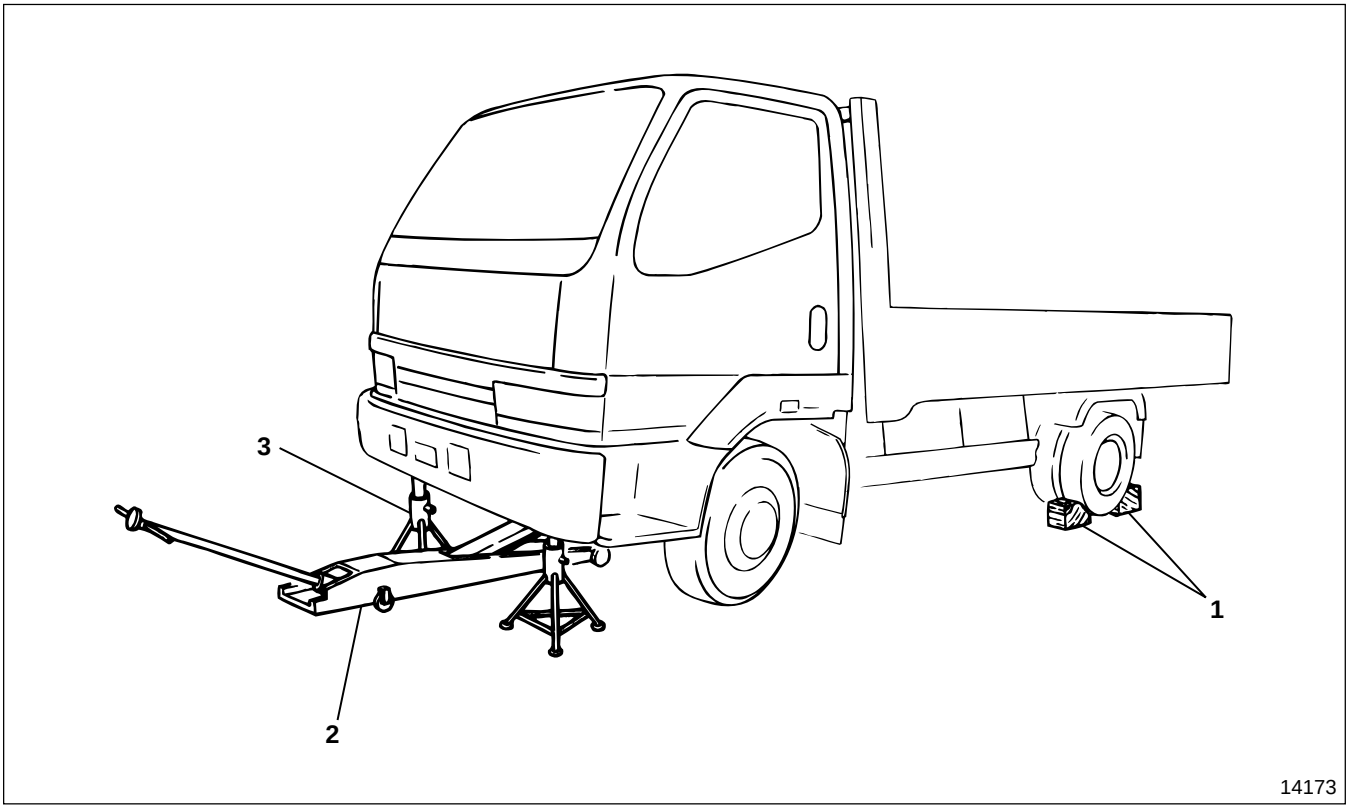

● **Work sequence before removal**

1 Place wheel chocks.
2 Jack up the front axle with a garage jack.
3 Support the front frame on rigid racks.

WARNING⚠

- **Chock the wheels securely so the vehicle does not move.**
- **Do not remove the chocks until the entire operation is completed.**
- **Supporting a vehicle on a garage jack only is extremely dangerous, so always support the frame on rigid racks.**
- **Leave the garage jack and rigid racks in place until the entire operation is completed. Never remove them during the operation.**

● **Work sequence after installation**

Follow the work sequence before removal in reverse.

WHEEL HUB AND BRAKE DRUM

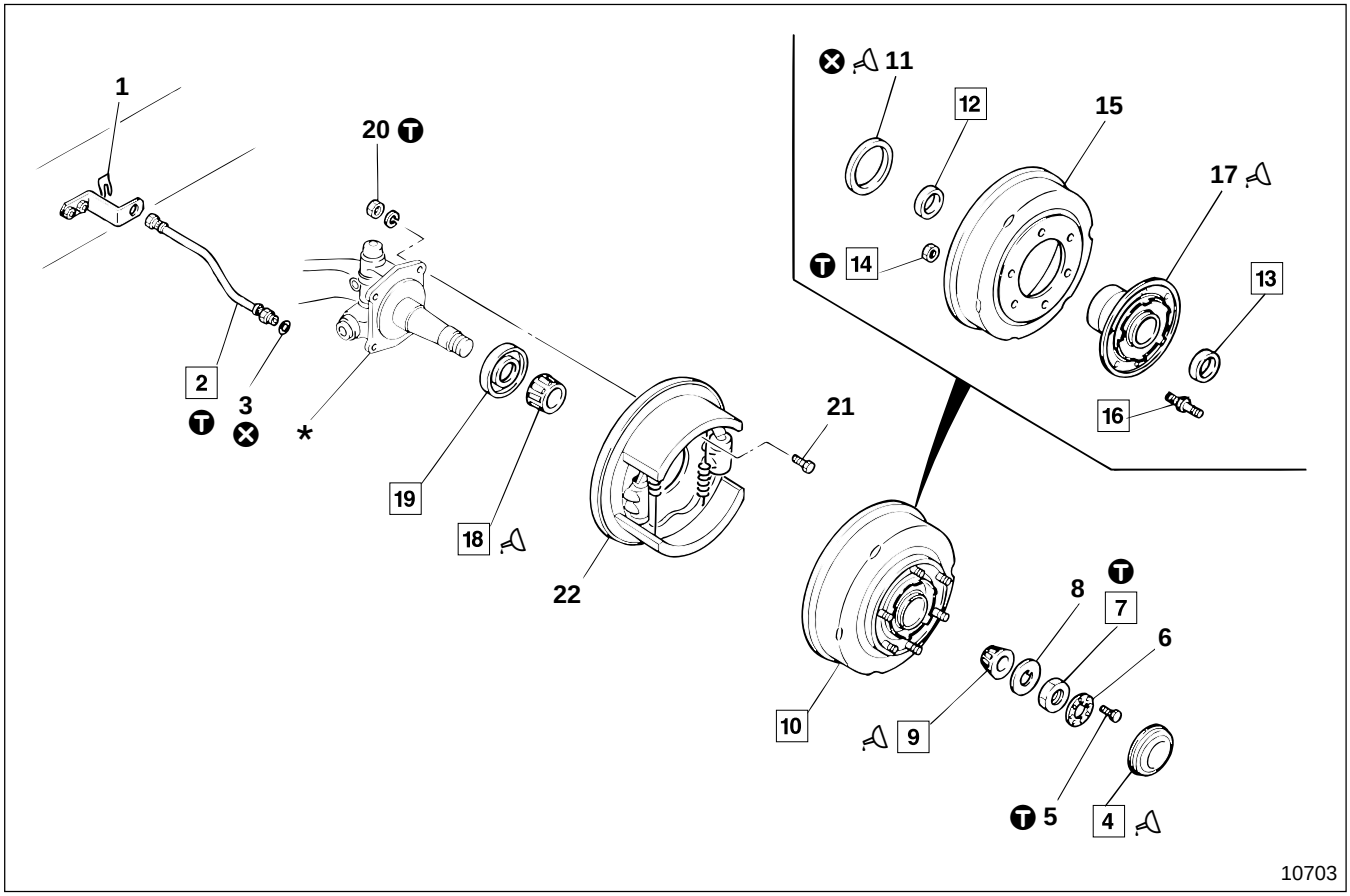

● **Disassembly sequence**

1 Clip
2 Brake hose
3 Packing
4 Wheel hub cap
5 Bolt
6 Lock plate
7 Lock nut
8 Lock washer
9 Outer bearing inner race
10 Wheel hub and brake drum assembly
11 Oil seal
12 Inner bearing outer race
13 Outer bearing outer race
14 Nut
15 Brake drum Gr 35
16 Hub bolt
17 Wheel hub
18 Inner bearing inner race
19 Knuckle retainer
20 Nut
21 Bolt
22 Brake assembly Gr 35

*: Knuckle P26-18
⊗: Non-reusable parts

CAUTION

Be sure to protect brake hose 2 from dust by fitting blanking plugs after removal.

NOTE

Do not disassemble brake drum 15 and wheel hub 17 except for replacement.

● **Assembly sequence**

Follow the disassembly sequence in reverse.

WARNING

You must bleed air from the brake system after installing the brake hose, failure to do so would cause the brake to malfunction. Gr 35

CAUTION

Be careful not to damage oil seal 11 when installing wheel hub and brake drum assembly 10 onto knuckle *.

Service standards

Location	Maintenance item	Standard value	Limit	Remedy
9, 12, 13, 18	Starting torque of wheel hub bearing	1 to 4 N·m {0.72 to 2.89 lbf.ft, 0.1 to 0.4 kgf·m}	—	Tangential force at hub bolt 9 to 35 N {1.98 to 7.94 lbf, 0.9 to 3.6 kgf}

Tightening torque

Unit : N·m {lbf.ft, kgf·m}

Location	Parts to be tightened	Tightening torque	Remarks
2	Brake hose tightening (Axle side)	21 to 30 {15 to 22, 2.1 to 3.1}	—
5	Bolt (Lock plate mounting)	7 to 11 {5.1 to 8.0, 0.7 to 1.1}	—
7	Lock nut	200 {145, 20}	Slackening off angle : 30°(one twelfth of a turn)
14	Nut (Wheel hub and brake drum mounting)	320 {235, 32.8}	—
20	Nut (Brake assembly mounting)	135 {100, 13.8}	—

Lubricant and sealant

Location	Points of application	Kinds	Quantity
4	Pack wheel hub cap	Wheel bearing grease [NLGI No.2 (Li soap)]	120±10 g {4.23±0.35 oz}
	Contact surface between wheel hub cap and wheel hub	THREEBOND 1104	As required
9, 18	Pack the space between rollers of outer and inner bearing races	Wheel bearing grease [NLGI No.2 (Li soap)]	As required
11	Lip area of oil seal	Wheel bearing grease [NLGI No.2 (Li soap)]	As required
17	Pack interior of wheel hub	Wheel bearing grease [NLGI No.2 (Li soap)]	250±10 g {8.81±0.35 oz}

Special tools

Unit : mm {in.}

Location	Tool name and shape	Part No.	Application
4	Hub cap wrench 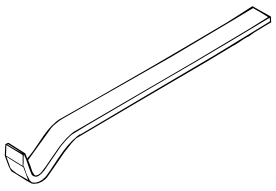 00898	MH061948	Removal of wheel hub cap
	Hub cap installer 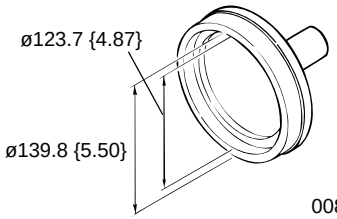 00899	MH062204	Press-fitting of wheel hub cap

WHEEL HUB AND BRAKE DRUM

Special tools

Unit : mm {in.}

Location	Tool name and shape	Part No.	Application
7	Socket wrench 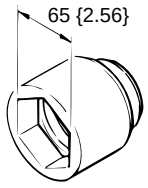	MH061531	Removal and installation of lock nut
10	Wheel hub puller 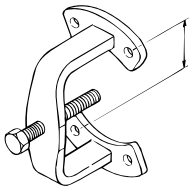	MH061966 or MH061017	Removal of wheel hub and brake drum assembly
12	Inner bearing installer 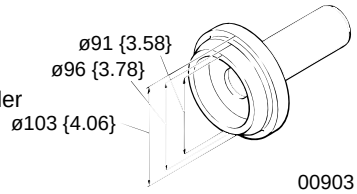	MH061974	Press-fitting of inner bearing outer race
13	Outer bearing installer 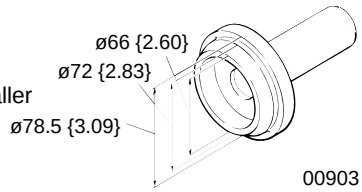	MC881484	Press-fitting of outer bearing outer race
18, 19	Lever 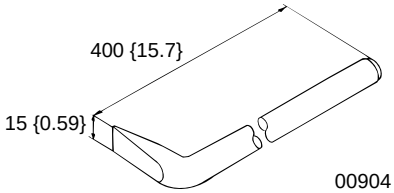	MH061683	Pinching for knuckle retainer
	Gear puller 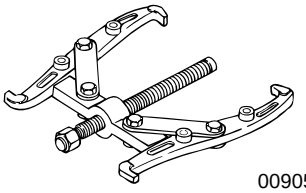	MH061102	Removal of inner bearing inner race and knuckle retainer
	Inner bearing installer 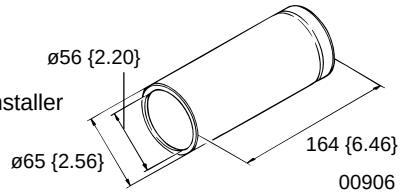	MH061475	Press-fitting of inner bearing inner race and knuckle retainer

◆ Service procedure

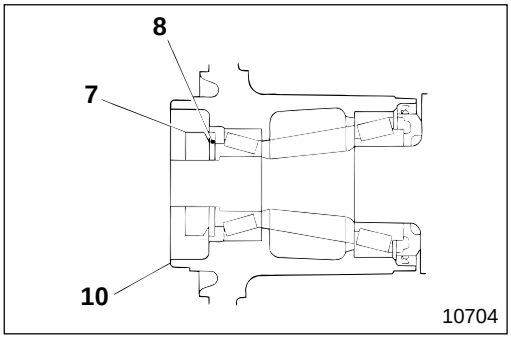

● **Starting torque of wheel hub bearing**

[Adjustment]

- Install lock washer **8** and lock nut **7** on wheel hub and brake drum assembly **10**, then tighten the lock nut at specified torque by 3 turns or more.
- Then, slacken off lock nut **7** completely until there is clearance with lock washer **8**.

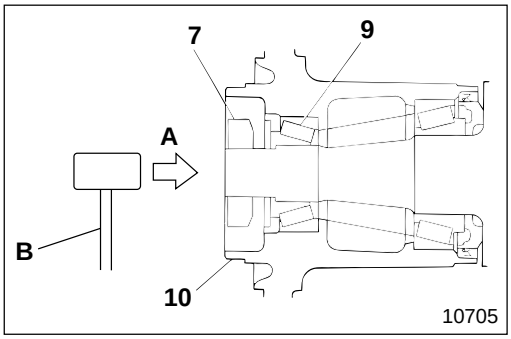

- Return outer bearing 9 toward lock nut **7** by hitting illustrated part **A** two or three times while turning wheel hub and brake drum assembly **10**.

  B : Copper-headed hammer

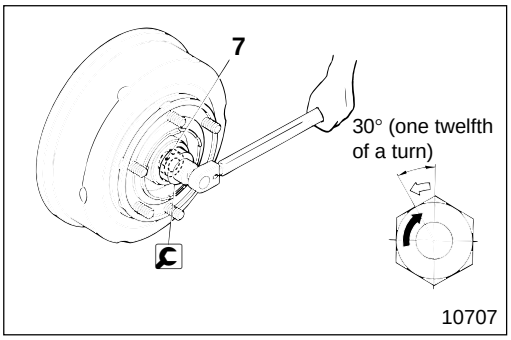

★ • After retightening lock nut **7** at specified torque, slacken it off by 30° (one twelfth of a turn).

(★: If any fault is found in the tangential force measurement in 📖 P26-14, redo the procedure from this step.)

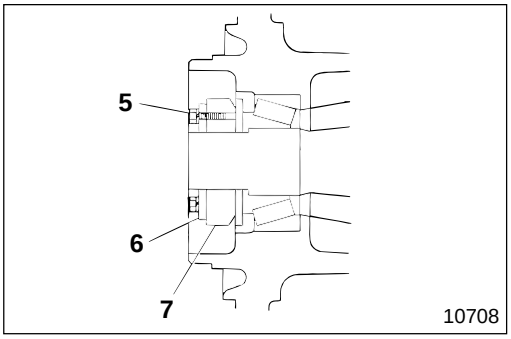

- Fit lock plate **6** into place, making sure that lock nut **7** and the mounting holes in the lock plate align, then tighten mounting bolts **5** at specified torque.

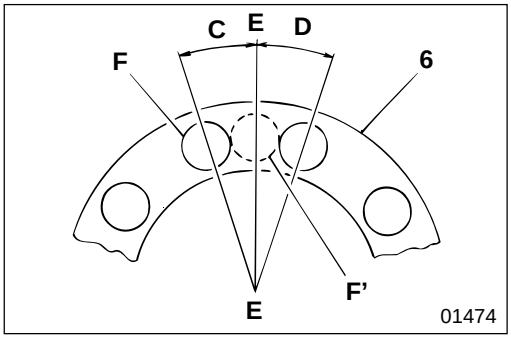

- If the mounting holes of lock plate **6** and lock nut **7** do not align, align them as follows:

Lock nut hole position	How to align lock plate hole
Range **C**	Slacken off lock nut
Range **D**	Turn over lock plate and slacken off lock nut
On line **E-E**	Turn over lock plate (Hole position changes **F´** to **F**)

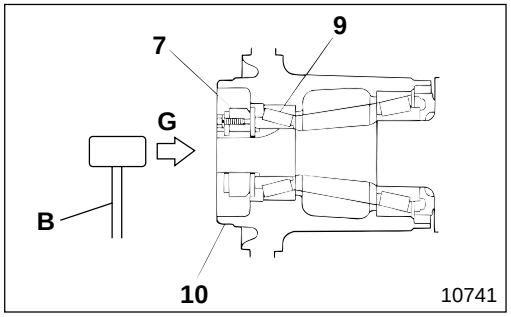

- Return outer bearing **9** toward the lock nut **7** by hitting illustrated part G two or three times while turning wheel hub and brake drum assembly **10**.
  B : Copper-headed hammer

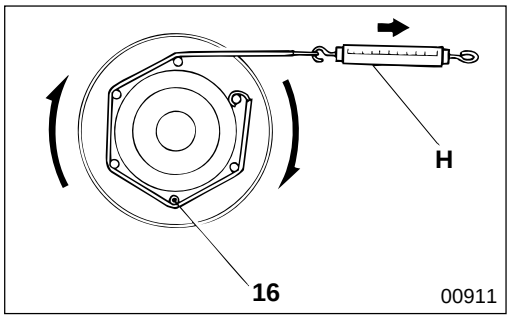

[Measurement]
- Fasten spring balance **H** to hub bolt **16** and measure the tangential force.
- If the measured tangential force is the standard value, the starting torque conforms to the standard value.
- Make sure that the starting torque is smaller than the tangential force.
- If the tangential force deviates from the specified value, adjust the starting torque again.
- If the measured value deviates from the standard value, redo the procedure from the item marked ★. P26-13
- If, after this, the result is still not satisfactory, replace outer bearings **9**, **13** and inner bearings **12**, **18**.

NOTE
- **Measure the starting torque when oil seal 11 has been installed.**
- **Make sure that the brake lining and brake drum 15 do not drag before measurement.**

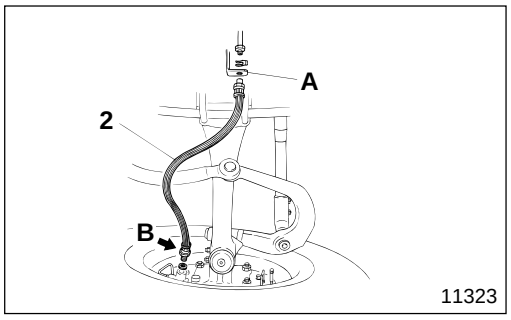

2 Removal and installation of brake hose

First remove brake hose **2** from bracket **A** (on the frame), then remove the brake hose from wheel brake **B**. For installation, follow this procedure in reverse.

CAUTION
Make sure that brake hose 2 is not twisted when you install it.

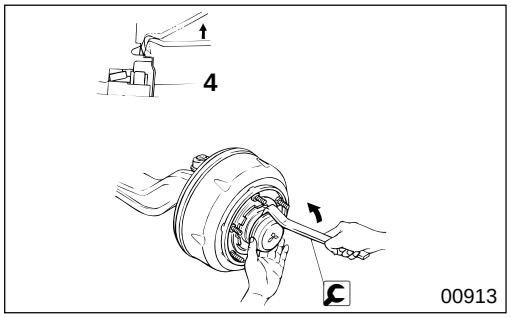

4 Wheel hub cap

[Removal]

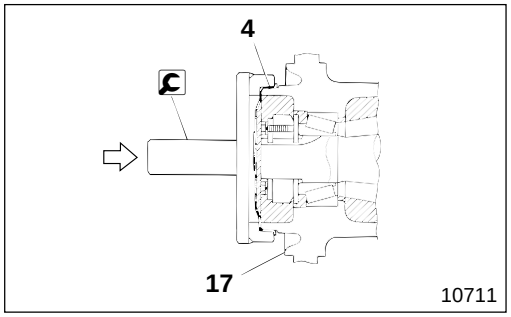

[Installation]
Pack grease into wheel hub cap **4** and apply sealant to the contact surface with wheel hub **17**, then install it.

CAUTION
Be careful during installation not to hit wheel hub cap 4 too hard with the mallet, or you will deform the contact surfaces, spoiling the water tightness.

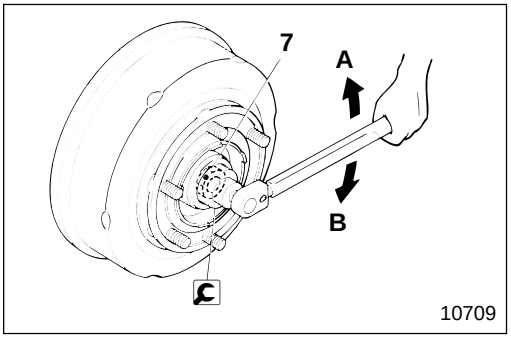

7 **Removal and installation of lock nut**

Refer to adjustment of starting torque of wheel hub bearing. P26-13

A : Removal
B : Installation

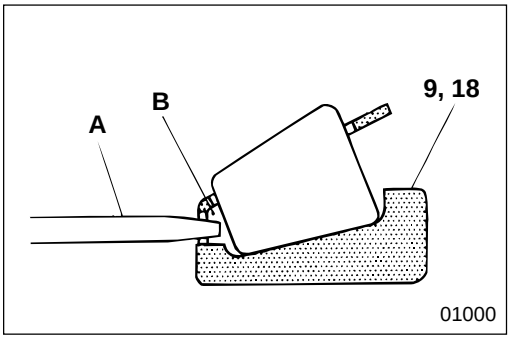

9 **18** **Packing grease into outer and inner bearing inner races**

A : Grease pump nozzle
B : Between rollers

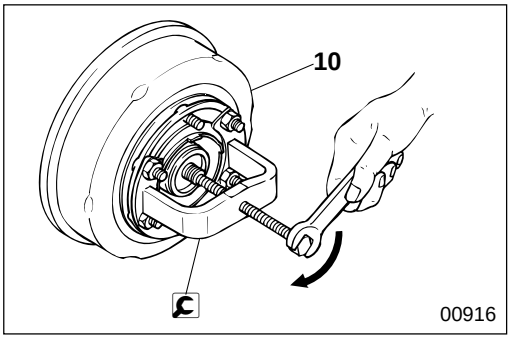

10 **Wheel hub and brake drum assembly**

[Removal]

CAUTION

Make sure you remove wheel hub and brake drum assembly 10 in a straight line to prevent damage to oil seal 11.

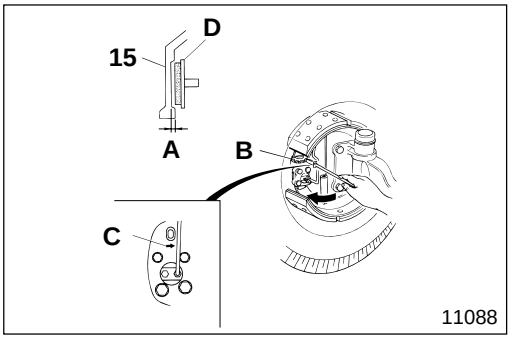

- If it is hard to remove wheel hub and brake drum assembly **10** because brake drum **15** has stepped wear **A**, remove the wheel hub and brake drum assembly as follows:
- Turn adjuster **B** in the opposite direction to arrow **C** on the backing plate, and expand the clearance between brake drum **15** and brake shoe **D**. Then remove the brake drum.

CAUTION

Be sure to correct brake drum 15 if it is faulty. **Gr 35**

[Installation]

After installing wheel hub and brake drum assembly 10, adjust the brake shoe clearance. Gr 35

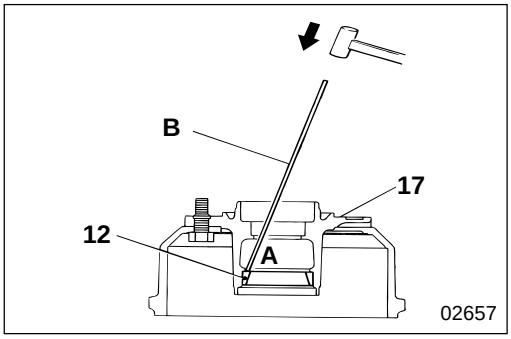

12 **Inner bearing outer race**

[Removal]

Drive out inner bearing outer race **12** from the two indented parts **A** in wheel hub **17**.

B : Pin-punch

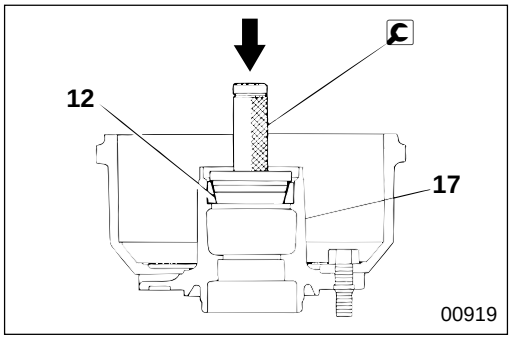

[Installation]

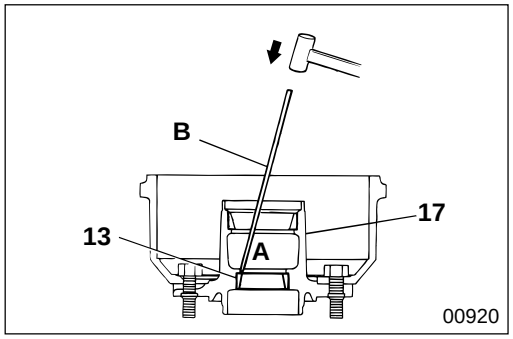

13 **Outer bearing outer race**

[Removal]
Drive out outer bearing outer race **13** from the two indented parts **A** in wheel hub **17**.
B : Pin-punch

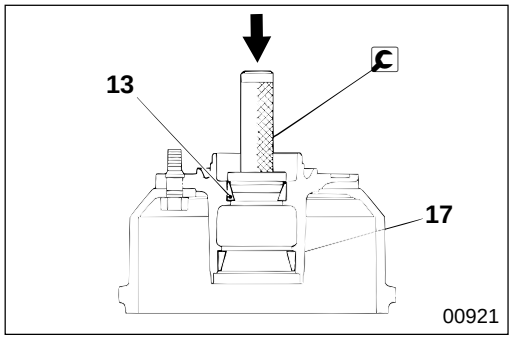

[Installation]

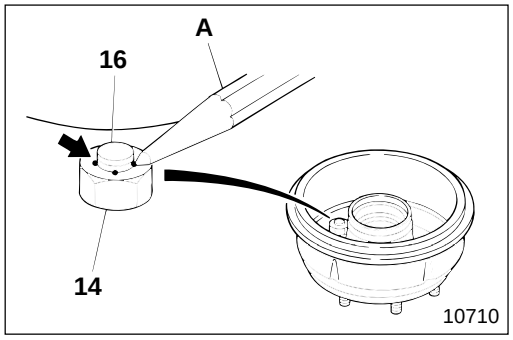

14 **16** **Installation of nut and hub bolt**

Tighten nut **14** at specified torque, then caulk hub bolt **16** evenly at four points.
A : Punch

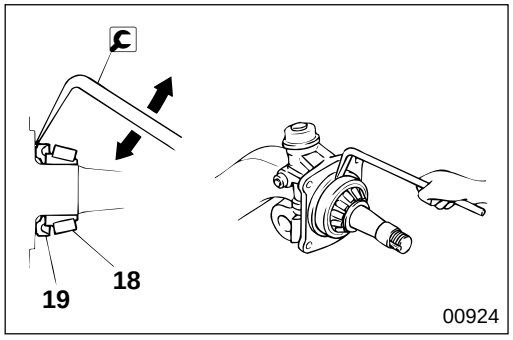

18 **19** **Inner bearing inner race and knuckle retainer**

[Removal]

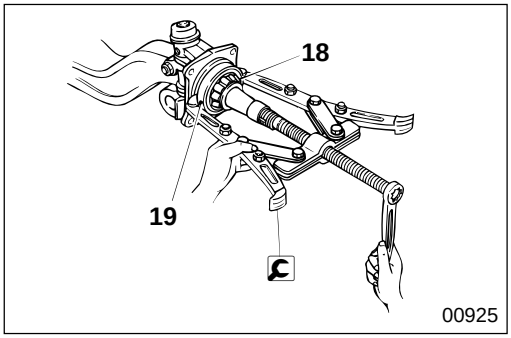

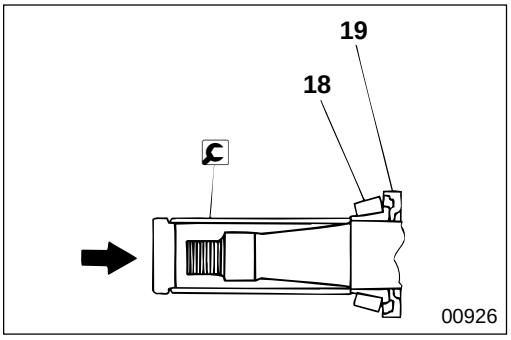

[Installation]

FRONT AXLE, KNUCKLE AND KINGPIN

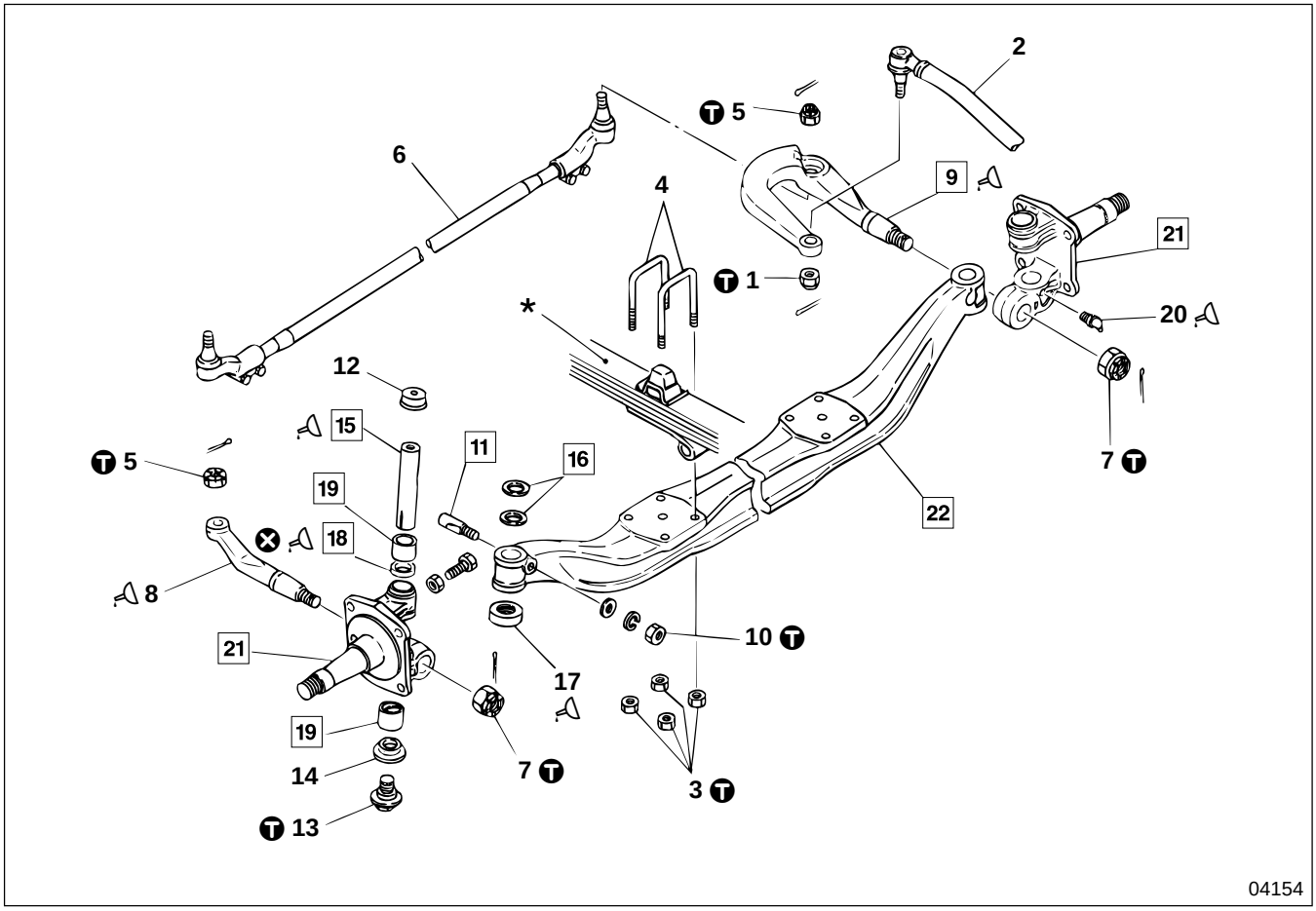

● **Disassembly sequence**

1 Nut
2 Drag link Gr 37
3 U-bolt nut Gr 33
4 U-bolt
5 Nut
6 Tie rod Gr 37
7 Nut
8 Tie rod arm
9 Knuckle arm
10 Nut
11 Set bolt
12 Kingpin cap
13 Lower kingpin cover
14 Dust seal
15 Kingpin
16 Thrust washer
17 Bearing
18 Oil seal
19 Bushing
20 Grease nipple
21 Knuckle
22 Front axle

*: Front leaf spring Gr 33
⊗: Non-reusable parts

● **Assembly sequence**

21 → 20 → 19 → 18 ┐
→ 15 → 11 → 10 → 14 → 13 → 12 → 9 → 8 → 7 → 6 → 5 → 4 → 3 → 2 → 1
22 → 17 → 16 ┘

Repair kit : Kingpin kit

● **Work after assembly**

P26-20

Service standards

Unit : mm {in.}

Location	Maintenance item		Standard value (Basic diameter in [ ])	Limit	Remedy
15	Kingpin	Outer diameter	$[35]\ ^{-0.002}_{-0.015}$ $\left\{[1.38]\ ^{-0.000079}_{-0.00059}\right\}$	34.9 {1.37}	Replace
		Inclination angle	7°	7°±30'	
19	Kingpin bushing	Inner diameter (after press-fitting into knuckle)	$[35]\ ^{+0.045}_{+0.018}$ $\left\{[1.38]\ ^{+0.0018}_{+0.00071}\right\}$	—	Replace
		Clearance between kingpin and kingpin bushing	0.02 to 0.06 {0.00079 to 0.0024}	0.15 {0.0059}	Replace
21, 22	Vertical clearance between knuckle and front axle		0.1 {0.0039} or less	0.2 {0.0079}	Adjust using thrust washer
22	Front axle	Bend in longitudinal direction	2.5 {0.098} or less	7 {0.28}	Replace
		Bend in vertical direction	3 {0.12} or less	7 {0.28}	

Tightening torque

Unit : N·m {lbf.ft, kgf·m}

Location	Parts to be tightened	Tightening torque	Remarks
1	Nut (Drag link mounting)	190±47.5 {140±35, 19.4±4.85}	—
3	U-bolt nut (U-bolt mounting)	240±36 {175±27, 24.5±3.7}	Wet
5	Nut (Tie rod mounting)	190±48 {140±35, 19.4±4.85}	—
7	Nut (Tie rod arm and knuckle arm mounting)	686±98 {505±72, 70±10}	—
10	Nut (Set bolt tightening)	29 {22, 3}	—
13	Kingpin lower cover	39±10 {29±7, 4±1}	—

Lubricant

Location	Points of application	Kinds	Quantity
8, 9	Thread areas of knuckle arm and tie rod arm	Wheel bearing grease [NLGI No.2 (Li soap)]	As required
15	Periphery of kingpin and pack through hole	Wheel bearing grease [NLGI No.2 (Li soap)]	As required
17	Pack in bearing	Wheel bearing grease [NLGI No.2 (Li soap)]	As required
18	Lip area of oil seal	Wheel bearing grease [NLGI No.2 (Li soap)]	As required
20	Supply via grease nipple	Wheel bearing grease [NLGI No.2 (Li soap)]	As required

Special tools

Unit : mm {in.}

Location	Tool name and shape	Part No.	Application
11	Kingpin set bolt remover 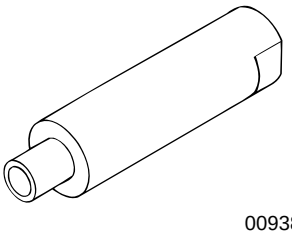 00938	MH061688	Removal of kingpin set bolt
15	Kingpin puller 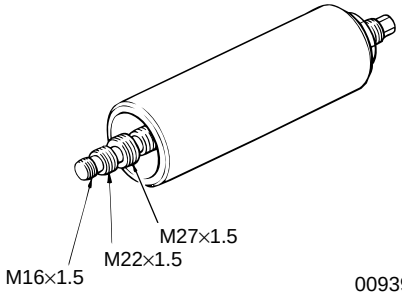 00939	MH061684	Removal of kingpin
18	Oil seal installer 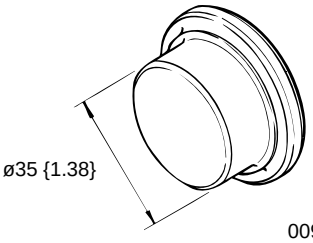 00940	MH062201	Installation of oil seal
19	Kingpin bushing remover 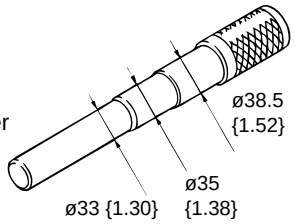 00941	MH061037	Removal and installation of kingpin bushing

◆ Service procedure

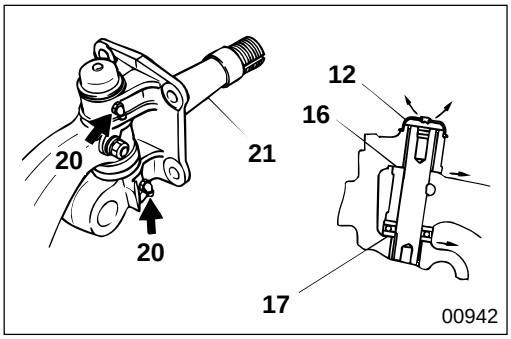

00942

● Work after assembly

Pack knuckle **21** with grease via grease nipple **20**. Pack until grease starts overflowing from the dust cap of upper cap **12**, thrust washer **16**, and the press side of bearing **17**.

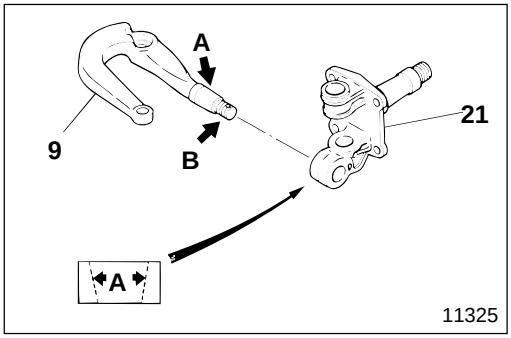

9 **21** **Installation of knuckle arm and knuckle**

(1) Reassembly of existing knuckle arm 9 and/or knuckle 21

- Polish taper surfaces **A** of knuckle arm **9** and knuckle **21** with emery paper (120 grit or finer) uniformly, until abrasion traces left by the emery paper are only just visible. For new parts, polishing is not necessary.
- Clean taper surfaces **A** of knuckle arm **9** and knuckle **21**, and thread **B** of the knuckle arm. (Use a cleaning solvent for acetone color checking or other solvent.)
- Install knuckle arm **9** after applying grease to thread **B**. (Do not grease the taper surface of the knuckle arm and knuckle **21**.)
- Tighten new nut **7** at specified torque. Make sure you align the pin hole by turning in the tightening direction when you insert and fix split pin **C**.

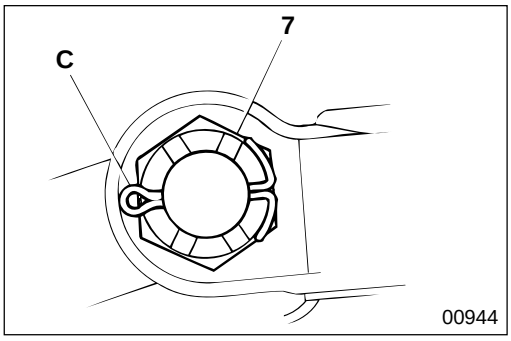

(2) Installation of new knuckle arm 9 and knuckle 21

- Clean taper surfaces **A** of knuckle arm **9**, knuckle **21**, and thread **B** of the knuckle arm, and install them without greasing.
- Tighten new nut **7** at specified torque. Make sure you align the pin hole by turning in the tightening direction when you insert and fix split pin **C**.

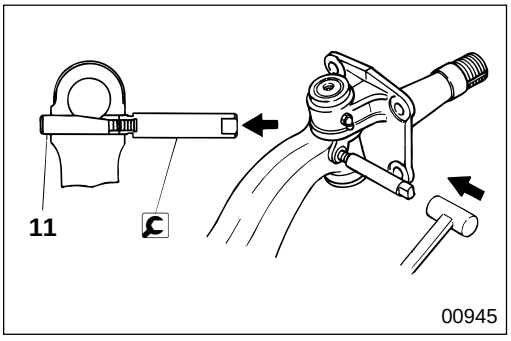

11 **Removal of set bolt**

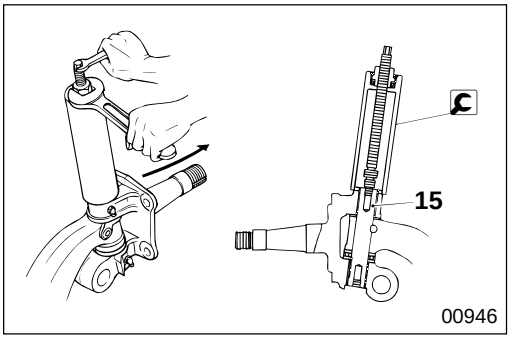

15 **Removal of kingpin**

- Remove the kingpin cap; tighten kingpin puller bolt into the thread of kingpin **15** to remove the kingpin.

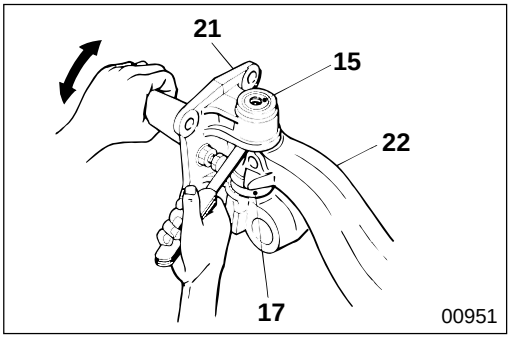

16 **21** **22** **Thrust washer, knuckle and front axle**

[Inspection]

- Assemble kingpin **15** and bearing **17** temporarily, and turn knuckle **21** a few times to smooth its operation.
- Measure the clearance between the upper surface of front axle **22** and the lower part of knuckle **21**.
- If the measured value is higher than the limit, adjust the clearance with thrust washer **16**.

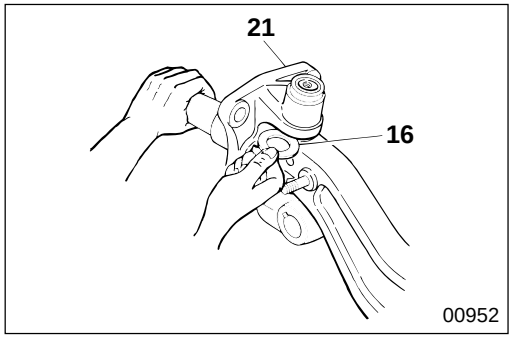

[Adjustment]

- Available adjusting thrust washer **16** thicknesses: 2.1 to 2.8 mm {0.083 to 0.11 in.} (8 thicknesses are available in 0.1 mm {0.0039 in.} increments.)
- Minimize the clearance by selecting appropriate thrust washer **16**.
- Check that knuckle **21** turns smoothly after assembly.

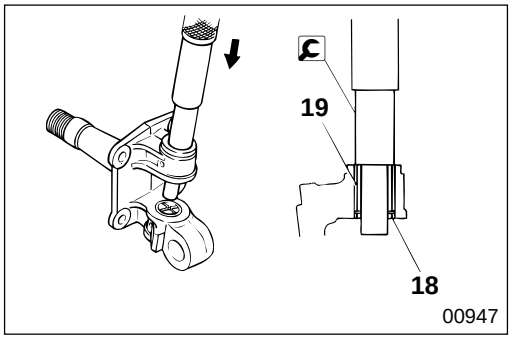

18 **19** **Oil seal and bushing**

[Removal]

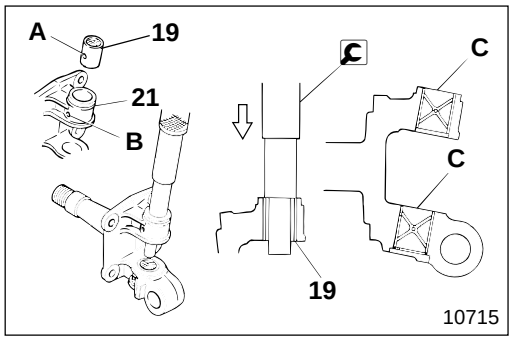

[Installation]

- Install bushing **19** so that the direction of oil hole **A** is aligned with oil hole **B** of knuckle **21** and the bushing end is set in the same plane with end **C**.

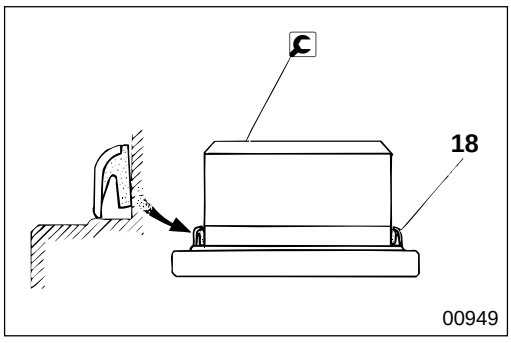

- Apply grease to the lip area of oil seal **18** and install it on oil seal installer.

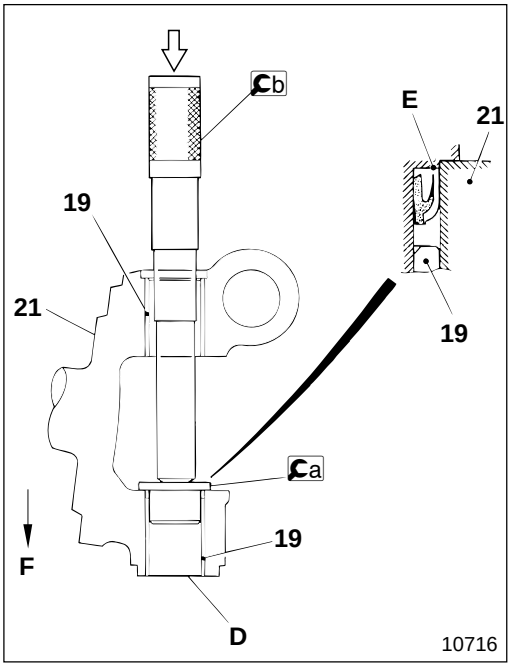

- Next, install a oil seal installer on knuckle **21** in the direction as illustrated.
- Pass b kingpin bushing remover through kingpin hole until it makes contact with a oil seal installer.
- Drive the head of b kingpin bushing remover using a mallet until a oil seal installer makes contact with knuckle **21**.
- Check that end **D** of bushing **19** is aligned with knuckle **21**.
- Make sure that oil seal end **E** does not protrude from knuckle **21**.

  F : Top of vehicle

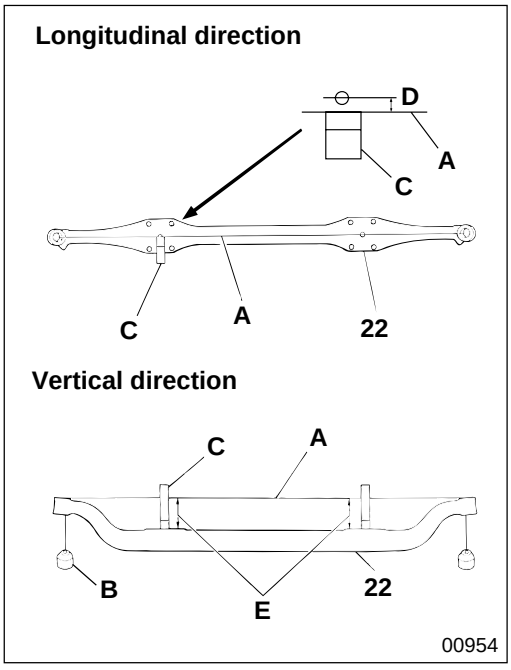

22 Inspection of front axle

(1) Measurement of bend in front axle 22 in longitudinal and vertical directions

- Pass a piece of thread **A** through the kingpin hole of front axle **22** and hang weights **B** on both ends.
- Use square **C** to find the degree of bend in both the longitudinal direction **D** and the vertical direction **E**.
- If the measured value is higher than the limit, replace front axle **22**.

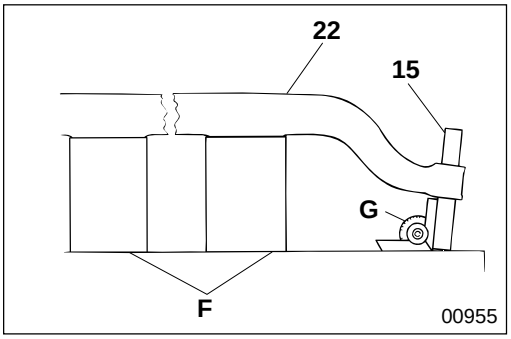

(2) Measurement of kingpin inclination angle

Mount kingpin **15** in front axle **22** as illustrated, and measure the kingpin inclination angle. If the measured value is higher the limit, replace the front axle.

F : Block gauge

G : Angle gauge

MITSUBISHI
FUSO

FH

Service Manual

Group 27
Rear Axle

Table of Contents

BACK

HOME

MITSUBISHI FUSO TRUCK OF AMERICA, Inc.

Pub No. TWME9502-27

GROUP 27 REAR AXLE

SPECIFICATIONS 2

STRUCTURE AND OPERATION 2

TROUBLESHOOTING 4

WORK BEFORE REMOVAL AND INSTALLATION OF REAR AXLE 6

WHEEL HUB AND BRAKE DRUM 8

AXLE HOUSING 18

REDUCTION AND DIFFERENTIAL 22

SPECIFICATIONS/STRUCTURE AND OPERATION

SPECIFICATIONS

Item		Specifications
Rear axle	Model	R040T
	Type	Banjo type, full floating
Reduction	Model	D040H
	Type	Single-reduction
	Tooth shape	Hypoid gear
	Speed reduction ratio	4.111
Differential	Tooth shape	Straight bevel gear
Gear oil	Grade	* Normal : Maximum air temperature during operation below 40°C {104°F} API GL-5 SAE 90 Hot areas : Maximum air temperature during operation above 40°C {104°F} API GL-5 SAE 140
	Quantity L {qts}	4.5 {4.8}
Mass kg {lb}		Approximately 285 {630}

* : When used under heavily-loaded, severe conditions such as continuous driving on uphill grades, it is recommended that you use gear oil with a SAE viscosity grade of 140. However, the air temperature must be above 10°C {50°F}.

STRUCTURE AND OPERATION

Wheel Hub and Brake Drum

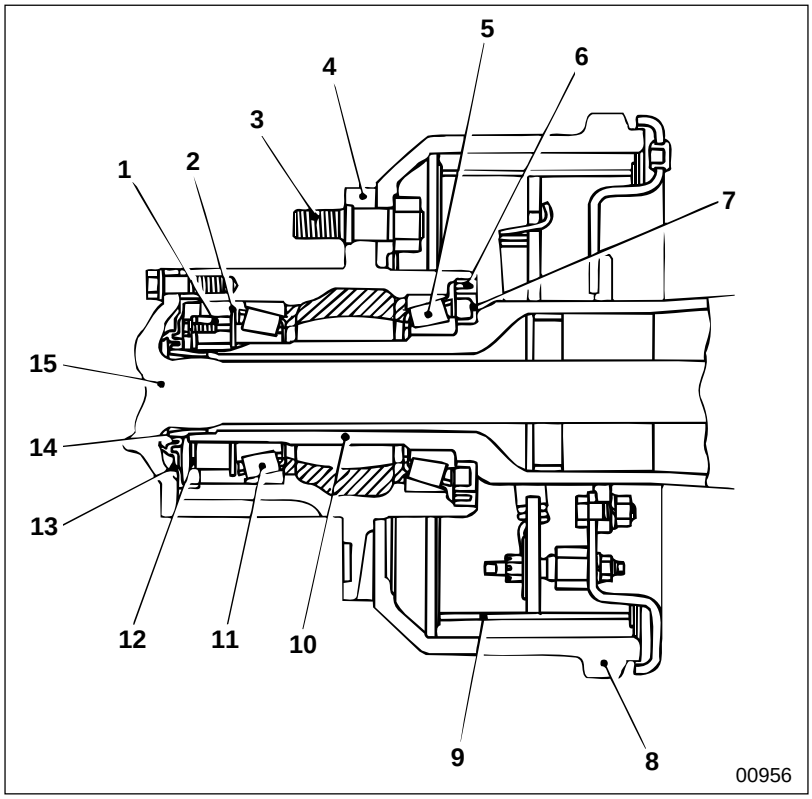

1 Lock nut
2 Lock washer
3 Hub bolt
4 Wheel hub
5 Inner bearing
6 Oil seal
7 Oil seal retainer
8 Brake drum
9 Brake assembly
10 Axle tube
11 Outer bearing
12 Lock plate
13 Oil seal
14 Oil seal retainer
15 Axle shaft

Reduction and Differential

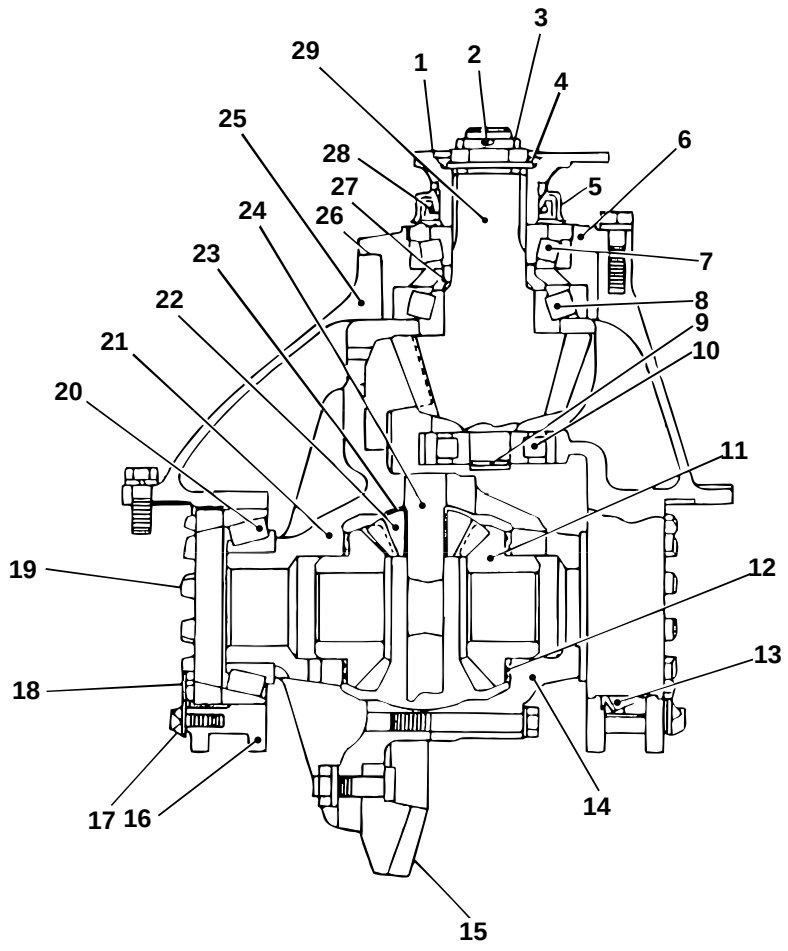

1 Companion flange
2 Split pin
3 Lock nut
4 Washer
5 Dust cover
6 Bearing retainer
7 Outer bearing
8 Inner bearing
9 Lock ring
10 Pinion pilot bearing
11 Differential gear
12 Differential gear washer
13 Lock plate
14 Differential case, RH
15 Reduction gear
16 Bearing cap
17 Lock sheet
18 Lock pawl
19 Adjusting screw
20 Side bearing
21 Differential case, LH
22 Differential pinion
23 Differential pinion washer
24 Pinion spider
25 Differential carrier
26 Shim
27 Collar
28 Oil seal
29 Reduction pinion

TROUBLESHOOTING

Possible causes	Symptoms	Oil leaking from companion flange assembly	Oil leaking from differential carrier and axle housing	Oil leaking from axle shaft	Power transmission insufficient: Propeller shaft turns but vehicle does not move	Noise when starting and changing speed	Continuous noise while cruising	Intermittent noise while cruising	Noise while cornering	Tires drag while cornering	Seizure	Damage
Wheel hub, axle housing	Axle shaft mounting bolt loose			○				○				
	Axle housing bent						○					
	Axle shaft bent						○					
	Axle shaft fractured				○							
	Axle shaft slips out of engagement				○							
	Oil seal faulty			○								
	Air breather clogged			○								
	Wheel hub bearing seized, worn or rotation faulty						○					
	Wheel hub bearing broken							○				
Reduction and differential	Gear oil excessive	○										
	Gear oil insufficient					○	○				○	
	Oil seal faulty	○										
	Sealant faulty		○									
	Side bearing seized, worn or rotation faulty						○		○			
	Side bearing broken							○				
	Side bearing preload adjusted incorrectly						○				○	
	Side bearing starting torque faulty					○	○		○			○
	Reduction and differential assembly mounting bolt and nut loose		○									
	Differential carrier cracked or damaged		○									
	Reduction gear and differential case tightening bolts loose					○		○				
	Reduction gear or reduction pinion broken				○	○	○	○	○			
	Reduction gear or reduction pinion worn						○		○			
	Reduction gear to reduction pinion backlash excessive					○						○
	Reduction gear to reduction pinion backlash insufficient						○				○	
	Reduction gear tooth contact adjusted incorrectly						○					

Symptoms / Possible causes		Oil leaking from companion flange assembly	Oil leaking from differential carrier and axle housing	Oil leaking from axle shaft	Power transmission insufficient							
					Propeller shaft turns but vehicle does not move	Noise when starting and changing speed	Continuous noise while cruising	Intermittent noise while cruising	Noise while cornering	Tires drag while cornering	Seizure	Damage
Reduction and differential	Reduction pinion assembly starting torque excessive					○	○				○	
	Reduction pinion assembly starting torque insufficient					○	○					
	Reduction pinion lock nut loose					○	○					
	Reduction pinion assembly inner bearing or outer bearing seized				○		○					
	Reduction pinion assembly inner bearing or outer bearing worn						○					
	Reduction pinion assembly inner bearing or outer bearing broken							○				
	Reduction pinion pilot bearing worn						○					
	Reduction pinion pilot bearing seized							○				
	Differential pinion spider broken				○							
	Differential gear or differential pinion broken				○			○	○	○		
	Differential gear or differential pinion seized				○					○		
	Differential gear or differential pinion worn								○	○		
	Differential gear washer worn or damaged							○	○	○		
	Differential gear backlash excessive					○						○
	Differential gear backlash insufficient								○		○	
	Play between differential gear and axle shaft spline excessive					○						○

WORK BEFORE REMOVAL AND INSTALLATION OF REAR AXLE

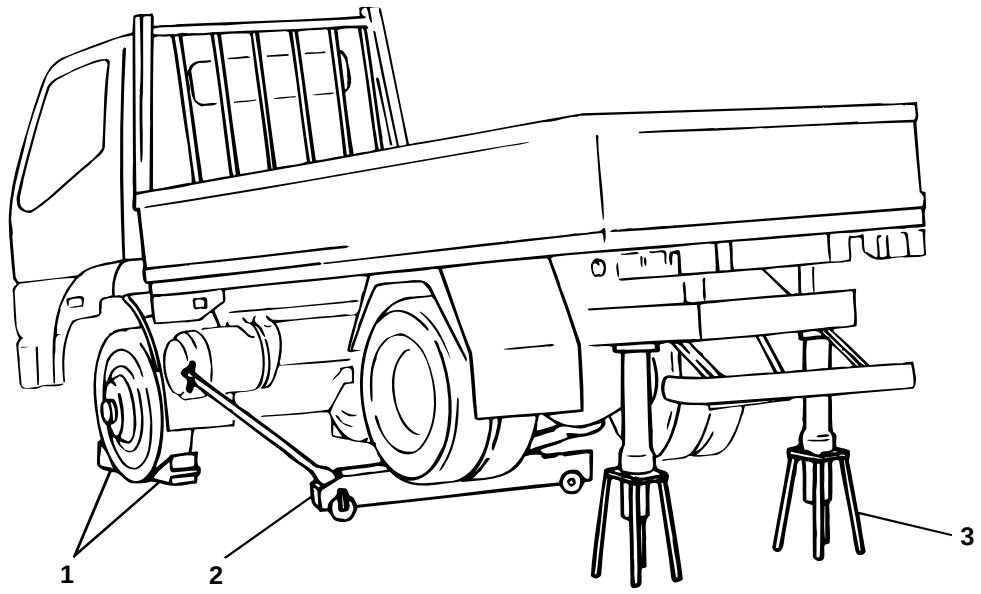

14186

● **Work sequence before removal**

1 Place wheel chocks.
2 Jack up the rear axle using a garage jack.
3 Support the rear frame on rigid racks.

WARNING⚠

- **Chock the wheels securely so the vehicle does not move.**
- **Do not remove the chocks until the entire operation is completed.**
- **Supporting a vehicle on a garage jack only is extremely dangerous, so always support the frame on rigid racks.**
- **Leave the garage jack and rigid racks in place until the entire operation is completed. Never remove them during the operation.**

● **Work sequence after installation**

Follow the work sequence before removal in reverse.

M E M O

WHEEL HUB AND BRAKE DRUM

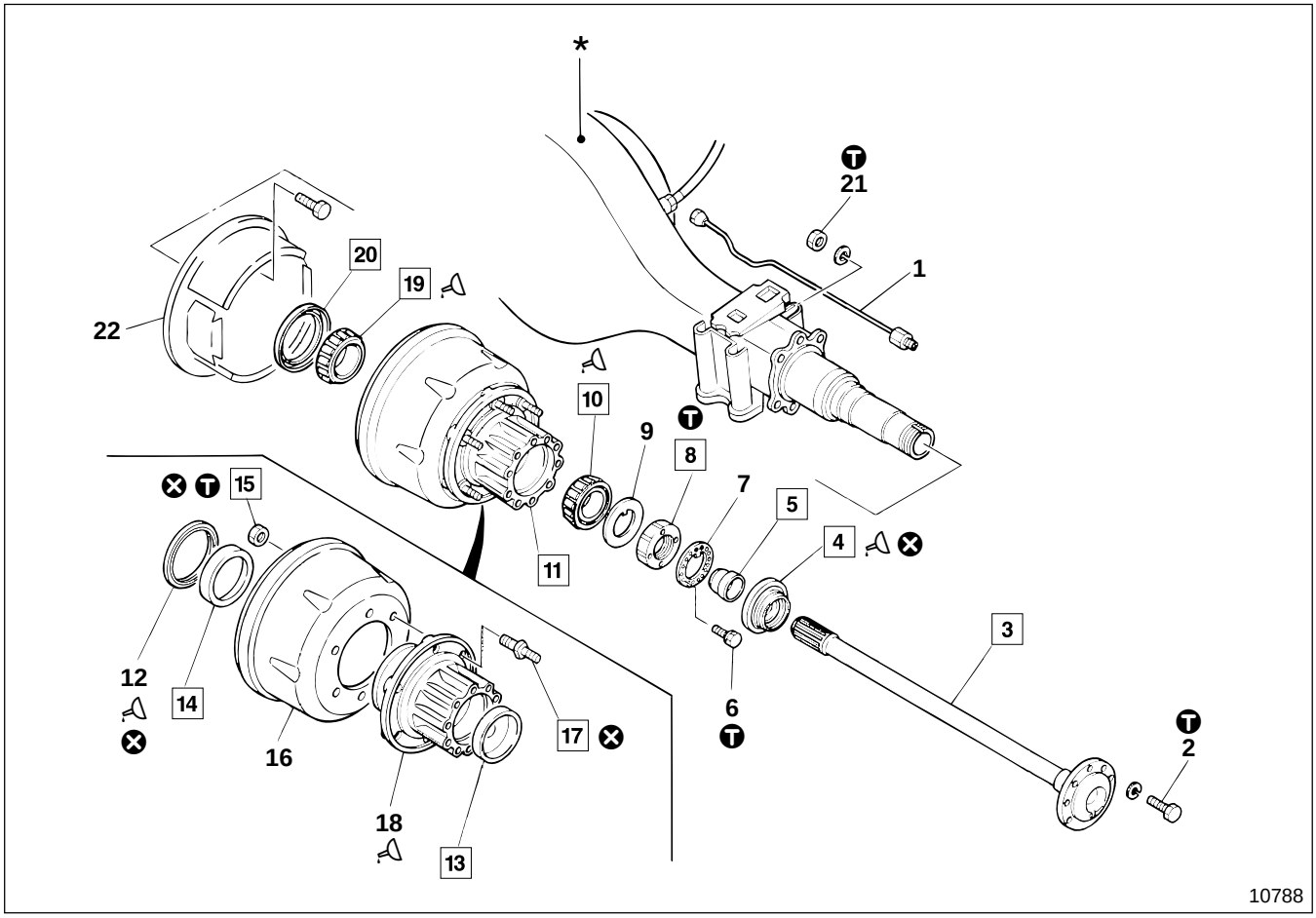

● **Disassembly sequence**

1 Brake pipe
2 Bolt
3 Axle shaft
4 Oil seal
5 Oil seal retainer
6 Bolt
7 Lock plate
8 Lock nut
9 Lock washer
10 Outer bearing inner race
11 Wheel hub and brake drum assembly
12 Oil seal
13 Outer bearing outer race
14 Inner bearing outer race
15 Nut
16 Brake drum
17 Hub bolt
18 Wheel hub
19 Inner bearing inner race
20 Oil seal retainer
21 Nut
22 Brake assembly Gr 35

* : Axle housing P27-18
⊗ : Non-reusable parts

CAUTION

Be sure to protect brake pipe 1 from dust by fitting blanking plugs after removal.

NOTE

Do not disassemble wheel hub 18 and brake drum 16 unless they are faulty.

● **Assembly sequence**

Follow the disassembly sequence in reverse.

WARNING

You must bleed air from the brake system after assembly, failure to do so would cause the brake to malfunction. Gr 35

CAUTION

Be careful not to damage oil seal 12 when installing wheel hub and brake drum assembly 11 in axle housing *.

Service standards

Unit : mm {in.}

Location	Maintenance item		Standard value	Limit	Remedy
3	Axle shaft	Bend of shaft center	1.0 {0.039} or less	2.0 {0.079}	Replace
		Wobble of flange face	0.04 {0.0016}	0.5 {0.020}	Replace
10, 13, 14, 19	Starting torque of wheel hub bearing		2.5 to 5.4 N·m {1.8 to 4.0 lbf.ft, 0.25 to 0.55 kgf·m}	—	Tangential force at hub bolt position: 22 to 48 N {4.9 to 11 lbf, 2.2 to 4.9 kgf}

Tightening torque

Unit : N·m {lbf.ft, kgf·m}

Location	Parts to be tightened	Tightening torque	Remarks
2	Bolt (Axle shaft mounting)	105 {80, 11}	—
6	Bolt (Lock plate mounting)	6.9 to 11 {5.1 to 8.0, 0.7 to 1.1}	—
8	Lock nut	195 {145, 20}	Screw slackening angle 22.5° (one sixteenth of a turn)
15	Nut (Wheel hub and brake drum mounting)	320 {235, 32.8}	—
21	Nut (Brake assembly mounting)	76 {56, 7.8}	—

Lubricant

Location	Points of application	Kinds	Quantity
4, 12	Lip area of oil seal	Wheel bearing grease [NLGI No. 2 (Li soap)]	As required
10, 19	Pack the space between rollers of outer bearing inner race and inner bearing inner race	Wheel bearing grease [NLGI No. 2 (Li soap)]	As required
18	Pack interior of wheel hub	Wheel bearing grease [NLGI No. 2 (Li soap)]	280 g {9.88 oz}

Special tools

Unit : mm {in.}

Location	Tool name and shape	Part No.	Application
8	Socket wrench 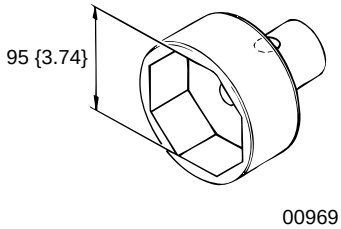 00969	MH061597	Removal and installation of lock nut

WHEEL HUB AND BRAKE DRUM

Unit : mm {in.}

Location	Tool name and shape	Part No.	Application
11	**A** : Wheel hub puller **B** : Adapter 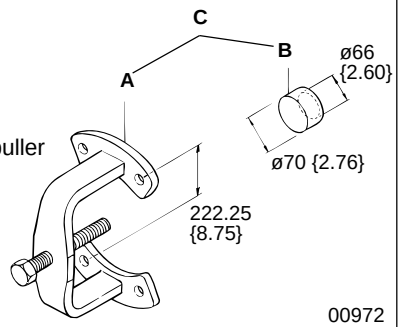	**A** : MH061966 **B** : MH061962 or **C** : MH061017	Removal of wheel hub and brake drum assembly
13	Wheel hub outer bearing installer 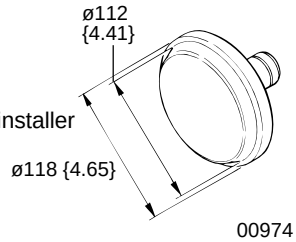	MH061012	Press-fitting of outer bearing outer race
14	Wheel hub inner bearing installer 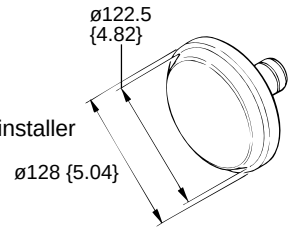	MH061010	Press-fitting of inner bearing outer race
19	**A** : Gear puller **B** : Adapter 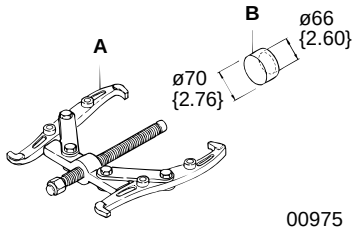	**A** : MH061102 **B** : MH061962	Removal of inner bearing inner race
	Wheel bearing installer 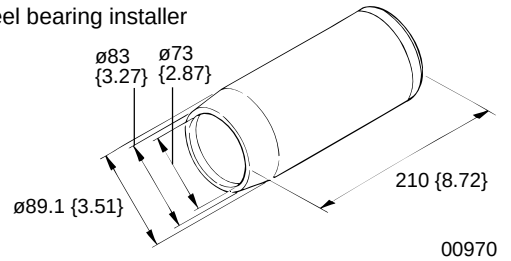	MH061009	Press-fitting of inner bearing inner race

Unit : mm {in.}

Location	Tool name and shape	Part No.	Application
20	**A** : Gear puller **B** : Adapter 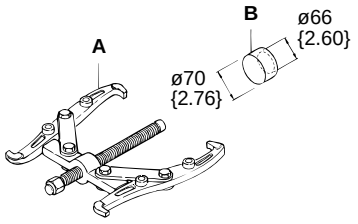 00975	**A** : MH061102 **B** : MH061962	Removal of oil seal retainer
	Oil seal retainer installer 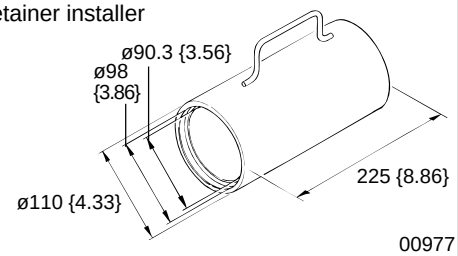 00977	MH061008	Press-fitting of oil seal retainer

◆ Service procedure

● Starting torque of wheel hub bearing

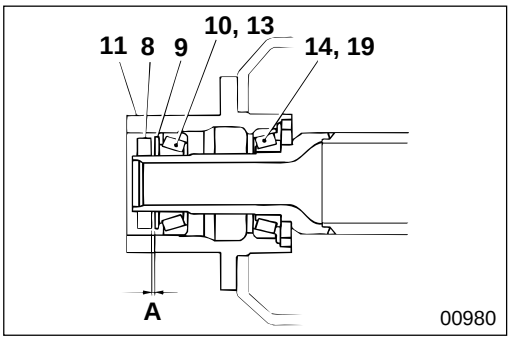

00980

[Adjustment]

- Install lock washer **9** and lock nut **8**.
- Turn wheel hub and brake drum assembly **11** several times to smooth operation of outer bearings **10**, **13** and inner bearings **14**, **19**.
- Tighten lock nut **8** at specified torque.
- Slacken off lock nut **8** to obtain clearance **A** between the lock nut and lock washer **9**.

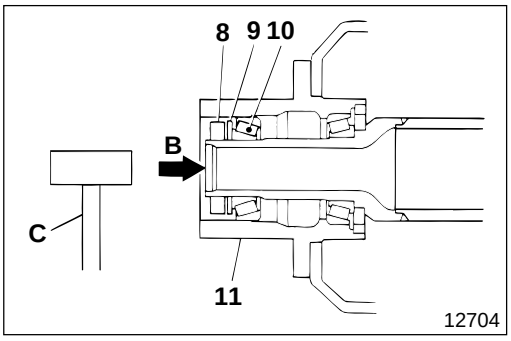

12704

- To slide outer bearing inner race **10** towards lock nut **8**, hit end **B** of the axle tube two or three times with a mallet, while turning wheel hub and brake drum assembly **11**.
  C : Copper-headed mallet

WHEEL HUB AND BRAKE DRUM

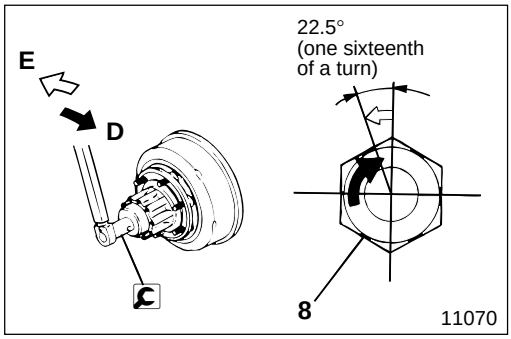

★ • Tighten lock nut **8** at specified torque.
D : Tightening direction

• Slacken off lock nut **8** by 22.5° (one sixteenth of a turn).
E : Slackening off direction
(★ : If any fault is found when measuring tangential force, redo from this item.)

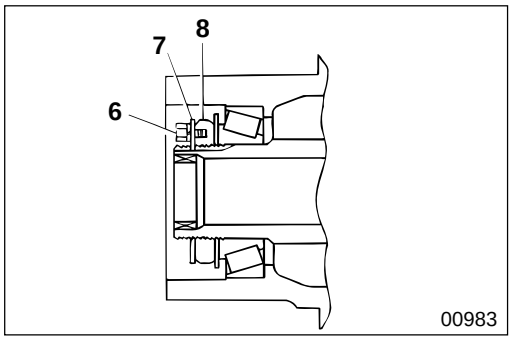

• Install lock plate **7**.
• Make sure that bolt **6** mounting holes of lock nut **8** and lock plate **7** align.
• Tighten bolt **6** at specified torque.

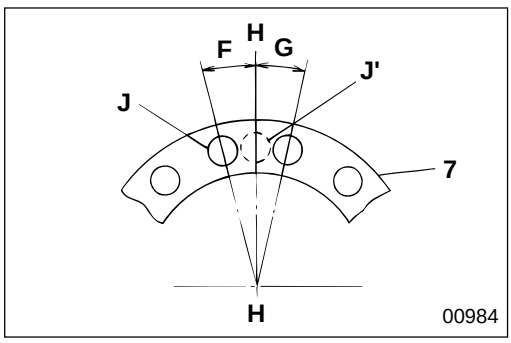

• If the mounting holes of lock plate **7** and lock nut **8** do not align, align as follows:

Hole position of lock nut	How to align hole of lock plate
Within range **F**	Loosen lock nut to align holes
Within range **G**	Turn over lock plate and loosen lock nut to align holes
On line **H-H**	Turn over lock plate to align holes (Hole position **J**' changes to **J**)

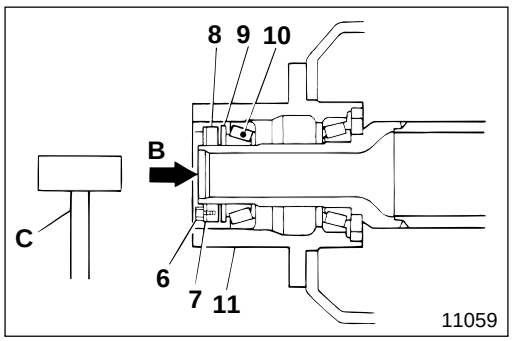

• To slide outer bearing inner race **10** towards lock nut **8**, hit end **B** of the axle tube two or three times with a mallet, while turning wheel hub and brake drum assembly **11**.
C : Copper-headed mallet

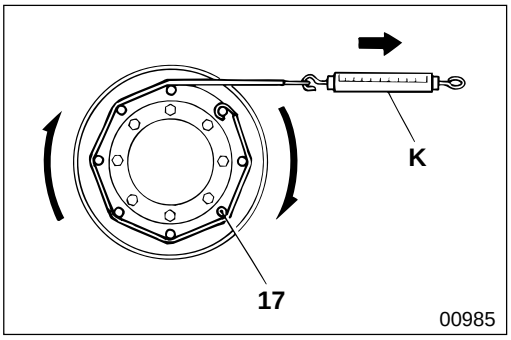

[Measurement]
- Install spring balance **K** on hub bolt **17**.
- Measure tangential force.
- If the measured tangential force is within the specified value, the starting torque conforms to the standard value.
- Do not allow the tangential force to become higher than the upper limit of the specified value.
- If the measured tangential force deviates from the specified value, repeat from step ★.
- If the result is still not satisfactory, replace outer bearings **10, 13** and inner bearings **14, 19**.

NOTE
- **Make sure that there is no drag in brake drum 16 and the brake lining before you measure the tangential force.**
- **Measure the starting torque when oil seal 12 has been installed.**

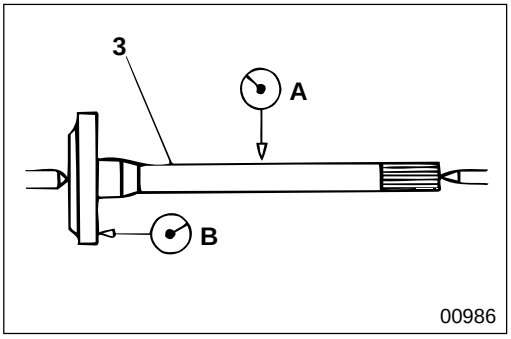

3 Inspection of axle shaft

A : Bend of shaft center

NOTE
To measure the bend of axle shaft 3, turn it one full revolution and read the dial gauge indicator. The bend is one half of the indicated value.

B : Wobble of flange face

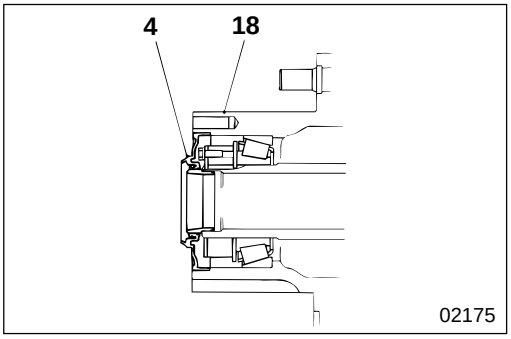

4 Installation of oil seal

Press-fit oil seal **4** until it is flush with the end of wheel hub **18**.

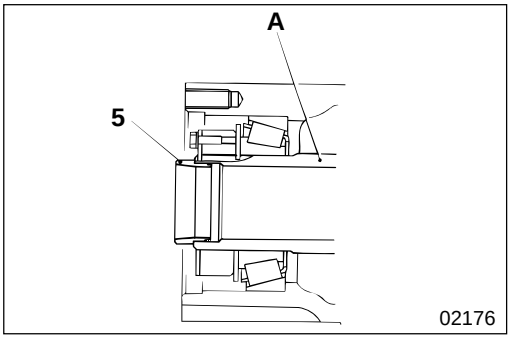

5 Oil seal retainer

[Removal]
It is not necessary to remove oil seal retainer **5** other than for replacement of oil seal **4**.

[Installation]
Press-fit oil seal retainer **5** until it is flush with the end of axle tube **A**.

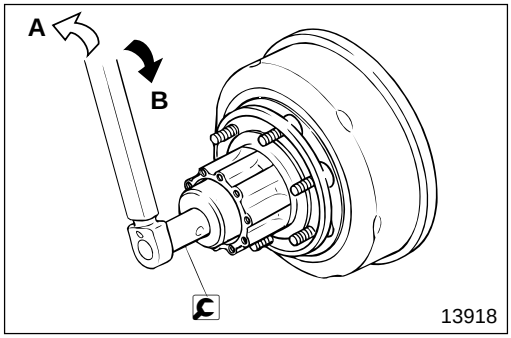

8 **Removal and installation of lock nut**

After installation, adjust the starting torque of the wheel hub bearing. P27-11

A : Removal
B : Installation

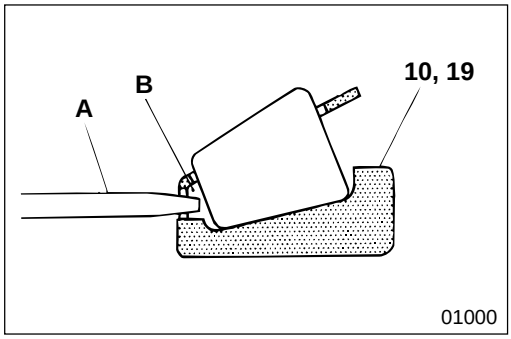

10 **19** **Packing grease in outer bearing inner race and inner bearing inner race**

A : Grease pump nozzle
B : Space between rollers

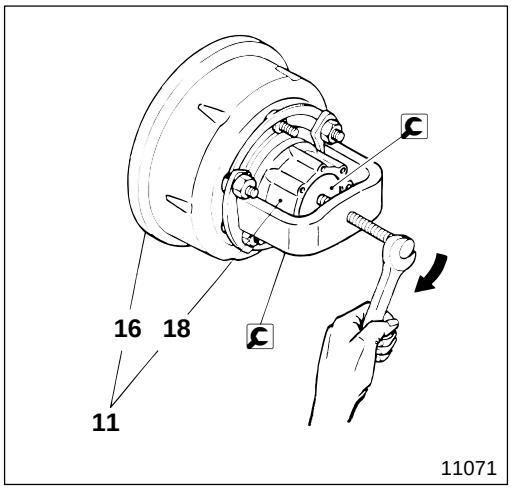

11 **Wheel hub and brake drum assembly**

[Removal]

CAUTION

Make sure you remove wheel hub and brake drum assembly 11 in a straight line to prevent damage to oil seal 12.

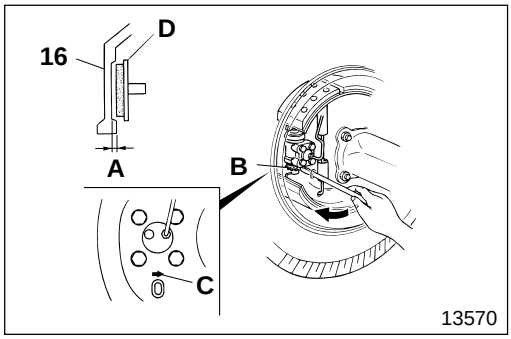

- If wheel hub and brake drum assembly **11** cannot be removed because of stepped wear **A** in brake drum **16**, carry out the following:
- Turn adjuster **B** in the opposite direction to arrow **C** on the packing plate, and expand the clearance between brake drum **16** and brake shoe assembly **D**. Then remove wheel hub and brake drum assembly **11**.

CAUTION

If brake drum 16 is faulty, correct it. **Gr 35**

[Installation]

After installing wheel hub and brake drum assembly **11**, adjust the brake shoe clearance.

Gr 35

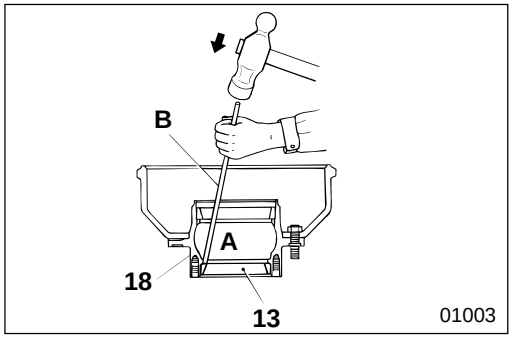

13 **Outer bearing outer race**

[Removal]
Drive out outer bearing outer race **13** evenly from four indented parts **A** in wheel hub **18**.
B : Pin-punch

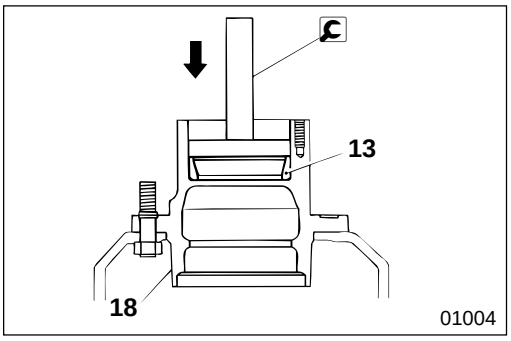

[Installation]

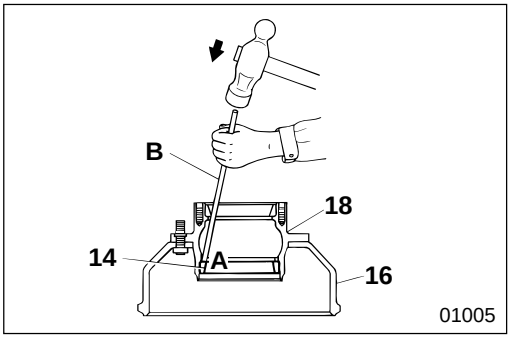

14 **Inner bearing outer race**

[Removal]
Drive out inner bearing outer race **14** evenly from four indented parts **A** in wheel hub **18**.
B : Pin-punch

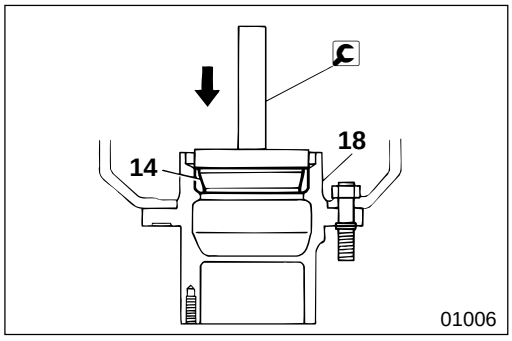

[Installation]

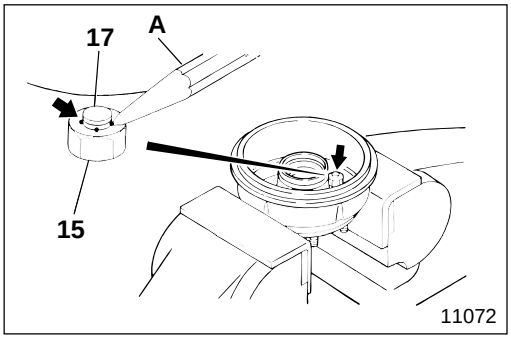

15 **17** **Installation of hub bolt and nut**

- Install hub bolt **17**.
- Tighten nut **15** at specified torque.
- Caulk nut **15** evenly at four points to keep it from turning.
  A : Pin-punch

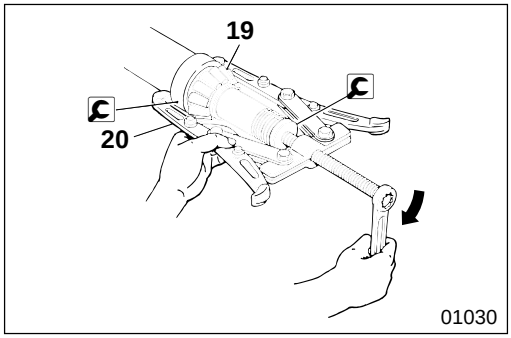

19 **20** **Inner bearing inner race and oil seal retainer**

[Removal]

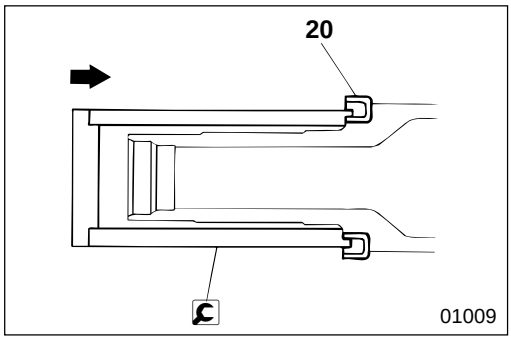

[Installation]

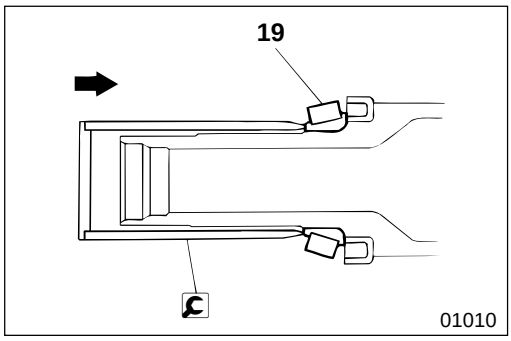

M E M O

AXLE HOUSING

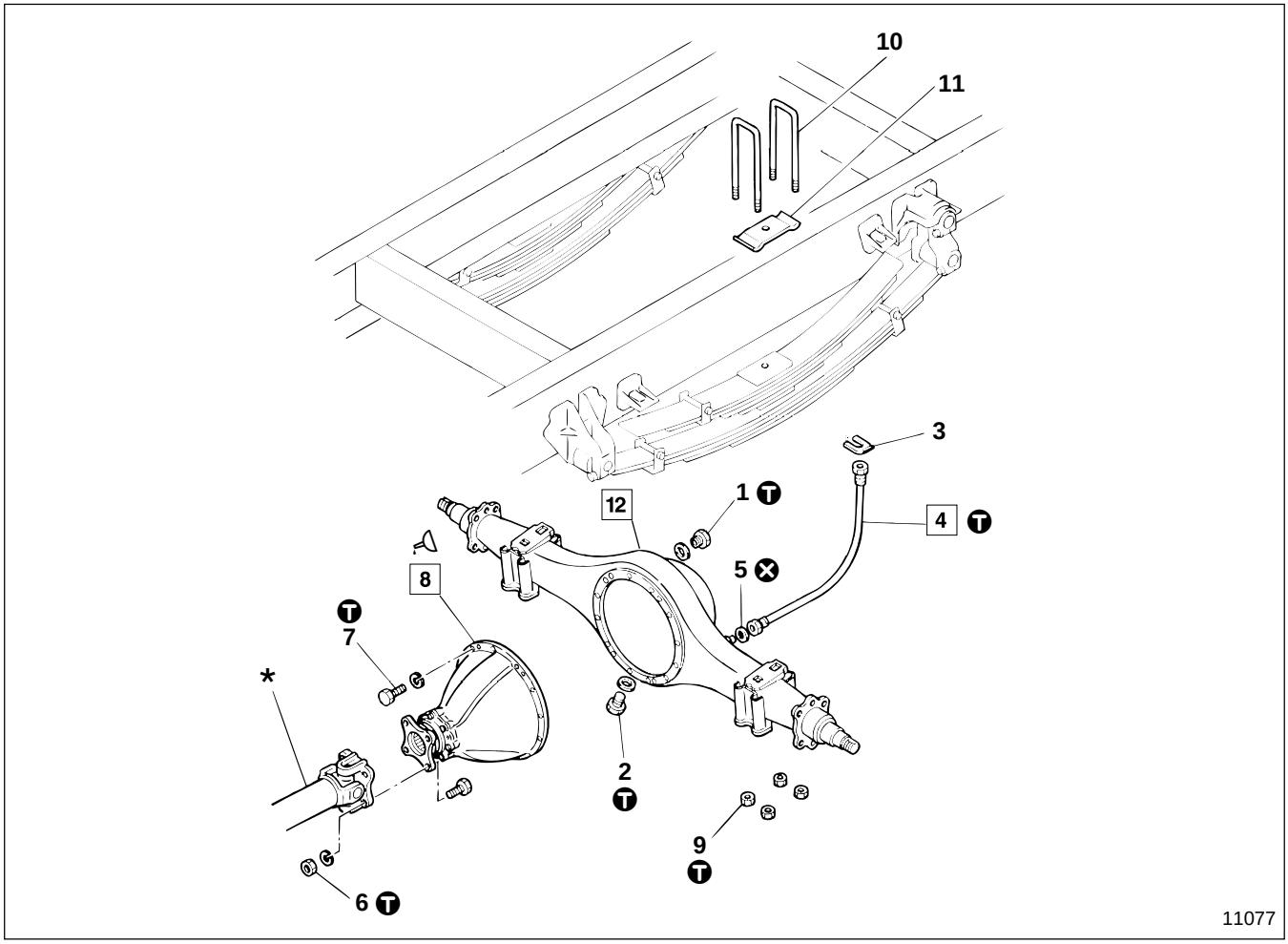

● **Work before removal** P27-19

● **Removal sequence**

1 Inspection plug
2 Drain plug
3 Clip
4 Brake hose
5 Packing
6 Nut
7 Bolt
8 Reduction and differential assembly P27-22
9 U-bolt nut
10 U-bolt
11 Spring upper pad
12 Axle housing

*: Propeller shaft Gr 25
⊗: Non-reusable parts

CAUTION

Be sure to protect brake hose 4 from dust by fitting blanking plugs after removal.

NOTE

Do not remove axle housing 12 unless it is faulty.

● **Installation sequence**

Follow the removal sequence in reverse.

CAUTION

Make sure that brake hose 4 is not twisted when you install it.

NOTE

Do not let sealant ooze from the mounting surfaces of reduction and differential assembly 8 and axle housing 12.

● **Work after installation** P27-19

Service standards

Unit : mm {in.}

Location	Maintenance item	Standard value	Limit	Remedy
12	Bend of axle housing (C-B)	0.2 {0.0079} or less	0.5 {0.020} or more	Replace

Tightening torque

Unit : N·m {lbf.ft, kgf·m}

Location	Parts to be tightened	Tightening torque	Remarks
1	Inspection plug	98 to 115 {72 to 87, 10 to 12}	—
2	Drain plug	98 to 115 {72 to 87, 10 to 12}	—
4	Brake hose mounting (Axle housing side)	21 to 30 {15 to 22, 2.1 to 3.1}	—
6	Nut (Propeller shaft mounting)	85 {61, 8.5}	—
7	Bolt (Reduction and differential assembly mounting)	120 {90, 12.5}	—
9	U-bolt nut (U-bolt mounting)	414±62 {305±46, 42.2±6.3}	Wet

Sealant

Location	Points of application	Kinds	Quantity
8	Connecting surfaces of reduction and differential assembly and axle housing	THREEBOND 1215	As required

Special tools

Unit : mm {in.}

Location	Tool name and shape	Part No.	Application
12	Measuring bar 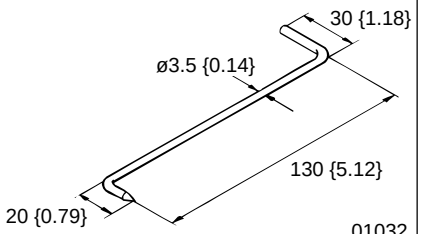	MH061003	Measures bend of axle housing : Two required

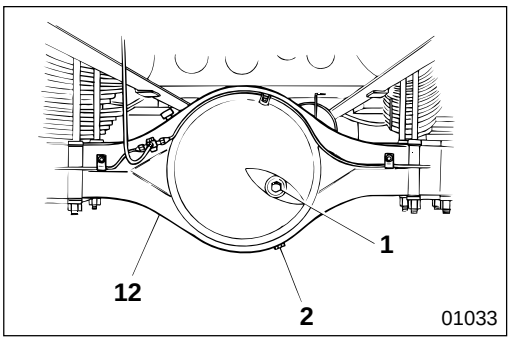

◆ Service procedure

● **Work before removal**

Remove drain plug **2** and drain the gear oil.

WARNING⚠

The oil temperature is high immediately after the vehicle has stopped, so take care not to scald yourself.

● **Work after installation**

Fill with the specified amount of gear oil via inspection plug **1**.

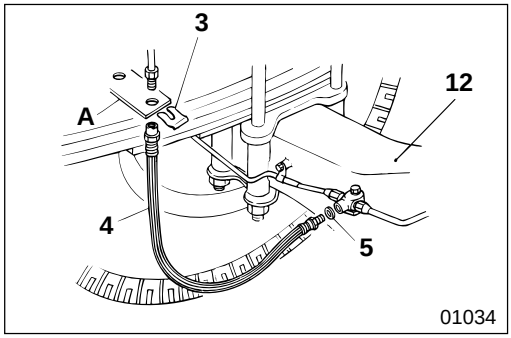

4 **Removal and installation of brake hose**

- Remove brake hose **4** from frame **A** side first, then from axle housing **12** side.
- For installation, follow the removal sequence in reverse.

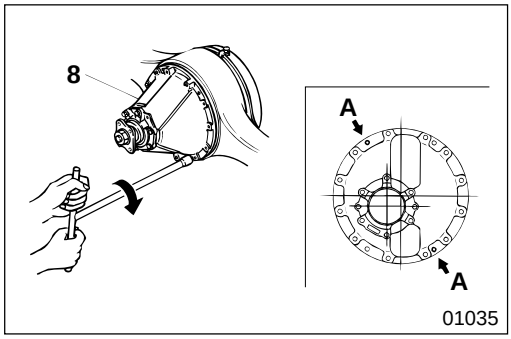

8 **Removal of reduction and differential assembly**

To remove reduction and differential assembly **8**, screw two M12×1.25 mm bolts evenly into two screw holes **A**.

NOTE

Completely remove adhered sealant from the mounting surfaces of reduction and differential assembly 8 and axle housing 12.

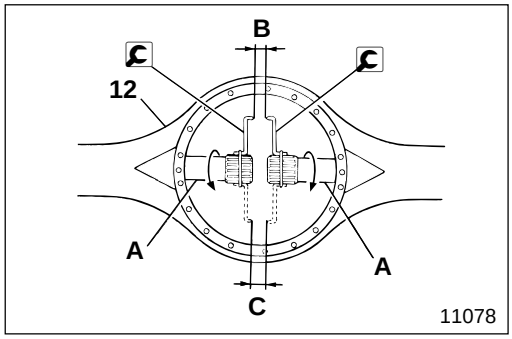

12 **Bend of axle housing**

- Leave axle shaft **A** installed in axle housing **12**.
- Install measuring bar on axle shaft **A**, and measure clearance **B**.
- Turn axle shaft **A** 180°, and measure clearance **C**.
- The difference between **B** and **C** is the amount of bend of axle housing **12**.
- If the bend of axle housing **12** is higher than the limit, replace the axle housing.

M E M O

REDUCTION AND DIFFERENTIAL

Reduction and Differential Assembly

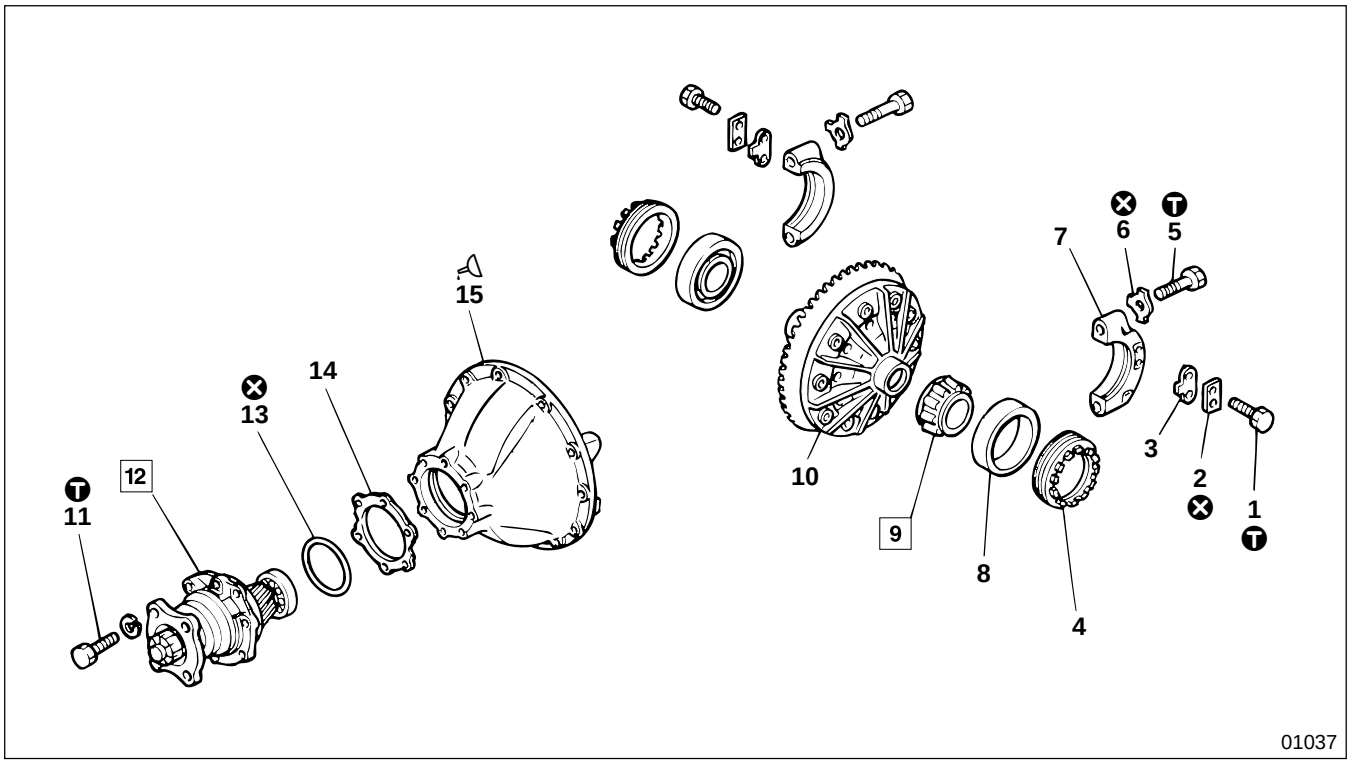

- **Inspection before disassembly** **P27-24**
- **Work before disassembly** **P27-25**
- **Disassembly sequence**

1 Bolt
2 Lock seat
3 Lock pawl
4 Adjusting screw
5 Bolt
6 Lock plate
7 Bearing cap
8 Side bearing outer race
9 Side bearing inner race
10 Differential assembly P27-30
11 Bolt
12 Pinion assembly P27-34
13 O-ring
14 Shim
15 Differential carrier

⊗ : Non-reusable parts

CAUTION⚠

- **Make sure you replace bearing caps 7, differential carrier 15 and bolt 5 as a differential carrier set.**
- **Make sure you replace the reduction gear of differential assembly 10 and the reduction pinion of pinion assembly 12 as a reduction gear set.**
- **Make sure you keep left and right side bearings 8, 9 separate after removal, and be careful not to mix them up when installing them.**

NOTE

Write down the thickness of shim 14 before disassembly to use it as reference when assembly.

- **Assembly sequence**

Follow the disassembly sequence in reverse.

- **Inspection and adjustment after assembly** **P27-25**

Service standards

Unit : mm {in.}

Location	Maintenance item	Standard value	Limit	Remedy
8, 9	Starting torque of side bearing	2.0 to 2.9 N·m {1.4 to 2.2 lbf.ft, 0.2 to 0.3 kgf·m}	—	• Adjust using adjusting screw • Tangential force at 170 {6.69} outer periphery point of differential case : 24 to 34 N {5.3 to 7.7 lbf, 2.4 to 3.5 kgf}
10	Wobble of reduction gear back face	0.15 {0.0059} or less	0.2 {0.0079}	• Adjust or replace as a gear set • Measure at the 145 {5.71} radial point from reduction gear center
10, 12	Backlash between reduction gear and reduction pinion	0.25 to 0.33 {0.0098 to 0.013}	0.6 {0.024}	Adjust or replace as a gear set

Tightening torque

Unit : N·m {lbf.ft, kgf·m}

Location	Parts to be tightened	Tightening torque	Remarks
1	Bolt (Lock pawl mounting)	34 {25, 3.5}	—
5	Bolt (Bearing cap mounting)	235 {175, 24}	—
11	Bolt (Differential carrier and pinion assembly mounting)	78 {58, 8}	—

Sealant

Location	Points of application	Kinds	Quantity
15	Mounting surface of pinion pilot bearing	LOCTITE 601	As required

Special tools

Unit : mm {in.}

Location	Tool name and shape	Part No.	Application
9	Side bearing installer 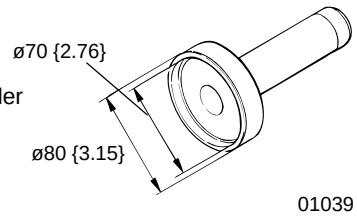	MH061748	Press-fitting of side bearing inner race
12	Bearing retainer guide pin 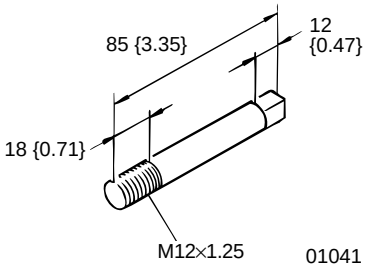	MH061745	Installation of pinion assembly : Two required

◆ Service procedure

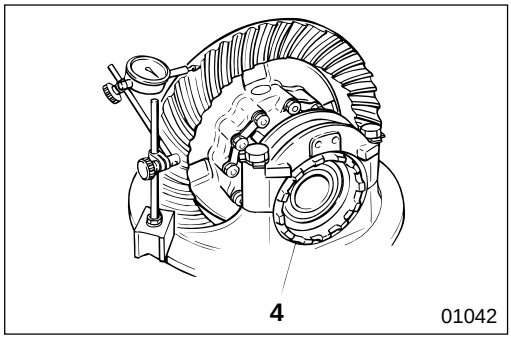

● Inspection before disassembly

Inspect for faulty parts before disassembly.

(1) Backlash of reduction gear and reduction pinion

If there is any fault, it is considered to be because of the amount adjusting screw **4** was tightened.

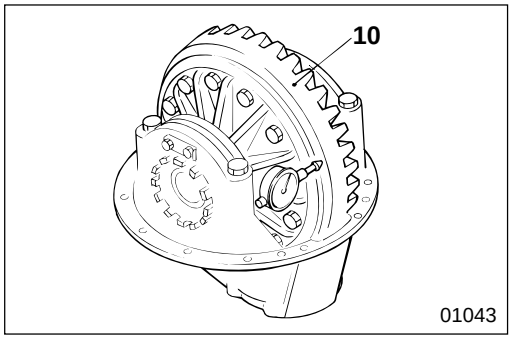

(2) Wobble of back face of reduction gear

Measure wobble at a point 145 mm {5.71 in.} (on the radius) from the center of the reduction gear, turning differential assembly **10** one full revolution.

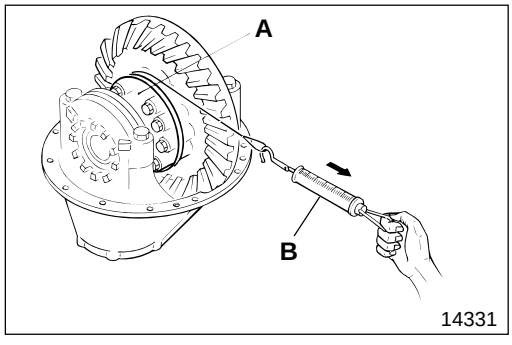

(3) Starting torque of side bearing

- Install spring balance **B** at 170 mm {6.69 in.} outer periphery point of differential case **A**.
- Measure the tangential force.
- If the measured tangential force is within the specified value, the starting torque conforms to the standard value.

NOTE

Measure the starting torque within reduction gear and reduction pinion backlash range.

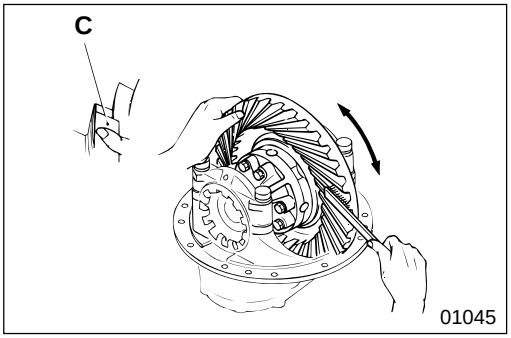

(4) Tooth contact of reduction gear

Apply red lead to three or four gear teeth, turn the gear a few times, and examine tooth contact with a piece of paper **C**.

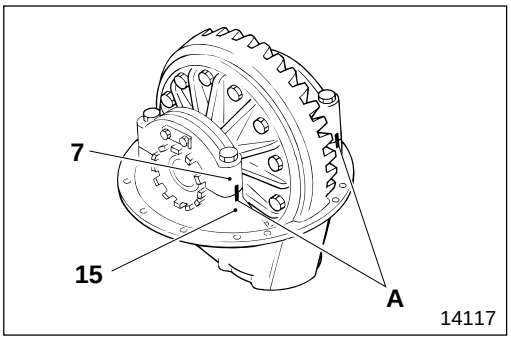

● **Work before disassembly**

Put alignment marks **A** on bearing cap **7** and differential carrier **15** to identify left and right.

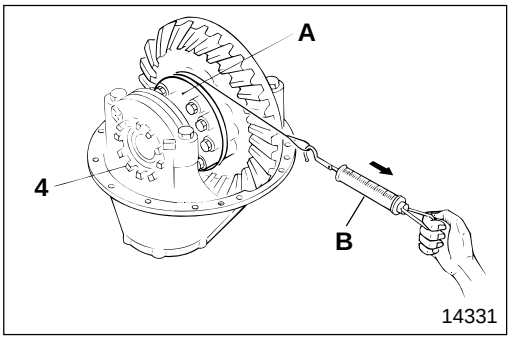

● **Inspection and adjustment after assembly**

(1) Starting torque of side bearing

[Inspection]

- Install spring balance **B** at 170 mm {6.69 in.} outer periphery point of differential case **A**.
- Measure the tangential force.
- If the measured tangential force is within the specified value, the starting torque conforms to the standard value.
- If the measured value deviates from the specified value, adjust.

[Adjustment]

If the measured value does not meet the specified value, adjust using left and right adjusting screws **4**.

CAUTION

- **Tighten left and right adjusting screws 4 the same amount.**
- **Adjust the starting torque within the reduction gear and reduction pinion backlash range.**

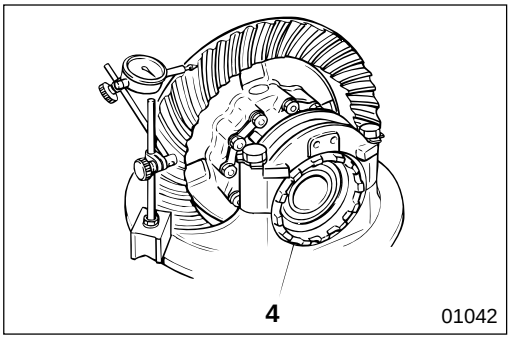

(2) Adjustment of backlash between reduction gear and reduction pinion

Adjust the starting torque of the side bearings using left and right adjusting screws **4**, taking care not to change the starting torque.

CAUTION

Make sure when you loosen one adjusting screw 4 that you tighten the other adjusting screw by the same amount, because the starting torque of the side bearing changes.

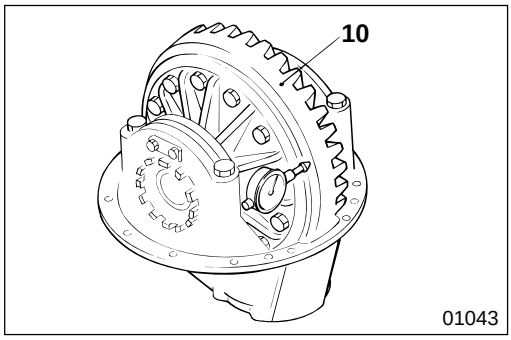

(3) Inspection of wobble of back face of reduction gear

Measure wobble at a point 145 mm {5.71 in.} (on the radius), from the center of the reduction gear, turning differential assembly **10** one full revolution.

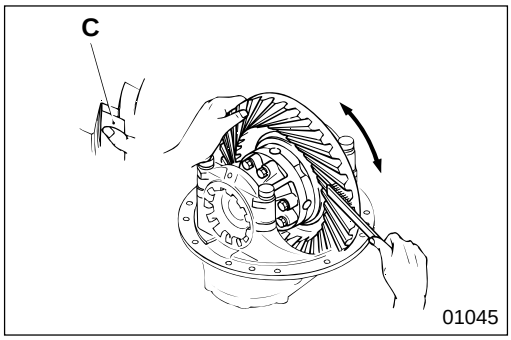

(4) Tooth contact of reduction gear

[Inspection]

Apply red lead to three or four gear teeth, turn the gear a few times, and examine tooth contact with a piece of paper **C**.

[Adjustment]

If contact area is remarkably offset, adjust with reduction pinion mounting adjusting shims **14** to increase or decrease the backlash.

CAUTION ⚠

- **Make sure you replace as a reduction gear set (reduction gear and reduction pinion), when you replace the gear because of excessive teeth wear.**
- **When good tooth contact adjustment has been obtained, but backlash does not meet the standard value, tooth contact has priority. It is not necessary to adjust backlash to the standard value if it is less than 0.15 mm {0.0059 in.} out.**

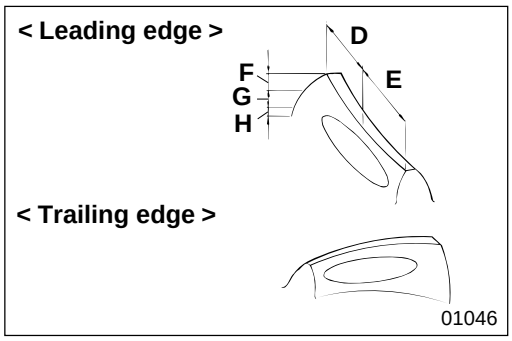

● **Normal tooth contact at no load**

< Reduction gear >

D : Heel
E : Toe
F : Face
G : Flank
H : Clearance

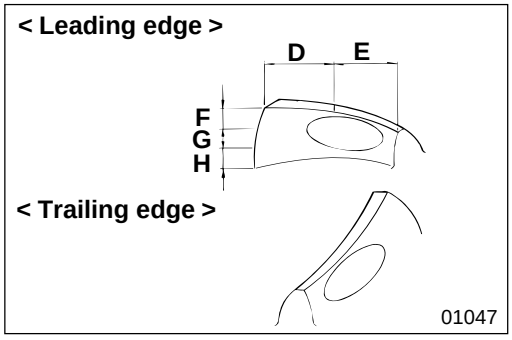

< Reduction pinion >

D : Heel
E : Toe
F : Face
G : Flank
H : Clearance

Maintenance item			Assembly standards
At no load	Tooth contact position	Lengthwise direction of tooth	From center toward toe
		Vertical direction	From center toward top of tooth for reduction gear and center of tooth for pinion
	Tooth contact shape	Length	About 50 to 70% of tooth width
		Width	About 50 to 70% of tooth depth
	Degree of tooth contact		Degree of tooth contact becomes weaker as it comes nearer to root or top

NOTE

When tooth contact area is nearer to toe at no load, it becomes middle area contact under load.

Adjustment of Tooth Contact

	Mode of adjustment	Moving direction
Adjustment by adding or reducing shims	Advances reduction pinion to reduction gear (Shims are reduced) 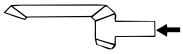	< Leading edge >  < Trailing edge > Tooth contact moves toward root of tooth
	Retards reduction pinion from reduction gear (Shims are added) 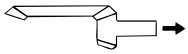	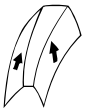 Tooth contact moves toward top of tooth
Adjustment using adjusting screw	Advance reduction gear to reduction pinion axis (Less backlash) 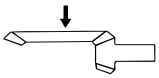	 Tooth contact moves in lengthwise direction of tooth Leading edge: Nearer to toe and slightly nearer to root of tooth Trailing edge: Nearer to heel and slightly nearer to top of tooth
	Retard reduction gear from reduction pinion axis (More backlash) 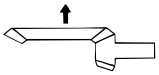	 Tooth contact moves in lengthwise direction of tooth Leading edge: Nearer to heel and slightly nearer to top of tooth Trailing edge: Nearer to toe and slightly nearer to root of tooth

◆ Service procedure

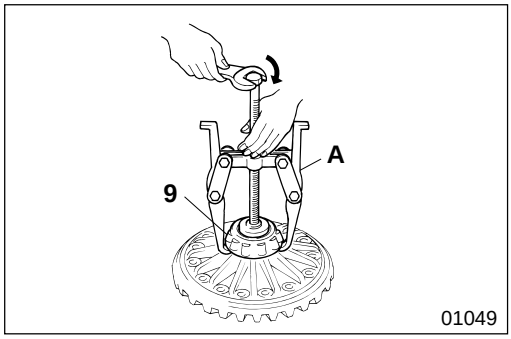

9 **Side bearing inner race**

[Removal]

A : Gear puller (General tool)

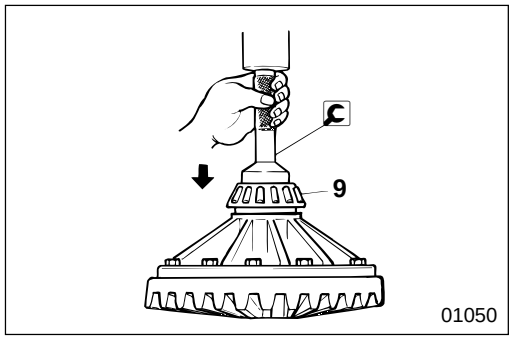

[Installation]

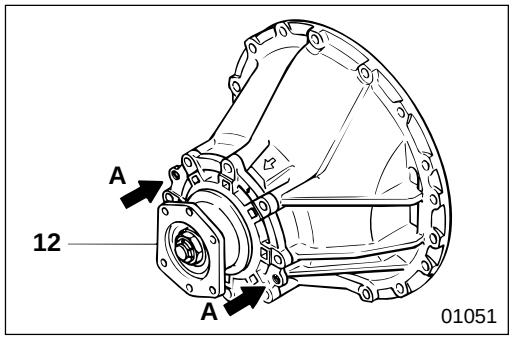

12 **Pinion assembly**

[Removal]

To remove pinion assembly **12**, screw two M12×1.25 mm bolts evenly into the two pinion assembly removal screw holes **A**.

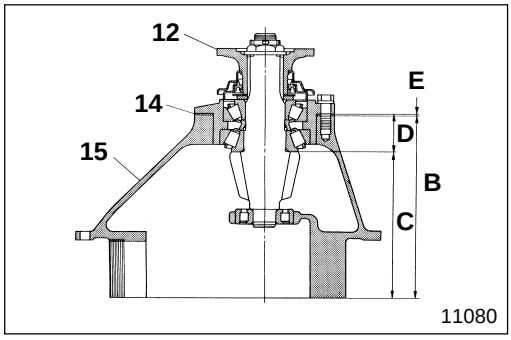

[Adjustment]

- Carry out the following procedure so that **B**, **C** and **D** conform to the standard dimension.
- Calculate shim thickness **E** according to the following formula based upon the machining error data stamped on pinion assembly **12** and differential carrier **15**.

Formula for calculation:

E = 0.5 {0.020}–b+c+d

b : Deviation from basic dimension **B**
c : Deviation from basic dimension **C**
d : Deviation from basic dimension **D**

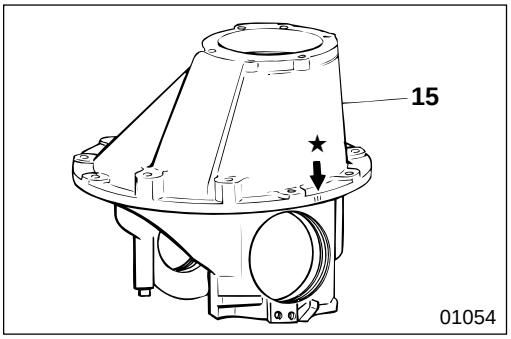

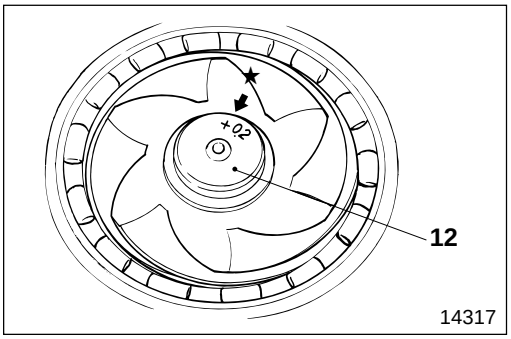

Unit : mm {in.}

Location	Standard dimension	How to calculate deviation
Shim thickness	0.5 {0.020}	—
B	227 {8.94}	The basic dimension, multiplied by 100, is stamped on the periphery of differential carrier **15** flange
C	175 {6.89}	The basic dimension is stamped on the top of pinion assembly **12**
D	52 {2.05}	Measure the deviation from **D** using a dial gauge. However, If it is difficult to measure the actual deviation, assume a value from 0 to 0.2 {0 to 0.0079}

★ : Stamped number position

NOTE

Thickness is stamped in millimeters.

- Select shim **14** from shim thickness **E**.
  Available thicknesses of shim **14** : 0.1 mm {0.0039 in.} and 0.2 mm {0.0079 in.}

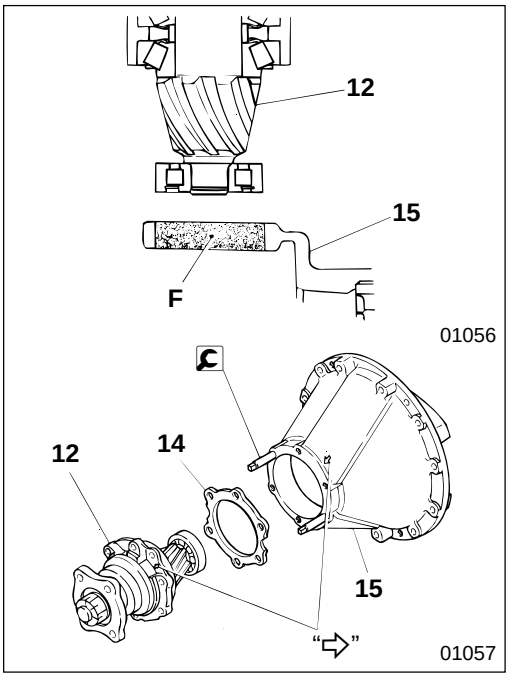

[Installation]

- Apply lock paint to pinion pilot bearing mounting surface **F** of differential carrier **15**.
- Install pinion assembly **12**.

CAUTION ⚠

- **Be sure to let the lock paint harden undisturbed for 30 minutes to two hours after installation.**
- **Be sure to wait at least three hours before running the vehicle, and if possible wait 24 hours to let the lock paint harden.**

REDUCTION AND DIFFERENTIAL

Differential Assembly

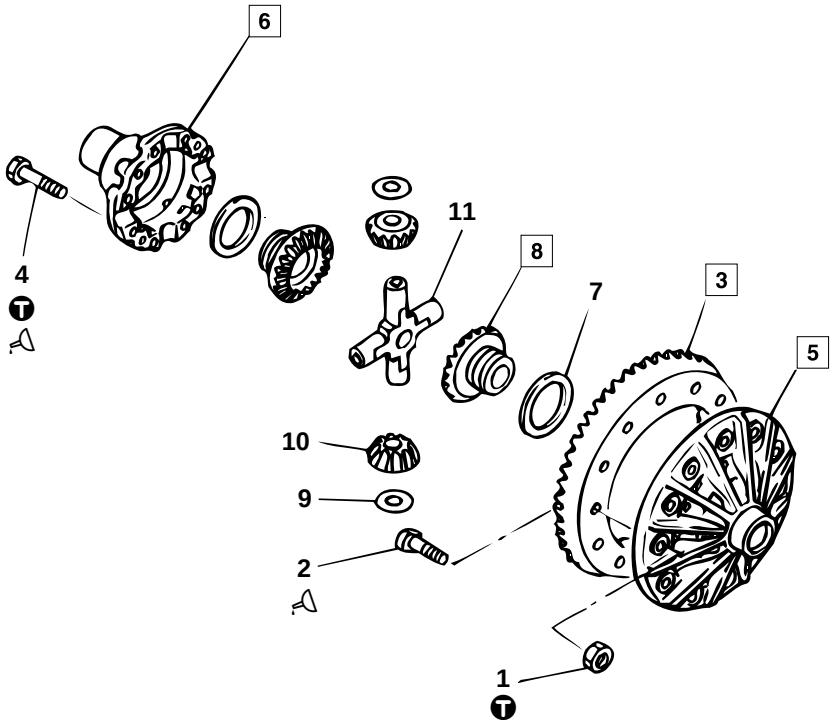

● **Disassembly sequence**

1 Nut
2 Bolt
3 Reduction gear
4 Bolt
5 Differential case, LH
6 Differential case, RH
7 Differential gear washer
8 Differential gear
9 Differential pinion washer
10 Differential pinion
11 Pinion spider

CAUTION⚠

Make sure you replace differential case LH 5 and differential case RH 6 as a differential case set.

● **Assembly sequence**

Follow the disassembly sequence in reverse.

● **Adjustment after assembly** 🕮 P27-31

Service standards

Unit : mm {in.}

Location	Maintenance item	Standard value (Basic diameter in [ ])	Limit	Remedy
8	Play between differential gear and axle shaft spline	0.10 to 0.18 {0.0039 to 0.0071}	0.5 {0.020}	Replace
8, 10	Backlash between differential pinion and differential gear	0.19 to 0.25 {0.0075 to 0.0098}	0.5 {0.020}	Replace
10, 11	Clearance between differential pinion and pinion spider	[26] 0.17 to 0.27 {[1.02] 0.0067 to 0.011}	0.5 {0.020}	Replace

Tightening torque

Unit : N·m {lbf.ft, kgf·m}

Location	Parts to be tightened	Tightening torque	Remarks
1	Nut (Reduction gear and differential case LH mounting)	295 {215, 30}	—
4	Bolt (Differential case LH and differential case RH mounting)	180 {135, 18.5}	—

Lubricant and sealant

Location	Points of application	Kinds	Quantity
2, 4	Entire bolt	Rust preventive	As required
	Thread area of bolt	LOCTITE 271	As required

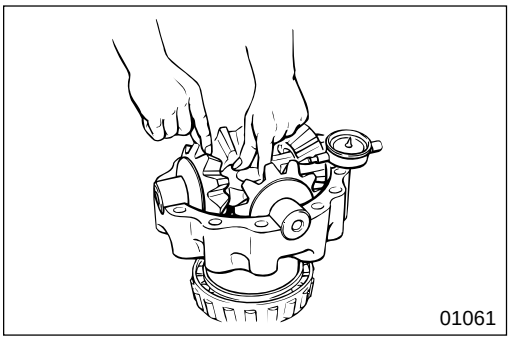

◆ Service procedure

● Adjustment after assembly

Backlash between differential gear and differential pinion

If the measured value deviates from the standard value, replace differential gear washer **7**.

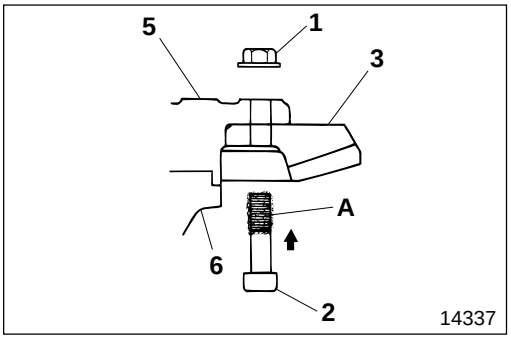

3 **5** **Installation of differential case LH and reduction gear**

- Apply rust preventive to entire surface of bolt **2**.
- Apply lock paint to thread area **A** of bolt **2**.
- Tighten nut **1** at specified torque.

CAUTION

- **Be sure to apply rust preventive to nut 1 because of the need to tighten it at specified torque.**
- **Be sure not to operate the vehicle for at least one hour after installation in order to let the lock paint harden.**
- **Be sure not to operate the vehicle at full torque for at least four hours after installation in order to let the lock paint harden.**

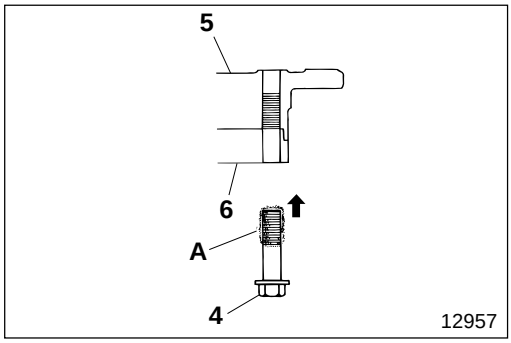

5 **6** **Installation of differential case LH and differential case RH**

- Apply rust preventive to entire surface of bolt **4**.
- Apply lock paint to thread area **A** of bolt **4**.
- Tighten bolt **4** at specified torque.

CAUTION

- **Be sure to apply rust preventive to bolt 4 because of the need to tighten it at specified torque.**
- **Be sure not to operate the vehicle for at least one hour after installation in order to let the lock paint harden.**
- **Be sure no to operate the vehicle at full torque for at least four hours after installation in order to let the lock paint harden.**

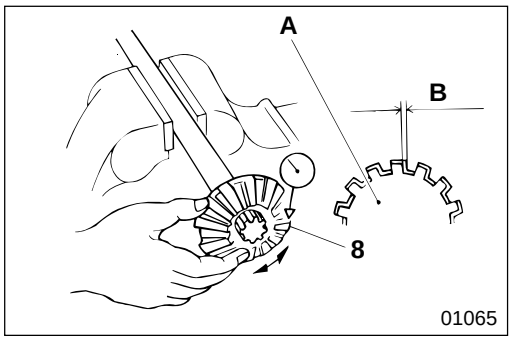

8 **Play between differential gear and axle shaft at the spline**

A : Axle shaft
B : Play

M E M O

Pinion Assembly

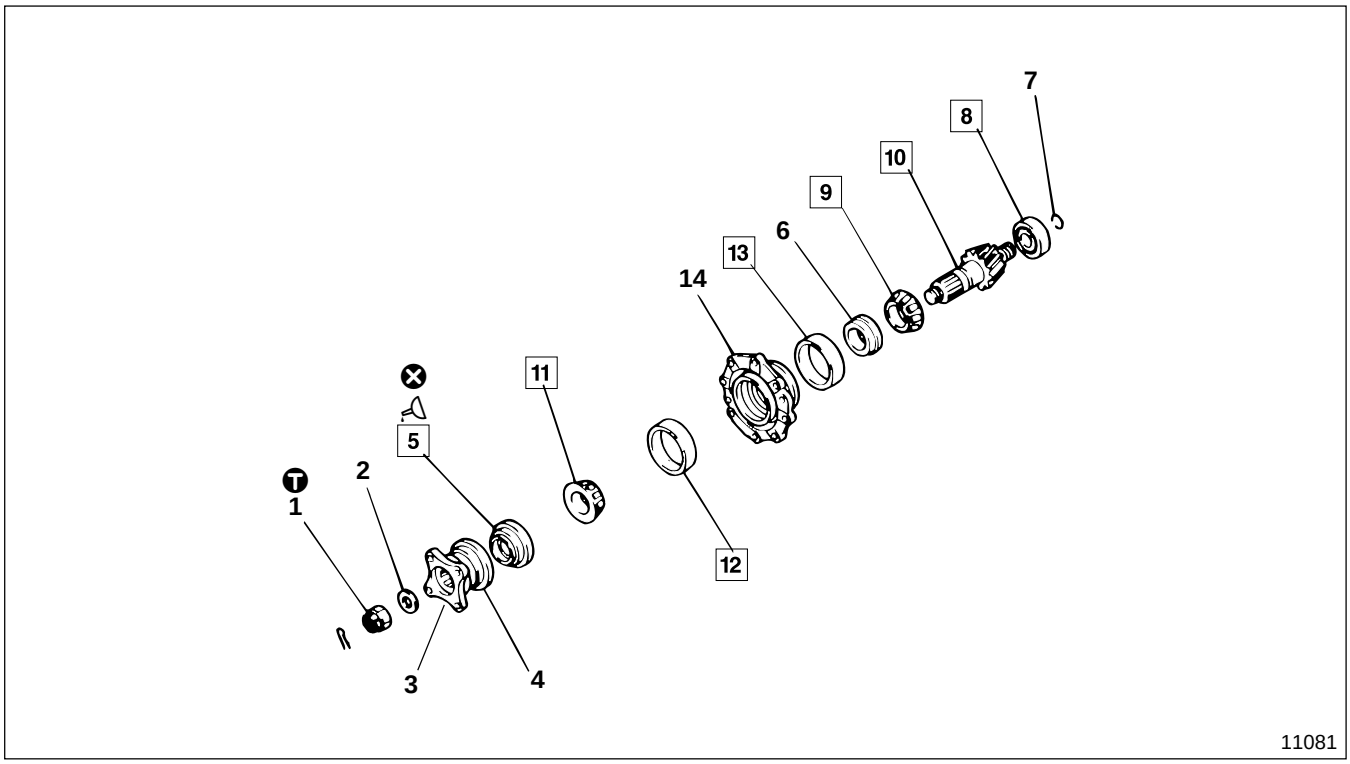

● **Disassembly sequence**

1 Lock nut
2 Washer
3 Companion flange
4 Dust cover
5 Oil seal
6 Collar
7 Lock ring
8 Pinion pilot bearing
9 Inner bearing inner race
10 Reduction pinion
11 Outer bearing inner race
12 Outer bearing outer race
13 Inner bearing outer race
14 Bearing retainer

⊗ : Non-reusable parts

NOTE

Record the thicknesses and number of collars 6 before disassembling for reference when assembling.

● **Assembly sequence**

14→13→12 ┐
→11→5 ┐
10→8→7→9→6 ┘ →2→1
4→3 ┘

● **Inspection and adjustment after assembly** 🕮 P27-37

Service standards

Unit : mm {in.}

Location	Maintenance item		Standard value	Limit	Remedy
9, 11, 12, 13	Starting torque of pinion bearing	When new bearings are used	2.0 to 2.9 N·m {1.4 to 2.2 lbf.ft, 0.20 to 0.30 kgf·m}	—	• Adjust using collar • Tangential force at 134 {5.28} outer periphery point of bearing retainer : 29.4 to 44.1 N {6.6 to 9.9 lbf, 3 to 4.5 kgf}
		When bearings are reused	1.6 to 2.4 N·m {1.2 to 1.7 lbf.ft, 0.16 to 0.24 kgf·m}	—	• Adjust using collar • Tangential force at 134 {5.28} outer periphery point of bearing retainer : 24 to 34 N {5.3 to 7.7 lbf, 2.4 to 3.5 kgf}

Tightening torque

Unit : N·m {lbf.ft, kgf·m}

Location	Parts to be tightened	Tightening torque	Remarks
1	Lock nut (Companion flange and reduction pinion mounting)	195 to 345 {145 to 255, 20 to 35}	—

Lubricant

Location	Points of application	Kinds	Quantity
5	Lip area of oil seal	Chassis grease [NLGI No. 1 (Ca soap)]	As required

Special tools

Unit : mm {in.}

Location	Tool name and shape	Part No.	Application
5	Oil seal installer 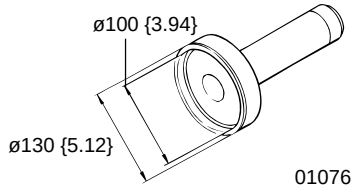	MH061752	Press-fitting of oil seal
8	Pinion pilot bearing installer 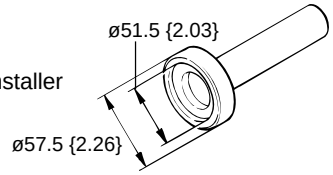	03723-27001	Press-fitting of pinion pilot bearing
9	Pinion inner bearing installer 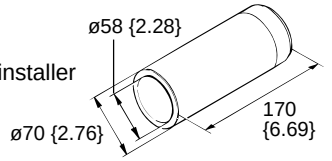	MH061004	Press-fitting of inner bearing inner race
11	Pinion outer bearing installer 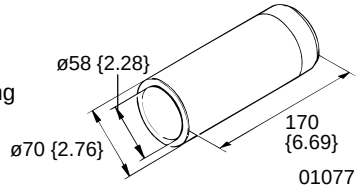	MH061004	Press-fitting of outer bearing inner race
12	Pinion outer bearing installer 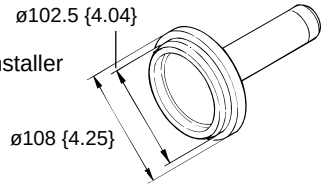	MH061007	Press-fitting of outer bearing outer race
13	Pinion inner bearing installer 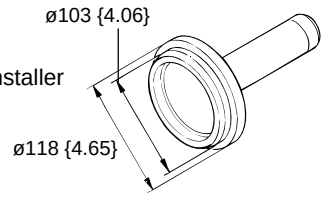	MH061006	Press-fitting of inner bearing outer race

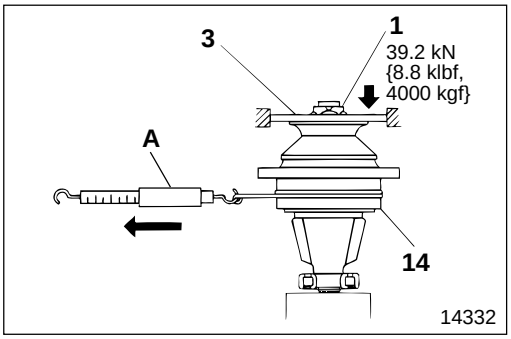

◆ Service procedure

● Inspection and adjustment after assembly

Starting torque of pinion bearing

[Inspection]

- Apply load of approximately 39.2 kN {8.8 klbf, 4000 kgf} to companion flange **3** or tighten lock nut **1** at specified torque.
- Install spring balance **A** at 134 mm {5.28 in.} outer periphery point of bearing retainer **14**.
- Measure the tangential force.
- If the measured tangential force is within the specified value, the starting torque conforms to the standard value.
- If the measured value deviates from the specified value, adjust.

NOTE

- **Tighten companion flange 3 before measuring.**
- **Measure with oil seal 5 removed.**

[Adjustment]

If the measured value does not conform to the specified value, adjust with collar **6** to obtain specified tangential force. Choose an appropriate collar by referring to the table below.

Thickness of collar : 15.875 to 16.475 mm {0.62 to 0.65 in.} (25 thicknesses in 0.025 mm {0.00098 in.} increments)

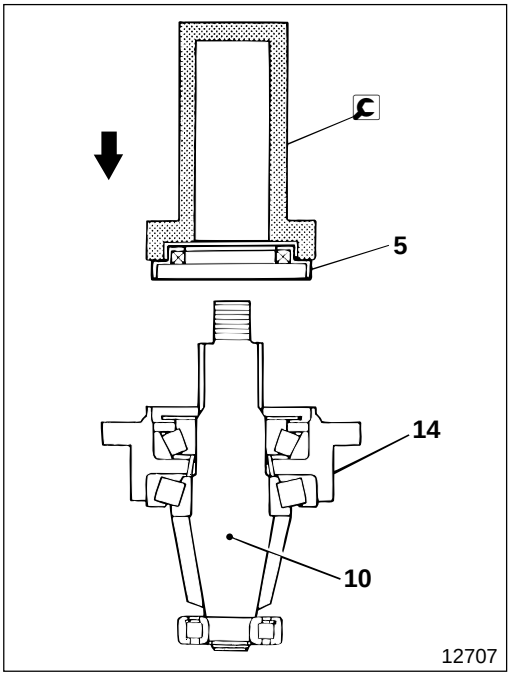

5 **Installation of oil seal**

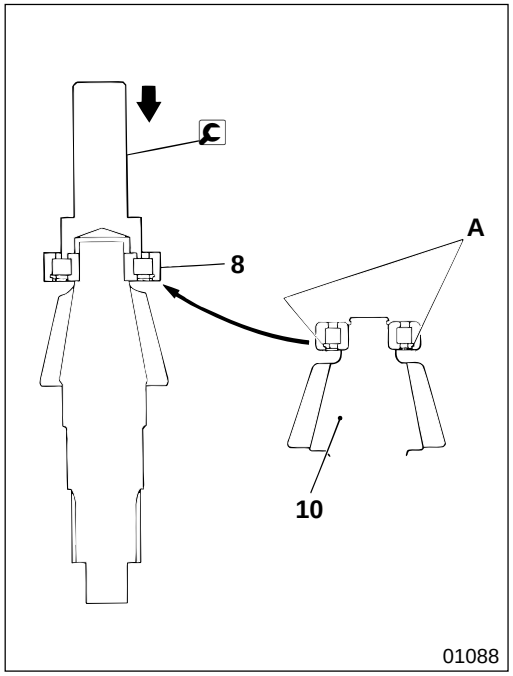

8 **Installation of pinion pilot bearing**

Press-fit pinion pilot bearing **8** in the direction as illustrated.

A : Lock ring

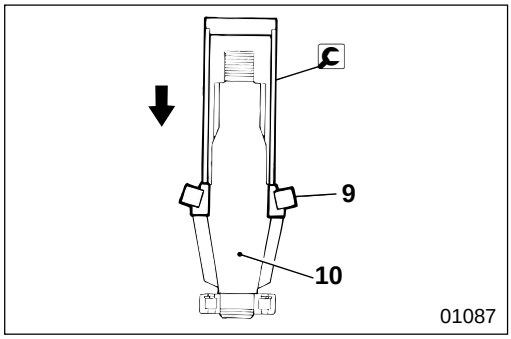

9 **Installation of inner bearing inner race**

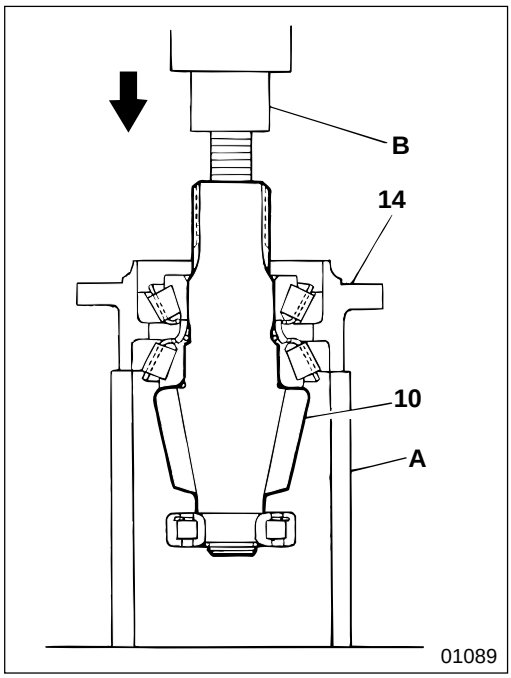

10 **Removal of reduction pinion**

A : Cylindrical guide

B : Press

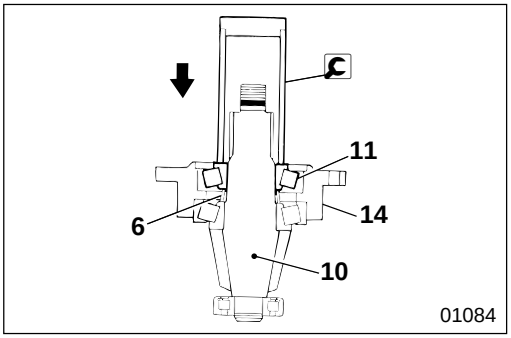

11 **Installation of outer bearing inner race**

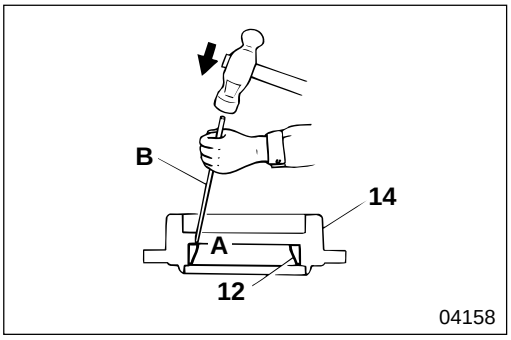

12 **Outer bearing outer race**

[Removal]
Drive out outer bearing outer race **12** evenly from three indented parts **A** in bearing retainer **14**.
B : Pin-punch

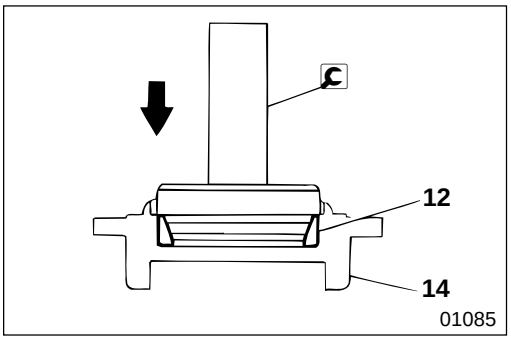

[Installation]

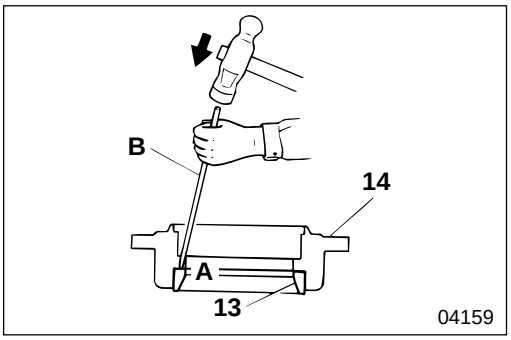

13 **Inner bearing outer race**

[Removal]
Drive out inner bearing outer race **13** evenly from three indented parts **A** in bearing retainer **14**.
B : Pin-punch

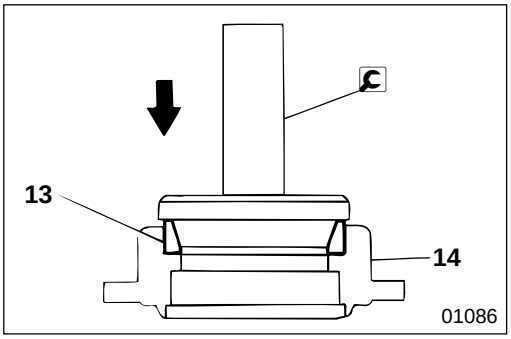

[Installation]

MITSUBISHI
FUSO

FH

Service Manual

Group 31
Wheel and Tire

Table of Contents

BACK

HOME

MITSUBISHI FUSO TRUCK OF AMERICA, Inc.

Pub No. TWME9502-31

GROUP 31 WHEEL AND TIRE

SPECIFICATIONS 2

TROUBLESHOOTING 2

WHEEL AND TIRE 3

SPECIFICATIONS/TROUBLESHOOTING

SPECIFICATIONS

Tire size	Air pressure kPa {psi, kgf/cm^2}		Application wheel
	Front	Rear	
215/75R17.5 124/123L	700 {100, 7.00}	700 {100, 7.00}	17.5×6.00-135-9t

TROUBLESHOOTING

Possible causes \ Symptoms			Tire tread worn										Remarks
			Both shoulders worn	Center worn	Outside worn	Inside worn	Feather-edged wear from outside to inside	Feather-edged wear from inside to outside	Wavy wear	Dished wear (one or more spots)	Pitted wear (dented) all around	Jagged wear	
Overloading			○										
Tire air pressure		Insufficient	○						○	○	○	○	
		Excessive		○									
Wheel alignment	Toe-in	Excessive			○		○						
Gr 26		Insufficient				○							
	Camber	Excessive			○								
		Insufficient				○							
	Toe-out excessive					○		○					
	Overall misalignment		○		○	○	○	○	○	○	○		
Knuckle arm bent					○	○	○	○					Gr 26
Left and right tie rod lengths different							○						Gr 26
Wheel balance incorrect									○	○	○	○	
Wheel bearing loose									○	○	○	○	Gr 26, 27
Ball joint loose										○			Gr 26
Tie rod end loose										○			Gr 37
Brake drum eccentric										○	○		Gr 35
Axle bent									○	○			Gr 26, 27
Sudden starting, sudden braking or sharp turn										○	○		
Left and right front wheel turning radius incorrect												○	Gr 26
Road surface influence					○	○							

Work for Removal and Installation of Wheel and Tire

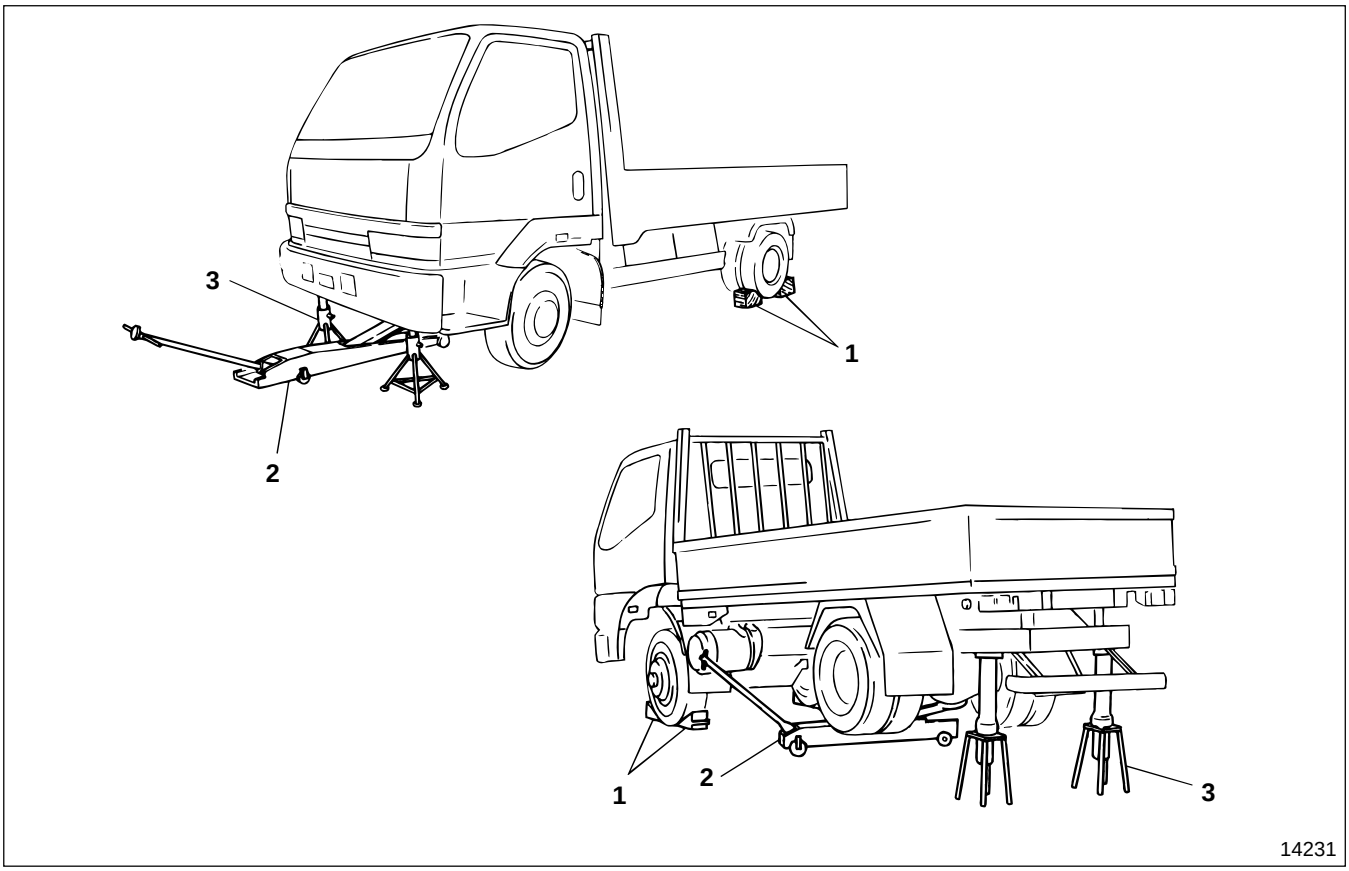

● **Work sequence**

1 Place wheel chocks.
2 Jack up the front or rear axle using a garage jack placed under the center of the axle.
3 Support the frame on rigid racks.

WARNING⚠

- **Chock the wheels securely so the vehicle does not move.**
- **Do not remove the chocks until the entire operation is completed.**
- **Supporting a vehicle on a garage jack only is extremely dangerous, so always support the frame on rigid racks.**
- **Leave the garage jack and rigid racks in place until the entire operation is completed. Never remove them during the operation.**

● **Work sequence after removal and installation**

Follow the work sequence in reverse.

WHEEL AND TIRE

NOTE

Use right-hand threaded wheel nuts marked “R” for right side wheel and left-hand threaded wheel nuts marked “L” for left side wheel.

< Single tire >

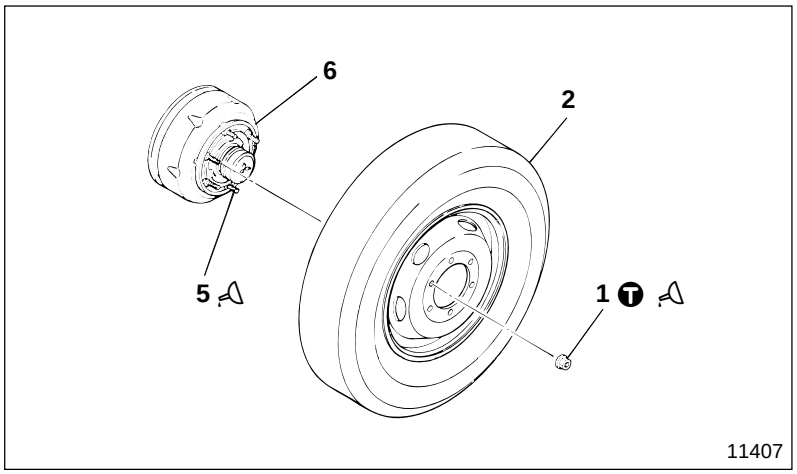

- **Removal sequence**
  - **1** Wheel nut
  - **2** Tire assembly P31-6
  - **5** Hub bolt
  - **6** Hub
- **Cleaning and applying grease before installation**
  P31-5
- **Installation sequence**
  Follow the removal sequence in reverse.

< Double tire >

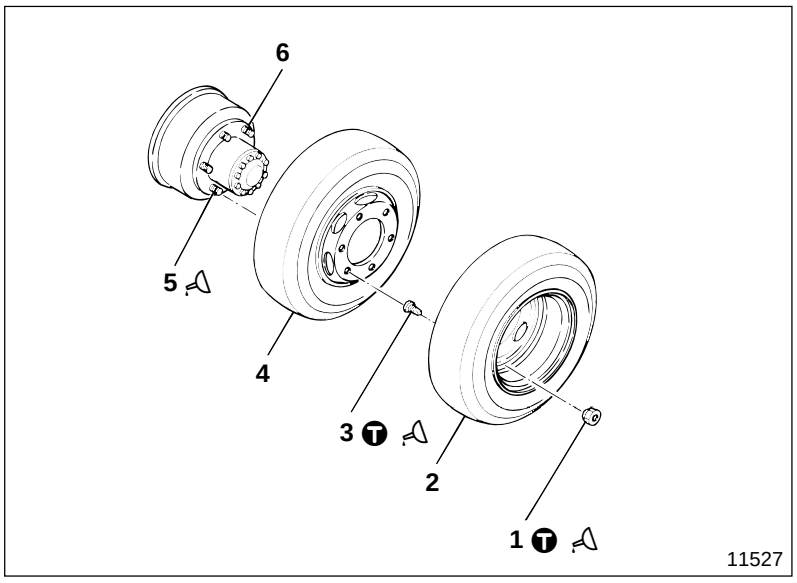

- **Removal sequence**
  - **1** Wheel nut (outer)
  - **2** Tire assembly P31-6
  - **3** Wheel nut (inner)
  - **4** Tire assembly P31-6
  - **5** Hub bolt
  - **6** Hub
- **Cleaning and applying grease before installation**
  P31-5
- **Installation sequence**
  Follow the removal sequence in reverse.

Tightening torque

Unit : N·m {lbf.ft, kgf·m}

Location	Parts to be tightened	Tightening torque	Remarks
1, 3	Wheel nut	370 to 410 {275 to 305, 38 to 42}	Wet

Lubricant

Location	Points of application	Kinds	Quantity
1	Wheel nut spherical area	Chassis grease [NLGI No. 1 (Ca soap)] or Wheel bearing grease [NLGI No. 2 (Li soap)]	As required
3	Thread and spherical areas of wheel nut (inner)	Chassis grease [NLGI No. 1 (Ca soap)] or Wheel bearing grease [NLGI No. 2 (Li soap)]	As required
5	Thread area of hub bolt	Chassis grease [NLGI No. 1 (Ca soap)] or Wheel bearing grease [NLGI No. 2 (Li soap)]	As required

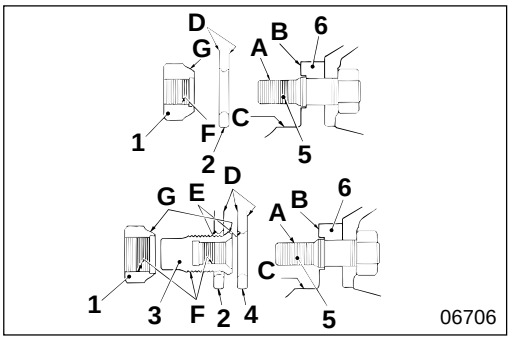

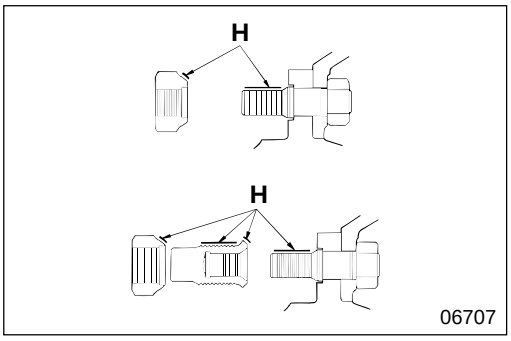

◆ Service procedure

● **Cleaning and applying grease before installation**

[Cleaning]

To prevent wheel nuts **1** and **3** and hub bolt **5** from becoming loose and to prevent mounting parts (tire assemblies **2** and **4** and hub **6**) from being damaged, remove rust, dust, additional coatings of paint, and foreign particles from the following areas:

A : Hub bolt thread area
B : Wheel mounting surface of hub
C : Wheel alignment area of hub
D : Disc wheel mating surface
E : Disc wheel nut mounting surface
F : Wheel nut thread area
G : Wheel nut spherical area

[Applying grease]

H : Grease application location

WARNING⚠

Never use grease containing molybdenum disulfide, since it can cause loosening of fitted screws.

Tire Assembly

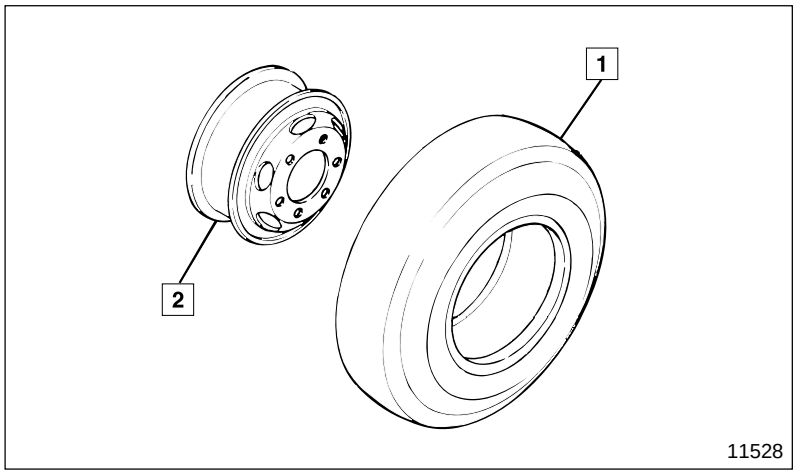

● **Disassembly sequence**

1 Tire
2 Disc wheel

● **Assembly sequence**

Follow the disassembly sequence in reverse.

Service standards

Unit : mm {in.}

Location	Maintenance item		Standard value	Limit	Remedy
1	Horizontal deflection of tire (When assembled)		3.5 {0.14} or less	—	—
2	Disc wheel	Flatness	0.2 {0.0079} or less	—	—
		Horizontal deflection	1.5 {0.059} or less	—	—
		Vertical deflection	1.5 {0.059} or less	—	—

◆ Service procedure

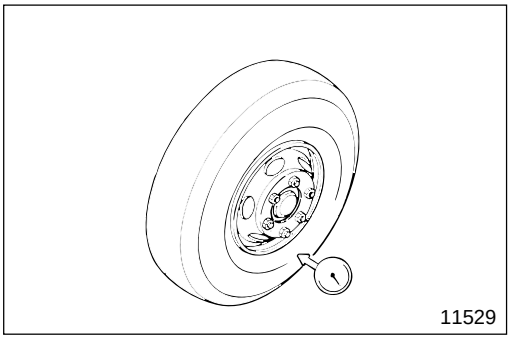

1 **Deflection of tire**

[Inspection]
If the measured value is higher than the limit, make corrections as follows.

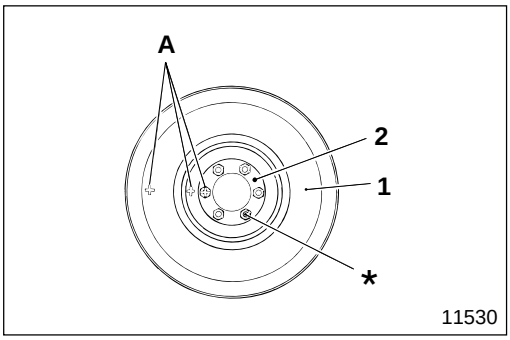

[Correction]

- Put chalk marks on tire **1**, disc wheel **2**, and hub bolt * (positions **A** as illustrated).
- Remove tire **1** from disc wheel **2**.

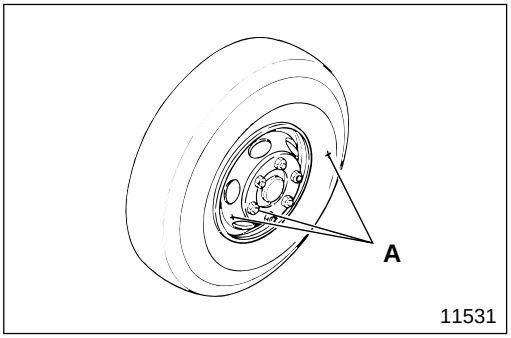

- Measure deflection of disc wheel **2**. If the most deflective position is near the chalk mark, reinstall tire **1** rotating it half a turn from the chalk mark and tighten nuts.
- Remeasure deflection of tire **1**.
- If the measured value is still higher than the limit, replace tire **1** and disc wheel **2** together as an assembly.

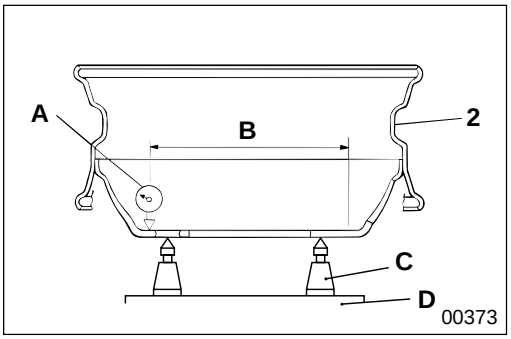

2 Inspection of disc wheel

(1) Flatness

- Measure flatness at specified position **B** from the center of disc wheel **2**.
  Measure flatness at six equidistant points (wheel with 6 studs) on the wheel.
  A : Dial gauge
  B : ø170 to 270 mm {6.69 to 10.6 in.}
  C : Portable screw jacks (x 4)
  D : Surface plate
- Replace disc wheel **2** if the measured value is higher than the limit.

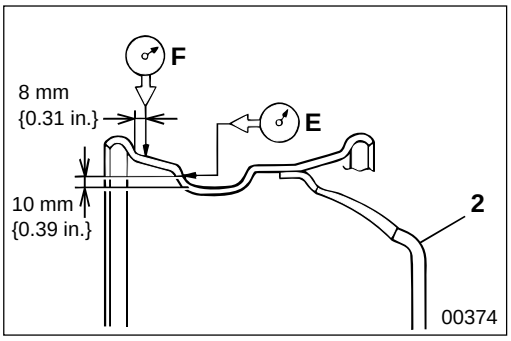

(2) Deflection

Replace disc wheel **2** if the measured value is higher than the limit.
E : Horizontal deflection measuring point
F : Vertical deflection measuring point

MITSUBISHI
FUSO

FH

Service Manual

Group 33
Front Suspension

Table of Contents

BACK

HOME

MITSUBISHI FUSO TRUCK OF AMERICA, Inc.

Pub No. TWME9502-33

GROUP 33 FRONT SUSPENSION

STRUCTURE AND OPERATION 2

TROUBLESHOOTING 3

WORK BEFOR REMOVAL AND INSTALLATION
OF FRONT SUSPENSION 4

REMOVAL AND INSTALLATION OF LEAF SPRING ASSEMBLY 6

LEAF SPRING ASSEMBLY 12

SHOCK ABSORBER 14

STABILIZER 15

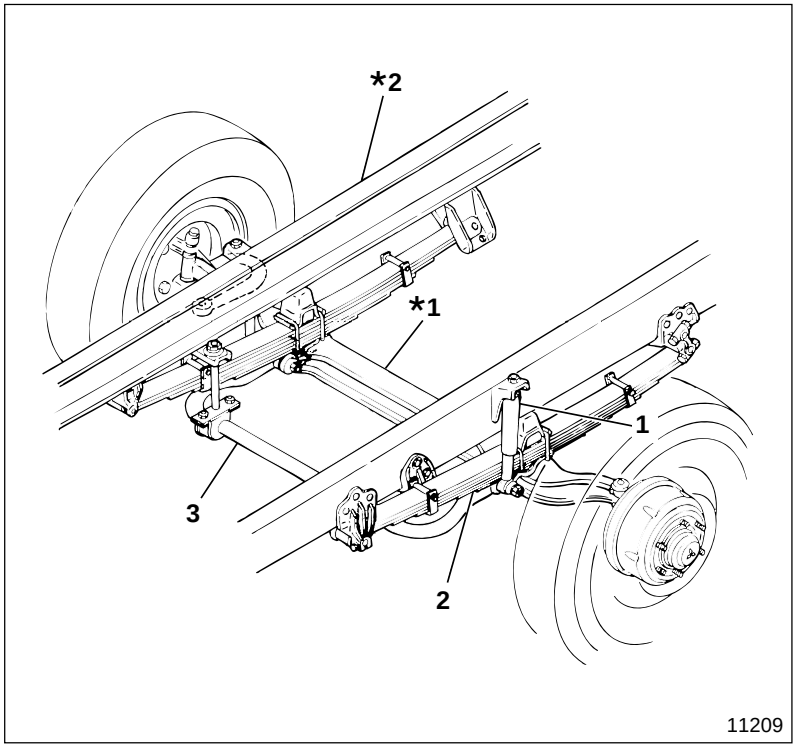

1 Shock absorber
2 Leaf spring assembly
3 Stabilizer

***1:** Front axle
***2:** Frame

Leaf spring assembly **2**, shock absorber **1** and stabilizer **3** are installed between frame ***2** and front axle ***1** to support the vehicle body mass and absorb vibration and shock from the road surface to prevent them from being directly transmitted to the vehicle body thereby protecting the crew, the vehicle body, and the cargo. In addition, irregular vibration from the wheels is restrained, ensuring driving stability.

Possible causes \ Symptoms		Ride soft with gentle swaying	Noise generated when vehicle is unloaded	Direct impact transmitted from uneven road surface	Noise generated when vehicle is loaded	Excessive rolling while cruising	Periodic jolts received from the road surface	Remarks
Leaf spring	Cracked or damaged			○				
	Fractured		○					
	Spring brackets broken				○			
	U-bolts loose				○			
	Spring bushing worn		○					
Shackle pin play in thrust direction			○					
Bump stopper damaged or broken					○			
Shock absorber	Oil leaking noticeable or damping force decreased	○						
	Rubber bushing worn		○					
	Installation loose		○					
Stabilizer	Stabilizer deformed or bushing worn					○		
Tire	Tires worn unevenly						○	
	Tires and wheels unbalanced						○	Gr 31
	Air pressure excessive			○				

WORK BEFORE REMOVAL AND INSTALLATION OF FRONT SUSPENSION

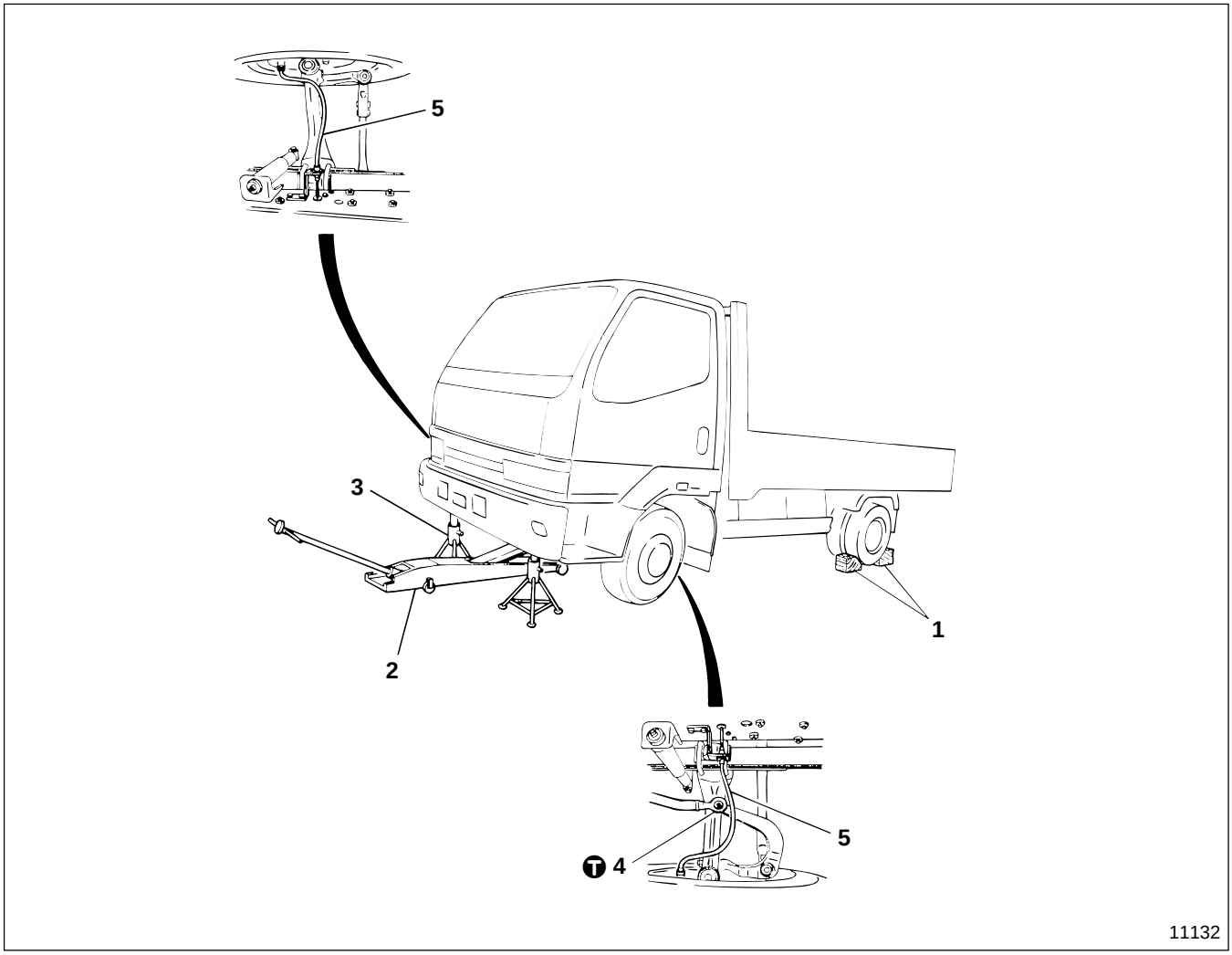

● **Removal sequence**

1 Place wheel chocks.
2 Jack up the front axle with a garage jack.
3 Support the front frame on rigid racks.
4 Remove the nut (that connect the knuckle arm and the drag link).
5 Disconnect the brake hose (on the frame side).

WARNING

- **Chock the wheels securely so the vehicle does not move.**
- **Do not remove the chocks until the entire operation is completed.**
- **Supporting a vehicle on a garage jack only is extremely dangerous, so always support the frame with rigid racks.**
- **Leave the garage jack and rigid racks in place until the entire operation is completed. Never remove them during the operation.**

CAUTION

Be sure to protect the brake hose from dust by fitting blanking plugs.

● **Installation sequence**

Follow the removal sequence in reverse.

WARNING

You must bleed air from the brake system after connecting the brake hose, failure to do so would cause the brakes to malfunction. **Gr 35**

CAUTION

Be sure that the brake hose is not twisted when you connect it.

Tightening torque

Unit : N·m {lbf.ft, kgf·m}

Location	Parts to be tightened	Tightening torque	Remarks
4	Nut (Knuckle arm and drag link connecting)	190±47.5 {140±35, 19.4±4.85}	—

REMOVAL AND INSTALLATION OF LEAF SPRING ASSEMBLY

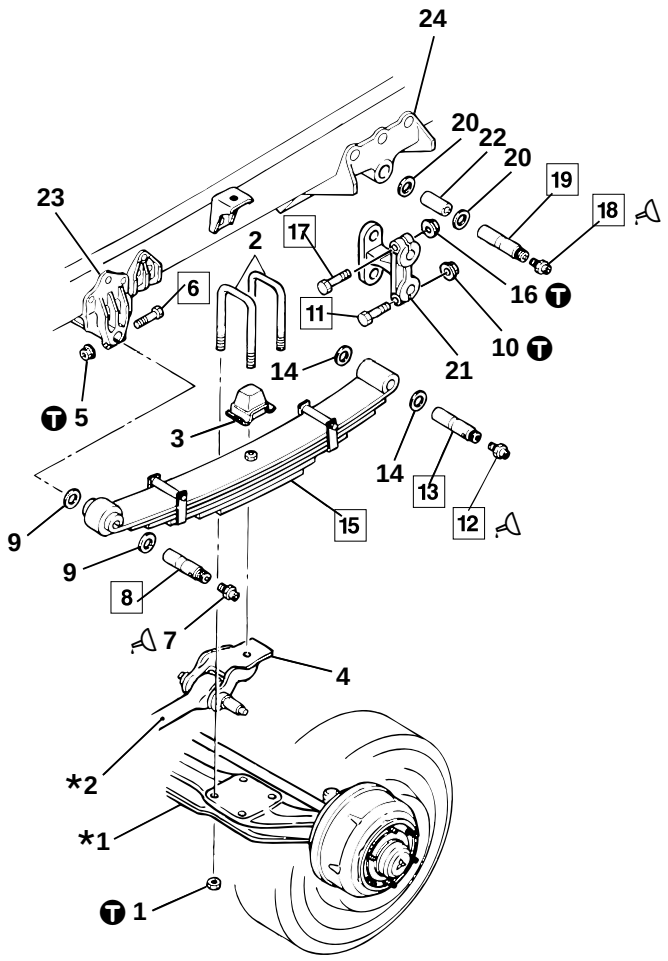

11133

● **Removal sequence**

1 U-bolt nut
2 U-bolt
3 Bump stopper
4 Stabilizer bracket
📖 P33-15
5 Nut
6 Bolt
7 Grease nipple
8 Shackle pin
9 Side washer
10 Nut
11 Bolt
12 Grease nipple
13 Shackle pin
14 Side washer
15 Leaf spring assembly
📖 P33-12
16 Nut
17 Bolt
18 Grease nipple
19 Shackle pin
20 Side washer
21 Shackle link
22 Bushing
23 Front spring front bracket
24 Front spring rear bracket

***1 :** Front axle 🗂 Gr 26
***2 :** Stabilizer 📖 P33-15

NOTE

Do not remove front spring front bracket 23 and rear bracket 24 unless they are faulty. 🗂 Gr 41

● **Installation sequence**

Follow the removal sequence in reverse.

Service standards

Unit : mm {in.}

Location	Maintenance item	Standard value (Basic diameter in [ ])	Limit	Remedy
8, 3, 15	Clearance between shackle pin and leaf spring assembly bushing	[28} 0 to 0.12 {[1.10] 0 to 0.0047}	0.3 {0.012}	Replace
8, 23	Clearance between shackle pin and front spring front bracket	[28} 0 to 0.04 {[1.10] 0 to 0.0016}	0.3 {0.012}	Replace
13, 19, 21	Clearance between shackle pin and shackle link	[28} 0 to 0.04 {[1.10] 0 to 0.0016}	0.3 {0.012}	Replace
15, 21	Clearance between leaf spring assembly and shackle link	0.5 to 1.2 {0.020 to 0.047}	1.5 {0.059}	Replace side washer
15, 23	Clearance between leaf spring assembly and front spring front bracket	0.2 to 0.9 {0.0079 to 0.035}	—	Replace side washer
19, 22	Clearance between shackle pin and bushing	[28} 0.02 to 0.14 {[1.10] 0.00079 to 0.0055}	—	Replace
21, 24	Clearance between shackle link and front spring rear bracket	0.5 to 1.2 {0.020 to 0.047}	—	Replace side washer

Tightening torque

Unit : N·m {lbf.ft, kgf·m}

Location	Parts to be tightened	Tightening torque	Remarks
1	U-bolt nut (U-bolt mounting)	240±36 {175±27, 24.5±3.7}	Wet
5, 10, 16	Nut (Shackle pin mounting)	80 to110 {58 to 80, 8.0 to 11}	—

Lubricant

Location	Points of application	Kinds	Quantity
7, 12, 18	Grease nipple	Chassis grease [NLGI NO.1 (Ca soap)]	As required

Special tools

Unit : mm {in.}

Location	Tool name and shape	Part No.	Application
6, 8, 11, 13, 17, 19	Shackle pin setting bar 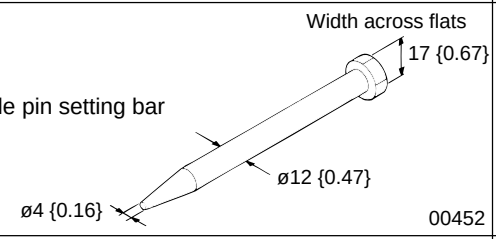	MC023419	Removal of bolt (installation of shackle pin), alignment of shackle pin bolt slot
8, 3, 19	Shackle pin remover 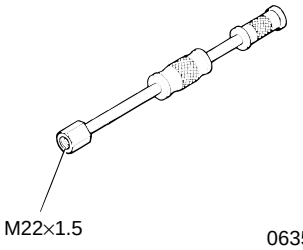	MB999112	Removal of shackle pin

REMOVAL AND INSTALLATION OF LEAF SPRING ASSEMBLY

◆ Service procedure

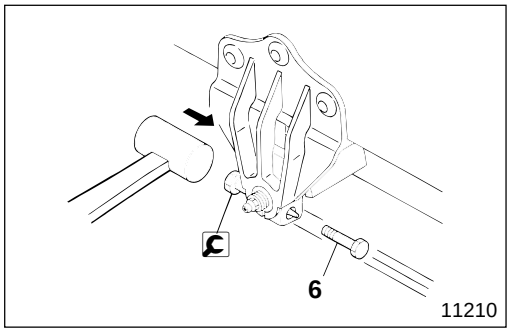

6 **Removal of bolt**

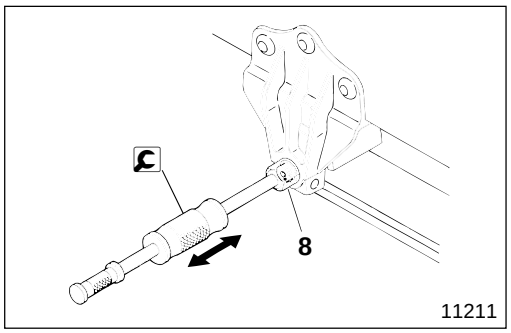

8 **Shackle pin**

[Removal]

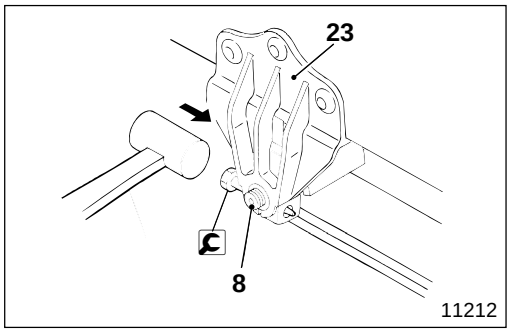

[Installation]
Align the bolt hole of front spring front bracket **23** and the bolt slot of shackle pin **8** using shackle pin setting bar.

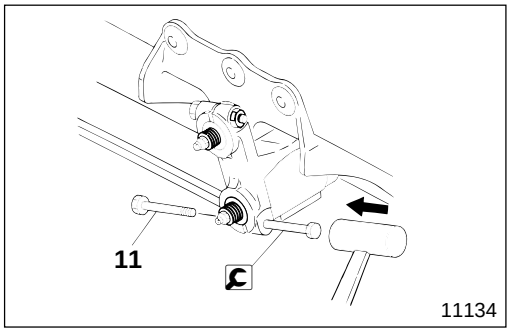

11 **Removal of bolt**

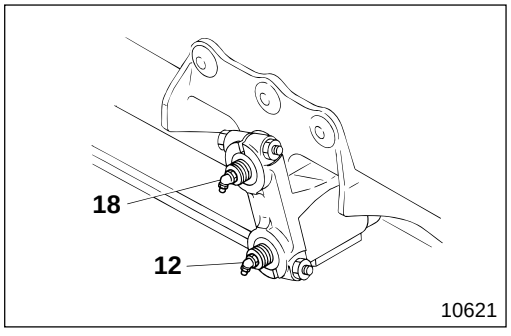

12 **18** **Installation of grease nipple**

- Install grease nipples **12**, **18** on the driver's side (rear left) so that they face the most convenient side for supplying grease.
- For the automatic transmission model, also install grease nipples **12**, **18** on the passenger's side (rear right) so that they face the most convenient side for supplying grease.

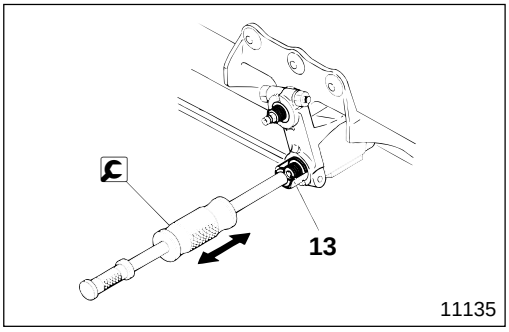

13 **Shackle pin**

[Removal]

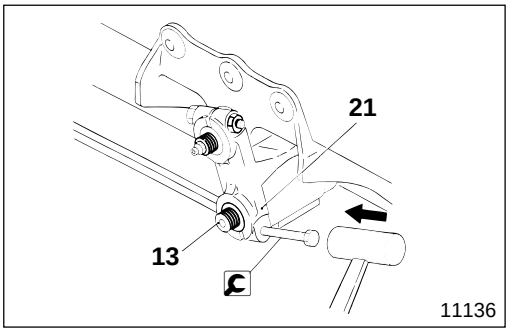

[Installation]
Align the bolt hole of shackle link **21** and the bolt slot of shackle pin **13** using 🔧 shackle pin setting bar.

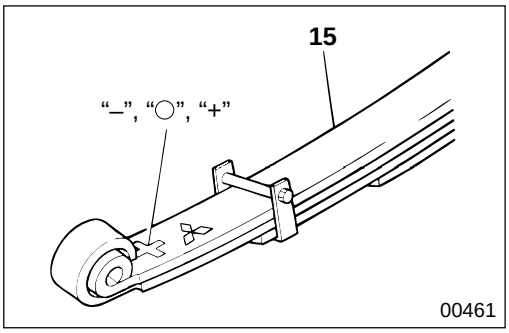

15 **Leaf spring assembly left/right height combinations**

When replacing leaf spring assembly **15**, select the members so that the left and right height marks "+", "○" and "–" are combined as shown below.

Item	Combination				
	1	2	3	4	5
Right leaf spring assembly, passenger's side	–	–	○	○	+
Left leaf spring assembly, driver's side	–	○	○	+	+

CAUTION⚠

Passenger's side leaf spring assembly 15 differs from driver's side leaf spring assembly in camber (arch). Do not mix them up when mounting, or this would cause vehicle tilt.

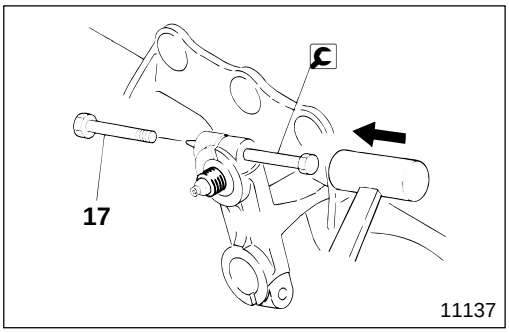

17 **Removal of bolt**

REMOVAL AND INSTALLATION OF LEAF SPRING ASSEMBLY

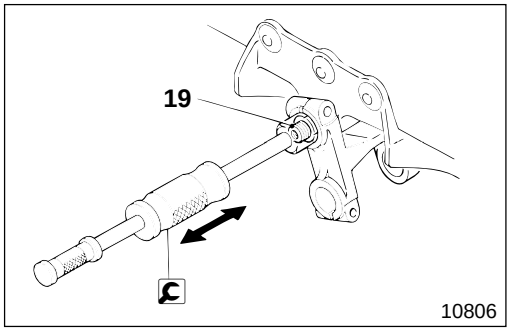

19 **Shackle pin**

[Removal]

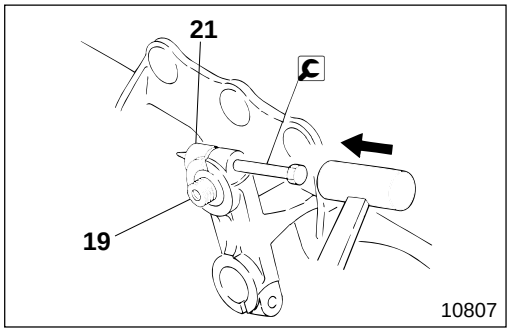

[Installation]
Align the bolt hole of shackle link **21** and the bolt slot of shackle pin **19** using shackle pin setting bar.

M E M O

LEAF SPRING ASSEMBLY

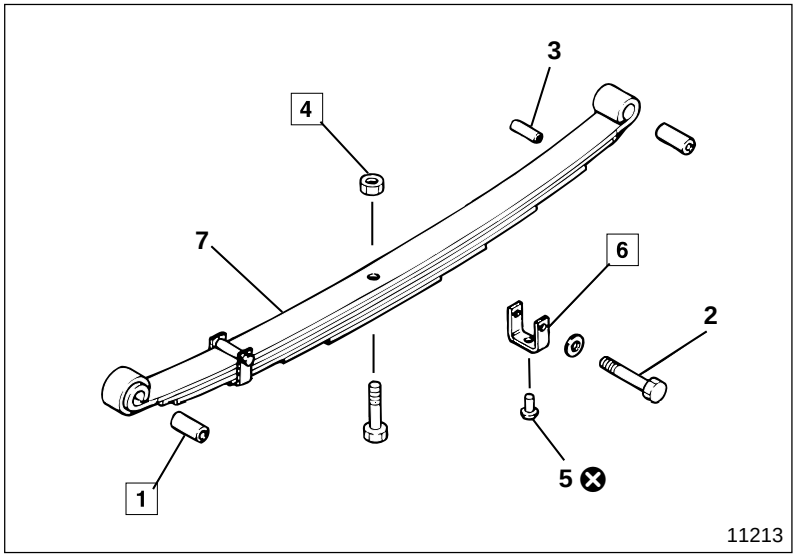

● **Disassembly sequence**

1 Spring bushing
2 Clip bolt
3 Pipe
4 Center nut
5 Rivet
6 Clip
7 Leaf spring

⊗ : Non-reusable parts

● **Assembly sequence**

Follow the disassembly sequence in reverse.

Special tools

Unit : mm {in.}

Location	Tool name and shape	Part No.	Application
1	Bushing installer set **A:** Bushing installer A **B:** Bushing installer B 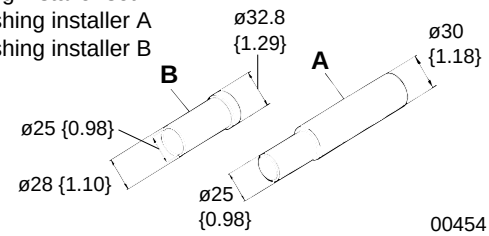	MB999066 **A:** MB999067 **B:** MB999068	Removal and installation of spring bushing

◆ Service procedure

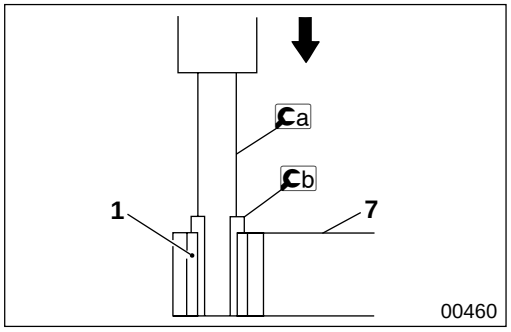

1 **Removal and installation of spring bushing**

Remove spring bushing **1** from leaf spring **7** using a bushing installer **A** and b bushing installer **B**. For installation, follow the removal sequence in reverse.

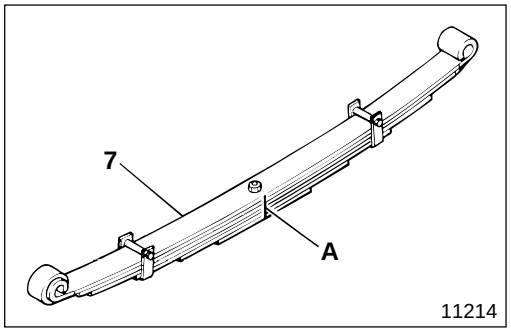

4 **Center nut**

[Removal]

- Put alignment marks **A** on the side of leaf spring **7**.

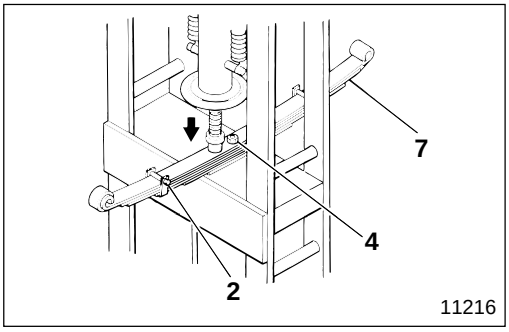

- Compress leaf springs **7** using a press, remove clip bolt **2** and center nut **4**.

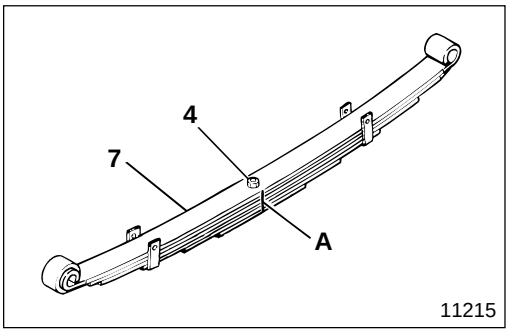

[Installation]
- Align alignment marks **A** on leaf spring **7** and assemble.
- Tighten center nut **4** temporarily.

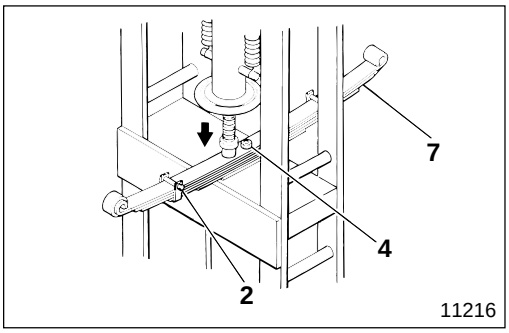

- Compress leaf spring **7** using a press, then install center nut **4**. After installation, caulk at three points using a punch.
- Tighten center clip bolt **2**.

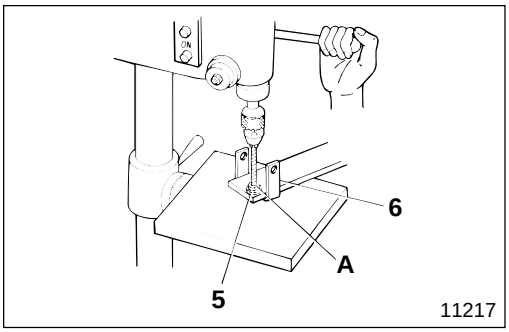

6 **Clip**

[Removal]
Drill out caulked end **A** of rivet **5** on a drill press, then remove clip **6**.

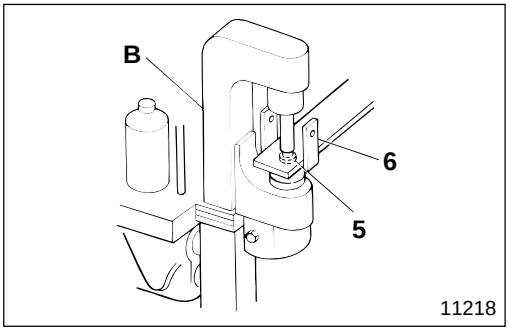

[Installation]
Using riveting machine **B**, install clip **6** by caulking rivet **5**.

SHOCK ABSORBER

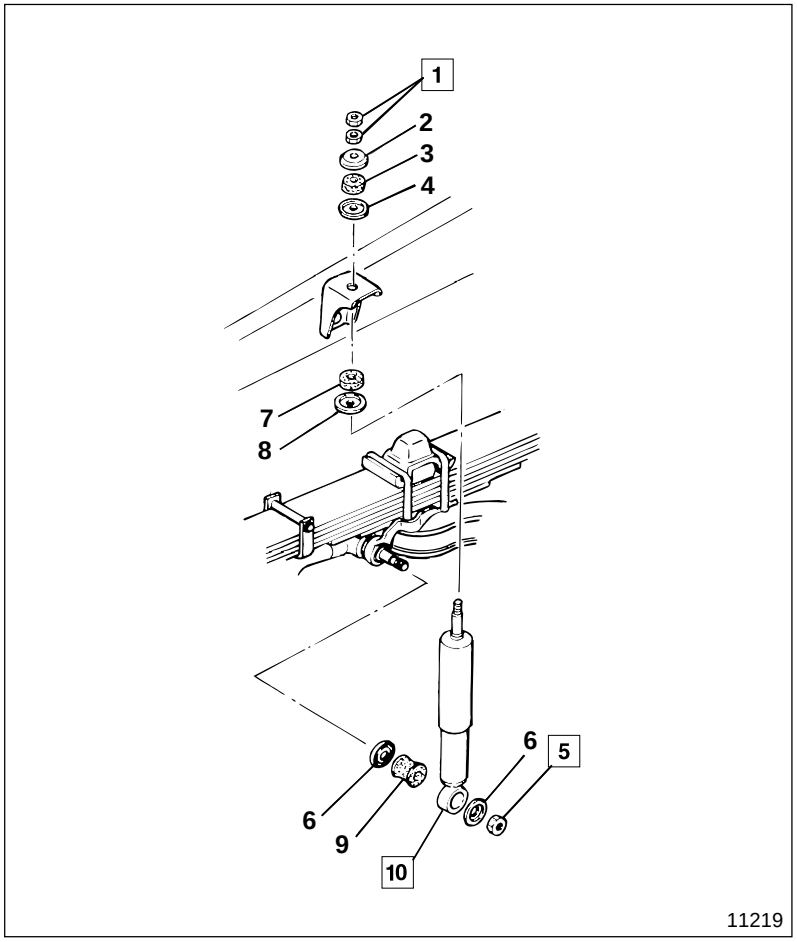

● **Removal sequence**

1 Nut
2 Washer
3 Rubber bushing
4 Centering washer
5 Nut
6 Washer
7 Rubber bushing
8 Washer
9 Rubber bushing
10 Shock absorber

● **Installation sequence**

Follow the removal sequence in reverse.

◆ Service procedure

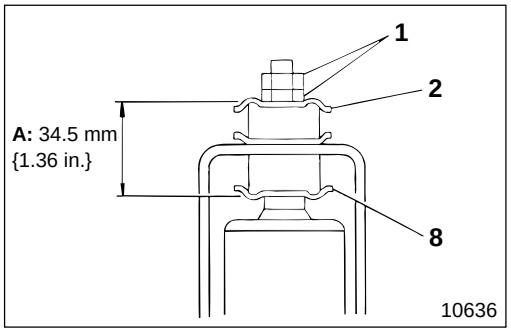

1 **Nut**

Install nut **1** so that the distance between washers **2**, **8** is **A**.

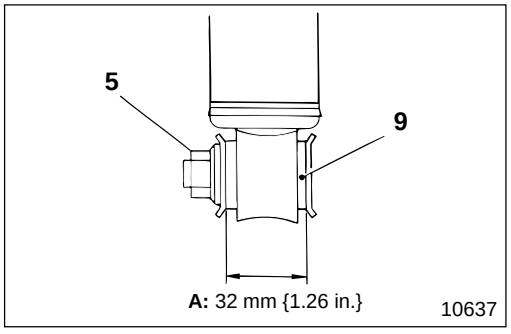

5 **Nut**

Install nut **5** so that dimension of rubber bushing **9** is **A**.

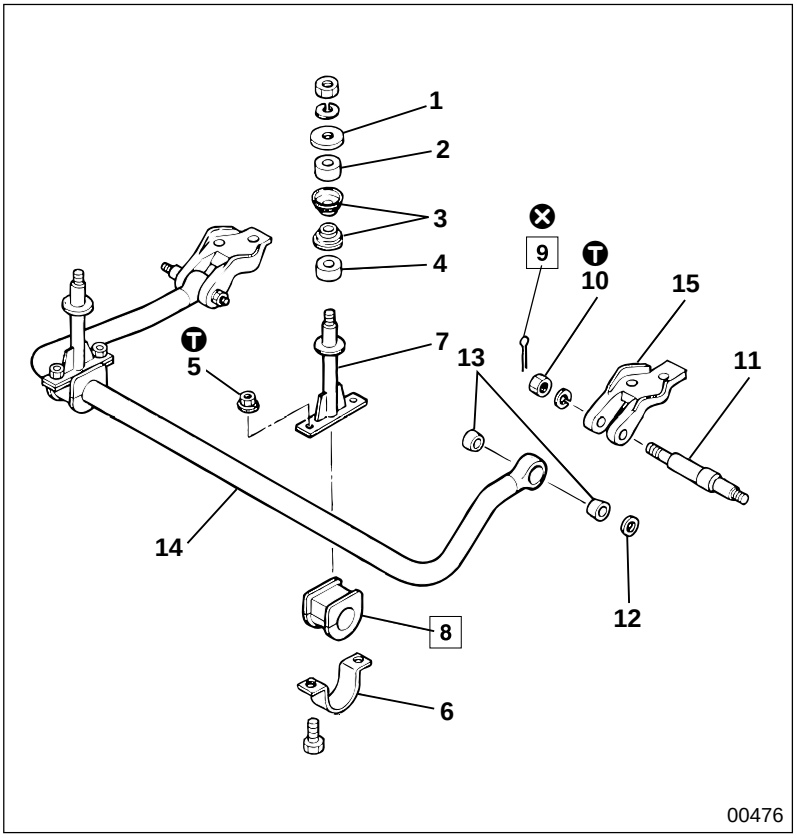

● **Removal sequence**

1 Sheet
2 Bushing
3 Holder
4 Bushing
5 Nut
6 Cap
7 Stabilizer rod
8 Stabilizer bushing
9 Split pin
10 Nut
11 Stabilizer pin
12 Side washer
13 Bushing
14 Stabilizer bar
15 Stabilizer bracket

⊗ : Non-reusable parts

● **Installation sequence**

15 →11→8→7→6
14→13→12 →5→4→3→2→1→10→9

CAUTION

Be careful not to force in bushings 2, 4 and stabilizer rod 7 when installing them.

Ⓣ Tightening torque

Unit : N·m {lbf.ft, kgf·m}

Location	Parts to be tightened	Tightening torque	Remarks
5	Nut (Cap installation)	80 to 110 {58 to 80, 8.0 to 11}	—
10	Nut (Stabilizer pin installation)	100 to 160 {72 to 115, 10 to 16}	—

◆ Service procedure

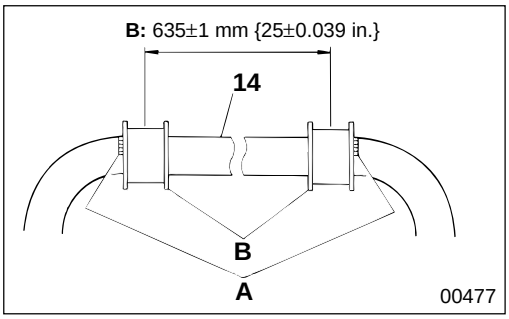

8 **Stabilizer bushing**

Install stabilizer bushing **8** with their end faces aligned with marks **A** on stabilizer bar **14** so that the distance between ends is **B**.

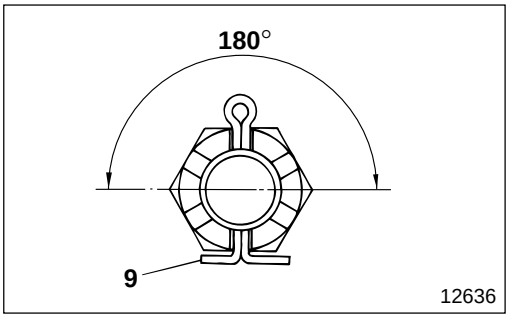

9 **Installation of split pin**

Insert split pin **9** so that its head is placed within the illustrated range, then bend the split pin securely.

MITSUBISHI
FUSO

FH

Service Manual

Group 34
Rear Suspension

Table of Contents

BACK

HOME

MITSUBISHI FUSO TRUCK OF AMERICA, Inc.

Pub No. TWME9502-34

GROUP 34 REAR SUSPENSION

STRUCTURE AND OPERATION 2

TROUBLESHOOTING 3

WORK BEFORE REMOVAL AND INSTALLATION OF REAR SUSPENSION 4

REMOVAL AND INSTALLATION OF LEAF SPRING ASSEMBLY 6

LEAF SPRING ASSEMBLY 10

SHOCK ABSORBER 12

STABILIZER 13

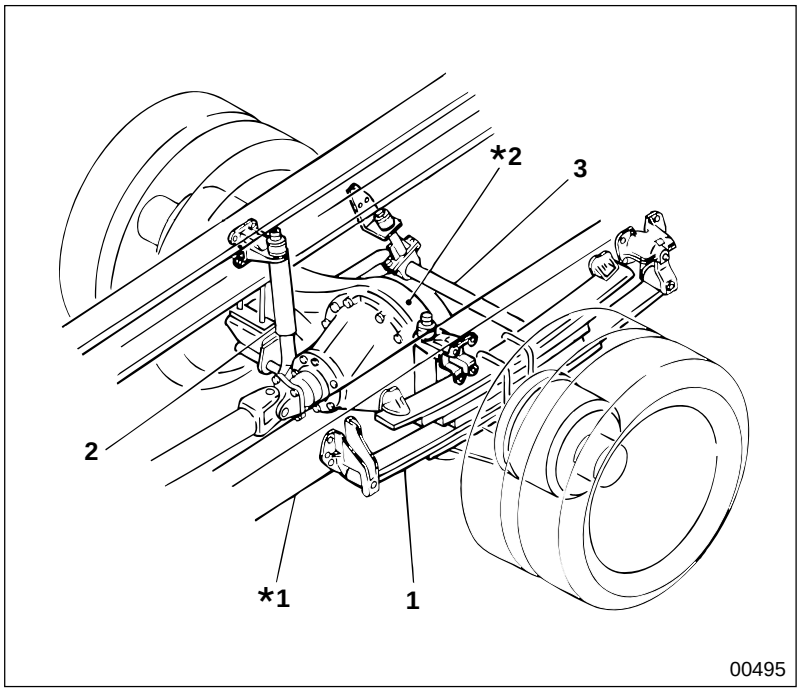

1 Leaf spring assembly
2 Shock absorber
3 Stabilizer

***1** : Frame
***2** : Rear axle

Leaf spring assembly **1** and shock absorber **2** are installed between frame ***1** and rear axle ***2** to support the vehicle body mass and absorb vibration and shock from the road surface to prevent them from being directly transmitted to the vehicle body thereby protecting the crew, the vehicle body, and the cargo. In addition, irregular vibration from the wheels is restrained, ensuring driving stability. Stabilizer **3** is installed to prevent rolling.

Possible causes \ Symptoms		Ride spongy	Noise generated when vehicle is unloaded	Impact transmitted from uneven road surface	Noise generated when vehicle is loaded	Excessive rolling while cruising	Periodic jolts caused by the road surface	Remarks
Leaf spring	Cracked or damaged			○				
	Damaged		○					
	Spring bracket broken				○			
	U-bolts loose				○			
	Spring bushing worn		○					
Shackle pins thrust play excessive			○					
Helper stopper damaged or broken					○			
Shock absorber	Oil leaking noticeable or damping force decreased	○						
	Rubber bushing worn		○					
	Bolt loose		○					
Stabilizer	Stabilizer deformed, bushing worn					○		
Tire	Tires worn unevenly						○	
	Tires and wheels unbalanced						○	Gr 31
	Air pressure excessive			○				

WORK BEFORE REMOVAL AND INSTALLATION OF REAR SUSPENSION

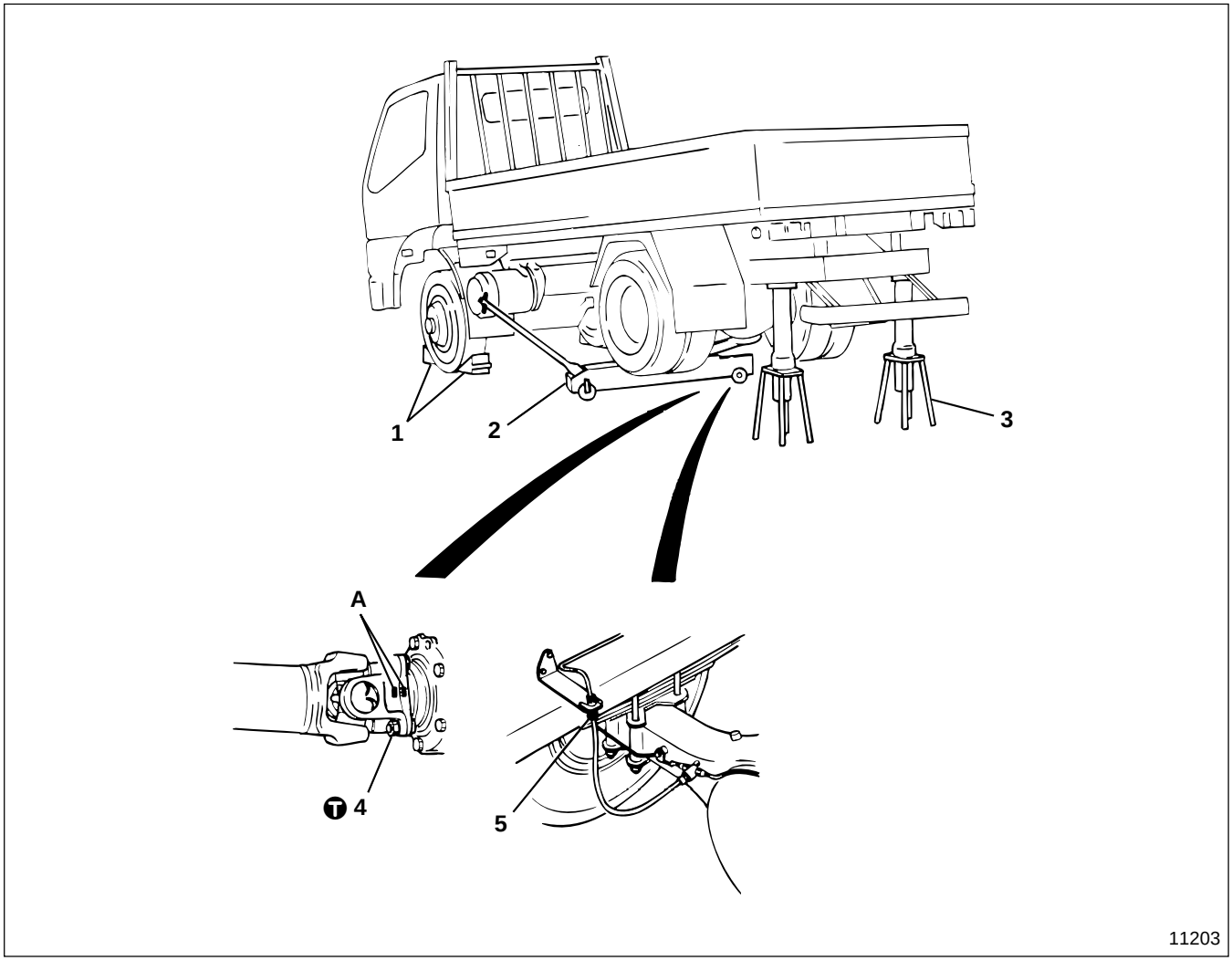

● **Removal sequence**

1 Place wheel chocks.
2 Jack up the rear axle with a garage jack.
3 Support the rear frame on a rigid rack.
4 Put alignment marks **A** on the rear axle companion flange and the propeller shaft flange yoke, then remove the nuts (on the joint between the rear axle and the propeller shaft).
5 Remove the brake hose joint (on the frame).

WARNING⚠

- **Chock the wheels securely so the vehicle does not move.**
- **Do not remove the chocks until the entire operation is completed.**
- **Supporting a vehicle on a garage jack only is extremely dangerous, so always support the frame on rigid racks.**
- **Leave the garage jack and rigid racks in place until the entire operation is completed. Never remove them during the operation.**

CAUTION⚠

Be sure to protect the brake hose from dust by fitting blanking plugs.

● **Installation sequence**

Follow the removal sequence in reverse.

WARNING⚠

You must bleed air from the brake system after installing the brake hose, failure to do so would cause the brake to malfunction. Gr 35

CAUTION⚠

Be sure that the brake hose is not twisted when you install it.

Tightening torque

Unit : N·m {lbf.ft, kgf·m}

Location	Parts to be tightened	Tightening torque	Remarks
4	Nut (Rear axle and propeller shaft connecting)	85 {61, 8.5}	—

REMOVAL AND INSTALLATION OF LEAF SPRING ASSEMBLY

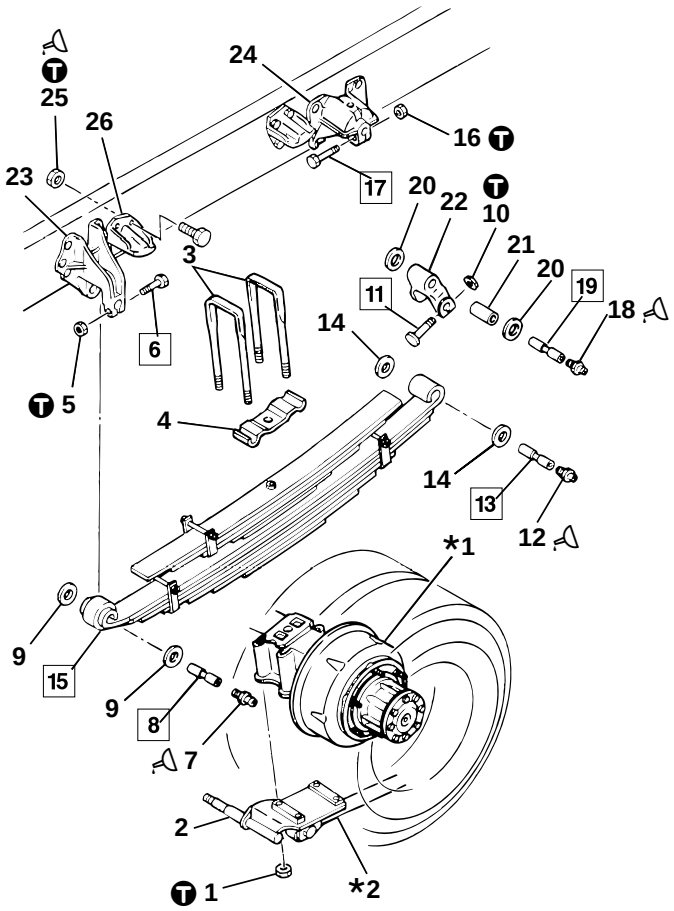

11207

● **Removal sequence**

1 U-bolt nut
2 Shock absorber and stabilizer bracket 📖 P34-13
3 U-bolt
4 Spring pad
5 Nut
6 Bolt
7 Grease nipple
8 Shackle pin
9 Side washer
10 Nut
11 Bolt
12 Grease nipple
13 Shackle pin
14 Side washer
15 Leaf spring assembly 📖 P34-10
16 Nut
17 Bolt
18 Grease nipple
19 Shackle pin
20 Side washer
21 Bushing
22 Shackle link
23 Rear spring front bracket
24 Rear spring rear bracket
25 Nut
26 Helper stopper

***1** : Rear axle Gr 27
***2** : Stabilizer 📖 P34-13

NOTE

Do not remove rear spring front bracket 23 or rear spring rear bracket 24 unless they are faulty. Gr 41

● **Installation sequence**

Follow the removal sequence in reverse.

Service standards

Unit : mm {in.}

Location	Maintenance item	Standard value (Basic diameter in [ ])	Limit	Remedy
8, 13, 15	Clearance between shackle pin and bushing of leaf spring assembly	[28] 0 to 0.12 {[1.10] 0 to 0.0047}	0.3 {0.019}	Replace
19, 21	Clearance between shackle pin and bushing	[28] 0.02 to 0.14 {[1.10] 0.00079 to 0.0055}	0.3 {0.019}	Replace
8, 23	Clearance between shackle pin and rear spring front bracket	[28] 0 to 0.04 {[1.10] 0 to 0.0016}	0.3 {0.019}	Replace
15, 22	Clearance between leaf spring assembly and shackle link	0.2 to 0.9 {0.0079 to 0.035}	—	Replace side washer
13, 22	Clearance between shackle pin and shackle link	[28] 0 to 0.04 {[1.10] 0 to 0.0016}	0.3 {0.019}	Replace
15, 23	Clearance between leaf spring assembly and rear spring front bracket	0.2 to 0.9 {0.0079 to 0.035}	—	Replace side washer
19, 24	Clearance between shackle pin and rear spring rear bracket	[28] 0 to 0.04 {[1.10] 0 to 0.0016}	1.0 {0.039}	Replace
22, 24	Clearance between shackle link and rear spring rear bracketside washer	0.2 to 0.6 {0.0079 to 0.024}	—	Replace side washer

Tightening torque

Unit : N·m {lbf.ft, kgf·m}

Location	Parts to be tightened	Tightening torque	Remarks
1	U-bolt nut (U-bolt mounting)	414±62 {305±46, 42.2±6.3}	Wet
5, 10, 16	Nut (Shackle pin mounting)	80 to 110 {58 to 80, 8 to 11}	—
25	Nut (Helper stopper mounting)	103 to 132 {76 to 98, 10.5 to 13.5}	Wet

Lubricant

Location	Points of application	Kinds	Quantity
7, 12, 18	Supply via grease nipple	Chassis grease [NLGI No.1 (Ca soap)]	As required
25	Thread and contact surface of nut	Engine oil	As required

Special tools

Unit : mm {in.}

Location	Tool name and shape	Part No.	Application
6, 8, 11, 13, 17, 19	Shackle pin setting bar 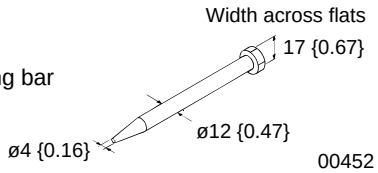	MC023419	Removal of bolt (shackle pin installation), alignment of the shackle pin bolt groove
8, 13, 19	Shackle pin puller 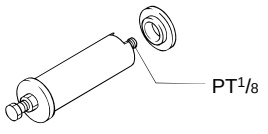	MH061452	Removal of shackle pin

REMOVAL AND INSTALLATION OF LEAF SPRING ASSEMBLY

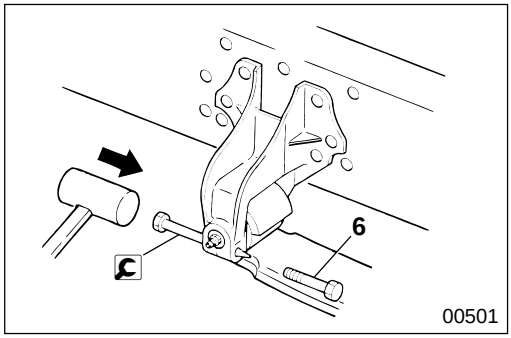

◆ Service procedure

6 **Removal of bolt**

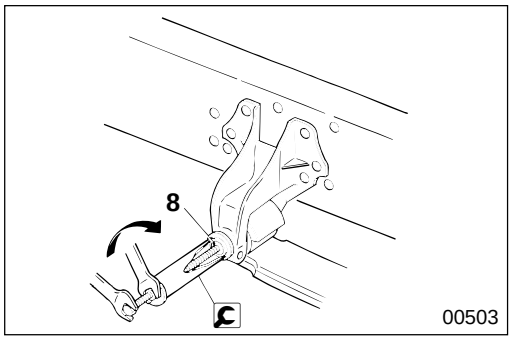

8 **Shackle pin**

[Removal]

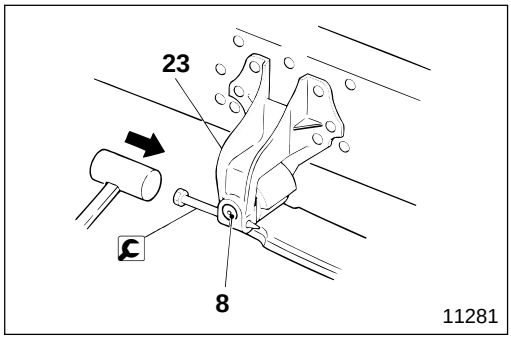

[Installation]
Align the bolt hole of rear spring front bracket **23** with the bolt groove of shackle pin **8** using 🔧 shackle pin setting bar.

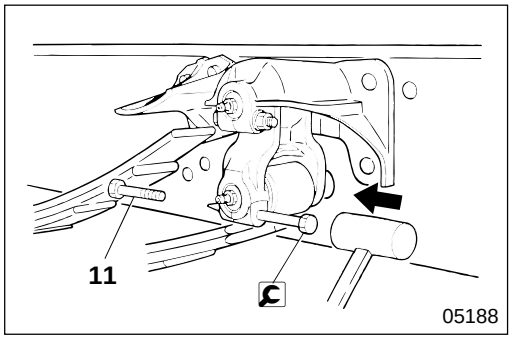

11 **Removal of bolt**

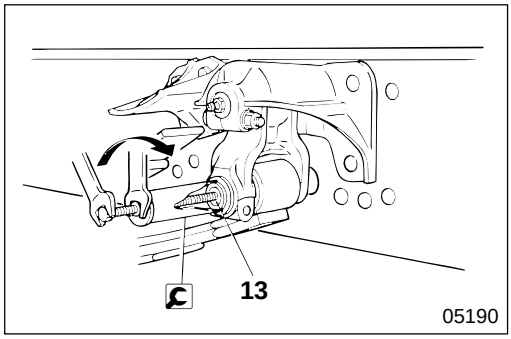

13 **Shackle pin**

[Removal]

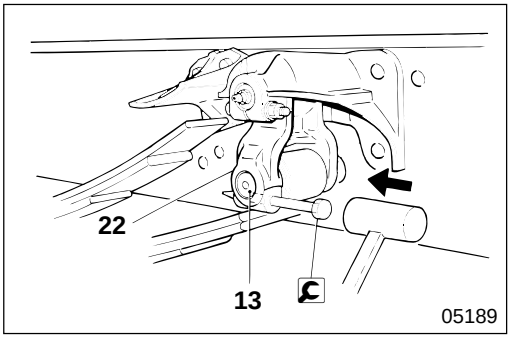

[Installation]
Align the bolt hole of shackle link **22** with the bolt groove of shackle pin **13** using 🔧 shackle pin setting bar.

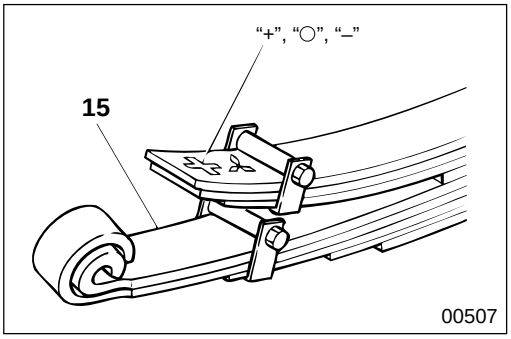

15 **Leaf spring assembly left/right height combinations**

When replacing leaf spring assembly **15**, select the members so that the left and right height marks "+", "○" and "–" are combined as shown below.

Item	Combination		
	1	2	3
Leaf spring assembly, left side	+	○	–
Leaf spring assembly, right side	+	○	–

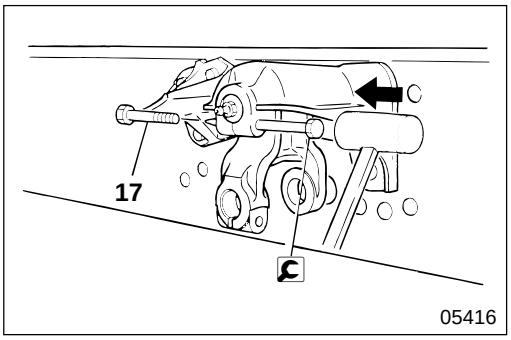

17 **Removal of bolt**

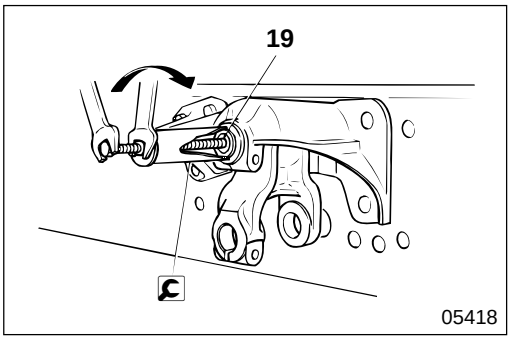

19 **Shackle pin**

[Removal]

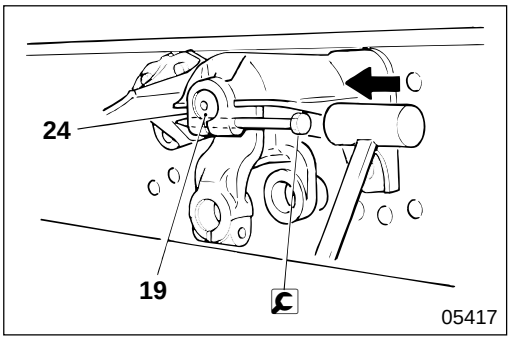

[Installation]
Align the bolt hole of rear spring rear bracket **24** and the bolt groove of shackle pin **19** using 🔧 shackle pin setting bar.

LEAF SPRING ASSEMBLY

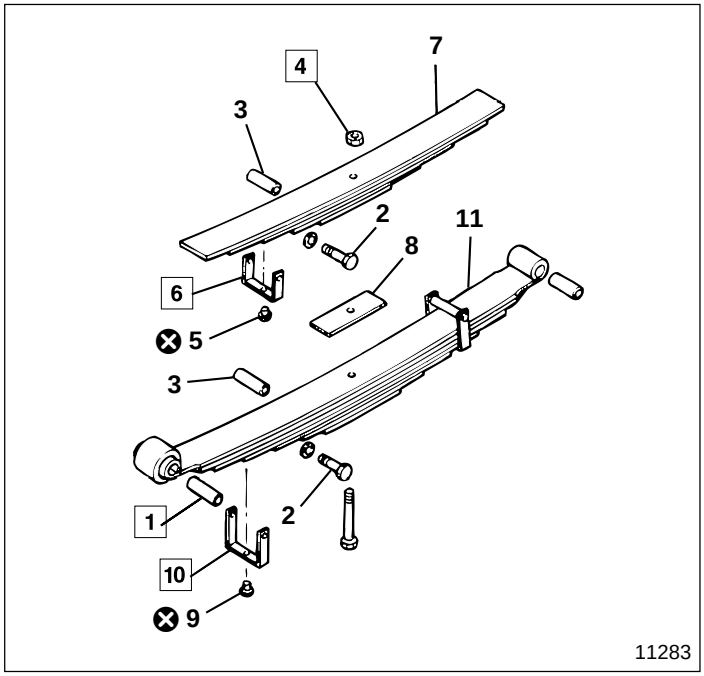

● **Disassembly sequence**

1 Spring bushing
2 Clip bolt
3 Pipe
4 Center nut
5 Rivet
6 Clip
7 Helper spring
8 Seat
9 Rivet
10 Clip
11 Main spring

⊗ : Non-reusable parts

● **Assembly sequence**

Follow the disassembly sequence in reverse.

Special tools

Unit : mm {in.}

Location	Tool name and shape	Part No.	Application
1	Bushing installer set **A** : Bushing installer A **B** : Bushing installer B 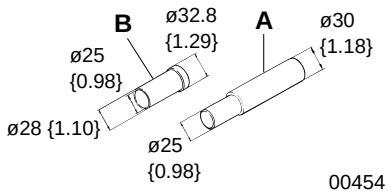	MB999066 **A** : MB999067 **B** : MB999068	Removal and installation of bushing

◆ Service procedure

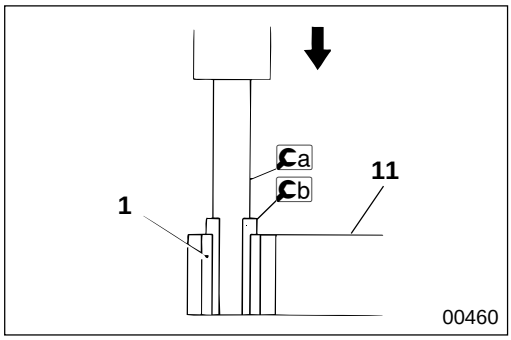

1 **Removal and installation of spring bushing**

Remove spring bushing **1** from main springs **11** using a bushing installer **A** and b bushing installer **B**. For installation, follow the removal sequence in reverse.

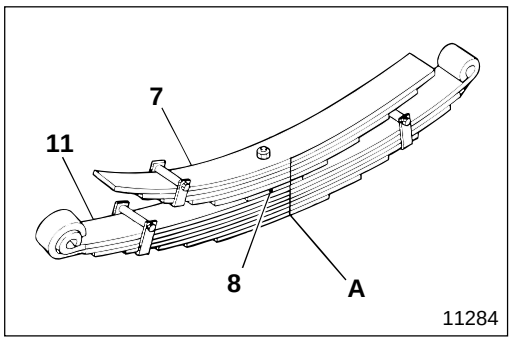

4 **Center nut**

[Removal]

- Put alignment marks **A** on the sides of helper springs **7**, seat **8**, and main springs **11**.

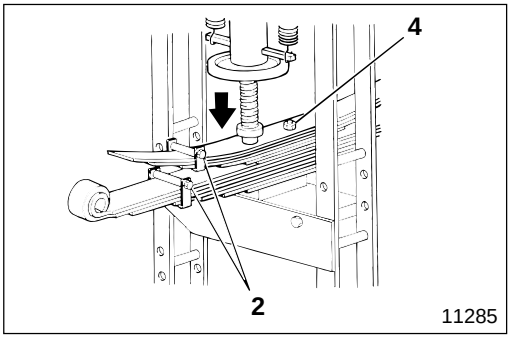

- Compress the leaf springs using a press to remove clip bolt **2** and center nut **4**.

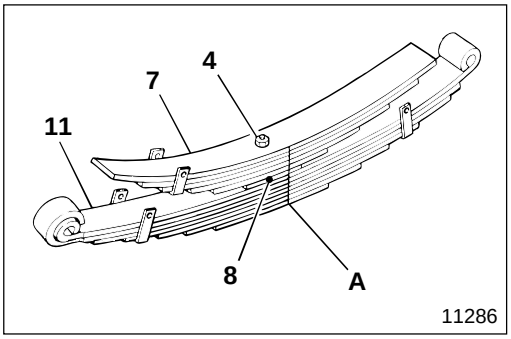

[Installation]

- Align alignment marks **A** on helper springs **7**, seat **8**, and main springs **11** to assemble them.
- Tighten center nut **4** temporarily.

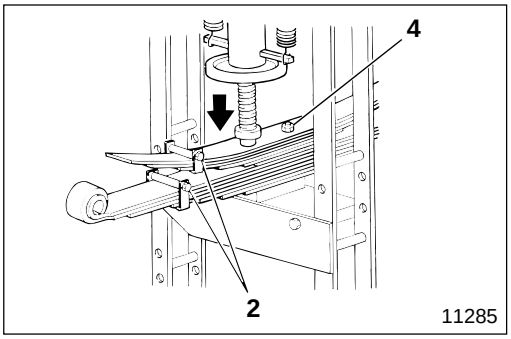

- Compress leaf springs using a press to install center nut **4**, then caulk it using a three-point punch.
- Install clip bolt **2**.

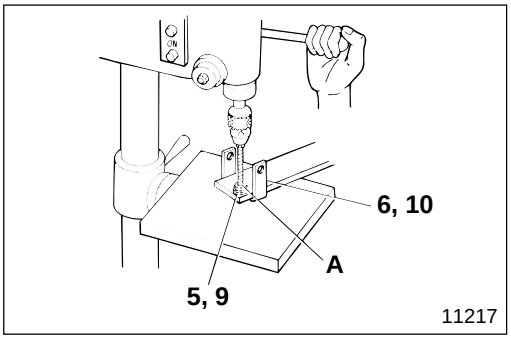

6 **10** **Clip**

[Removal]

Drill out caulked ends **A** of rivets **5**, **9** on a drill press to remove clips **6**, **10**.

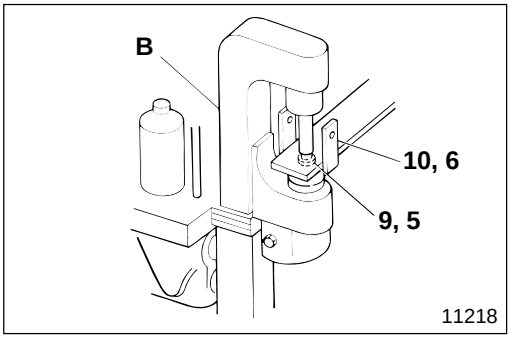

[Installation]

Caulk rivets **9**, **5** using riveting machine **B** to install clips **10**, **6**.

SHOCK ABSORBER

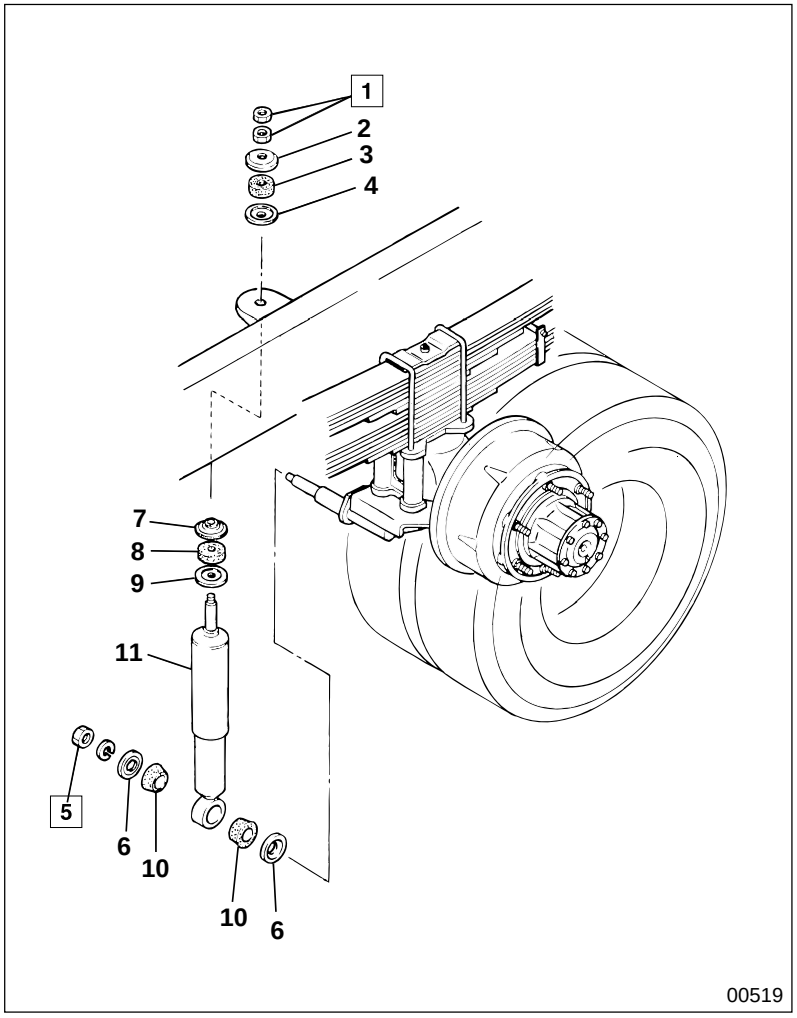

● **Removal sequence**

1 Nut
2 Washer
3 Rubber bushing
4 Centering washer
5 Nut
6 Washer
7 Centering washer
8 Rubber bushing
9 Washer
10 Rubber bushing
11 Shock absorber

● **Installation sequence**

Follow the removal sequence in reverse.

◆ Service procedure

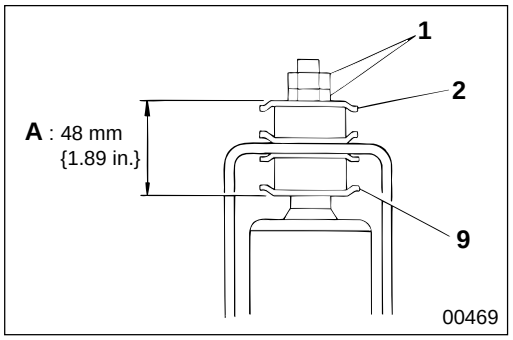

1 **Nut**

Install nut **1** so that the distance between washers **2**, **9** is **A**.

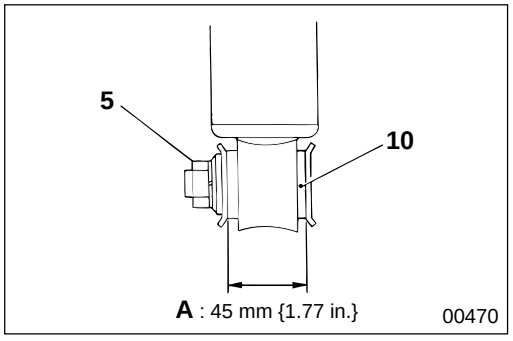

5 **Nut**

Install nut **5** so that dimension of rubber bushing **10** is **A**.

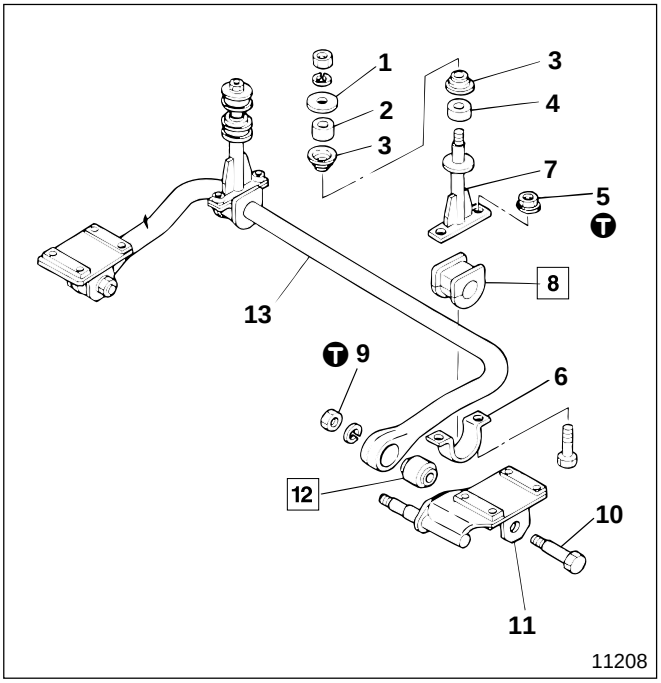

● **Removal sequence**

1 Seat
2 Bushing
3 Holder
4 Bushing
5 Nut
6 Cap
7 Stabilizer rod
8 Stabilizer bushing
9 Nut
10 Stabilizer pin
11 Shock absorber and stabilizer bracket
12 Bushing
13 Stabilizer bar

● **Installation sequence**

11
→10→8→7→6→5
13→12
→4→3→2→1→9

CAUTION⚠

Be sure not to force in bushings 2, 4 and stabilizer rod 7 when installing them.

T Tightening torque

Unit : N·m {lbf.ft, kgf·m}

Location	Parts to be tightened	Tightening torque	Remarks
5	Nut (Cap mounting)	80 to 110 {58 to 80, 8 to 11}	—
9	Nut (Stabilizer bracket mounting)	410 to 550 {295 to 405, 41 to 56}	—

◆ Service procedure

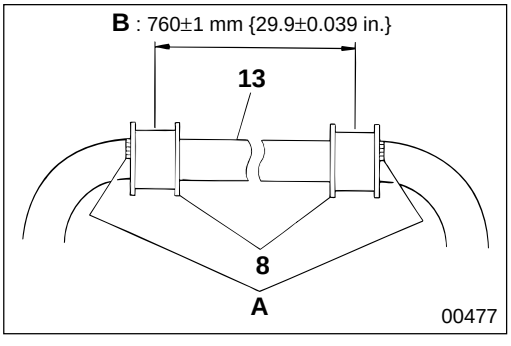

8 **Stabilizer bushing**

Align the ends of stabilizer bushings **8** with markings **A** of stabilizer bar **12** so that the distance between each bushing center is **B**.

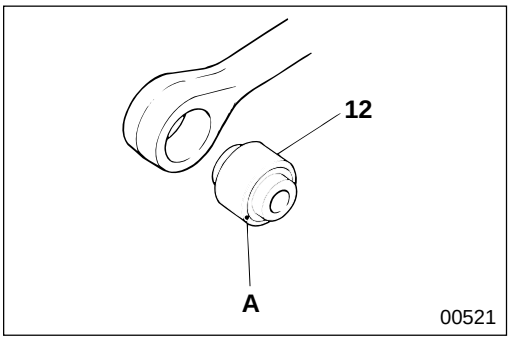

12 **Removal and installation of bushing**

Compress outer cylinder **A** to remove bushing **12**. For installation, follow the removal sequence in reverse.

CAUTION⚠

Make sure you apply force to the outer cylinder when compressing outer cylinder A to avoid damaging bushing 12.

MITSUBISHI FUSO

BACK HOME

FH

Service Manual

Group 35 - Brake

Group 35 - 1998 Minor Changes

Group 35A - Anti-Lock Brake System (ABS) '00 Minor Change

MITSUBISHI FUSO TRUCK OF AMERICA, Inc.

Pub No. TWME9502-00

MITSUBISHI
FUSO

FH

Service Manual

Group 35A
Anti-Lock Brake System (ABS)

'00 Minor Change

Table of Contents

MITSUBISHI FUSO TRUCK OF AMERICA, Inc.

BACK HOME

Pub No. TWME9502-435A

GROUP 35A ANTI-LOCK BRAKE SYSTEM (ABS)

SPECIFICATIONS 35A-2

STRUCTURE AND OPERATION 35A-2

ON-VEHICLE INSPECTION AND ADJUSTMENT
- Periodic Inspection Procedures 35A-9
- Adjustment of Wheel Speed Sensor Clearance 35A-10
- Inspection of Wheel Speed Sensor Signal Waveform Using Oscilloscope 35A-11
- Hydraulic Unit Operation Check 35A-12

TROUBLESHOOTING
- Troubleshooting Procedures 35A-14
- Diagnosis Code Indication 35A-15
- Diagnosis Code Chart 35A-18
- Actuator Drive Chart 35A-19
- Service Data 35A-19

WHEEL SPEED SENSOR AND ROTOR
< FRONT AXLE > 35A-20
< REAR AXLE > 35A-26

ELECTRIC CIRCUIT AND PART INSTALLATION LOCATIONS 35A-34

SPECIFICATIONS/STRUCTURE AND OPERATION

SPECIFICATIONS

Item	Specifications
Brake system	Hydraulic booster
Anti-lock brake system (number of sensors/number of channels)	ABS (4S/4K)
Manufacturer	NIPPON ABS

STRUCTURE AND OPERATION
Anti-lock Brake System (ABS)

The anti-lock brake system (ABS) prevents tire slippage due to wheel lockup caused by sudden braking and braking on slippery road surfaces. The ABS provides a driver with vehicle controllability and directional stability in braking.

● Wheel lockup

Rotating tires of a moving vehicle have a tendency to continue traveling in the direction of tire rotation. Because of this characteristic, a driver can control the vehicle's traveling direction by moving the front wheels to a desired direction using the steering wheel.

In a vehicle not equipped with an anti-lock brake system, when a driver depresses the brake pedal with full force, the wheels can lock up under certain conditions. Tires in a wheel lockup condition lose the tendency to maintain directional characteristic, and the vehicle starts sliding in a direction of an externally applied force regardless of the tire direction. In other words, when wheel lockup occurs, the vehicle loses its directional stability, disallowing the driver to control the vehicle's movement.

The following shows how a vehicle without ABS loses its directional stability when different tires lock up on slippery road surfaces.

● Front wheel lockup (both front tires)

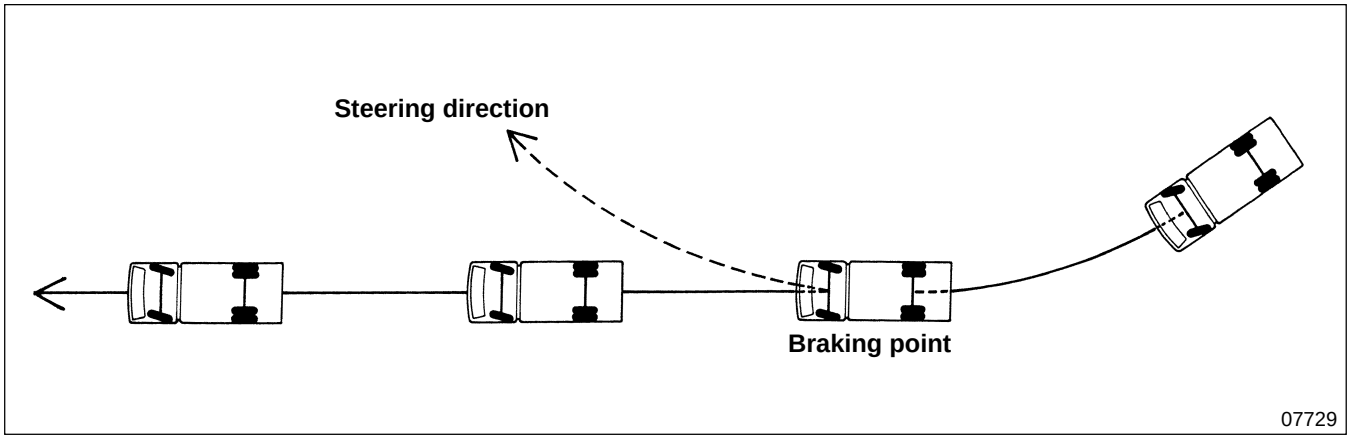

The front tires lose directional stability, but the rear tires try to travel in the direction of rotation since they are not locked up. Because of the front wheel lockup, a steering wheel operation does not change the vehicle's moving direction.

● **Rear wheel lockup (both rear tires)**

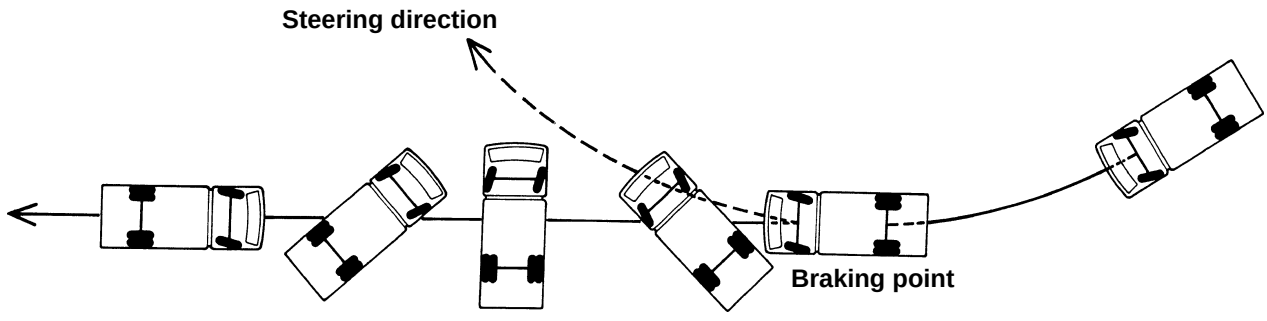

When the steering wheel is operated with the rear wheels in a lockup condition, the front tires try to change the vehicle's direction of travel, but the rear tires slide sideways, causing the vehicle to spin. If wheel lockup occurs in a vehicle traveling in a straight direction, the force of inertia continues to push the vehicle straight ahead from the back of the vehicle due to the lack of stopping force in the rear tires, and the vehicle can spin.

● **All wheel lock up (front and rear tires)**

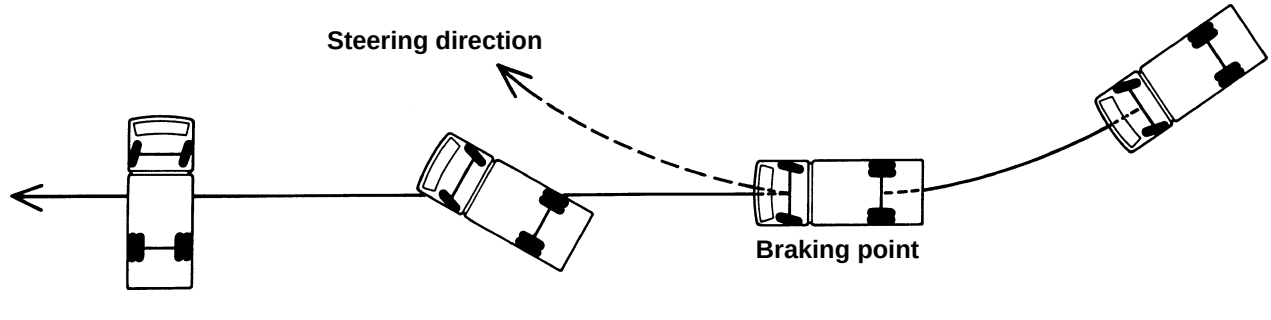

When wheel lockup occurs in both front and rear tires, all four tires lose directional stability. Therefore, the vehicle slips in the direction of inertia regardless of the steering direction.

● **Wheel lockup on surfaces with split μ factors (road surface with different friction coefficients for right and left tires)**

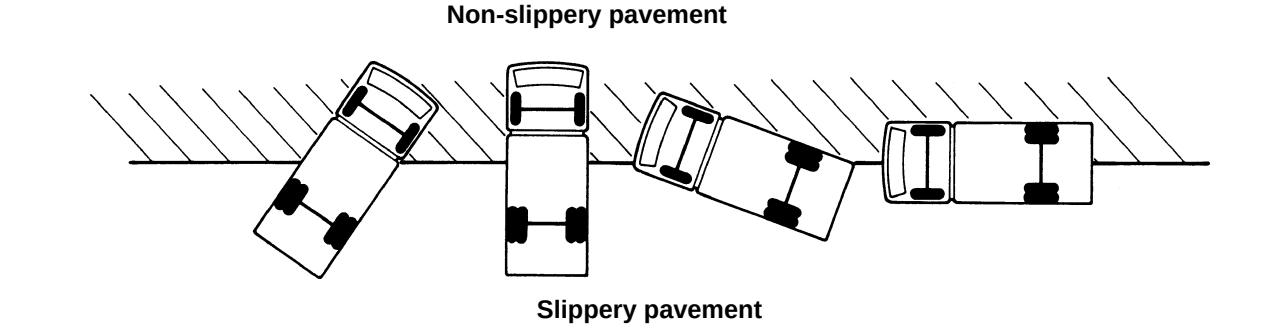

The tires on a surface with a lower friction coefficient lock up first. The tires in a lockup condition start sliding, thus failing to provide effective stopping force. Due to this imbalance in the stopping power between the right and left tires, one side of the vehicle slows down while the other side continues traveling, thus resulting in the loss of directional stability. When this happens during sudden braking, the vehicle spins.

Structure of ABS

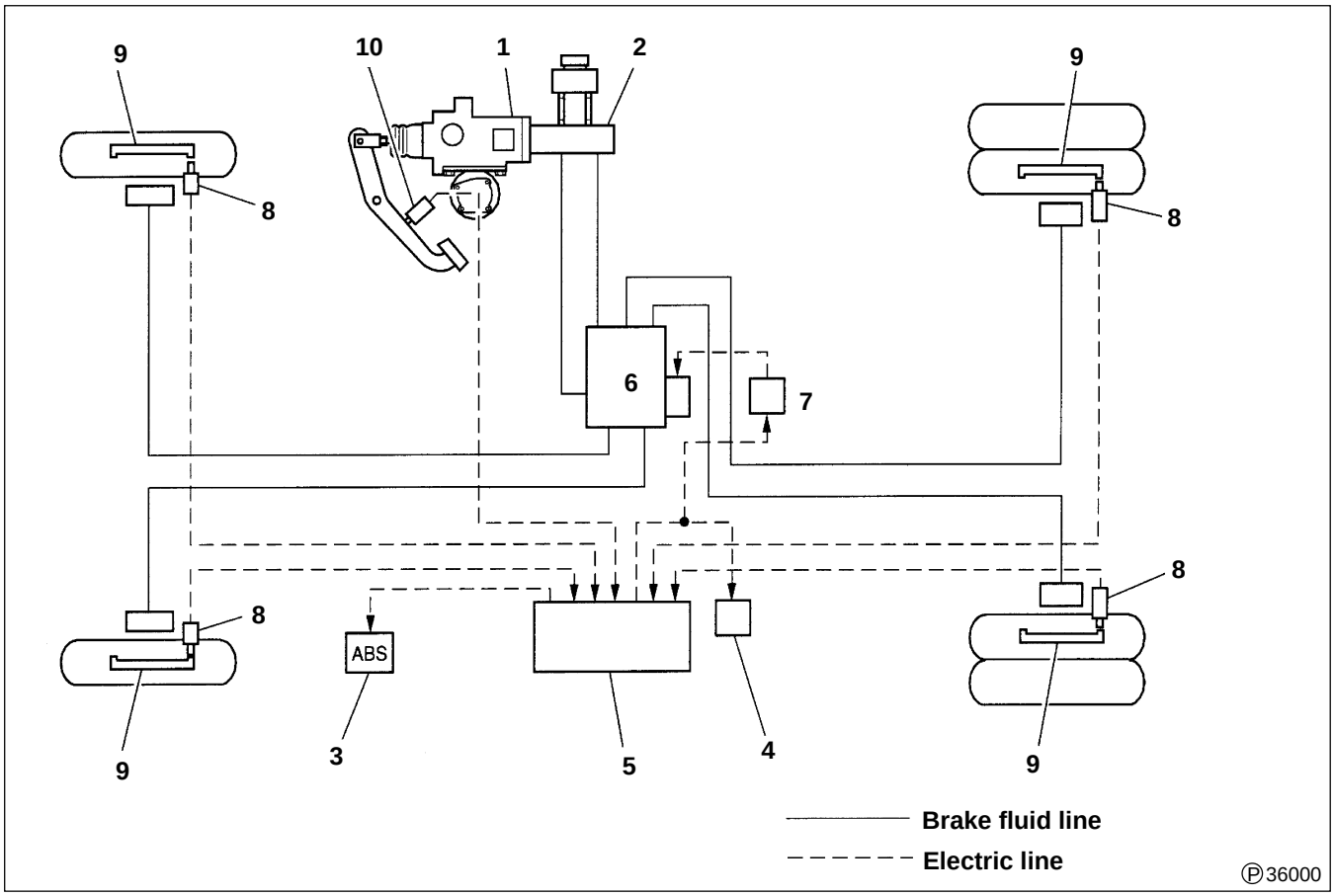

1 Hydraulic booster
2 Brake master cylinder
3 ABS warning lamp
4 Exhaust brake cut relay
< Manual transmission >
5 ECU
6 Hydraulic unit
7 Relay box
8 Wheel speed sensor
9 Rotor
10 Stop lamp switch

The ABS uses wheel speed sensors **8** and ECU **5** to monitor the rotating speed of each wheel. When the wheel speed exceeds the preset deceleration speed or slip rate, the ECU detects it as a tendency leading to wheel lockup, and sends control signals to hydraulic unit **6** and relay box **7**. The signals activate the solenoid valves to reduce the brake fluid pressure in the wheel brakes and ease the braking force to prevent wheel lockup. Then, when the wheel speed increases, wheel speed sensors **8** send signals to the solenoid valves in hydraulic unit **6** by way of ECU **5** to increase the brake fluid pressure in the wheel brakes to augment the braking force. This control cycle is repeated to prevent wheel lockup on slippery pavements and ensure the vehicle's directional stability during braking. The 4-sensor 4-channel anti-lock brake system uses four wheel speed sensors **8**, which are located at the front and rear wheels, to control each of the four wheels.

● **ABS function**

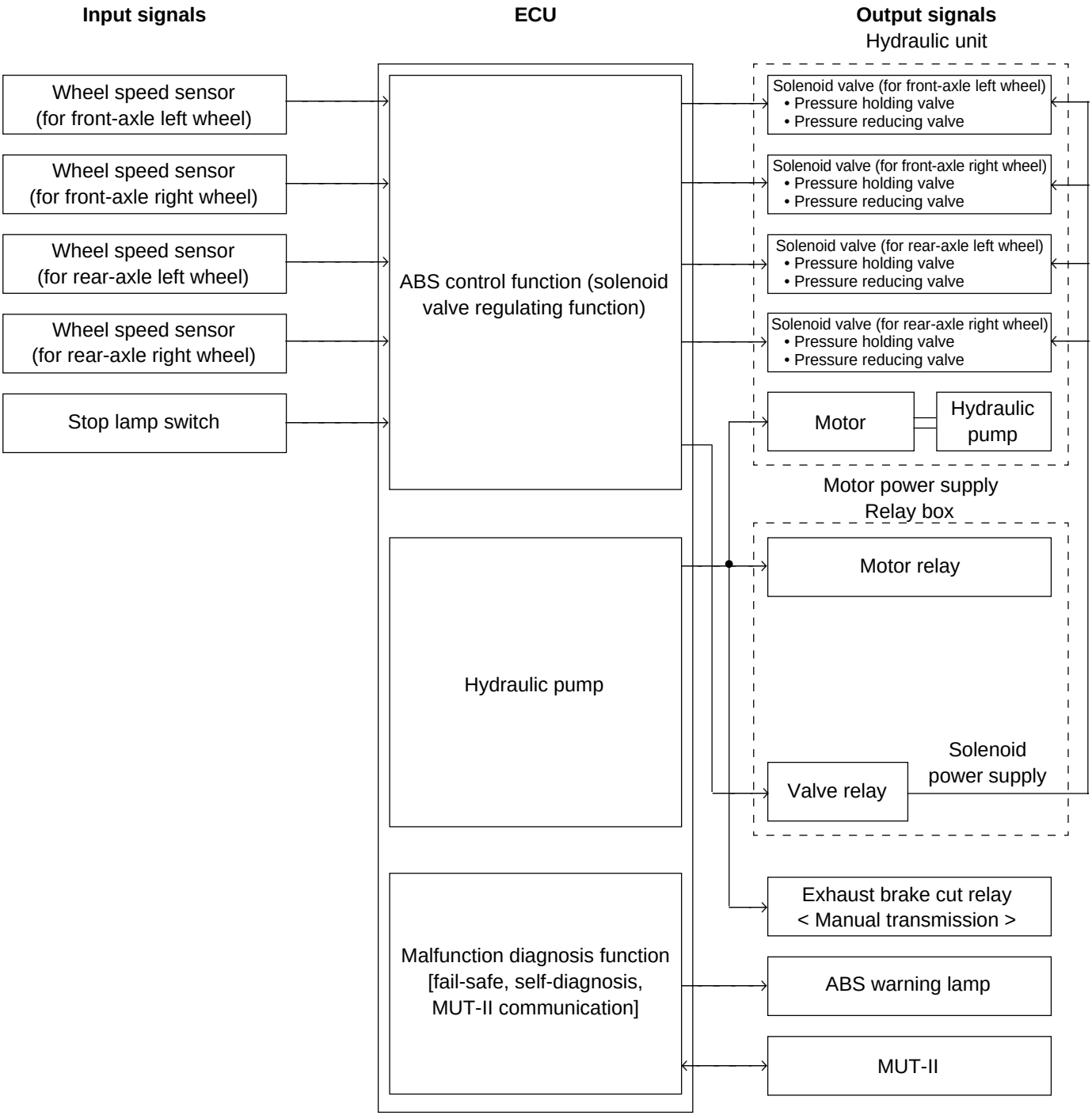

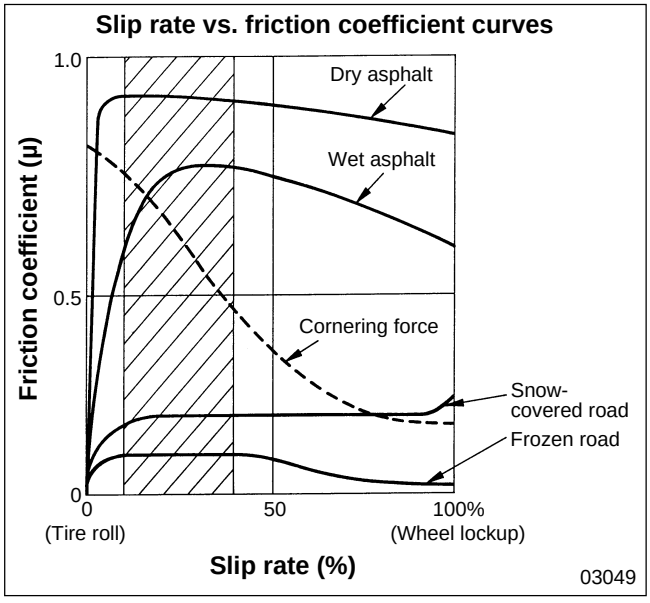

● ABS control function

To provide optimum stopping power, the ABS controls the braking force based on the slip rate determined by the relationship between the wheel speed and the vehicle speed. When the brake is applied, the resulting force slows down the wheel rotation, thus reducing the vehicle speed. However, inertia acts on the vehicle and tries to maintain the vehicle's forward movement despite the stopping force applied by the tires. When there is a difference between the wheel speed and vehicle speed, slipping occurs. The degree of slippage is expressed by a slip rate.

$$\text{Slip rate (\%)} = \frac{\text{Vehicle speed} - \text{Wheel speed}}{\text{Vehicle speed}} \times 100$$

When the slip rate is 0%, there is no slippage between the tires and pavement. The slip rate of 100% refers to a wheel lockup condition.

The graph shows the time-based changes in the friction coefficient of a rolling tire during the process of wheel lockup. When the brake is applied gradually while the tires are rotating on pavement, the tires begin to slip while in rotation.
When the brake is applied harder, the tires stop rotating and start to slide on the pavement. This condition is called wheel lockup.
The friction coefficient is highest when the slip rate is within the shaded area on the graph.
In other words, tires provide maximum friction when the braking force is appropriately controlled to maintain the slip rate in the range indicated by the shaded area on the graph, rather than when the brake is applied at full force.
In a vehicle equipped with ABS, the ECU and hydraulic unit adjust the braking force and maintain it within the shaded area on the graph where the friction coefficient is high, thus preventing tire slippage and ensuring braking stability.

ABS Operation

● **ABS control characteristic curve**

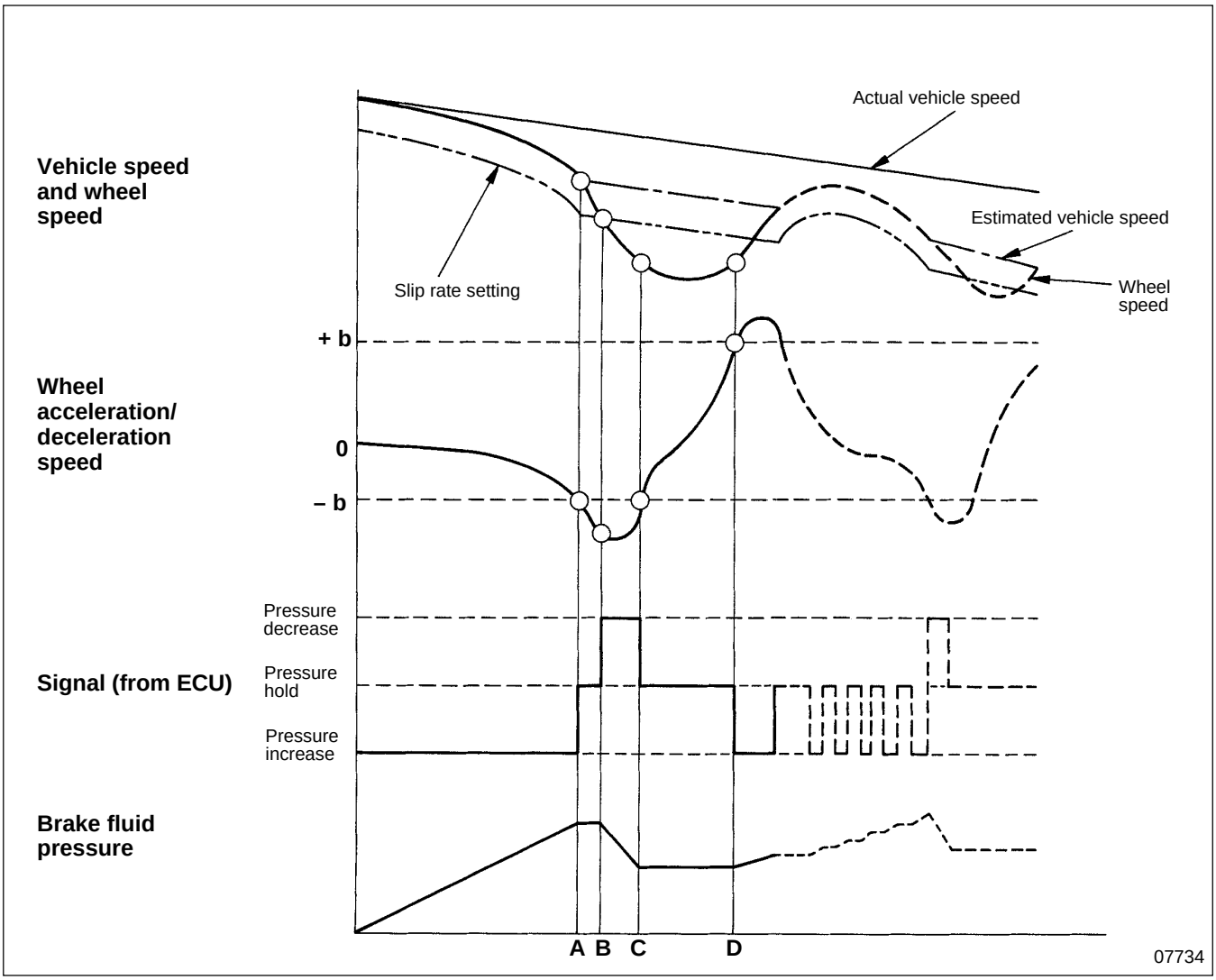

The above ABS control characteristic graph shows the time-based changes in vehicle speed, wheel acceleration/ deceleration speed and brake fluid pressure level during braking.

- When the wheel deceleration speed exceeds the speed setting **– b** at point **A**, the ECU sends a signal to maintain the brake fluid pressure at the same level.
  At the same time, the ECU estimates the vehicle speed according to a programmed calculation method.
- When the vehicle speed decreases further and the slip rate exceeds the setting at point **B**, the ECU detects it as a tendency leading to wheel lockup, and sends a signal to reduce the brake fluid pressure.
- When the wheel speed increases because of the reduced brake fluid pressure and the wheel speed exceeds the setting **– b** at point **C**, the ECU sends a signal to maintain the brake fluid pressure at the same level.
- When the wheel speed increases further and the wheel speed exceeds the setting **+ b** at point **D**, the ECU determines that there is no risk of wheel lockup and sends a signal to increase the brake fluid pressure.

By repeating the above control cycle, the ABS prevents wheel lockup and provides maximum friction between the tires and pavement to ensure high stability during braking.

● **ABS and exhaust brake system**

On slippery road surfaces, activation of the exhaust brake system can result in wheel lockup. If the exhaust brake activates during an ABS braking operation, proper braking function cannot be provided by the ABS.
To prevent this, the exhaust brake system is deactivated during ABS operation even when the exhaust brake switch is turned ON.
When the ABS stops providing its function, the exhaust brake system becomes operable if the exhaust brake switch is ON.

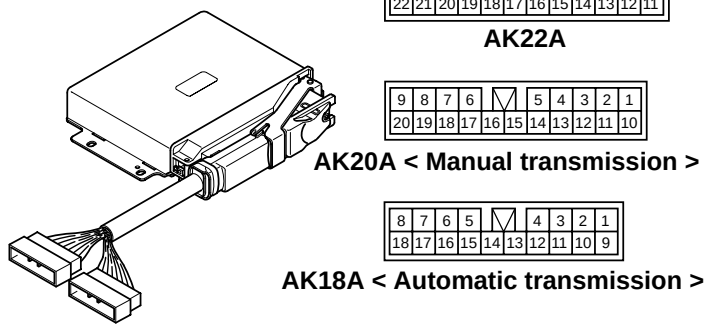

● **ECU**

This component calculates the wheel speed and estimates the vehicle speed based on signals sent from the wheel speed sensors. Based on the calculation results, it determines the degree of wheel lockup tendency, and sends brake fluid pressure control signals to the solenoid valves of the hydraulic unit to regulate brake fluid pressure accordingly.

The ECU is equipped with a self-diagnosis function. Should an abnormality occur, the ECU turns on the warning lamp on the instrument panel to indicate the system malfunction and deactivates the ABS control to set the brake system in normal condition (without anti-lock brake system control).

	AK22A	AK20A < Manual transmission >	AK18A < Automatic transmission >
Terminal No.	Connection destination		
1	Ground	–	–
2	Ground	–	–
3	–	–	Meter cluster (ABS warning lamp)
4	Hydraulic unit (motor drive)	Meter cluster (ABS warning lamp)	Starter switch terminal M (ECU power supply)
5	Hydraulic unit (motor drive monitor)	Starter switch terminal M (ECU power supply)	Wheel speed sensor (rear-axle right-wheel input)
6	–	Wheel speed sensor (rear-axle right-wheel input)	Wheel speed sensor (rear-axle left-wheel input)
7	Hydraulic unit (rear-axle right-wheel brake fluid pressure decrease)	Wheel speed sensor (rear-axle left-wheel input)	Wheel speed sensor (front-axle right-wheel input)
8	Hydraulic unit (rear-axle left-wheel brake fluid pressure decrease)	Wheel speed sensor (front-axle right-wheel input)	Wheel speed sensor (front-axle left-wheel input)
9	Hydraulic unit (front-axle right-wheel brake fluid pressure decrease)	Wheel speed sensor (front-axle left-wheel input)	–
10	Hydraulic unit (front-axle left-wheel brake fluid pressure decrease)	–	MUT-II connector
11	Ground	–	MUT-II connector
12	Ground	MUT-II connector	Stop lamp switch
13	–	MUT-II connector	–
14	Relay box (valve relay drive)	Stop lamp switch	–
15	Relay box (valve relay and motor relay power supply)	–	Wheel speed sensor (rear-axle right-wheel grounding)
16	Exhaust brake cut relay < Manual transmission >	–	Wheel speed sensor (rear-axle left-wheel grounding)
17	Exhaust brake cut relay < Manual transmission >	\Wheel speed sensor (rear-axle right-wheel grounding)	Wheel speed sensor (front-axle right-wheel grounding)
18	–	Wheel speed sensor (rear-axle left-wheel grounding)	Wheel speed sensor (front-axle left-wheel grounding)
19	Hydraulic unit (rear-axle right-wheel brake pressure hold)	Wheel speed sensor (front-axle right-wheel grounding)	
20	Hydraulic unit (rear-axle left-wheel brake pressure hold)	Wheel speed sensor (front-axle left-wheel grounding)	
21	Hydraulic unit (front-axle right-wheel brake pressure hold)		
22	Hydraulic unit (front-axle left-wheel brake pressure hold)		

Periodic Inspection Procedures

(1) Periodic inspection of Anti-lock brake system

- Inspect the vehicle's Anti-lock brake system following the procedure below.
- If an abnormality is found in this inspection, further inspect the Anti-lock brake system using MUT-II (multi-use tester) by referring to TROUBLESHOOTING section.
  P35A-15

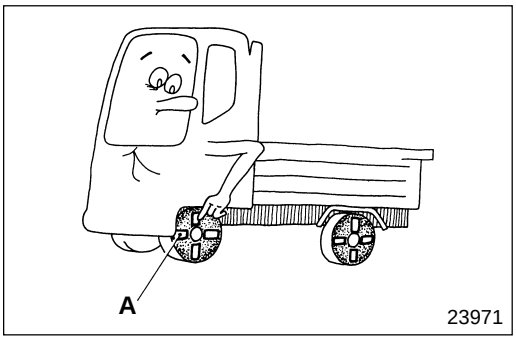

- Inspection procedure
  ① With the vehicle stationary, press the brake pedal and inspect the hydraulic unit for fluid leaks.
  If fluid leaks from the hydraulic unit, replace the unit. If fluid leaks from the fluid pipe or connector, tighten the joint.
  ② Inspection using brake tester
  Check the braking force at each wheel with a brake tester by following the inspection procedure for ordinary vehicles.
  If an abnormality is found, inspect the wheel brake units, service brake system and hydraulic unit.
  ③ Drive the vehicle and check the operation of the Anti-lock brake system.
  - Conduct a test drive at an open area to ensure safety.
  - Conduct a test drive without cargo.

  Attach white tape **A** on the sides of tires, so that it is easy to observe the rotation of the front and rear wheels.
  - Turn the starter switch from the OFF position to the ON position, and make sure that the ABS warning lamp lights.
    Then, check that the ABS warning lamp turns off approximately two seconds after the starter switch is turned on.
  - Drive the vehicle at a speed of 20 to 30 km/h {12 to 19 mph}, and apply a sudden brake. Make sure that wheel lockup does not occur in any of the tires.

Adjustment of Wheel Speed Sensor Clearance

Tightening torque

Unit : N·m {lbf.ft, kgf·m}

Location	Parts to be tightened	Tightening torque	Remarks
7	Bolt (Anchor bracket mounting)	135 {100, 13.8}	—

Special tools

Unit : mm {in.}

Location	Tool name and shape	Part No.	Application
1	Adjuster 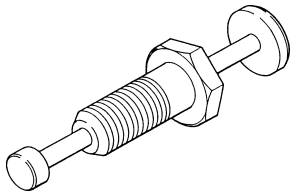 14912	MH062080	Adjustment of wheel speed sensor clearance

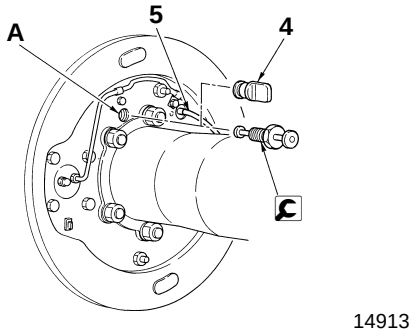

14913

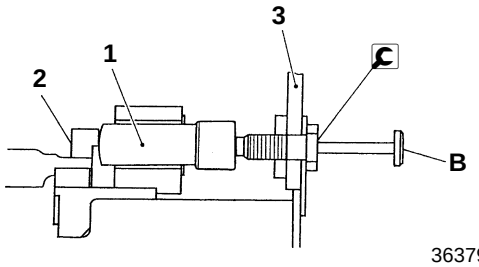

36379

Tighten adjuster to extend wheel speed sensor **1**, and adjust clearance between the sensor and rotor **2**.

- Remove plug **4** located on the back side of back plate **3**.
- Mount adjuster in adjustment hole **A**, and tighten the adjuster.
- Wheel speed sensor **1** contacts the rotor before adjuster is completely tightened. Therefore, do not press shaft **B**, and tighten the adjuster until resistance is felt.
- Be sure to reinstall plug **4** after adjustment.

5: Wheel speed sensor harness

Inspection of Wheel Speed Sensor Signal Waveform Using Oscilloscope

Inspect the rotor for dents using an oscilloscope, since the tester cannot be used for dent detection.

NOTE

Use an oscilloscope with a waveform recording function.

- Lift the wheel to be tested off the ground, and disconnect the connector at the wheel speed sensor.
- Connect the terminal of the oscilloscope to the terminal of the disconnected connector. Rotate the wheel at a constant speed. Check the waveform shown on the oscilloscope to check for dents on the rotor.

Normal waveform (no dent on rotor)

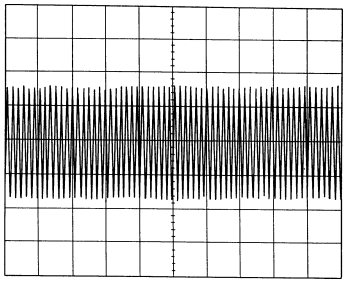

03122

Abnormal waveform (with dents on rotor)

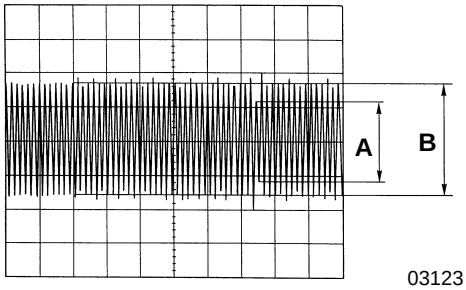

03123

- Rotor dents are often made by the rotor press-fit on the hub end contacting the axle during installation of the hub and brake drum assembly on the axle. When installing the hub & brake drum assembly, pay close attention to prevent the rotor from contacting other parts.

A: Vmin (Minimum peak)
B: Vmean (Average of maximum peaks)

$$\frac{\text{Vmean} - \text{Vmin}}{\text{Vmean}} = 0.2 \text{ (20\% or lower)}$$

If more than 20%, replace the rotor.

Hydraulic Unit Operation Check

Operation check using MUT-II

- Lift the vehicle using a jack and support it with jack stands, or position the tires on brake tester rollers.

WARNING⚠

- **The brake tester rollers and tires must be dry during inspection.**
- **To test the front brakes, apply the parking brake. To test the rear brakes, place wheel chokes at the front tires to secure them in position.**

- Disengage the parking brake, and feel the drag resistance of the brake on each wheel.
  When using a brake tester, record the indicated drag resistance of the brake.
- Set the starter switch to the OFF position, then connect the MUT-II.
- Set the testing equipment and system on the MUT-II.
- After making sure that the transmission is in the neutral position, start the engine.

NOTE

- **When the engine is turned on, the ABS switches to the MUT-II mode and the ABS warning lamp flashes.**
- **When the ABS function is deactivated due to the ECU's fail-safe function, the actuator test cannot be performed with the MUT-II.**

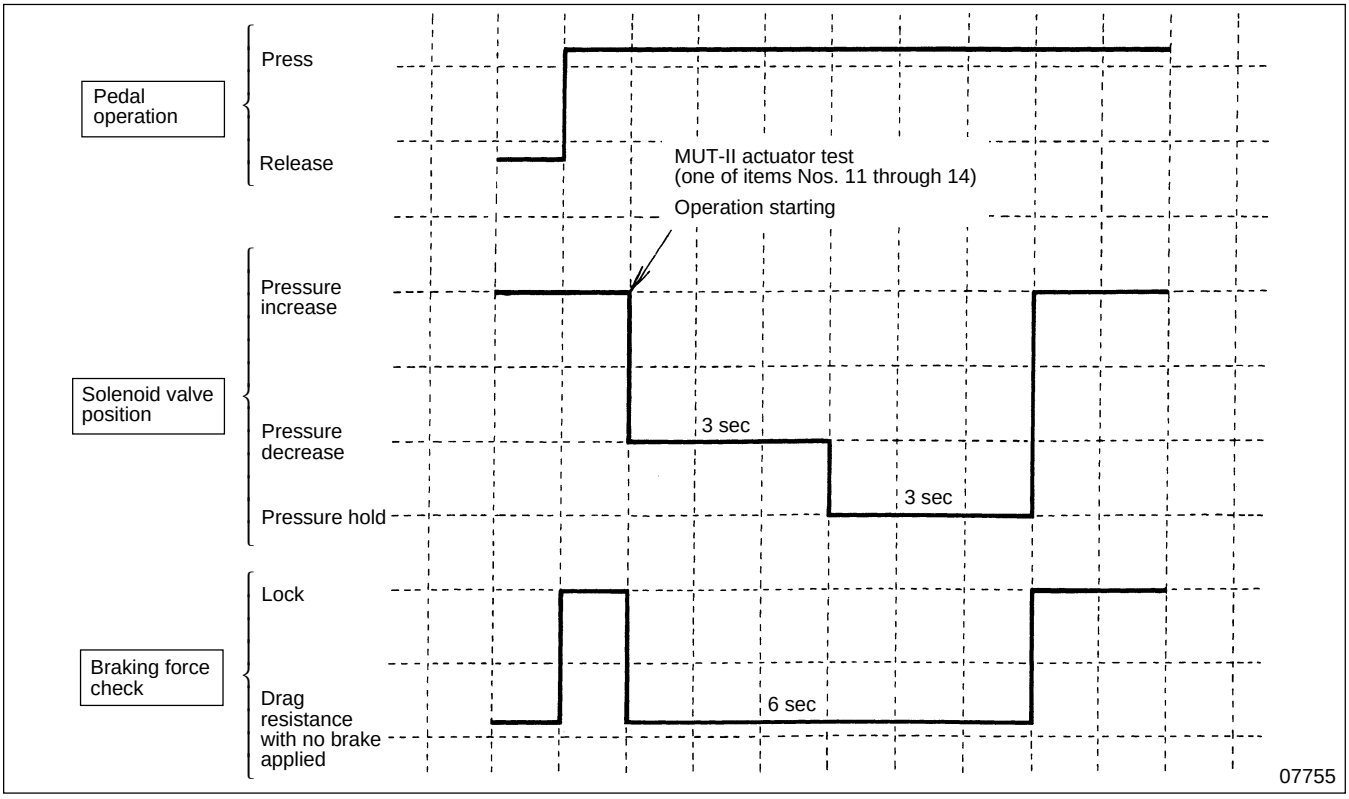

- If an abnormality is found during the inspection, take appropriate measures described in the following operating condition evaluation chart.

Operating condition evaluation chart

Item No.	MUT-II indication	Operation	Judgment		Cause	Remedy
			Normal	Malfunction		
11	FR ABS MV ON	(1) Depress the brake pedal to lock wheels. (2) On the MUT-II, select the wheel to be tested and forcibly drive the actuator. (3) Rotate the selected wheel using the brake tester or by hand, and check the change in braking power.	Braking force eases for 6 seconds from locked condition.	Wheel does not lock when brake pedal is depressed.	Clogging in brake line other than HU	Inspect and clean brake lines.
12	FL ABS MV ON				Clogging in hydraulic line inside HU	Replace HU assembly.
13	RR ABS MV ON			Braking force does not ease.	Erroneous HU brake tube connection	Correct tube connection.
14	RL ABS MV ON				Faulty HU solenoid valve	Replace HU assembly.

HU: Hydraulic unit

• After inspection, set the starter switch to OFF before disconnecting the MUT-II.

TROUBLESHOOTING

Troubleshooting Procedures

Inspection flow chart

The MUT-II allows efficient inspection of the ABS.
The types of system inspections can be roughly divided according to the malfunction condition and diagnosis code, as shown below.

- Inspection based on individual malfunction diagnosis codes stored in the ECU
- Inspection based on symptoms not indicated by diagnosis codes
- Correcting non-recurring problems

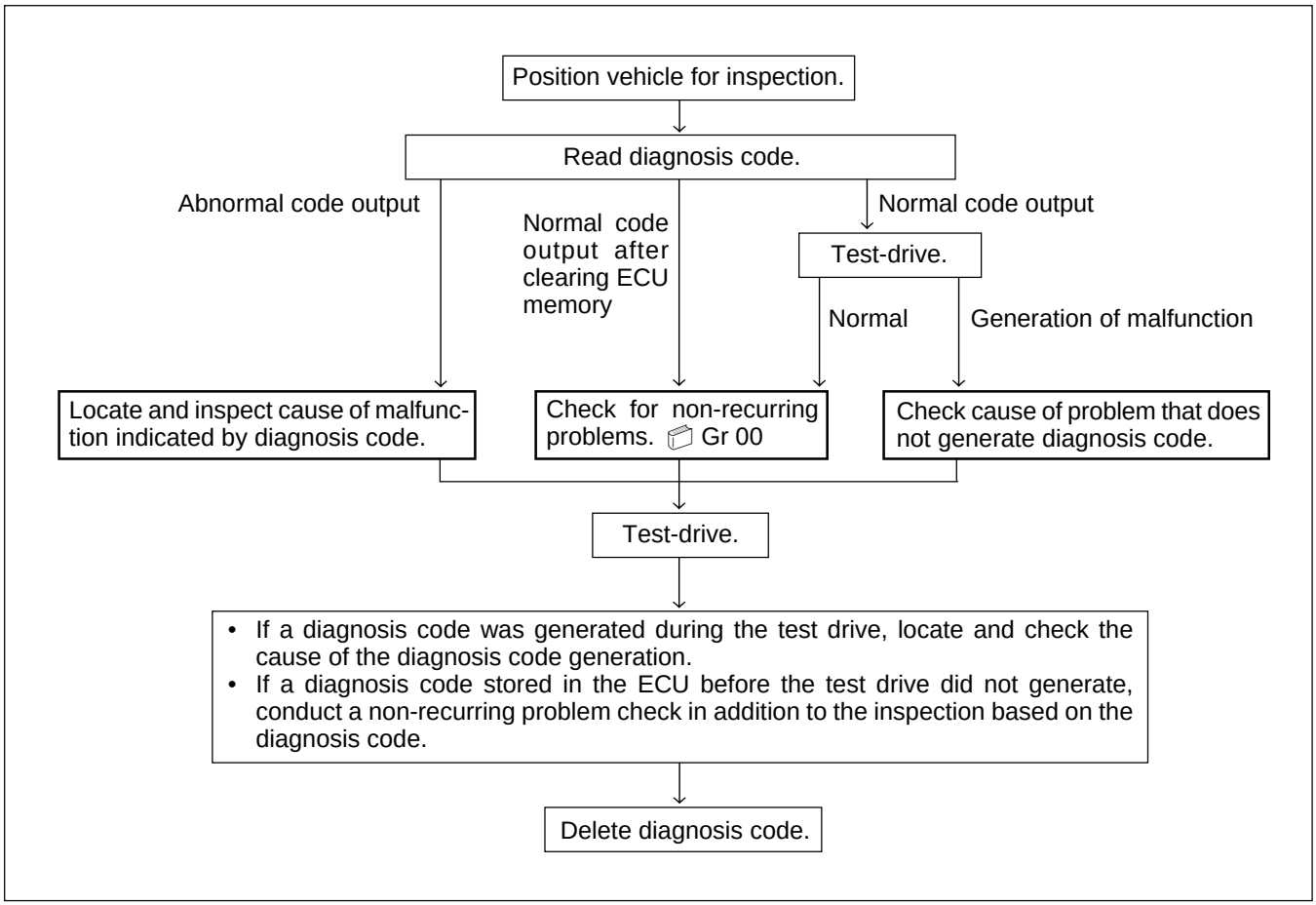

Cautions in malfunction diagnosis

- The ABS uses electronic control to regulate the braking system. The following phenomena may occur during normal ABS operation, but they do not denote a malfunction.

Phenomenon	Description
System checking sound	When the engine starts, a slight clunking sound may be generated in the left side of the frame near the cargo bed. This sound is produced by the system conducting an operation check, and does not denote a malfunction.
ABS operating sound	• Motor noise from the hydraulic unit (humming sound) • Noise generated as the brake pedal feel changes (grinding sound) • Noise from the chassis produced by repeated ON and OFF operations of the ABS (wheels: short squeak, suspension: slight thud)
ABS operation effect (longer stopping distance)	On snow-covered surfaces and gravel roads, a vehicle equipped with ABS may require a longer distance to come to a complete stop. Therefore, when driving on such road surfaces, reduce the speed sufficiently and drive carefully to minimize the use of brakes.

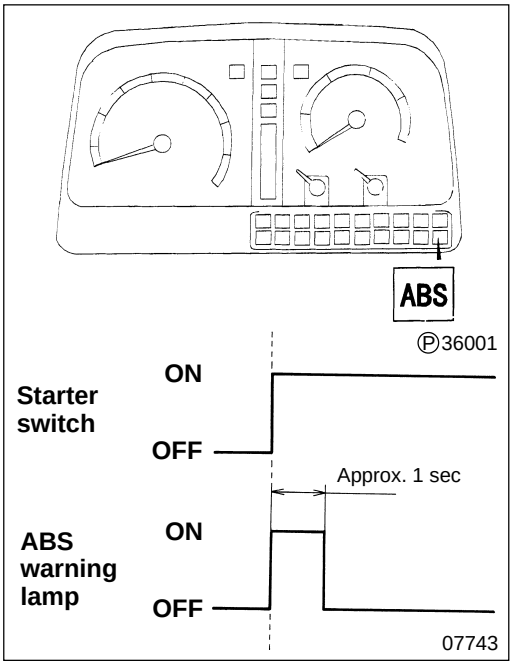

● **Inspection of ABS warning lamp**

Check the ABS warning lamp to make sure that the following operation turns on the lamp.

- Set the starter switch to the ON position, and check that the ABS warning lamp lights for about 1 second and turns off.
- If the lamp does not light as described above, check diagnosis codes stored in the ECU.

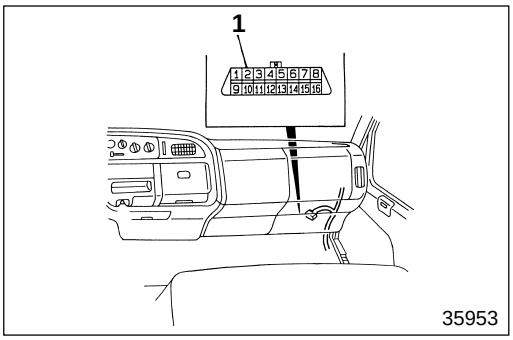

Diagnosis code indication

● **Without MUT-II**

- With the vehicle stationary, ground terminal No. 16 of MUT-II connector **1**, then turn the starter switch to the ON position. The ABS warning lamp will flash to indicate a diagnosis code.
- The ABS warning lamp starts flashing 3.0 seconds after the starter switch is turned ON. The flashing pattern of the warning lamp indicates a diagnosis code.

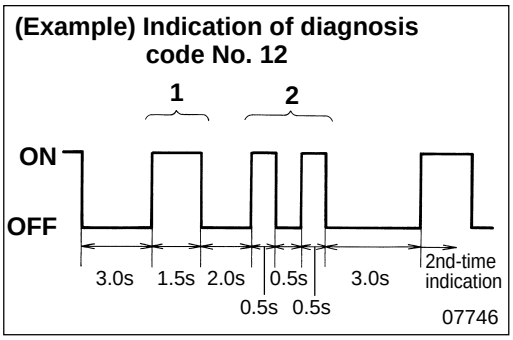

- A diagnosis code is indicated in the following manner.
  - To indicate the tens digit (left digit), the lamp remains ON for 1.5 seconds, then remains OFF for 0.5 seconds. To indicate the ones digit (right digit), the lamp remains ON for 0.5 second, then remains OFF for 0.5 second.
  - For multiple diagnosis codes, each code is indicated one time, in sequence. When there is no other diagnosis code to indicate, the lamp repeats the diagnosis code indication from the beginning for 7 cycles.
  - When there is no diagnosis code stored in the memory (normal condition), the ABS warning lamp repeats On/Off in 0.25-second intervals.

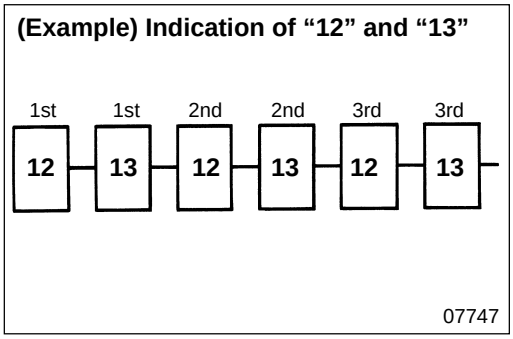

- When two or more diagnosis codes are stored in the ECU.

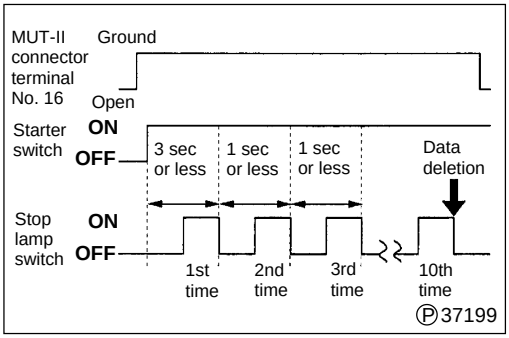

● **Deletion of diagnosis codes**

Connect terminal No. 16 of the MUT-II connector to the chassis for grounding. Turn on the starter switch, and depress the brake pedal within 3 seconds and turn On and Off the stop lamp switch ten times in intervals of 1 second or less. This erases diagnosis codes from the memory.

● **Completion of diagnosis code check**

The diagnosis code check completes when diagnosis codes are erased from the ECU of terminal No. 16 of the MUT-II connector is disconnected.

NOTE

The diagnosis code check also ends when the vehicle moves from a stationary condition during the diagnosis code check.

With MUT-II

Special tools

Tool name and shape	Part No.	Application
MUT-II 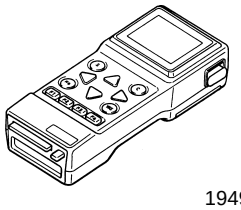 19492	MB991496	Inspection of Anti-lock brake system
MUT-II harness (for data communication) 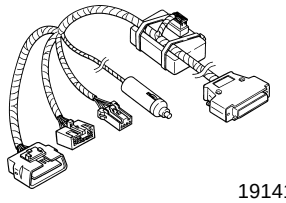 19141	MK327601	
ROM pack (MRT-E6) 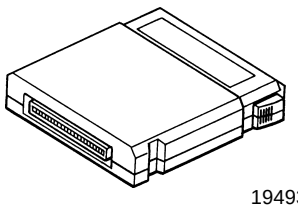 19493	MK344606	

Tool name and shape	Part No.	Application
MUT-II harness (for circuit tester) 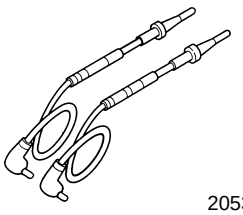 20536	MB991499	Inspection of Anti-lock brake system
Memory card (for MUT-II) 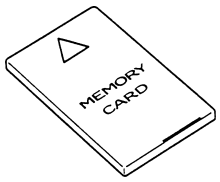 20538	MB991500	

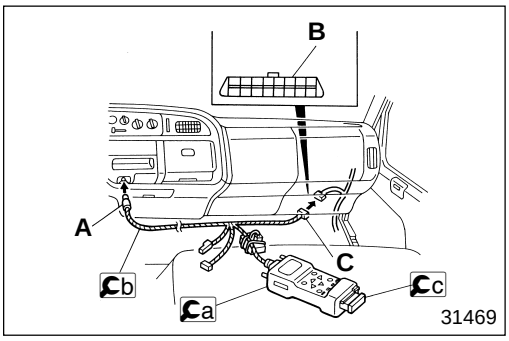

31469

Connecting the MUT-II

- Turn the starter switch to the LOCK position.
- Connect the b MUT Communication Harness to the a MUT-II, and insert the c ROM Pack.
- Plug connector **A** into the cigarette lighter socket.
- Fit connector **C** onto MUT connector **B** (16 pin) in the relay box.

NOTE

Instructions for operation of the MUT-II are given in the separate MUT-II Reference Manual.

Current diagnosis codes

- Turn the starter switch to the ON position.
- Determine the fault location(s) in accordance with the MUT-II diagnosis code(s).

Past diagnosis codes

- Turn the starter switch to the ON position.
- Determine the fault location(s) in accordance with the past MUT-II diagnosis code(s).

Diagnosis code erasure

- Turn the starter switch to the ON position.
- Using the MUT-II, erase all diagnosis codes stored in the control unit.

Diagnosis Code Chart

Diagnosis codes can be read by using the MUT-II or ABS warning lamp.

Diagnosis code	Malfunction location		
	MUT-II display	Description of malfunction	
11	FR-SNSR OPEN	Wheel speed sensor	Broken wire to front-axle right-wheel speed sensor
12	FL-SNSR OPEN		Broken wire to front-axle left-wheel speed sensor
13	RR-SNSR OPEN		Broken wire to rear-axle right-wheel speed sensor
14	RL-SNSR OPEN		Broken wire to rear-axle left-wheel speed sensor
*a 15	ROTA OR SNSR		Broken wire
16	ECU VOLTAGE	Drop in power supply voltage	
21	FR-SNSR SHORT	Wheel speed sensor	No broken wire to front-axle right-wheel speed sensor
22	FL-SNSR SHORT		No broken wire to front-axle left-wheel speed sensor
23	RR-SNSR SHORT		No broken wire to rear-axle right-wheel speed sensor
24	RL-SNSR SHORT		No broken wire to rear-axle left-wheel speed sensor
*b 35	EXB RLY	Exhaust brake cut relay	
38	STOP LAMP SW	Stop lamp switch	
41	FR-EV VALVE	Hydraulic unit	Front-axle right-wheel solenoid valve (pressure decrease)
42	FL-EV VALVE		Front-axle left-wheel solenoid valve (pressure decrease)
43	RR-EV VALVE		Rear-axle right-wheel solenoid valve (pressure decrease)
44	RL-EV VALVE		Rear-axle left-wheel solenoid valve (pressure decrease)
45	FR-AV VALVE		Front-axle right-wheel solenoid valve (pressure hold)
46	FL-AV VALVE		Front-axle left-wheel solenoid valve (pressure hold)
47	RR-AV VALVE		Rear-axle right-wheel solenoid valve (pressure hold)
48	RL-AV VALVE		Rear-axle left-wheel solenoid valve (pressure hold)
51	VALVE RLY	Relay box	Valve relay
53	MOTOR RLY		Motor relay or motor
			Motor monitor line
63	ECU ERR	ABS ECU	

Actuator Drive Chart

MUT-II display	
Item No.	Item name
11	FR ABS MV ON
12	FL ABS MV ON
13	RR ABS MV ON
14	RL ABS MV ON

Service Data

MUT-II display			Inspection condition	Criterion
11	FR SPEED	■■■. ■ MPH	Constant-speed driving	Same as speedometer indication
12	FL SPEED	■■■. ■ MPH		
13	RR SPEED	■■■. ■ MPH		
14	RL SPEED	■■■. ■ MPH		
15	ECU VOLTAGE	■■. ■ V	Starter switch ON	Same as battery voltage
30	STOP LAMP SW	ON/OFF	Brake pedal depressed	ON
			Brake pedal released	OFF

WHEEL SPEED SENSOR AND ROTOR < FRONT AXLE >

The following describes the service procedures for wheel speed sensors and rotors only.
Regarding the procedures for servicing other components, refer to Gr 26.

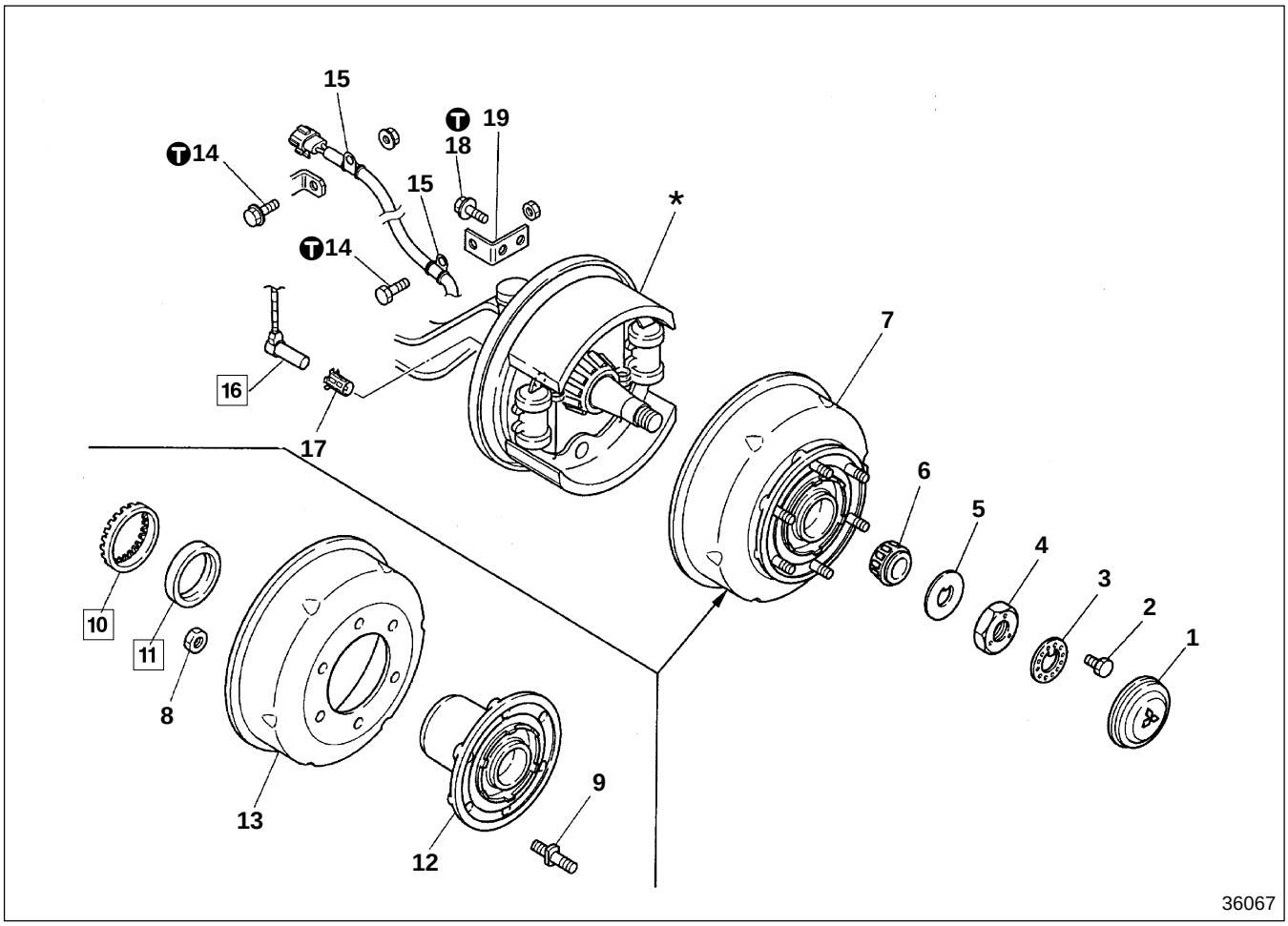

● **Disassembly sequence**

1 Wheel hub cap
2 Bolt
3 Lock plate
4 Lock nut
5 Lock washer
6 Outer bearing
7 Hub and brake drum assembly
8 Nut
9 Hub bolt
10 Rotor
11 Oil seal
12 Wheel hub
13 Brake drum
14 Bolt
15 Clip
16 Wheel speed sensor
17 Spring spacer
18 Bolt
19 Bracket
*: Front brake assembly

● **Assembly sequence**

Follow the disassembly sequence in reverse.

CAUTION

- **When removing or installing hub and brake drum assembly 7, handle rotor 10 with care to prevent damage. Also, do not damage oil seal 11 during assembly.**
- **Keep oil and grease off lining surface of front brake assembly * and the inner surface of brake drum 13.**

Service standards

Unit : mm {in.}

Location	Maintenance item		Standard value	Limit	Remedy
10	Wobbling of rotor		0.1 {0.0039}	—	Replace
16	Wheel speed sensor	Resistance between terminals	950 to 1450Ω	—	Replace
		Insulation resistance	1MΩ or higher	—	Replace

Tightening torque

Unit : N·m {lbf.ft, kgf·m}

Location	Parts to be tightened	Tightening torque	Remarks
14	Bolt (Clip mounting)	19 to 27 {14 to 20, 1.9 to 2.8}	—
18	Bolt (Bracket mounting)	9.8 to 14.0 {7 to 10, 1.0 to 1.4}	—

Special tools

Unit : mm {in.}

Location	Tool name and shape	Part No.	Application
11	ABS oil seal installer 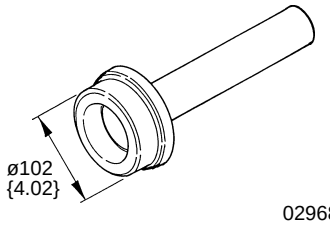 02968	MH062305	Press-fitting of oil seal

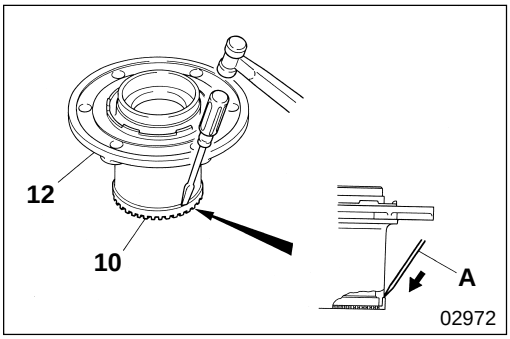

02972

◆ Service procedure

10 Rotor

[Removal]

Strike the outer edge of rotor **10** evenly with flat-tip screwdriver **A** to remove the rotor from the wheel hub.

CAUTION

Be careful not to damage wheel hub 12.

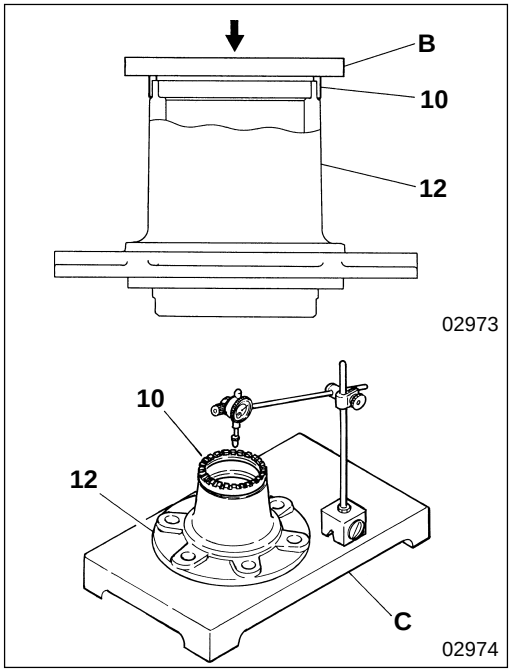

[Installation]
Heat rotor **10** to approximately 150°C {302°F}. Press the rotor evenly with iron plate **B** to press-fit the rotor to wheel hub **12**. Make sure there is no space between the rotor and wheel hub.

[Inspection]
- If the amount of wobbling exceeds the standard value, repeat the assembly procedure from the beginning.
- If the amount of wobbling exceeds the standard value after reassembly, replace defective parts.
  C : Base

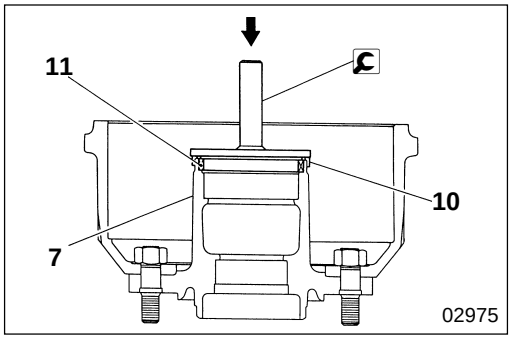

11 Installation of oil seal

CAUTION
When hub and brake drum assembly 7 is removed for a service operation and if rotor 10 is still mounted on the wheel hub, use 0 ABS oil seal installer to press-fit oil seal 11.

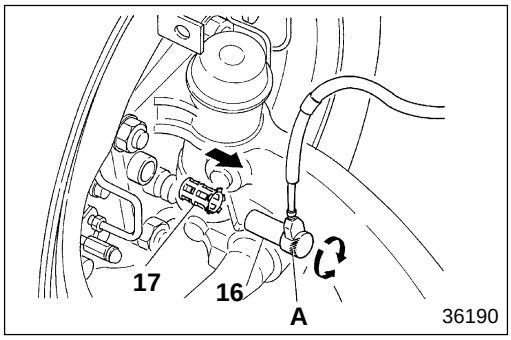

16 Wheel speed sensor

[Removal]
Hold shaded section **A** of wheel speed sensor **16** with pliers, and remove the sensor by twisting it slightly in left and right directions.

CAUTION
- **When holding wheel speed sensor 16 with pliers, do not grip any section other than shaded area A in the diagram.**
- **When removing wheel speed sensor 16, do not apply force on the sensor, such as by hitting with a hammer, prying with a screwdriver or pulling the harness, since these actions can result in wire breakage.**
- **If wheel speed sensor 16 dismounts easily, replace spring spacer 17.**

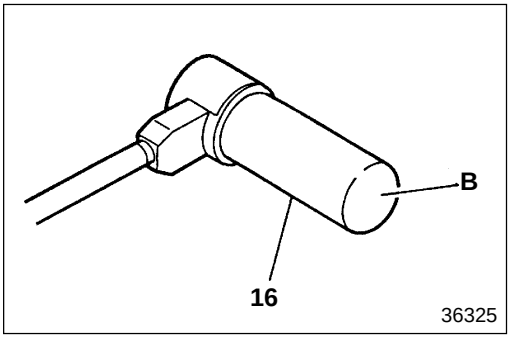

[Inspection]

- Since pole piece section **B** is magnetized by the magnet inside wheel speed sensor **16**, it attracts metals. Do not allow the pole piece to collect metallic objects.

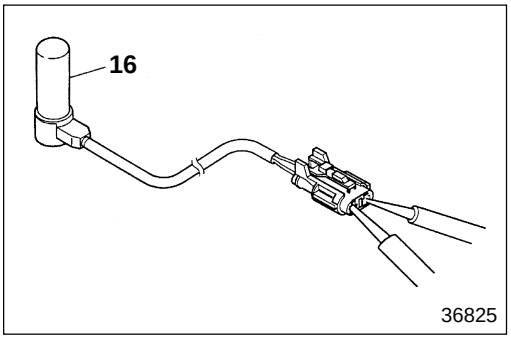

- Measure the resistance between the terminals of wheel speed sensor **16**.
  If the measured value deviates from the standard value, replace the wheel speed sensor.

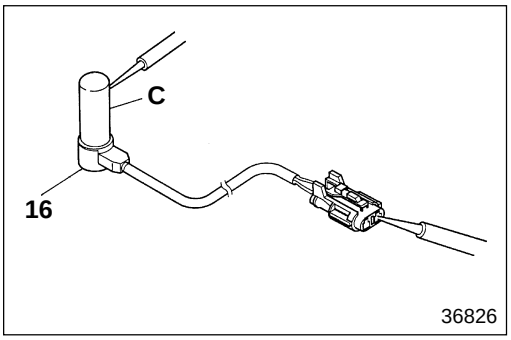

- Measure the insulation resistance between body **C** of wheel speed sensor **16** and each terminal.
  If the measured values deviate from the standard value, replace the wheel speed sensor.

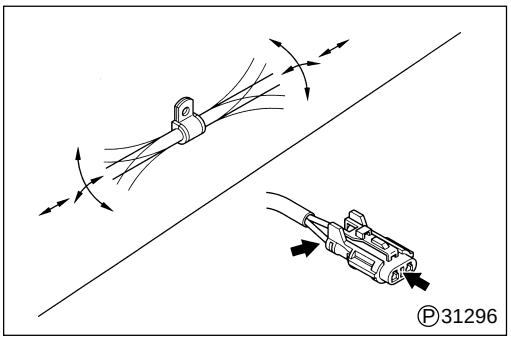

- To check for broken wires, remove the harness clamp section from the vehicle. Bend and extend the harness to check if there is any broken wire in the harness. Also, inspect the connector for proper contact.
  If a defect is found, replace wheel speed sensor **16**.

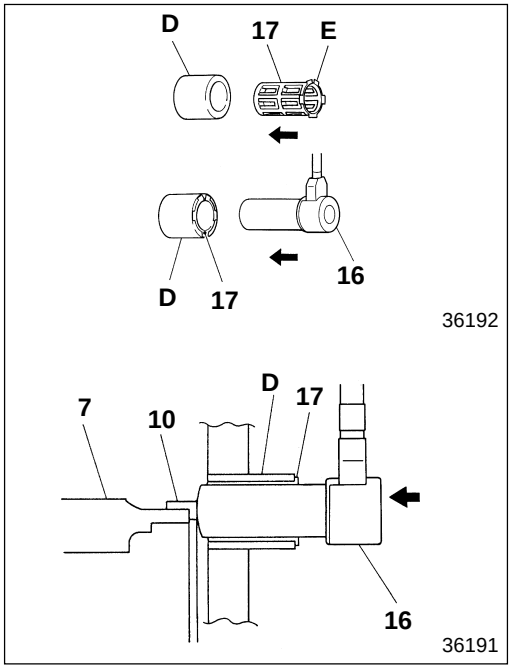

[Installation]

- Insert spring spacer **17** into holder section **D** of the knuckle, and press until stopper section **E** contacts the holder.
- Insert wheel speed sensor **16**, and press until it contacts rotor **10**.
- Rotate hub and brake drum assembly **7** slowly for two or three turns (2 seconds per turn) to make sure it rotates smoothly.

CAUTION

When installing wheel speed sensor 16, do not apply force on the sensor, such as by hitting with a hammer, prying with a screwdriver or pulling the harness, since these actions can result in wire breakage.

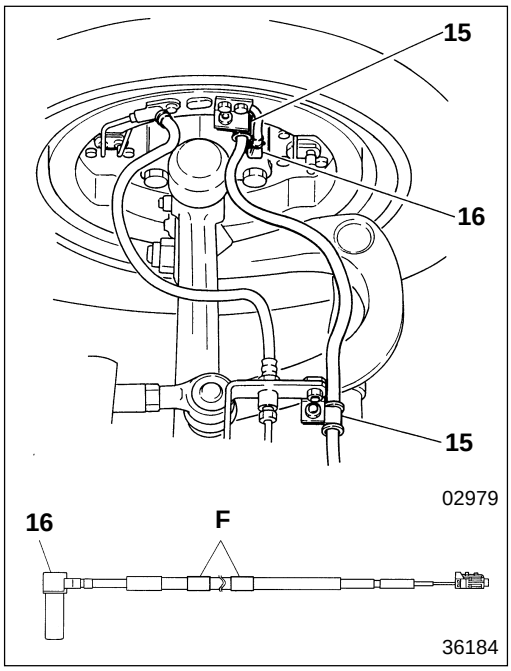

- Secure white tape section **F** of the harness of wheel speed sensor **16** in place using clip **15** on the wheel brake side and clip **15** on the frame side.

CAUTION

Be sure to clamp the harness of wheel speed sensor 16 at two white tape sections F. Make sure the harness does not interfere with other parts and there is no twist or slack in the harness.

M E M O

WHEEL SPEED SENSOR AND ROTOR < REAR AXLE >

The following describes the service procedures for wheel speed sensors and rotors only.
Regarding the procedures for servicing other components, refer to Gr 27.

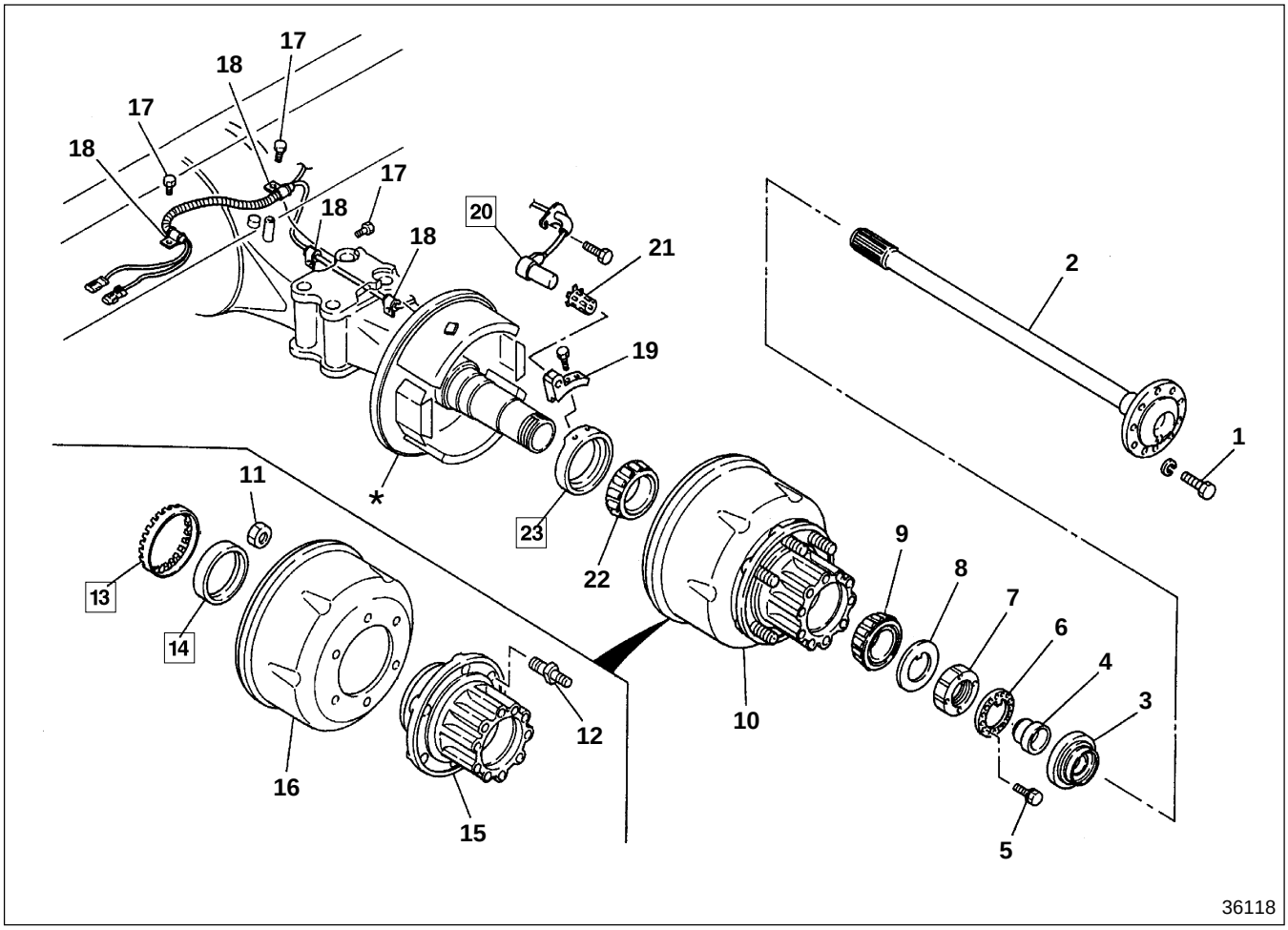

● **Disassembly sequence**

1 Bolt
2 Rear axle shaft
3 Oil seal
4 Oil seal retainer
5 Bolt
6 Lock plate
7 Lock nut
8 Lock washer
9 Outer bearing
10 Hub and brake drum assembly
11 Nut
12 Hub bolt
13 Rotor
14 Oil seal
15 Wheel hub
16 Brake drum
17 Bolt
18 Clip
19 Sensor holder
20 Wheel speed sensor
21 Spring spacer
22 Inner bearing
23 Oil seal retainer

*: Rear brake assembly

● **Assembly sequence**

Follow the disassembly sequence in reverse.

- Do not remove oil seal retainer **4** unless it is damaged (scratches, bending, tilting).

CAUTION

- **When removing or installing hub and brake drum assembly 10, handle rotor 13 with care to prevent damage. Also, do not damage oil seal 14 during assembly.**
- **Keep oil and grease off lining surface of rear brake assembly * and the inner surface of brake drum 16.**

Service standards

Unit : mm {in.}

Location	Maintenance item		Standard value	Limit	Remedy
13	Wobbling of rotor		0.1 {0.0039}	—	Replace
20	Wheel speed sensor	Resistance between terminals	950 to 1450Ω	—	Replace
		Insulation resistance	1MΩ or higher	—	Replace

Special tools

Unit : mm {in.}

Location	Tool name and shape	Part No.	Application
14	Anti-lock brake system oil seal installer 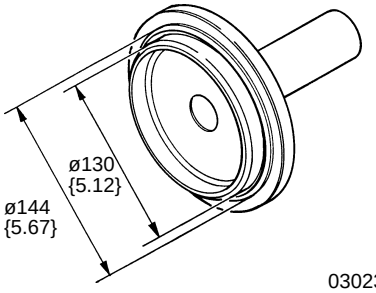	MH062664	Press-fitting of oil seal

◆ Service procedure

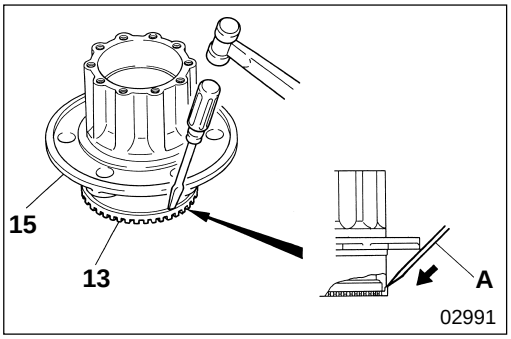

13 Rotor

[Removal]

Strike the outer edge of rotor **13** evenly with flat-tip screwdriver **A** to remove the rotor from the wheel hub.

CAUTION⚠

Be careful not to damage wheel hub 15.

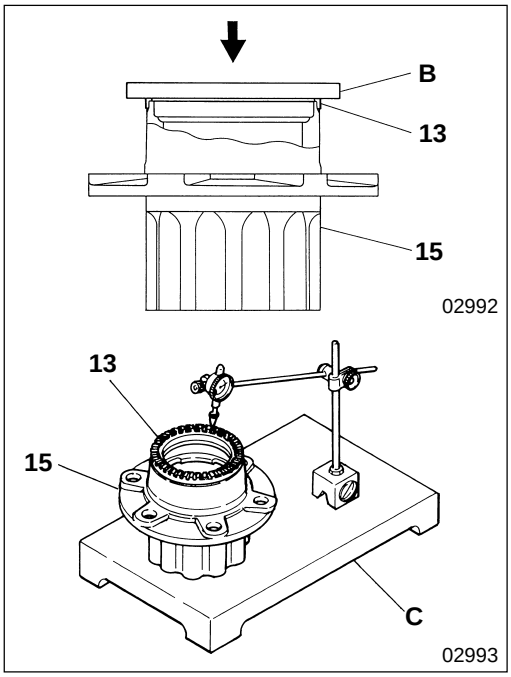

[Installation]

Heat rotor **13** to approximately 150°C {302°F}. Press the rotor evenly with iron plate **B** to press-fit the rotor to wheel hub **15**. Make sure there is no space between the rotor and wheel hub.

[Inspection]

- If the amount of wobbling exceeds the standard value, repeat the assembly procedure from the beginning.
- If the amount of wobbling exceeds the standard value after reassembly, replace defective parts.

C : Base

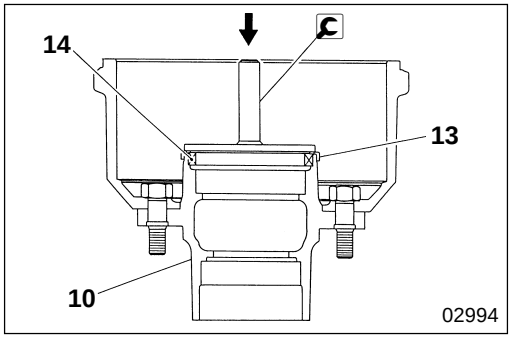

14 Installation of oil seal

NOTE

When hub and brake drum assembly 10 is removed for a service operation and if rotor 13 is still mounted on the wheel hub, use Anti-lock brake system oil seal installer to press-fit oil seal 14.

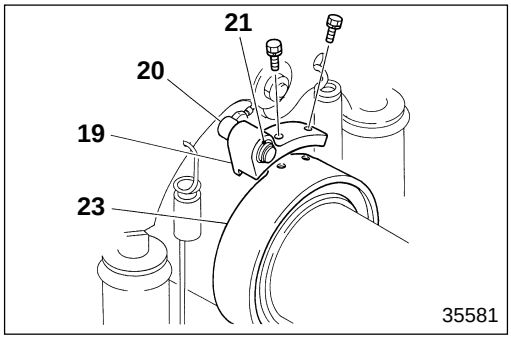

20 Wheel speed sensor

[Removal]

- With wheel speed sensor **20** and spring space **21** installed in sensor holder **19**, remove the sensor holder from oil seal retainer **23**.

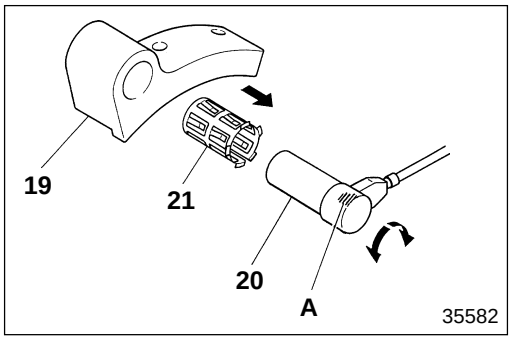

- Hold shaded section **A** of wheel speed sensor **20** with pliers, and remove the sensor by twisting it slightly in left and right directions.

CAUTION

- **When holding wheel speed sensor 20 with pliers, do not grip any section other than shaded area A in the diagram.**
- **When removing wheel speed sensor 20, do not apply force on the sensor, such as by hitting with a hammer, prying with a screwdriver or pulling the harness, since these actions can result in wire breakage.**
- **If wheel speed sensor 20 dismounts easily, replace spring spacer 21.**

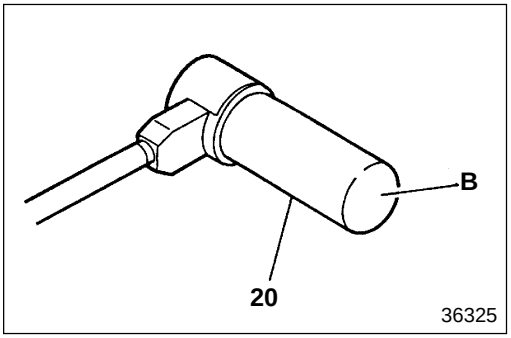

[Inspection]

- Since pole piece section **B** is magnetized by the magnet inside wheel speed sensor **20**, it attracts metals. Do not allow the pole piece to collect metallic objects.

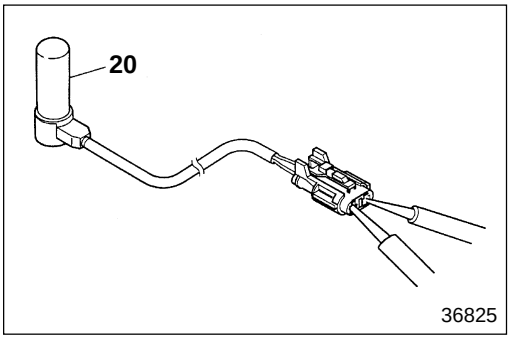

- Measure the resistance between the terminals of wheel speed sensor **20**.
  If the measured value deviates from the standard value, replace the wheel speed sensor.

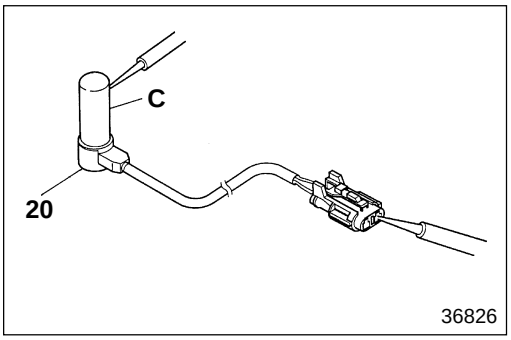

- Measure the insulation resistance between body **C** of wheel speed sensor **20** and each terminal.
  If the measured values deviate from the standard value, replace the wheel speed sensor.

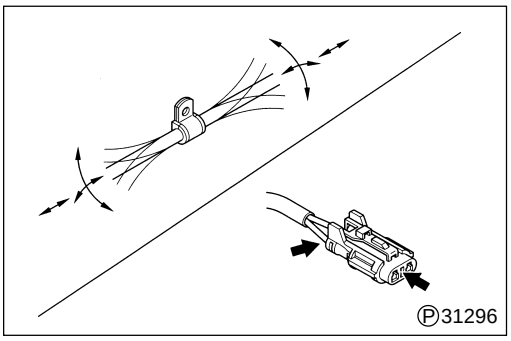

- To check for broken wires, remove the harness clamp section from the vehicle. Bend and extend the harness to check if there is any broken wire in the harness. Also, inspect the connector for proper contact.
  If a defect is found, replace wheel speed sensor **20**.

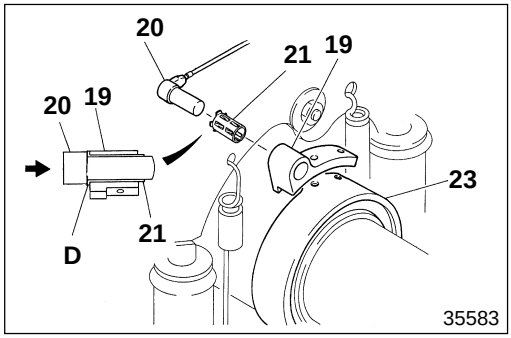

[Installation]

- Insert wheel speed sensor **20** from the back plate, and press until spring spacer **21** and stopper section **D** of the wheel speed sensor contacts sensor holder **19**.
- With wheel speed sensor **20** and spring spacer **21** installed in sensor holder **19**, mount the sensor holder on oil seal retainer **23**.

CAUTION

- **When installing wheel speed sensor 20, do not apply force on the sensor, such as by hitting with a hammer, prying with a screwdriver or pulling the harness, since these actions can result in wire breakage.**
- **Note that wheel speed sensor 20 is different for left and right wheels.**

Location	Harness connector color	Harness connector shape
Left wheel	Gray	Male
Right wheel	Black	Female

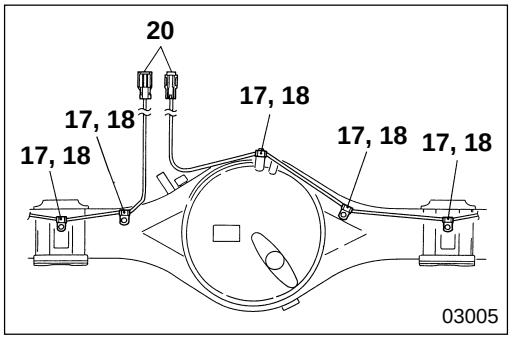

- Rear axle housing section
  Starting from the wheel brake side, secure the harness of wheel speed sensor **20** in place with clip **18** and bolt **17**. Make sure the harness does not interfere with other parts and there is no twist or slack in the harness.

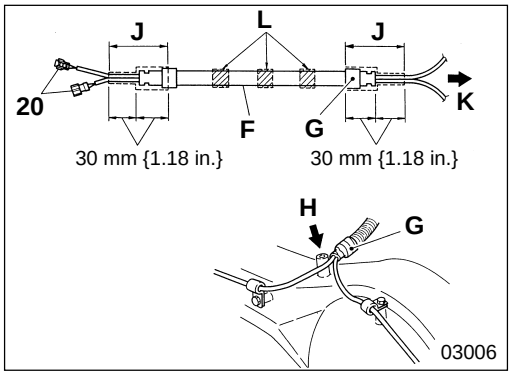

- Binding of harness
  - Gather the harnesses of left and right wheel speed sensors **20**, and bind with corrugated tube **F**.
  - Adjust the position of the corrugated tube **F** so that white tape section **G** is located at clip position **H** on the rear axle housing. Then, turn the corrugated tube so that the slit faces down. Wrap black tape (electric harness tape) on both ends **J** of the corrugated tube. The tape should be placed over the tube end and harness.
    K: Rear axle housing side
  - Wrap tape on the harnesses of wheel speed sensors **20** at sections **L** (three locations at equal intervals).

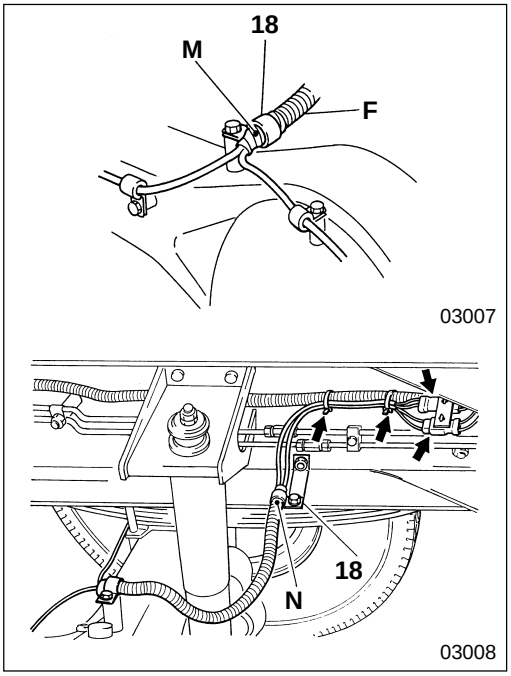

- Clamping of harness
  - Secure section **M** of corrugated tube **F** to the rear axle housing using clip **18**, and attach section **N** of the corrugated tube to the frame using clip **18**.
  - Connect the wheel speed sensor connector to the harness connector on the chassis side, and secure the connectors in place using the bracket.

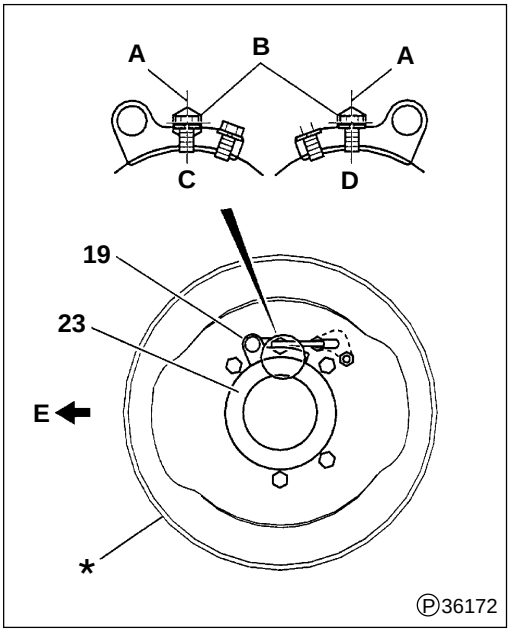

23 **Installation of oil seal retainer**

When installing oil seal retainer **23**, align mounting bolt center **A** of sensor holder **19** with the center line of mounting bolt **B** of rear brake assembly *.

C : For left wheel
D : For right wheel
E : Front of vehicle

NOTE

The brake assembly diagram shows a left wheel.

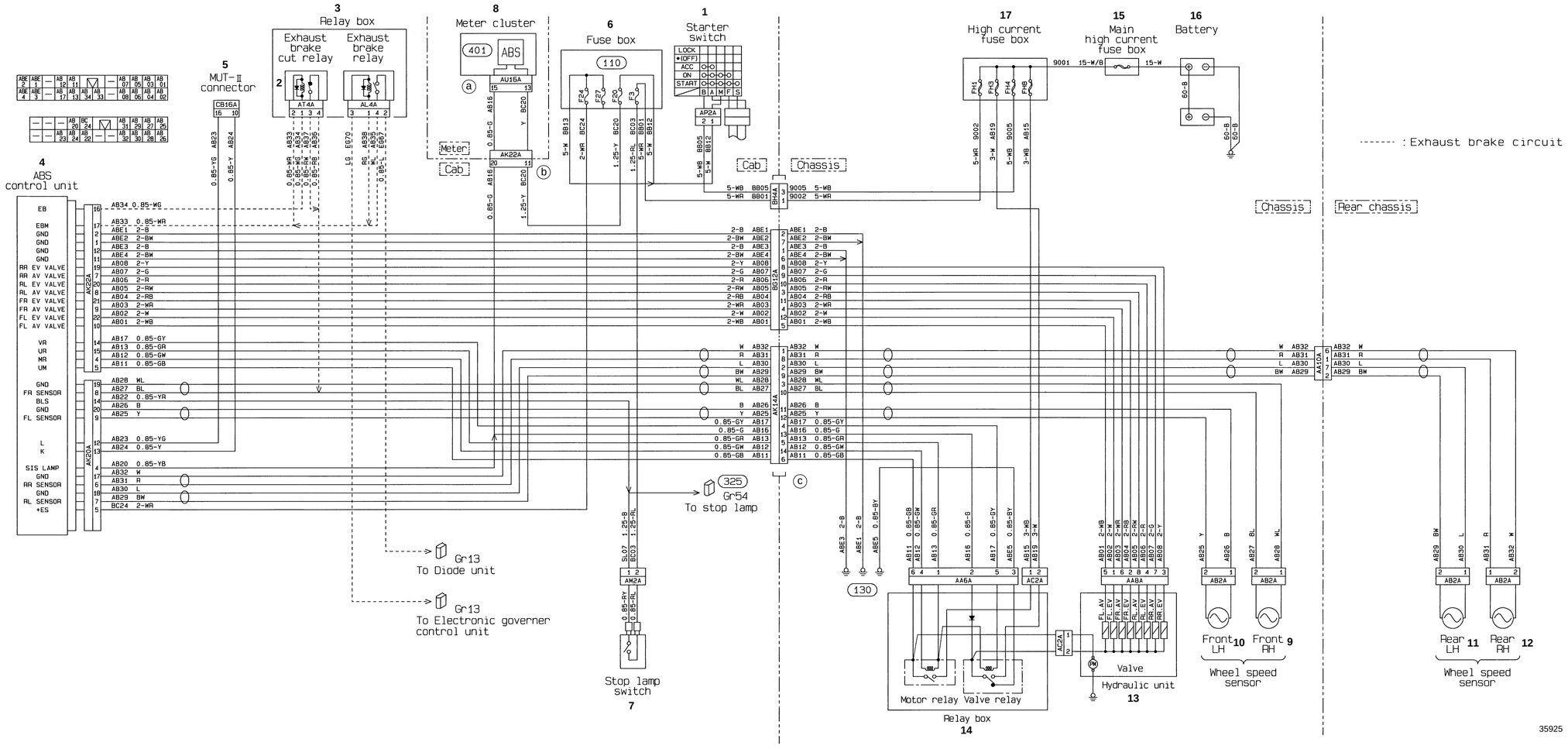
3
Relay box
Exhaust brake cut relay
Exhaust brake relay
8
Meter cluster
6
Fuse box
1
Starter switch
17
High current fuse box
15
Main high current fuse box
16
Battery
5
MUT-II connector
4
ABS control unit
Meter
Cab
Chassis
Rear chassis
: Exhaust brake circuit
To stop lamp
To Diode unit
To Electronic governer control unit
Stop lamp switch
7
Motor relay
Valve relay
Relay box
14
Hydraulic unit
13
Front LH
10
Front RH
9
Rear LH
11
Rear RH
12
Wheel speed sensor
Wheel speed sensor
35925

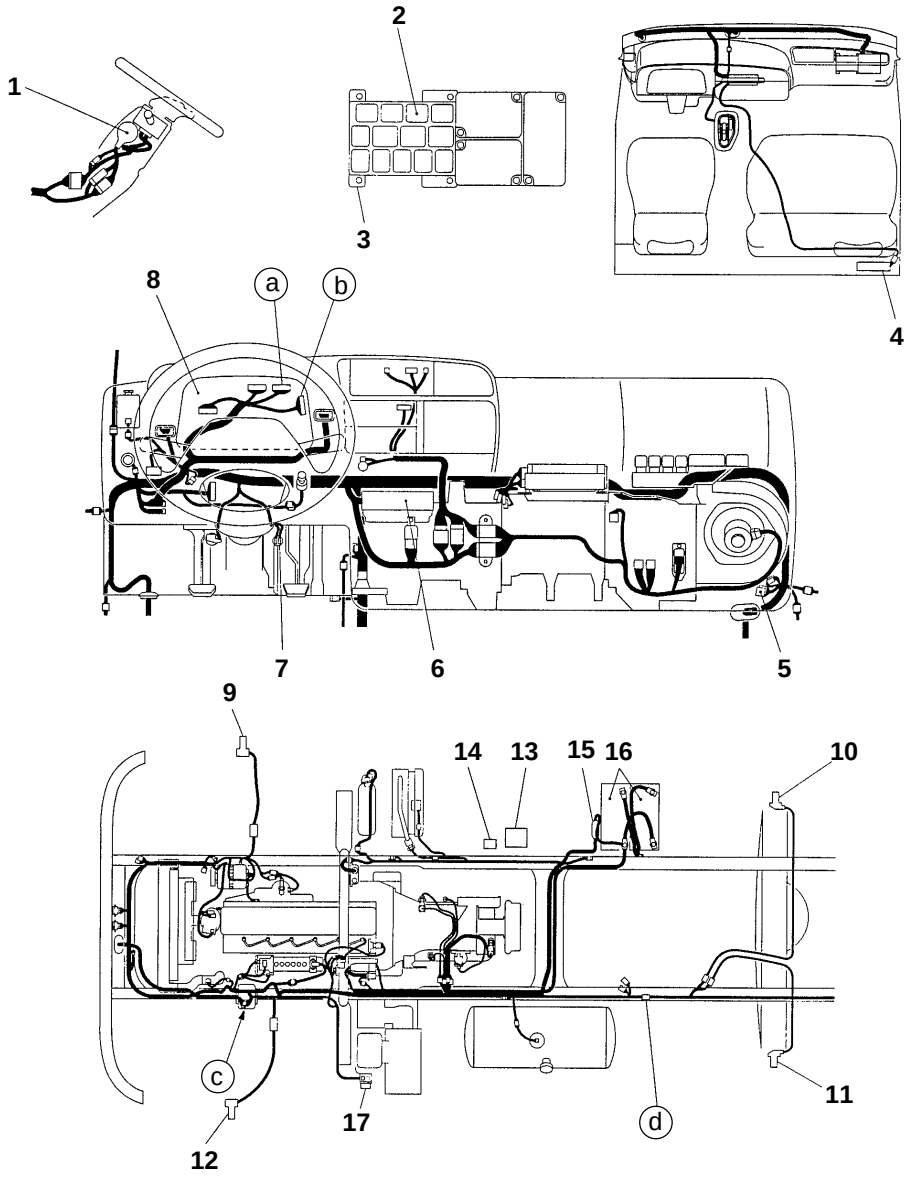

1 Starter switch
2 Exhaust brake cut relay
3 Relay box
4 ECU
5 MUT-II connector
6 Fuse box
7 Stop lamp switch
8 Meter cluster
9 Wheel speed sensor (for front-axle right wheel)
10 Wheel speed sensor (for front-axle left wheel)
11 Wheel speed sensor (for rear-axle left wheel)
12 Wheel speed sensor (for rear-axle right wheel)
13 Hydraulic unit
14 Relay box
15 Main high-current fuse
16 Battery
17 High-current fuse box

MITSUBISHI
FUSO

FH

Service Manual

Group 35
Brake

'98 Minor Change

Table of Contents

MITSUBISHI FUSO TRUCK OF AMERICA, Inc.

BACK HOME

Pub No. TWME9502-235

GROUP 35 BRAKE

SPECIFICATIONS 35- 2

STRUCTURE AND OPERATION 35- 4

TROUBLESHOOTING 35- 22

ON-VEHICLE INSPECTION AND ADJUSTMENT
- Replacement of Brake Fluid 35- 28
- Air Bleeding of Brake System 35- 30
- Inspection and Adjustment of Brake Pedal Free Play 35- 32
- Inspection and Adjustment of Clearance between Brake Pedal and Floor Panel 35- 32
- Thickness Inspection and Replacement of Brake Lining 35- 33
- Inspection of Brake Shoe Clearance 35- 33
- Inspection of Brake Booster (Hydraulic Booster) 35- 34

BRAKE MASTER CYLINDER 35- 36

BRAKE PEDAL AND BRAKE BOOSTER (HYDRAULIC BOOSTER) 35- 38

BRAKE BOOSTER (HYDRAULIC BOOSTER) 35- 40

FRONT WHEEL BRAKE 35- 42

REAR WHEEL BRAKE 35- 50

VACUUM PUMP 35- 58

EXHAUST BRAKE SYSTEM 35- 60

SPECIFICATIONS

< Equipment for Service Brake >

Item			Specifications
Brake booster (Hydraulic booster)	Booster		Hydraulic type
	Manufacturer		NABCO
Brake master cylinder	Cylinder	Inner diameter mm {in.}	ø41.28 {1.63}
	Piston stroke	Front mm {in.}	15.5 {0.61}
		Rear mm {in.}	19.0 {0.75}
	Manufacturer		NABCO
Vacuum pump	Type		Vane type
	Delivery	cm^3 {cu.in.}	120 {7.32}
	Manufacturer		MITSUBISHI ELECTRIC

< Wheel Brake >

Item		Specifications
Brake type	Front	Drum brake (2-leading type)
	Rear	Drum brake (Dual 2-leading type)
Brake drum inner diameter	mm {in.}	ø320 {12.6}
Wheel cylinder inner diameter	Front mm {in.}	ø34.93 {1.38}
	Rear mm {in.}	ø36.51 {1.44}
Brake lining Width×Thickness	Front mm {in.}	120×12 {4.72×0.47}
	Rear mm {in.}	140×12 {5.51×0.47}

< Exhaust Brake >

Item	Specifications
Control type	Combined electric and vacuum
Valve type	Butterfly valve

M E M O

Hydraulic booster brake system

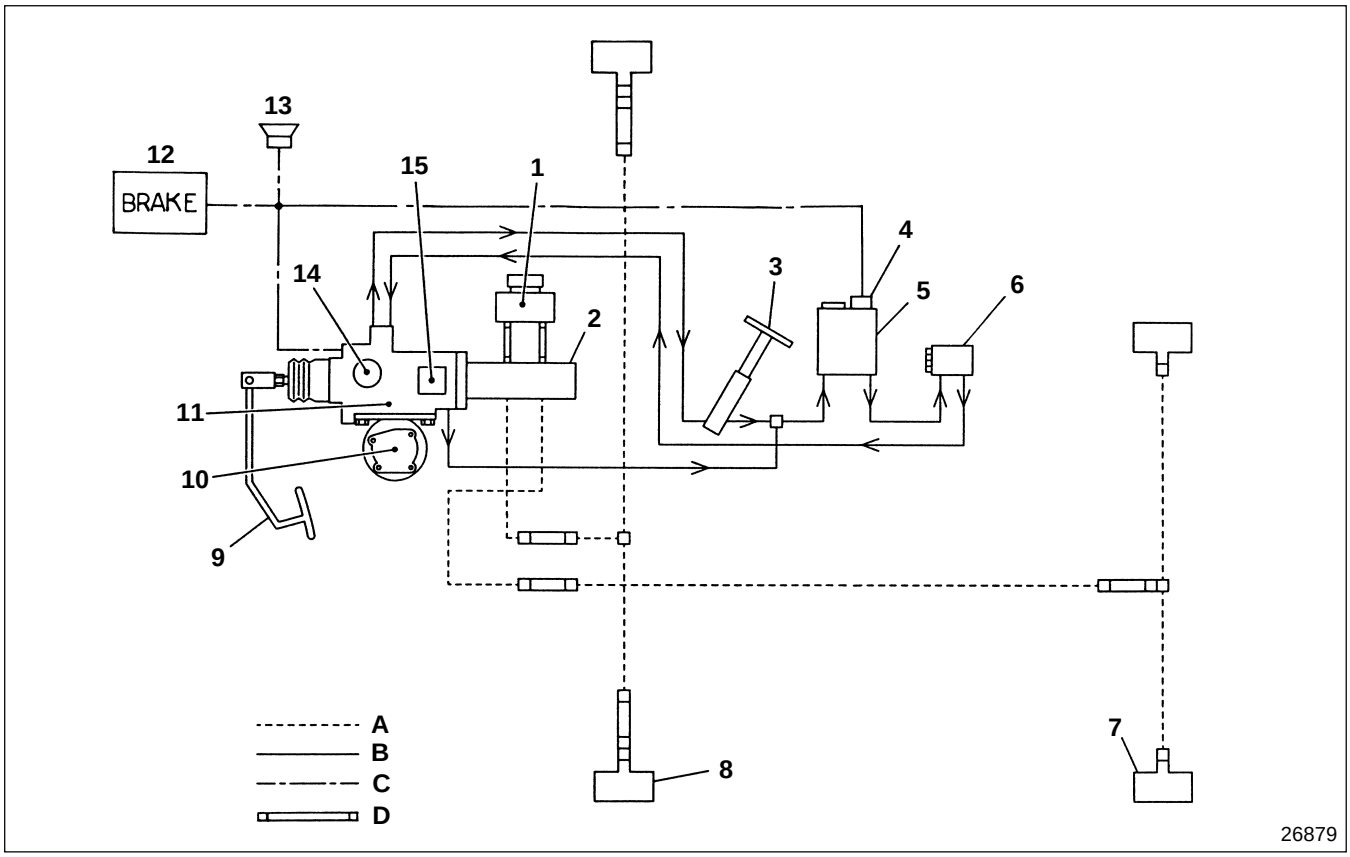

1 Brake fluid tank
2 Brake master cylinder
3 Power steering booster
4 Power steering fluid level sensor
5 Power steering oil tank
6 Power steering oil pump
7 Rear wheel cylinder
8 Front wheel cylinder
9 Brake pedal
10 Emergency pump motor
11 Brake booster (Hydraulic booster)
12 Brake warning lamp
13 Warning buzzer
14 Flow switch
15 Motor relay

A : Brake fluid line
B : Power steering fluid line
C : Electric line
D : Hose

- The brake system is a hydraulic booster brake type, all-wheel braking type consisting of separate front and rear systems.
- The servo system is fitted with brake booster (hydraulic booster) **11**.
- The hydraulic booster brake type uses the fluid pressure from power steering oil pump **6** to boost brake pedal **9** operating force.
- If fluid pressure stops being generated because of engine stoppage, power steering oil pump **6** failure, or fluid leakage from the power steering piping, it is detected by flow switch **14**. To ensure proper fluid pressure in an emergency, the emergency pump motor **10** rotates by the action of operating currents from motor relay **15**.

- Emergency pump **10** operates only when brake pedal **9** is depressed.
  Operation conditions details are as follows.

Starter switch	Engine	Parking brake switch	Alarms		Power steering fluid pressure	*1 Emergency pump motor	Vehicle condition
			Brake warning lamp ○ ··· Lit × ··· Not lit	Warning buzzer ○ ··· Sounding × ··· Silent		○ ··· Running × ··· Stopped	
ON	Running	ON (Pulled)	×	×	Present	×	When normal
			○	○	Absent	○	*2 Power steering piping fluid leakage
		OFF (Returned)	×	×	Present	×	When normal
			○	○	Absent	○	*2 Power steering piping fluid leakage
	Stopped	ON (Pulled)	○	○		○	When engine is started
						○	When engine stalls during take-off on a slope
		OFF (Returned)	○	○		○	When engine stalls
OFF		ON (Pulled)	×	×		○	When vehicle starts moving right after being parked (when parking brake force is insufficient)
		OFF (Returned)	×	×		○	When engine is cut off right before the vehicle comes to a stop
ON	—	—	○	○	—	—	When fluid level in power steering oil tank is below “MIN” or above “MAX”
OFF	—	—	×	×	—	—	

*1 : The emergency pump motor operates when the brake pedal is depressed.

*2 : Fluid pressure is obtained by the action of the brake booster (hydraulic booster) fail-safe system which cuts off the flow of fluid to the power steering piping. P35-6

Brake Booster (Hydraulic Booster)

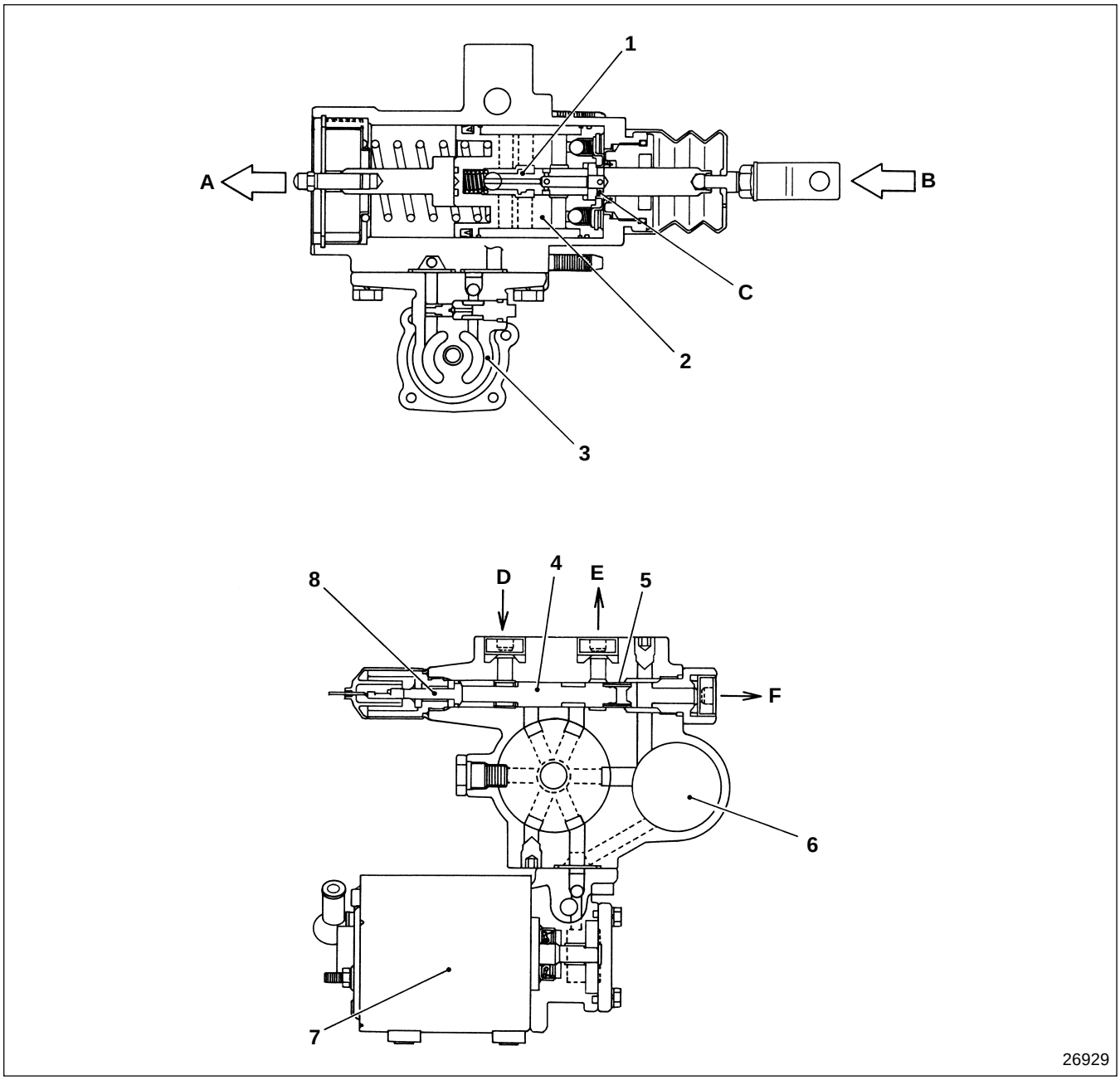

1 Spool valve
2 Hydraulic piston
3 Emergency pump
4 Piston
5 Spring
6 Reservoir
(Brake booster built-in)
7 Emergency pump motor
8 Flow switch

A : Brake master cylinder
B : Brake pedal
C : Servo chamber
D : Power steering oil pump
E : Power steering booster
F : Drain

- Spool valve **1** is an adjusting valve linked to brake pedal **B** that generates fluid pressure in accordance with the pedal operating force.
- Hydraulic piston **2** is linked to brake master cylinder **A**, by storing the fluid supplied via spool valve **1** in servo chamber **C** its force is boosted.

- In case there is fluid leaking from the power steering piping and fluid pressure is lost, piston **4** is depressed by the action of spring **5** and moves to the left, shutting off the flow of fluid to power steering oil pump **D** and power steering booster **E**. As a result fluid hydraulic circuit is created only inside the brake booster.
- When piston **4** moves to the left, flow switch **8** is turned ON and emergency pump motor **7** starts operating. By the action of emergency pump **3**, fluid pressure is generated within the fluid hydraulic circuit inside the brake booster.

● Spool valve

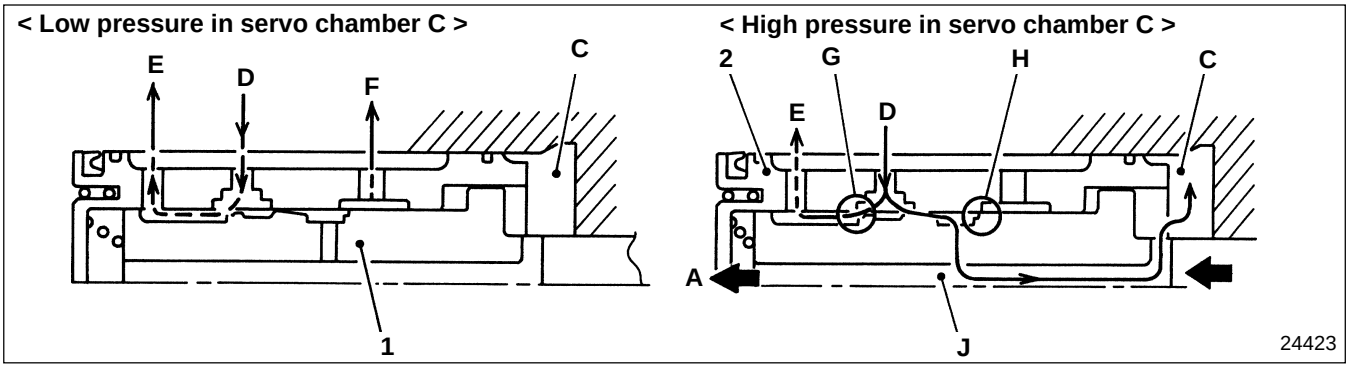

At operation

Through the action of brake pedal **B** spool valve **1** moves to the left, narrowing down land **G*** and closing off land **H** → Pressure of fluid coming from power steering oil pump **D** rises → High pressure fluid flows into servo chamber **C** via fluid groove **J**

↓

Hydraulic piston **2** is pushed to the left → Piston of brake master cylinder **A** is pushed and the brake is operated

***** : When the brake is operating, land **G** is not completely shut, therefore the power steering booster is not affected.

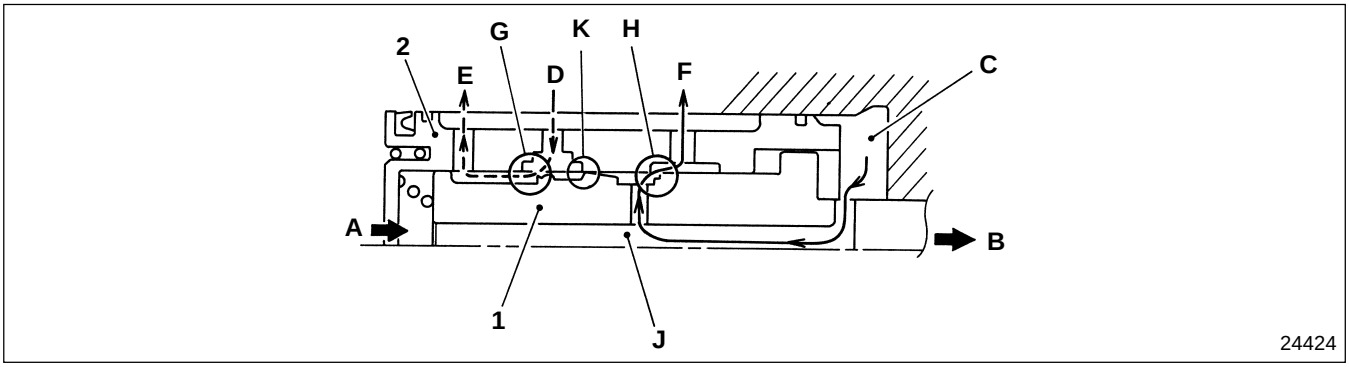

When released

Through the action of brake pedal **B** spool valve **1** moves to the right, opening lands **G** and **H** and closing fluid groove **K** → Pressure of fluid from power steering oil pump **D** falls → Fluid from servo chamber **C** flows into reservoir **4** and drain **F**

↓

Hydraulic piston **2** moves to its original position → Brake master cylinder **A** piston is released

Brake Master Cylinder

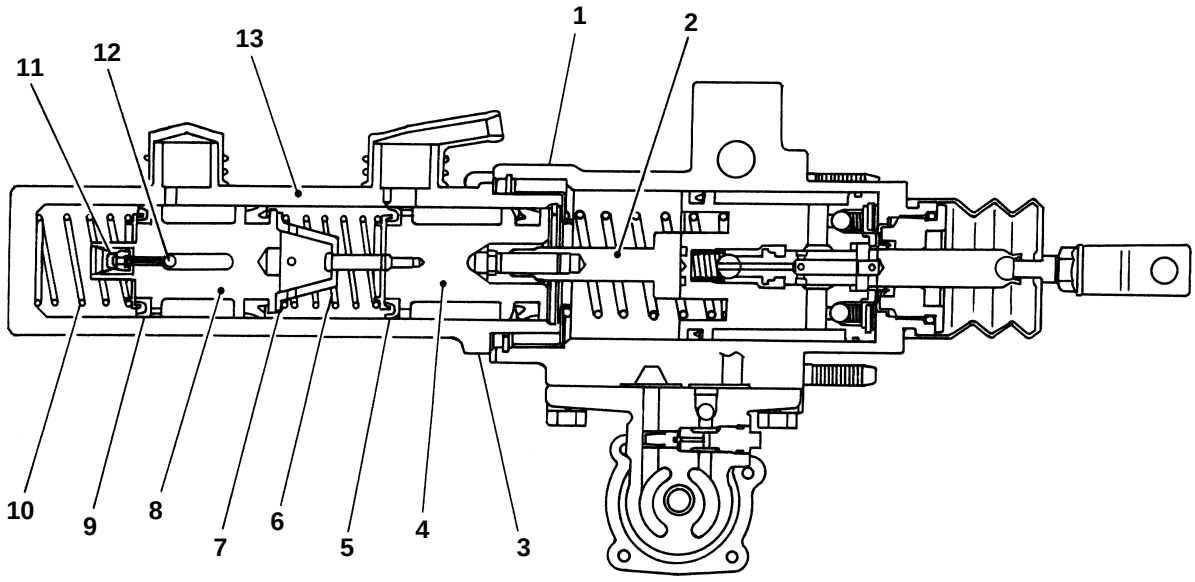

1 Brake booster (Hydraulic booster)
2 Hydraulic piston
3 Brake master cylinder
4 Primary piston
5 Packing cup
6 Primary piston return spring
7 Retainer
8 Secondary piston
9 Packing cup
10 Secondary piston return spring
11 Supply valve
12 Supply valve stopper
13 Cylinder

- Brake master cylinder **3** consists of separate and independent front and rear hydraulic systems. Therefore, if by chance there should be leakage in either the front or the rear hydraulic systems, the safety mechanism ensures that the other unaffected system can operate the brakes.

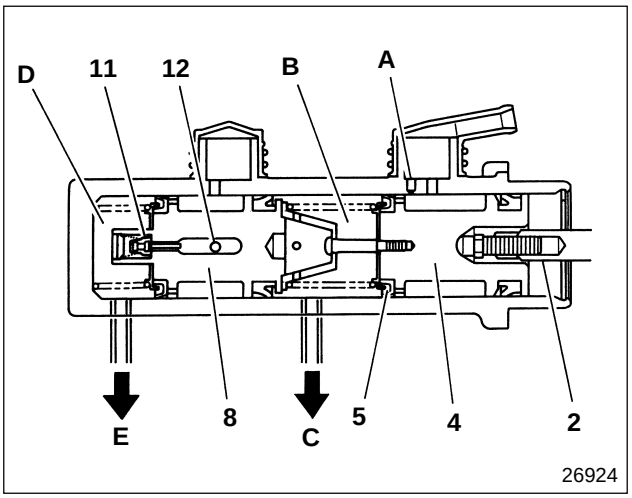

● **When brake pedal is depressed**

- Depressing the brake pedal makes brake booster (hydraulic booster) hydraulic piston **2** push in primary piston **4** and secondary piston **8**, packing cup **5** passes return port **A**, generates hydraulic pressure in chamber **B**, and feeds fluid to front brake system **C**.
- Supply valve **11** separates from supply valve stopper **12**, generates hydraulic pressure in chamber **D**, and feeds fluid to rear brake system **E**.

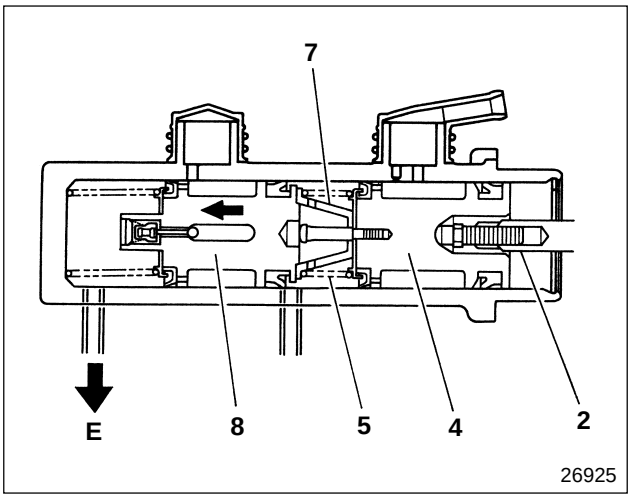

● **When there is fluid leakage in the front brake system**

- Depressing the brake pedal makes hydraulic piston **2** push in primary piston **4**. However, if the brake fluid in the front brake system leaks, hydraulic pressure is not generated in the front brake system.
- Depressing the brake pedal further makes primary piston **4** compress primary piston return spring **6** causing retainer **7** to push in secondary piston **8**, thus generating hydraulic pressure only in the rear brake system **E**.

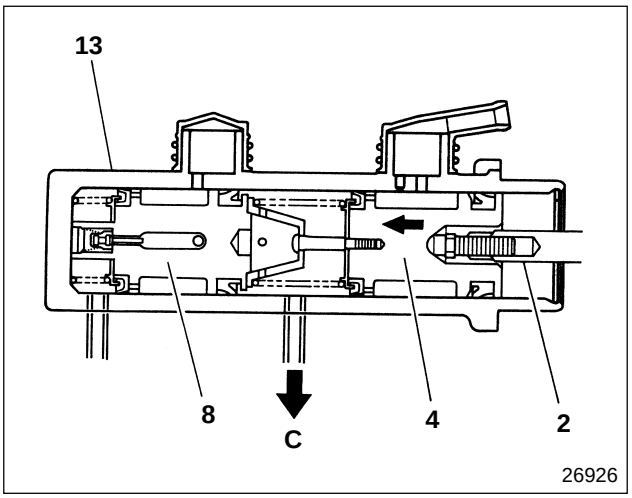

● **When there is fluid leakage in the rear brake system**

- Depressing the brake pedal makes hydraulic piston **2** push in primary piston **4** and secondary piston **8**. However, if the brake fluid in the rear brake system leaks, hydraulic pressure is not generated in the rear brake system.
- Depressing the brake pedal further makes the end of secondary piston **8** hit against cylinder **13**, pushing primary piston **4** and generating hydraulic pressure only in the front brake system **C**.

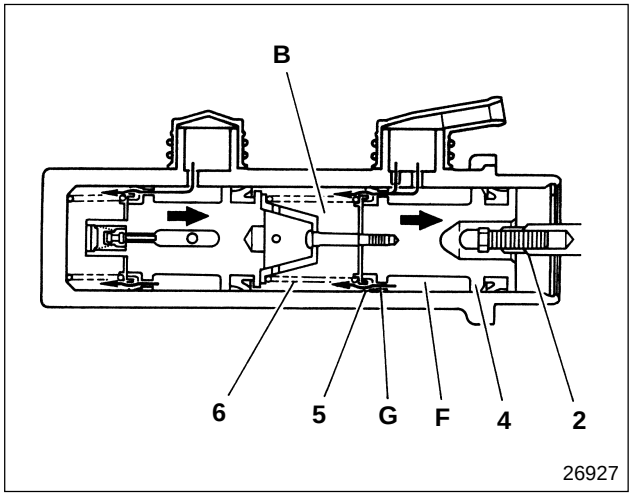

● **When the brake pedal is released**

- When hydraulic piston **2** returns to its original position, as a result of the repercussive force of primary piston return spring **6**, primary piston **4** begins to return immediately. However, because of a lack of a pressure difference between chambers **B** and **F** brake fluid delivered from the brake master cylinder cannot return quickly.
- When primary piston **4** begins to return, hydraulic pressure in chamber **B** becomes lower than that in chamber **F**, the pressure difference causes packing cup **5** to deform opening up passage **G**. This causes brake fluid from chamber **F** to flow into chamber **B**.

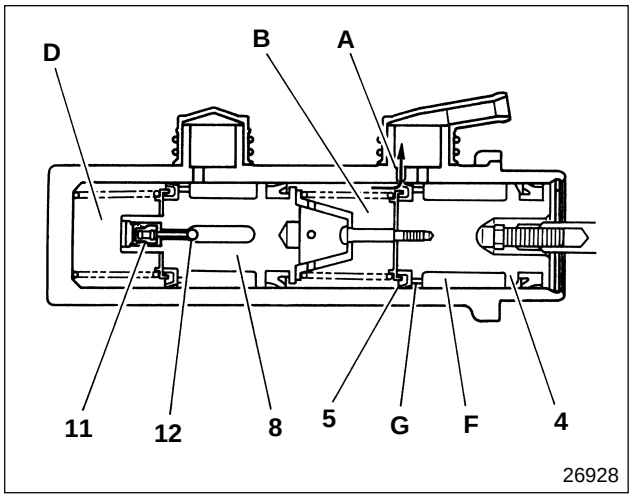

- When primary piston **4** moves further and returns to its original position, the pressure in chambers **B** and **F** become the same, and packing cup **5** closes passage **G**. The hydraulic fluid in the brake pipe returns from chamber **B** to the reservoir tank via return port **A**.
- The same action also takes place in the secondary side. However, when secondary piston **8** is pushed back, supply valve **11** hits against supply valve stopper **12** and the supply valve opens.
- Therefore the hydraulic fluid in the brake pipe returns from chamber **D** to the reservoir tank via supply valve **11**.

Wheel Brake

< Front >

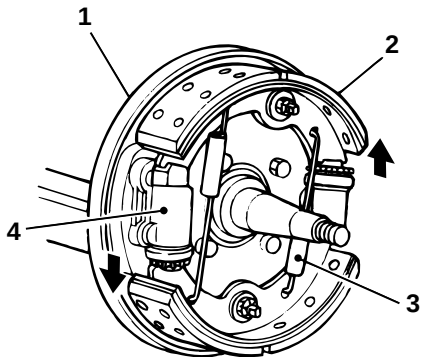

12964

< Rear >

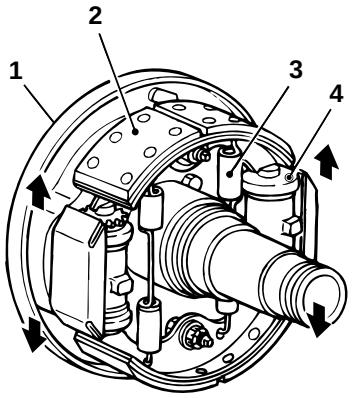

12965

1 Backing plate
2 Brake shoe assembly
3 Return spring
4 Wheel cylinder assembly

- The front wheel brake is an internal expanding 2-leading brake type.
- The rear wheel brake is an internal expanding dual 2-leading brake type.
- Front and rear wheel cylinder assemblies **4** have shoe clearance automatic adjusting mechanisms to adjust shoe clearance within a specific range.

● Wheel cylinder assembly

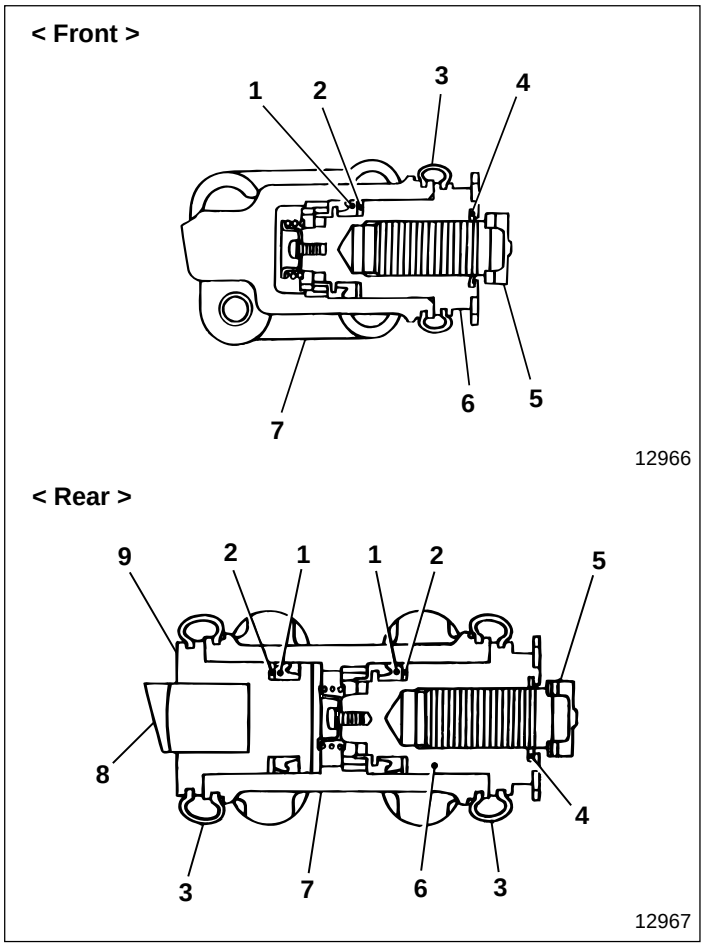

1 Piston cup
2 Backup ring
3 Boot
4 Seal
5 Screw
6 Piston
7 Cylinder body
8 Anchor piece < Rear >
9 Piston < Rear >

Even if the brake lining has worn to the extent that the brake shoe clearance is higher than the specified value, the brake shoe clearance automatic adjusting mechanism automatically adjusts the brake shoe clearance to maintain the appropriate brake shoe clearance when the vehicle is braked when moving forward.

● Operation of automatic shoe clearance adjusting mechanism (one-way clutch)

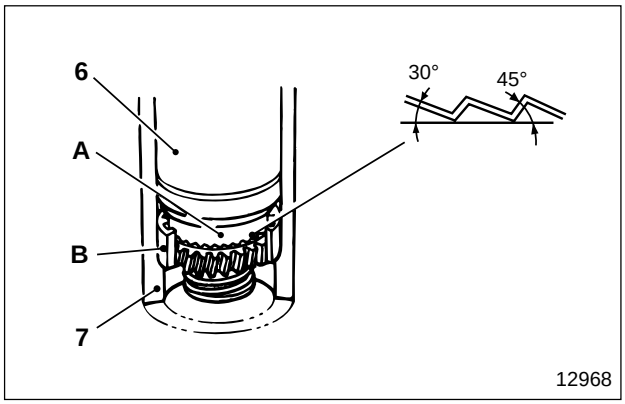

30° : When piston **6** appears, the double helical gear slides out easily.
45° : When turning piston **6**, the double helical gear receives and maintains the rotational force.
A : Clutch
B : Guide

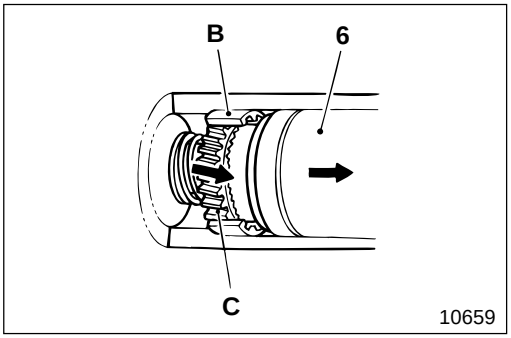

● **When braking starts**

- When hydraulic braking pressure acts on the wheel cylinder, it pushes piston **6** forward.
- Idler **C** of extended piston **6** is engaged with the diagonal gears cut in guide **B** of the cylinder body, so the idler advances while turning, in accordance with the travel of the piston.

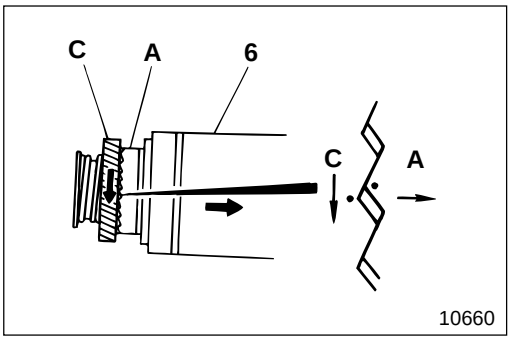

- The rotation of idler **C** slides out the double helical gear of clutch **A**.

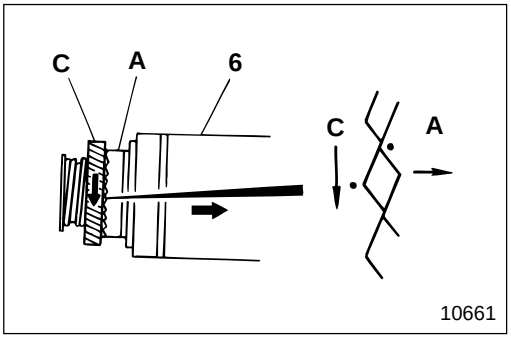

● **When depressing brake pedal**

When the brake shoe clearance conforms to the specified value

- The amount of travel of idler **C** is proportional to the amount of travel of piston **6**. The amount of travel is not enough to make the double helical gear of clutch **A** climb over the opposite double helical gear when the brake shoe clearance is within the specified value.

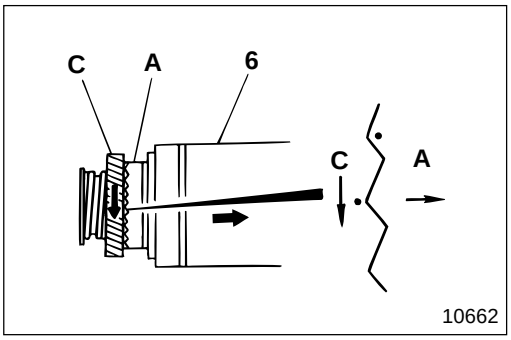

When the brake shoe clearance is higher than the specified value

- When the brake shoe clearance is higher than the specified value, the amount of travel of idler **C** increases enough to make the double helical gear of clutch **A** climb over the opposite double helical gear.

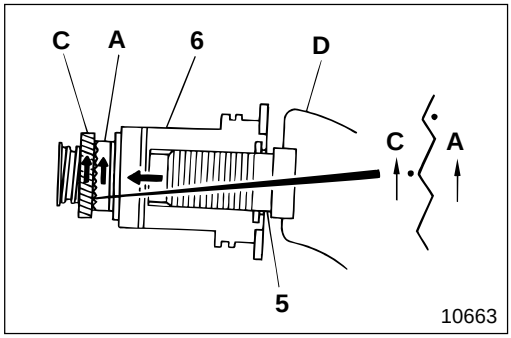

● **When releasing brake pedal**

- As the brake fluid pressure decreases and piston **6** returns, idler **C** also returns, turning in the opposite direction along guide **B** of the cylinder body.
- When the brake shoe clearance is within the specified value, piston **6** returns to its original position without turning, because the double helical gear of clutch **A** has not climbed over the opposite double helical gear.
- When the brake shoe clearance is higher than the specified value, piston **6** returns while turning by one gear tooth, since the double helical gear of clutch **A** has climbed over the opposite gear. This lowers the brake shoe clearance to the specified value, because screw **5** of the piston is fixed by brake shoe **D** and does not turn.

Vacuum Pump

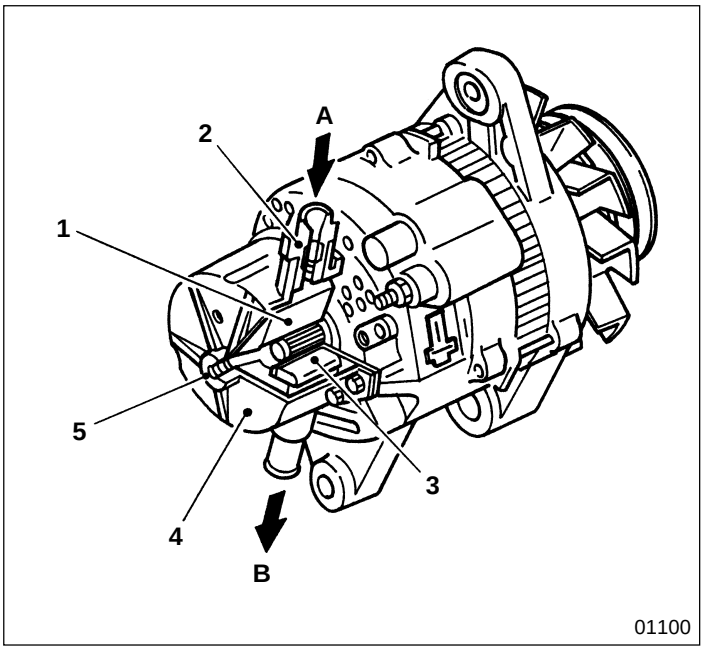

1 Rotor
2 Check valve
3 Vane
4 Housing
5 Oil filler hole

A : Inlet
B : Outlet

- The vacuum pump is installed on the rear part of alternator and is rotated by the V-belt.
- Check valve **2** is fitted to prevent the atmospheric pressure and the lubricating oil from flowing in reverse from the vacuum pump when the engine is stopped.

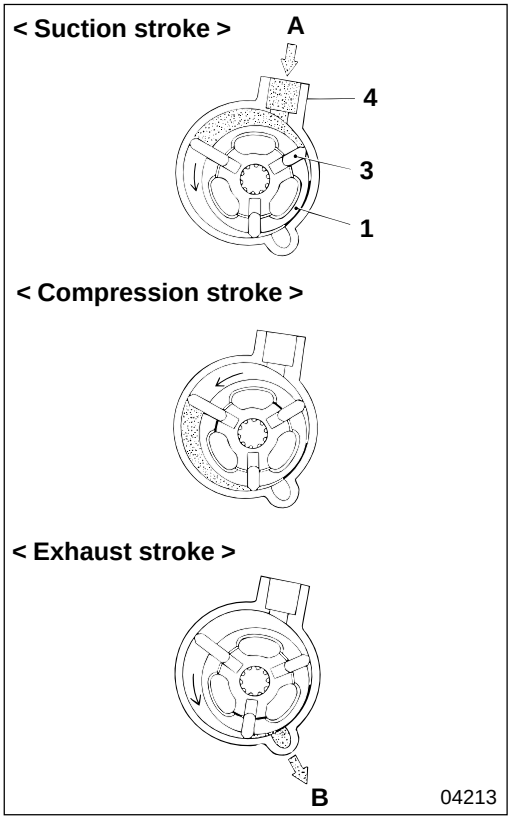

● **Operation**

- Inside cylindrical housing **4**, rotor **1** equipped with three vanes (movable blades) **3** rotates, pressing the vanes against the inside surface of the housing by centrifugal force.
- Since rotor **1** is eccentric with respect to housing **4**, as the rotor rotates, the atmospheric pressure of the exhaust brake unit is drawn in from inlet **A** and discharges from outlet **B** by the gradual compression of the air. This repetition of the suction, compression and exhaust strokes generates a vacuum, realizing a near-vacuum in the exhaust brake unit.
- The engine oil that lubricates and cools the inside of housing **4** is returned, along with air pressure, through outlet **B** to the oil pan.

Exhaust Brake System

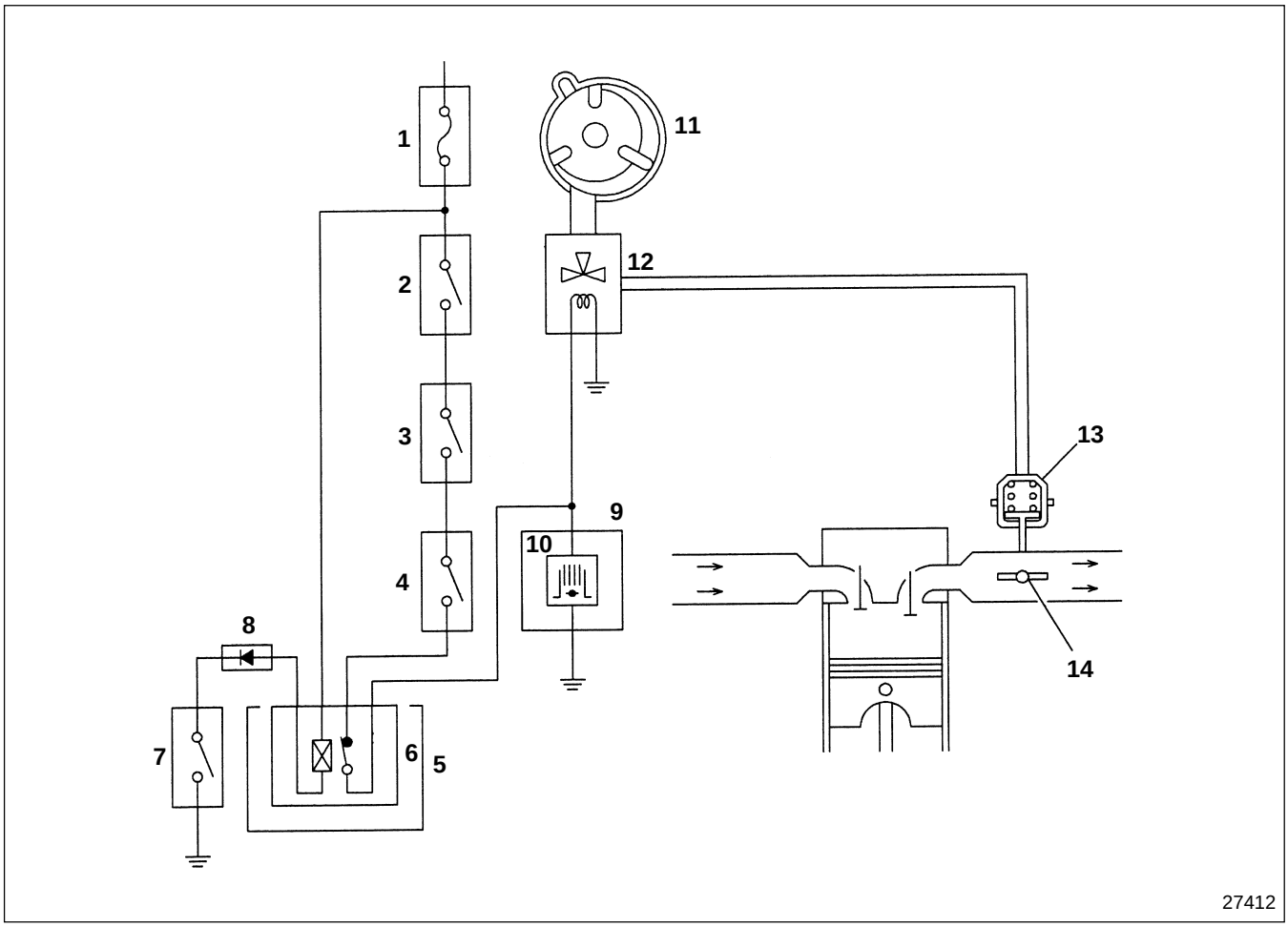

1 Fuse box
2 Clutch switch
3 Accelerator switch
4 Exhaust brake switch
5 Relay box
6 Exhaust brake cut relay
7 Transmission neutral switch
8 Diode
9 Meter cluster
10 Exhaust brake indicator lamp
11 Vacuum pump
12 3-way magnetic valve
13 Exhaust brake unit
14 Butterfly valve

- Excitation of the coil of 3-way magnetic valve **12** closes the atmospheric valve and opens the vacuum valve. This makes the vacuum pump **11** act on exhaust brake unit **13** which closes butterfly valve **14**, activating the exhaust brake.
- If the exhaust brake is activated while the vehicle is stationary, the coolant temperature can rise excessively, overheating the engine. To avoid this, when the transmission is in neutral, transmission neutral switch **7** turns ON, cutting the exhaust brake system.

● When exhaust brake system is activated

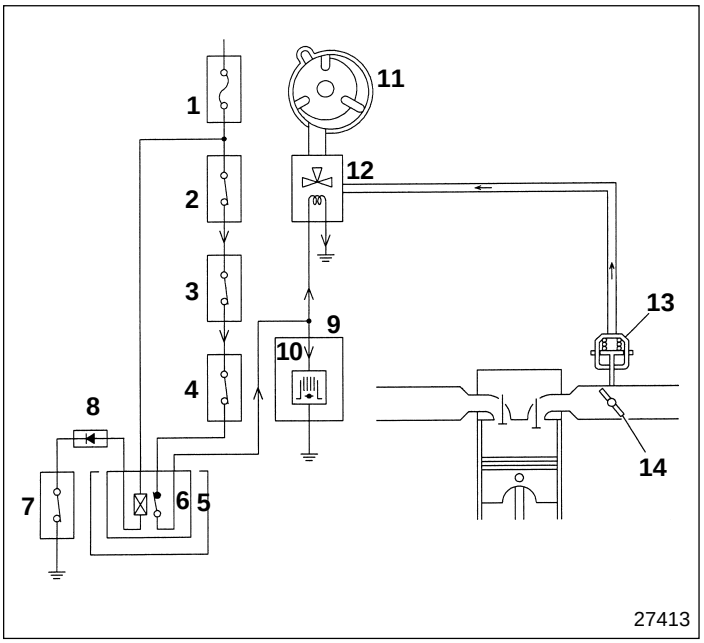

When exhaust brake switch **4** is turned on, the current flows as illustrated to activate the exhaust brake.

Fuse **1**→Clutch switch **2**→Accelerator switch **3**→Exhaust brake switch **4**→Exhaust brake cut relay **6**→3-way magnetic valve **12**→Ground

→Exhaust brake indicator lamp **10** (ON)→Ground

● When the exhaust brake system is released

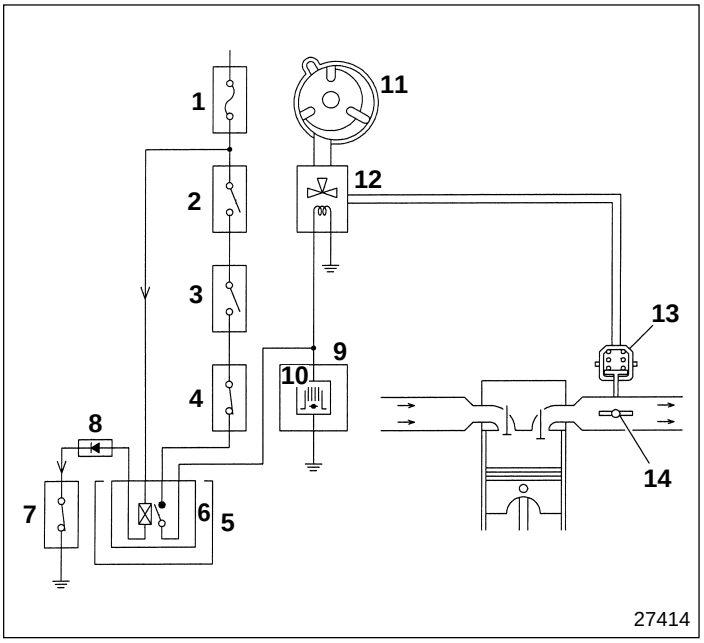

When the accelerator pedal or clutch pedal is depressed while the exhaust brake is working, all switches **3**, **2** turn off, shutting off the current, releasing the exhaust brake.

● When clutch pedal is depressed

Fuse **1**→Clutch switch **2** (OFF)→Since no current flows, the circuit turns off and the exhaust brake is released.

● When accelerator pedal is depressed

Fuse **1**→Clutch switch **2**→Accelerator switch **3** (OFF)→Since there is no grounding, current does not flow, so the exhaust brake is released.

● Releasing exhaust brake system by placing transmission in neutral

Fuse **1**→Exhaust brake cut relay **6** excitation→Transmission neutral switch **7**→Ground
Fuse **1**→Clutch switch **2**→Accelerator switch **3**→Exhaust brake switch **4**→Exhaust brake cut relay **6** (OFF)→Beyond this, current does not flow so the exhaust brake is released.

● Working principle of exhaust brake

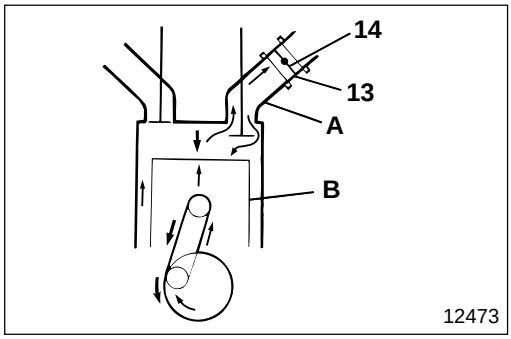

When butterfly valve **14** of exhaust brake unit **13**, in exhaust pipe **A**, is closed, the pressure in the exhaust pipe rises. The pressure rises further in the exhaust stroke, generating a force that pushes back piston **B**, the exhaust braking force.

● Exhaust brake unit

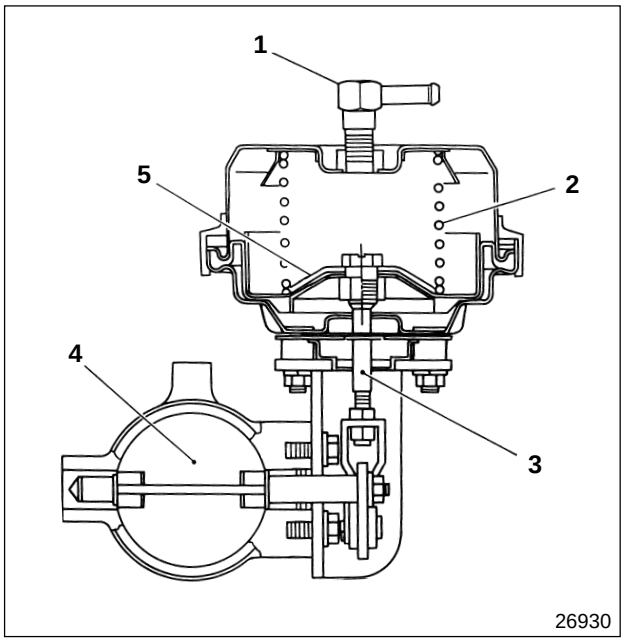

1 Connector
2 Spring
3 Push rod
4 Butterfly valve
5 Diaphragm

Brake Warning and Brake booster (Hydraulic Booster) Fail-Safe System

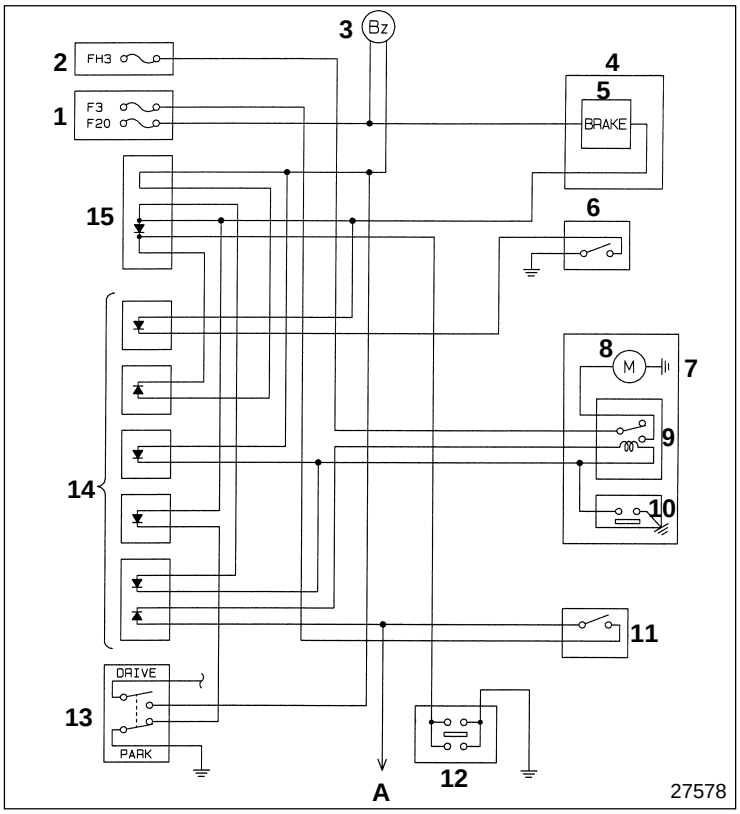

1 Fuse box
2 High current fuse box
3 Warning buzzer
4 Meter cluster
5 Brake warning lamp
6 Brake fluid level switch
7 Brake booster (Hydraulic booster)
8 Emergency pump motor
9 Motor relay
10 Flow switch
11 Stop lamp switch
12 Power steering fluid level sensor
Gr 37
13 Parking brake switch
14 Diode
15 Joint connector

A: To stop lamp

● Power steering fluid level warning circuit

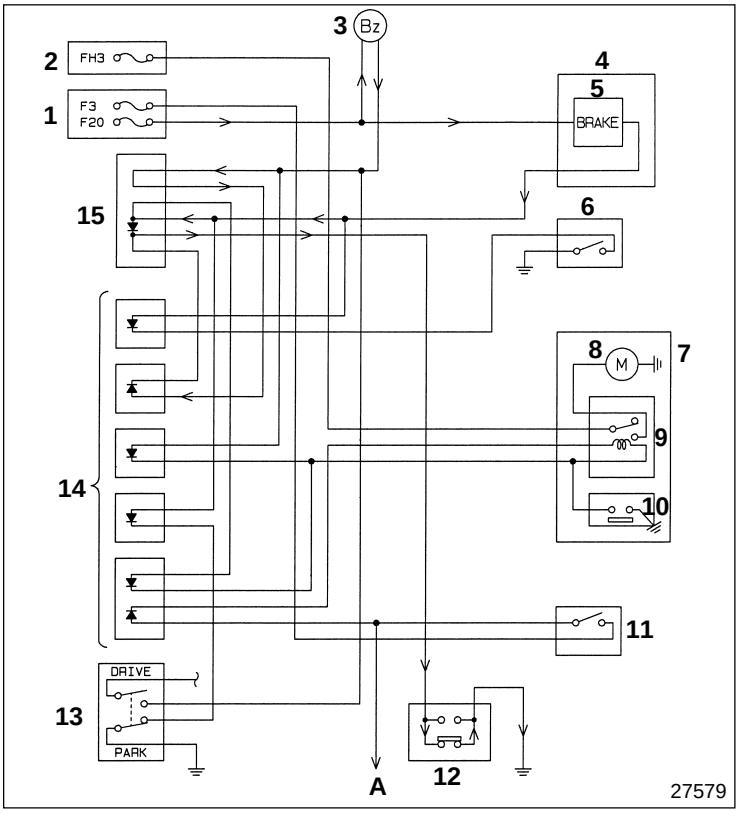

- Since the fluid pressure of the power steering fluid is also used for brake booster (hydraulic booster) **7**, the power steering fluid level warning circuit is connected to warning buzzer **3** and brake warning lamp **5**.
- When the power steering fluid level drops below the **"MIN"** level or rises above the **"MAX"** level of the power steering oil tank, power steering fluid level sensor **12** is turned ON, and the flow of current at such time is as follows.

Fuse **1** → Warning buzzer **3**
↓ ↓
Brake warning lamp **5** Joint connector **15**
↓
Diode **14**
↓
Joint connector **15**
↓
Power steering fluid level sensor **12**
↓
Ground

As a result warning buzzer **3** sounds and warning lamp **5** lights to warn the driver.

● **Brake booster (hydraulic booster) fail-safe system**

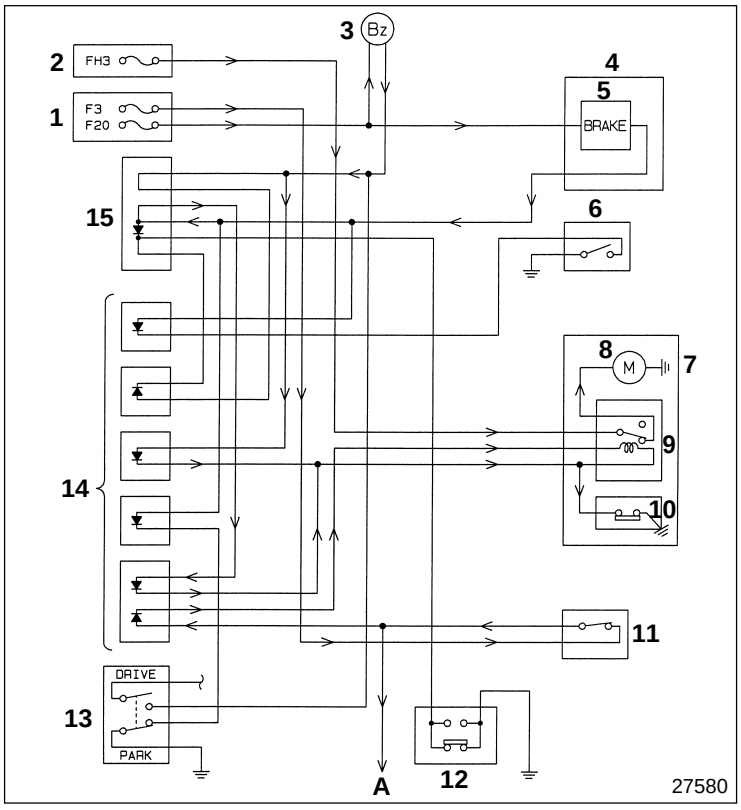

- If there is a fluid leakage in the power steering system piping and hydraulic pressure is lost, the brake booster (hydraulic booster) fail-safe system will act in the following manner.

  Flow switch **10** is turned ON and the flow of current is as follows.

  Fuse **1** → Warning buzzer **3**
  ↓ ↓
  Brake warning lamp **5** Diode **14**
  ↓ ↓
  Joint connector **15** → Flow switch **10**
  ↓ ↓
  Diode **14** Ground

  As a result warning buzzer **3** sounds and brake warning lamp **5** lights.

  Depressing the brake pedal when flow switch **10** is ON, will cause the current to flow as follows.

  Fuse **1** → Stop lamp switch **11**
  ↓
  High current fuse **2** → Diode **14**
  ↓
  (Contact) → Motor relay **9** (coil)
  ↓
  Emergency pump motor **8** ← Flow switch **10**
  ↓ ↓
  Ground Ground

  As a result emergency pump motor **8** starts operating, maintaining the hydraulic pressure during an emergency.

● **Brake fluid warning circuit**

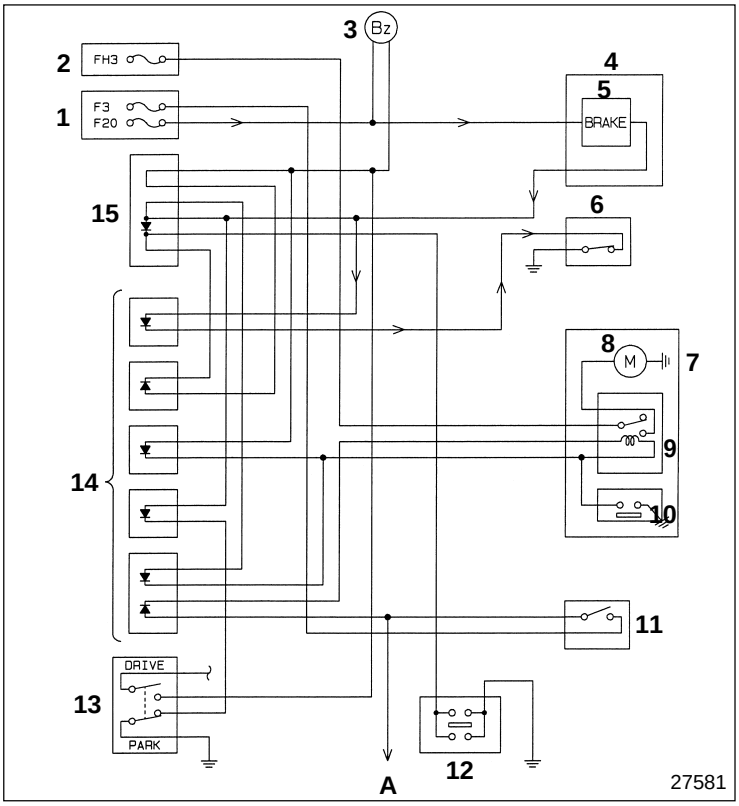

- When the brake fluid in the fluid tank drops below the specified level, brake fluid level switch **6** in the fluid tank turns on, brake warning lamp **5** lights.

● **Brake fluid level switch**

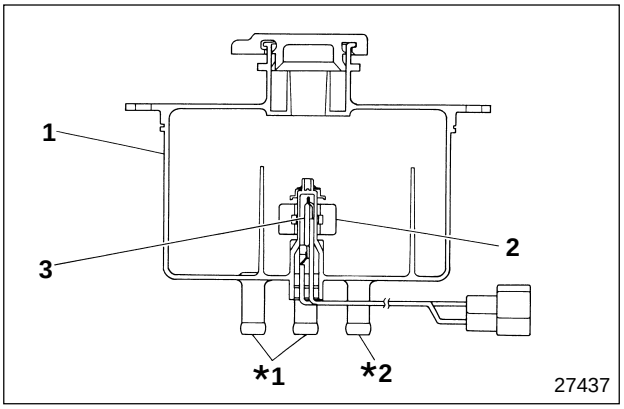

1 Fluid tank
2 Float
3 Brake fluid level switch
***1** : For brakes
***2** : For clutch

- Brake fluid level switch **3**, installed on fluid tank **1**, monitors the brake fluid level in the fluid tank. If the brake fluid level drops below the specified level, float **2** moves and lights up the warning lamp within the meter cluster to alert the driver.

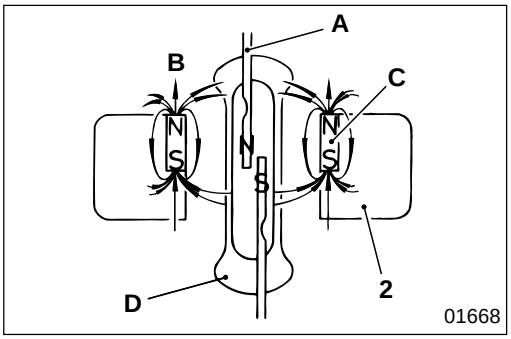

- If the brake fluid level in fluid tank **1** drops and float **2** drops lower than level **L**, magnetic force **B** that passes through the contact point (ferromagnetic body **A**), increases generating north and south poles at the ends of the contact points. Therefore, the contact points pull each other and overcome the repercussive force of the springs of the contact points, forming an electric circuit.
  C : Permanent magnet
  D : Glass

● Wheel Brake

Possible causes	Symptoms	One-sided braking	One-sided braking				Braking force insufficient	Brake pedal stroke reduced	Noise and judder when brakes are applied	Noise and judder when brakes are applied	
			Braking shoe return slow after releasing brake pedal	Braking force difference between left and right	Braking force unstable	Lock points difference				Noise generated when wheels are rotating, with vehicle jacked up	Continuous noise generated while braking (at low speed)
Tires	Air pressures uneven, etc. Gr 31	○									
	Left and right tire sizes different Gr 31	○									
Axle	Wheel hub bearing adjusted incorrectly Gr 26, 27	○									○
	Left and right wheelbase difference excessive Gr 26, 27	○									
	Wheel alignment incorrect Gr 26	○									
	Kingpin bushing worn Gr 26										
Wheel brakes	Backing plate ledge surface rough		○		○						
	Backing plate ledge surface not smooth										
	Backing plate deformed, mounted incorrectly				○						
	Oil or water on brake lining surfaces			○			○				
	Brake lining changed in quality or wrong material used		○								
	Brake lining unevenly worn or surface roughened			○							
	Brake lining fading (surface change in material)						○				
	Brake lining worn out completely										○
	Abrasive on brake lining										
	Brake lining worn										
	Brake lining contact incorrect			○		○	○				
	Brake lining ground radius irregular					○					
	Wheel cylinder malfunctioning		○	○				○		○	
	Wheel cylinder piston cup faulty										
	Shoe return spring fatigued or broken		○							○	
	Brake drum worn unevenly			○							
	Brake drum warped				○						
	Brake drum worn					○					
	Brake drum surface roughened						○				
	Brake drum roughness excessive								○		
	Brake drum glassy										

Symptoms / Possible causes		One-sided braking	One-sided braking							Noise and judder when brakes are applied	
		One-sided braking	Braking shoe return slow after releasing brake pedal	Braking force difference between left and right	Braking force unstable	Lock points difference	Braking force insufficient	Brake pedal stroke reduced	Noise and judder when brakes are applied	Noise generated when wheels are rotating, with vehicle jacked up	Continuous noise generated while braking (at low speed)
Wheel brakes	Brake drum cracked								○		
	Brake drum clogged by foreign particles										
	Brake drum deformed or eccentric									○	
	Brake shoe deformed or damaged							○			
	Brake shoe twisted or tilted										
	Moving parts greased insufficiently								○		
Brake pedal	Brake pedal stroke faulty (52 mm {2.05 in.} or more at 490 N {110 lbf, 50 kgf} foot pressure)						○				
	Brake pedal adjusted incorrectly, looseness excessive							○			
	Brake booster (Hydraulic booster) operating rod pushing up										
Brake fluid system	Brake fluid insufficient							○			
	Brake fluid leaking							○			
	Air lock in system							○			
	Vapor lock							○			
	Brake fluid return insufficient because brake pipe tightened excessively										
Power steering fluid system	Degree of power steering fluid line pressure reduced							○			
Brake booster (Hydraulic booster)	Brake booster (Hydraulic booster) defective						○	○			
Brake master cylinder	Piston cup faulty							○			
	Return port clogged										

TROUBLESHOOTING

Symptoms / Possible causes		Brake drums overheating			Brakes squeaking						Remarks
		All wheels overheating	One wheel overheating	Brakes squeaking	Squeaking in new vehicle or after brake lining replacement	Action too severe	Brake juddering	Brake pedal return faulty	Brake drags	
Tires	Air pressures uneven, etc.										Gr 31
	Left and right tire sizes different										Gr 31
Axle	Wheel hub bearing adjusted incorrectly		○	○			○				Gr26, 27
	Left and right wheelbase difference excessive										Gr26, 27
	Wheel alignment incorrect										Gr26
	Kingpin bushing worn						○				Gr26
Wheel brakes	Backing plate ledge surface rough								○		
	Backing plate ledge surface not smooth		○								
	Backing plate deformed, mounted incorrectly					○					
	Oil or water on brake lining surfaces										
	Brake lining changed in quality or wrong material used										
	Brake lining unevenly worn or surface roughened										
	Brake lining fading (surface change in material)					○					
	Brake lining worn out completely										
	Abrasive on brake lining			○							
	Brake lining worn			○							
	Brake lining contact incorrect				○						
	Brake lining ground radius irregular										
	Wheel cylinder malfunctioning		○						○		
	Wheel cylinder piston cup faulty		○						○		
	Shoe return spring fatigued or broken		○						○		
	Brake drum worn unevenly										
	Brake drum warped										
	Brake drum worn										
	Brake drum surface roughened										
	Brake drum roughness excessive										
	Brake drum glassy					○					

Possible causes / Symptoms		Brake drums overheating			Brakes squeaking						Remarks
		All wheels overheating	One wheel overheating	Brakes squeaking	Squeaking in new vehicle or after brake lining replacement	Action too severe	Brake juddering	Brake pedal return faulty	Brake drags	
Wheel brakes	Brake drum cracked										
	Brake drum clogged by foreign particle										
	Brake drum deformed or eccentric						○				
	Brake shoe deformed or damaged					○					
	Brake shoe twisted or tilted		○								
	Moving parts greased insufficiently										
Brake pedal	Brake pedal stroke faulty (52 mm {2.05 in.} or more at 490 N {110 lbf, 50 kgf} foot pressure)										
	Brake pedal adjusted, looseness excessive										
	Brake pedal return faulty	○									
	Brake pedal free play inadequate								○		
	Linkage rusted or deformed							○			
	Return spring fatigued or broken							○			
	Brake booster (Hydraulic booster) operating rod pushing up							○			
Brake fluid system	Brake fluid insufficient										
	Brake fluid leaking										
	Air lock in system										
	Vapor lock										
	Brake fluid return insufficient because brake pipe tightened excessively		○								
Power steering fluid system	Degree of power steering fluid line pressure reduced										
Brake booster (Hydraulic booster)	Brake booster (Hydraulic booster) defective	○							○		
Brake master cylinder	Piston cup faulty	○							○		
	Return port clogged	○							○		

● Exhaust Brake

Symptoms / Possible causes		Exhaust brake does not work	Exhaust brake does not release	Remarks
Vacuum system	Degree of vacuum insufficient	○		
	Pipe crushed	○		
3-way magnetic valve	Does not work	○	○	Gr 54
Exhaust brake unit	Valve assembly does not work	○	○	
	Valve assembly shaft stuck	○	○	
	Vacuum chamber does not work	○		
Electric system	Electric system faulty	○	○	Gr 54

M E M O

ON-VEHICLE INSPECTION AND ADJUSTMENT

Replacement of Brake Fluid

Fluid

Location	Points of application	Specified fluid	Quantity
3	Fluid tank	Brake fluid (SAE J1703f or FMVSS No.116 DOT3)	As required

Special tools

Unit : mm {in.}

Location	Tool name and shape	Part No.	Application
1	Vinyl hose 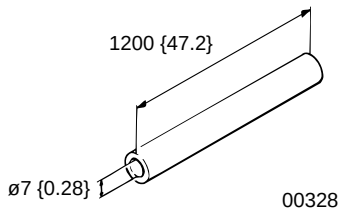	MH033102	Air bleeding

WARNING

- **The clutch fluid system and the brake fluid system use the fluid tank in common.**
- **You must use new brake fluid (SAE J17031 or FMVSS No. 116 DOT 3). Do not add different quality fluid or mineral oil (gas oil, engine oil, gear oil, automatic transmission fluid, etc.) to the clutch system, because this will cause the rubber parts of the clutch system and brake system to swell, resulting in faulty clutch operation, as well as ineffective braking and brake dragging.**
- **Do not allow foreign particles or water to become mixed into the brake fluid when refilling, because this will result in ineffective clutch and brake operations.**
- **If you use a mug for adding brake fluid, keep it solely for that purpose.**

CAUTION

- **Be careful not to splash brake fluid on related parts as this could damage the paintwork.**
- **Be sure to wipe off brake fluid immediately if you splash it on the paintwork.**

NOTE

Supply and maintain the brake fluid level to the “MAX” level of the fluid tank.

- Start engine and let it idle until brake fluid replacement is completed.

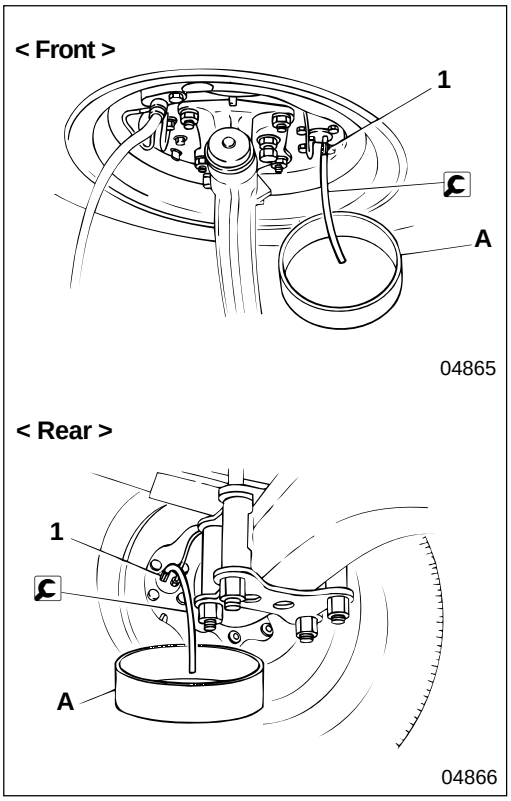

- Attach one end of vinyl hose to air bleeder **1** and place the other end in container **A**.

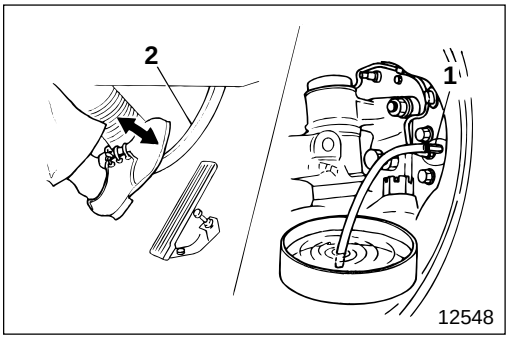

- Loosen air bleeder **1** and depress brake pedal **2** to drain brake fluid completely.

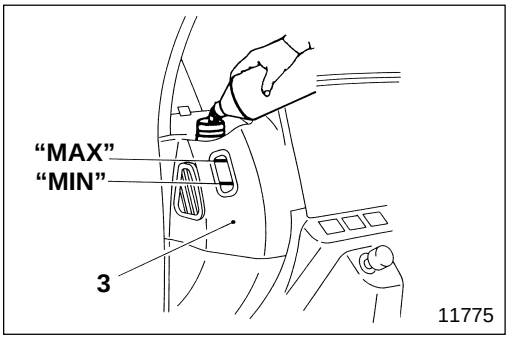

- Maintain a supply of new brake fluid up to the "**MAX**" level of fluid tank **3**, depress the brake pedal repeatedly until the old brake fluid of the brake system is replaced with new fluid.

- Bleed air from the brake system.
P35-30

ON-VEHICLE INSPECTION AND ADJUSTMENT

Air Bleeding of Brake System

Tightening torque

Unit : N·m {lbf.ft, kgf·m}

Location	Parts to be tightened	Tightening torque	Remarks
1	Air bleeder	7.8 to 12 {5.8 to 8.5, 0.8 to 1.2}	—

Fluid

Location	Points of application	Specified fluid	Quantity
—	Fluid tank	Brake fluid (SAE J1703f or FMVSS No.116 DOT3)	As required

Special tools

Unit : mm {in.}

Location	Tool name and shape	Part No.	Application
1	Vinyl hose 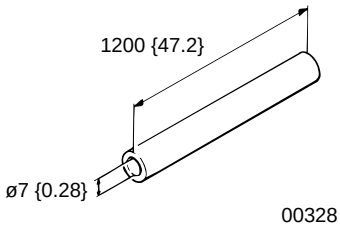	MH033102	Air bleeding

WARNING

- **The clutch fluid system and the brake fluid system use the fluid tank in common.**
- **You must use new brake fluid (SAE J1703f or FMVSS No. 116 DOT 3). Do not add different quality fluid or mineral oil (gas oil, engine oil, gear oil, automatic transmission fluid, etc.) to the clutch system, because this will cause the rubber parts of the clutch system and brake system to swell, resulting in faulty clutch operation, as well as ineffective braking and brake dragging.**
- **Do not allow foreign particles or water to become mixed into the brake fluid when refilling, because this will result in ineffective clutch and brake operations.**
- **If you use a mug for adding brake fluid, keep it solely for that purpose.**

CAUTION⚠

- **Be careful not to splash brake fluid on related parts as this could damage the paintwork.**
- **Be sure to wipe off brake fluid immediately if you splash it on the paintwork.**

NOTE

- **Supply and maintain brake fluid to the "MAX" level of the fluid tank.**
- **Make sure you maintain brake fluid at the "MAX" level of the fluid tank since the brake fluid level drops during air bleeding.**

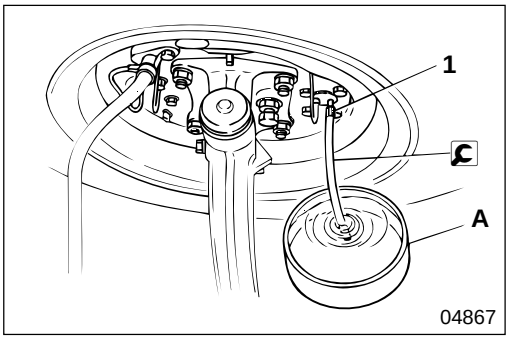

- Start engine and let it idle until brake fluid replacement is completed.
- Attach one end of 🔧 vinyl hose to air bleeder **1** of the wheel brake. Place free end in container **A** filled with brake fluid.
- Carry out air bleeding in the following sequence:

Front brake system	Rear brake system
Right-hand side wheel brake	Right-hand side wheel brake
↓	↓
Left-hand side wheel brake	Left-hand side wheel brake

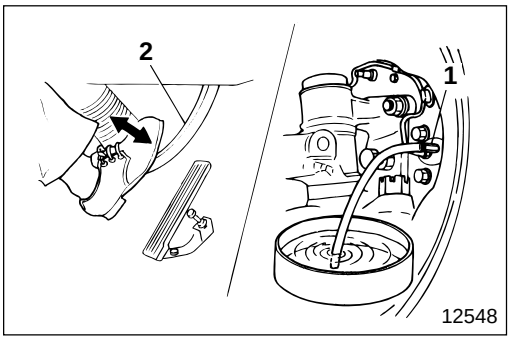

- Depress brake pedal **2** slowly a few times, and with the brake pedal depressed, loosen air bleeder **1** to drain brake fluid containing air.
- Tighten air bleeder **1**, and release brake pedal **2**.
- Repeat this service procedure until air is no longer present in the fluid being drained.
- Tighten air bleeder **1** at specified torque as soon as brake fluid flowing out is free of air bubbles.

- Adjust brake shoe clearance when you have finished air bleeding. 📖 P35-30
- Check that brake fluid comes up to level "**MAX**" of fluid tank. If it does not, refill with new brake fluid.
- Depress brake pedal **2** a few times and check for any leakage of brake fluid, then test the brakes.

ON-VEHICLE INSPECTION AND ADJUSTMENT

Inspection and Adjustment of Brake Pedal Free Play

Service standards

Unit : mm {in.}

Location	Maintenance item	Standard value	Limit	Remedy
—	Free play of brake pedal	10 to 15 {0.39 to 0.59}	—	Adjust

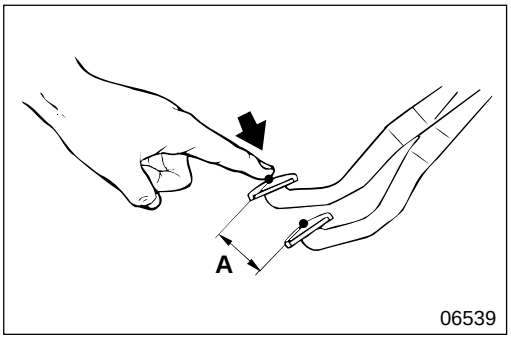

[Inspection]
Check if brake pedal free play **A** confirms to the standard value. If the measured value deviates from the standard value, adjust the position of the brake pedal.

[Adjustment]
P35-39

Inspection and Adjustment of Clearance between Brake Pedal and Floor Panel

Service standards

Unit : mm {in.}

Location	Maintenance item	Standard value	Limit	Remedy
—	Clearance between brake pedal and floor panel (with pedal depressed at 490 N {110 lbf, 50 kgf})	52 {2.05} or more	—	Adjust

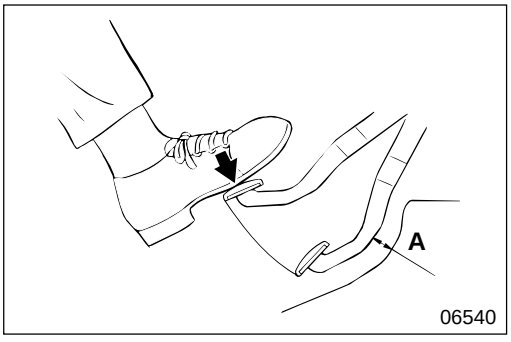

[Inspection]
Depress the brake pedal using 490 N {110 lbf, 50 kgf} when the engine is idling to check if clearance **A** between the brake pedal and the floor panel conforms to the standard value. If the measured value deviates from the standard value, adjust the position of the brake pedal.

[Adjustment]
P35-39

Thickness Inspection and Replacement of Brake Lining

Service standards

Unit : mm {in.}

Location	Maintenance item	Standard value	Limit	Remedy
2	Thickness of brake lining	—	5.5 {0.22} (Side shoulder means wear limit)	Replace

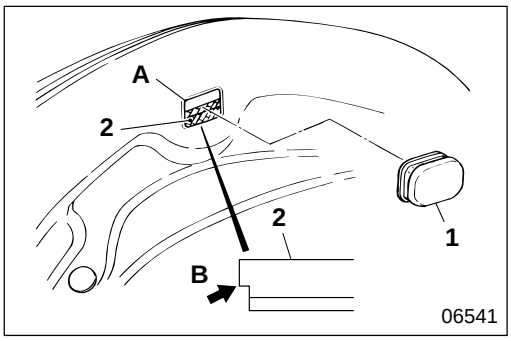

[Inspection]

NOTE

Be sure to inspect at two points for each wheel per side.

- Remove check hole plug **1** from the backing plate.
- Inspect through check hole **A** whether brake lining **2** is worn to the point of side shoulder **B** of the brake lining (the limit).
- If the measured value is lower than the limit, replace brake lining **2** on the same axle as a unit.
- After inspection, be sure to reinstall check hole plug **1**.

[Replacement]

P35-42, 50

Inspection of Brake Shoe Clearance

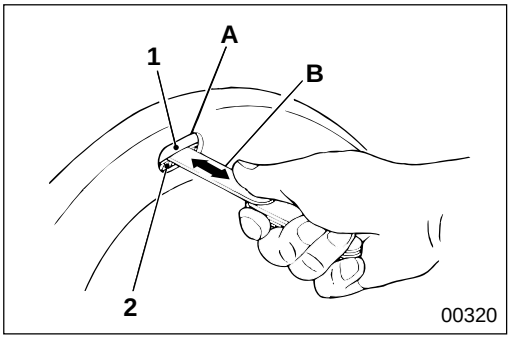

NOTE

When the vehicle is jacked up and the wheel is being turned, make sure that there is no dragging.

- Remove the check hole plug from the backing plate.
  A : Check hole
- Try to insert a 1 mm {0.039 in.} feeler gauge **B** between brake drum **1** and brake lining **2**. Check that the clearance is too small to let the feeler gauge enter.
  If feeler gauge **A** enters the clearance, disassemble the wheel cylinder and inspect.
  P35-48, 56

Inspection of Brake Booster (Hydraulic Booster)

(1) Inspection of electric equipment

Perform inspection in accordance with the flow-chart below. Make sure the power steering fluid level sensor is working properly and power steering oil tank fluid level is normal. Make sure the parking brake is working properly and the wheels are choked during inspection.

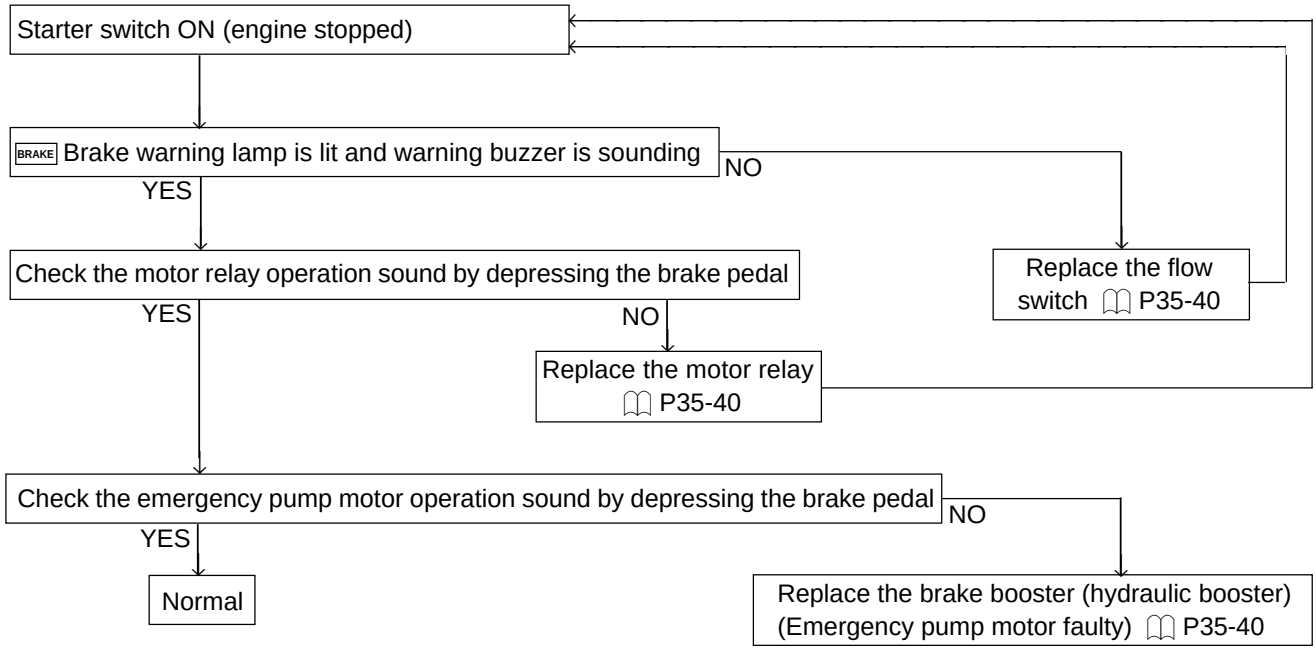

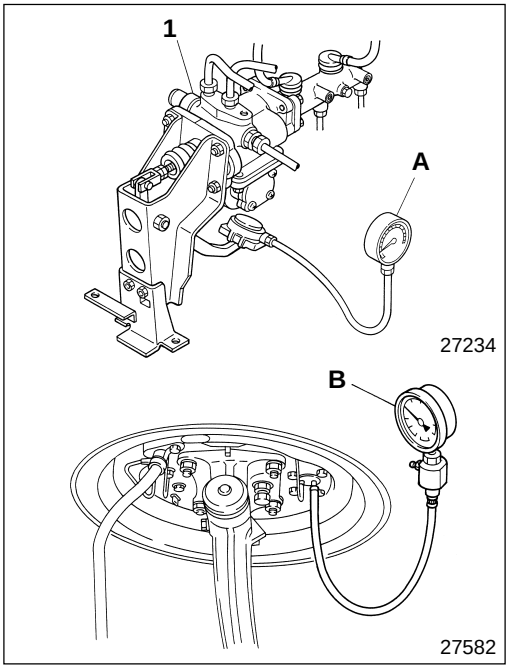

(2) Performance inspection

- Mount foot pressure meter **A** on the brake pedal, remove the front wheel brake air bleeder and after installing oil pressure gauge **B**, bleed the air from the pressure gauge.
- Carry out a performance evaluation test on the power steering system and make sure hydraulic pressure in the power steering fluid system is at a normal level. Gr 37
- If the above proves normal, check to make sure the hydraulic pressure of the front wheel brakes in response to foot pressure on the brake pedal is in conformity with the performance characteristics chart.
  If faulty, replace brake booster (hydraulic booster) **1**.
  Gr 35-38

Performance characteristics chart

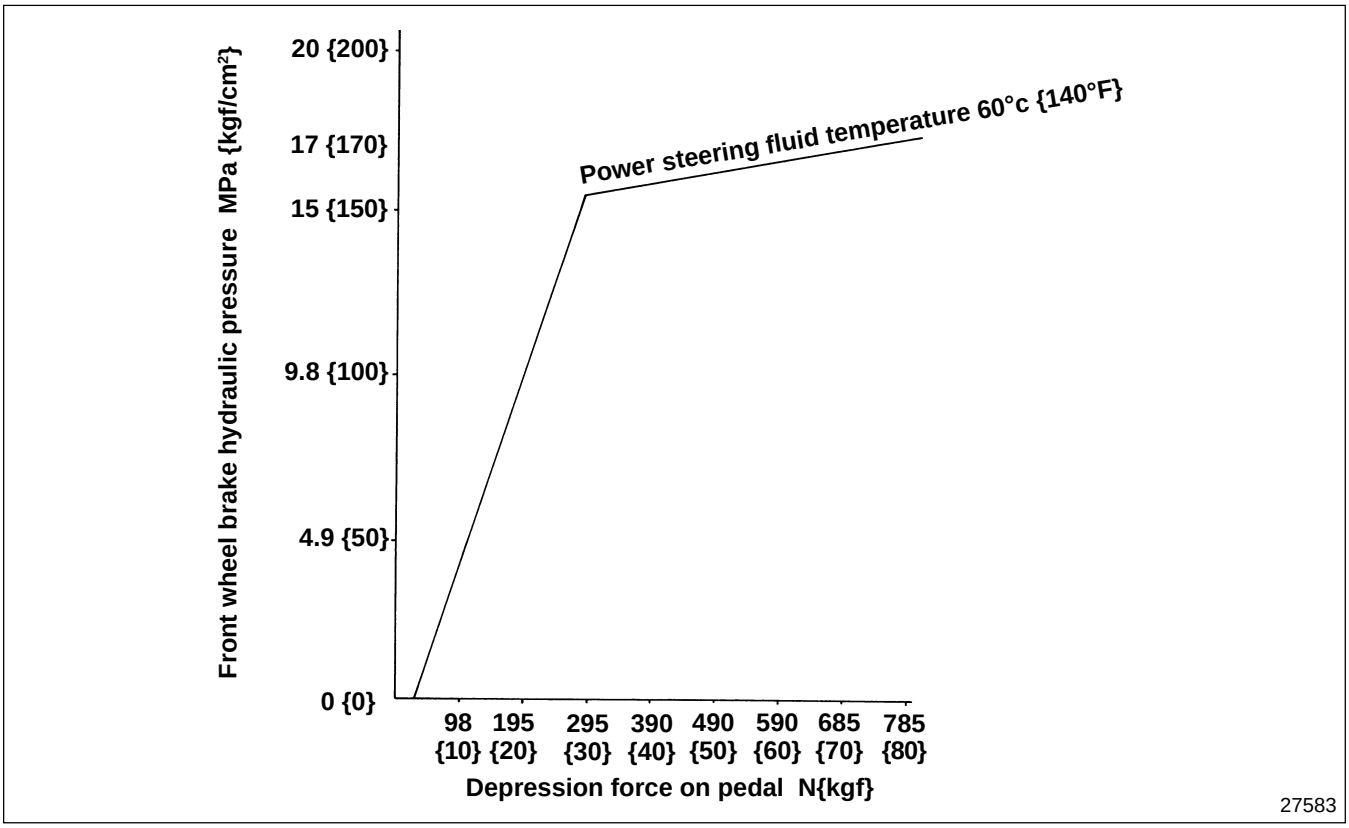

BRAKE MASTER CYLINDER

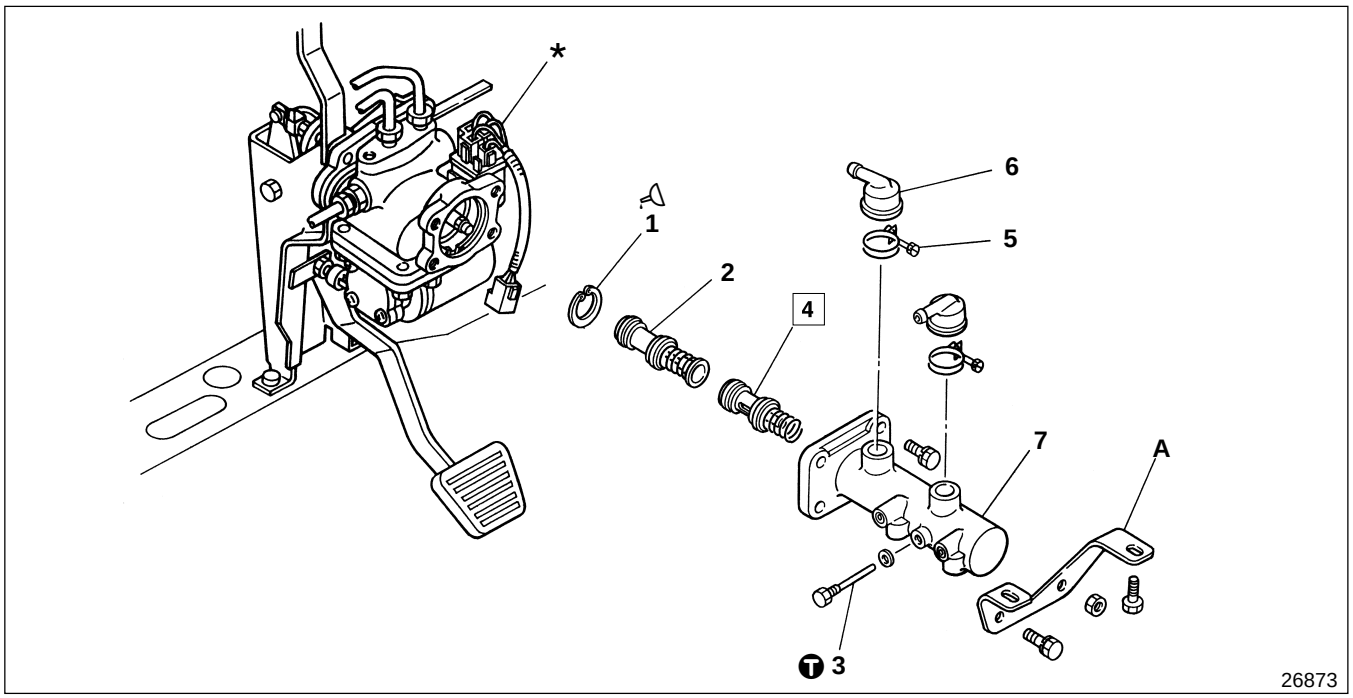

● **Disassembly sequence**

1 Retaining ring
2 Primary piston assembly
3 Set bolt
4 Secondary piston assembly
5 Clamp
6 Connector
7 Cylinder body

A : Brake booster support
***** : Brake pedal and brake booster (hydraulic booster) 🕮 P35-38

WARNING⚠

Be sure not to damage the inner surface of cylinder body 7, since it will cause air to get mixed in or will result in brake fluid leakage during the removal and installation of primary piston assembly 2 and secondary piston assembly 4.

● **Assembly sequence**

Follow the disassembly sequence in reverse.

Service standards

Unit : mm {in.}

Location	Maintenance item	Standard value (Basic diameter in [ ])	Limit	Remedy
2	Primary piston assembly spring load (Installed length 35.1{1.38})	100 to 115 N {22 to 26 lbf, 10.2 to 11.7 kgf}	93 N {21 lbf, 9.5 kgf}	Replace
2, 4, 7	Clearance between primary and secondary piston assemblies and cylinder body	[41.28] 0.02 to 0.10 {[1.63] 0.00079 to 0.0039}	0.2 {0.0079}	Replace
4	Secondary piston assembly spring load (Installed length 34.1{1.34})	71 to 86 N {16 to 19 lbf, 7.2 to 8.8 kgf}	67 N {15 lbf, 6.8 kgf}	Replace

Tightening torque

Unit : N·m {lbf.ft, kgf·m}

Location	Parts to be tightened	Tightening torque	Remarks
3	Set bolt	6.86 to 8.82 {5.1 to 6.5, 0.7 to 0.9}	—

Lubricant

Location	Points of application	Specified lubricant	Quantity
1	Periphery of retaining ring	Rubber grease	As required

◆ Service procedure

4 Secondary piston assembly

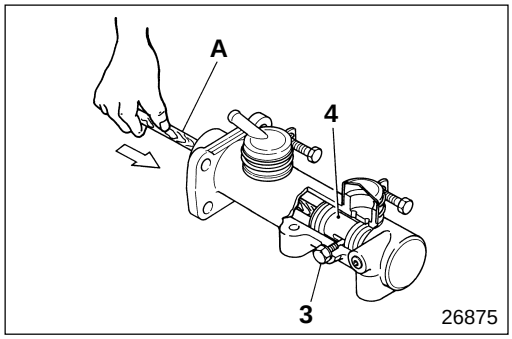

[Removal]

- Using rod **A**, push in secondary piston assembly **4**, then loosen set bolt **3**.

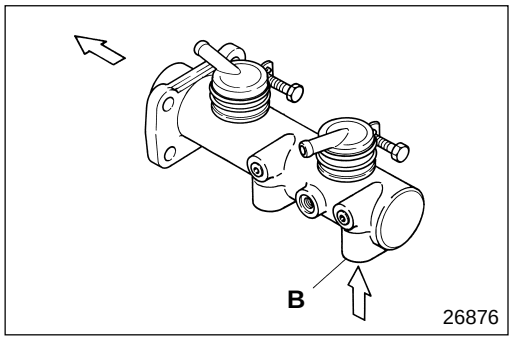

- Feed compressed air via discharge port **B** that leads to the rear wheel brake to extract secondary piston assembly **4**.

WARNING

You must apply compressed air gradually when you remove secondary piston assembly 4. If you applied compressed air strongly at one time, the secondary piston assembly would be violently ejected.

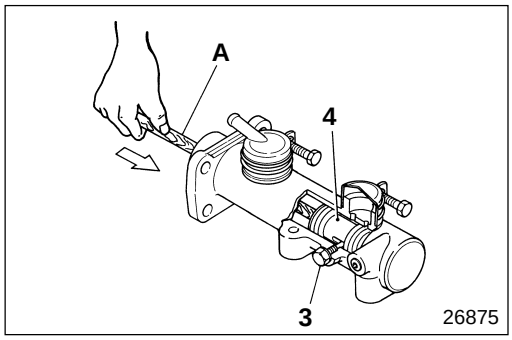

[Installation]

Using rod **A**, push in secondary piston assembly **4**, then tighten set bolt **3** at specified torque.

BRAKE PEDAL AND BRAKE BOOSTER (HYDRAULIC BOOSTER)

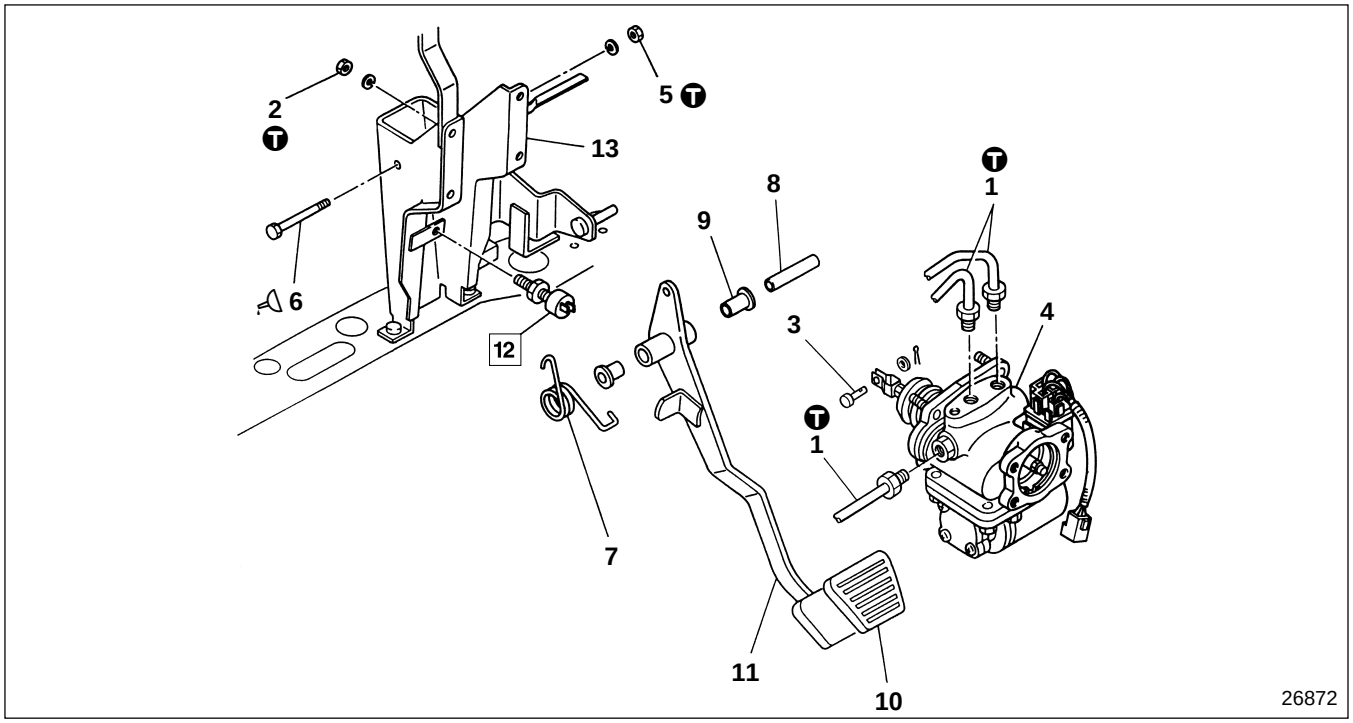

● **Disassembly sequence**

1 Pipe 🗃 Gr 37
2 Nut
3 Clevis pin
4 Brake booster (Hydraulic booster) 🕮 P35-40
5 Nut
6 Bolt
7 Spring
8 Collar
9 Bushing
10 Pedal pad
11 Brake pedal
12 Stop lamp switch 🗃 Gr 54
13 Support assembly

WARNING ⚠

Power steering fluid is a mineral fluid. Make sure it does not get mixed with brake fluid (vegetable fluid) during disassembly, because it causes the rubber parts of the brake equipment to expand resulting in brake dragging or malfunction.

NOTE

Do not disassemble brake booster (hydraulic booster) 4 because it is a non-disassemble type.

● **Assembly sequence**

Follow the disassembly sequence in reverse.

● **Adjustment after assembly** 🕮 P35-39

Service standards

Unit : mm {in.}

Location	Maintenance item		Standard value (Basic diameter in [ ])	Limit	Remedy
8, 9	Clearance between collar and bushing		[16] 0.02 to 0.26 {0.00079 to 0.010}	0.5 {0.020}	Replace
11	Brake pedal	Height from pedal pad center to instrument panel underside	264 {10.4}	—	Adjust
		Full stroke	163 {6.42}	—	Adjust
11, 12	Clearance between brake pedal stopper and tip of stop lamp switch thread area		0 to 0.1 {0 to 0.0039}	—	Adjust

Tightening torque

Unit : N·m {lbf.ft, kgf·m}

Location	Parts to be tightened	Tightening torque	Remarks
1	Pipe (Brake booster connecting)	66.69±12.75 {49±9.4, 6.8±1.3}	—
2	Nut (Brake booster mounting)	8.8 to 14 {6.5 to 10, 0.9 to 1.4}	—
5	Nut (Brake pedal mounting)	34.3 to 53.9 {25 to 40, 3.5 to 5.5}	—

Lubricant

Location	Points of application	Specified lubricant	Quantity
6	Friction surface of bolt bushing	Chassis grease [NLGI No.1 (Ca soap)]	As required

◆ Service procedure

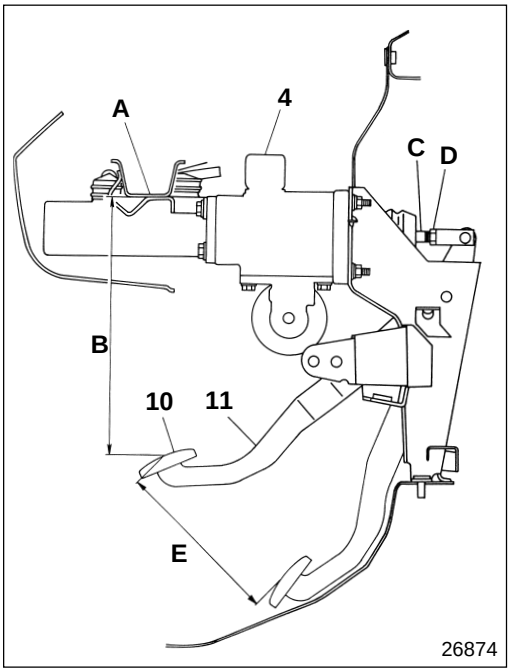

● Adjustment after assembly

- Adjustment of brake pedal installation height
  By turning operating rod **C** of brake booster (hydraulic booster) **4**, adjust height **B** from the center of pedal pad **10** to the underside of instrument panel **A** to the standard value, then secure in place using nut **D**.

WARNING ⚠

Make sure, when brake pedal 11 is depressed fully, that operating rod C of brake booster (hydraulic booster) 4 functions as the stopper and the pedal does not come to a stop by hitting against the floor panel, since this will reduce brake effectiveness.

- Inspection of brake pedal full stroke
  Make sure that full stroke **E** when brake pedal **11** is depressed fully conforms to the standard value.
  If there is any fault, adjust the installation height of the brake pedal.

- Inspection of play towards brake pedal 🕮 Gr 35-32

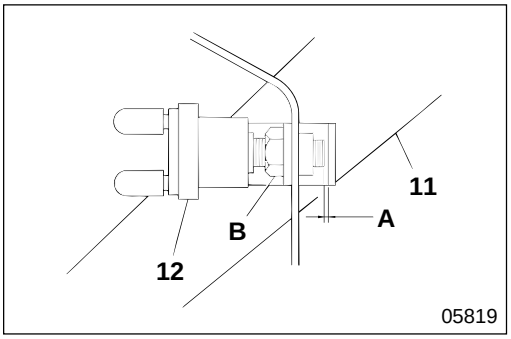

12 Adjustment of stop lamp switch

Turn stop lamp switch **12** to adjust clearance **A** between the top of the thread area of the stop lamp switch and the stopper of brake pedal **11** to the standard value, and fasten with lock nut **B**.

WARNING ⚠

Make sure, when brake pedal 11 is released, that stop lamp switch 12 does not stop the pedal, since this will cause the brake to drag.

BRAKE BOOSTER (HYDRAULIC BOOSTER)

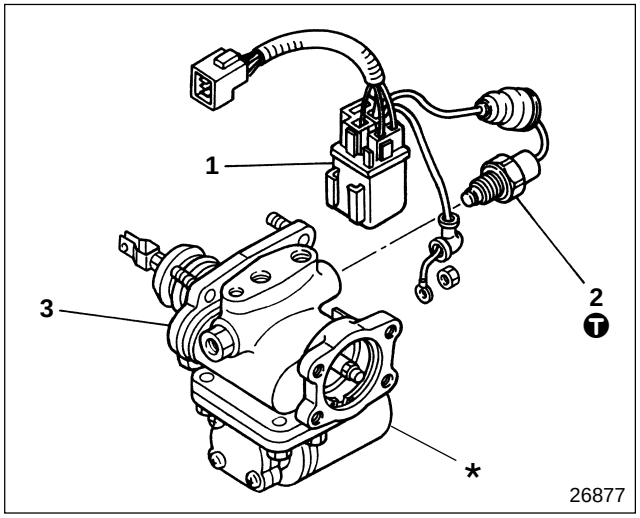

● **Disassembly sequence**

1 Motor relay
2 Flow switch
3 Brake booster (Hydraulic booster)

*: Emergency pump motor

● **Assembly sequence**

Follow the disassembly sequence in reverse.

Ⓣ Tightening torque

Unit : N·m {lbf.ft, kgf·m}

Location	Parts to be tightened	Tightening torque	Remarks
2	Flow switch	24.5 to 34.3 {18 to 25, 2.5 to 3.5}	—

M E M O

FRONT WHEEL BRAKE

Front Wheel Brake Assembly

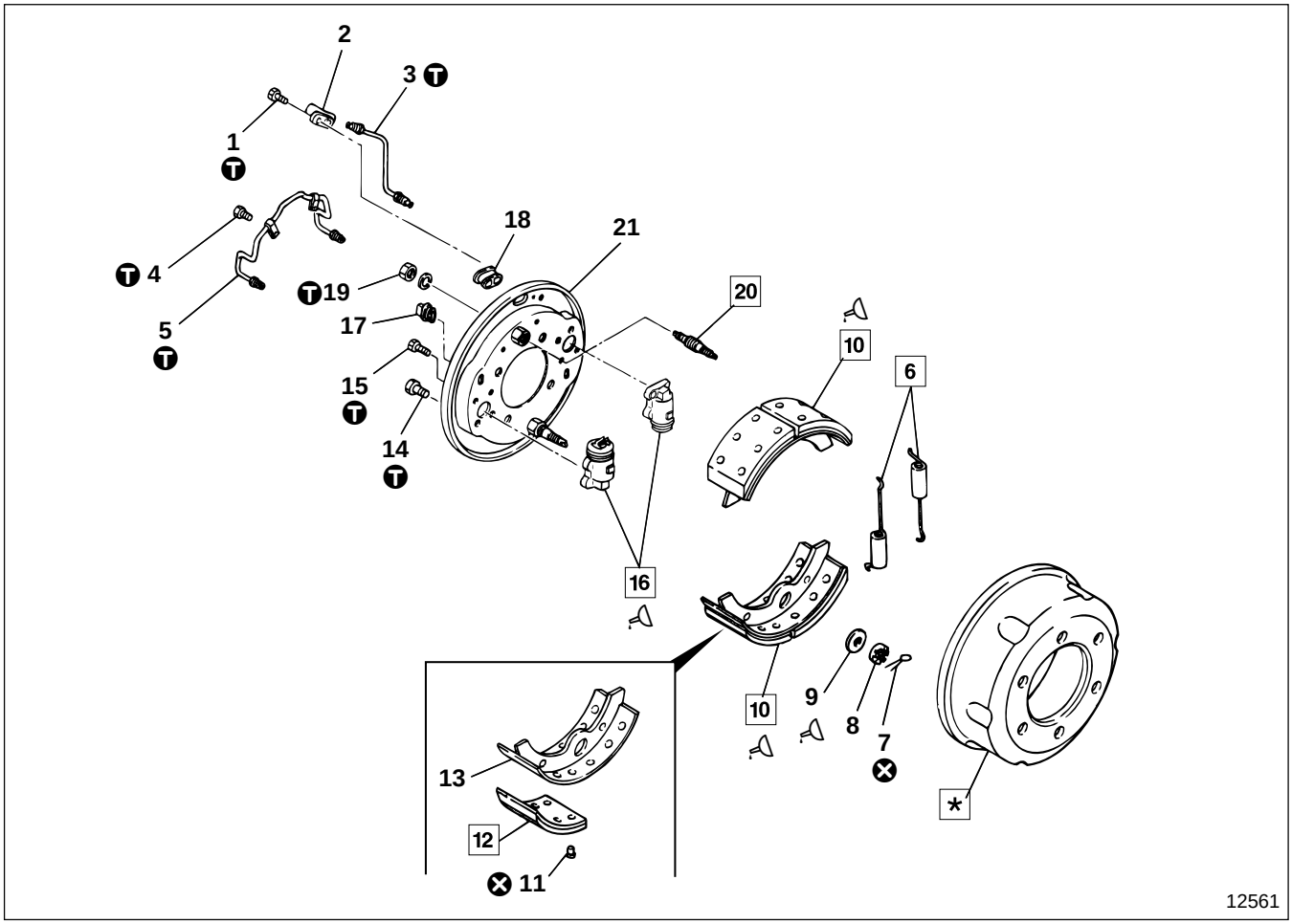

● **Disassembly sequence**

1 Bolt
2 Joint assembly
3 Pipe assembly
4 Bolt
5 Pipe assembly
6 Return spring
7 Split pin
8 Holder pin nut
9 Washer
10 Brake shoe assembly
11 Rivet
12 Brake lining
13 Brake shoe
14 Bolt
15 Bolt
16 Wheel cylinder assembly P35-48
17 Adjusting hole plug
18 Check hole plug
19 Nut
20 Holder pin
21 Backing plate

⊗ : Non-reusable parts

* : Brake drum Gr 26

WARNING

Do not leave grease or oil on the surface of brake lining 12 or inner surface of brake drum * because this reduces braking performance.

CAUTION

Do not turn or remove holder pin 20 unless it is necessary, or the squareness of brake shoe assembly 10 can be influenced causing brake drag.

● **Assembly sequence**

Follow the disassembly sequence in reverse.
Repair kit : Brake lining kit

● **Initial adjustment of brake shoe clearance after installation**

P35-43

Service standards

Unit : mm {in.}

Location	Maintenance item		Standard value		Limit	Remedy
6	Return spring load (Installed length 192 {7.56})		325 N {73 lbf, 33 kgf}		Clearance between coils or coil and cover	Replace
12	Brake lining thickness		12.0 {0.47}		5.0 {0.20} (Side shoulder means wear limit)	Replace brake lining
*	Brake drum	Inner diameter	320 {12.5}	*321 {12.64}	322 {12.68}	Replace
		Cylindrical accuracy	0.05 {0.0020}		0.2 {0.0079}	Correct or replace

* : Indicates correction limit.

Tightening torque

Unit : N·m {lbf.ft, kgf·m}

Location	Parts to be tightened	Tightening torque	Remarks
1	Bolt (Joint assembly mounting)	9.8±1.0 {7.2±1.4, 1.0±0.2}	—
3, 5	Flair nut (Pipe assembly mounting)	14±2.0 {10±1.4, 1.4±0.2}	—
4	Bolt (Pipe clamp mounting)	4.9±1.0 {3.6±0.7, 0.5±0.1}	—
14	Bolt (Wheel cylinder assembly mounting)	78±16 {58±12, 8.0±1.6}	—
15	Bolt (Wheel cylinder assembly mounting)	44±8.8 {33±6.5, 4.5±0.9}	—
19	Nut (Holder pin mounting)	29±5.9 {22±4.3, 3,0±0.6}	—

Lubricant

Location	Points of application	Specified lubricant	Quantity
9, 10, 16	Contact areas between washer and brake shoe assembly; and between brake shoe assembly and wheel cylinder assembly	Wheel bearing grease [NLGI No.2 (Li soap)]	As required

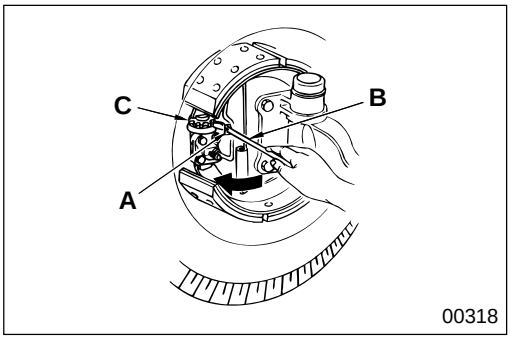

◆ Service procedure

● **Initial adjustment of brake shoe clearance after installation**

- Jack up the front wheels, and make sure that there is no play in the hub bearings.
- Insert screwdriver **B** into adjusting hole **A** and turn adjuster **C** in the direction of the arrow marked on backing plate **21** until the wheel drags slightly when turned by hand.

NOTE

- **Be sure to adjust the clearance at two points for each wheel per side.**
- **The arrow mark on backing plate 21 is near adjusting hole A.**

- After depressing the brake pedal several times, release it and make sure that the wheel drags lightly when turned by hand. If the wheel turns without stress, repeat the above steps. Slacken off adjuster **B**, in the reverse direction to the arrow mark, by eight or nine notches.

NOTE

Be sure to adjust the clearance at two points for each wheel per side.

- Make sure that the wheel does not drag when turned by hand. If the wheel drags, repeat the above steps.

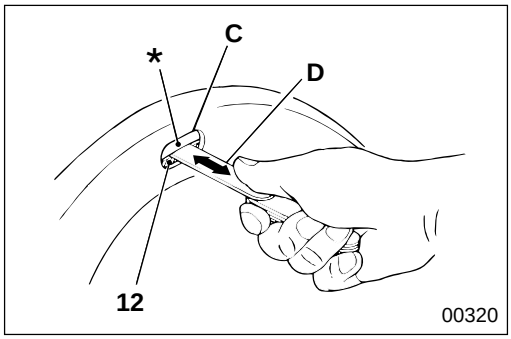

- Insert feeler gauge **D** between brake drum * and brake lining **12** through check hole **C**, and make sure that a little resistance is felt when the feeler gauge is pulled out or pushed in.

NOTE

Be sure to adjust the clearance at two points for each wheel per side.

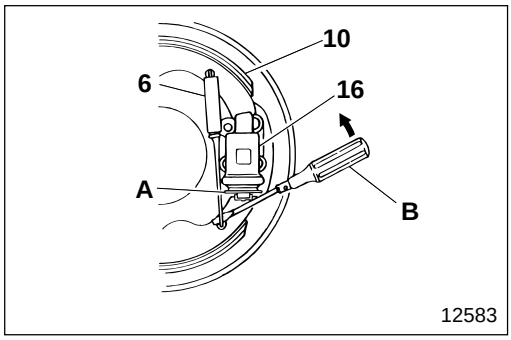

6 Return Spring

[Removal]

To remove return spring **6**, place screwdriver **B** on the hook of the return spring, then pry and remove the return spring making use of wheel cylinder assembly **16** adjuster **A** as a fulcrum.

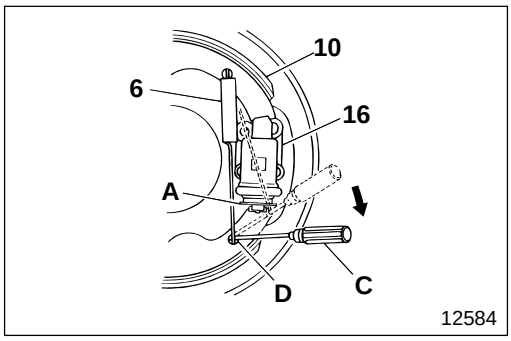

[Installation]

- Install the shorter hook end of return spring **6** in brake shoe assembly **10** at the side opposite to adjuster **A** of wheel cylinder assembly **16**.
- Insert a small Phillips screwdriver **C** into the hook of return spring **6**, insert the tip of the screwdriver into return spring installation hole **D** of the brake shoe assembly to pry on the return spring.

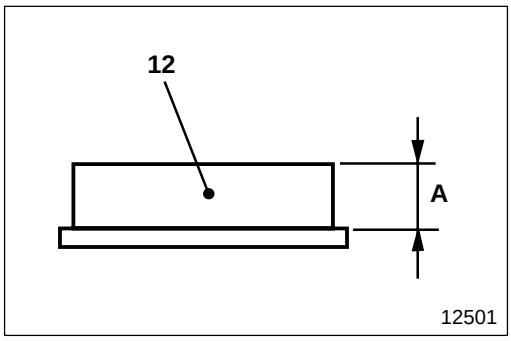

10 Brake shoe assembly

[Inspection]

If thickness **A** of brake lining **12** is lower than the limit replace the brake lining on the same axle as a unit.

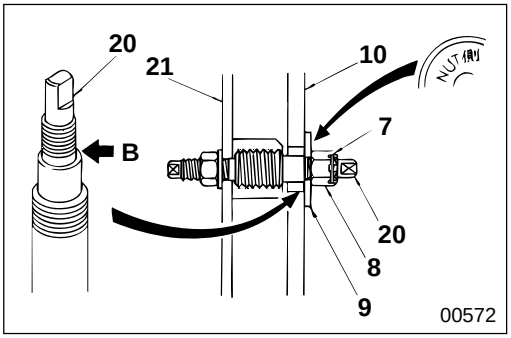

[Installation]

- Install brake shoe assembly **10**.
- Insert washer **9** with the side stamped “NUT 側” facing outside, screw down holder pin nut **8** until washer hits stepped area **B** of holder pin **20** gently, then slacken off the nut within the 0 to 60° limit until the nut is aligned with the first split pin hole.
- Insert split pin **7**, and bend it securely.

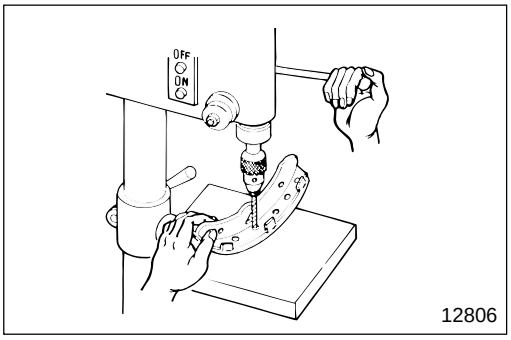

12 **Brake lining**

[Removal]

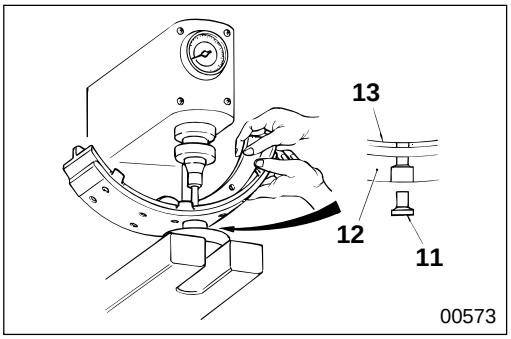

[Installation]

- Clean the mounting surfaces of brake lining **12** and brake shoe **13** with cleaning fluid and dry them.
- Insert rivets **11** from brake lining **12** side, and caulk the rivets at the specified load so that there is no clearance between brake shoe **13** and the brake lining.

  Caulking load for rivets : 17 to 19 kN {3750 to 4190 lbf, 1700 to 1900 kgf}

- Make sure that you inspect contact with the inner surface of brake drum ***** after you replace brake linings **12**. If contact is incorrect, correct with the brake assembled.

WARNING⚠

Do not leave lubricant on the surface of brake lining 12 because this reduces braking performance.

CAUTION⚠

Make sure that the type of brake linings 12 you fit are suitable for the intended use of the vehicle. Make sure that you fit identical size and color coated linings on the left and right sides of one shaft.

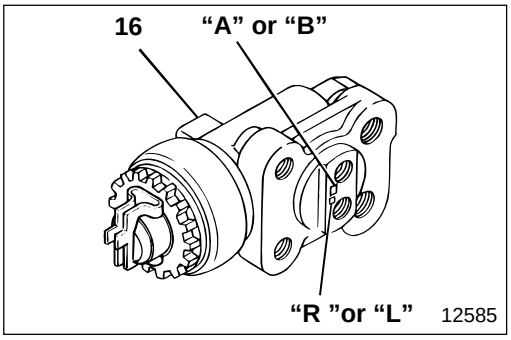

16 **Installation of wheel cylinder assembly**

Identification mark	Installation position
RA	Front of front axle right wheel
RB	Rear of front axle right wheel
LA	Front of front axle left wheel
LB	Rear of front axle left wheel

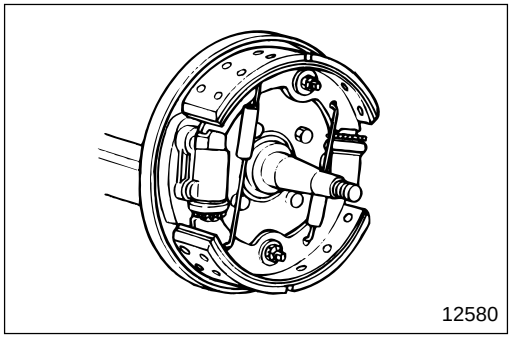

20 **Adjustment of holder pin**

- Install the front wheel brake assembly on the front axle. Gr 26

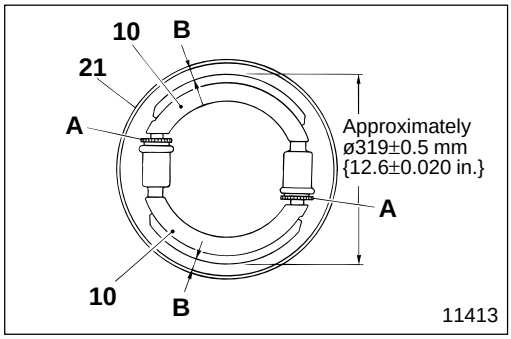

- Turn adjuster **A** to adjust the outer diameter to approximately ø319±0.5 mm {12.6±0.020 in.}.
- Then, move brake shoe assembly **10** to adjust clearance **B** evenly.

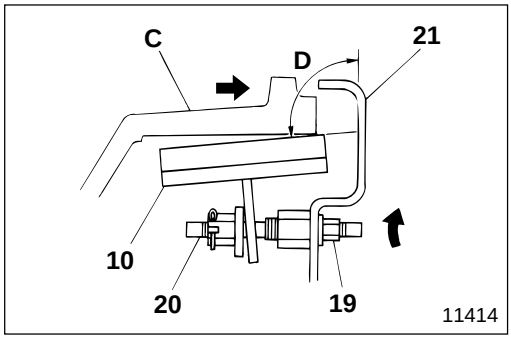

- Install hub and drum assembly **C** on the front wheel brake assembly. Gr 26
  At this time, the hub and drum assembly cannot be inserted in the specified position if squareness **D** is 90° or more, so loosen nut **19** and turn holder pin **20** to adjust the squareness to as close to 90° as possible.
- Bleed the brake system. P35-30

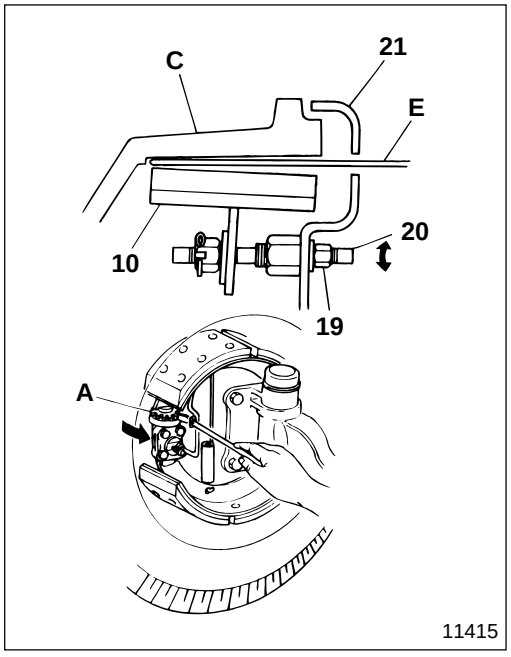

★• Turn adjuster **A** to widen brake shoe assembly **10** until 0.2 mm {0.0079 in.} feeler gauge **E** cannot be pulled out easily.
★• Loosen nut **19** and turn holder pin **20** to the right or left so that feeler gauge **E** can be pushed in or pulled out easily.
- Repeat the above steps (marked ★) until feeler gauge **E** cannot be pushed in or pulled out easily.
- Depress the brake pedal a few times lightly to equalize clearance **B** (adjusted in the previous section).
- Repeat the above steps (marked ★) until feeler gauge **E** cannot be pushed in or pulled out easily.

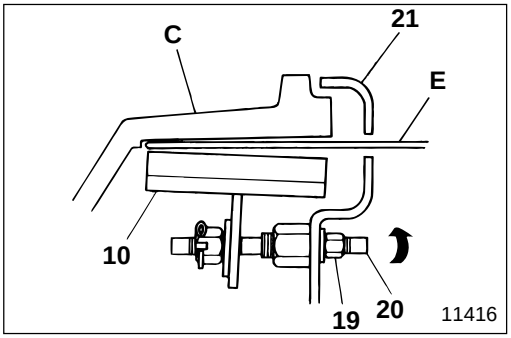

- If feeler gauge **E** cannot be pushed in or pulled out easily it is because it is making contact over the full width of brake shoe assembly **10**.
- Turn holder pin **20** so that when you pull out feeler gauge **E**, in the above condition, and reinsert the feeler gauge, pushing in or pulling out the feeler gauge at the rear is difficult.
- After adjustment, tighten nut **19** at specified torque.

* Correction of brake drum

If the cylindrical accuracy of brake drum * is higher than the limit, or there are seams, correct by machining to the correction limit. Machining of the brake drum should be done with the wheel hub attached as an integral part.

FRONT WHEEL BRAKE

Wheel Cylinder Assembly

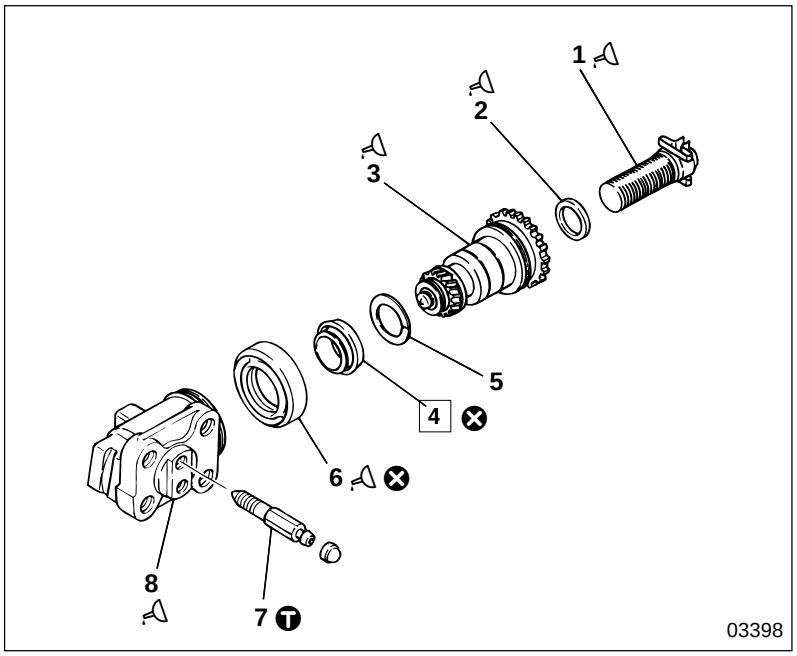

● **Disassembly sequence**

1 Screw
2 Seal
3 Piston
4 Piston cup
5 Backup ring
6 Boot
7 Air bleeder (only at the rear)
8 Body

⊗ : Non-reusable parts

● **Assembly sequence**

Follow the disassembly sequence in reverse.
Repair kit : Wheel cylinder kit

Service standards

Unit : mm {in.}

Location	Maintenance item	Standard value (Basic diameter in [ ])	Limit	Remedy
3, 8	Clearance between piston and body	[34.93] 0.03 to 0.09 {[1.38] 0.0012 to 0.0035}	0.2 {0.0079}	Replace piston

Ⓣ Tightening torque

Unit : N·m {lbf.ft, kgf·m}

Location	Parts to be tightened	Tightening torque	Remarks
7	Air bleeder	9.8±2.0 {7.2±1.4, 1.0±0.2}	—

Lubricant

Location	Points of application	Specified lubricant	Quantity
1, 2, 3, 6, 8	Thread area of screw, outer periphery of seal, outer periphery of piston, mounting groove and thread area of boot, and inner surface of body	Rubber grease	As required

Special tools

Unit : mm {in.}

Location	Tool name and shape	Part No.	Application
4	Piston cup guide 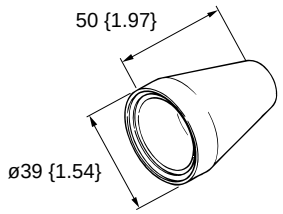	MC895722	Installation of piston cup

◆ Service procedure

4 **Installation of piston cup**

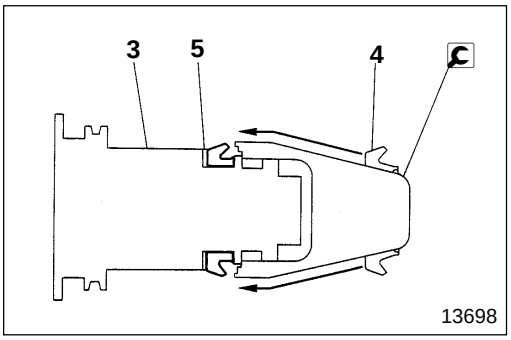

REAR WHEEL BRAKE

Rear Wheel Brake Assembly

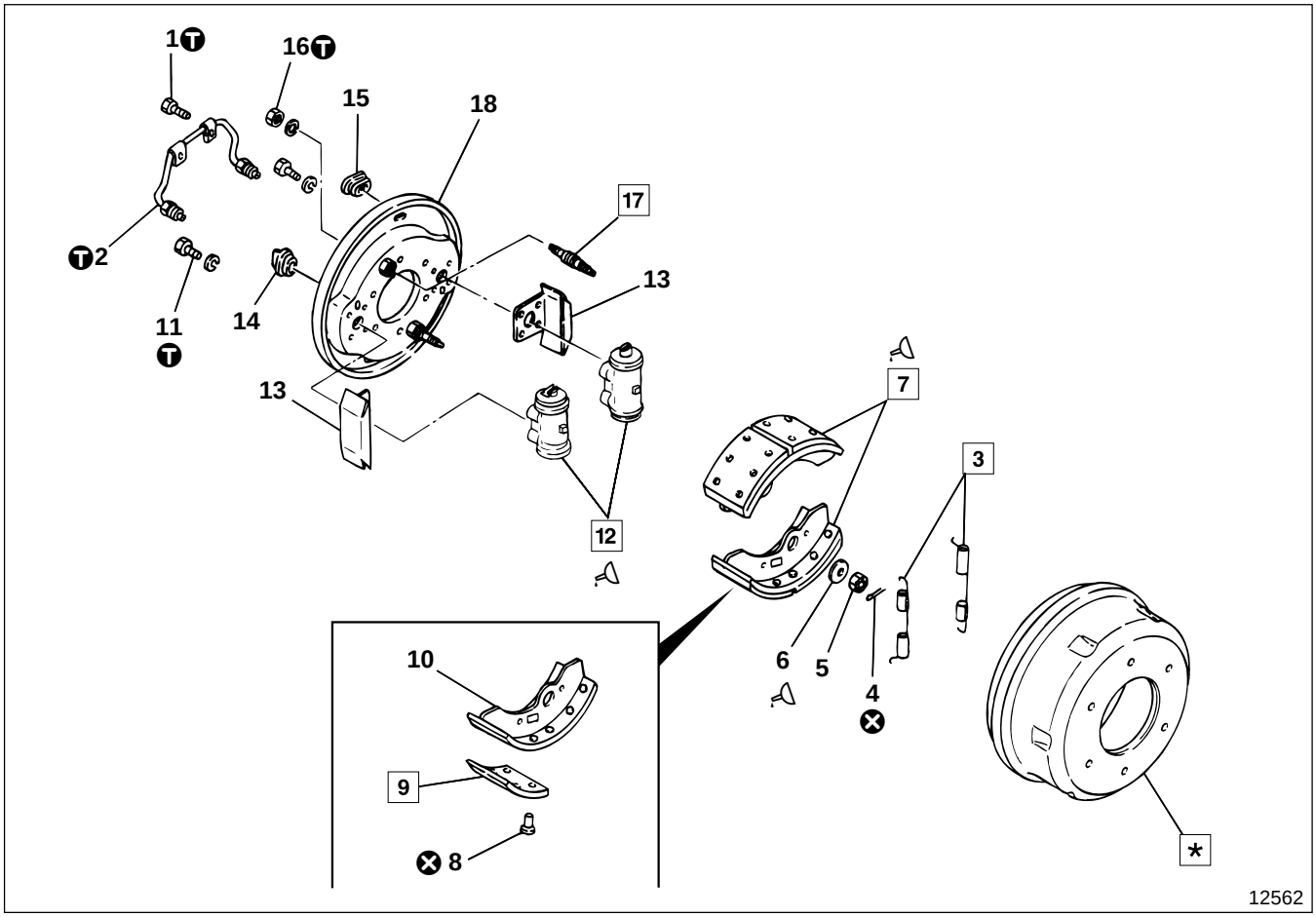

● **Disassembly sequence**

1 Bolt
2 Pipe assembly
3 Return spring
4 Split pin
5 Holder pin nut
6 Washer
7 Brake shoe assembly
8 Rivet
9 Brake lining
10 Brake shoe
11 Bolt
12 Wheel cylinder assembly
📖 P35-56
13 Wheel cylinder cover
14 Adjusting hole plug
15 Check hole plug
16 Nut
17 Holder pin
18 Backing plate

⊗ : Non-reusable parts
* : Brake drum 🗃 Gr 27

WARNING⚠

Do not leave grease or oil on the surface of brake lining 9 or inner surface of brake drum * because this reduces braking performance.

CAUTION⚠

Do not turn or remove holder pin 17 unless it is necessary, or the squareness of brake shoe assembly can be influenced causing brake drag.

● **Assembly sequence**

Follow the disassembly sequence in reverse.
Repair kit : Brake lining kit

● **Initial adjustment of brake shoe clearance after installation**

📖 P35-51

Service standards

Unit : mm {in.}

Location	Maintenance item		Standard value		Limit	Remedy
3	Return spring load (Installed length 217 {8.54})		390 N {88 lbf, 40 kgf}		Clearance between coils or coil and cover	Replace
9	Brake lining thickness		12.0 {0.47}		5.0 {0.20} (Side shoulder means wear limit)	Replace lining
*	Brake drum	Inner diameter	320 {12.5}	*321 {12.64}	322 {12.68}	Replace
		Cylindrical accuracy	0.05 {0.0020}		0.2 {0.0079}	Correct or replace

* : Indicates correction limit.

Tightening torque

Unit : N·m {lbf.ft, kgf·m}

Location	Parts to be tightened	Tightening torque	Remarks
1	Bolt (Pipe clamp mounting)	4.9±1.0 {3.6±0.7, 0.5±0.1}	—
2	Flair nut (Pipe assembly mounting)	14±2.0 {10±1.4, 1.4±0.2}	—
11	Bolt (Wheel cylinder assembly mounting)	78±16 {58±12, 8.0±1.6}	—
16	Nut (Holder pin mounting)	29±5.9 {22±4.3, 3,0±0.6}	—

Lubricant

Location	Points of application	Specified lubricant	Quantity
6, 7, 12	Contact areas between washer and brake shoe assembly; and between brake shoe assembly and wheel cylinder assembly	Wheel bearing grease [NLGI No.2 (Li soap)]	As required

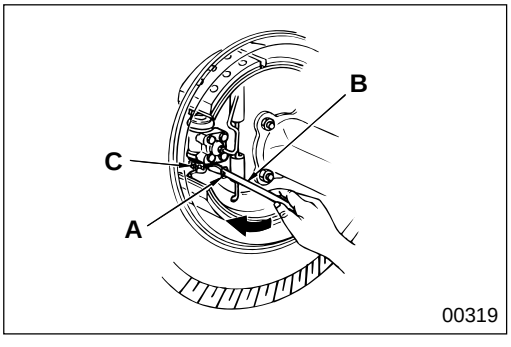

◆ Service procedure

● Initial adjustment of brake shoe clearance after installation

- Jack up the front wheels, and make sure that there is no play in the hub bearings.
- Insert screwdriver **B** into adjusting hole **A** and turn adjuster **C** in the direction of the arrow marked on the back plate until the wheel drags slightly when turned by hand.

NOTE

- **Be sure to adjust the clearance at two points for each wheel per side.**
- **The arrow mark on backing plate 18 is near adjusting hole A.**

- After depressing the brake pedal several times, release it and make sure that the wheel drags lightly when turned by hand. If the wheel turns without stress, repeat the above steps. Slacken off adjuster **B**, in the reverse direction to the arrow mark, by eight or nine notches.

NOTE

Be sure to adjust the clearance at two points for each wheel per side.

- Make sure that the wheel does not drag when turned by hand. If the wheel drags, repeat the above steps.

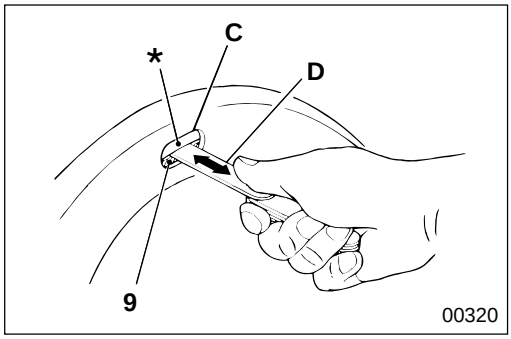

- Insert feeler gauge **D** between brake drum ***** and lining **9** through check hole **C**, and make sure that a little resistance is felt when the feeler gauge is pulled out or pushed in.

NOTE

Be sure to adjust the clearance at two points for each wheel per side.

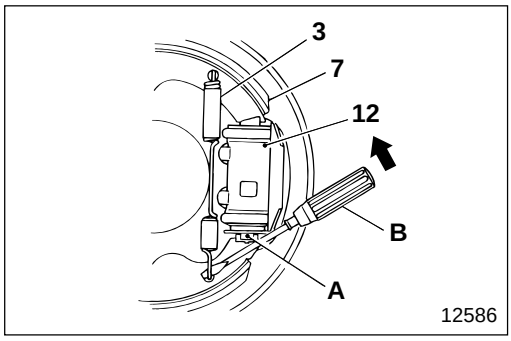

3 Return Spring

[Removal]

To remove return spring **3**, place screwdriver **B** on the hook of the return spring, then pry and remove the return spring making use of wheel cylinder assembly **12** adjuster **A** as a fulcrum.

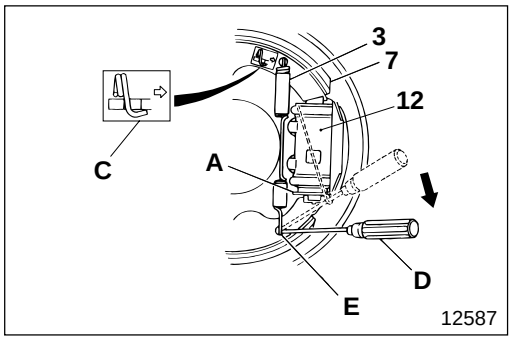

[Installation]

- Refer to the illustration on the caution plate fitted to brake shoe assembly **7** or marking **C**, and connect shorter hook end of return spring **3** to the brake shoe assembly at the side opposite the adjuster of wheel cylinder assembly **12**.
- Insert a small Phillips screwdriver **D** into the hook of return spring **3**, insert the tip of the screwdriver into return spring installation hole **E** of brake shoe assembly **7** to pry on the return spring.

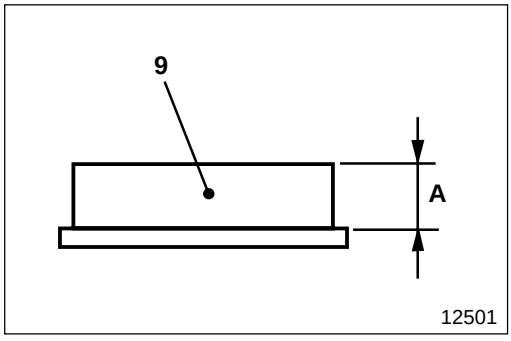

7 Brake shoe assembly

[Inspection]

If thickness **A** of brake lining **9** is lower than the limit replace the brake lining on the same axle as a unit.

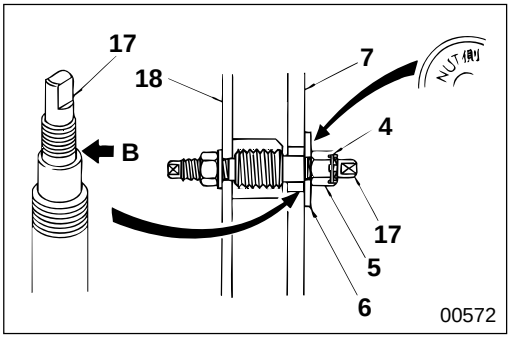

[Installation]
- Install brake shoe assembly **7**.
- Insert washer **6** with the side stamped “NUT 側” facing outside, screw down holder pin nut **5** until washer hits stepped area **B** of holder pin **17** gently, then slacken off the nut within the 0 to 60° limit until the nut is aligned with the first split pin hole.
- Insert split pin **4**, and bend it securely.

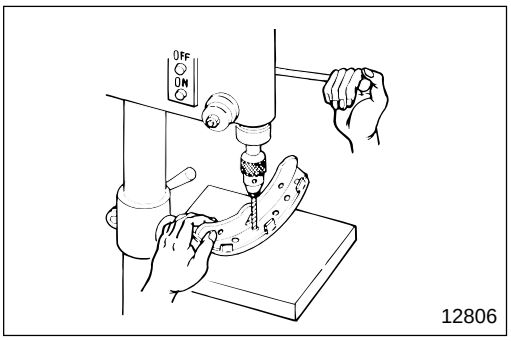

9 Brake lining

[Removal]

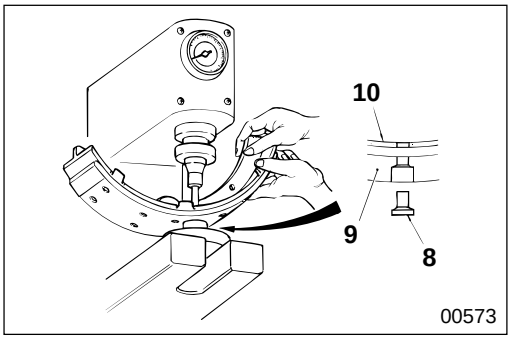

[Installation]
- Clean the mounting surfaces of brake lining **9** and brake shoe **10** with cleaning fluid and dry them.
- Insert rivets **8** from brake lining **9** side, and caulk the rivets at the specified load so that there is no clearance between brake shoe **10** and the brake lining.

  Caulking load for rivets : 17 to 19 kN {3750 to 4190 lbf, 1700 to 1900 kgf}

- Make sure that you inspect contact with the inner surface of brake drum ***** after you replace brake linings **9**. If contact is incorrect, correct with the brake assembled.

WARNING⚠

Do not leave lubricant on the surface of brake lining 9 because this reduces braking performance.

CAUTION⚠

Make sure that the type of brake linings 9 you fit are suitable for the intended use of the vehicle. Make sure that you fit identical size and color coated linings on the left and right sides of one shaft.

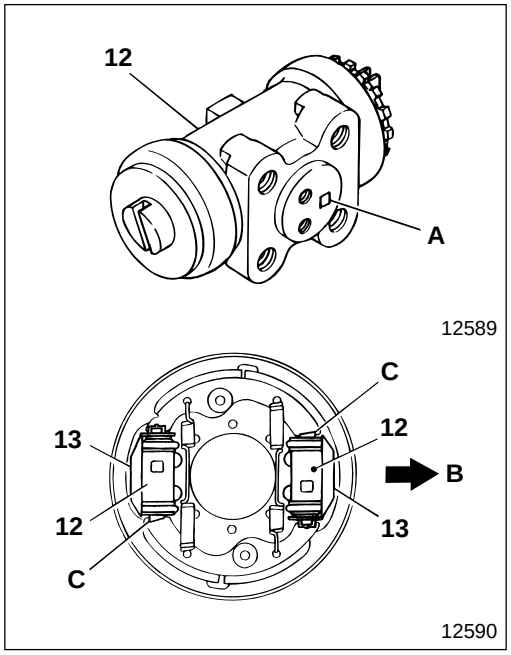

12 **Installation of wheel cylinder assembly**

A : Identification mark

Identification mark	Installation position
R	Right wheel forward
L	Left wheel forward
No mark	Left and right wheel rearward

- Install anchor piece **C** so its recession is at the deeper side of the brake shoe at the outside.
  B : Front of the vehicle

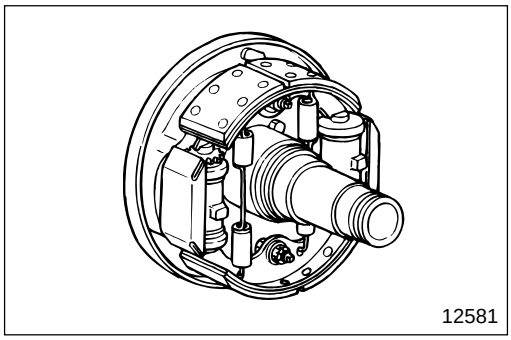

17 **Adjustment of holder pin**

- Install the rear wheel brake assembly on the rear axle. Gr 27

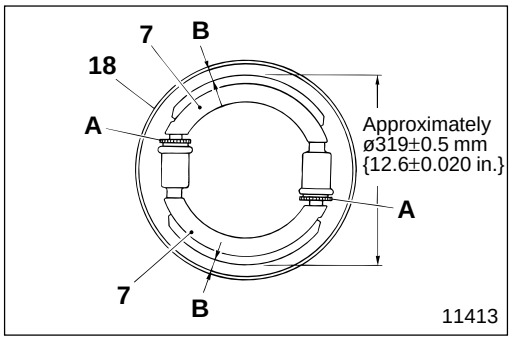

- Turn adjuster **A** to adjust the outer diameter to approximately ø319±0.5 mm {12.6±0.020 in.}.
- Then, move brake shoe assembly **7** to adjust clearance **B** evenly.

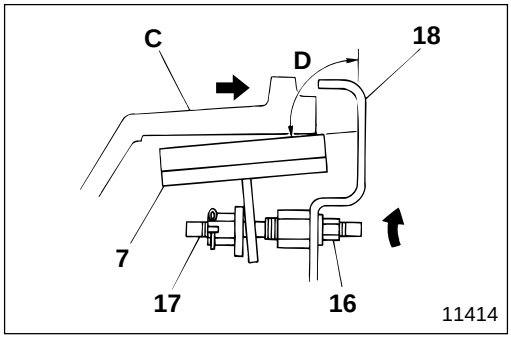

- Install hub and drum assembly **C** on the rear wheel brake assembly. Gr 27
  At this time, the hub and drum assembly cannot be inserted in the specified position if squareness **D** is 90° or more, so loosen nut **16** and turn holder pin **17** to adjust the squareness to as close to 90° as possible.
- Bleed the brake system. P35-30

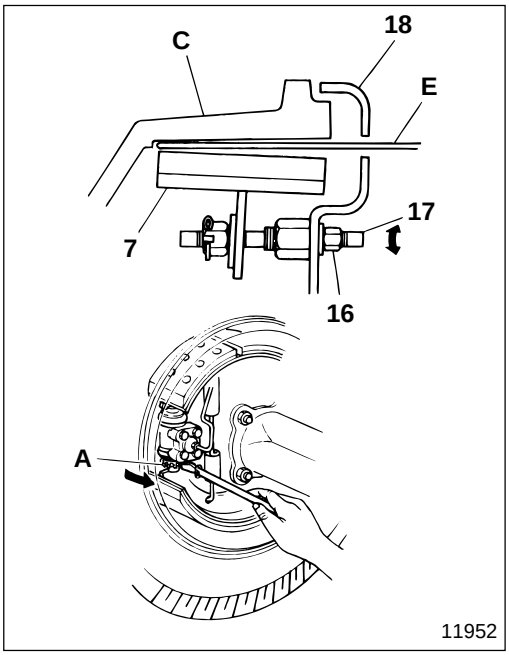

★• Turn adjuster **A** to widen brake shoe assembly **7** until 0.2 mm {0.0079 in.} feeler gauge **E** cannot be pulled out easily.

★• Loosen nut **16** and turn holder pin **17** to the right or left so that feeler gauge **E** can be pushed in or pulled out easily.

- Repeat the above steps (marked ★) until feeler gauge **E** cannot be pushed in or pulled out easily.
- Depress the brake pedal a few times lightly to equalize clearance **B** (adjusted in the previous section).
- Repeat the above steps (marked ★) until feeler gauge **E** cannot be pushed in or pulled out easily.

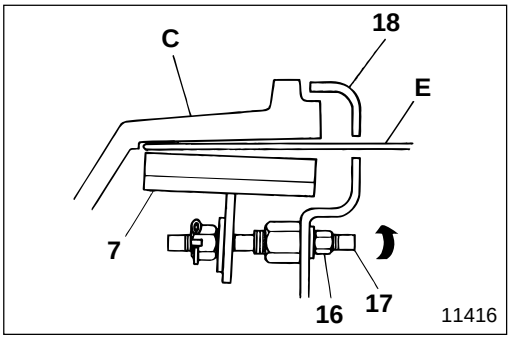

- If feeler gauge **E** cannot be pushed in or pulled out easily it is because it is making contact over the full width of brake shoe assembly **7**.
- Turn holder pin **17** so that when you pull out feeler gauge **E**, in the above condition, and reinsert the feeler gauge, pushing in or pulling out the feeler gauge at the rear is difficult.
- After adjustment, tighten nut **16** at specified torque.

✱ Correction of brake drum

If the cylindrical accuracy of brake drum ✱ is higher than the limit, or there are seams, correct by machining to the correction limit. Machining of the brake drum should be done with the wheel hub attached as an integral part.

REAR WHEEL BRAKE

Wheel Cylinder Assembly

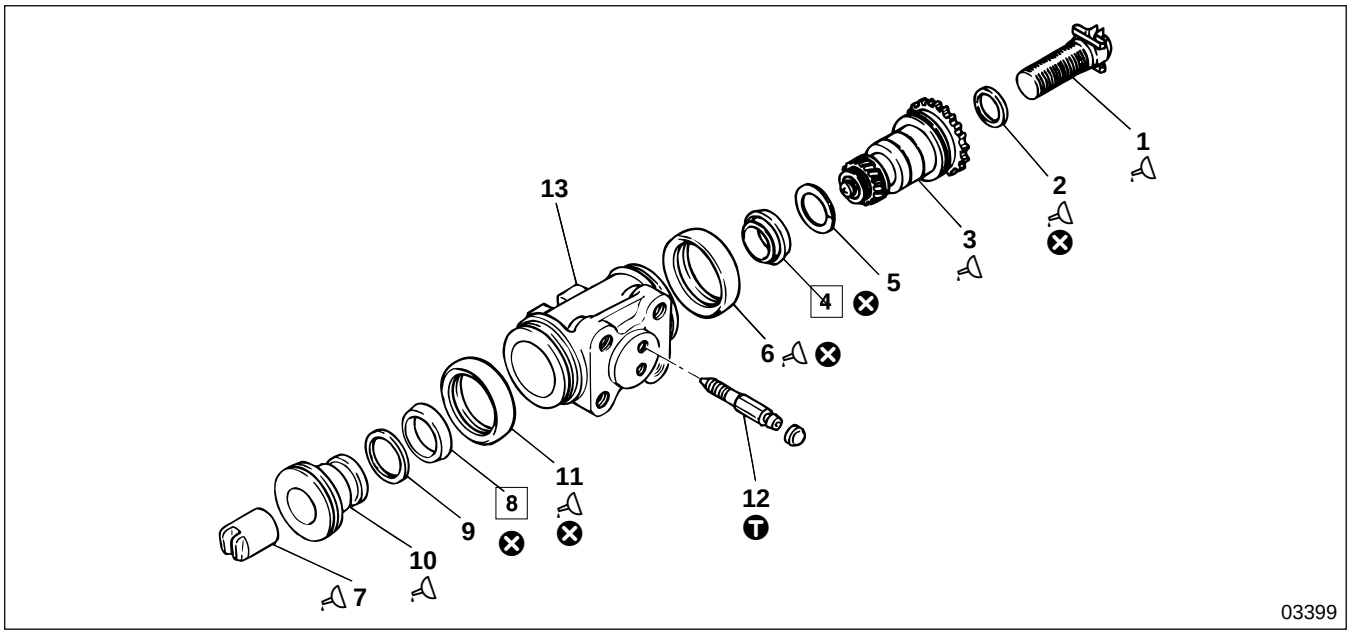

● **Disassembly sequence**

1 Screw
2 Seal
3 Piston
4 Piston cup
5 Backup ring
6 Boot
7 Anchor piece
8 Piston cup
9 Backup ring
10 Piston
11 Boot
12 Air bleeder
(Only identification marks L, R)
13 Body

⊗ : Non-reusable parts

● **Assembly sequence**

Follow the disassembly sequence in reverse.
Repair kit : Wheel cylinder kit

Service standards

Unit : mm {in.}

Location	Maintenance item	Standard value (Basic diameter in [ ])	Limit	Remedy
3, 10, 13	Clearance between piston and body	[36.51] 0.03 to 0.09 {[1.44] 0.0012 to 0.0035}	0.2 {0.0079}	Replace piston

Ⓣ Tightening torque

Unit : N·m {lbf.ft, kgf·m}

Location	Parts to be tightened	Tightening torque	Remarks
12	Air bleeder	9.8±2.0 {7.2±1.4, 1.0±0.2}	—

Lubricant

Location	Points of application	Specified lubricant	Quantity
1, 2, 3, 6, 10, 11	Thread area of screw, outer periphery of seal, outer periphery of piston, mounting groove and thread area of boot, and inner surface of body	Rubber grease	As required
7	Bottom surface of anchor piece	Wheel bearing grease [NLGI No.2 (Li soap)]	As required

Special tools

Unit : mm {in.}

Location	Tool name and shape	Part No.	Application
4, 8	Piston cup guide 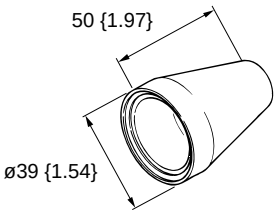	MC895722	Installation of piston cup

◆ Service procedure

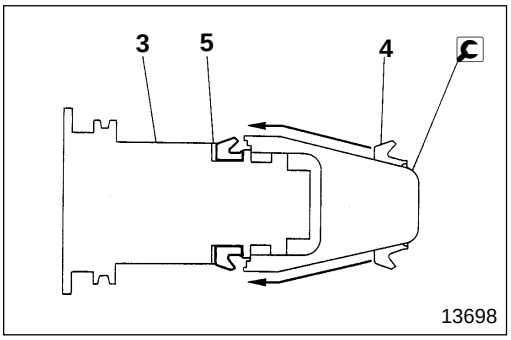

4 **Installation of piston cup**

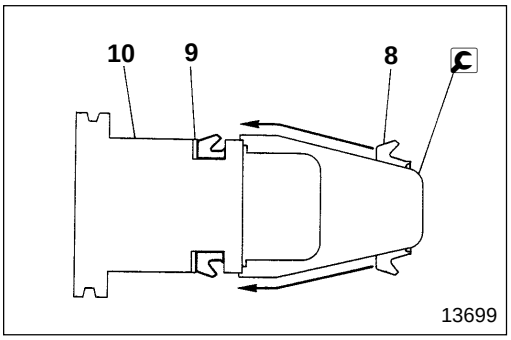

8 **Installation of piston cup**

VACUUM PUMP

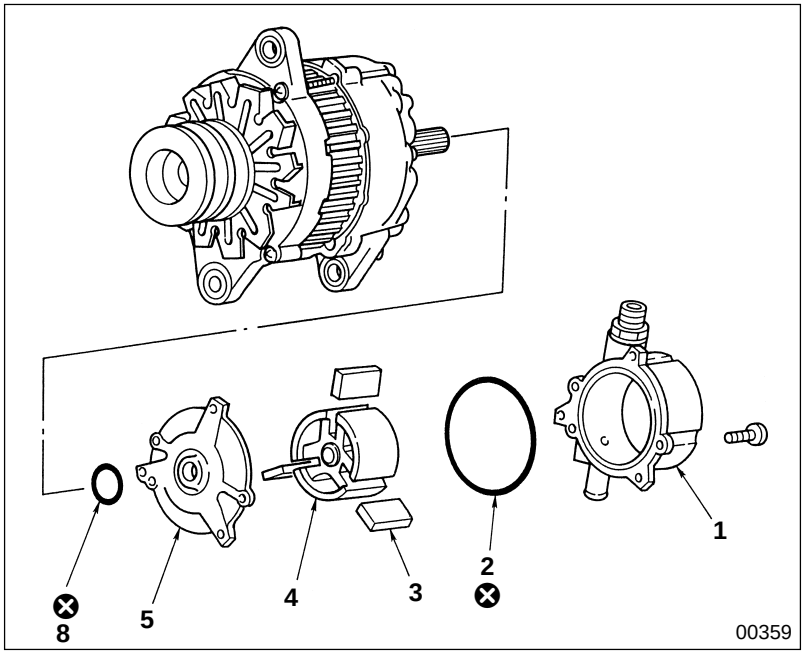

● **Disassembly sequence**

1 Vacuum housing
2 O-ring
3 Vane
4 Rotor
5 Plate
6 O-ring

⊗ : Non-reusable parts

● **Assembly sequence**

Follow the disassembly sequence in reverse.

Service standards

Location	Maintenance item	Standard value	Limit	Remedy
—	Ultimate vacuum (When alternator number of revolutions is 1500 rpm)	93.3 kPa {27.6 in.Hg, 700 mmHg} or more	—	—

M E M O

EXHAUST BRAKE SYSTEM

Exhaust Brake Unit

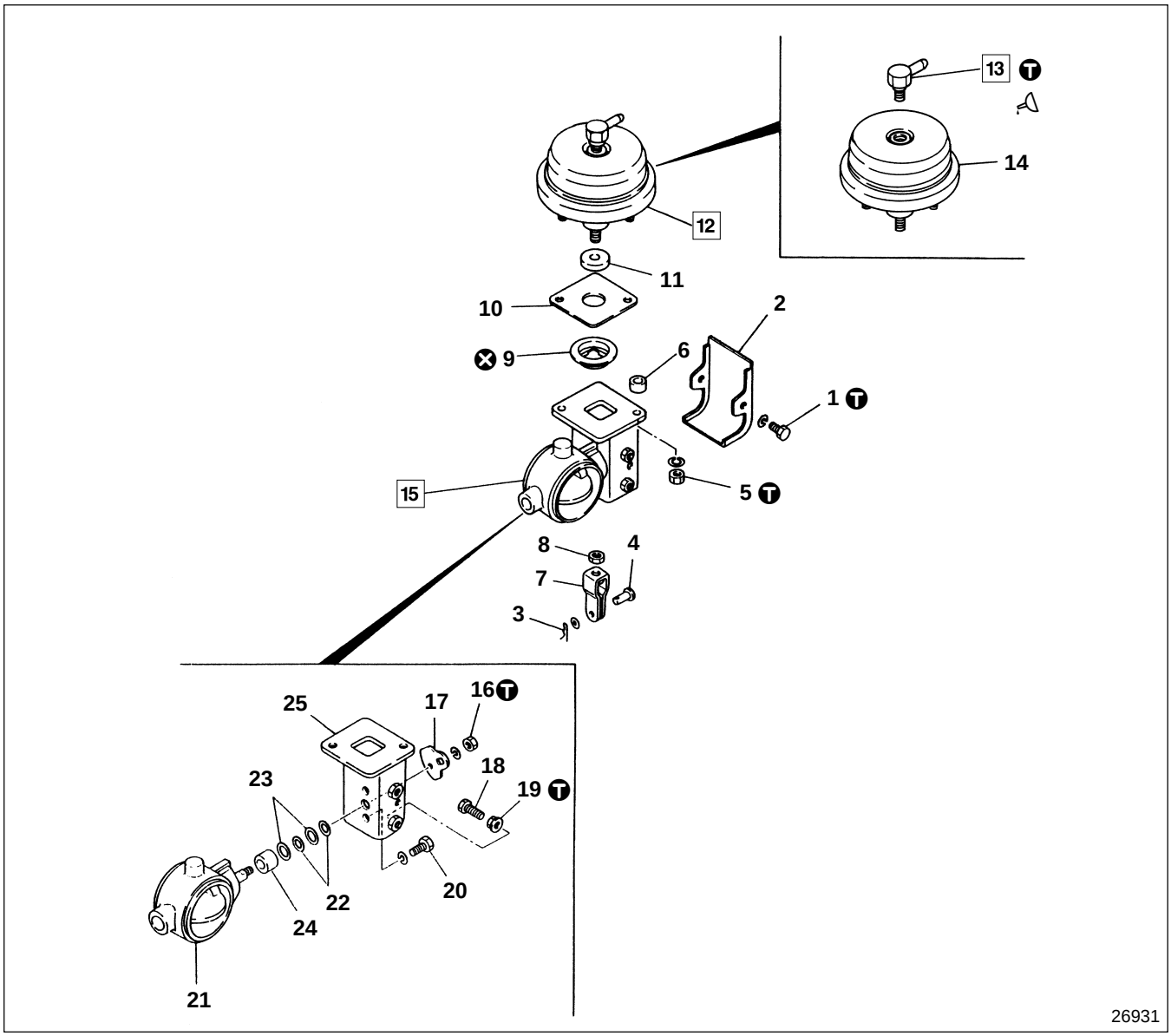

● **Disassembly sequence**

1 Bolt
2 Cover
3 Pin
4 Clevis pin
5 Nut
6 Collar
7 Clevis
8 Lock nut
9 Dust protector
10 Retainer
11 Bearing
12 Vacuum chamber assembly
13 Connector
14 Vacuum chamber 📖 P35-64
15 Valve and bracket assembly
16 Nut
17 Lever
18 Adjusting bolt
19 Lock nut
20 Bolt
21 Valve assembly
22 Seal ring (Small)
23 Seal ring (Large)
24 Bushing
25 Bracket assembly

⊗ : Non-reusable parts

● **Assembly sequence**

12 : 14→13

15 : 21→24→23→22 → 25 → 20→19→18→17→16

15→ 9 → 12→11→10→6 → 5→8→7→4→3→2→1

● **Adjustment after assembly**

P35-62

Service standards

Unit : mm {in.}

Location	Maintenance item	Standard value	Limit	Remedy
12	Airtightness in vacuum chamber (Airtightness 15 seconds after applying negative pressure 67 kPa {19.7 in.Hg, 500 mmHg})	63 kPa {18.7 in.Hg, 475 mmHg} or more	—	Replace
—	Clearance between valve assembly butterfly valve and body when butterfly valve is fully closed (Degree of negative pressure in power chamber 87 to 93 kPa {25.6 to 27.6 in.Hg, 650 to 700 mmHg})	0.4 to 0.6 {0.016 to 0.023}	—	Adjust

Tightening torque

Unit : N·m {lbf.ft, kgf·m}

Location	Parts to be tightened	Tightening torque	Remarks
1	Bolt (Cover mounting)	4.9 to 6.9 {3.6 to 5.0, 0.5 to 0.7}	—
5, 16	Nut (Vacuum chamber and lever mounting)	9.8 to 16 {7.3 to 11.5, 1.0 to 1.6}	—
13	Connector	9.8 {7.3, 1} or more	—
19	Lock nut (Adjusting bolt mounting)	4.9 to 6.9 {3.6 to 5.0, 0.5 to 0.7}	—

Sealant

Location	Points of application	Specified sealant	Quantity
13	Thread area of connector	THREEBOND 1211	As required

◆ Service procedure

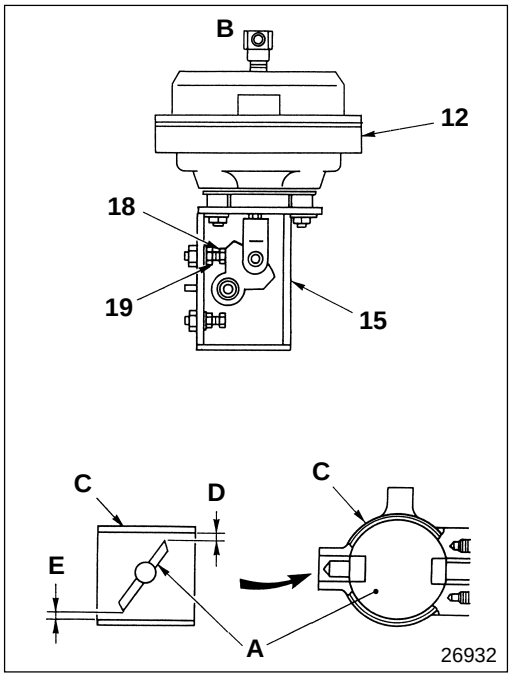

● **Adjustment after assembly**

Adjustment of valve when fully-closed

- While applying negative pressure **B** of 87 to 93 kPa {25.6 to 27.5 in.Hg, 650 to 700 mmHg} to vacuum chamber assembly **12**, adjust by turning adjusting bolt **18** so that clearance **D** and **E** between the butterfly valve and body **C** conforms to the standard value.
- After adjustment, tighten lock nut **19** at specified torque.
- Average value of clearance **D, E** = (**D + E**)/2.
- Fully-opened adjustment of butterfly valve **A** is done while valve and bracket assembly **15** is installed.

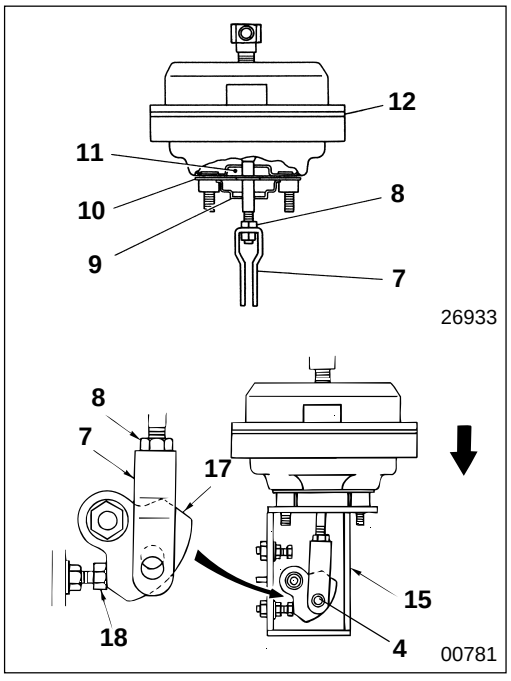

12 **Vacuum chamber assembly**

[Installation]

- Adjust valve and bracket assembly **15**. P35-63
- Adjust the hole of clevis **7** to position as illustrated.
- Fix clevis **7** using lock nut **8**.
- Push up and align clevis **7** with the hole of lever **17** and install using clevis pin **4**.

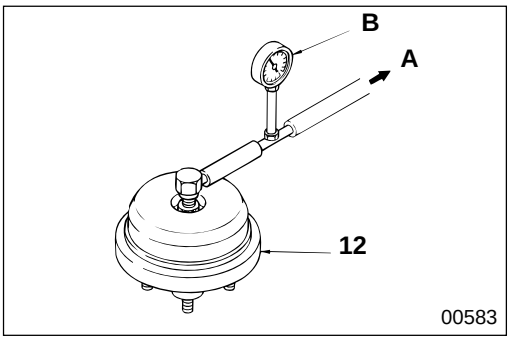

[Inspection]

Apply negative pressure **A** of 67 kPa {19.6 in.Hg, 500 mmHg} or more to vacuum chamber assembly **12**. Check to ensure that the value of negative pressure gauge **B** 15 seconds after indicating 67 kPa {19.6 in.Hg, 500 mmHg} conforms to the standard value.

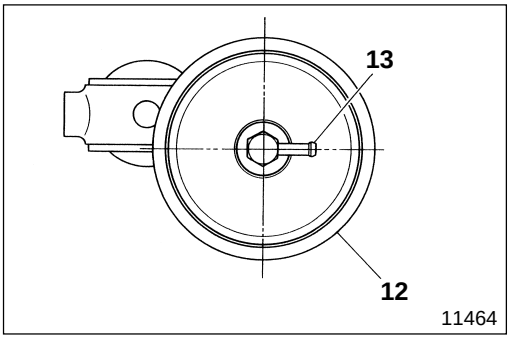

13 Installation of connector

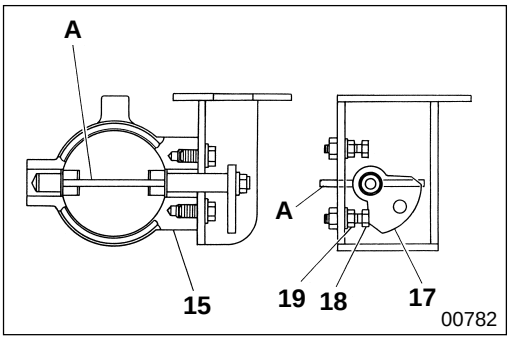

15 Adjustment of valve and bracket assembly butterfly valve when fully-opened

- Adjust by turning adjusting bolt **18** so that lever **17** and the head of the adjusting bolt meet horizontally (butterfly valve **A** is fully opened at such time).
- After adjustment, tighten lock nut **19** at specified torque.

Vacuum Chamber

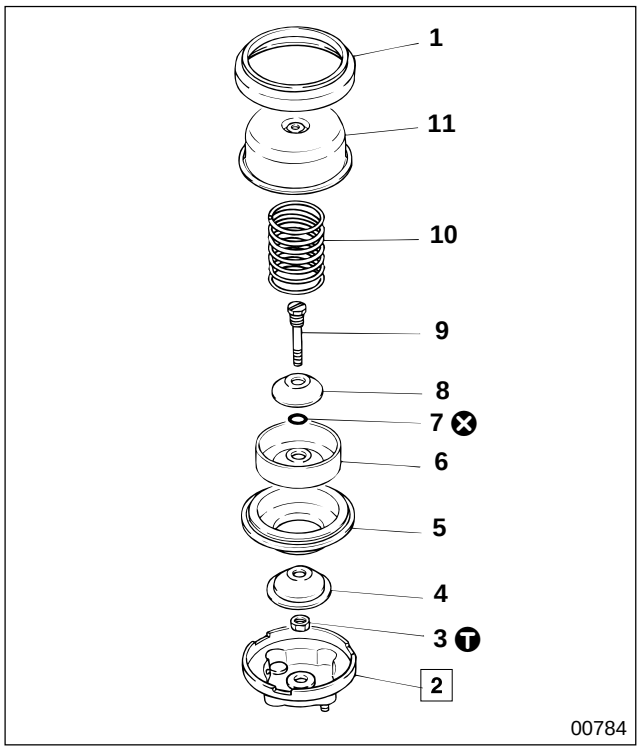

● **Disassembly sequence**

1 Dust cover
2 Rear shell
3 Nut
4 Diaphragm retainer
5 Diaphragm
6 Diaphragm plate
7 O-ring
8 Piston washer
9 Push rod
10 Spring
11 Front shell

⊗ : Non-reusable parts

● **Assembly sequence**

Follow the disassembly sequence in reverse.

● **Inspection after assembly**

P35-65

Tightening torque

Unit : N·m {lbf.ft, kgf·m}

Location	Parts to be tightened	Tightening torque	Remarks
3	Nut (Push rod mounting)	44 to 59 {32.6 to 43.3, 4.5 to 6}	—

Special tools

Location	Tool name and shape	Part No.	Application
2	Plate	*910-22060	Removal and installation of rear shell
	Lever	*910-22100	
11	Socket	*910-22110	Fixing of front shell

* : JIDOSHA KIKI part No.

◆ Service procedure

● Inspection after assembly

- Inspect the airtightness of the vacuum chamber assembly.
  📖 P35-63
- If the measured value is higher than the limit, replace the vacuum chamber assembly.

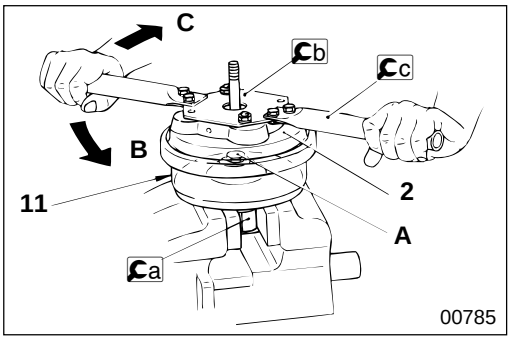

2 **Rear shell**

[Removal]

- Fix a socket in a vice.
- Fix nut **A** of front shell **11** using a socket.
- Assemble b plate and c lever and install on rear shell **2**. Turn c lever in direction **B**.

[Installation]

Set up as described above and turn c lever in direction **C**.

- After making sure the flange area of diaphragm **5** is fully inserted inside front shell **11**, turn rear shell **2**.

EXHAUST BRAKE SYSTEM

Exhaust Brake System Electric Equipment

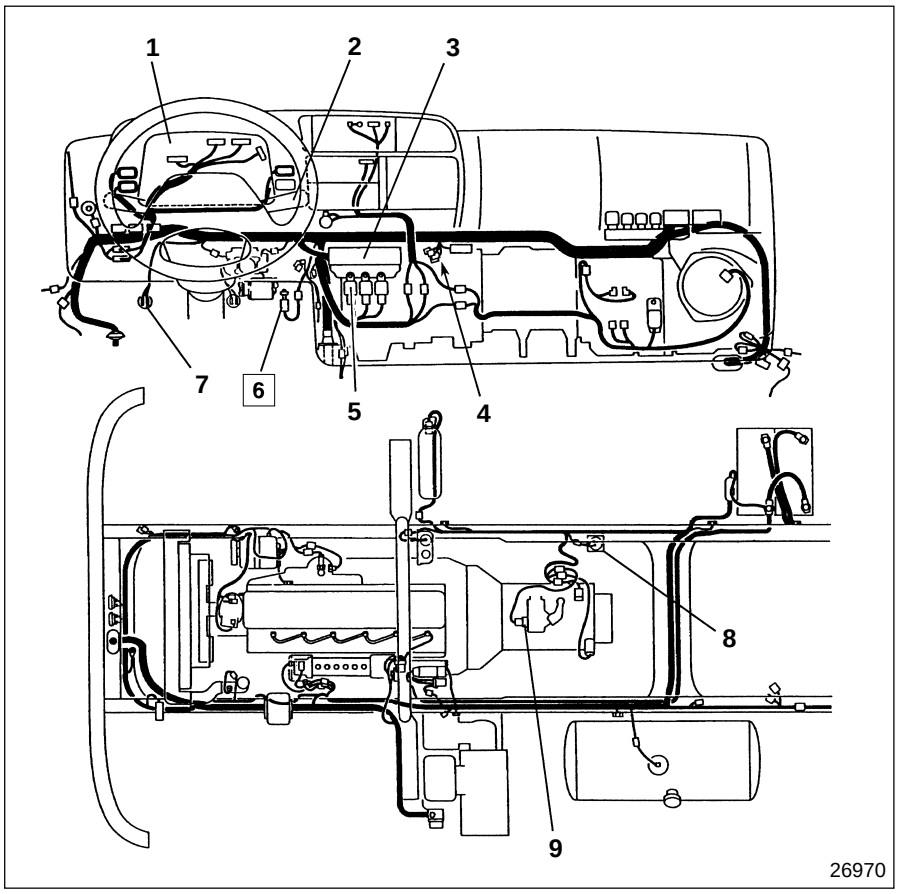

1 Meter cluster
Gr 54
2 Exhaust brake switch
Gr 37, Gr 54
3 Fuse box
Gr 54
4 Diode
5 Exhaust brake cut relay
Gr 54
6 Accelerator switch
Gr 13, Gr 54
7 Clutch switch
Gr 21, Gr 54
8 3-way magnetic valve
Gr 54
9 Transmission neutral switch
Gr 22, Gr 54

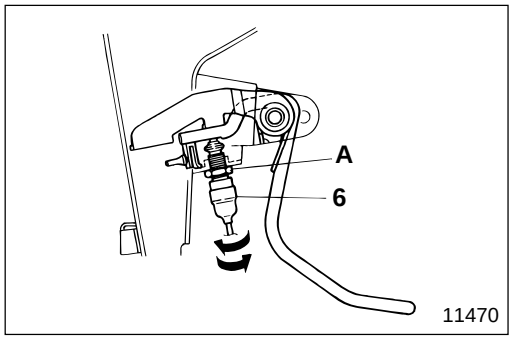

◆ Service procedure

6 **Adjustment of accelerator switch**

- While the engine is idling, turn exhaust brake switch **2** ON, depress the accelerator gradually, and check the engine revolution when the exhaust indicator lamp within the meter cluster goes off.
- Adjust on the basis of the following chart using accelerator switch **6**.

Engine revolution	Adjusting direction of accelerator switch 6
800 rpm or less	↷
950 rpm or more	↶

- After adjustment, tighten nut **A** to fix accelerator switch **6**.

MITSUBISHI
FUSO

FH

Service Manual

Group 35
Brake

Table of Contents

BACK

HOME

MITSUBISHI FUSO TRUCK OF AMERICA, Inc.

Pub No. TWME9502-35

GROUP 35 BRAKE

SPECIFICATIONS 2

STRUCTURE AND OPERATION 4

TROUBLESHOOTING 26

INSPECTION AND ADJUSTMENT MOUNTED IN VEHICLE

- Replacement of Brake Fluid 30
- Air Bleeding of Brake System 32
- Inspection and Adjustment of Clearance between Brake Pedal and Floor Panel 34
- Thickness Inspection and Replacement of Brake Lining 35
- Inspection of Brake Shoe Clearance 35
- Inspection and Maintenance of Air Dryer 36

HANDLING OF CONNECTORS 37

BRAKE PEDAL 38

DUAL BRAKE VALVE 42

BRAKE BOOSTER (AIRMASTER) 49

FRONT WHEEL BRAKE 56

REAR WHEEL BRAKE 64

AIR COMPRESSOR 72

AIR DRYER 80

AIR PRESSURE GOVERNOR 84

FLUID TANK 86

CHECK VALVE 87

SAFETY VALVE 87

SUPPLY VALVE 88

EXHAUST BRAKE SYSTEM 90

SPECIFICATIONS

< Equipment for Service Brake >

Item			Specifications
Brake booster (Airmaster)	Power cylinder inner diameter×Stroke mm {in.}		ø114.3×79 {4.50×3.11}
	Hydraulic cylinder inner diameter×Stroke mm {in.}		ø23.8×76 {0.94×2.99}
	Operating starting pressure kPa {lbf/in^2, kgf/cm^2}		18±9.8 {2.6±1.4, 0.18±0.1}
	Residual pressure kPa {lbf/in^2, kgf/cm^2}		78 to 125 {11 to 18, 0.8 to 1.3}
	Manufacturer		JIDOSHA KIKI
Air compressor	Type		Air-cooled, single cylinder
	Cylinder diameter×Stroke mm {in.}		ø70×40 {2.76×1.57}
	Cylinder capacity cm^3 {cu.in.}		154 {9.40}
	Manufacturer		SANWA SEIKI
Air dryer	Type		DR-41
	Heater capacity	V-W	12-50
	Thermostat operating temperature °C {°F}	ON	4±4 {39±7.2}
		OFF	20 {68} or less
	Purge chamber capacity	L {qts}	0.9 {0.95}
	Required time for recycling desiccant	Sec	30
	Manufacturer		NABCO
Air tank	Capacity	L {qts}	8+9+8 {8.45+9.50+8.45}

< Wheel Brake >

Item			Specifications
Brake type	Front		Drum brake (2-leading type)
	Rear		Drum brake (Dual 2-leading type)
Brake drum inner diameter		mm {in.}	ø320 {12.6}
Wheel cylinder inner diameter	Front	mm {in.}	ø34.93 {1.38}
	Rear	mm {in.}	ø36.51 {1.44}
Brake lining Width×Thickness	Front	mm {in.}	120×12 {4.72×0.47}
	Rear	mm {in.}	140×12 {5.51×0.47}

< Exhaust Brake >

Item	Specifications
Control type	Combined electric and air
Valve type	Butterfly valve

M E M O

Brake System

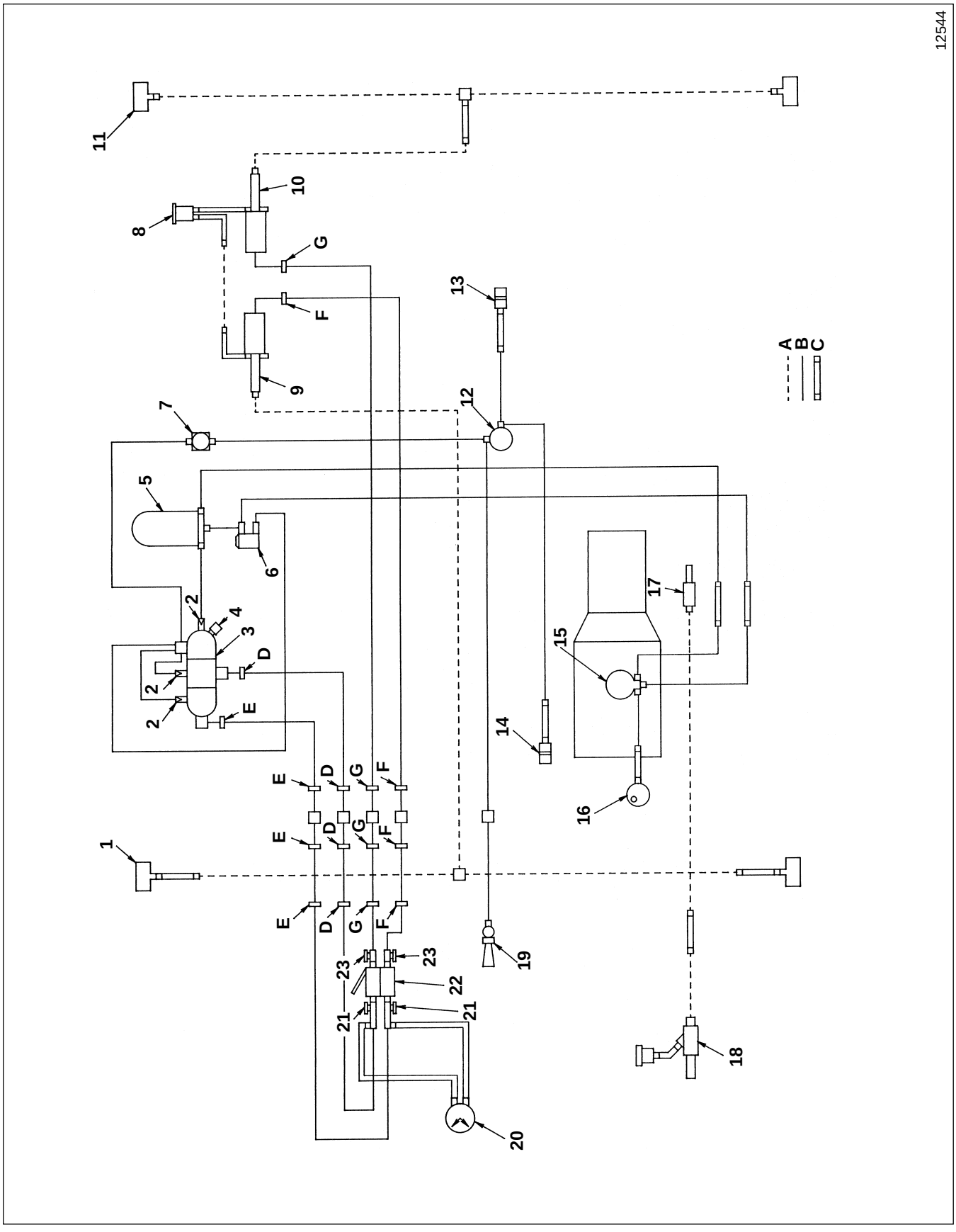

1 Front wheel cylinder
2 Check valve
3 Air tank
4 Safety valve
5 Air dryer
6 Air pressure governor
7 Supply valve
8 Fluid tank
9 Airmaster (Front)
10 Airmaster (Rear)
11 Rear wheel cylinder
12 3-way magnetic valve
13 Exhaust brake unit
14 Intake silencer < Manual transmission >
15 Air compressor
16 Air cleaner
17 Power cylinder
18 Master cylinder
19 Air horn
20 Air pressure gauge
21 Low air pressure switch
22 Dual brake valve
23 Stop lamp switch

A : Fluid line
B : Air line
C : Hose
D : Red identification tape
E : Blue identification tape
F : White identification tape
G : Yellow identification tape

- The brake system is an air over hydraulic, all-wheel braking type consisting of separate front and rear systems.
- The servo system is fitted with airmasters **9**, **10**.
- An exhaust brake system, of the exhaust pipe opening and closing valve type, is fitted as a sub-brake system.

Dual Brake Valve

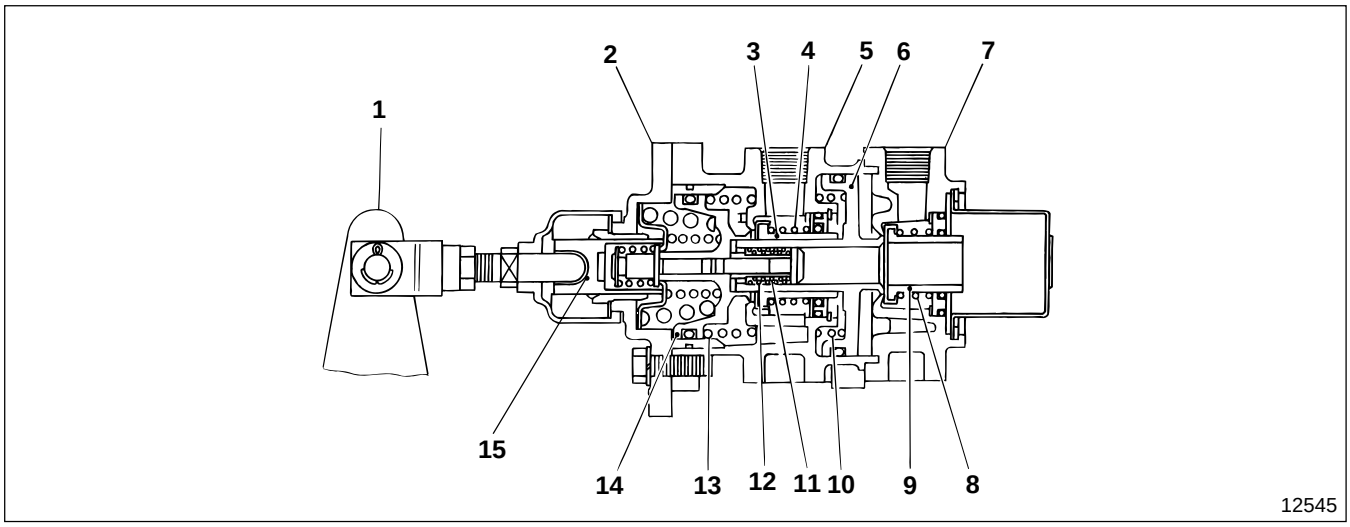

1 Brake pedal
2 Plate assembly
3 Primary inlet valve
4 Primary inlet valve spring
5 Body
6 Relay piston
7 Cover
8 Secondary inlet valve spring
9 Secondary inlet valve
10 Relay piston spring
11 Sleeve inner spring
12 Sleeve outer spring
13 Primary piston spring
14 Primary piston
15 Plunger

The dual brake valve controls the braking force of the vehicle by feeding pressurized air to the airmaster in accordance with the brake pedal depression angle of brake pedal **1**.

● When depressing brake pedal (braking pressure is generated)

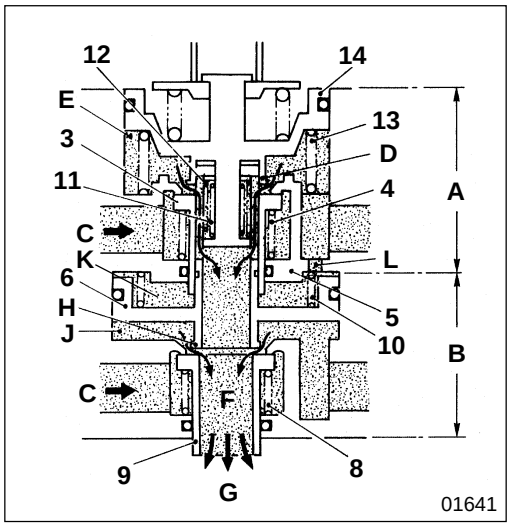

- The repercussive forces of primary inlet valve spring **4** and secondary inlet valve spring **8** seat primary inlet valve **3** at primary side **A**, and secondary inlet valve **9** at secondary side **B**, on their respective seats. This shuts off air **C** from the air tank to maintain airtightness.
- The repercussive force of primary piston spring **13** raises primary piston **14** to its upper position. Exhaust valve seat **D** opens and chamber **E** is open to atmosphere **G** via chamber **F**.
- Since the repercussive forces of sleeve inner spring **11** and sleeve outer spring **12** is stronger than the repercussive force of relay piston spring **10**, relay piston **6** is raised to its upper position and exhaust valve seat **H** is opened. This opens chamber **J** to atmosphere **G** via chamber **F**.
  Chamber **E** at the primary side and chamber **K** at the upper part of relay piston **6** at the secondary side are connected via passage port **L** of body **5**.

● When depressing brake pedal (before braking pressure is generated)

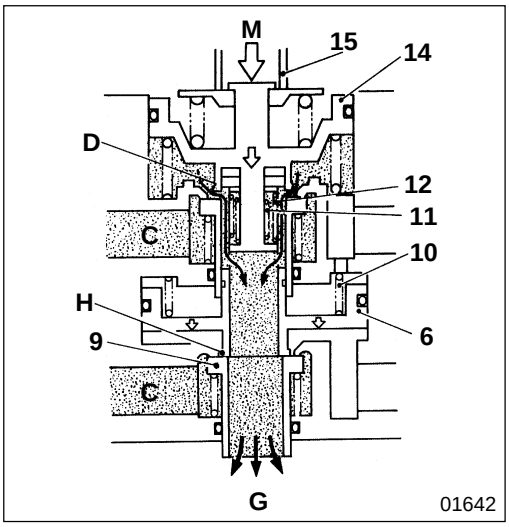

- Depressing the brake pedal (illustrated as pedal action **M**), forces down primary piston **14** via plunger **15**.
- Forcing down primary piston **14** changes the balance between the repercussive forces of inner spring **11** and outer spring **12**, and the repercussive force of relay piston spring **10**, forcing down relay piston **6**. This seats the relay piston on secondary inlet valve **9** and closes exhaust valve seat **H**.
- This closes the secondary side exhaust passage; however, primary side exhaust valve seat **D** remains open. No braking pressure is generated at either primary or secondary sides.

● When depressing brake pedal (braking pressure is generated)

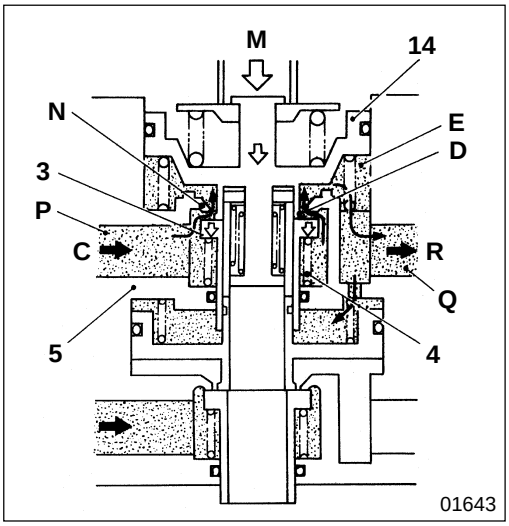

Primary side

- As the brake pedal is depressed further (illustrated as brake pedal action **M**), primary piston **14** is forced down until it is seated on primary inlet valve **3**, closing exhaust valve seat **D**.
- Primary inlet valve **3** is forced down, compressing primary valve spring **4**, and supply valve seat **N** of body **5** separates from the primary inlet valve. The air in chamber **P** flows into chamber **E** and is fed to rear brake system **R** via discharge port **Q** as braking pressure.

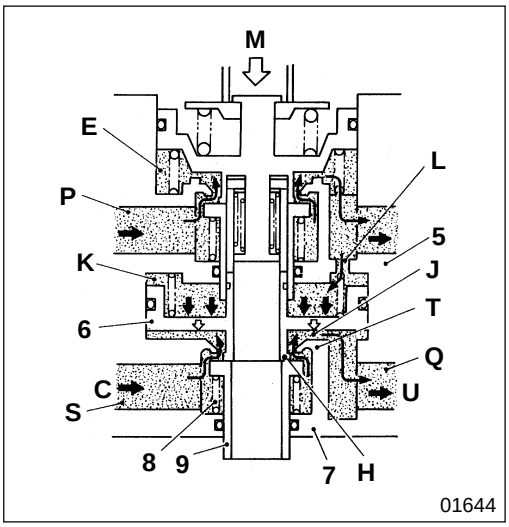

Secondary side

- The air at the primary side flows into chamber **K** via passage port **L** of body **5**.
- The air fed into chamber **K** acts on the upper part of relay piston **6** to force down the relay piston and compress secondary valve spring **8**, forcing down secondary inlet valve **9**.
- This separates supply valve seat **T** and secondary inlet valve **9** of cover **7**.
- The air in supply port chamber **S** flows into chamber **J** and is fed to front brake system **U** via discharge port **Q** as braking pressure.

● Stabilization of braking pressure

When the brake pedal remains depressed at the specified depression angle, the braking air pressure stabilizes at the pressure corresponding to the brake pedal depression angle.

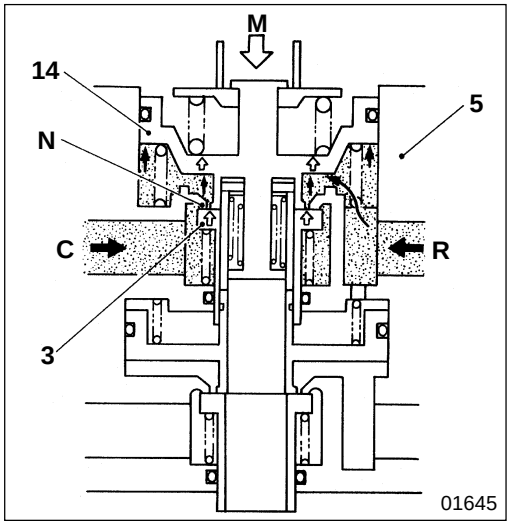

Primary side

- The braking air pressure fed under the bottom of primary piston **14** raises the primary piston and primary inlet valve **3** together in tandem.
- Primary inlet valve **3** makes contact with supply valve seat **N** of body **5**, then the supply of air **C** from the air tank ceases and the increases in the braking air pressure stops. This stabilizes braking pressure **R** for the rear brake system.

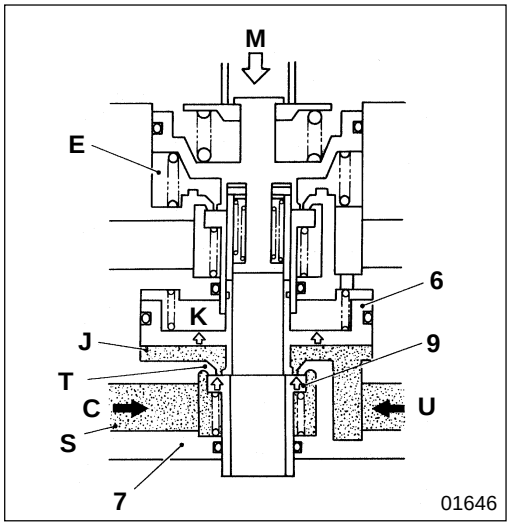

Secondary side

- As the braking pressure (pressure in chamber **J**) for the front brake system balances the pressures in chambers **E** and **K**, the force raising relay piston **6** disappears, and the relay piston rises in tandem with secondary inlet valve **9**.
- Secondary inlet valve **9** makes contact with supply valve seat **T** of cover **7**, then the supply of air from supply port chamber **S** to chamber **J** ceases. This stabilizes brake pressure **U** for the front system.

● Release of brake pressure

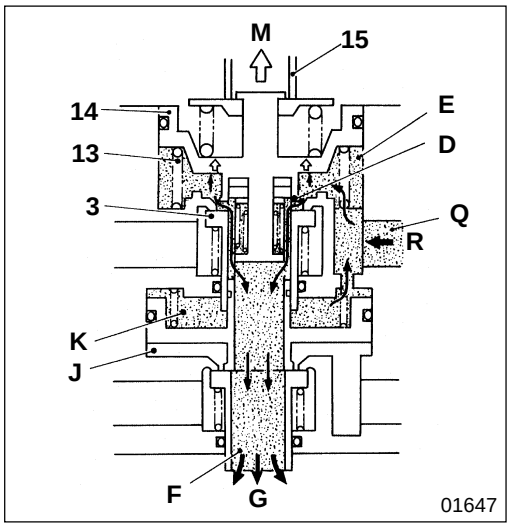

Primary side

When the brake pedal is released (illustrated as brake pedal action **M**), primary piston spring **13** and air pressure **R** at discharge port **Q** (pressure in chamber **E**) raise plunger **15** and primary piston **14**. Then, exhaust valve seat **D** at the lower end of the primary piston separates from primary inlet valve **3**. The air pressure of the rear brake system flows through chamber **E** to be discharged from exhaust passage chamber **F** into atmosphere **G**.

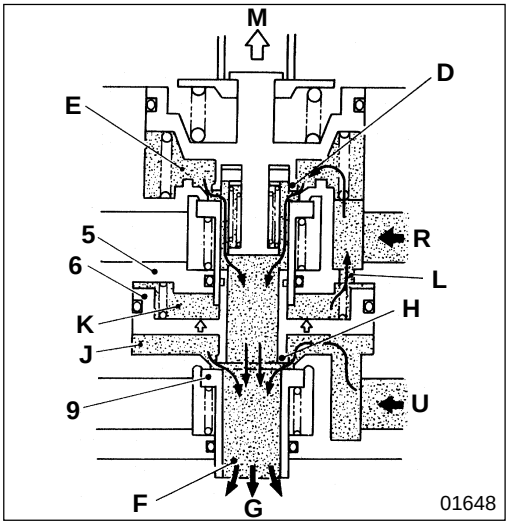

Secondary side

- As the air pressure in the rear brake system drops, the air pressure in chamber **K** is discharged via passage port **L** of body **5**, and chambers **E**, **F** into atmosphere **G**.
- This changes the air pressure balance between chambers **K** and **J**. The air pressure in chamber **J** raises relay piston **6**, and exhaust valve seat **H** at the lower end of the relay piston separates from secondary inlet valve **9**. Air pressure **U** in the front brake system is discharged from exhaust passage chamber **F** into atmosphere **G**.

● When abnormality occurs

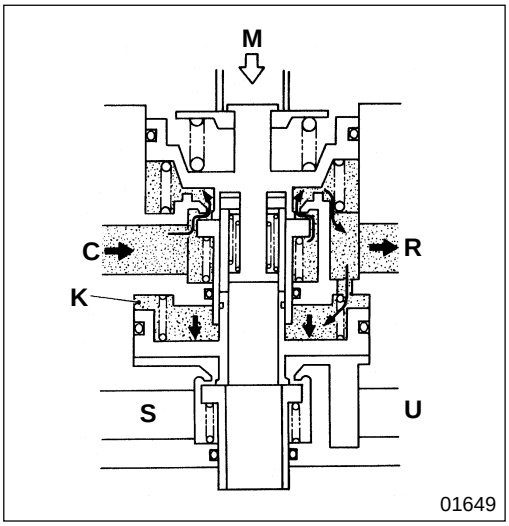

Operation when the air pipe of the front brake system fails

- The primary side operates the same as normal, generating braking pressure in rear brake system **R**.
- At the secondary side, even if the primary side generates air pressure in chamber **K**, braking pressure is not generated in front brake system **U**, since no air pressure is generated in supply port **S**.

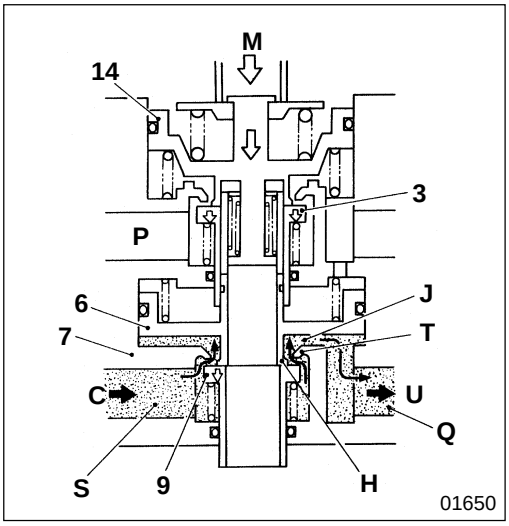

Operation when the air pipe of the rear brake system fails

- In the rear brake system, air pressure is not generated up to supply port **P**. Therefore, even if the brake pedal is depressed (causing primary piston **14** to force down primary inlet valve **3**), braking pressure is not generated.
- If the brake pedal is depressed further (illustrated as brake pedal action **M**), primary piston **14** makes contact with relay piston **6** and they force down secondary inlet valve **9**.
- This action separates supply valve seat **T** of cover **7** from secondary inlet valve **9**. The air pressure flows into chamber **J** from chamber **S** and is fed to front brake system **U** via discharge port **Q** as braking pressure.

Brake Booster (Airmaster)

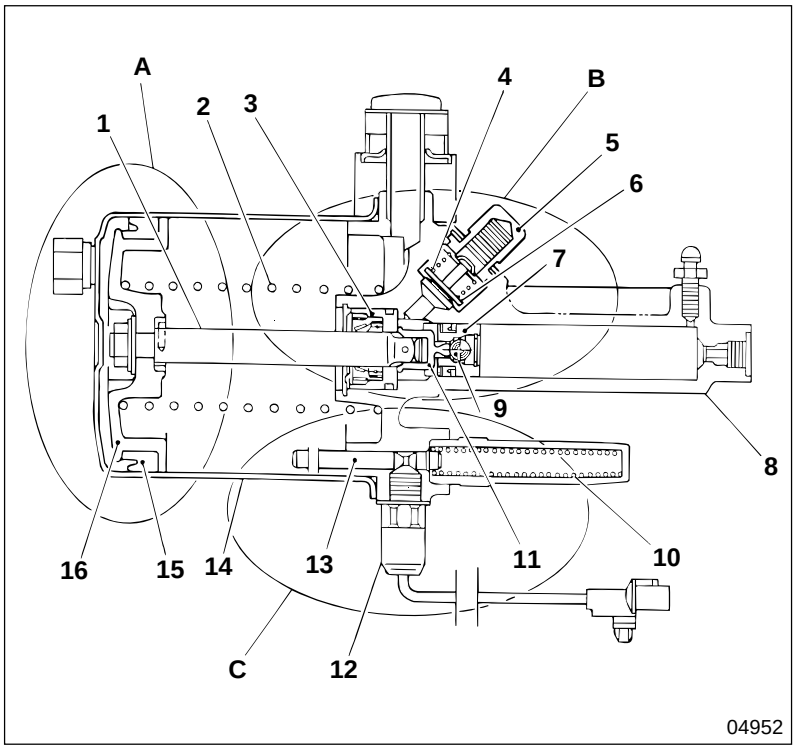

1 Push rod
2 Return spring
3 Retainer assembly
4 Spring
5 Connector
6 Residual valve
7 Hydraulic piston
8 Body assembly
9 Steel ball
10 Return spring
11 Yoke
12 Stroke switch
13 Rod
14 Cylinder shell
15 Cup packing
16 Piston plate

A : Power cylinder area
B : Hydraulic piston area
C : Power piston stroke detection switch area

● Power cylinder area

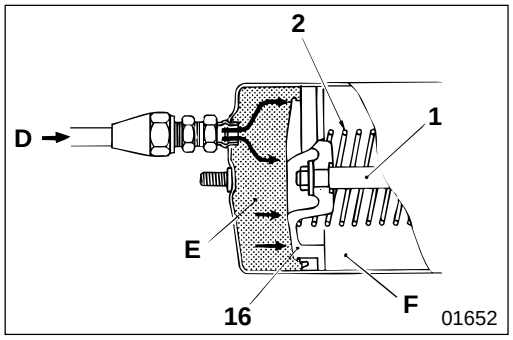

- Operation of the dual brake valve feeds compressed air **D** into chamber **E**, activating piston plate **16**. This opens chamber **F** to the atmosphere, generating a pressure difference between chambers **E** and **F**. When this force becomes greater than the repercussive force of return spring **2**, the piston plate moves to the right.
- Piston plate **16** is fitted with push rod **1** that transmits the force of the compressed air received at the piston plate to hydraulic piston area **B**.

● **Hydraulic piston area**

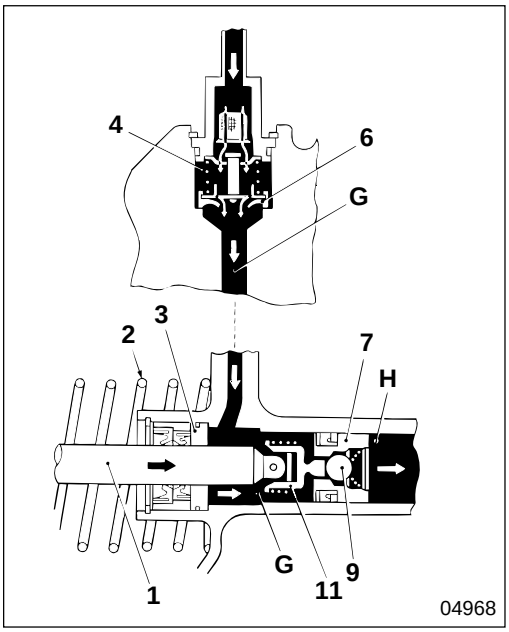

When functioning

- The movement of the piston plate compresses return spring **2**, which moves push rod **1**, then hydraulic piston **7** to the right. This movement separates yoke **11** from retainer assembly **3**, and seats steel ball **9** at the end of the hydraulic piston. This closes the passage between brake fluid tank chamber **G** and wheel cylinder chamber **H**. The hydraulic piston moves to the right and pressurizes the brake fluid in chamber **H**, transmitting power to the wheel cylinder.
- In residual valve **6**, negative pressure from chamber **G** increases as the volume expands in line with the movement of the hydraulic piston. This opens the residual valve, allowing it to suck brake fluid from the fluid tank.

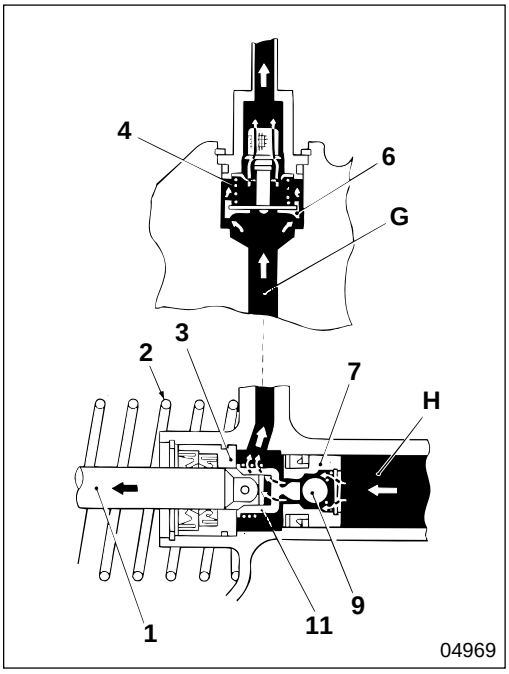

When released

- Releasing the brake pedal frees the compressed air at the rear side of the piston plate into the atmosphere. Hydraulic piston **7** is returned to its original position by the combined repercussive forces of return spring **2** of push rod **1**, and the brake fluid pressure of chamber **H** yoke **11** hits retainer assembly **3**, connecting chamber **G** and chamber **H**.
- Brake fluid flows through chamber **G** to compress spring **4** of residual valve **6**. The brake fluid passes around the residual valve and returns to the fluid tank.
- Residual valve **6** closes when the repercussive forces of spring **4** and the brake fluid pressure balance.

● **Power piston stroke detecting switch area**

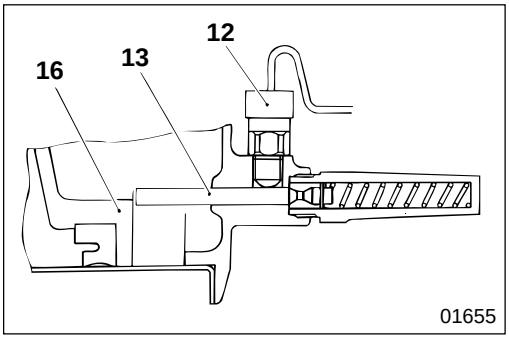

- When brake fluid has been lost due to damage to the brake pipe, the stroke of the power piston increases, and piston plate **16** hits the end of rod **13**, and the rod is moved to the right.
- Because of this, stroke switch **12** leaves the recessed area of the rod **13**, and turns the stroke switch ON. This turns on a warning lamp within the meter cluster to alert the driver.

Wheel Brake

< Front >

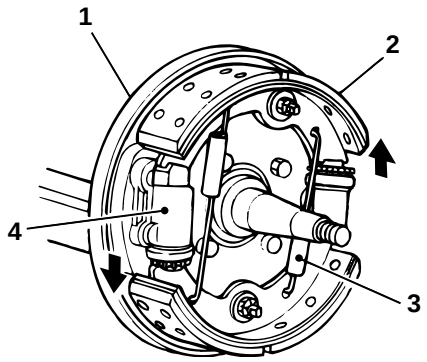

12964

< Rear >

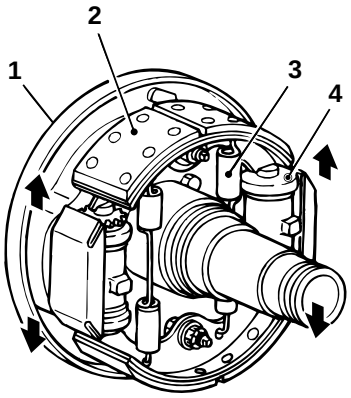

12965

1 Backing plate
2 Brake shoe assembly
3 Return spring
4 Wheel cylinder assembly

- The front wheel brake is an internal expanding 2-leading brake type.
- The rear wheel brake is an internal expanding dual 2-leading brake type.
- Front and rear wheel cylinder assemblies **4** have shoe clearance automatic adjusting mechanisms to adjust shoe clearance within a specific range.

● Wheel cylinder assembly

< Front >

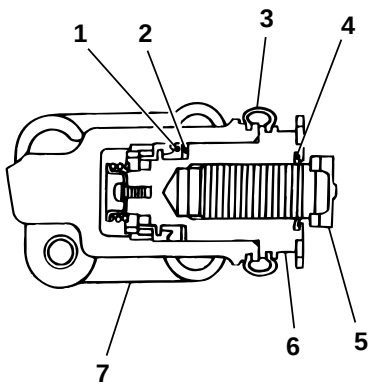

12966

< Rear >

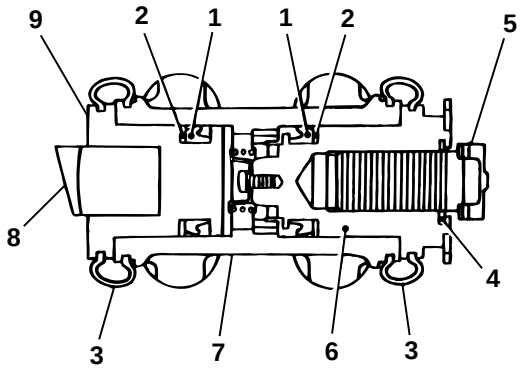

12967

1 Piston cup
2 Backup ring
3 Boot
4 Seal
5 Screw
6 Piston
7 Cylinder body
8 Anchor piece < Rear >
9 Piston < Rear >

Even if the brake lining has worn to the extent that the brake shoe clearance is higher than the specified value, the brake shoe clearance automatic adjusting mechanism automatically adjusts the brake shoe clearance to maintain the appropriate brake shoe clearance when the vehicle is braked when moving forwards.

● Operation of automatic shoe clearance adjusting mechanism (one-way clutch)

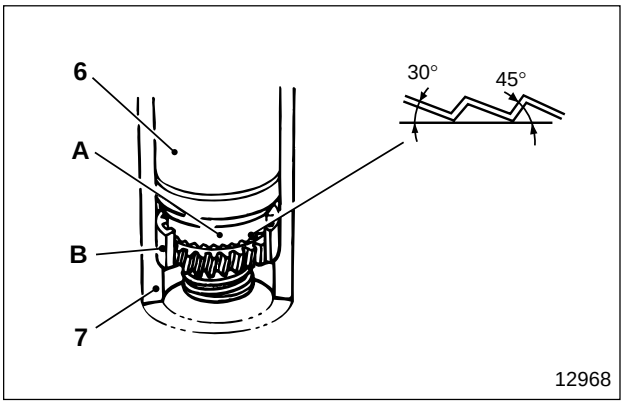

12968

30° : When piston **6** appears, the double helical gear slides out easily.
45° : When turning piston **6**, the double helical gear receives and maintains the rotational force.
A : Clutch
B : Guide

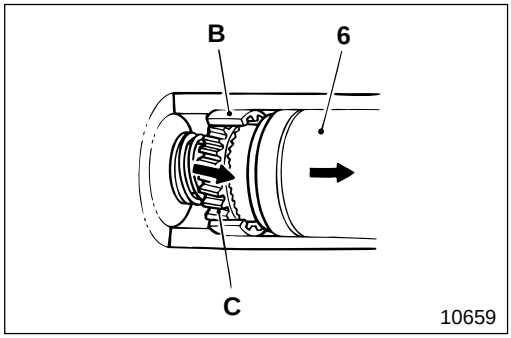

● **When braking starts**

- When hydraulic braking pressure acts on the wheel cylinder, it pushes piston **6** forward.
- Idler **C** of extended piston **6** is engaged with the diagonal gears cut in guide **B** of the cylinder body, so the idler advances while turning, in accordance with the travel of the piston.

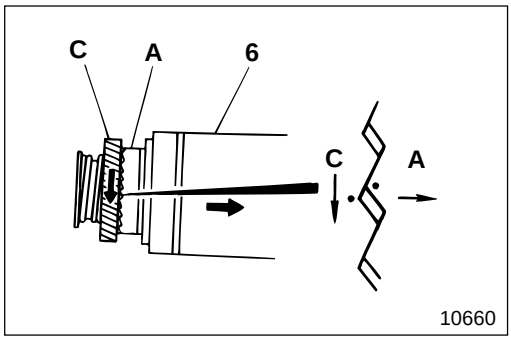

- The rotation of idler **C** slides out the double helical gear of clutch **A**.

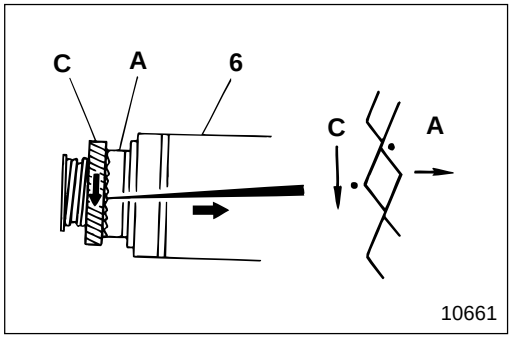

● **When depressing brake pedal**

When the brake shoe clearance conforms to the specified value

- The amount of travel of idler **C** is proportional to the amount of travel of piston **6**. The amount of travel is not enough to make the double helical gear of clutch **A** climb over the opposite double helical gear when the brake shoe clearance is within the specified value.

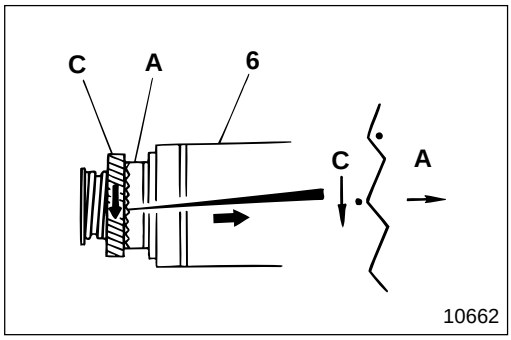

When the brake shoe clearance is higher than the specified value

- When the brake shoe clearance is higher than the specified value, the amount of travel of idler **C** increases enough to make the double helical gear of clutch **A** climb over the opposite double helical gear.

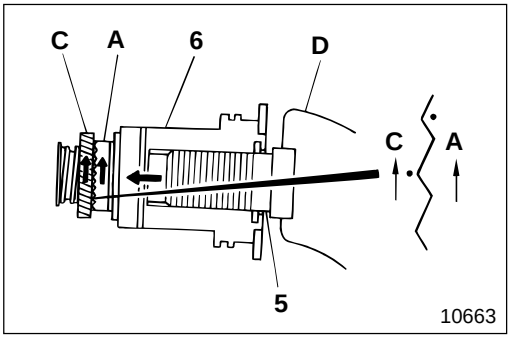

● **When releasing brake pedal**

- As the brake fluid pressure decreases and piston **6** returns, idler **C** also returns, turning in the opposite direction along guide **B** of the cylinder body.
- When the brake shoe clearance is within the specified value, piston **6** returns to its original position without turning, because the double helical gear of clutch **A** has not climbed over the opposite double helical gear.
- When the brake shoe clearance is higher than the specified value, piston **6** returns while turning by one gear tooth, since the double helical gear of clutch **A** has climbed over the opposite gear. This lowers the brake shoe clearance to the specified value, because screw **5** of the piston is fixed by brake shoe **D** and does not turn.

Air Compressor

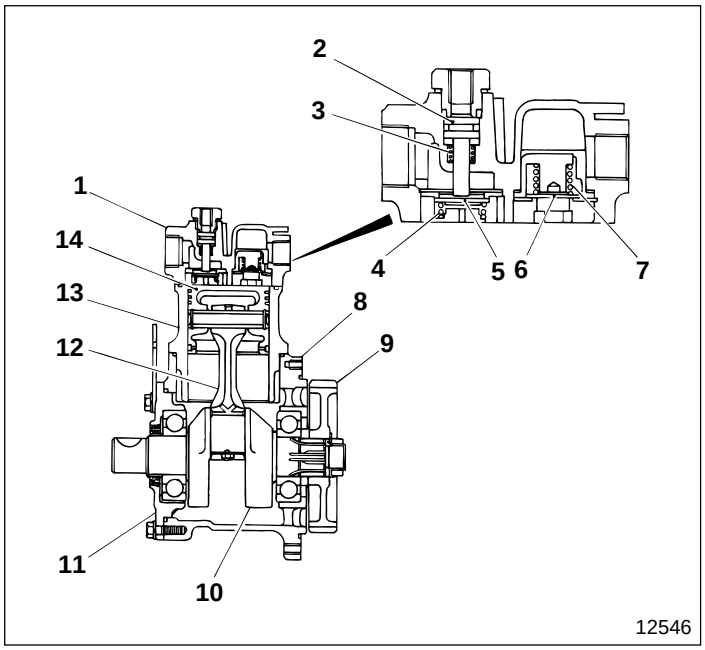

1 Cylinder head
2 Unloader valve
3 Unloader valve spring
4 Suction valve spring
5 Suction valve
6 Delivery valve
7 Delivery valve spring
8 Crankcase
9 Drive gear
10 Crankshaft
11 Bearing holder
12 Connecting rod
13 Cylinder liner
14 Piston

The air compressor is driven by the engagement of drive gear **9** with the engine timing gear.

● **During suction**

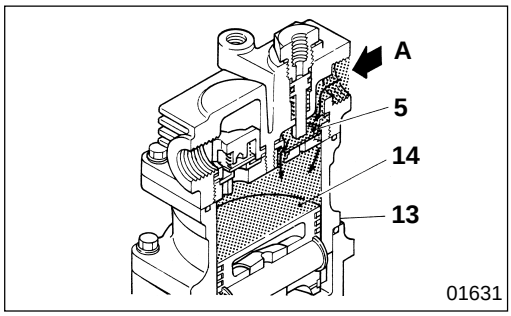

- When drive gear **16** is driven, crankshaft **10** engaged with the drive gear turns to force down piston **14**.
- The negative pressure generated at this time opens suction valve **5**, sucking air **A** into cylinder liner **13**.

● **During pressurized delivery**

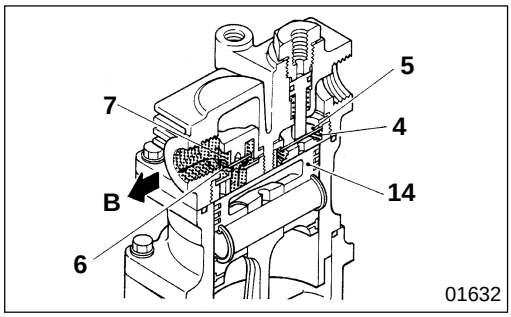

- As piston **14** rises and enters into the compression stroke, suction valve spring **4** closes suction valve **5**.
- The pressure of the compressed air overcomes the repercussive force of delivery valve spring **7** and opens delivery valve **6** to compress and deliver air **B** to the air tank.

● **When unloader valve operates**

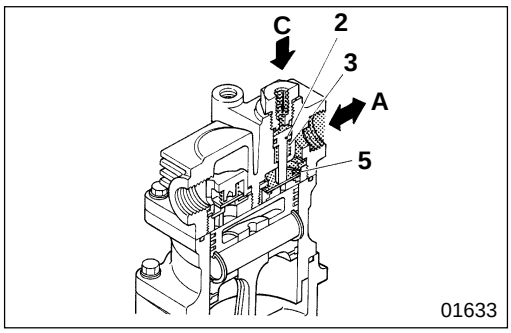

- When the air pressure in the air tank becomes higher than the specified value, the air pressure governor feeds compressed air **C** to unloader valve **2**. This forces down the unloader valve and holds suction valve **5** open at the same time. Therefore, air **A** is not compressed and the air compressor idles.
- When the air pressure in the air tank drops below the specified value, the air pressure governor discharges compressed air from the upper part of unloader valve **2**. So, unloader spring **3** returns the unloader valve to its original position.

Air Dryer

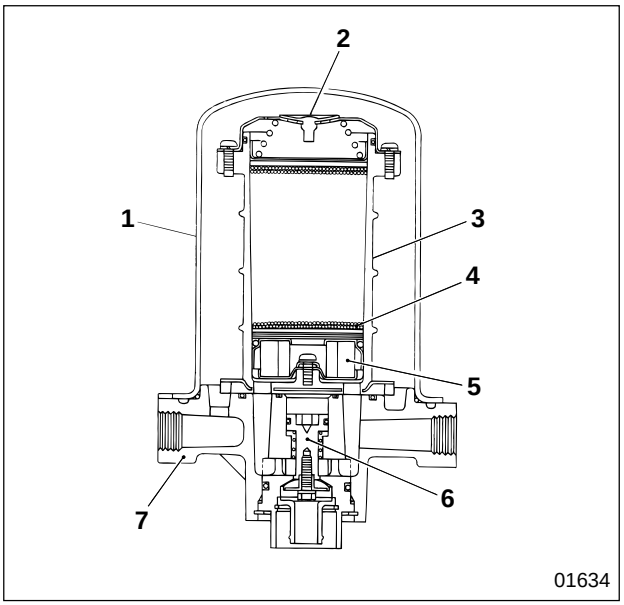

1 Purge chamber
2 Check valve
3 Case
4 Desiccant
5 Oil filter
6 Valve
7 Body

The air dryer removes moisture and oil in the air compressed by the air compressor and protects the brake assembly.

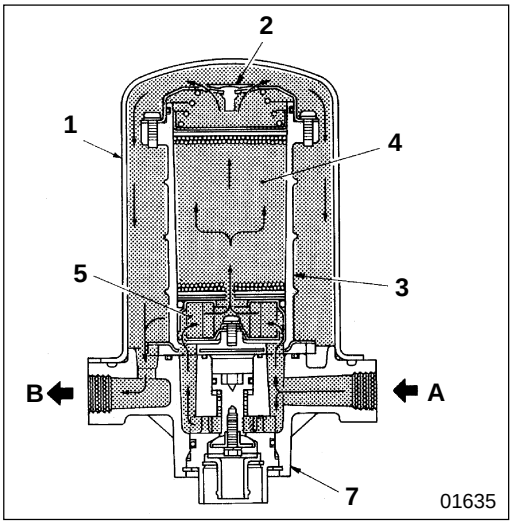

Dehumidification

- The pressurized air from the air compressor enters delivery side **A** of the air dryer. Once in body **7**, moisture and oil are separated from the air and collected in the bottom. Then, the air passes through oil filter **5**, where small oil droplets and dust are removed. Next, the air is delivered into case **3**, where moisture is removed by desiccant **4**.
- As the air travels from the bottom to the top of case **3**, it comes into contact with more dried desiccant. This removes residual moisture from the air, drying the air as it reaches the top of the case. The air passes through check valve **2** and purge chamber **1**, and is delivered to the air tank through exhaust side **B**.

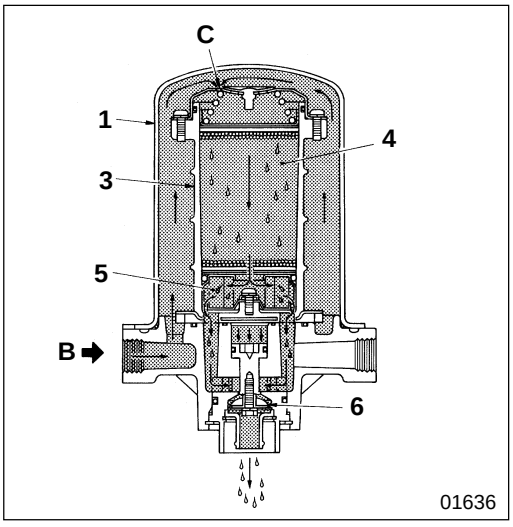

Regeneration of desiccant

- When the supply of air from the air compressor stops, pressure **D** from the air pressure governor opens valve **6** of the control port of the air dryer. The pressure in case **3** cleans oil filter **5**, releasing the condensed water and oil into the atmosphere.
- After being quickly decompressed, the dry air in purge chamber **1** passes through hole **C**, where the air expands under the reduced pressure, becoming super dry air. This air flows back through case **3** and collects the moisture in desiccant **4**, releasing this moisture into the atmosphere, thereby recycling the desiccant.

Air Pressure Governor

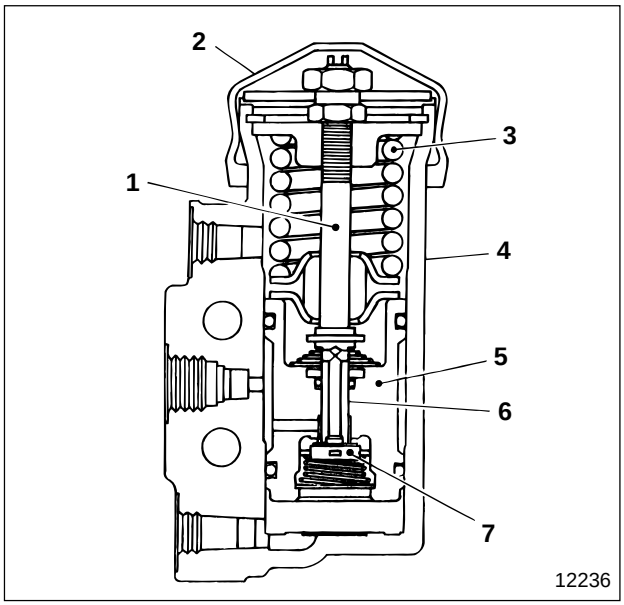

1 Adjusting screw
2 Cover
3 Spring
4 Body
5 Piston
6 Exhaust stem
7 Valve

The air pressure governor keeps the air pressure in the air tank at the specified pressure, by operating the air compressor with or without load in accordance with the air pressure in the air tank.

● **High specified-pressure**

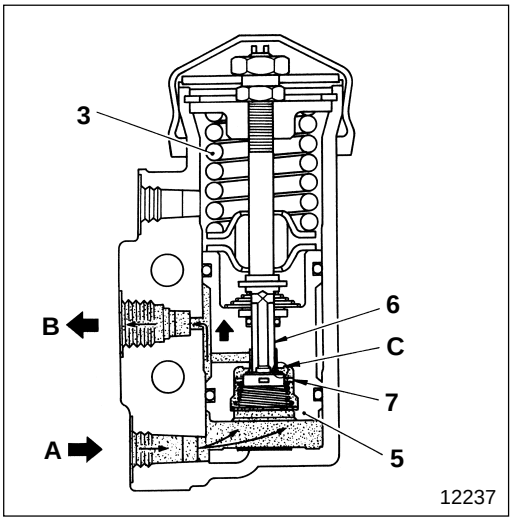

- Pressurized air **A** from the air tank acts constantly on piston **5**. As the pressure in the air tank rises to overcome the repercussive force of spring **3**, the piston rises and valve **7** closes.
- As air pressure **A** from the air tank rises further to become higher than the high specified-pressure, piston **5** rises further. Therefore, exhaust stem **6** opens inlet valve **C** and the air pressure in the air tank flows from unloader port **B** to the unloader valve of the air compressor via the inlet valve. Then the air compressor enters unloaded operation. Pressure also reaches the air dryer to recycle the desiccant.

● **Low specified-pressure**

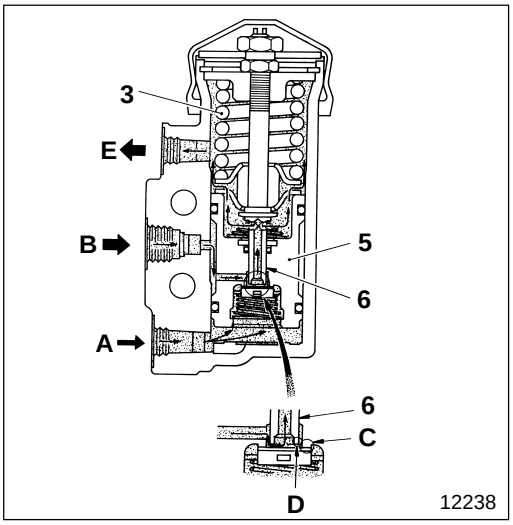

When pressurized air **A** from the air tank gradually drops below the specified-pressure, spring **3** forces down piston **5**. This closes inlet valve **C** and opens exhaust valve seat **D** so pressurized air **B**, up to the unloader valve of the air compressor, is discharged through the opening of cover **2** via exhaust stem **6** as exhausted air **E**, operating the air compressor at load. The pressurized air up to the air dryer is also discharged into the atmosphere.

M E M O

Exhaust Brake System

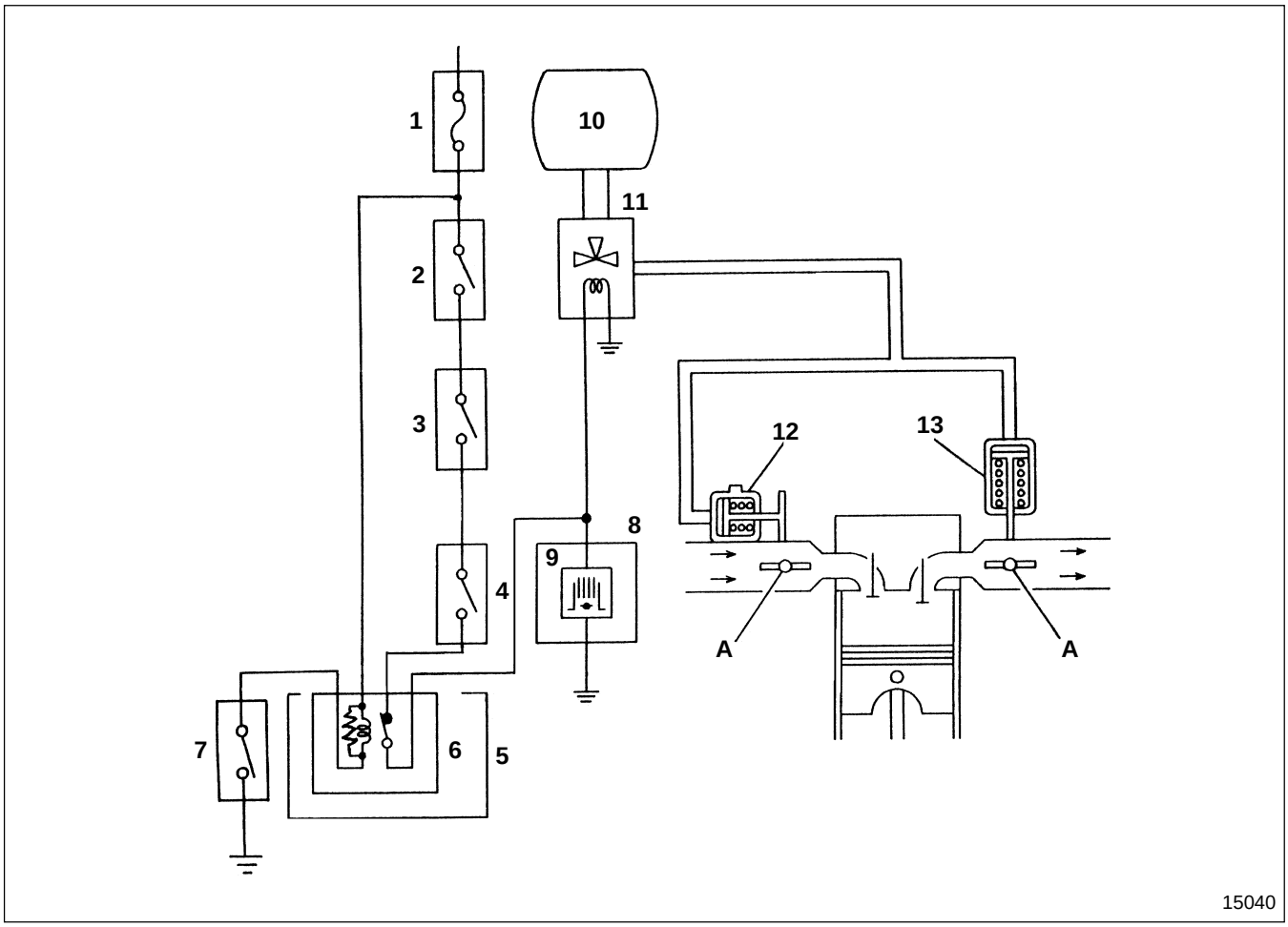

1 Fuse box
2 Clutch switch
3 Accelerator switch
4 Exhaust brake switch
5 Relay box
6 Exhaust brake cut relay
7 Transmission neutral switch
8 Meter cluster
9 Exhaust brake indicator lamp
10 Air tank
11 3-way magnetic valve
12 Intake silencer actuator
13 Exhaust brake unit

A : Butterfly valve

- Excitation of 3-way magnetic valve **11** causes the air pressure in air tank **10** to act on intake silencer actuator **12** and exhaust brake unit **13** to close butterfly valve **A**, activating the exhaust brake.
- If the exhaust brake is activated while the vehicle is stationary, the coolant temperature can rise excessively, overheating the engine. To avoid this, when the transmission is in neutral, transmission neutral switch **7** turns ON, cutting the exhaust brake system.

● When exhaust brake system is activated

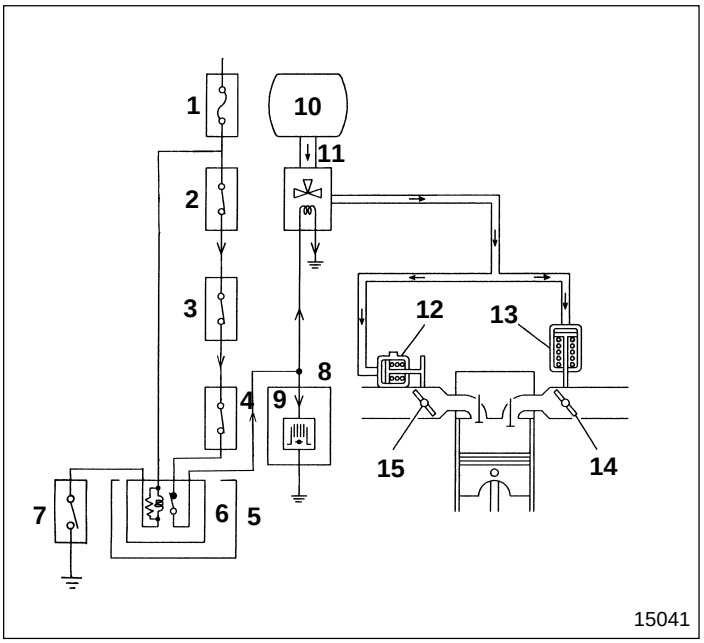

When exhaust brake switch **4** is turned on, the current flows as illustrated to activate the exhaust brake.

Fuse **1**→Clutch switch **2**→Accelerator switch **3**→Exhaust brake switch **4**→Exhaust brake cut relay **6**⟶3-way magnetic valve **11**→Ground

⟶Exhaust brake indicator lamp **9** (ON)→Ground

● When the exhaust brake system is released

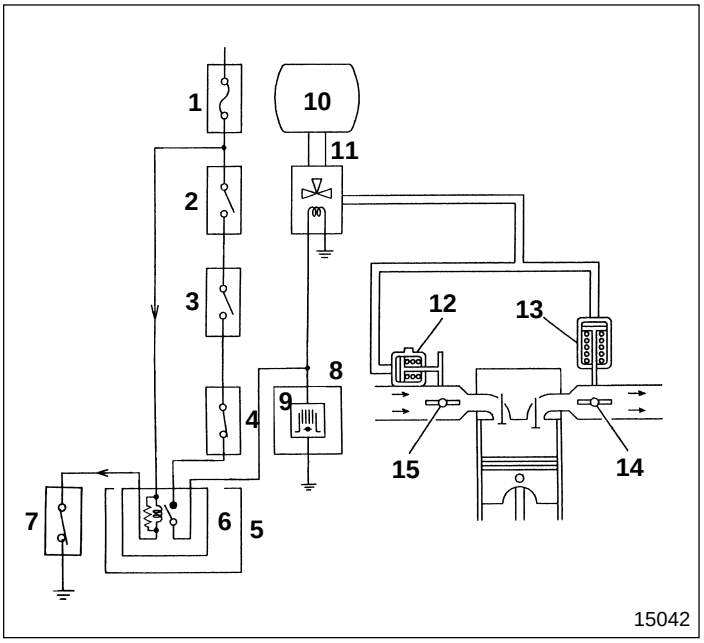

When the accelerator pedal or clutch pedal is depressed while the exhaust brake is working, all switches **3**, **2** turn off, shutting off the current, releasing the exhaust brake.

● When clutch pedal is depressed

Fuse **1**→Clutch switch **2** (OFF)→Since no current flows, the circuit turns off and the exhaust brake is released.

● When accelerator pedal is depressed

Fuse **1**→Clutch switch **2**→Accelerator switch **3** (OFF)→Since there is no grounding, current does not flow, so the exhaust brake is released.

● Releasing exhaust brake system by placing transmission in neutral

Fuse **1**→Exhaust brake cut relay **6** excitation→Transmission neutral switch **7**→Ground
Fuse **1**→Clutch switch **2**→Accelerator switch **3**→Exhaust brake switch **4**→Exhaust brake cut relay **6** (OFF)→Beyond this, current does not flow so the exhaust brake is released.

● Working principle of exhaust brake

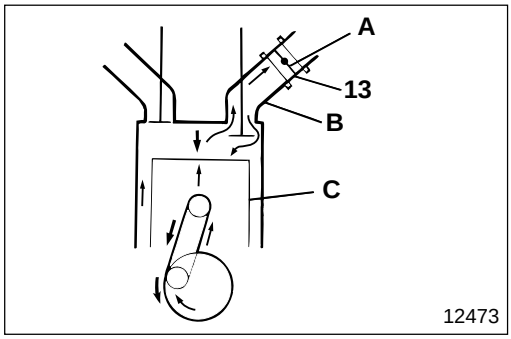

When butterfly valve **A** of exhaust brake unit **13**, in exhaust pipe **B**, is closed, the pressure in the exhaust pipe rises. The pressure rises further in the exhaust stroke, generating a force that pushes back piston **C**, the exhaust braking force.

● Exhaust brake unit

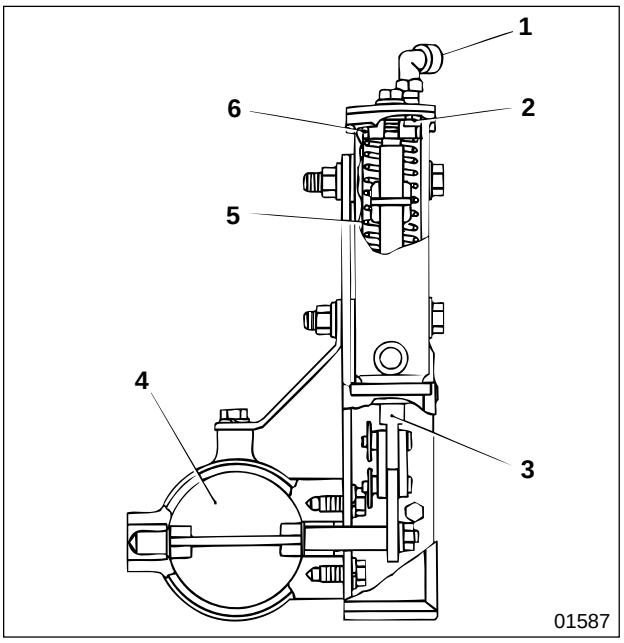

1 Connector
2 Packing
3 Shaft assembly
4 Butterfly valve
5 Spring
6 Plate

● Intake silencer

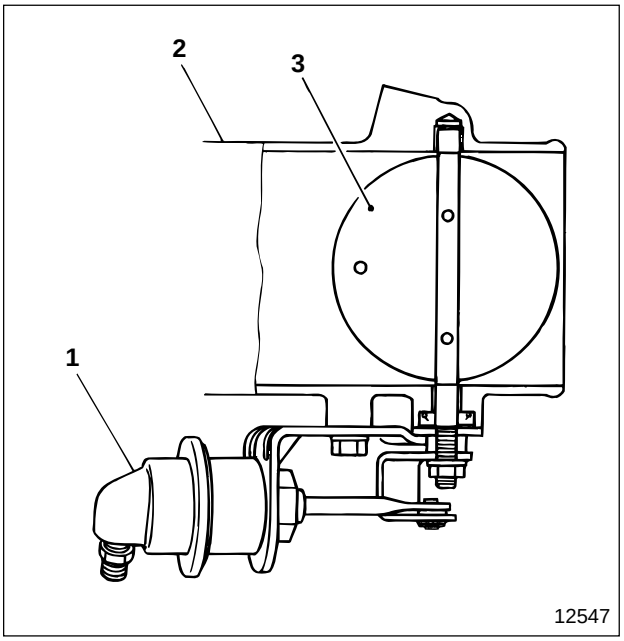

1 Actuator assembly
2 Intake pipe
3 Butterfly valve

Brake Warning System

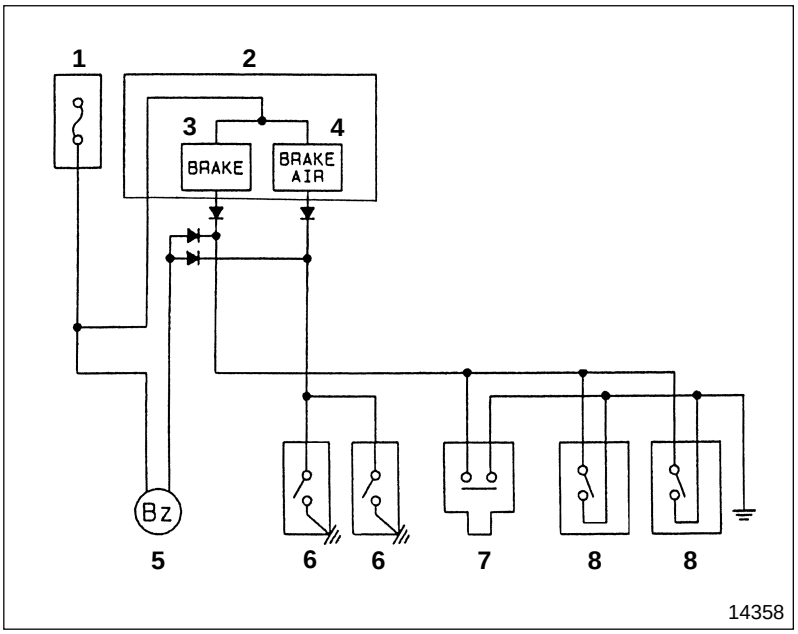

1 Fuse and relay box
2 Meter cluster
3 Brake fluid warning lamp
4 Air warning lamp
5 Warning buzzer
6 Low air pressure switch
7 Brake fluid level switch (installed on fluid tank)
8 Stroke switch (installed on airmaster)

The brake warning system consists of two circuits: the air pressure warning circuit and the brake fluid warning circuit. The first detects decrease of air pressure in the air tank, the second detects decrease in brake fluid in the fluid tank and brake fluid leakage in the brake fluid system. Both circuits light warning lamps and at the same time sound a buzzer to alert the driver.

● Air pressure warning circuit

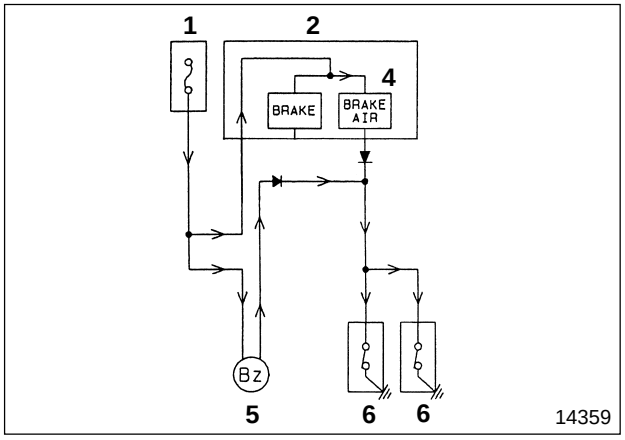

When the air pressure in the air tank drops below the specified value, low air pressure switch **6** turns on to light air warning lamp **4** and sound warning buzzer **5**.

● Brake fluid warning circuit

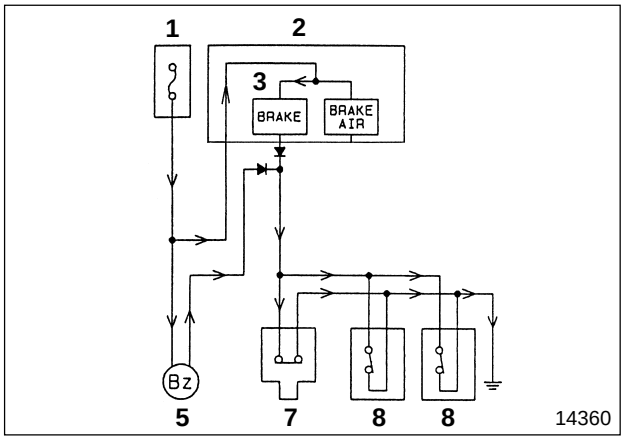

- When the brake fluid in the fluid tank drops below the specified level, brake fluid level switch **7** in the fluid tank turns on, brake fluid warning lamp **3** lights and warning buzzer **5** sounds. At this time, current flows as follows:
- If brake fluid leaks from the brake fluid system, stroke switch **8** of the airmaster turns on, brake fluid warning lamp **3** lights and warning buzzer **5** sounds.

● Brake fluid level switch

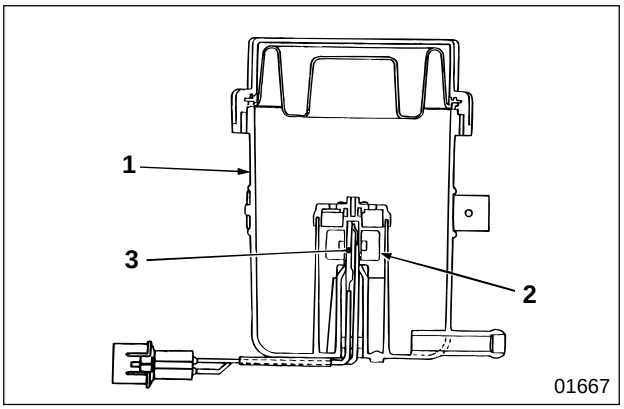

1 Fluid tank
2 Float
3 Brake fluid level switch

- Brake fluid level switch **3**, installed on fluid tank **1**, monitors the brake fluid level in the fluid tank. If the brake fluid level drops below the specified level, float **2** moves and lights up the warning lamp within the meter cluster to alert the driver.

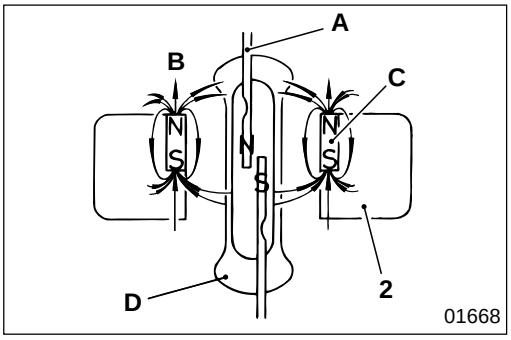

- If the brake fluid level in fluid tank **1** drops and float **2** drops lower than level **L**, magnetic force **B** that passes through the contact point (ferromagnetic body **A**), increases generating north and south poles at the ends of the contact points. Therefore, the contact points pull each other and overcome the repercussive force of the springs of the contact points, forming an electric circuit.
  C : Permanent magnet
  D : Glass

● Wheel Brake

Possible causes	Symptoms	Wheel brake does not work effectively: Air leakage when brake pedal depressed	Wheel brake does not work effectively: Air leakage when brake pedal released	Wheel brake does not work effectively: No air leakage but brake works ineffectively	Wheel brake does not work effectively: Air pressure low	Brake drum over-heating: Brake shoe self-return poor after releasing brake pedal (Wheel drags)	Noise when brake pedal depressed	One-sided braking	Wheel brake works suddenly	Brake warning lamp lights
Wheel brake	Wheel cylinder malfunctioning			○				○		○
	Brake lining surface contaminated with oil			○						
	Brake lining surface hardened			○			○			
	Brake fluid leaking because wheel cylinder cup worn			○						
	Brake lining worn									○
	Brake lining worn exposing rivet head						○			
	Brake drum interior worn unevenly						○			
	Brake shoe and brake lining close contact faulty						○			
	Brake drum installation loose						○	○		
	Brake lining materials unequal							○		
	Brake lining contact faulty							○		
	Brake drum runout							○		
	Backing plate warped							○		
	Brake shoe clearance insufficient					○		○	○	
	Brake shoe return spring deteriorated or fractured					○		○		
	Wheel cylinder piston return faulty					○		○		
	Brake fluid return faulty because brake pipe or joints clogged					○				

Possible causes	Symptoms	Wheel brake does not work effectively				Brake drum over-heating				
		Air leakage when brake pedal depressed	Air leakage when brake pedal released	No air leakage but brake works ineffectively	Air pressure low	Brake shoe self-return poor after releasing brake pedal (Wheel drags)	Noise when brake pedal depressed	One-sided braking	Wheel brake works suddenly	Brake warning lamp lights
Dual brake valve	O-ring damaged	○								
	Primary and secondary valve airtightness faulty	○	○							
	Primary and secondary valve return faulty or exhaust port clogged with foreign particles					○				
Airmaster	Power cylinder lubrication faulty or rubber packing damaged			○						
	Hydraulic piston valve seal close contact faulty			○						
	Hydraulic piston cup packing damaged, wrong combination, or foreign particles adhering to it			○				○		
	Exhaust port clogged with foreign particles					○				
	Push rod bent					○				
	Power cylinder rubber packing lubricated incorrectly					○				
Brake air system	Connector loose	○	○							
	Air leakage				○					
	Air pressure governor adjusted incorrectly				○					
	Air compressor malfunctioning				○					
Brake fluid system	Brake fluid leaking or insufficient			○						○
	Air mixed in brake fluid system			○						○
Tire	Left and right air pressure different Gr 31							○		
Suspension	Leaf spring U-bolt loose Gr 33, 34							○		

Possible causes / Symptoms		Drainage from air tank drain cock	Drainage not drawn off from exhaust port	Air dryer interior frozen	Air leakage from exhaust port	Air pressure in air reservoir drops extraordinarily	Engine oil coming out exhaust port	Remarks
Air Dryer	Desiccant deteriorated	○						
	Heater not working and air dryer frozen		○					
	Valve malfunctioning because of foreign particles adhering to it		○					
	No warming because heater wiring broken			○				
	Heater malfunctioning because thermostat faulty			○				
	Temperature extremely low because of snow and ice sticking to air dryer body			○				
	Heater malfunctioning because wiring to thermostat disconnected			○				
	Valve seat close contact faulty because of clogging by foreign particles				○			
	Dry air returning from air tank because air tank check valve malfunctioning during air compressor unloading cycle					○		
	Air compressor oiling-up						○	

● Exhaust Brake

Possible causes \ Symptoms		Exhaust brake does not work	Exhaust brake cannot be released	Intake silencer does not work	Intake silencer cannot be released	Remarks
Exhaust brake unit	Valve assembly malfunctioning	○	○			
	Valve assembly shaft stuck	○	○			
	Control cylinder malfunctioning	○				
	Butterfly valve adjusted incorrectly	○				
Intake silencer	Malfunctioning			○	○	
3-way magnetic valve	Malfunctioning	○	○	○		Gr 54
Brake air system	Air pressure abnormal	○		○		
	Air pipes crushed	○		○		
Electric system	Malfunctioning	○	○	○	○	Gr 54

INSPECTION AND ADJUSTMENT MOUNTED IN VEHICLE

Replacement of Brake Fluid

Fluid

Location	Points of application	Kinds	Quantity
—	Fluid tank	Brake fluid (SAE J1703f or FMVSS No.116 DOT3)	As required

Special tools

Unit : mm {in.}

Location	Tool name and shape	Part No.	Application
1	Vinyl hose 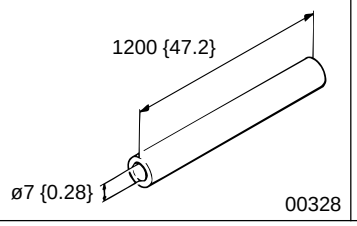	MH033102	Air bleeding

WARNING

- **You must use new brake fluid (SAE J1703f or FMVSS No. 116 DOT3).**
- **Do not add different quality fluid or mineral oil (gas oil, engine oil, gear oil, automatic transmission fluid, etc.) to the brake system, because this will cause the rubber parts of the brake system to swell, resulting in brake dragging or ineffective braking.**
- **Do not allow foreign particles or water to get mixed in with the brake fluid when you add it.**
- **If you use a mug for adding brake fluid, keep it solely for that purpose to prevent contamination from different quality fluids or mineral oil.**

CAUTION

- **Be careful not to splash brake fluid on related parts as this could damage the paintwork.**
- **Be sure to wipe off brake fluid immediately if you splash it on the paintwork.**

NOTE

Supply and maintain brake fluid to the “H” level of the fluid tank.

- Start engine and let it idle until brake fluid replacement is completed.

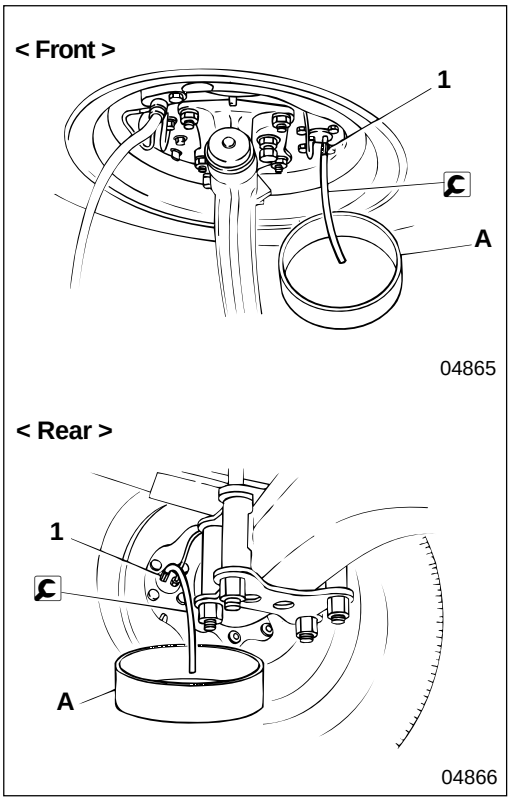

- Attach one end of vinyl hose to air bleeder **1** and place the other end in container **A**.

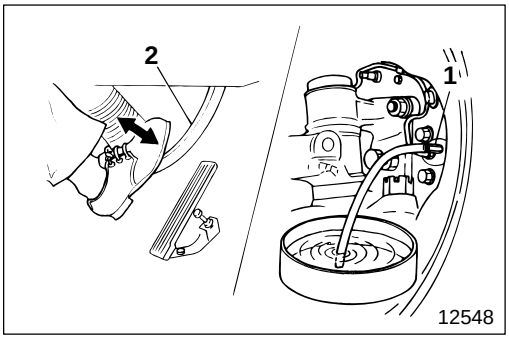

- Loosen air bleeder **1** and depress brake pedal **2** to drain brake fluid completely.

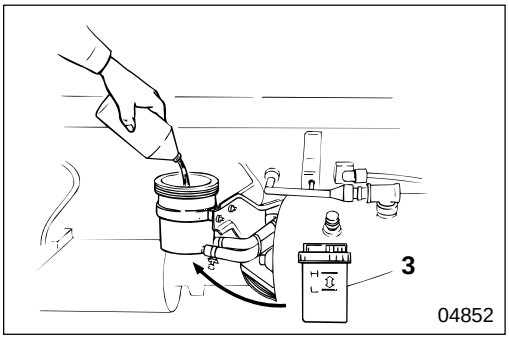

- Maintain a supply of new brake fluid up to the "**H**" level of fluid tank **3**, depress the brake pedal repeatedly until the old brake fluid of the brake system is replaced with new fluid.

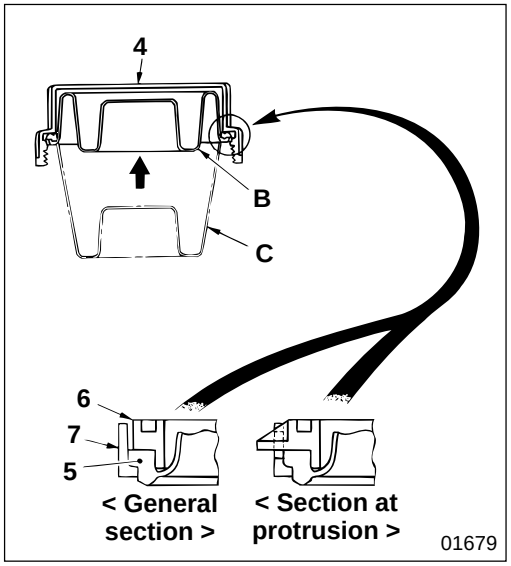

- If diaphragm **5** is not in its normal posture when the brake fluid is supplied, correct it to its normal posture, and install cap **4**. If brake fluid leaks from the cap area after you have supplied brake fluid, check whether the diaphragm is assembled as illustrated.

  6 : Slide ring
  7 : Ring cover
  B : Correct condition of diaphragm when brake fluid is being supplied
  C : Condition when diaphragm is extended when brake fluid has decreased

- Air bleeding of brake system. P35-32

Air Bleeding of Brake System

Tightening torque

Unit : N·m {lbf.ft, kgf·m}

Location	Parts to be tightened	Tightening torque	Remarks
—	Air bleeder (Airmaster)	6.9 to 12.7 {5.1 to 9.4, 0.7 to 1.3}	—
—	Air bleeder (Wheel brake)	7.8 to 12 {5.8 to 8.5, 0.8 to 1.2}	—

Fluid

Location	Points of application	Kinds	Quantity
—	Fluid tank	Brake fluid (SAE J1703f or FMVSS No.116 DOT3)	As required

Special tools

Unit : mm {in.}

Location	Tool name and shape	Part No.	Application
2	Vinyl hose 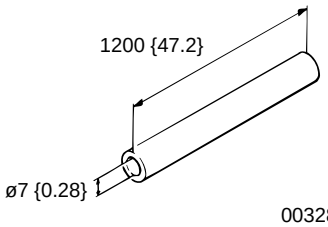	MH033102	Air bleeding

WARNING

- **You must use new brake fluid (SAE J1703f or FMVSS No. 116 DOT3).**
- **Do not add different quality fluid or mineral oil (gas oil, engine oil, gear oil, automatic transmission fluid, etc.) to the brake system, because this will cause the rubber parts of the brake system to swell, resulting in brake dragging or ineffective braking.**
- **Do not allow foreign particles or water to get mixed in with the brake fluid when you add it.**
- **If you use a mug for adding brake fluid, keep it solely for that purpose to prevent contamination from different quality fluids or mineral oil.**

CAUTION

- **Be careful not to splash brake fluid on related parts as this could damage the paintwork.**
- **Be sure to wipe off brake fluid immediately if you splash it on the paintwork.**

NOTE

- **Supply and maintain brake fluid to the "H" level of the fluid tank.**
- **Make sure you maintain brake fluid at the "H" level of the fluid tank since the brake fluid level drops during air bleeding.**

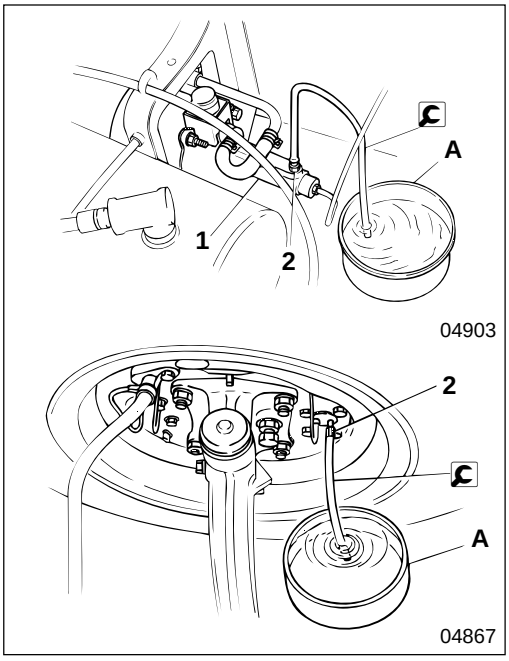

- Start engine and let it idle until brake fluid replacement is completed.
- Attach one end of vinyl hose to front or rear airmaster **1**. Then, attach one end of another vinyl hose to air bleeder **2** of the wheel brake. Finally, place both free ends in container **A** filled with brake fluid.
- Carry out air bleeding in the following sequence:

Front brake system	Rear brake system
Airmaster for front	Airmaster for rear
↓	↓
Right-hand side wheel brake	Right-hand side wheel brake
↓	↓
Left-hand side wheel brake	Left-hand side wheel brake

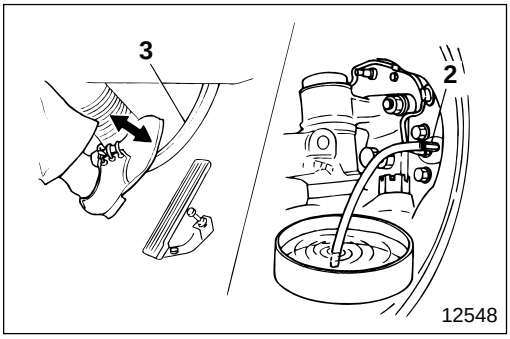

- Depress brake pedal **3** slowly a few times, and with the brake pedal depressed, loosen air bleeder **2** to drain brake fluid containing air.

- Tighten air bleeder **2**, and release brake pedal **3**.
- Repeat this service procedure until air is no longer present in the fluid being drained.
- Tighten air bleeder **2** at specified torque as soon as brake fluid flowing out is free of air bubbles.

- Adjust brake shoe clearance when you have finished air bleeding. P35-32
- Check that brake fluid comes up to level "**H**" of fluid tank. If it does not, refill with new brake fluid.
- Depress brake pedal **3** a few times and check for any leakage of brake fluid, then test the brakes.
- When you test the brakes, if the brake warning lamp within the meter cluster lights, it means that air has not been bled completely. Redo air bleeding.

Inspection and Adjustment of Clearance between Brake Pedal and Floor Panel

Service standards

Unit : mm {in.}

Location	Maintenance item	Standard value	Limit	Remedy
—	Clearance between brake pedal and floor panel (with pedal depressed at 490 N {110 lbf, 50 kgf})	45 {1.8} or more	—	Adjust

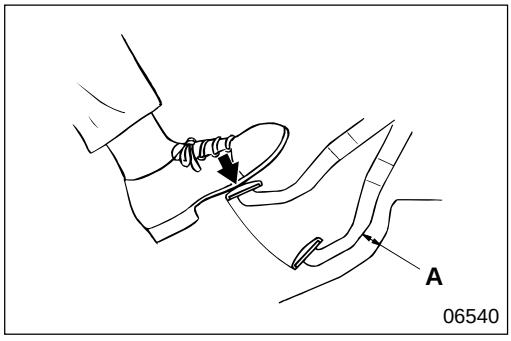

[Inspection]
Depress the brake pedal using 490 N {110 lbf, 50 kgf} when the engine is idling to check if clearance **A** between the brake pedal and the floor panel conforms to the standard value. If the measured value deviates from the standard value, adjust the height of the brake pedal.

[Adjustment]
P35-38

Thickness Inspection and Replacement of Brake Lining

Service standards

Unit : mm {in.}

Location	Maintenance item	Standard value	Limit	Remedy
2	Thickness of brake lining	—	5.5 {0.22} (Side shoulder means wear limit)	Replace

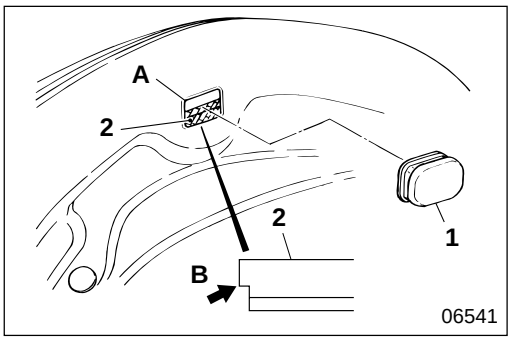

[Inspection]

NOTE

Be sure to inspect at two points for each wheel per side.

- Remove check hole plug **1** from the backing plate.
- Inspect through check hole **A** whether brake lining **2** is worn to the point of side shoulder **B** of the brake lining (the limit).
- If the measured value is lower than the limit, replace brake lining **2** on the same axle as a unit.
- After inspection, be sure to reinstall check hole plug **1**.

[Replacement]

P35-56, 64

Inspection of Brake Shoe Clearance

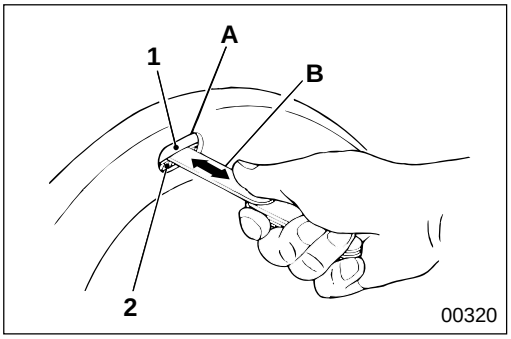

NOTE

When the vehicle is jacked up and the wheel is being turned, make sure that there is no dragging.

- Remove the check hole plug from the backing plate.
  A : Check hole
- Try to insert a 1 mm {0.039 in.} feeler gauge **B** between brake drum **1** and brake lining **2**. Check that the clearance is too small to let the feeler gauge enter.
  If feeler gauge **A** enters the clearance, disassemble the wheel cylinder and inspect.
  P35-62, 70

Inspection and Maintenance of Air Dryer

Carry out inspection and maintenance according to the following interval or vehicle milage.

(1) Every three months or 10000 km {6000 miles}

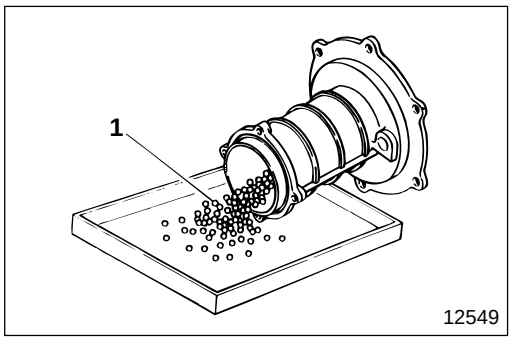

- To check that the air dryer operates correctly, open the drain cock of the air tank and see if any drainage comes out.
- If a little drainage comes out, check if desiccant **1** is discolored. If more than one fifth of the desiccant has changed color from white to brown, renew desiccant.

NOTE

In an operational environment where the decrease of the ambient temperature in the air tank is higher than 16°C {29°F}, a little moisture might collect.

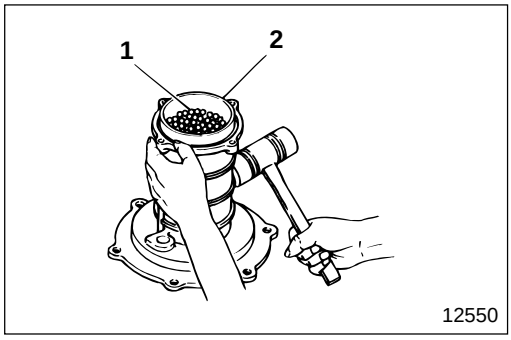

- Pour desiccant **1** into container **2**, tap around the container lightly to settle the desiccant.

- Carefully inspect the drainage from the exhaust port of the air dryer body. Inspect the air compressor and take appropriate action for abnormal oil consumption.
  P35-72

(2) Every year or every 60000 km {36000 miles}

Disassemble the air dryer body. Replace the oil filter, filter and all the rubber parts together with a repair kit.
P35-80

Sealant

Location	Points of application	Kinds	Quantity
—	Taper thread of connector	THREEBOND 1110B	As required

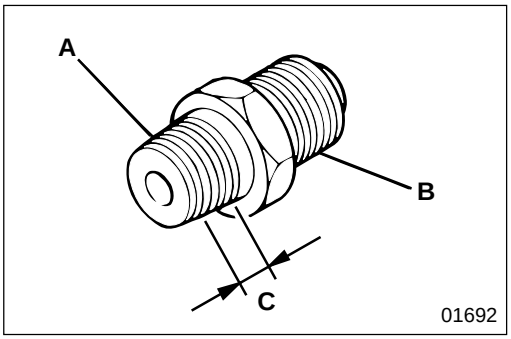

- If the connectors for the brake air system are to be reused after removal, thoroughly remove residual sealant, oil, moisture, etc.
- Apply sealant to the threads of the connector taper except for one or two turns from the end, then tighten.
- When positioning, adjust in the tightening direction.
  A : Taper thread
  B : Parallel thread (Do not apply sealant here)
  C : Apply sealant here

BRAKE PEDAL

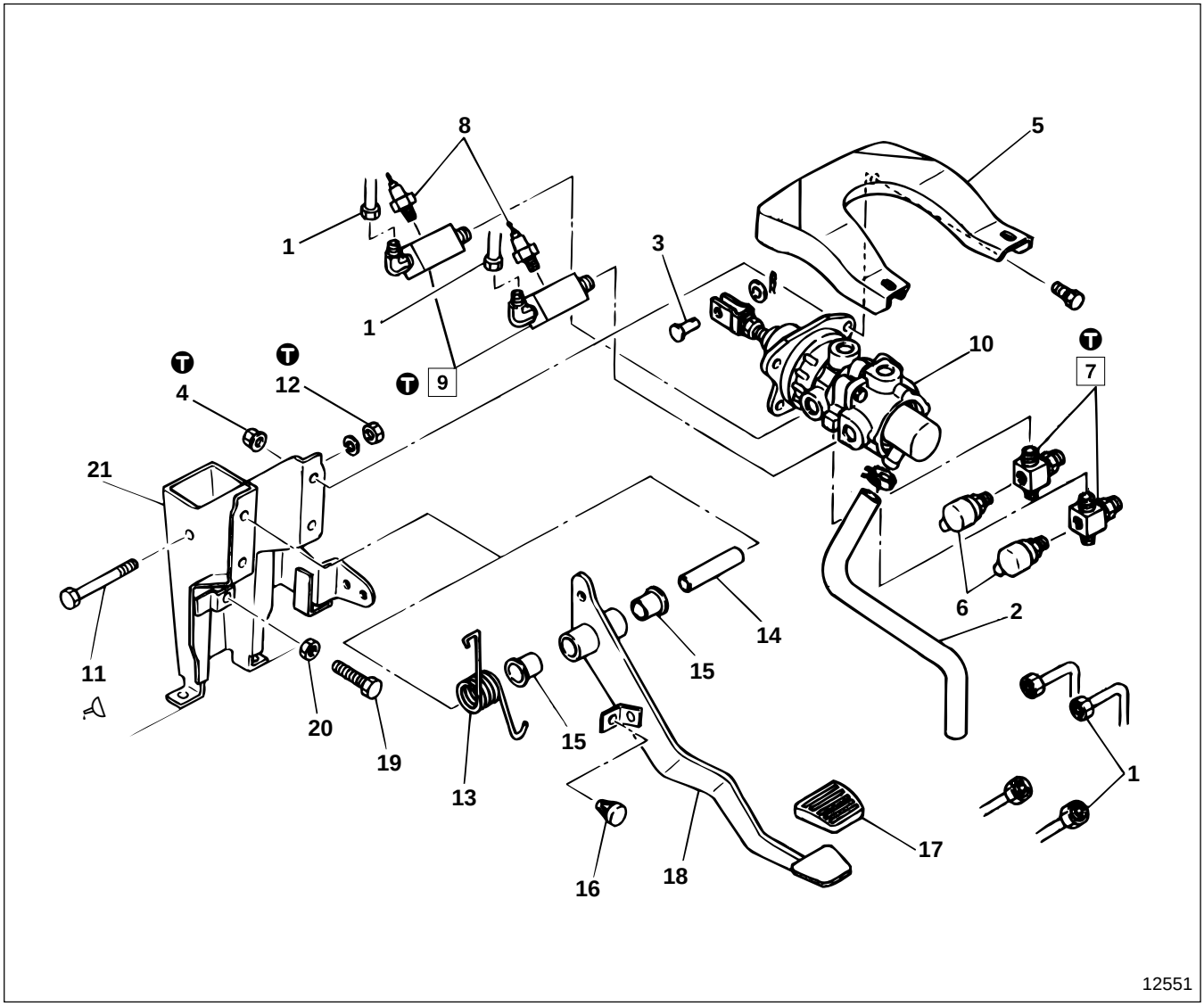

● **Removal sequence**

1 Nylon tube
2 Vinyl tube
3 Clevis pin
4 Nut
5 Valve support bracket
6 Stop lamp switch Gr 54
7 Connector
8 Low air pressure switch Gr 54
9 Connector
10 Dual brake valve P35-42
11 Bolt
12 Nut
13 Return spring
14 Collar
15 Bushing
16 Stopper
17 Pedal pad
18 Brake pedal
19 Pedal stopper bolt
20 Lock nut
21 Support assembly

● **Installation sequence**

Follow the removal sequence in reverse.

Service standards

Unit : mm {in.}

Location	Maintenance item	Standard value (Basic diameter in [ ])	Limit	Remedy
14, 15	Clearance between collar and bushing	[16] 0.02 to 0.26 {[0.63] 0.00079 to 0.010}	0.05 {0.0020}	Replace
18	Installation height of brake pedal	305 {12.0}	—	Adjust
	Stroke of brake pedal	54 {2.13}	—	Adjust

Tightening torque

Unit : N·m {lbf.ft, kgf·m}

Location	Parts to be tightened	Tightening torque	Remarks
4	Nut (Dual brake valve mounting)	19 to 28 {14 to 21, 1.9 to 2.9}	—
7	Connector	29.4 to 39.2 {22 to 29, 3.0 to 4.0}	—
9	Connector	29.4 to 117.6 {22 to 87, 3.0 to 12}	—
12	Nut (Brake pedal mounting)	34.3 to 53.9 {25 to 40, 3.5 to 5.5}	—

Lubricant

Location	Points of application	Kinds	Quantity
11	Friction surfaces of bolt and bushing	Chassis grease [NLGI No.1 (Ca soap)]	As required

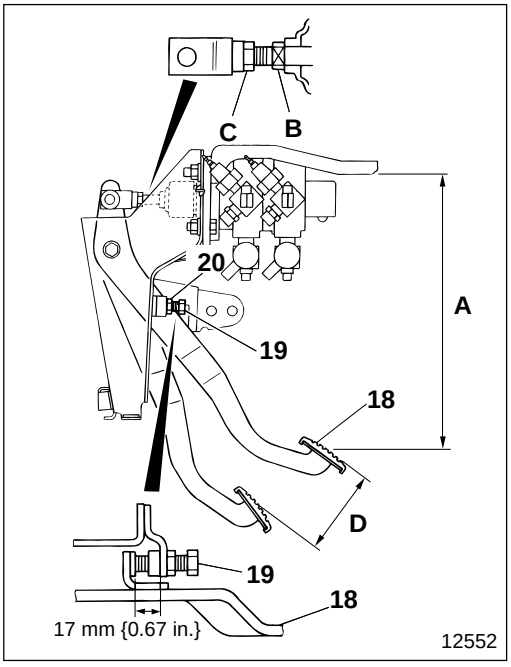

◆ Service procedure

● Adjustment after assembly

(1) Adjustment of brake pedal installation height

- Adjust the installation distance of pedal stopper bolt **19** to 17 mm {0.67 in.}.
- Turn operating rod **B** to adjust brake pedal installation height **A** to the standard value. After adjustment, fix using lock nut **C**.

(2) Inspection of brake pedal stroke

- Make sure that brake pedal stroke **D** is the standard value when brake pedal **18** is depressed fully.
- If any fault is found, adjust the brake pedal installation height.

WARNING ⚠

Make sure that brake pedal 18 is stopped by operating rod B, because if the brake pedal makes contact with the floor panel when depressed fully, braking force is reduced.

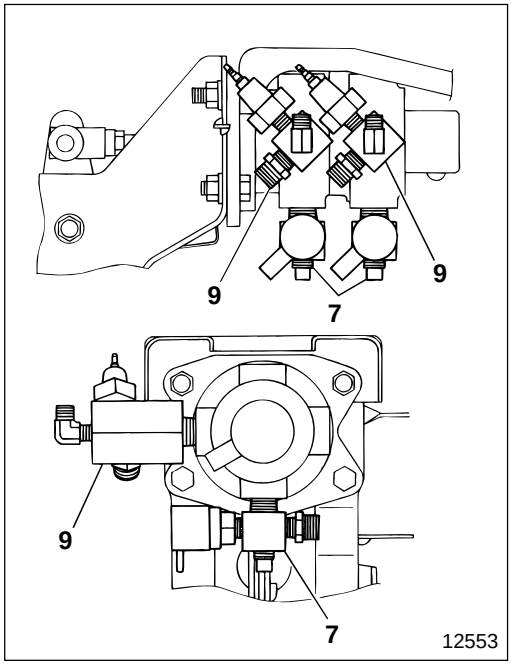

7 **9** **Installation of connector**

For connectors **7**, **9**, determine the direction within one turn of exceeding 29 N·m {22 lbf.ft, 3 kgf·m}.

M E M O

DUAL BRAKE VALVE

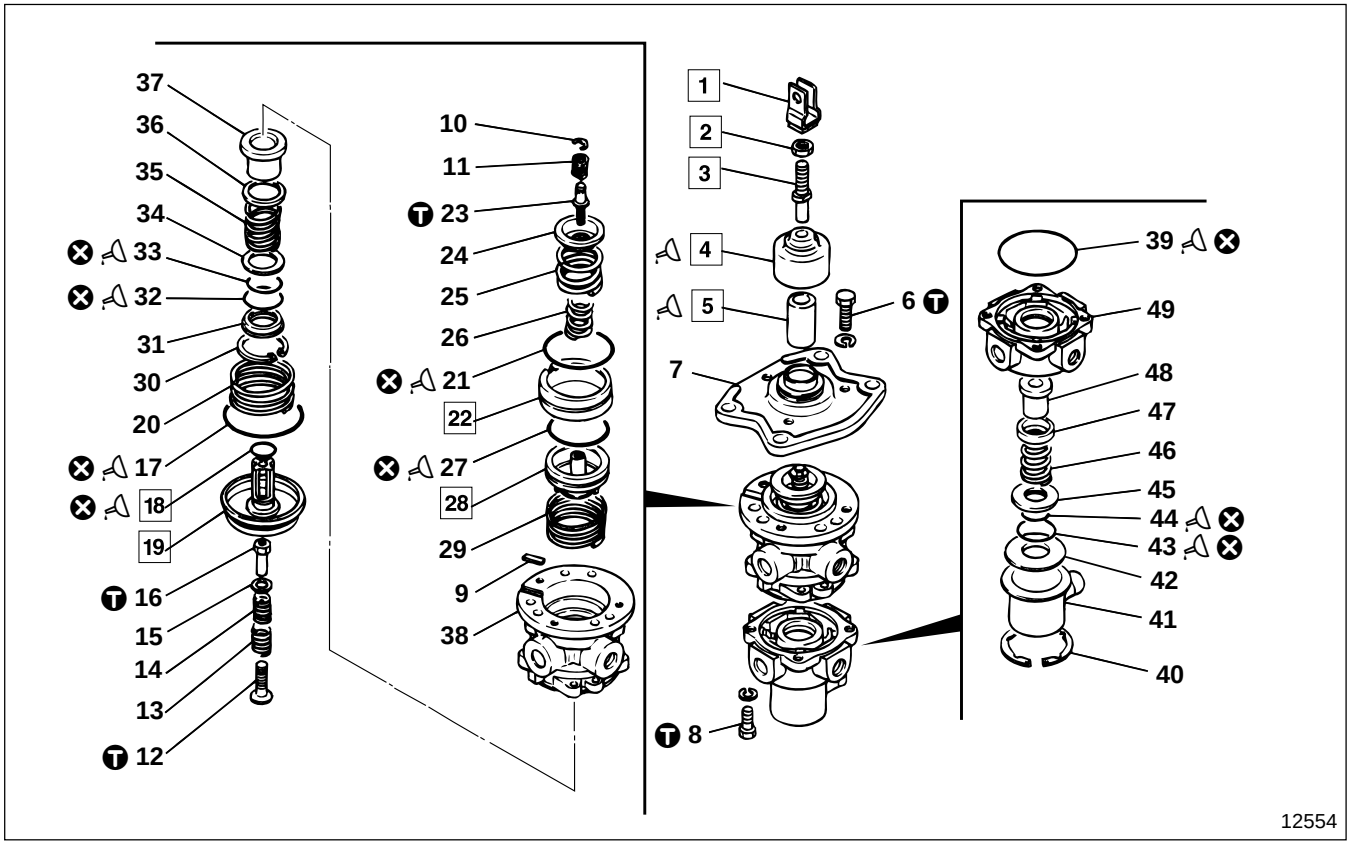

● **Work before disassembly**

P35-45

● **Disassembly sequence**

1 Clevis
2 Nut
3 Push rod
4 Boot
5 Plunger
6 Bolt
7 Plate
8 Bolt
9 Plug
10 Retaining ring
11 Spring
12 Screw
13 Outer spring
14 Inner spring
15 Washer
16 Sleeve
17 O-ring
18 O-ring
19 Relay piston
20 Relay piston spring
21 O-ring
22 Bushing
23 Self-locking bolt
24 Spring seat
25 Outer spring
26 Inner spring
27 O-ring
28 Primary piston
29 Spring
30 Retaining ring
31 Valve retainer
32 O-ring
33 O-ring
34 Washer
35 Valve spring
36 Washer
37 Inlet valve
38 Body
39 O-ring
40 Retaining ring
41 Valve seat
42 Washer
43 O-ring
44 O-ring
45 Valve retainer
46 Valve spring
47 Valve retainer
48 Inlet valve
49 Cover

⊗ : Non-reusable parts

● **Assembly sequence**

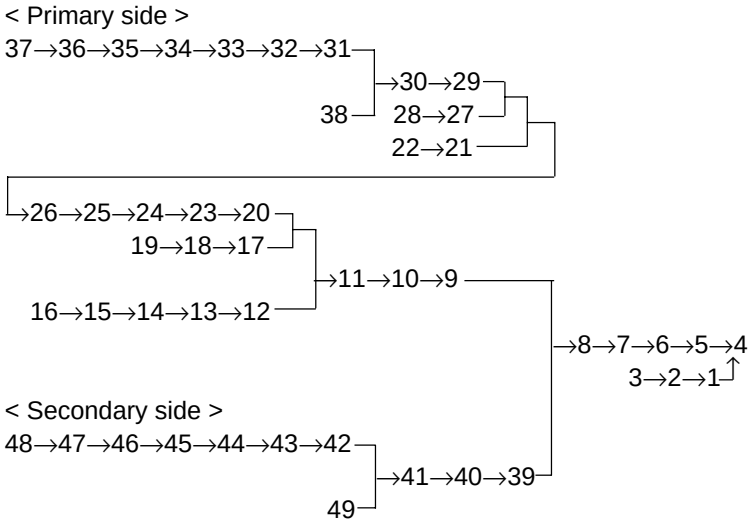

Repair kit : Dual brake valve kit

● **Inspection of function after assembly**

P35-45

DUAL BRAKE VALVE

Service standards

Unit : mm {in.}

Location	Maintenance item	Standard value	Limit	Remedy
5	Outer diameter of plunger	19.9 {0.783}	19.8 {0.780}	Replace
7	Inner diameter of bushing	20 {0.787}	20.08 {0.791}	Replace plate
11	Spring load (Installed length 12.6 {0.496})	—	215 N {49 lbf, 22 kgf}	Replace
20	Relay piston spring load (Installed length 12.8 {0.504})	—	47 N {11 lbf, 48 kgf}	Replace
25	Outer spring load (Installed length 26.5 {1.04})	—	214 N {48 lbf, 21.8 kgf}	Replace
26	Inner spring load (Installed length 19.1 {0.75})	—	60 N {13 lbf, 6.1 kgf}	Replace
29	Spring load (Installed length 17 {0.67})	—	97 N {22 lbf, 9.9 kgf}	Replace
35	Valve spring load (Installed length 14.3 {0.56})	—	37 N {8.4 lbf, 38 kgf}	Replace
46	Valve spring load (Installed length 12.8 {0.51})	—	47 N {11 lbf, 4.8 kgf}	Replace
—	Play — Input air pressure 685 kPa {100 lbf/in², 7 kgf/cm²} — Push rod stroke: 1.5 {0.059} — Output air pressure: —	—	—	—
	Pressure stroke — Input air pressure 685 kPa {100 lbf/in², 7 kgf/cm²} — Push rod stroke: $1.5^{+0.6}_{-0.4}$ {$0.059^{+0.024}_{-0.016}$} — Output air pressure: 29 kPa {43 lbf/in², 0.3 kgf/cm²} or less	—	—	Replace springs
	Pressure stroke — Input air pressure 685 kPa {100 lbf/in², 7 kgf/cm²} — Push rod stroke: 6 {0.24} — Output air pressure: 310 kPa {45 lbf/in², 3.18 kgf/cm²}	—	—	
	Pressure stroke — Input air pressure 685 kPa {100 lbf/in², 7 kgf/cm²} — Push rod stroke: 7 {0.28} — Output air pressure: 685 kPa {100 lbf/in², 7 kgf/cm²}	—	—	

Tightening torque

Unit : N·m {lbf.ft, kgf·m}

Location	Parts to be tightened	Tightening torque	Remarks
6	Bolt (Plate mounting)	12 to 19 {8.7 to 14, 1.2 to 1.9)	—
8	Bolt (Primary and secondary side assembling)	4.9 to 7.8 {3.6 to 5.8, 0.5 to 0.8)	—
12	Screw	4.9 to 7.8 {3.6 to 5.8, 0.5 to 0.8)	—
16	Sleeve	1.0 to 2.9 {0.7 to 2.2, 0.1 to 0.3}	—
23	Self-locking bolt	12 to 19 {8.7 to 14, 1.2 to 1.9}	—

Lubricant

Location	Points of application	Kinds	Quantity
4, 5	Pack between boot and plunger	Multipurpose grease [NLGI No.2 (Li soap)]	1 cm³ {0.061 cu. in.}
5	Friction surfaces of plunger and other parts	Multipurpose grease [NLGI No.2 (Li soap)]	As required
—	O-ring and its friction surface, metal friction surface, and O-ring groove	Multipurpose grease [NLGI No.2 (Li soap)]	As required

Special tools

Location	Tool name and shape	Part No.	Application
21	Insert tool	*910-24461	Installation of O-ring
32	Retainer	*910-24590	Holding of primary piston

* : JIDOSHA KIKI Part No.

◆ Service procedure

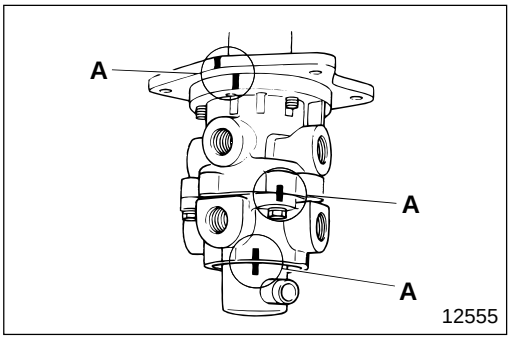

● Work before disassembly

A : Alignment mark

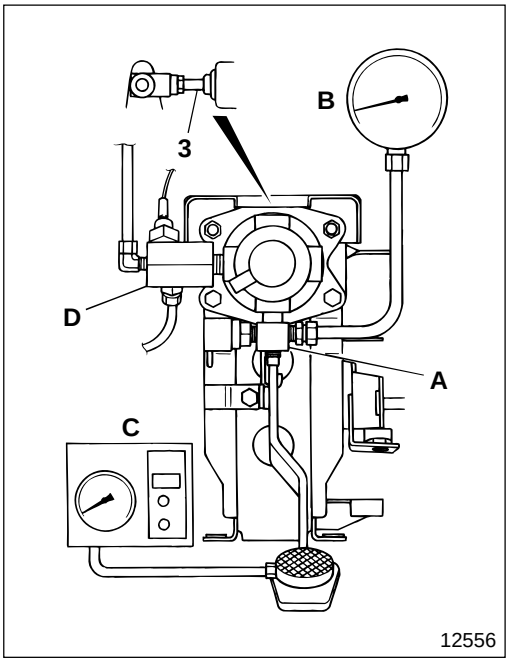

● Inspection of function after assembly

Check if the output air pressure, corresponding to the stroke of push rod **3**, conforms to the standard value. This inspection of function is carried out by installing a gauge on the brake pedal. 📖 P35-38

- Install pressure gauge **B** capable of measuring 980 kPa {140 lbf/in^2, 10 kgf/cm^2} or more on primary output side port **A**.
- Install depression gauge **C** on the brake pedal.
- Apply air pressure of 685 kPa {100 lbf/in^2, 7 kgf/cm^2} to primary input side port **D** and inspect the parts for air leakage.
- If an air leakage is found, take the following countermeasures:
  - Tighten connectors further.
  - Disassemble the dual brake valve and inspect the O-ring assemblies of all parts.
- Then, adjust the installation height of the brake pedal.
- After adjustment, read pressure gauge **B** and make sure that the primary output pressure, corresponding to the stroke of push rod **3**, conforms to the standard value as shown in the input/output characteristic curve diagram overleaf.
- If the primary output air pressure is lower than the standard value, replace the following springs:
  - Spring **11**
  - Outer spring **25**
  - Inner spring **26**

Input/Output Characteristic Curve Diagram

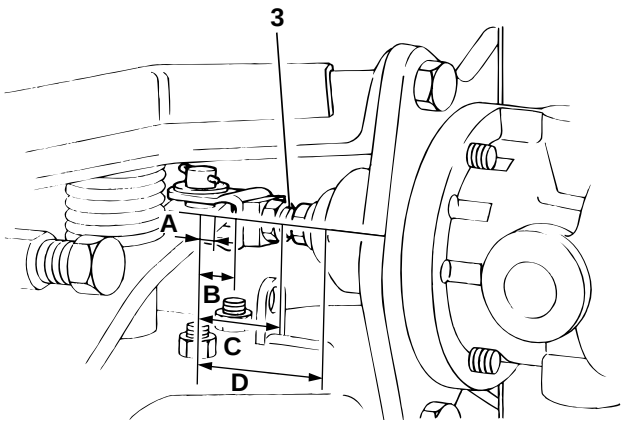

12557

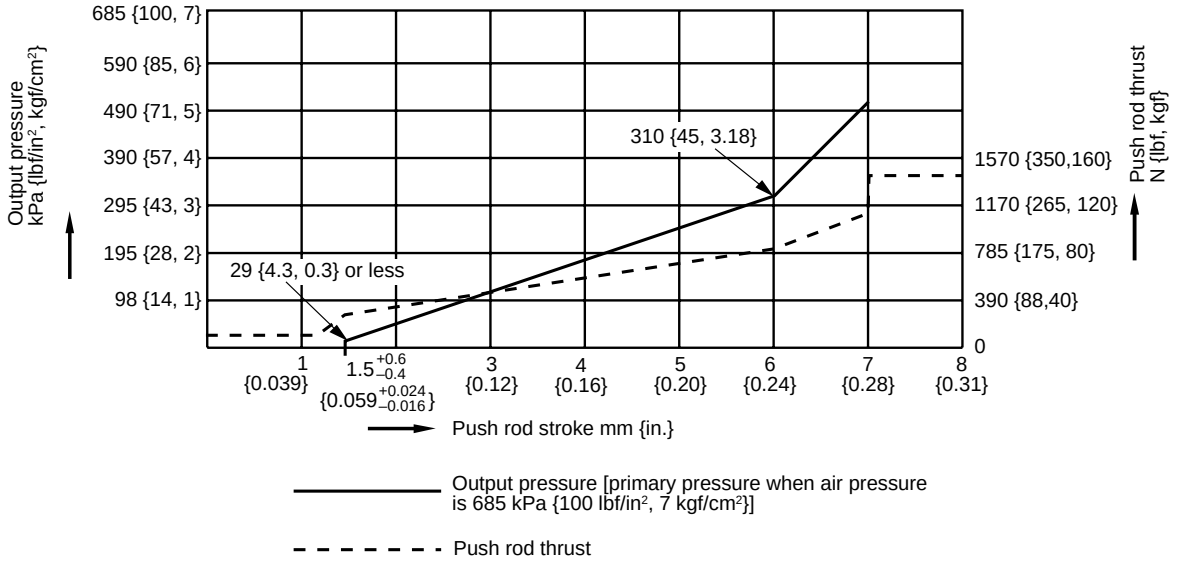

12558

A : Play 1.5 mm {0.059 in.}
B : Pressure stroke 1.5 $^{+0.6}_{-0.4}$ mm {0.059 $^{+0.024}_{-0.016}$ in.}
C : Pressure stroke 6 mm {0.24 in.}
D : Pressure stroke 7 mm {0.28 in.}

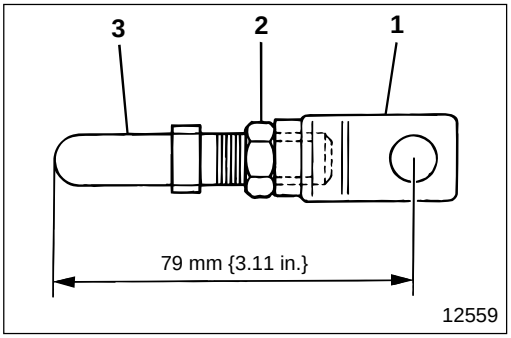

1 to **3** **Installation of clevis, nut and push rod**

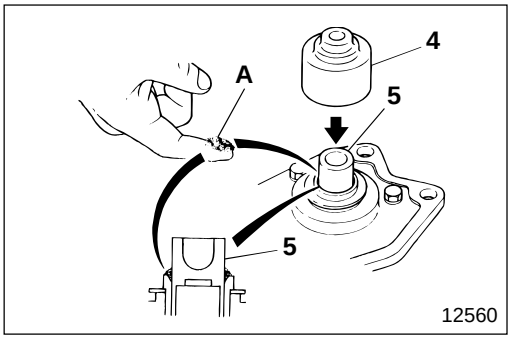

4 **5** **Packing grease between boot and plunger**

A : Grease

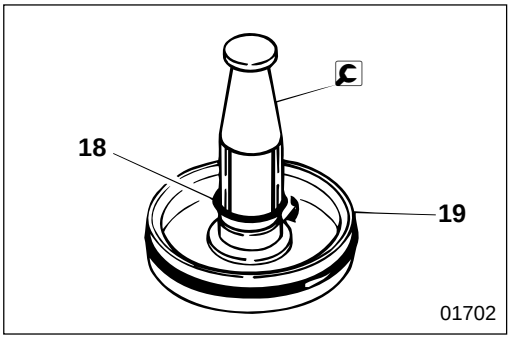

18 **Installation of O-ring**

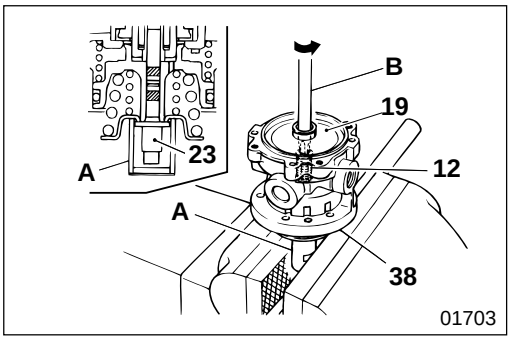

19 **Removal of relay piston**

- Grip a (14 mm {0.55 in.}) socket wrench **A** in a vise.
- Insert the head of self-locking bolt **23** into socket wrench **A** to tighten body **38**.

WARNING

You must be careful when you loosen screw 12, because the spring in body 38 can forcibly eject relay piston 19. To avoid this hazard, press down on the relay piston with your hand when you carry out the above work.

- Loosen screw **12** gradually to remove relay piston **19**.
  B : Phillips screwdriver

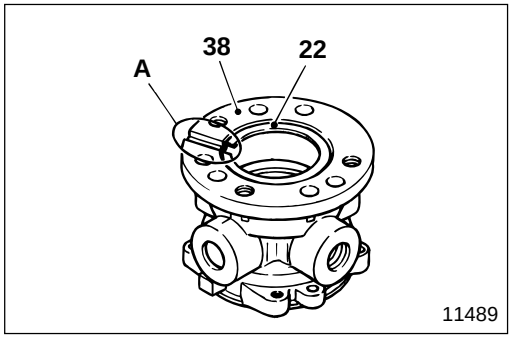

22 **Installation of bushing**

A : Indent

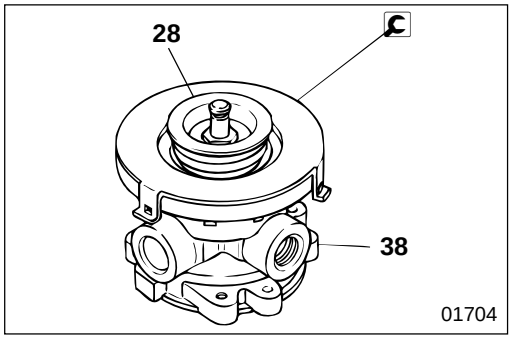

28 **Removal and installation of primary piston**

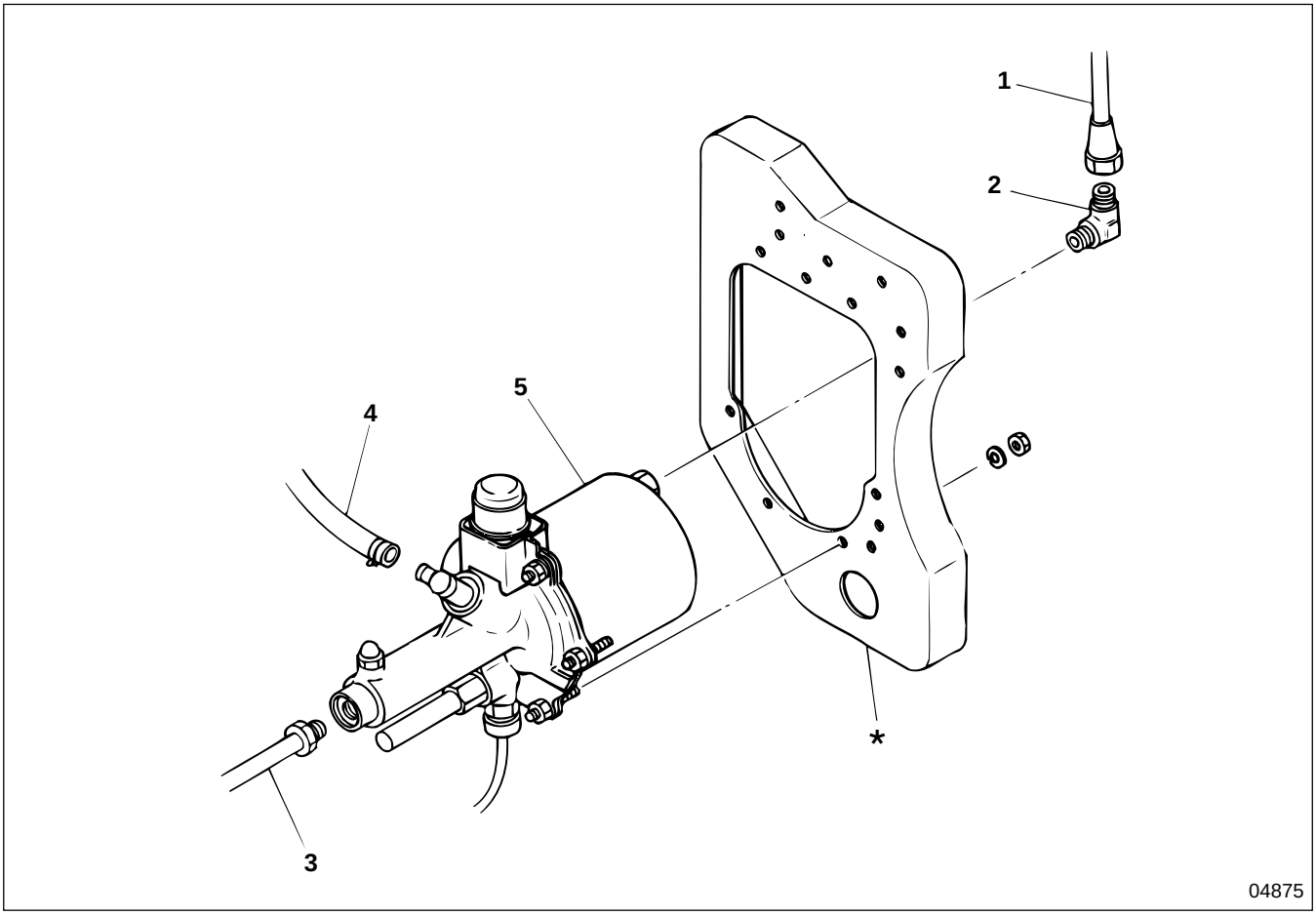

● **Disassembly sequence**

1 Air pipe
2 Connector
3 Brake pipe
4 Brake hose
5 Airmaster 🕮 P35-50

***** : Airmaster and air tank bracket

● **Assembly sequence**

Follow the disassembly sequence in reverse.

NOTE

Check for air and liquid leakage after installation. Also, carry out air bleeding of brake system. 🕮 **P35-32**

BRAKE BOOSTER (AIRMASTER)

Airmaster Assembly

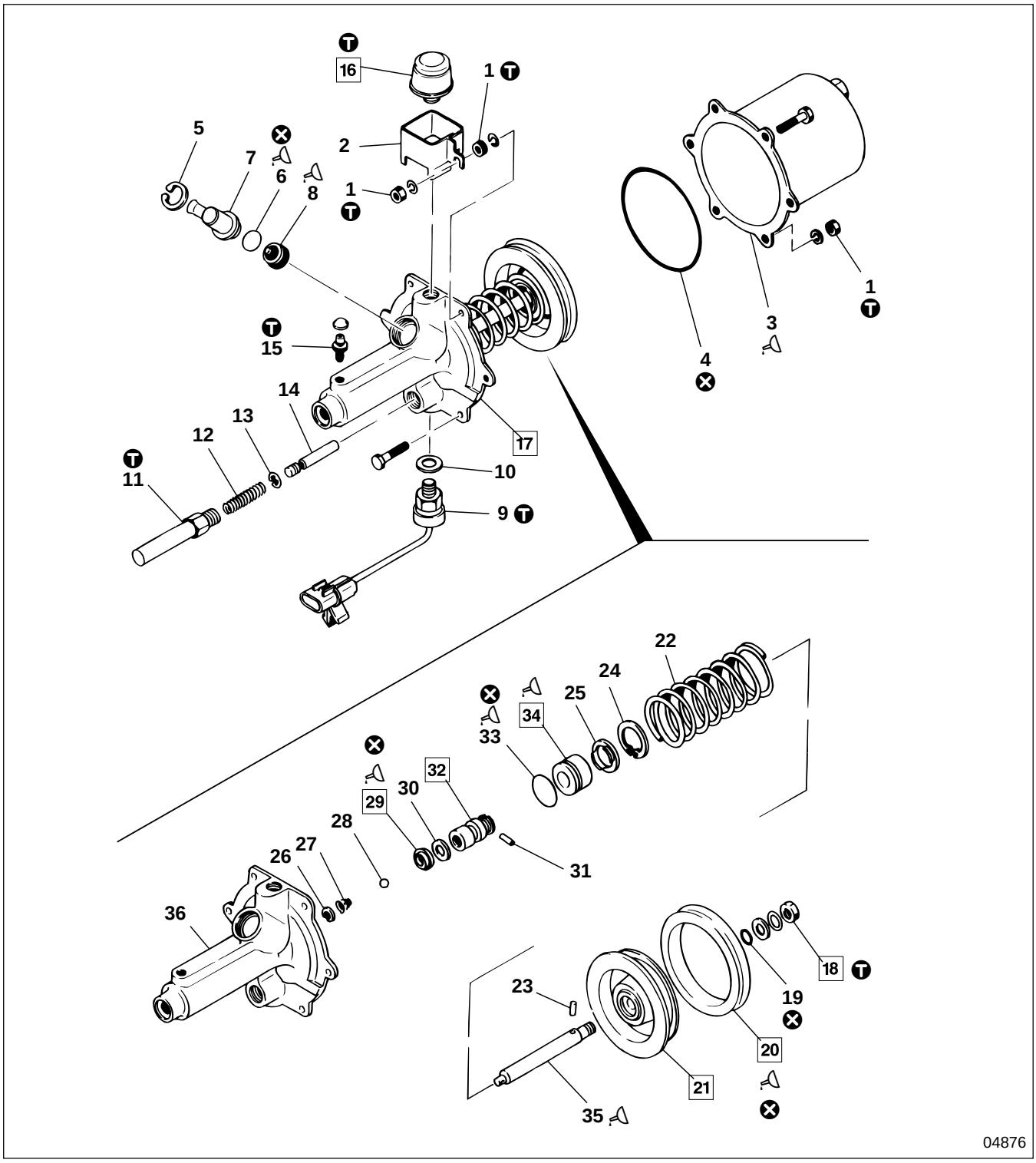

● **Disassembly sequence**

1 Nut
2 Bracket
3 Cylinder shell
4 O-ring
5 Retaining ring
6 O-ring
7 Connector
8 Residual valve
9 Stroke switch Gr 54
10 Shim
11 Retainer
12 Return spring
13 Retaining ring
14 Rod
15 Air bleeder
16 Exhaust cover
17 Body assembly
18 Nut
19 O-ring
20 Cup packing
21 Piston plate
22 Return spring
23 Straight pin
24 Retaining ring
25 Washer
26 Retaining ring
27 Spring
28 Steel ball
29 Cup packing
30 Backup ring
31 Straight pin
32 Hydraulic piston
33 O-ring
34 Retainer assembly
35 Push rod
36 Body

⊗ : Non-reusable parts

● **Assembly sequence**

Follow the disassembly sequence in reverse.
Repair kit : Airmaster kit

Service standards

Unit : mm {in.}

Location	Maintenance item	Standard value (Basic diameter in [ ])	Limit	Remedy
3, 21	Clearance between cylinder shell and piston plate	[114.3] 0.5 to 1.4 {[4.50] 0.20 to 0.055}	1.8 {0.071}	Replace piston plate
22	Return spring load (Installed length 120 {4.72})	78±7.8 N {18±1.8 lbf, 8±0.8 kgf}	69 N {15 lbf, 7 kgf}	Replace
32, 36	Clearance between body and hydraulic piston	[23.8] 0.04 to 0.11 {[0.94] 0.0016 to 0.0043}	0.15 {0.0059}	Replace hydraulic piston
35	Bend of push rod	0.05 {0.0020} or less	0.15 {0.0059}	Replace

Tightening torque

Unit : N·m {lbf.ft, kgf·m}

Location	Parts to be tightened	Tightening torque	Remarks
1	Nut (Body and cylinder shell mounting)	11 to 15 {8.0 to 12, 1.1 to 1.6}	—
9	Stroke switch	24.6 to 34.3 {18 to 25, 2.5 to 3.5}	—
11	Retainer	7.9 to 19 {5.8 to 14, 0.8 to 2}	—
15	Air bleeder	6.9 to 12.7 {5.1 to 9.4, 0.7 to 1.3}	—
16	Exhaust cover	7.9 to 19 {5.8 to 14, 0.8 to 2}	—
18	Nut (Piston plate and push rod mounting)	20 to 29 {14 to 22, 2 to 3}	—

BRAKE BOOSTER (AIRMASTER)

Lubricant and fluid

Location	Points of application	Kinds	Quantity
3	Cylinder shell bore	Multipurpose grease [NLGI No.2 (Li soap)]	10 g {0.35 oz}
6	O-ring	Brake fluid (SAE J1703f or FMVSS No.116 DOT3)	As required
8	Residual valve	Brake fluid (SAE J1703f or FMVSS No.116 DOT3)	As required
20	Surface of cup packing and friction surface of push rod	Multipurpose grease [NLGI No.2 (Li soap)]	5 g {0.18 oz}
29	Interior surface of cup packing	Multipurpose grease [NLGI No.2 (Li soap)]	As required
33	O-ring	Brake fluid (SAE J1703f or FMVSS No.116 DOT3)	As required
34	Fill oil seal groove of inside of retainer	Silicon grease	As required
35	Push rod friction surface against retainer	Silicon grease	As required

Special tools

Location	Tool name and shape	Part No.	Application
16	L-spanner	*910-23370	Removal and installation of exhaust cover
17	Stand	*910-00450	Working bench
21	Holder	*910-24831	Removal and installation of piston plate
29	Cup insert guide	*910-23289	Installation of cup packing

* : JIDOSHA KIKI Part No.

◆ Service procedure

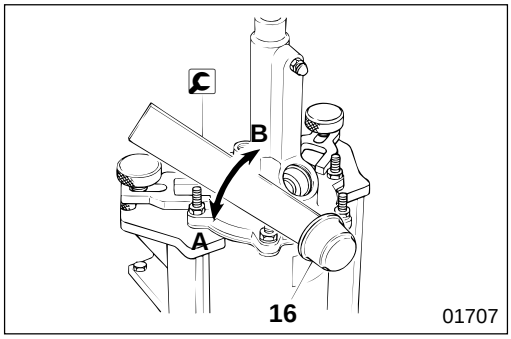

16 **Removal and installation of exhaust cover**

A : Removal
B : Installation

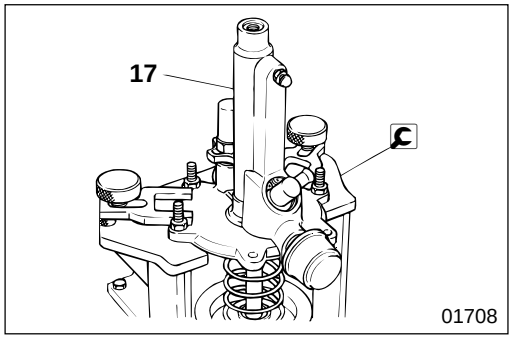

17 **Installation of body assembly**

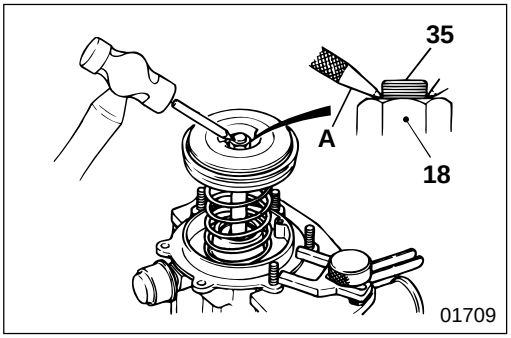

18 **Installation of nut**

After tightening nut **18** at specified torque, caulk the nut and push rod **35** thread area.

A : Center punch

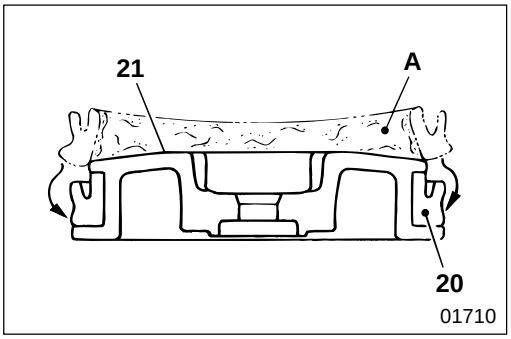

20 **Installation of cup packing**

A : Grease

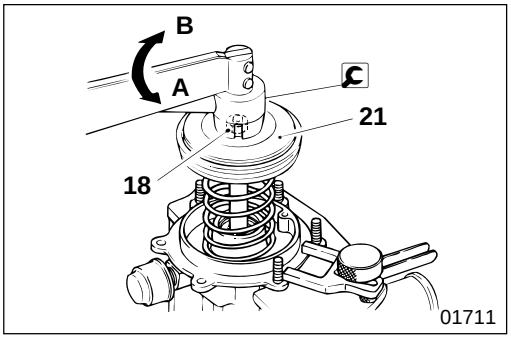

21 **Removal and installation of piston plate**

A : Removal
B : Installation

NOTE

After installation, tighten nut 18 at specified torque.

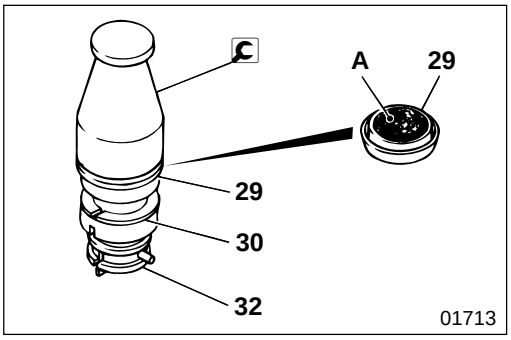

29 **Installation of cup packing**

A : Grease

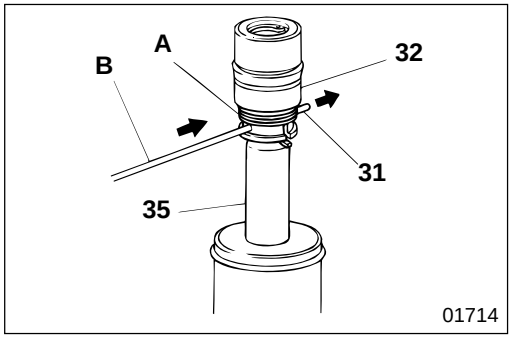

32 **Hydraulic piston**

[Removal]

A : Spring

B : Needle

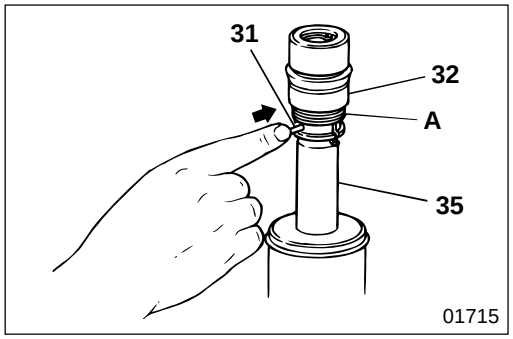

[Installation]

Align holes of hydraulic piston **32** and push rod **35**, and insert straight pin **31**.

A : Spring

NOTE

After inserting straight pin 31, make sure that the hydraulic piston spring is hanging over the straight pin and working as a stopper.

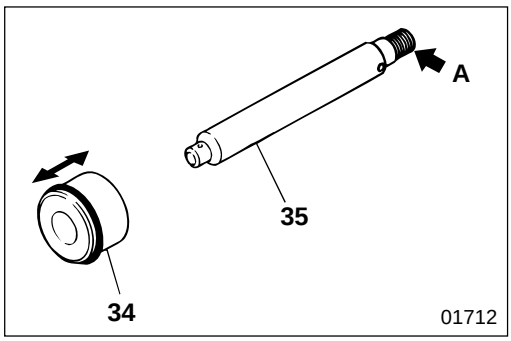

34 **Removal and installation of retainer**

CAUTION ⚠

Do not remove or install retainer 34 from the side of thread area A, or the inside of the retainer might be damaged.

M E M O

FRONT WHEEL BRAKE

Front Wheel Brake Assembly

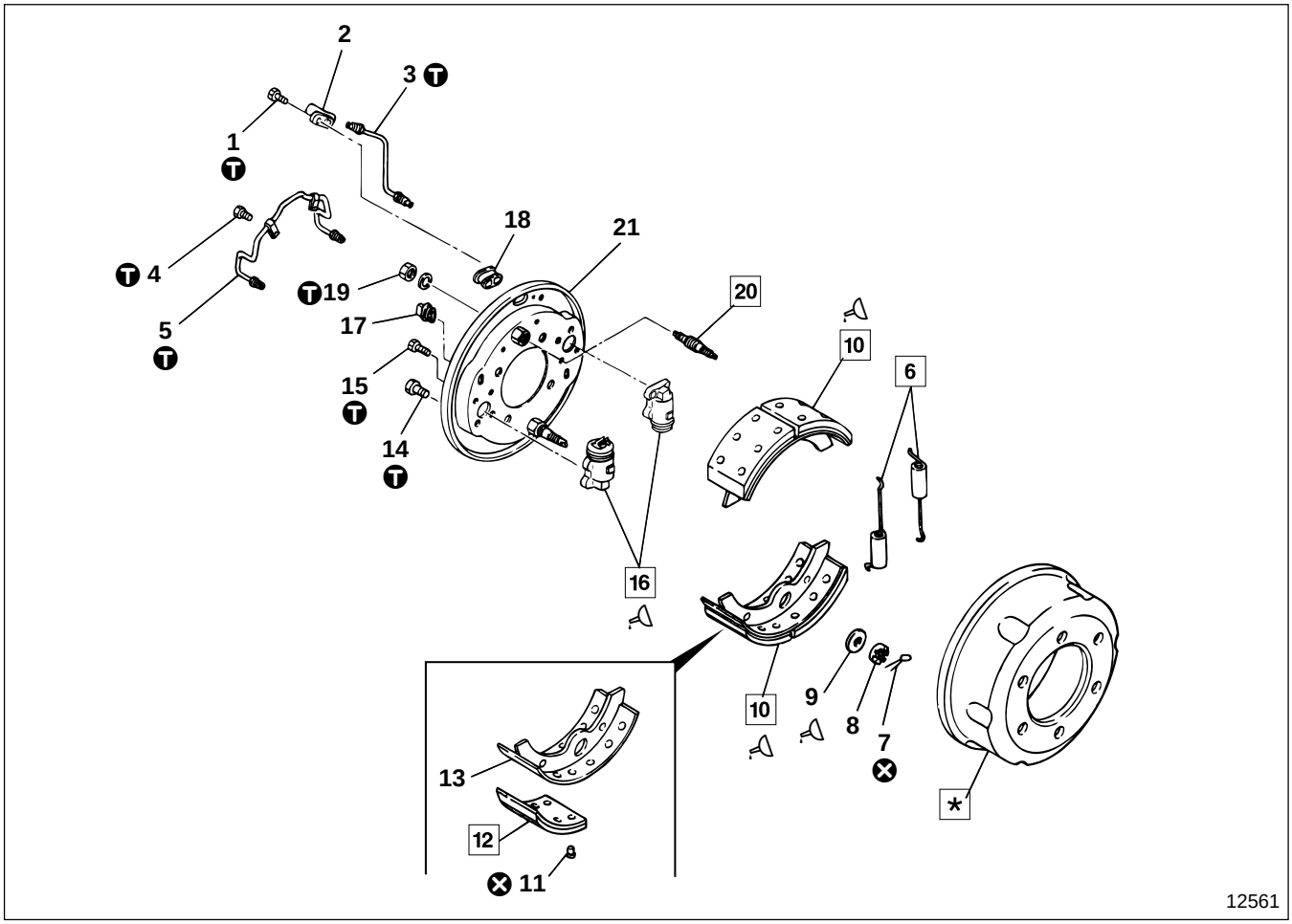

● **Disassembly sequence**

1 Bolt
2 Joint assembly
3 Pipe assembly
4 Bolt
5 Pipe assembly
6 Return spring
7 Split pin
8 Holder pin nut
9 Washer
10 Brake shoe assembly
11 Rivet
12 Brake lining
13 Brake shoe
14 Bolt
15 Bolt
16 Wheel cylinder assembly P35-62
17 Adjusting hole plug
18 Check hole plug
19 Nut
20 Holder pin
21 Backing plate

⊗ : Non-reusable parts

* : Brake drum Gr 26

WARNING

Do not leave grease or oil on the surface of brake lining 12 or inner surface of brake drum * because this reduces braking performance.

CAUTION

Do not turn or remove holder pin 20 unless it is necessary, or the squareness of brake shoe assembly 10 can be influenced causing brake drag.

● **Assembly sequence**

Follow the disassembly sequence in reverse.
Repair kit : Brake lining kit

● **Initial adjustment of brake shoe clearance after installation**

P35-57

Service standards

Unit : mm {in.}

Location	Maintenance item		Standard value		Limit	Remedy
6	Return spring load (Installed length 192 {7.56})		325 N {73 lbf, 33 kgf}		Clearance between coils or coil and cover	Replace
12	Brake lining thickness		12.0 {0.47}		5.0 {0.20} (Side shoulder means wear limit)	Replace brake lining
*	Brake drum	Inner diameter	320 {12.5}	*321 {12.64}	322 {12.68}	Replace
		Cylindrical accuracy	0.05 {0.0020}		0.2 {0.0079}	Correct or replace

* : Indicates correction limit.

Tightening torque

Unit : N·m {lbf.ft, kgf·m}

Location	Parts to be tightened	Tightening torque	Remarks
1	Bolt (Joint assembly mounting)	9.8±1.0 {7.2±1.4, 1.0±0.2}	—
3, 5	Flair nut (Pipe assembly mounting)	14±2.0 {10±1.4, 1.4±0.2}	—
4	Bolt (Pipe clamp mounting)	4.9±1.0 {3.6±0.7, 0.5±0.1}	—
14	Bolt (Wheel cylinder assembly mounting)	78±16 {58±12, 8.0±1.6}	—
15	Bolt (Wheel cylinder assembly mounting)	44±8.8 {33±6.5, 4.5±0.9}	—
19	Nut (Holder pin mounting)	29±5.9 {22±4.3, 3,0±0.6}	—

Lubricant

Location	Points of application	Kinds	Quantity
9, 10, 16	Contact areas between washer and brake shoe assembly; and between brake shoe assembly and wheel cylinder assembly	Wheel bearing grease [NLGI No.2 (Li soap)]	As required

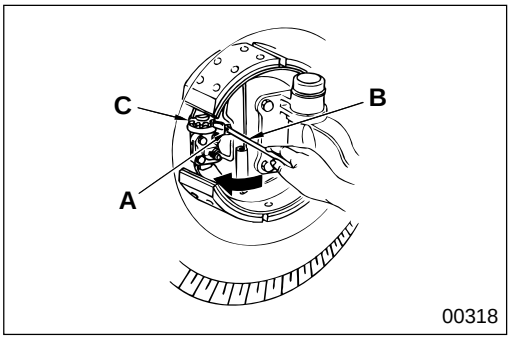

◆ Service procedure

● **Initial adjustment of brake shoe clearance after installation**

- Jack up the front wheels, and make sure that there is no play in the hub bearings.
- Insert screwdriver **B** into adjusting hole **A** and turn adjuster **C** in the direction of the arrow marked on backing plate **21** until the wheel drags slightly when turned by hand.

NOTE

- **Be sure to adjust the clearance at two points for each wheel per side.**
- **The arrow mark on backing plate 21 is near adjusting hole A.**

- After depressing the brake pedal several times, release it and make sure that the wheel drags lightly when turned by hand. If the wheel turns without stress, repeat the above steps. Slacken off adjuster **B**, in the reverse direction to the arrow mark, by eight or nine notches.

NOTE

Be sure to adjust the clearance at two points for each wheel per side.

- Make sure that the wheel does not drag when turned by hand. If the wheel drags, repeat the above steps.

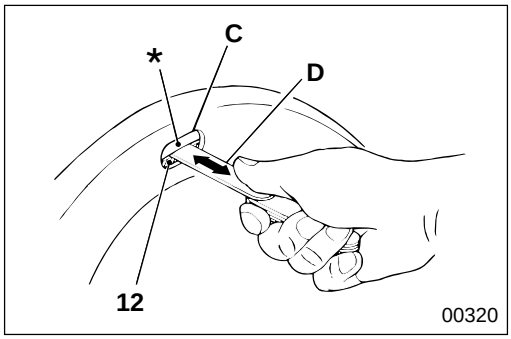

- Insert feeler gauge **D** between brake drum ***** and brake lining **12** through check hole **C**, and make sure that a little resistance is felt when the feeler gauge is pulled out or pushed in.

NOTE

Be sure to adjust the clearance at two points for each wheel per side.

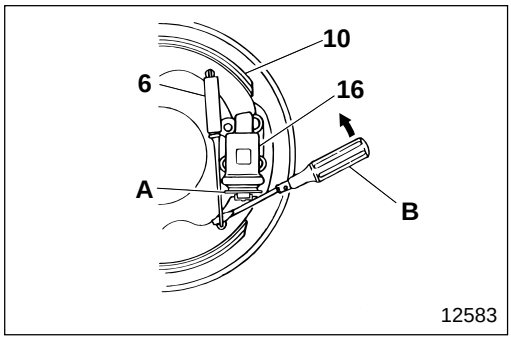

6 Return Spring

[Removal]

To remove return spring **6**, place screwdriver **B** on the hook of the return spring, then pry and remove the return spring making use of wheel cylinder assembly **16** adjuster **A** as a fulcrum.

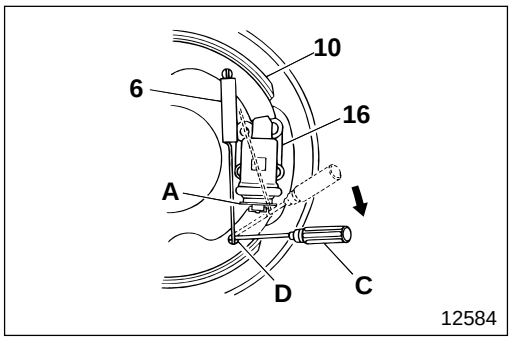

[Installation]

- Install the shorter hook end of return spring **6** in brake shoe assembly **10** at the side opposite to adjuster **A** of wheel cylinder assembly **16**.
- Insert a small Phillips screwdriver **C** into the hook of return spring **6**, insert the tip of the screwdriver into return spring installation hole **D** of the brake shoe assembly to pry on the return spring.

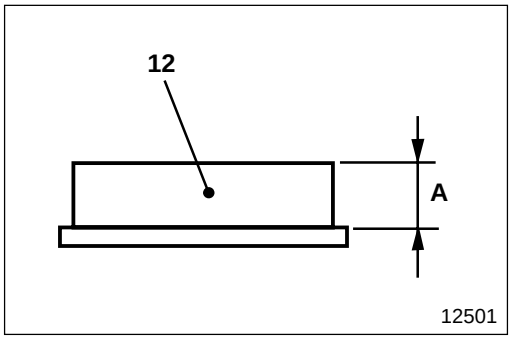

10 Brake shoe assembly

[Inspection]

If thickness **A** of brake lining **12** is lower than the limit replace the brake lining on the same axle as a unit.

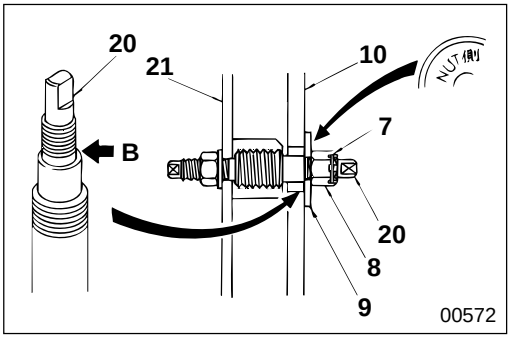

[Installation]

- Install brake shoe assembly **10**.
- Insert washer **9** with the side stamped “NUT 側” facing outside, screw down holder pin nut **8** until washer hits stepped area **B** of holder pin **20** gently, then slacken off the nut within the 0 to 60° limit until the nut is aligned with the first split pin hole.
- Insert split pin **7**, and bend it securely.

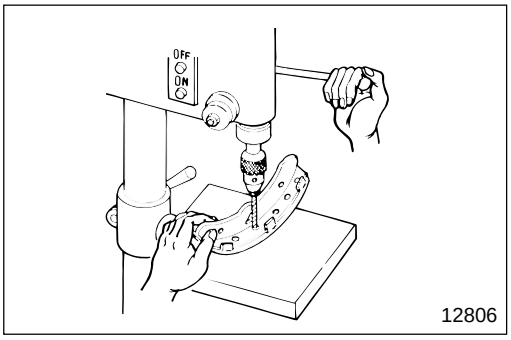

12 **Brake lining**

[Removal]

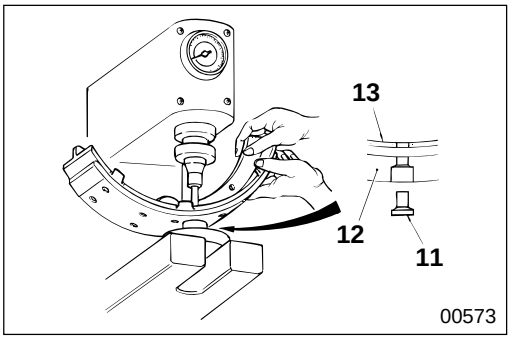

[Installation]

- Clean the mounting surfaces of brake lining **12** and brake shoe **13** with cleaning fluid and dry them.
- Insert rivets **11** from brake lining **12** side, and caulk the rivets at the specified load so that there is no clearance between brake shoe **13** and the brake lining.

  Caulking load for rivets : 17 to 19 kN {3750 to 4190 lbf, 1700 to 1900 kgf}

- Make sure that you inspect contact with the inner surface of brake drum ***** after you replace brake linings **12**. If contact is incorrect, correct with the brake assembled.

WARNING⚠

Do not leave lubricant on the surface of brake lining 12 because this reduces braking performance.

CAUTION⚠

Make sure that the type of brake linings 12 you fit are suitable for the intended use of the vehicle. Make sure that you fit identical size and color coated linings on the left and right sides of one shaft.

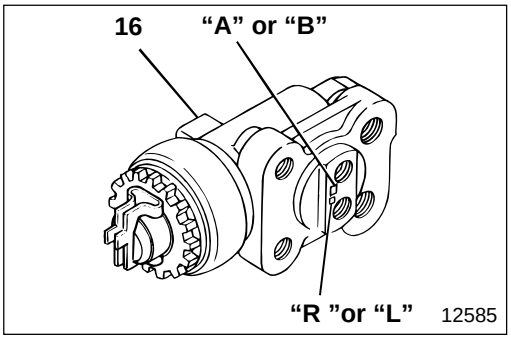

16 **Installation of wheel cylinder assembly**

Identification mark	Installation position
RA	Front of front axle right wheel
RB	Rear of front axle right wheel
LA	Front of front axle left wheel
LB	Rear of front axle left wheel

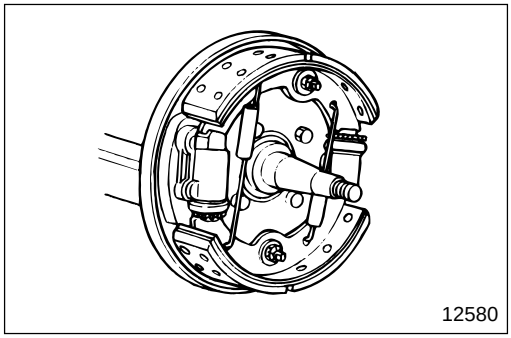

20 **Adjustment of holder pin**

- Install the front wheel brake assembly on the front axle. Gr 26

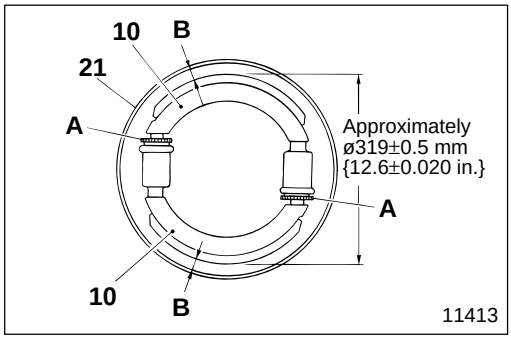

- Turn adjuster **A** to adjust the outer diameter to approximately ø319±0.5 mm {12.6±0.020 in.}.
- Then, move brake shoe assembly **10** to adjust clearance **B** evenly.

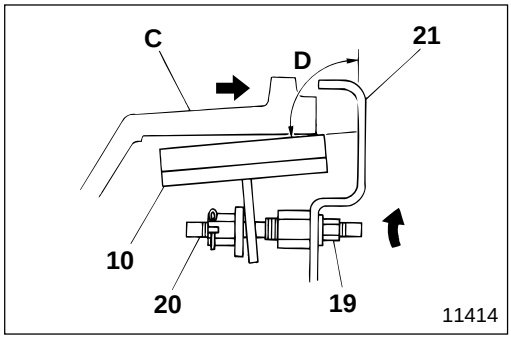

- Install hub and drum assembly **C** on the front wheel brake assembly. Gr 26
  At this time, the hub and drum assembly cannot be inserted in the specified position if squareness **D** is 90° or more, so loosen nut **19** and turn holder pin **20** to adjust the squareness to as close to 90° as possible.
- Bleed the brake system. P35-32

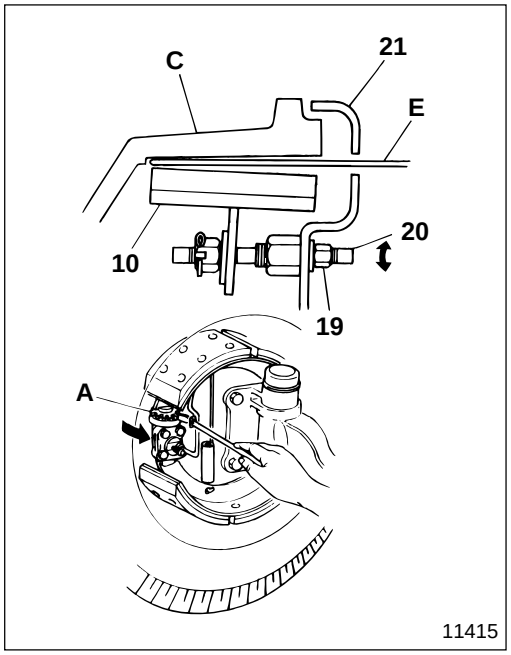

★• Turn adjuster **A** to widen brake shoe assembly **10** until 0.2 mm {0.0079 in.} feeler gauge **E** cannot be pulled out easily.
★• Loosen nut **19** and turn holder pin **20** to the right or left so that feeler gauge **E** can be pushed in or pulled out easily.
- Repeat the above steps (marked ★) until feeler gauge **E** cannot be pushed in or pulled out easily.
- Depress the brake pedal a few times lightly to equalize clearance **B** (adjusted in the previous section).
- Repeat the above steps (marked ★) until feeler gauge **E** cannot be pushed in or pulled out easily.

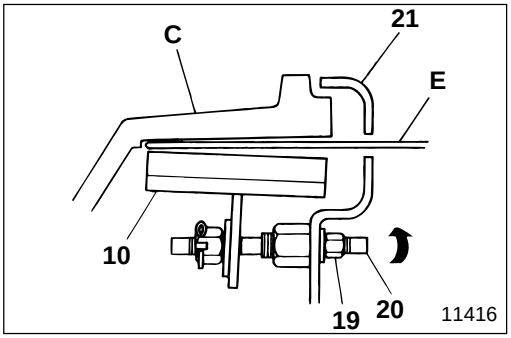

- If feeler gauge **E** cannot be pushed in or pulled out easily it is because it is making contact over the full width of brake shoe assembly **10**.
- Turn holder pin **20** so that when you pull out feeler gauge **E**, in the above condition, and reinsert the feeler gauge, pushing in or pulling out the feeler gauge at the rear is difficult.
- After adjustment, tighten nut **19** at specified torque.

* Correction of brake drum

If the cylindrical accuracy of brake drum * is higher than the limit, or there are seams, correct by machining to the correction limit. Machining of the brake drum should be done with the wheel hub attached as an integral part.

FRONT WHEEL BRAKE

Wheel Cylinder Assembly

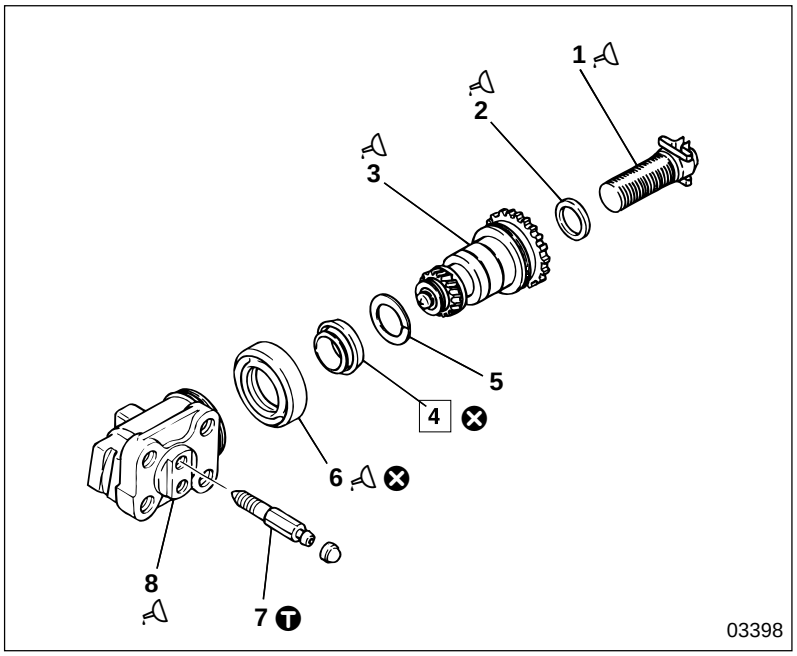

● **Disassembly sequence**

1 Screw
2 Seal
3 Piston
4 Piston cup
5 Backup ring
6 Boot
7 Air bleeder (only at the rear)
8 Body

⊗ : Non-reusable parts

● **Assembly sequence**

Follow the disassembly sequence in reverse.
Repair kit : Wheel cylinder kit

Service standards

Unit : mm {in.}

Location	Maintenance item	Standard value (Basic diameter in [ ])	Limit	Remedy
3, 8	Clearance between piston and body	[34.93] 0.03 to 0.09 {[1.38] 0.0012 to 0.0035}	0.2 {0.0079}	Replace piston

Ⓣ Tightening torque

Unit : N·m {lbf.ft, kgf·m}

Location	Parts to be tightened	Tightening torque	Remarks
7	Air bleeder	9.8±2.0 {7.2±1.4, 1.0±0.2}	—

Lubricant

Location	Points of application	Kinds	Quantity
1, 2, 3, 6, 8	Thread area of screw, outer periphery of seal, outer periphery of piston, mounting groove and thread area of boot, and inner surface of body	Rubber grease	As required

Special tools

Unit : mm {in.}

Location	Tool name and shape	Part No.	Application
4	Piston cup guide 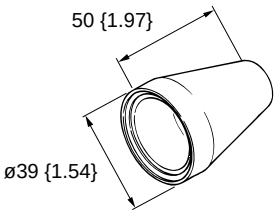	MC895722	Installation of piston cup

◆ Service procedure

4 **Installation of piston cup**

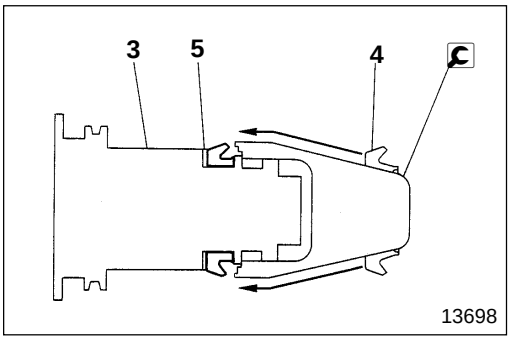

REAR WHEEL BRAKE

Rear Wheel Brake Assembly

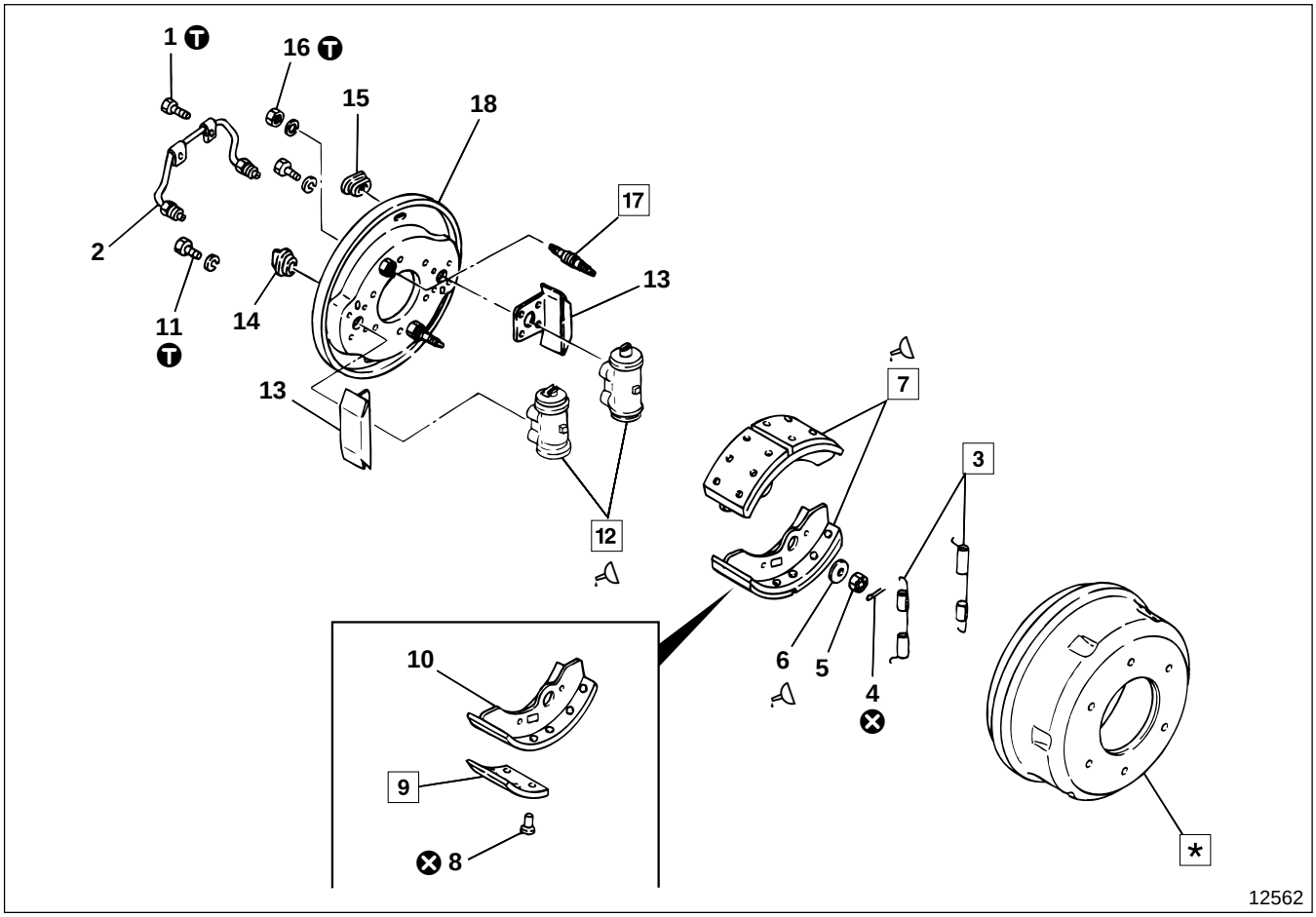

● **Disassembly sequence**

1	Bolt	**8**	Rivet	**14**	Adjusting hole plug
2	Pipe assembly	**9**	Brake lining	**15**	Check hole plug
3	Return spring	**10**	Brake shoe	**16**	Nut
4	Split pin	**11**	Bolt	**17**	Holder pin
5	Holder pin nut	**12**	Wheel cylinder assembly P35-70	**18**	Backing plate
6	Washer	**13**	Wheel cylinder cover		
7	Brake shoe assembly				

⊗ : Non-reusable parts
* : Brake drum Gr 27

WARNING⚠

Do not leave grease or oil on the surface of brake lining 9 or inner surface of brake drum * because this reduces braking performance.

CAUTION⚠

Do not turn or remove holder pin 17 unless it is necessary, or the squareness of brake shoe assembly can be influenced causing brake drag.

● **Assembly sequence**

Follow the disassembly sequence in reverse.
Repair kit : Brake lining kit

● **Initial adjustment of brake shoe clearance after installation**

P35-65

Service standards

Unit : mm {in.}

Location	Maintenance item		Standard value		Limit	Remedy
3	Return spring load (Installed length 217 {8.54})		390 N {88 lbf, 40 kgf}		Clearance between coils or coil and cover	Replace
9	Brake lining thickness		12.0 {0.47}		5.0 {0.20} (Side shoulder means wear limit)	Replace lining
*	Brake drum	Inner diameter	320 {12.5}	*321 {12.64}	322 {12.68}	Replace
		Cylindrical accuracy	0.05 {0.0020}		0.2 {0.0079}	Correct or replace

* : Indicates correction limit.

Tightening torque

Unit : N·m {lbf.ft, kgf·m}

Location	Parts to be tightened	Tightening torque	Remarks
1	Bolt (Pipe clamp mounting)	4.9±1.0 {3.6±0.7, 0.5±0.1}	—
2	Flair nut (Pipe assembly mounting)	14±2.0 {10±1.4, 1.4±0.2}	—
11	Bolt (Wheel cylinder assembly mounting)	78±16 {58±12, 8.0±1.6}	—
16	Nut (Holder pin mounting)	29±5.9 {22±4.3, 3,0±0.6}	—

Lubricant

Location	Points of application	Kinds	Quantity
6, 7, 12	Contact areas between washer and brake shoe assembly; and between brake shoe assembly and wheel cylinder assembly	Wheel bearing grease [NLGI No.2 (Li soap)]	As required

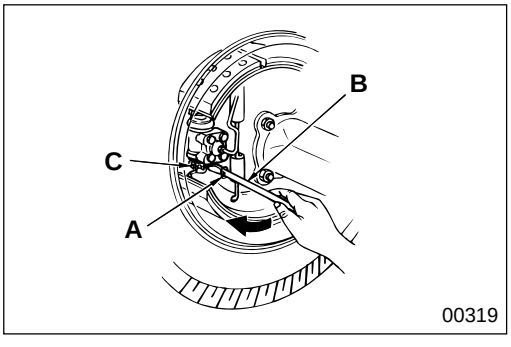

◆ Service procedure

● Initial adjustment of brake shoe clearance after installation

- Jack up the front wheels, and make sure that there is no play in the hub bearings.
- Insert screwdriver **B** into adjusting hole **A** and turn adjuster **C** in the direction of the arrow marked on the back plate until the wheel drags slightly when turned by hand.

NOTE

- **Be sure to adjust the clearance at two points for each wheel per side.**
- **The arrow mark on backing plate 18 is near adjusting hole A.**

- After depressing the brake pedal several times, release it and make sure that the wheel drags lightly when turned by hand. If the wheel turns without stress, repeat the above steps. Slacken off adjuster **B**, in the reverse direction to the arrow mark, by eight or nine notches.

NOTE

Be sure to adjust the clearance at two points for each wheel per side.

- Make sure that the wheel does not drag when turned by hand. If the wheel drags, repeat the above steps.

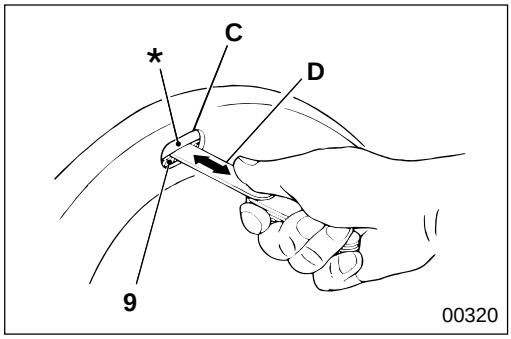

- Insert feeler gauge **D** between brake drum ***** and lining **9** through check hole **C**, and make sure that a little resistance is felt when the feeler gauge is pulled out or pushed in.

NOTE

Be sure to adjust the clearance at two points for each wheel per side.

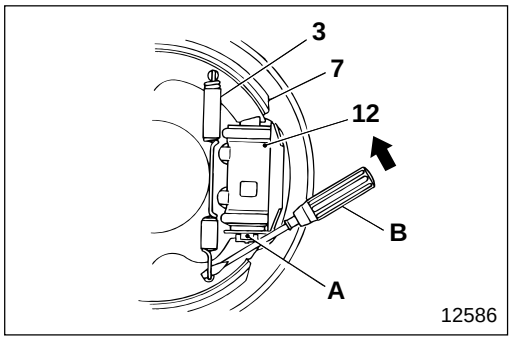

3 Return Spring

[Removal]

To remove return spring **3**, place screwdriver **B** on the hook of the return spring, then pry and remove the return spring making use of wheel cylinder assembly **12** adjuster **A** as a fulcrum.

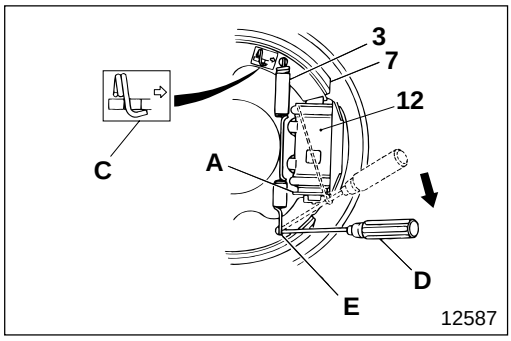

[Installation]

- Refer to the illustration on the caution plate fitted to brake shoe assembly **7** or marking **C**, and connect shorter hook end of return spring **3** to the brake shoe assembly at the side opposite the adjuster of wheel cylinder assembly **12**.
- Insert a small Phillips screwdriver **D** into the hook of return spring **3**, insert the tip of the screwdriver into return spring installation hole **E** of brake shoe assembly **7** to pry on the return spring.

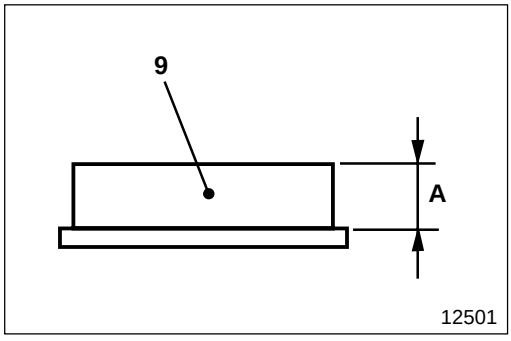

7 Brake shoe assembly

[Inspection]

If thickness **A** of brake lining **9** is lower than the limit replace the brake lining on the same axle as a unit.

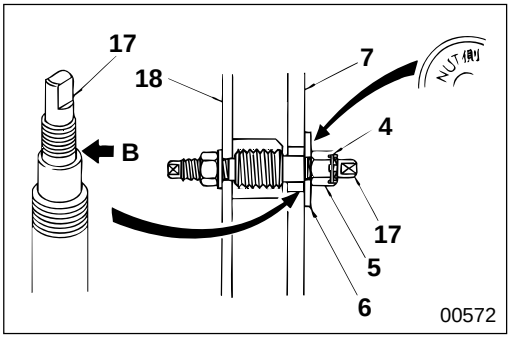

[Installation]
- Install brake shoe assembly **7**.
- Insert washer **6** with the side stamped “NUT 側” facing outside, screw down holder pin nut **5** until washer hits stepped area **B** of holder pin **17** gently, then slacken off the nut within the 0 to 60° limit until the nut is aligned with the first split pin hole.
- Insert split pin **4**, and bend it securely.

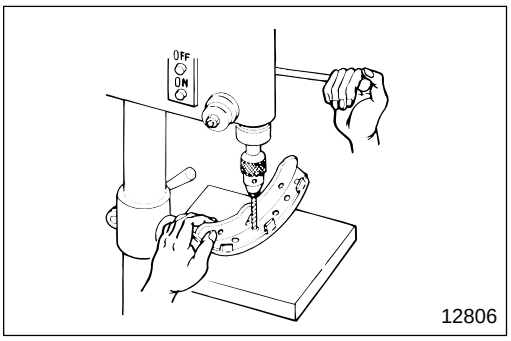

9 Brake lining

[Removal]

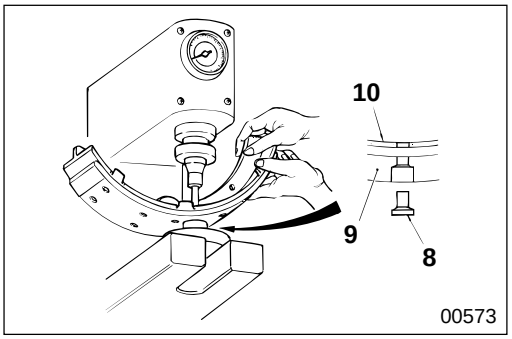

[Installation]
- Clean the mounting surfaces of brake lining **9** and brake shoe **10** with cleaning fluid and dry them.
- Insert rivets **8** from brake lining **9** side, and caulk the rivets at the specified load so that there is no clearance between brake shoe **10** and the brake lining.

  Caulking load for rivets : 17 to 19 kN {3750 to 4190 lbf, 1700 to 1900 kgf}

- Make sure that you inspect contact with the inner surface of brake drum ***** after you replace brake linings **9**. If contact is incorrect, correct with the brake assembled.

WARNING⚠

Do not leave lubricant on the surface of brake lining 9 because this reduces braking performance.

CAUTION⚠

Make sure that the type of brake linings 9 you fit are suitable for the intended use of the vehicle. Make sure that you fit identical size and color coated linings on the left and right sides of one shaft.

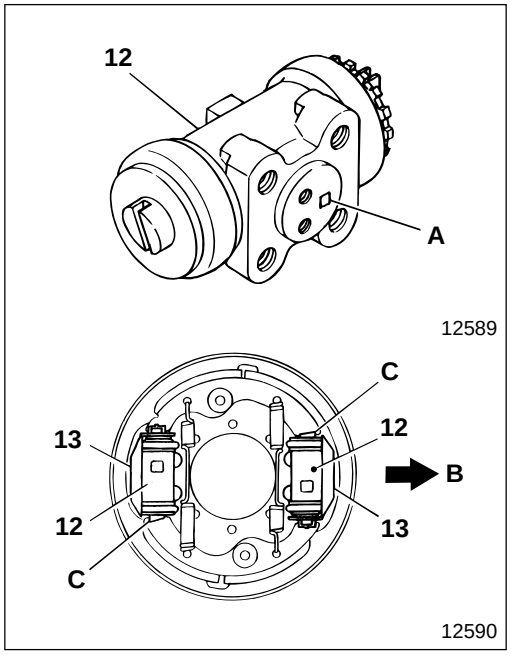

12 **Installation of wheel cylinder assembly**

A : Identification mark

Identification mark	Installation position
R	Right wheel forward
L	Left wheel forward
No mark	Left and right wheel rearward

- Install anchor piece **C** so its recession is at the deeper side of the brake shoe at the outside.
  B : Front of the vehicle

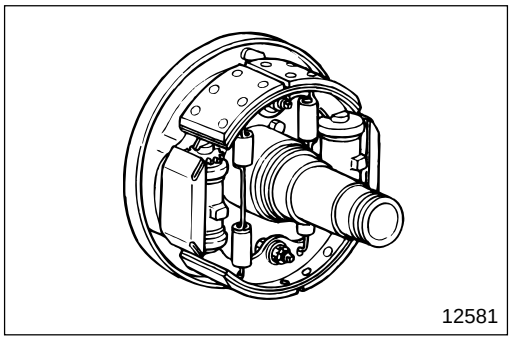

17 **Adjustment of holder pin**

- Install the rear wheel brake assembly on the rear axle. Gr 27

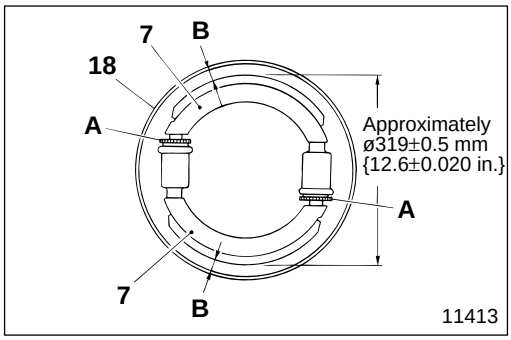

- Turn adjuster **A** to adjust the outer diameter to approximately ø319±0.5 mm {12.6±0.020 in.}.
- Then, move brake shoe assembly **7** to adjust clearance **B** evenly.

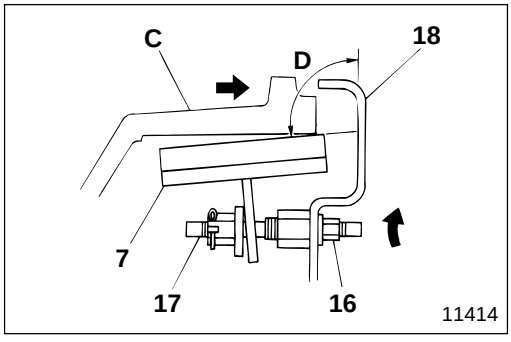

- Install hub and drum assembly **C** on the rear wheel brake assembly. Gr 27
  At this time, the hub and drum assembly cannot be inserted in the specified position if squareness **D** is 90° or more, so loosen nut **16** and turn holder pin **17** to adjust the squareness to as close to 90° as possible.
- Bleed the brake system. P35-32

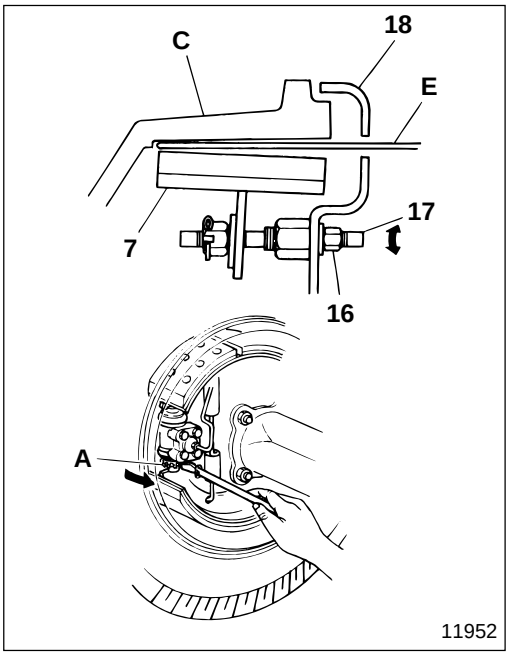

★• Turn adjuster **A** to widen brake shoe assembly **7** until 0.2 mm {0.0079 in.} feeler gauge **E** cannot be pulled out easily.

★• Loosen nut **16** and turn holder pin **17** to the right or left so that feeler gauge **E** can be pushed in or pulled out easily.

- Repeat the above steps (marked ★) until feeler gauge **E** cannot be pushed in or pulled out easily.
- Depress the brake pedal a few times lightly to equalize clearance **B** (adjusted in the previous section).
- Repeat the above steps (marked ★) until feeler gauge **E** cannot be pushed in or pulled out easily.

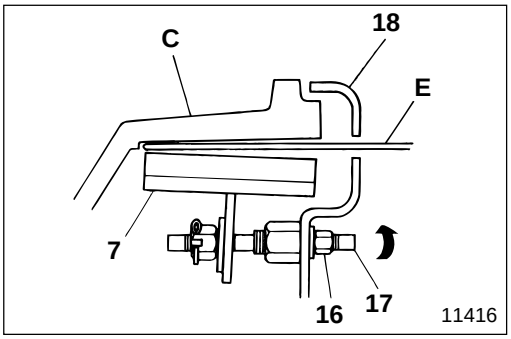

- If feeler gauge **E** cannot be pushed in or pulled out easily it is because it is making contact over the full width of brake shoe assembly **7**.
- Turn holder pin **17** so that when you pull out feeler gauge **E**, in the above condition, and reinsert the feeler gauge, pushing in or pulling out the feeler gauge at the rear is difficult.
- After adjustment, tighten nut **16** at specified torque.

✱ Correction of brake drum

If the cylindrical accuracy of brake drum ✱ is higher than the limit, or there are seams, correct by machining to the correction limit. Machining of the brake drum should be done with the wheel hub attached as an integral part.

REAR WHEEL BRAKE

Wheel Cylinder Assembly

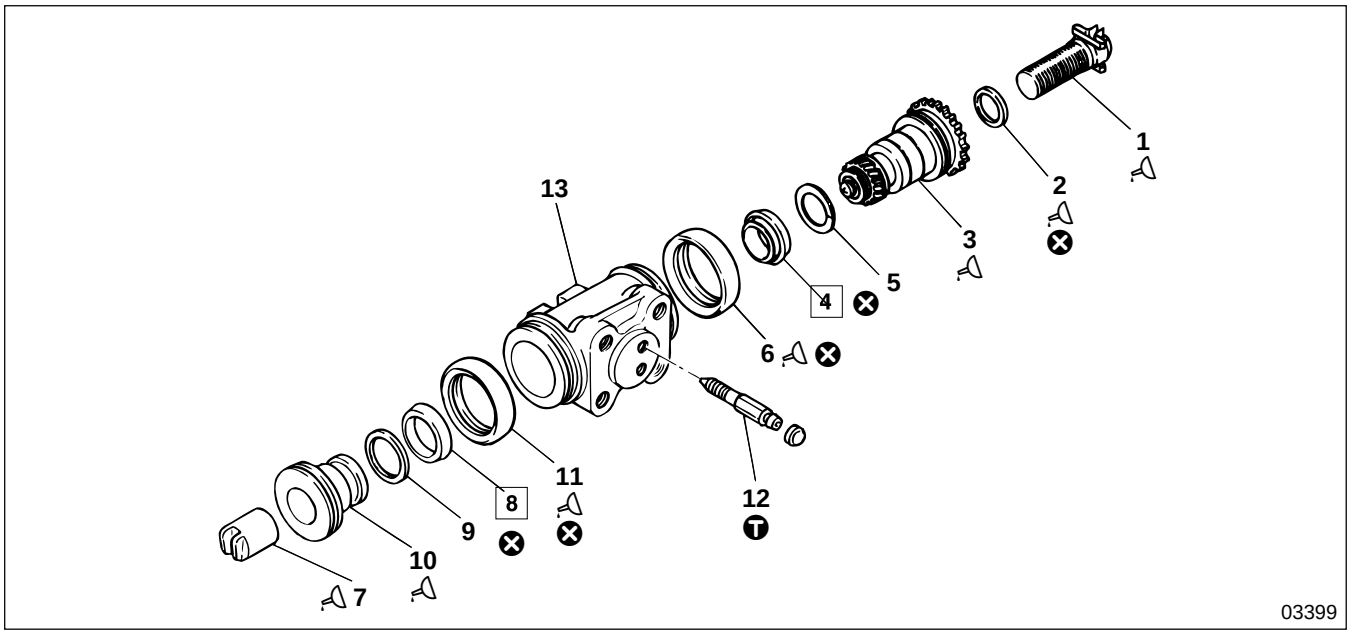

● **Disassembly sequence**

1 Screw
2 Seal
3 Piston
4 Piston cup
5 Backup ring
6 Boot
7 Anchor piece
8 Piston cup
9 Backup ring
10 Piston
11 Boot
12 Air bleeder
(Only identification marks L, R)
13 Body

⊗ : Non-reusable parts

● **Assembly sequence**

Follow the disassembly sequence in reverse.
Repair kit : Wheel cylinder kit

Service standards

Unit : mm {in.}

Location	Maintenance item	Standard value (Basic diameter in [ ])	Limit	Remedy
3, 10, 13	Clearance between piston and body	[36.51] 0.03 to 0.09 {[1.44] 0.0012 to 0.0035}	0.2 {0.0079}	Replace piston

Ⓣ Tightening torque

Unit : N·m {lbf.ft, kgf·m}

Location	Parts to be tightened	Tightening torque	Remarks
12	Air bleeder	9.8±2.0 {7.2±1.4, 1.0±0.2}	—

Lubricant

Location	Points of application	Kinds	Quantity
1, 2, 3, 6, 10, 11	Thread area of screw, outer periphery of seal, outer periphery of piston, mounting groove and thread area of boot, and inner surface of body	Rubber grease	As required
7	Bottom surface of anchor piece	Wheel bearing grease [NLGI No.2 (Li soap)]	As required

Special tools

Unit : mm {in.}

Location	Tool name and shape	Part No.	Application
4, 8	Piston cup guide 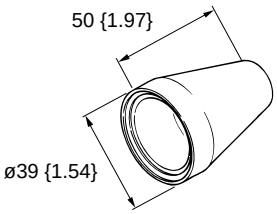	MC895722	Installation of piston cup

◆ Service procedure

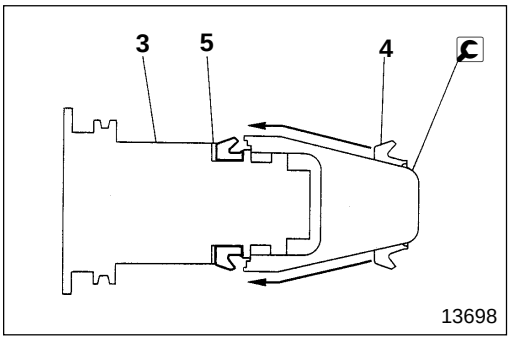

4 **Installation of piston cup**

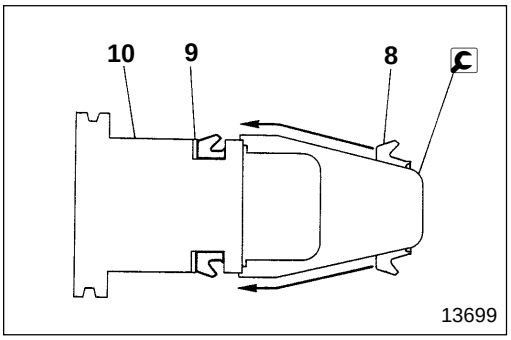

8 **Installation of piston cup**

AIR COMPRESSOR

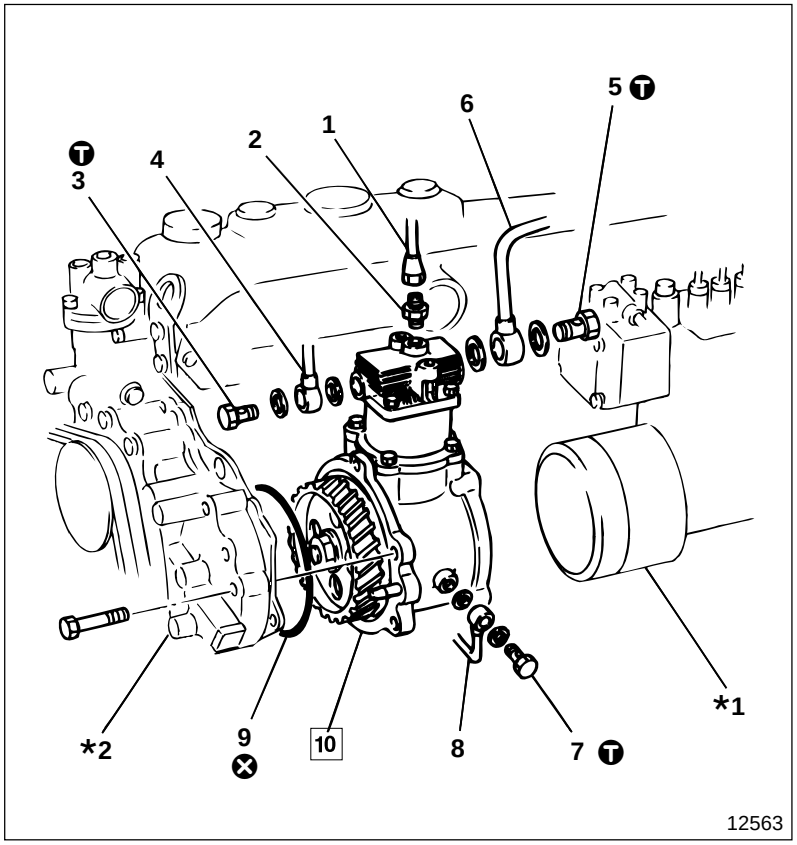

● **Removal sequence**

1 Unloader pipe
2 Connector
3 Eye bolt
4 Air outlet pipe
5 Eye bolt
6 Air inlet pipe
7 Eye bolt
8 Oil pipe
9 O-ring
10 Air compressor assembly P35-74

***1** : Injection pump assembly Gr 13
***2** : Timing gear case
⊗ : Non-reusable parts

● **Installation sequence**

Follow the removal sequence in reverse.

T Tightening torque

Unit : N·m {lbf.ft, kgf·m}

Location	Parts to be tightened	Tightening torque	Remarks
3	Eye bolt	98 {72, 10}	—
5	Eye bolt	98 {72, 10}	—
7	Eye bolt	21 {15, 2.1}	—

◆ Service procedure

10 **Installation of air compressor assembly**

- Position No.1 cylinder of the engine at top dead center in the compression cycle. Gr 11
- Align marking line **A** with notch **B**, then install air compressor assembly **10** on timing gear case ***2**.

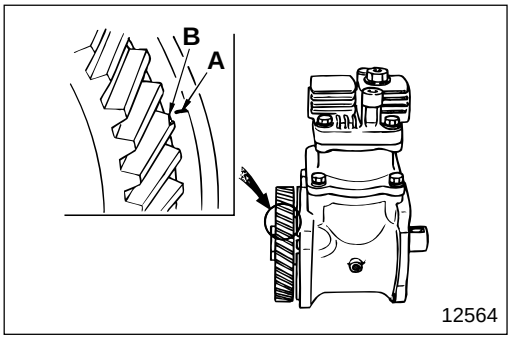

M E M O

AIR COMPRESSOR

Air Compressor Assembly

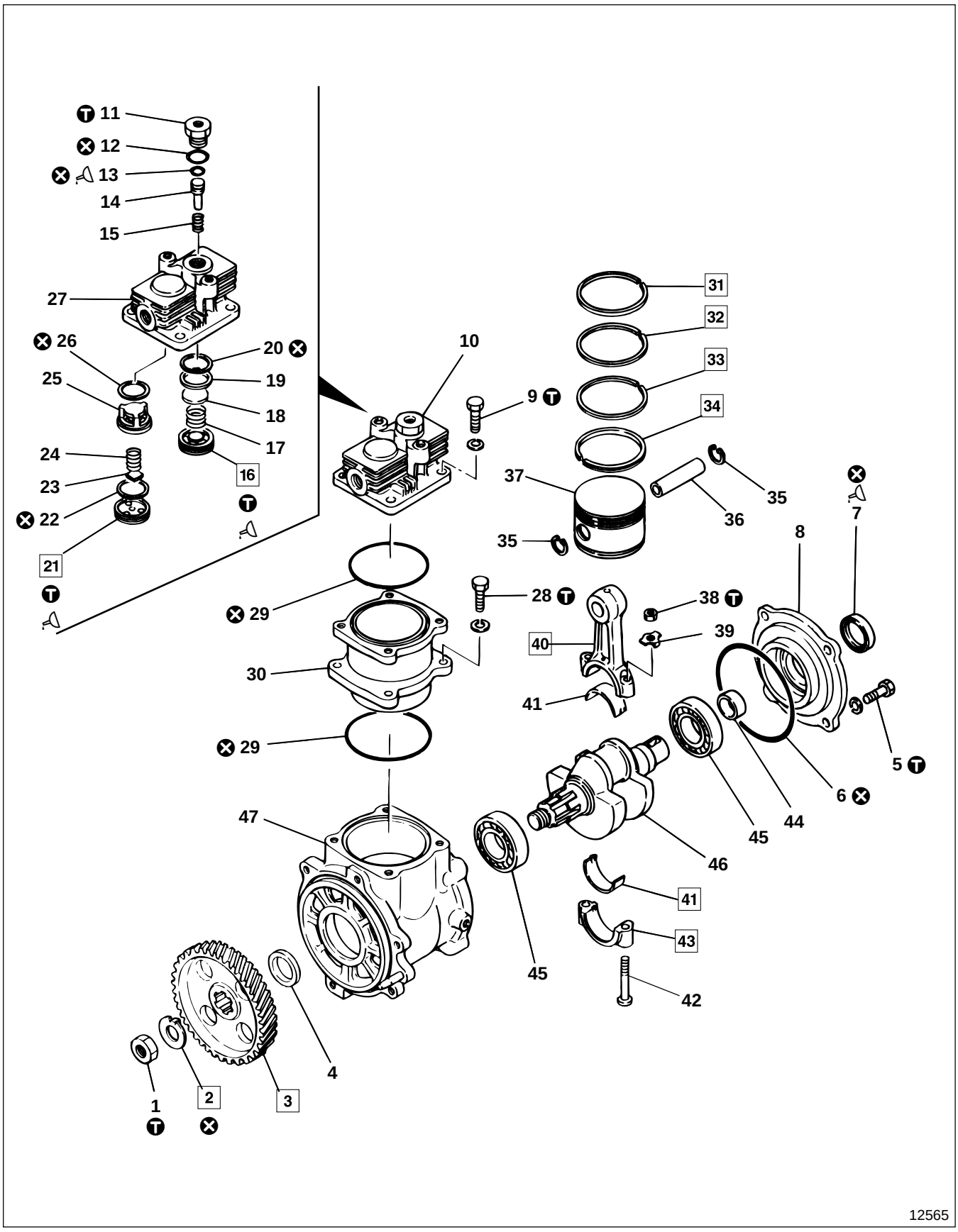

● **Disassembly sequence**

1 Nut
2 Lock washer
3 Drive gear
4 Collar
5 Bolt
6 O-ring
7 Oil seal
8 Bearing holder
9 Bolt
10 Cylinder head assembly
11 Connector
12 Packing
13 O-ring
14 Unloader valve
15 Unloader valve spring
16 Suction valve holder
17 Suction valve spring
18 Suction valve
19 Suction valve seat
20 Packing
21 Delivery valve seat
22 Packing
23 Delivery valve
24 Delivery valve spring
25 Delivery valve holder
26 Packing
27 Cylinder head
28 Bolt
29 O-ring
30 Cylinder liner
31 1st compression ring
32 2nd compression ring
33 3rd compression ring
34 Oil ring
35 Retaining ring
36 Piston pin
37 Piston
38 Nut
39 Lock washer
40 Connecting rod
41 Bearing
42 Bolt
43 Connecting rod cap
44 Sleeve
45 Bearing
46 Crankshaft
47 Crankcase

⊗ : Non-reusable parts

● **Assembly sequence**

Follow the disassembly sequence in reverse.
Repair kit : Piston ring kit

Service standards

Unit : mm {in.}

Location	Maintenance item		Standard value (Basic diameter in [ ])	Limit	Remedy
17	Suction valve spring load (Installed length 7 {0.28})		1.3 N {0.3 lbf, 0.13 kgf}	0.98 N {0.2 lbf, 0.1 kgf}	Replace
24	Delivery valve spring load (Installed length 11.5 {0.45})		2.9 N {0.7 lbf, 0.3 kgf}	1.5 N {0.3 lbf, 0.15 kgf}	Replace
30, 37	Clearance between piston and cylinder liner	Top	[70] {0.22 to 0.28 {[2.76] 0.0087 to 0.011}	0.32 {0.013}	Replace cylinder liner
		Skirt	[70] {0.13 to 0.18 {[2.76] 0.0051 to 0.0071}	0.22 {0.0087}	
31 to 34	Clearance of piston ring gap (Measure at interior of cylinder liner)	Compression ring	—	0.8 {0.031}	Replace piston ring kit
		Oil ring	—	0.8 {0.031}	
31 to 34, 37	Clearance between piston ring and piston ring groove	Compression ring	—	0.07 {0.0028}	Replace piston ring kit
		Oil ring	—	0.07 {0.0028}	
36, 37	Clearance between piston pin and piston		[6] {[0.63]}	0.08 {0.0031}	Replace piston pin
36, 40	Clearance between piston pin and connecting rod small end		[6] {[0.63]}	0.07 {0.0028}	Replace connecting rod
40, 43, 46	End play of connecting rod		—	0.5 {0.020}	Replace
41, 46	Clearance between crankshaft and connecting rod bearing		[34] {[1.34]}	0.1 {0.0039}	Replace
46, 47	End play of crankshaft		—	1.0 {0.0039}	Replace

AIR COMPRESSOR

Tightening torque

Unit : N·m {lbf.ft, kgf·m}

Location	Parts to be tightened	Tightening torque	Remarks
1	Nut (Drive gear mounting)	166.7 to 210.8 {120 to 155, 17.0 to 21.5}	—
5	Bolt (Bearing holder mounting)	13.7 to 17.7 {10 to 13, 1.4 to 1.8}	—
9	Bolt (Cylinder head assembly mounting)	24.5 to 29.4 {18 to 22, 2.5 to 3.0}	—
11	Connector	29.4 to 34.3 {22 to 25, 3.0 to 3.5}	—
16	Suction valve holder	117.7 to 127.5 {87 to 94, 12 to 13}	—
21	Delivery valve seat	117.7 to 127.5 {87 to 94, 12 to 13}	—
28	Bolt (Cylinder liner mounting)	24.5 to 29.4 {18 to 22, 2.5 to 3.0}	—
38	Nut (Connecting rod mounting)	22.6 to 25.5 {17 to 19, 2.3 to 2.6}	—

Lubricant and sealant

Location	Points of application	Kinds	Quantity
7	Oil seal lip	Engine oil	As required
13	O-ring	Silicon grease	As required
16	Thread area of suction valve holder	THREEBOND 1360	As required
21	Thread area of delivery valve seat	THREEBOND 1360	As required

Special tools

Unit : mm {in.}

Location	Tool name and shape	Part No.	Application
16	Suction valve tool 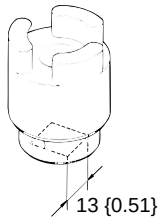 01730	MH061984	Removal and installation of suction valve holder
21	Delivery valve tool 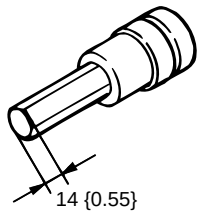 01731	MH061595	Removal and installation of delivery valve seat
31 to 34	Piston ring tool 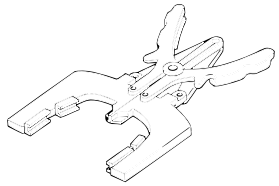 01732	MH060014	Removal and installation of piston ring (Compression ring and oil ring)

◆ Service procedure

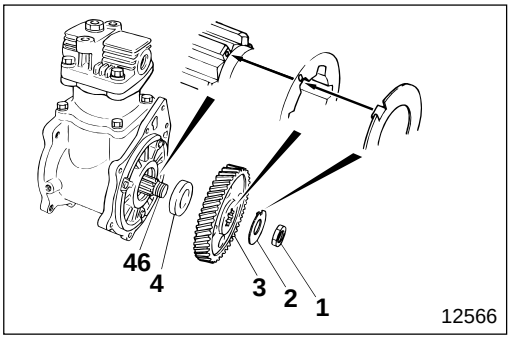

2 **3** **Installation of lock washer and drive gear**

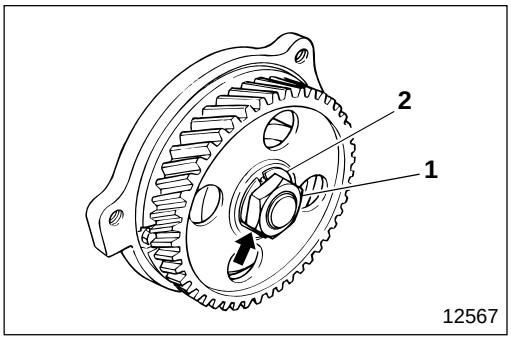

After installation, bend lock washer **2** to nut **1** side.

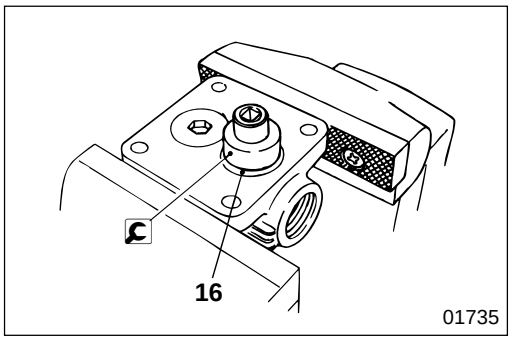

16 **Removal and installation of suction valve holder**

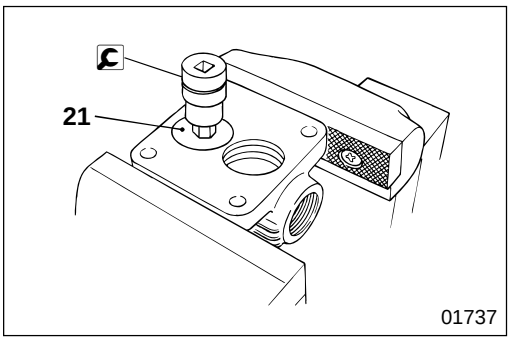

21 **Removal and installation of delivery valve seat**

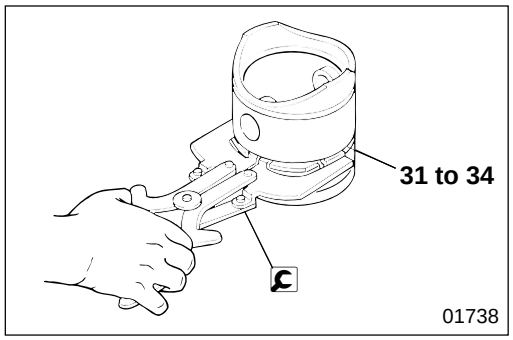

31 to **34** **Piston ring (Compression ring and oil ring)**

[Removal and installation]

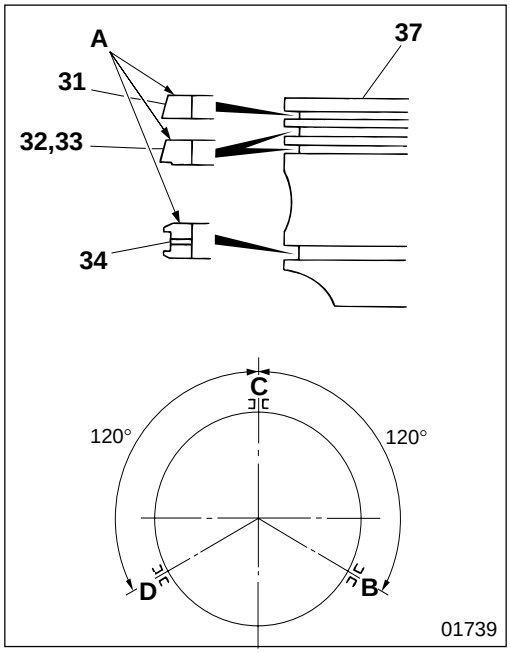

[Installation position]

- **A** : Stamped area
- **B** : 1st compression ring split **31**
- **C** : 2nd compression ring split **32**
- **D** : 3rd compression ring split **33**

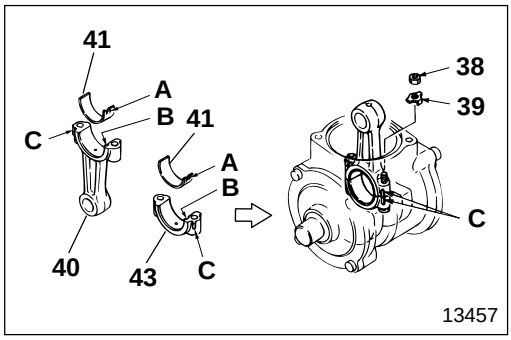

40 **41** **43** **Installation of connecting rod, bearing and connecting rod cap**

- **A** : Lug
- **B** : Notch
- **C** : Alignment marks

M E M O

AIR DRYER

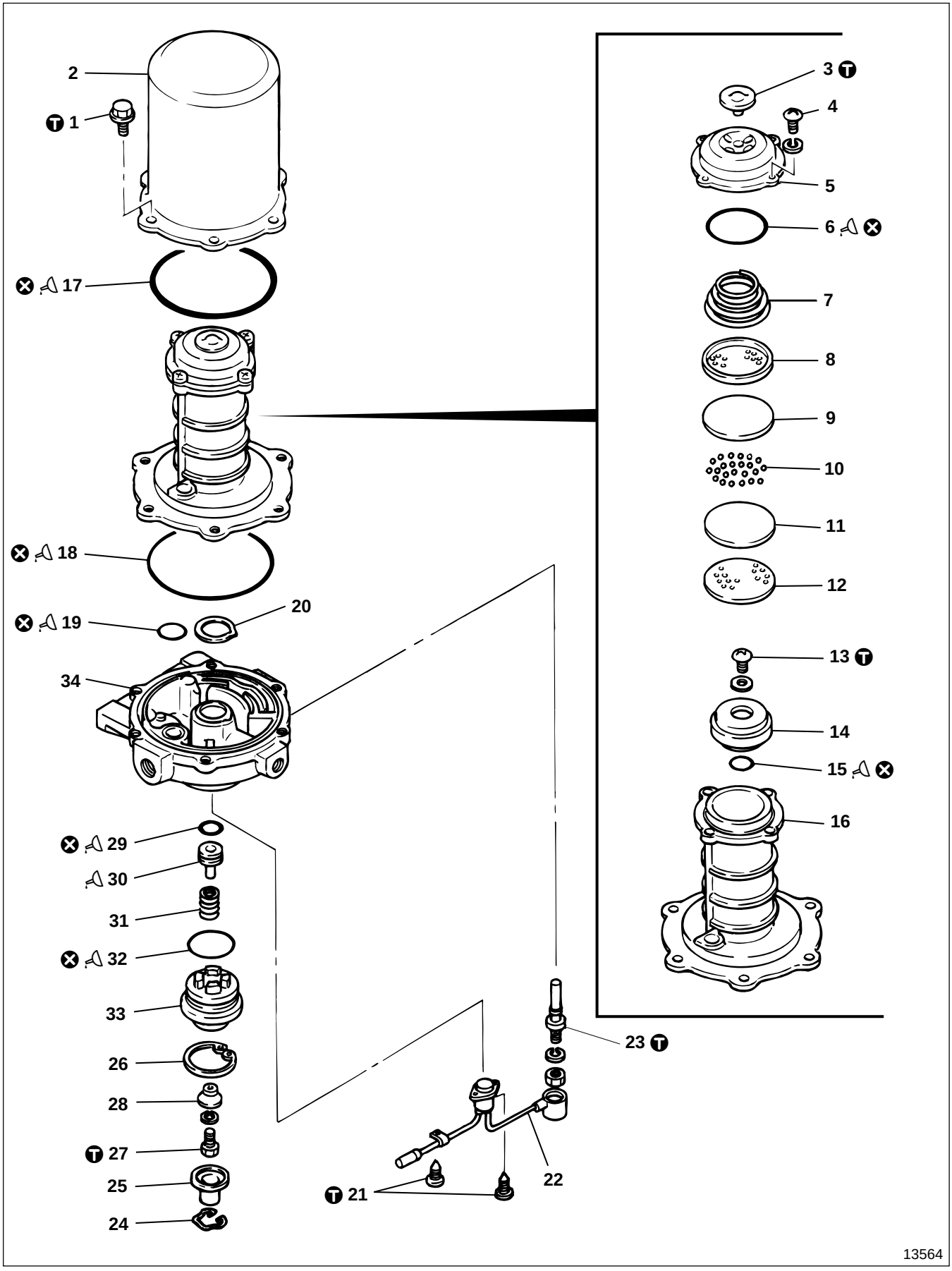
2
1
17
18
19
20
34
29
30
31
32
33
26
28
27
25
24
21
22
23
3
4
5
6
7
8
9
10
11
12
13
14
15
16
13564

● **Disassembly sequence**

1 Bolt
2 Purge chamber
3 Screw
4 Check valve
5 Case cover
6 O-ring
7 Set spring
8 Filter plate
9 Filter
10 Desiccant
11 Filter
12 Filter plate
13 Screw
14 Oil filter
15 O-ring
16 Case
17 O-ring
18 O-ring
19 O-ring
20 Gasket
21 Screw
22 Thermostat assembly Gr 54
23 Heater Gr 54
24 Stopper ring
25 Exhaust cover
26 Retaining ring
27 Bolt
28 Valve assembly
29 O-ring
30 Piston
31 Valve spring
32 O-ring
33 Valve body
34 Body

⊗ : Non-reusable parts

CAUTION⚠

Clean disassembled parts thoroughly, except for rubber parts and desiccant 10, with clean wash oil, wipe off foreign particles and dry.

● **Assembly sequence**

Follow the disassembly sequence in reverse.
Repair kit : Air dryer kit

CAUTION⚠

Make sure you install filters 9, 11, with their soft layer sides toward desiccant 10.

● **Inspection after installation**

P35-82

Tightening torque

Unit : N·m {lbf.ft, kgf·m}

Location	Parts to be tightened	Tightening torque	Remarks
1	Bolt (Purge chamber and body mounting)	8.8 to 14 {6.5 to 10, 0.9 to 1.4}	—
3	Screw (Case cover and case mounting)	0.8 to 1.0 {0.6 to 0.7, 0.08 to 0.1}	—
13	Screw (Oil filter mounting)	0.8 to 1.0 {0.6 to 0.7, 0.08 to 0.1}	—
21	Screw (Thermostat assembly mounting)	0.8 to 1.0 {0.6 to 0.7, 0.08 to 0.1}	—
23	Heater	20 to 29 {14 to 22, 2 to 3}	—
27	Bolt (Valve assembly mounting)	3.9 to 6.9 {2.9 to 5.1, 0.4 to 0.7}	—

Lubricant

Location	Points of application	Kinds	Quantity
6, 15, 17 to 19, 29, 30, 32	Friction surfaces of O-ring and piston	Multipurpose grease [NLGI No. 2 (Li soap)]	As required

◆ Service procedure

● Inspection after installation

- Start the engine.
- Make sure that air is exhausted from the port of exhaust cover **25** when the air pressure reaches the specified level and the air compressor is switched to idling.

NOTE

If high air pressure is exhausted first and approximately three seconds later, you cannot hear an exhausting sound, do not worry, it is normal.

- Make sure that there is no air leakage from any piping connection.

M E M O

AIR PRESSURE GOVERNOR

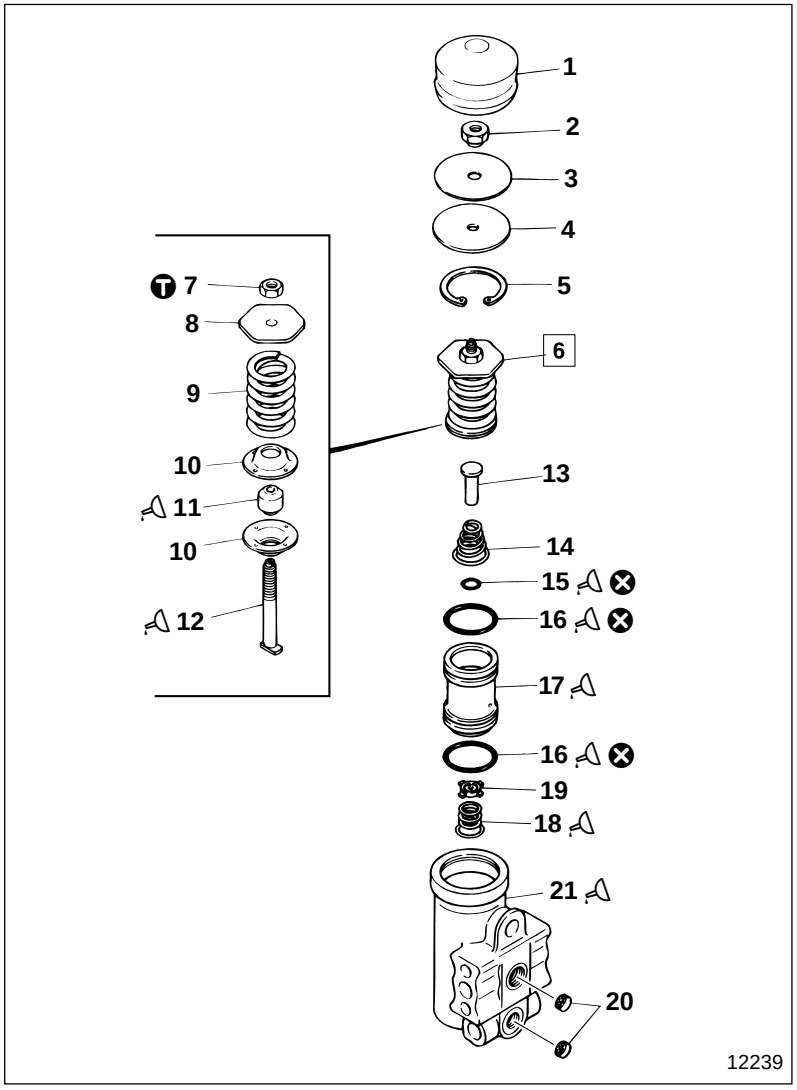

● **Disassembly sequence**

1 Cover
2 Nut
3 Plate
4 Seat
5 Retaining ring
6 Adjusting screw assembly
7 Lock nut
8 Upper spring seat
9 Spring
10 Lower spring seat
11 Spring guide
12 Adjusting screw
13 Exhaust stem
14 Exhaust stem spring
15 O-ring
16 O-ring
17 Piston
18 Valve spring
19 Valve
20 Filter
21 Body

⊗ : Non-reusable parts

● **Assembly sequence**

Follow the disassembly sequence in reverse.

Repair kit : Air pressure governor kit

● **Inspection of function after assembly**

P35-85

Service standards

Location	Maintenance item		Standard value	Limit	Remedy
—	Specified pressure	High specified pressure	805^{+29}_{-20} kPa $\{115^{+4.3}_{-2.8}$ lbf/in^2, $8.2^{+0.3}_{-0.2}$ kgf/cm$^2\}$	—	Adjust
		Low specified pressure	685±20 kPa {100±2.8 lbf/in^2, 7.0±0.2 kgf/cm^2}		

Ⓣ Tightening torque

Unit : N·m {lbf.ft, kgf·m}

Location	Parts to be tightened	Tightening torque	Remarks
7	Lock nut	3.9 to 6.9 {2.9 to 5.1, 0.4 to 0.7}	—

Lubricant

Location	Points of application	Kinds	Quantity
11	Surface of spring guide	Multipurpose grease [NLGI No. 2 (Li soap)]	As required
12	Surface of adjusting screw, except for thread area	Multipurpose grease [NLGI No. 2 (Li soap)]	As required
15, 16	Entire O-ring	Multipurpose grease [NLGI No. 2 (Li soap)]	As required
17	Outer periphery of piston and O-ring groove	Multipurpose grease [NLGI No. 2 (Li soap)]	As required
21	Interior of body	Multipurpose grease [NLGI No. 2 (Li soap)]	As required

◆ Service procedure

● Inspection of function after assembly

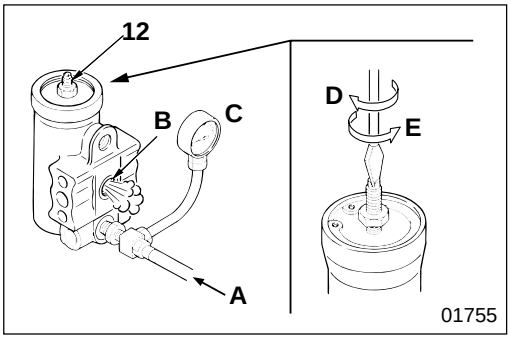

- Increase air pressure **A** gradually and read the value on air pressure gauge **C** when air is discharged from **B**. Adjust by turning adjusting screw **12** so that the reading conforms to the standard value (high specified-pressure).
  D : Turning clockwise decreases the pressure
  E : Turning counterclockwise increases the pressure
- Lower air pressure **A** to 685 kPa {100 lbf/in^2, 7 kgf/cm^2} or less, then raise the air pressure gradually. Read air pressure gauge **C** when it stops and check that the value conforms to the standard value (high specified-pressure). If the value deviates from the standard value, readjust.

- Lower air pressure **A** gradually. When the discharge of air from **B** ceases, read air pressure gauge **C** to check that the valve conforms to the standard value (high specified-pressure). If the value deviates from the standard value, replace the air pressure governor assembly.

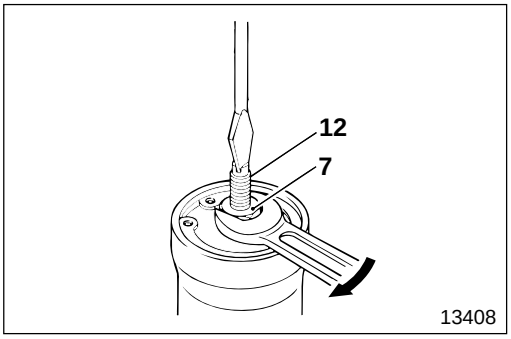

- After adjusting, tighten lock nut **7** to prevent adjusting screw **12** being turned accidentally.

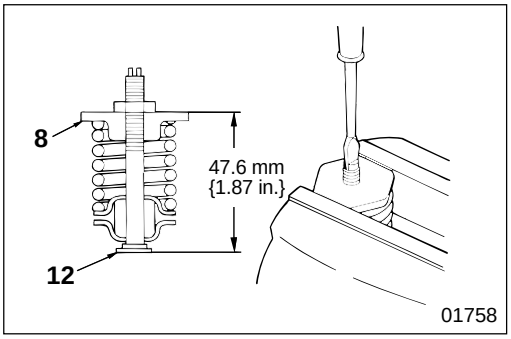

6 **Preliminary adjustment of adjusting screw assembly**

It is recommended that you adjust the distance from the upper level of upper spring seat **8** to the lower level of adjusting screw **12** to 47.6 mm {1.87 in.} by turning the adjusting screw, because this makes adjustment to the specified value easier.

FLUID TANK

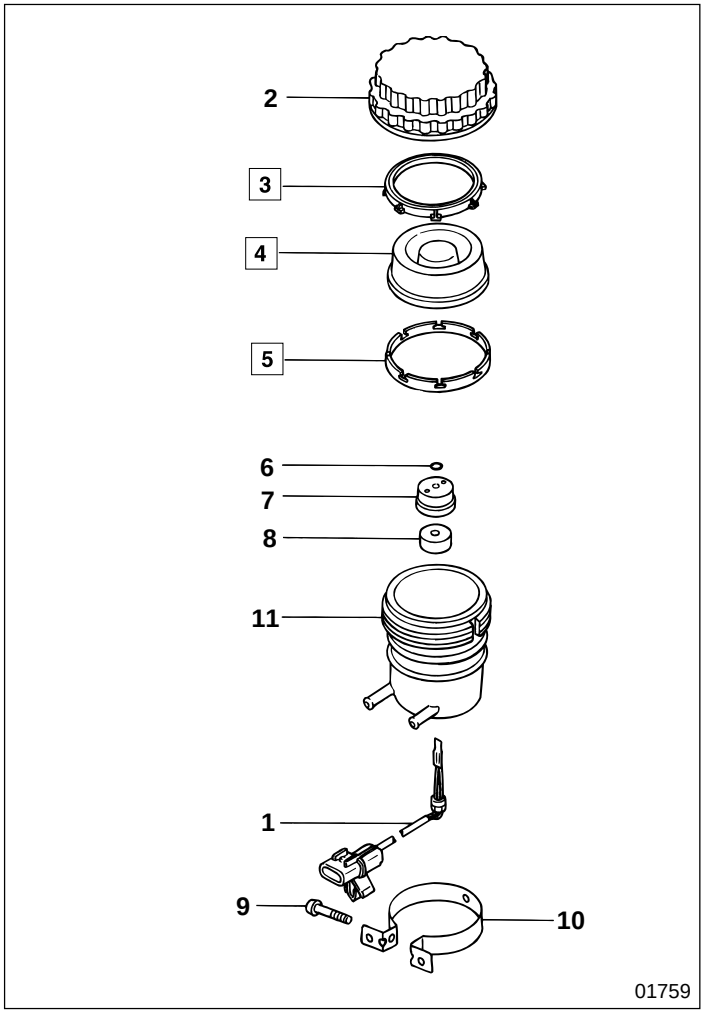

● **Disassembly sequence**

1 Brake fluid level switch Gr 54
2 Cap
3 Slide ring
4 Diaphragm
5 Ring cover
6 Stopper ring
7 Float stopper
8 Float
9 Screw
10 Fluid tank bracket
11 Tank

● **Assembly sequence**

Follow the disassembly sequence in reverse.

◆ Service procedure

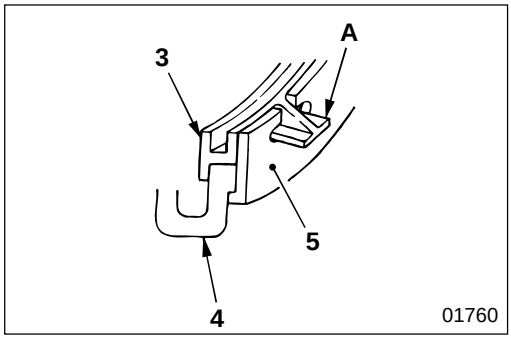

3 **to** **5** **Installation of slide ring, diaphragm and ring cover**

Be sure to install claw **A** of slide ring **3** to ring cover **5** securely. Install diaphragm **4** in the direction as illustrated.

CHECK VALVE

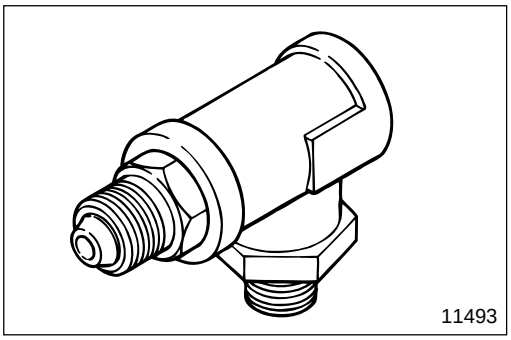

CAUTION⚠

Do not disassemble this check valve because it is a unit construction.

Service standards

Location	Maintenance item	Standard value	Limit	Remedy
—	Pressure difference between inlet and outlet	29 kPa {4.3 lbf/in^2, 0.3 kgf/cm^2} or less	—	Replace

SAFETY VALVE

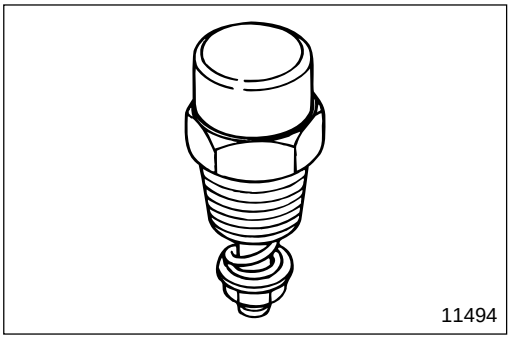

Service standards

Location	Maintenance item	Standard value	Limit	Remedy
—	Release pressure of safety valve	950±20 kPa {135±2.8 lbf/in^2, 9.7±0.2 kgf/cm^2}	—	Replace

SUPPLY VALVE

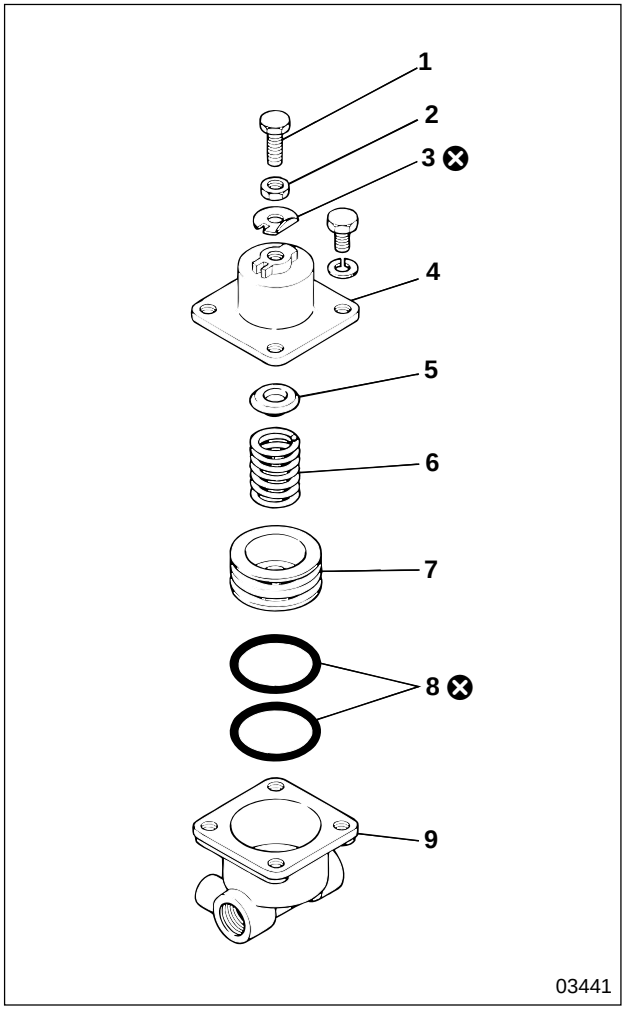

● **Disassembly sequence**

1 Adjusting bolt
2 Lock nut
3 Claw washer
4 Cap
5 Spring retainer
6 Spring
7 Piston
8 O-ring
9 Valve body

⊗ : Non-reusable parts

CAUTION⚠

Make sure that adjusting bolt 1 is not turned except for adjustment.

● **Assembly sequence**

Follow the disassembly sequence in reverse.

● **Inspection after assembly**

P35-88

Service standards

Location	Maintenance item		Standard value	Limit	Remedy
—	Specified pressure	Valve opening pressure	345±29 kPa {50±4.3 lbf/in², 3.5±0.3 kgf/cm²}	—	Adjust or replace
		Valve closing pressure	315±20 kPa {46±2.8 lbf/in², 3.2±0.2 kgf/cm²}	—	

◆ Service procedure

● **Inspection after assembly**

Adjust by turning adjusting bolt **1** after loosening lock nut **2**. After adjusting, tighten the lock nut without turning the adjusting bolt, and bend claw washer **3** to secure the lock nut.

- Adjust adjusting bolt **1** so that air is discharged from the outlet port (arrow mark **B** in the illustration), when valve opening pressure is applied to the inlet port (arrow mark **A** in the illustration).
- After adjusting valve opening pressure, adjust adjusting bolt **1** so that air is not discharged from the outlet port (arrow mark **B** in the illustration) when valve closing pressure is applied to the inlet port (arrow mark **A** in the illustration).

  B : Arrow showing the air flow direction

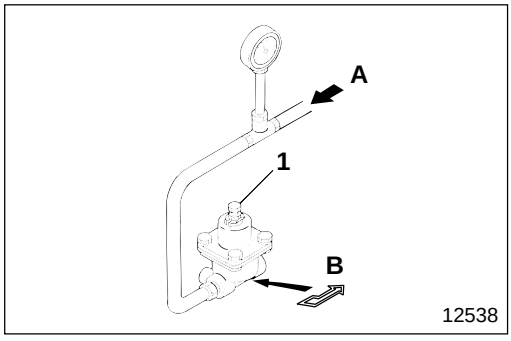

M E M O

EXHAUST BRAKE SYSTEM

Exhaust Brake Unit

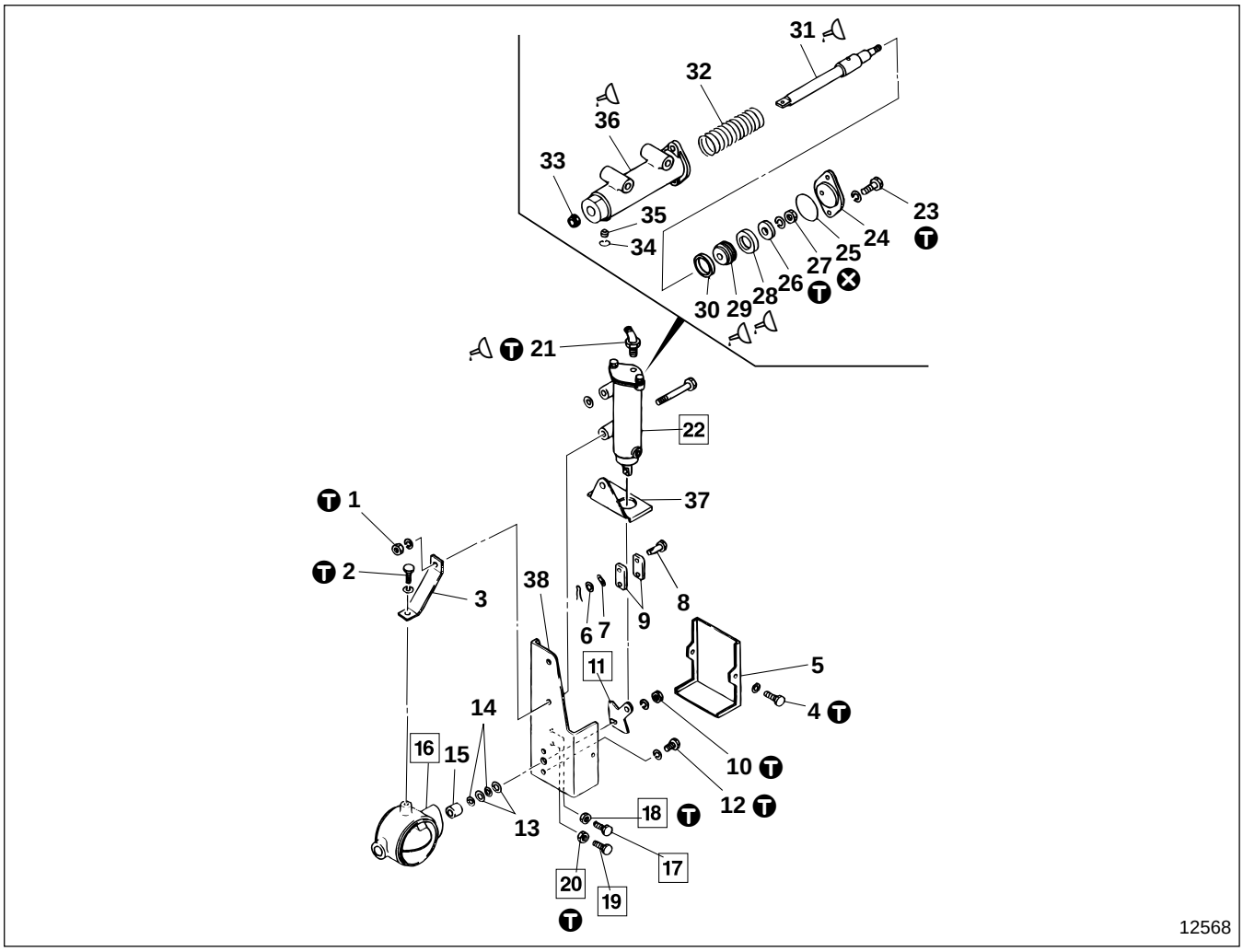

● **Disassembly sequence**

1 Nut
2 Bolt
3 Arm
4 Screw
5 Cover
6 Plain washer
7 Wave washer
8 Pin
9 Link
10 Nut
11 Lever
12 Bolt
13 Seal ring (Large)
14 Seal ring (Small)
15 Bushing
16 Valve assembly
17 Adjusting bolt
18 Lock nut
19 Adjusting bolt
20 Lock nut
21 Connector
22 Control cylinder
23 Bolt
24 Cover
25 O-ring
26 Retainer
27 Nut
28 Packing
29 Plate
30 Wear ring
31 Shaft assembly
32 Spring
33 Dust seal
34 Retaining ring
35 Filter
36 Cylinder
37 Cover
38 Plate

⊗ : Non-reusable parts

● **Assembly sequence**

Follow the disassembly sequence in reverse.

Service standards

Unit : mm {in.}

Location	Maintenance item	Standard value	Limit	Remedy
16	Clearance between butterfly valve and body; when butterfly valve of valve assembly is working (when air pressure 685±49 kPa {100±7.1 lbf/in^2, 7±0.5 kgf/cm^2} is applied to control cylinder)	0.4 to 0.6 {0.016 to 0.024}	—	Adjust
22	Airtightness of control cylinder (air leakage from various parts when subjected to air pressure of 980 kPa {140 lbf/in^2, 10 kgf/cm^2})	No leakage	—	Replace
32	Spring load (Installed length 109 {4.29})	72 N {16 lbf, 7.3 kgf}	61 N {14 lbf, 6.2 kgf}	Replace

Tightening torque

Unit : N·m {lbf.ft, kgf·m}

Location	Parts to be tightened	Tightening torque	Remarks
1	Nut (Arm, plate, and control cylinder mounting)	21 to 25 {15 to 19, 2.1 to 2.6}	—
2	Bolt (Arm and valve assembly mounting)	9.8 to 16 {7.2 to 12, 1.0 to 1.6}	—
4	Screw (Cover and plate mounting)	4.9 to 6.9 {3.6 to 5.1, 0.5 to 0.7}	—
10	Nut (Valve assembly and spindle mounting)	9.8 to 16 {7.2 to 12, 1.0 to 1.6}	—
12	Bolt (Valve assembly body mounting)	9.8 to 16 {7.2 to 12, 1.0 to 1.6}	—
18, 20	Lock nut	4.9 to 6.9 {3.6 to 5.1, 0.5 to 0.7}	—
21	Connector	4.9 {3.6, 0.5} or more	—
23	Bolt (Cover mounting)	9.8 to 16 {7.2 to 12, 1.0 to 1.6}	—
27	Nut (Plate mounting)	9.8 to 16 {7.2 to 12, 1.0 to 1.6}	—

Lubricant and sealant

Location	Points of application	Kinds	Quantity
21	Thread area of connector	THREEBOND No.1211	As required
28	Packing surface	Multipurpose grease [NLGI No. 2 (Li soap)]	As required
29, 31	Mating surfaces of plate and shaft assembly	SANNOW KOGYO CO., HERMETIC GA	As required
31	ø12 mm {0.47 in.} area of shaft assembly	Multipurpose grease [NLGI No. 2 (Li soap)]	As required
36	Inside of cylinder	Multipurpose grease [NLGI No. 2 (Li soap)]	2 cm^3 {0.12 cu. in.}

Inspection and Adjustment of Exhaust Brake System

[Inspection]
Turn the exhaust brake switch ON, depress the accelerator pedal gradually, and make sure that when the engine revolution reaches 800 to 950 rpm the exhaust brake operation indicator lamp within the meter cluster goes out. If any fault is found, adjust accelerator switch **1**.

◆ Service procedure

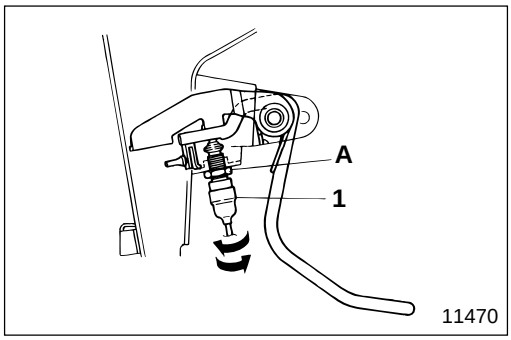

1 **Adjustment of accelerator switch**

- Turn the exhaust brake switch ON while the engine is idling, depress the accelerator pedal gradually, and check the engine revolution when the exhaust brake operation indicator lamp within the meter cluster goes out.
- Turn accelerator switch **1** to adjust the engine revolution, referring to the following table:

Confirmed engine revolution	Adjusting direction of accelerator switch 1
800 rpm or less	↻
950 rpm or more	↺

- After adjustment, tighten nut **A** to fix accelerator switch **1**.

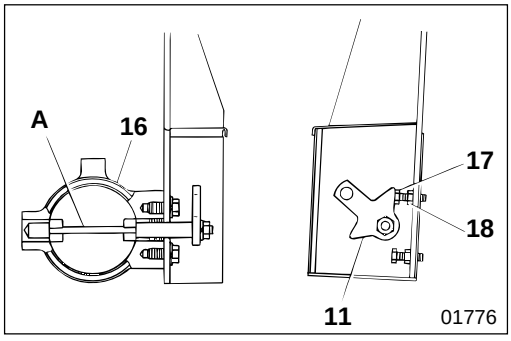

11 **16** **to** **18** **Adjustment of fully opened position of butterfly valve of valve assembly**

Turn adjusting bolt **17** so that its head is level with lever **11** (at this time, butterfly valve **A** of valve assembly **16** is fully open). Then, tighten lock nut **18** at specified torque.

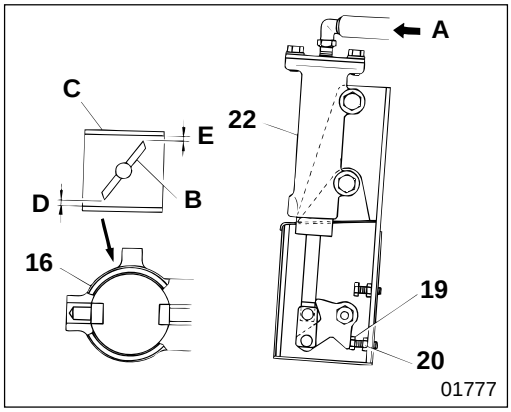

16 **19** **20** **22** **Adjustment of fully closed position of butterfly valve of valve assembly**

- Supply air pressure **A** of 685±49 kPa {100±7.1 lbf/in^2, 7±0.5 kgf/cm^2} to control cylinder **22**, and turn adjusting bolt **19** (bolt for adjustment of fully closed position) so that the mean value of clearances **D** and **E** between butterfly valve **B** and body **C** conforms to the standard value.
- Calculate the mean value of clearances **D** and **E** by (**D**+**E**)/2.
- Tighten lock nut **20** at specified torque.

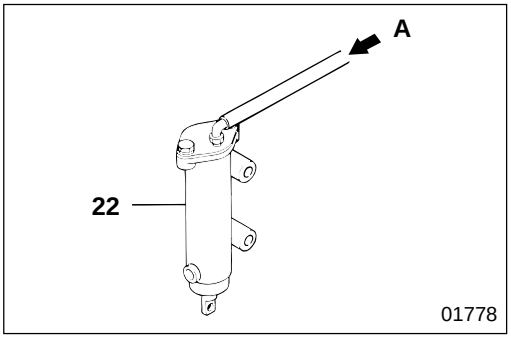

22 **Inspection of airtightness of control cylinder**

Check that there is no air leakage when pressure **A** of 980 kPa {140 lbf/in^2, 10 kgf/cm^2} is applied to control cylinder **22**. Replace any control cylinder that leaks.

Intake Silencer

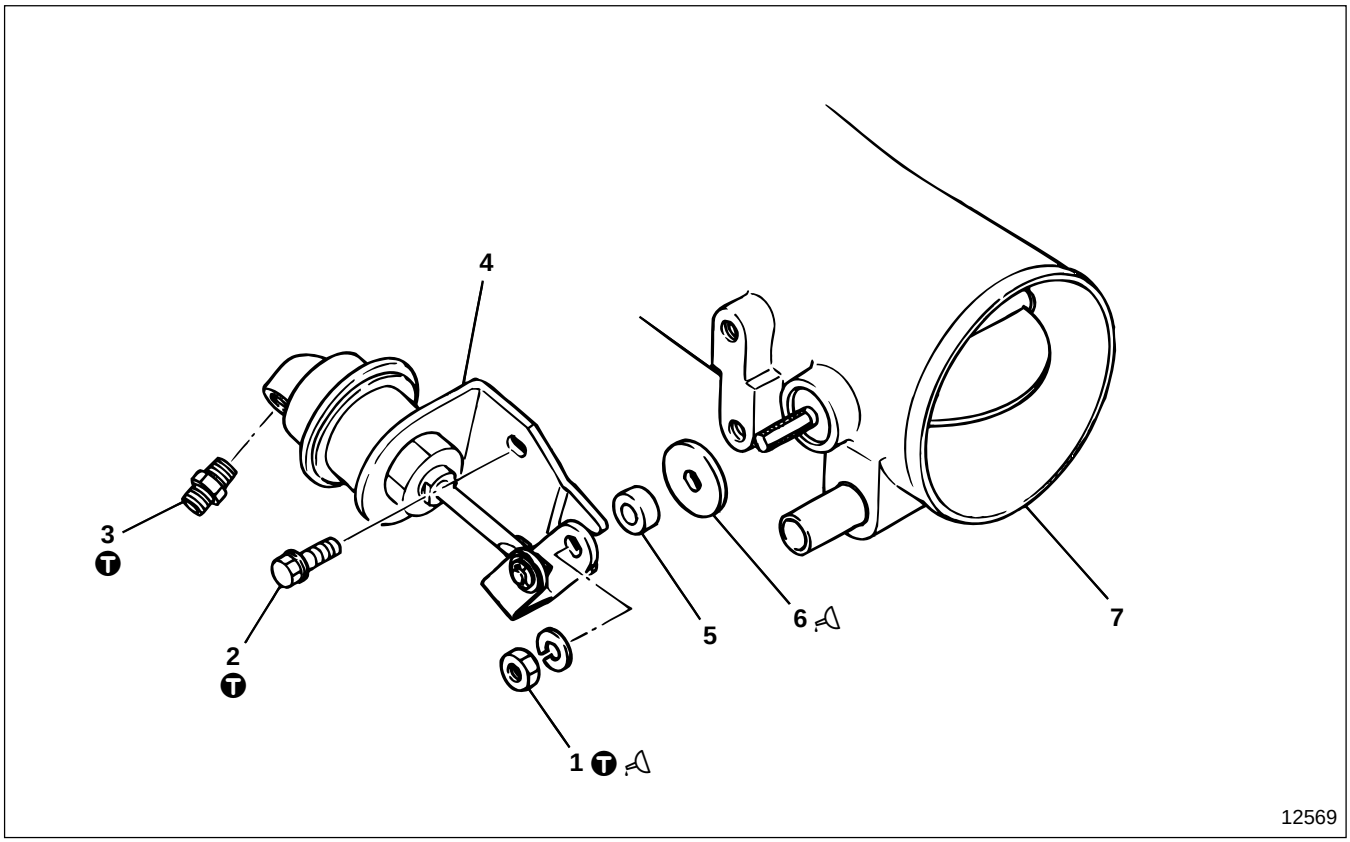

● **Disassembly sequence**

1 Nut
2 Bolt
3 Connector
4 Actuator assembly
5 Spacer
6 Thrust washer
7 Air inlet pipe

● **Assembly sequence**

Follow the disassembly sequence in reverse.

● **Adjustment after assembly**

P35-95

Service standards

Unit : mm {in.}

Location	Maintenance item		Standard value	Limit	Remedy
—	Clearance between top of butterfly valve and center of air inlet pipe		1.5 {0.059}	—	Adjust
	Clearance of butterfly valve (when fully closed) and air inlet pipe	Upper and lower clearances	1 {0.039} or more	—	Adjust
		Mean value of upper and lower clearances	3.5 to 4.0 {0.14 to 0.16}	—	Adjust

Tightening torque

Unit : N·m {lbf.ft, kgf·m}

Location	Parts to be tightened	Tightening torque	Remarks
1	Nut (Valve shaft mounting)	8 {5.9, 0.8}	—
2	Bolt (Actuator assembly mounting)	15 {11, 1.5}	—
3	Connector	10 {7.2, 1.0}	—

Lubricant and sealant

Location	Points of application	Kinds	Quantity
1	Thread area of nut	LOCTITE 271	As required
6	Both surfaces of thrust washer	Molybdenum disulfide grease	As required

◆ Service procedure

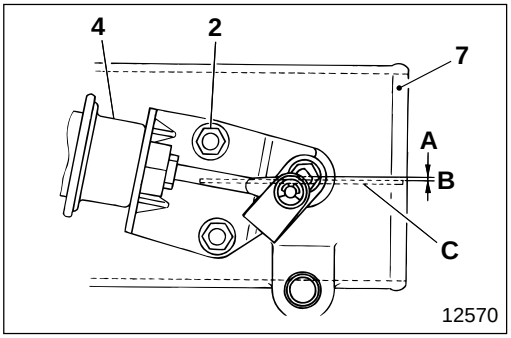

● **Adjustment after assembly**

(1) Butterfly valve full-open adjustment

- Loosen bolt **2** so that actuator assembly **4** can move slightly.
- Move actuator assembly **4** to adjust clearance **A** to the standard value.
- After adjustment, tighten bolt **2** at specified torque.
  B : Center of air inlet pipe **7**
  C : Butterfly valve

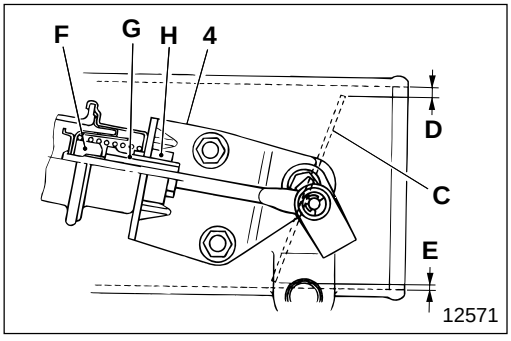

(2) Butterfly valve full-close adjustment

- Move butterfly valve **C** so that stopper **F** makes contact with adjusting screw **G**.
- Turn adjusting screw **G** to adjust clearances **D** (upper) and **E** (lower) to their respective standard values, and check that the mean value of upper and lower clearances **D**, **E** conforms to the standard value.
- Calculate the mean value of the upper and lower clearances by (**D**+**E**)/2.
- After adjustment, fix adjusting screw **G** using lock nut **H**.

EXHAUST BRAKE SYSTEM

Exhaust Brake System Electric Equipment

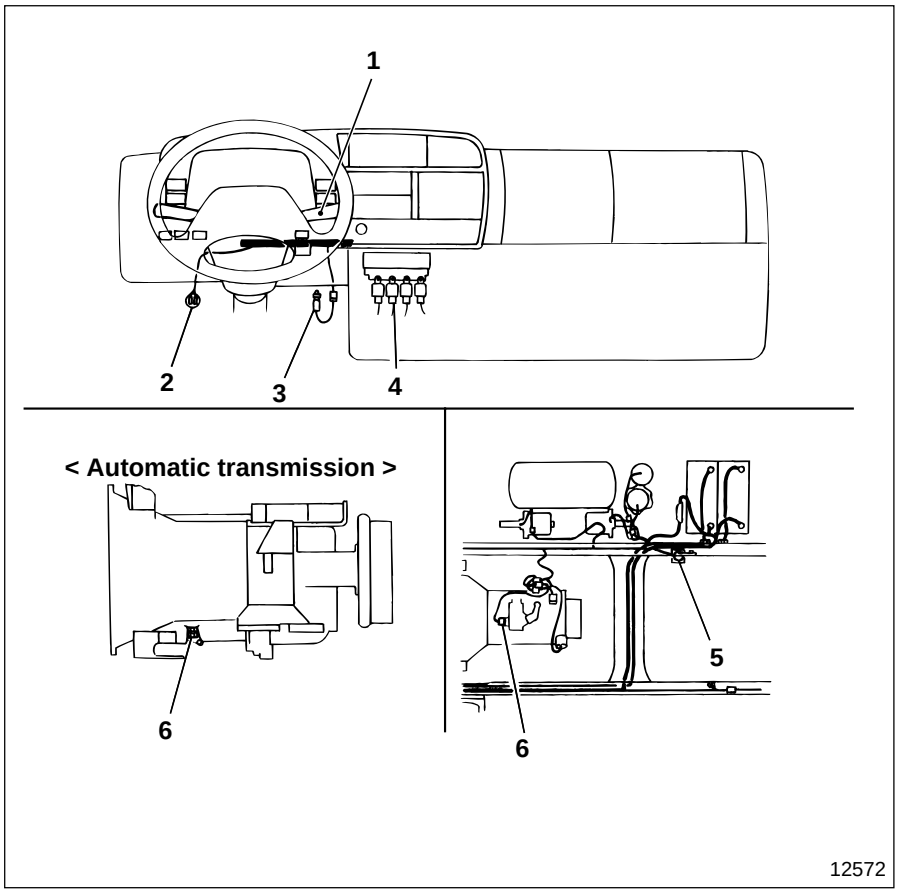

1 Exhaust brake switch
- Gr 37
- Gr 54

2 Clutch switch
- Gr 21
- Gr 54

3 Accelerator switch
- Gr 13
- Gr 54

4 Exhaust brake cut relay
- Gr 54

5 3-way magnetic valve
- Gr 54

6 Transmission neutral switch
- Gr 22, Gr 23
- Gr 54

MITSUBISHI
FUSO

FH

Service Manual

Group 36
Parking Brake

Table of Contents

BACK

HOME

MITSUBISHI FUSO TRUCK OF AMERICA, Inc.

Pub No. TWME9502-36

GROUP 36 PARKING BRAKE

SPECIFICATIONS 2

STRUCTURE AND OPERATION 2

TROUBLESHOOTING 4

INSPECTION AND ADJUSTMENT MOUNTED IN VEHICLE

• Adjustment of Parking Brake Shoe Clearance and Lever Stroke 5

PARKING BRAKE CONTROL 6

PARKING BRAKE ASSEMBLY 8

SUPPORT PLATE AND SHOE ASSEMBLY

< ø203.2 mm {8 in.} Drum > 12

< ø254 mm {10 in.} Drum > 14

SPECIFICATIONS/STRUCTURE AND OPERATION

SPECIFICATIONS

Item \ Vehicle model		FH211-A	FH211-B
		Manual transmission	Automatic transmission
Brake	Type	Propeller shaft internal expanding type brake	
	Operation type	Mechanical cable type	
Parking brake assembly	Type	Dual-servo type	
	Inner diameter of drum mm {in.}	ø203.2 {8}	ø254 {10}
	Lining width×Thickness mm {in.}	50×4.0 {1.97×0.16}	60×5.8 {2.36×0.23}

STRUCTURE AND OPERATION

Parking Brake Control

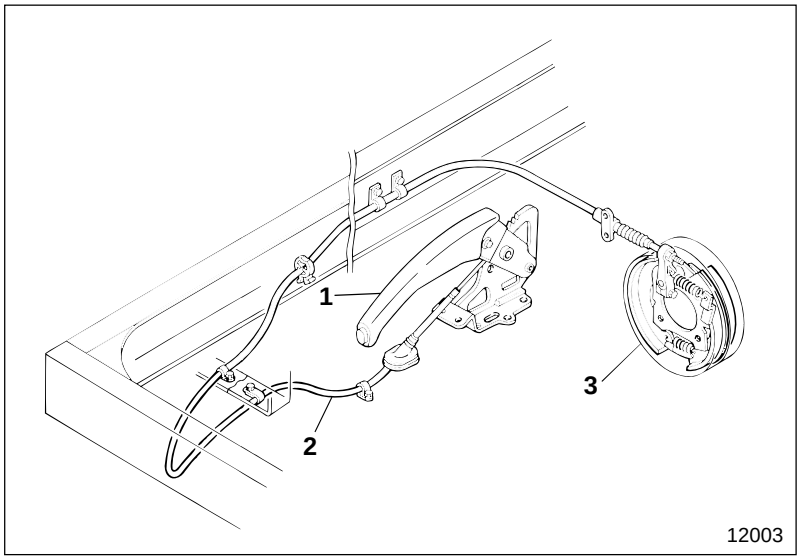

1 Parking brake lever
2 Parking brake cable
3 Parking brake assembly

Parking Brake Lever

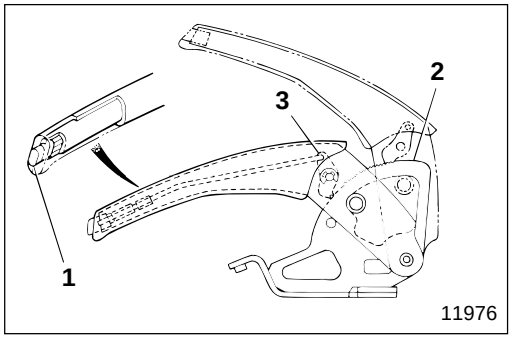

1 Release rod knob
2 Lever bracket
3 Locking latch

The parking brake has a built-in locking mechanism that prevents inadvertent release of the brake.
To release locking, push release rod knob **1** which will disengage from the serration of lever bracket **2** and the tooth of locking latch **3** freeing the parking brake lever and allowing it to return.

Parking Brake Assembly

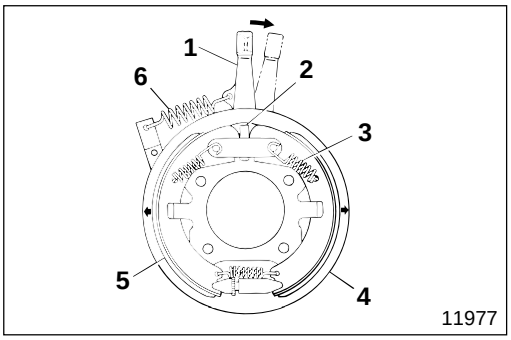

1 Camshaft lever
2 Camshaft
3 Shoe return spring
4 Dust cover or support plate and cover assembly
5 Shoe and lining assembly
6 Camshaft lever return spring

Pulling the parking brake lever pulls the parking brake cable, which in turn pulls camshaft lever **1**. At the same time, camshaft **2** rotates in conjunction with the camshaft lever, and expands shoe and lining assembly **5** making it press against the brake drum. This frictional force locks the propeller shaft that is connected to the drum. When the brake lever is released, the repercussive force of shoe return spring **3** releases the brake.

Parking Brake Electrical System

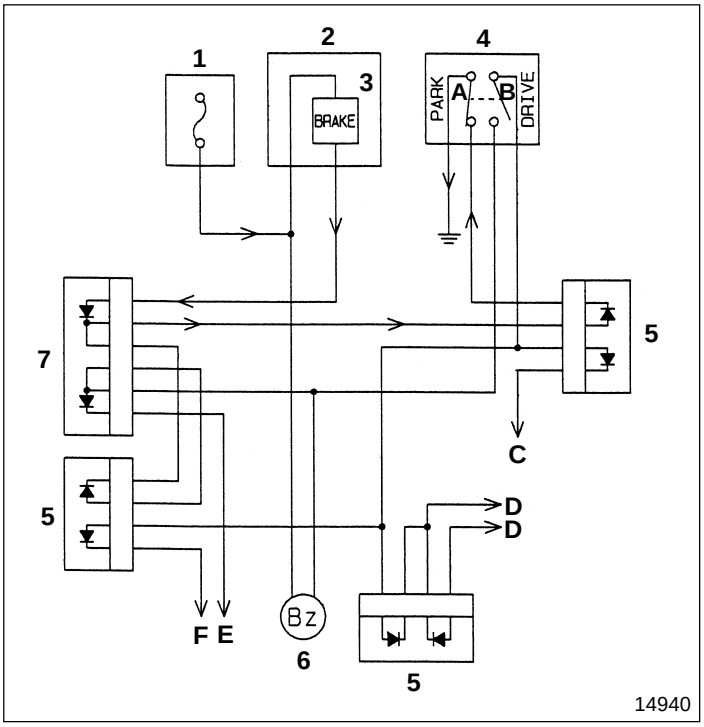

1 Fuse box
2 Meter cluster
3 Parking brake indicator lamp
4 Parking brake switch
5 Diode unit
6 Buzzer
7 Joint connector

C : Cooling system
D : Automatic transmission system
E : Brake system
D : Engine oil pressure system

- The parking brake electrical system is provided for indictaing, its detecting and indictaing function is activated by pulling the parking brake lever.
- When the parking brake lever is pulled, contact point **A** of parking brake switch **4** closes (ON), and parking brake indicator lamp **3** is lit, indicating that the parking brake is operating.
  The current flows as below:
  Fuse **1** → Parking brake indicator lamp **3** →
  Joint connector **7** → Diode unit **5** →
  Parking brake switch **4** → Ground
- Buzzer **6** sounds and gives a warning when any fault is detected in the cooling system, automatic transmissionn system, brake system or engine oil pressure system. Pulling the parking brake lever opens (OFF) contact point **B** of parking brake switch **4** to stop the buzzer from sounding.

Possible causes / Symptoms		Parking brake does not work	Parking brake does not release smoothly (dragging)	Remarks
Parking brake cable	Inner cable stretched or damaged	○	○	
	Inner cable rusted		○	
Parking brake lever	Ratchet bar and ratchet pawl engaging incorrectly	○		
	Pulling stroke insufficient		○	
	Pulling stroke excessive	○		
Parking brake assembly	Shoe clearance insufficient		○	
	Shoe clearance excessive	○		
	Parking brake drum inner surface deformed or warped	○		
	Lining worn unevenly	○		
	Brake drum inner surface greasy or oily	○		
	Lining surface greasy or oily	○		
	Camshaft lever return spring fatigued or fractured		○	
	Shoe return spring fatigued or fractured		○	

Adjustment of Parking Brake Shoe Clearance and Lever Stroke

Service standards

Unit : mm {in.}

Location	Maintenance item	Standard value	Limit	Remedy
—	Brake shoe clearance	0.1 to 0.25 {0.0039 to 0.0098}	—	Adjust
3	Brake lever pulling stroke (at operating force of 490 N {110 lbf, 50 kgf})	7 to 10 notches	—	Adjust

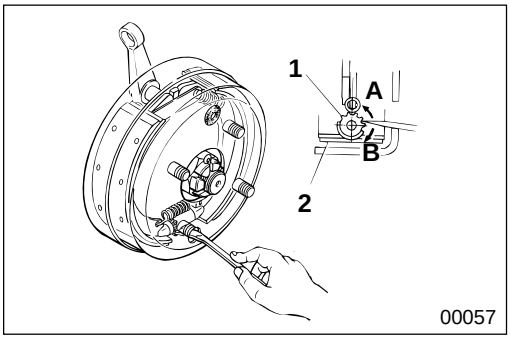

(1) Shoe clearance

When the camshaft lever is released, turn adjusting screw **1** in the expansion direction, using a screwdriver inserted through the shoe adjusting hole of the brake drum, and return 8 notches from the position where shoe **2** is in close contact with the drum. Then, the shoe clearance will be the standard value.

A : Expansion
B : Contraction

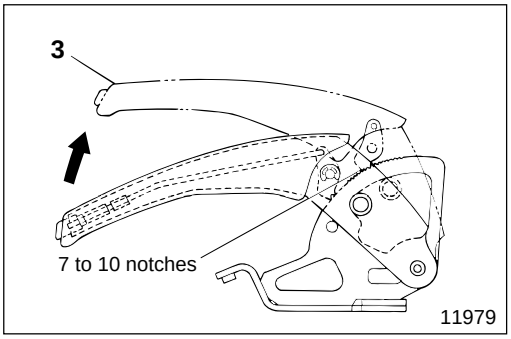

(2) Lever pulling stroke

Adjust camshaft lever lock nut **4** so that the number of notches (clicks heard) is the standard value when parking brake lever **3** is pulled from the released position by an operating force of 490 N {110 lbf, 50 kgf}. Operate the parking brake lever two or three times after adjusting to verify the pulling stroke, to make sure that the parking brake is operating properly and that the parking brake drum does not drag when the parking brake is released.

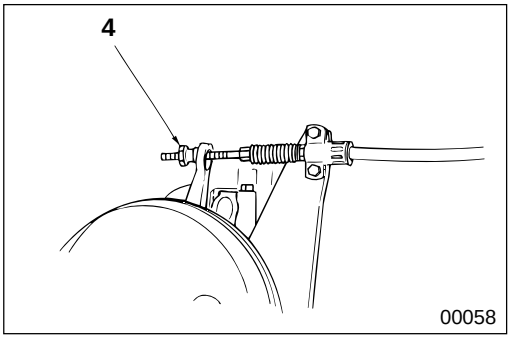

PARKING BRAKE CONTROL

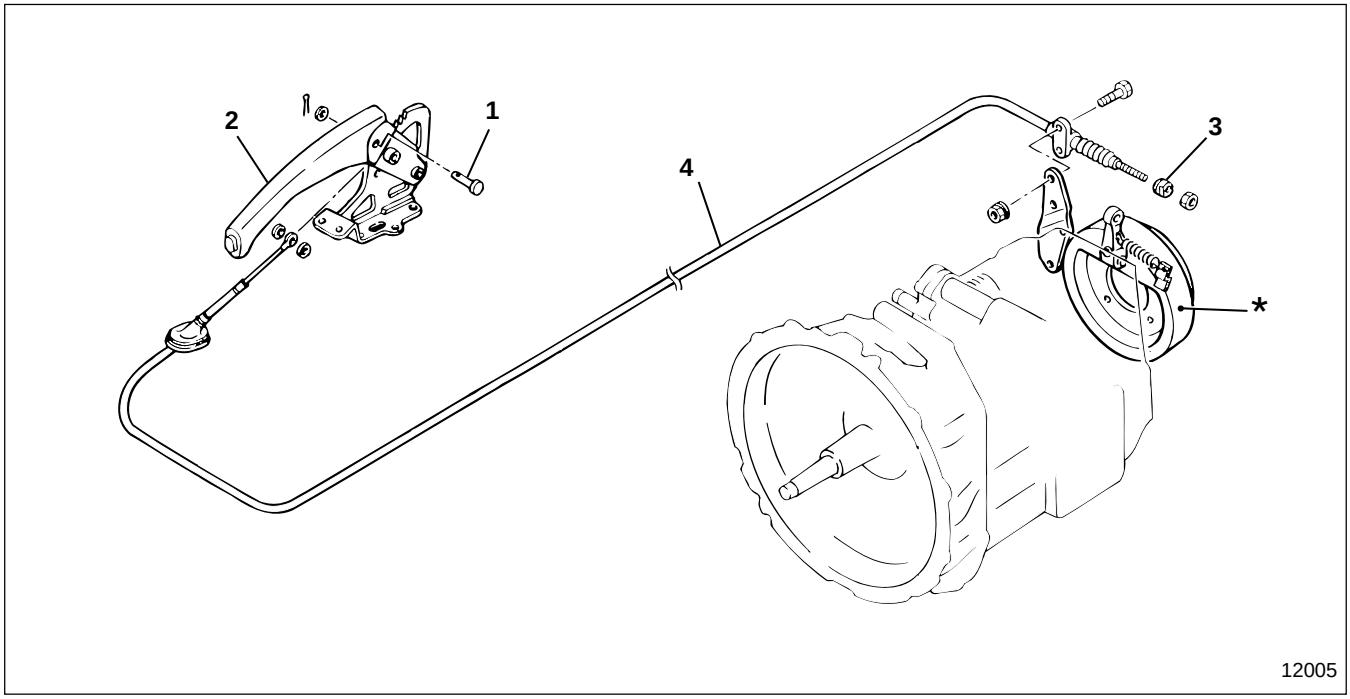

● **Removal sequence**

1 Clevis pin
2 Parking brake lever assembly 🕮 P36-7
3 Ball bushing
4 Parking brake cable

***** : Parking brake assembly 🕮 P36-8

WARNING⚠

- **You must place wheel chocks securely in place to prevent the vehicle from moving.**
- **Do not remove the chocks until the entire operation is completed.**

● **Installation sequence**

Follow the removal sequence in reverse.

Parking Brake Lever Assembly

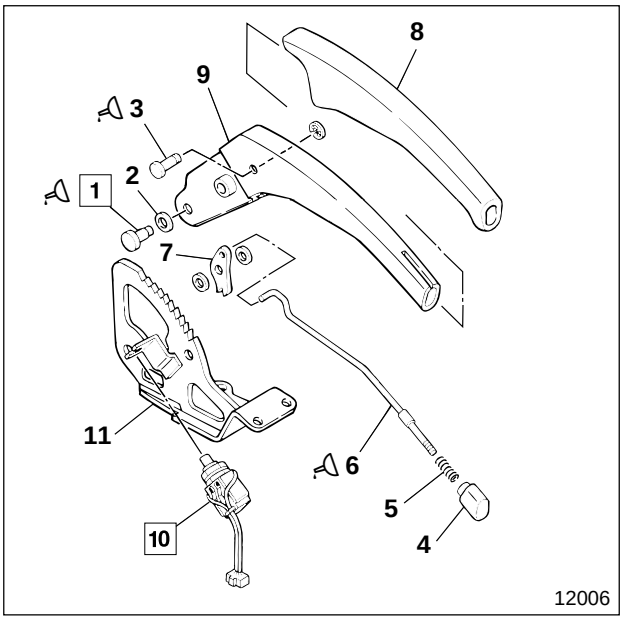

● **Disassembly sequence**

1 Pin
2 Spacer
3 Pin
4 Release rod knob
5 Return spring
6 Release rod
7 Locking latch
8 Grip
9 Parking brake lever
10 Parking brake switch Gr 54
11 Lever bracket

● **Assembly sequence**

Follow the disassembly sequence in reverse.

Lubricant and sealant

Location	Points of application	Kinds	Quantity
1, 3	Rotating area and friction surface of pins	Chassis grease [NLGI No.1 (Ca soap)]	As required
6	Thread area of release rod	Cemedine 1500	As required

◆ Service procedure

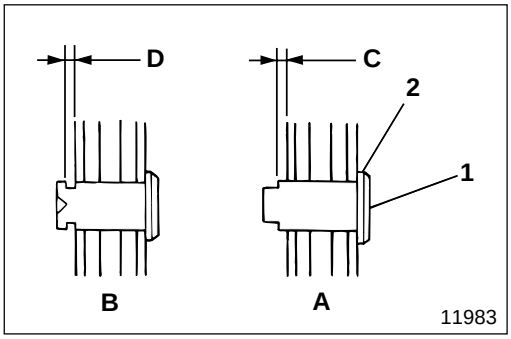

1 **Installation of pin**

A : Before caulking
B : After caulking

When clearance **C** (before caulking) is less than 0.6 mm {0.024 in.}, do not use spacer **2**.
Also, use the spacer to adjust if clearance is 0.6 to 0.96 mm {0.024 to 0.038 in.}.

	Without spacer	With spacer
Dimension **D**	0.06 to 0.6 mm {0.0024 to 0.024 in.}	0 to 0.36 mm {0 to 0.014 in.}

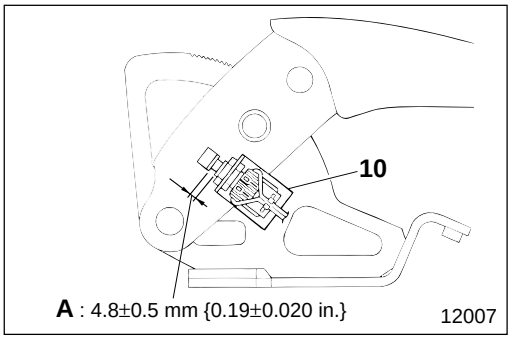

10 **Installation of parking brake switch**

Install parking brake switch **10** so that the stroke equals **A**.

PARKING BRAKE ASSEMBLY

< Manual Transmission >

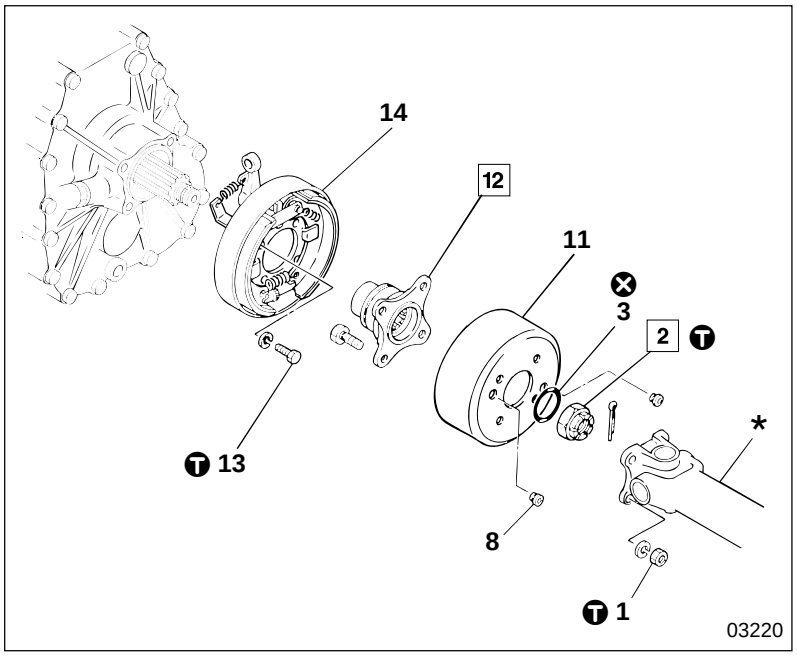

● **Inspection before disassembly**

P36-10

● **Disassembly sequence**

1 Nut
2 Lock nut
3 O-ring
4 Flange set bolt
5 Lock washer
6 O-ring
7 Retainer washer
8 Dust plug
9 Bolt
10 Drum plate
11 Parking brake drum
12 Companion flange
13 Bolt
14 Support plate and shoe assembly
P36-12 or P36-14

* : Propeller shaft Gr 25
⊗ : Non-reusable parts

< Automatic Transmission >

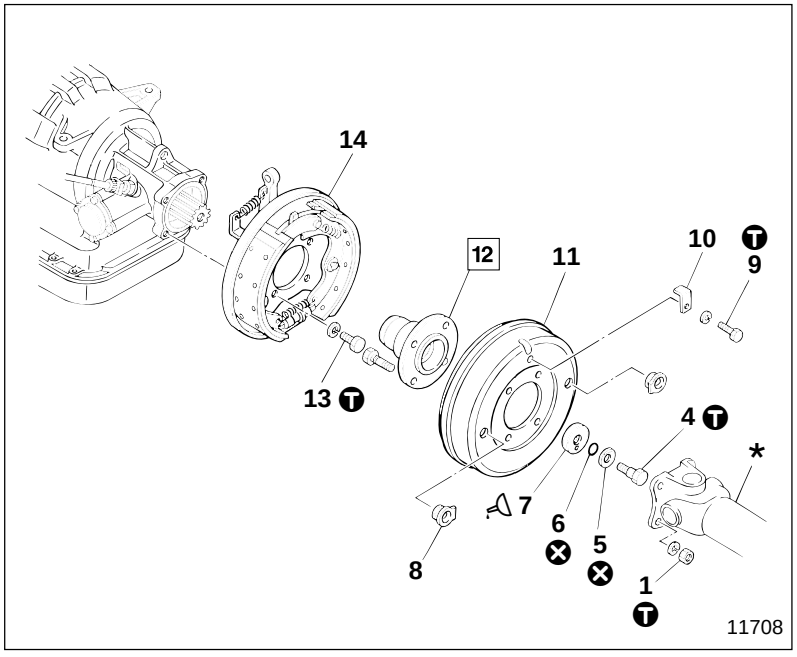

WARNING

- **You must place wheel chocks securely in place to prevent the vehicle from moving.**
- **Do not remove the chocks until the entire operation is completed.**

● **Assembly sequence**

Follow the disassembly sequence in reverse.

< Manual Transmission >

Service standards

Unit : mm {in.}

Location	Maintenance item		Standard value	Limit	Remedy
11	Parking brake drum	Deflection at mating area	0.15 {0.0059} or less	0.5 {0.020}	Replace
		Inner diameter	ø203.2 $^{+0.3}_{0}$ {8 $^{+0.012}_{0}$}	ø205 {8.07}	
		Squareness	0.05 {0.0020} or less	—	
		Concentricity	ø0.2 {0.0079} or less	—	
		Cylindrical accuracy	0.05 {0.0020} or less	—	
		Static rotation imbalance	0.88 N·cm {0.0065 lbf.ft, 90 gf·cm}	—	

< Automatic Transmission >

Service standards

Unit : mm {in.}

Location	Maintenance item		Standard value	Limit	Remedy
11	Parking brake drum	Deflection at mating area	0.15 {0.0059} or less	0.5 {0.020}	Replace
		Inner diameter	ø254.0 $^{+0.5}_{0}$ {10 $^{+0.020}_{0}$}	ø255.5 {10.1}	
		Squareness	0.05 {0.0020} or less	—	
		Concentricity	ø0.1 {0.0039} or less	—	
		Cylindrical accuracy	0.05 {0.0020} or less	—	
		Static rotation imbalance	0.88 N·cm {0.0065 lbf.ft, 90 gf·cm}	—	

Tightening torque

Unit : N·m {lbf.ft, kgf·m}

Location	Parts to be tightened		Tightening torque	Remarks
1	Nut (Propeller shaft mounting)		85 {61, 8.5}	—
2	Lock nut (Companion flange mounting)		245 to 345 {180 to 235, 25 to 35}	—
4	Flange set bolt (Companion flange mounting)		140 to 160 {100 to 120, 14.10 to 16.72}	—
9	Bolt (Drum plate mounting)		20 {14, 2}	—
13	Bolt (Support plate and shoe assembly mounting)	Manual transmission	40 {30, 4.1}	—
		Automatic transmission	110 to 130 {81 to 97, 11.22 to 13.46}	

Sealant

Location	Points of application	Kinds	Quantity
7	Outer periphery of retainer washer	THREEBOND 1215	As required

PARKING BRAKE ASSEMBLY

Special tools

Unit : mm {in.}

Location	Tool name and shape	Part No.	Application
2	Socket wrench 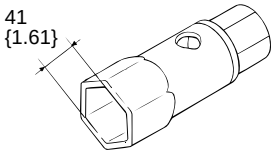 00069	MH061532	Removal and installation of main shaft rear lock nut < Manual transmission >
12	Flange puller 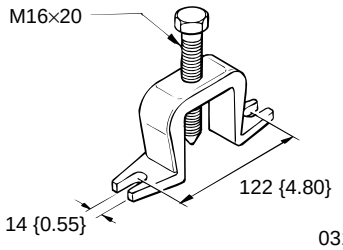 03159	MC881524	Removal of main shaft rear companion flange

◆ Service procedure

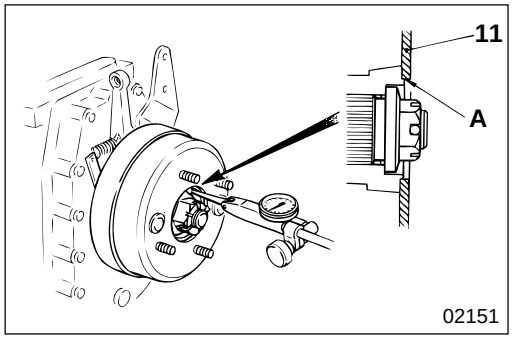

02151

● **Inspection before disassembly**

Measure parking brake drum **11** at mating area **A**, and replace the brake drum if the measured valve is higher than the limit.

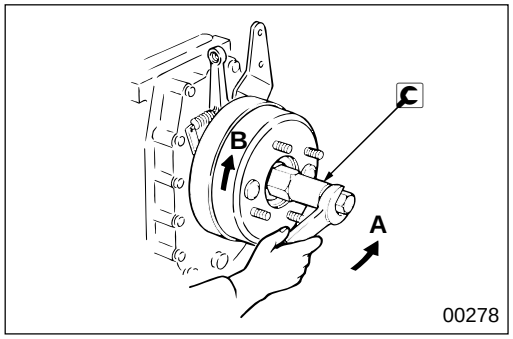

00278

2 **Removal and installation of lock nut < Manual transmission >**

A : Removal

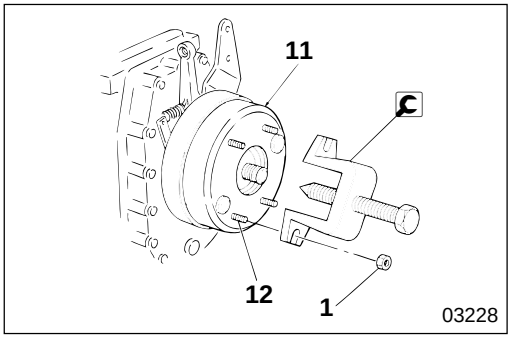

B : Installation

SUPPORT PLATE AND SHOE ASSEMBLY < ø203.2 mm {8 in.} Drum >

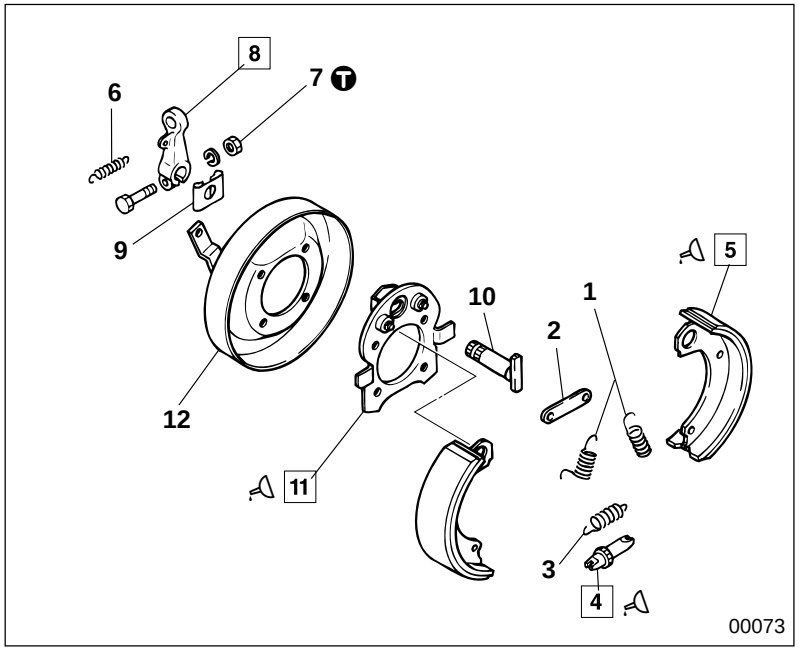

● **Disassembly sequence**

1 Shoe return spring
2 Anchor pin brace
3 Adjusting wheel return spring
4 Adjusting screw
5 Shoe and lining assembly
6 Camshaft lever return spring
7 Nut
8 Camshaft lever
9 Spring spacer
10 Camshaft
11 Support plate
12 Dust cover

● **Assembly sequence**

Follow the disassembly sequence in reverse.

WARNING

Do not leave grease or oil on the surface of shoe and lining assembly 5 because this reduces braking performance.

NOTE

If shoe and lining assembly 5 has been replaced with a new part, check correctness of contact with the parking brake drum.

Service standards

Unit : mm {in.}

Location	Maintenance item	Standard value	Limit	Remedy
1	Installed load of shoe return spring (Installed length 57.5 {2.26})	145±15 N {33±3.3 lbf, 15±1.5 kgf}	115 N {26 lbf, 12 kgf}	Replace
3	Installed load of adjusting wheel return spring (Installed length 59 {2.32})	78±7.8 N {18±1.8 lbf, 8±0.8 kgf}	63 N {14 lbf, 6.4 kgf}	Replace
5	Lining thickness of shoe and lining assembly	4.0 {0.16}	1.4 {0.055}	Replace
6	Installed load of camshaft lever return spring (Installed length 85 {3.35})	62±5.9 N {14±1.3 lbf, 6.3±0.6 kgf}	49 N {11 lbf, 5 kgf}	Replace

Tightening torque

Unit : N·m {lbf.ft, kgf·m}

Location	Parts to be tightened	Tightening torque	Remarks
7	Nut (Camshaft lever mounting)	6.9 to 13 {5.1 to 9.4, 0.7 to 1.3}	—

Lubricant

Location	Points of application	Kinds	Quantity
4, 5	Contact surfaces of both ends of adjusting screw with shoe and lining assembly	Brake grease (AKB100)	As required
5, 11	Contact surface of support plate and shoe and lining assembly	Brake grease (AKB100)	As required
	Contact surface of anchor pin area and support plate and shoe and lining assembly	Brake grease (AKB100)	As required

◆ Service procedure

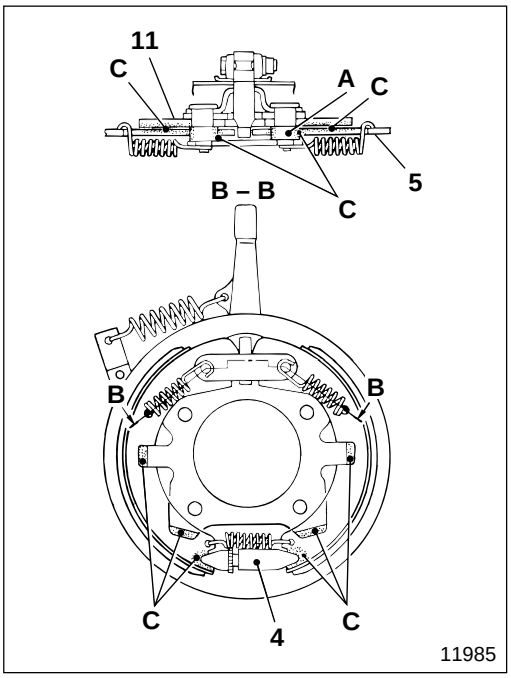

4 **5** **11** **Applying grease to adjusting screw, shoe and lining assembly, and support plate**

Apply grease to area **C**.

A : Anchor pin area

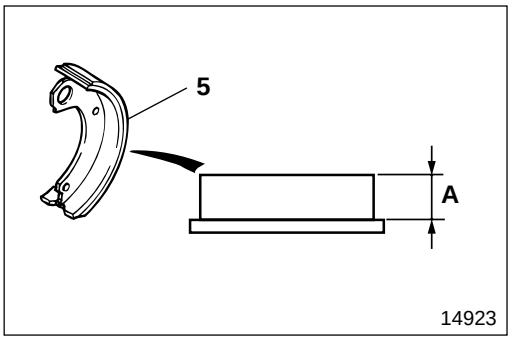

5 **Inspection of shoe and lining assembly**

Measure thickness **A** of the lining. If the measured value is lower than the limit, replace shoe and lining assembly **5**.

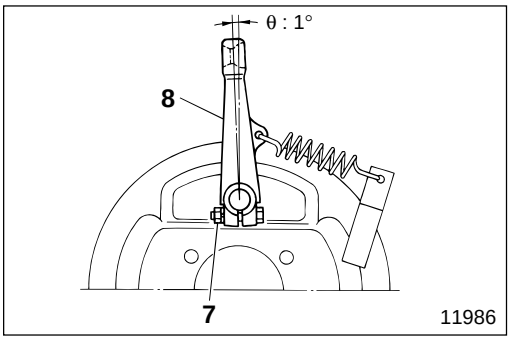

8 **Installation of camshaft lever**

Install camshaft lever **8**, aligning the lever at the specified angle θ, then tighten nut **7** at specified torque.

SUPPORT PLATE AND SHOE ASSEMBLY < ø254 mm {10 in.} Drum >

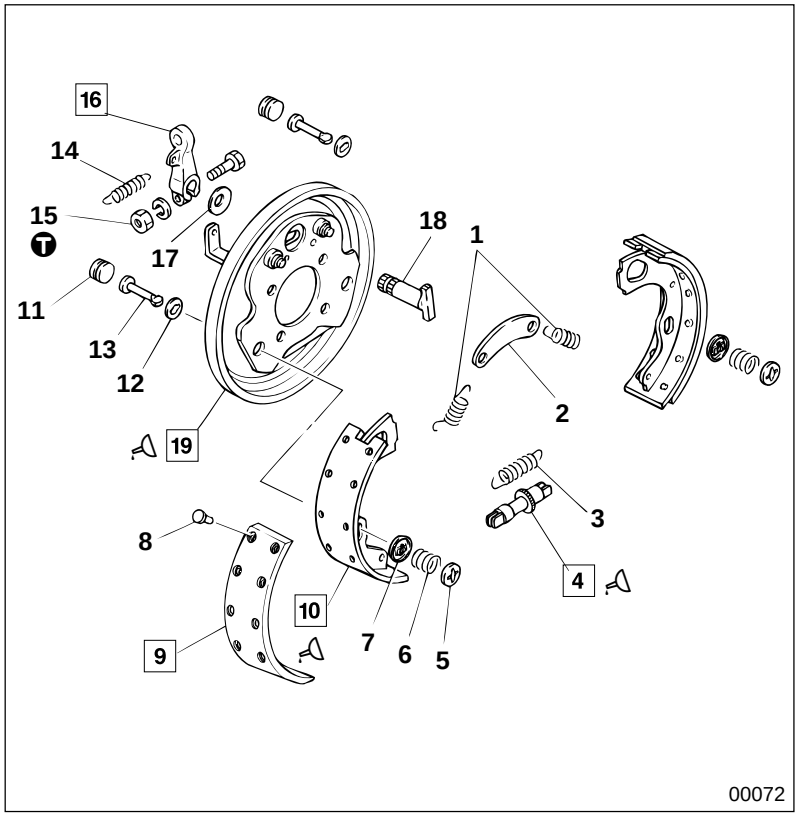

● **Disassembly sequence**

1 Shoe return spring
2 Anchor pin brace
3 Adjusting wheel return spring
4 Adjusting screw
5 Shoe hold-down cup
6 Shoe hold-down spring
7 Shoe hold-down cup
8 Rivet
9 Lining
10 Brake shoe
11 Cover
12 Shoe hold-down washer
13 Shoe hold-down pin
14 Camshaft lever return spring
15 Nut
16 Camshaft lever
17 Spring spacer
18 Camshaft
19 Support plate and cover assembly

● **Assembly sequence**

Follow the disassembly sequence in reverse.

WARNING ⚠

Do not leave grease or oil on the surface of lining 9 because this reduces braking performance.

NOTE

If lining 9 has been replaced with a new part, check correctness of contact with the parking brake drum.

Service standards

Unit : mm {in.}

Location	Maintenance item	Standard value	Limit	Remedy
1	Installed load of shoe return spring (Installed length 75 {2.95})	180±18 N {41±4.0 lbf, 18.5±1.8 kgf}	145 N {33 lbf, 15 kgf}	Replace
3	Installed load of wheel return spring (Installed length 85 {3.35})	105±11 N {24±2.4 lbf, 11±1.1 kgf}	86 N {19 lbf, 8.8 kgf}	Replace
6	Installed load of shoe hold-down spring (Installed length 14 {0.55})	145±15 N {33±3.3 lbf, 15±1.5 kgf}	115 N {26 lbf, 12 kgf}	Replace
9	Lining thickness	5.8 {0.23}	3.5 {0.14}	Replace
14	Installed load of camshaft lever return spring (Installed length 85 {3.35})	62±5.9 N {14±1.3 lbf, 6.3±0.6 kgf}	49 N {11 lbf, 5 kgf}	Replace

Tightening torque

Unit : N·m {lbf.ft, kgf·m}

Location	Parts to be tightened	Tightening torque	Remarks
15	Nut (Camshaft lever mounting)	13.72 to 22.56 {10 to 17, 1.4 to 2.3}	—

Lubricant

Location	Points of application	Kinds	Quantity
4, 10	Contact surfaces of both ends of adjusting screw with shoe and lining assembly	Brake grease (AKB100)	As required
10, 19	Contact surface of support plate and shoe and lining assembly	Brake grease (AKB100)	As required
	Contact surface of anchor pin area and support plate and shoe and lining assembly	Brake grease (AKB100)	As required

◆ Service procedure

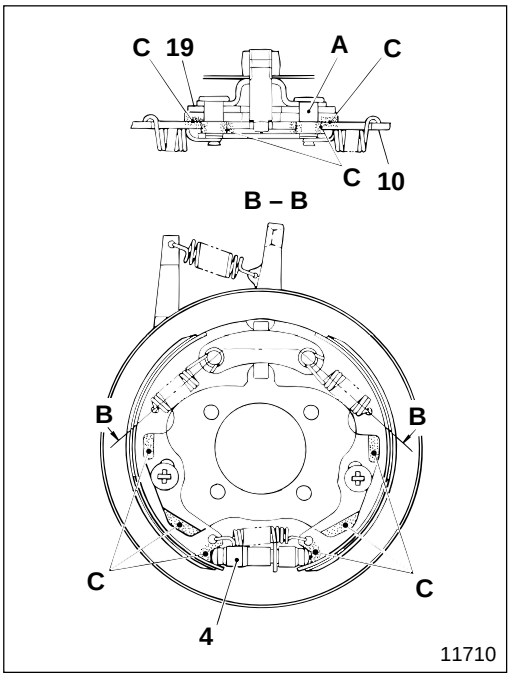

4 **10** **19** **Applying grease to adjusting screw, shoe and lining assembly, and support plate**

Apply grease to area **C**.

A : Anchor pin area

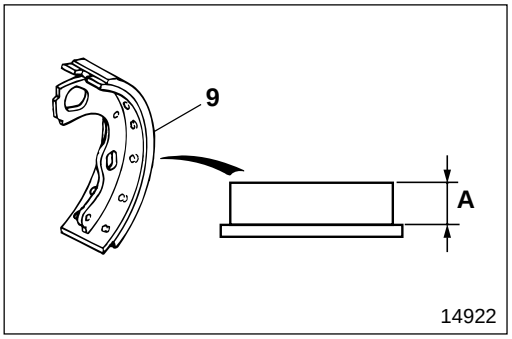

9 **Inspection of lining**

Measure thickness **A** of lining **9**. If the measured value is lower than the limit, replace the lining.

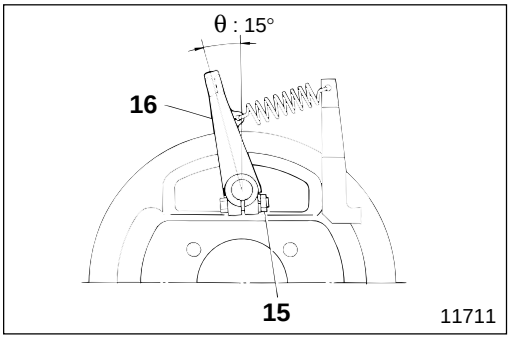

16 **Installation of camshaft lever**

Install camshaft lever **16**, aligning the lever at the specified angle θ, then tighten nut **15** at specified torque.

MITSUBISHI FUSO

FH

Service Manual

Group 37 - Steering

Group 37 - 1998 Minor Changes

BACK HOME

MITSUBISHI FUSO TRUCK OF AMERICA, Inc.

Pub No. TWME9502-00

MITSUBISHI
FUSO

FH

Service Manual

Group 37
Steering

'98 Minor Change

Table of Contents

MITSUBISHI FUSO TRUCK OF AMERICA, Inc.

BACK HOME

Pub No. TWME9502-237

GROUP 37 STEERING

SPECIFICATIONS 37- 2

STRUCTURE AND OPERATION 37- 3

TROUBLESHOOTING 37- 9

ON-VEHICLE INSPECTION AND ADJUSTMENT
- Change of Power Steering Fluid 37- 12
- Bleeding of Power Steering System 37- 12
- Steering Wheel Play 37- 13
- Performance Verification Test of Power Steering System 37- 14

STEERING SYSTEM 37- 16

STEERING COLUMN SUBASSEMBLY 37- 22

POWER STEERING BOOSTER 37- 26

POWER STEERING OIL PUMP 37- 38

POWER STEERING OIL TANK 37- 42

POWER STEERING FLUID LINE 37- 44

DRAG LINK 37- 46

TIE ROD ASSEMBLY 37- 48

SPECIFICATIONS

Item		Specification
Steering wheel	Type	2-spoke type
	Outer diameter mm {in.}	450 {17.7}
Steering shaft	Type	Universal joint type (High tilt and telescopic type)
Power steering booster	Manufacturer	JIDOSHA KIKI
	Type	Ball nut type
	Form	Integral type
	Gear ratio	17.1 to 20
	Cylinder diameter mm {in.}	85 {3.35}
	Mass (without pitman arm and fluid) kg {lb}	21 {46}
Power steering oil pump	Manufacturer	JIDOSHA KIKI
	Type	Vane type
	Discharge amount cm^3 {cu. in.}/rotation	11.2 {0.68}
	Regulated flow amount L {qts}/min	12 {13}
	Regulated pressure (relief valve) MPa {lbf/in^2, kgf/cm^2}	12.3 {1780, 125}
	Permissible revolutions rpm	600 to 4800
	Mass (without drive gear and fluid) kg {lb}	2.7 {6.0}

Steering System

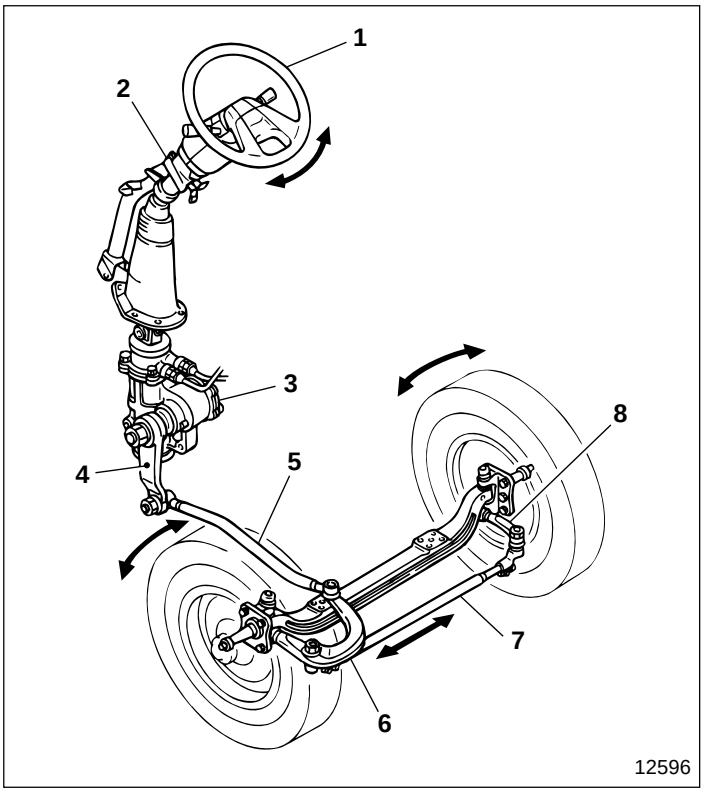

1 Steering wheel
2 Steering column subassembly
3 Power steering booster
4 Pitman arm
5 Drag link
6 Knuckle arm
7 Tie rod
8 Tie rod arm

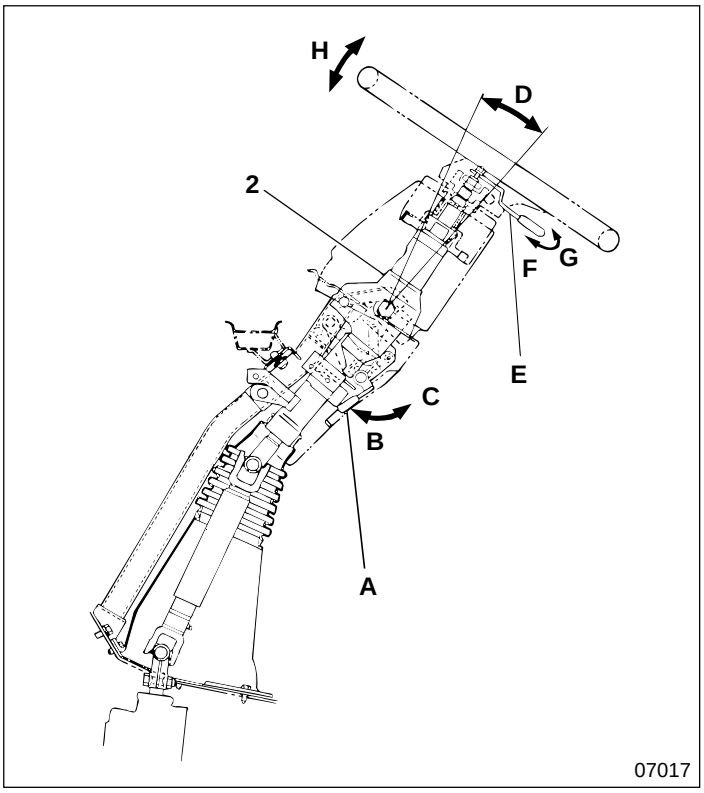

Shifting lock lever **A** from lock position **B** to release position **C** produces high tilt **D**, and turning telescopic lever **E** (counterclockwise) from lock position **F** to release position **G** allows telescopic movement **H**. In this way, the structure of steering column subassembly **2** can be adjusted for optimum driving position.

Power Steering System

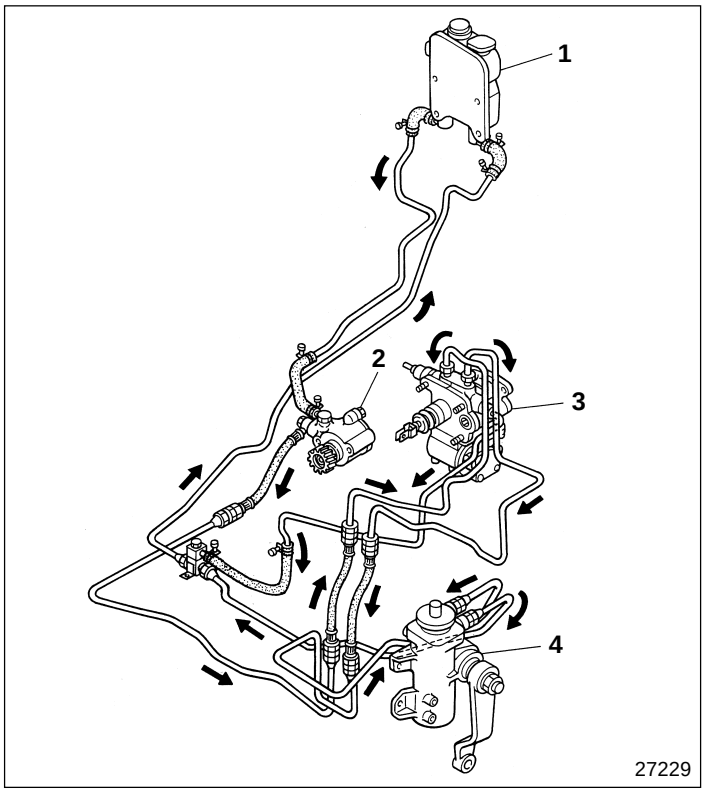

1 Power steering oil tank
2 Power steering oil pump
3 Brake booster (Hydraulic booster)
4 Power steering booster

⬅ : Fluid flow

- In vehicles equipped with hydraulic booster brake, power steering oil pump **2** hydraulic pressure is also used for brake booster (hydraulic booster) **3** by the power steering system. Although the power steering pump is shared by both the power steering system and the brake system, the spool valve inside brake booster (hydraulic booster) ensures that power steering booster **4** and brake booster (hydraulic booster) operate without interfering with each other.
  (For information on brake booster operation, refer to Gr 35.)

Power Steering Booster

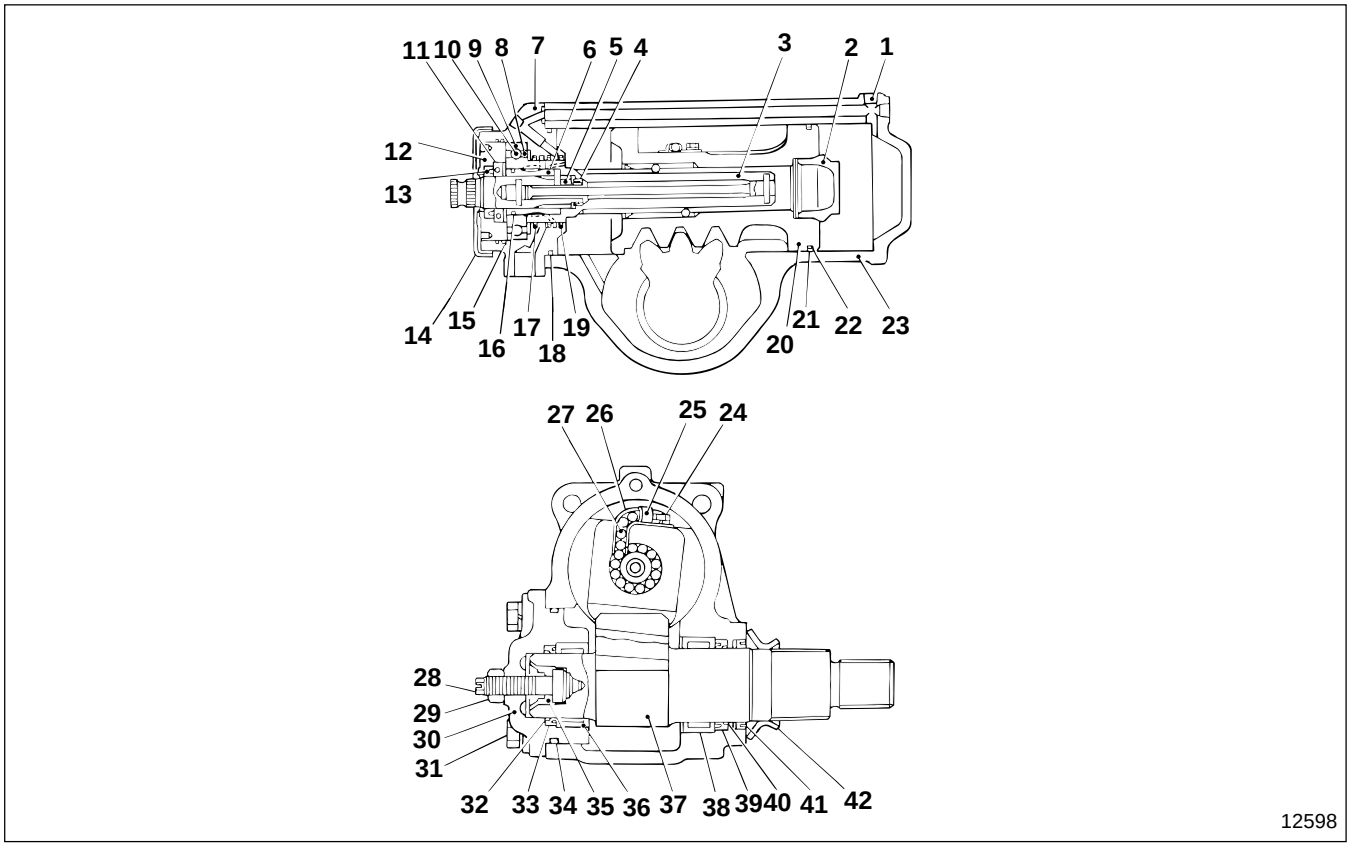

1 Taper plug
2 Plug
3 Worm shaft
4 Needle bearing
5 Stub shaft
6 Rotor
7 Valve housing
8 Bearing cage
9 Side race
10 Steel ball
11 Ball bearing
12 Adjusting plug
13 Oil seal
14 Dust cover
15 O-ring
16 Seal ring
17 O-ring
18 O-ring
19 Seal ring
20 Piston
21 Seal ring
22 O-ring
23 Body
24 Screw
25 Ball tube clip
26 Ball tube
27 Steel ball
28 Adjusting screw
29 Nut
30 Side cover
31 Bolt
32 Backup ring
33 Y-packing
34 O-ring
35 Retainer
36 Needle bearing
37 Sector shaft
38 Needle bearing
39 Y-packing
40 Backup ring
41 Oil seal
42 Dust cover

The rotary valve is the central part of the power steering booster. The torsion bar allows the steering reaction force and valve return to operate lightly and smoothly at low speed, and ensures stable steering feel even at high speed.

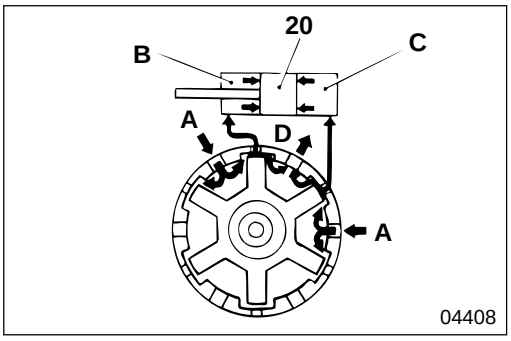

● **Straight-ahead operation**

Piston **20** is in the neutral position as chambers **B** and **C** of the piston are under equal pressure.

A : From oil pump
D : To oil tank

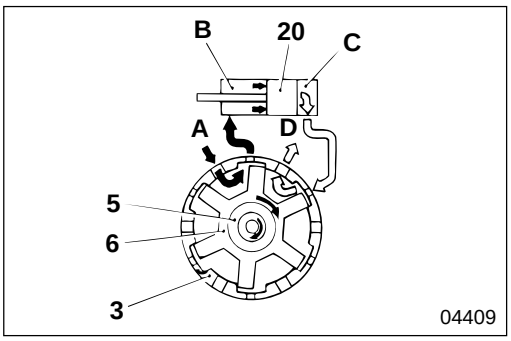

● **Steering operation**

Turning the steering wheel rotates stub shaft **5**, causing rotor **6** to close the fluid feed passage to cylinder chamber **C**. This produces a pressure difference between cylinder chambers **B**, **C**, which causes piston **20** to move, and facilitates rotation of worm shaft **3**.

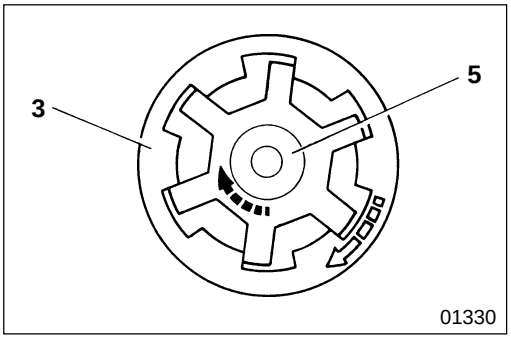

If the hydraulic circuit fails

The safety mechanism allows the vehicle to be steered manually, when the rotating force of stub shaft **5** alone directly turns worm shaft **3**, transmitting the steering force.

Power Steering Oil Pump

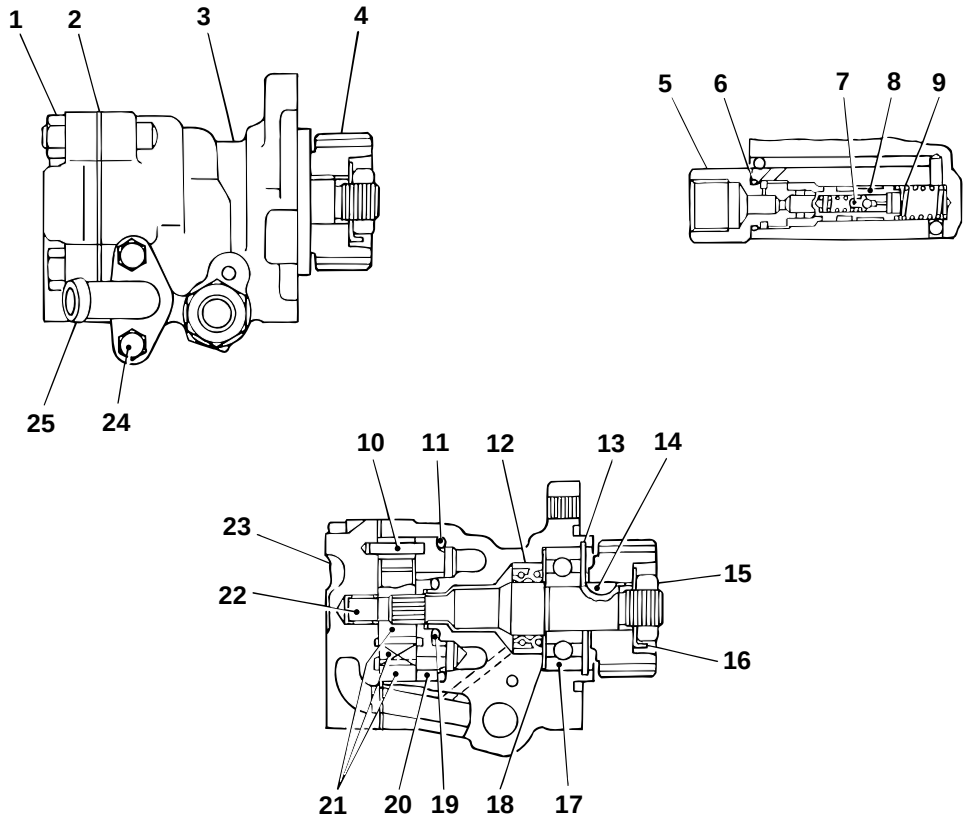

1 Bolt
2 Gasket
3 Front body
4 Gear
5 Connector
6 O-ring
7 Relief valve
8 Flow control valve assembly
9 Flow control spring
10 Straight pin
11 O-ring
12 Oil seal
13 Retaining ring
14 Key
15 Nut
16 Lock washer
17 Ball bearing
18 Retaining ring
19 O-ring
20 Pressure plate
21 Cartridge assembly
22 Shaft
23 Rear body
24 Bolt
25 Suction pipe

Flow Control Valve Assembly

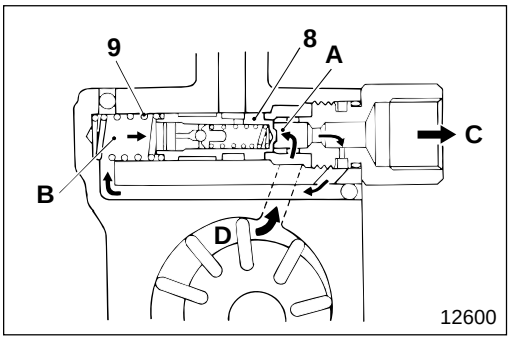

● **Operation of flow control valve**

(1) When not operating (When oil pump rotating at low speed)

The fluid pressure from chamber **A** does not move flow control valve assembly **8** because the fluid pressure is lower than the combined force of the fluid pressure from chamber **B** and the repercussive force of flow control spring **9**.

C : To power steering booster

D : Pressure chamber

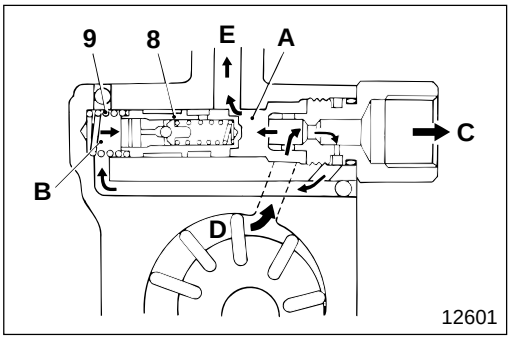

(2) When operating (When oil pump rotating at middle or high speed)

The fluid pressure from chamber **A** moves flow control valve assembly **8** because the fluid pressure is higher than the combined force of the fluid pressure from chamber **B** and the repercussive force of flow control spring **9**. Then, port **E** opens to release the fluid, maintaining the level of flow in chamber **A**.

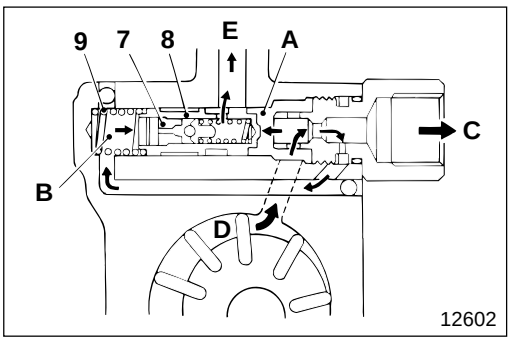

● **Operation of relief valve**

The combined force of the fluid pressure from chamber **B** and the repercussive force of flow control spring **9** moves flow control valve assembly **8** because the fluid pressure is higher than the fluid pressure from chamber **A**. The hydraulic pressure in chamber **B** rises further to open relief valve **7** and port **E**, stabilizing the fluid pressure in chamber **B**.

Power Steering Fluid Level Warning Circuit

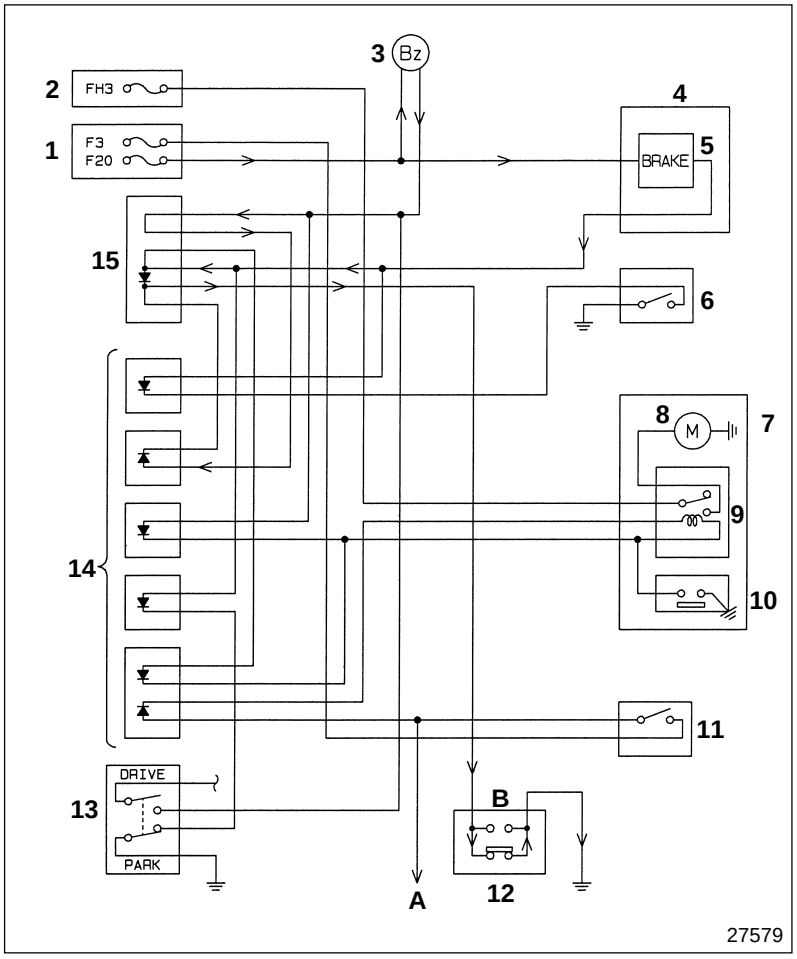

1 Fuse box
2 High-current fuse box
3 Warning buzzer
4 Meter cluster
5 Brake warning lamp
6 Brake fluid level switch
7 Brake booster (Hydraulic booster)
8 Emergency pump motor
9 Motor relay
10 Flow switch
11 Stop lamp switch
12 Power steering fluid level sensor
13 Parking brake switch
14 Diode
15 Joint connector

A : To stop lamp
B : Float

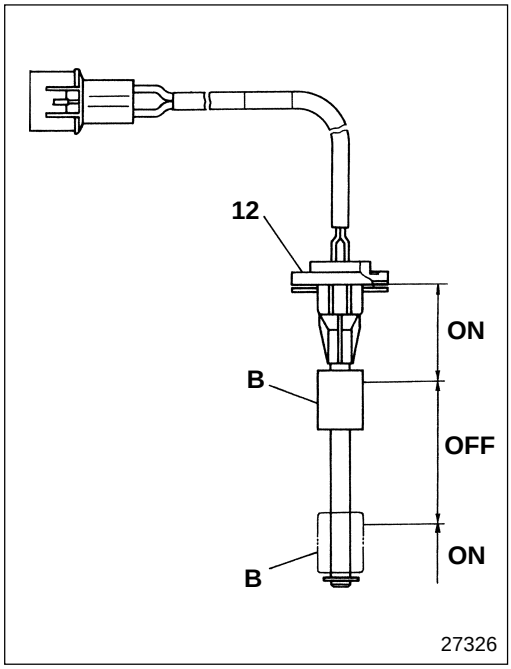

- Power steering oil pump hydraulic pressure is also used for brake booster (hydraulic booster) **7** which reinforces brake. So the power steering fluid level warning circuit is connected to warning buzzer **3** and brake warning lamp **5**.
- When the power steering fluid level drops below the **"MIN"** level or rises above the **"MAX"** level of the power steering oil tank, the magnet inside float **B** in power steering fluid level sensor **12** turns the power steering fluid level sensor ON. Warning buzzer **3** sounds and brake warning lamp **5** lights to warn the driver.

Possible causes \ Symptoms		Steering wheel operation heavy	Steering wheel play excessive and unstable	Steering wheel pulls to one side	Steering wheel vibration	Steering wheel self-return poor	Steering wheel does not turn	Steering angle insufficient or difference between right and left	Fluid leaking	Oil pump fluid pressure faulty	Oil pump gurgles	Oil pump squeaks	Oil pump growls	Remarks
Power steering mechanism faulty	Bearing damaged or worn	○			○	○								
	Ball or groove of ball screw worn	○	○		○									
	Air bled insufficiently	○												
	Fluid viscosity unsuitable	○												
	Power steering booster system faulty	○												
	Flow control valve malfunctioning	○												
	Ball screw unit rack and gear worn		○											
	Sector shaft bearing worn		○		○									
	Power steering booster mounting bolt loose		○											
	Ball screw unit and sector shaft play incorrect				○									
	Valve control edge damaged or control seal ring broken				○									
	Power steering system fluid unsuitable				○									
	Rack engagement starting torque adjusted incorrectly	○				○								
	Fluid circuit clogged	○				○								
	Sector shaft gear worn		○											
	Torsion shaft serration damaged or worn		○											
	Power steering booster body faulty			○	○									
	O-ring, oil seal faulty								○					
	Sealant applied incorrectly								○					
Steering column and linkage mechanism faulty	Universal joint worn abnormally, damaged, lubricated incorrectly	○	○											
	Linkage deformed	○												
	Drag link ball stud play		○		○									
	Tie rod end ball stud play		○		○									
	Tie rod bent						○							
	Pitman arm mounting position incorrect							○						
	Steering wheel turning center offset			○										

TROUBLESHOOTING

Possible causes \ Symptoms		Steering wheel operation heavy	Steering wheel play excessive and unstable	Steering wheel pulls to one side	Steering wheel vibration	Steering wheel self-return poor	Steering wheel does not turn	Steering angle insufficient or difference between right and left	Fluid leaking	Oil pump fluid pressure faulty	Oil pump gurgles	Oil pump squeaks	Oil pump growls	Remarks
	Kingpin lubricated incorrectly	○				○								
	Front wheel alignment (toe-in, camber, caster) incorrect	○		○	○	○								
	Thrust bearing damaged	○												
	Wheel hub bearing worn or damaged		○	○	○									Gr 26
	Kingpin or bushing worn or damaged		○	○	○									
	Front axle deformed			○										
	Knuckle arm, tie rod arm, or knuckle tightened incorrectly				○									
	U-bolt of front spring, nut, loose				○									Gr 33
	Front axle parts overtightened					○								
	Turning angle adjusted incorrectly						○	○						Gr 26
	Mounting parts, connection point loose		○											
	Knuckle stopper bolt adjusted incorrectly							○						
Oil pump faulty	Oil pump body faulty								○					
	O-ring or oil seal faulty								○					
	Bolt tightened incorrectly								○					
	Maximum generated fluid pressure insufficient									○				
	Fluid line crushed or clogged									○				
	Air lock in oil pump										○			
	Oil pump interior seized									○	○	○		
	Mounting bolt or nut loose												○	
	Pump body faulty												○	
	Valve malfunctioning									○				

Possible causes / Symptoms		Steering wheel operation heavy	Steering wheel play excessive and unstable	Steering wheel pulls to one side	Steering wheel vibration	Steering wheel self-return poor	Steering wheel does not turn	Steering angle insufficient or difference between right and left	Fluid leaking	Oil pump fluid pressure faulty	Oil pump gurgles	Oil pump squeaks	Oil pump growls	Remarks
	Oil tank leaking due to overflowing								○					
	Oil tank leaking due to air lock								○					
	Fluid level insufficient	○												
	Load too far forward of load-carrying platform	○												
	Load too far rearward of load-carrying platform		○											
	Load too far to one side of load-carrying platform			○										
	Wheelbase difference between left and right excessive			○										
	Propeller shaft runout excessive				○									Gr 25
	Front axle bent				○									Gr 26
	Rear axle housing bent			○										Gr 27
	Final drive gear and final drive pinion damaged or engaged incorrectly				○									
	Tire pressure insufficient	○												Gr 31
	Tire pressure excessive		○											
	Tire wear difference between left and right excessive			○										
	Tire outer diameter difference between left and right			○										
	Front tire radial and lateral runout, static balance and dynamic balance incorrect				○									
	One-sided braking			○										Gr 35

ON-VEHICLE INSPECTION AND ADJUSTMENT

Change of Power Steering Fluid

Ⓣ Tightening torque

Unit : N·m {lbf.ft, kgf·m}

Location	Parts to be tightened	Tightening torque	Remarks
2	Oil pipe	66.69±12.75 {49±9.4, 6.8±1.3}	—

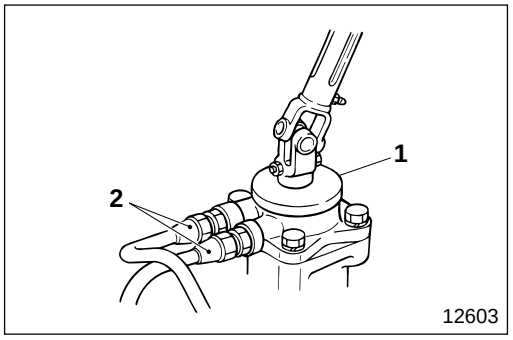

[Draining]
- Jack up the front wheels.
- Loosen oil pipe **2** connected to power steering booster **1**.
- Turn the steering wheel fully left and right repeatedly, and drain the fluid from power steering booster **1**.
- After draining the fluid, tighten oil pipe **2** at specified torque.

[Filling]
🕮 P37-12

Bleeding of Power Steering System

Fluid

Location	Points of application	Specified fluid	Quantity
1	Power steering oil tank	Automatic transmission fluid (DEXRON or DEXRON II type)	Between the "MAX" and "MIN" levels in the power steering oil tank

WARNING⚠

Because the brake booster (hydraulic booster) uses power steering fluid, do not let other fluids such as brake fluid, etc. get mixed with the power steering fluid inside the power steering oil tank.

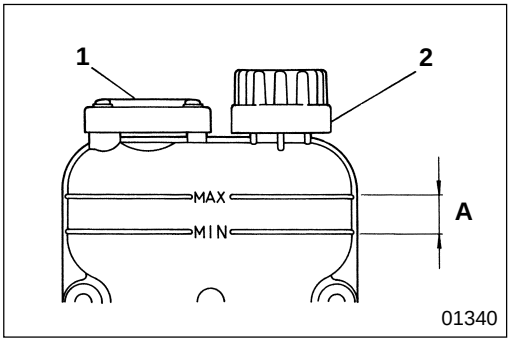

- Supply fluid into power steering oil tank **1** up to filler cap **2**.
- With the engine stopped, jack up the front wheels and turn the steering wheel fully left and right repeatedly. When the fluid level has dropped, add fluid to maintain the fluid level within range **A**.
- Start the engine and letting it idle, turn the steering wheel fully left and right repeatedly. When the fluid level has dropped, add fluid to maintain the fluid level within range **A**. Repeat these steps until the fluid level does not drop.
- Depress the brake pedal fully several times repeatedly, until as in the case of the steering wheel, the fluid level does not drop anymore. (The steering wheel at such time does not need to be operated)
- If there is an abnormal noise, air is still in the system. Turn the steering wheel several times, next depress the brake pedal several times to raise the fluid temperature to approximately 60 to 80°C {140 to 176°F}, then stop the engine and wait for approximately five minutes.
- Lower the front wheels and turn the steering wheel several times to make sure there is no abnormal noise.
- With the engine stopped, depress the brake pedal several times, activate the brake booster (hydraulic booster) emergency pump and bleed air.
- When there is no abnormal noise after the above procedure has been performed, bleeding is completed. Check oil tank **1** fluid level, and pipe and hose connections for fluid leakage.
- After bleeding is completed, inspect brake booster (hydraulic booster) performance (input and output characteristics). Gr 35

Steering Wheel Play

Service standards

Unit : mm {in.}

Location	Maintenance item	Standard value	Limit	Remedy
—	Steering wheel play (Measure at the outer circumference of steering wheel)	10 to 40 {0.39 to 1.57}	—	Adjust

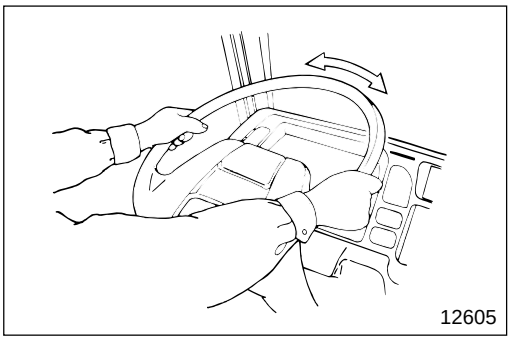

Point the wheels directly forward and gently turn the steering wheel left and right and measure the outer circumference play. If the play deviates from the standard value, adjust tightening points and power steering booster backlash. P37-31

Performance Verification Test of Power Steering System

Service standards

Location	Maintenance item	Standard value	Limit	Remedy
—	Steering system fluid pressure (With hands off steering wheel)	490 kPa {71 lbf/in^2, 5 kgf/cm^2}	—	Repair
—	Relief set pressure (Measure with engine speed at 1000 to 1500 rpm and the stop valve closed)	12.3 MPa {1780 lbf/in^2, 125 kgf/cm^2}	Maximum +785 kPa {115 lbf/in^2, 8 kgf/cm^2} Minimum –1180 kPa {170 lbf/in^2, 12 kgf/cm^2}	Replace

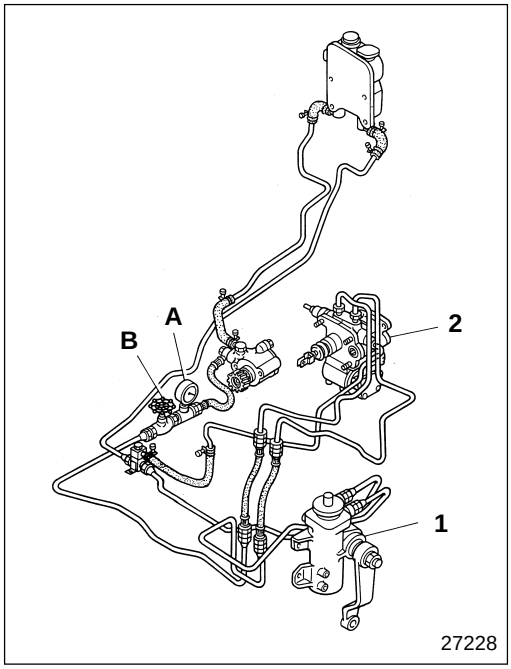

Verify that power steering booster **1** and the power steering oil pump are operating properly by testing the following items.

NOTE

If the fluid pressure is higher than 490 kPa {71 lbf/in^2, 5 kgf/cm^2} with engine idling and the steering wheel free, inspect power steering booster 1, brake booster (hydraulic booster) 2 and the fluid circuit for clogging.

Test item	Test procedure	Assembly standards
Verification of smooth operation	Jack up the front wheels and turn steering wheel fully left and right	Smooth operation through-out test
Measurement conditions	• Install oil pressure gauge **A** capable of measuring above 14.7 MPa {2130 lbf/in^2, 150 kgf/cm^2} and stop valve **B**, then bleed air • With engine idling, turn steering wheel left and right several times to raise fluid temperature to 50 to 60°C {122 to 140°F} • With the engine idling, open stop valve **B**	
Measurement of fluid pressure	• Measure fluid pressure with hands off steering wheel	490 kPa {71 lbf/in^2, 5 kgf/cm^2}
Measurement of relief pressure	• Gradually increase engine speed and maintain it at 1000 to 1500 rpm, and close stop valve **B** to measure maximum fluid pressure • Do not keep stop valve **B** closed for more than fifteen seconds	Relief set pressure 12.3 MPa {1780 lbf/in^2, 125 kgf/cm^2}

M E M O

STEERING SYSTEM

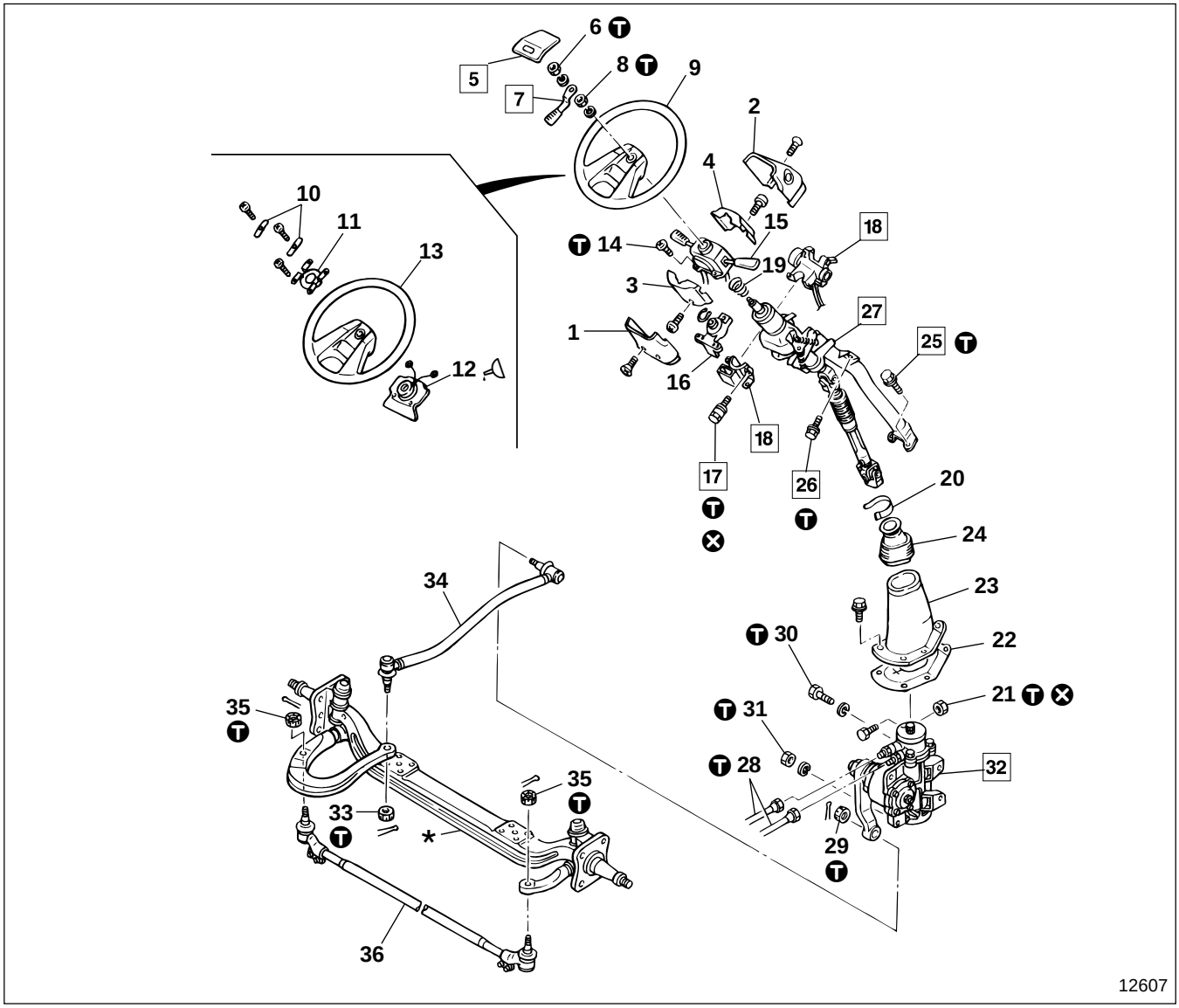

● **Removal sequence**

1 Column cover outer lower
2 Column cover outer upper
3 Column cover inner lower
4 Column cover inner upper
5 Horn pad
6 Nut
7 Telescopic lever
8 Nut
9 Steering wheel assembly
10 Horn spring
11 Contact plate
12 Cover assembly
13 Steering wheel
14 Screw
15 Combination switch Gr 54
16 Bracket
17 Head cutting bolt
18 Starter switch Gr 54
19 Spring
20 Band
21 Nut
22 Dust cover
23 Dust cover
24 Dust cover
25 Bolt
26 Bolt
27 Steering column subassembly P37-22
28 Oil pipe P37-44
29 Nut
30 Bolt
31 Nut
32 Power steering booster P37-26
33 Nut
34 Drag link P37-46
35 Nut
36 Tie rod assembly P37-48

*: Front axle assembly Gr 26
⊗: Non-reusable parts

CAUTION

Be sure to clean the port area of oil pipe 28 when disconnecting the oil pipe, so as to keep it free from dust and foreign particles.

● **Installation sequence**

Follow the removal sequence in reverse.

Tightening torque

Unit : N·m {lbf.ft, kgf·m}

Location	Parts to be tightened	Tightening torque	Remarks
6	Nut (Telescopic lever mounting)	8.8 to 9.8 {6.5 to 7.2, 0.9 to 1.0}	—
8	Nut (Steering wheel assembly mounting)	39 to 49 {29 to 36, 4 to 5}	—
14	Screw (Combination switch mounting)	2.5±0.5 {1.8±0.36, 0.25±0.05}	—
17	Head cutting bolt (Starter switch mounting)	14.2±1.5 {10±1.1, 1.45±0.15}	—
21	Nut (Steering column subassembly and power steering booster mounting)	51.45±2.45 {38±1.8, 5.25±0.25}	—
25	Bolt (Steering column at floor side mounting)	17 to 26 {12 to 19, 1.7 to 2.6}	—
26	Bolt (Steering column subassembly to instrument panel side mounting)	17 to 26 {12 to 19, 1.7 to 2.6}	—
28	Oil pipe	66.69±12.75{49±9.4, 6.8±1.3}	—
29	Nut (Drag link and power steering booster mounting)	190±47.5 {140±35, 19.4±4.85}	—
30	Bolt (Power steering booster mounting)	175.4±26.5 {130±20, 17.9±2.7}	—
31	Nut (Power steering booster mounting)	175.4±26.5 {130±20, 17.9±2.7}	—
33	Nut (Drag link and front axle assembly mounting)	190±47.5 {140±35, 19.4±4.85}	—
35	Nut (Tie rod assembly and front axle assembly mounting)	190±47.5 {140±35, 19.4±4.85}	—

Lubricant

Location	Points of application	Specified lubricant	Quantity
12	Contact area between combination switch of cover assembly and horn contact	Wheel bearing grease [NLGI No.2 (Li soap)]	As required

◆ Service procedure

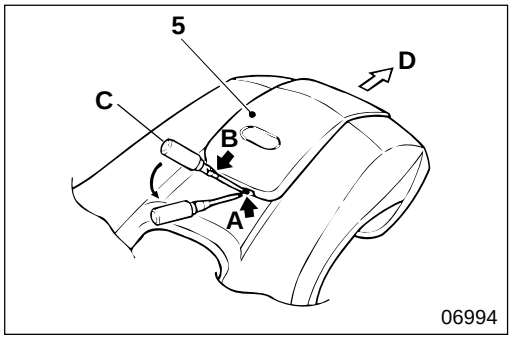

5 Removal of horn pad

Insert flat-blade screwdriver **C** in grooves **A**, **B** of horn pad **5** and press down on the screwdriver until the horn pad is removed with a “click”. To remove the horn pad, raise and press it in direction **D** as illustrated.

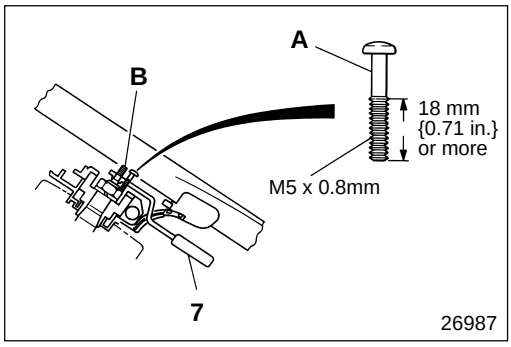

7 Telescopic lever

[Removal]

Drive in screw **A** (M5 x 0.8 mm) into tapped hole of telescopic lever **7** and remove the telescopic lever from telescopic shaft **B**.

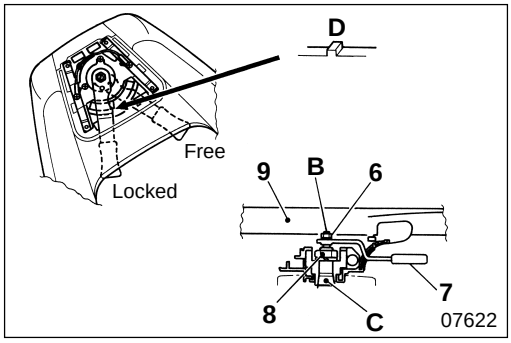

[Installation]

Locate telescopic lever **7** at the specified position (locked), and adjust until the specified torque is applied to telescopic shaft **B**.

CAUTION

Do not crush the screw tip of telescopic shaft B.

v

Start procedure

Install steering wheel assembly **9**. Using a long socket wrench, tighten nut **8** at specified torque 39 to 49 N·m {29 to 36 lbf.ft, 4 to 5 kgf·m}

Rotate telescopic shaft **B** counterclockwise with your fingers and check for looseness

Looseness found

No looseness

Using a flat-blade screwdriver turn telescopic shaft **B** clockwise and drive it in until it hits lightly with a "clunk", but do not turn it any further

CAUTION

Be careful not to tighten too forcibly or you will crush the end of the telescopic shaft, requiring replacement of telescopic shaft assembly C

Install telescopic lever **7** at a location that allows easy tightening, then tighten nut **6** until the telescopic lever will not slip

Tighten telescopic shaft **B** at operating torque 6.9 to 7.8 N·m {5.1 to 5.8 lbf.ft, 0.7 to 0.8 kgf·m}. (Tighten telescopic bar **7** at torque 69 to 78 N {15 to 18 lbf, 7 to 8 kgf} 100 mm {3.94 in.}from the center of steering wheel assembly **9**

To maintain lock, hold telescopic lever **7** clockwise, then loosen and remove lock nut **6**

Remove telescopic lever **7**

NOTE

Remove telescopic lever 7 following the description under [Removal], taking care not to loosen telescopic shaft B.

Set telescopic lever **7** to specified lock position **D**, marked "凸"

Tighten nut **6** at specified torque 8.8 to 9.8 N·m {6.5 to 7.2 lbf.ft, 0.9 to 1.0 kgf·m}

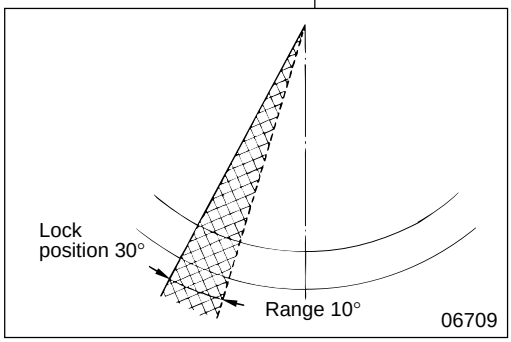

When telescopic lever **7** is released, and telescopic shaft **B** is retightened at operating torque 6.9 to 7.8 N·m {5.1 to 5.8 lbf.ft, 0.7 to 0.8 kgf·m}, the telescopic lever should lock in the 10° range this side of specified lock position 30°

Out of the range

Within the range

Joggle steering wheel assembly **9** up and down and check for looseness

Looseness found

No looseness

Remove nut **6**

Procedure is completed

Remove telescopic lever **7**

CAUTION

Be sure not to operate telescopic shaft B while steering wheel assembly 9 is removed.

NOTE

Be sure to assemble telescopic lever 7 only after steering wheel assembly 9 has been installed.

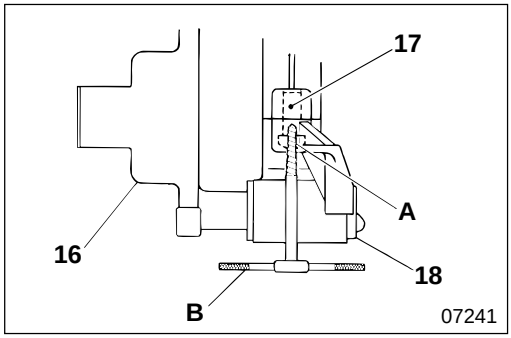

17 **18** **Head cutting bolt, starter switch**

[Removal]

- After removing bracket **16**, drill a ø5.5 to 6.0 mm {0.22 to 0.24 in.} hole 10 to 15 mm {0.39 to 0.59 in.} deep in surface **A** of head cutting bolt **17** for mounting starter switch **18**.
- Screw in screw extractor **B** counterclockwise, then remove head cutting bolt **17**.

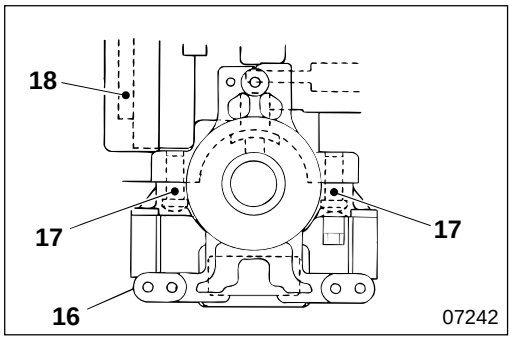

[Installation]

- With new head cutting bolt **17**, tighten starter switch **18** at specified torque to cut the head off the bolt.
- After installing bracket **16**, verify operation of the steering lock function of starter switch **18**.

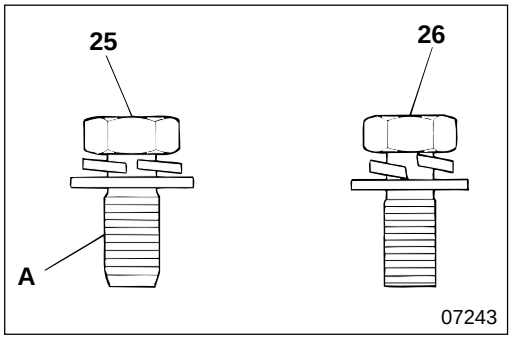

25 **26** **Installation of bolt**

- Bolts **25** and **26**, differ in shape. Do not mix them up when installing.
- Thread area **A** of bolt **25** is elliptical to facilitate grounding of the horn circuit.

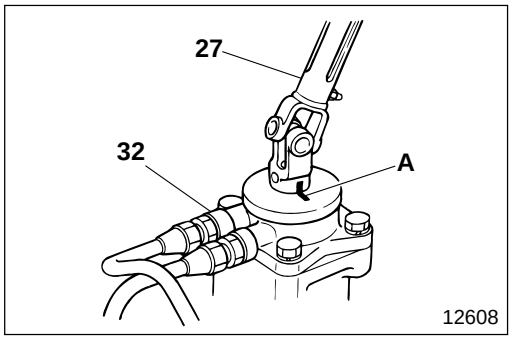

27 **32** **Removal and installation of steering column subassembly, and power steering booster**

Before removing steering column subassembly **27** or power steering booster **32**, be sure to make alignment mark **A**.

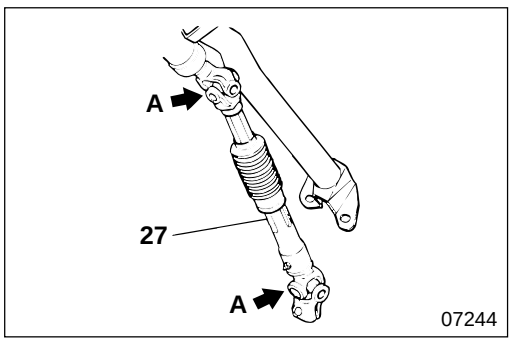

27 **Steering column subassembly**

When the spline of steering column subassembly **27** has been disconnected, align marks **A** on the yokes to face the same direction.

M E M O

STEERING COLUMN SUBASSEMBLY

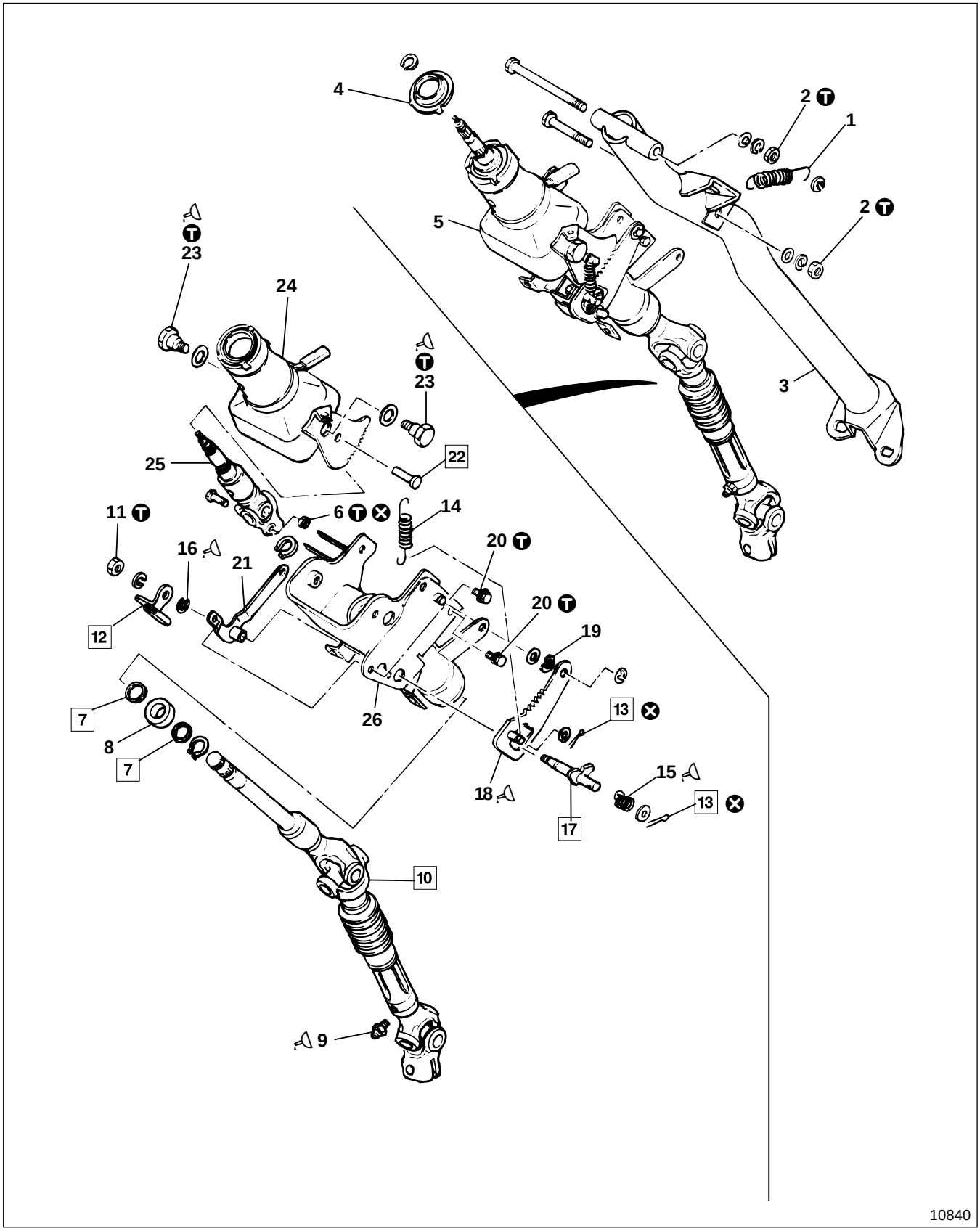

● **Disassembly sequence**

1 Return spring
2 Nut
3 Support bracket
4 Spring seat
5 Steering column assembly
6 Nut
7 Stopper
8 Bearing spacer
9 Grease nipple
10 Steering shaft assembly
11 Nut
12 Lock lever
13 Split pin
14 Return spring
15 Return spring
16 Snap ring
17 Cam
18 Lock plate
19 Wave washer
20 Bolt
21 Lever support
22 Clevis pin
23 Bolt
24 Column support upper
25 Telescopic shaft assembly
26 Column support lower

⊗ : Non-reusable parts

● **Assembly sequence**

5 → 4 → 3 → 2 → 1

5 : 25 → 24 → 23 → 22 → 21 → 20 → 19 → 18 → 17 → 16 → 15 → 14 → 13 → 12 → 11 → 10 → 9 → 8 → 7 → 6
26

Ⓣ Tightening torque

Unit : N·m {lbf.ft, kgf·m}

Location	Parts to be tightened	Tightening torque	Remarks
2	Nut (Support bracket mounting)	17 to 26 {12 to 19, 1.7 to 2.6}	—
6	Nut (Steering shaft assembly and telescopic shaft assembly mounting)	53 to 65 {39 to 48, 5.4 to 6.6}	—
11	Nut (Lock lever mounting)	4 to 6 {2.9 to 4.3, 0.4 to 0.6}	—
20	Bolt (Lever support mounting)	7 to 10 {5.1 to 7.2, 0.7 to 1.0}	—
23	Bolt (Column support upper and column support lower mounting)	15 to 20 {11 to 14, 1.5 to 2.0}	—

Lubricant and/or sealant

Location	Points of application	Specified lubricant and/or sealant	Quantity
9	Supply via grease nipple	Wheel bearing grease [NLGI No.2 (Li soap)]	As required
15	Friction surfaces of return spring and washer	Wheel bearing grease [NLGI No.2 (Li soap)]	As required
16	Friction surfaces of lever support and snap ring	Wheel bearing grease [NLGI No.2 (Li soap)]	As required
18	Friction surfaces of cam and lock plate return spring clevis pin	Wheel bearing grease [NLGI No.2 (Li soap)]	As required
23	Thread area of bolt	THREEBOND thread lock super 103Q or LOCTITE 271	As required
	Friction surfaces of column support upper and bolt	Wheel bearing grease [NLGI No.2 (Li soap)]	As required

◆ Service procedure

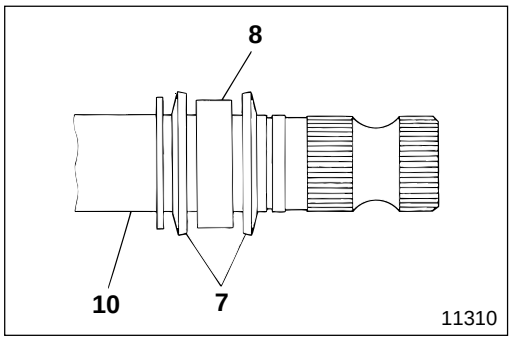

7 **Installation of stopper**

Install stoppers **7** on steering shaft assembly **10** in the direction as illustrated so that they straddle bearing spacer **8**.

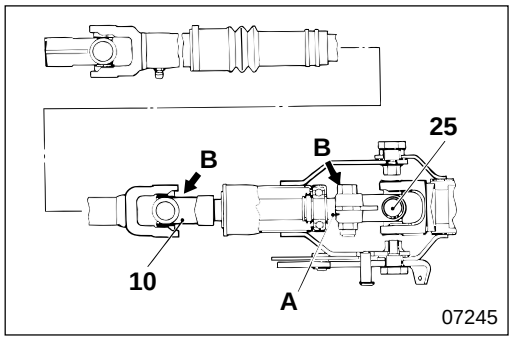

10 **Steering shaft assembly**

- Before removing steering shaft assembly **10**, be sure to make alignment mark **A**.
- Install the steering shaft with direction **B** of the telescopic shaft assembly **25** yoke and steering shaft assembly **10** yoke aligned or at phase angle of 90°.

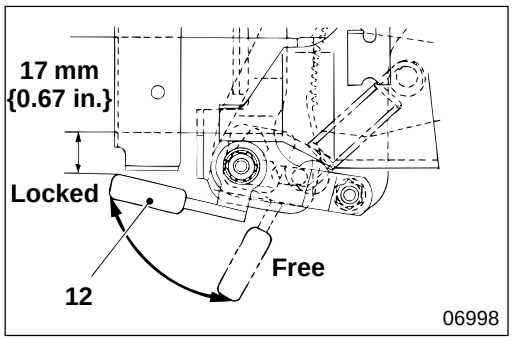

12 **Installation of lock lever**

- Install lock lever **12** so it is within the working angle when locked.
- After installing lock lever **12**, make sure that the lever operates smoothly (operating force less than 49 N {11 lbf, 5 kgf}). With the lever free, make sure that high tilt operates smoothly.

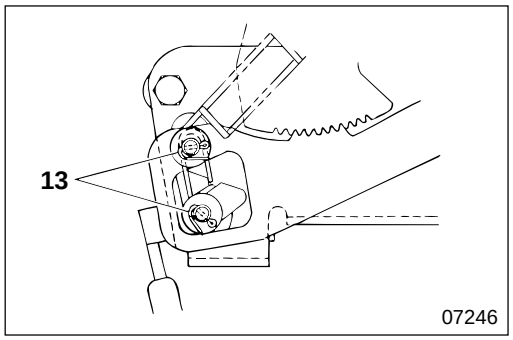

13 **Installation of split pin**

Bend split pin **13** to face outwards as illustrated.

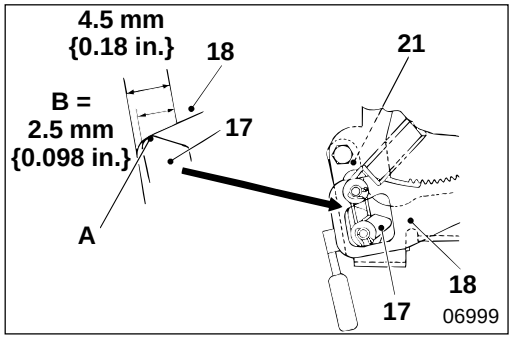

17 **Installation of cam**

Adjust lever support **21** so that the top surface **A** of cam **17** is within dimension **B** of lock plate **18** to install the cam.

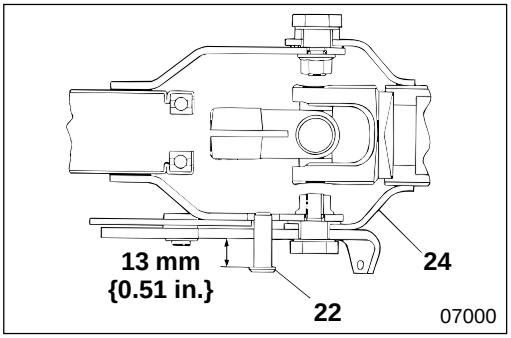

22 **Installation of clevis pin**

Drive clevis pin **22** into column support upper **24** so that the drive dimension is obtained.

POWER STEERING BOOSTER

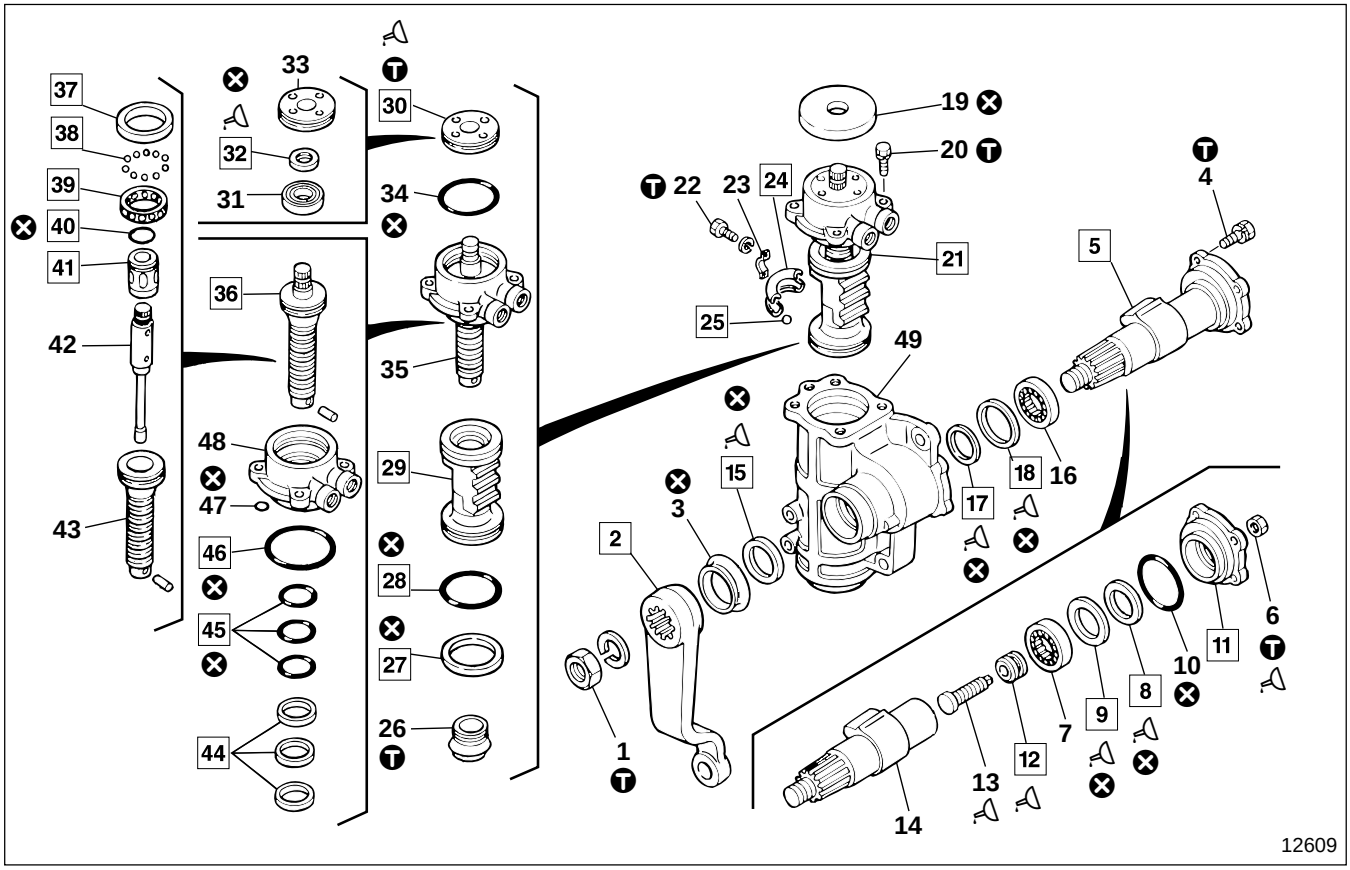

● **Work before disassembly**

P37-30

● **Disassembly sequence**

1 Lock nut
2 Pitman arm
3 Dust cover
4 Bolt
5 Sector shaft assembly and side cover assembly
6 Nut
7 Needle bearing
8 Backup ring
9 Y-packing
10 O-ring
11 Side cover
12 Retainer
13 Adjusting screw
14 Sector shaft
15 Oil seal
16 Needle bearing
17 Backup ring
18 Y-packing
19 Dust cover
20 Bolt
21 Ball screw assembly
22 Screw
23 Ball tube clip
24 Ball tube
25 Steel ball
26 Plug
27 Seal ring
28 O-ring
29 Piston
30 Adjusting plug assembly
31 Ball bearing
32 Oil seal
33 Adjusting plug
34 O-ring
35 Worm shaft assembly and valve housing assembly
36 Worm shaft assembly
37 Side race
38 Steel ball
39 Bearing cage
40 Seal ring
41 Rotor
42 Stub shaft
43 Worm shaft
44 Seal ring
45 O-ring
46 O-ring
47 O-ring
48 Valve housing
49 Body (Cylinder)

⊗ : Non-resusable parts

NOTE

- **Do not remove needle bearing 7 or 16 unless they are faulty.**
- **Do not remove retainer 12 or adjusting screw 13 unless they are faulty.**
- **Have a tray or box ready to catch steel balls 25, 38.**

● **Assembly sequence**

49 → 21 → 20 → 19 → 18 → 17 → 16 → 15 → 5 → 4 → 3 → 2 → 1

36 : 43 → 42 → 41 → 40 → 39 → 38 → 37

35 : 48 → 47 → 46 → 45 → 44 → 36

30 : 33 → 32 → 31

21 : 35 → 34 → 30 → 29 → 28 → 27 → 26 → 25 → 24 → 23 → 22

5 : 14 → 13 → 12 → 11 → 10 → 9 → 8 → 7 → 6

● **Adjustment after assembly**

P37-31

Service standards

Unit : mm {in.}

Location	Maintenance item		Standard value (Basic diameter in [ ])	Limit	Remedy	
5, 21	Backlash between sector shaft and ball screw (Measure at the end of pitman arm)		0.2 {0.0079}	0.5 {0.020}	ℓ= 250 {9.84}	Adjust (Measure with applied load of ±15 N {3.3 lbf, 1.5 kgf})
12	Retainer		Tighten the retainer then slacken off by 180°, retighten at 39 N·m {29 lbf.ft, 4 kgf·m}, then slacken off by 20°. Make sure that the adjusting screw turns smoothly, then caulk it	—	—	
13, 14	Axial play of adjusting screw and sector shaft		0.01 to 0.10 {0.00039 to 0.0039}	0.2 {0.0079}	Replace	
14	Outer diameter of sector shaft	Adjusting screw side	ø39.975 {1.574}	ø39.875 {1.570}	Replace	
		Pitman arm side	ø44.975 {1.771}	ø44.875 {1.767}	Replace	
29, 43	Play of piston and worm shaft in axial direction		—	0.5 {0.02} or more	Replace	
29, 49	Clearance between outer diameter of piston and inner diameter of body (Cylinder)		[85 {3.3}] 0.11 {0.0043}	0.16 {0.0063}	Replace	
41, 43	Clearance between outer diameter of rotor and worm shaft		[35.5 {1.4}] 0.02 {0.00079}	0.03 {0.0012}	Replace	

Ⓣ Tightening torque

Unit : N·m {lbf.ft, kgf·m}

Location	Parts to be tightened	Tightening torque	Remarks
1	Lock nut (Pitman arm mounting)	270±25 {200±18, 27.5±2.5}	—
4	Bolt (Side cover mounting)	53.9 to 63.7 {40 to 47, 5.5 to 6.5}	—
6	Nut (Adjusting screw tightening)	63.7 to 73.5 {47 to 54, 6.5 to 7.5}	—
20	Bolt (Valve housing tightening)	98.1 to 107.9 {72 to 80, 10 to 11}	—
22	Screw (Ball tube clip mounting)	4.41 to 5.39 {3.3 to 4.0, 0.45 to 0.55}	—
26	Plug	246 to 274 {180 to 200, 25 to 28}	—
30	Adjusting plug assembly	177 to 196 {130 to 145, 18 to 20}	—

POWER STEERING BOOSTER

Lubricant and/or sealant

Location	Points of application	Specified lubricant and/or sealant	Quantity
6	Contact surfaces of nut and side cover	Hermetic seal 101Y or THREEBOND 1102	As required
8, 17	Backup ring inner periphery	Multipurpose grease [NLGI No.2 (Li soap)]	As required
9, 18	Pack interior of Y-packing	Multipurpose grease [NLGI No.2 (Li soap)]	As required
12	Pack interior of retainer	Multipurpose grease [NLGI No.2 (Li soap)]	As required
13	Contact surfaces of adjusting screw and sector shaft	Multipurpose grease [NLGI No.2 (Li soap)]	As required
	Thread area of adjusting screw	Hermetic seal 101Y or THREEBOND 1102	As required
15, 32	Pack interior of oil seal	Multipurpose grease [NLGI No.2 (Li soap)]	As required
30	Adjusting plug assembly outer periphery	Hermetic seal 101Y or THREEBOND 1102	As required

Special tools

Unit : mm {in.}

Location	Tool name and shape	Part No.	Application
2	Pitman arm puller Part No. / **A** / **B** MH061687 *910-00183 / 59 {2.32} / ø92 {3.62} *910-00184 / 59 {2.32} / ø100 {3.94} 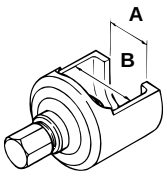 01355	MH061687 *910-00183 *910-00184	Removal of pitman arm
8,15, 17	Inserting tool assembly 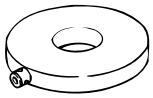 01356	MC811971 *910-11001	Forming of backup ring and press-fitting of oil seal
8,17	Inserting tool 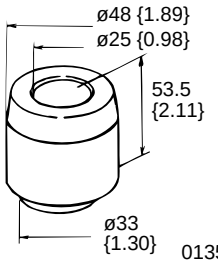 01358	MC811974 *910-21715	Forming of backup ring
10, 27, 28, 34, 40, 44, 45, 46, 47	Needle 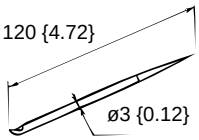 02288	MC811948 *910-21200	Removal of O-ring and seal ring

* JIDOSHA KIKI part No.

Unit : mm {in.}

Location	Tool name and shape	Part No.	Application
12	Bar 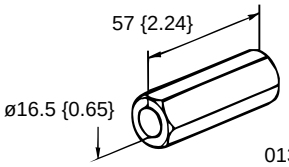	MC811955 *910-22811	Turning of retainer
	Squeeze tool 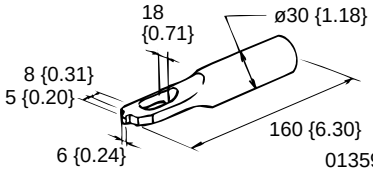	MC811950 *910-21801	Caulking of retainer
27	Inserting tool 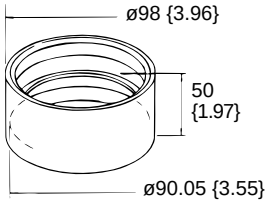	MC813516 *910-21718	Forming of piston seal ring
30	Wrench assembly 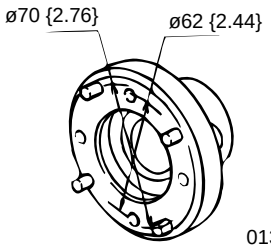	MC811970 *910-10743	Removal and installation of adjusting plug assembly
	Attachment (**A** : Adapter) (**B** : Bolt) 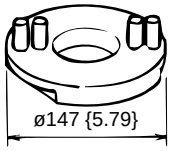	MC811969 *910-10671 (**A** : *910-23581) (**B** : *910-23194)	Holding down of valve housing
32	Press-fitting tool 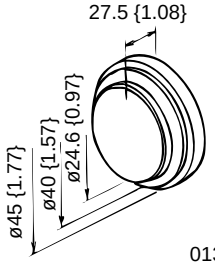	MC811972 *910-20404	Press-fitting of oil seal

* JIDOSHA KIKI part No.

Unit : mm {in.}

Location	Tool name and shape	Part No.	Application
37 to 39	Tool assembly 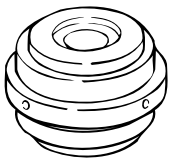 01363	MC811968 *910-10611	Assembly of thrust bearing
	Guide assembly 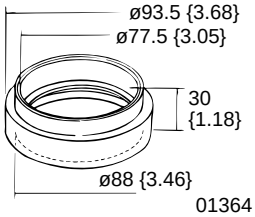 01364	MC090148 *910-23033	
40	Inserting tool 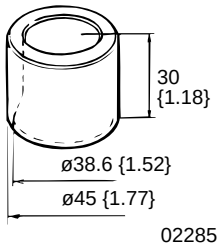 02285	*910-22777	Forming of rotor seal ring
44	Inserting tool 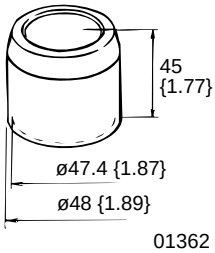 01362	MC811975 *910-22722	Forming of valve housing seal ring

* JIDOSHA KIKI part No.

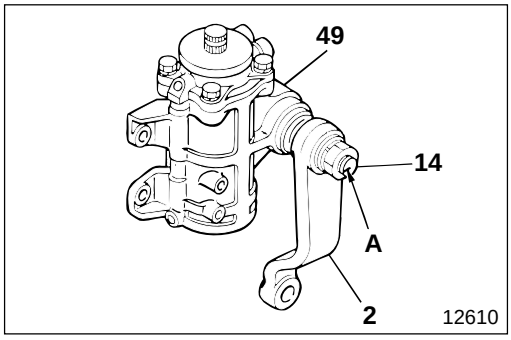

◆ Service procedure

● Work before disassembly

Move pitman arm **2**, and align slit **A** of the V-groove of sector shaft **14** to the center of body **49** so that the gears are in neutral position.

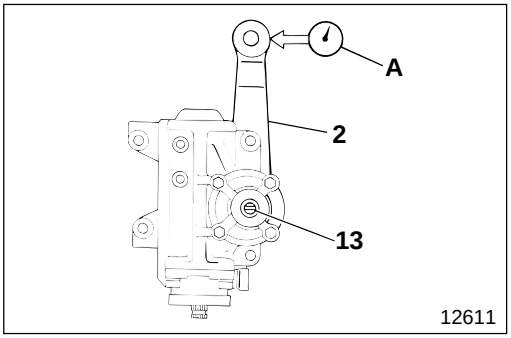

● **Adjustment after assembly**

Adjustment of backlash

- (Carry out this work with the gears in neutral position.)
  Measure play at the end of pitman arm **2** with dial gauge **A**, and adjust adjusting screw **13** so that the reading meets the standard value.

  Measuring load : ±15 N {3.3 lbf, 1.5 kgf}

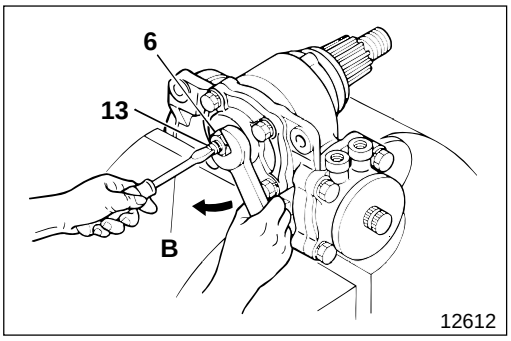

Tightening nut

- After adjusting backlash, apply sealer to thread area of adjusting screw **13**. Hold it in place with screwdriver **B** and tighten nut **6** at specified torque.

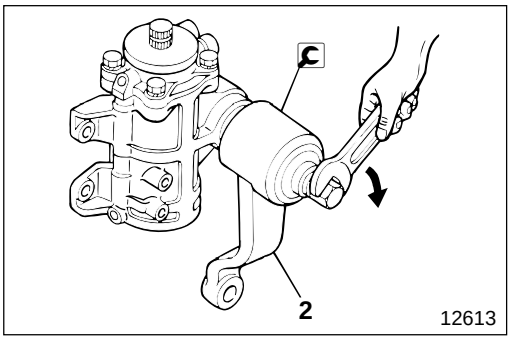

2 **Pitman arm**

[Removal]

: Pitman arm puller

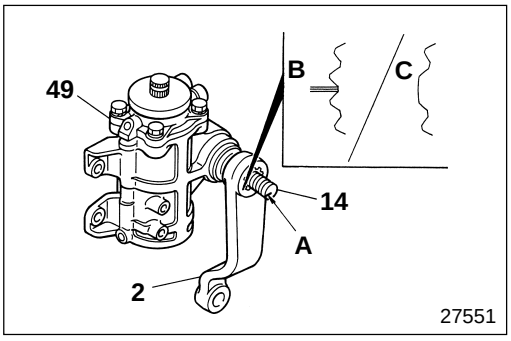

[Installation]

Align slit **A** of the V-groove of sector shaft **14** to the center of body **49**, and align slit **B** of the V-groove of pitman arm **2** or serration missing part **C** on the same line.

NOTE

Have pitman arm 2 make a full stroke of the piston to make sure that the piston moves smoothly.

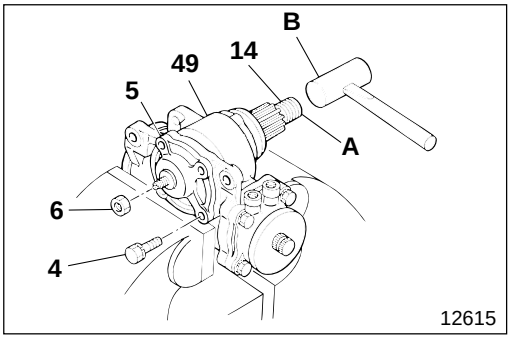

5 **Sector shaft assembly and side cover assembly**

[Removal]

- Make sure that the piston is in the neutral position (slit **A** of the V-groove at one end of sector shaft **14** is aligned with the center of body **49**).
- Tap the end of sector shaft **14** and pull out sector shaft assembly and side cover assembly **5**.

  B : Plastic-headed mallet

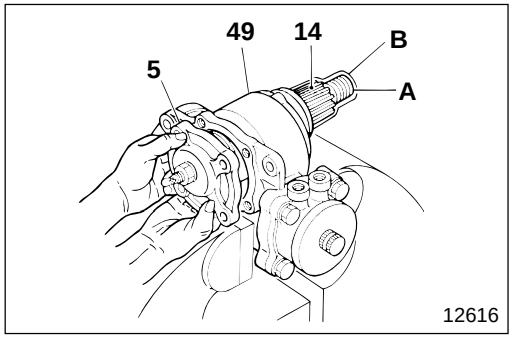

[Installation]
Position sector shaft **14** of sector shaft assembly and side cover assembly **5** so that slit **A** of its V-groove is aligned with the center of body **49**, and the piston gear and sector shaft gear engage at their centers.

CAUTION

Before installation, apply tape B to the Y-packing to prevent it being damaged by the threads of sector shaft 14.

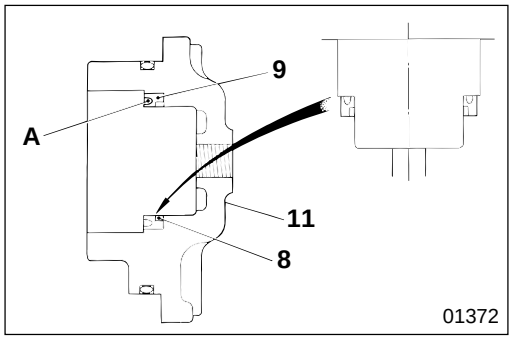

8 **9** **Backup ring, Y-packing**

[Installation]
- Install Y-packing **9** into side cover **11** in the direction as illustrated.
- After installing backup ring **8**, pack groove **A** of Y-packing **9** with grease.

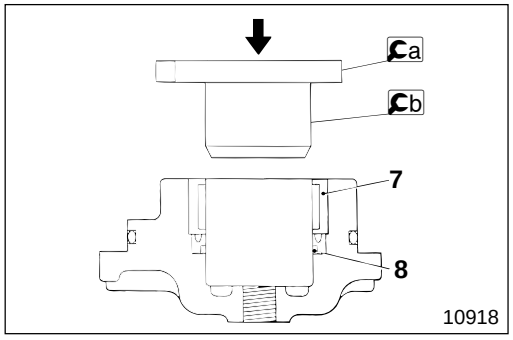

- After installing needle bearing **7** into backup ring **8**, form the bent up part of the backup ring using a insert tool assembly and b insert tool.

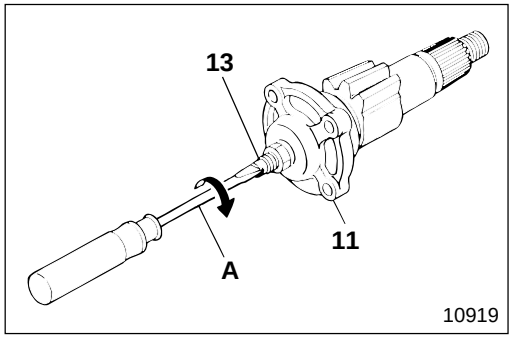

11 **Removal of side cover**

Screw in adjusting screw **13** and remove side cover **11**.
A : Screwdriver

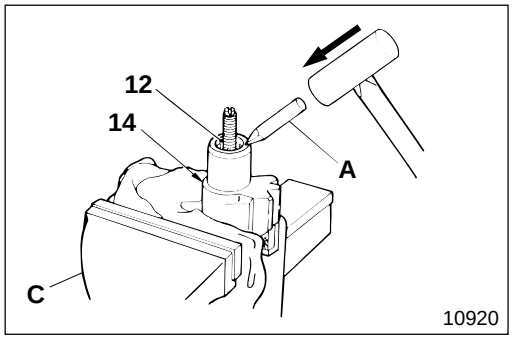

12 **Retainer**

Disassemble sector shaft **14**, as follows, only if it is faulty :
[Removal]
- Pry up (2 points) of retainer **12**.
  A : Chisel

CAUTION

Make sure you use a cloth when you grip sector shaft 14 in vise C to prevent damage.

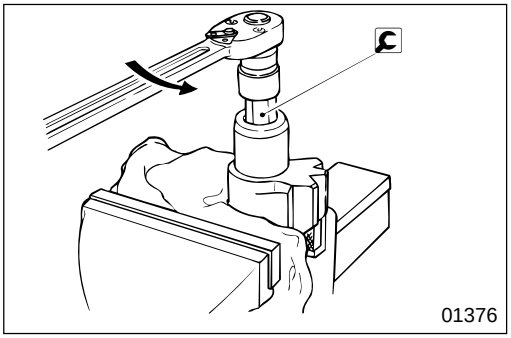

- Remove retainer **12** using bar.

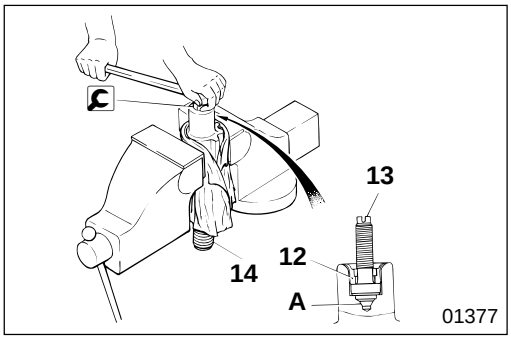

[Installation]

- Pack adjusting screw **13** mounting hole **A** of sector shaft **14** with grease.
- Install adjusting screw **13** into sector shaft **14**.
- Install retainer **12** into sector shaft **14** using bar.
- After installation, slacken off by 180°, retighten at 39 N·m {29 lbf.ft, 4 kgf·m}, then slacken off by 20°.
- Make sure that adjusting screw **13** turns smoothly.

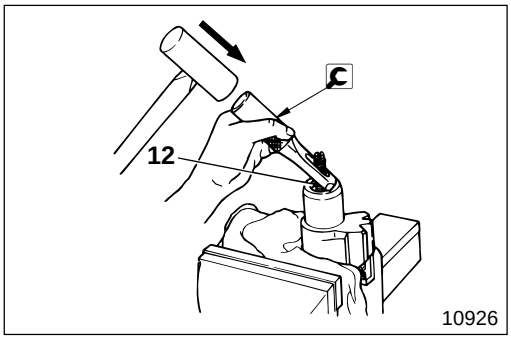

- After installing retainer **12**, caulk the retainer (2 points) using squeeze tool.

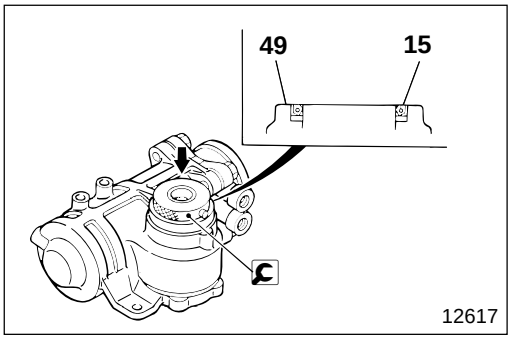

15 Installation of oil seal

Install oil seal **15** into body **49** in the direction as illustrated.

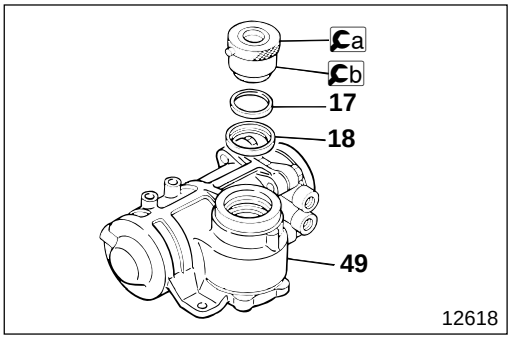

17 18 Installation of backup ring and Y-packing

- Install Y-packing **18** and backup ring **17** to body **49**.
- Pack the groove of Y-packing **18** with grease.
- Form the shape of backup ring **17** using a insert tool assembly and b insert tool.

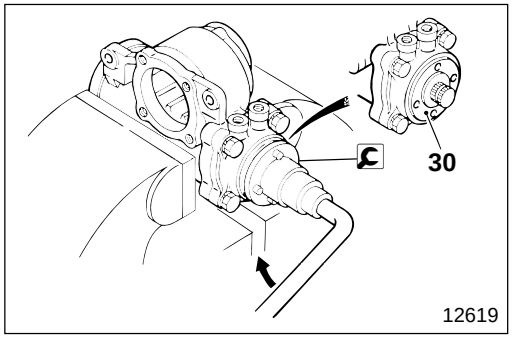

21 **Ball screw assembly**

[Removal]

- Loosen adjusting plug assembly **30** by approximately 180° using wrench assembly.

CAUTION

Make sure you only loosen adjusting plug assembly 30, do not undo it completely because the bearing inside the valve housing might spring out.

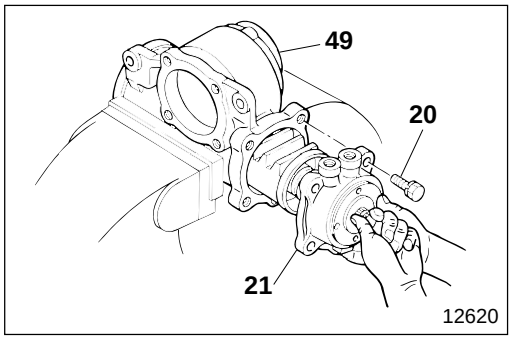

- Loosen bolt **20** and remove ball screw assembly **21** from body **49**.

CAUTION

- **Make sure that the balls of the ball screw do not spring out.**
- **Be careful not to damage the piston or the interior of body 49.**

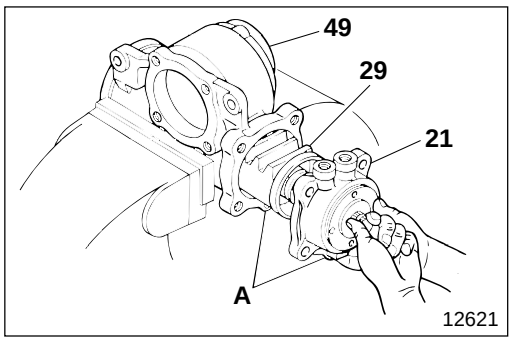

[Installation]

- Install ball screw assembly **21** into body **49**, holding piston **29** so it will not turn.

CAUTION

Be careful not to damage the piston seal ring or the interior of body 49.

- Align oil passage ports **A** of ball screw assembly **21** and body **49**, then tighten.

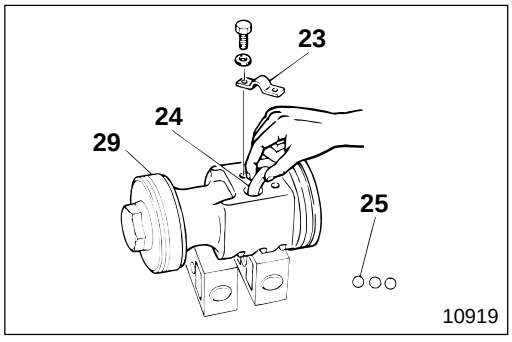

24 **25** **Ball tube and steel ball**

First remove steel balls **25** from piston **29** and place them in the receiving tray, remove ball clip **23**, grip ball tube **24** with your fingers and pull it out gently.

CAUTION

Be careful not to loose any steel balls 25 (×30).

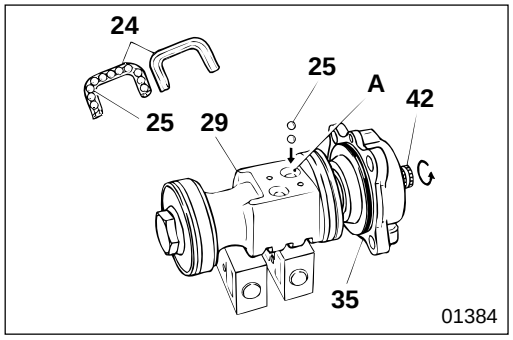

[Installation]

- Pack the interior of ball tube **24** with grease, lay 10 or 11 steel balls **25** in place, then mount the other side of the ball tube.
- Place piston **29** on a level surface, align assembled worm shaft assembly and valve housing assembly **35** and the piston ball race, then drop the steel balls through ball tube hole **A** while turning stub shaft **42**.

CAUTION

Make sure that you do not pull out worm shaft assembly and valve housing assembly 35 too far, or steel balls 25 will drop out of the ball race.

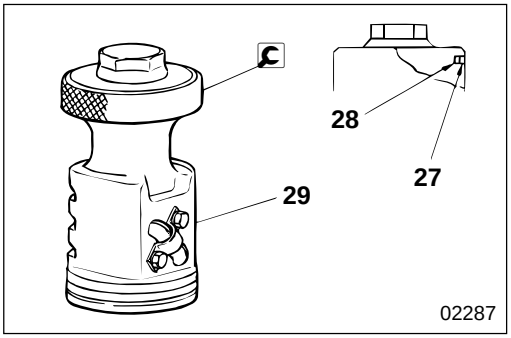

27 **28** **Installation of O-ring and seal-ring**

Install O-ring **28** and seal ring **27** in the outside grooves of piston **29**, then form the shape of the seal ring with 🔧 inserting tool.

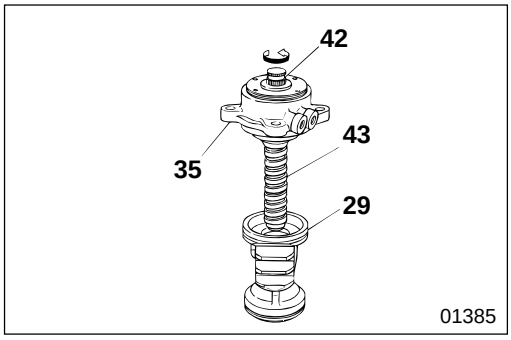

29 **Piston**

[Removal]
Holding worm shaft assembly and valve housing assembly **35** so that piston **29** is at the bottom, turn stub shaft **42** and remove the piston.

CAUTION ⚠

Be careful not to tilt piston 29 when you do this, otherwise steel balls 25 in the races of the piston and worm shaft 43, will drop into the piston.

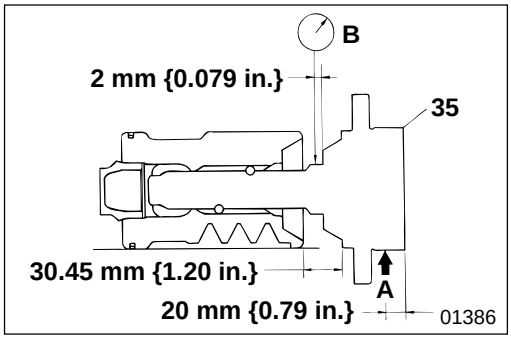

[Inspection]
Measure side play (play in axial direction) **B** of worm shaft assembly and valve housing assembly **35** when 49 N {11 lbf, 5 kgf} is applied to **A** as illustrated.

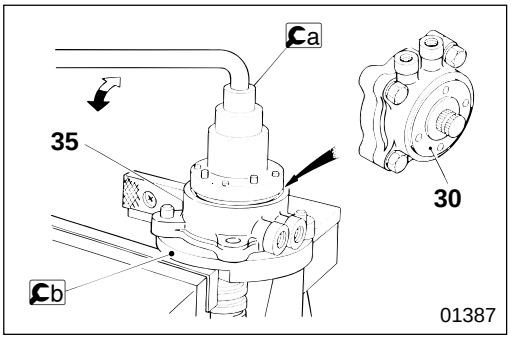

30 **Installation of adjusting plug assembly**

- After tightening adjusting plug assembly **30** of worm shaft assembly and valve housing assembly **35** at specified torque, slacken off by approximately 180°.

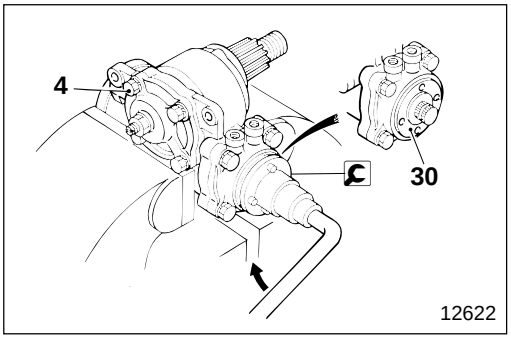

- Tighten bolt **4** at specified torque, then retighten adjusting plug assembly **30** at specified torque using 🔧 wrench assembly.

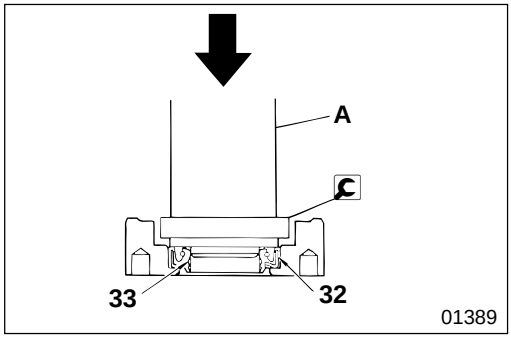

32 **Installation of oil seal**

Install oil seal **32** into adjusting plug **33** in the direction as illustrated.
A : Hand press

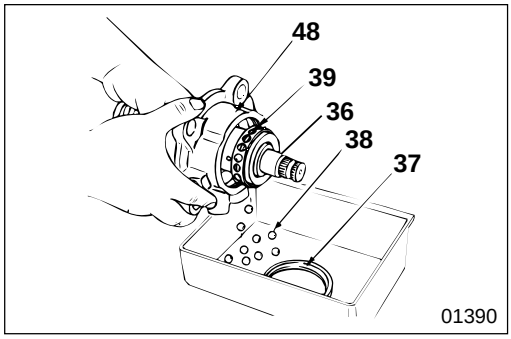

36 **Worm shaft assembly**

[Removal]
Push out worm shaft assembly **36** from valve housing **48** by pushing out the side of the worm shaft assembly where the piston is assembled.

NOTE

Have a tray or box ready to catch side race 37, steel balls 38, and bearing cage 39 as these items separate on removal.

[Installation]

CAUTION

Be careful that worm shaft assembly 36 ball race does not damage seal ring 44.

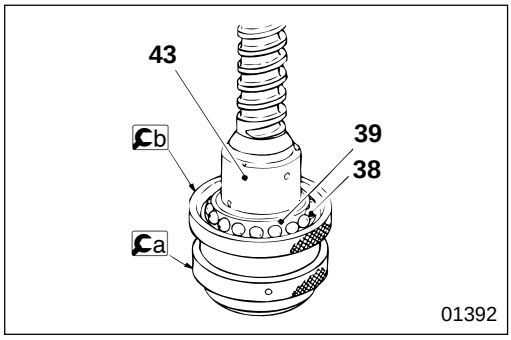

37 **to** **39** **Installation of side race, steel ball, and bearing cage**

- Install b guide assembly on a tool assembly, and insert worm shaft **43** in the direction as illustrated.
- Assemble bearing cage **39** and steel balls **38** on worm shaft **43**.

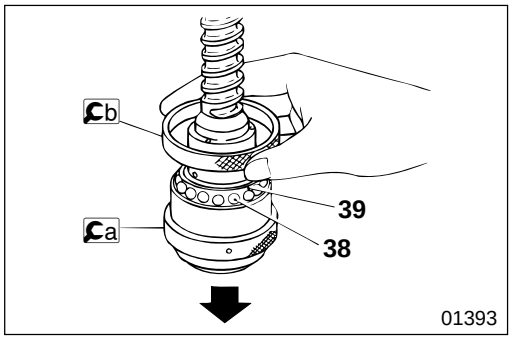

- Hold down b with your hand and slide a downward, so that you can position steel balls **38** as specified.

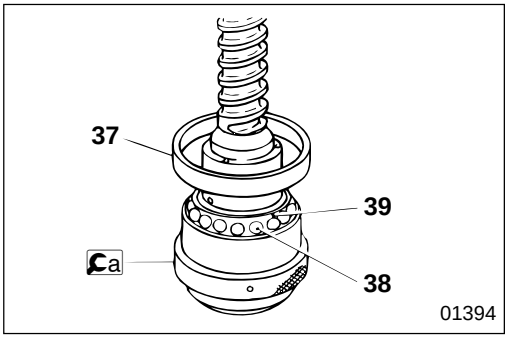

- Install side race **37** on top of steel balls **38** and bearing cage **39**.

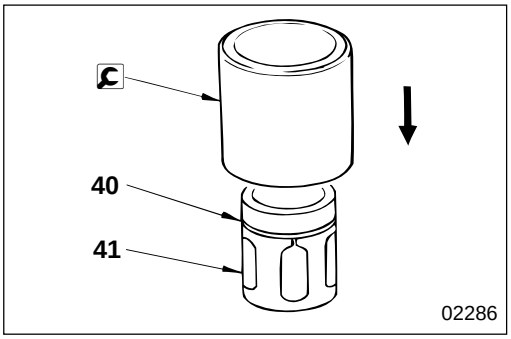

40 **Installation of seal ring**

- Install seal ring **40** onto rotor **41**.
- Form seal ring **40** using insert tool.

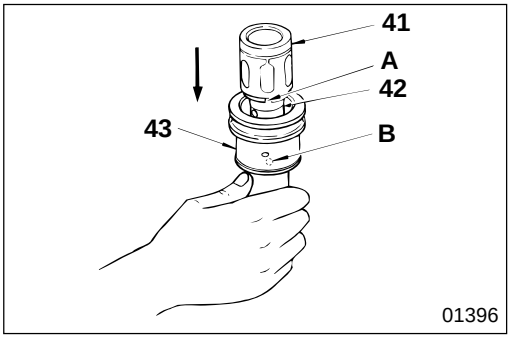

41 **Installation of rotor**

Install rotor **41** between stub shaft **42** and worm shaft **43** so that indent **A** of the rotor fits positioning pin **B** of the worm shaft.

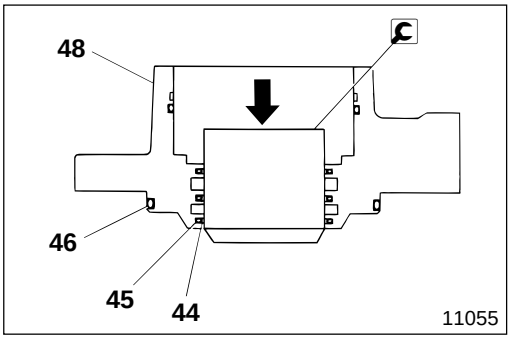

44 **to** **46** **Installation of seal ring and O-ring**

- Install seal ring **44** and O-ring **45**, **46** into valve housing **48**.
- Form seal ring **44** using insert tool.

POWER STEERING OIL PUMP

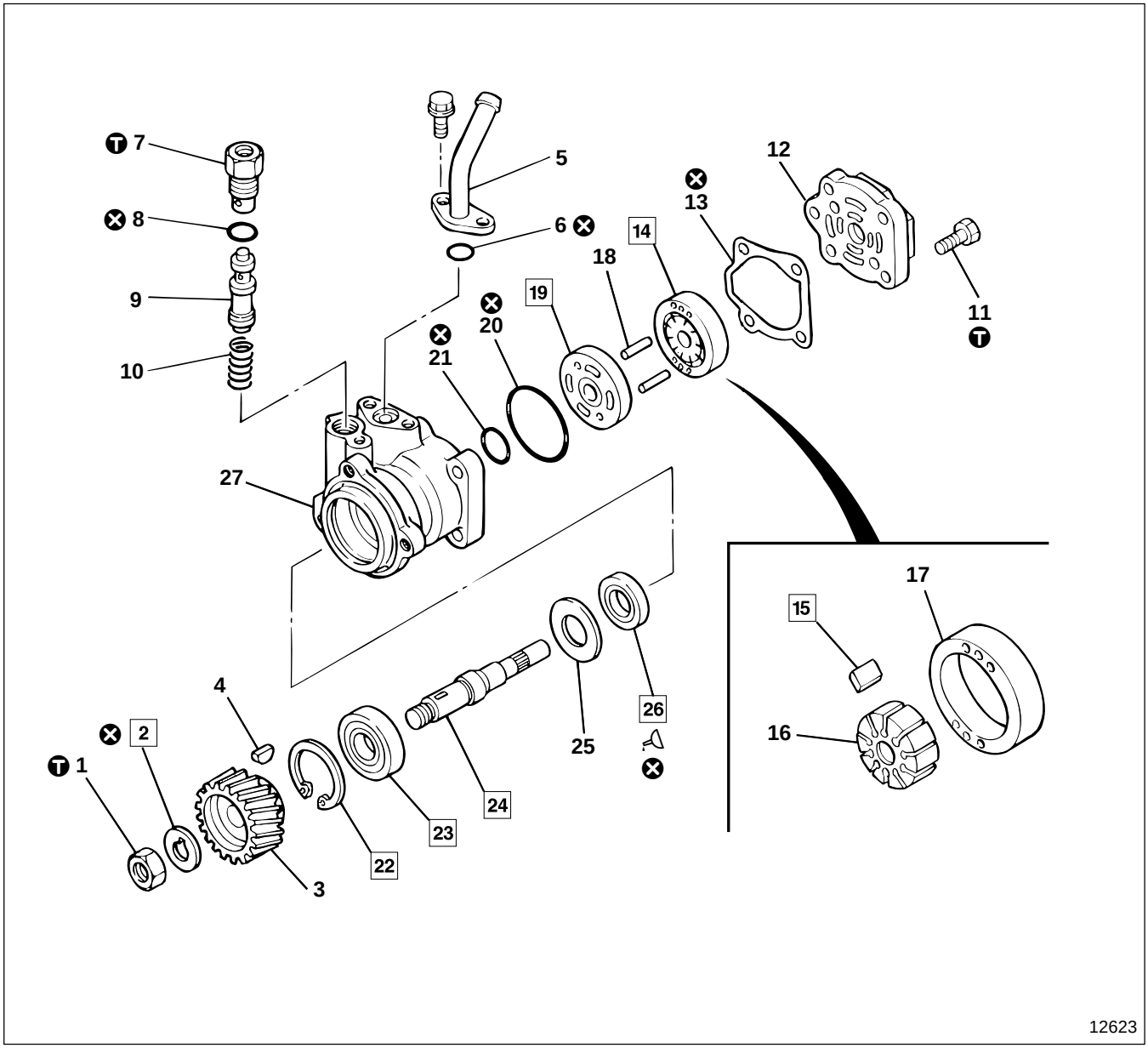

● **Disassembly sequence**

1 Nut
2 Lock washer
3 Gear
4 Key
5 Suction pipe
6 O-ring
7 Connector
8 O-ring
9 Flow control valve assembly
10 Flow control spring
11 Bolt
12 Rear body
13 Gasket
14 Cartridge assembly
15 Vane
16 Rotor
17 Cam ring
18 Straight pin
19 Pressure plate
20 O-ring
21 O-ring
22 Retaining ring
23 Ball bearing
24 Shaft
25 Retaining ring
26 Oil seal
27 Front body

⊗ : Non-reusable parts

● **Assembly sequence**

Follow the disassembly sequence in reverse.
Repair kit : Seal kit, Cartridge assembly kit

Service standards

Unit : mm {in.}

Location	Maintenance item	Standard value	Limit	Remedy
9, 27	Clearance between flow control valve assembly and front body	—	0.03 {0.0012}	*1
12, 19	Stepped wear on rear body and pressure plate where it is subject to friction against rotor and vane	—	0.01 {0.00039}	*2

*1 No seizure, wear, or scoring sufficient to catch a finger nail. Replace flow control valve assembly or front body.
*2 No seizure, wear, or scoring sufficient to catch a finger nail. Replace rear body or pressure plate.

Tightening torque

Unit : N·m {lbf.ft, kgf·m}

Location	Parts to be tightened	Tightening torque	Remarks
1	Nut (Gear mounting)	68.8 to 88.2 {51 to 65, 7 to 9}	—
7	Connector	49 to 58.8 {36 to 43, 5 to 6}	—
11	Bolt (Rear body mounting)	49 to 58.8 {36 to 43, 5 to 6}	—

Special tools

Location	Tool name and shape	Part No.	Application
22	Pliers	*910-22570	Removal and installation of retaining ring
23	Press-fitting tool	*910-23061	Removal and installation of ball bearing, and installation of shaft
26	Stick	*910-21632	Driving out of oil seal
	Press-fitting tool	*910-23062	Press-fitting of oil seal

* JIDOSHA KIKI part No.

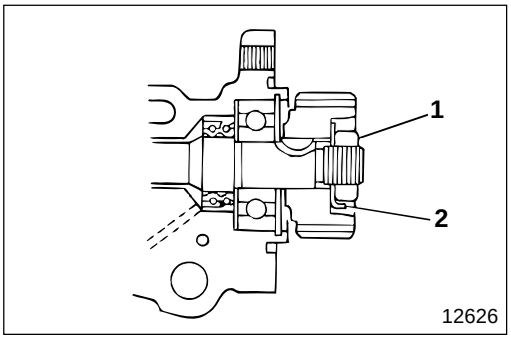

◆ Service procedure

2 **Installation of lock washer**

After installing nut **1**, bend up one lug on the circumference of lock washer **2**.

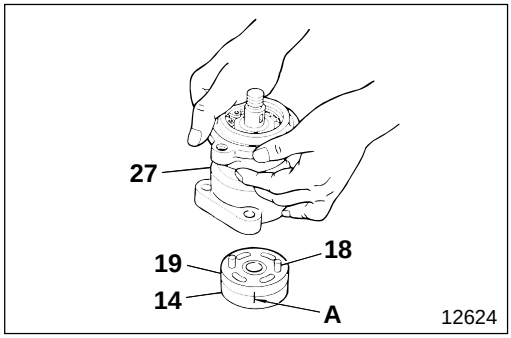

14 **Removal and installation of cartridge assembly**

[Removal]

- Remove cartridge assembly **14**, pressure plate **19** and straight pin **18** together from front body **27**.
- Put alignment marks **A** around the outer circumferences of cartridge assembly **14** and pressure plate **19**.

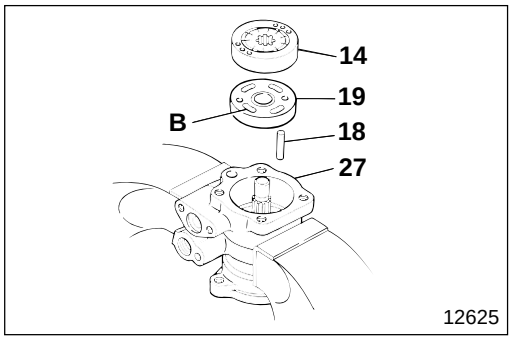

[Installation]

- Install straight pin **18** into front body **27**.
- Install pressure plate **19** onto front body **27**, so that groove **B** of the pressure plate faces the direction as illustrated.
- Align cartridge assembly **14** with straight pin **18**, then install the cartridge assembly.

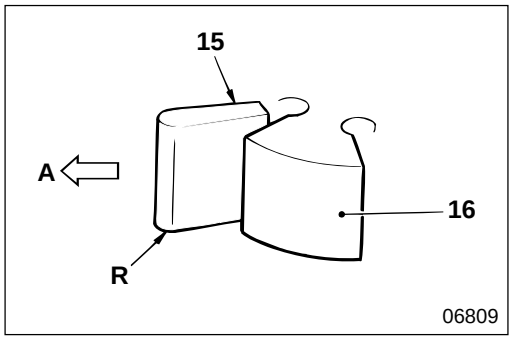

15 **Installation of vane**

With point **R** of vane **15** facing outside **A**, install it into rotor **16** and make sure that the vane moves smoothly. If it is faulty, replace the cartridge assembly.

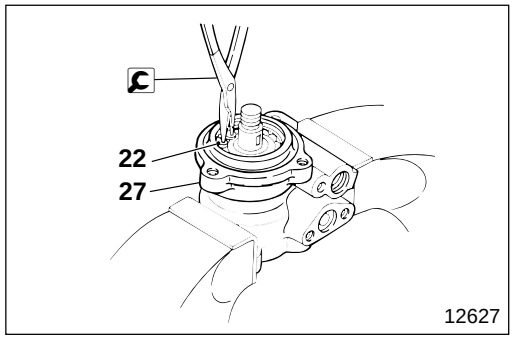

22 **Removal of retaining ring**

Remove retaining ring **22** using pliers.

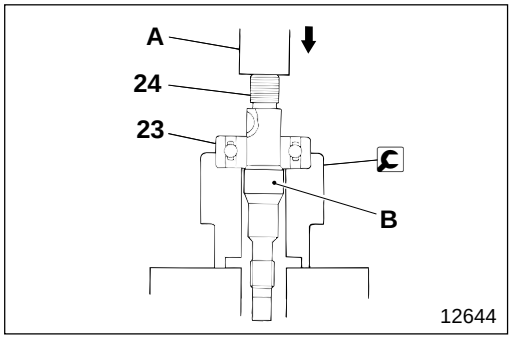

23 **Removal and installation of ball bearing**

Remove ball bearing **23** from shaft **24** using press-fitting tool.

A : Hand press

For installation, follow the removal sequence in reverse.

CAUTION

Be careful not to damage oil seal contact surface B.

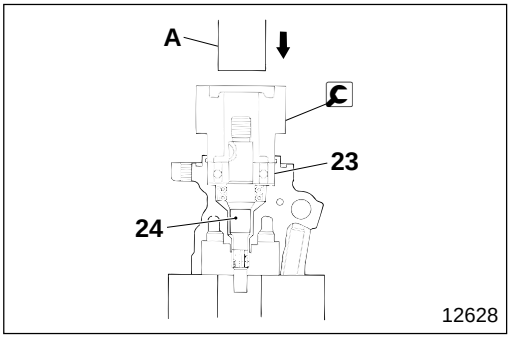

23 **24** **Installation of ball bearing and shaft**

Install ball bearing **23** and shaft **24** using press-fitting tool.

A : Hand press

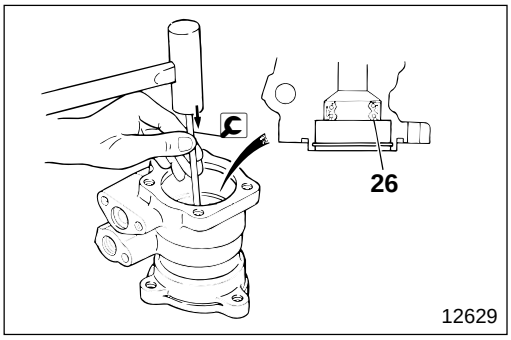

26 **Oil seal**

[Removal]

Remove oil seal **26** using stick.

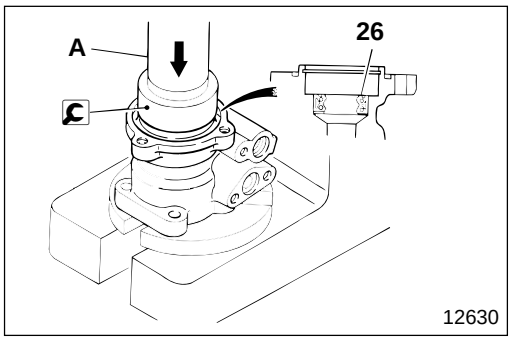

[Installation]

Install oil seal **26** in the direction as illustrated using press-fitting tool.

A : Hand press

POWER STEERING OIL TANK

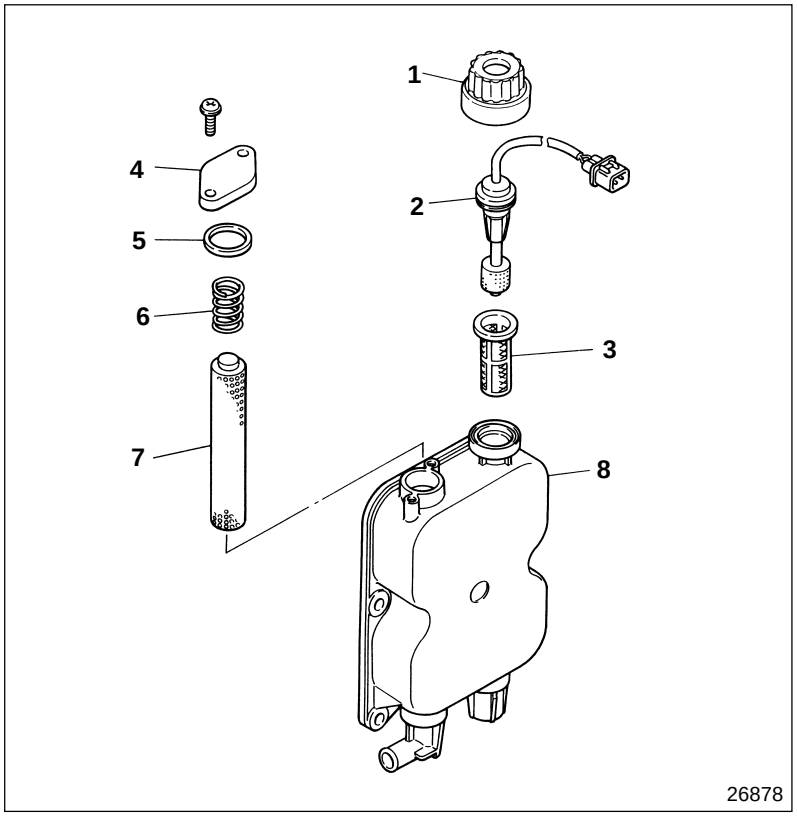

● **Disassembly sequence**

1 Cap (with packing)
2 Power steering fluid level sensor (with packing) Gr 54
3 Strainer
4 Filter cap
5 Packing
6 Spring
7 Return filter
8 Tank body assembly

● **Assembly sequence**

Follow the disassembly sequence in reverse.

CAUTION

Because the oil tank is made of resin make sure you do not hit the tank or let it suffer any other kind of shock.

M E M O

POWER STEERING FLUID LINE

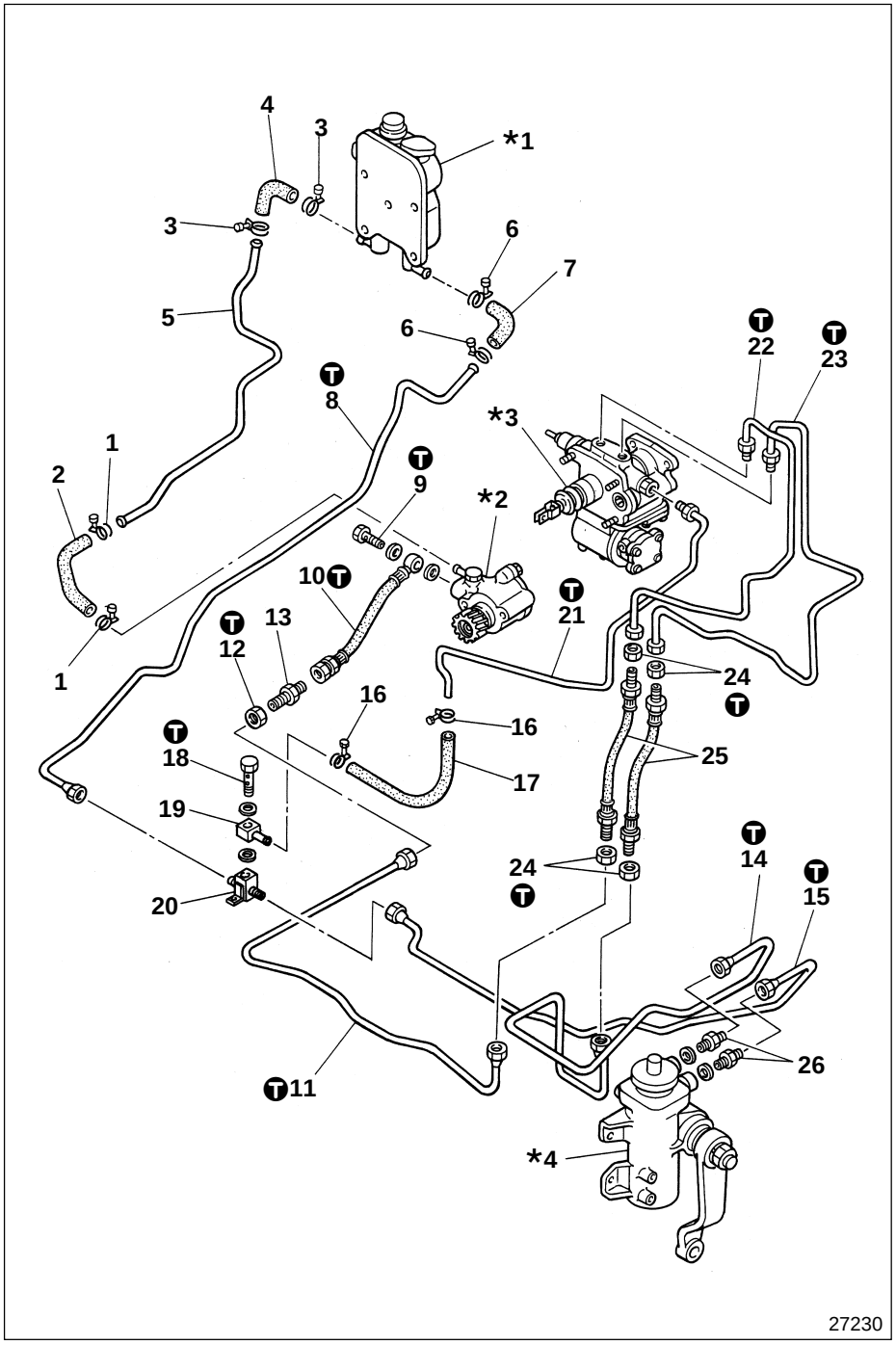

● **Removal sequence**

1 Clamp
2 Oil hose
3 Clamp
4 Oil hose
5 Oil pipe
6 Clamp
7 Oil hose
8 Oil pipe
9 Bolt
10 Oil hose
11 Oil pipe
12 Nut
13 Connector
14 Oil pipe
15 Oil pipe
16 Clamp
17 Oil hose
18 Bolt
19 Connector
20 Connector
21 Oil pipe
22 Oil pipe
23 Oil pipe
24 Nut
25 Oil hose
26 Connector

*1 : Power steering oil tank
*2 : Power steering oil pump
*3 : Brake booster (Hydraulic booster) Gr 35
*4 : Power steering booster

● **Installation sequence**

Follow the removal sequence in reverse.

WARNING

Be sure to bleed air after removing the fluid line, failure to do so would cause the brake and power steering to malfunction. **P37-12**

Tightening torque

Unit : N·m {lbf.ft, kgf·m}

Location	Parts to be tightened	Tightening torque	Remarks
8,15	Oil pipe (Connector connecting)	66.69±12.75 {49±9.4, 6.8±1.3}	—
9	Bolt (Oil hose mounting)	125 {94, 13}	—
10	Oil hose (Connector connecting)	66.69±12.75 {49±9.4, 6.8±1.3}	—
11	Oil pipe (Oil hose and connector connecting)	66.69±12.75 {49±9.4, 6.8±1.3}	—
12, 24	Nut	66.69±12.75 {49±9.4, 6.8±1.3}	—
14	Oil pipe (Oil hose and connector connecting)	66.69±12.75 {49±9.4, 6.8±1.3}	—
18	Bolt (Connector mounting)	66.69±12.75 {49±9.4, 6.8±1.3}	—
21	Oil pipe (Brake booster connecting)	66.69±12.75 {49±9.4, 6.8±1.3}	—
22, 23	Oil pipe (Oil hose and brake booster connecting)	66.69±12.75 {49±9.4, 6.8±1.3}	—

DRAG LINK

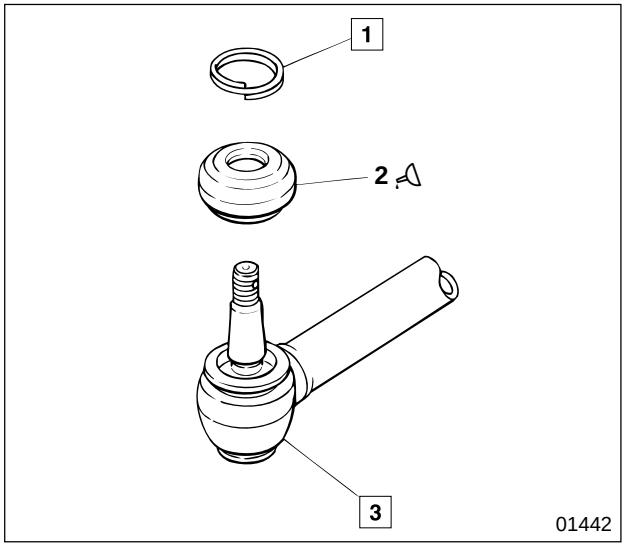

● **Disassembly sequence**

1 Clip
2 Dust cover
3 Drag link

NOTE

- **Do not remove clip 1 or dust cover 2 unless they are faulty.**
- **Do not disassemble drag link 3 because it is a unit construction.**

● **Assembly sequence**

Follow the disassembly sequence in reverse.

Lubricant

Location	Points of application	Specified Lubricant	Quantity
2	Lip area of dust cover	Molybdenum disulfide grease [NLGI No.2 (Li soap)]	As required
	Pack interior of dust cover	Molybdenum disulfide grease [NLGI No.2 (Li soap)]	11 g {0.39 oz}

Special tools

Unit : mm {in.}

Location	Tool name and shape	Part No.	Application
1	Clip guide 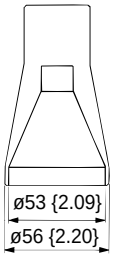	MH061831	Installation of clip

◆ Service procedure

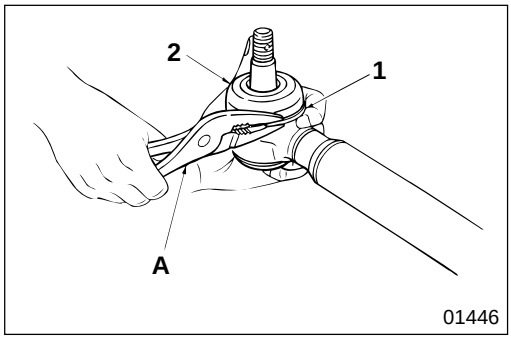

1 **Clip**

[Removal]

A : Long nose pliers

CAUTION

- **Be careful not to damage clip 1 or dust cover 2 when you remove the clip.**
- **If clip 1 is deformed, do not reuse it.**

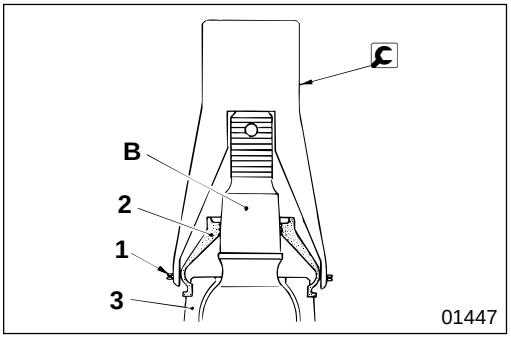

[Installation]
- Position the assembly so ball stud **B** is vertical.
- Place clip guide on drag link **3**.
- Install clip **1** into the groove of dust cover **2**.

CAUTION
- **Be careful that clip guide end does not dig into dust cover 2.**
- **Be especially careful that clip 1 end does not damage dust cover 2.**

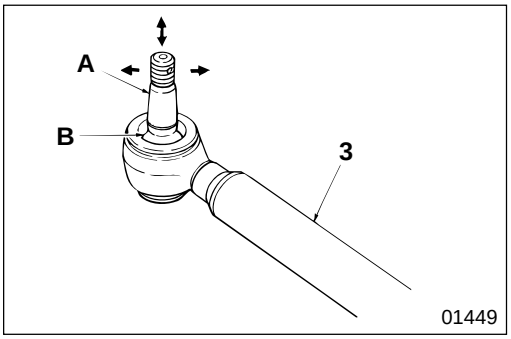

3 Inspection of drag link

Move ball stud area **A** of drag link **3** vertically and horizontally to make sure that there is no play. Also, check that ball section **B** moves evenly. If any fault is found, replace the tie rod assembly.

TIE ROD ASSEMBLY

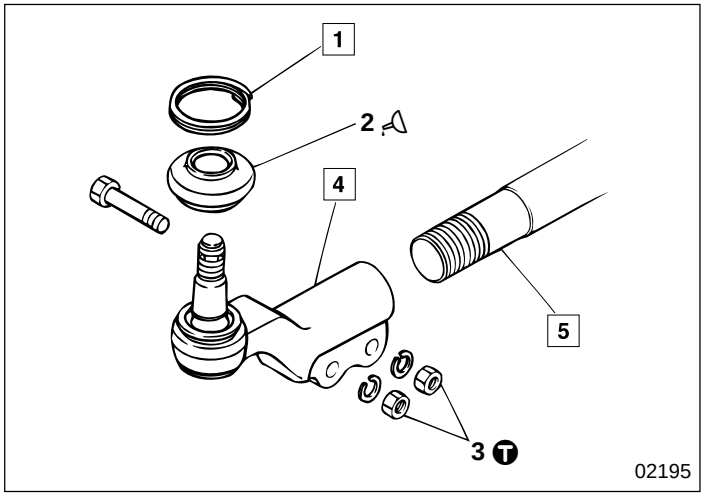

● **Disassembly sequence**

1 Clip
2 Dust cover
3 Nut
4 Tie rod end assembly
5 Tie rod

● **Assembly sequence**

Follow the disassembly sequence in reverse.

NOTE

Do not attempt to disassemble tie rod end assembly 4 because it is a unit construction.

Service standards

Unit : mm {in.}

Location	Maintenance item	Standard value	Limit	Remedy
5	Bend of tie rod	1 {0.039} or less	1 {0.039}	Replace

Tightening torque

Unit : N·m {lbf.ft, kgf·m}

Location	Parts to be tightened	Tightening torque	Remarks
3	Nut (Tie rod end assembly fastening)	78 {58, 8}	Wet

Lubricant

Location	Points of application	Specified lubricant	Quantity
2	Lip area of dust seal	Molybdenum disulfide grease [NLGI No.2 (Li soap)]	As required
	Pack into dust cover	Molybdenum disulfide grease [NLGI No.2 (Li soap)]	11 g {0.39 oz}

Special tools

Unit : mm {in.}

Location	Tool name and shape	Part No.	Application
1	Clip guide 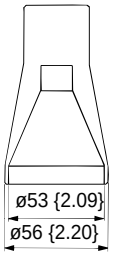	MH061831	Installation of clip

◆ Service procedure

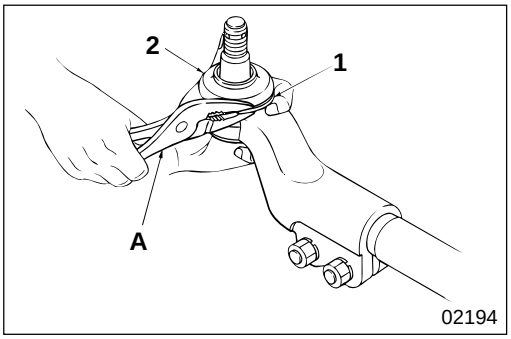

1 **Clip**

[Removal]

A : Long nose pliers

CAUTION

- **Be careful not to damage clip 1 or dust cover 2 when you remove the clip.**
- **If clip 1 is deformed, do not reuse it.**

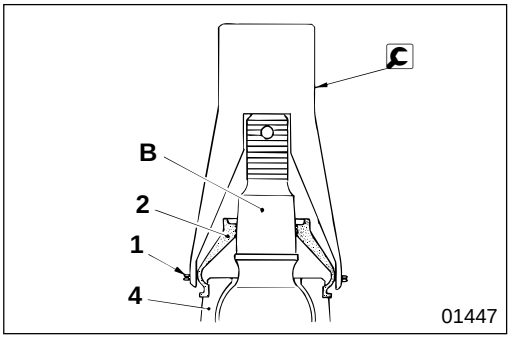

[Installation]

- Position so ball stud **B** is vertical.
- Place clip guide on tie rod end assembly **4**.
- Install clip **1** into the groove of dust cover **2**.

CAUTION

- **Be careful that clip guide end does not dig into dust cover 2.**
- **Be especially careful that clip 1 end does not damage dust cover 2.**

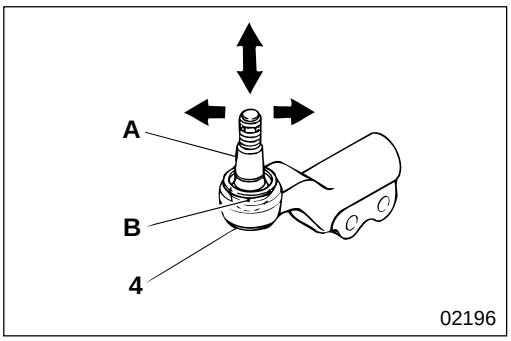

4 **Inspection of tie rod end assembly**

Move ball stud area **A** of tie rod end assembly **4** vertically and horizontally to make sure that there is no play. Also, check that ball section **B** moves evenly. If any fault is found, replace the tie rod end assembly.

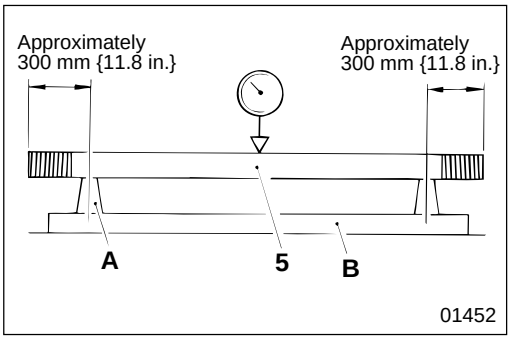

5 **Bend of tie rod**

Measure the bend of tie rod **5** at the center point. If the measured value exceeds the limit, correct or replace the tie rod.

NOTE

To measure the deflection of tie rod 5, turn it one full rotation and read the dial gauge indicator. The deflection is one half of the indicated value.

A : V-block

B : Surface plate

MITSUBISHI
FUSO

FH

Service Manual

Group 37
Steering

Table of Contents

BACK

HOME

MITSUBISHI FUSO TRUCK OF AMERICA, Inc.

Pub No. TWME9502-37

GROUP 37 STEERING

SPECIFICATIONS 2

STRUCTURE AND OPERATION 3

TROUBLESHOOTING 8

INSPECTION AND ADJUSTMENT MOUNTED IN VEHICLE
- Change of Power Steering Fluid 11
- Bleeding of Power Steering System 11
- Steering Wheel Play 12
- Performance Verification Test of Power Steering System 13

STEERING SYSTEM 14

STEERING COLUMN SUBASSEMBLY 18

POWER STEERING BOOSTER 22

POWER STEERING OIL PUMP 34

POWER STEERING OIL TANK 38

POWER STEERING FLUID LINE 39

DRAG LINK 40

TIE ROD ASSEMBLY 42

SPECIFICATIONS

Item		Specification
Steering wheel	Type	2-spoke type
	Outer diameter mm {in.}	450 {17.7}
Steering shaft	Type	Universal joint type (High tilt and telescopic type)
Power steering booster	Manufacturer	JIDOSHA KIKI
	Type	Ball nut type
	Form	Integral type
	Model No.	443-00015
	Gear ratio	17.1 to 20
	Cylinder diameter mm {in.}	85 {3.35}
	Mass (without pitman arm and fluid) kg {lb}	21 {46}
Power steering oil pump	Manufacturer	JIDOSHA KIKI
	Type	Vane type
	Model No.	470-03325
	Discharge amount cm^3 {cu. in.}/rotation	11.2 {0.68}
	Regulated flow amount L {qts}/min	12 {13}
	Regulated pressure (relief valve) MPa {lbf/in^2, kgf/cm^2}	12.3 {1780, 125}
	Permissible revolutions rpm	600 to 4800
	Mass (without drive gear and fluid) kg {lb}	2.7 {6.0}

Steering System

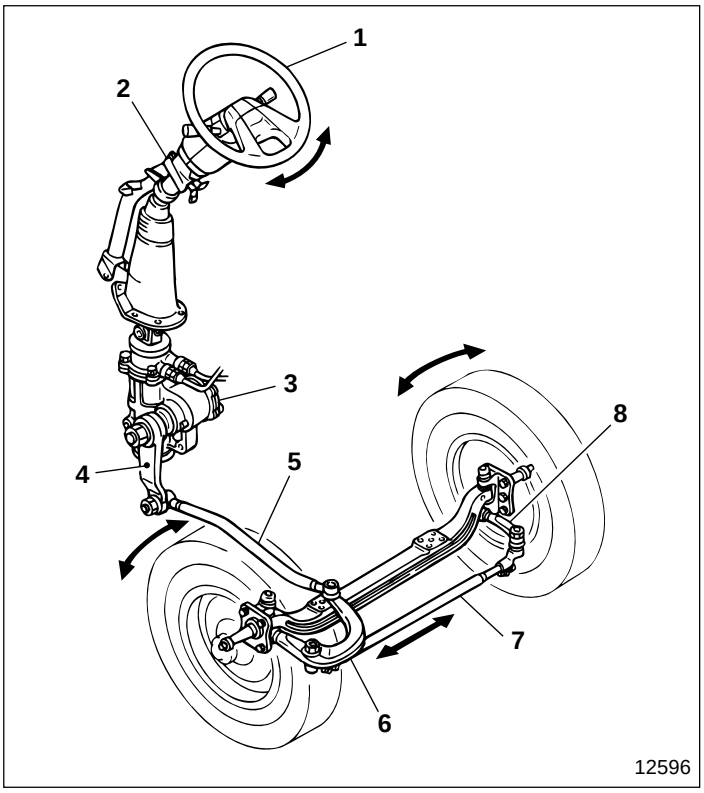

1 Steering wheel
2 Steering column subassembly
3 Power steering booster
4 Pitman arm
5 Drag link
6 Knuckle arm
7 Tie rod
8 Tie rod arm

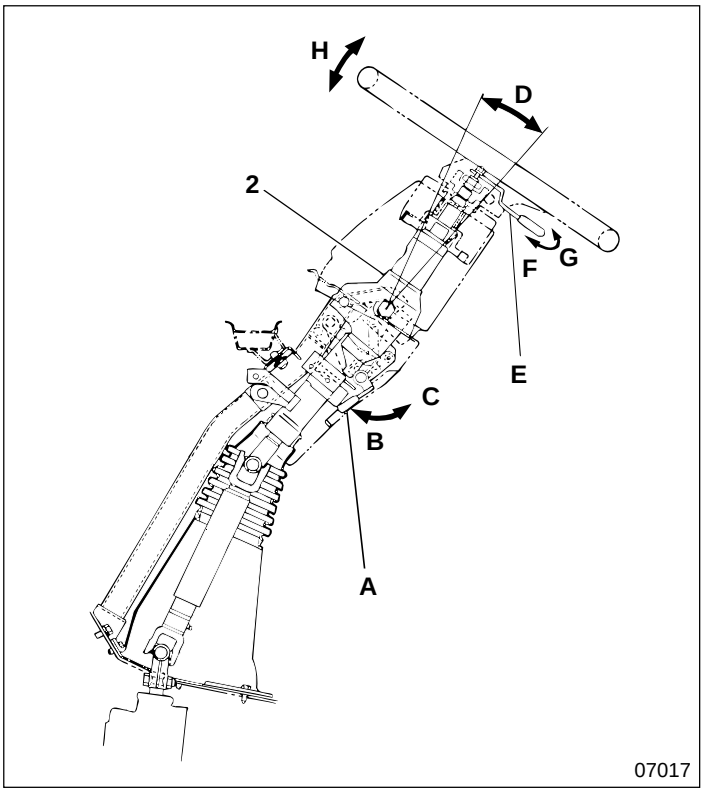

Shifting lock lever **A** from lock position **B** to release position **C** produces high tilt **D**, and turning telescopic lever **E** (counterclockwise) from lock position **F** to release position **G** allows telescopic movement **H**. In this way, the structure of steering column subassembly **2** can be adjusted for optimum driving position.

Power Steering System

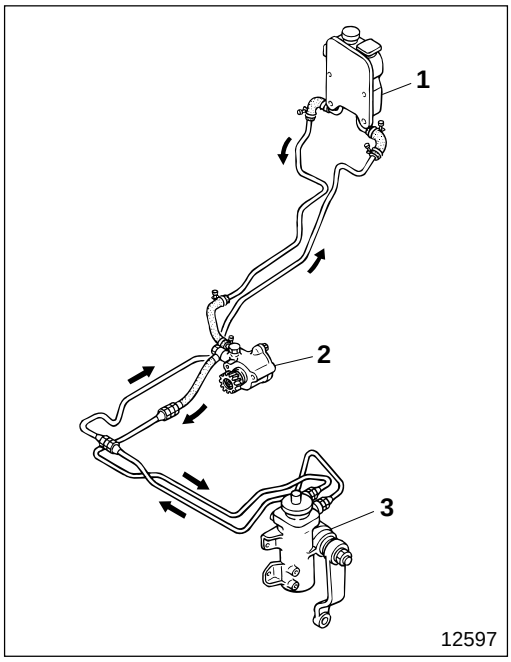

1 Power steering oil tank
2 Power steering oil pump
3 Power steering booster

⬅ : Fluid flow

Power Steering Booster

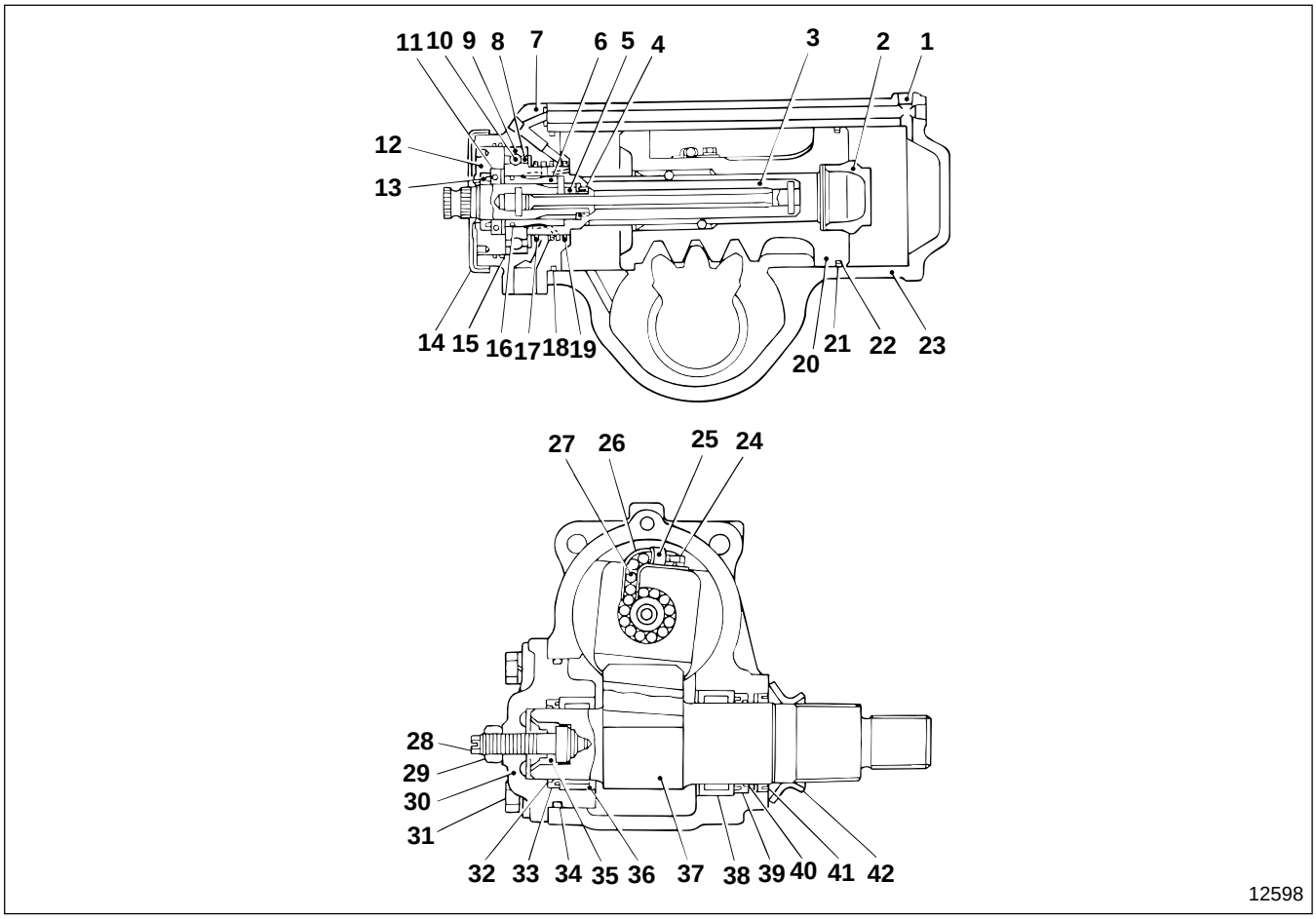

1 Taper plug
2 Plug
3 Worm shaft
4 Needle bearing
5 Stub shaft
6 Rotor
7 Valve housing
8 Bearing cage
9 Side race
10 Steel ball
11 Ball bearing
12 Adjusting plug
13 Oil seal
14 Dust cover
15 O-ring
16 Seal ring
17 O-ring
18 O-ring
19 Seal ring
20 Piston
21 Seal ring
22 O-ring
23 Body
24 Screw
25 Ball tube clip
26 Ball tube
27 Steel ball
28 Adjusting screw
29 Nut
30 Side cover
31 Bolt
32 Backup ring
33 Y-packing
34 O-ring
35 Retainer
36 Needle bearing
37 Sector shaft
38 Needle bearing
39 Y-packing
40 Backup ring
41 Oil seal
42 Dust cover

The rotary valve is the central part of the power steering booster. The torsion bar allows the steering reaction force and valve return to operate lightly and smoothly at low speed, and ensures stable steering feel even at high speed.

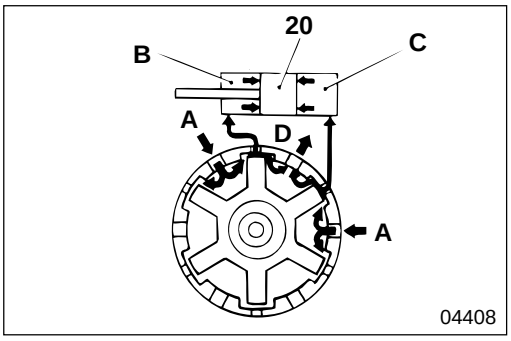

● **Straight-ahead operation**

Piston **20** is in the neutral position as chambers **B** and **C** of the piston are under equal pressure.

A : From oil pump
D : To oil tank

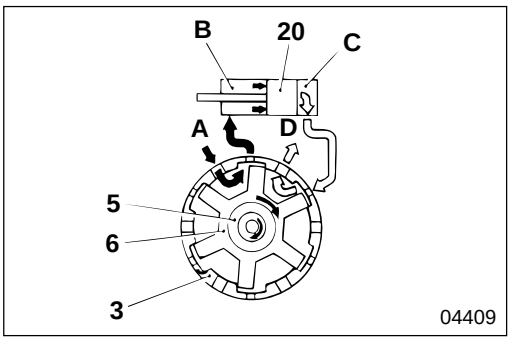

● **Steering operation**

Turning the steering wheel rotates stub shaft **5**, causing rotor **6** to close the fluid feed passage to cylinder chamber **C**. This produces a pressure difference between cylinder chambers **B**, **C**, which causes piston **20** to move, and facilitates rotation of worm shaft **3**.

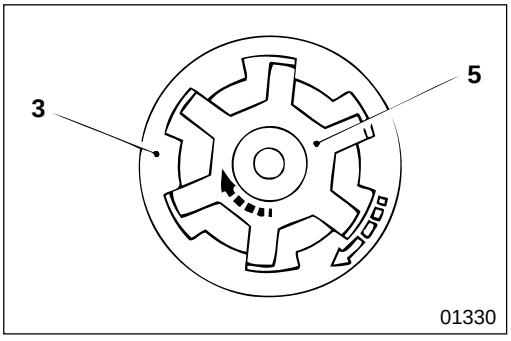

If the hydraulic circuit fails

The safety mechanism allows the vehicle to be steered manually, when the rotating force of stub shaft **5** alone directly turns worm shaft **3**, transmitting the steering force.

Power Steering Oil Pump

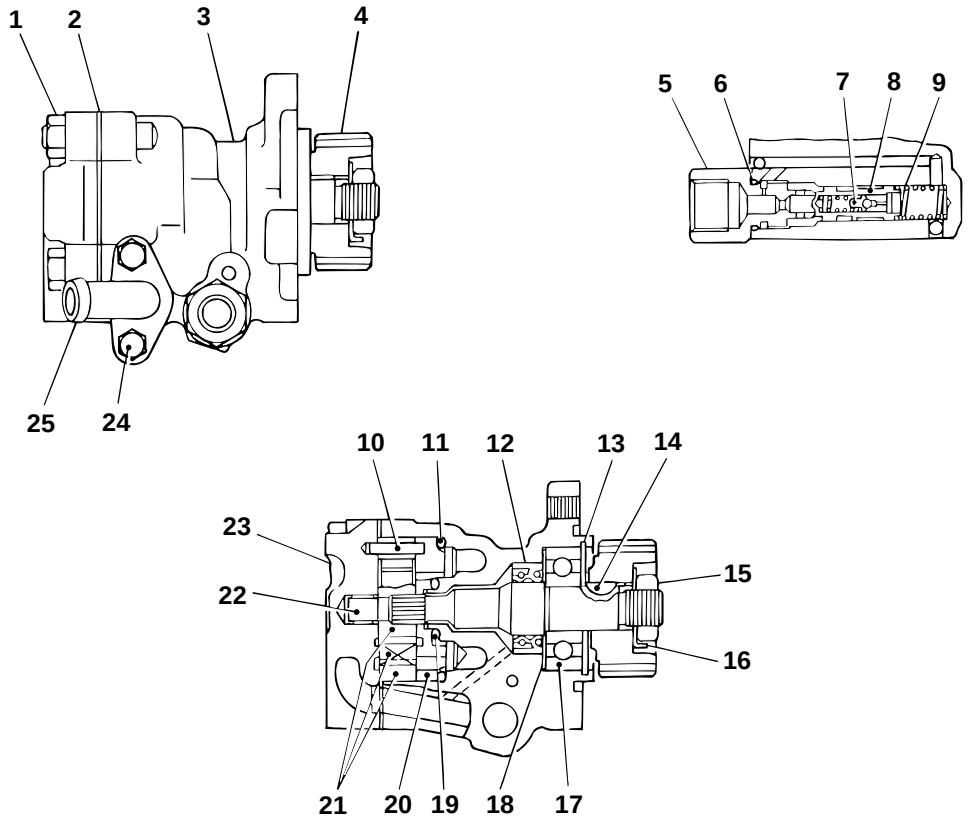

1 Bolt
2 Gasket
3 Front body
4 Gear
5 Connector
6 O-ring
7 Relief valve
8 Flow control valve assembly
9 Flow control spring
10 Straight pin
11 O-ring
12 Oil seal
13 Retaining ring
14 Key
15 Nut
16 Lock washer
17 Ball bearing
18 Retaining ring
19 O-ring
20 Pressure plate
21 Cartridge assembly
22 Shaft
23 Rear body
24 Bolt
25 Suction pipe

Flow Control Valve Assembly

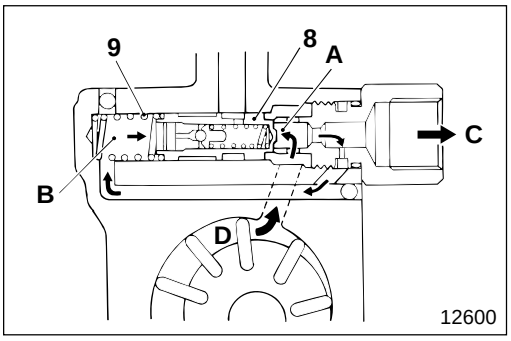

● **Operation of flow control valve**

(1) When not operating (When oil pump rotating at low speed)

The fluid pressure from chamber **A** does not move flow control valve assembly **8** because the fluid pressure is lower than the combined force of the fluid pressure from chamber **B** and the repercussive force of flow control spring **9**.

C : To power steering booster

D : Pressure chamber

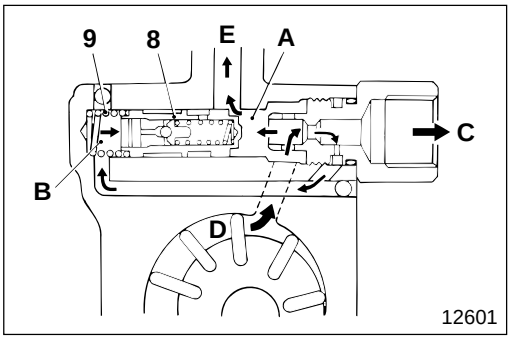

(2) When operating (When oil pump rotating at middle or high speed)

The fluid pressure from chamber **A** moves flow control valve assembly **8** because the fluid pressure is higher than the combined force of the fluid pressure from chamber **B** and the repercussive force of flow control spring **9**. Then, port **E** opens to release the fluid, maintaining the level of flow in chamber **A**.

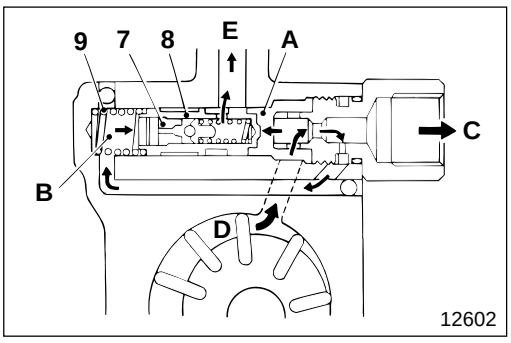

● **Operation of relief valve**

The combined force of the fluid pressure from chamber **B** and the repercussive force of flow control spring **9** moves flow control valve assembly **8** because the fluid pressure is higher than the fluid pressure from chamber **A**. The hydraulic pressure in chamber **B** rises further to open relief valve **7** and port **E**, stabilizing the fluid pressure in chamber **B**.

Possible causes / Symptoms		Steering wheel operation heavy	Steering wheel play excessive and unstable	Steering wheel pulls to one side	Steering wheel vibration	Steering wheel self-return poor	Steering wheel does not turn	Steering angle insufficient or difference between right and left	Fluid leaking	Oil pump fluid pressure abnormal	Oil pump gurgles	Oil pump squeaks	Oil pump growls	Remarks
Power steering mechanism faulty	Bearing damaged or worn	○			○	○								
	Ball or groove of ball screw worn	○	○		○									
	Air bled insufficiently	○												
	Fluid viscosity unsuitable	○												
	Power steering booster system faulty	○												
	Flow control valve malfunctioning	○												
	Ball screw unit rack and gear worn		○											
	Sector shaft bearing worn		○		○									
	Power steering booster mounting bolt loose		○											
	Ball screw unit and sector shaft play incorrect				○									
	Valve control edge damaged or control seal ring broken				○									
	Power steering system fluid unsuitable				○									
	Rack engagement starting torque adjusted incorrectly	○				○								
	Fluid circuit clogged	○				○								
	Sector shaft gear worn		○											
	Torsion shaft serration damaged or worn		○											
	Power steering booster body faulty			○	○									
	O-ring, oil seal faulty								○					
	Sealant applied incorrectly								○					
Steering column and linkage mechanism faulty	Universal joint worn abnormally, damaged, lubricated incorrectly	○	○											
	Linkage deformed	○												
	Drag link ball stud play		○		○									
	Tie rod end ball stud play		○		○									
	Tie rod bent						○							
	Pitman arm mounting position incorrect							○						
	Steering wheel turning center offset			○										

Possible causes	Symptoms	Steering wheel operation heavy	Steering wheel play excessive and unstable	Steering wheel pulls to one side	Steering wheel vibration	Steering wheel self-return poor	Steering wheel does not turn	Steering angle insufficient or difference between right and left	Fluid leaking	Oil pump fluid pressure abnormal	Oil pump gurgles	Oil pump squeaks	Oil pump growls	Remarks
Front axle, etc. faulty	Kingpin lubricated incorrectly	○				○								
	Front wheel alignment (toe-in, camber, caster) incorrect	○		○	○	○								
	Thrust bearing damaged	○												
	Wheel hub bearing worn or damaged		○	○	○									Gr 26
	Kingpin or bushing worn or damaged		○	○	○									
	Front axle deformed			○										
	Knuckle arm, tie rod arm, or knuckle tightened incorrectly				○									
	U-bolt of front spring, nut, loose				○									Gr 33
	Front axle parts overtightened					○								
	Turning angle adjusted incorrectly						○	○						Gr 26
	Mounting parts, connection point loose		○											
	Knuckle stopper bolt adjusted incorrectly							○						
Oil pump faulty	Oil pump body faulty								○					
	O-ring or oil seal faulty								○					
	Bolt tightened incorrectly								○					
	Maximum generated fluid pressure insufficient									○				
	Fluid line crushed or clogged									○				
	Air lock in oil pump										○			
	Oil pump interior seized									○	○	○		
	Mounting bolt or nut loose												○	
	Pump body faulty												○	
	Valve malfunctioning									○				

TROUBLESHOOTING

Possible causes \ Symptoms		Steering wheel operation heavy	Steering wheel play excessive and unstable	Steering wheel pulls to one side	Steering wheel vibration	Steering wheel self-return poor	Steering wheel does not turn	Steering angle insufficient or difference between right and left	Fluid leaking	Oil pump fluid pressure abnormal	Oil pump gurgles	Oil pump squeaks	Oil pump growls	Remarks
Oil tank faulty	Oil tank leaking due to overflowing								○					
	Oil tank leaking due to air lock								○					
	Fluid level insufficient	○												
Other malfunctions	Load too far forward of load-carrying platform	○												
	Load too far rearward of load-carrying platform		○											
	Load too far to one side of load-carrying platform			○										
	Wheelbase difference between left and right excessive			○										
	Propeller shaft runout excessive				○									Gr 25
	Front axle bent				○									Gr 26
	Rear axle housing bent			○										Gr 27
	Final drive gear and final drive pinion damaged or engaged incorrectly				○									
	Tire pressure insufficient	○												Gr 31
	Tire pressure excessive		○											
	Tire wear difference between left and right excessive			○										
	Tire outer diameter difference between left and right			○										
	Front tire radial and lateral runout, static balance and dynamic balance incorrect				○									
	One-sided braking			○										Gr 35

Change of Power Steering Fluid

Tightening torque

Unit : N·m {lbf.ft, kgf·m}

Location	Parts to be tightened	Tightening torque	Remarks
2	Oil pipe	66.69±12.75 {49±9.4, 6.8±1.3}	—

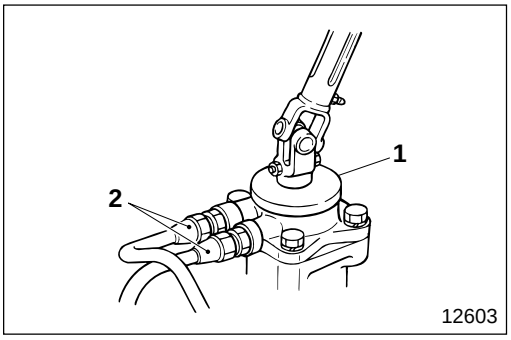

[Draining]
- Jack up the front wheels.
- Loosen oil pipe **2** connected to power steering booster **1**.
- Turn the steering wheel fully left and right repeatedly, and drain the fluid from power steering booster **1**.
- After draining the fluid, tighten oil pipe **2** at specified torque.

[Filling]
P37-11

Bleeding of Power Steering System

Fluid

Location	Points of application	Kinds	Quantity
1	Power steering oil tank	Automatic transmission fluid (DEXRON or DEXRON II type)	Filler cap dipstick on filler cap between end and F

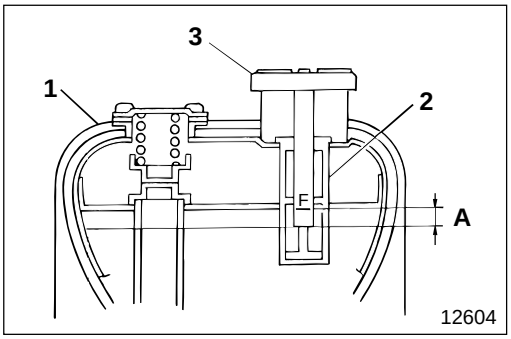

- Pour fluid into power steering oil tank **1** up to the inner port of strainer **2**.
- With the engine stopped, jack up the front wheels and turn the steering wheel fully left and right repeatedly. When the fluid level has dropped, add fluid to maintain the fluid level within range **A**.

NOTE

Check the fluid level without screwing on filler cap 3.

- Start the engine and letting it idle, turn the steering wheel fully left and right repeatedly. When the fluid level has dropped, add fluid to maintain the fluid level within range **A**. Repeat these steps until the fluid level does not drop.
- If there is an abnormal noise, air is still in the system. Turn the steering wheel several times to raise the fluid temperature to approximately 60 to 80°C {140 to 176°F}, then stop the engine and wait for approximately five minutes.
- Lower the front wheels and turn the steering wheel several times. If there is no noise, bleeding is completed.
- When bleeding is finished, check the fluid level of power steering oil tank **1**, and pipe and hose connections for fluid leaks.

INSPECTION AND ADJUSTMENT MOUNTED IN VEHICLE

Steering Wheel Play

Service standards

Unit : mm {in.}

Location	Maintenance item	Standard value	Limit	Remedy
—	Steering wheel play (Measure at the outer circumference of steering wheel)	10 to 40 {0.39 to 1.57}	—	Adjust

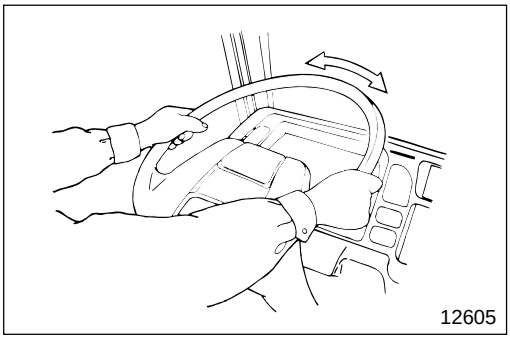

Point the wheels directly forward and gently turn the steering wheel left and right and measure the outer circumference play. If the play deviates from the standard value, adjust tightening points and power steering booster backlash. P37-27

Performance Verification Test of Power Steering System

Service standards

Location	Maintenance item	Standard value	Limit	Remedy
—	Steering system fluid pressure (With hands off steering wheel)	490 kPa {71 lbf/in^2, 5 kgf/cm^2}	—	Repair
—	Relief set pressure (Measure with engine speed at 1000 to 1500 rpm and the stop valve closed)	12.3 MPa {1780 lbf/in^2, 125 kgf/cm^2}	Maximum +785 kPa {115 lbf/in^2, 8 kgf/cm^2} Minimum –1180 kPa {170 lbf/in^2, 12 kgf/cm^2}	Replace

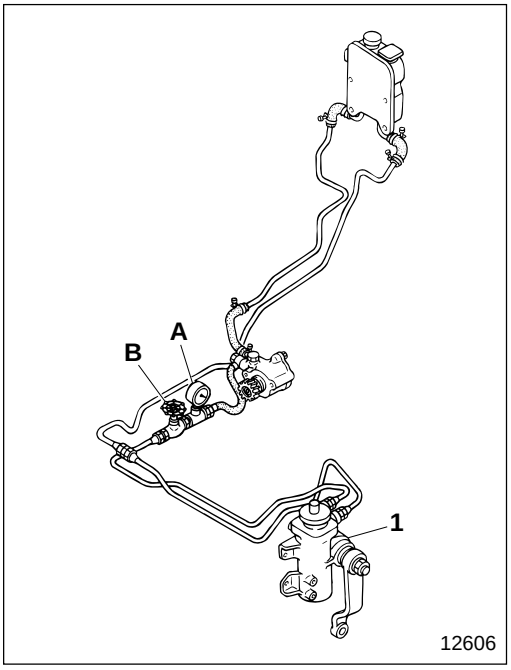

Verify that power steering booster **1** and the power steering oil pump are operating properly by testing the following items.

NOTE

If the fluid pressure is higher than 490 kPa {71 lbf/in^2, 5 kgf/cm^2} with engine idling and the steering wheel free, inspect power steering booster 1 and the fluid circuit for clogging.

Test item	Test procedure	Assembly standards
Verification of smooth operation	Jack up the front wheels and turn steering wheel fully left and right	Smooth operation throughout test
Measurement conditions	• Install oil pressure gauge **A** capable of measuring above 14.7 MPa {2130 lbf/in^2, 150 kgf/cm^2} and stop valve **B**, then bleed air • With engine idling, turn steering wheel left and right several times to raise fluid temperature to 50 to 60°C {122 to 140°F} • With the engine idling, open stop valve **B**	
Measurement of fluid pressure	• Measure fluid pressure with hands off steering wheel	490 kPa {71 lbf/in^2, 5 kgf/cm^2}
Measurement of relief pressure	• Gradually increase engine speed and maintain it at 1000 to 1500 rpm, and close stop valve **B** to measure maximum fluid pressure • Do not keep stop valve **B** closed for more than fifteen seconds	Relief set pressure 12.3 MPa {1780 lbf/in^2, 125 kgf/cm^2}

STEERING SYSTEM

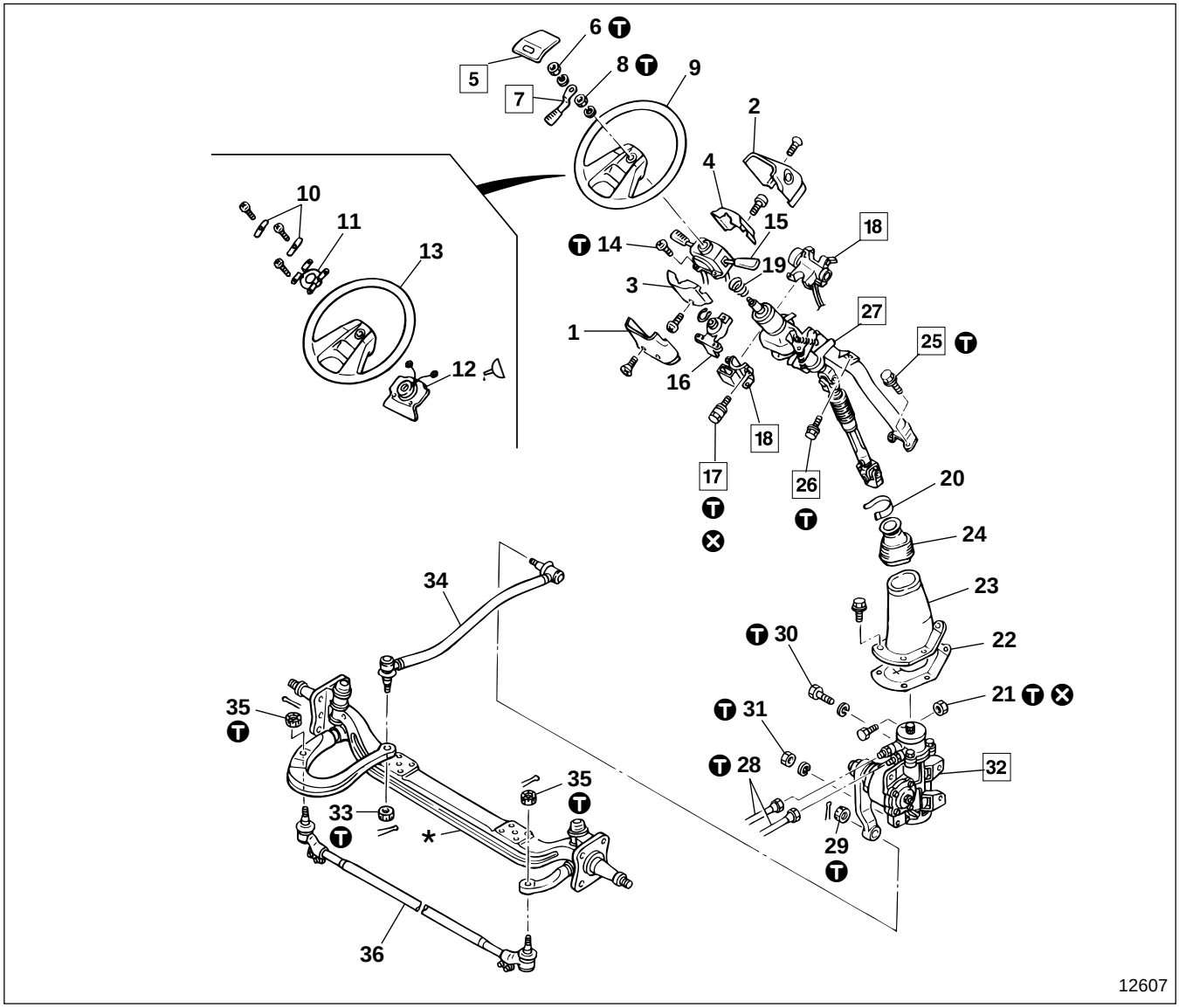

● **Removal sequence**

1 Column cover outer lower
2 Column cover outer upper
3 Column cover inner lower
4 Column cover inner upper
5 Horn pad
6 Nut
7 Telescopic lever
8 Nut
9 Steering wheel assembly
10 Horn spring
11 Contact plate
12 Cover assembly
13 Steering wheel
14 Screw
15 Combination switch Gr 54
16 Bracket
17 Head cutting bolt
18 Starter switch Gr 54
19 Spring
20 Band
21 Nut
22 Dust cover
23 Dust cover
24 Dust cover
25 Bolt
26 Bolt
27 Steering column subassembly P37-18
28 Oil pipe P37-39
29 Nut
30 Bolt
31 Nut
32 Power steering booster P37-22
33 Nut
34 Drag link P37-40
35 Nut
36 Tie rod assembly P37-42

* : Front axle assembly Gr 26
⊗ : Non-reusable parts

CAUTION⚠

Be sure to clean the port area of oil pipe 28 when disconnecting the oil pipe, so as to keep it free from dust and foreign particles.

● **Installation sequence**

Follow the removal sequence in reverse.

Tightening torque

Unit : N·m {lbf.ft, kgf·m}

Location	Parts to be tightened	Tightening torque	Remarks
6	Nut (Telescopic lever mounting)	8.8 to 9.8 {6.5 to 7.2, 0.9 to 1.0}	—
8	Nut (Steering wheel assembly mounting)	39 to 49 {29 to 36, 4 to 5}	—
14	Screw (Combination switch mounting)	2.5±0.5 {1.8±0.36, 0.25±0.05}	—
17	Head cutting bolt (Starter switch mounting)	14.2±1.5 {10±1.1, 1.45±0.15}	—
21	Nut (Steering column subassembly and power steering booster mounting)	51.45±2.45 {38±1.8, 5.25±0.25}	—
25	Bolt (Steering column at floor side mounting)	17 to 26 {12 to 19, 1.7 to 2.6}	—
26	Bolt (Steering column subassembly to instrument panel side mounting)	17 to 26 {12 to 19, 1.7 to 2.6}	—
28	Oil pipe	66.69±12.75{49±9.4, 6.8±1.3}	—
29	Nut (Drag link and power steering booster mounting)	190±47.5 {140±35, 19.4±4.85}	—
30	Bolt (Power steering booster mounting)	175.4±26.5 {130±20, 17.9±2.7}	—
31	Nut (Power steering booster mounting)	175.4±26.5 {130±20, 17.9±2.7}	—
33	Nut (Drag link and front axle assembly mounting)	190±47.5 {140±35, 19.4±4.85}	—
35	Nut (Tie rod assembly and front axle assembly mounting)	190±47.5 {140±35, 19.4±4.85}	—

Lubricant

Location	Points of application	Kinds	Quantity
12	Contact area between combination switch of cover assembly and horn contact	Wheel bearing grease [NLGI No.2 (Li soap)]	As required

◆ Service procedure

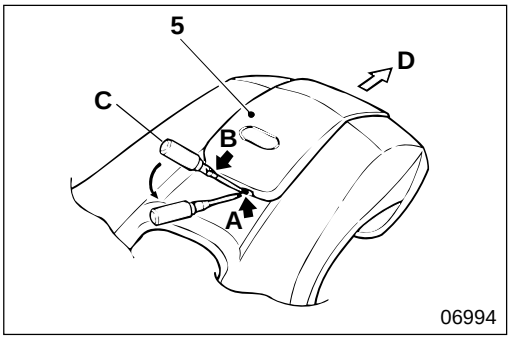

5 **Removal of horn pad**

Insert flat-blade screwdriver **C** in grooves **A**, **B** of horn pad **5** and press down on the screwdriver until the horn pad is removed with a “click”. To remove the horn pad, raise and press it in direction **D** as illustrated.

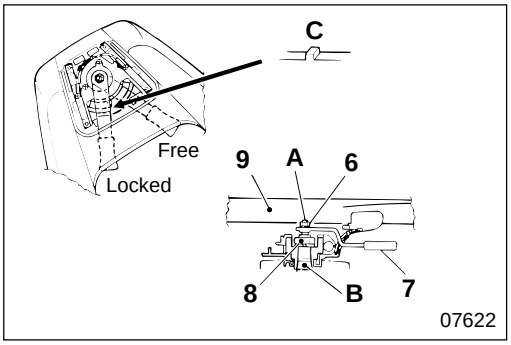

7 **Installation of telescopic lever**

Locate telescopic lever **7** at the specified position, and adjust until the specified torque is applied to telescopic shaft **A**.

CAUTION

Do not crush the screw tip of telescopic shaft A.

Start procedure

Install steering wheel assembly **9**. Using a long socket wrench, tighten nut **8** at specified torque 39 to 49 N·m {29 to 36 lbf.ft, 4 to 5 kgf·m}

Looseness found

Rotate telescopic shaft **A** counterclockwise with your fingers and check for looseness

No looseness

Using a flat-blade screwdriver turn telescopic shaft **A** clockwise and drive it in until it hits lightly with a "clunk", but do not turn it any further

CAUTION

Be careful not to tighten too forcibly or you will crush the end of the telescopic shaft, requiring replacement of telescopic shaft assembly B

Install telescopic lever **7** at a location that allows easy tightening, then tighten nut **6** until the telescopic lever will not slip

Tighten telescopic shaft **A** at operating torque 6.9 to 7.8 N·m {5.1 to 5.8 lbf.ft, 0.7 to 0.8 kgf·m}. (Tighten telescopic bar **7** at torque 69 to 78 N {15 to 18 lbf.ft, 7 to 8 kgf} 100 mm {3.94 in.} from the center of steering wheel assembly **9**

To maintain lock, hold telescopic lever **7** clockwise, then loosen and remove lock nut **6**

Remove telescopic lever **7**

NOTE

Remove telescopic lever 7 by prying it out vertically, taking care not to loosen telescopic shaft A. Prying the lever horizontally can loosen the telescopic shaft

Set telescopic lever **7** to specified lock position **C**, marked "⏃"

Tighten nut **6** at specified torque 8.8 to 9.8 N·m {6.5 to 7.2 lbf.ft, 0.9 to 1.0 kgf·m}

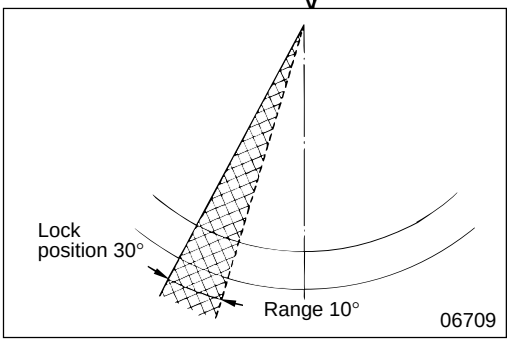

When telescopic lever **7** is released, and telescopic shaft **A** is retightened at operating torque 6.9 to 7.8 N·m {5.1 to 5.8 lbf.ft, 0.7 to 0.8 kgf·m}, the telescopic lever should lock in the 10° range this side of specified lock position 30°

Out of the range

Within the range

Joggle steering wheel assembly **9** up and down and check for looseness

Looseness found

No looseness

Remove nut **6**

Procedure is completed

Remove telescopic lever **7**

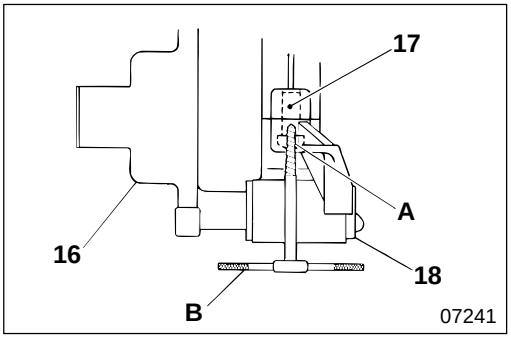

17 **18** **Head cutting bolt, starter switch**

[Removal]

- After removing bracket **16**, drill a ø5.5 to 6.0 mm {0.22 to 0.24 in.} hole 10 to 15 mm {0.39 to 0.59 in.} deep in surface **A** of head cutting bolt **17** for mounting starter switch **18**.
- Screw in screw extractor **B** counterclockwise, then remove head cutting bolt **17**.

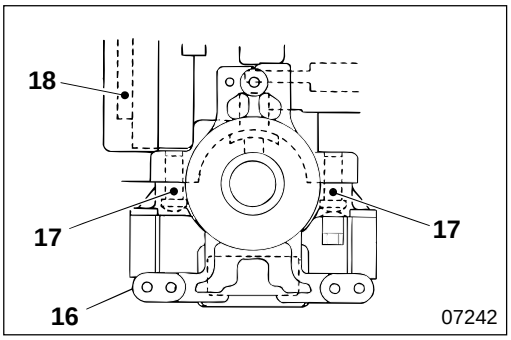

[Installation]

- With new head cutting bolt **17**, tighten starter switch **18** at specified torque to cut the head off the bolt.
- After installing bracket **16**, verify operation of the steering lock function of starter switch **18**.

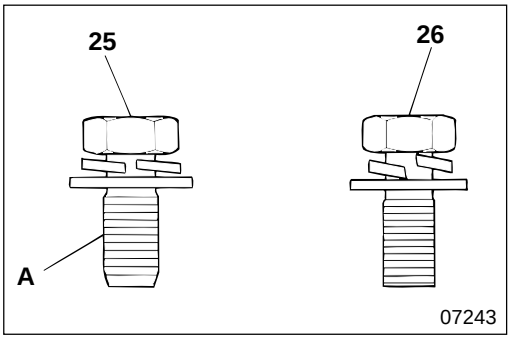

25 **26** **Installation of bolt**

- Bolts **25** and **26**, differ in shape. Do not mix them up when installing.
- Thread area **A** of bolt **25** is elliptical to facilitate grounding of the horn circuit.

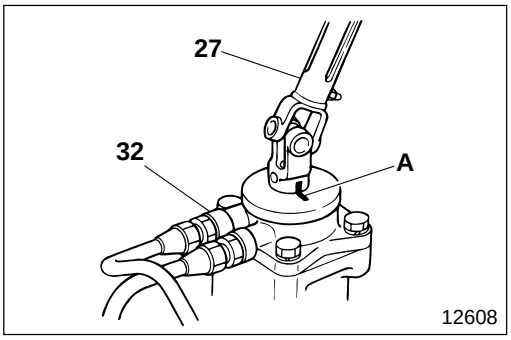

27 **32** **Removal and installation of steering column subassembly, and power steering booster**

Before removing steering column subassembly **27** or power steering booster **32**, be sure to make alignment mark **A**.

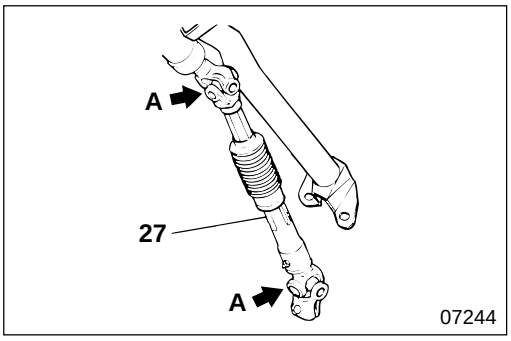

27 **Steering column subassembly**

When the spline of steering column subassembly **27** has been disconnected, align marks **A** on the yokes to face the same direction.

STEERING COLUMN SUBASSEMBLY

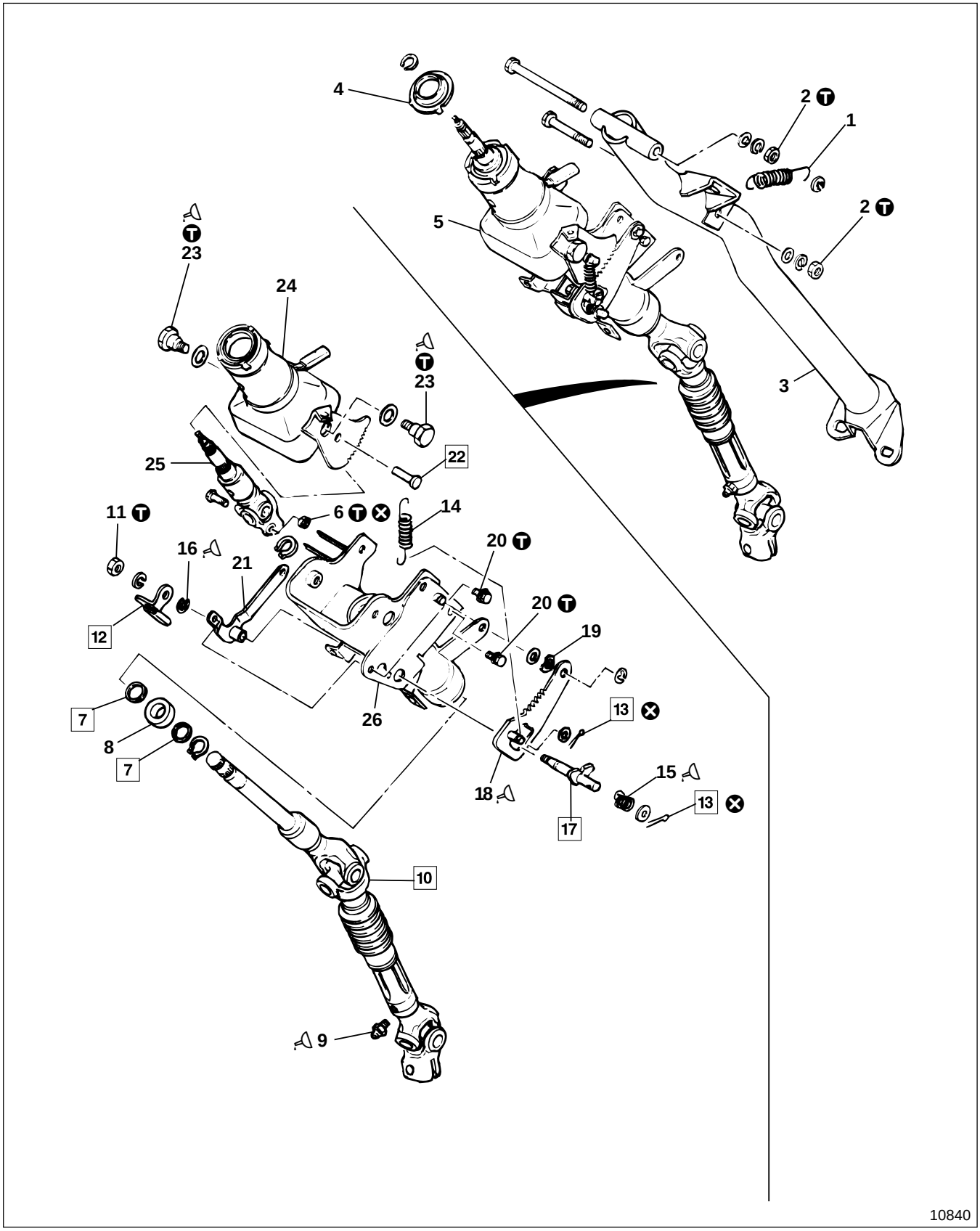

● **Disassembly sequence**

1 Return spring
2 Nut
3 Support bracket
4 Spring seat
5 Steering column assembly
6 Nut
7 Stopper
8 Bearing spacer
9 Grease nipple
10 Steering shaft assembly
11 Nut
12 Lock lever
13 Split pin
14 Return spring
15 Return spring
16 Snap ring
17 Cam
18 Lock plate
19 Wave washer
20 Bolt
21 Lever support
22 Clevis pin
23 Bolt
24 Column support upper
25 Telescopic shaft assembly
26 Column support lower

⊗ : Non-reusable parts

● **Assembly sequence**

5 → 4 → 3 → 2 → 1

5 : 25 → 24 → 23 → 22 → 21 → 20 → 19 → 18 → 17 → 16 → 15 → 14 → 13 → 12 → 11 → 10 → 9 → 8 → 7 → 6
26

Ⓣ Tightening torque

Unit : N·m {lbf.ft, kgf·m}

Location	Parts to be tightened	Tightening torque	Remarks
2	Nut (Support bracket mounting)	17 to 26 {12 to 19, 1.7 to 2.6}	—
6	Nut (Steering shaft assembly and telescopic shaft assembly mounting)	53 to 65 {39 to 48, 5.4 to 6.6}	—
11	Nut (Lock lever mounting)	4 to 6 {2.9 to 4.3, 0.4 to 0.6}	—
20	Bolt (Lever support mounting)	7 to 10 {5.1 to 7.2, 0.7 to 1.0}	—
23	Bolt (Column support upper and column support lower mounting)	15 to 20 {11 to 14, 1.5 to 2.0}	—

Lubricant and sealant

Location	Points of application	Kinds	Quantity
9	Supply via grease nipple	Wheel bearing grease [NLGI No.2 (Li soap)]	As required
15	Friction surfaces of return spring and washer	Wheel bearing grease [NLGI No.2 (Li soap)]	As required
16	Friction surfaces of lever support and snap ring	Wheel bearing grease [NLGI No.2 (Li soap)]	As required
18	Friction surfaces of cam and lock plate return spring clevis pin	Wheel bearing grease [NLGI No.2 (Li soap)]	As required
23	Thread area of bolt	THREEBOND thread lock super 103Q or LOCTITE 271	As required
	Friction surfaces of column support upper and bolt	Wheel bearing grease [NLGI No.2 (Li soap)]	As required

◆ Service procedure

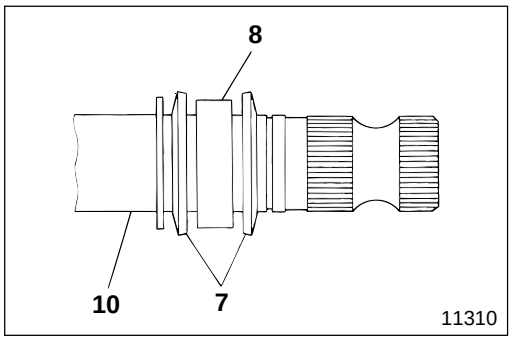

7 **Installation of stopper**

Install stoppers **7** on steering shaft assembly **10** in the direction as illustrated so that they straddle bearing spacer **8**.

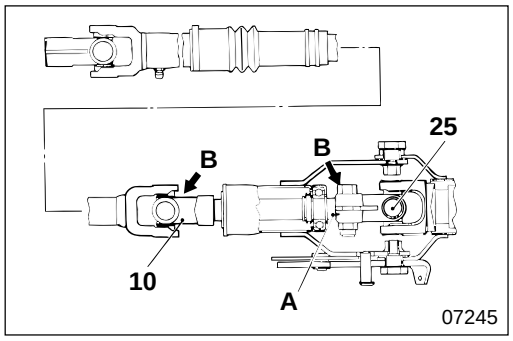

10 **Steering shaft assembly**

- Before removing steering shaft assembly **10**, be sure to make alignment mark **A**.
- Install the steering shaft with direction **B** of the telescopic shaft assembly **25** yoke and steering shaft assembly **10** yoke aligned or at phase angle of 90°.

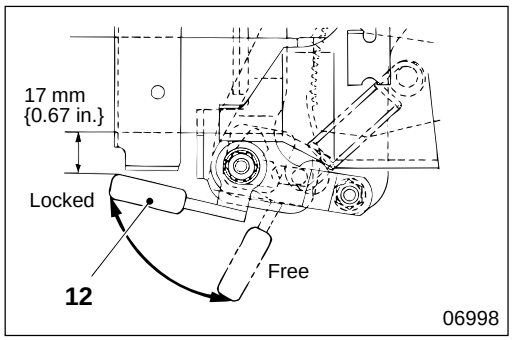

12 **Installation of lock lever**

- Install lock lever **12** so it is within the working angle when locked.
- After installing lock lever **12**, make sure that the lever operates smoothly (operating force less than 49 N {11 lbf, 5 kgf}). With the lever free, make sure that high tilt operates smoothly.

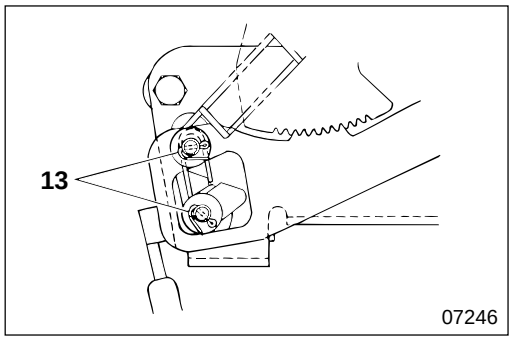

13 **Installation of split pin**

Bend split pin **13** to face outwards as illustrated.

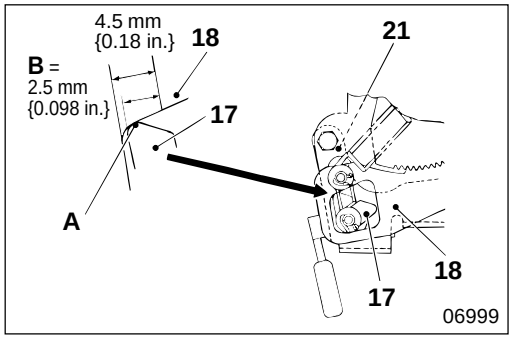

17 **Installation of cam**

Adjust lever support **21** so that the top surface **A** of cam **17** is within dimension **B** of lock plate **18** to install the cam.

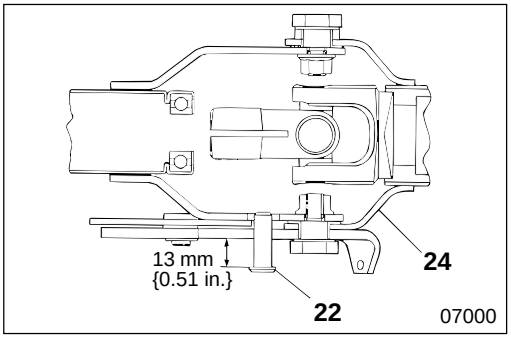

22 **Installation of clevis pin**

Drive clevis pin **22** into column support upper **24** so that the drive dimension is obtained.

POWER STEERING BOOSTER

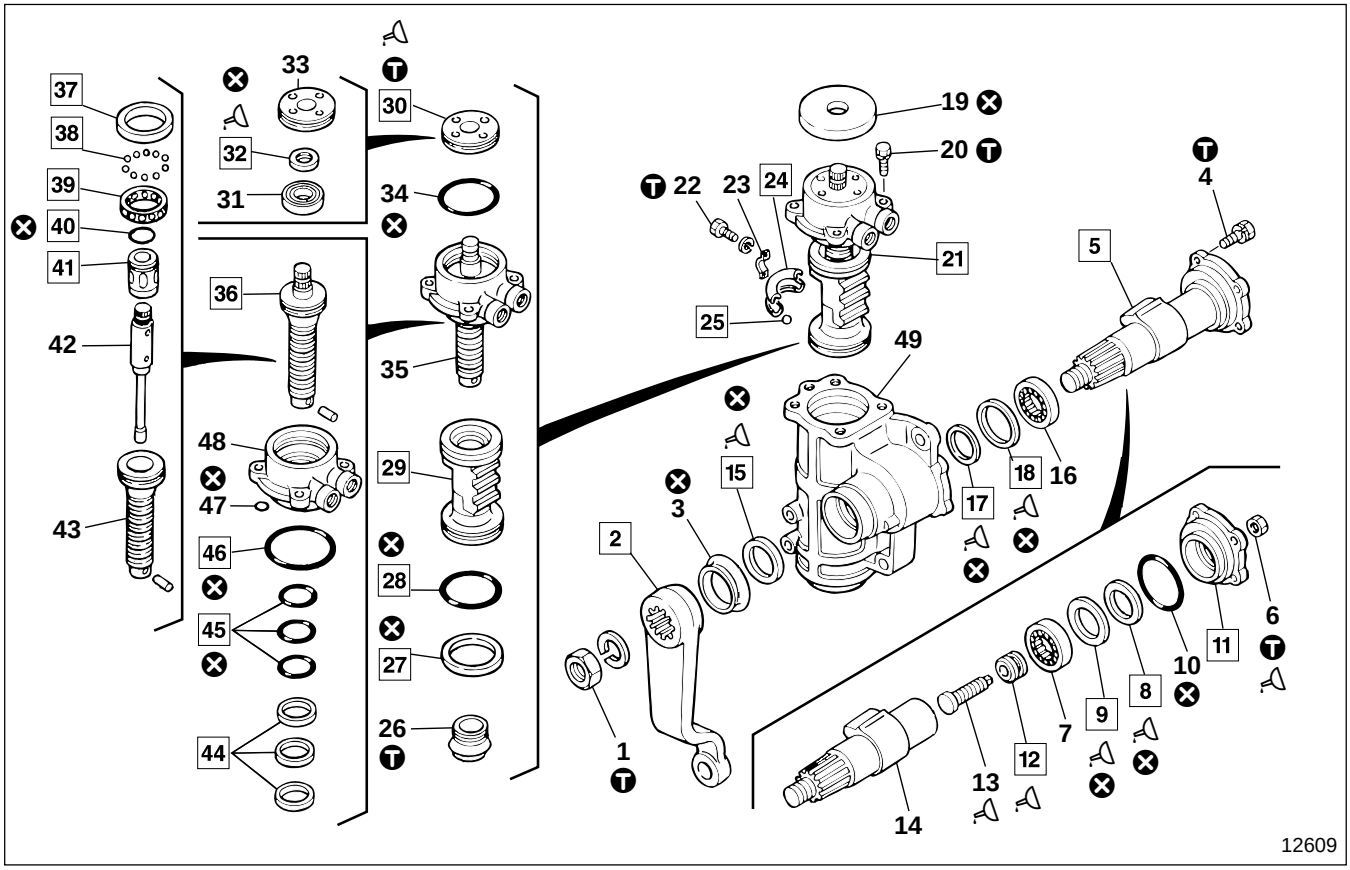

● **Work before disassembly**

P37-26

● **Disassembly sequence**

1 Lock nut
2 Pitman arm
3 Dust cover
4 Bolt
5 Sector shaft assembly and side cover assembly
6 Nut
7 Needle bearing
8 Backup ring
9 Y-packing
10 O-ring
11 Side cover
12 Retainer
13 Adjusting screw
14 Sector shaft
15 Oil seal
16 Needle bearing
17 Backup ring
18 Y-packing
19 Dust cover
20 Bolt
21 Ball screw assembly
22 Screw
23 Ball tube clip
24 Ball tube
25 Steel ball
26 Plug
27 Seal ring
28 O-ring
29 Piston
30 Adjusting plug assembly
31 Ball bearing
32 Oil seal
33 Adjusting plug
34 O-ring
35 Worm shaft assembly and valve housing assembly
36 Worm shaft assembly
37 Side race
38 Steel ball
39 Bearing cage
40 Seal ring
41 Rotor
42 Stub shaft
43 Worm shaft
44 Seal ring
45 O-ring
46 O-ring
47 O-ring
48 Valve housing
49 Body (Cylinder)

⊗ : Non-resusable parts

NOTE

- **Do not remove needle bearing 7 or 16 unless they are faulty.**
- **Do not remove retainer 12 or adjusting screw 13 unless they are faulty.**
- **Have a tray or box ready to catch steel balls 25, 38.**

● **Assembly sequence**

49 → 21 → 20 → 19 → 18 → 17 → 16 → 15 → 5 → 4 → 3 → 2 → 1

36 : 43 → 42 → 41 → 40 → 39 → 38 → 37

35 : 48 → 47 → 46 → 45 → 44 → 36

30 : 33 → 32 → 31

21 : 35 → 34 → 30 → 29 → 28 → 27 → 26 → 25 → 24 → 23 → 22

5 : 14 → 13 → 12 → 11 → 10 → 9 → 8 → 7 → 6

● **Adjustment after assembly**

P37-27

Service standards

Unit : mm {in.}

Location	Maintenance item		Standard value (Basic diameter in [ ])	Limit	Remedy	
5, 21	Backlash between sector shaft and ball screw (Measure at the end of pitman arm)		0.2 {0.0079}	0.5 {0.020}	ℓ= 250 {9.84}	Adjust (Measure with applied load of ±15 N {3.3 lbf, 1.5 kgf})
12	Retainer		Tighten the retainer then slacken off by 180°, retighten at 39 N·m {29 lbf.ft, 4 kgf·m}, then slacken off by 20°. Make sure that the adjusting screw turns smoothly, then caulk it	—	—	
13, 14	Axial play of adjusting screw and sector shaft		0.01 to 0.10 {0.00039 to 0.0039}	0.2 {0.0079}	Replace	
14	Outer diameter of sector shaft	Adjusting screw side	ø39.975 {1.574}	ø39.875 {1.570}	Replace	
		Pitman arm side	ø44.975 {1.771}	ø44.875 {1.767}	Replace	
29, 43	Play of piston and worm shaft in axial direction		—	0.5 {0.02} or more	Replace	
29, 49	Clearance between outer diameter of piston and inner diameter of body (Cylinder)		[85 {3.3}] 0.11 {0.0043}	0.16 {0.0063}	Replace	
41, 43	Clearance between outer diameter of rotor and worm shaft		[35.5 {1.4}] 0.02 {0.00079}	0.03 {0.0012}	Replace	

Ⓣ Tightening torque

Unit : N·m {lbf.ft, kgf·m}

Location	Parts to be tightened	Tightening torque	Remarks
1	Lock nut (Pitman arm mounting)	270±25 {200±18, 27.5±2.5}	—
4	Bolt (Side cover mounting)	53.9 to 63.7 {40 to 47, 5.5 to 6.5}	—
6	Nut (Adjusting screw tightening)	63.7 to 73.5 {47 to 54, 6.5 to 7.5}	—
20	Bolt (Valve housing tightening)	98.1 to 107.9 {72 to 80, 10 to 11}	—
22	Screw (Ball tube clip mounting)	4.41 to 5.39 {3.3 to 4.0, 0.45 to 0.55}	—
26	Plug	246 to 274 {180 to 200, 25 to 28}	—
30	Adjusting plug assembly	177 to 196 {130 to 145, 18 to 20}	—

POWER STEERING BOOSTER

Lubricant and sealant

Location	Points of application	Kinds	Quantity
6	Contact surfaces of nut and side cover	Hermetic seal 101Y or THREEBOND 1102	As required
8, 17	Backup ring inner periphery	Multipurpose grease [NLGI No.2 (Li soap)]	As required
9, 18	Pack interior of Y-packing	Multipurpose grease [NLGI No.2 (Li soap)]	As required
12	Pack interior of retainer	Multipurpose grease [NLGI No.2 (Li soap)]	As required
13	Contact surfaces of adjusting screw and sector shaft	Multipurpose grease [NLGI No.2 (Li soap)]	As required
	Thread area of adjusting screw	Hermetic seal 101Y or THREEBOND 1102	As required
15, 32	Pack interior of oil seal	Multipurpose grease [NLGI No.2 (Li soap)]	As required
30	Adjusting plug assembly outer periphery	Hermetic seal 101Y or THREEBOND 1102	As required

Special tools

Unit : mm {in.}

Location	Tool name and shape	Part No.	Application
2	Pitman arm puller Part No. / **A** / **B** MH061687 *910-00183 / 59 {2.32} / ø92 {3.62} *910-00184 / 59 {2.32} / ø100 {3.94} 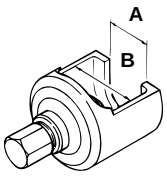 01355	MH061687 *910-00183 *910-00184	Removal of pitman arm
8,15, 17	Inserting tool assembly 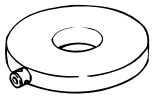 01356	MC811971 *910-11001	Forming of backup ring and press-fitting of oil seal
8,17	Inserting tool 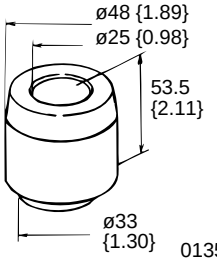 01358	MC811974 *910-21715	Forming of backup ring
10, 27, 28, 34, 40, 44, 45, 46, 47	Needle 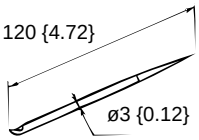 02288	MC811948 *910-21200	Removal of O-ring and seal ring

* JIDOSHA KIKI part No.

Unit : mm {in.}

Location	Tool name and shape	Part No.	Application
12	Bar 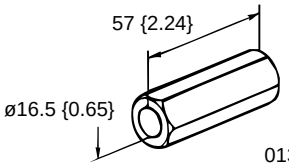	MC811955 *910-22811	Turning of retainer
	Squeeze tool 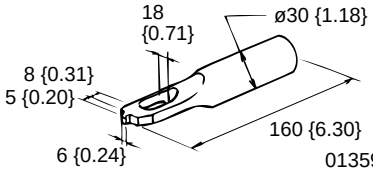	MC811950 *910-21801	Caulking of retainer
27	Inserting tool 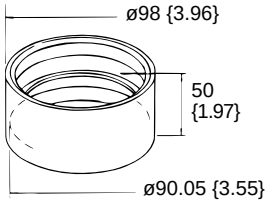	MC813516 *910-21718	Forming of piston seal ring
30	Wrench assembly 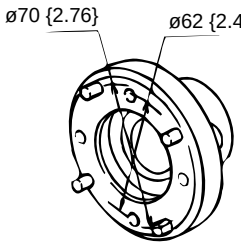	MC811970 *910-10743	Removal and installation of adjusting plug assembly
	Attachment (**A** : Adapter) (**B** : Bolt) 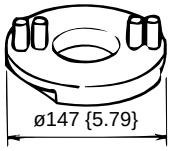	MC811969 *910-10671 (**A** : *910-23581) (**B** : *910-23194)	Holding down of valve housing
32	Press-fitting tool 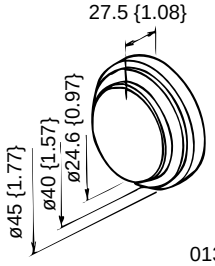	MC811972 *910-20404	Press-fitting of oil seal

* JIDOSHA KIKI part No.

Unit : mm {in.}

Location	Tool name and shape	Part No.	Application
37 to 39	Tool assembly 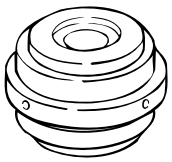 01363	MC811968 *910-10611	Assembly of thrust bearing
	Guide assembly 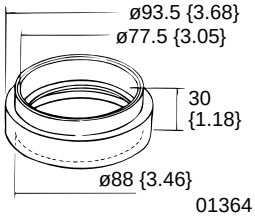 01364	MC090148 *910-23033	
40	Inserting tool 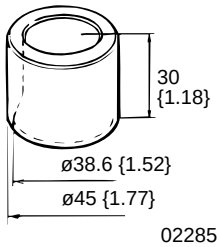 02285	*910-22777	Forming of rotor seal ring
44	Inserting tool 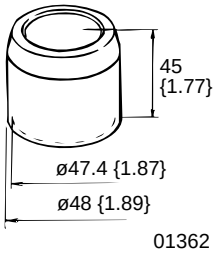 01362	MC811975 *910-22722	Forming of valve housing seal ring

* JIDOSHA KIKI part No.

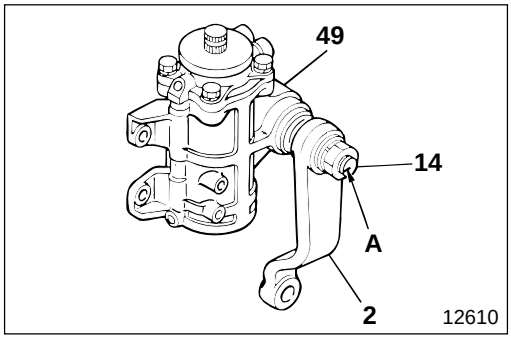

◆ Service procedure

● Work before disassembly

Move pitman arm **2**, and align slit **A** of the V-groove of sector shaft **14** to the center of body **49** so that the gears are in neutral position.

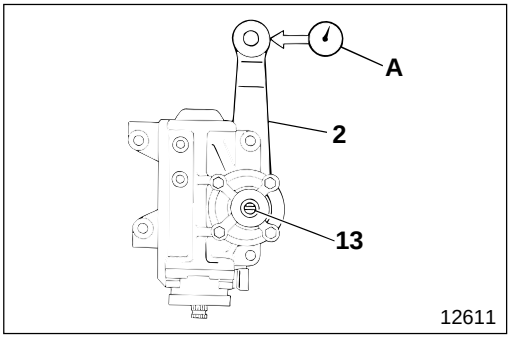

● **Adjustment after assembly**

Adjustment of backlash

- (Carry out this work with the gears in neutral position.)
  Measure play at the end of pitman arm **2** with dial gauge **A**, and adjust adjusting screw **13** so that the reading meets the standard value.

  Measuring load : ±15 N {3.3 lbf, 1.5 kgf}

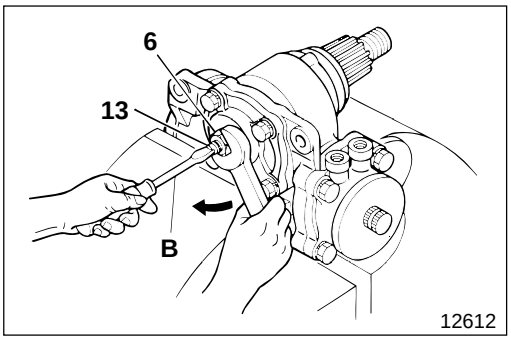

Tightening nut

- After adjusting backlash, apply sealer to thread area of adjusting screw **13**. Hold it in place with screwdriver **B** and tighten nut **6** at specified torque.

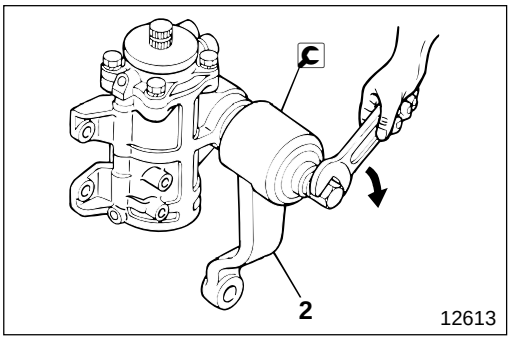

2 **Pitman arm**

[Removal]

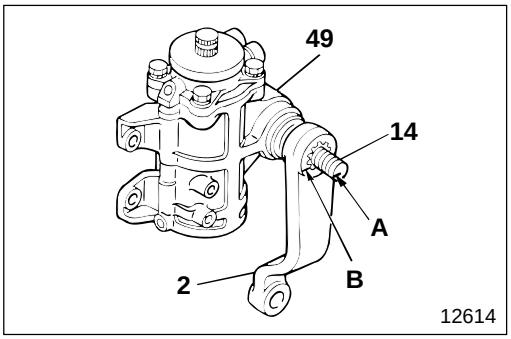

[Installation]
Align slit **A** of the V-groove of sector shaft **14** to the center of body **49**, and align slit **B** of the V-groove of pitman arm **2** on the same line.

NOTE

Have pitman arm 2 make a full stroke of the piston to make sure that the piston moves smoothly.

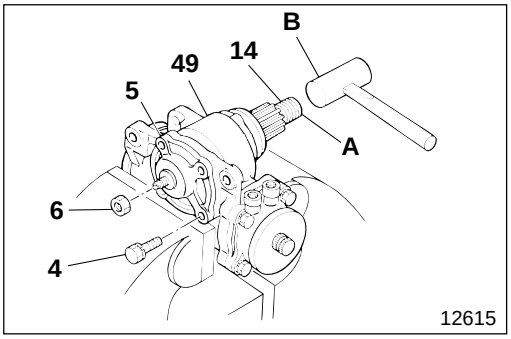

5 **Sector shaft assembly and side cover assembly**

[Removal]

- Make sure that the piston is in the neutral position (slit **A** of the V-groove at one end of sector shaft **14** is aligned with the center of body **49**).
- Tap the end of sector shaft **14** and pull out sector shaft assembly and side cover assembly **5**.

  B : Plastic-headed mallet

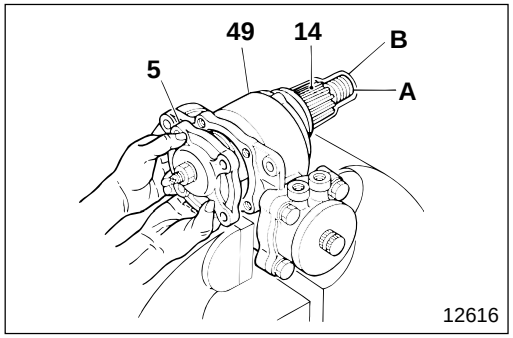

[Installation]
Position sector shaft **14** of sector shaft assembly and side cover assembly **5** so that slit **A** of its V-groove is aligned with the center of body **49**, and the piston gear and sector shaft gear engage at their centers.

CAUTION
Before installation, apply tape B to the Y-packing to prevent it being damaged by the threads of sector shaft 14.

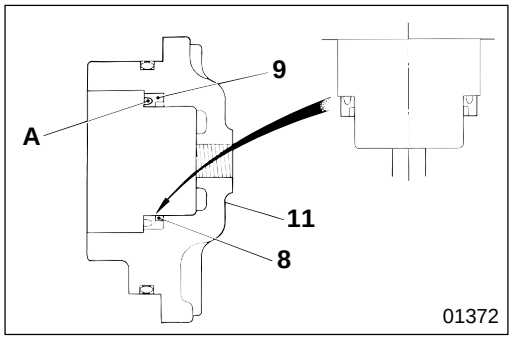

8 **9** **Backup ring, Y-packing**

[Installation]
- Install Y-packing **9** into side cover **11** in the direction as illustrated.
- After installing backup ring **8**, pack groove **A** of Y-packing **9** with grease.

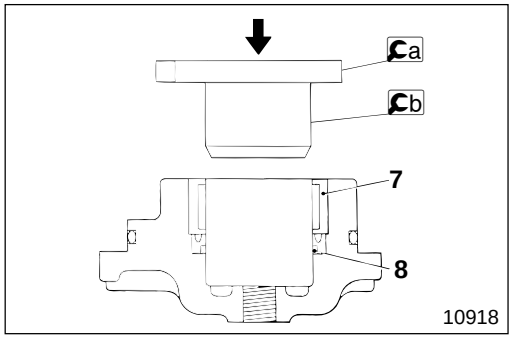

- After installing needle bearing **7** into backup ring **8**, form the bent up part of the backup ring using a insert tool assembly and b insert tool.

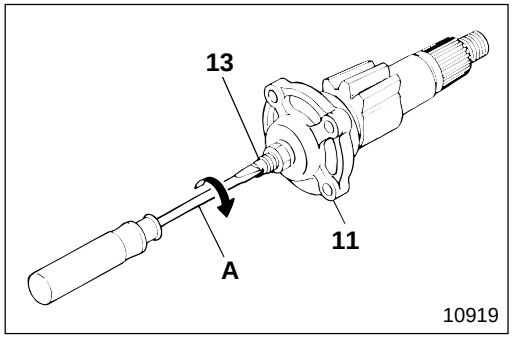

11 **Removal of side cover**

Screw in adjusting screw **13** and remove side cover **11**.
A : Screwdriver

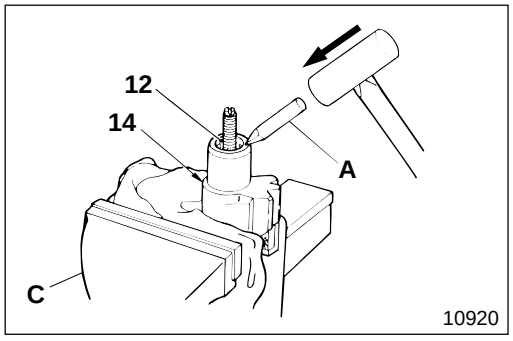

12 **Retainer**

Disassemble sector shaft **14**, as follows, only if it is faulty :
[Removal]
- Pry up (2 points) of retainer **12**.
  A : Chisel

CAUTION
Make sure you use a cloth when you grip sector shaft 14 in vise C to prevent damage.

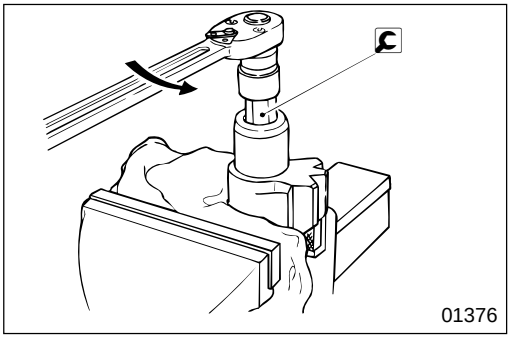

- Remove retainer **12** using bar.

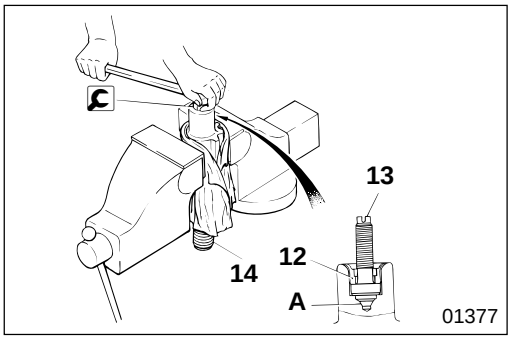

[Installation]

- Pack adjusting screw **13** mounting hole **A** of sector shaft **14** with grease.
- Install adjusting screw **13** into sector shaft **14**.
- Install retainer **12** into sector shaft **14** using bar.
- After installation, slacken off by 180°, retighten at 39 N·m {29 lbf.ft, 4 kgf·m}, then slacken off by 20°.
- Make sure that adjusting screw **13** turns smoothly.

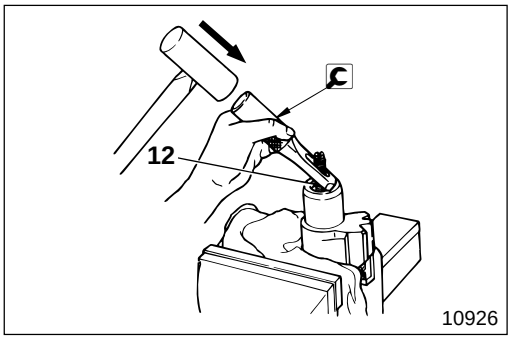

- After installing retainer **12**, caulk the retainer (2 points) using squeeze tool.

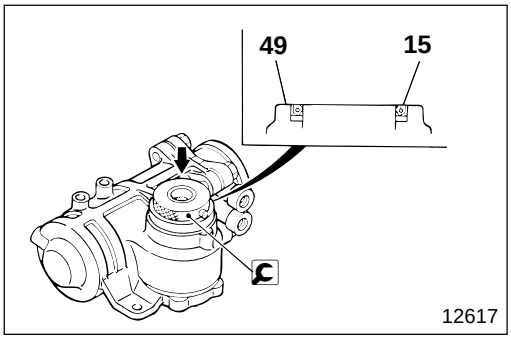

15 Installation of oil seal

Install oil seal **15** into body **49** in the direction as illustrated.

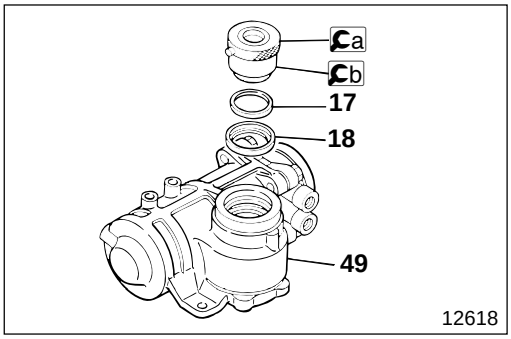

17 18 Installation of backup ring and Y-packing

- Install Y-packing **18** and backup ring **17** to body **49**.
- Pack the groove of Y-packing **18** with grease.
- Form the shape of backup ring **17** using a insert tool assembly and b insert tool.

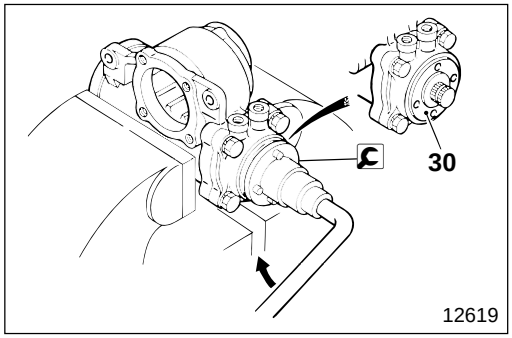

21 **Ball screw assembly**

[Removal]

- Loosen adjusting plug assembly **30** by approximately 180° using wrench assembly.

CAUTION

Make sure you only loosen adjusting plug assembly 30, do not undo it completely because the bearing inside the valve housing might spring out.

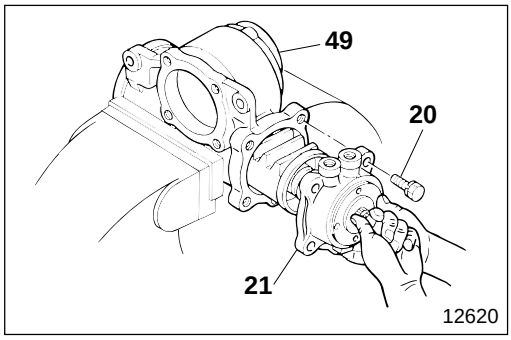

- Loosen bolt **20** and remove ball screw assembly **21** from body **49**.

CAUTION

- **Make sure that the balls of the ball screw do not spring out.**
- **Be careful not to damage the piston or the interior of body 49.**

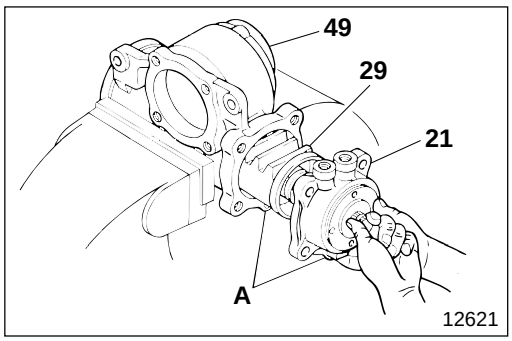

[Installation]

- Install ball screw assembly **21** into body **49**, holding piston **29** so it will not turn.

CAUTION

Be careful not to damage the piston seal ring or the interior of body 49.

- Align oil passage ports **A** of ball screw assembly **21** and body **49**, then tighten.

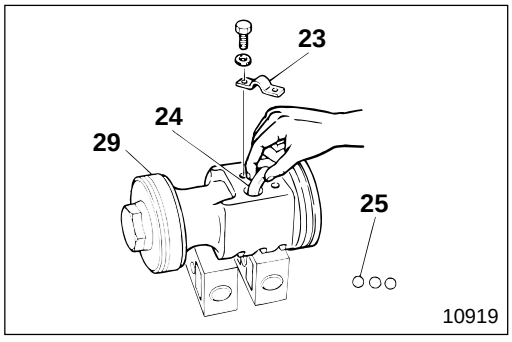

24 **25** **Ball tube and steel ball**

First remove steel balls **25** from piston **29** and place them in the receiving tray, remove ball clip **23**, grip ball tube **24** with your fingers and pull it out gently.

CAUTION

Be careful not to loose any steel balls 25 (×30).

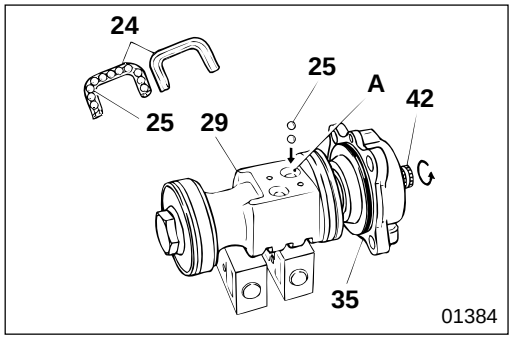

[Installation]

- Pack the interior of ball tube **24** with grease, lay 10 or 11 steel balls **25** in place, then mount the other side of the ball tube.
- Place piston **29** on a level surface, align assembled worm shaft assembly and valve housing assembly **35** and the piston ball race, then drop the steel balls through ball tube hole **A** while turning stub shaft **42**.

CAUTION

Make sure that you do not pull out worm shaft assembly and valve housing assembly 35 too far, or steel balls 25 will drop out of the ball race.

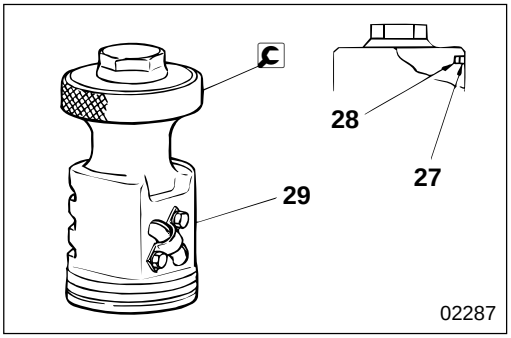

27 **28** **Installation of O-ring and seal-ring**

Install O-ring **28** and seal ring **27** in the outside grooves of piston **29**, then form the shape of the seal ring with [C] inserting tool.

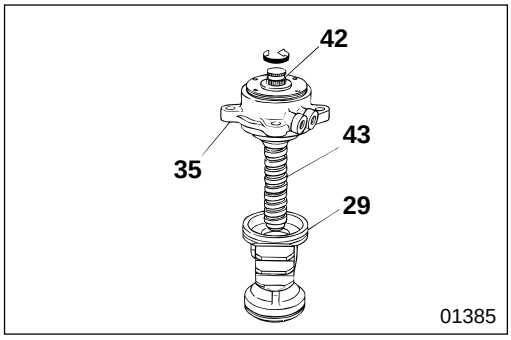

29 **Piston**

[Removal]
Holding worm shaft assembly and valve housing assembly **35** so that piston **29** is at the bottom, turn stub shaft **42** and remove the piston.

CAUTION

Be careful not to tilt piston 29 when you do this, otherwise steel balls 25 in the races of the piston and worm shaft 43, will drop into the piston.

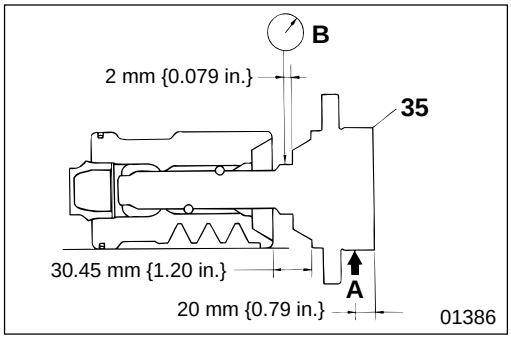

[Inspection]
Measure side play (play in axial direction) **B** of worm shaft assembly and valve housing assembly **35** when 49 N {11 lbf, 5 kgf} is applied to **A** as illustrated.

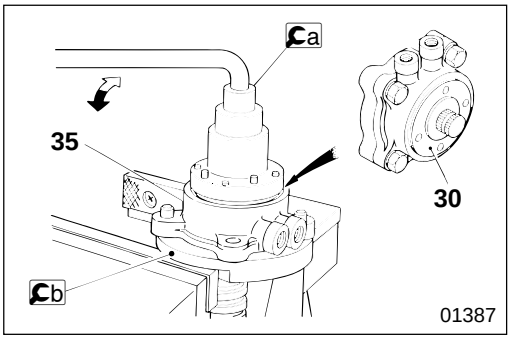

30 **Installation of adjusting plug assembly**

- After tightening adjusting plug assembly **30** of worm shaft assembly and valve housing assembly **35** at specified torque, slacken off by approximately 180°.

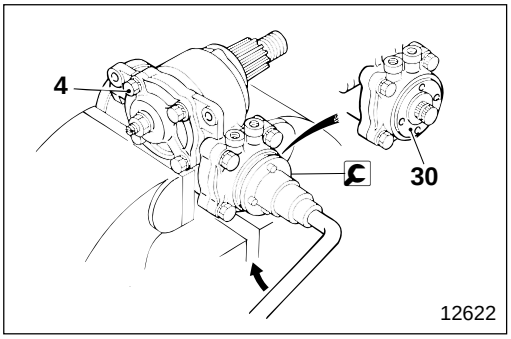

- Tighten bolt **4** at specified torque, then retighten adjusting plug assembly **30** at specified torque using [C] wrench assembly.

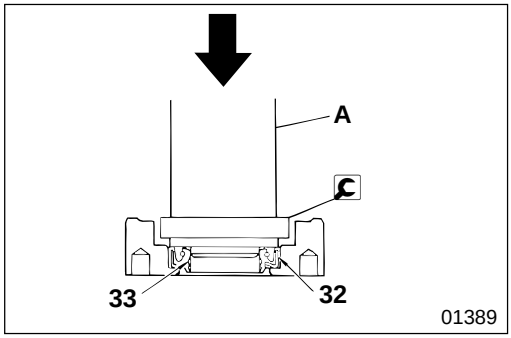

32 **Installation of oil seal**

Install oil seal **32** into adjusting plug **33** in the direction as illustrated.
A : Hand press

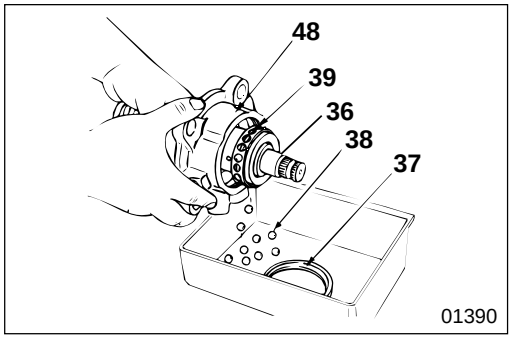

36 **Worm shaft assembly**

[Removal]
Push out worm shaft assembly **36** from valve housing **48** by pushing out the side of the worm shaft assembly where the piston is assembled.

NOTE

Have a tray or box ready to catch side race 37, steel balls 38, and bearing cage 39 as these items separate on removal.

[Installation]

CAUTION

Be careful that worm shaft assembly 36 ball race does not damage seal ring 44.

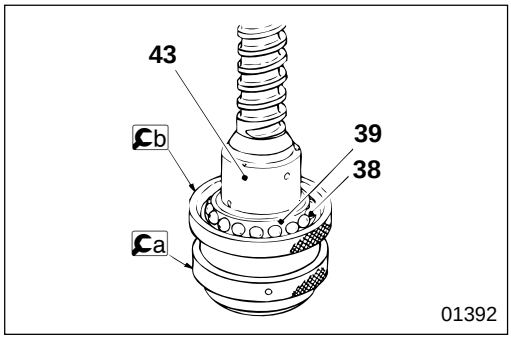

37 **to** **39** **Installation of side race, steel ball, and bearing cage**

- Install b guide assembly on a tool assembly, and insert worm shaft **43** in the direction as illustrated.
- Assemble bearing cage **39** and steel balls **38** on worm shaft **43**.

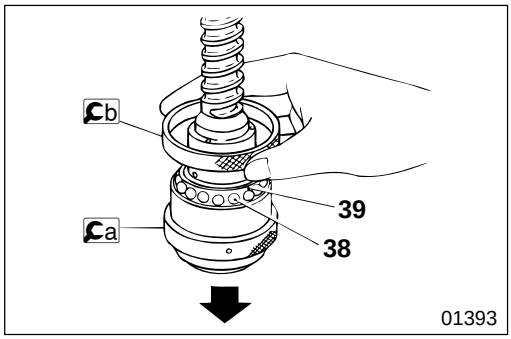

- Hold down b with your hand and slide a downward, so that you can position steel balls **38** as specified.

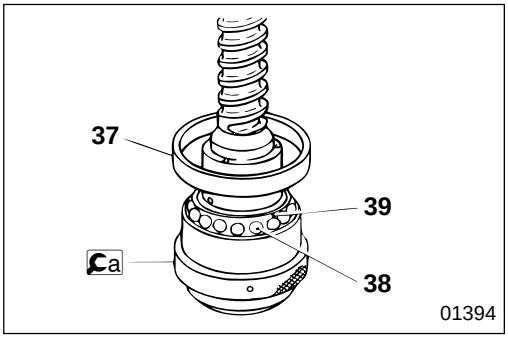

- Install side race **37** on top of steel balls **38** and bearing cage **39**.

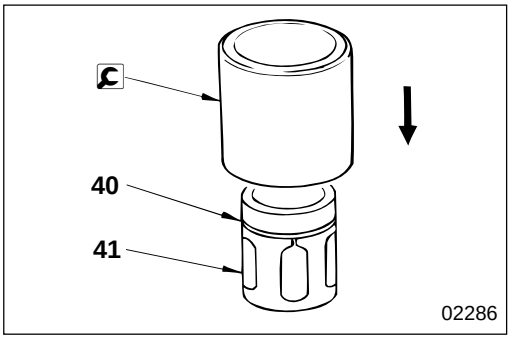

40 **Installation of seal ring**

- Install seal ring **40** onto rotor **41**.
- Form seal ring **40** using insert tool.

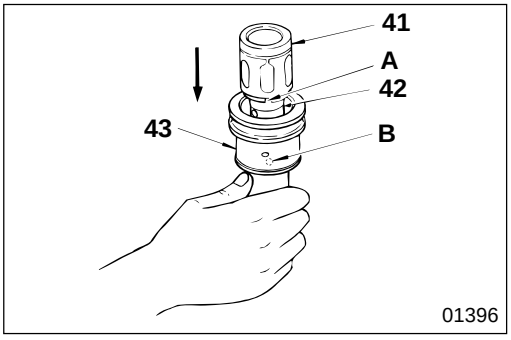

41 **Installation of rotor**

Install rotor **41** between stub shaft **42** and worm shaft **43** so that indent **A** of the rotor fits positioning pin **B** of the worm shaft.

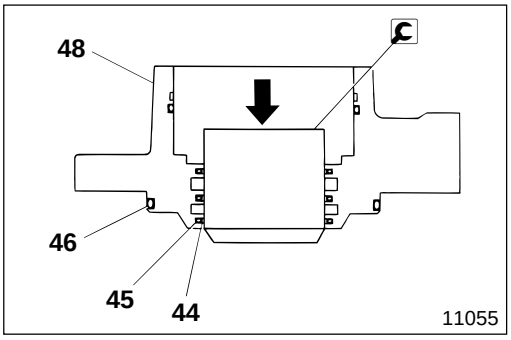

44 **to** **46** **Installation of seal ring and O-ring**

- Install seal ring **44** and O-ring **45**, **46** into valve housing **48**.
- Form seal ring **44** using insert tool.

POWER STEERING OIL PUMP

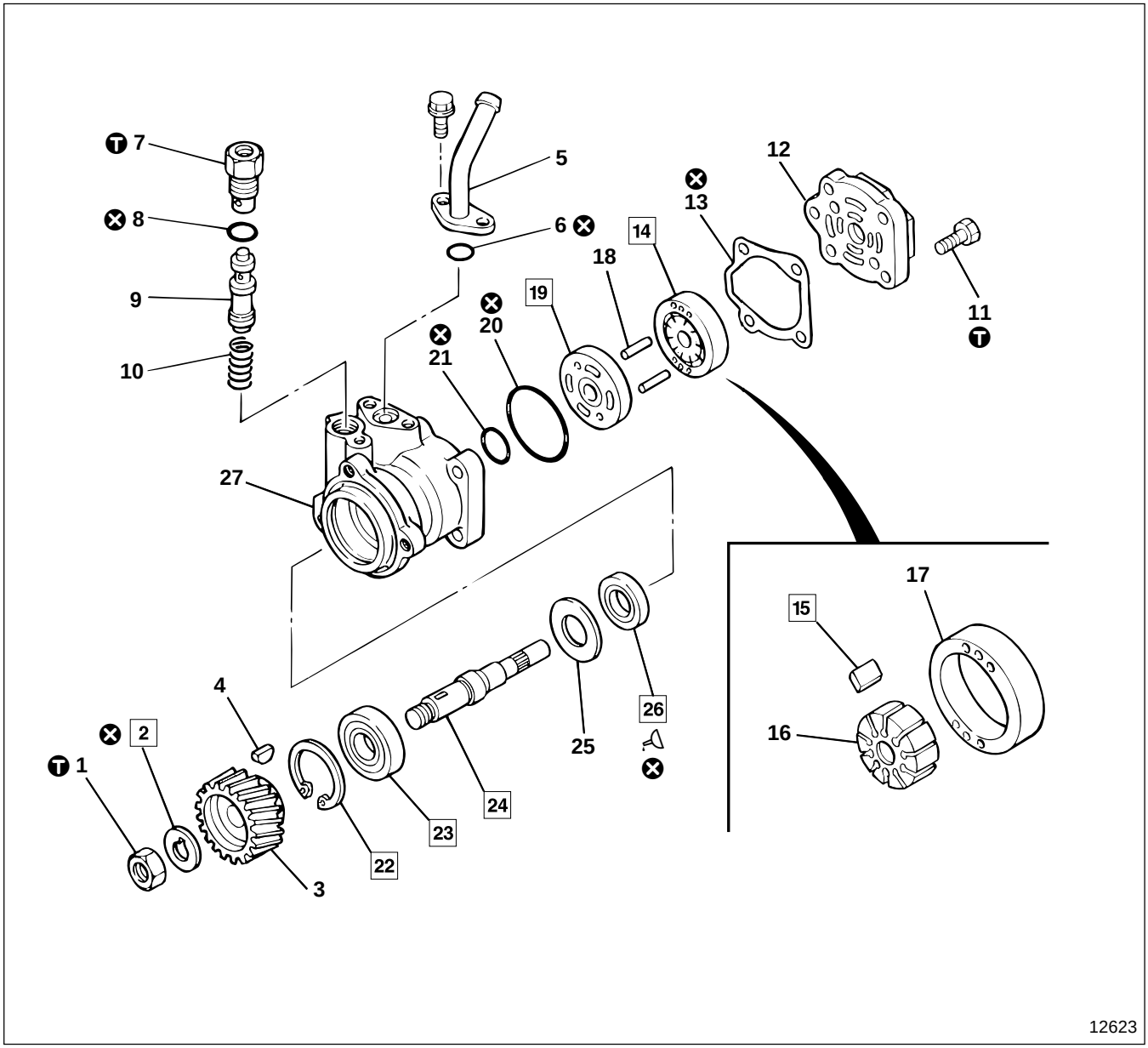

● **Disassembly sequence**

1 Nut
2 Lock washer
3 Gear
4 Key
5 Suction pipe
6 O-ring
7 Connector
8 O-ring
9 Flow control valve assembly
10 Flow control spring
11 Bolt
12 Rear body
13 Gasket
14 Cartridge assembly
15 Vane
16 Rotor
17 Cam ring
18 Straight pin
19 Pressure plate
20 O-ring
21 O-ring
22 Retaining ring
23 Ball bearing
24 Shaft
25 Retaining ring
26 Oil seal
27 Front body

⊗ : Non-reusable parts

● **Assembly sequence**

Follow the disassembly sequence in reverse.
Repair kit : Seal kit, Cartridge assembly kit

Service standards

Unit : mm {in.}

Location	Maintenance item	Standard value	Limit	Remedy
9, 27	Clearance between flow control valve assembly and front body	—	0.03 {0.0012}	*1
12, 19	Stepped wear on rear body and pressure plate where it is subject to friction against rotor and vane	—	0.01 {0.00039}	*2

*1 No seizure, wear, or scoring sufficient to catch a finger nail. Replace flow control valve assembly or front body.
*2 No seizure, wear, or scoring sufficient to catch a finger nail. Replace rear body or pressure plate.

Tightening torque

Unit : N·m {lbf.ft, kgf·m}

Location	Parts to be tightened	Tightening torque	Remarks
1	Nut (Gear mounting)	68.8 to 88.2 {51 to 65, 7 to 9}	—
7	Connector	49 to 58.8 {36 to 43, 5 to 6}	—
11	Bolt (Rear body mounting)	49 to 58.8 {36 to 43, 5 to 6}	—

Special tools

Location	Tool name and shape	Part No.	Application
22	Pliers	*910-22570	Removal and installation of retaining ring
23	Press-fitting tool	*910-23061	Removal and installation of ball bearing, and installation of shaft
26	Stick	*910-21632	Driving out of oil seal
	Press-fitting tool	*910-23062	Press-fitting of oil seal

* JIDOSHA KIKI part No.

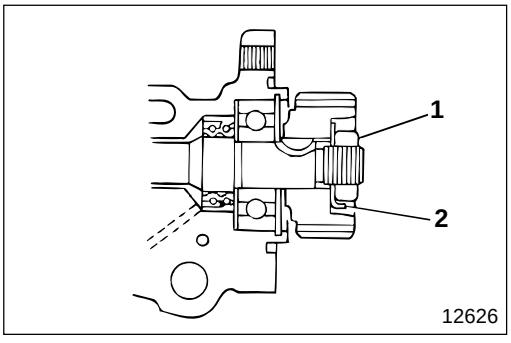

◆ Service procedure

2 **Installation of lock washer**

After installing nut **1**, bend up one lug on the circumference of lock washer **2**.

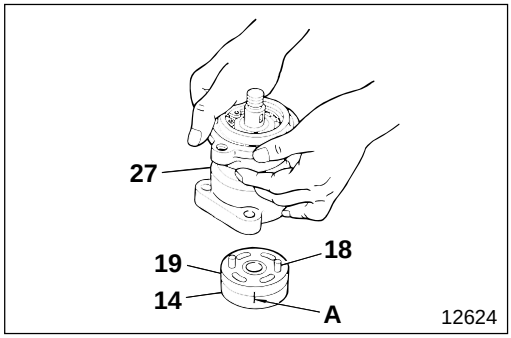

14 **Removal and installation of cartridge assembly**

[Removal]

- Remove cartridge assembly **14**, pressure plate **19** and straight pin **18** together from front body **27**.
- Put alignment marks **A** around the outer circumferences of cartridge assembly **14** and pressure plate **19**.

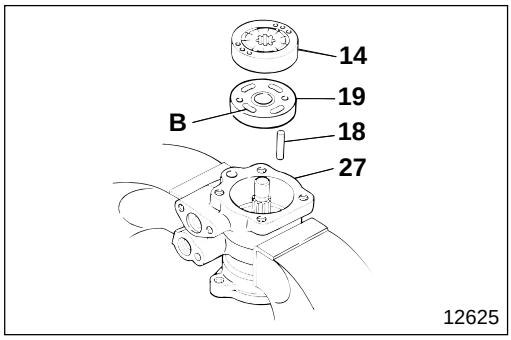

[Installation]

- Install straight pin **18** into front body **27**.
- Install pressure plate **19** onto front body **27**, so that groove **B** of the pressure plate faces the direction as illustrated.
- Align cartridge assembly **14** with straight pin **18**, then install the cartridge assembly.

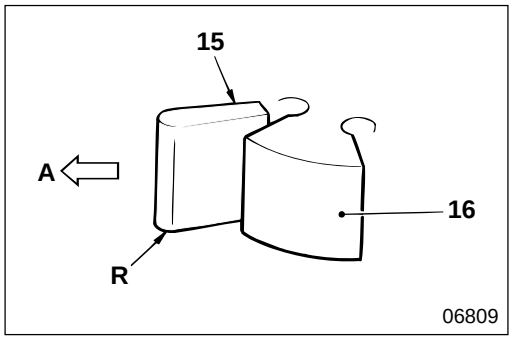

15 **Installation of vane**

With point **R** of vane **15** facing outside **A**, install it into rotor **16** and make sure that the vane moves smoothly. If it is faulty, replace the cartridge assembly.

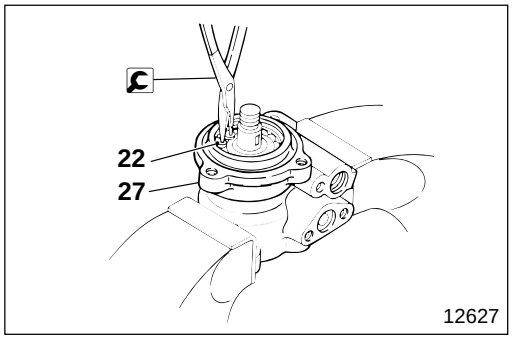

22 **Removal of retaining ring**

Remove retaining ring **22** using pliers.

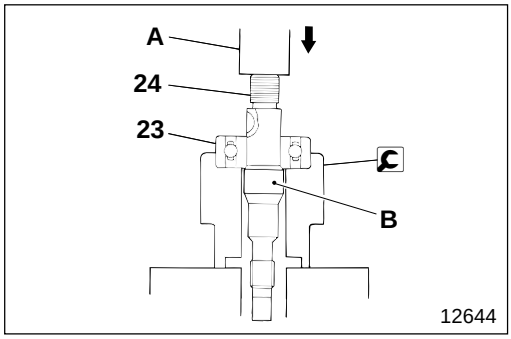

23 **Removal and installation of ball bearing**

Remove ball bearing **23** from shaft **24** using press-fitting tool.

A : Hand press

For installation, follow the removal sequence in reverse.

CAUTION

Be careful not to damage oil seal contact surface B.

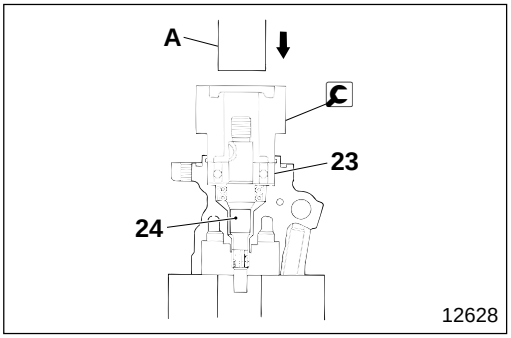

23 **24** **Installation of ball bearing and shaft**

Install ball bearing **23** and shaft **24** using press-fitting tool.

A : Hand press

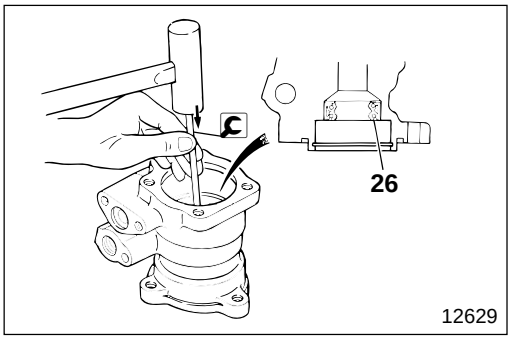

26 **Oil seal**

[Removal]

Remove oil seal **26** using stick.

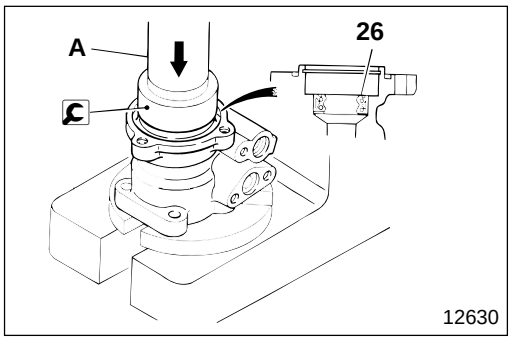

[Installation]

Install oil seal **26** in the direction as illustrated using press-fitting tool.

A : Hand press

POWER STEERING OIL TANK

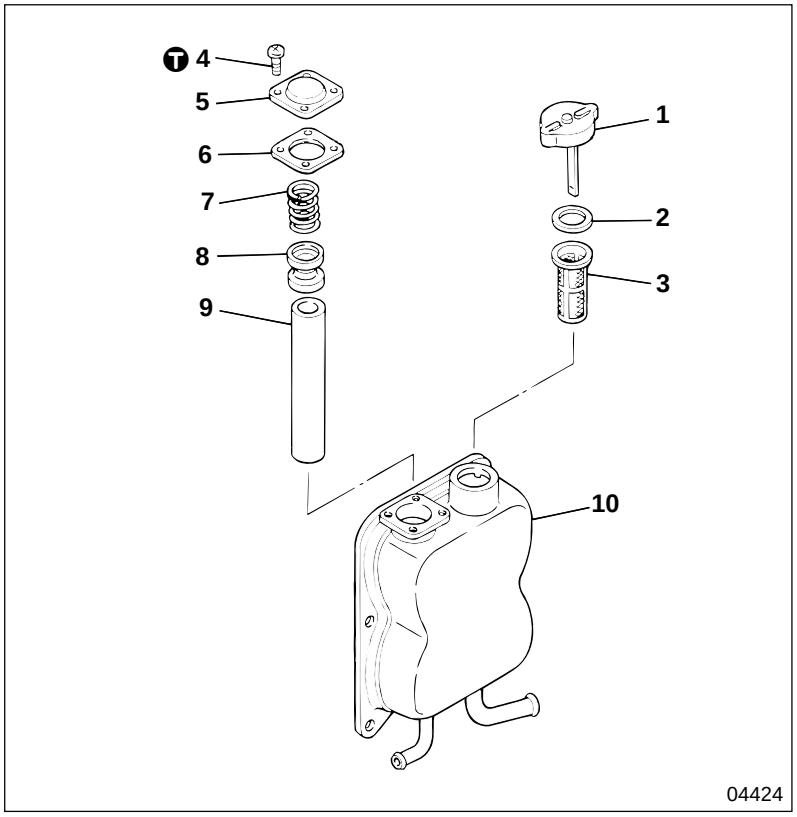

● **Disassembly sequence**

1 Filler cap
2 Packing
3 Strainer
4 Screw
5 Plate
6 Packing
7 Spring
8 Retainer
9 Return filter
10 Tank body assembly

● **Assembly sequence**

Follow the disassembly sequence in reverse.

Tightening torque

Unit : N·m {lbf.ft, kgf·m}

Location	Parts to be tightened	Tightening torque	Remarks
4	Screw (Plate mounting)	0.49 to 0.98 {0.36 to 0.72, 0.05 to 0.1}	—

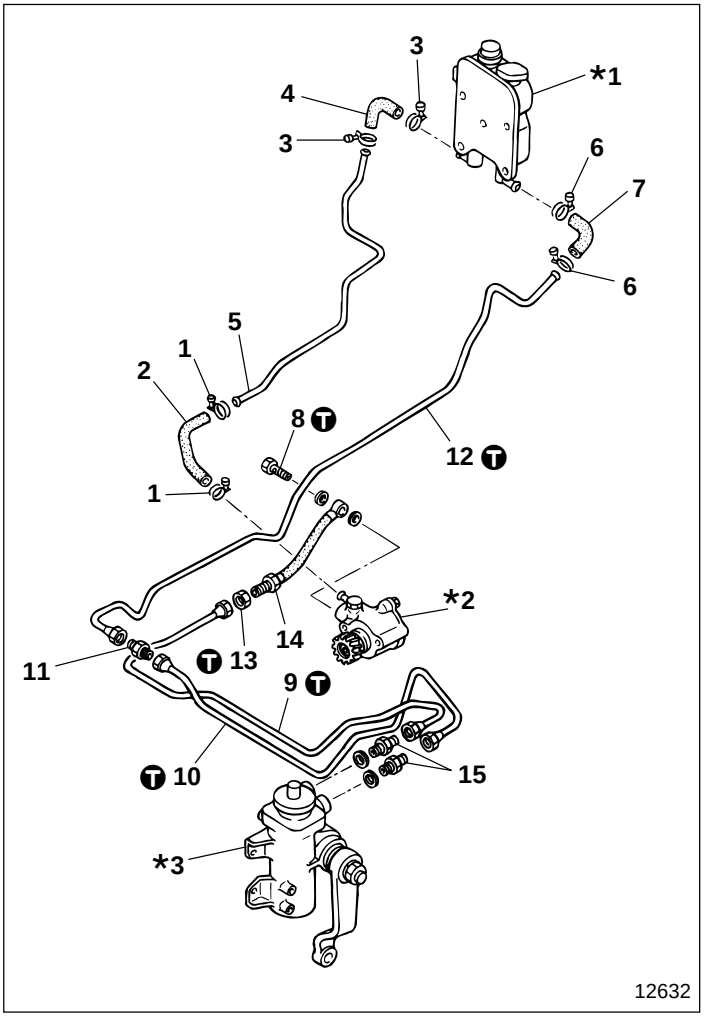

● **Removal sequence**

1 Clamp
2 Oil hose
3 Clamp
4 Oil hose
5 Oil pipe
6 Clamp
7 Oil hose
8 Bolt
9 Oil pipe
10 Oil pipe
11 Connector
12 Oil pipe
13 Nut
14 Oil hose
15 Connector

***1** : Power steering oil tank
***2** : Power steering oil pump
***3** : Power steering booster

● **Installation sequence**

Follow the removal sequence in reverse.

CAUTION⚠

Be sure to bleed air after removing the fluid line, failure to do so would cause the power steering to malfunction.

🕮 **P37-11**

T Tightening torque

Unit : N·m {lbf.ft, kgf·m}

Location	Parts to be tightened	Tightening torque	Remarks
8	Bolt (Oil hose mounting)	125 {94, 13}	—
9	Oil pipe (Oil hose and connector connecting)	66.69±12.75 {49±9.4, 6.8±1.3}	—
10	Oil pipe (Connector connecting)	66.69±12.75 {49±9.4, 6.8±1.3}	—
12	Oil pipe (Connector connecting)	66.69±12.75 {49±9.4, 6.8±1.3}	—
13	Nut	66.69±12.75 {49±9.4, 6.8±1.3}	—

DRAG LINK

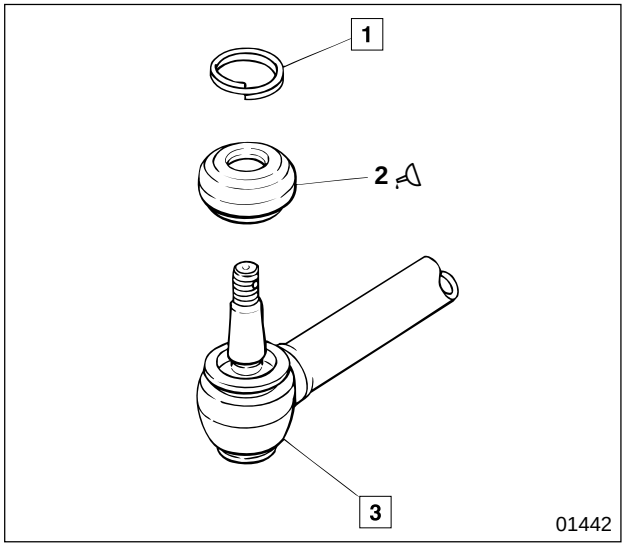

● **Disassembly sequence**

1 Clip
2 Dust cover
3 Drag link

NOTE

- **Do not remove clip 1 or dust cover 2 unless they are faulty.**
- **Do not disassemble drag link 3 because it is a unit construction.**

● **Assembly sequence**

Follow the disassembly sequence in reverse.

Lubricant

Location	Points of application	Kinds	Quantity
2	Lip area of dust cover	Molybdenum disulfide grease [NLGI No.2 (Li soap)]	As required
	Pack interior of dust cover	Molybdenum disulfide grease [NLGI No.2 (Li soap)]	11 g {0.39 oz}

Special tools

Unit : mm {in.}

Location	Tool name and shape	Part No.	Application
1	Clip guide 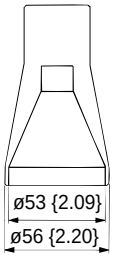	MH061831	Installation of clip

◆ Service procedure

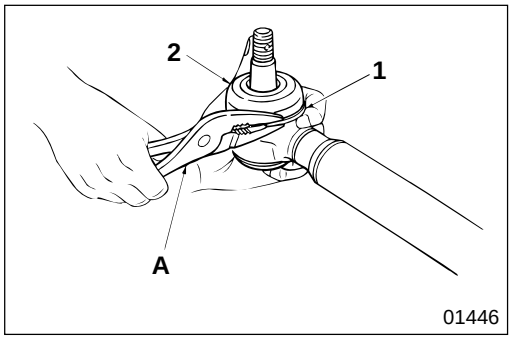

1 **Clip**

[Removal]

A : Long nose pliers

CAUTION

- **Be careful not to damage clip 1 or dust cover 2 when you remove the clip.**
- **If clip 1 is deformed, do not reuse it.**

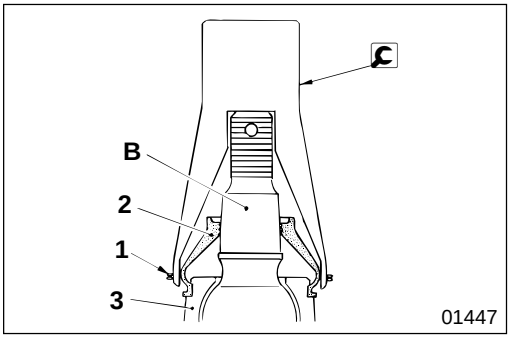

[Installation]
- Position the assembly so ball stud **B** is vertical.
- Place clip guide on drag link **3**.
- Install clip **1** into the groove of dust cover **2**.

CAUTION
- **Be careful that clip guide end does not dig into dust cover 2.**
- **Be especially careful that clip 1 end does not damage dust cover 2.**

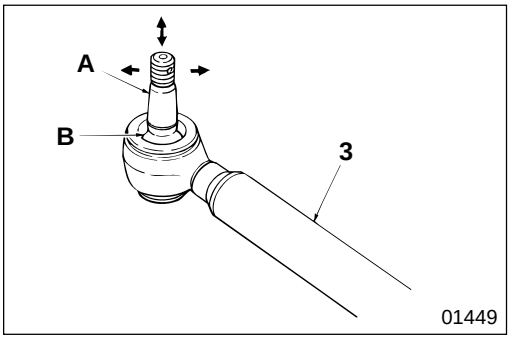

3 Inspection of drag link

Move ball stud area **A** of drag link **3** vertically and horizontally to make sure that there is no play. Also, check that ball section **B** moves evenly. If any fault is found, replace the tie rod assembly.

TIE ROD ASSEMBLY

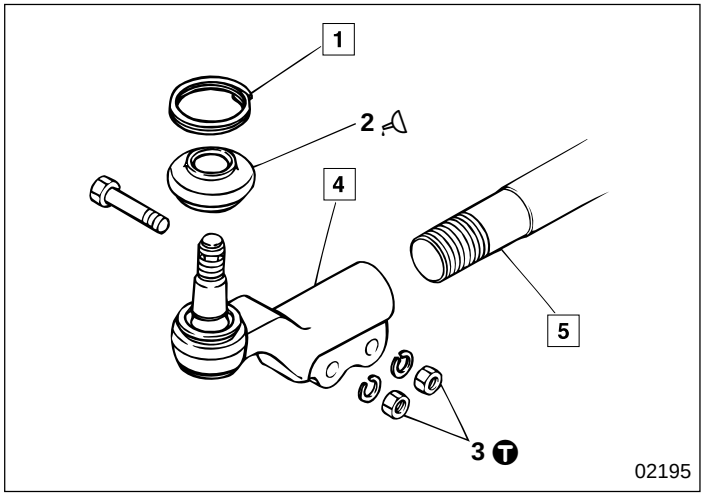

● **Disassembly sequence**

1 Clip
2 Dust cover
3 Nut
4 Tie rod end assembly
5 Tie rod

● **Assembly sequence**

Follow the disassembly sequence in reverse.

NOTE

Do not attempt to disassemble tie rod end assembly 4 because it is a unit construction.

Service standards

Unit : mm {in.}

Location	Maintenance item	Standard value	Limit	Remedy
5	Bend of tie rod	1 {0.039} or less	1 {0.039}	Replace

Tightening torque

Unit : N·m {lbf.ft, kgf·m}

Location	Parts to be tightened	Tightening torque	Remarks
3	Nut (Tie rod end assembly fastening)	78 {58, 8}	Wet

Lubricant

Location	Points of application	Kinds	Quantity
2	Lip area of dust seal	Molybdenum disulfide grease [NLGI No.2 (Li soap)]	As required
	Pack into dust cover	Molybdenum disulfide grease [NLGI No.2 (Li soap)]	11 g {0.39 oz}

Special tools

Unit : mm {in.}

Location	Tool name and shape	Part No.	Application
1	Clip guide 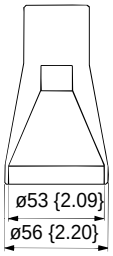	MH061831	Installation of clip

◆ Service procedure

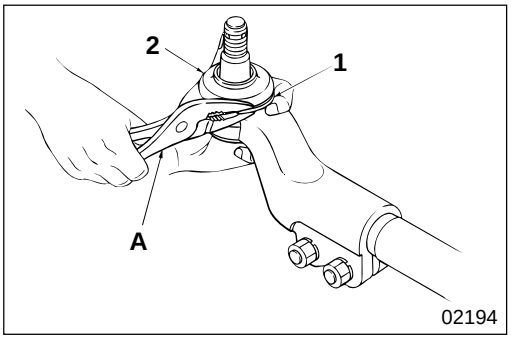

1 **Clip**

[Removal]

A : Long nose pliers

CAUTION

- **Be careful not to damage clip 1 or dust cover 2 when you remove the clip.**
- **If clip 1 is deformed, do not reuse it.**

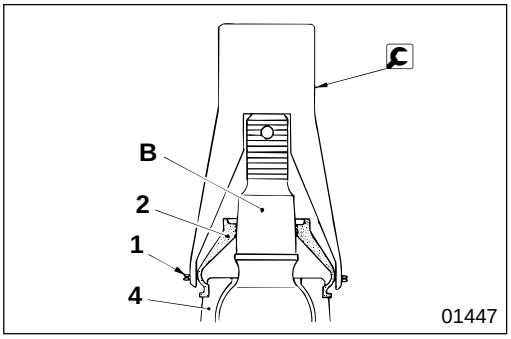

[Installation]

- Position so ball stud **B** is vertical.
- Place clip guide on tie rod end assembly **4**.
- Install clip **1** into the groove of dust cover **2**.

CAUTION

- **Be careful that clip guide end does not dig into dust cover 2.**
- **Be especially careful that clip 1 end does not damage dust cover 2.**

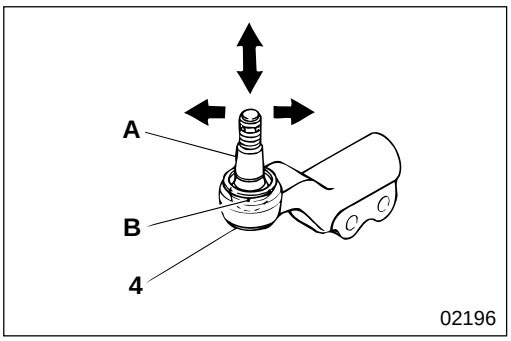

Move ball stud area **A** of tie rod end assembly **4** vertically and horizontally to make sure that there is no play. Also, check that ball section **B** moves evenly. If any fault is found, replace the tie rod end assembly.

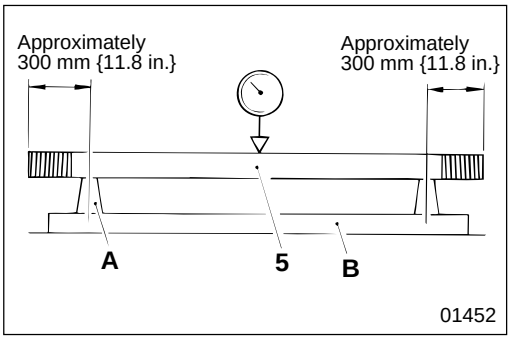

5 **Bend of tie rod**

Measure the bend of tie rod **5** at the center point. If the measured value exceeds the limit, correct or replace the tie rod.

NOTE

To measure the deflection of tie rod 5, turn it one full rotation and read the dial gauge indicator. The deflection is one half of the indicated value.

A : V-block
B : Surface plate

MITSUBISHI
FUSO

FH

Service Manual

Group 41
Frame

Table of Contents

BACK

HOME

MITSUBISHI FUSO TRUCK OF AMERICA, Inc.

Pub No. TWME9502-41

GROUP 41 FRAME

SPECIFICATIONS 2

STRUCTURE AND OPERATION 2

INSPECTION AND REPAIR OF FRAMES 2

SPECIFICATIONS

Item	Specifications
Frame type	Ladder type
Cross section configuration of side rail	⊐ shape channel section

STRUCTURE AND OPERATION

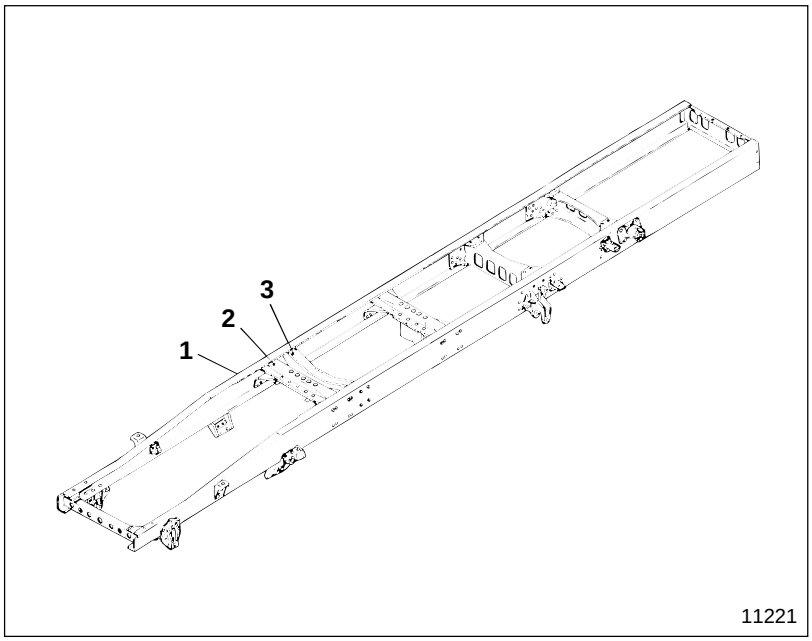

1 Side rail
2 Cross member
3 Center bearing bracket

INSPECTION AND REPAIR OF FRAMES

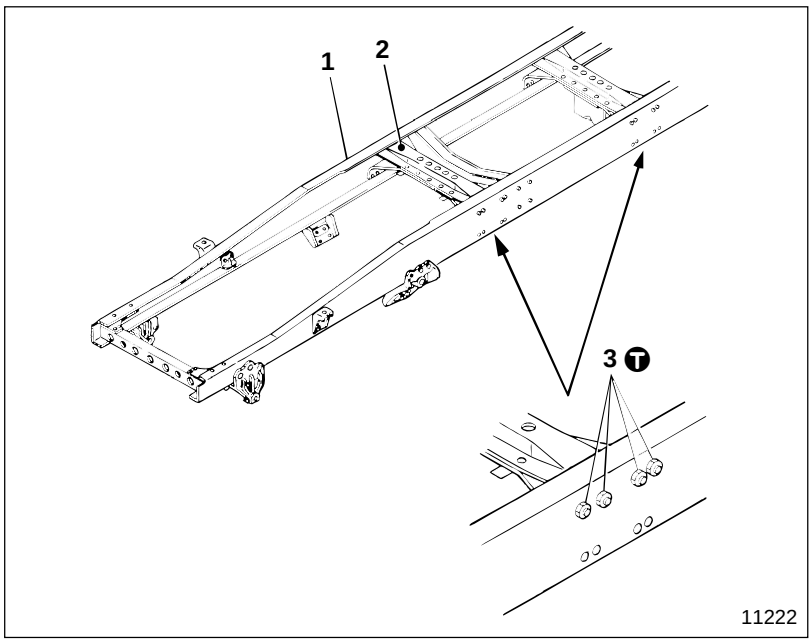

1 Side rail
2 Cross member
3 Nut

Tightening torque

Unit : N·m {lbf.ft, kgf·m}

Location	Parts to be tightened	Tightening torque	Remarks
3	Nut (Cross member to side rail side wall mounting)	85 to 110 {61 to 80, 8.5 to 11}	—

◆ Service procedure

● Cleaning of frame

Carefully remove mud, grease, rust, etc. that is stuck to the outer and inner surfaces of the frame.

● Inspection for frame deformation

If any fault such as deformation is found, repair the frame.

● Inspection for cracks in frame

- Remove paint from any areas that are seemingly faulty and carefully inspect.
- If visual inspection is difficult, inspect using color contrast penetrant examination or other methods.
  If a crack is found, repair as follows.

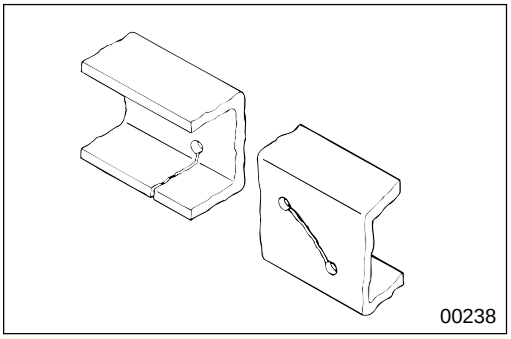

● Repair of crack in frame

- With the vehicle unloaded, level the frame.
- Drill a hole, about twice the thickness of the frame, 10 mm {0.39 in.} from the end of the crack.

NOTE

If a crack is found inside the frame, drill holes at both ends of the crack.

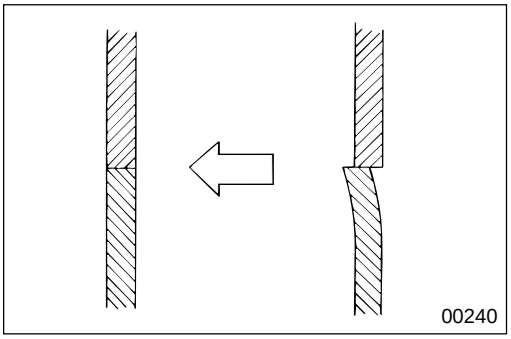

- If the edges of the crack are not flush, make them flush with each other.

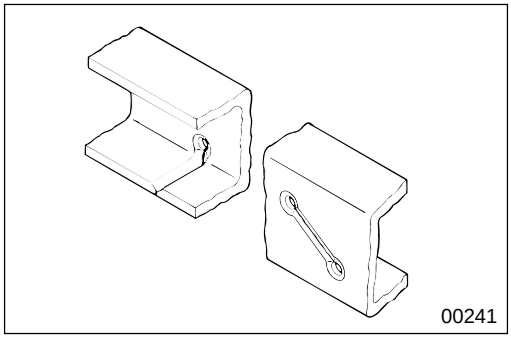

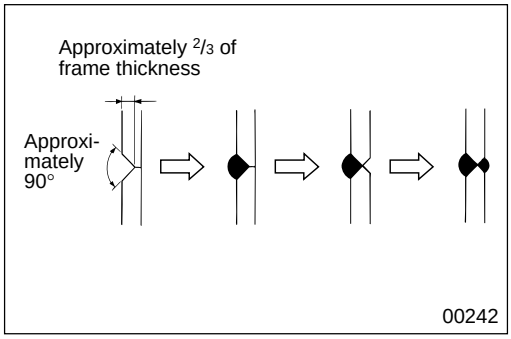

- Using a grinder, etc., grind a 90° V-section channel, two-thirds of the frame thickness, then weld.

WARNING

You must cover any inflammable materials, such as pipelines, wiring harnesses, rubber parts, and the fuel tank, that are near the welding site.

CAUTION

- **Do not use gas welding because the high temperature produced alters the material properties and weakens the welded area. Be sure, therefore, to use electric welding.**
- **Be sure to remove the negative terminal of the battery, then ground the welder near the area to be welded to prevent reversed flow of current from the welder which might burn out electrical components.**
- **Be sure to protect mountings such as main sills that can be damaged by heat, by using heat insulators, etc.**

NOTE

- **Use low-hydrogen type coated CO_2 and arc welding electrodes for welding to prevent harmful defects such as undercutting, blow holes, etc.**
- **Preheat the area to be welded to approximately 50 to 350°C {122 to 662°F} before welding when the workshop temperature is below 0°C {32°F}.**

- Next, grind a V-section channel, as described above, on the opposite side of the weld and weld. At the same time, fill the holes at both ends of the crack by welding.

NOTE

In cold districts, heat the welded area to approximately 200°C {392°F} after welding.

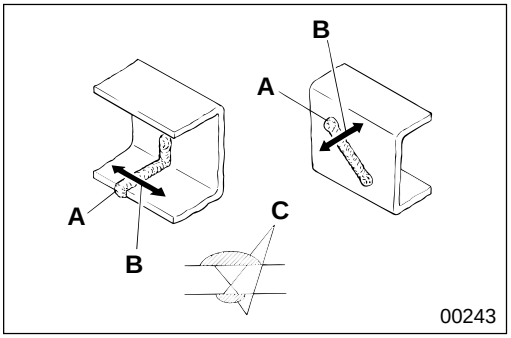

- After welding, grind bead **A** at right angles **B** to remove shaded area **C** as illustrated and grind the area flat.
- Finish the surface so that the frame thickness is identical to the original thickness.

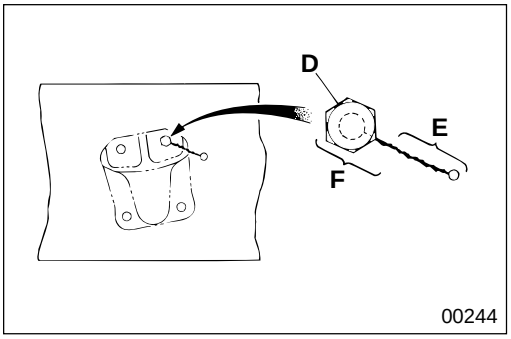

[Repairing cracks caused by rivets or bolt holes]

- To make the edges of the holes flush at the cracked area, temporarily tighten bolt **D** in the hole.
- Weld cracked point **E** at least 20 mm {0.79 in.} from the center of the bolt.
  For welding method refer to the above-mentioned procedures for repairing cracks. P41-3
- After removing the bolt and making the edges flush, weld remaining area **F** and fill the hole.
- After drilling a hole in the filled area, install a rivet or bolt.

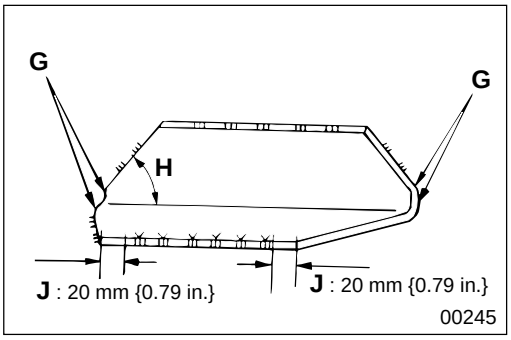

[Repairing using reinforcement plate]

- To prevent concentrated stress being produced at ends **G** of the reinforcement plate, weld the plate with angle **H** at both ends opened 30° or less.
  Do not weld area **J**.
- The reinforcement plate must have enough strength for the cracked area.

NOTE

- **Thickness of reinforcement plate : same as frame thickness**
- **Reinforcement plate material : HTP540 (high tensile strength steel) or equivalent strength.**

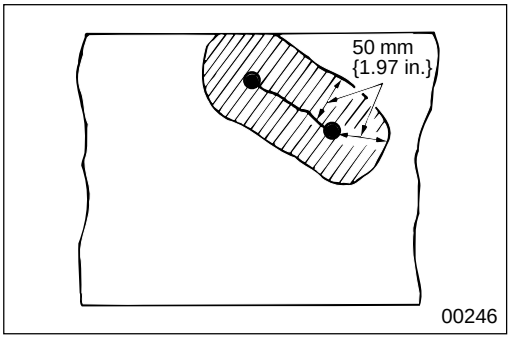

- After welding, heat the shaded area to 600 to 700°C {1112 to 1292°F}.

CAUTION

Be sure to protect mountings such as main sills that can be damaged by heat, by using heat insulators, etc.

INSPECTION AND REPAIR OF FRAMES

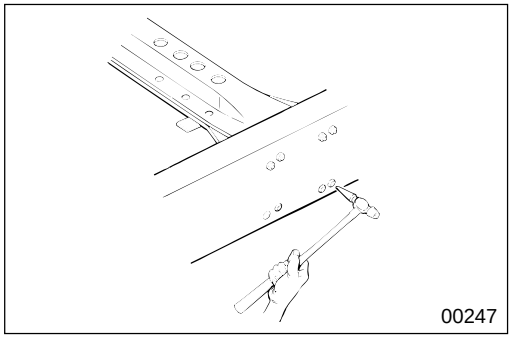

● **Inspection for loose rivets**

- Gently tap the rivet head using an inspection hammer and judge the condition by checking the vibration using the tip of your finger, or by listening to the sound.
- Rust between rivet and frame indicates that the rivet is loose.

CAUTION

Be sure to replace loose rivets because they can break or cause cracking of the frame in the area around the rivet hole, causing accidents.

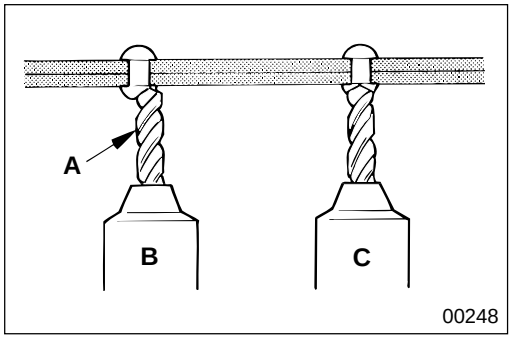

● **Repair of rivet**

- When removing rivets, use a center punch to make an indent in the center of the rivet head; then, drill out using drill **A** or grind.
  B : Incorrect
  C : Correct

CAUTION

Make sure that you do not damage the rivet hole.

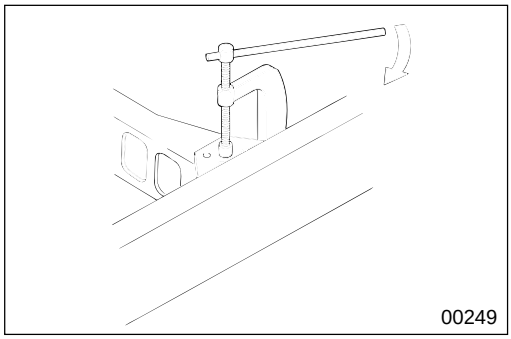

- When rivetting, first clamp both plates tightly near the rivet hole using a clamp to eliminate gaps between plates.

- Using a rivetting machine, insert the rivet (cold rivet).
- If rivetting is impossible, ream the rivet hole, drive in a reamer bolt, fully tightening the nut, then weld it in place.
  A flange bolt and flange nut should be used for the reamer bolt and nut.

● **Inspection for loose bolts and nuts**

- Inspect the mounting bolts of the cross member and the helper stopper for looseness. Loosened bolts should be tightened at specified torque. P41-2, Gr 34

NOTE

Tighten the nut side when working on the helper stopper mounting bolts.

MITSUBISHI
FUSO

FH

Service Manual

Group 42
Cab

Table of Contents

BACK

HOME

MITSUBISHI FUSO TRUCK OF AMERICA, Inc.

Pub No. TWME9502-42

GROUP 42 CAB

SPECIFICATIONS 2

STRUCTURE AND OPERATION 3

TROUBLESHOOTING 13

INSPECTION AND ADJUSTMENT MOUNTED IN VEHICLE
- Adjustment of Cab Tilt 17
- Adjustment of Door Fitting 18

REMOVAL AND INSTALLATION OF CAB 20

FRONT CAB MOUNTING 28

REAR CAB MOUNTING 30

CAB TILT LINK 32

DOOR 35

CAB EXTERIOR FITTING 40

MIRROR 44

WIPER AND WASHER 46

CAB INTERIOR FITTING 49

INSTRUMENT PANEL 51

WINDOW GLASS 54

SPECIFICATIONS

Item		Specifications
Cab assembly	Type	Cab over type (Forward control type)
	Mass kg {lb}	Approximately 390 {860}
Cab tilt	Type	Torsion bar type
	Tilt angle	45°
Cab mounting Type		Fixed type
Windshield		Laminated glass
Glass other than windshield		Tempered glass
Door glass opening and closing mechanism		Manual control type (Cable driven)

Front Cab Mounting

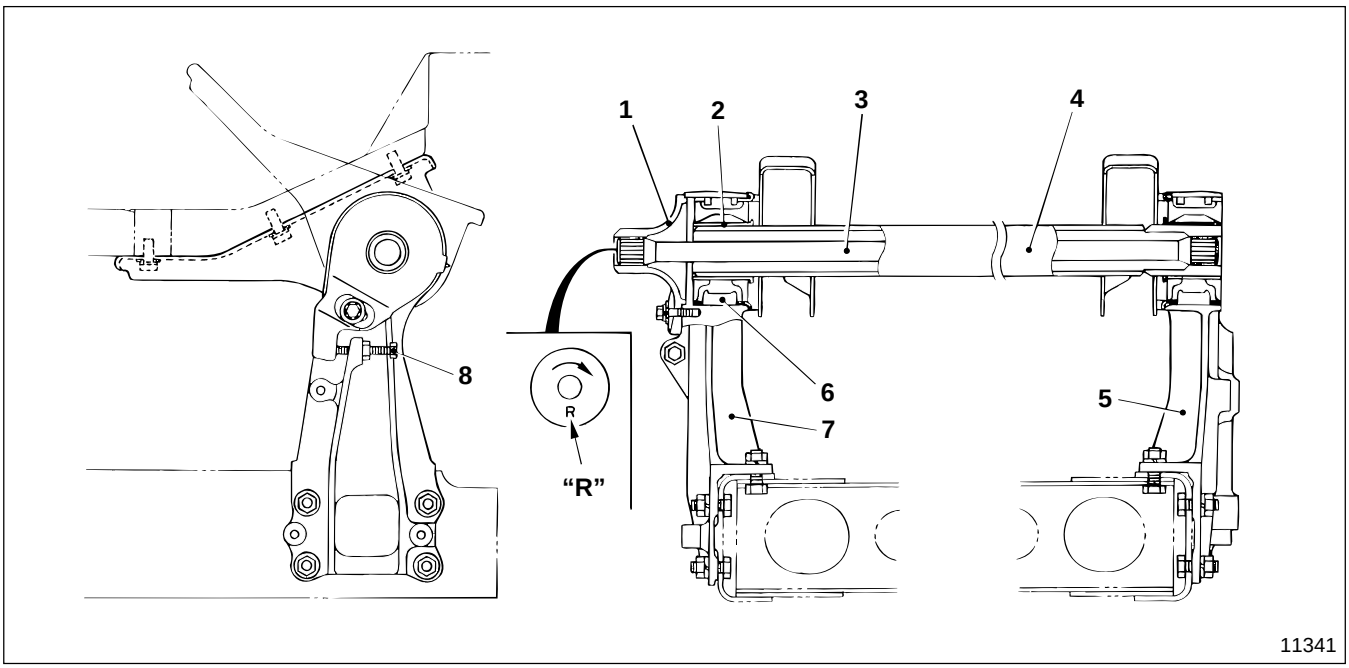

1 Anchor lever
2 Bushing
3 Torsion bar
4 Front floor cross member assembly
5 Front cab mounting bracket, LH
6 Front rubber assembly
7 Front cab mounting bracket, RH
8 Adjusting bolt

Since torsion bar **3** has torsional direction, it is marked **"R"** on its right end to indicate the torsional direction, preventing mistaken installation.

Rear Cab Mounting

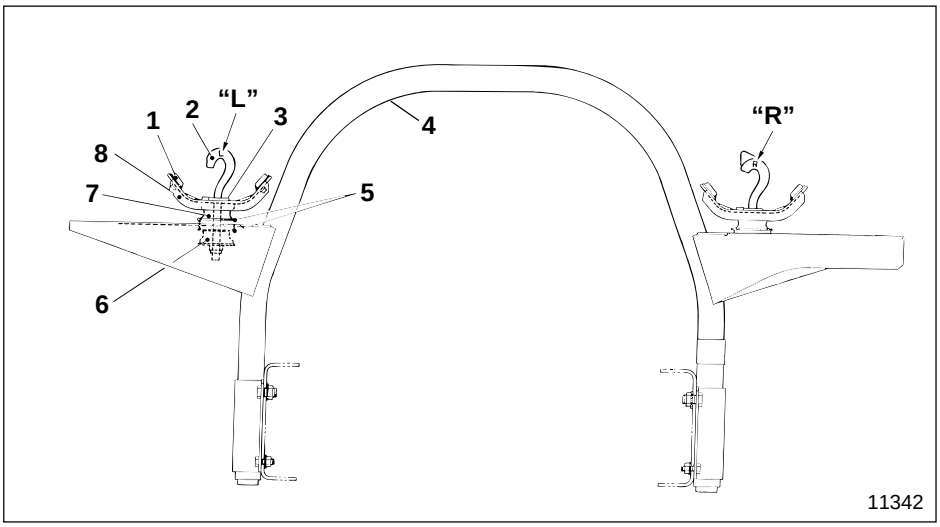

1 Side rubber
2 Anchor hook
3 Spacer
4 Rear mounting post
5 Metal fixture
6 Lower rubber
7 Upper rubber
8 Cab hold bracket

- Anchor hooks **2** are marked **"L"** and **"R"** to identify left and right.
- Between anchor hook **2** and cab hold bracket **8** is spacer **3**. By increasing or decreasing the number of spacers, the cab tilt operating force can be adjusted.

Cab Tilt Link

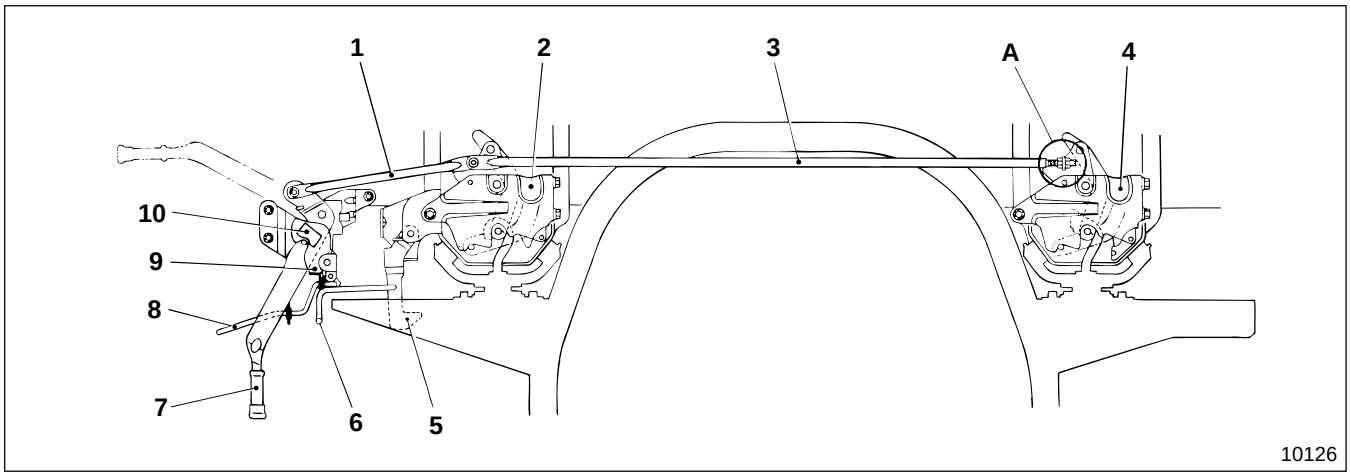

1 Lock handle rod
2 Link assembly, LH
3 Center rod
4 Link assembly, RH
5 L-lever
6 L-lever rod
7 Lock handle
8 Lock latch lever
9 Lock latch
10 Cab tilt lock switch
A : Center rod adjusting point

- The length of center rod **3** can be adjusted at mounting part **A** (center rod adjusting point) of link assembly RH **4**.
- Cab tilt lock switch **10**, mounted on lock latch **9**, detects whether lock handle **7** is locked securely.

Cab Tilt Warning Electric Circuit

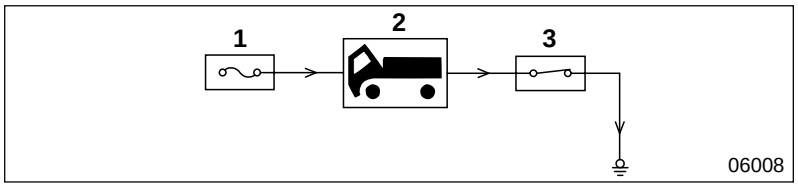

1 Fuse box
2 Cab tilt warning lamp
3 Cab tilt lock switch

Door Locking System

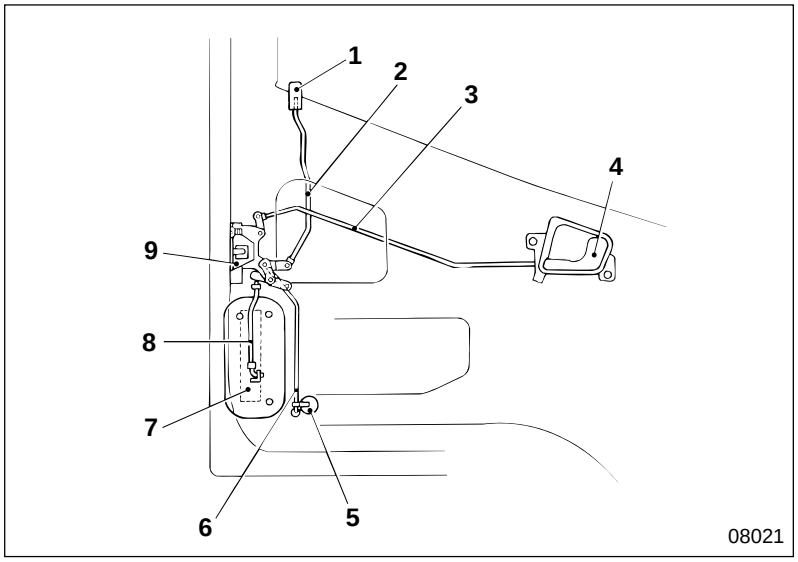

1 Door lock knob
2 Door lock rod
3 Door opening rod
4 Inside handle
5 Door lock cylinder
6 Door lock cylinder rod
7 Outside handle
8 Door opening rod
9 Door lock latch

Door Glass Opening System

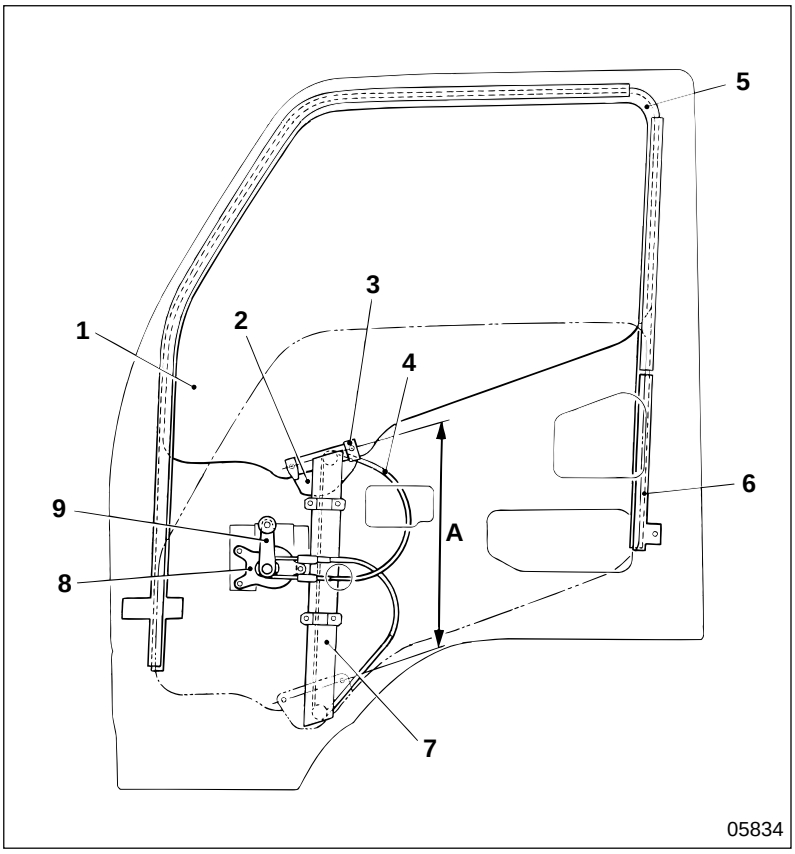

1 Door glass
2 Carrier plate
3 Glass holder
4 Cable
5 Run channel
6 Lower sash
7 Rail
8 Regulator
9 Regulator handle

A : Carrier plate moving range

- Both ends of cable **4** are secured to carrier plate **2**, and regulator **8** is installed in the middle of the cable.
- Regulator **8** winds cable **4**, and moves carrier plate **2** vertically to open and close door glass **1**.
- Carrier plate **2** and door glass **1** are secured by glass holder **3**.
- Regulator handle **9** turns regulator **8**.
- To allow removal and installation of door glass **1**, lower sash **6** is removable.

Wiper and Washer

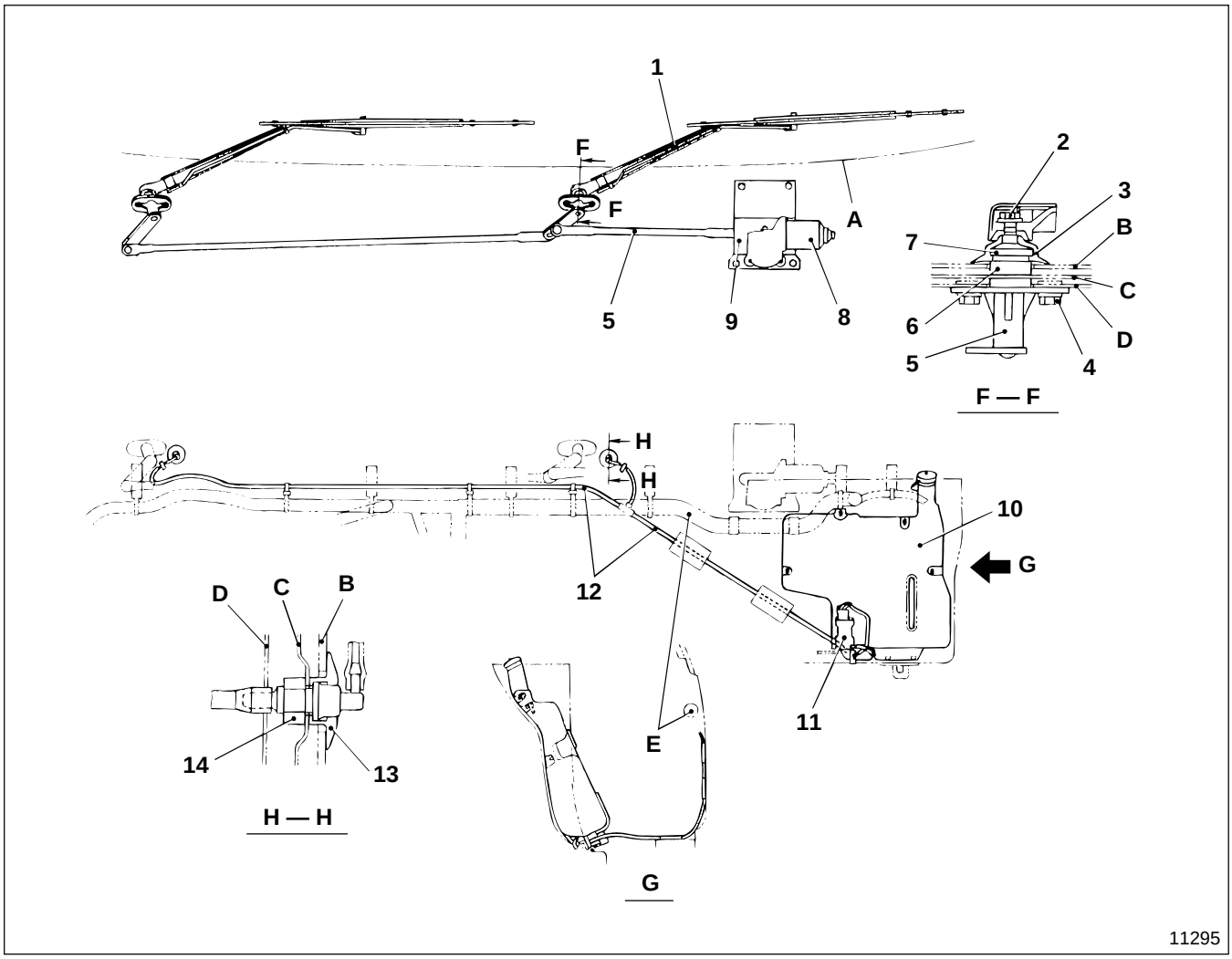

1 Wiper arm and blade assembly
2 Nut
3 Pivot cap
4 Nut
5 Wiper link assembly
6 Packing washer
7 Nut
8 Wiper motor
9 Wiper motor bracket
10 Washer tank
11 Washer motor
12 Washer hose
13 Hose joint
14 Nut

A : Weatherstrip ends
B : Front garnish
C : Front panel
D : Front rail
E : Cab harness

The viewpoint of this illustration is from inside the cab.

Wiper and Washer Electric Circuit

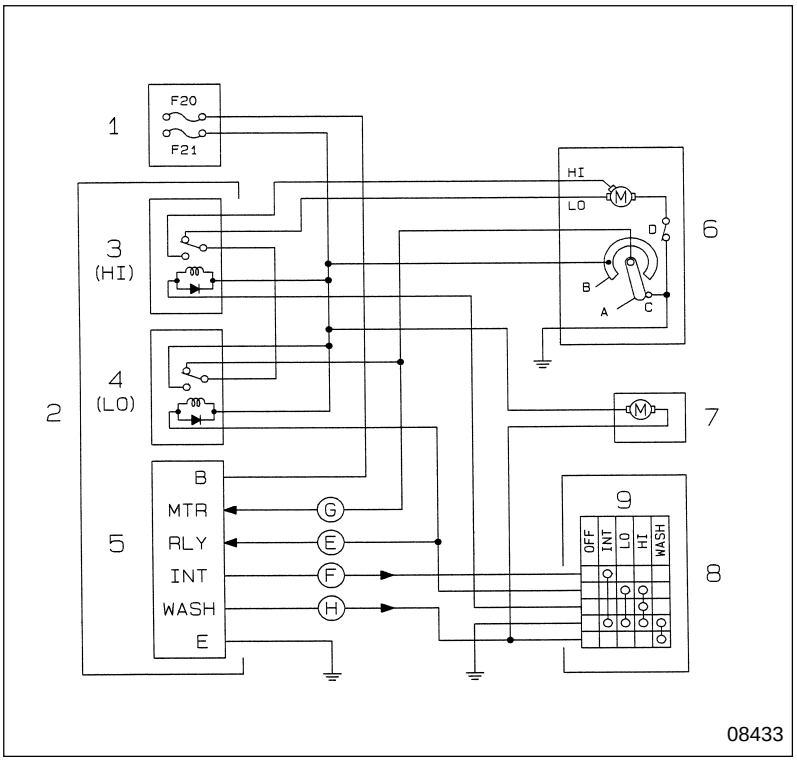

1 Fuse box
2 Relay box
3 Wiper relay (HIGH)
4 Wiper relay (LOW)
5 Multipurpose timing control unit
6 Wiper motor
7 Washer motor
8 Combination switch
9 Wiper and washer switch

Wiper motor **6** section
A : Cam
B : Plate
C : Contact point
D : Circuit breaker

Ⓔ : Wiper motor driving signal (when wiper operating intermittently)
Ⓕ : Intermittent switch signal (when wiper operating intermittently)
Ⓖ : Cam signal (when wiper stops)
Ⓗ : Washer switch signal

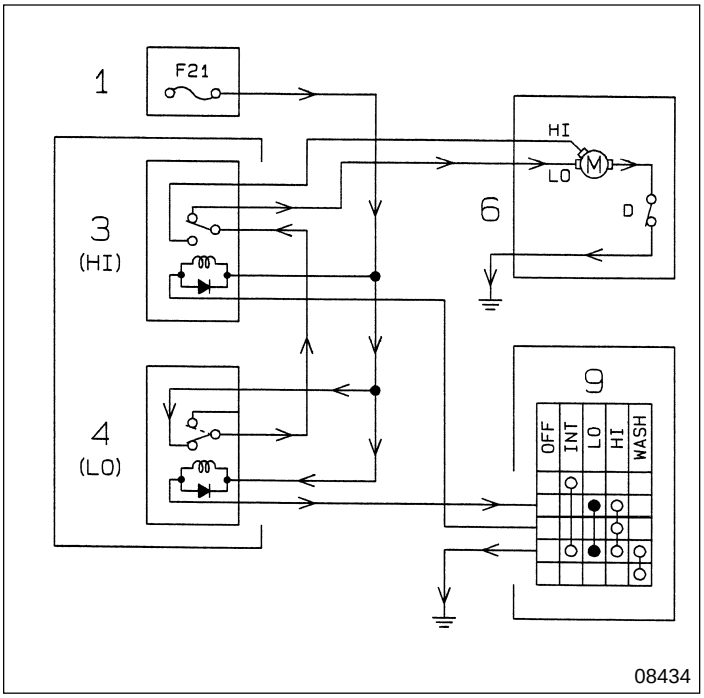

When wiper operating at LOW speed

Position of wiper and washer switch **9** : LO
- **1** (F21) → **4** (coil) → **9** (LO) → Ground
- **1** (F21) → **4** (contact point) → **3** (contact point) → **6** (LO) → **6** (D) → Ground
  Wiper motor **6** rotates at low speed.

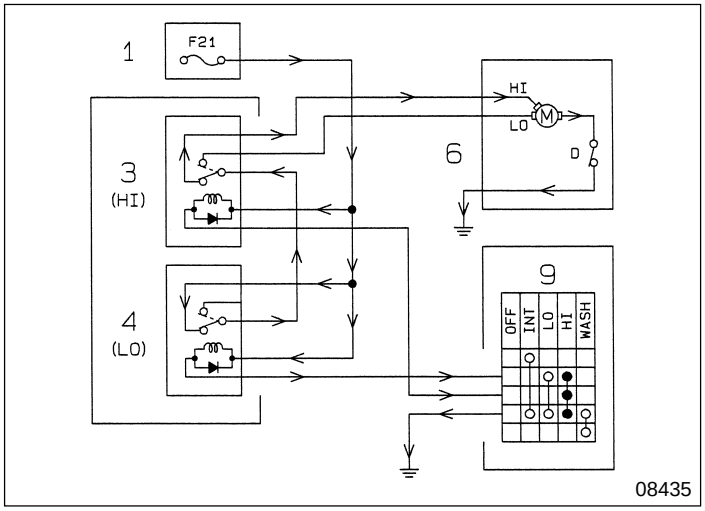

When wiper operating at HIGH speed

Position of wiper and washer switch **9** : HI

- **1** (F21) → **3** (coil) → **9** (HI) → Ground
  → **4** (coil) → **9** (HI) → Ground
- **1** (F21) → **4** (contact point) → **3** (contact point) → **6** (HI) → **6** (D) → Ground
  Wiper motor **6** rotates at high speed.

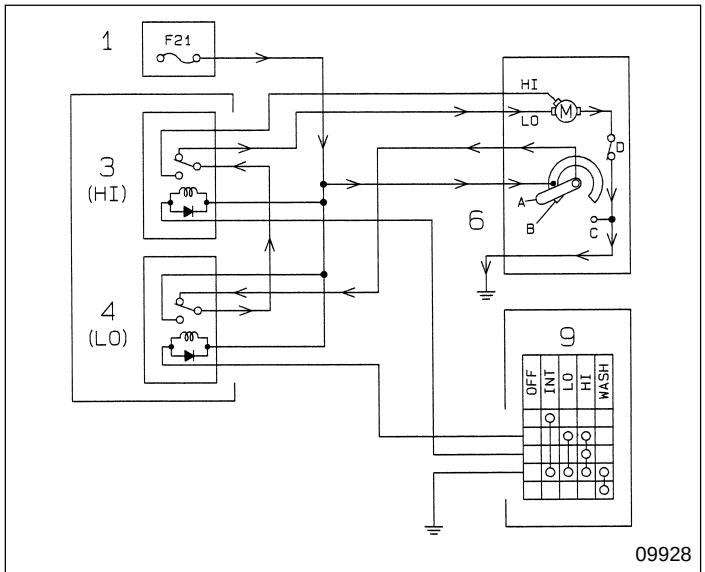

When wiper stops

Position of wiper and washer switch **9** : OFF

- **1** (F21) → **6** (B) → **6** (A) → **4** (contact point) → **3** (contact point) → **6** (LO) → **6** (D) → Ground
  Wiper motor **6** continues to rotate at low speed.

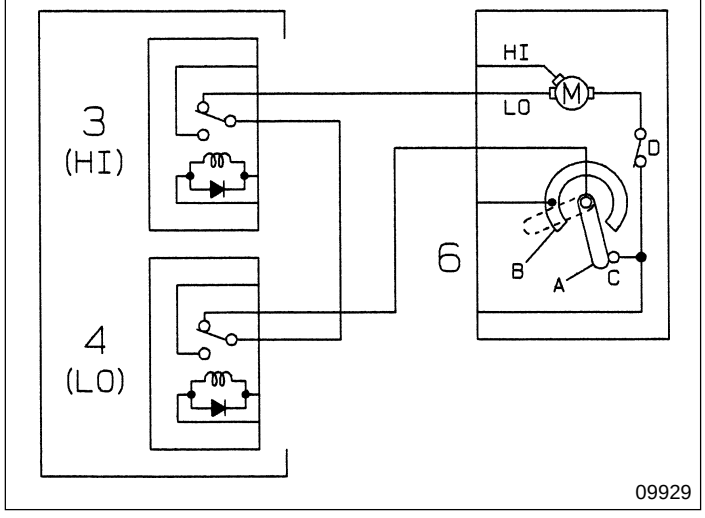

- When cam **A** is separated from plate **B** by rotation of wiper motor **6**, the current to the motor is cut off.
- Wiper motor **6** continues to rotate due to the inertia force of the motor and the wiper link.
- When cam **A** of wiper motor **6** makes contact with contact point **C**, the following ungrounded circuit is formed.
  → **6** (LO) → **6** (D) → **6** (C) → **3** (contact point) ← **4** (contact point) ← **6** (A) ←
- Wiper motor **6** stops by dynamic (electric) braking because of this circuit.

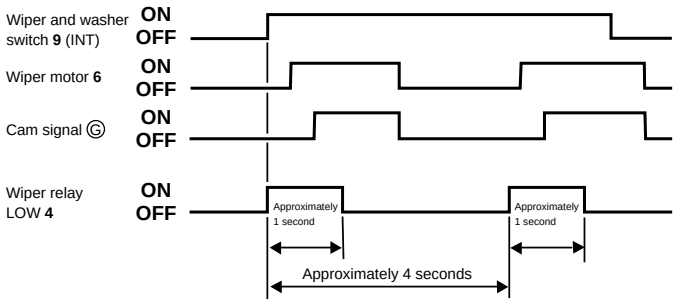

08654

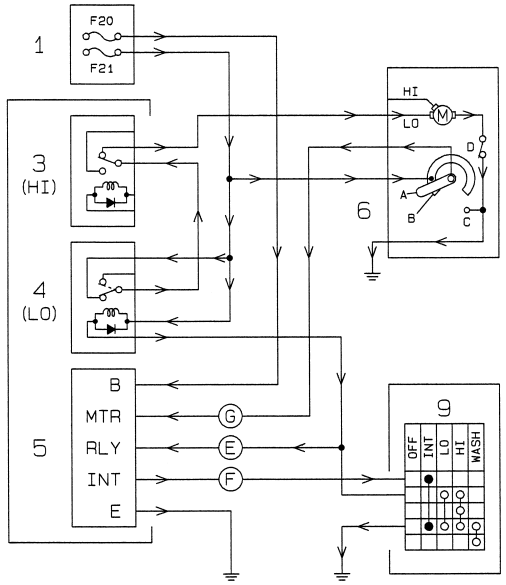

09931

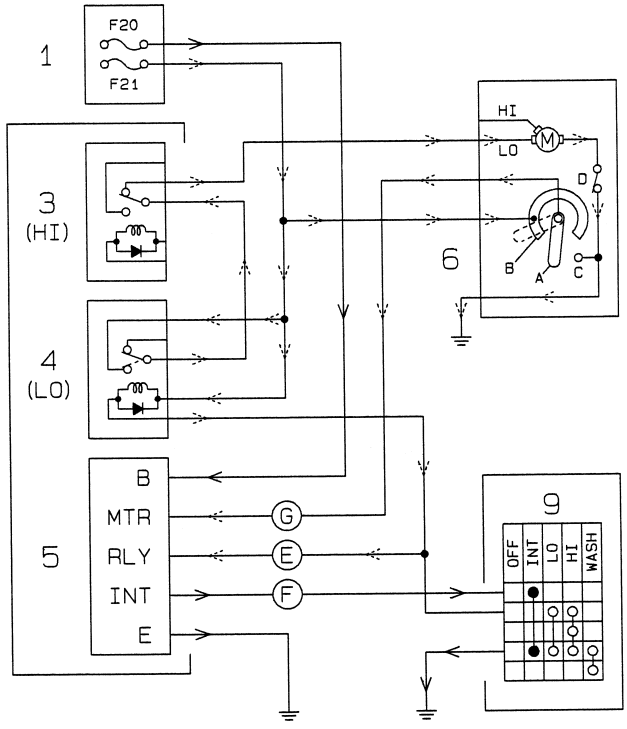

09932

When wiper operating intermittently

Operation mode with multipurpose timing control unit **5**

Position of wiper and washer switch **9** : INT

- **1** (F20) → **5** (B) → Ground
- **5** (INT) —Ⓕ→ **9** (INT) → Ground
- Multipurpose timing control unit **5** sends wiper motor driving signal Ⓔ when it receives intermittent switch signal Ⓕ.
  1 (F21) → **4** (coil) —Ⓔ→ 5 (RLY)
- **1** (F21) → **4** (contact point) → **3** (contact point) → **6** (LO) → **6** (D) → Ground
  Wiper motor **6** rotates at low speed.
- Multipurpose timing control unit **5** sends wiper motor driving signal Ⓔ, then sends cam signal Ⓖ.
  1 (F21) → **6** (B) → **6** (A) –Ⓖ→ **5** (MTR)

- When cam **A** of wiper motor **6** is separated from plate **B**, cam signal Ⓖ turns OFF.
- When cam signal Ⓖ is turned OFF, multipurpose timing control unit **5** turns wiper motor driving signal Ⓔ OFF for specified time.
  The illustrated part ⊸ of the circuit turns OFF.
- Wiper motor **6** stops. 📖 Gr 42-8
- After specified time has passed, multipurpose timing control unit **5** sends wiper motor driving signal Ⓔ again.
- Wiper motor **6** rotates at low speed.

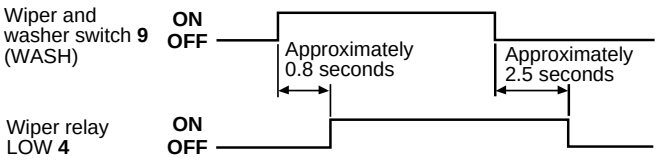

11125

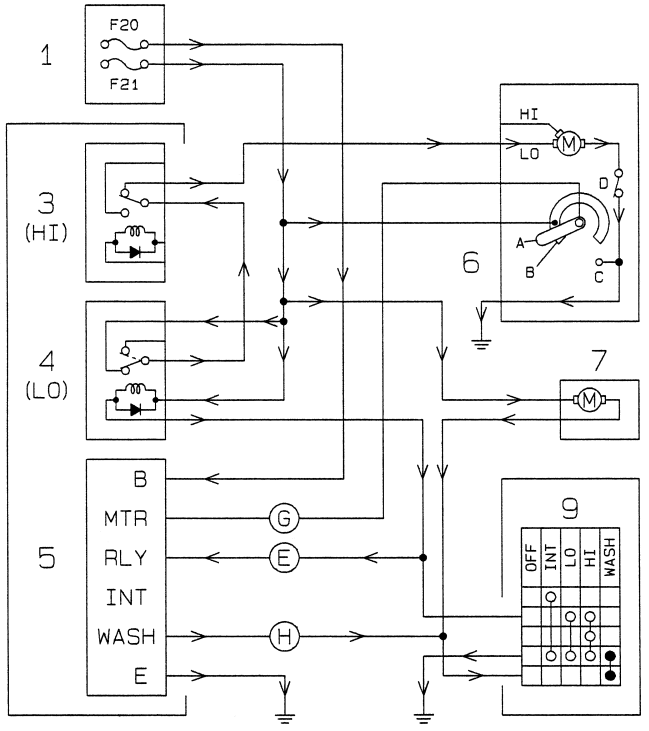

11126

When washer operating

Operation mode with multipurpose timing control unit **5**

Position of wiper and washer switch **9** : WASH

- **1** (F20) → **5** (B) → Ground
- **1** (F21) → **7** → **9** → Ground
  5 (WASH) - Ⓗ

When washer motor **7** operates to spray washer fluid, multipurpose timing control unit **5** transmits washer switch signal Ⓗ.

- 1 (F21) → **4** (coil) —Ⓔ→ **5** (RLY)
  Washer switch signal Ⓗ makes multipurpose timing control unit **5** input wiper motor drive signal Ⓔ.
- 1 (F21) → **4** (contact point) → **3** (contact point)

  → **6** (LO) → **6** (D) → Ground
  Wiper motor **6** operates at LOW speed.
- When wiper and washer switch **9** is turned to OFF, washer motor **7** stops.
- Then, washer switch signal Ⓗ is turned off and multipurpose timing control unit **5** turns off wiper motor drive signal Ⓔ after specified time.
- Wiper motor **6** automatically stops.
  P42-8

Emergency Locking Retractor (ELR) Type Seat Belt

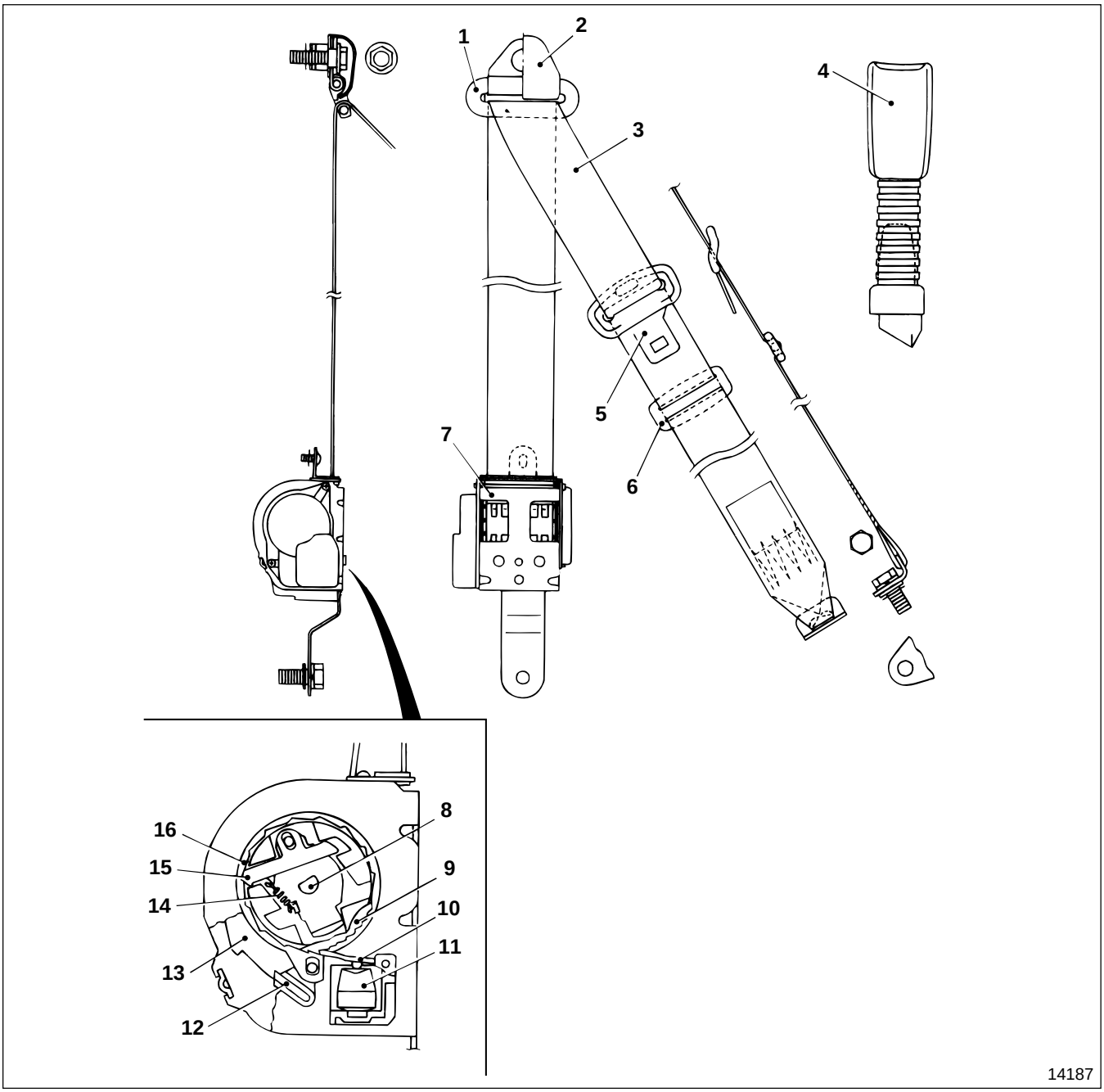

1 Sash guide
2 Cover
3 Webbing
4 Buckle assembly
5 Tongue plate
6 Tongue stopper
7 Emergency locking retractor assembly
8 Spindle
9 Locking gear
10 Mechanism lever
11 Mechanism weight
12 Pawl
13 Ratchet gear
14 Sensor spring
15 Lock arm
16 Clutch

CAUTION⚠

Do not disassemble emergency locking retractor assembly 7, or malfunctions might occur.

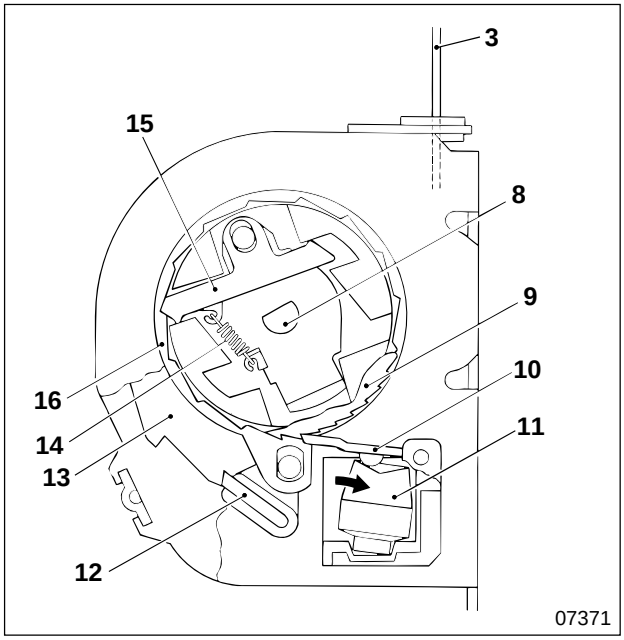

Webbing detecting lock

- When the vehicle is subjected to a sudden impact, such as a crash, webbing **3** retracts according to the movement of passengers, and spindle **8** rotates.
- As the rotation of spindle **8** is higher than the specified value, the repercussive force of sensor spring **14** can no longer retain lock arm **15**. Then, the arm is pulled out from the specified position and is locked by clutch **16**.
- If spindle **8** further rotates, clutch **16** lifts pawl **12** to lock with ratchet gear **13**, making spindle rotation impossible.

Body detecting lock

- When the body is tilted excessively, mechanism weight **11** is tilted, engaging mechanism lever **10** with locking gear **9**, locking it.
- If spindle **8** further rotates, clutch **16** operates as described above, and the spindle cannot rotate.

Cab as a Whole

Possible causes / Symptoms		Cab shimmy (pitching and rolling vibration)	Cab or steering wheel high-frequency vibration (above 20 Hz) or noise	Cab cannot be tilted up	Cab cannot be locked to rear mounting post	Cab tilt warning lamp does not light	Cab tilt warning lamp does not go out	Remarks
Cab-related	Cab mounting loose or play	○						
	Front rubber, rear rubber deteriorated		○					
	Cab mounted incorrectly		○					
	Link assembly from anchor hook does not release			○				
	L-lever release faulty			○				
	Torsion bar damaged or fatigued			○				
	Torsion bar arm installation position incorrect			○				
	Link assembly not hooked to anchor hook				○			
	Link assembly contact with side cushion incorrect				○			
	Cab tilt lock switch adjusted incorrectly					○	○	
	Cab tilt lock switch faulty					○	○	
	Cab tilt warning lamp bulb burnt-out					○		
	Fuse, high-current fuse blown					○		
	Wiring broken or connection faulty					○		
Engine-related	Crossed axes angle of propeller shaft excessive due to increased tilt caused by deteriorated engine mounting		○					
	Engine installation faulty		○					Gr 10
	Intake and exhaust system installation faulty		○					
Transmission-related	Transmission installation faulty		○					Gr 22, 23
Propeller shaft-related	Propeller shaft run-out excessive		○					
	Universal joint worn excessively		○					
	Slip yoke joint spline play		○					
	Center bearing play excessive		○					Gr 25
	Crossed axes angle of mounting dimension excessive due to deteriorated center bearing cushion rubber, etc.			○				
	Crossed axes angle of propeller shaft excessive due to increased tilt of drive axis caused by overloading		○					

TROUBLESHOOTING

Possible causes	Symptoms	Cab shimmy (pitching and rolling vibration)	Cab or steering wheel high-frequency vibration (above 20 Hz) or noise	Cab cannot be tilted up	Cab cannot be locked to rear mounting post	Cab tilt warning lamp does not light	Cab tilt warning lamp does not go out	Remarks
Front axle-related	Axle seat resonance	○						Gr 26
Rear axle-related	Reduction gear engaged incorrectly		○					Gr 27
	Differential gear engaged incorrectly		○					
Wheel and tire-related	Wheel and tire run-out excessive	○						Gr 31
	Wheel and tire unbalanced	○						
	Size and kinds of tire unequal	○						
	Wheel mounting surface warped	○						
Front suspension-related	Leaf spring friction between leaves excessive	○						Gr 33
Brake-related	Brake drum unbalanced	○						Gr 35
	Brake drum eccentric	○						
	Rotor of disc brake eccentric	○						

Door Lock

Symptoms / Possible causes	Door does not shut completely	Door does not lock when door look knob is pressed	Door does not lock when key is turned	Door does not open using outside door handle	Door does not open using inside door handle	Inside door handle self-return poor	Door and cab interference	Remarks
Door installation faulty	○						○	
Striker installation faulty	○							
Door latch lock faulty	○	○	○	○	○			
Door latch rod deformed		○			○			
Door latch rod removed		○	○		○			
Door latch rod obstructed						○		
Door lock cylinder deformed			○					
Left side outside door handle faulty				○				
Inside door handle installation faulty					○			
Inside door handle spring fatigued						○		

TROUBLESHOOTING

Wiper and Washer

Symptoms / Possible causes	Wiper doe not work	Wiper does not stop	Wiper intermittent operation does not work	Wiper blade stop position incorrect	Wiper operation inadequate	Noise during wiper operation	Washer motor does not work	Washer fluid jetting insufficient	Washer fluid does not jet	Remarks
Wiper motor faulty	○	○		○		○				
Washer motor faulty							○	○	○	
Wiper and washer switch faulty	○	○	○				○			
Multipurpose timing control unit faulty			○							Gr 54
Wiper relay faulty	○						○			
Fuse, high-current fuse blown	○						○			
Wiring broken or connection faulty	○		○				○		○	
Wiper motor crank arm set position faulty				○						
Wiper link and wiper arm connection faulty						○				
Wiper blade faulty					○	○				
Wiper arm faulty					○					
Washer hose twisted								○		
Washer hose connected incorrectly									○	
Washer nozzle clogged								○	○	
Washer fluid insufficient									○	

Adjustment of Cab Tilt

Ⓣ Tightening torque

Unit : N·m {lbf.ft, kgf·m}

Location	Parts to be tightened	Tightening torque	Remarks
1	Lock nut (Anchor hook mounting)	83 to 98 {61 to 72, 8.5 to 10.0}	—
4	Bolt (Lock handle mounting)	29 to 39 {22 to 29, 3.0 to 4.0}	—

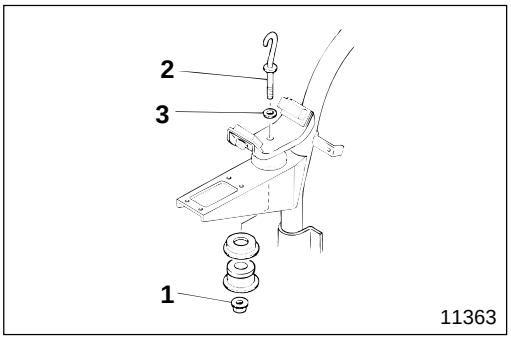

(1) Adjustment of lock handle operating force

Adjust the lock handle operating force by increasing or decreasing the number of spacers **3** as follows:

1 : Lock nut

2 : Anchor hook

	Number of spacers
Heavy operating force	Increased
Light operating force	Decreased

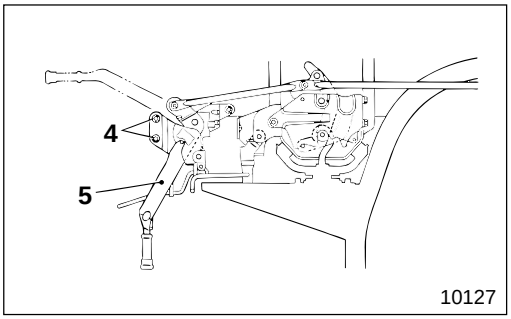

(2) Adjustment for unsmooth latch

If latch operation is not smooth, loosen bolt **4**, and adjust installation of lock handle **5**.

Adjustment of Door Fitting

Ⓣ Tightening torque

Unit : N·m {lbf.ft, kgf·m}

Location	Parts to be tightened	Tightening torque	Remarks
2	Bolt (Upper and lower hinge mounting)	17 to 25 {12 to 19, 1.7 to 2.6}	—
7	Screw (Striker mounting)	8.8 to 14 {6.5 to 10, 0.9 to 1.4}	—

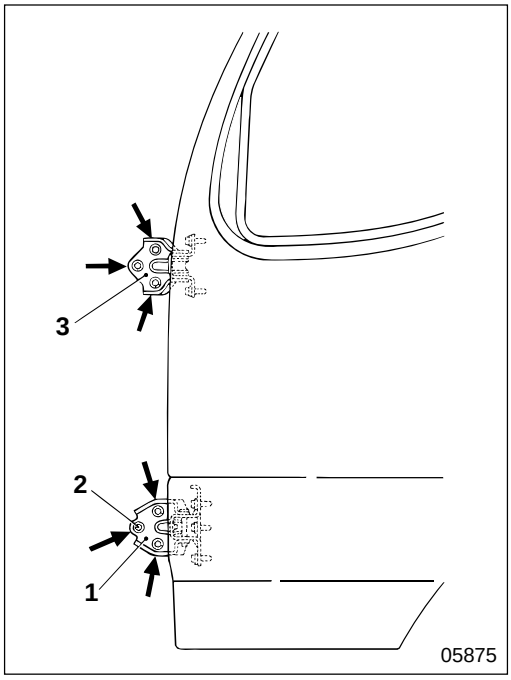

Adjust door fitting at hinge and striker.
(For door fitting dimensions: 🕮 P42-19.)

(1) Adjustment of hinge

For adjustment, use front-side bolt **2** of lower hinge **1** as the reference point.

3 : Upper hinge

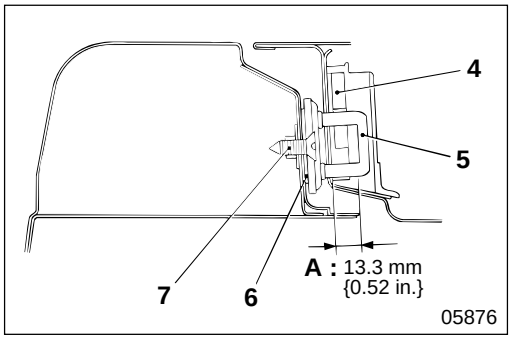

(2) Adjustment of striker

Engagement condition between door lock latch **4** and striker **5** should be adjusted with shim **6** within illustrated range **A**.

7 : Screw

Door Fitting Dimensions

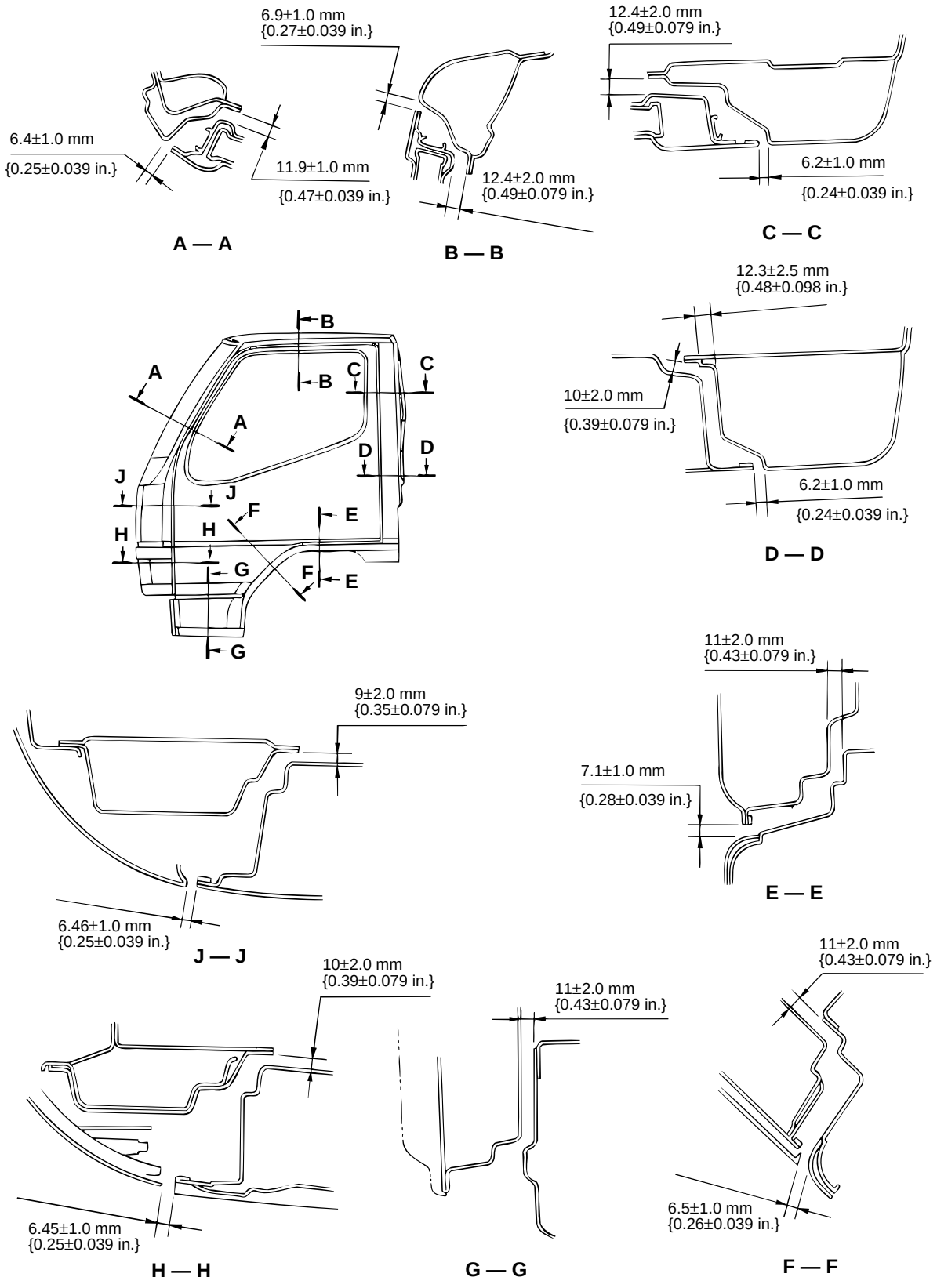

REMOVAL AND INSTALLATION OF CAB

Preliminary Work

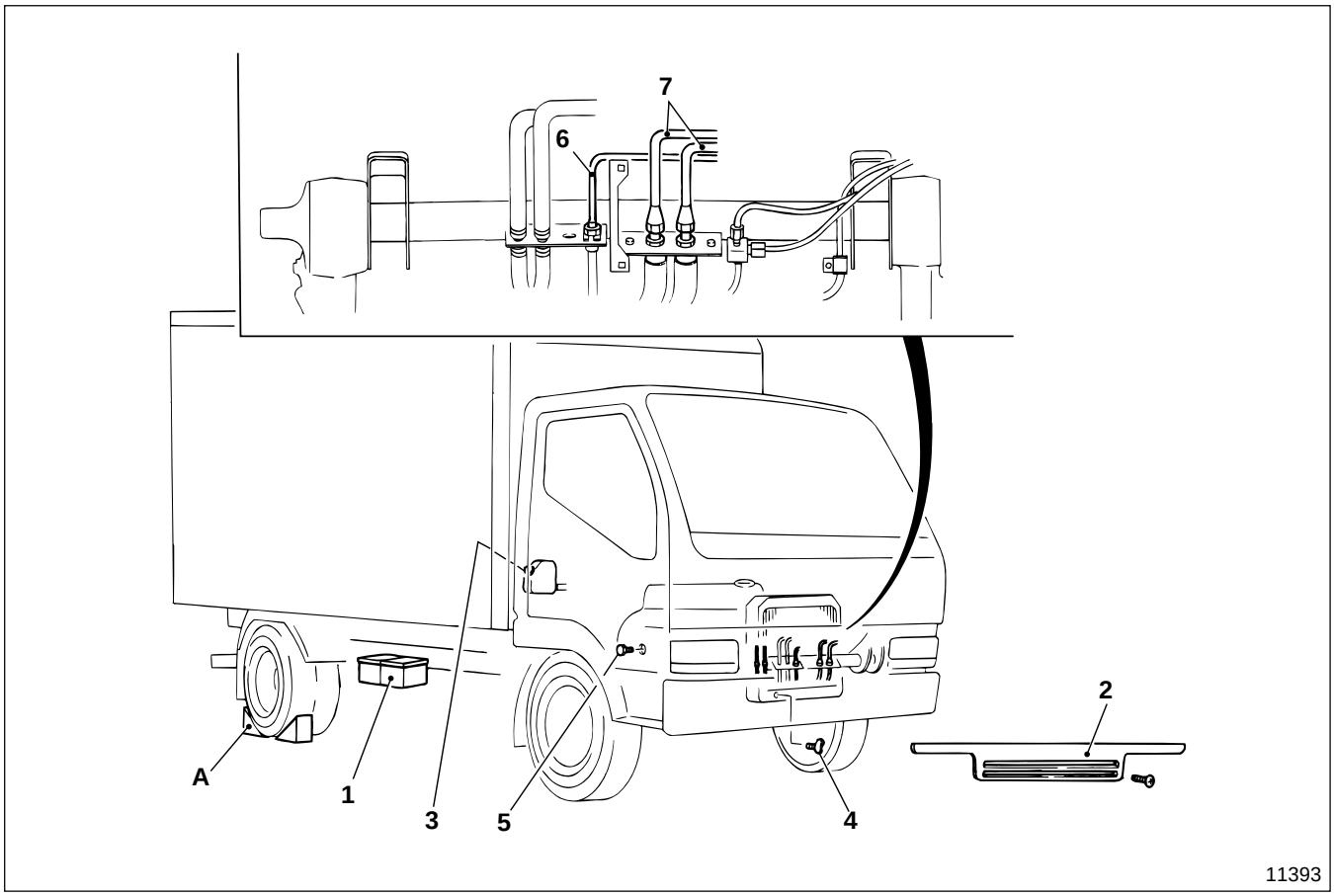

● **Disassembly sequence**

1 Battery (negative terminal) Gr 54
2 Front grille P42-40
3 Pressure cap Gr 14
4 Radiator drain plug Gr 14
5 Crankcase drain plug Gr 14
6 Clutch fluid pipe
< Manual transmission > Gr 21
7 Brake fluid pipe Gr 35

A : Wheel chock

Work items

- Draining, filling, and air bleeding of clutch fluid and brake fluid Gr 21, Gr 35
- Draining, filling, and air bleeding of coolant Gr 14

WARNING

- **Put chocks A securely because the vehicle cannot be maintained at a standstill just by using the parking brake during removal and installation of the cab.**
- **Do not remove chocks A until the entire operation is completed.**

● **Assembly sequence**

Follow the disassembly sequence in reverse.

Work Inside Cab

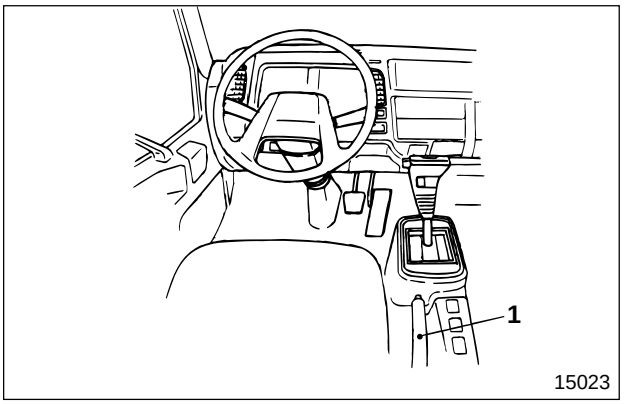

● **Disassembly sequence**

1 Parking brake cable Gr 36

● **Assembly sequence**

Follow the disassembly sequence in reverse.

Work from Front of Cab

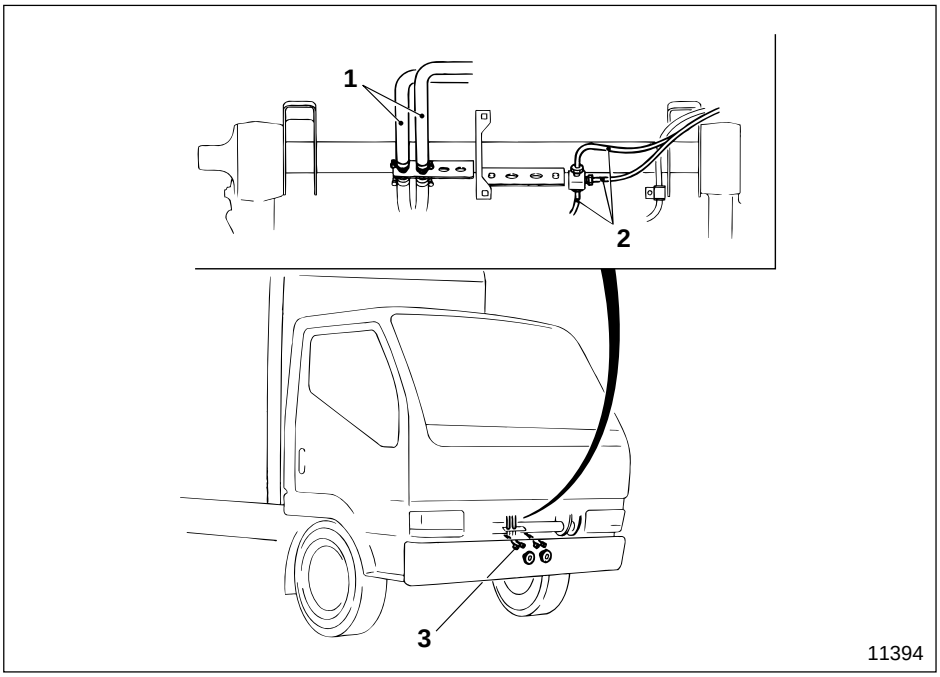

● **Disassembly sequence**

1 Heater hose Gr 55B
2 Air hose Gr 35
3 Horn harness

● **Assembly sequence**

Follow the disassembly sequence in reverse.

REMOVAL AND INSTALLATION OF CAB

Work with Cab Tilted Up

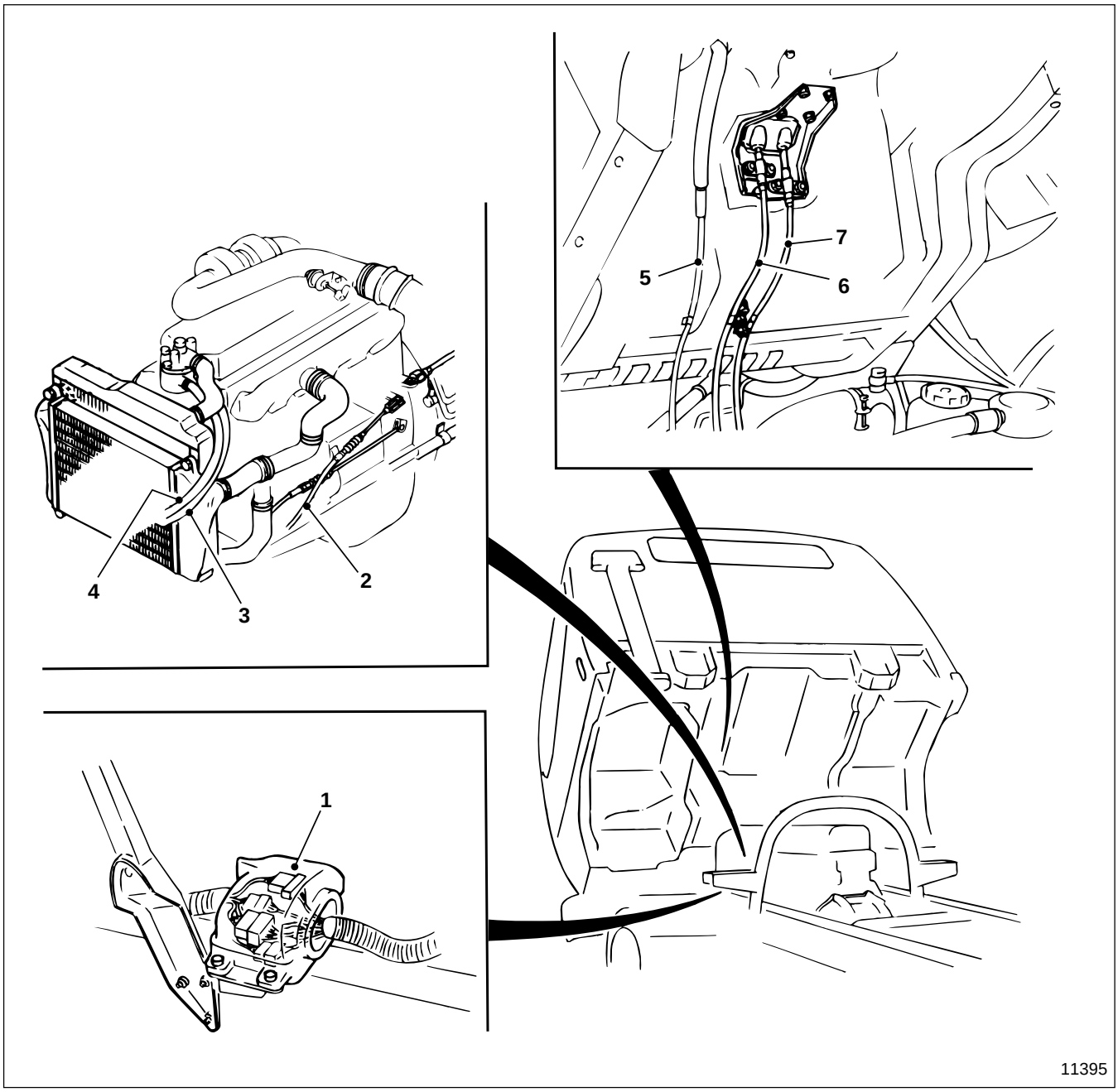

● **Disassembly sequence**

1 Cab harness and chassis harness connection
2 Accelerator control cable Gr 13
3 Heater hose (Engine in)
4 Heater hose (Engine out)
5 Range selector cable < Automatic transmission > Gr 23
6 Shift cable < Manual transmission > Gr 22
7 Selector cable < Manual transmission > Gr 22

● **Assembly sequence**

Follow the disassembly sequence in reverse.

M E M O

REMOVAL AND INSTALLATION OF CAB

Removal and Installation of Tilt Cab Body

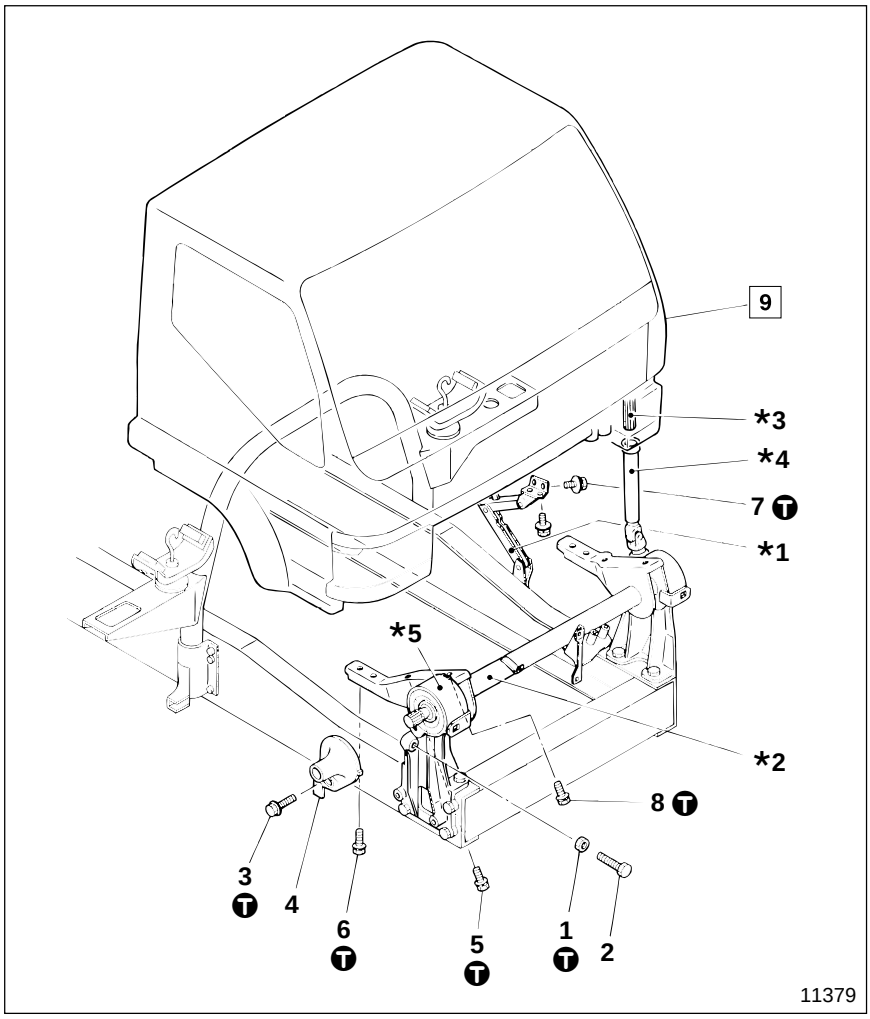

● **Disassembly sequence**

1 Nut
2 Bolt
3 Bolt
4 Anchor lever
5 Bolt
6 Bolt
7 Bolt
8 Bolt
9 Cab assembly

***1** : Cab stay
***2** : Front floor cross member
***3** : Steering yoke
***4** : Steering shaft
***5** : Front cab mounting bracket

● **Assembly sequence**

Follow the disassembly sequence in reverse.

T Tightening torque

Unit : N·m {lbf.ft, kgf·m}

Location	Parts to be tightened	Tightening torque	Remarks
1	Nut (Anchor lever adjusting bolt locking)	59 to 83 {43 to 60, 6 to 8.5}	—
3	Bolt (Anchor lever mounting)	34 to 54 {25 to 40, 3.5 to 5.5}	—
5, 6, 8	Bolt (Front floor cross member mounting)	70 to 95 {51 to 70, 7.1 to 9.7}	—
7	Bolt (Cab stay mounting)	19 to 27 {14 to 21, 1.9 to 2.8}	—

◆ Service procedure

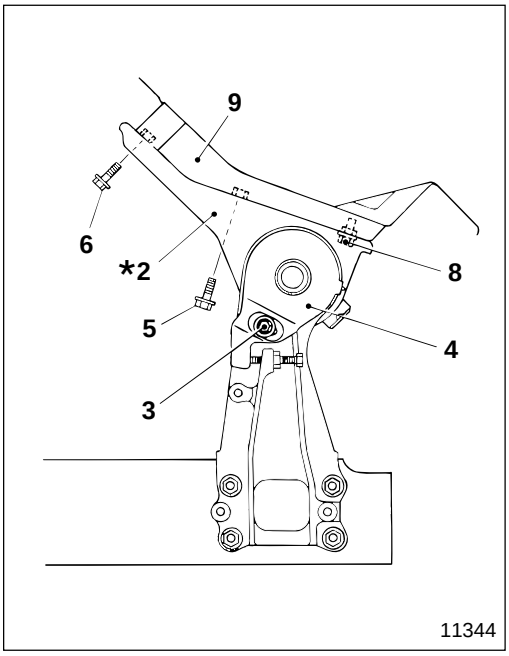

9 **Cab assembly**

[Removal]

- Tilt cab assembly **9** and lock cab stay ***1** securely.
- Remove bolt **3**, and remove anchor lever **4**.
- Of the three bolts that retain front floor cross member ***2**, remove bolts **5**, **6** at rear side, leaving bolt **8** at front side.

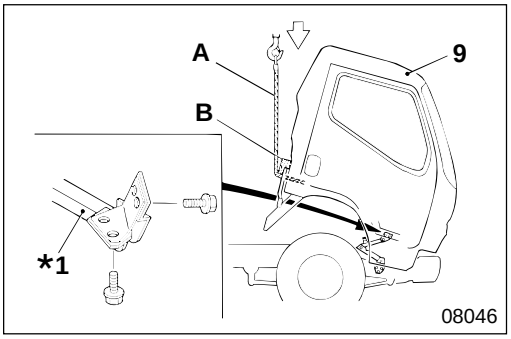

- To separate cab stay ***1** from cab assembly **9**, support the cab securely using crane **A** that is capable of lifting the cab.
  B : Use a wood block for protecting the rear of the cab
- Using crane **A**, lower cab assembly **9** until cab stay ***1** can be removed, then remove it.

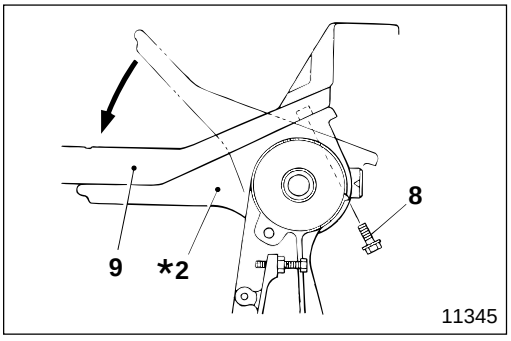

- Fully lower cab assembly **9** to remove remaining bolt **8** that retains front floor cross member ***2**.

REMOVAL AND INSTALLATION OF CAB

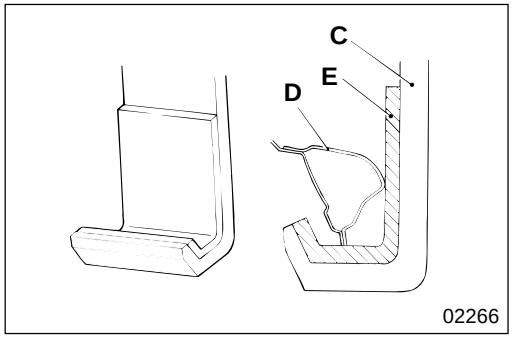

- Set up hoist attachment **C** for the cab as illustrated.

CAUTION

- **Make sure when you set up hoist attachment C that it is capable of lifting cab assembly 9 which weighs approximately 390 kg {860 lb}.**
- **Make sure you install rubber E on hoist attachment C to prevent cab roof D being deformed when the cab is lifted.**

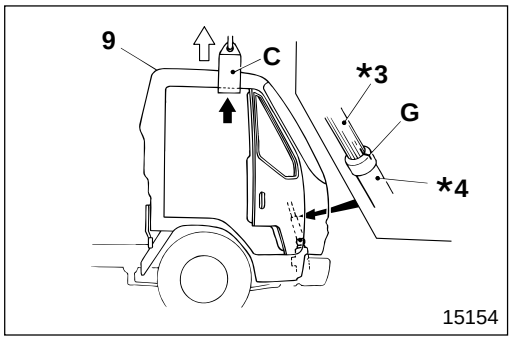

- Mount hoist attachment **C** at center-of-gravity point **F** of cab assembly **9**. Verify the position at which the cab can be lifted horizontally when the cab is lifted slightly.
- Slowly lift cab assembly **9** straight up, and finish lifting when steering yoke ***3** is pulled out from steering shaft ***4**. Make alignment mark **G** before the steering yoke is pulled out from the steering shaft.

WARNING

Never get under cab assembly 9 when it is being lifted.

CAUTION

Make sure, when lifting cab assembly 9, that the wiring harness, cable, hoses, etc. are completely disconnected when the cab is lifted slightly.

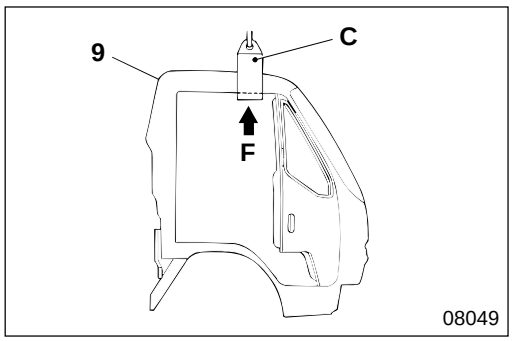

[Installation]

- Mount hoist attachment **C** at center-of-gravity point **F** of cab assembly **9**.

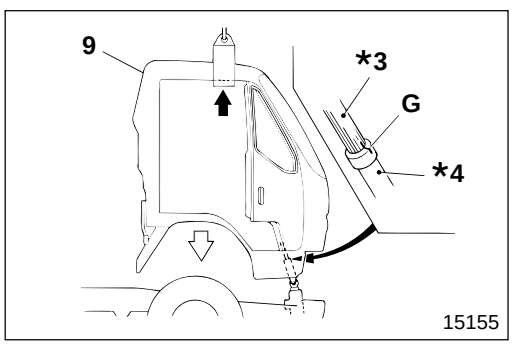

- Slowly lower cab assembly **9** horizontally to insert steering yoke ***3** into steering shaft ***4**, aligning alignment mark **G**.

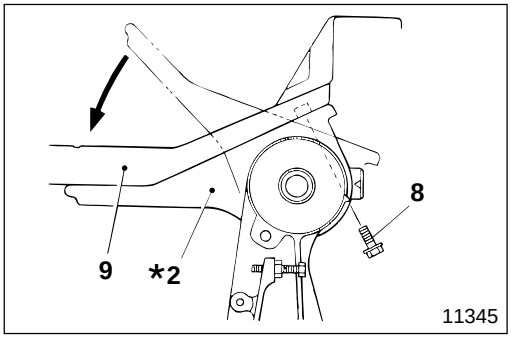

- Slowly lower cab assembly **9** further, and remove hoist attachment **C** after it comes down fully.
- Tighten front bolt **8**, one of the three bolts used for installing front floor cross member ***2**.

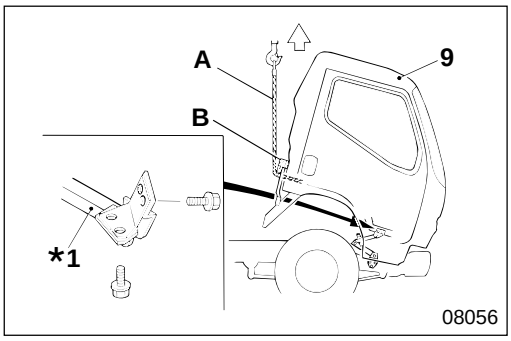

- Securely support cab on crane **A** to tilt cab assembly **9**.
  B : Use a wood block for protecting the rear of the cab
- Using crane **A** tilt cab assembly **9**, and install cab stay ***1**.

WARNING

You must pay close attention to the tilt angle when tilting cab assembly 9 using crane A. It is very dangerous to tilt the cab excessively because it will topple over.

- After installing cab stay ***1**, tilt cab assembly **9** slowly until it is completely tilted, securely lock cab stay, then detach the cab from crane **A**.

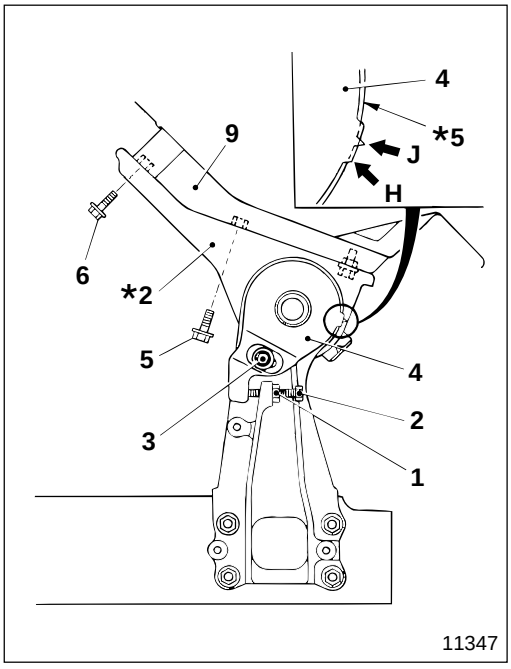

- Tilt cab assembly **9**, and securely lock cab stay ***1**.
- Tighten bolts **5**, **6** to install front floor cross member ***2**.
- Position and install pointer **J** of front cab mounting bracket ***5** in convex area **H** of anchor lever **4** and fix it with bolt **3**.
- Position bolt **2** on anchor lever **4** and lock it with nut **1**.
- After mounting cab assembly **9**, check and adjust the operating force required for the lock handle. P42-17

FRONT CAB MOUNTING

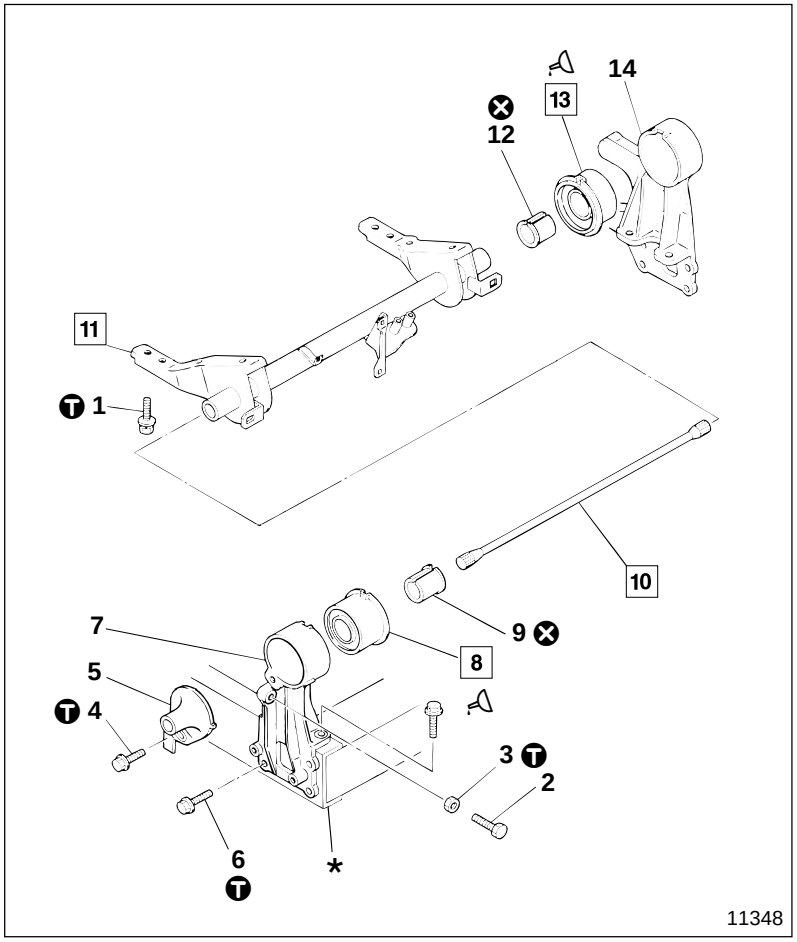

● **Disassembly sequence**

1 Bolt
2 Bolt
3 Nut
4 Bolt
5 Anchor lever
6 Bolt
7 Front cab mounting bracket, RH
8 Front rubber assembly, RH
9 Bushing, RH
10 Torsion bar
11 Front floor cross member assembly
12 Bushing, LH
13 Front rubber assembly, LH
14 Front cab mounting bracket, LH

⊗ : Non-reusable parts
* : Frame

● **Assembly sequence**

Follow the disassembly sequence in reverse.

NOTE

Since the following parts are assembled at the time the cab is mounted, see removal and installation of cab (P42-24) for assembly procedure.
1 : Bolt (Connection of front floor cross member assembly and cab assembly)
2 : Bolt (Adjustment of anchor lever)
3 : Nut
4 : Bolt (Installation of anchor lever)
5 : Anchor lever

Ⓣ Tightening torque

Unit : N·m {lbf.ft, kgf·m}

Location	Parts to be tightened	Tightening torque	Remarks
1	Bolt (Front floor cross member assembly and cab assembly mounting)	70 to 95 {51 to 70, 7.1 to 9.7}	—
3	Nut (Lock of anchor lever adjustment bolt)	59 to 83 {43 to 61, 6 to 8.5}	—
4	Bolt (Anchor lever mounting)	34 to 54 {25 to 40, 3.5 to 5.5}	—
6	Bolt (Front cab mounting bracket mounting)	70 to 85 {51 to 63, 7.1 to 8.7}	—

Lubricant

Location	Points of application	Kinds	Quantity
8, 13	Contact area between front rubber assemblies and front floor cross member assembly	Rubber grease	As required

◆ Service procedure

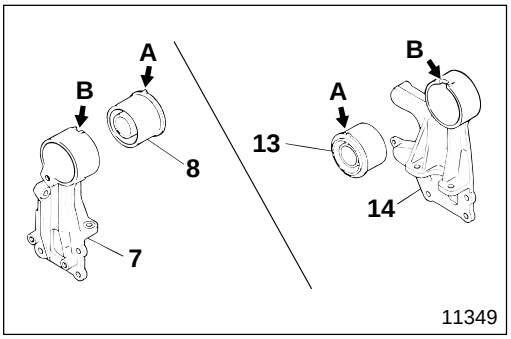

8 **13** **Installation of front rubber assembly**

Install front rubber assembly RH **8** and LH **13** fitting protrusions **A** to the indents **B** of mounting bracket RH **7** and LH **14** respectively.

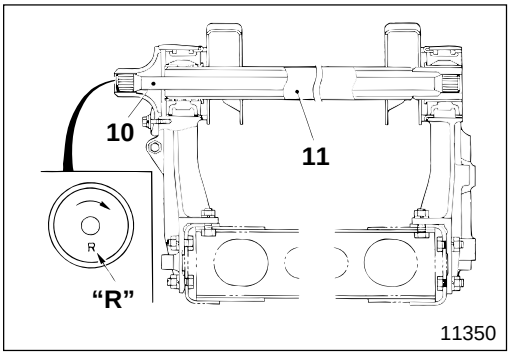

10 **Installation of torsion bar**

Install torsion bar **10** to front floor cross member assembly **11** in the direction as illustrated.

CAUTION⚠

Be sure not to mistake the left side for the right side, when installing torsion bar 10, because the torsion bar will be damaged if its torsion direction is reversed.

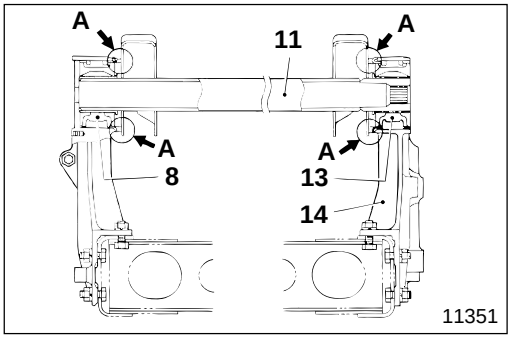

11 **Installation of front floor cross member assembly**

Install front floor cross member assembly **11**, adjusting front cab mounting bracket LH **14** so there is no gap between the front floor cross member assembly and front rubber assembly RH **8** and LH **13** at points **A**.

REAR CAB MOUNTING

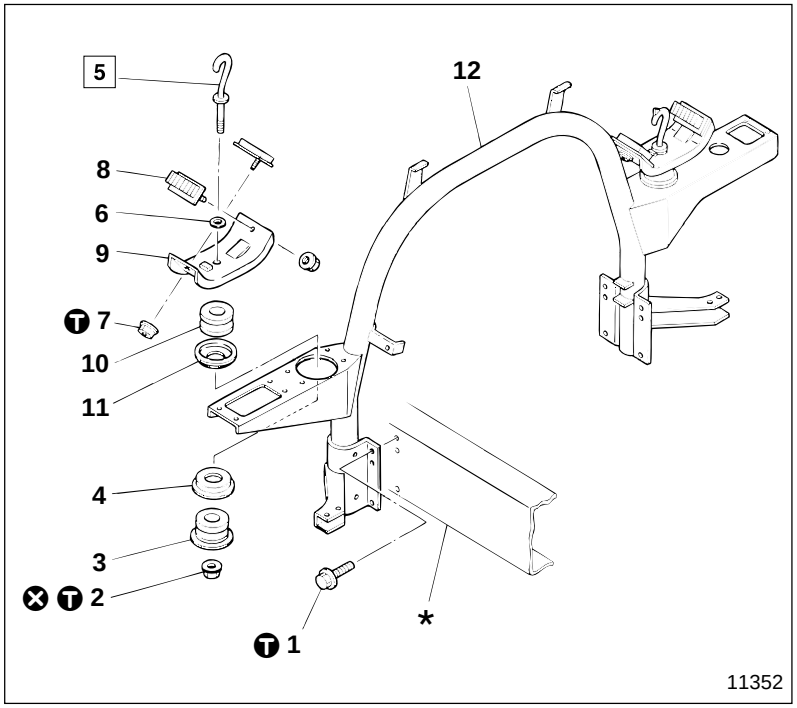

● **Disassembly sequence**

1 Bolt
2 Nut
3 Lower rubber
4 Metal fixture
5 Anchor hook
6 Spacer
7 Nut
8 Side rubber
9 Cab hold bracket
10 Upper rubber
11 Metal fixture
12 Rear mounting post

⊗ : Non-reusable parts
* : Frame

● **Assembly sequence**

Follow the disassembly sequence in reverse.

Ⓣ Tightening torque

Unit : N·m {lbf.ft, kgf·m}

Location	Parts to be tightened	Tightening torque	Remarks
1	Bolt (Rear mounting post mounting)	78 to 105 {58 to 80, 8 to 11}	—
2	Nut (Anchor hook mounting)	83 to 98 {61 to 72, 8.5 to 10.0}	—
7	Nut (Side rubber mounting)	16 to 20 {12 to 14, 1.6 to 2.0}	—

◆ Service procedure

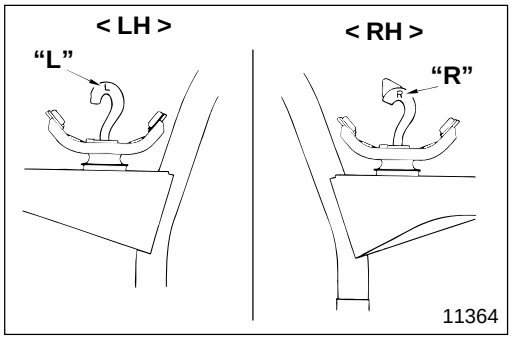

5 **Installation of anchor hook**

L : Left identification mark
R : Right identification mark

M E M O

CAB TILT LINK

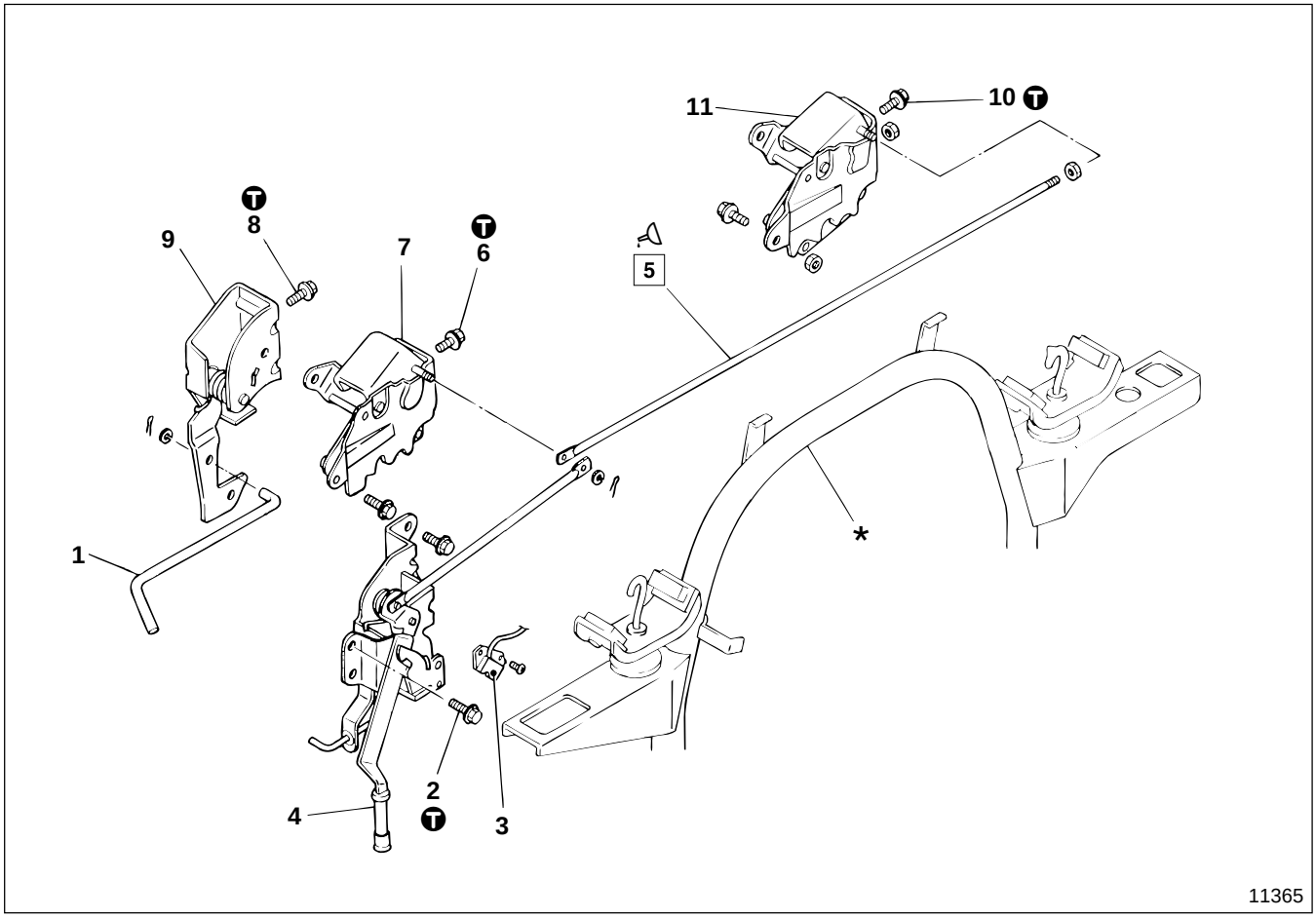

● **Disassembly sequence**

1 L-lever rod
2 Bolt
3 Cab tilt lock switch Gr 54
4 Lock handle assembly
5 Center rod
6 Bolt
7 Link assembly, LH
8 Bolt
9 L-lever assembly
10 Bolt
11 Link assembly, RH

***** : Rear mounting post

● **Assembly sequence**

Follow the disassembly sequence in reverse.

Tightening torque

Unit : N·m {lbf.ft, kgf·m}

Location	Parts to be tightened	Tightening torque	Remarks
2	Bolt (Lock handle assembly mounting)	29 to 39 {22 to 29, 3 to 4}	—
6	Bolt (Link assembly, LH mounting)	29 to 39 {22 to 29, 3 to 4}	—
8	Bolt (L-lever assembly mounting)	29 to 39 {22 to 29, 3 to 4}	—
10	Bolt (Link assembly, RH mounting)	29 to 39 {22 to 29, 3 to 4}	—

Lubricant

Location	Points of application	Kinds	Quantity
5	Connecting area between center rod link assembly, LH and lock handle assembly	Wheel bearing grease [NLGI No2 (Li soap)]	As required

◆ Service procedure

● Inspection after assembly

Make sure that operating force for lock handle assembly **4** is correct. If it is too heavy or too light, adjust. P42-17

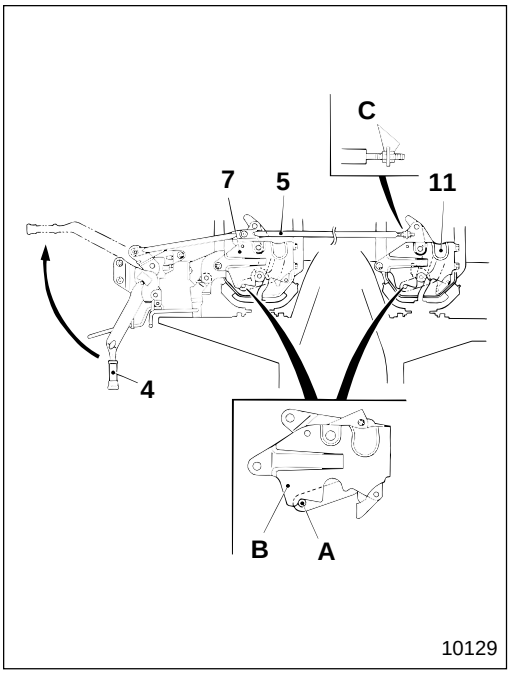

5 **Installation of center rod**

Adjust the length of center rod **5** using lock nut **C** to optimize locking and unlocking of rear cab mounting.

- Raise lock handle assembly **4** all the way, unlocking it.
- Turn and adjust lock nut **C** so that shafts **A** of link assembly LH **7** and RH **11** contact brackets **B**.

CAB TILT LINK

Cab Stay

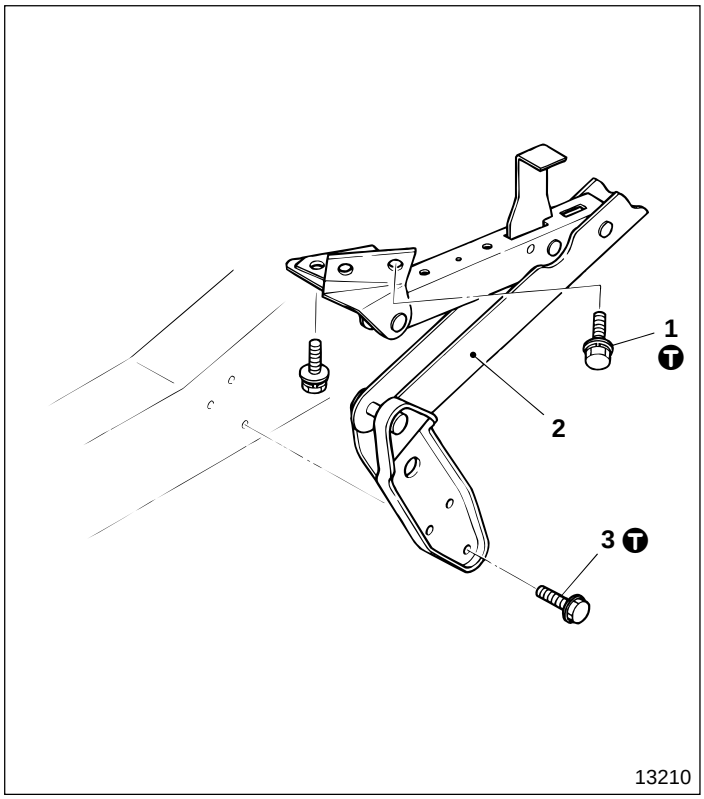

● **Removal sequence**
1 Bolt
2 Cab stay assembly
3 Bolt

WARNING⚠
You must use a hoist to support the cab when you remove the cab stay assembly.

● **Installation sequence**
Follow the removal sequence in reverse.

Ⓣ Tightening torque

Unit : N·m {lbf.ft, kgf·m}

Location	Parts to be tightened	Tightening torque	Remarks
1	Bolt (Cab stay mounting)	19 to 27 {14 to 20, 1.9 to 2.8}	—
3	Bolt (Cab stay mounting)	59 to 78 {43 to 65, 6 to 8}	—

Door Hinge and Striker

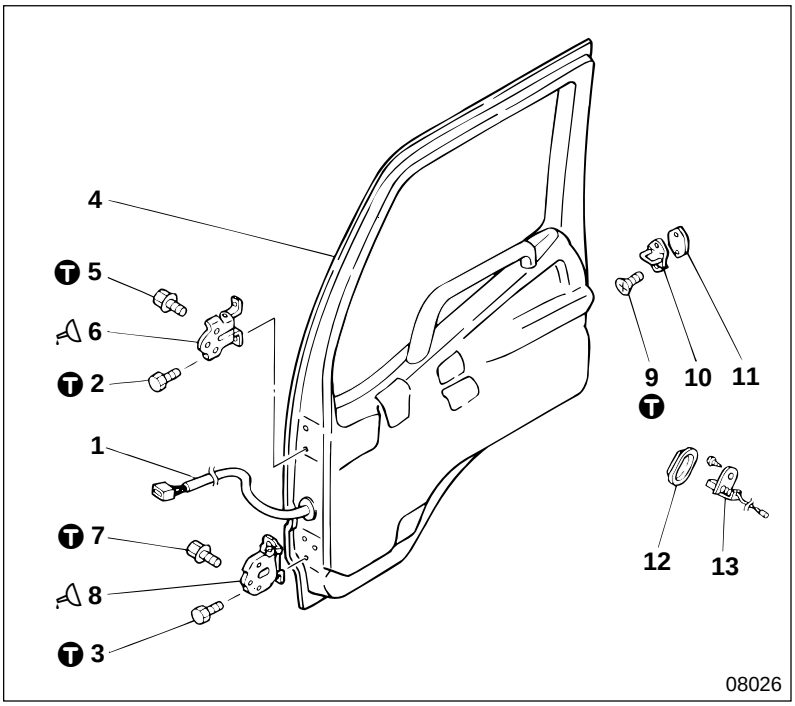

● **Disassembly sequence**

1 Door harness
2 Bolt
3 Bolt
4 Door assembly P42-36
5 Bolt
6 Upper hinge
7 Bolt
8 Lower hinge
9 Screw
10 Striker
11 Shim
12 Grommet
13 Door switch Gr 54

● **Assembly sequence**

Follow the disassembly sequence in reverse.

● **Inspection and adjustment after assembly**

P42-18

NOTE

For adjustment of door fit: P42-18.

T Tightening torque

Unit : N·m {lbf.ft, kgf·m}

Location	Parts to be tightened	Tightening torque	Remarks
2, 3	Bolt (Door assembly mounting)	17 to 25 {12 to 19, 1.7 to 2.6}	—
5	Bolt (Upper hinge mounting)	17 to 25 {12 to 19, 1.7 to 2.6}	—
7	Bolt (Lower hinge mounting)	17 to 25 {12 to 19, 1.7 to 2.6}	—
9	Screw (Striker mounting)	8.8 to 14 {6.5 to 10, 0.9 to 1.4}	—

Lubricant

Location	Points of application	Kinds	Quantity
6	Upper hinge checker pin roller	Chassis grease [NLGI No.1 (Ca soap)]	As required
8	Lower hinge checker pin roller	Chassis grease [NLGI No.1 (Ca soap)]	As required

DOOR

Door Assembly

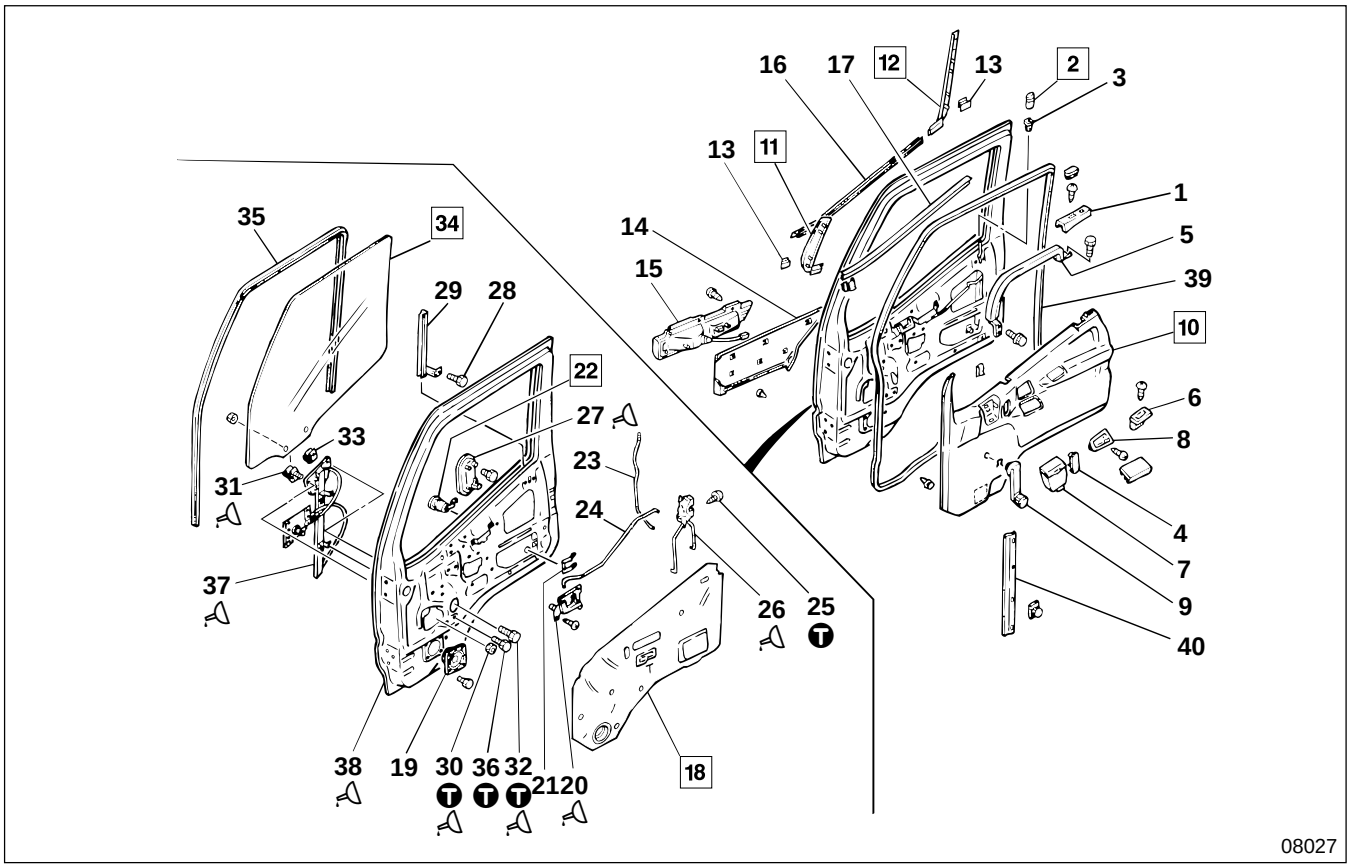

● **Disassembly sequence**

1 Cover
2 Door lock knob
3 Bushing
4 Cover
5 Guard bar
6 Pull handle cover
7 Ashtray
8 Inside handle cover
9 Regulator handle
10 Door trim
11 Front garnish
12 Rear garnish
13 Clip
14 Outer garnish
15 Side combination lamp Gr 54
16 Outer weatherstrip
17 Inner weatherstrip
18 Waterproof cover
19 Speaker
20 Inside handle
21 Clip
22 Door lock cylinder
23 Door lock rod
24 Door opening rod
25 Screw
26 Door lock assembly
27 Outside handle
28 Bolt
29 Lower sash
30 Nut
31 Glass holder
32 Bolt
33 Glass holder
34 Door glass
35 Run channel
36 Bolt
37 Regulator and rail assembly
38 Door panel
39 Weatherstrip
40 Weatherstrip

● **Assembly sequence**

Follow the disassembly sequence in reverse.

NOTE

Service procedure describes details for right side door, the left side door has the same structure.

Tightening torque

Unit : N·m {lbf.ft, kgf·m}

Location	Parts to be tightened	Tightening torque	Remarks
25	Screw (Door lock assembly mounting)	3.9 to 5.9 {2.9 to 4.3, 0.4 to 0.6}	—
30	Nut (Door glass mounting)	6.9 to 11 {5.1 to 8, 0.7 to 1.1}	—
32	Bolt (Door glass mounting)	6.9 to 11 {5.1 to 8, 0.7 to 1.1}	—
36	Bolt (Regulator and rail assembly mounting)	6.9 to 11 {5.1 to 8, 0.7 to 1.1}	—

Lubricant and sealant

Location	Points of application	Kinds	Quantity
20	Turning part of inside handle	Wheel bearing grease [NLGI No.2 (Li soap)]	As required
26	Friction part of door lock assembly	Wheel bearing grease [NLGI No.2 (Li soap)]	As required
27	Friction part of outside handle	Wheel bearing grease [NLGI No.2 (Li soap)]	As required
30	Thread area of nut	LOCTITE DRYLOCK No.203	As required
31, 32	Thread area of bolt	LOCTITE DRYLOCK No.203	As required
37	Friction part of regulator and rail assembly	DYNAMIC GB	As required
38	Door panel and waterproof cover mounting surface	BUTYL TAPE	As required

◆ Service procedure

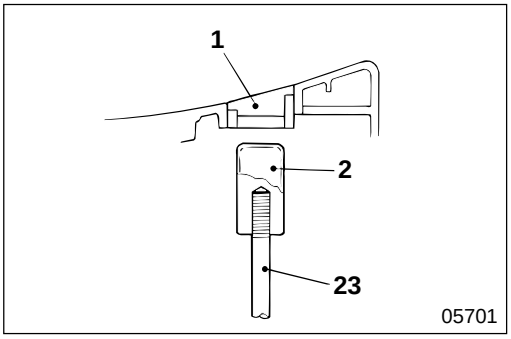

2 **Installation of door lock knob**

- Screw door lock knob **2** onto door lock rod **23** and turn to the right fully.
- Slacken off door lock knob **2** to the left by one or two turns.
- Install cover **1** to prevent door lock knob **2** from turning excessively.

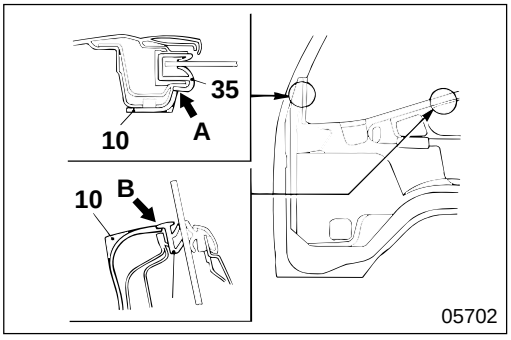

10 **Installation of door trim**

- At front pillar, tap door trim **10** against lip area **A** of run channel **35** .
- In belt line, insert door trim **10** into lip area **B** of inner weatherstrip **17** and install.

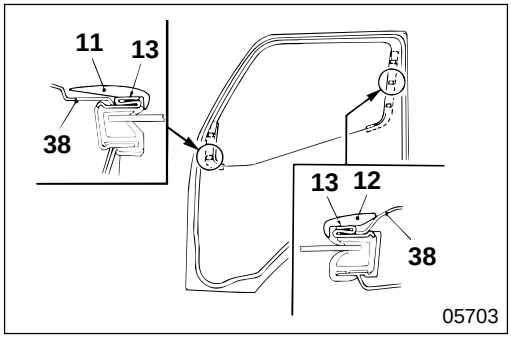

11 **12** **Installation of front garnish and rear garnish**

- Install clips **13** on door panel **38**.
- Install front garnish **11** and rear garnish **12** on clips **13**.

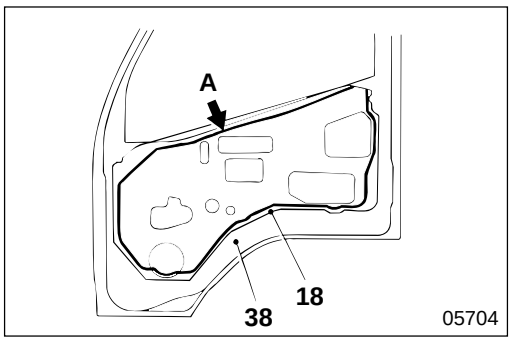

18 **Installation of waterproof cover**

- Apply butyl tape **A** to door panel **38** as illustrated.
- Stick waterproof cover **18** over butyl tape **A**.

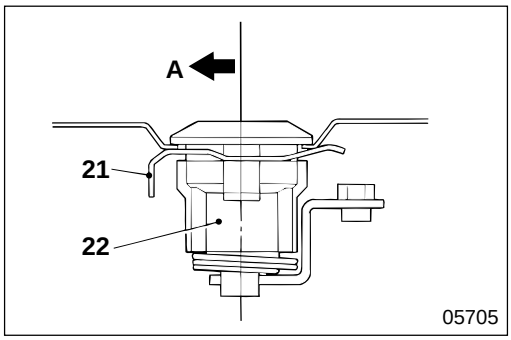

22 **Installation of door lock cylinder**

21 : Clip
A : Front of the vehicle

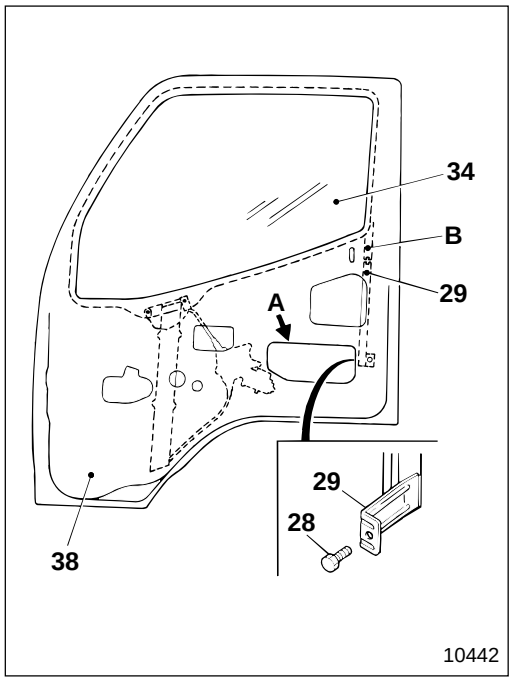

34 **Removal and installation of door glass**

Remove all parts supporting door glass **34** and remove the door glass from the door opening.

- Raise door glass **34** to the upper limit.
- Remove bolt **28** through hole **A** of door panel **38** to remove lower sash **29** which is inserted into upper sash **B**.

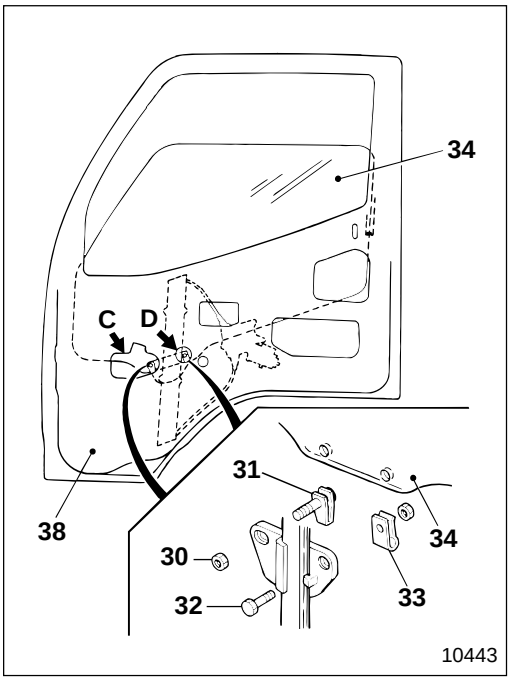

- Lower door glass **34** to the level where nut **30** and bolt **32** can be seen through holes **C** and **D** of door panel **38** respectively.
- Hold door glass **34** with your hands and remove glass holders **31, 33**.
- Remove door glass **34** via the door opening.
- For installation, follow the removal sequence in reverse.

CAB EXTERIOR FITTING

Front Panel

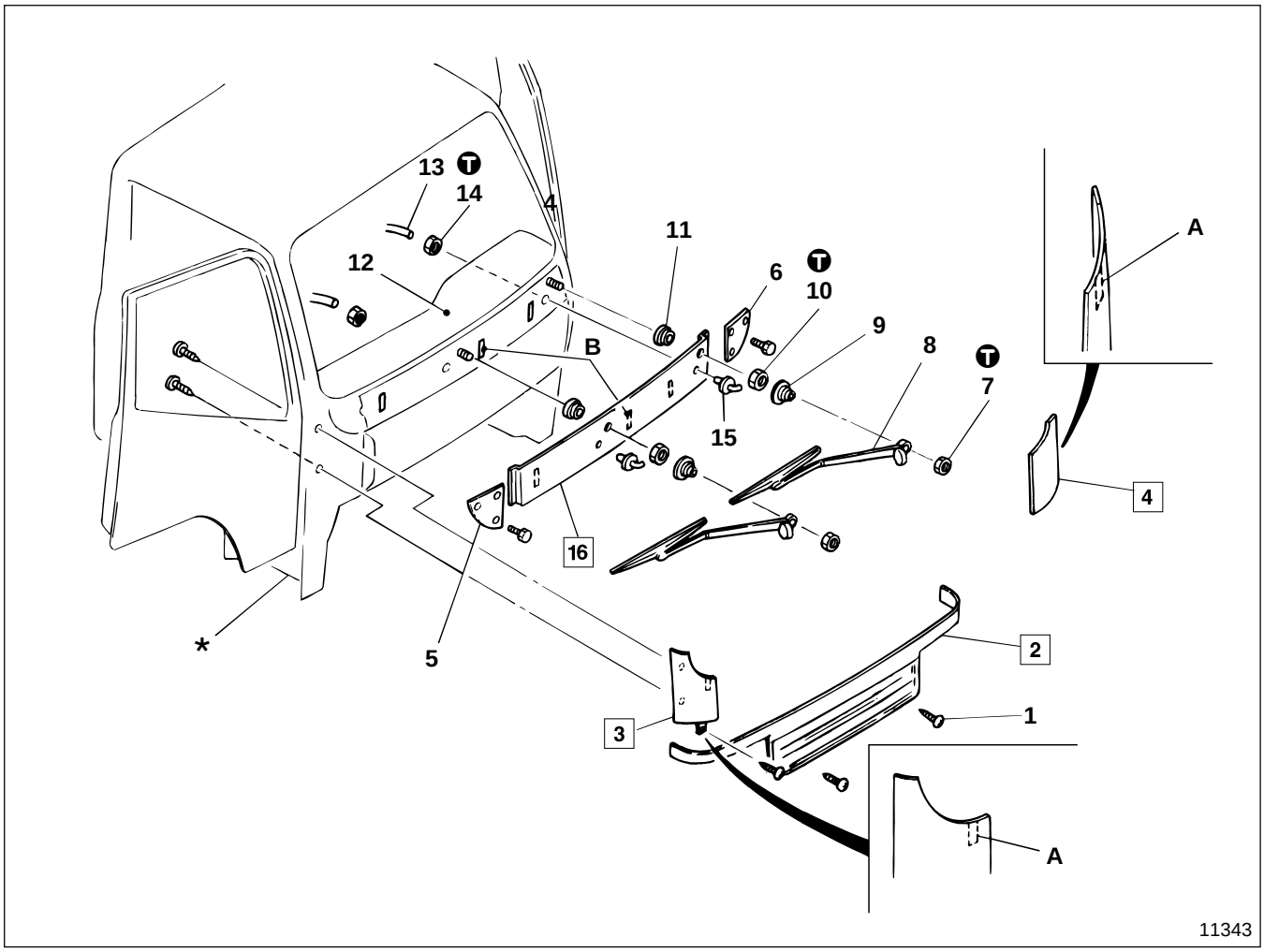

● **Disassembly sequence**

1 Screw
2 Front grille
3 Front side panel, RH
4 Front side panel, LH
5 Side garnish, RH
6 Side garnish, LH
7 Nut
8 Wiper arm and blade assembly 🕮 P42-46
9 Pivot cap
10 Nut
11 Packing washer 🕮 P42-46
12 Instrument panel 🕮 P42-53
13 Washer hose
14 Nut
15 Hose joint
16 Front garnish

***** : Cab assembly
A : Pawl (Front side panel)
B : Magic tape

● **Assembly sequence**

Follow the disassembly sequence in reverse.

Ⓣ Tightening torque

Unit : N·m {lbf.ft, kgf·m}

Location	Parts to be tightened	Tightening torque	Remarks
7	Nut (Wiper arm and blade assembly mounting)	9.8 to 15 {7.2 to 11, 1.0 to 1.5}	—
10	Nut (Packing washer mounting)	14 to 20 {10 to 14, 1.4 to 2.0}	—
14	Nut (Hose joint connecting)	0.59 to 0.88 {0.43 to 0.65, 0.06 to 0.09}	—

◆ Service procedure

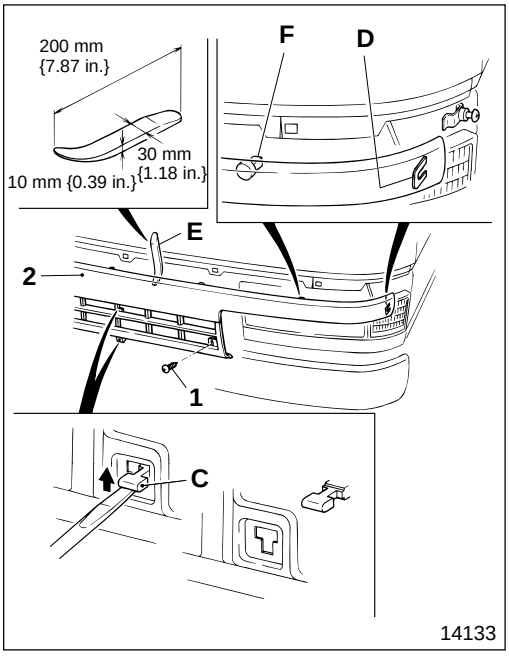

2 **Removal and installation of front grille**

- Remove screws **1** (two points) from front grilles **2**.
- Lift up the ends of clips **C** (two points), located in the center of front grilles **2**, using a screwdriver, and unlock them from the clips.
- Pull out front grilles **2** horizontally, in the vehicle forward running direction, to remove them.

CAUTION

- **Be careful not to apply too much force to front grilles 2, because this would damage them. Be especially careful to avoid applying force to clips D at both sides, support the clips using your hands. If it is hard to remove the front grilles, remove them using nylon jig E as illustrated.**
- **Be careful not to use force when you pull out clips F (five points) from the tops of front grilles 2, because this would damage them.**

- For installation, follow the removal sequence in reverse.

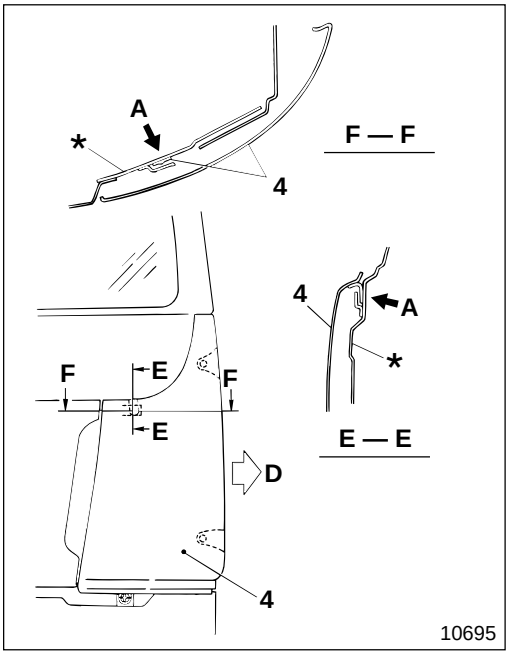

3 **4** **Installation and removal of front side panels RH, LH**

- Move front side panels RH **3**, LH **4** to the outside of the vehicle to remove them from the cab assembly *.
  A : Pawl
  (The illustration shows front side panel LH **4**.)
- For installation, follow the removal sequence in reverse.

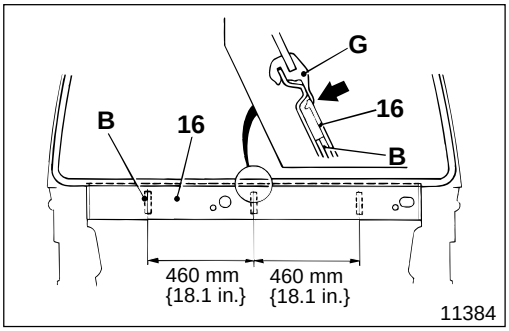

16 **Installation of front garnish**

NOTE

When installing front garnish 16, be careful not to catch weather-strip G of the windshield.

B : Magic tape (3 points)

CAB EXTERIOR FITTING

Step and Fender

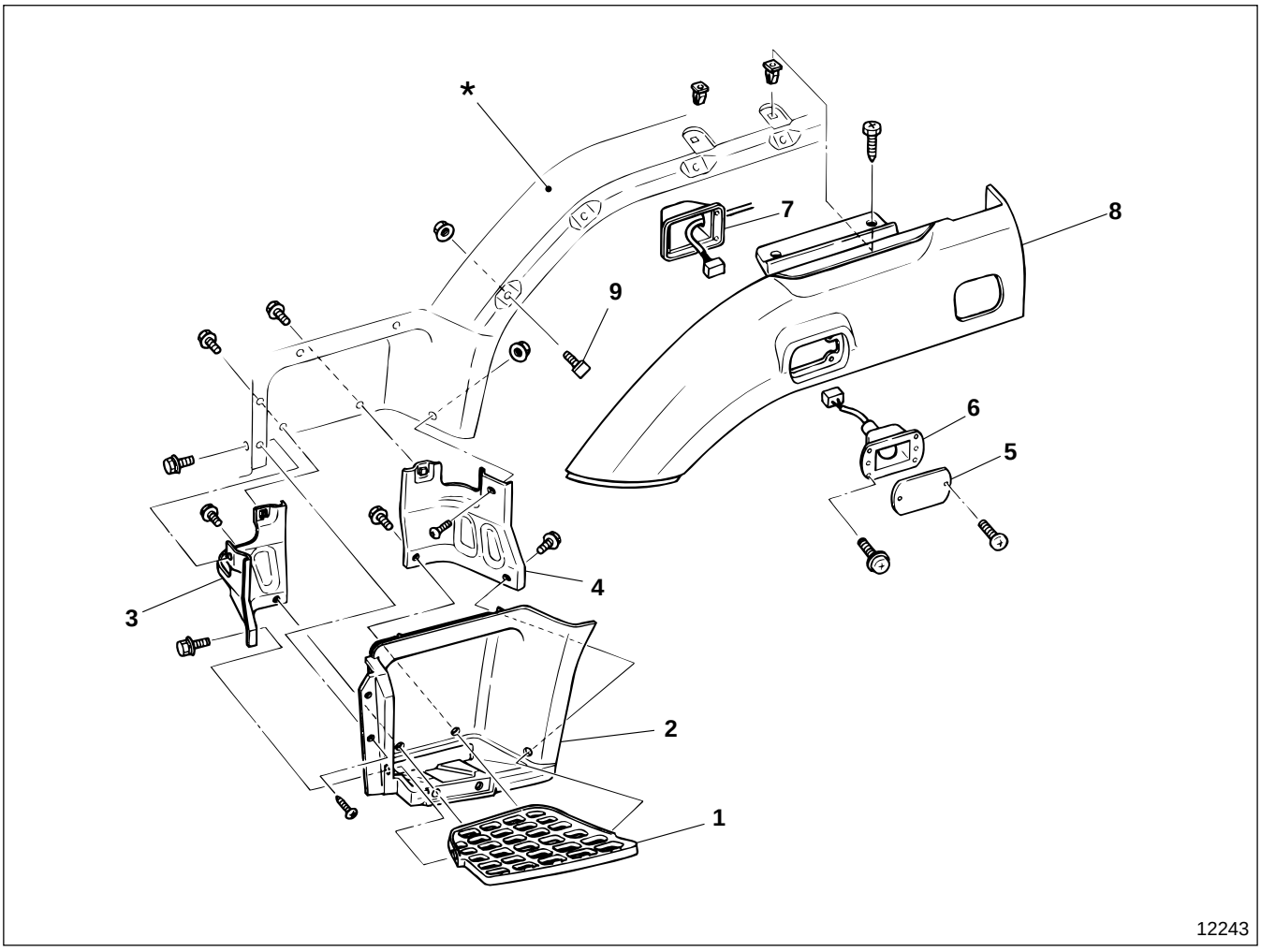

● **Removal sequence**

1 Step
2 Step garnish
3 Front step bracket
4 Rear step bracket
5 Lens
6 Side turn signal lamp
7 Side turn signal lamp cover
8 Fender garnish
9 Set bolt

***** : Cab assembly

● **Installation sequence**

Follow the removal sequence in reverse.

NOTE

This illustration only shows the step and fender for the left side; the same service procedure described above is used for the right side.

M E M O

MIRROR

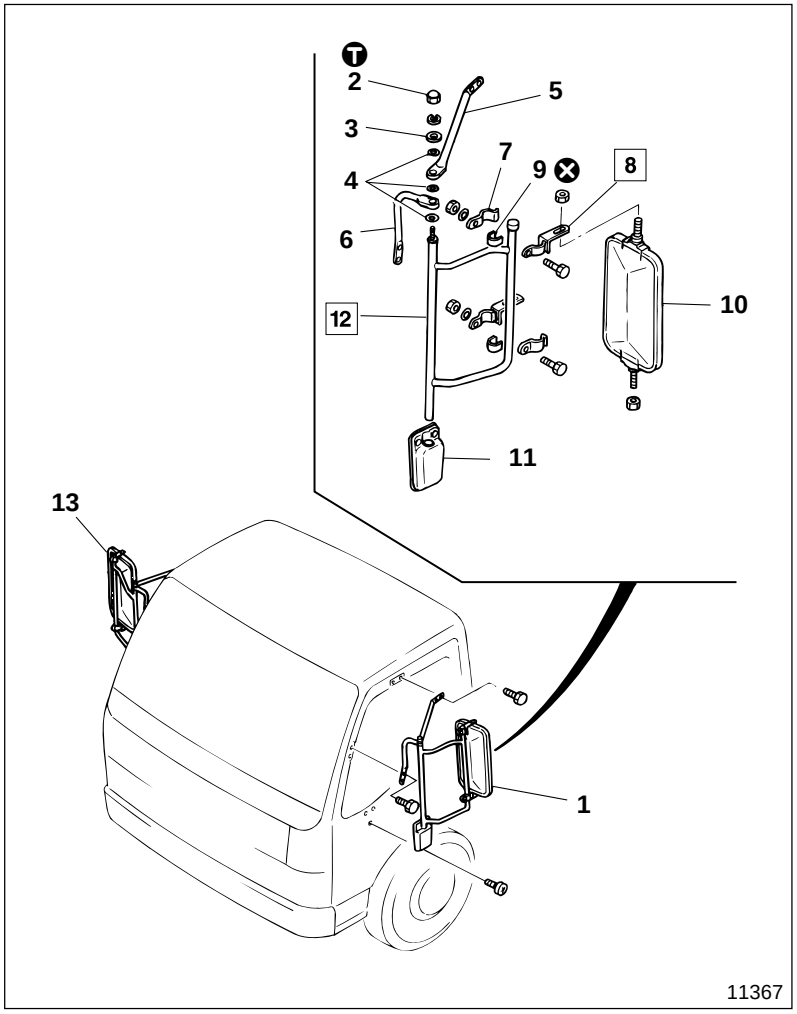

● **Removal sequence**

1 Outside mirror stay assembly, LH
2 Nut
3 Washer (Stainless)
4 Washer
5 Sub mirror stay
6 Sub mirror stay
7 Mirror holder B
8 Mirror holder
9 Packing
10 Outside mirror
11 Lower bracket
12 Main mirror stay
13 Outside mirror stay assembly, RH

⊗ : Non-reusable parts

● **Installation sequence**

Follow the removal sequence in reverse.

NOTE

For outside mirror stay assembly RH 13, follow the same service procedure as for outside mirror stay assembly LH 1.

Ⓣ Tightening torque

Unit : N·m {lbf.ft, kgf·m}

Location	Parts to be tightened	Tightening torque	Remarks
2	Nut (Sub mirror stay and main mirror stay mounting)	24.5 to 29.4 {18 to 22, 2.5 to 3.0}	—

◆ Service procedure

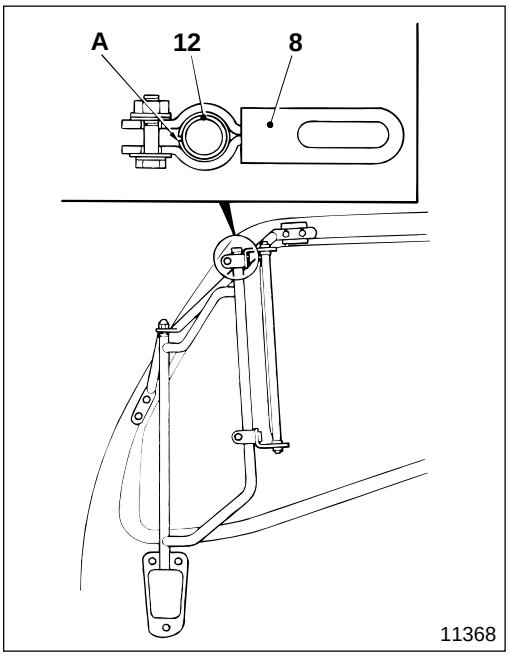

8 **Installation of mirror holder**

Install mirror holder **8** onto main mirror stay **12** in the direction as illustrated.

A : Indent of main mirror stay **12**.

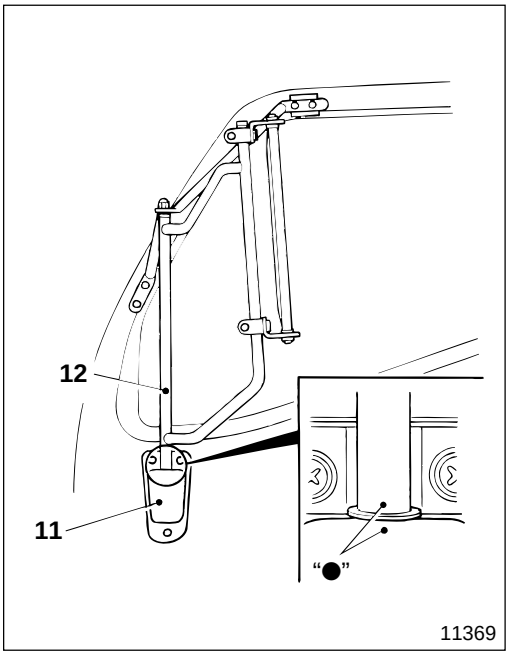

12 **Installation of main mirror stay**

Install main mirror stay **12** and lower bracket **11** so that alignment marks "●" are aligned.

WIPER AND WASHER

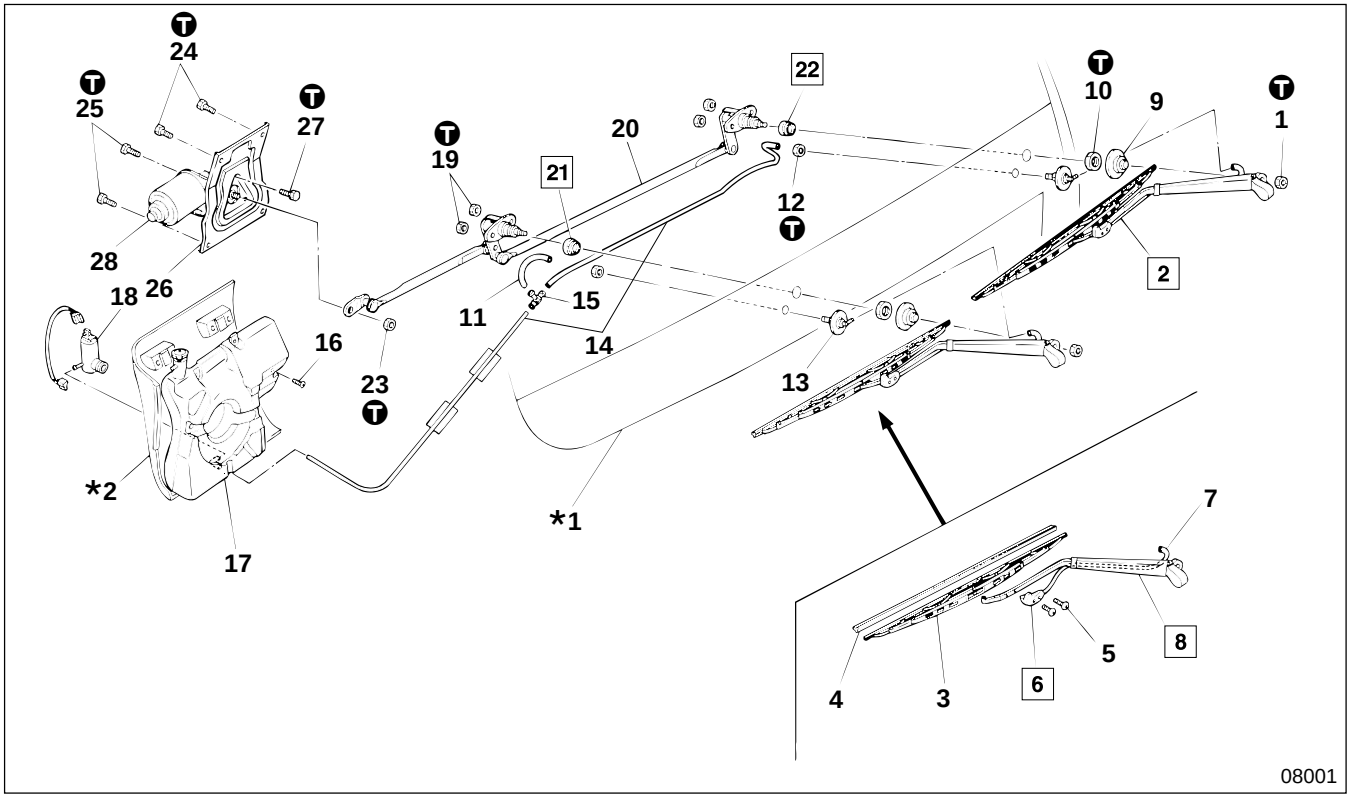

● **Disassembly sequence**

1 Nut
2 Wiper arm and blade assembly
3 Wiper blade
4 Blade rubber
5 Screw
6 Washer nozzle assembly
7 Hose
8 Wiper arm
9 Pivot cap
10 Nut
11 Washer hose
12 Nut
13 Hose joint
14 Washer hose
15 Joint
16 Screw
17 Washer tank
18 Washer motor Gr 54
19 Nut
20 Wiper link assembly
21 Packing washer
22 Packing washer
23 Nut
24 Bolt (L : 16 mm {0.63 in.})
25 Bolt (L : 12 mm {0.47 in.})
26 Wiper motor bracket
27 Bolt
28 Wiper motor Gr 54

***1** : Front garnish P42-40
***2** : Assistant driver's side lower panel P42-51

NOTE

Before disassembling parts 11 to 28, remove the instrument panel to allow access to them. **P42-49**

● **Assembly sequence**

Follow the disassembly sequence in reverse.

Service standards

Location	Maintenance item	Standard value	Limit	Remedy
2	Wiping force of wiper arm	5.7±0.49 N {1.28±0.11 lbf, 0.58±0.05 kgf}	—	Replace

Tightening torque

Unit : N·m {lbf.ft, kgf·m}

Location	Parts to be tightened	Tightening torque	Remarks
1	Nut (Wiper arm and blade assembly mounting)	9.8 to 15 {7.2 to 11, 1 to 1.5}	—
10	Nut (Packing washer mounting)	14 to 20 {10 to 14, 1.4 to 2}	—
12	Nut (Hose joint mounting)	0.6 to 0.9 {0.4 to 0.7, 0.06 to 0.09}	—
19	Nut (Wiper link mounting)	9.8 to 15 {7.2 to 11, 1 to 1.5}	—
23	Nut (Wiper motor and wiper link mounting)	1.7 to 2.4 {1.2 to 1.7, 0.17 to 0.24}	—
24, 25	Bolt (Wiper motor bracket mounting)	9.8 to 15 {7.2 to 11, 1 to 1.5}	—
27	Bolt (Wiper motor mounting)	5.4 {4, 0.55}	—

◆ Service procedure

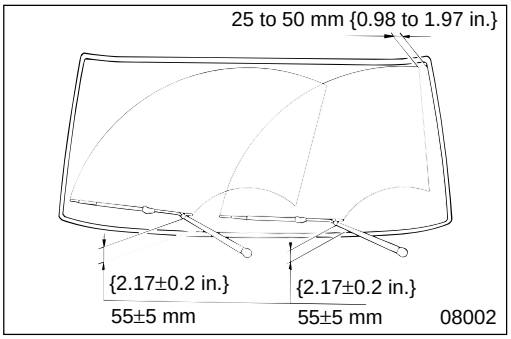

2 **Installation of wiper arm and blade assembly**

Install wiper arm and blade assembly **2** so that dimensions from the edges of the weatherstrip are as illustrated.

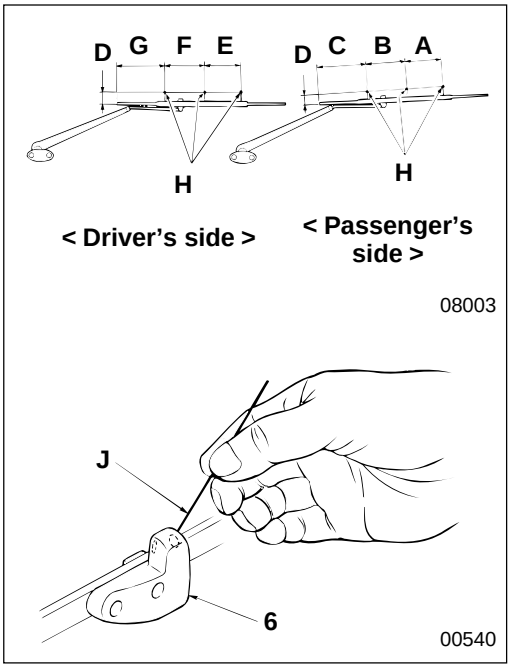

6 **Inspection of washer nozzle assembly**

Make sure that washer fluid spreading target positions **H** are within dimensions **A** to **G**. (Illustration shows the view from inside cab.)

Unit : mm {in.}

		H
Passenger's side	A	110 {4.33}
	B	90 {3.54}
	C	170 {6.69}
	D	15 {0.59}
Driver's side	E	90 {3.54}
	F	90 {3.54}
	G	160 {6.30}

If washer fluid spreading target positions **H** deviate from these dimensions, adjust the jet hole angle of washer nozzle assembly **6** using wire **J**.

CAUTION⚠

Be careful not to damage the jet hole of washer nozzle assembly 6 with wire J when adjusting the angle.

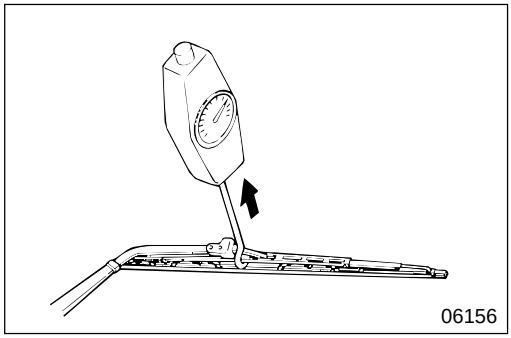

8 **Inspection of wiper arm**

If the measured value deviates from the standard value, replace wiper arm **8**.

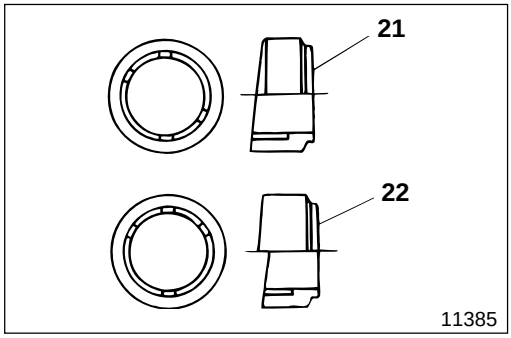

21 **22** **Packing washer**

Because the shape of packing washer **21** for the passenger's side and packing washer **22** for the driver's side are different, be careful not to mix them up during assembly.

Trim

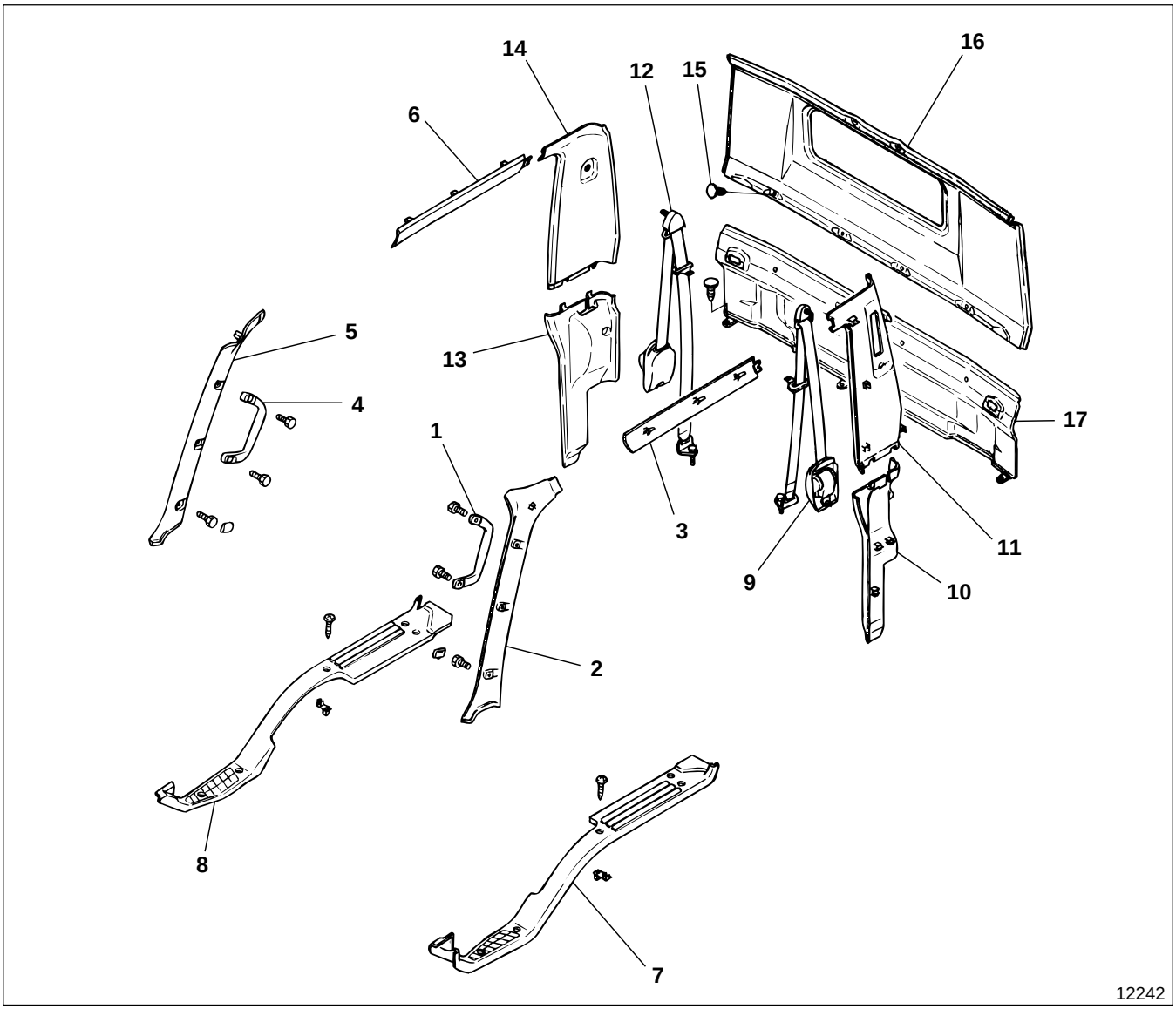

● **Removal sequence**

1 Front pillar grip, LH
2 Front pillar trim, LH
3 Roof side trim, LH
4 Front pillar grip, RH
5 Front pillar trim, RH
6 Roof side trim, RH
7 Scuff plate, LH
8 Scuff plate, RH
9 Seat belt assembly, LH
10 Lower rear pillar trim, LH
11 Upper rear pillar trim, LH
12 Seat belt assembly, RH
13 Lower rear pillar trim, RH
14 Upper rear pillar trim, RH
15 Rear trim clip
16 Upper rear trim
17 Lower rear trim

CAUTION⚠

Do not disassemble seat belt assemblies 9, 12 because this might cause malfunction of the emergency locking retractor.

● **Installation sequence**

Follow the removal sequence in reverse.

CAB INTERIOR FITTING

Headlining

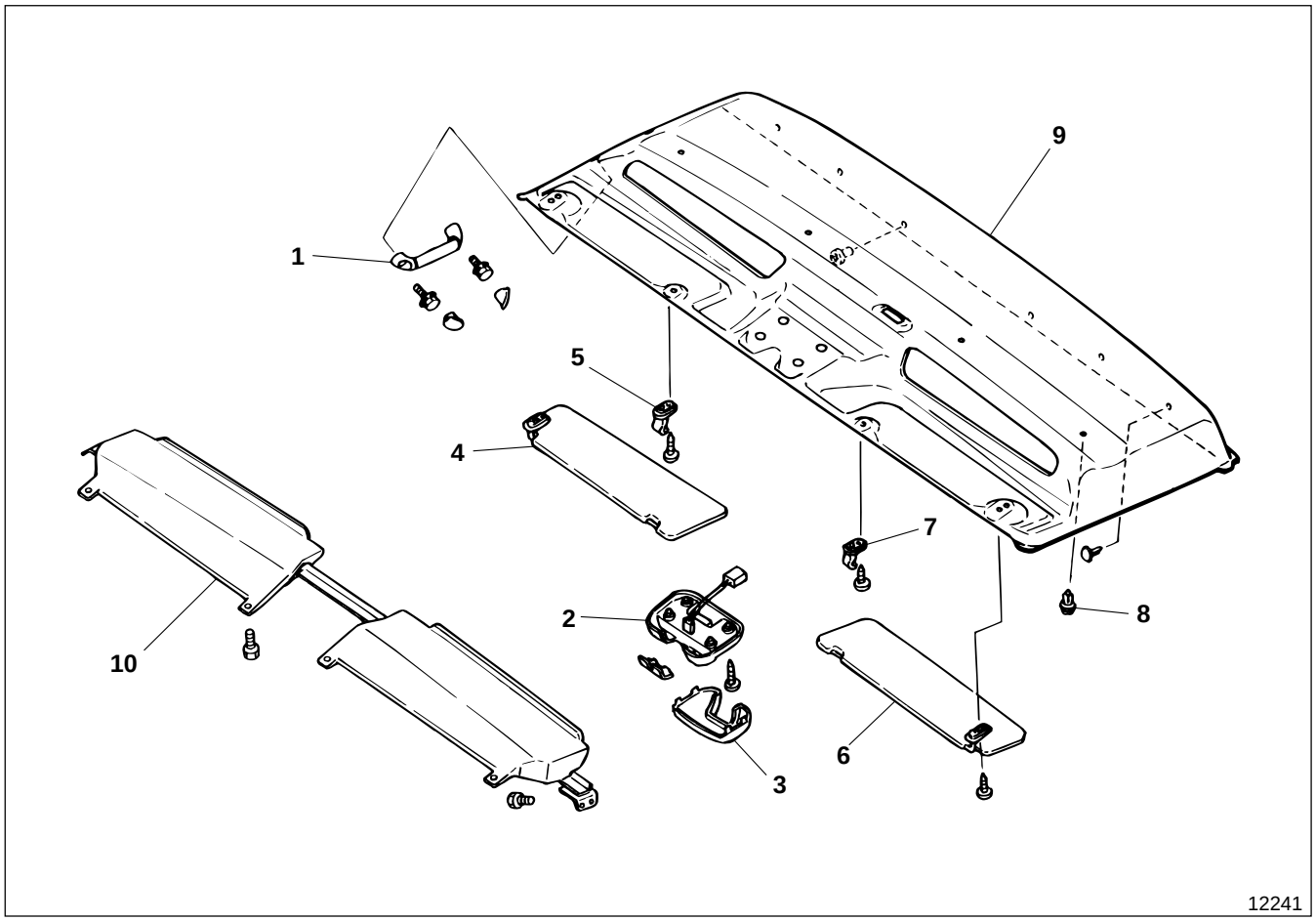

● **Removal sequence**

1 Grip
2 Lens
3 Cab lamp assembly Gr 54
4 Sun visor, RH
5 Hook
6 Sun visor, LH
7 Hook
8 Headlining clip
9 Headlining
10 Shelf assembly

● **Installation sequence**

Follow the removal sequence in reverse.

Lower Panel

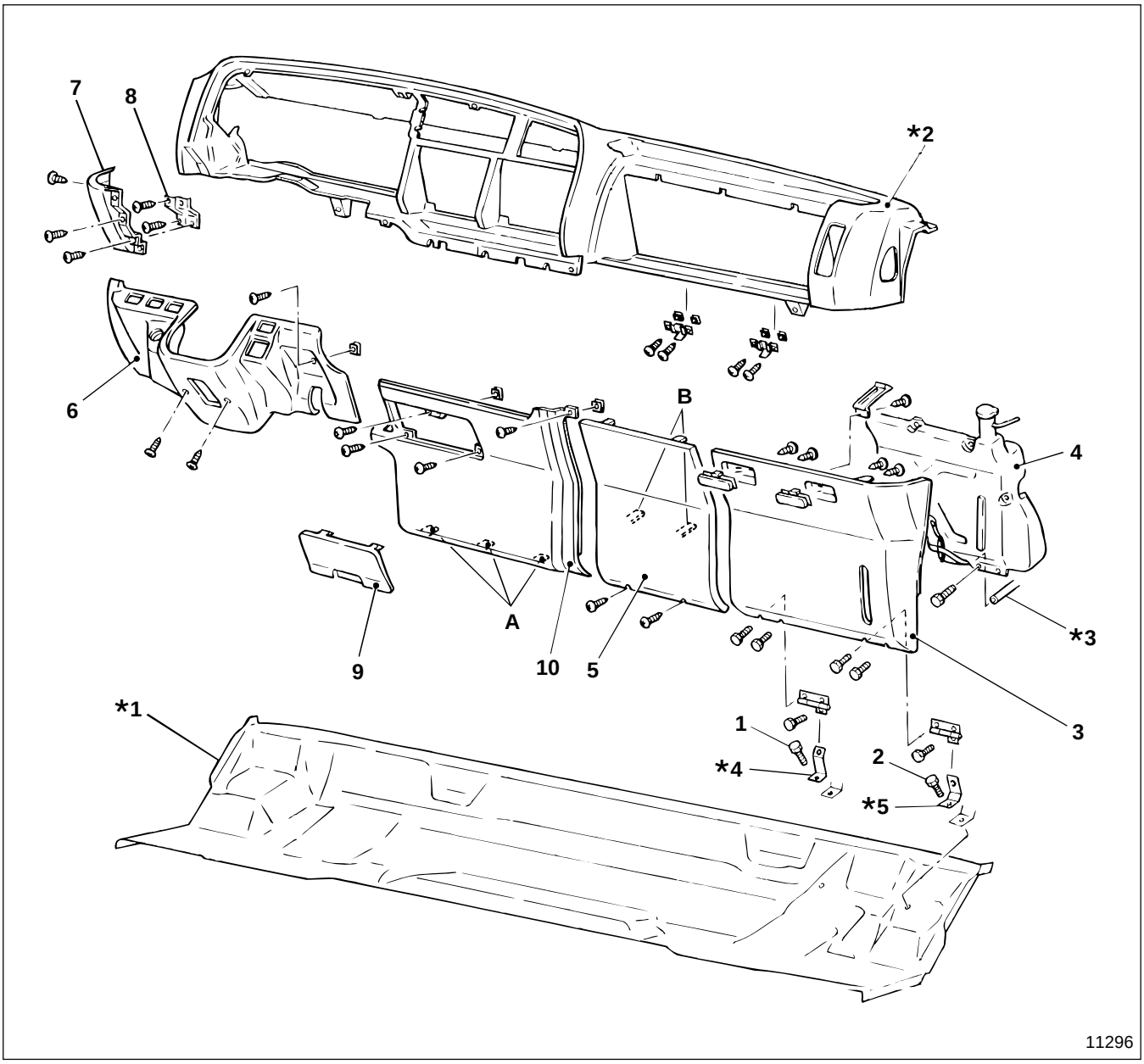

● **Disassembly sequence**

1 Bolt
2 Bolt
3 Passenger's side lower panel
4 Window washer tank
5 Center lower panel
6 Driver's side lower panel
7 Side panel
8 Side panel bracket
9 Fuse box lid
10 Center lower panel

***1** : Front floor
***2** : Instrument panel 📖 P42-53
***3** : Water hose
***4** : Cooling unit
***5** : Blower unit

A : Fixed on heater unit
B : Fixed on joint duct

● **Assembly sequence**

Follow the disassembly sequence in reverse.

INSTRUMENT PANEL

Meter Bezel

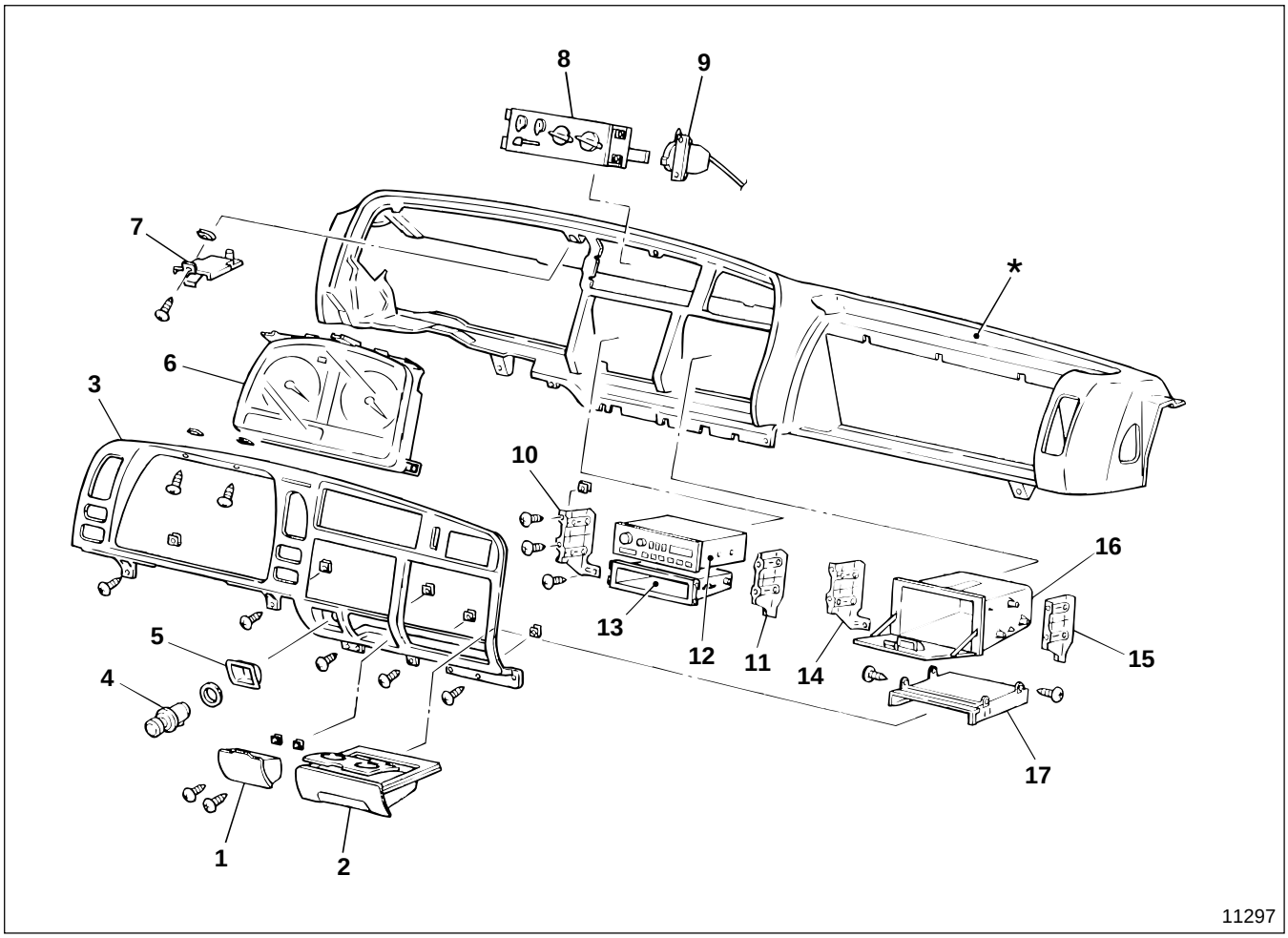

● **Disassembly sequence**

1 Ashtray
2 Cup holder
3 Meter bezel
4 Cigarette lighter Gr 54
5 Protector
6 Meter cluster Gr 54
7 Card holder
8 Heater control assembly Gr 55B
9 Cool air bypass control assembly Gr 55B
10 Bracket, LH
11 Bracket, RH
12 Radio < Option >
13 Box
14 Bracket, LH
15 Bracket, RH
16 Glove compartment
17 Cup holder base

* : Instrument panel P42-53

● **Assembly sequence**

Follow the disassembly sequence in reverse.

Instrument Panel

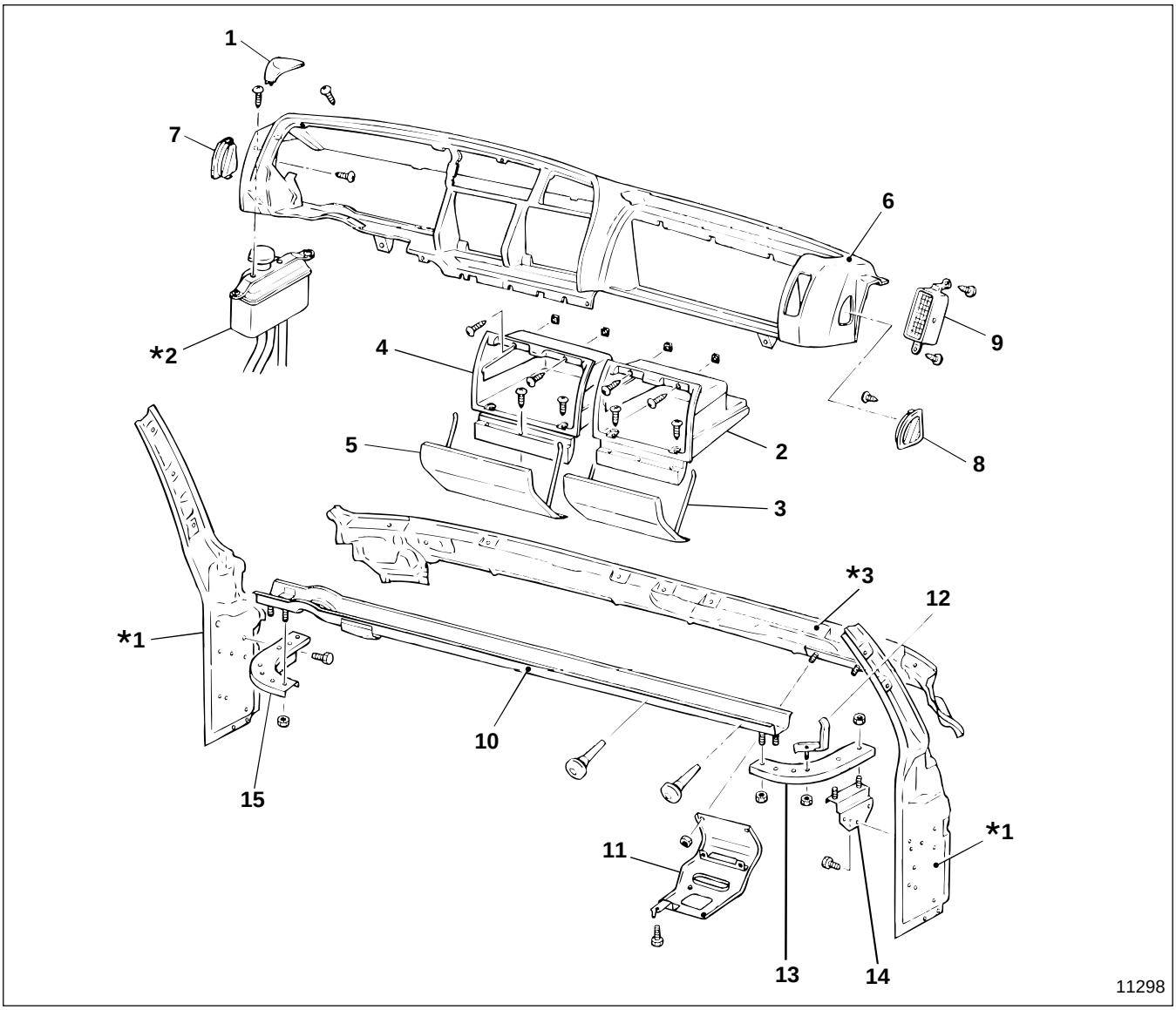

● **Disassembly sequence**

1 Fluid tank lid
2 Glove compartment
3 Glove compartment lid
4 Glove compartment
5 Glove compartment lid
6 Instrument panel
7 Side demister grille
8 Side demister grille
9 Air outlet grille
10 Instrument panel frame
11 Relay bracket
12 Instrument panel support
13 Instrument panel bracket
14 Instrument panel bracket
15 Instrument panel bracket

***1** : Upper front inner pillar
***2** : Fluid tank Gr 21
***3** : Front window rail

● **Assembly sequence**

Follow the disassembly sequence in reverse.

WINDOW GLASS

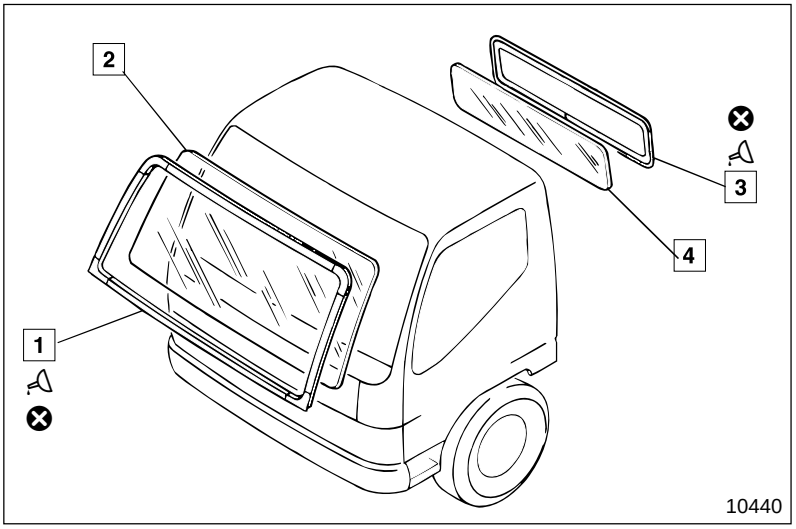

● **Disassembly sequence**

1 Weatherstrip
2 Windshield
3 Weatherstrip
4 Rear window glass

⊗ : Non-reusable parts

● **Assembly sequence**

Follow the disassembly sequence in reverse.

Lubricant

Location	Points of application	Kinds	Quantity
1, 3	Lip area of weatherstrip	Soapy water	As required

◆ Service procedure

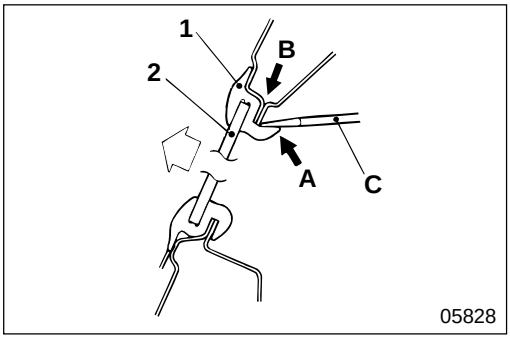

1 **2** **Weatherstrip and windshield**

[Removal]

- From the inside of the cab, separate lip **A** of weatherstrip **1** from flange lip **B** of the cab.
  C : Screwdriver
- Push windshield **2** outward to remove it from the cab.

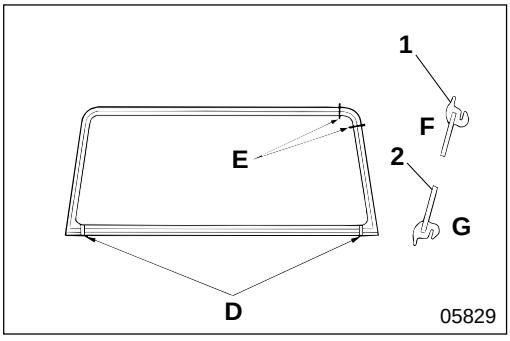

[Installation]

When installing the windshield, pull cord **H** attached to weatherstrip **1** and turn over lip **A**, following the procedure below:

- Position drain hole **D** and joint part **E** of weatherstrip **1** as illustrated and install them on windshield **2**.
  F : Outside
  G : Inside

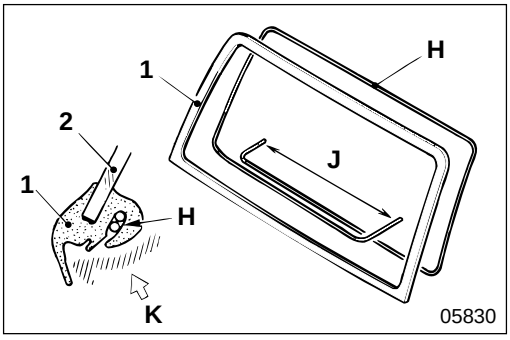

- Lay cord **H** in the cab mounting groove of weatherstrip **1** as illustrated, and overlap the cord at the lower side of the glass by the specified length, see **J**.
- Apply soapy water **K** to weatherstrip **1**.
- Align windshield **2** with the cab.

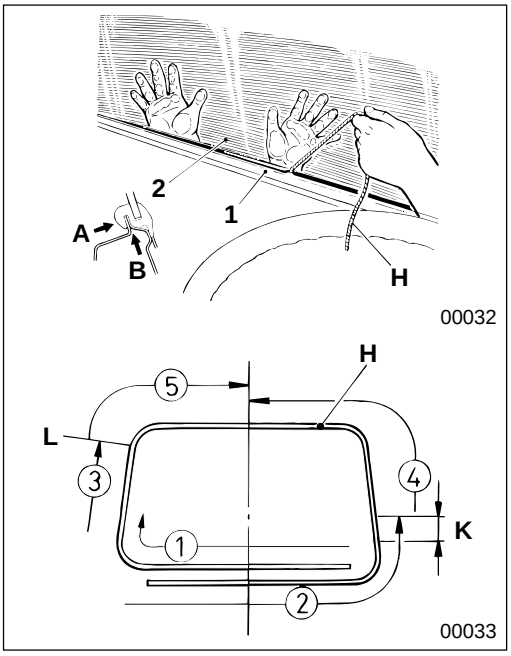

- Push windshield **2** inward from the outside of the cab firmly.
- Inside the cab, pull one end of cord **H** to install lip **A** of weatherstrip **1** into flange lip **B** of the cab.

- Pull cord **H** in the numbered order as illustrated and at the same time have someone push windshield **2** into weatherstrip **1**, tapping the windshield with a rubber-headed mallet.
  K : approximately 100 mm {3.94 in.} from the starting point of straight line
  L : up to the end of straight line

CAUTION⚠

Make sure that windshield 2 is installed correctly into the cab before hitting the windshield with the rubber-headed mallet, otherwise the windshield might be broken.

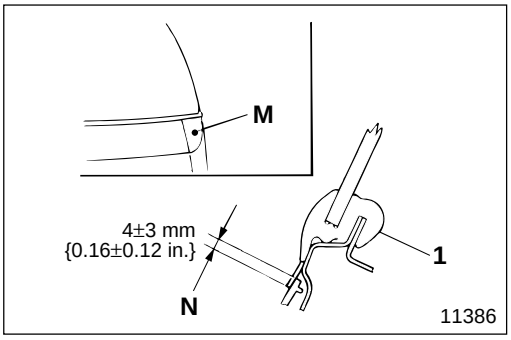

- Provide an overlapped margin **N** on weatherstrip **1** and side garnish **M** to prevent water flowing backwards from the water drain hole.

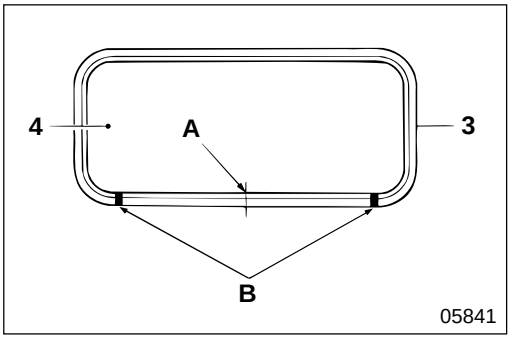

3 **4** **Weatherstrip, rear window glass**

- Install so that joint **A** of weatherstrip **3** is at the center of rear window **4**.
  B : Water drain hole
- Except for the point mentioned above, follow the same service procedure as for installation of windshield. 🕮 P42-54

MITSUBISHI FUSO

FH

Service Manual

Group 54 - Electrical

Group 54 - 1998 Minor Changes

BACK HOME

MITSUBISHI FUSO TRUCK OF AMERICA, Inc.

Pub No. TWME9502-00

MITSUBISHI
FUSO

FH

Service Manual

Group 54
Electrical

'98 Minor Change

Table of Contents

MITSUBISHI FUSO TRUCK OF AMERICA, Inc.

BACK HOME

Pub No. TWME9502-254

GROUP 54 ELECTRICAL

1 POWER, CHARGE AND GROUND

SPECIFICATIONS 54-1-2

STRUCTURE AND OPERATION 54-1-2

TROUBLESHOOTING 54-1-3

100 ON-VEHICLE INSPECTION AND ADJUSTMENT
- Inspection of Alternator 54-1-4
- Inspection of Regulator 54-1-5

101 BATTERY .....

104 FUSE 54-1-6

106 ALTERNATOR 54-1-8

110 POWER CIRCUIT 54-1-14

115 RESERVE POWER CIRCUIT 54-1-22

125 BATTERY CHARGING CIRCUIT 54-1-24

130 GROUND 54-1-26

2 STARTING, PREHEATING AND STOPPING ENGINE

SPECIFICATIONS .....

STRUCTURE AND OPERATION .....

TROUBLESHOOTING .....

200 ON-VEHICLE INSPECTION AND ADJUSTMENT
Inspection of Engine Preheating System ....

201 STARTER .....

210 ENGINE STARTING CIRCUIT
< Manual Transmission > 54-2-2
< Automatic Transmission > .....

215 ENGINE STOPPING CIRCUIT .....

220 ENGINE PREHEATING CIRCUIT
< Manual Transmission > 54-2-4
< Automatic Transmission > ..... *

3 LIGHTING

SPECIFICATIONS .....

STRUCTURE AND OPERATION .....

TROUBLESHOOTING .....

300 ON-VEHICLE INSPECTION AND ADJUSTMENT
Headlamp Aiming .....

310 HEADLAMP CIRCUIT .....

320 TAIL LAMP, CLEARANCE LAMP AND LICENSE PLATE LAMP CIRCUITS 54-3-2

325 STOP LAMP CIRCUIT 54-3-4

330 TURN SIGNAL LAMP AND HAZARD LAMP CIRCUITS .....

340 BACKUP LAMP CIRCUIT .....

345 CAB LAMP CIRCUIT .....

348 ILLUMINATION LAMP CIRCUIT .....

349 MARKER LAMP AND IDENTIFICATION LAMP CIRCUITS .....

352 VAN BODY DOME LIGHT CIRCUIT 54-3-6

4 METER

SPECIFICATIONS .....

TROUBLESHOOTING .....

401 METER CLUSTER 54-4-2

410 SPEEDOMETER AND TACHOMETER CIRCUIT .....

420 FUEL GAUGE CIRCUIT .....

425 WATER TEMPERATURE GAUGE CIRCUIT .....

⑤ INDICATOR AND WARNING

TROUBLESHOOTING 54-5-2

(500) ON-VEHICLE INSPECTION AND ADJUSTMENT
- Inspection of Brake Fluid Level Switch 54-5-6
- Inspection of Power Steering Fluid Level Sensor 54-5-7

(510) PARKING BRAKE INDICATOR CIRCUIT [BRAKE] 54-5-8

(515) BRAKE WARNING CIRCUIT [BRAKE] 54-5-10

(530) WATER LEVEL WARNING CIRCUIT 54-5-14

(536) ENGINE OIL PRESSURE WARNING CIRCUIT 54-5-16

(537) OVERHEATING WARNING CIRCUIT 54-5-18

(547) AUTOMATIC TRANSMISSION FLUID TEMPERATURE WARNING CIRCUIT [T/M OIL TEMP] 54-5-20

(549) POWER STEERING FLUID LEVEL WARNING CIRCUIT [BRAKE] 54-5-22

(550) CAB TILT WARNING CIRCUIT .....

⑥ CAB SIDE ELECTRICAL

SPECIFICATIONS 54-6-2

TROUBLESHOOTING 54-6-3

(601) SWITCH .....

(604) RELAY AND CONTROL UNIT .....

(606) WARNING BUZZER .....

(610) CIGARETTE LIGHTER CIRCUIT .....

(612) AUDIO CIRCUIT .....

(614) WIPER AND WASHER CIRCUIT .....

(616) HORN CIRCUIT 54-6-4

(618) HEATER CIRCUIT .....

: '96 Model Gr 54 (Pub. No. TWME9502-54)
*: '97 Model Gr 54 (Pub. No. TWME9502-1)

⑦ CHASSIS ELECTRICAL

(701) MAGNETIC VALVE
< Manual Transmission > 54-7-2

(710) EXHAUST BRAKE CIRCUIT
< Manual Transmission > 54-7-4

⑧ ENGINE AND TRANSMISSION ELECTRICS

(801) ENGINE ELECTRICS .....

(802) TRANSMISSION ELECTRICS
< Manual Transmission > .....
< Automatic Transmission > .....

(850) TRANSMISSION POWER TAKE-OFF CIRCUIT
< Option > .....

⑨ OTHERS

STRUCTURE AND OPERATION ..... *

(905) JOINT CONNECTOR 54-9-2

(910) MULTIPURPOSE TIMING CONTROL UNIT CIRCUIT ..... *

1 POWER, CHARGING AND GROUND

SPECIFICATIONS 54-1-2

STRUCTURE AND OPERATION 54-1-2

TROUBLESHOOTING 54-1-3

100 ON-VEHICLE INSPECTION AND ADJUSTMENT
- Inspection of Alternator 54-1-4
- Inspection of Regulator 54-1-5

101 BATTERY .....

104 FUSE 54-1-6

106 ALTERNATOR 54-1-8

110 POWER CIRCUIT 54-1-14

115 RESERVE POWER CIRCUIT 54-1-22

125 BATTERY CHARGING CIRCUIT 54-1-24

130 GROUND 54-1-26

: '96 Model Gr 54 (Pub. No. TWME9502-54)

SPECIFICATIONS/STRUCTURE AND OPERATION

This chapter contains information on the alternator. Items not covered in this chapter are the same as those of '97 model.

SPECIFICATIONS

Item			Specifications
Alternator	Manufacturer		MITSUBISHI ELECTRIC
	Type		Alternator with built-in regulator (without brush external fan)
	Model		A4TU0388
	Output	V-A	12-80

STRUCTURE AND OPERATION

Alternator

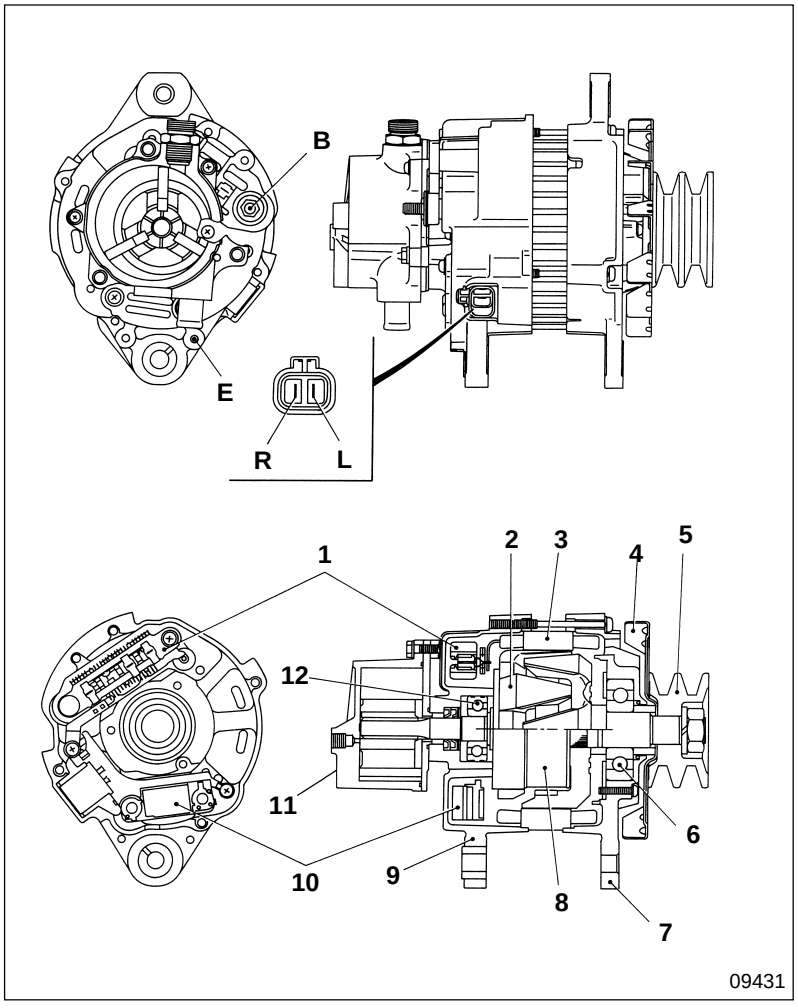

1 Rectifier
2 Rotor assembly
3 Stator assembly
4 Fan
5 Pulley
6 Front bearing
7 Front bracket
8 Field coil
9 Rear bracket
10 Regulator
11 Vacuum pump
12 Rear bearing

B : Terminal B
E : Terminal E
L : Terminal L
R : Terminal R

Possible causes \ Symptoms		Battery electrolyte decreases too early	Battery overheating	Battery is normal but overdischarged	Charge warning lamp does not light when turning starter switch ON, with engine stopped	Alternator is normal but battery overdischarged	Remarks
Connector connection faulty, harness broken, grounding faulty				○		○	
Fuse blown					○		
V-belts loose				○		○	Gr 14
V-belts damaged				○		○	Gr 14
Battery faulty		○				○	
Alternator	Stator coil broken			○			
	Stator coil short-circuited with core			○			
	Field coil broken			○			
	Rectifier faulty			○			
	Regulator faulty		○	○	○		
	Brush worn			○			
	Brush spring fatigued			○			
	Wiring faulty			○			
Meter cluster faulty					○		

Inspection of Alternator

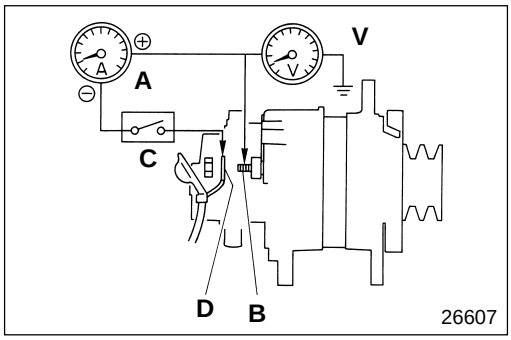

Performance test

- Connect the meters to the alternator as illustrated.
  A : Ammeter (100 amperes class)
  B : Terminal B on alternator
  C : Switch
  D : Terminal
  V : Voltmeter

WARNING

- **Terminal D is always loaded with voltage from the battery.**
- **You must handle terminal D carefully, it will short-circuit if it touches any part other than terminal B on the alternator.**

- Turn switch **C** ON and make sure that voltmeter **V** indicates the voltage of the battery.
- Start the engine.
- Turn the switches ON of all the lamps on the vehicle immediately.
- Raise the engine speed immediately and measure the current when the speed reaches approximately 2260 rpm.
- The alternator is assumed to be normal if the measured value is higher than 70% of the specified output.

Specified output of alternator

Alternator model	Voltage	Output
A4TU0388	12 V	80 A

NOTE

Since the above inspection is only a simplified check, it is necessary to conduct a stringent bench test for an official check.
P54-1-8

Inspection of Regulator

Service standards

Location	Maintenance item	Standard value	Limit	Remedy
—	Adjustment voltage of regulator	14.7±0.3 V	—	Replace

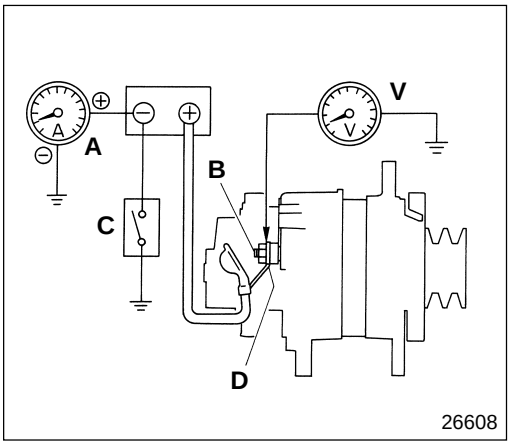

- Connect the meters to the alternator as illustrated.
  A : Ammeter (100 amperes class)
  B : Terminal B on alternator
  C : Switch
  D : Terminal
  V : Voltmeter

WARNING

- **Terminal D is always loaded with voltage from the battery.**
- **You must handle terminal D carefully, it will short-circuit if it touches any part other than terminal B on the alternator.**

- Turn OFF the lamps, heater, etc., to ensure that there is no electrical loading during inspection.
- Turn switch **C** OFF and start the engine.

CAUTION

Do not start the engine with switch C turned ON because the starter current will flow into ammeter A and damage it.

- If the charge current is five amperes or less and the engine speed is approximately 2260 rpm, measure the adjustment voltage.
- If the charge voltage is five amperes or more, do one of the following :
  - Run the engine for a while to charge the battery.
  - Replace the old battery with a fully-charged one.
- If the measured value deviates from the standard value, reexamine on the test bench. P54-1-8

Installation Location

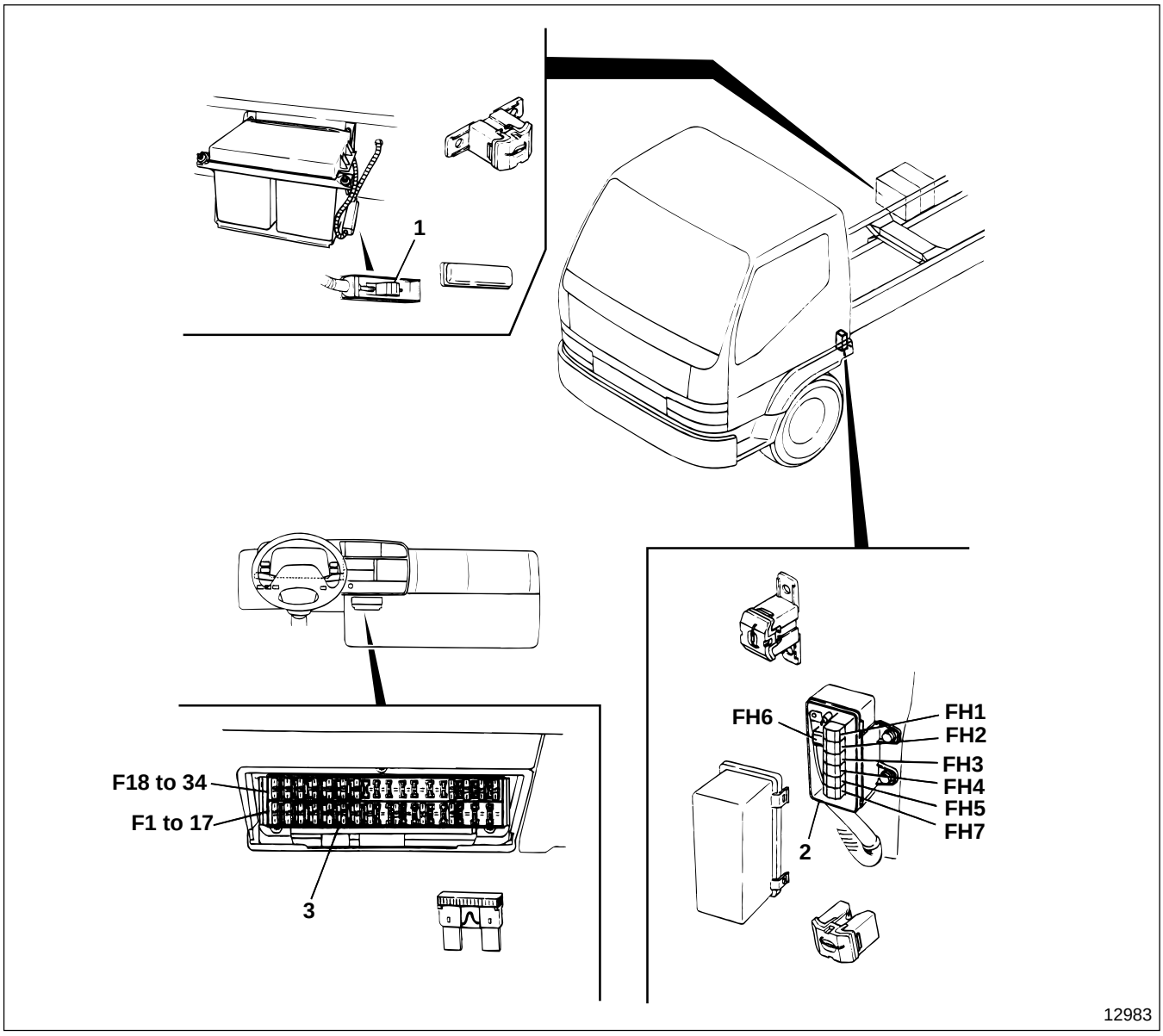

1 Main high-current fuse
2 High-current fuse box
3 Fuse box

CAUTION

- **If a fuse blows, make sure you identify and remedy the cause, then replace the fuse.**
- **Make sure that you replace the fuse with one having the same rating.**
- **Make sure that you remove the ⊖ terminal of the battery cable before removing main high-current fuse 1 and high-current fuses FH1 to 7. 101 ('96 Model Gr 54 (Pub. No. TWME9502-54))**

Main high-current fuse

Fuse No.	Main load	Capacity
—	High-current fuse box	120 A

High-current fuse box

Fuse No.	Main load	Capacity
FH1	Fuse box (F1 to F4)	50 A
FH2	Fuse box (F5 to F8, F11)	40 A
FH3	Brake booster (Hydraulic booster)	50 A
FH4	Starter switch (Terminal B)	50 A
FH5	Glow relay	50 A
FH6	Alternator	120 A
FH7	Fuse box (F31 to F34)	40 A

Fuse box

Fuse No.	Main load	Capacity
F1	Headlamp, LH	15 A
F2	Headlamp, RH	15 A
F3	Stop lamp, horn	15 A
F4	Turn signal lamp	15 A
F5	Fuel-cut motor	10 A
F6	Cab lamp	10 A
F7	Reserve power (BATT)	10 A
F8	A/T fluid cooler fan relay	10 A
F9	—	—
F10	—	—
F11	Reserve power (BATT)	10 A
F12	—	—
F13	* Cigarette lighter	15 A
F14	Radio	10 A
F15	Reserve power (ACC)	10 A
F16	—	—
F17	Fuel-cut relay	10 A

Fuse No.	Main load	Capacity
F18	Starter	10 A
F19	Backup lamp	10 A
F20	Meter cluster	10 A
F21	Wiper	10 A
F22	—	—
F23	—	—
F24	—	—
F25	—	—
F26	—	—
F27	Exhaust brake < M/T >	10 A
F28	Transmission PTO	10 A
F29	Pre-stroke cut relay	15 A
F30	* Air-conditioner control	10 A
F31	* Air-conditioner compressor	10 A
F32	* Condenser fan	15 A
F33	Blower fan	25 A
F34	Tail lamp	15 A

* : Fuses are provided for these pieces of equipment only where they are installed.

PTO : Power take-off
A/T : Automatic transmission
M/T : Manual transmission

106 ALTERNATOR

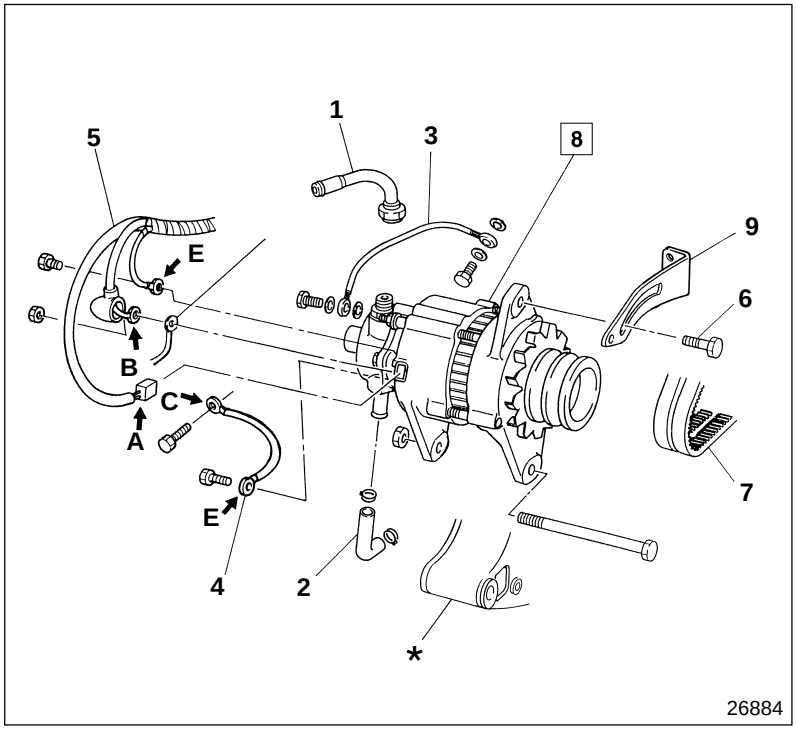

● **Removal sequence**

1 Vacuum pipe
2 Oil return hose
3 Oil inlet hose
4 Ground cable
5 Chassis harness
6 Adjusting bolt
7 V-belts
8 Alternator P54-1-10
9 Adjusting plate

***** : Timing gear case and front plate Gr 11
A : To terminals L and R
B : To terminal B
C : Connected to crankcase
E : To terminal E

WARNING

- **Terminal B is always loaded with voltage from the battery, supplied via chassis harness 5. Therefore when you remove the harness from terminal B, make sure that tools do not touch any adjacent parts because this would cause a short-circuit.**
- **Make sure that you disconnect terminal ⊖ of the battery before removing the harness and insulate the terminal with tape.**

● **Installation sequence**

Follow the removal sequence in reverse.

● **Adjustment after installation**

Adjustment of V-belt **7** tension Gr 14

Service standards

Location	Maintenance item		Standard value	Limit	Remedy
8	Output current (***** When engine is hot and 13.5 V is loaded)	At 1500 rpm	37 A or more	—	Inspect
		At 2500 rpm	64 A or more	—	
		At 5000 rpm	75 A or more	—	
	Adjustment voltage of regulator (At 5000 rpm, 5 A is loaded)		14.7±0.3 V	—	Replace

***** : The value of the ambient temperature is measured after running the engine at maximum power (5000 rpm) for 30 minutes.

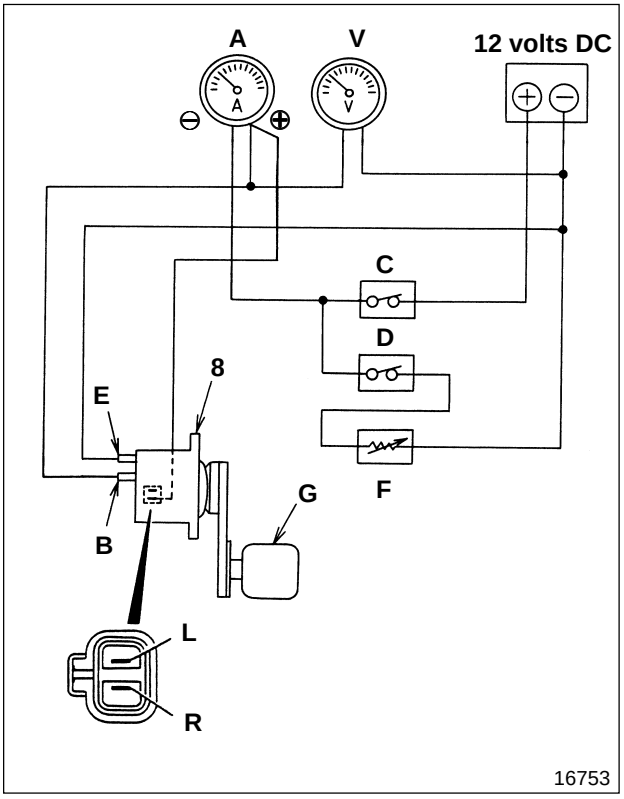

8 Inspection of alternator

(1) Inspection of alternator performance (bench test)

- Connect each unit to alternators **8** as illustrated.

CAUTION ⚠

Use sufficiently thick wires for the wiring and make sure all connecting parts are securely connected.

A : Ammeter
B : Terminal B on alternator
C : Switch
D : Switch
E : Terminal E on alternator
F : Load resistance (variable resistance)
G : Alternator drive motor
L : Terminal L on alternator
R : Terminal R on alternator
V : Voltmeter

- Maximize load resistance **F** (load current hardly flows).
- Warm-up alternator **8** by letting it run for 30 minutes at 5000 rpm.

- Turn switches **C**, **D** ON.
- Adjust load resistance **F** to maintain the specified current.
  Specified output of the alternator : 12 V-80 A
- Increase the rotation of alternator **8** gradually and measure current at specified rpm.
- If the measured value deviates from the standard value, disassemble and inspect alternator **8**. 📖 P54-1-10

(2) Inspection of regulator (bench test)

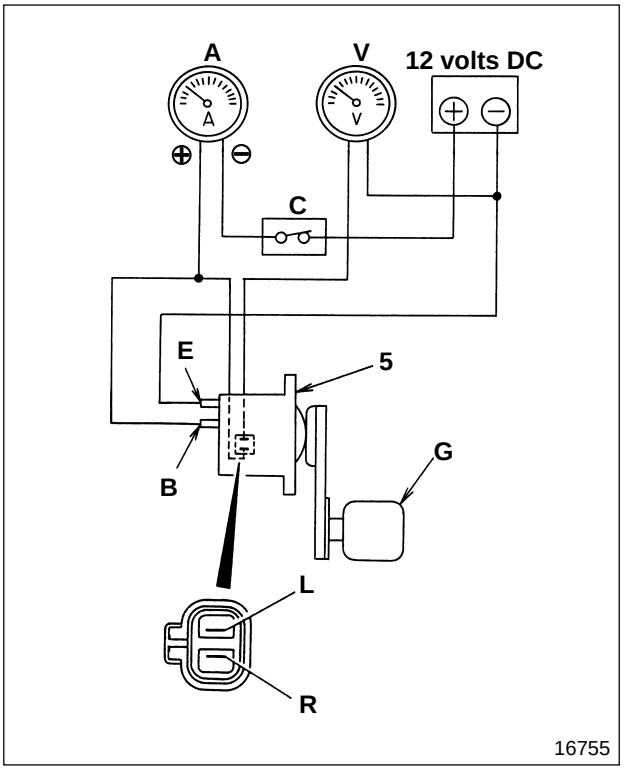

- Connect each unit to the alternators as illustrated.
  A : Ammeter
  B : Terminal B on alternator
  C : Switch
  E : Terminal E on alternator
  G : Alternator drive motor
  L : Terminal L on alternator
  R : Terminal R on alternator
  V : Voltmeter
- Turn switch **C** ON.
- Run alternator **8** at low speed.
- Measure the voltage (adjustment voltage) when alternator **8** has reached a speed of 5000 rpm. Make sure at such time that the value of the current is five amperes or less.
- If the measured value deviates from the standard value, perform either of the following.
  - If the measured value is higher than the standard value : Replace the regulator
  - If the measured value is lower than the standard value : Before replacing the regulator check the alternator area.

Alternator

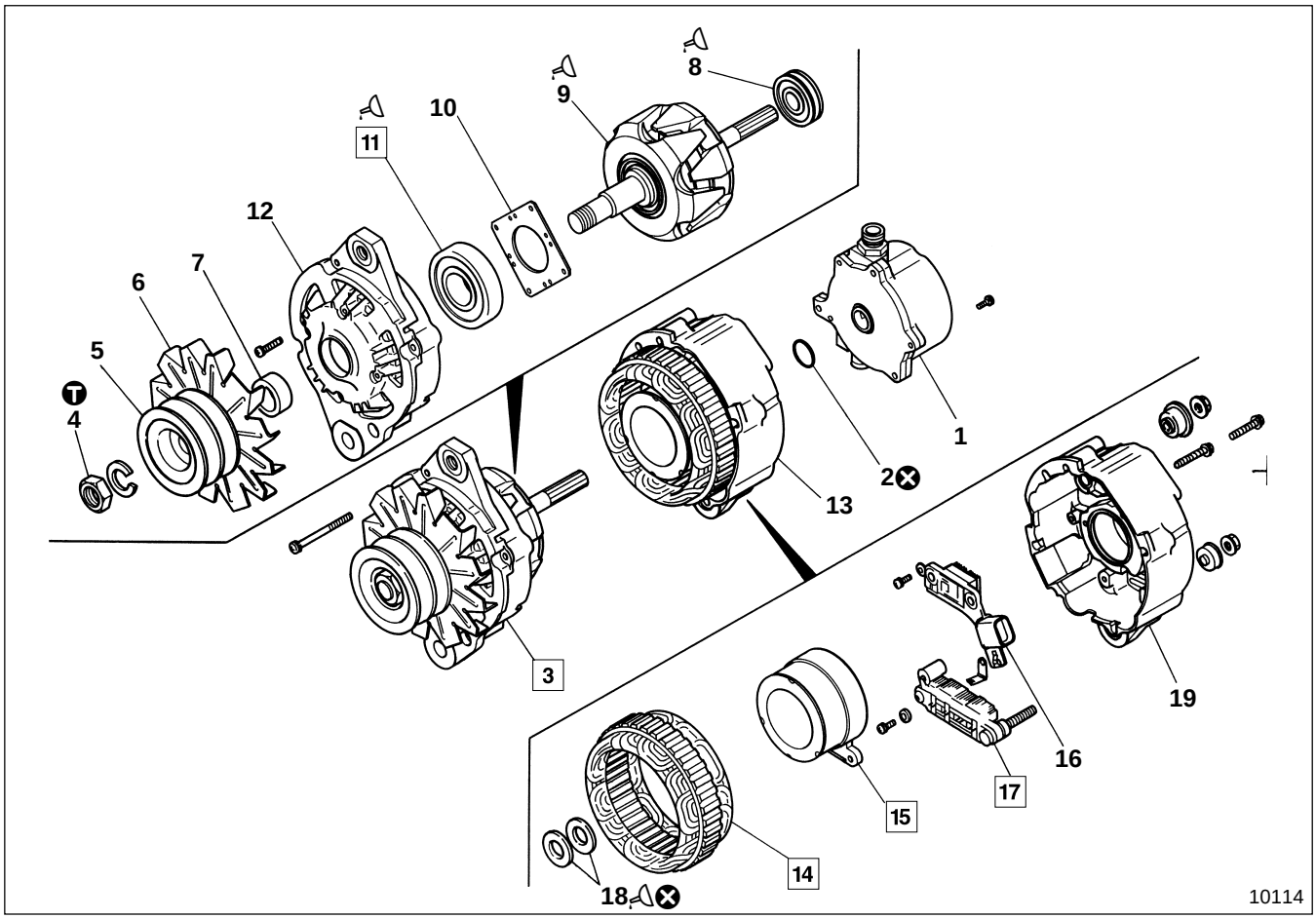

● **Disassembly sequence**

1 Vacuum pump Gr35
2 O-ring
3 Rotor and front bracket assembly
4 Nut
5 Pulley
6 Fan
7 Spacer
8 Rear bearing
9 Rotor assembly
10 Cover
11 Front bearing
12 Front bracket
13 Stator and rear bracket assembly
14 Stator assembly
15 Field coil
16 Regulator
17 Rectifier
18 Oil seal
19 Rear bracket

⊗ : Non-reusable parts

NOTE

Do not remove parts 8, 11, 14 unless they are faulty.

● **Assembly sequence**

13 → 3 → 2→ 1

13 : 19 → 18 → 16 → 17 → 15 → 14

3 : 12 → 11 → 10 → 9 → 8 →7 → 6 → 5→ 4

Service standards

Location	Maintenance item	Standard value	Limit	Remedy
15	Field coil resistance (20°C {68°F})	2.6 to 3.1 Ω	—	Replace

Tightening torque

Unit : N·m {lbf.ft, kgf·m}

Location	Parts to be tightened	Tightening torque	Remarks
4	Nut (Pulley mounting)	132 to 162 {98 to 120, 13.5 to 16.5}	—

Lubricant

Location	Points of application	Specified lubricant	Quantity
8	Rear bearing inner periphery	Engine oil	As required
9	Front bearing installation part of rotor assembly	Engine oil	As required
11	Front bearing outer periphery	Engine oil	As required
18	Oil seal lip area	Idemitsu Autolex	As required

◆ Service procedure

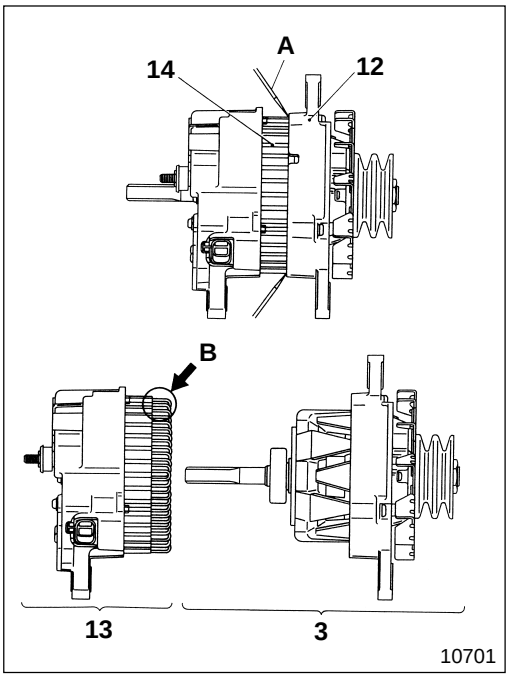

3 **Rotor and front bracket assembly**

[Removal]

- Insert screwdriver **A** between front bracket **12** and stator assembly **14**.
- Use screwdriver **A** to pry rotor and front bracket assembly **3** away from stator and rear bracket assembly **13**.

CAUTION

Be careful not to insert the screwdriver too deep or it will damage coil B of stator assembly 14 and might cause a short-circuit.

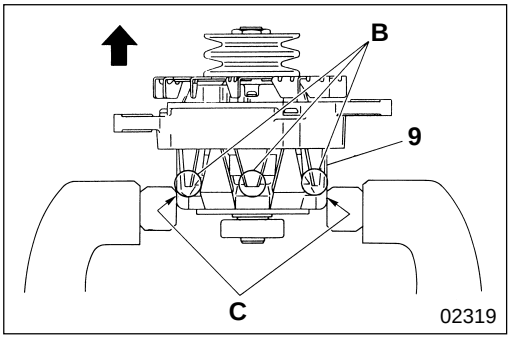

[Disassembly]

CAUTION

Make sure, when you hold rotor assembly 9 in a vise, to grip root C of the core claws. Gripping claws D can damage them.

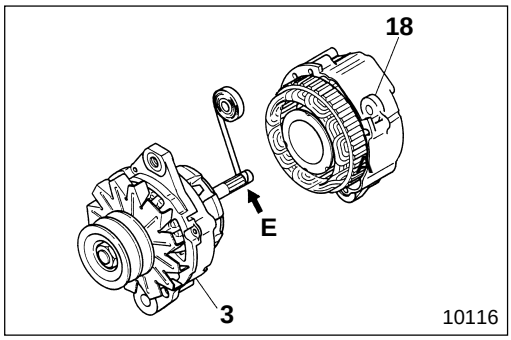

[Installation]

CAUTION

To prevent damaging oil seal 18 during assembly, cover spline area E of the shaft of rotor and front bracket assembly 3 with tape.

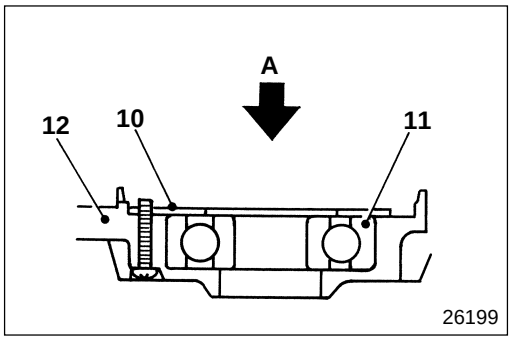

11 Installation of front bearing

- Press-fit front bearing **11** until it is flush with the installation part of cover **10**.
  A : Press

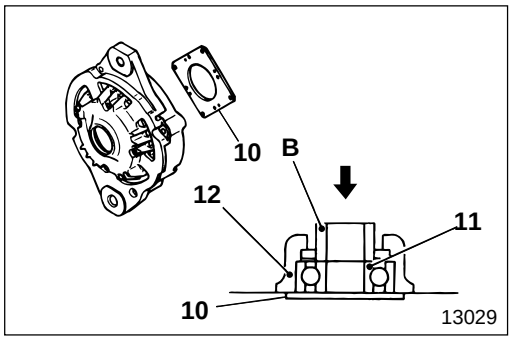

- Install cover **10**.
- Press spacer **B** until it makes contact with front bearing **11** and cover **10**, using a press.

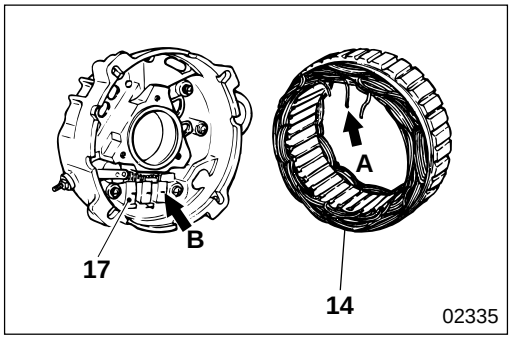

14 Stator assembly

[Removal and installation]

- Disconnect lead **A** of stator assembly **14** from rectifier **17**. The lead is soldered to diode **B** of rectifier **17** at three points.

CAUTION

Make sure that you desolder within five seconds because the diode is heat sensitive.

- To install, follow the removal sequence in reverse.

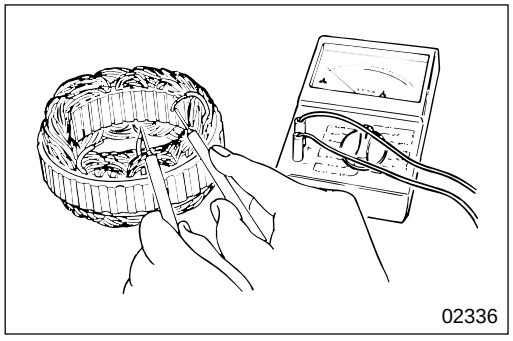

[Inspection]

(1) Continuity of each lead wire

- Make sure that each lead wire has continuity.
- If there is no continuity, the lead wire is broken. Replace stator assembly **14**.

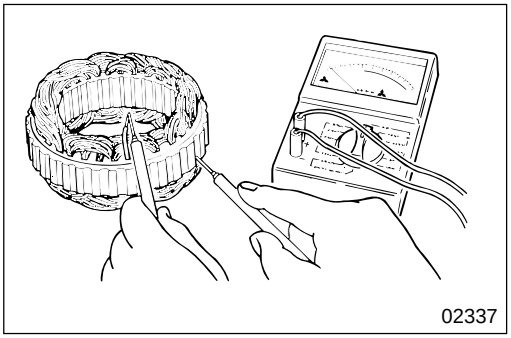
02337

(2) Continuity between lead wires and the core

- Make sure that there is no continuity between lead wires and the core.
- If there is continuity, replace stator assembly **14**, since it might be short-circuited.

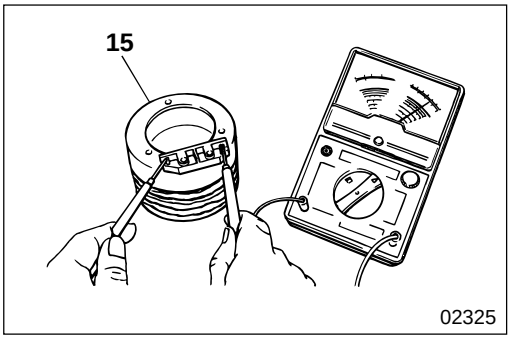

02325

15 Inspection of field coil

- Measure the resistance between the terminals of field coil **15**.
- If the measured value deviates from the standard value, replace field coil **15**.

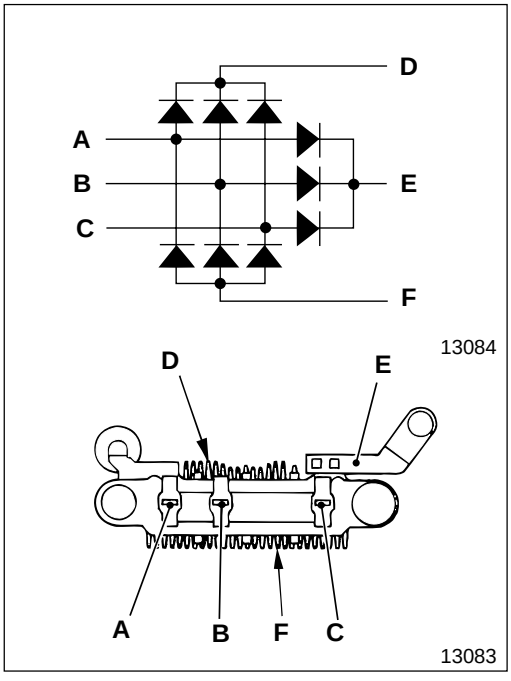

17 Inspection of rectifier

- Inspect whether the diode inside rectifier **17** functions properly, and if any fault is found, replace the rectifier.
  A, B, C : Lead connecting area of stator coil
  D, E : Heat sink area
  F : Regulator connecting area
- Inspect the rectifier twice, before and after the ⊕ side and ⊖ side of the tester have been changed over.

CAUTION⚠

When inspecting using a tester, the current becomes weaker than the usual current flowing through rectifier 17. Therefore, an incomplete resistance value might be indicated.
Also, this tendency increases as the range of the tester gets smaller. Therefore, use as large range as possible.

Power Supply (Battery to High-current Fuse Box and Fuse Box)

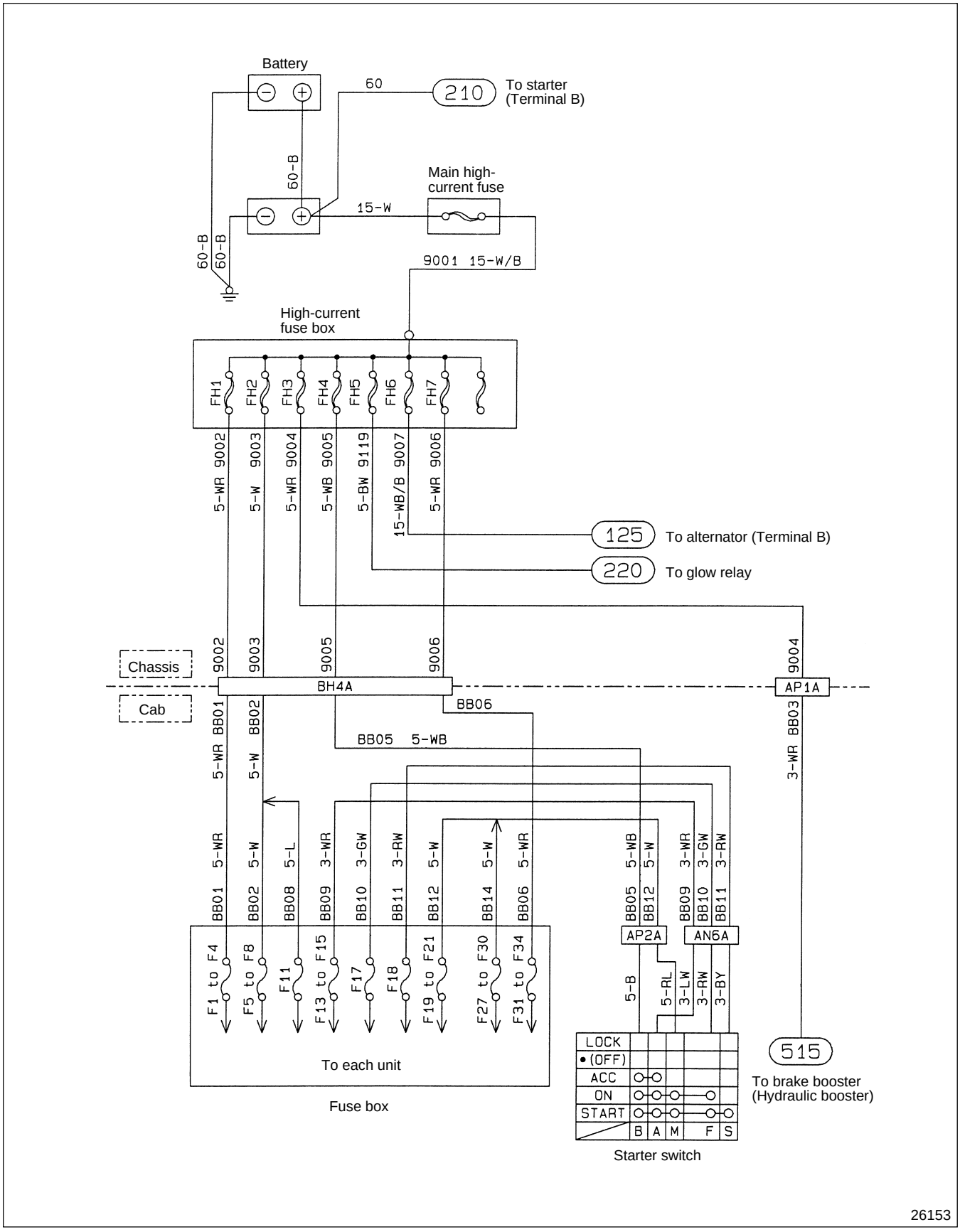

Fuses F1 to F4

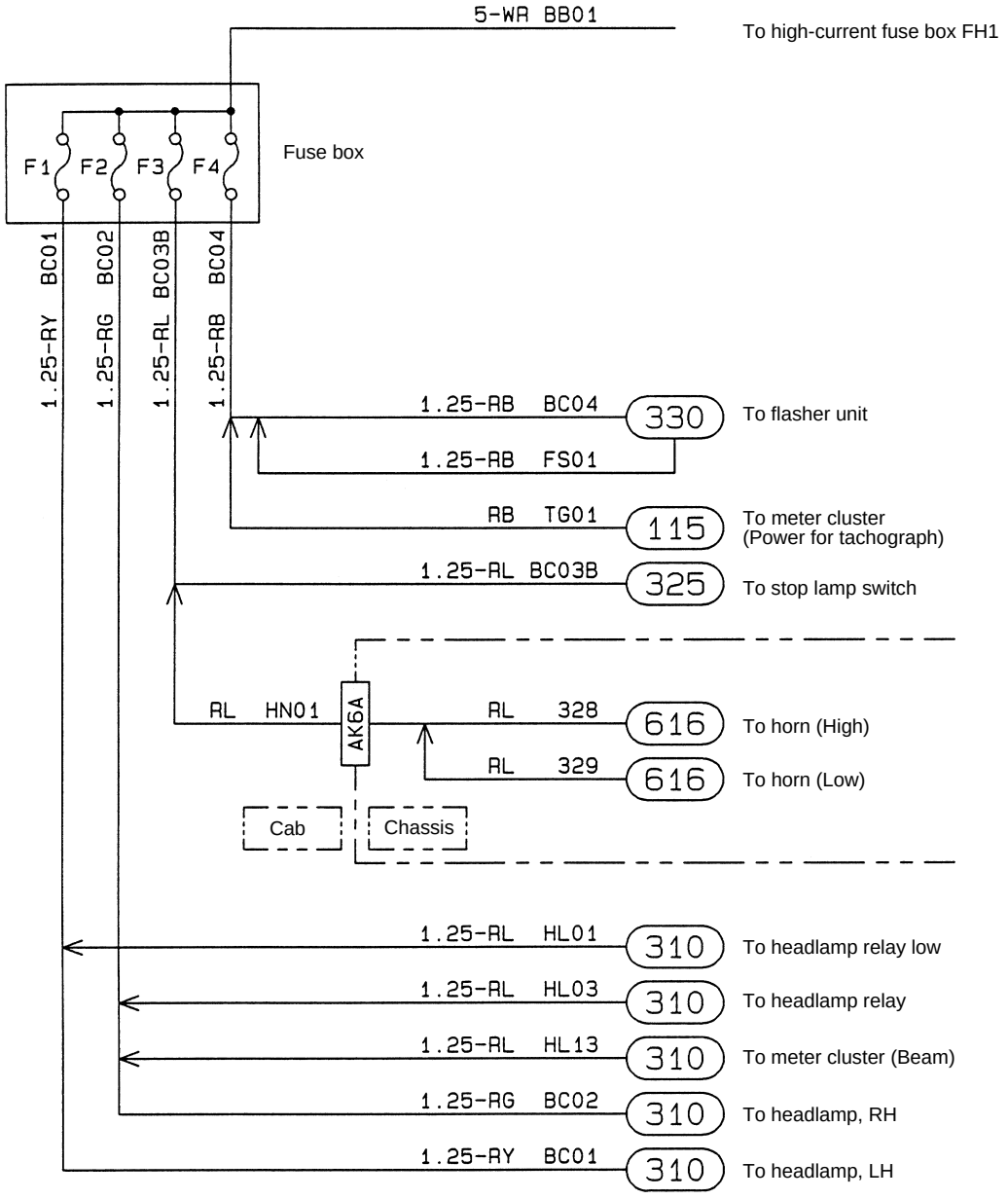

26154

Fuses F5 to F8, F11

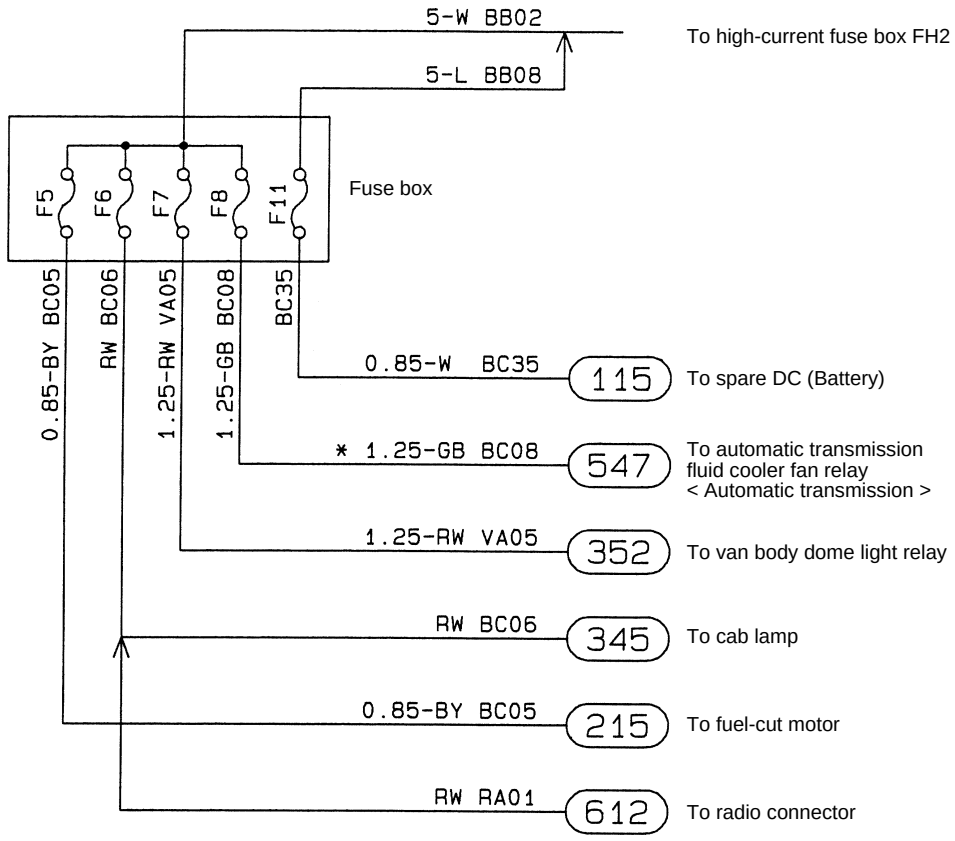

*: Automatic transmission

27136

Fuses F13 to F18

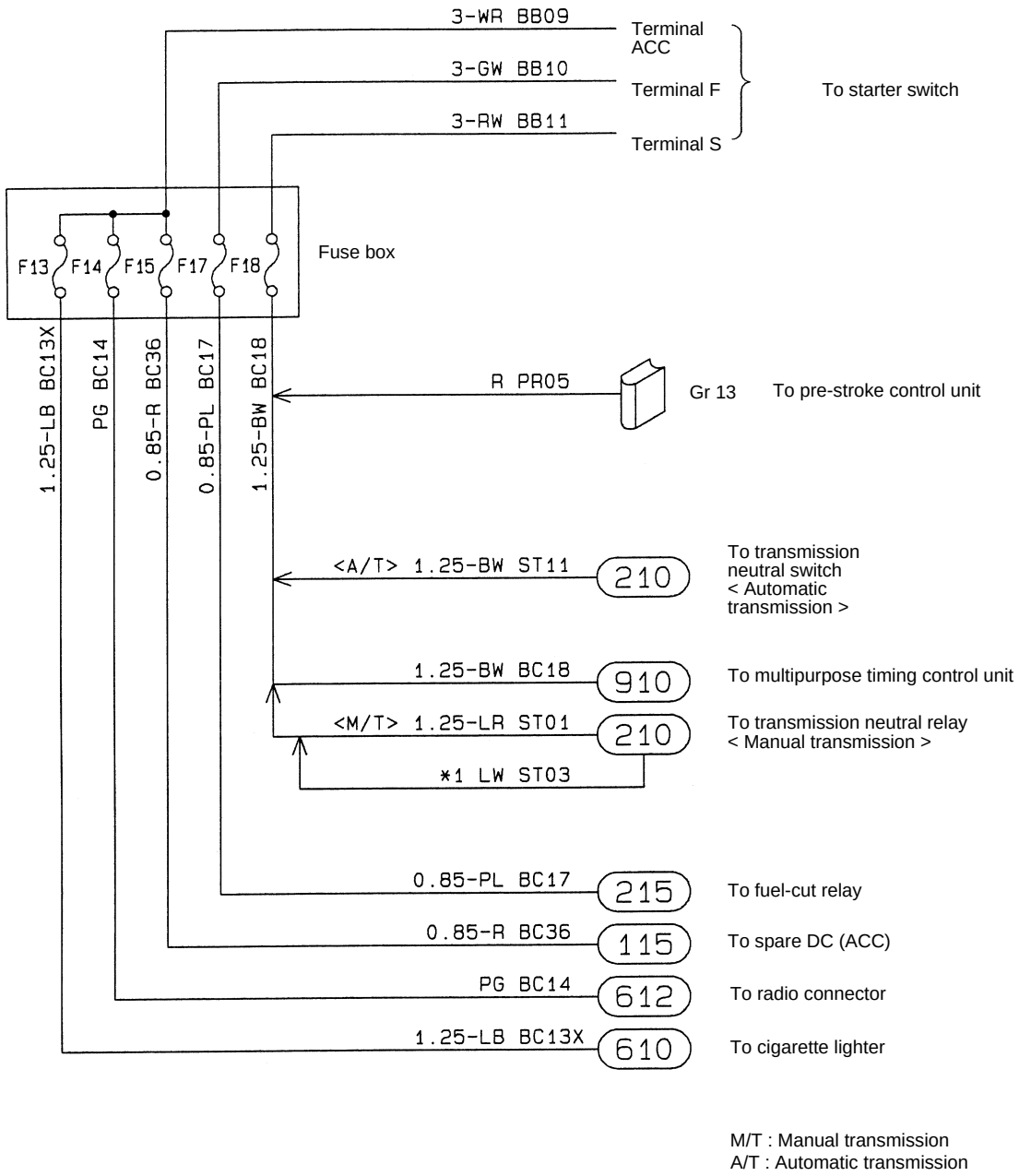

Fuses F19 to F21

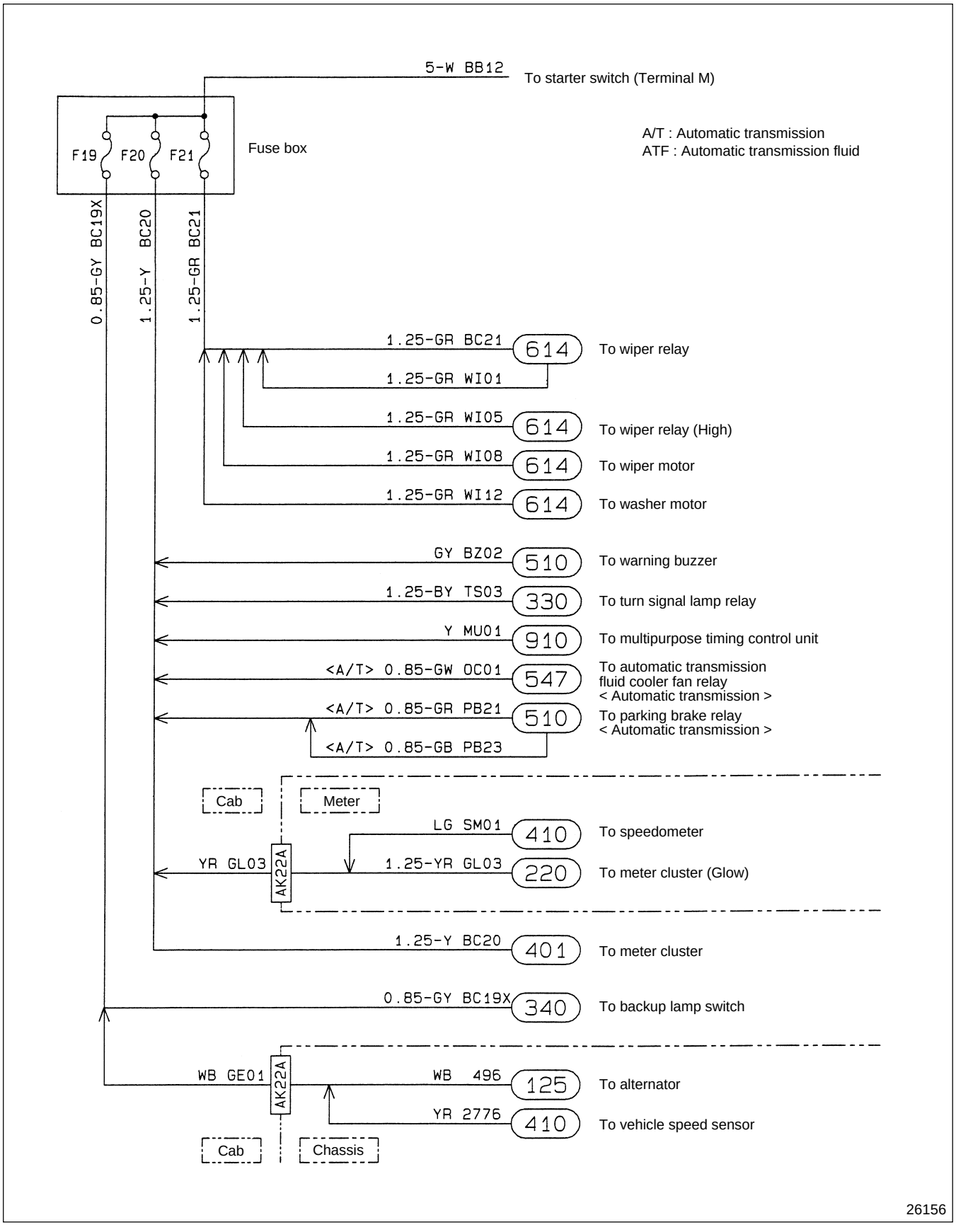

Fuses F27 to F30

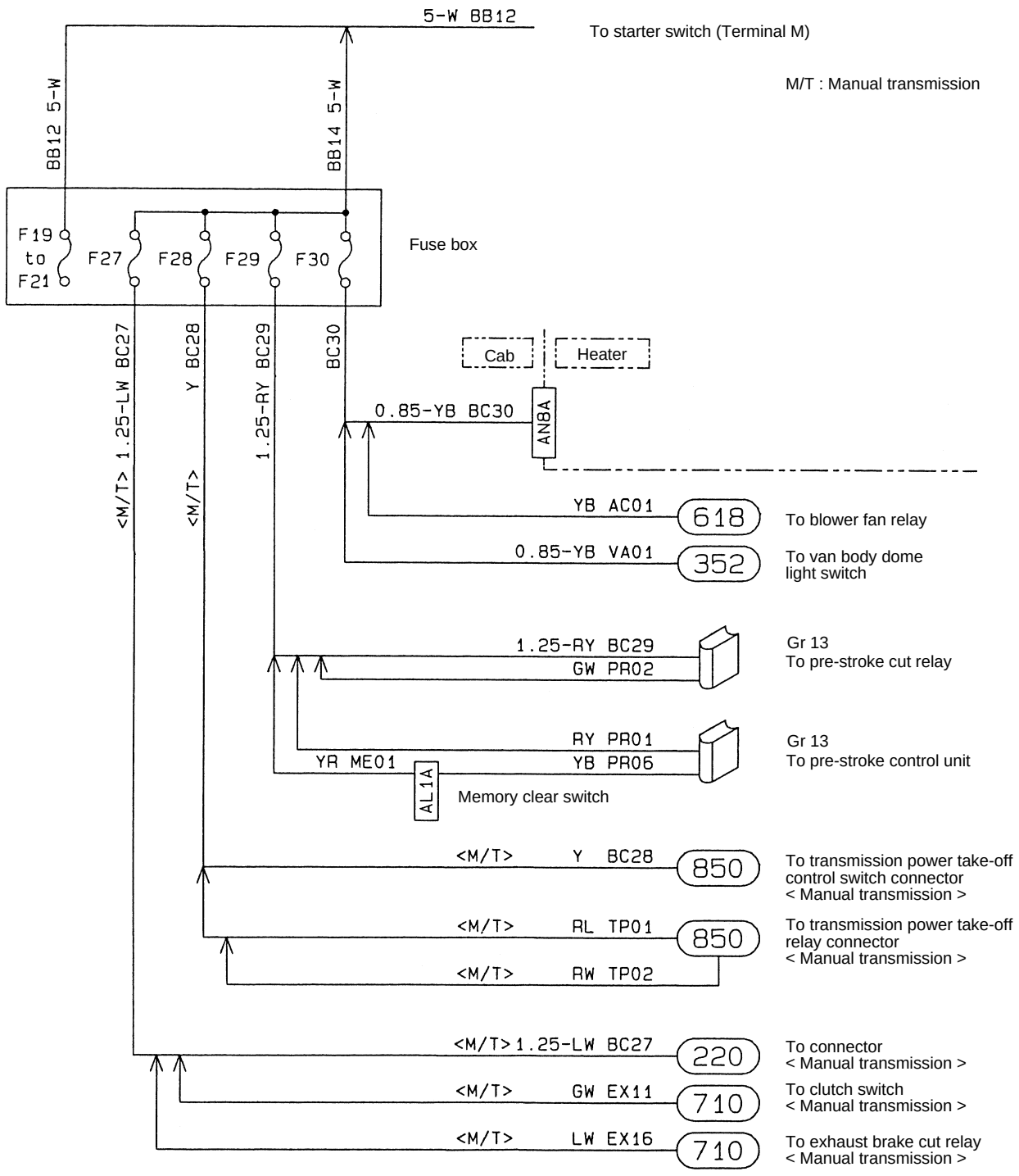

Fuses F31 to F34

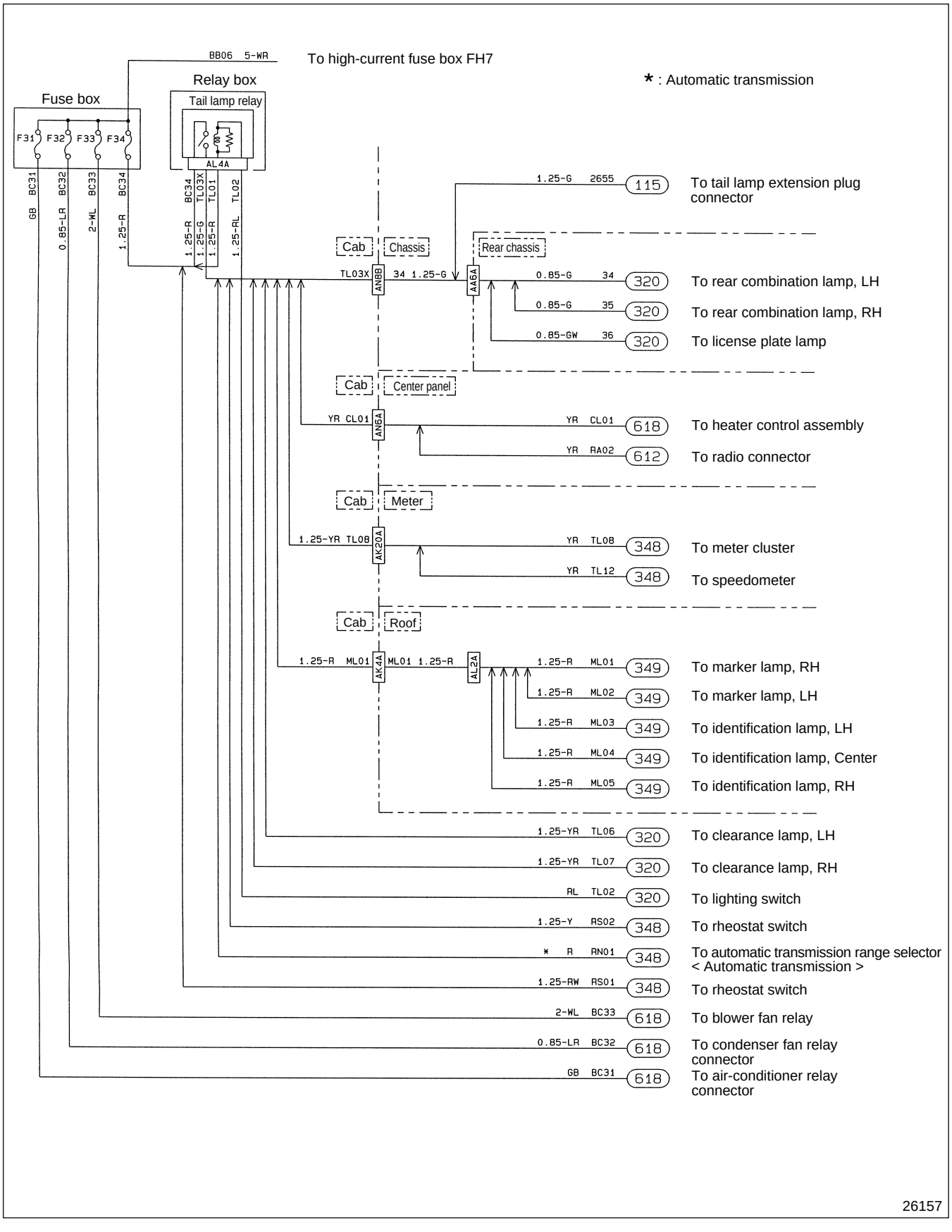

M E M O

115 RESERVE POWER CIRCUIT

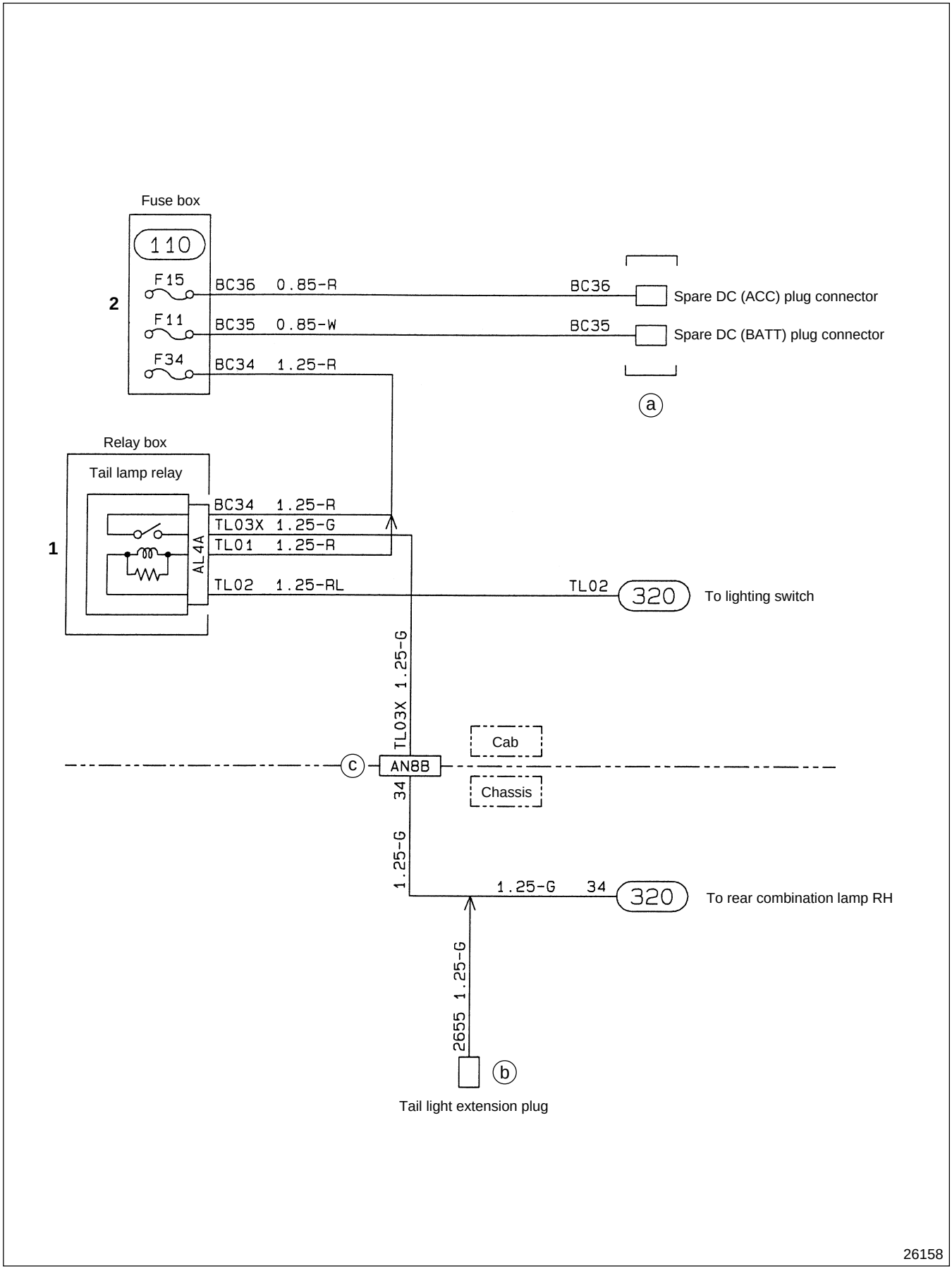

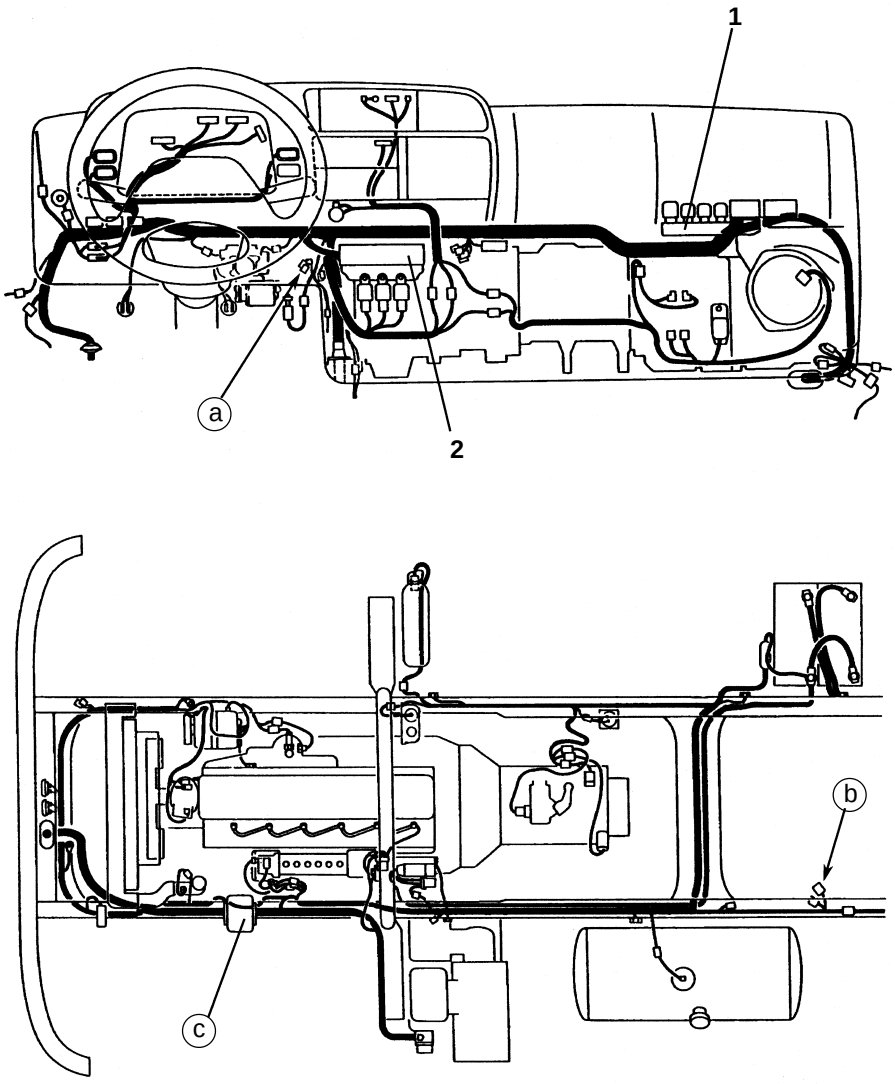

26885

1 Relay box 📖 (604)
2 Fuse box 📖 (104)

For information on the following equipment, refer to the manuals indicated.

- Transmission power take-off 📖 (850)
- Van body dome light 📖 (352)
- Air-conditioner 📖 (618)

📖 : '96 model Gr 54 (TWME 9502-54)

125 BATTERY CHARGING CIRCUIT

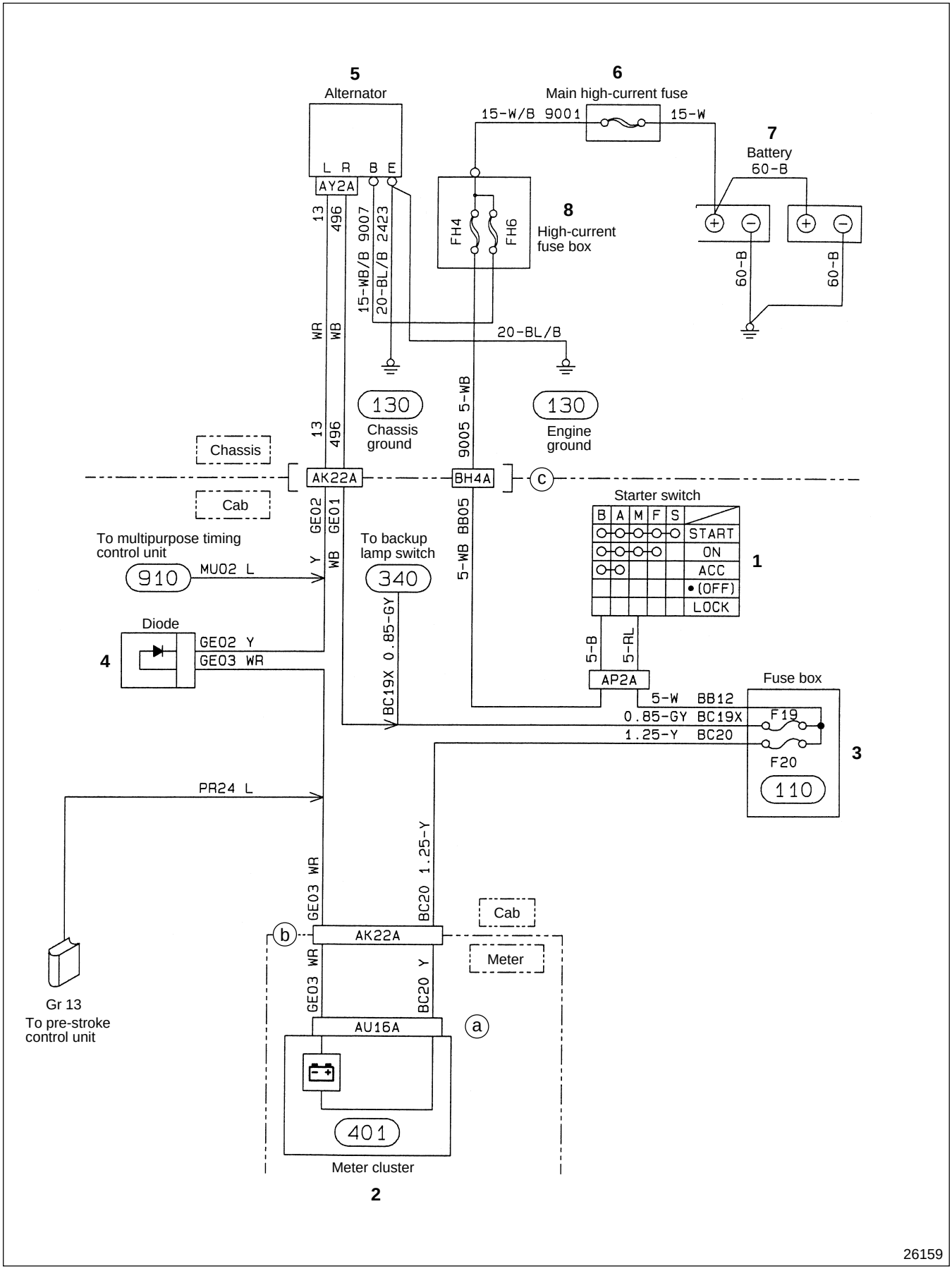

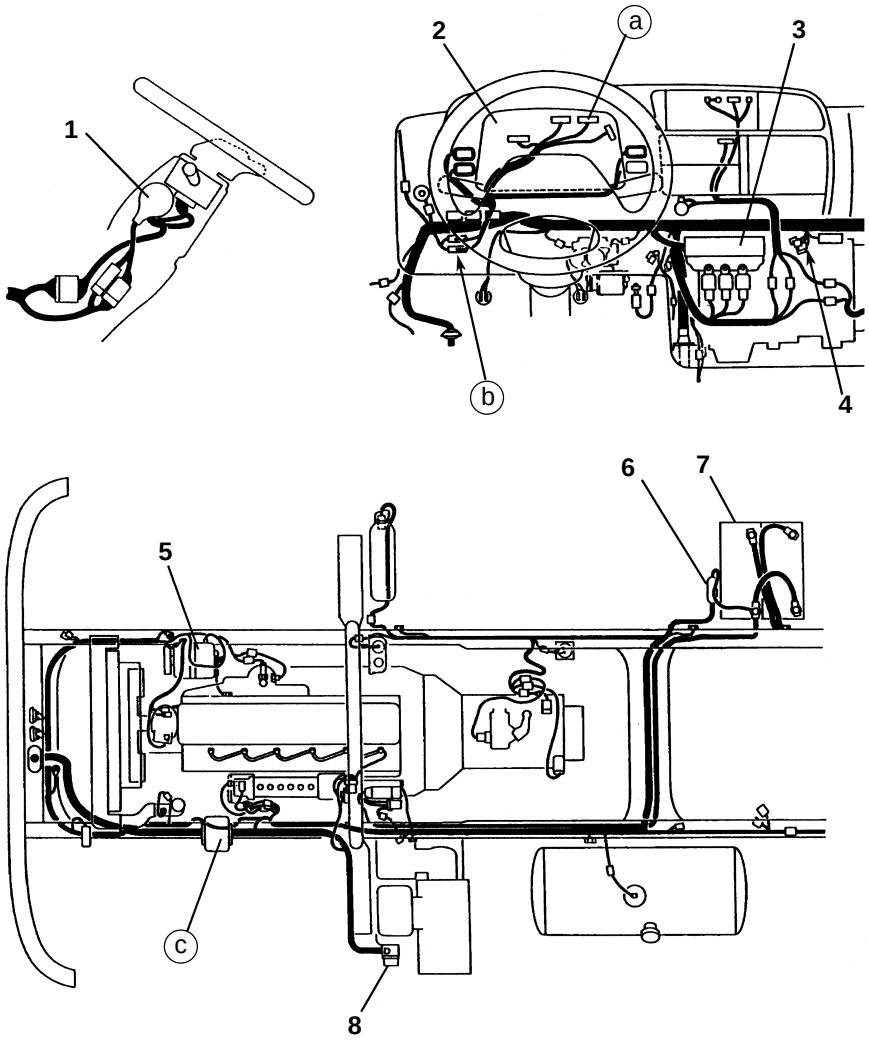

26886

1 Starter switch (210)
2 Meter cluster (401)
3 Fuse box (104)
4 Diode
5 Alternator (106)
6 Main high-current fuse (104)
7 Battery (101)
8 High-current fuse box (104)

: '96 Model Gr 54 (Pub. No. TWME9502-54)

Ground Point

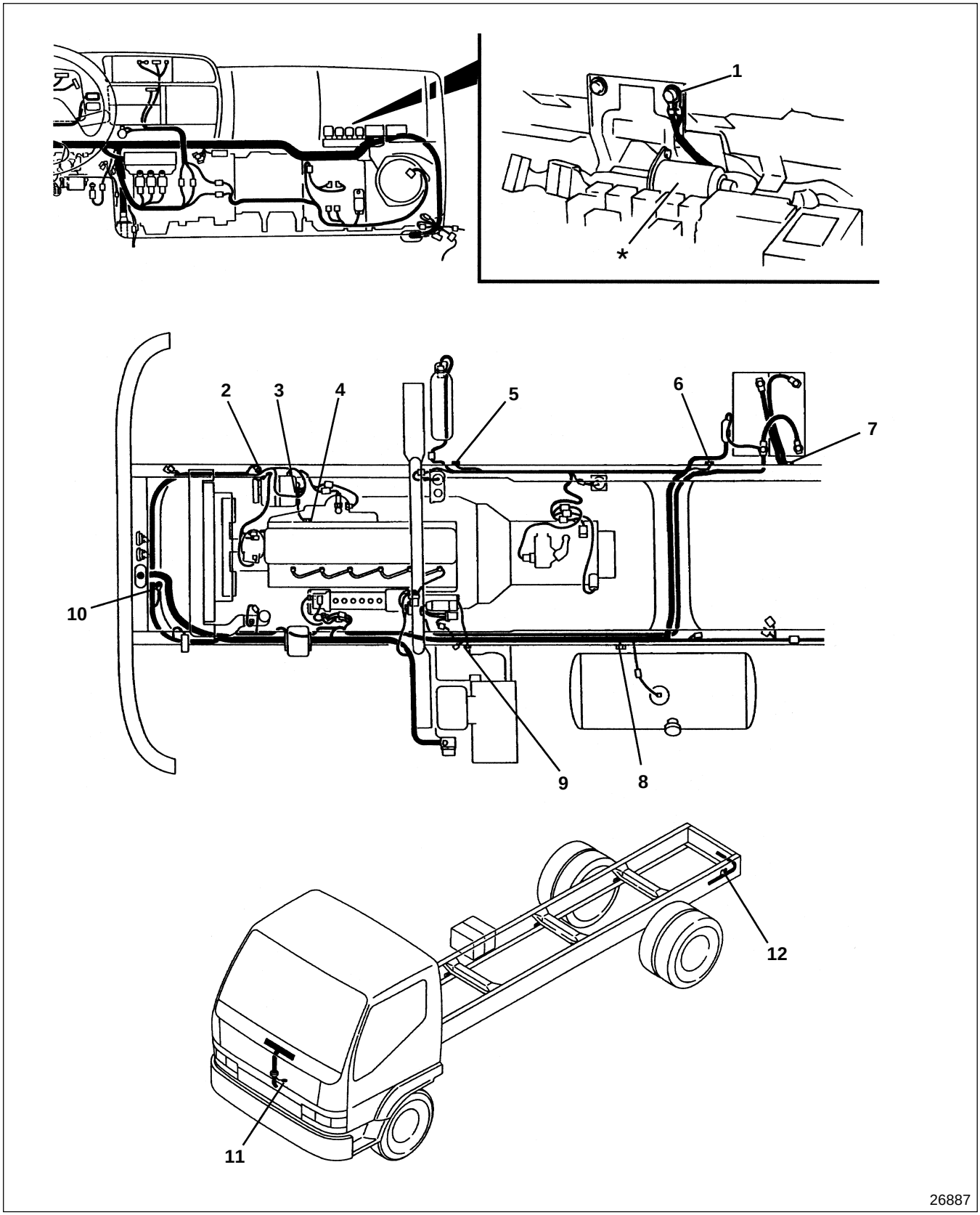

* : Wiper motor

Location	Name	Circuit No.	Wire diameter-wire color	Remarks
1	Cab ground	EA01	3–B	
2	Chassis ground	2423	20–BL/B	
3	Alternator ground	2423	20–BL/B	
4	Alternator ground	—	5–B	
5	Chassis ground	1575	1.25–B	
		1600	1.25–B	A/T
6	Chassis ground	1704	0.85-BR	
		1705	B	
7	Battery ground	—	60–B	
8	Chassis ground	74	B	
		1582	B	A/T
9	Engine ground	—	—	
10	Chassis ground	6	1.25–B	
		19	1.25–B	
		210	3–B	
		9617	3–B	
11	Cab ground	EA02	3–B	
12	Rear chassis ground	38	0.85–B	
		39	0.85–B	

A/T : Automatic transmission

Entire Ground

- This diagram indicates grounding points.
- See the following pages for branching of grounding (wiring for ☆). (in circuit No. order)

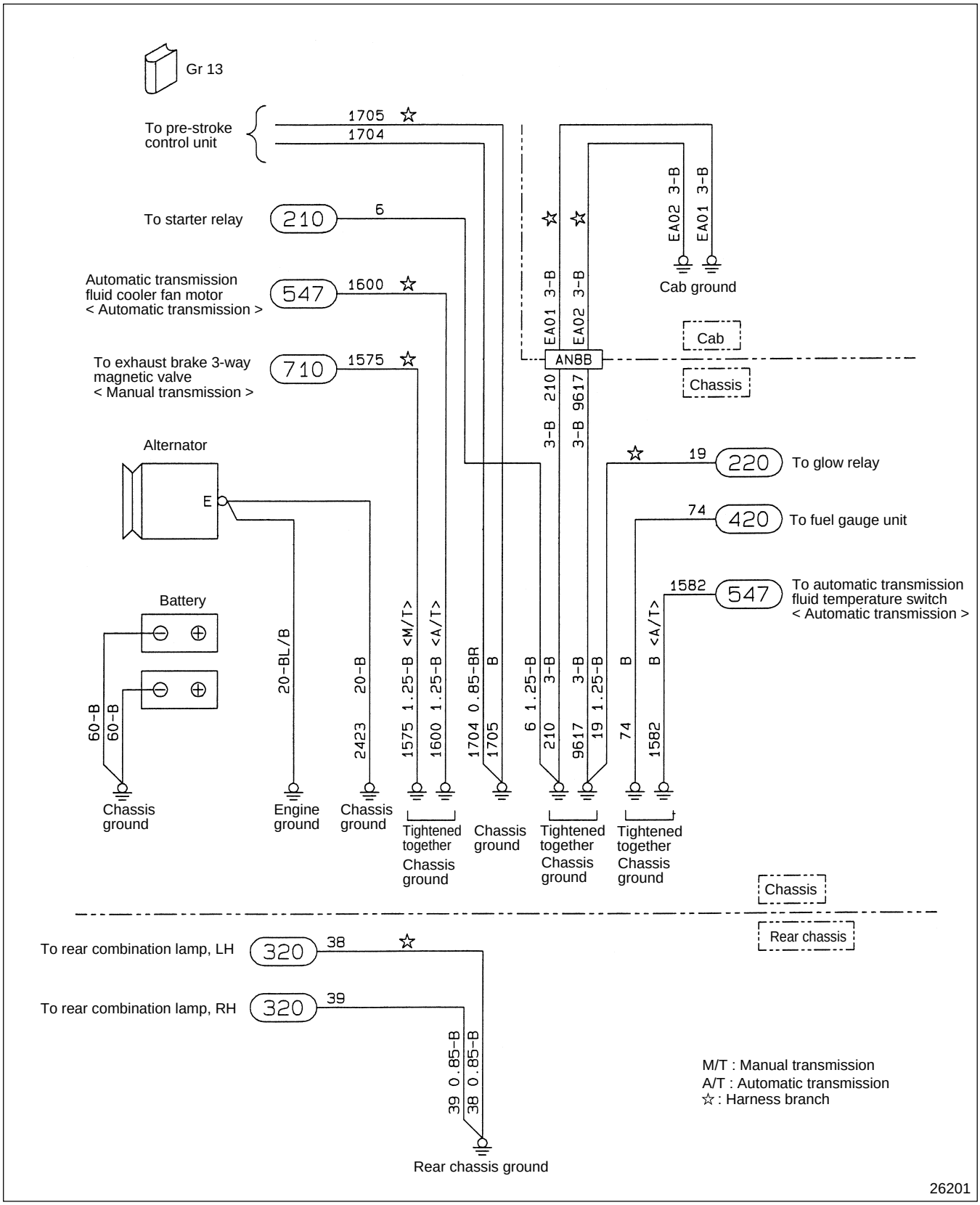

Circuit No.19 Chassis Ground

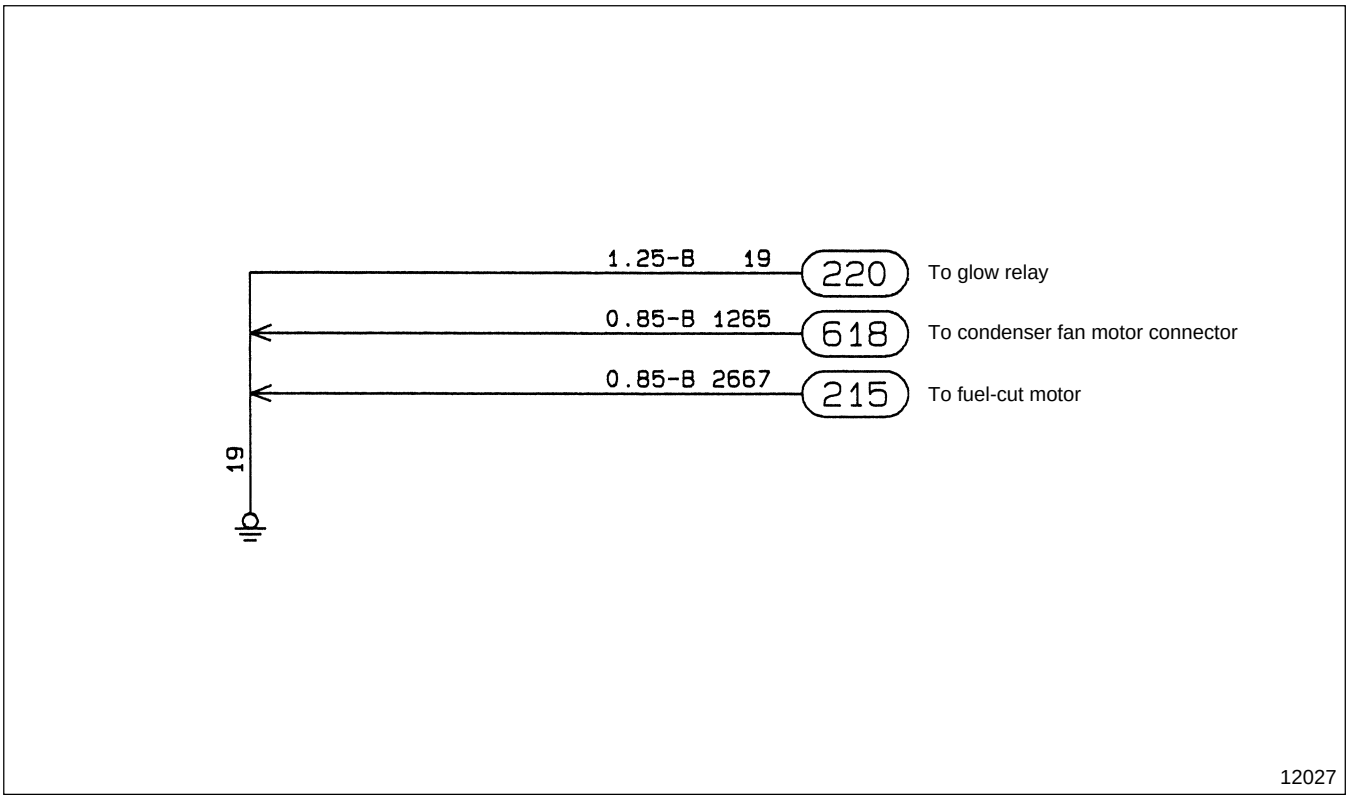

Circuit No.38 Rear Chassis Ground

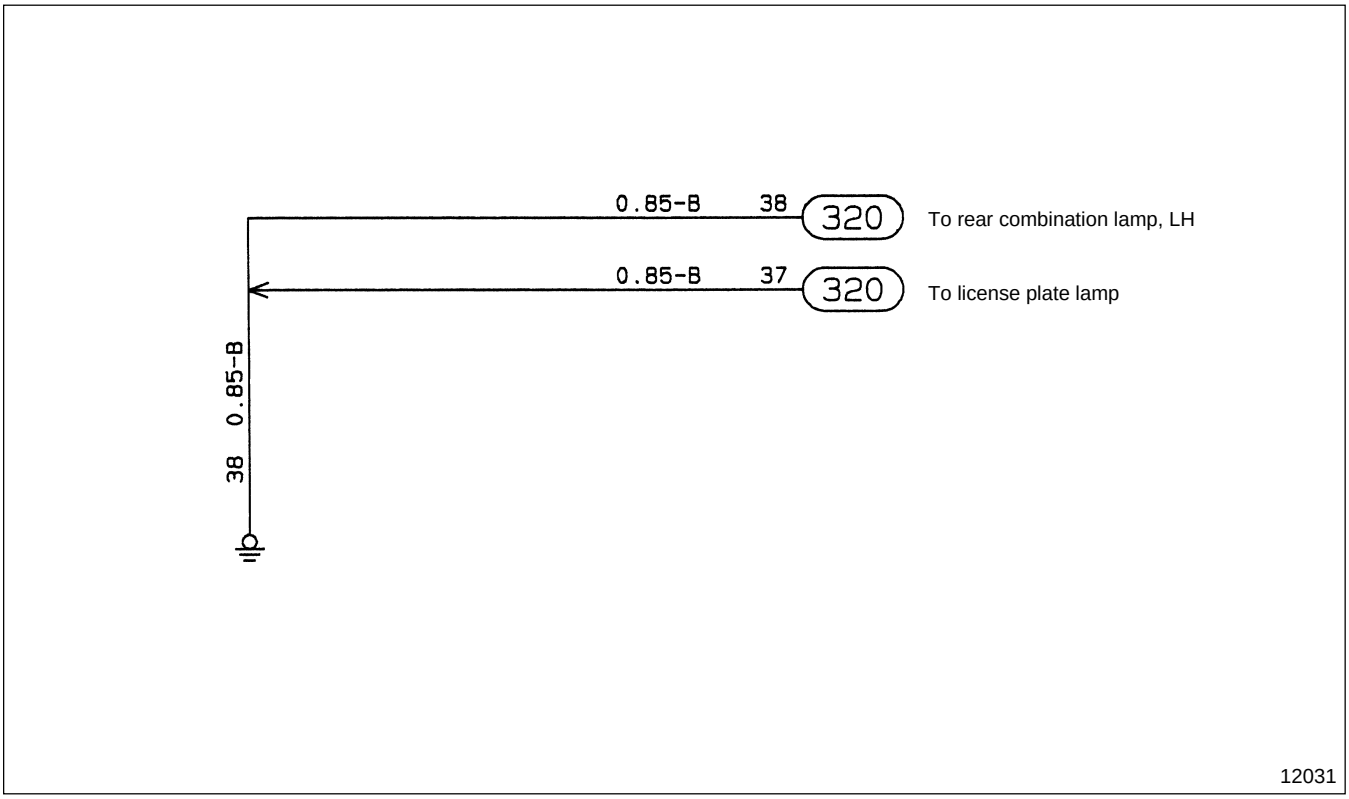

Circuit No.1575 Chassis Ground

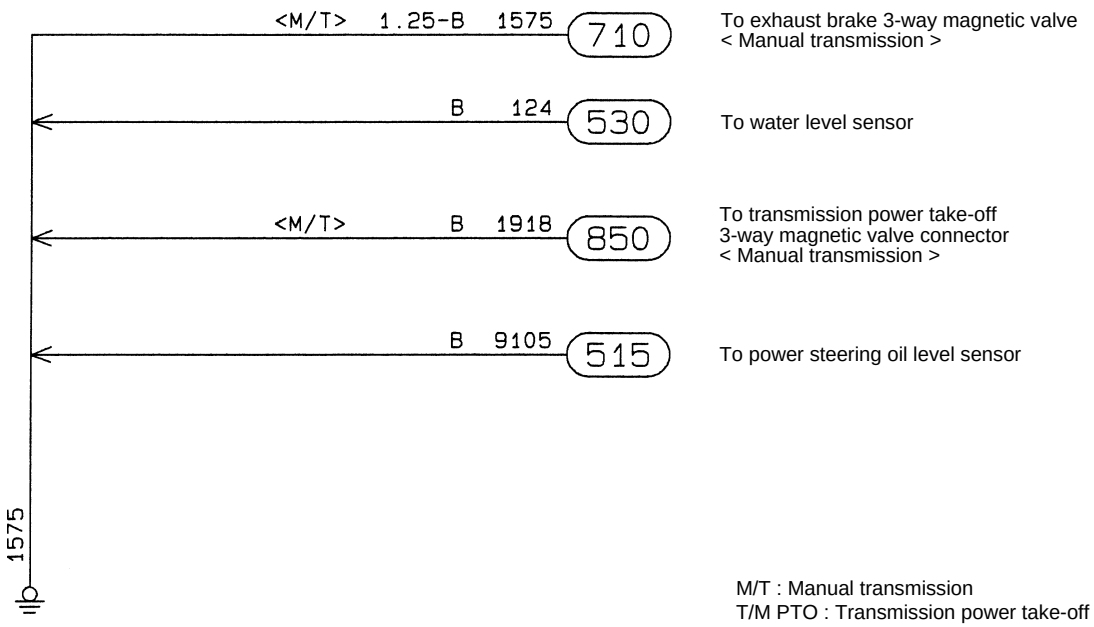

26162

Circuit No.1600 Chassis Ground < Only for Automatic Transmission >

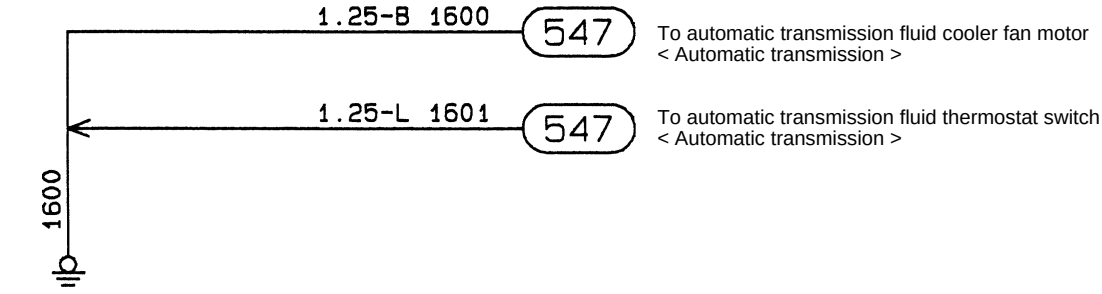

12029

Circuit No.1705 Chassis Ground

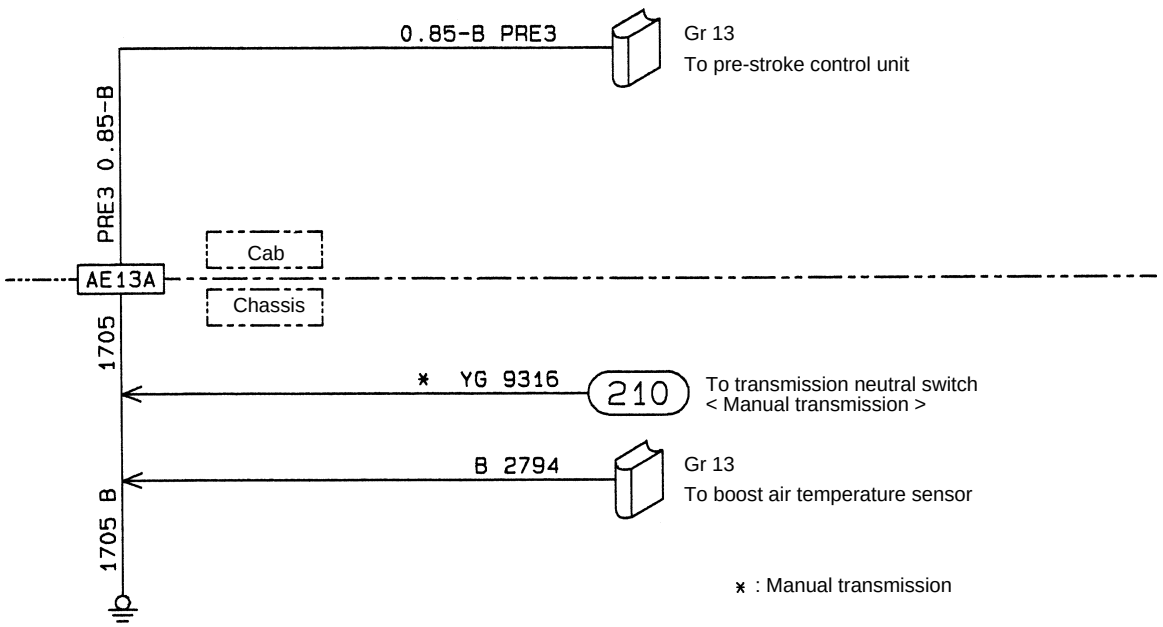

Circuit No.EA01 Cab Ground

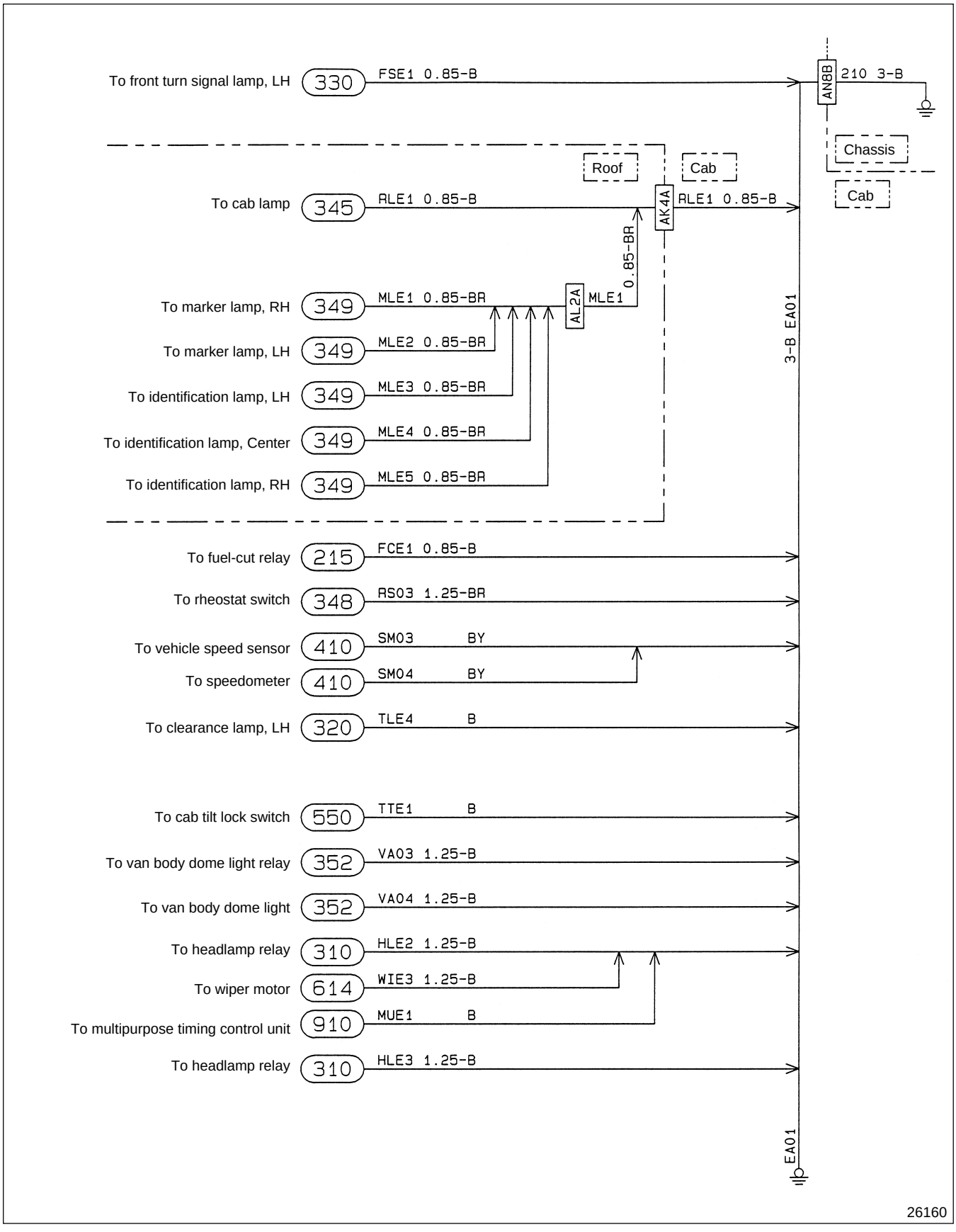

Circuit No.EA02 Cab Ground

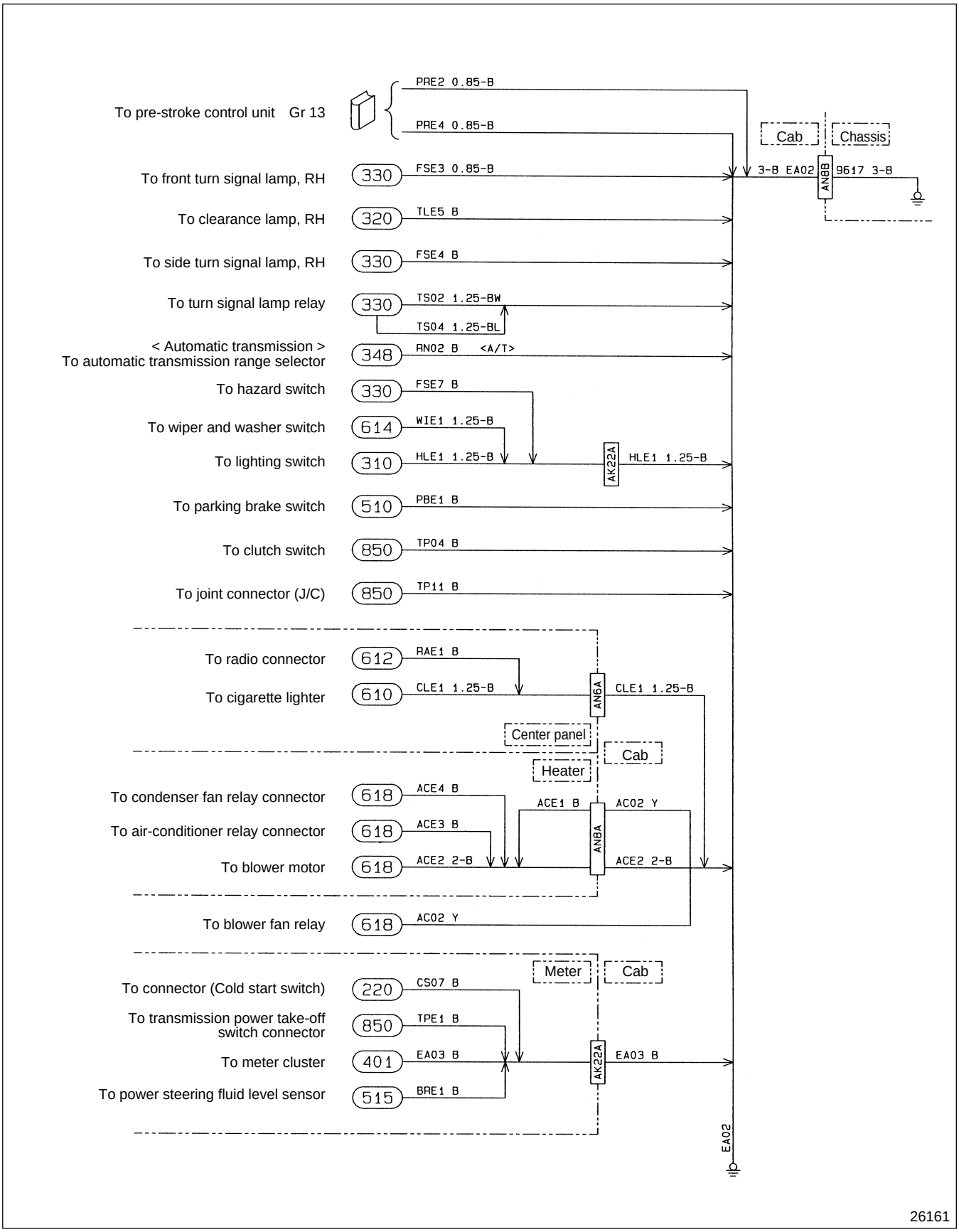

2 STARTING, PREHEATING AND STOPPING ENGINE

SPECIFICATIONS .....

STRUCTURE AND OPERATION .....

TROUBLESHOOTING .....

200 ON-VEHICLE INSPECTION AND ADJUSTMENT
Inspection of Engine Preheating System .....

201 STARTER .....

210 ENGINE STARTING CIRCUIT
< Manual Transmission > **54-2-2**
< Automatic Transmission > .....

215 ENGINE STOPPING CIRCUIT .....

220 ENGINE PREHEATING CIRCUIT
< Manual Transmission > **54-2-4**
< Automatic Transmission > ..... *

: '96 Model Gr 54 (Pub. No. TWME9502-54)
*: '97 Model Gr 54 (Pub. No. TWME9502-1)

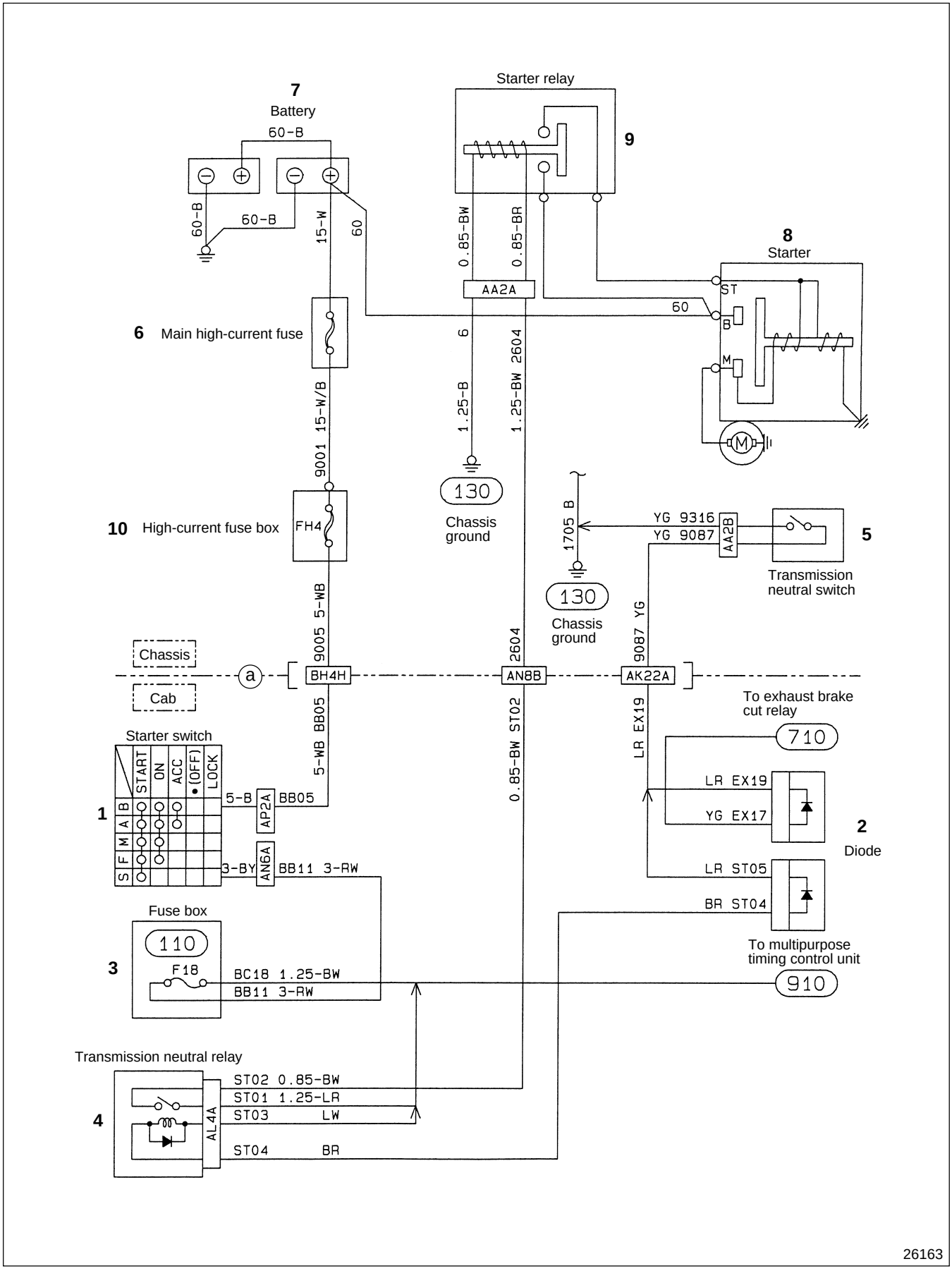
7
Battery
60-B
60-B
60-B
15-W
60
Starter relay
9
0.85-BW
0.85-BR
AA2A
8
Starter
ST
60
B
M
6 Main high-current fuse box
6
1.25-B
1.25-BW 2604
9001 15-W/B
130
Chassis ground
10 High-current fuse box
FH4
1705 B
YG 9316
YG 9087
AA2B
5
Transmission neutral switch
130
Chassis ground
9005 5-WB
2604
9087 YG
Chassis
Cab
a
BH4H
AN8B
AK22A
To exhaust brake cut relay
Starter switch
5-WB BB05
0.85-BW ST02
LR EX19
710
LR EX19
YG EX17
2
Diode
1
5-B
AP2A
BB05
3-BY
AN6A
BB11 3-RW
LR ST05
BR ST04
Fuse box
110
3
F18
BC18 1.25-BW
BB11 3-RW
To multipurpose timing control unit
910
Transmission neutral relay
4
AL4A
ST02 0.85-BW
ST01 1.25-LR
ST03 LW
ST04 BR
26163

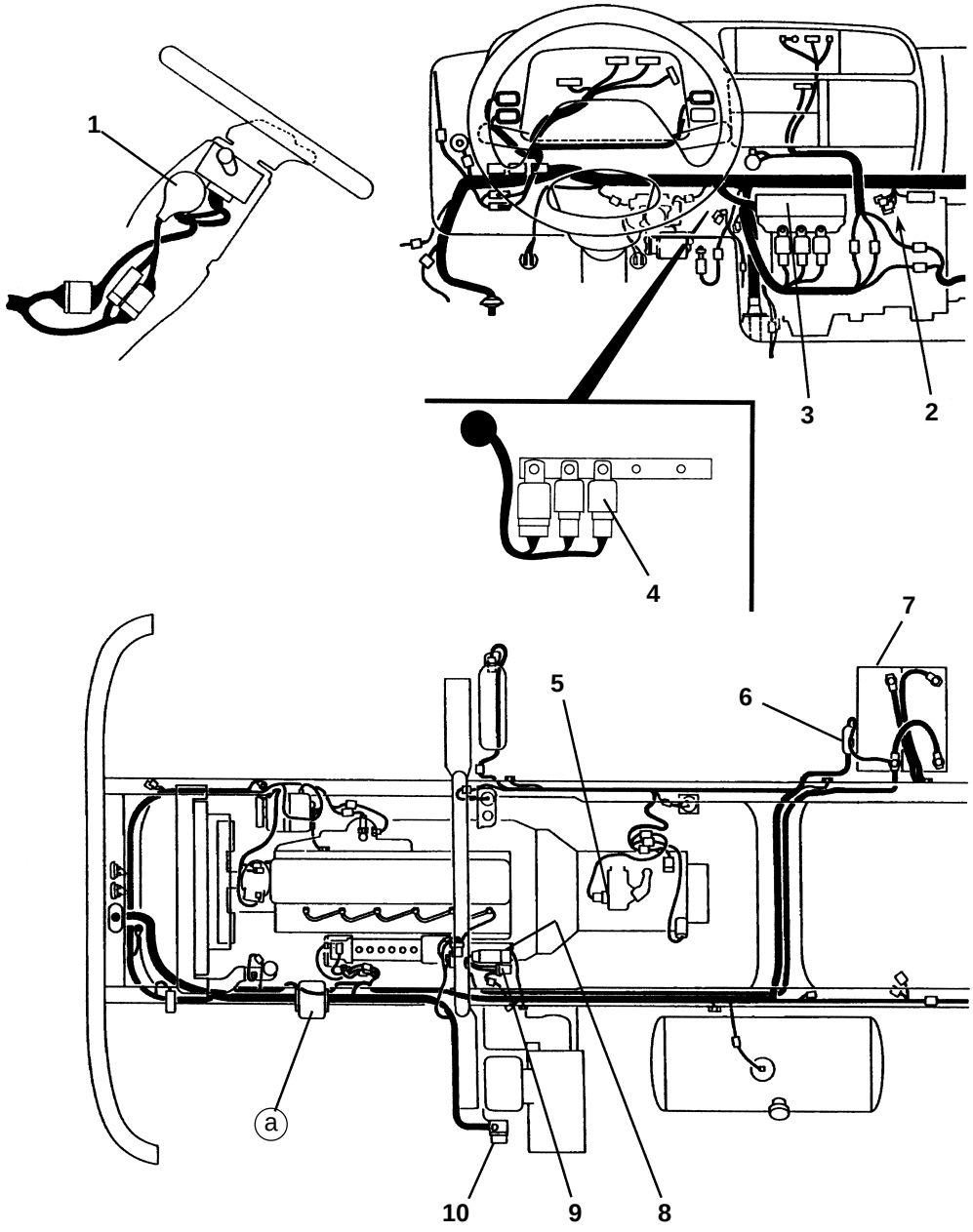

26888

1 Starter switch (210)
2 Diode
3 Fuse box (104)
4 Transmission neutral relay (604)
5 Transmission neutral switch (802)
6 Main high-current fuse (104)
7 Battery (101)
8 Starter (201)
9 Starter relay (210)
10 High-current fuse box (104)

: '96 Model Gr 54 (Pub. No. TWME9502-54)

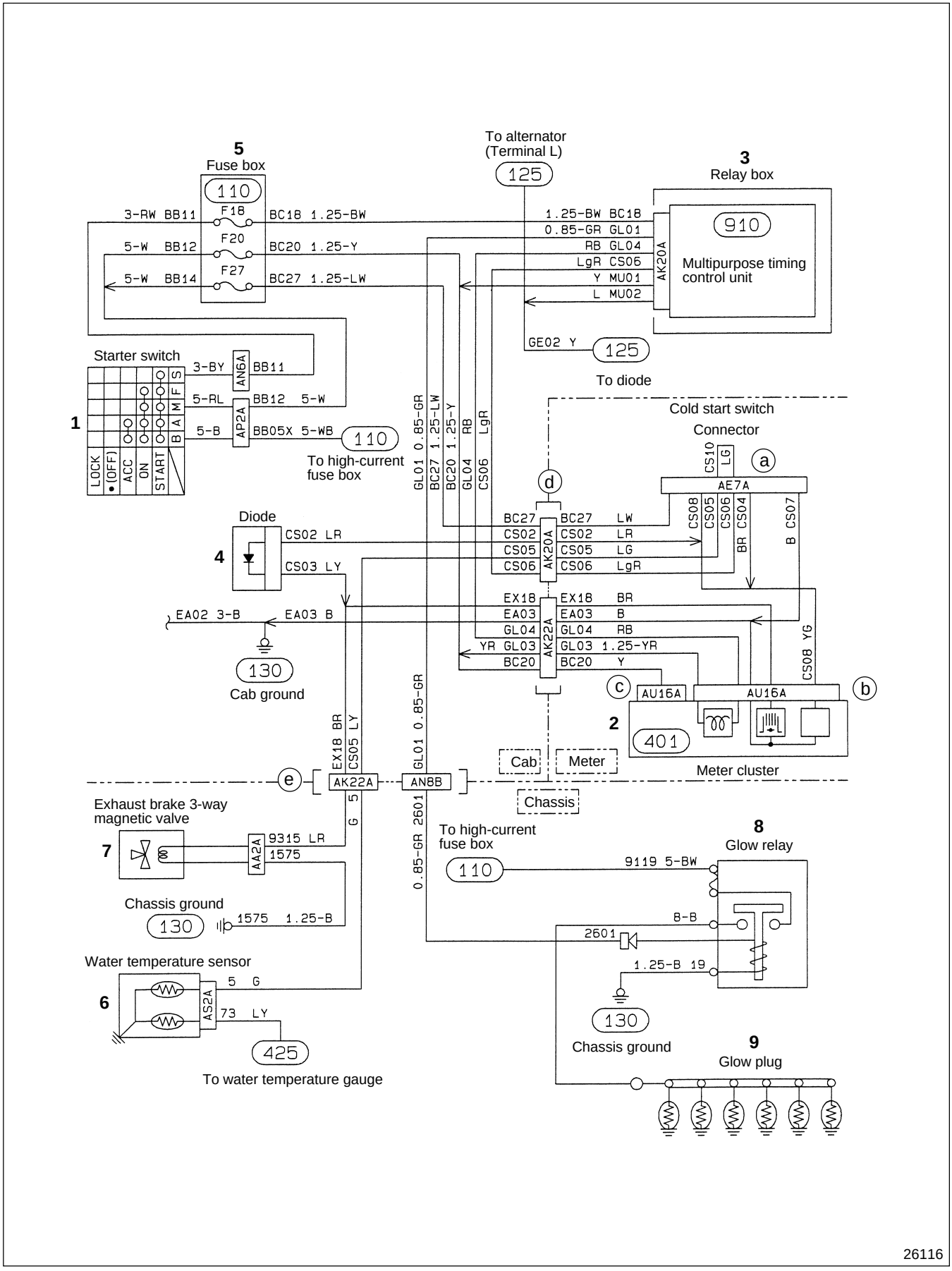
5
Fuse box
110
3-RW BB11
F18
BC18 1.25-BW
5-W BB12
F20
BC20 1.25-Y
5-W BB14
F27
BC27 1.25-LW
To alternator
(Terminal L)
125
3
Relay box
910
Multipurpose timing
control unit
AK20A
1.25-BW BC18
0.85-GR GL01
RB GL04
LgR CS06
Y MU01
L MU02
GE02 Y
125
To diode
Starter switch
1
LOCK
(OFF)
ACC
ON
START
B
A
M
F
S
3-BY
AN6A
BB11
5-RL
AP2A
BB12 5-W
5-B
BB05X 5-WB
110
To high-current
fuse box
GL01 0.85-GR
BC27 1.25-LW
BC20 1.25-Y
GL04 RB
CS06 LgR
Cold start switch
Connector
CS10
LG
a
AE7A
d
Diode
4
CS02 LR
CS03 LY
BC27 BC27 LW
CS02 CS02 LR
CS05 CS05 LG
CS06 CS06 LgR
AK20A
CS08
CS05
CS06
CS04
BR
B CS07
EX18 EX18 BR
EA03 EA03 B
GL04 GL04 RB
YR GL03 GL03 1.25-YR
BC20 BC20 Y
AK22A
EA02 3-B
EA03 B
130
Cab ground
c
AU16A
AU16A
b
2
401
Meter cluster
CS08 YG
Cab
Meter
e
AK22A
AN8B
Chassis
EX18 BR
CS05 LY
G 5
GL01 0.85-GR
Exhaust brake 3-way
magnetic valve
7
AA2A
9315 LR
1575
Chassis ground
130
1575 1.25-B
To high-current
fuse box
110
0.85-GR 2601
8
Glow relay
9119 5-BW
8-B
2601
1.25-B 19
130
Chassis ground
Water temperature sensor
6
AS2A
5 G
73 LY
425
To water temperature gauge
9
Glow plug
26116

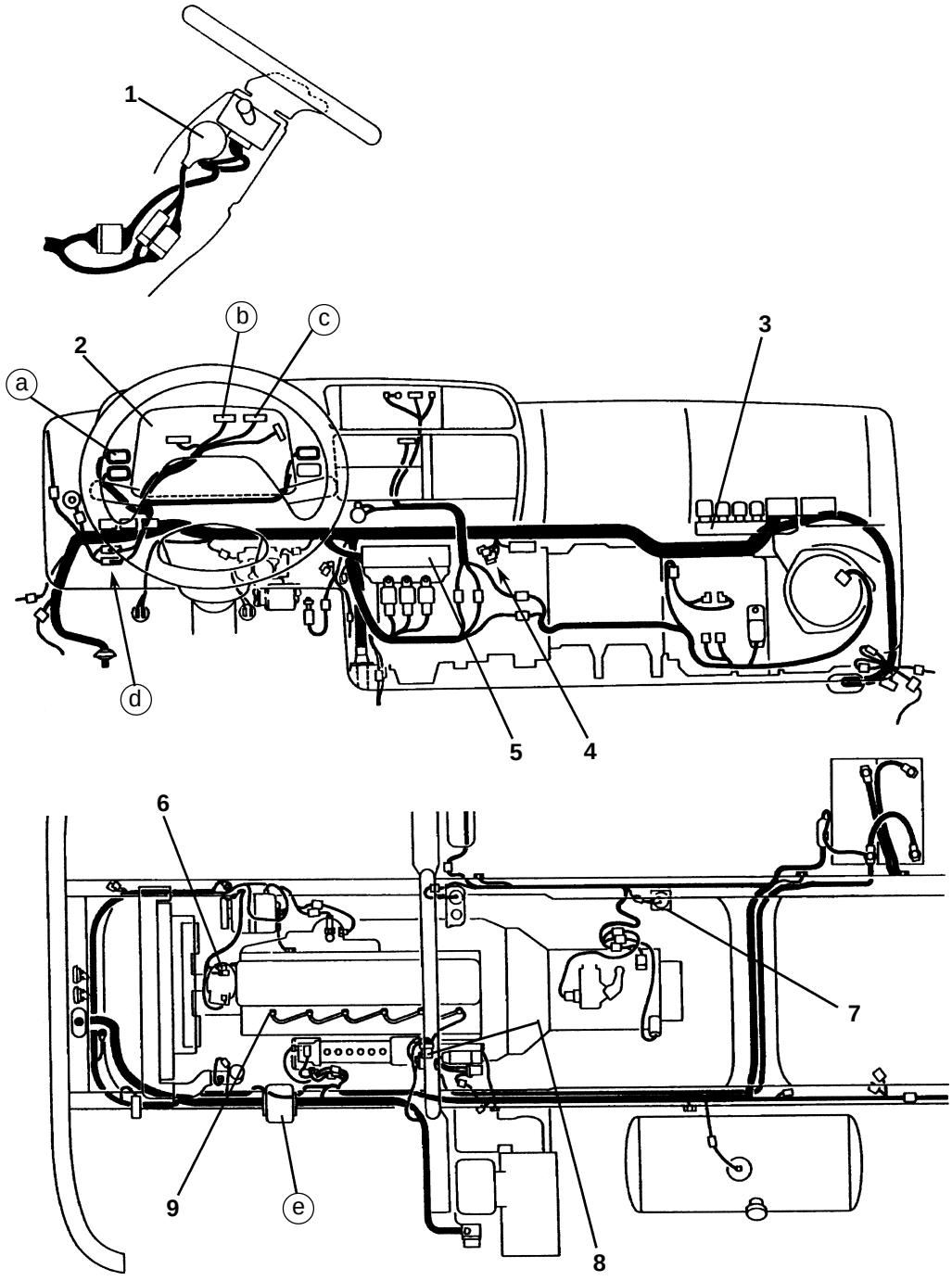

1 Starter switch 210
2 Meter cluster 401
3 Relay box 604
4 Diode
5 Fuse box 104
6 Water temperature sensor 801
7 Exhaust brake 3-way magnetic valve 701
8 Glow relay
9 Glow plug

: '96 Model Gr 54 (Pub. No. TWME9502-54)

3 LIGHTING

SPECIFICATIONS .....

STRUCTURE AND OPERATION .....

TROUBLESHOOTING .....

300 ON-VEHICLE INSPECTION AND ADJUSTMENT
Headlamp Aiming .....

310 HEADLAMP CIRCUIT .....

320 TAIL LAMP, CLEARANCE LAMP AND LICENSE PLATE LAMP CIRCUITS 54-3-2

325 STOP LAMP CIRCUIT 54-3-4

330 TURN SIGNAL LAMP AND HAZARD LAMP CIRCUITS .....

340 BACKUP LAMP CIRCUIT .....

345 CAB LAMP CIRCUIT .....

348 ILLUMINATION LAMP CIRCUIT .....

349 MARKER LAMP AND IDENTIFICATION LAMP CIRCUITS .....

352 VAN BODY DOME LIGHT CIRCUIT 54-3-6

: '96 Model Gr 54 (Pub. No. TWME9502-54)

320 TAIL LAMP, CLEARANCE LAMP AND LICENSE PLATE LAMP CIRCUITS

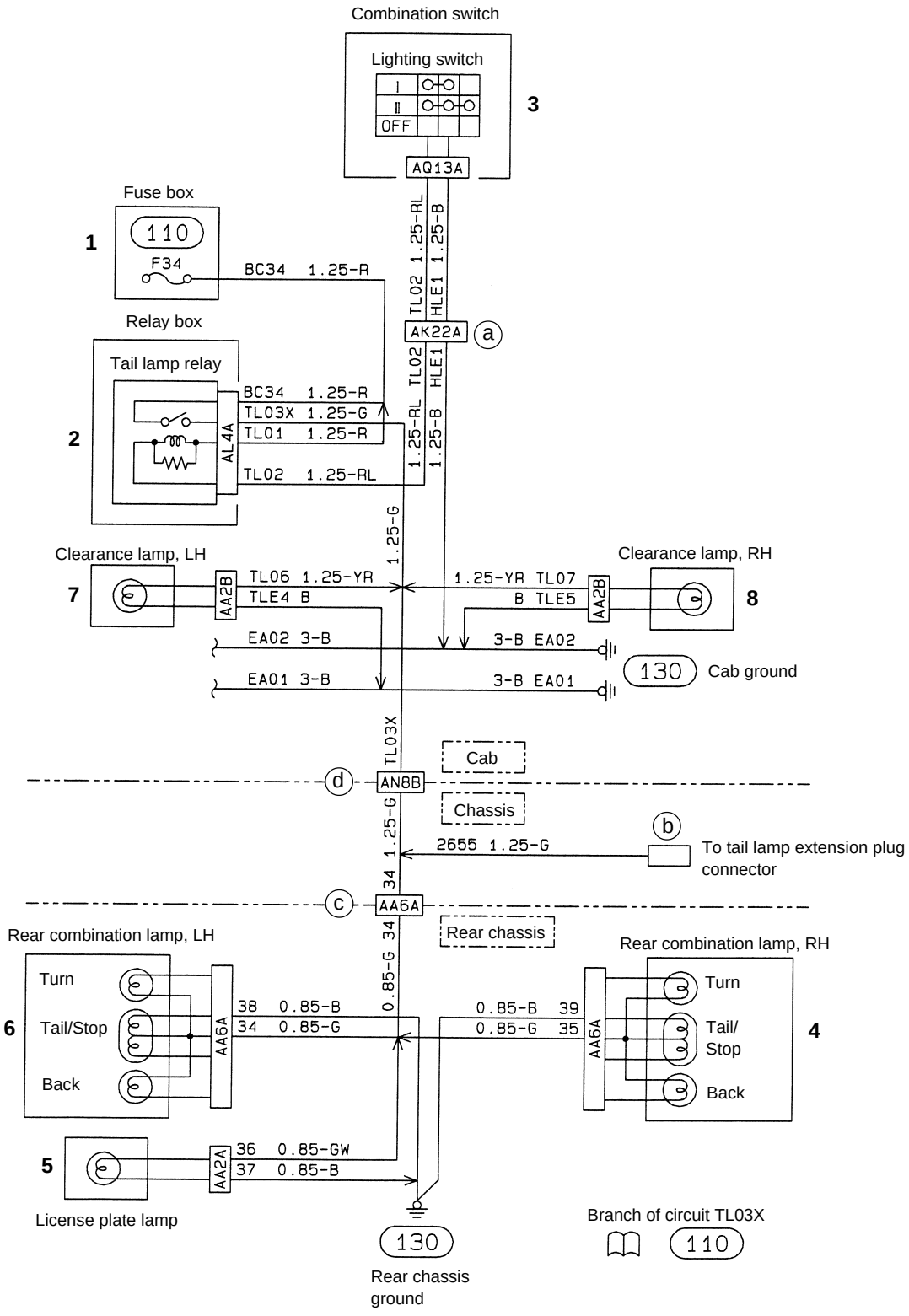

26168

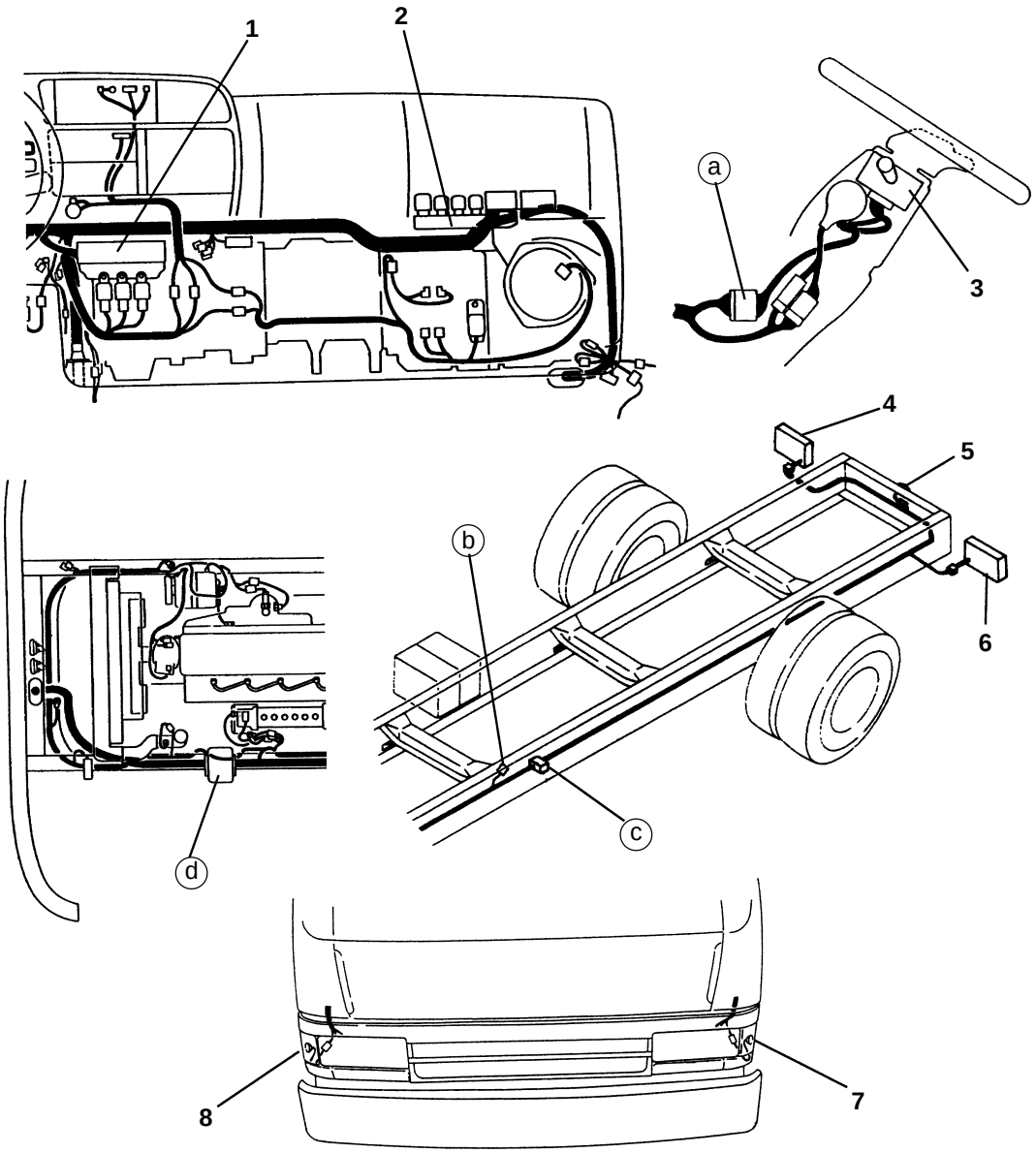

1 Fuse box 📖 (104)
2 Relay box 📖 (604)
3 Combination switch 🖹 (601)
4 Rear combination lamp, RH
5 License plate lamp
6 Rear combination lamp, LH
7 Clearance lamp, LH
8 Clearance lamp, RH

🖹 : ' 96 Model Gr 54 (Pub. No. TWME9502-54)

325 STOP LAMP CIRCUIT

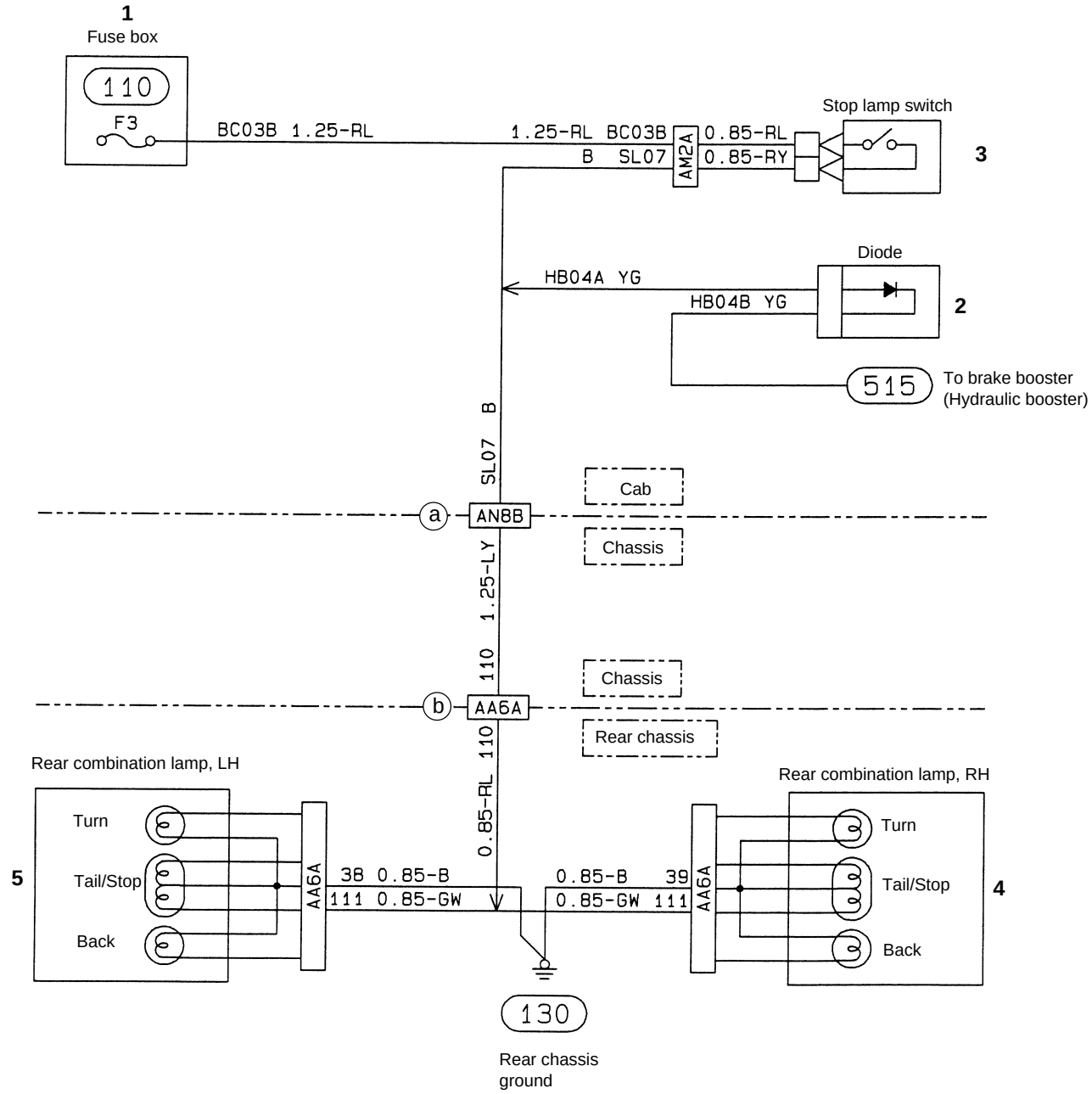

26169

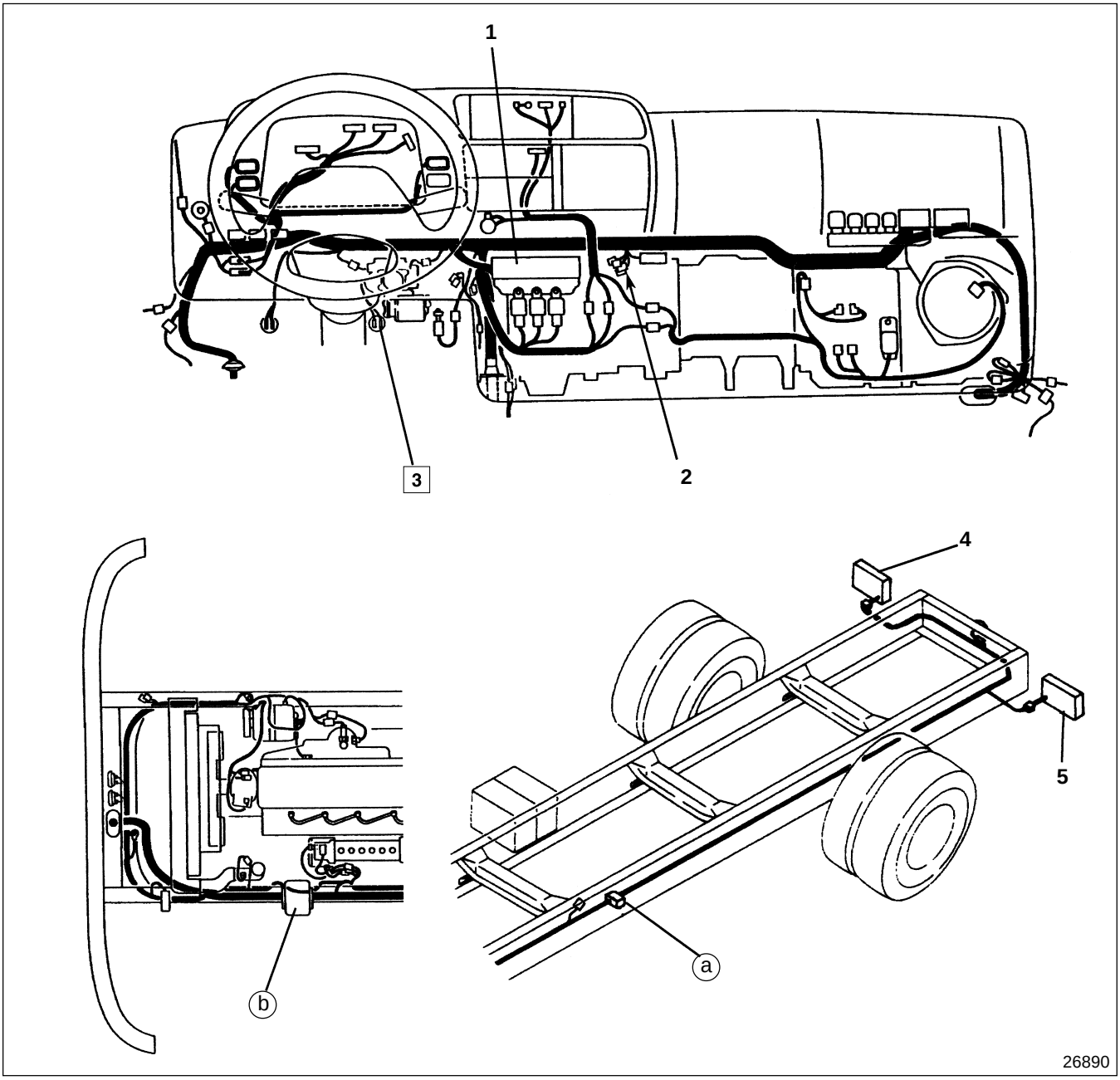

1 Fuse box 104
2 Diode
3 Stop lamp switch
4 Rear combination lamp, RH
5 Rear combination lamp, LH

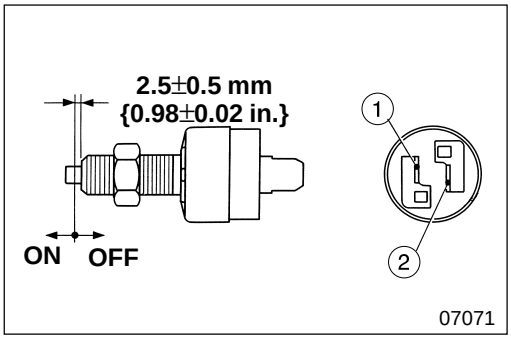

◆ Service procedure

3 Inspection of stop lamp switch

- Follow the table below to inspect continuity:

	①	②
OFF	○—○	
ON		

○—○ : There is continuity between terminals ○ and ○.

- If any fault is found, replace stop lamp switch **3**. Gr 35

352 VAN BODY DOME LIGHT CIRCUIT

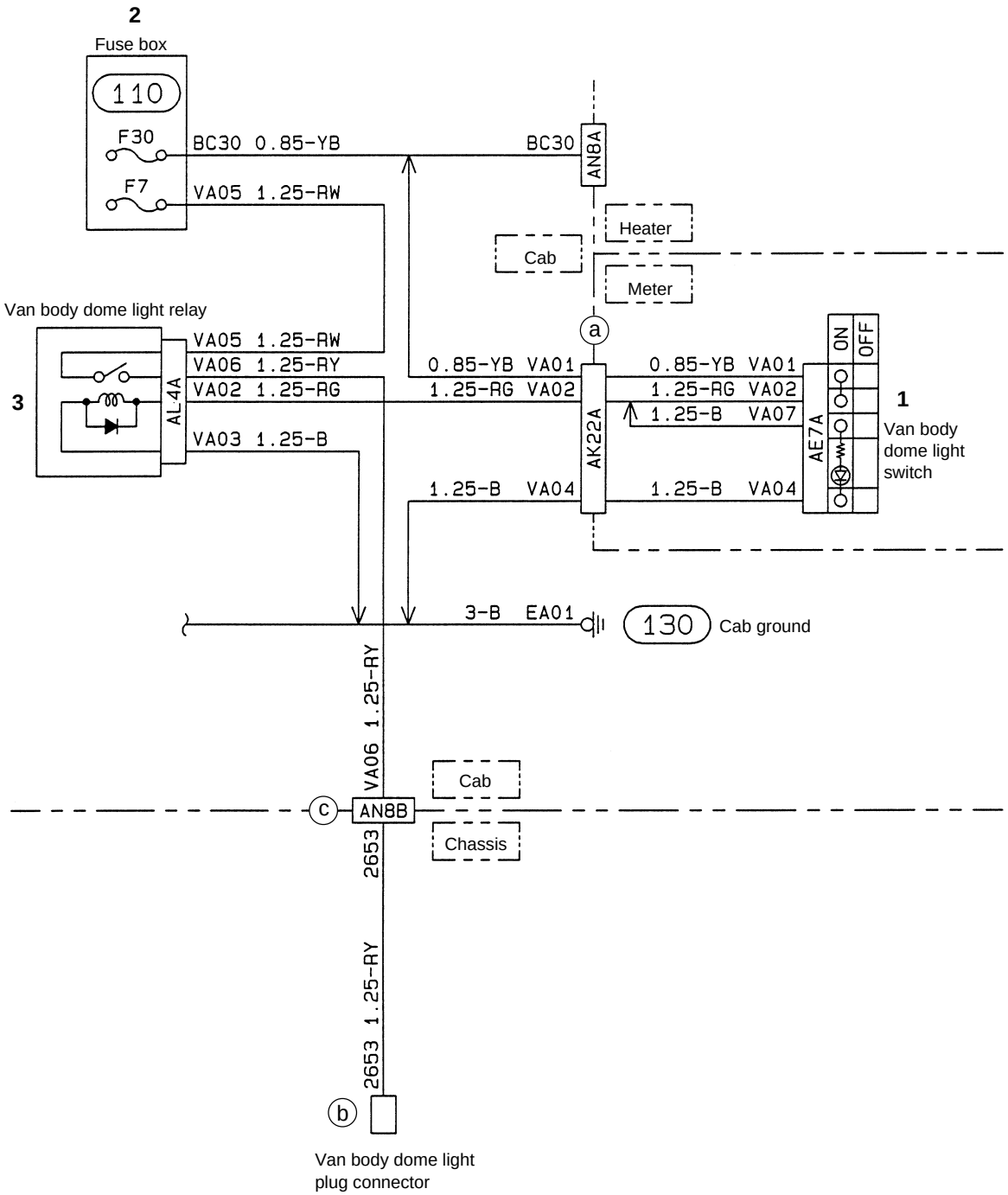

26172

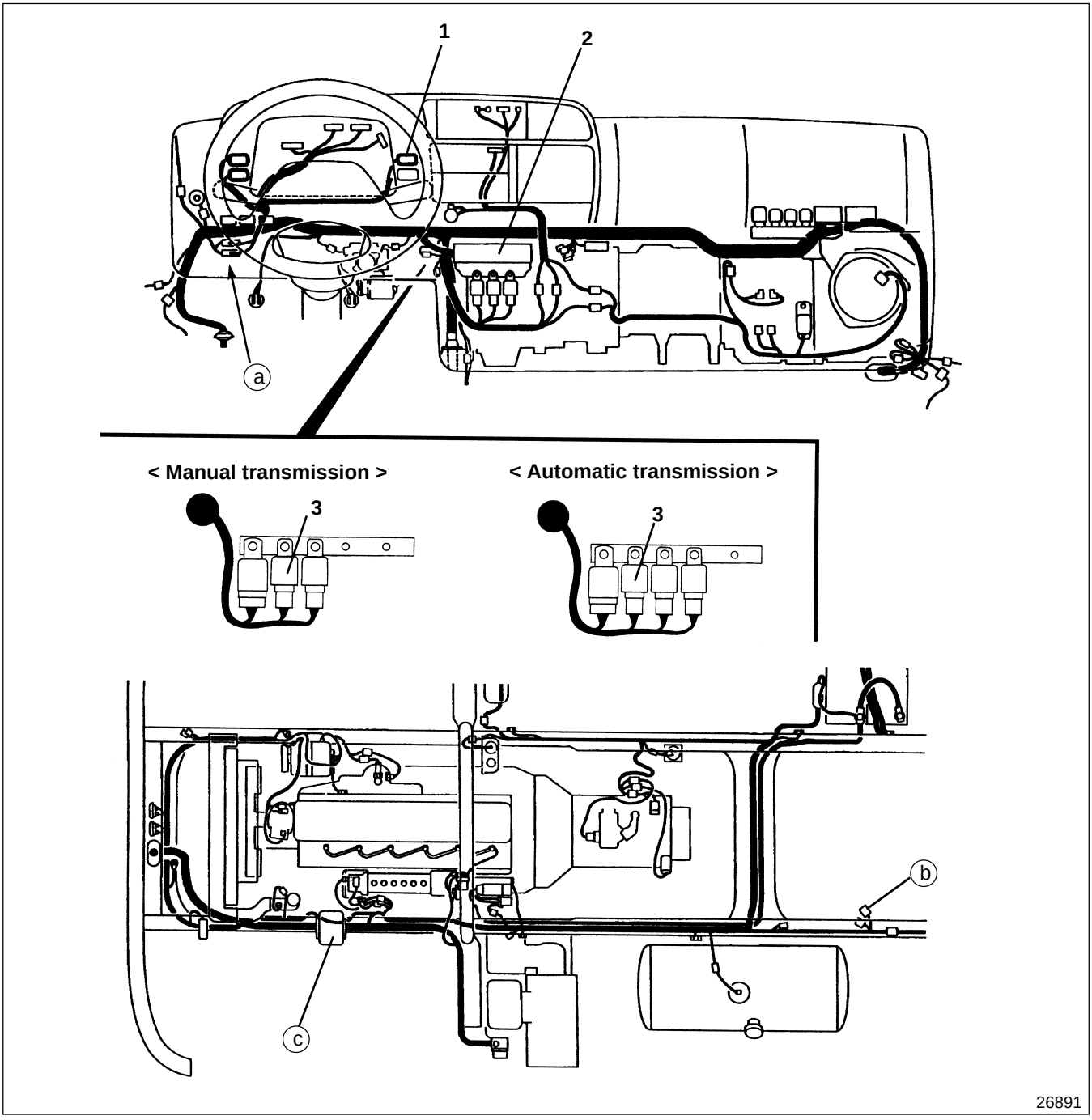

1 Van body dome light switch 📖 (601)
2 Fuse box 📖 (104)
3 Van body dome light relay 🗂 (604)

🗂 : '96 Model Gr 54 (Pub. No. TWME9502-54)

4 METER

SPECIFICATIONS .....

TROUBLESHOOTING .....

401 METER CLUSTER 54-4-2

410 SPEEDOMETER AND TACHOMETER CIRCUITS .....

420 FUEL GAUGE CIRCUIT .....

425 WATER TEMPERATURE GAUGE CIRCUIT .....

: '96 Model Gr 54 (Pub. No. TWME9502-54)

401 METER CLUSTER

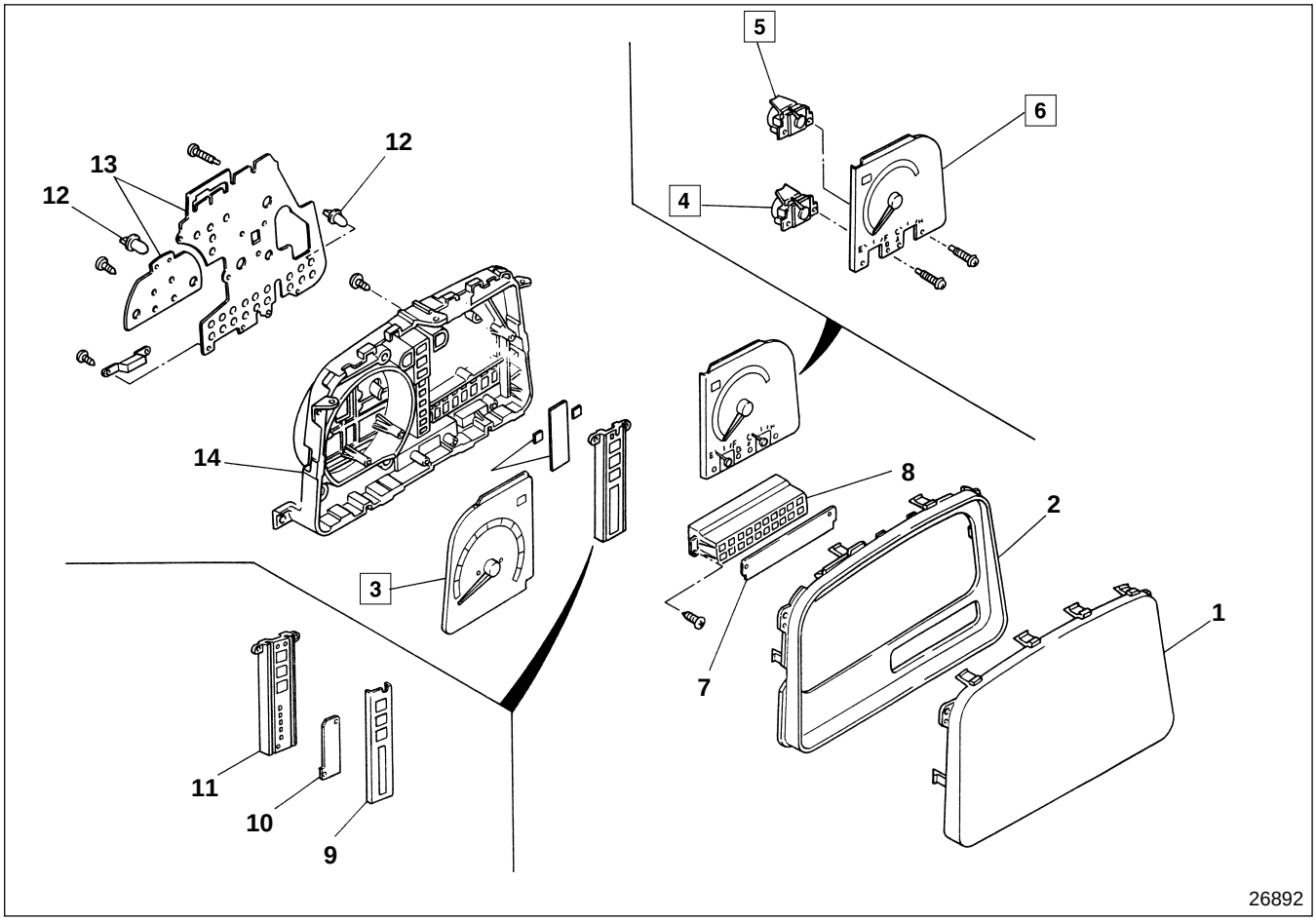

● **Disassembly sequence**

1 Meter glass
2 Window plate
3 Speedometer
4 Fuel gauge
5 Water temperature gauge
6 Tachometer
7 Indicator plate
8 Indicator case
9 Plate cover
10 Indicator plate < Automatic transmission >
11 Indicator case
12 Bulb
13 Printed board
14 Meter case

● **Assembly sequence**

Follow the disassembly sequence in reverse.

Removal and installation of meter cluster Gr 42

Service standards

Location	Maintenance item			Standard value	Limit	Remedy
3	Indication area of speedometer assembly		At 10 mph	16.1±3.2 km/h {10±2 mph}	—	Replace
			At 20 mph	32.2 $^{+3.2}_{-2.4}$ km/h {20 $^{+2}_{-1.5}$ mph}		
			At 40 mph	64.4 $^{+4}_{-1.6}$ km/h {40 $^{+2.5}_{-1}$ mph}		
			At 50 mph	80.5 $^{+4.8}_{0}$ km/h {50 $^{+3}_{0}$ mph}		
			At 60 mph	96.6 $^{+4.8}_{0}$ km/h {60 $^{+3}_{0}$ mph}		
4	Resistance of fuel gauge	Needle position	FULL	4 Ω	—	Replace
			1/2	50 Ω		
			EMPTY	135 Ω		
5	Resistance of water temperature gauge	Needle position	65°C {149°F}	84.4 Ω	—	Replace
			100°C {212°F}	26.5 Ω		
6	Indication range of tachometer 20±2°C {68±3.6°F} 13±0.2 V		At 550 rpm	550±50 rpm	—	Replace
			At 1000 rpm	1000±70 rpm		
			At 1500 rpm	1500±110 rpm		
			At 2000 rpm	2000±110 rpm		
			At 2500 rpm	2500±110 rpm		
			At 3000 rpm	3000±110 rpm		
			At 4500 rpm	4500±125 rpm		

◆ Service procedure

3 Inspection of speedometer

- Measure the indication area of speedometer **3** at various speed ranges using a speedometer tester.
- If the measured value deviates from the standard value, carry out the following inspection. If the inspection does not indicate a fault, replace speedometer **3**.

(1) Inspection of vehicle speed sensor body 802

: '96 Model Gr 54 (Pub. No. TWME9502-54)

(2) Inspection of installed condition of vehicle speed sensor

Gr 22 < Manual transmission >
Gr 23 < Automatic transmission >

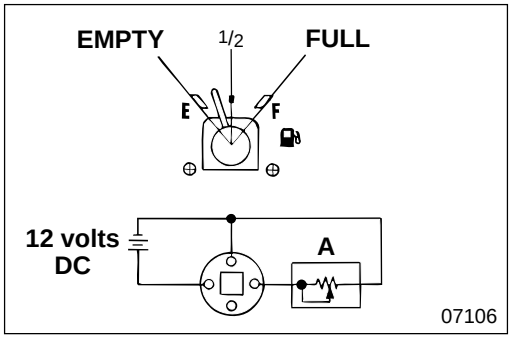

4 **Inspection of fuel gauge**

- Connect a variable resistor to fuel gauge **4** as illustrated.
  A : Variable resistor
- Measurement order
  FULL → 1/2 → EMPTY

NOTE

The movement of the gauge needle is subject to hysteresis (oscillation). Be sure to measure following the measurement order.

- Increase the value of variable resistor **A** gradually from 0 Ω.
- Measure the resistance respectively when the needle of fuel gauge **4** indicates FULL, 1/2 and EMPTY.
- If the measured value deviates from the standard value, replace fuel gauge **4**.

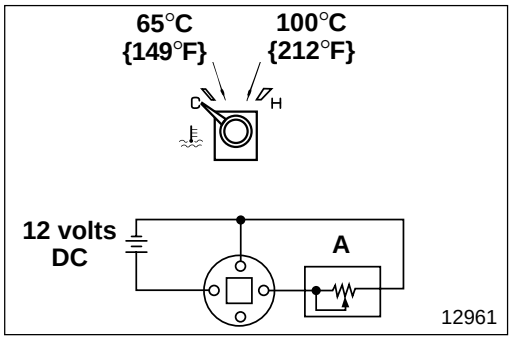

5 **Inspection of water temperature gauge**

- Connect a variable resistor to water temperature gauge **5** as illustrated.
  A : Variable resistor
- Measurement order
  Low temperature → High temperature

NOTE

The movement of the gauge needle is subject to hysteresis (oscillation). Be sure to measure following the measurement order.

- Increase the value of variable resistor **A** gradually from 0 Ω.
- Measure the resistance respectively when the needle of water temperature gauge **5** indicates 65°C {149°F} and 100°C {212°F}.
- If the measured value deviates from the standard value, replace water temperature gauge **5**.

6 **Inspection of tachometer**

- Measure the indication area of tachometer **6** at various revolution ranges using an engine revolution counter.
- If the measured value deviates from the standard value, carry out the following inspection. If the inspection does not indicate a fault, replace tachometer **6**.

(1) Inspection of the engine revolution sensor body 801

: '96 Model Gr 54 (Pub. No. TWME9502-54)

(2) Inspection of the installed condition of the engine revolution sensor **Gr 13**

M E M O

Meter Cluster Internal Circuit

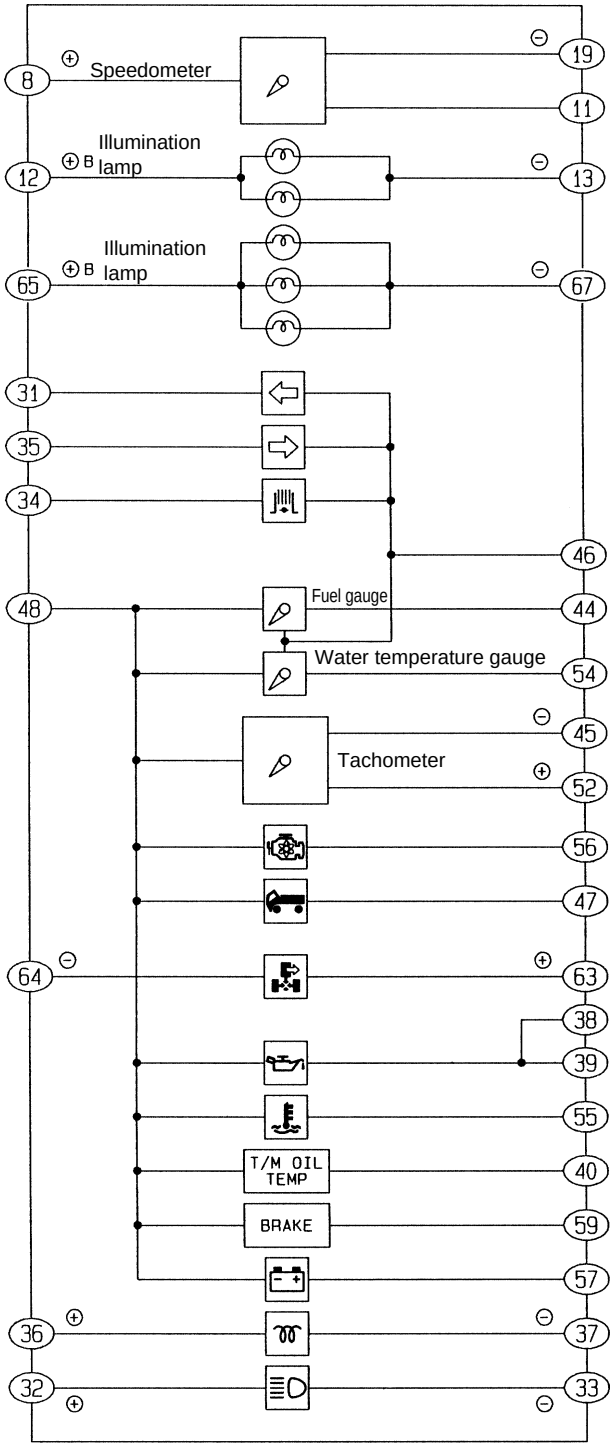

26173

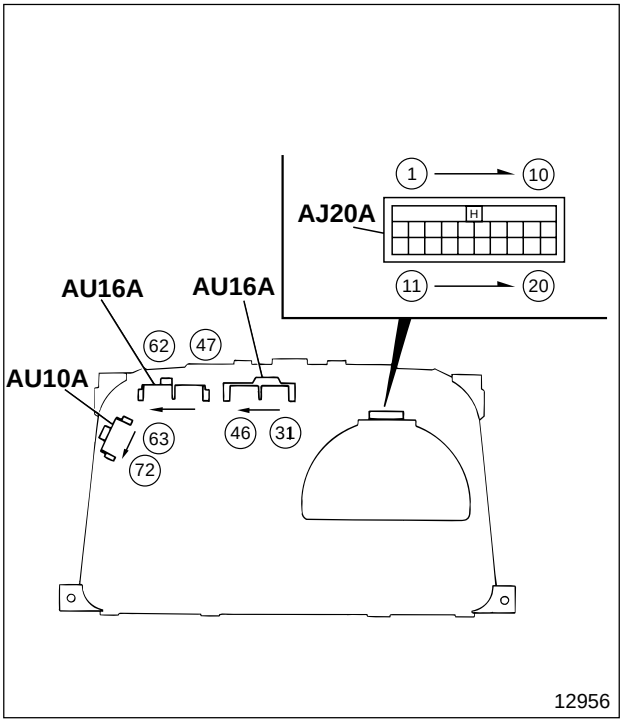

Terminal No.	AJ20A
1	—
2	—
3	—
4	—
5	—
6	—
7	—
8	Speedometer ⊕
9	—
10	—
11	Vehicle speed sensor ⊕
12	Illumination ⊕ (Speedometer)
13	Illumination ⊖ (Speedometer)
14	—
15	—
16	—
17	—
18	—
19	Speedometer ⊖
20	—

Terminal No.	AU16A
31	Turn signal (LH)
32	HIGH beam ⊕
33	HIGH beam ⊖
34	Exhaust brake < Manual transmission>
35	Turn signal (RH)
36	Glow ⊕
37	Glow ⊖
38	Engine oil filter
39	Engine oil pressure level
40	Automatic transmission fluid temperature
41	—
42	—
43	—
44	Fuel gauge
45	Tachometer ⊖
46	Ground

Terminal No.	AU10A
63	Power take-off ⊕
64	Power take-off ⊖
65	Illumination ⊕
66	—
67	Illumination ⊖
68	—
69	—
70	—
71	—
72	—

Terminal No.	AU16A
47	Cab tilt
48	Power
49	—
50	—
51	—
52	Tachometer ⊕
53	—
54	Water temperature gauge
55	•Engine coolant level •Engine coolant temperature
56	Pre-stroke control
57	Battery charge
58	—
59	Brake •Parking brake •Brake booster (Hydraulic booster) •Brake fluid level •Power steering fluid level
60	—
61	—
62	—

5 INDICATOR AND WARNING

TROUBLESHOOTING 54-5-2

500 ON-VEHICLE INSPECTION AND ADJUSTMENT
- **Inspection of Brake Fluid Level Switch 54-5-6**
- **Inspection of Power Steering Fluid Level Sensor 54-5-7**

510 PARKING BRAKE INDICATOR CIRCUIT [BRAKE] **..... 54-5-8**

515 BRAKE WARNING CIRCUIT [BRAKE] **..... 54-5-10**

530 WATER LEVEL WARNING CIRCUIT [ ] **..... 54-5-14**

536 ENGINE OIL PRESSURE WARNING CIRCUIT [ ] **..... 54-5-16**

537 OVERHEATING WARNING CIRCUIT [ ] **..... 54-5-18**

547 AUTOMATIC TRANSMISSION FLUID TEMPERATURE WARNING CIRCUIT [T/M OIL TEMP] **..... 54-5-20**

549 POWER STEERING FLUID LEVEL WARNING CIRCUIT [BRAKE] **..... 54-5-22**

550 CAB TILT WARNING CIRCUIT [ ] **..... ***

For details on the following indicator and warning lamps, see the relevant sections.

- [ ] * 125
- [ ] * 220
- [ ] * 310
- [ ] [ ] * 330
- [ ] 710
- [ ] Gr 13

* : '96 Model Gr 54 (Pub. No. TWME9502-54)

TROUBLESHOOTING

Symptoms / Possible causes			* BRAKE					Remarks
			Lamp does not light although parking brake lever is pulled	Lamp does not go out although parking brake lever is returned	Lamp does not light although power steering fluid level is insufficient	Warning buzzer does not sound although power steering fluid level is insufficient	Lamp lights although power steering fluid level is sufficient	
Connector connection faulty, harness broken, grounding faulty		○	○		○	○		
Fuse blown		○	○		○			
Meter cluster	Internal circuit faulty	○	○	○	○		○	
	Bulb burnt-out	○	○		○			
Warning buzzer faulty			○	○		○		
Parking brake switch faulty			○	○				
Parking brake relay faulty < Automatic transmission >			○	○				
Brake fluid level switch faulty					○		○	
Power steering fluid level sensor faulty								
Cab tilt lock switch	Switch body faulty							
	Installation faulty							Gr 42
Overheating switch faulty								
Water level sensor faulty								
Multipurpose timing control unit faulty								
Engine oil pressure switch faulty								
Engine oil bypass alarm switch faulty								
Automatic transmission fluid thermostat switch faulty								

* : For information regarding hydraulic brake systems of BRAKE warning lamp, refer to Gr 35.

Symptoms / Possible causes		Lamp does not light although engine coolant level is insufficient	Lamp lights although engine coolant level is sufficient	Lamp does not light although engine coolant over-heating	Lamp lights when not overheating	Warning buzzer does not stop sounding although parking brake lever is pulled	Lamp does not light although engine oil pressure is low	Lamp lights although engine oil pressure is sufficient	Warning buzzer does not stop sounding although parking brake lever is pulled	Remarks
Connector connection faulty, harness broken, grounding faulty		○		○		○	○		○	
Fuse blown		○		○			○			
Meter cluster	Internal circuit faulty	○	○	○	○		○	○		
	Bulb burnt-out	○		○			○			
Warning buzzer faulty						○			○	
Parking brake switch faulty										
Parking brake relay faulty < Automatic transmission >										
Brake fluid level switch faulty						○				Gr 35
Power steering fluid level sensor faulty						○				
Cab tilt lock switch	Switch body faulty									
	Installation faulty									Gr 42
Overheating switch faulty				○	○					
Water level sensor faulty		○	○							
Multipurpose timing control unit faulty		○	○							
Engine oil pressure switch faulty							○	○		
Engine oil bypass alarm switch faulty							○	○		
Automatic transmission fluid thermostat switch faulty										

Symptoms / Possible causes		T/M OIL TEMP					Remarks
		Lamp does not light although automatic transmission fluid temperature is high	Lamp lights although automatic transmission fluid temperature is appropriate	Warning buzzer does not stop sounding although parking brake lever is pulled	Lamp lights although cab is locked to rear cab mounting	Lamp does not light although cab is not locked to rear cab mounting	
Connector connection faulty, harness broken, grounding faulty		○		○		○	
Fuse blown		○				○	
Meter cluster	Internal circuit faulty	○	○		○	○	
	Bulb burnt-out	○				○	
Warning buzzer faulty				○			
Parking brake switch faulty							
Parking brake relay faulty < Automatic transmission >							
Brake fluid level switch faulty							
Power steering fluid level sensor faulty							
Cab tilt lock switch	Switch body faulty				○	○	
	Installation faulty				○		Gr 42
Overheating switch faulty							
Water level sensor faulty							
Multipurpose timing control unit faulty							
Engine oil pressure switch faulty							
Engine oil bypass alarm switch faulty							
Automatic transmission fluid thermostat switch faulty		○	○				

M E M O

Inspection of Brake Fluid Level Switch

Service standards

Unit : mm {in.}

Location	Maintenance item	Standard value	Limit	Remedy
—	Warning lamp lighting position for brake fluid level switch	41.0±3 {1.61±0.12}	—	Replace

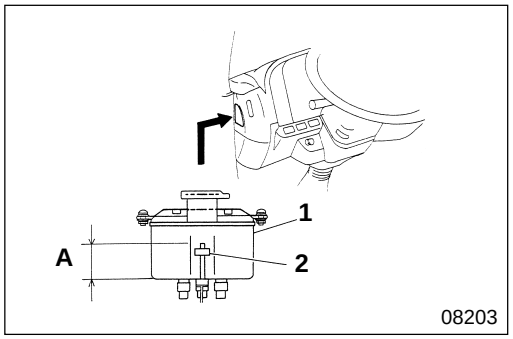

- Start engine.
- Drain the brake fluid gradually from fluid tank assembly **1**.

CAUTION

If brake fluid is spilt on any part of the vehicle, wipe it off immediately, since the solvent in the fluid can damage the paintwork.

- Measure height **A** of brake fluid level switch **2** when BRAKE warning lamp within the meter cluster lights.
- If the measured value deviates from the standard value, remove and check fluid tank assembly **1**.

Inspection : 515

Inspection of Power Steering Fluid Level Sensor

Service standards

Unit : mm {in.}

Location	Maintenance item		Standard value	Limit	Remedy
—	Warning lamp lighting position for power steering fluid level sensor	Height from oil tank MIN level to fluid surface	15 {0.59}	—	Replace
		Height from oil tank MAX level to fluid surface	25 {0.98}	—	

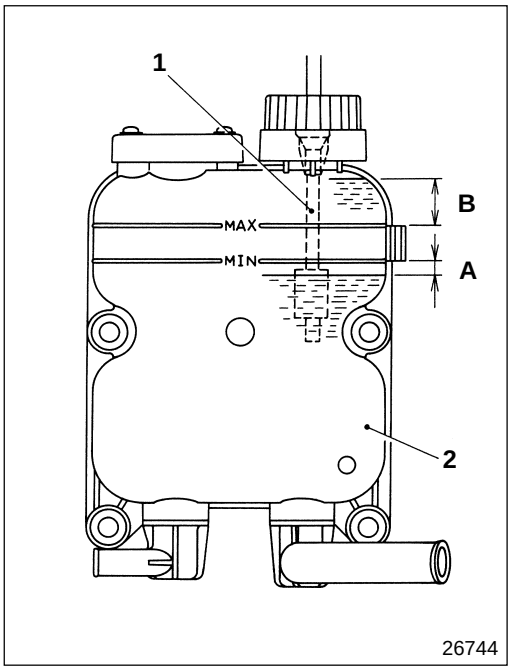

Perform the following inspection and if any fault is found, remove and inspect power steering fluid level sensor **1**.

Removal and installation : Gr 37

Inspection : 549

Perform inspection by turning the starter switch ON and determining the power steering fluid level when BRAKE warning lamp within the meter cluster lights (buzzer sounds at the same time).

(1) Inspection procedure when the power steering fluid level is low

- Drain the power steering fluid gradually from power steering oil tank **2**.
- Inspect to make sure that, when BRAKE warning lamp is lit, height **A** from power steering fluid surface to the **"MIN"** level of power steering oil tank **2**, is within the standard value.

(2) When power steering fluid level is too high

- Supply power steering fluid gradually into power steering oil tank **2**.
- Inspect to make sure that, when BRAKE warning lamp is lit, height **B** from power steering fluid surface to the **"MAX"** level of power steering oil tank **2**, is within the standard value.

510 PARKING BRAKE INDICATOR CIRCUIT

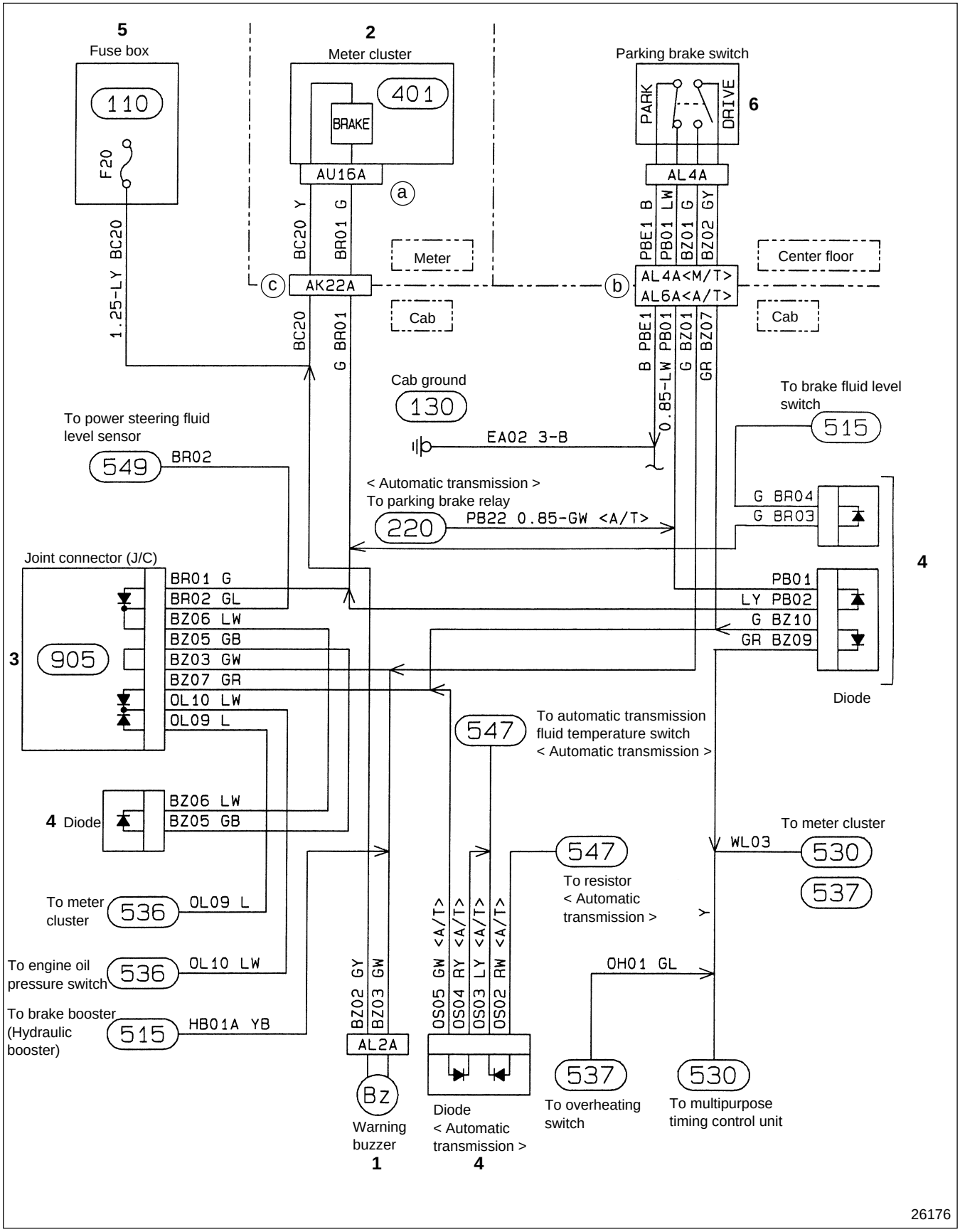

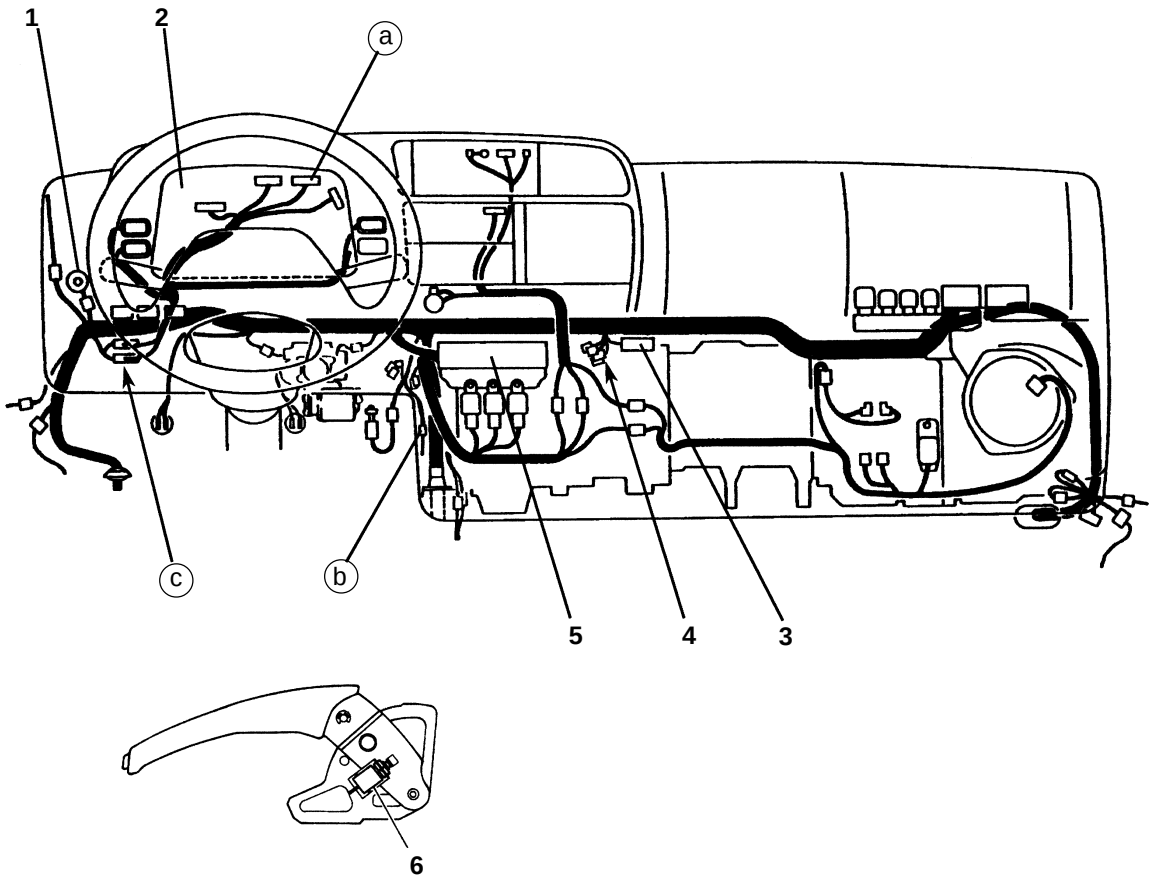

1 Warning buzzer (606)
2 Meter cluster (401)
3 Joint connector (J/C) (905)
4 Diode
5 Fuse box (104)
6 Parking brake switch (510)

: '96 Model Gr 54 (Pub. No. TWME9502-54)

515 BRAKE WARNING CIRCUIT

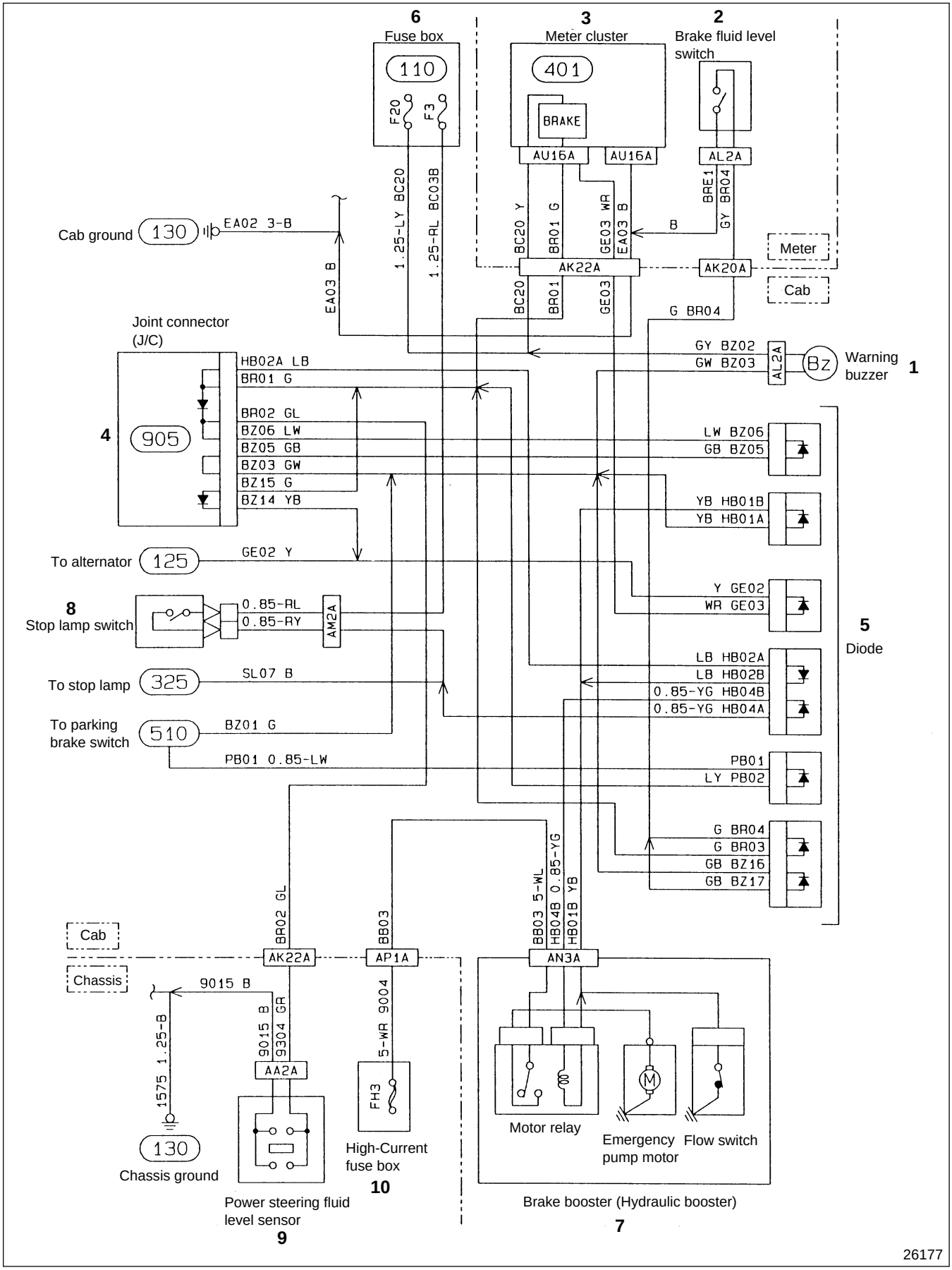

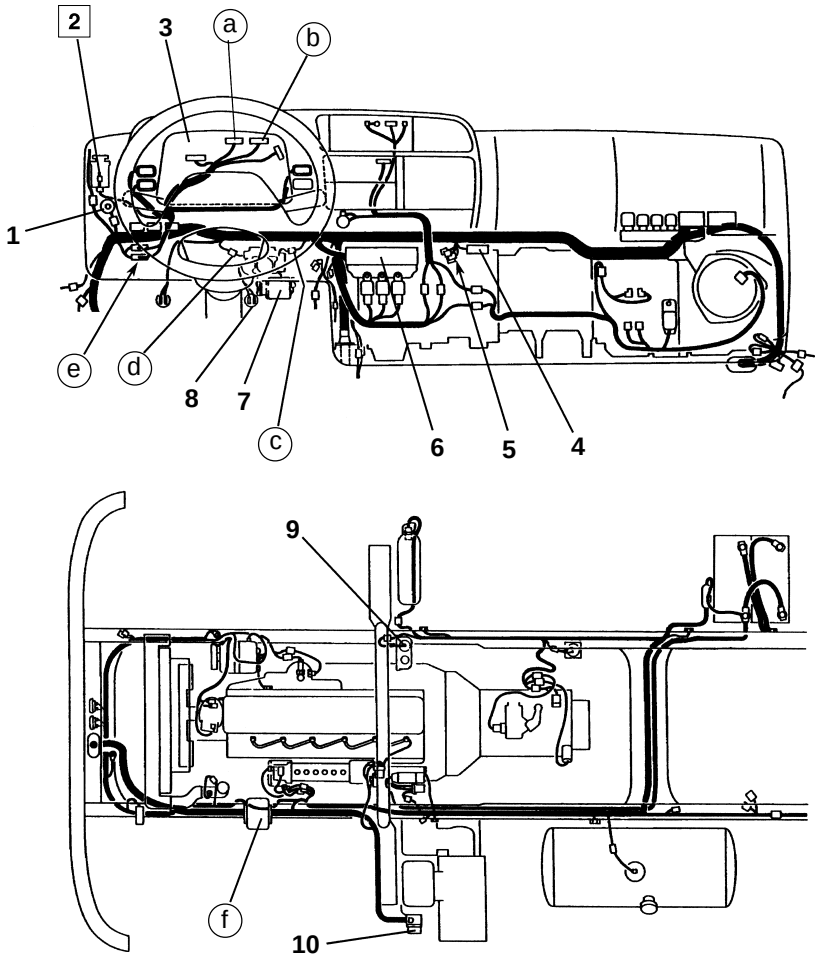

1 Warning buzzer 📖* (606)
2 Brake fluid lever switch
3 Meter cluster 🕮 (401)
4 Joint connector (J/C) 🕮 (905)
5 Diode
6 Fuse box 🕮 (104)
7 Brake booster (Hydraulic booster) 📖 Gr 35
8 Stop lamp switch 🕮 (325)
9 Power steering fluid level sensor 🕮 (549)
10 High-current fuse box

📖* : '96 Model Gr 54 (Pub. No. TWME9502-54)

Service standards

Unit : mm {in.}

Location	Maintenance item	Standard value	Limit	Remedy
2	Continuity position of brake fluid level switch	41.0±3 {1.61±0.12} (Equivalent to 120 cm^3 {7.32 cu.in., 120 cc})	—	Replace

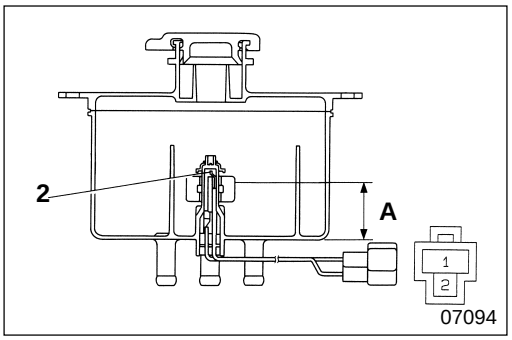

◆ Service procedure

2 Inspection of brake fluid level switch

- Drain the brake fluid gradually from the brake fluid tank assembly.

CAUTION ⚠

If brake fluid is spilt on any part of the vehicle, wipe it off immediately, since the solvent in the fluid can damage the paintwork.

- Measure height **A** of brake fluid level switch **2** when continuity is present between terminals ① and ②.
- If the measured value deviates from the standard value, replace the fluid tank assembly.

M E M O

530 WATER LEVEL WARNING CIRCUIT

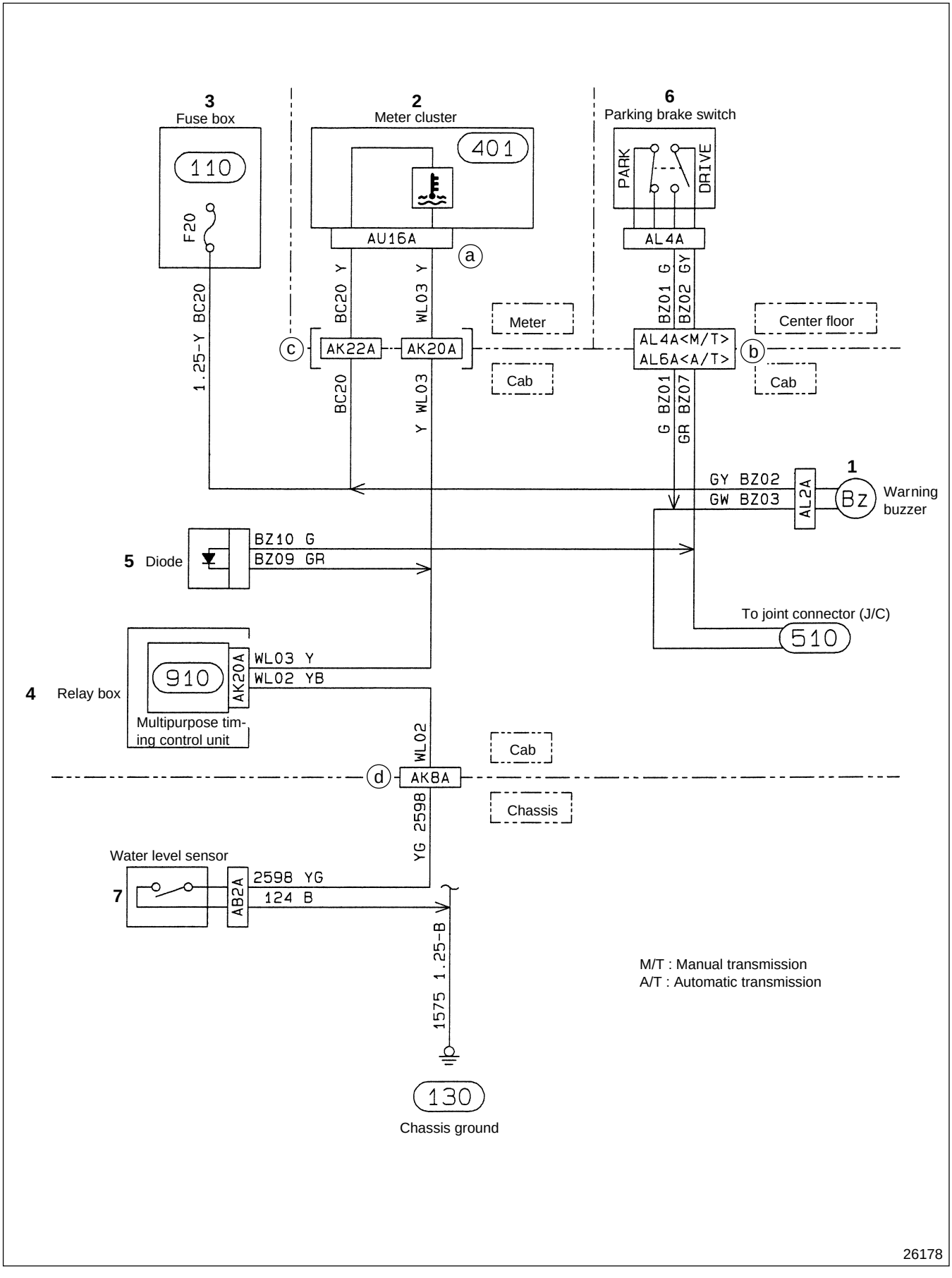

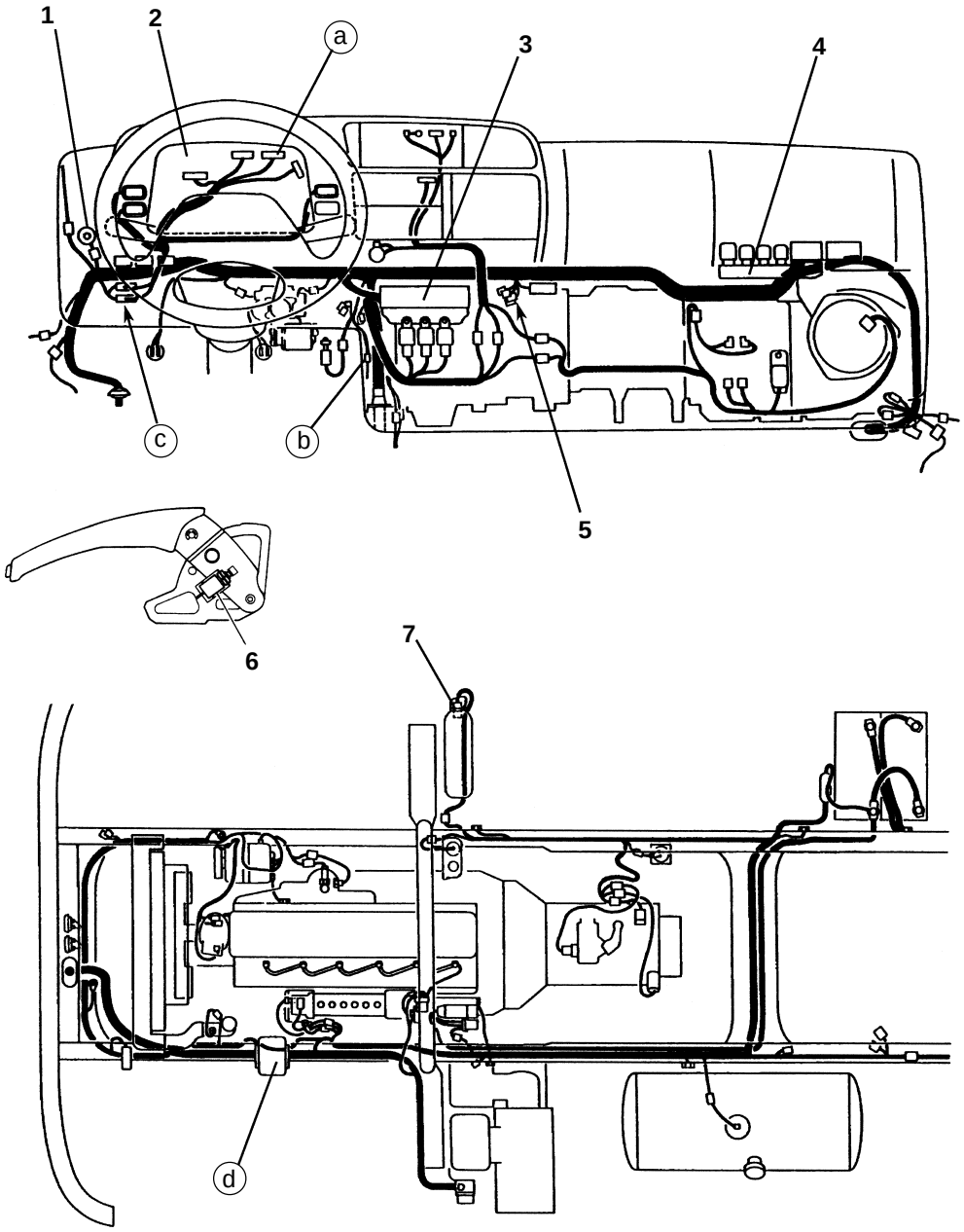

1 Warning buzzer (606)
2 Meter cluster (401)
3 Fuse box (104)
4 Relay box (604)
5 Diode
6 Parking brake switch (510)
7 Water level sensor (530)

: '96 Model Gr 54 (Pub. No. TWME9502-54)

536 ENGINE OIL PRESSURE WARNING CIRCUIT

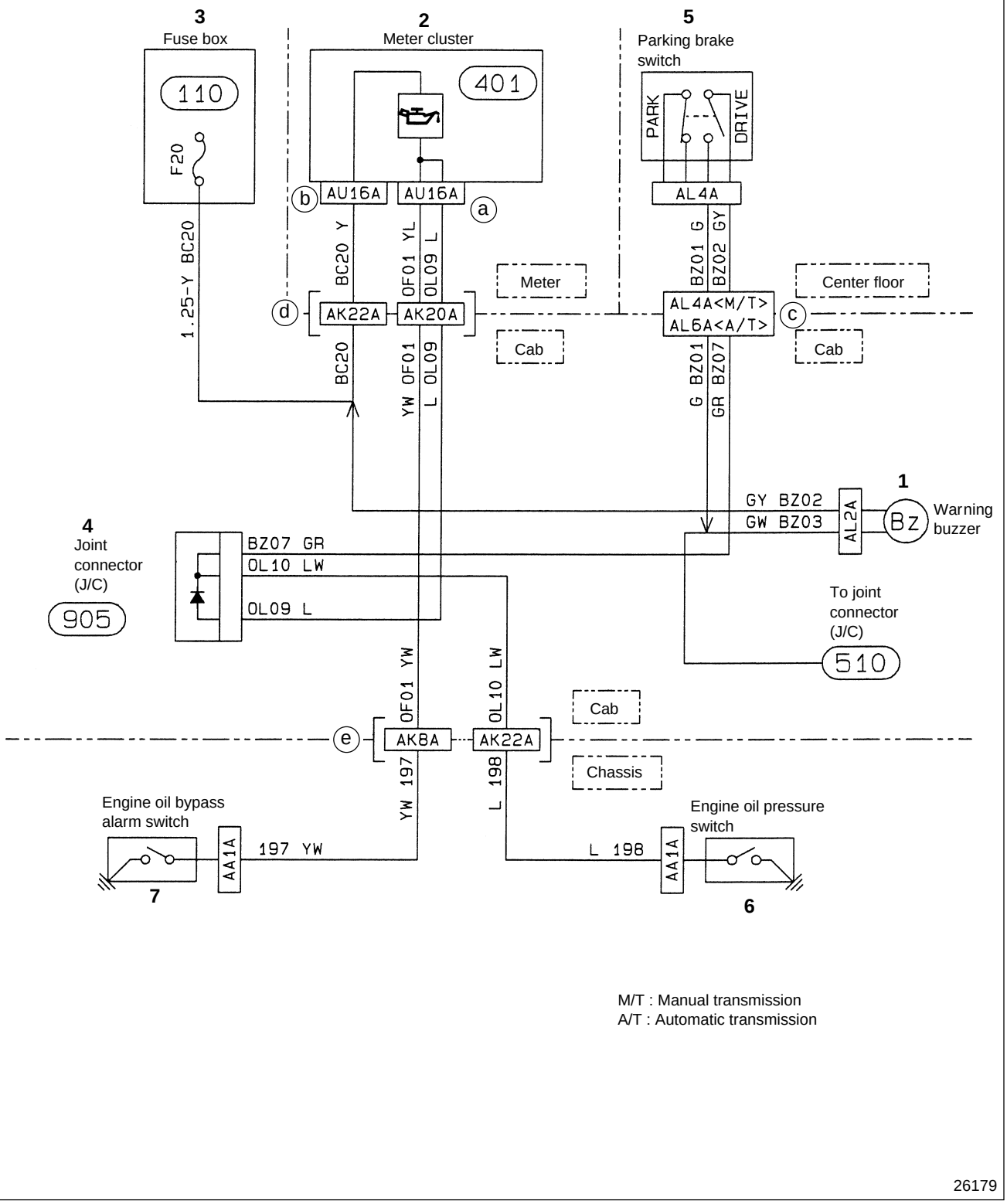

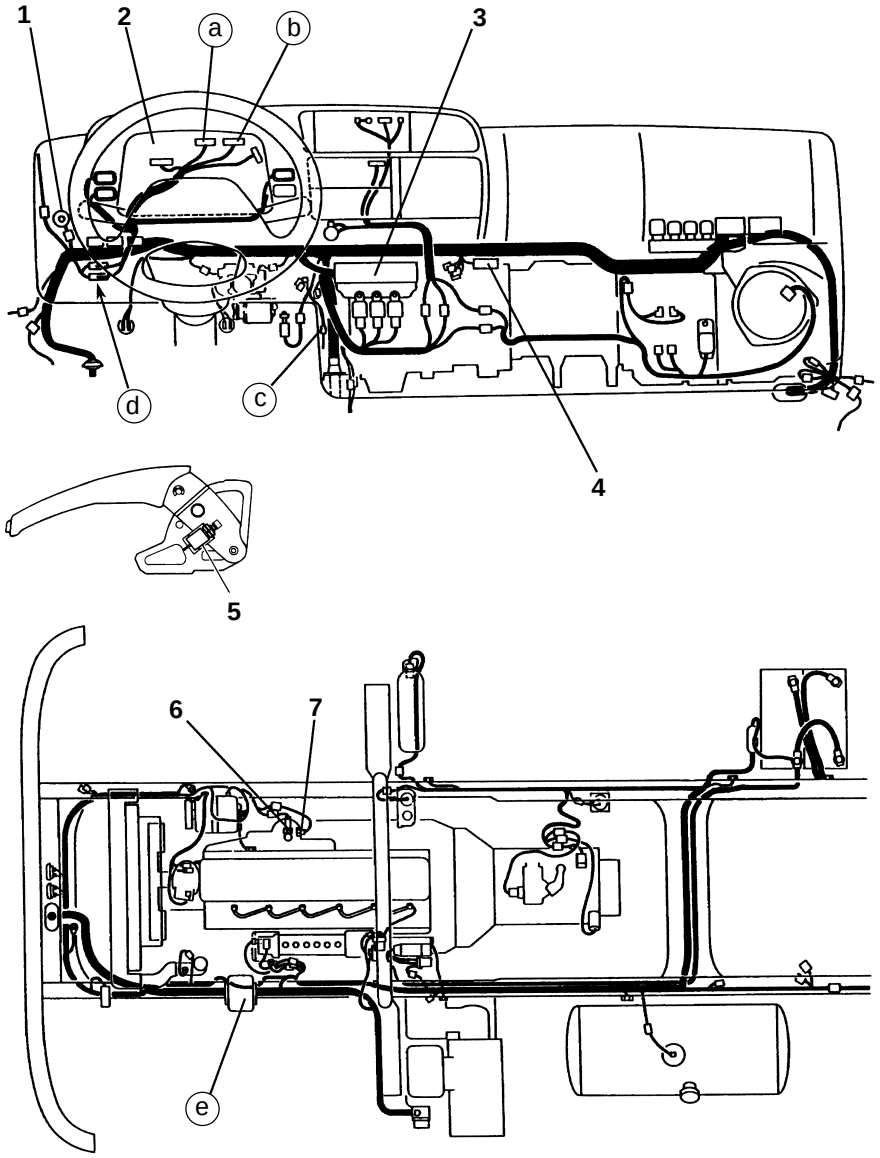

1 Warning buzzer 606
2 Meter cluster 401
3 Fuse box 104
4 Joint connector (J/C)
5 Parking brake switch 510
6 Engine oil pressure switch 810
7 Engine oil bypss alarm switch 810

: '96 Model Gr 54 (Pub. No. TWME9502-54)

537 OVERHEATING WARNING CIRCUIT

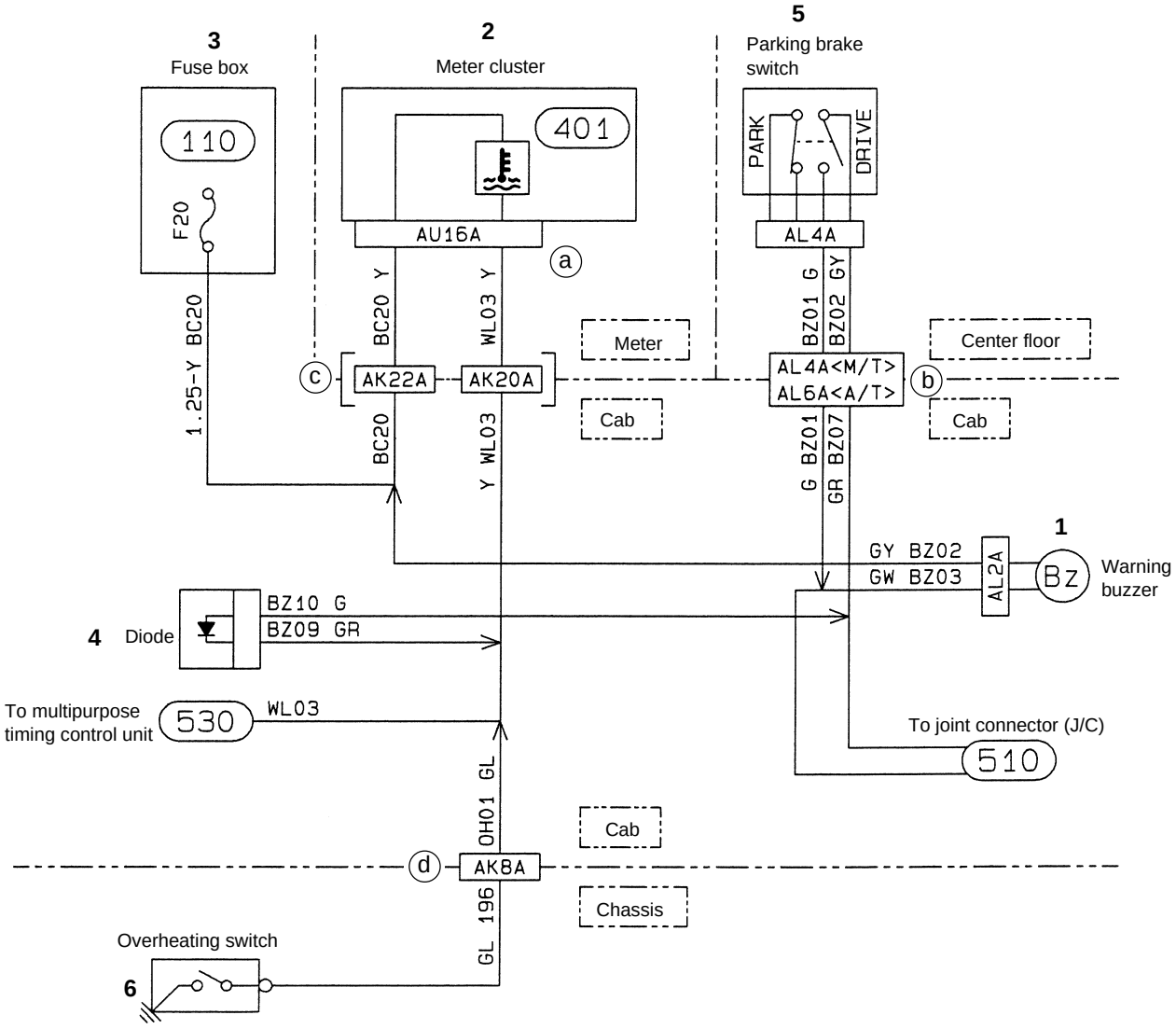

26180

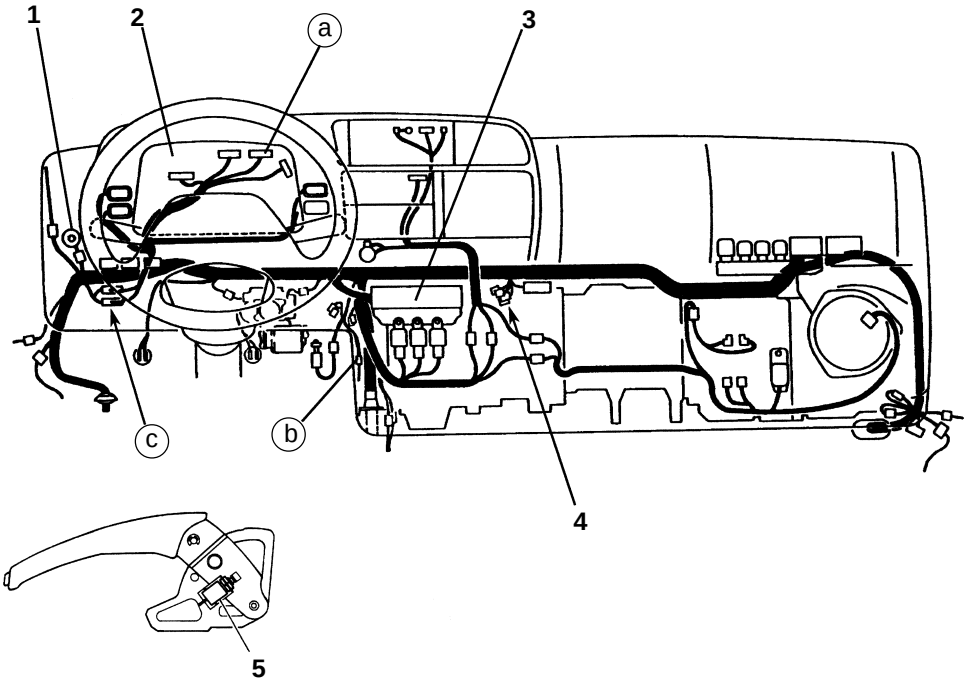

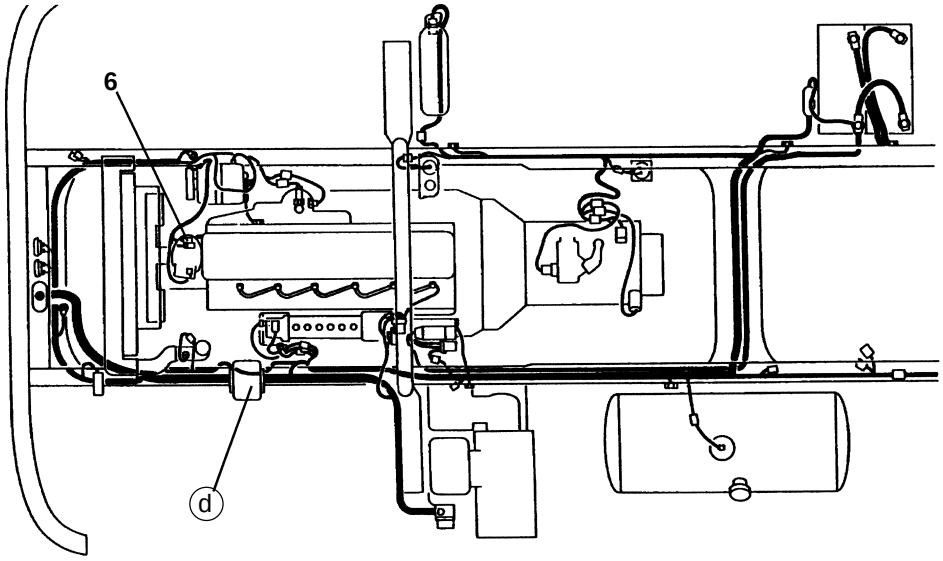

26897

1 Warning buzzer (606)
2 Meter cluster (401)
3 Fuse box (104)
4 Diode
5 Parking brake switch (510)
6 Overheating switch (801)

: '96 Model Gr 54 (Pub. No. TWME9502-54)

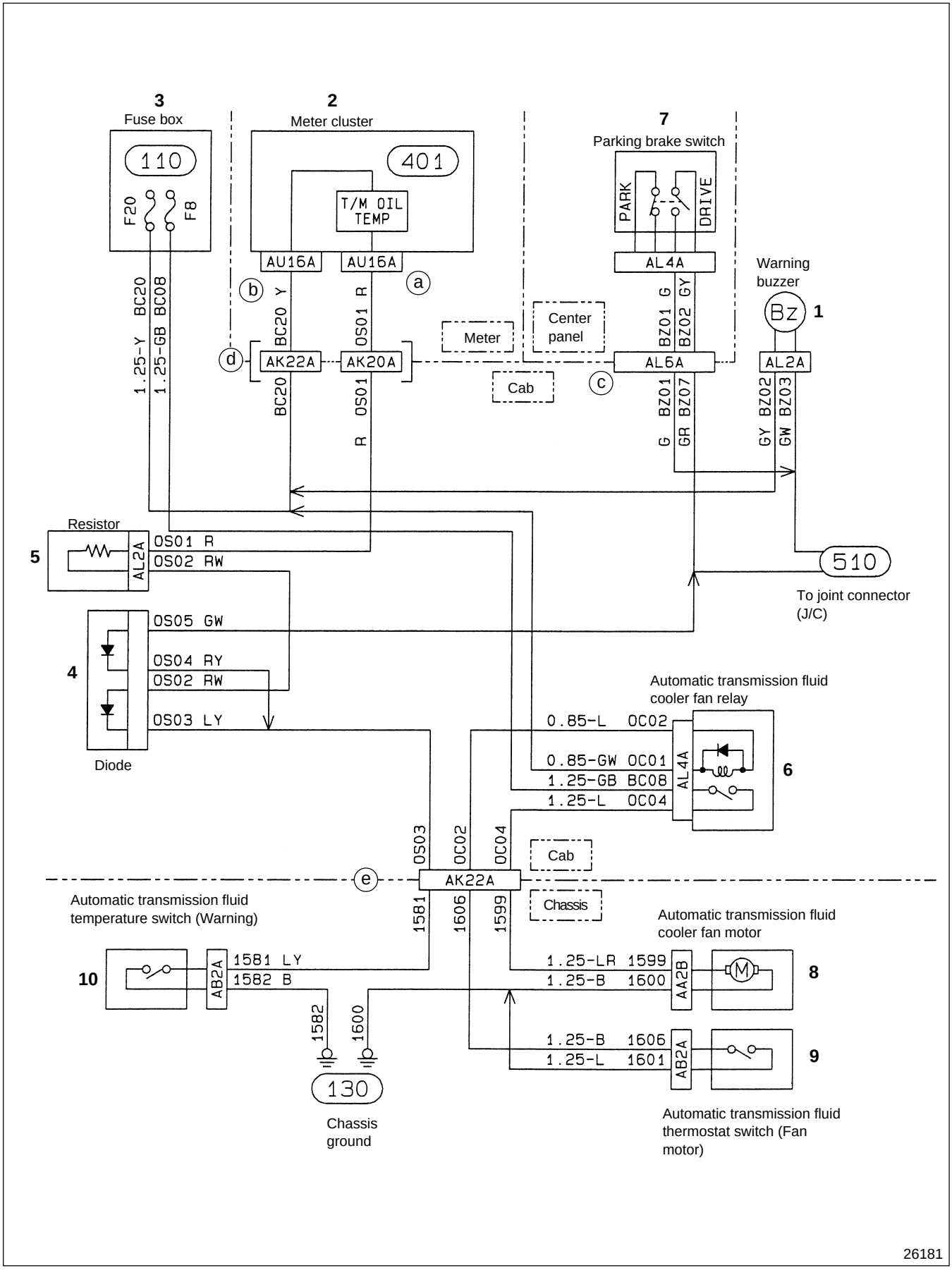
3
Fuse box
110
F20
F8
2
Meter cluster
401
T/M OIL TEMP
AU16A
AU16A
7
Parking brake switch
PARK
DRIVE
AL4A
Warning buzzer
Bz
1
AL2A
Meter
Center panel
Cab
AK22A
AK20A
AL6A
1.25-Y BC20
1.25-GB BC08
BC20 Y
OS01 R
BZ01 G
BZ02 GY
BC20
OS01
R
G BZ01
GR BZ07
GY BZ02
GW BZ03
Resistor
5
AL2A
OS01 R
OS02 RW
510
To joint connector (J/C)
4
OS05 GW
OS04 RY
OS02 RW
OS03 LY
Diode
Automatic transmission fluid cooler fan relay
0.85-L OC02
0.85-GW OC01
1.25-GB BC08
1.25-L OC04
AL4A
6
OS03
OC02
OC04
Cab
AK22A
Chassis
Automatic transmission fluid temperature switch (Warning)
1581
1606
1599
Automatic transmission fluid cooler fan motor
10
AB2A
1581 LY
1582 B
1.25-LR 1599
1.25-B 1600
AA2B
8
1582
1600
1.25-B 1606
1.25-L 1601
AB2A
9
130
Chassis ground
Automatic transmission fluid thermostat switch (Fan motor)
26181

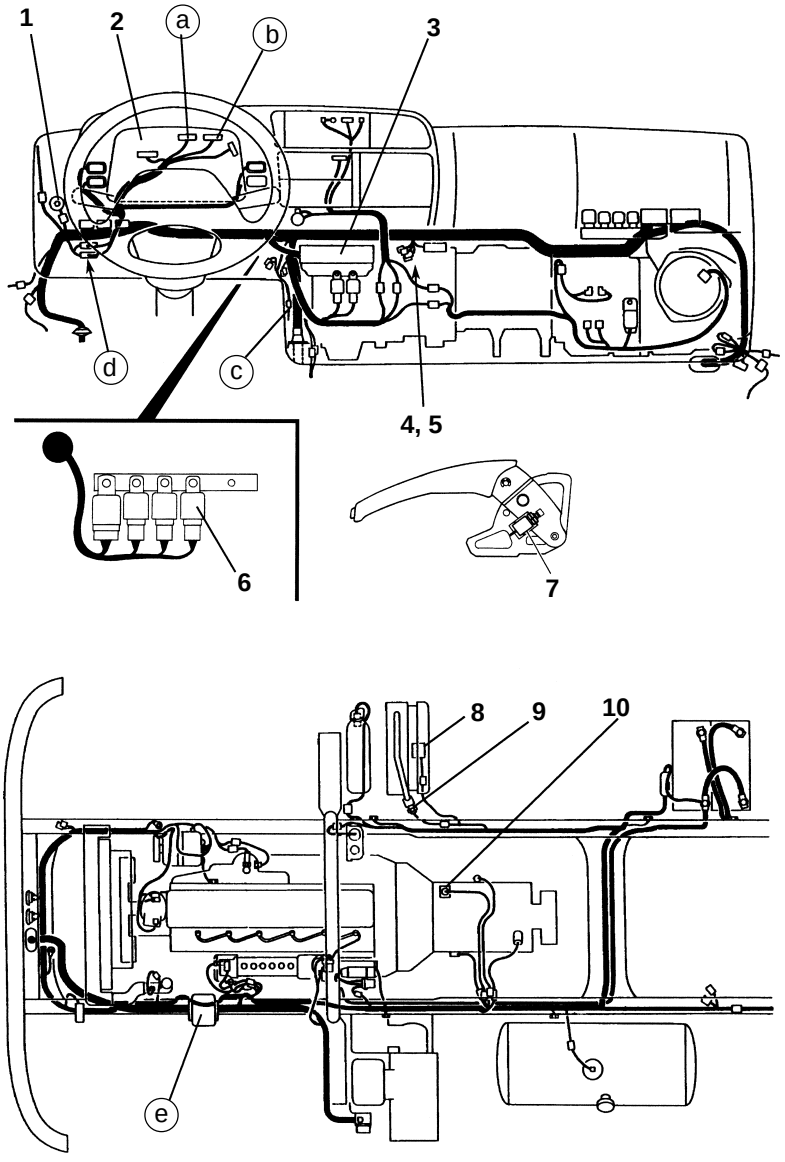

26898

1 Warning buzzer (606)
2 Meter cluster (401)
3 Fuse box (104)
4 Diode
5 Resistor
6 Automatic transmission fluid cooler fan relay
7 Parking brake switch (510)
8 Automatic transmission fluid cooler fan motor
9 Automatic transmission fluid thermostat switch (547)
10 Automatic transmission fluid temperature switch (802)

: '96 Model Gr 54 (Pub. No. TWME9502-54)

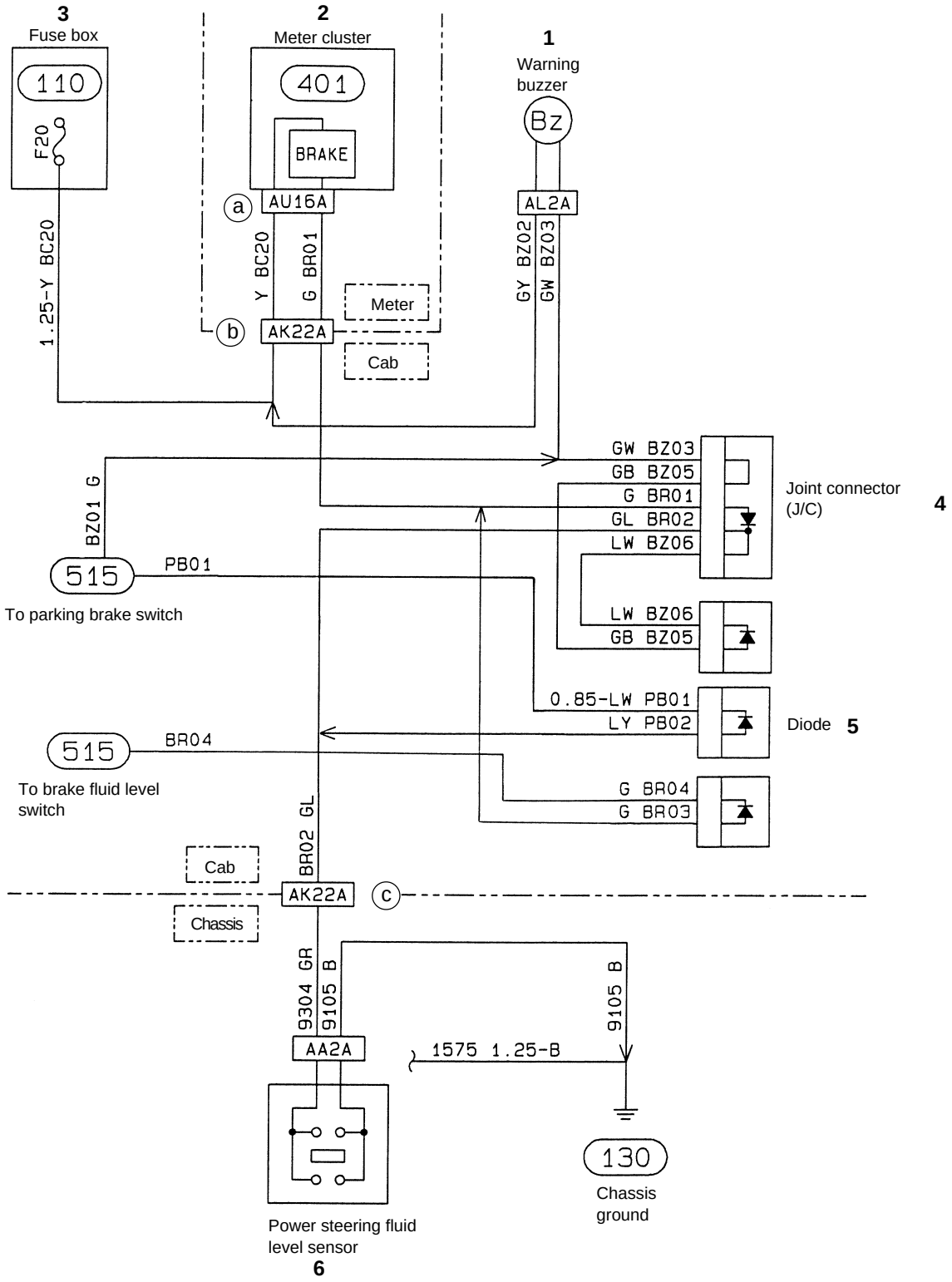
3
Fuse box
110
F20
1.25-Y BC20
2
Meter cluster
401
BRAKE
a
AU16A
Y BC20
G BR01
b
AK22A
Meter
Cab
1
Warning buzzer
Bz
AL2A
GY BZ02
GW BZ03
GW BZ03
GB BZ05
G BR01
GL BR02
LW BZ06
Joint connector (J/C)
4
BZ01 G
515
PB01
To parking brake switch
LW BZ06
GB BZ05
0.85-LW PB01
LY PB02
Diode
5
515
BR04
To brake fluid level switch
G BR04
G BR03
BR02 GL
Cab
AK22A
c
Chassis
9304 GR
9105 B
9105 B
AA2A
1575 1.25-B
130
Chassis ground
Power steering fluid level sensor
6

26197

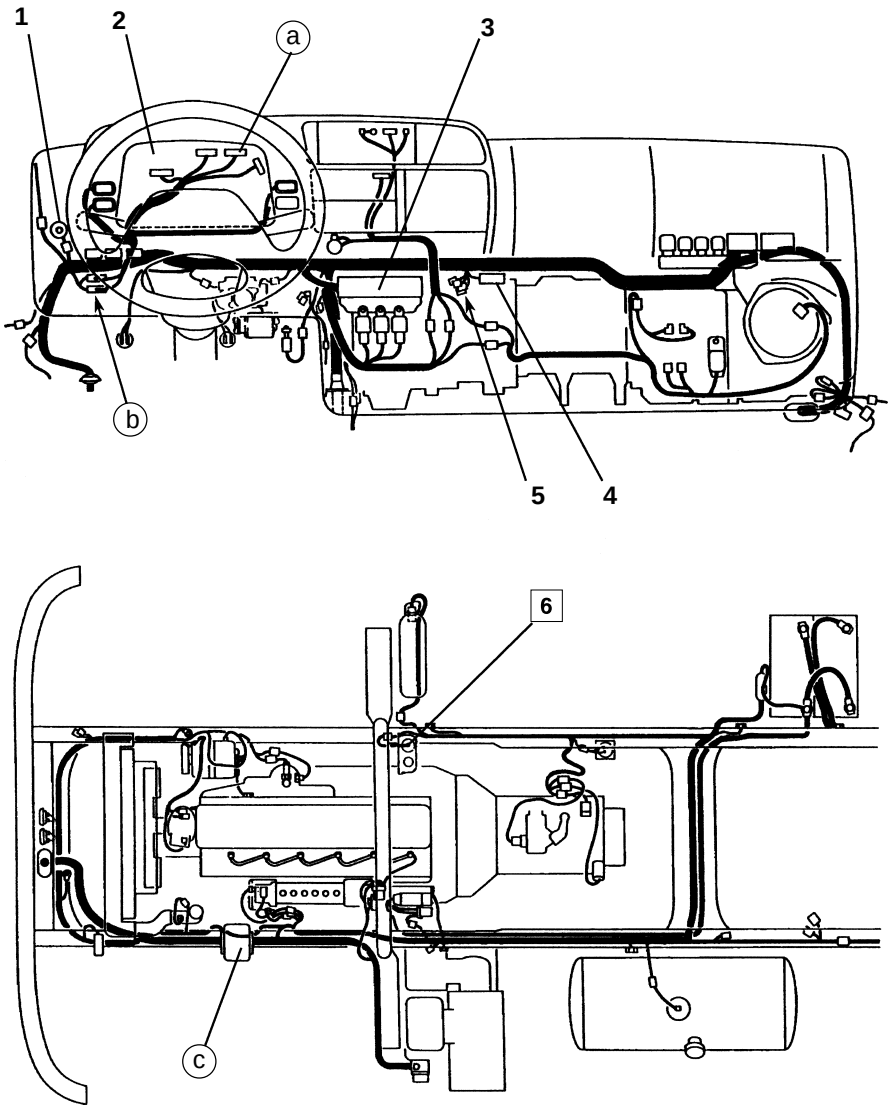

26899

1 Warning buzzer (606)
2 Meter cluster (401)
3 Fuse box (104)
4 Joint connector (J/C) (905)
5 Diode
6 Power steering fluid level sensor

: '96 Model Gr 54 (Pub. No. TWME9502-54)

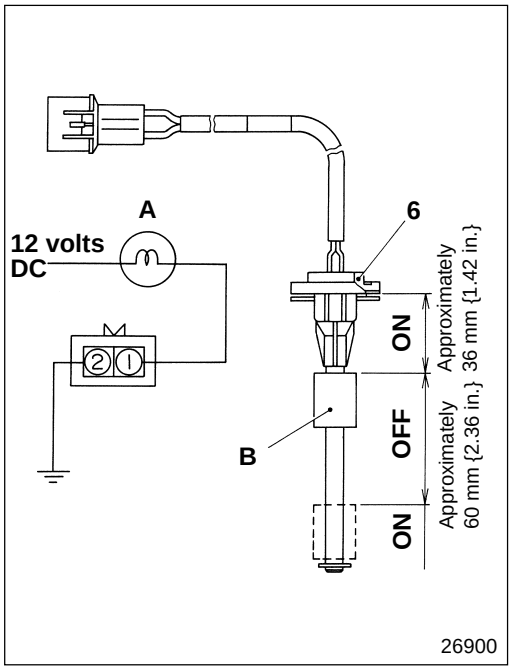

◆ Service procedure

6 **Inspection of power steering fluid level sensor**

- Wire power steering fluid level sensor **6** as illustrated.
  A : Inspection lamp (12 V - 1.4 W)
- Make sure inspection lamp **A** lights when float **B** is in ON position (when float is either in the upper or lower areas).
- If any fault is found, replace power steering fluid level sensor **6**.

M E M O

6 CAB SIDE ELECTRICS

SPECIFICATIONS 54-6-2

TROUBLESHOOTING 54-6-3

601 SWITCH .....

604 RELAY AND CONTROL UNIT .....

606 WARNING BUZZER .....

610 CIGARETTE LIGHTER CIRCUIT .....

612 AUDIO CIRCUIT .....

614 WIPER AND WASHER CIRCUIT .....

616 HORN CIRCUIT 54-6-4

618 HEATER CIRCUIT .....

This chapter contains information on the electric horn only.
: '96 Model Gr 54 (Pub. No. TWME9502-54)

SPECIFICATIONS

Item			Specifications
Electric horn	Rated voltage	V	12
	Rated current	A	3±0.5
	Sound pressure	dB	110±5 (at 2 m{6.6 ft})
	Standard frequency	Hz	390±20 (High/Low)

Symptoms / Possible causes	Horn				Remarks
	No Sound	Continuous sound	Small sound	Sound quality poor	
Connector connection faulty, harness broken, grounding faulty	○				
Fuse blown	○				
Horn switch faulty	○	○			
Horn faulty	○		○	○	
Horn stay warped			○	○	
Battery voltage insufficient	○		○		

616 HORN CIRCUIT

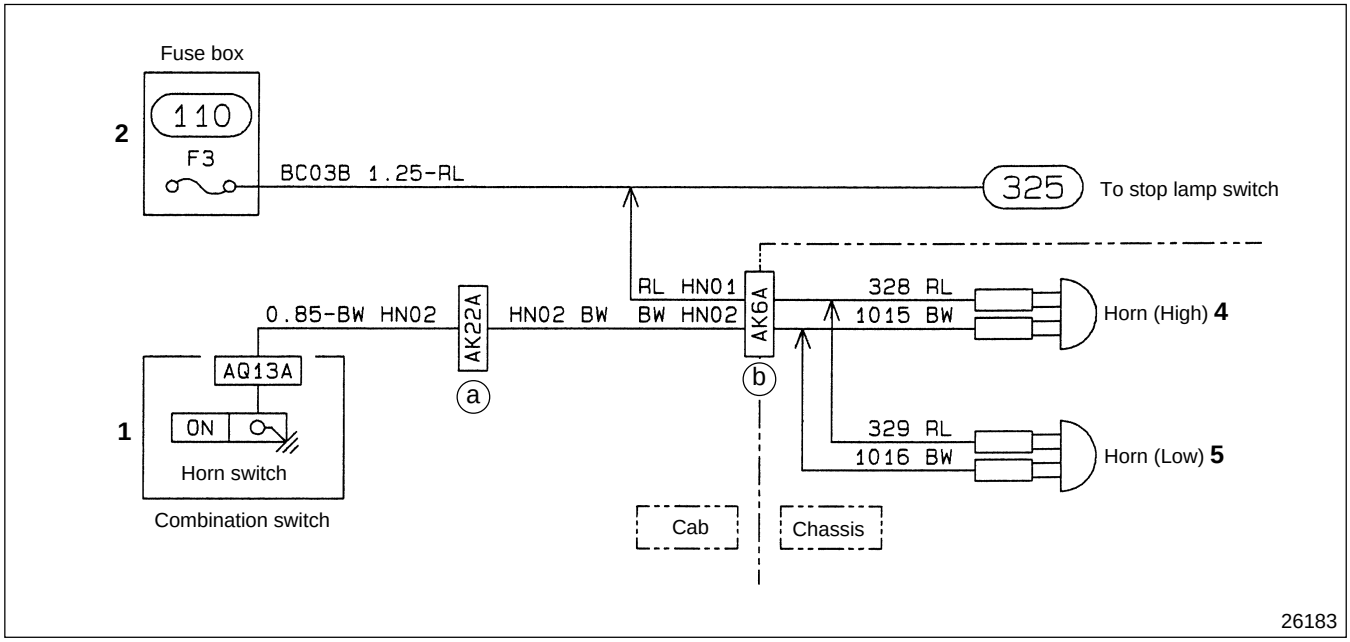

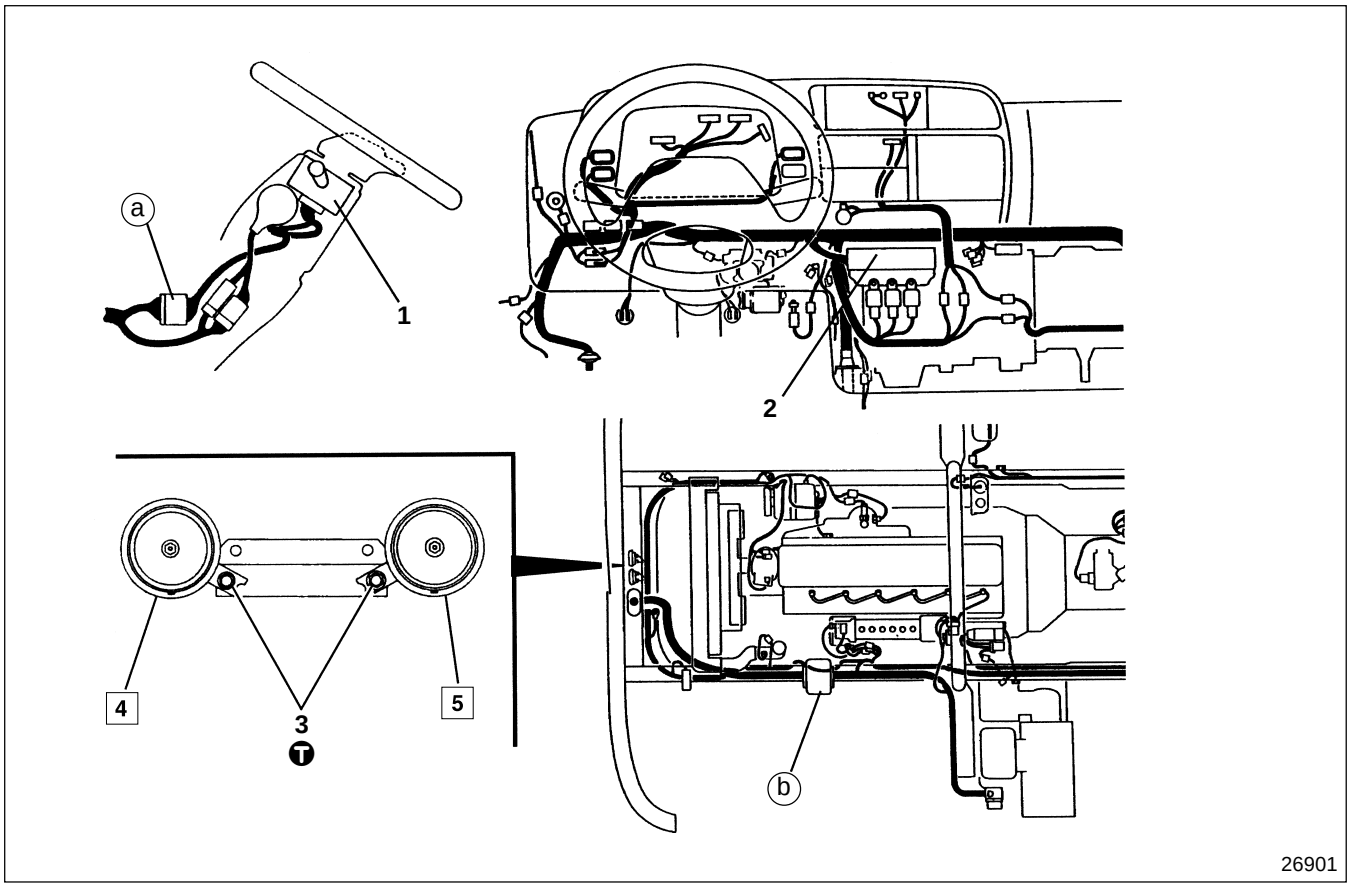

1 Combination switch 601
2 Fuse box 104
3 Bolt
4 Electric horn (High)
5 Electric horn (Low)

: '96 Model Gr 54 (Pub. No. TWME9502-54)

Tightening torque

Unit : N·m {kgf·m}

Location	Parts to be tightened	Tightening torque	Remarks
3	Bolt (Horn mounting)	11.8 to 15.6 {1.2 to 1.6}	—

◆ Service procedure

4 **5** **Electric horn**

CAUTION

- **Bending stay A will result in a change in the tone quality of electric horns 4 and 5, causing a deterioration in performance.**
- **Be sure not to bend or otherwise damage stay A.**

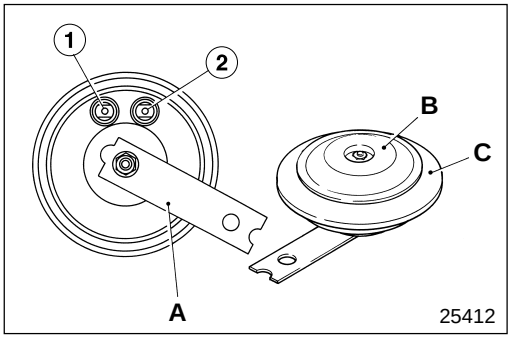

[Inspection]

- Apply 12 volts DC between terminals 1 and 2 (no êë polarity) and make sure horns **4** and **5** sound.
- If any fault is found, replace horns **4** and **5**.
- Except when the fault is due to foreign matter sticking to resonator **B** or diaphragm **C**.

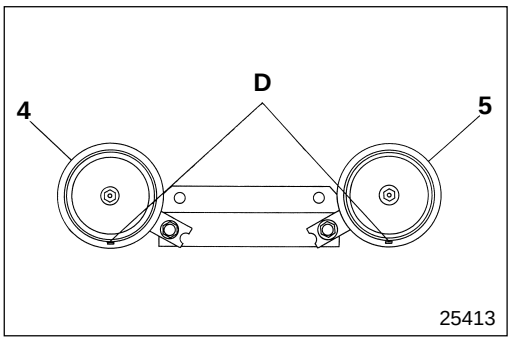

[Installation]

D : Drain hole

7 CHASSIS ELECTRICS

701 MAGNETIC VALVE < Manual Transmission > 54-7-2

710 EXHAUST BRAKE CIRCUIT < Manual Transmission > ... 54-7-4

Installing Position

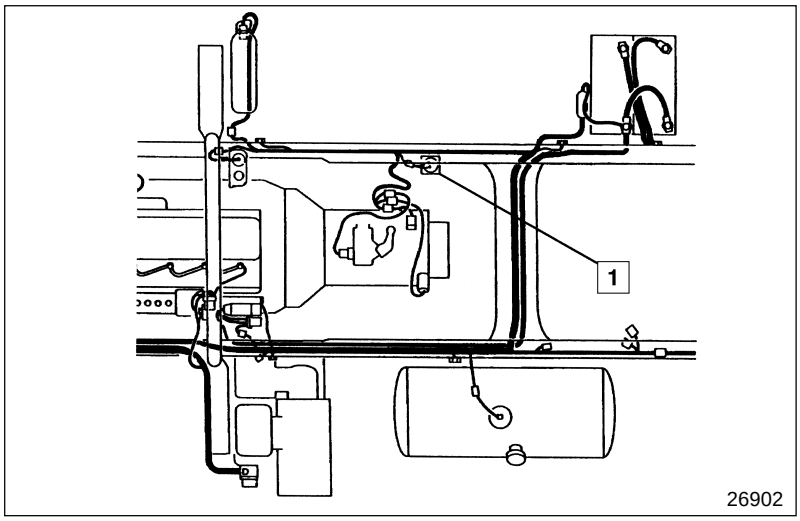

1 3-way magnetic valve
(For exhaust brake)

Service standards

Location	Maintenance item	Standard value	Limit	Remedy
1	Minimum operating voltage of 3-way magnetic valve 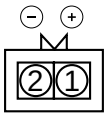 14318	10 V or less	—	Replace

◆ Service procedure

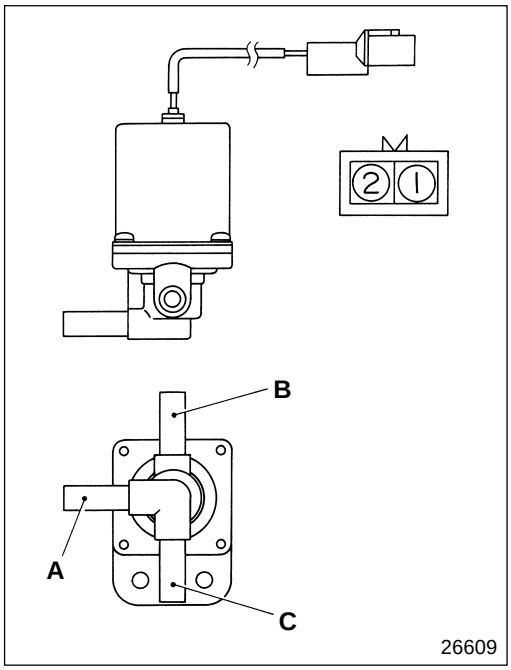

1 Inspection of 3-way magnetic valve

Perform the following inspection and if any fault is found, replace 3-way magnetic valve **1**.

Air circuit table (There is air continuity between terminals ○ and ○.)

	Input port A (from vacuum pump)	Output port B (to exhaust brake valve)	Exhaust port C (into atmosphere)
ON	○	○	
OFF		○	○

(1) Operation inspection

- While applying negative pressure of –99.99 kPa {–29.5 in. Hg, –750 mm Hg} through input port **A**, apply direct-current voltage between terminals ① and ② gradually, starting at 0 volt. Measure the voltage (minimum operating voltage) when 3-way magnetic valve **15** is activated under this condition. (You can tell if the magnetic valves are ON or OFF by listening for an operating sound.)
- Seal output port **B** tightly and applying a pressure of 98.1 kPa {14 lbf/in^2, 1kgf/cm^2} through exhaust port **C**, apply voltage and perform inspection in the same way as described above.

(2) Airtightness inspection

- When the 3-way magnetic valve is ON :
  - Seal output port **B** tightly.
  - While applying negative pressure of –99.99 kPa {–29.5 in. Hg, –750 mmHg} through input port **A**, apply 12 volts DC between terminals ① and ②. Check to ensure air is not sucked in through exhaust port **C** at such time.
  - Next, seal output port **B** tightly, and while applying a pressure of 98.1 kPa {14 lbf/in^2, 1kgf/cm^2} through exhaust port **C**, apply 12 volts DC between terminals ① and ②. Check to ensure there is no air leakage from input port **A** at such time.
- When the 3-way magnetic valve is OFF :
  - Seal output port **B** tightly, apply negative pressure of –99.99 kPa {–29.5 in. Hg, –750 mmHg} through input port **A** and check to ensure air is not sucked in through exhaust port **C**.
  - Next, seal output port **B** tightly, apply pressure of 1 kPa {14 lbf/in^2, 1kgf/cm^2} through exhaust port **C** and check to ensure there is no air leakage from input port **A**.

710 EXHAUST BRAKE CIRCUIT < MANUAL TRANSMISSION >

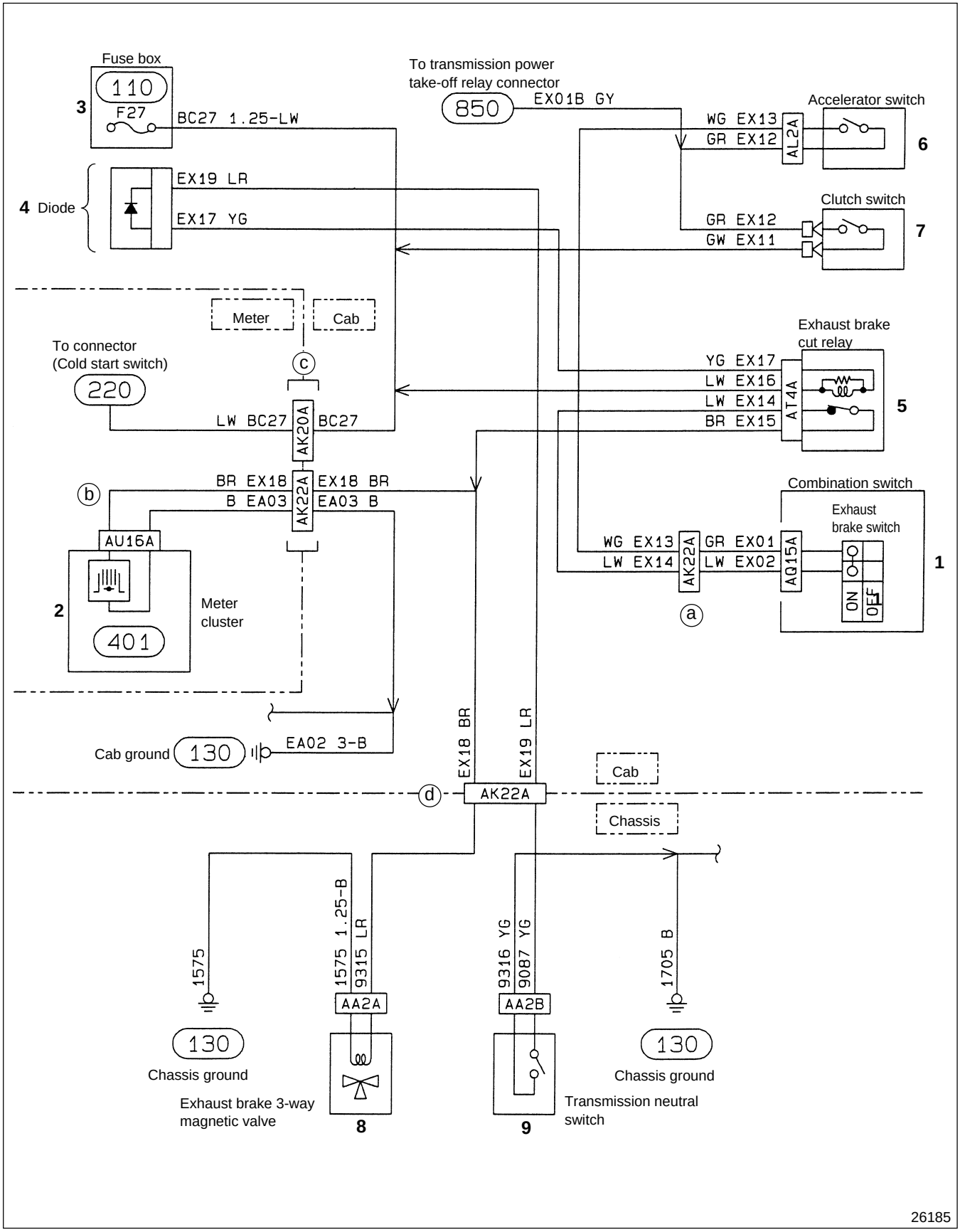

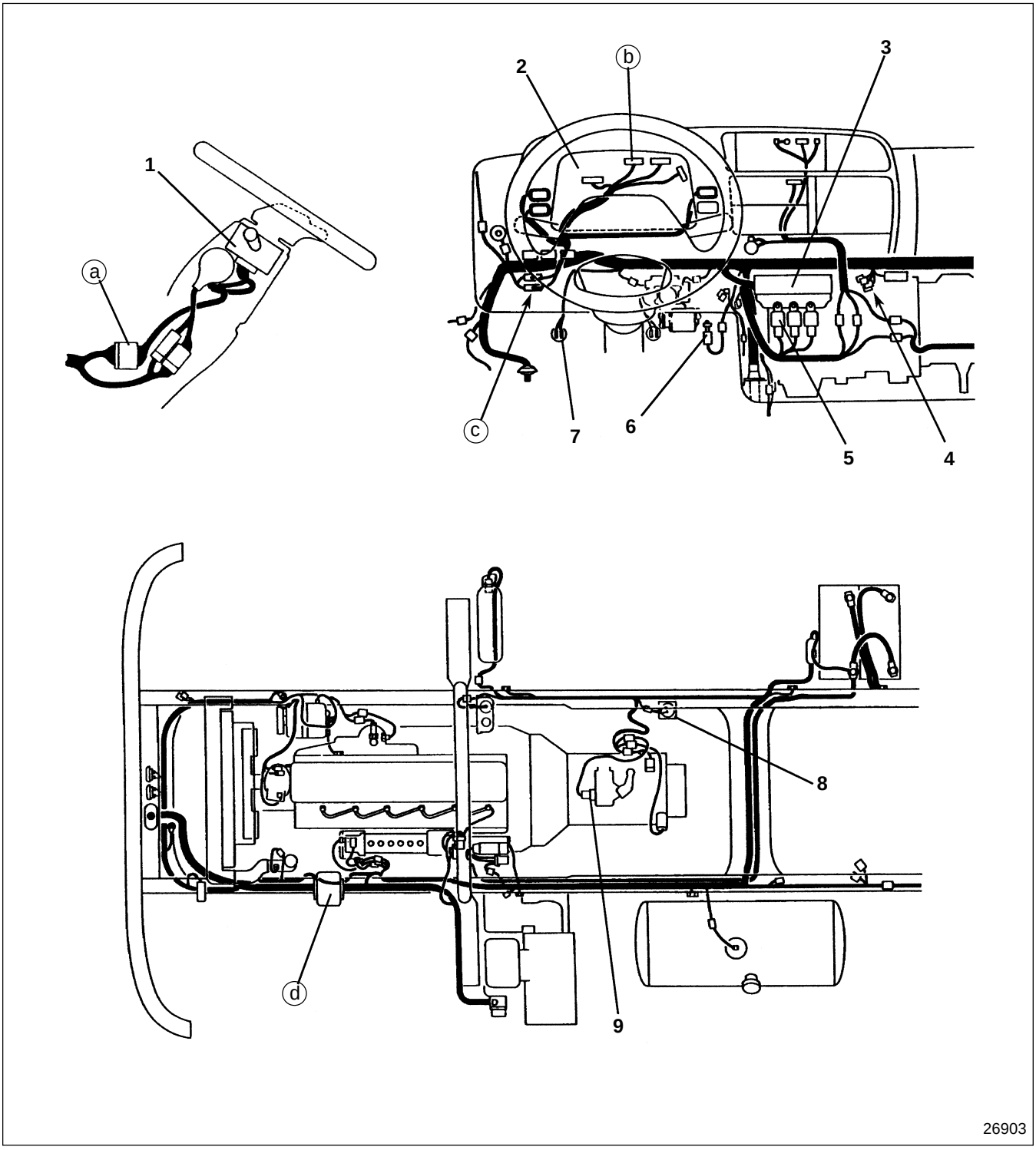

1 Combination switch 601
2 Meter cluster 401
3 Fuse box 104
4 Diode
5 Exhaust brake cut relay 604
6 Accelerator switch 710
7 Clutch switch 710
8 Exhaust brake 3-way magnetic valve 701
9 Transmission neutral switch 802

: '96 Model Gr 54 (Pub. No. TWME9502-54)

8 ENGINE AND TRANSMISSION ELECTRICS

(801) ENGINE ELECTRICS 54-8-2

(802) TRANSMISSION ELECTRICS
< Manual Transmission > 54-8-6
< Automatic Transmission > 54-8-8

(850) TRANSMISSION POWER TAKE-OFF CIRCUIT
< Option > 54-8-10

Installation Position

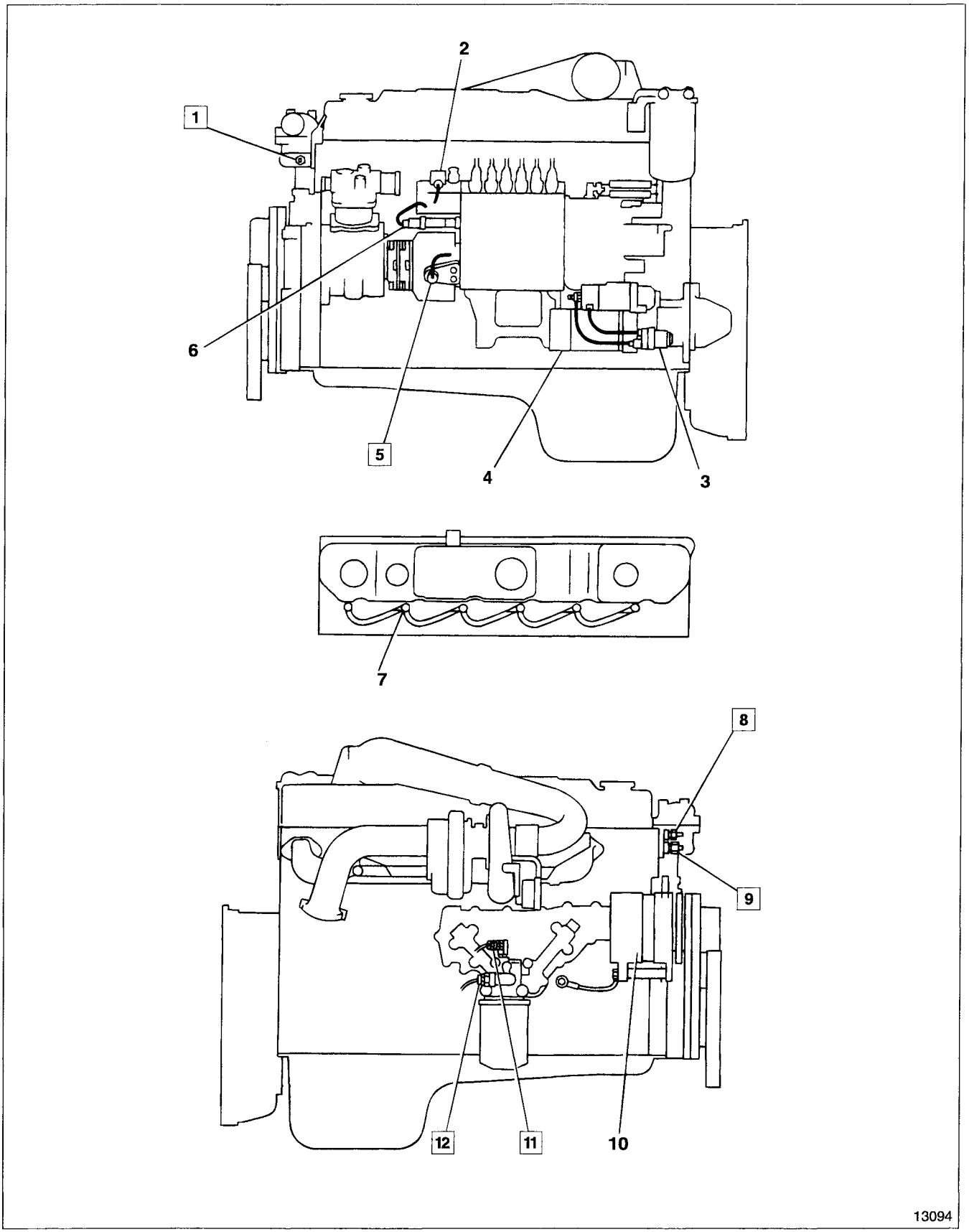

1 Water temperature sensor (Connects to pre-stroke control unit) Gr 13
2 Pre-stroke actuator Gr 13
3 Starter relay (210)
4 Starter (201)
5 Engine revolution sensor
6 Control rod position sensor Gr 13
7 Glow plug (220)
8 Water temperature sensor (Connects to water temperature gauge and multipurpose timing control unit)
9 Overheating switch
10 Alternator (106)
11 Engine oil pressure switch
12 Engine oil bypass alarm switch

Service standards

Location	Maintenance item			Standard value	Limit	Remedy
5	Resistance of engine revolution sensor (At room temperature 25°C {77°F}) 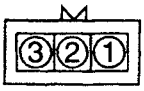 14366		①–②	2.1 to 2.5 k Ω	—	Replace
8	Resistance of water temperature sensor 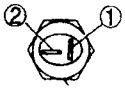 Body 14321	① – (Body) (Water temperature gauge side)	50°C {122°F}	(153.9 Ω)	—	Replace
			80°C {176°F}	51.9 $^{+4.9}_{-4.4}$ Ω		
			100°C {212°F}	27.4 $^{+1.9}_{-1.2}$ Ω		
		② – (Body) (Multipurpose timing control unit side)	20°C {68°F}	3.25±0.33 kΩ		
			60°C {140°F}	(620 Ω)		
			80°C {176°F}	(300 Ω)		
9	Operating temperature of overheating switch	When temperature increases (ON→OFF)		110 ± 2°C {230 ± 3.6°F}	—	Replace
		When temperature decreases (OFF→ON)		110 ± 4°C {230 ± 3.9°F}	—	
11	Operating pressure of engine oil pressure switch			49±9.8 kpa {7.1±1.4lbf/in², 0.5±0.1 kgf/cm²}	—	Replace
12	Operating pressure of engine oil bypass alarm switch			140±20 kPa {20±2.8 lbf/in², 1.4±0.2 kgf/cm²}	—	Replace

The values in ( ) are reference values.

◆ Service procedures

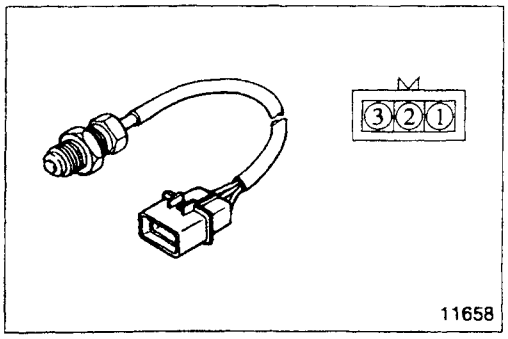

5 Inspection of engine revolution sensor

- Measure the resistance between terminals ① and ②.
- If the measured value deviates from the standard value, replace engine revolution sensor **5**. Gr 13

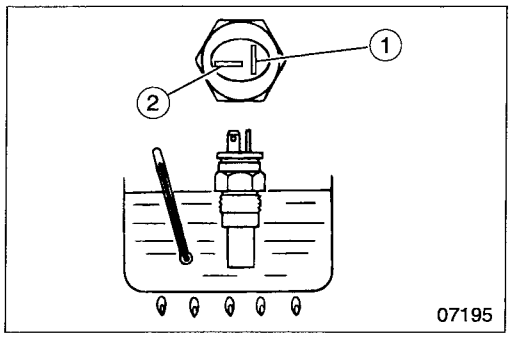

8 Inspection of water temperature sensor

- Place water temperature sensor **8** in engine oil in a container.
- Raise the oil temperature to the specified values and stir the oil.
- Measure the resistance between terminal ① and the body, and terminal ② and the body.
  Terminal ① : Water temperature gauge connection
  Terminal ② : Multipurpose timing control unit connection
- If the measured value deviates from the standard value, replace water temperature sensor **8**. Gr 14

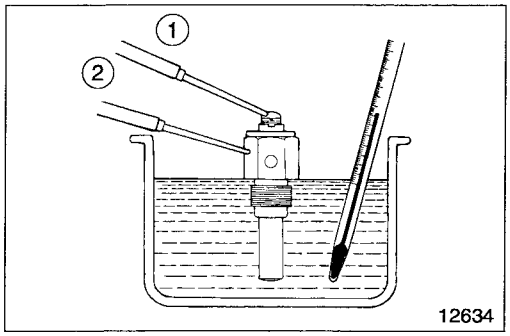

9 Inspection of overheating switch

Carry out the following inspection. If any fault is found, replace overheating switch **9**. Gr 14

- Make sure that there is no continuity between terminals ① and ② (Body) at room temperature (20°C {68°F}).
- Place overheating switch **9** in a container filled with engine oil and raise the oil temperature while stirring the oil.
  Measure the temperature when there is continuity between terminals ① and ② (Body), and make sure that the measured value conforms to the standard value.
- Lower the oil temperature and measure the temperature when continuity is lost between terminals ① and ② (Body), and make sure that the measured value conforms to the standard value.

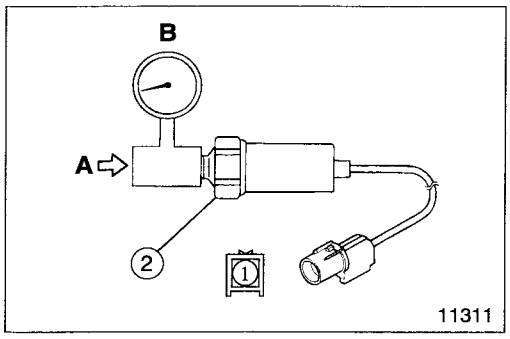

11 Inspection of engine oil pressure switch

Carry out the following inspection. If any fault is found, replace engine oil pressure switch **11**. Gr 12

- Make sure that there is continuity between terminals ① and ② (Body) when air pressure **A** is not applied to engine oil pressure switch **11**.
- Apply air pressure **A** to engine oil pressure switch **11** gradually starting from 0 kpa {0 lbf/in², 0 kgf/cm²}.
  Measure the air pressure when continuity is lost between terminals ① and ② (Body), and make sure that the measured value conforms to the standard value.
  B : Air pressure gauge

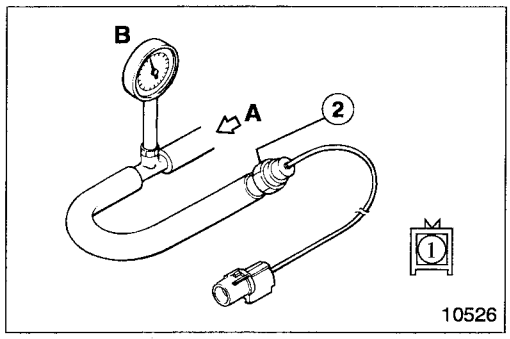

12 Inspection of engine oil bypass alarm switch

Carry out the following inspection. If any fault is found, replace engine oil bypass alarm switch **12**. Gr 12

- Make sure that there is no continuity between terminals ① and ② (Body) when air pressure **A** is not applied to engine oil bypass alarm switch **12**.
- Apply air pressure **A** to engine oil bypass alarm switch **12** gradually starting from 0 kpa {0 lbf/in², 0 kgf/cm²}.
  Measure the air pressure when continuity is present between terminals ① and ② (Body), and make sure that the measured value conforms to the standard value.
  B : Air pressure gauge

MEMO

Installation Position

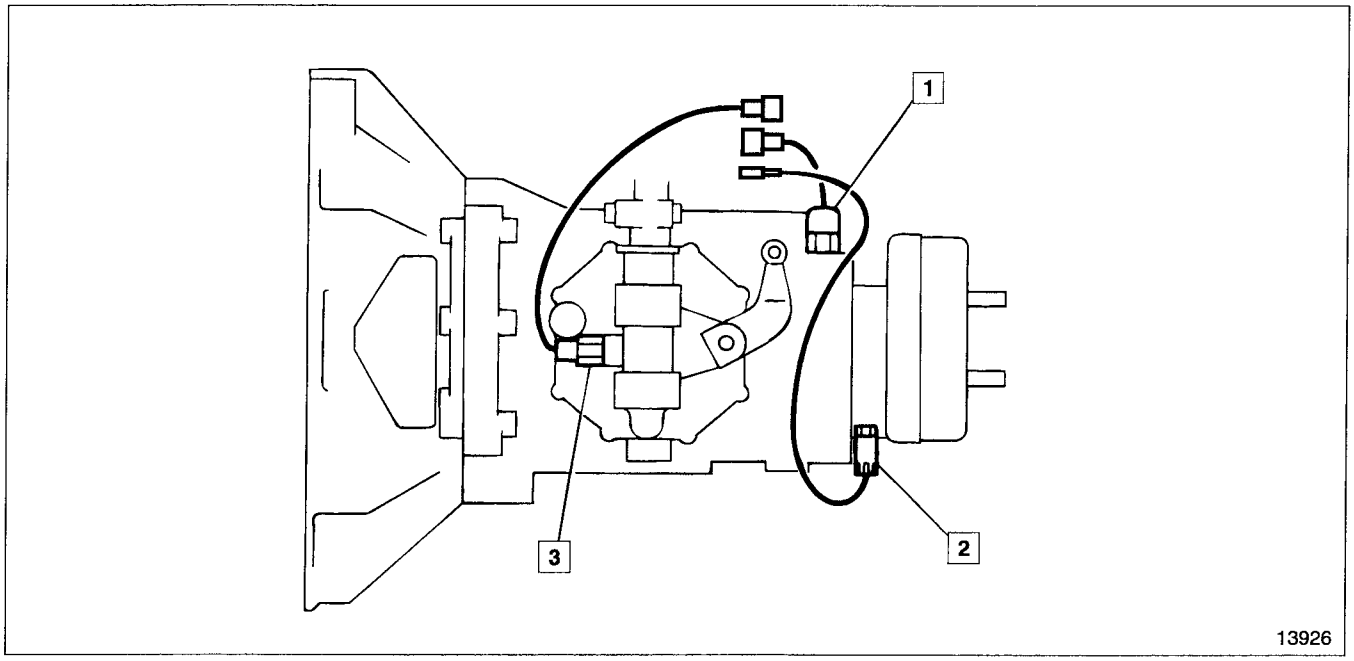

1 Backup lamp switch
2 Vehicle speed sensor
3 Transmission neutral switch

Service standards

Location	Maintenance item			Standard value	Limit	Remedy
2	Pulse output voltage of vehicle speed sensor (8 pulses) ⊕ ⊖ 3 2 1 Tester 14367	①–②	Low pulse	1.5 V or less	—	Replace
			High pulse	12 V–(0.5 V or less)	—	

◆ Service procedure

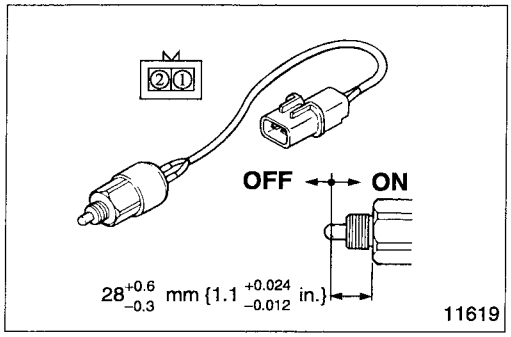

1 Inspection of Backup lamp switch

- Follow the table below to inspect continuity

	①	②
OFF		
ON	○—○	

○—○ : There is continuity between terminals ○ and ○.

- If any fault is found, replace backup lamp switch **1**. Gr 22

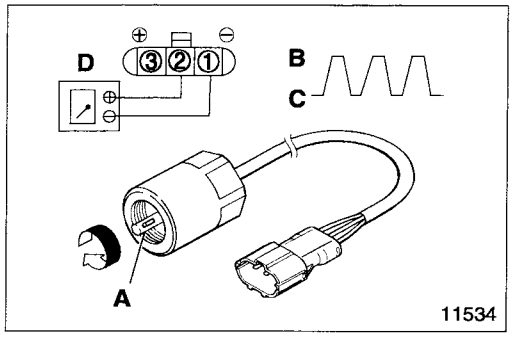

2 Inspection of vehicle speed sensor

- Apply 12 volts DC between terminals ① and ③, and rotate shaft **A** of vehicle speed sensor **2** slowly.
- At this state, measure the maximum voltage (High pulse voltage **B**) and the minimum voltage (Low pulse voltage **C**) generated between terminals ① and ②.
  D : Tester
- If the measured value deviates from the standard value, replace vehicle speed sensor **2.** Gr 22

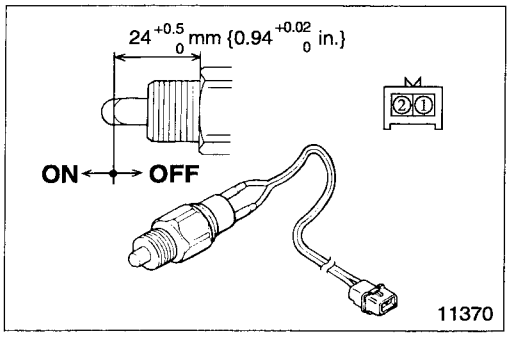

3 Inspection of transmission neutral switch

- Follow the table below to inspect continuity

	①	②
OFF		
ON	○—○	

○—○ : There is continuity between terminals ○ and ○.

- If any fault is found, replace transmission neutral switch **3**. Gr 22

Installation Position

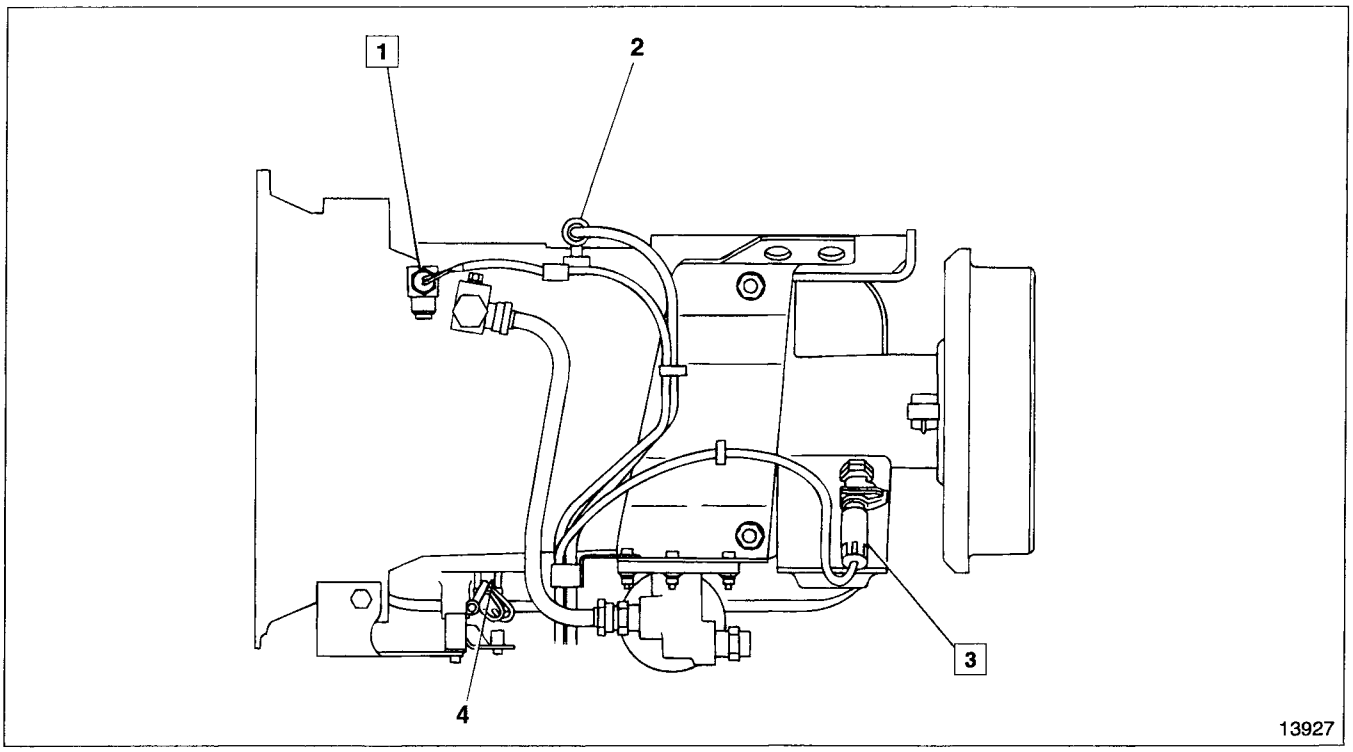

1 Automatic transmission fluid temperature switch
2 Backup lamp switch Gr 23
3 Vehicle speed sensor
4 Automatic transmission neutral switch Gr 23

Service standards

Location	Maintenance item			Standard value	Limit	Remedy
1	Operating temperature of automatic transmission fluid temperature switch	When increases (OFF→ON)		140±3°C {284±5.4°F}	—	Replace
		When decreases (ON→OFF)		133°C {271°F} MIN		
3	Output voltage of vehicle speed sensor 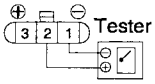	①–②	Low pulse	1.5 V or less	—	Replace
			High pulse	12 V–(0.5 V or less)	—	

◆ Service procedure

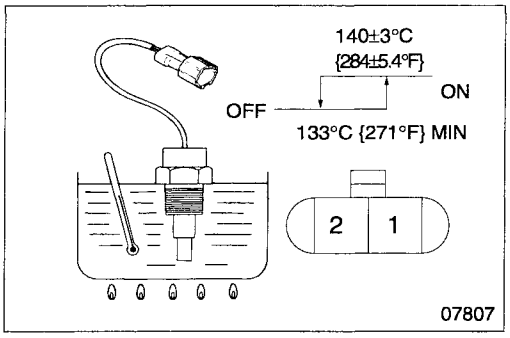

1 **Inspection of automatic transmission fluid temperature switch**

Carry out the following inspection. If any fault is found, replace automatic transmission fluid temperature switch **1**. Gr 23

- Make sure that there is no continuity between terminals ① and ② at room temperature (20±5°C {68±9°F}).
- Place automatic transmission fluid temperature switch **1** in a container filled with engine oil and raise the oil temperature while stirring the oil. Measure the temperature when there is continuity between terminals ① and ②, and make sure that the measured value conforms to the standard value.
- Lower the oil temperature and measure the temperature when continuity is lost between terminals ① and ②, and make sure that the measured value conforms to the standard value.

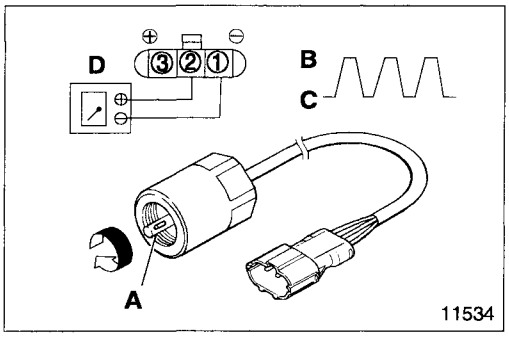

3 **Inspection of vehicle speed sensor**

- Apply 12 volts DC between terminals ① and ③, and rotate shaft **A** of vehicle speed sensor **3** slowly.
- At this state, measure the maximum voltage (High pulse voltage **B**) and the minimum voltage (Low pulse voltage **C**) generated between terminals ① and ②.
  D : Tester
- If the measured value deviates from the standard value, replace vehicle speed sensor **3**. Gr 23

(850) TRANSMISSION POWER TAKE-OFF CIRCUIT < Option >

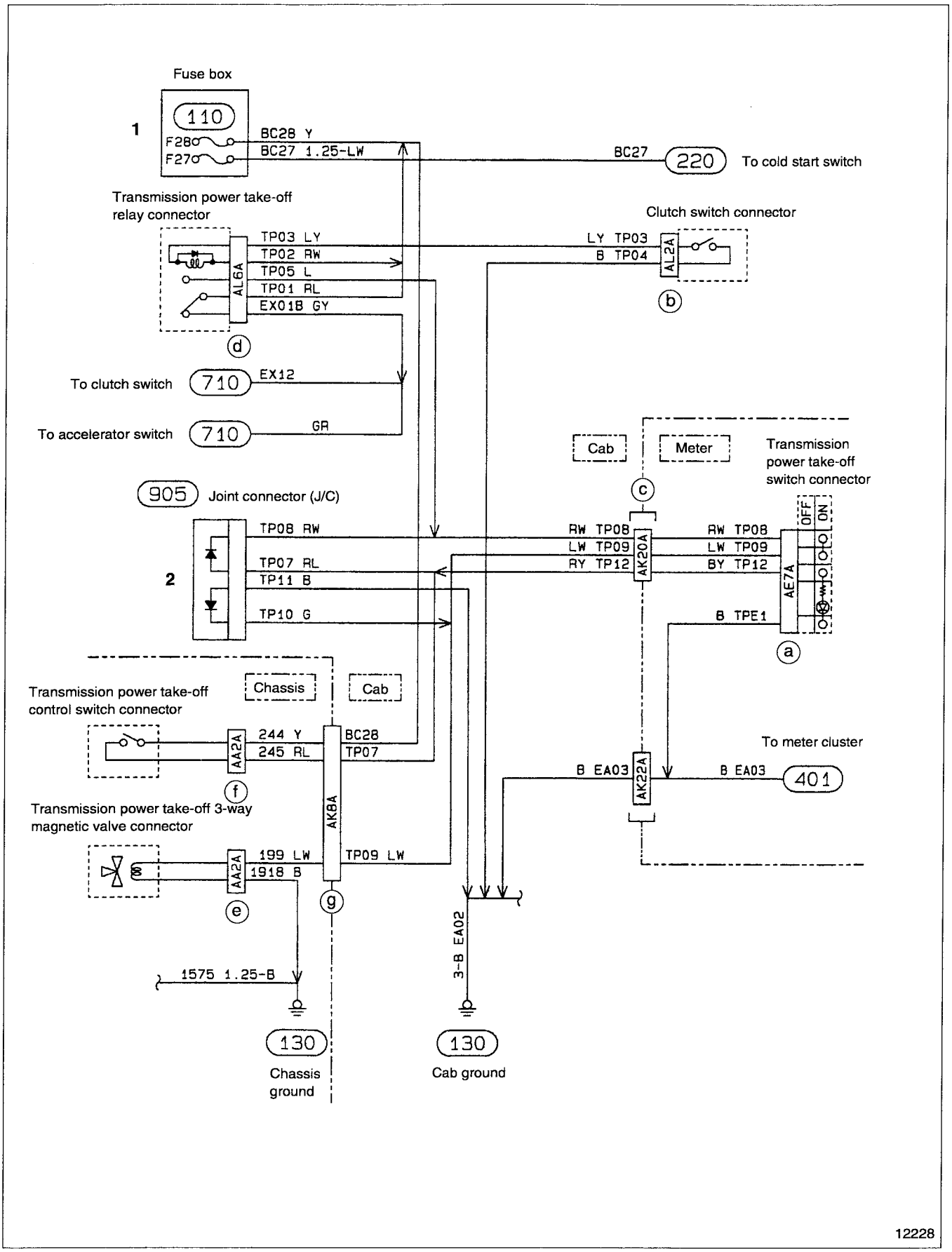

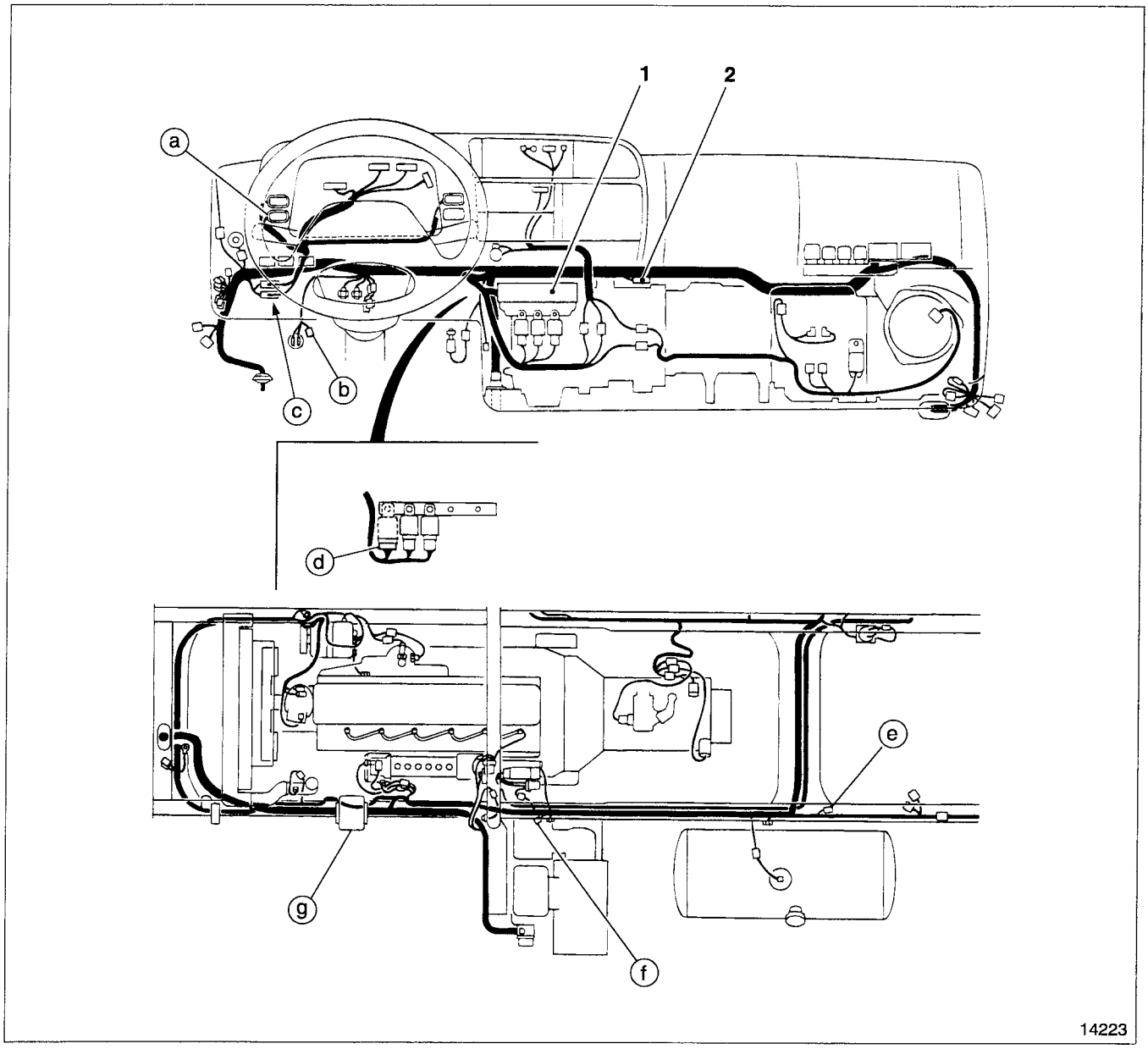

1 Fuse box 🕮 (104)
2 Joint connector 🕮 (905)

9 OTHERS

STRUCTURE AND OPERATION ..... 📖

905 JOINT CONNECTOR 54-9-2

910 MULTIPURPOSE TIMING CONTROL UNIT CIRCUIT ..... 📖

📖 : '97 Model Gr 54 (Pub. No. TWME9502-1)

Installation Position

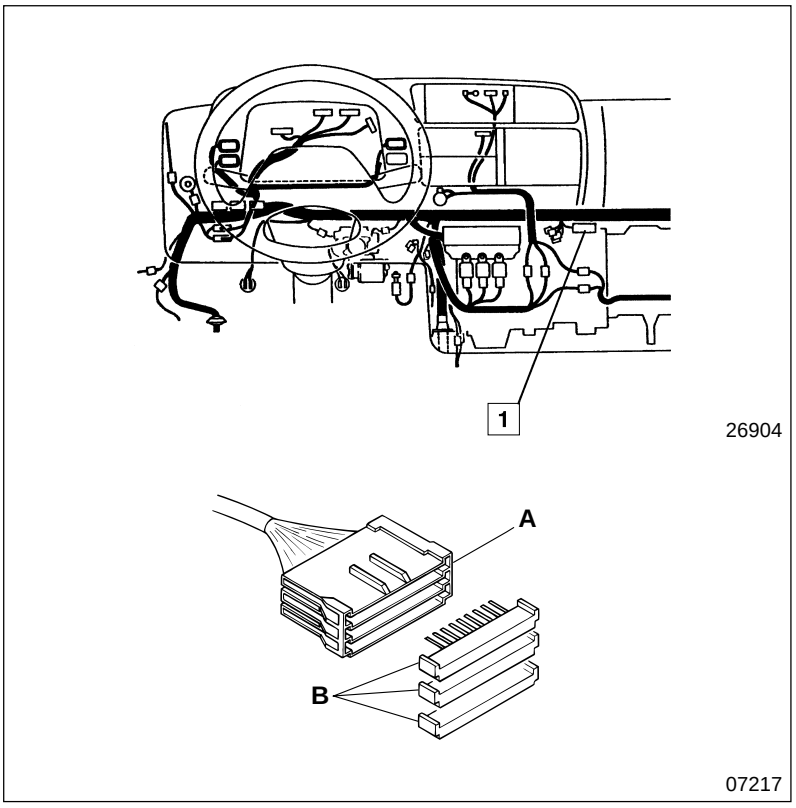

1 Joint connector

A : Housing
B : Joint

◆ Service procedure

1 Joint connector

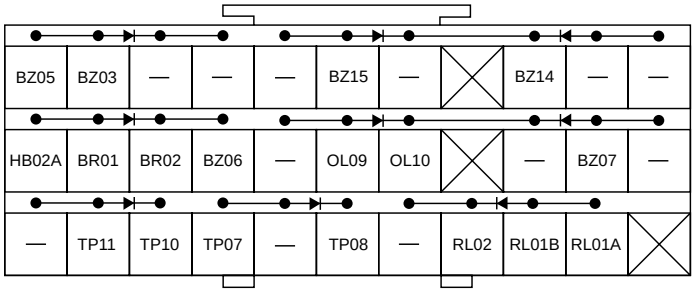

26187

	Circuit No.	Wire color	Destinations	Index No.	Remarks
Black-1	BZ05	GB	Diode	515	
	BZ03	GW	Warning buzzer	515	
	BZ15	G	BR01	515	
	BZ14	YB	GE02	215	
Black-2	HB02A	LB	Diode	515	
	BR01	G	Meter cluster (Brake)	515	
	BR02	GL	Power steering fluid level sensor	515	
	BZ06	LW	Diode	515	
	OL09	L	Meter cluster (Engine oil)	536	
	OL10	LW	Engine oil pressure switch	536	
	BZ07	GR	Diode	510	
Black-3	TP11	B	EA02	—	T/M PTO (Ground)
	TP10	G	TP09	—	T/M PTO
	TP07	RL	Transmission control switch	—	T/M PTO
	RL01A	BW	Cab lamp	345	
	TP08	RW	Transmission power take-off switch	—	T/M PTO
	RL02	BY	Door switch, RH	345	
	RL01B	BW	Door switch, LH	345	

T/M PTO : Transmission power take-off < Option >

MITSUBISHI
FUSO

FH

Service Manual

Group 54
Electrical

Table of Contents

BACK

HOME

MITSUBISHI FUSO TRUCK OF AMERICA, Inc.

Pub No. TWME9502-54

GROUP 54 ELECTRICAL

1 POWER, CHARGING AND GROUND

SPECIFICATIONS 54-1-2

STRUCTURE AND OPERATION 54-1-3

TROUBLESHOOTING 54-1-6

(100) INSPECTION AND ADJUSTMENT MOUNTED IN VEHICLE
- Inspection of Alternator 54-1-8
- Inspection of Regulator 54-1-9

(101) BATTERY 54-1-10

(104) FUSE 54-1-14

(106) ALTERNATOR 54-1-16

(110) POWER CIRCUIT 54-1-22

(125) BATTERY CHARGING CIRCUIT 54-1-30

(130) GROUND 54-1-32

2 STARTING, PREHEATING, AND STOPPING ENGINE

SPECIFICATIONS 54-2-2

STRUCTURE AND OPERATION 54-2-3

TROUBLESHOOTING 54-2-12

(200) INSPECTION AND ADJUSTMENT MOUNTED IN VEHICLE
Inspection of Engine Preheating System ... 54-2-14

(201) STARTER 54-2-15

(210) ENGINE STARTING CIRCUIT
< Manual Transmission > 54-2-28
< Automatic Transmission > 54-2-32

(212) SUB-STARTER CIRCUIT
< Manual Transmission > 54-2-36
< Automatic Transmission > 54-2-38

(215) ENGINE STOPPING CIRCUIT 54-2-40

(220) ENGINE PREHEATING AND COLD START CIRCUIT
< Manual Transmission > 54-2-44
< Automatic Transmission > 54-2-48

3 LIGHTING

SPECIFICATIONS 54-3-2

STRUCTURE AND OPERATION 54-3-4

TROUBLESHOOTING 54-3-6

(300) INSPECTION AND ADJUSTMENT MOUNTED IN VEHICLE
Headlamp Aiming 54-3-8

(310) HEADLAMP CIRCUIT 54-3-10

(320) TAIL LAMP, CLEARANCE LAMP AND LICENSE PLATE LAMP CIRCUITS 54-3-12

(325) STOP LAMP CIRCUIT 54-3-14

(330) TURN SIGNAL LAMP AND HAZARD LAMP CIRCUITS 54-3-18

(340) BACKUP LAMP CIRCUIT 54-3-20

(345) CAB LAMP CIRCUIT 54-3-24

(348) ILLUMINATION LAMP CIRCUIT 54-3-28

(349) MARKER LAMP AND IDENTIFICATION LAMP CIRCUITS 54-3-30

(352) VAN BODY DOME LIGHT CIRCUIT 54-3-32

4 METER

SPECIFICATIONS 54-4-2

TROUBLESHOOTING 54-4-3

(401) METER CLUSTER 54-4-4

(410) SPEEDOMETER AND TACHOMETER CIRCUITS 54-4-10

(420) FUEL GAUGE CIRCUIT 54-4-12

(425) WATER TEMPERATURE GAUGE CIRCUIT 54-4-16

5 INDICATOR AND WARNING

TROUBLESHOOTING 54-5-2

(500) INSPECTION AND ADJUSTMENT MOUNTED IN VEHICLE
- Inspection of Brake Fluid Level Switch..... 54-5-5

(510) PARKING BRAKE INDICATOR CIRCUIT [BRAKE] 54-5-6

(515) BRAKE WARNING CIRCUIT [BRAKE AIR] [BRAKE] 54-5-8

(530) WATER LEVEL WARNING CIRCUIT 54-5-12

(536) ENGINE OIL PRESSURE WARNING CIRCUIT 54-5-16

(537) OVERHEATING WARNING CIRCUIT 54-5-18

(547) AUTOMATIC TRANSMISSION FLUID TEMPERATURE WARNING CIRCUIT [T/M OIL TEMP] 54-5-20

(550) CAB TILT WARNING CIRCUIT 54-5-24

6 CAB SIDE ELECTRICS

SPECIFICATIONS 54-6-2

TROUBLESHOOTING 54-6-2

(601) SWITCH 54-6-4

(604) RELAY AND CONTROL UNIT 54-6-8

(606) WARNING BUZZER 54-6-11

(610) CIGARETTE LIGHTER CIRCUIT 54-6-12

(612) AUDIO CIRCUIT 54-6-14

(614) WIPER AND WASHER CIRCUIT 54-6-16

(616) HORN CIRCUIT 54-6-20

(618) HEATER CIRCUIT 54-6-22

7 CHASSIS ELECTRICS

(701) MAGNETIC VALVE 54-7-2

(710) EXHAUST BRAKE CIRCUIT
< Manual Transmission > 54-7-4

(718) AIR DRYER CIRCUIT 54-7-8

8 ENGINE AND TRANSMISSION ELECTRICS

(801) ENGINE ELECTRICS 54-8-2

(802) TRANSMISSION ELECTRICS
< Manual Transmission > 54-8-6
< Automatic Transmission > 54-8-8

(850) TRANSMISSION POWER TAKE-OFF CIRCUIT
< Option > 54-8-10

9 OTHERS

STRUCTURE AND OPERATION 54-9-2

(905) JOINT CONNECTOR 54-9-6

(910) MULTIPURPOSE TIMING CONTROL UNIT CIRCUIT 54-9-8

Model (Number shows number of pins)		Connection
AA	AA 1 A	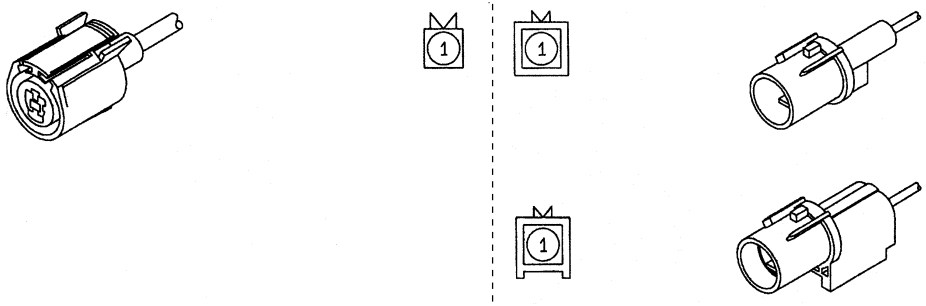
	AA 2 A	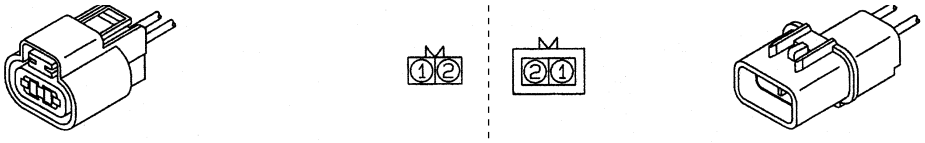
	AA 2 B	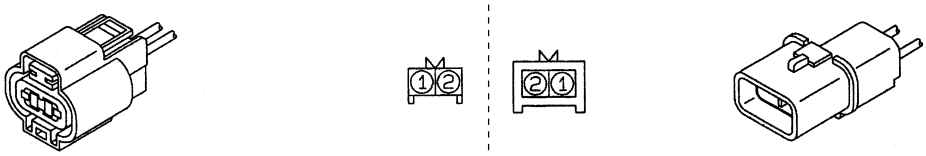
	AA 3 A	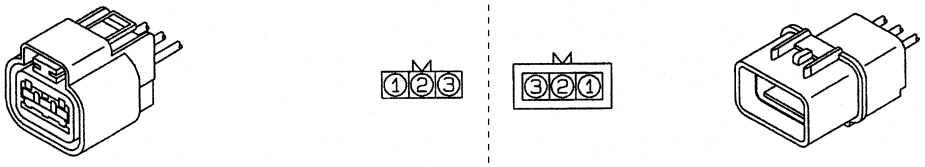
	AA 3 B	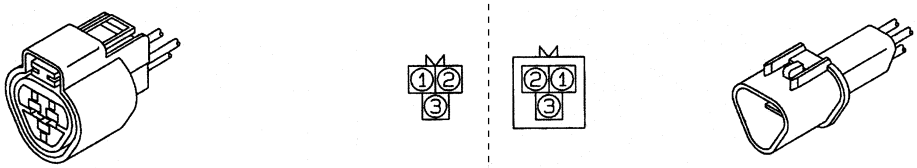
	AA 4 A	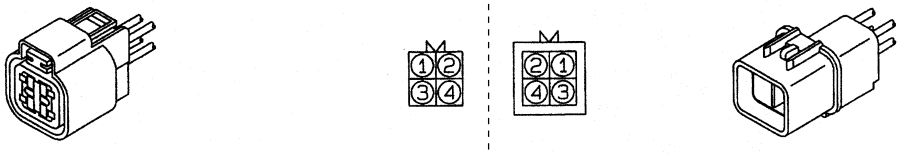
	AA 4 B	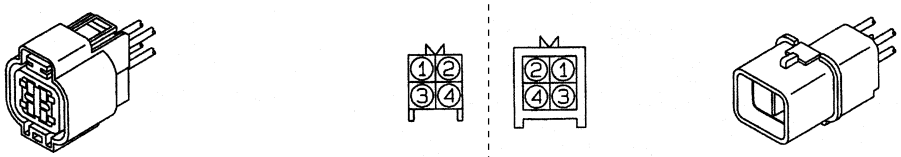
	AA 6 A	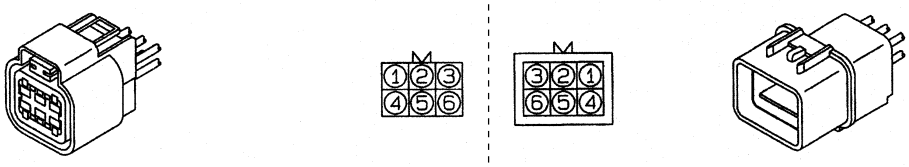

CONNECTOR CONFIGURATION CHART

Model (Number shows number of pins)		Connection			
AA	AA 6 B	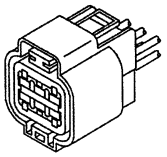		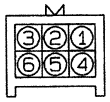	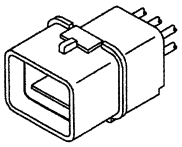
	AA 8 A	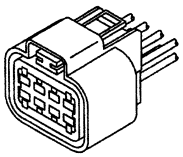	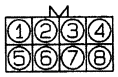	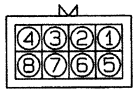	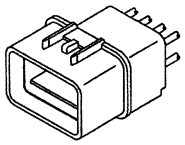
	AA10A	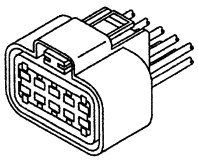	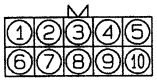	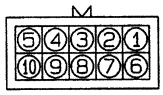	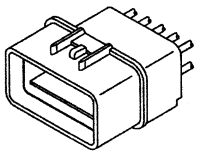
	AA12A	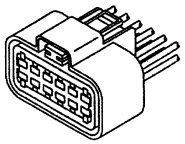	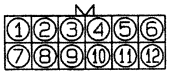	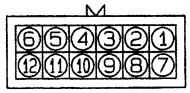	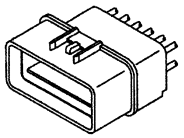
AB	AB 2 A	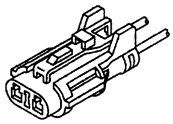	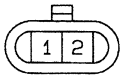	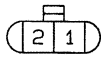	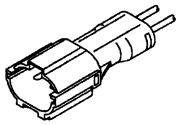
	AB 3 A	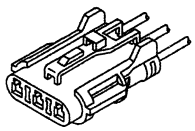	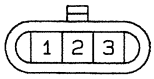	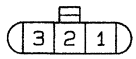	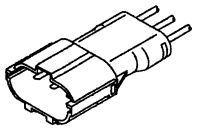
	AB 4 A	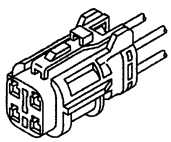	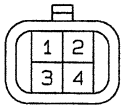	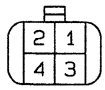	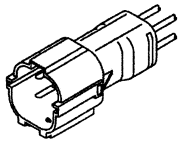
	AB 6 A	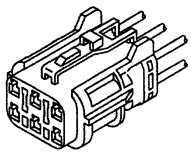	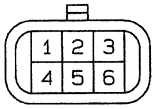	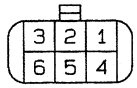	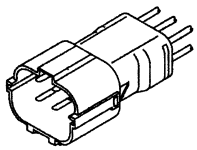
AC	AC 1 A	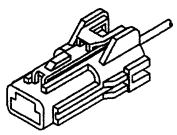			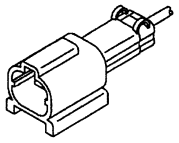

Model (Number shows number of pins)		Connection			
AC	AC 2 A	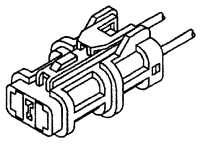			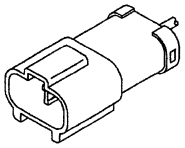
	AC 3 A	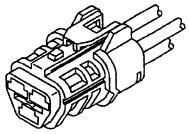		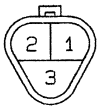	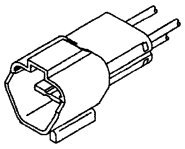
	AC 4 A	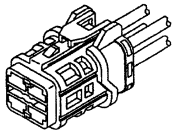	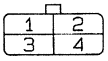	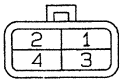	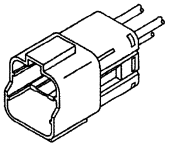
AD	AD 1 A	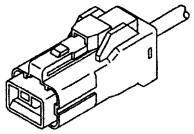			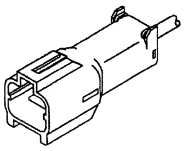
	AD 2 A	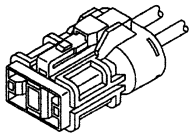	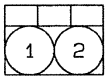	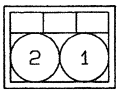	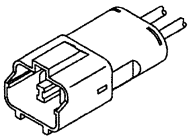
AE	AE 2 A	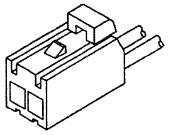			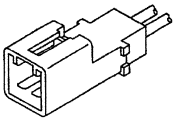
	AE 3 A	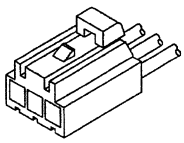	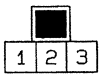	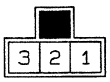	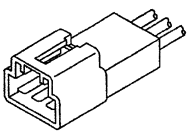
	AE 5 A	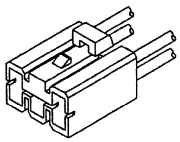	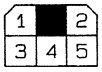	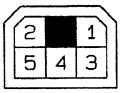	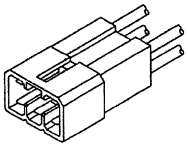
	AE 7 A	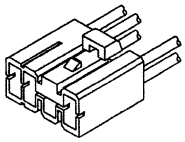		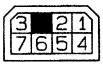	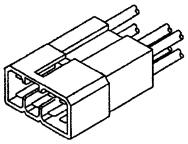

CONNECTOR CONFIGURATION CHART

Model (Number shows number of pins)		Connection			
AE	AE 9 A	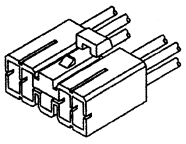	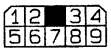	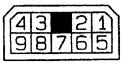	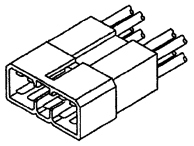
	AE11A	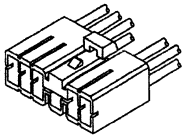	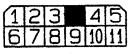	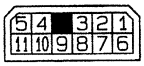	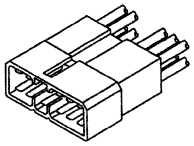
	AE13A	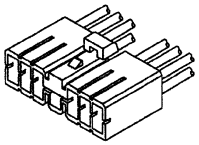	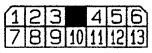	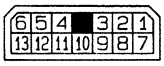	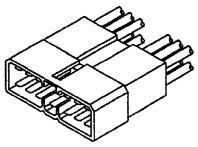
	AE15A	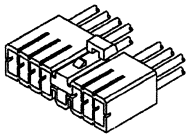	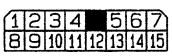	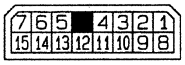	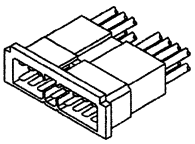
	AE16A (White, Gray, Black)	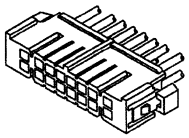	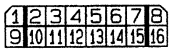	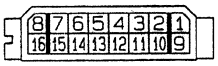	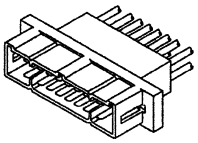
	AE16B (Green)	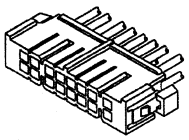	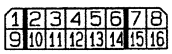	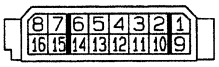	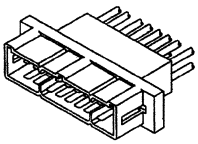
	AE16C (Blue)	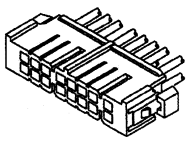	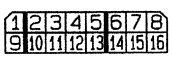	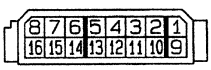	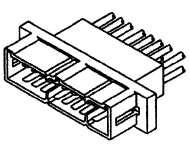
	AE17A	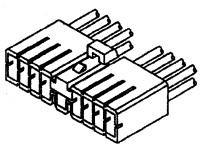	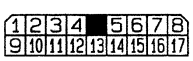	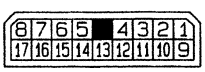	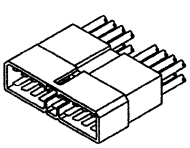
AG	AG16A	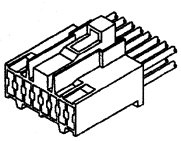	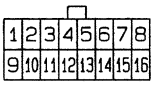		

Model (Number shows number of pins)		Connection
AG	AG20A	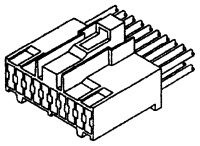 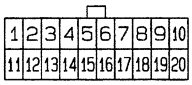
AH	AH10A	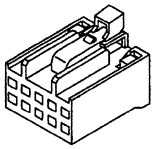 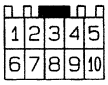 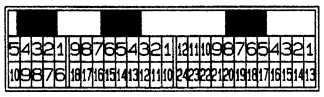 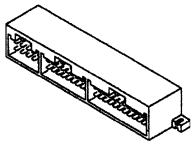
	AH12A	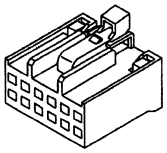 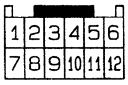 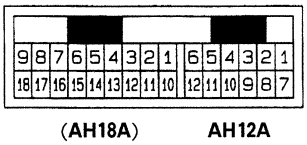 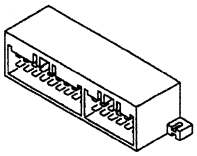
	AH18A	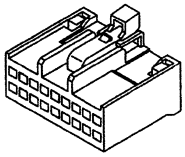 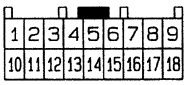 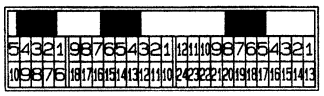 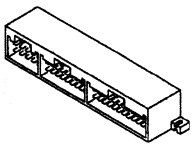
	AH18B	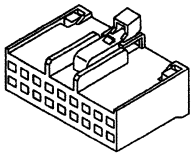 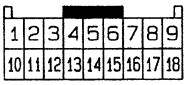 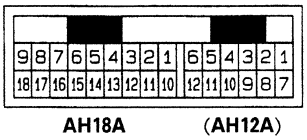 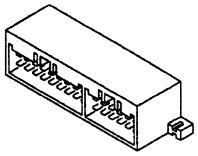

CONNECTOR CONFIGURATION CHART

Model (Number shows number of pins)		Connection
AH	AH24A	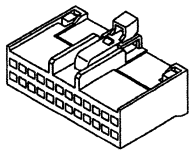 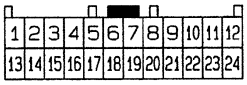 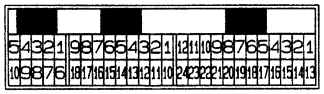 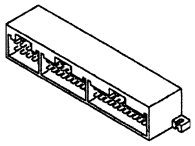
AJ	AJ 2 A	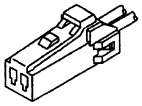   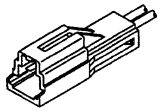
	AJ 4 A	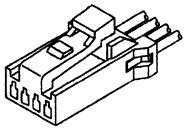  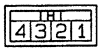 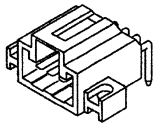
	AJ 8 A	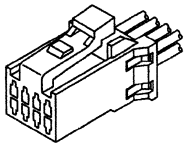  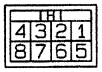 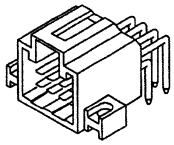
	AJ10A	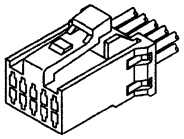 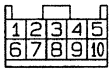 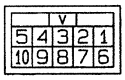 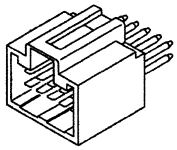 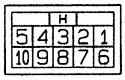 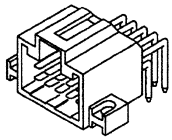
	AJ12A	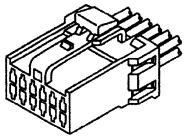 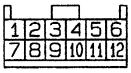 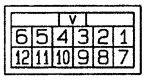 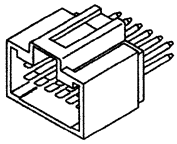 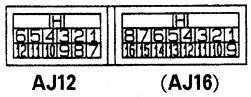 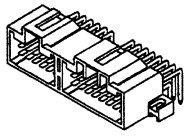

Model (Number shows number of pins)		Connection
AJ	AJ16A	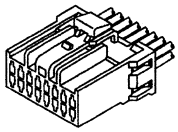 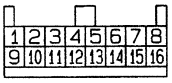 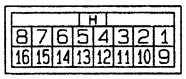 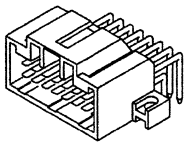 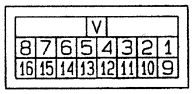 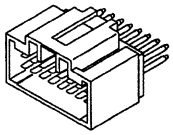 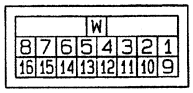 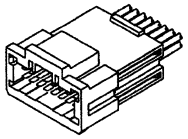  (AJ12A) AJ16A 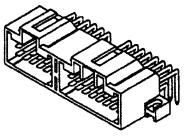 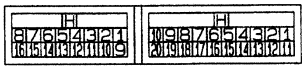 AJ16A (AJ20A) 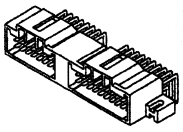

CONNECTOR CONFIGURATION CHART

Model (Number shows number of pins)		Connection
AJ	AJ20A	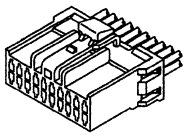 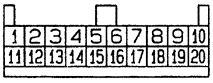 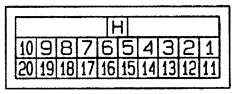 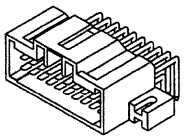 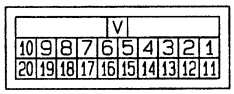 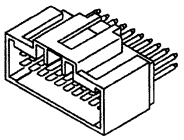 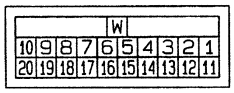 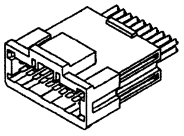 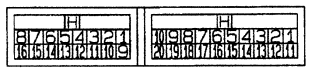 (AJ16A) AJ20A 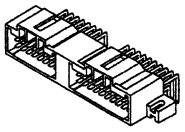
AK	AK 2 A	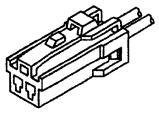   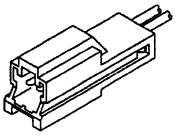
	AK 3 A	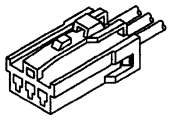   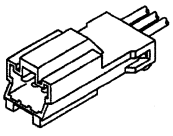
	AK 4 A	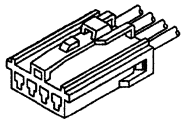   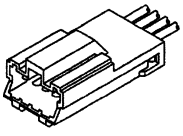
	AK 6 A	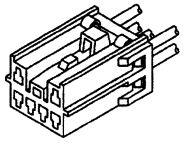   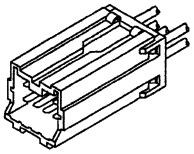

Model (Number shows number of pins)		Connection
AK	AK 8 A	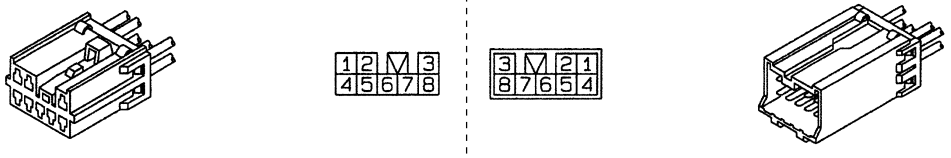
	AK10A	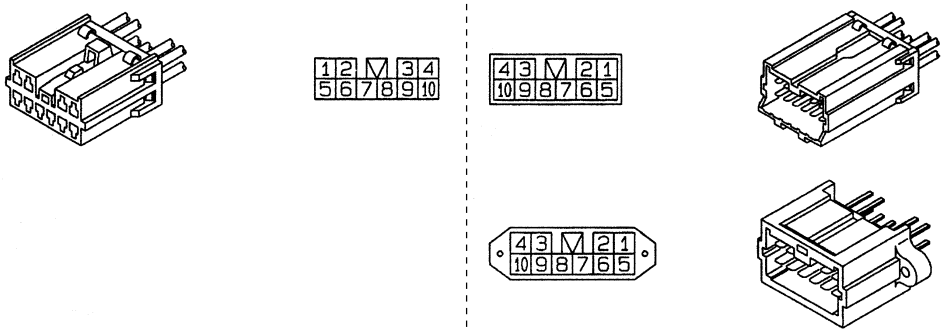
	AK14A	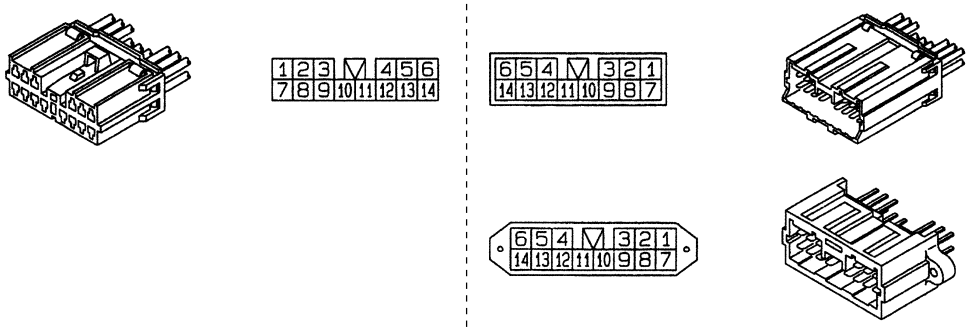
	AK18A	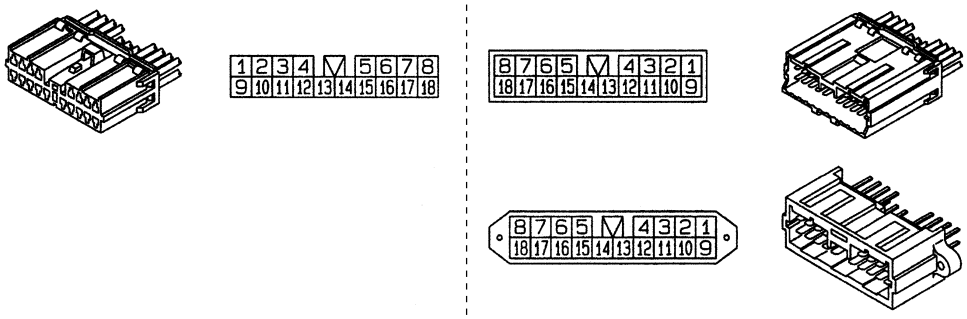
	AK20A	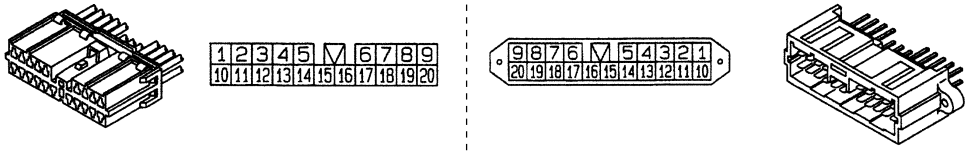

CONNECTOR CONFIGURATION CHART

Model (Number shows number of pins)		Connection
AK	AK20B	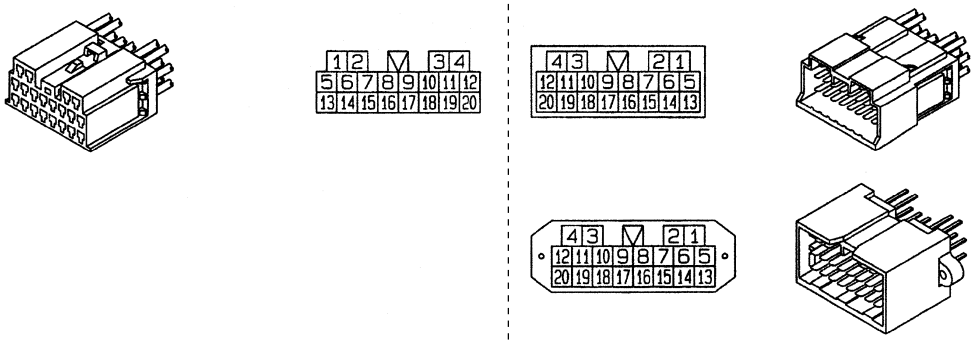
	AK22A	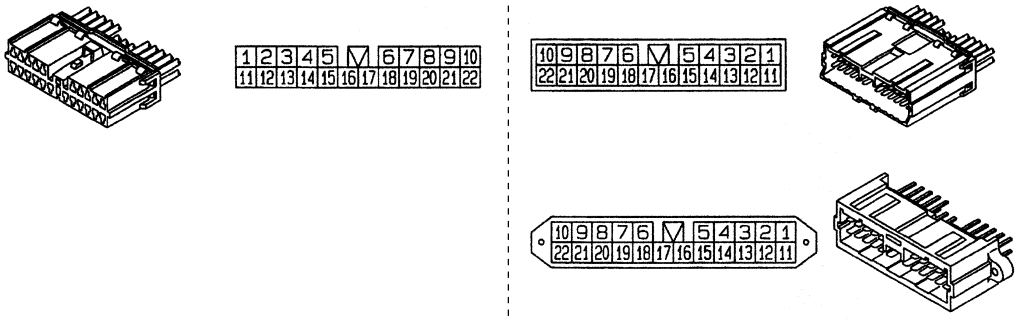
	AK22B	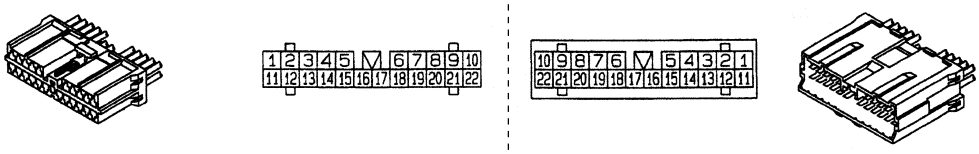
AL	AL 1 A	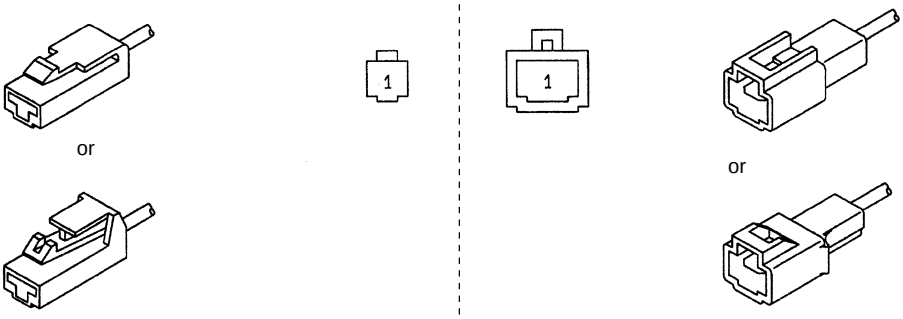
	AL 2 A	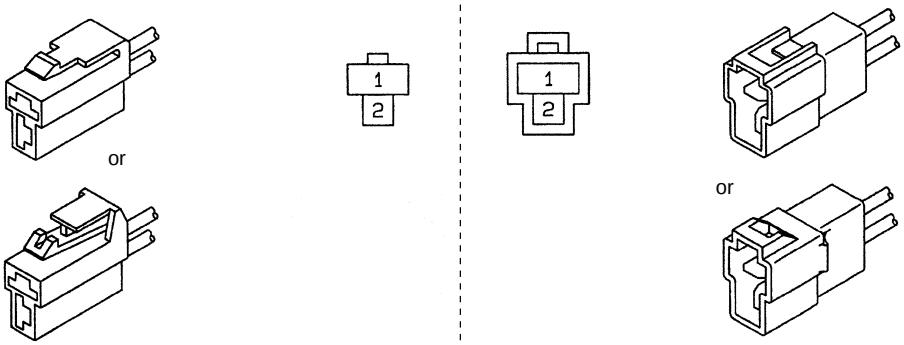

Model (Number shows number of pins)		Connection
AL	AL 2 B	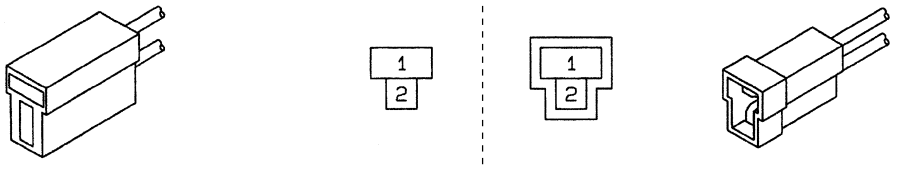
	AL 3 A	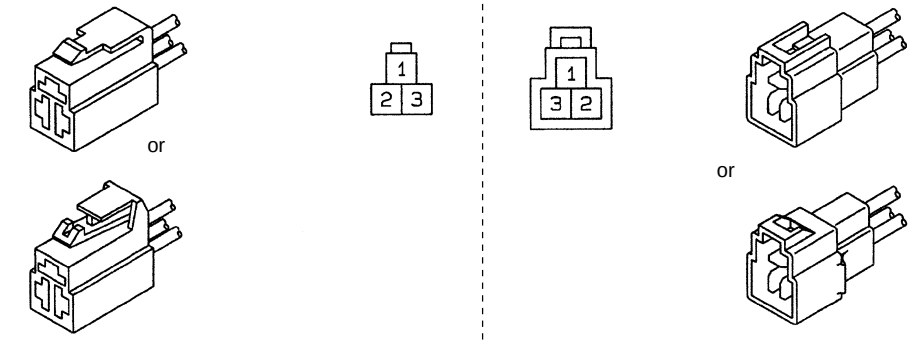
	AL 3 B	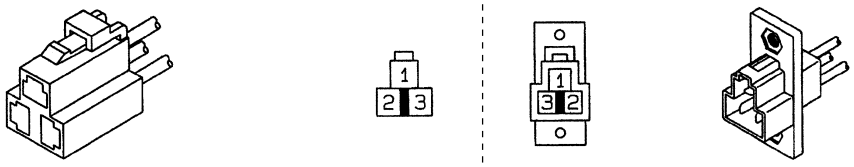
	AL 3 C	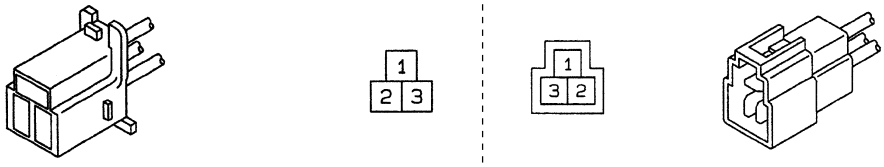
	AL 3 D	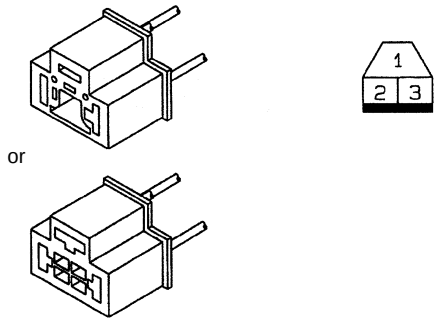
	AL 3 E	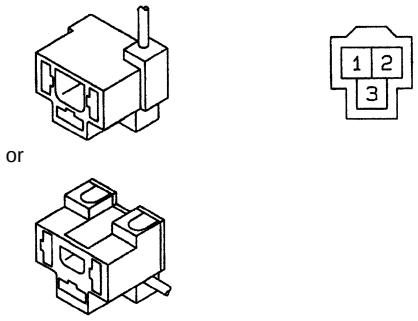

CONNECTOR CONFIGURATION CHART

Model (Number shows number of pins)		Connection
AL	AL 4 A	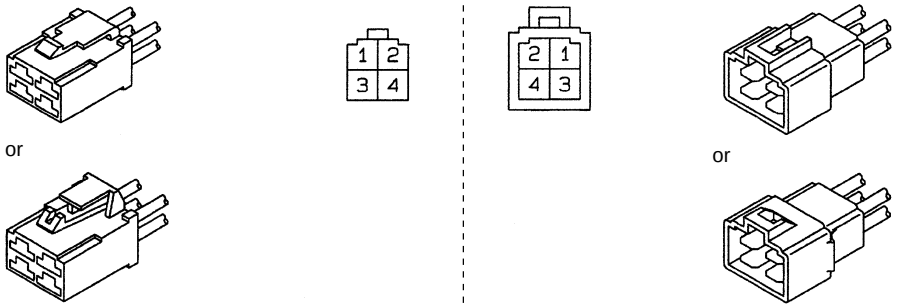
	AL 4 B	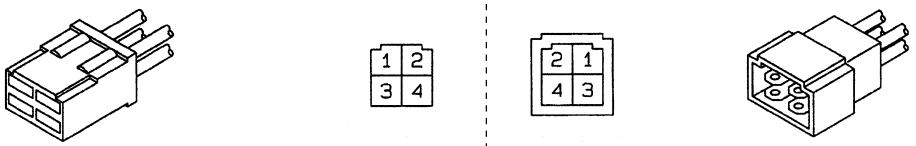
	AL 6 A	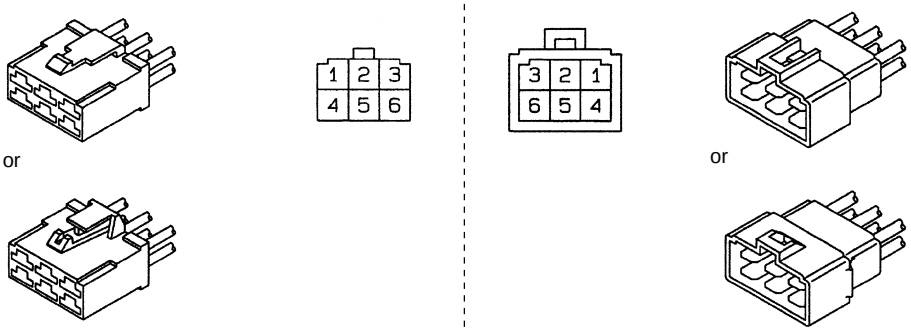
	AL 6 B	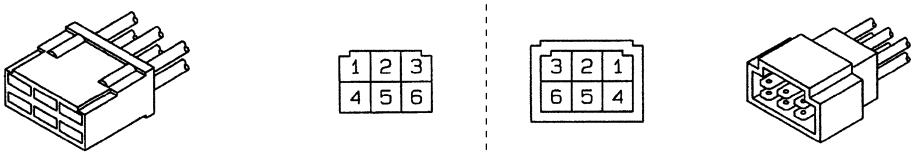
	AL 8 A	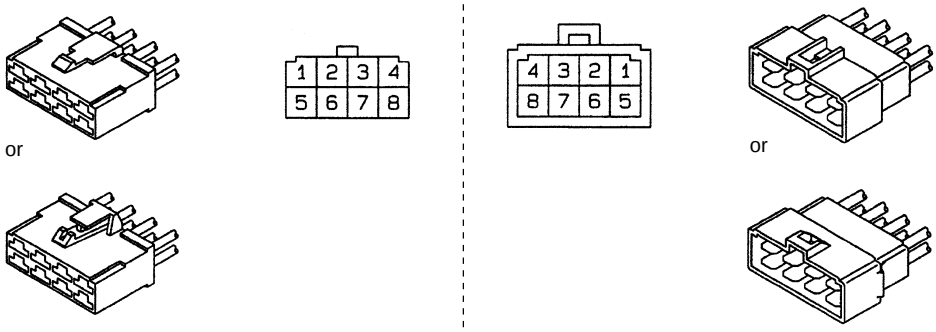
	AL 8 B	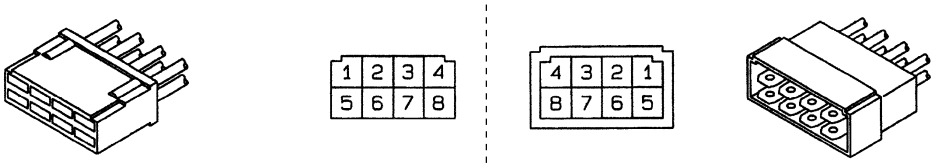

Model (Number shows number of pins)		Connection			
AM	AM 2 A	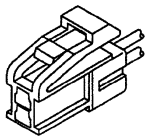			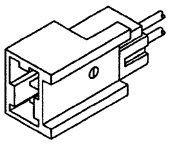
	AM 2 B	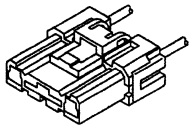			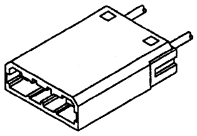
	AM 2 C	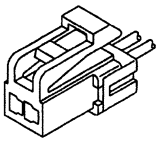			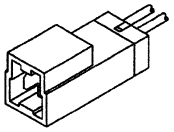
	AM 4 A	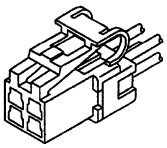			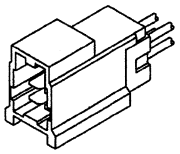
	AM 4 B	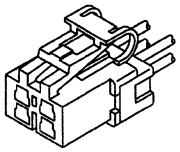			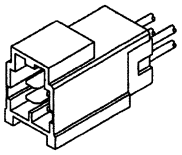
	AM 6 A	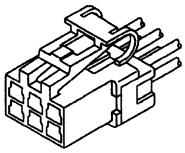		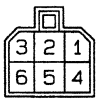	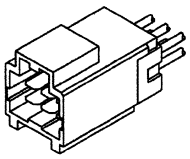
	AM 6 B	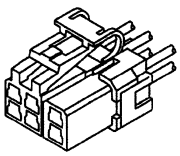			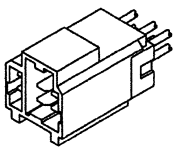
	AM 8 A	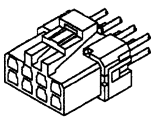	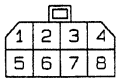	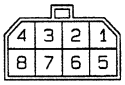	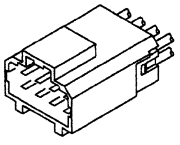
	AM 8 B	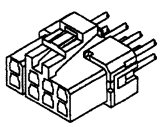	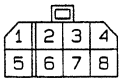	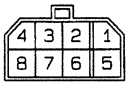	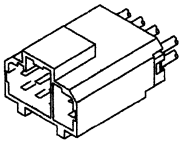

CONNECTOR CONFIGURATION CHART

Model (Number shows number of pins)		Connection			
AM	AM10A	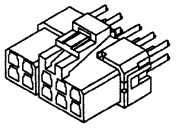	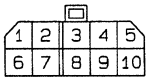	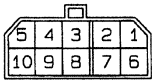	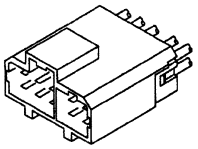
AN	AN 1 A	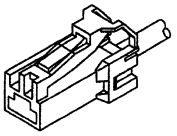			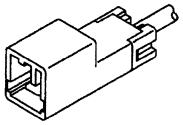
	AN 2 A	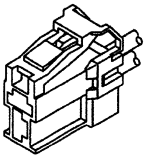			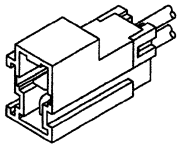
	AN 3 A	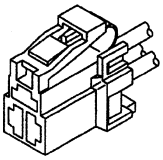	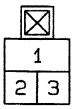	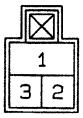	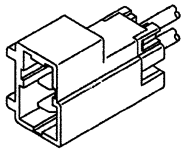
	AN 4 A	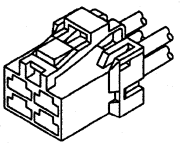	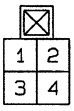	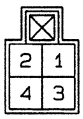	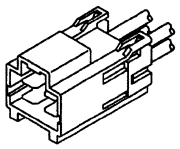
	AN 4 B	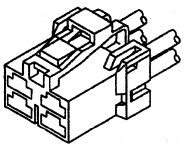	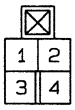	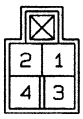	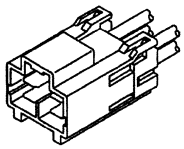
	AN 6 A	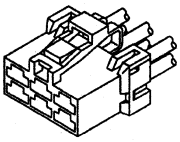	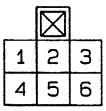	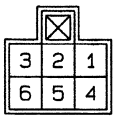	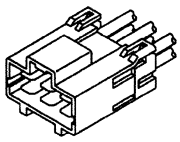
	AN 6 B	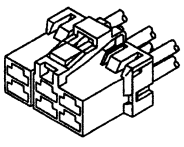	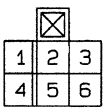	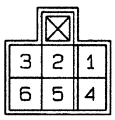	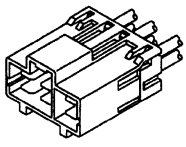
	AN 8 A	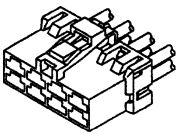	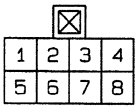	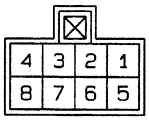	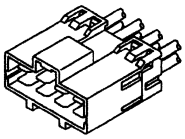

Model (Number shows number of pins)		Connection			
AN	AN 8 B	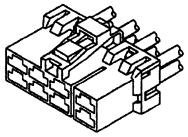	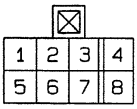	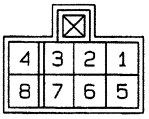	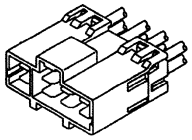
AP	AP 1 A	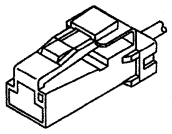	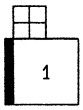	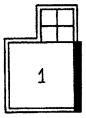	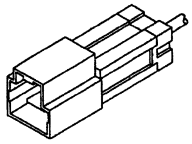
	AP 1 B	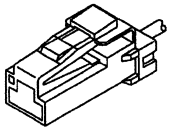	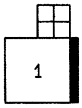	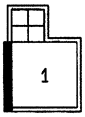	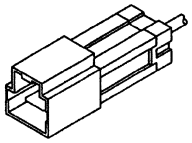
	AP 2 A	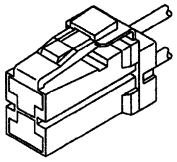	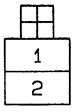	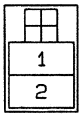	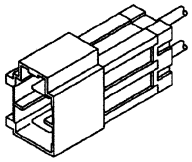
	AP 2 B	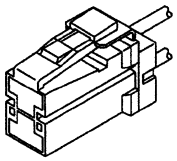	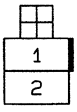	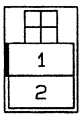	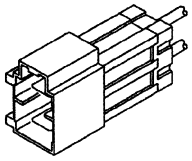
	AP 2 C	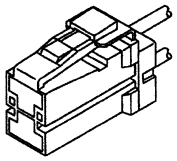	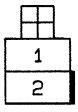	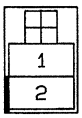	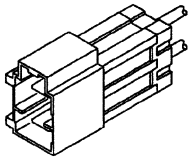
AQ	AQ 3 A	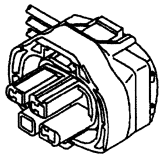			
	AQ 3 B	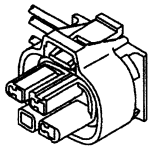			
	AQ13A	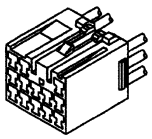	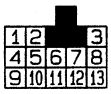	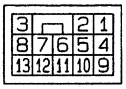	

CONNECTOR CONFIGURATION CHART

Model (Number shows number of pins)		Connection	
AQ	AQ15A	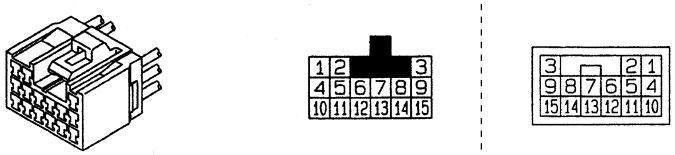	
	AQ20A	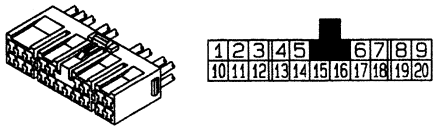	
AR	AR 2 A		
	AR 2 B	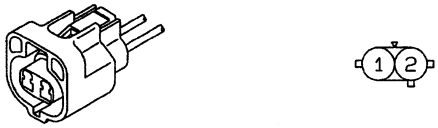	
	AR 2 C	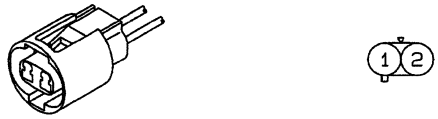	
	AR 2 D	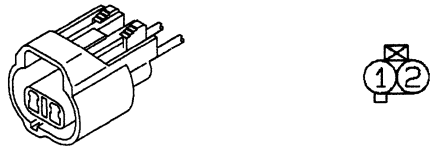	
	AR 2 E	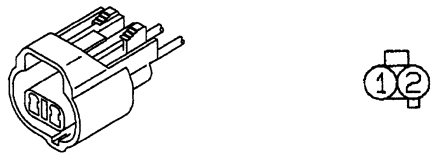	
	AR 2 F		

Model (Number shows number of pins)		Connection
AR	AR 3 A	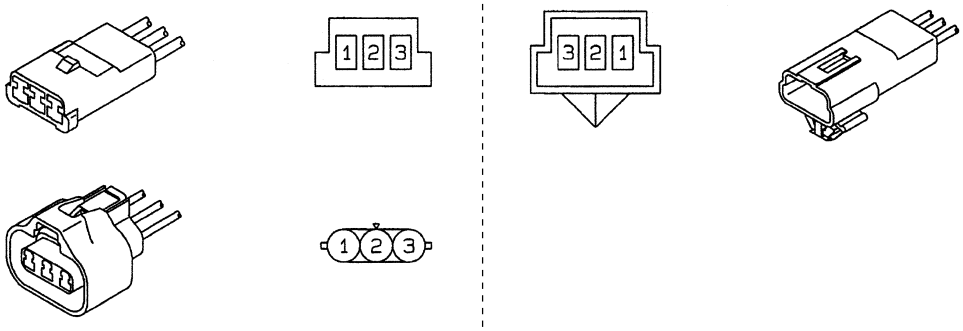
AS	AS 1 A	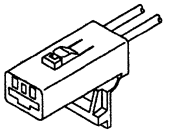
	AS 2 A	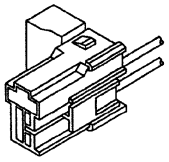
	AS 2 B	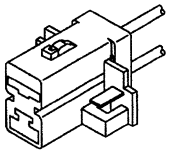
AT	AT 4 A	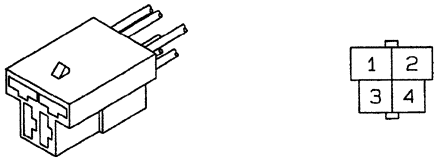
AU	AU 6 A	
	AU 8 A	
	AU10A	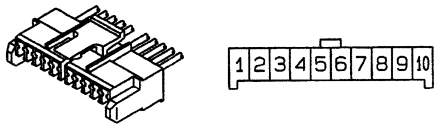

CONNECTOR CONFIGURATION CHART

Model (Number shows number of pins)		Connection
AU	AU12A	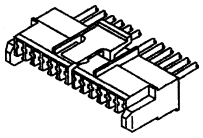 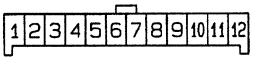
	AU13A	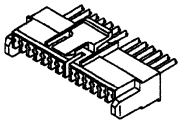 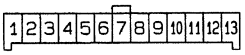
	AU16A	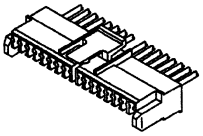 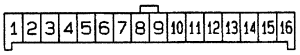
AV	AV 1 A	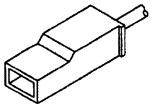 
	AV 2 A	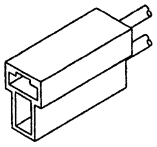 
AW	AW 1 A	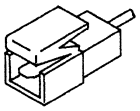   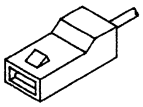
	AW 1 B	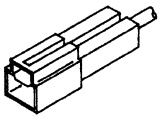   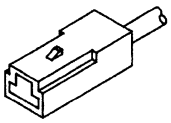
	AW 2 A	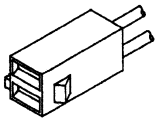   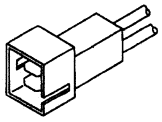
AX	AX 4 A	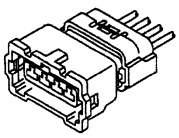 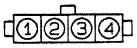 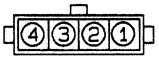 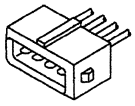

Model (Number shows number of pins)		Connection			
AY	AY 2 A	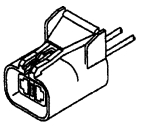			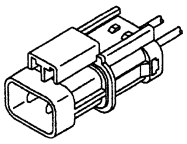
AZ	AZ 2 A	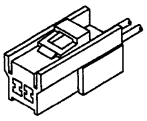			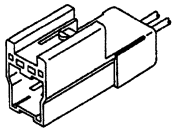
BA	BA 3 A	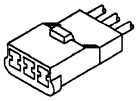	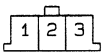	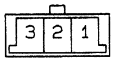	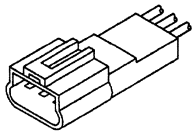
BB	BB 2 A	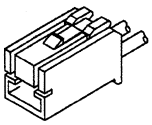			
	BB 3 A	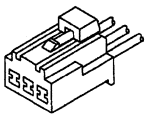	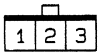	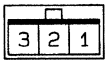	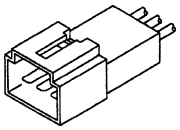
BC	BC 3 A	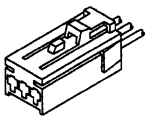	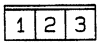	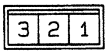	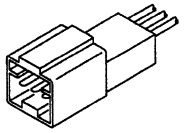
BD	BD 8 A	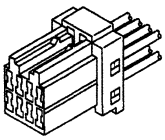	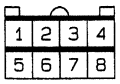	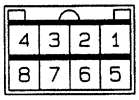	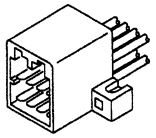
BE	BE 6 A				
BF	BF12A	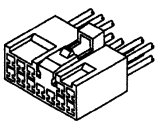	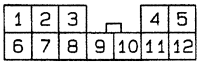	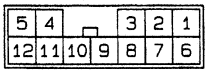	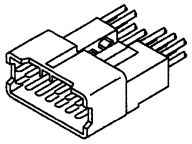

CONNECTOR CONFIGURATION CHART

Model (Number shows number of pins)		Connection	
BG	BG16A	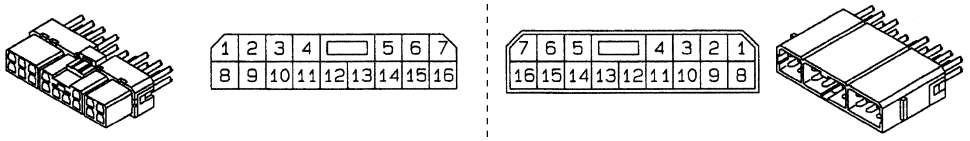	
BH	BH 4 A	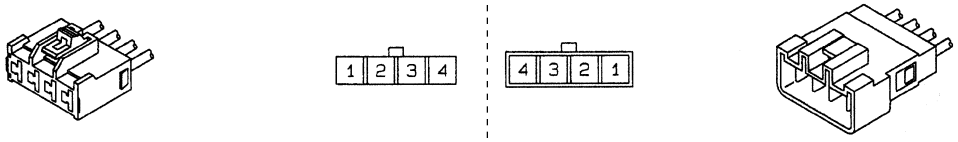	
BJ	BJ 9 A	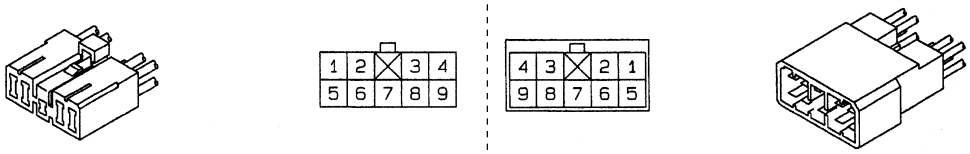	
BL	BL 2 A	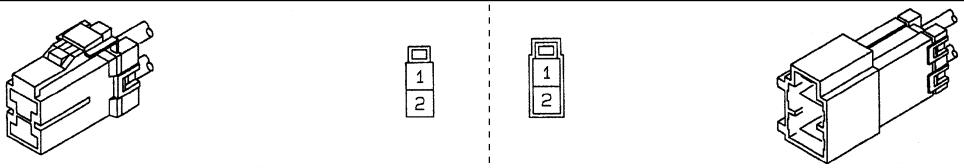	
BM	BM 2 A	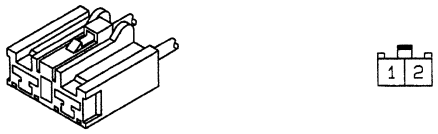	
	BM 2 B		
	BM 2 C		

1 POWER, CHARGING AND GROUND

SPECIFICATIONS 54-1-2

STRUCTURE AND OPERATION 54-1-3

TROUBLESHOOTING 54-1-6

100 INSPECTION AND ADJUSTMENT MOUNTED IN VEHICLE
- Inspection of Alternator 54-1-8
- Inspection of Regulator 54-1-9

101 BATTERY 54-1-10

104 FUSE 54-1-14

106 ALTERNATOR 54-1-16

110 POWER CIRCUIT 54-1-22

125 BATTERY CHARGING CIRCUIT 54-1-30

130 GROUND 54-1-32

SPECIFICATIONS

Battery

Item		Specifications
Model		95E41R
Voltage×No.	V	12×2 (Parallel connection)
Capacity (5-hour rating)	Ah	80

Alternator

Item		Specifications
Manufacturer		MITSUBISHI ELECTRIC
Type		Alternator with built-in regulator (without brush, external fan)
Model		A4TU0088
Output	V-A	12–80

Alternator

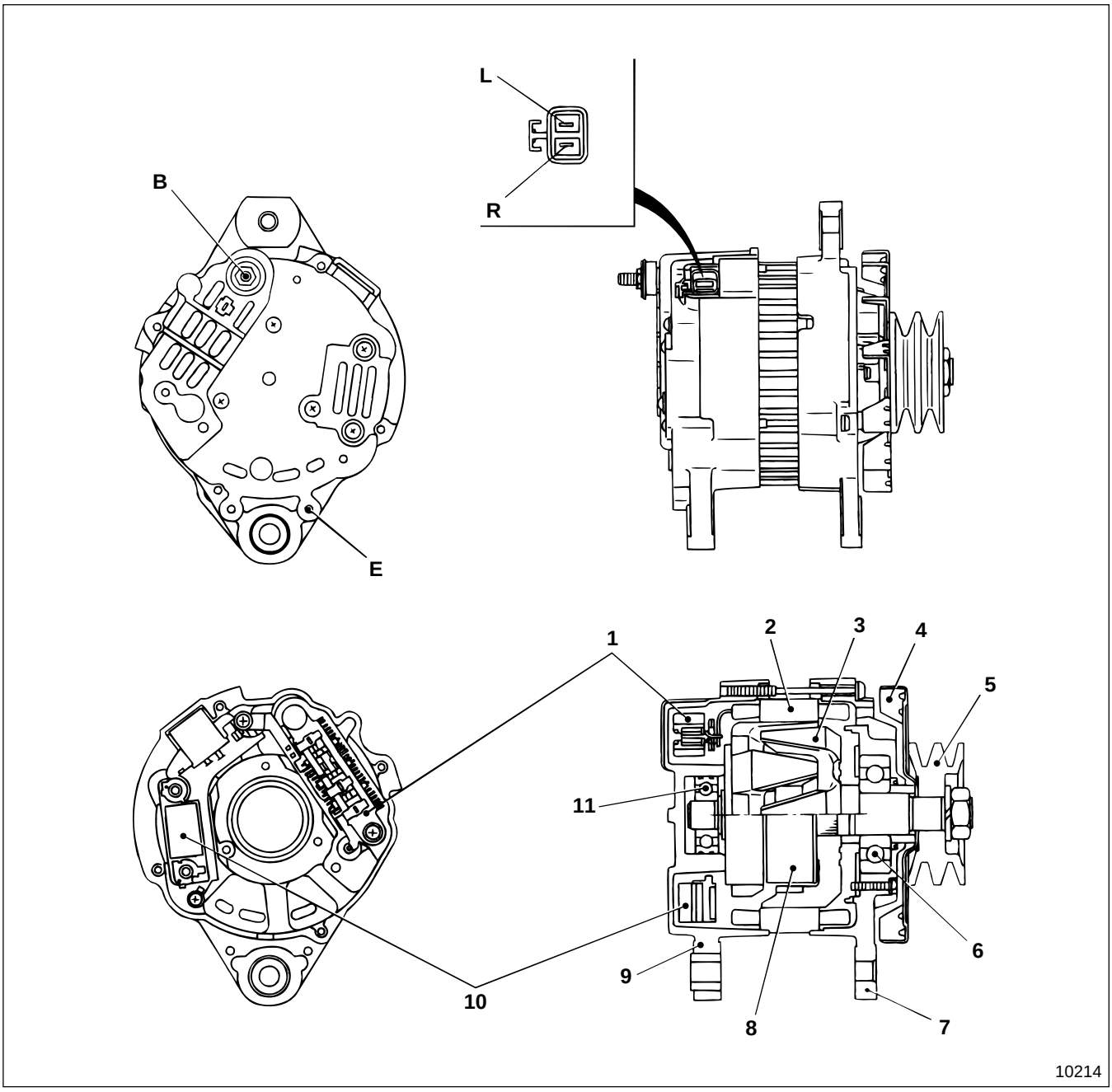

1 Rectifier
2 Stator assembly
3 Rotor assembly
4 Fan
5 Pulley
6 Front bearing
7 Front bracket
8 Field coil
9 Rear bracket
10 Regulator
11 Rear bearing

B : Terminal B
E : Terminal E
L : Terminal L
R : Terminal R

Battery Charging Circuit

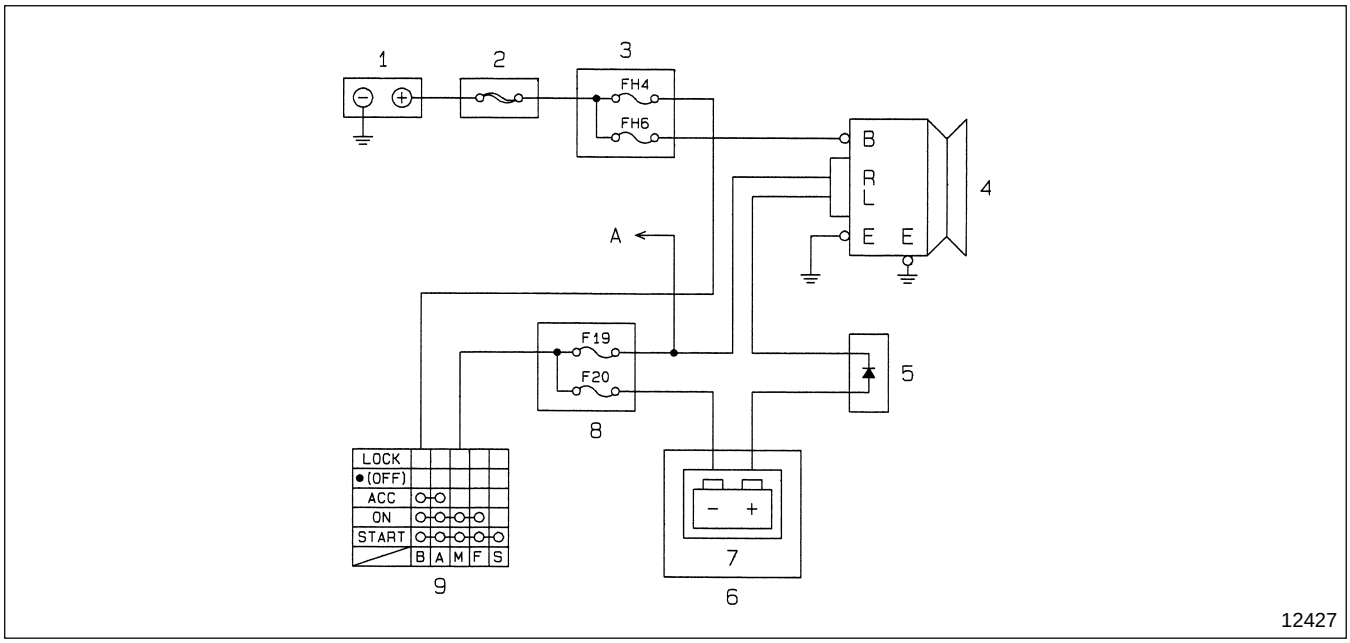

1 Battery
2 Main high-current fuse
3 High-current fuse box
4 Alternator
5 Diode
6 Meter cluster
7 Charge warning lamp
8 Fuse box
9 Starter switch

A : To each unit
B : Terminal B
E : Terminal E
L : Terminal L
R : Terminal R

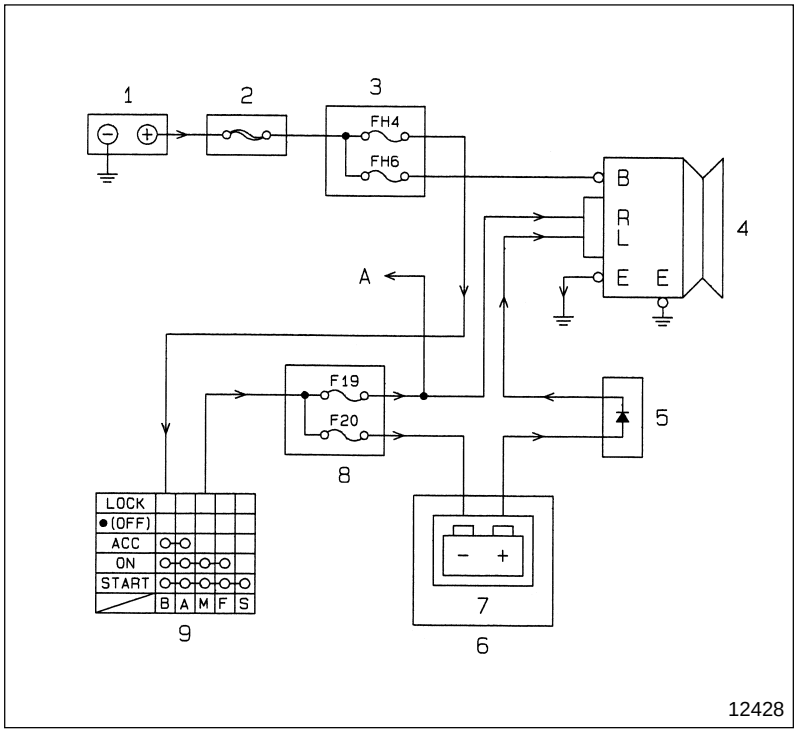

At engine standstill (before starting)

Position of starter switch **9** : ON

- 1→2→3→9
  →8 (F19)→4 (R→E)→Ground
  →8 (F20)→7→5→4 (L→E)→Ground

- Charge warning lamp [−+] **7** lights up.
  To improve the low-speed power generation build-up performance of alternator **4**, current is fed to terminal **R** immediately after the engine is started.

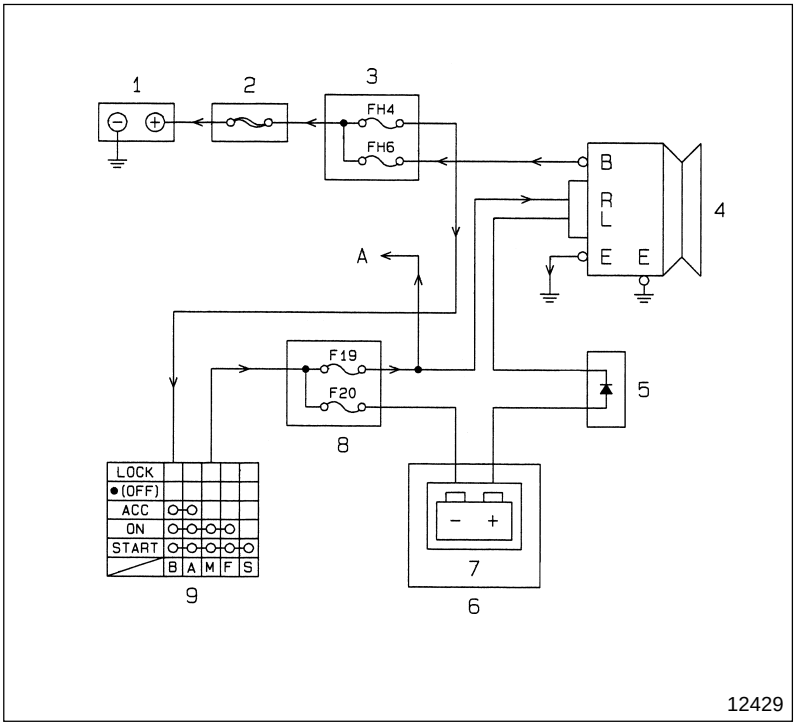

After engine start-up

Position of starter switch **9** : ON

- Alternator **4** starts to generate power.
- The voltage at terminal **B** of alternator **4** rises higher than the voltage of battery **1**.
- As alternator **4** starts to charge battery **1**, units **A** are supplied with power.
  4(B)→1→Ground
  →2→3→9→8(F19)→A
- Since there is no electric potential difference between the output voltage of terminal **L** of alternator **4** and the voltage of battery **1**, charge warning lamp **7** goes off.

TROUBLESHOOTING

Possible causes \ Symptoms		Battery electrolyte decreases too early	Battery overheating	Battery is normal but overdischarged	Charge warning lamp [-+] does not light when turning starter switch ON, with engine stopped	Alternator is normal but battery overdischarged	Remarks
Connector connection faulty, harness broken, grounding faulty				○		○	
Fuse blown					○		
V-belts loose				○		○	Gr 14
V-belts damaged				○		○	Gr 14
Battery faulty		○				○	
Alternator	Stator coil broken			○			
	Stator coil short-circuited with core			○			
	Field coil broken			○			
	Rectifier faulty			○			
	Regulator faulty		○	○	○		
	Wiring faulty			○			
Meter cluster faulty					○		

M E M O

Inspection of Alternator

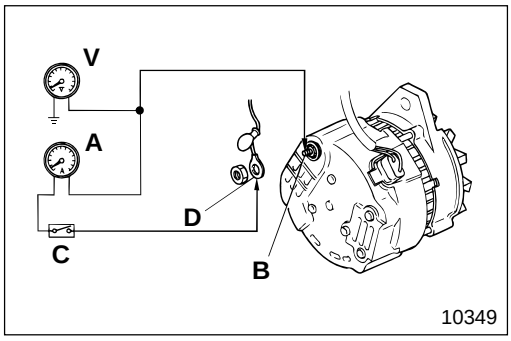

Performance test

- Connect the meters to the alternator as illustrated.
  A : Ammeter (100 amperes class)
  B : Terminal B on alternator
  C : Switch
  D : Terminal
  V : Voltmeter

WARNING

- **Terminal D is always loaded with voltage from the battery.**
- **You must handle terminal D carefully, it will short-circuit if it touches any part other than terminal B on the alternator.**

- Turn switch **C** ON to supply battery voltage to terminal **B** on the alternator.
- Start the engine.
- Turn the switches ON of all the lamps on the vehicle immediately.
- Measure the current when the engine speed reaches approximately 2260 rpm.
- The alternator is assumed to be normal if the measured value is higher than 70% of the specified output.

Specified output of alternator

Alternator model	Voltage	Output
A4TU0088	12 V	80 A

NOTE

Since the above inspection is only a simplified check, it is necessary to conduct a stringent test bench for an official check.
P54-1-17

Inspection of Regulator

Service standards

Location	Maintenance item	Standard value	Limit	Remedy
—	Adjustment voltage of regulator	14.7±0.3 V	—	Replace

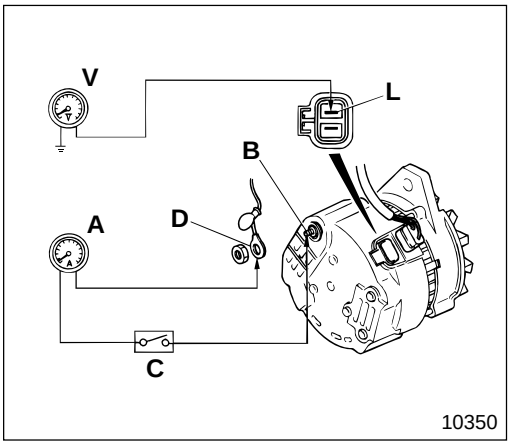

- Connect the meters to the alternator as illustrated.
  A : Ammeter (100 amperes class)
  B : Terminal B on alternator
  C : Switch
  D : Terminal
  L : Terminal L on alternator
  V : Voltmeter

WARNING⚠

- **Terminal D is always loaded with voltage from the battery.**
- **You must handle terminal D carefully, it will short-circuit if it touches any part other than terminal B on the alternator.**

- Turn switch **C** ON and make sure that voltmeter **V** indicates 0 volt.
- If the needle of voltmeter **V** oscillates, something is wrong with the alternator or the wiring.
- Turn switch **C** OFF and start the engine.

CAUTION⚠

Do not start the engine with switch C turned ON because the starter current will flow into ammeter A and damage it.

- If the charge current is five amperes or less and the engine speed is approximately 2260 rpm, measure the adjustment voltage.
- If the charge voltage is five amperes or more, do one of the following :
  - Run the engine for a while to charge the battery.
  - Replace the old battery with a fully-charged one.
  - Connect a $^1/_4$ Ω (25 W) resistor in series with the battery to limit the charge current.
- If the measured value deviates from the standard value, change the regulators.

101 BATTERY

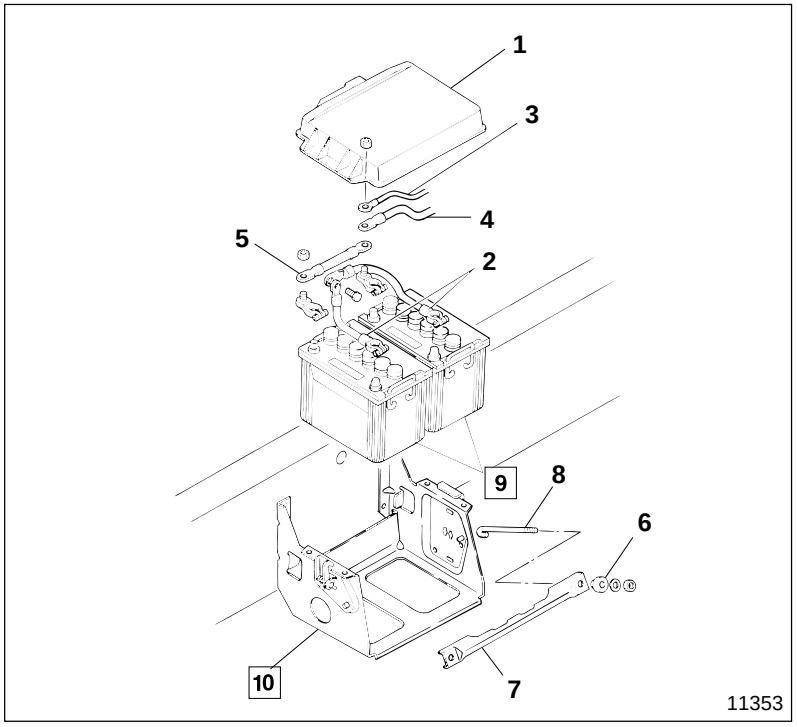

● **Removal sequence**

1 Battery cover
2 Battery cable ⊖
3 Harness (Main high-current fuse)
4 Starter cable
5 Battery cable ⊕
6 Rubber
7 Angle frame
8 Set bolt
9 Battery
10 Battery box

● **Installation sequence**

Follow the removal sequence in reverse.

DANGER⚠

- **Since flammable hydrogen gas is generated by battery 9, be sure to obey the following warnings :**
  - **Do not short-circuit the ⊕ and ⊖ terminals on the battery.**
  - **Keep sparks and lit cigarettes away from the battery.**
  - **Do not wear metal objects on your arms and lean over battery 9.**
- **Because the battery electrolyte is diluted sulfuric acid and is corrosive, when handling battery 9 wear safety glasses and rubber gloves to protect the eyes and hands.**

WARNING⚠

To prevent a short-circuit be sure that disconnected battery cables 2 and 5 do not accidentally touch the battery terminals.

CAUTION⚠

- **Make sure that you disconnect battery cable ⊖ 2 first when you disconnect battery cables 2 and 5.**
- **Make sure that all electrical switches of the vehicle are OFF before connecting battery cables 2 and 5.**
- **Make sure that you connect battery cable ⊕ 5 before you connect battery cable ⊖ 2.**

Service standards

Location	Maintenance item	Standard value	Limit	Remedy
9	Specific gravity of battery electrolyte (20°C {68°F})	1.280	1.220	Charge or replace

◆ Service procedure

9 Inspection of battery

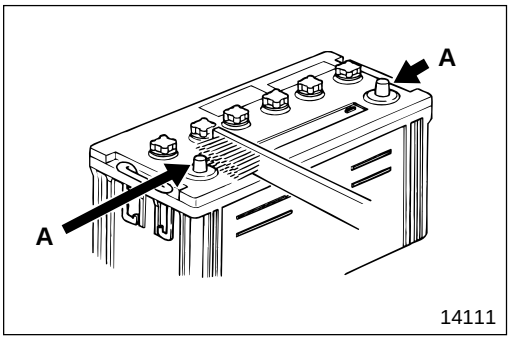

(1) Visual inspection

- If terminal **A** is corroded, scrub off the corrosion from it using a wire brush.
- If cracks or defects are found on battery **9**, replace it since the cracks or defects can cause liquid spills.

CAUTION ⚠

Make sure you grease the ⊕ side of terminal A because it is easily corroded.

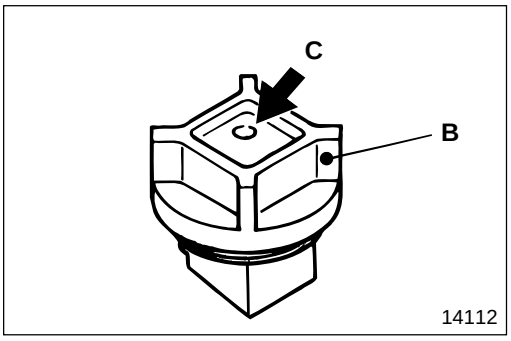

- If bleed hole **C** of vent plug **B** is clogged, clean the hole.

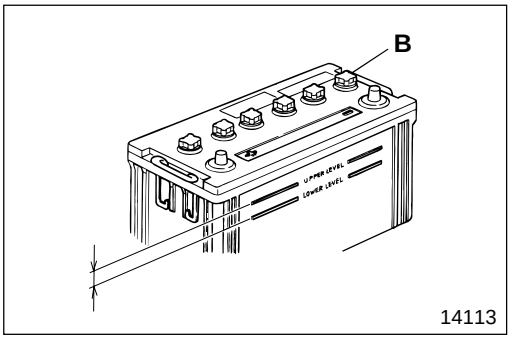

(2) Inspection of fluid level

- Make sure that the battery electrolyte level is between UPPER and LOWER.
- If the level is below LOWER, remove vent plug **B** and fill the battery with distilled water or battery replenisher to UPPER.

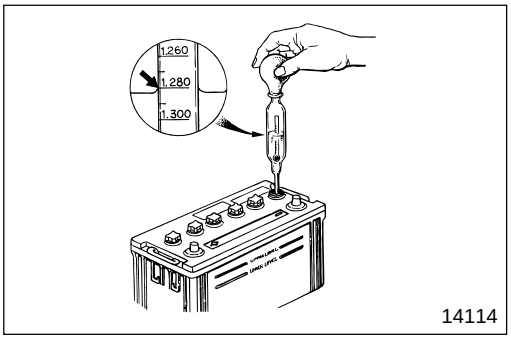

(3) Measurement of specific gravity

Measure the specific gravity of the battery electrolyte. If the measured value is lower than the limit, charge the battery.

NOTE

The specific gravity of the battery electrolyte depends on the liquid temperature. Use the following formula to convert the actual value to the value were the temperature 20°C {68°F}.

$$S_{20}\{68\} = S_t + 0.0007\,(t - 20\{68\})$$

$S_{20}\{68\}$: Specific gravity were the temperature 20°C {68°F}

S_t : Specific gravity actually measured with the temperature at t°C {t°F}

t : Temperature of battery electrolyte

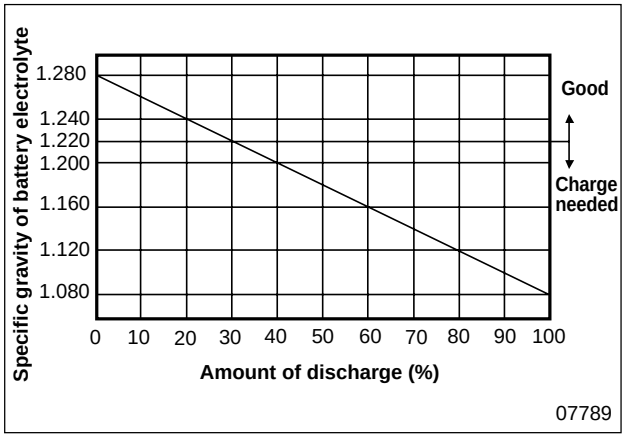

(4) Charging

- Although, as a rule, charging of battery **9** should be done with the battery removed from the vehicle, if you have to charge the battery while it is on the vehicle, make sure that you stop the engine and disconnect battery cable ⊖ **2**.
- Remove vent plug **B** before charging the battery.
- For the recommended charge time and current, see the following table to avoid overcharging.

	Charge current (A)	Charge time (H)	Upper limit of fluid temperature (°C {°F})
Normal charge	$\frac{\text{Value of 5-hour rating capacity}}{10}$	$\frac{*\text{Amount of discharge (Ah)}}{\text{Charge current (A)}} \times 1.2\text{(to 1.5)}$	45 {113}
Quick charge	$\frac{\text{Value of 5-hour rating capacity}}{1.5}$	0.5	55 {131}

* Amount of discharge (Ah)=5-hour rating capacity (Ah)$\times \frac{\text{Amount of discharge (\%)}}{100}$

- Use the graph shown on the left to calculate the amount of discharge (%).
- Use diluted sulfuric acid, made up of sulfuric acid and refined or distilled water, as the battery electrolyte.
- The specific gravity of fully-charged battery electrolyte is 1.280 with the temperature at 20°C {68°F}.

DANGER⚠

- **Do not let the battery electrolyte level rise and overflow while charging the battery.**
- **Keep naked lights away from the battery while charging it or it might explode.**
- **Be careful not to generate sparks while charging the battery because its dangerous.**
- **After charging the battery, tighten vent plug B, wash away sulfuric acid from the battery using water, and dry the surface.**

10 Inspection of battery box

- If battery box **10** is corroded, scrub off the corrosion from it using a wire brush and apply acid resistant coating.
- If battery box **10** is corroded excessively or if it is broken or cracked, replace it.

M E M O

Installation Location

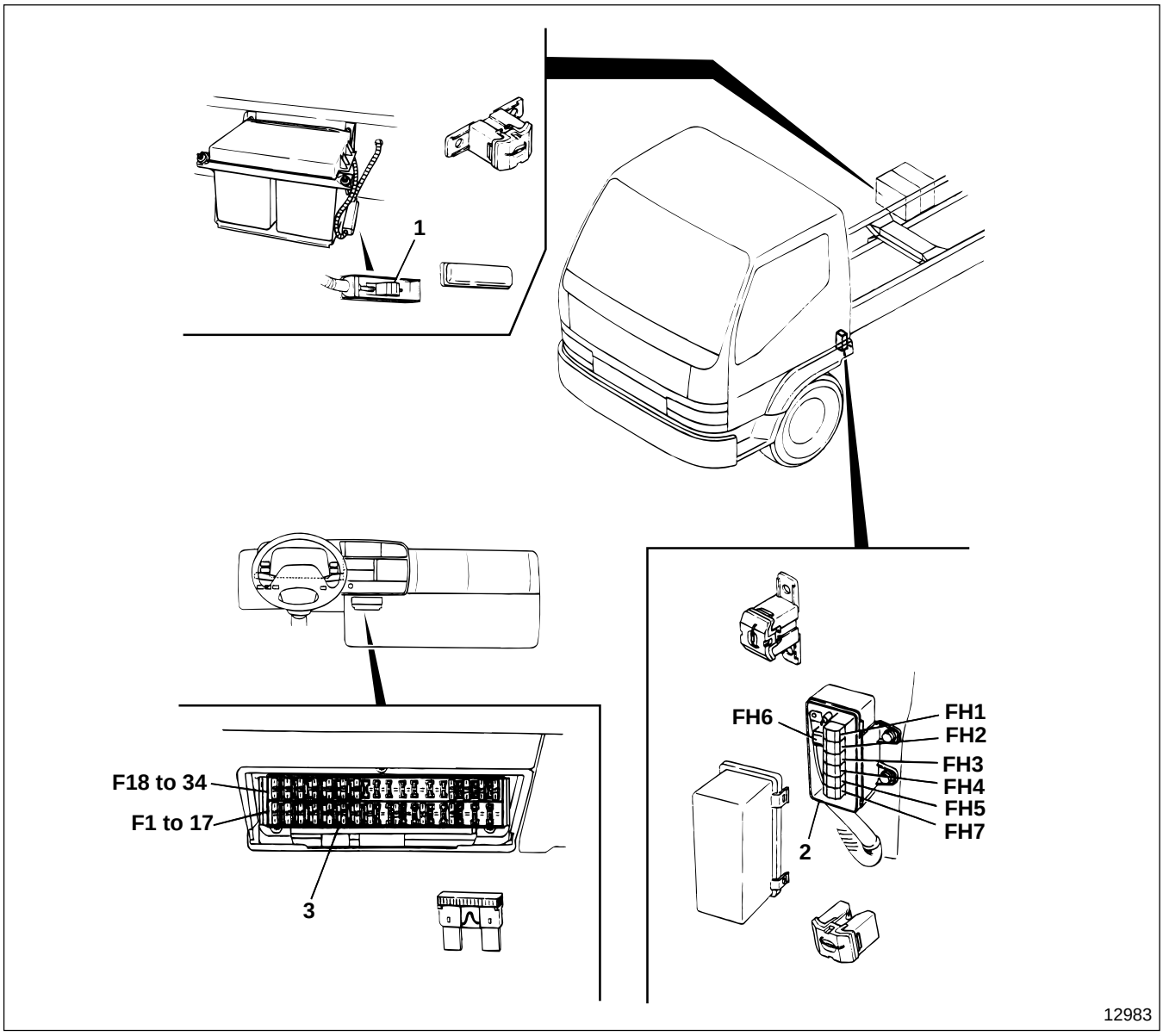

1 Main high-current fuse
2 High-current fuse box
3 Fuse box

CAUTION

- **If a fuse blows, make sure you identify and remedy the cause, then replace the fuse.**
- **Make sure that you replace the fuse with one having the same rating.**
- **Make sure that you remove the ⊖ terminal of the battery cable before removing main high-current fuse 1 and high-current fuses FH1 to 7.** 101

Main high-current fuse

Fuse No.	Main load	Capacity
—	High-current fuse box	120 A

High-current fuse box

Fuse No.	Main load	Capacity
FH1	Fuse box (F1 to F4)	50 A
FH2	Fuse box (F5 to F8)	50 A
FH3	Fuse box (F9 to F12)	40 A
FH4	Starter switch (Terminal B)	40 A
FH5	Glow relay	50 A
FH6	Alternator	120 A
FH7	Fuse box (F31 to F34)	40 A

Fuse box

Fuse No.	Main load	Capacity
F1	Headlamp, LH	15 A
F2	Headlamp, RH	15 A
F3	Stop lamp, horn	15 A
F4	Turn signal lamp	15 A
F5	Fuel-cut motor	10 A
F6	Cab lamp	10 A
F7	Reserve power (BATT)	10 A
F8	—	—
F9	—	—
F10	—	—
F11	—	—
F12	—	—
F13	* Cigarette lighter	15 A
F14	Radio	10 A
F15	—	—
F16	—	—
F17	Fuel-cut relay	10 A

Fuse No.	Main load	Capacity
F18	Starter	10 A
F19	Backup lamp	10 A
F20	Meter cluster	10 A
F21	Wiper	10 A
F22	Air dryer	10 A
F23	—	—
F24	—	—
F25	—	—
F26	—	—
F27	Exhaust brake	10 A
F28	Transmission PTO	10 A
F29	Pre-stroke cut relay	15 A
F30	* Air-conditioner control	10 A
F31	* Air-conditioner compressor	10 A
F32	* Condenser fan	15 A
F33	Blower fan	25 A
F34	Tail lamp	15 A

* : Fuses are provided for these pieces of equipment only where they are installed.

PTO : Power take-off

106 ALTERNATOR

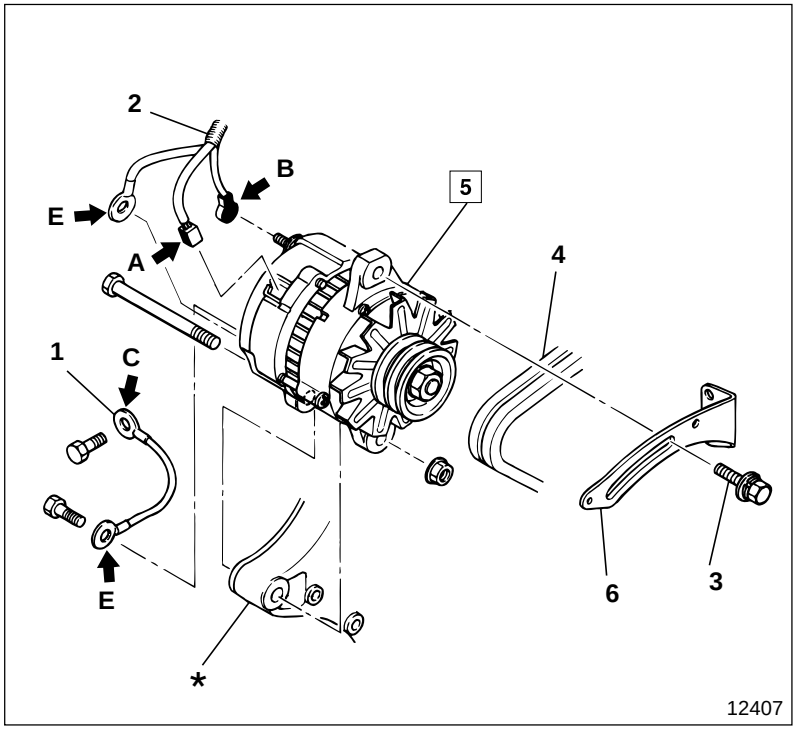

● **Removal sequence**

1 Ground cable
2 Chassis harness
3 Adjusting bolt
4 V-belts
5 Alternator 🕮 P54-1-18
6 Adjusting plate

***** : Timing gear case and front plate 🗀 Gr 11
A : To terminals L and R
B : To terminal B
C : Connected to crankcase
E : To terminal E

WARNING ⚠

- **Terminal B is always loaded with voltage from the battery, supplied via chassis harness 2. Therefore when you remove the harness from terminal B, make sure that tools do not touch any adjacent parts because this would cause a short-circuit.**
- **Make sure that you disconnect terminal ë of the battery before removing the harness and insulate the terminal with tape.**

● **Installation sequence**

Follow the removal sequence in reverse.

● **Adjustment after installation**

Adjustment of V-belt **4** tension 🗀 Gr 14

Service standards

Location	Maintenance item		Standard value	Limit	Remedy
5	Output current (***** When engine is hot and 13.5 V is loaded)	At 1500 rpm	38 A or more	—	Inspect
		At 2500 rpm	65 A or more	—	
		At 5000 rpm	76 A or more	—	
	Adjustment voltage of regulator (At 5000 rpm, 5 A is loaded)		14.7±0.3 V	—	Replace

***** : The value of the ambient temperature is measured after running the engine at maximum power (5000 rpm) for 30 minutes.

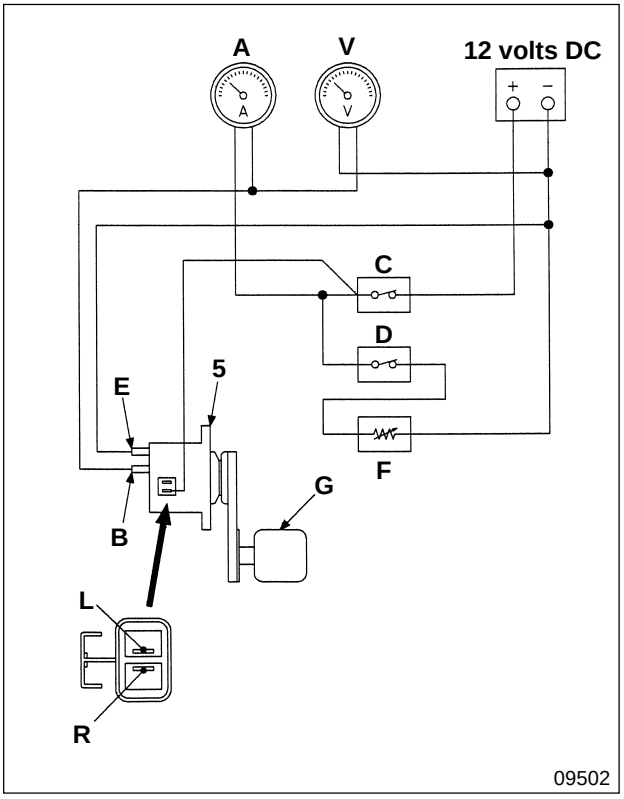

5 Inspection of alternator

(1) Inspection of alternator performance (bench test)

- Connect each unit to the alternators as illustrated.
  A : Ammeter
  B : Terminal B on alternator
  C : Switch
  D : Switch
  E : Terminal E on alternator
  F : Load resistance (variable resistance)
  G : Alternator drive motor
  L : Terminal L on alternator
  R : Terminal R on alternator
  V : Voltmeter
- Turn switches **C**, **D** OFF.
- Run alternator **5** at 5000 rpm.
- Adjust load resistance **F** to maintain the specified current.

  Specified output of the alternator : 12 V-80 A

- After adjustment, run alternator **5** for 30 minutes.
- Maximize load resistance **F** (current hardly flows).
- Turn switches **C**, **D** ON.
- Increase the rotation of alternator **5** gradually and measure current at specified rpm.
- If the measured value deviates from the standard value, disassemble and inspect alternator **5**. P54-1-18

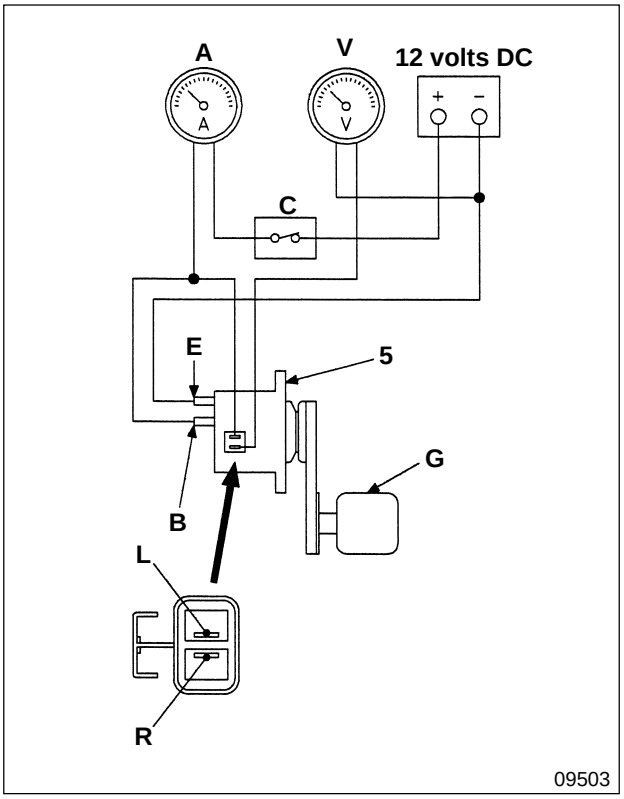

(2) Inspection of regulator (bench test)

- Connect each unit to the alternators as illustrated.
  A : Ammeter
  B : Terminal B on alternator
  C : Switch
  E : Terminal E on alternator
  G : Alternator drive motor
  L : Terminal L on alternator
  R : Terminal R on alternator
  V : Voltmeter
- Turn switch **C** ON.
- Run alternator **5**.
- Make sure that the value of the current at 5000 rpm is five amperes or less.
- Measure voltage (adjustment voltage).
- If the measured value deviates from the standard value, replace the regulator (in alternator **5**).

Alternator

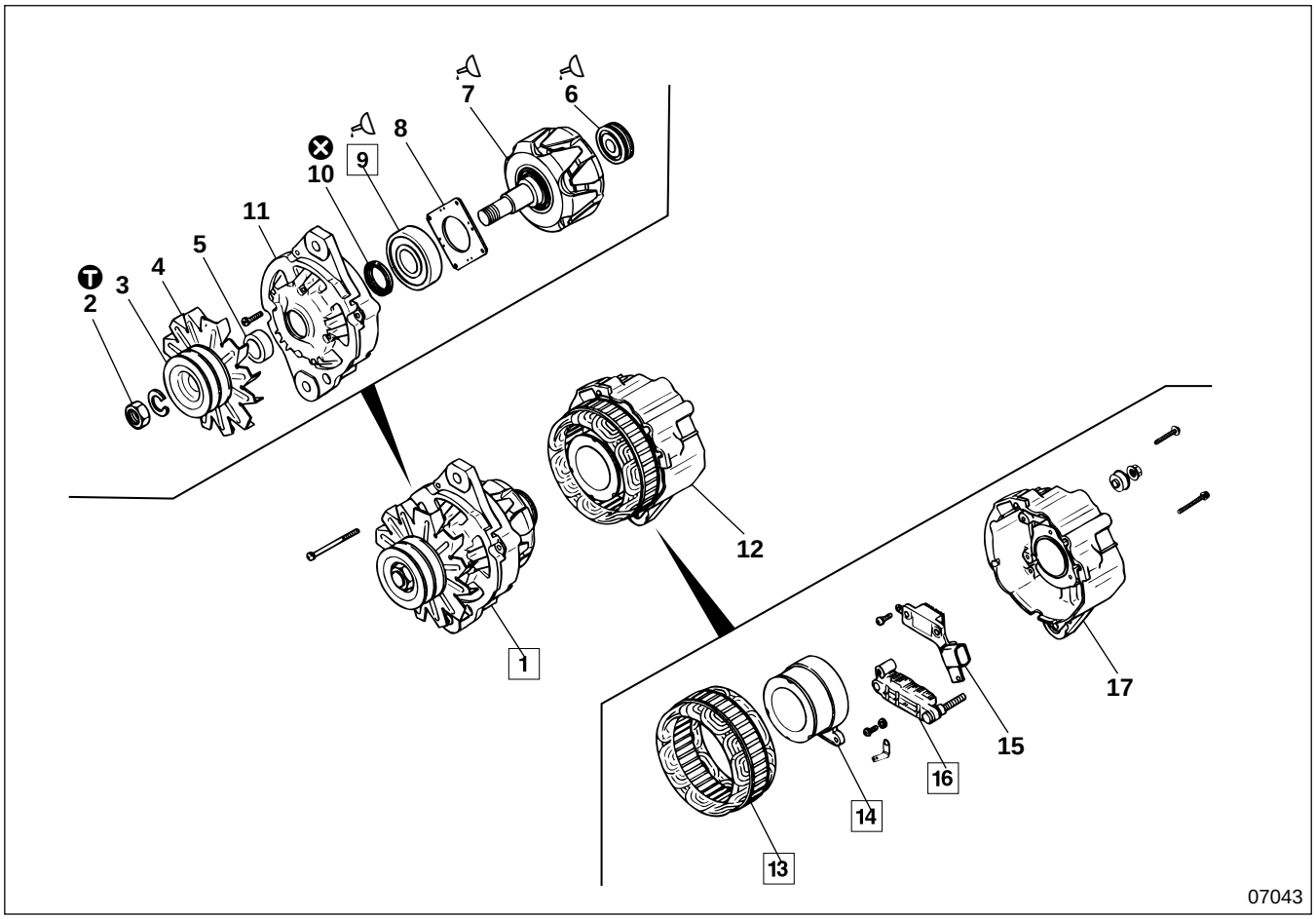

● **Disassembly sequence**

1 Rotor and front bracket assembly
2 Nut
3 Pulley
4 Fan
5 Spacer
6 Rear bearing
7 Rotor assembly
8 Cover
9 Front bearing
10 Oil seal
11 Front bracket
12 Stator and rear bracket assembly
13 Stator assembly
14 Field coil
15 Regulator
16 Rectifier
17 Rear bracket

⊗ : Non-reusable parts

NOTE

Do not remove parts 6, 9, 13 unless they are faulty.

● **Assembly sequence**

12 → 1　　12 : 17 → 16 → 15 → 14 → 13

1 : 11 → 10 → 9 → 8 → 7 → 6 → 5 → 4 → 3 → 2

Service standards

Location	Maintenance item	Standard value	Limit	Remedy
14	Field coil resistance (20°C {68°F})	2.6 to 3.4 Ω	—	Replace

Tightening torque

Unit : N·m {lbf.ft, kgf·m}

Location	Parts to be tightened	Tightening torque	Remarks
2	Nut (Pulley mounting)	132 to 162 {98 to 120, 13.5 to 16.5}	—

Lubricant

Location	Points of application	Kinds	Quantity
6	Rear bearing inner periphery	Engine oil	As required
7	Front bearing installation part of rotor assembly	Engine oil	As required
9	Front bearing outer periphery	Engine oil	As required

◆ Service procedure

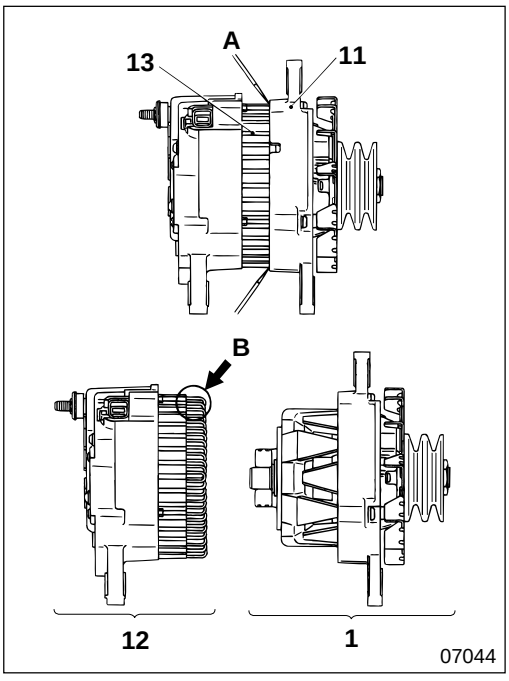

1 **Rotor and front bracket assembly**

[Removal]

- Insert screwdriver **A** between front bracket **11** and stator assembly **13**.
- Use screwdriver **A** to pry rotor and front bracket assembly **1** away from stator and rear bracket assembly **12**.

CAUTION

Be careful not to insert the screwdriver too deep or it will damage coil B of stator assembly 13 and might cause a short-circuit.

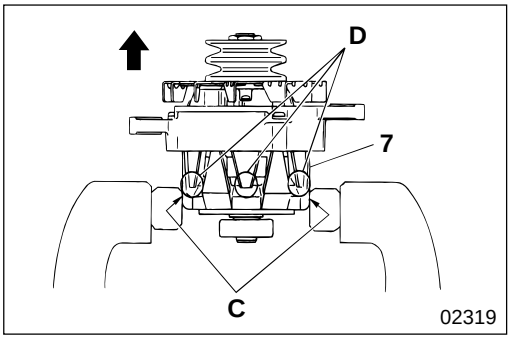

[Disassembly]

CAUTION

Make sure, when you hold rotor assembly 7 in a vise, to grip root C of the core claws. Gripping claws D can damage them.

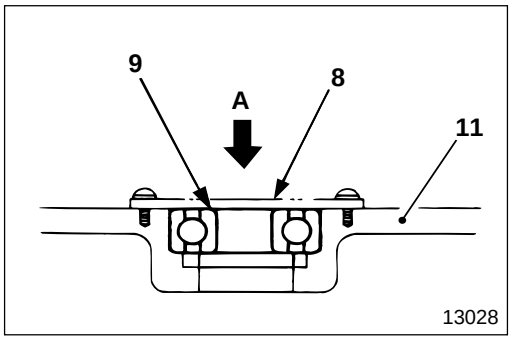

9 **Installation of front bearing**

- Press-fit front bearing **9** until it is flush with the installation part of cover **8**.
  A : Press

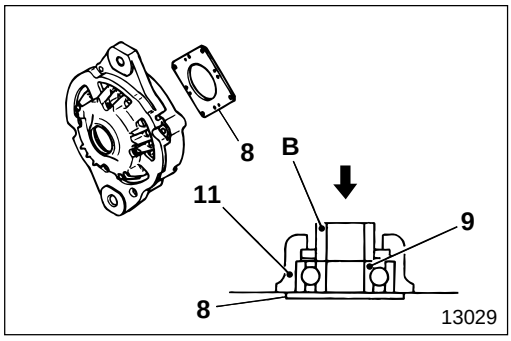

- Install cover **8**.
- Press spacer **B** until it makes contact with front bearing **9** and cover **8**, using a press.

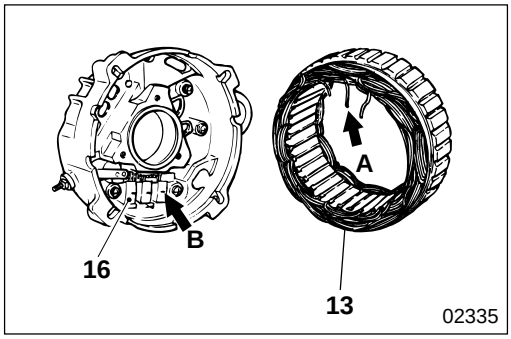

13 **Stator assembly**

[Removal and installation]

- Disconnect lead **A** of stator assembly **13** from rectifier **16**. The lead is soldered to diode **B** of rectifier **16** at three points.

CAUTION

Make sure that you desolder within five seconds because the diode is heat sensitive.

- To install, follow the removal sequence in reverse.

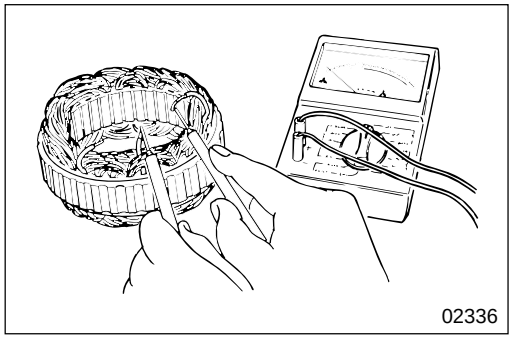

[Inspection]

(1) Continuity of each lead wire

- Make sure that each lead wire has continuity.
- If there is no continuity, the lead wire is broken. Replace stator assembly **13**.

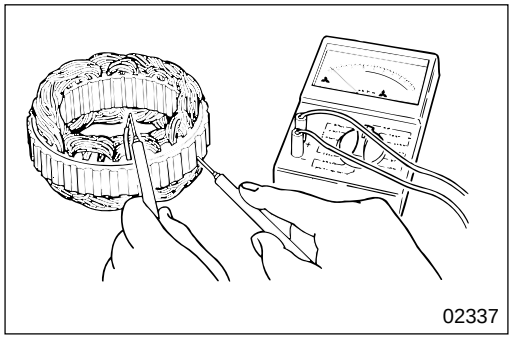

(2) Continuity between lead wires and the core

- Make sure that there is no continuity between lead wires and the core.
- If there is continuity, replace stator assembly **13**, since it might be short-circuited.

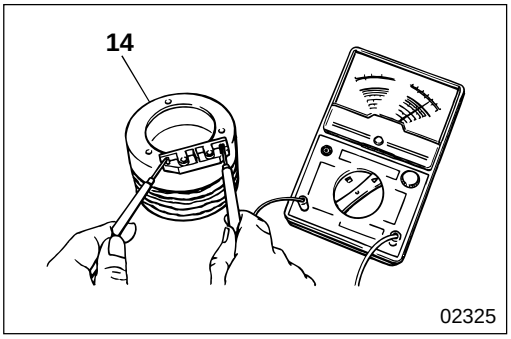

14 **Inspection of field coil**

- Measure the resistance between the terminals of field coil **14**.
- If the measured value deviates from the standard value, replace field coil **14**.

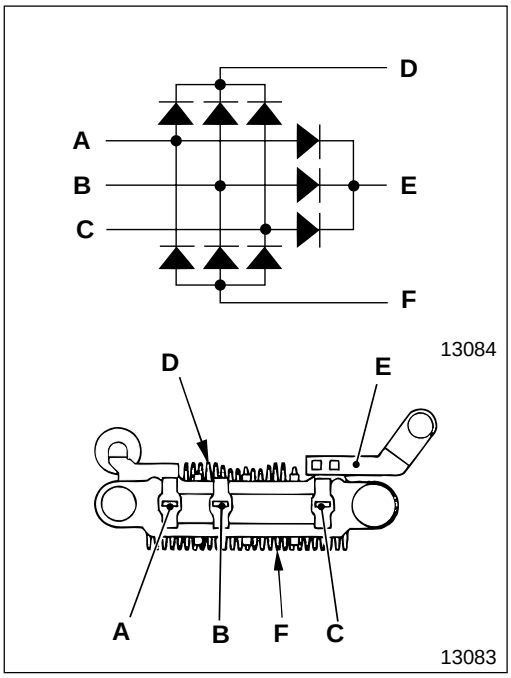

16 **Inspection of rectifier**

- Inspect whether the diode inside rectifier **16** functions properly, and if any fault is found, replace the rectifier.
  A, B, C : Lead connecting area of stator coil
  D, E : Heat sink area
  F : Regulator connecting area
- Inspect the rectifier twice, before and after the ⊕ side and ⊖ side of the tester have been changed over.

CAUTION ⚠

When inspecting using a tester, the current becomes weaker than the usual current flowing through rectifier 16. Therefore, an incomplete resistance value might be indicated.
Also, this tendency increases as the range of the tester gets smaller. Therefore, use as big a range as possible.

Power Supply (Battery to High-current Fuse Box and Fuse Box)

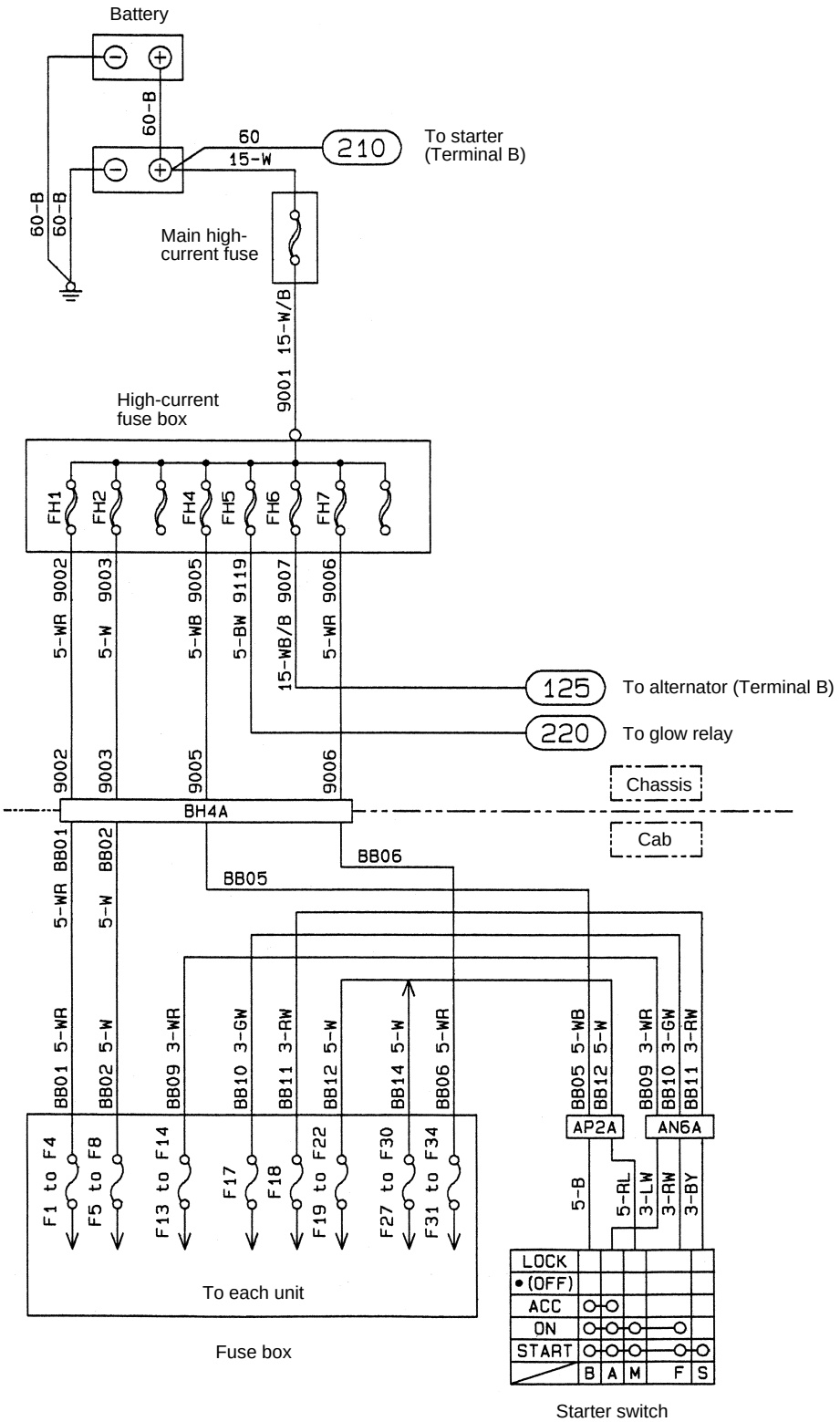

Fuses F1 to F4

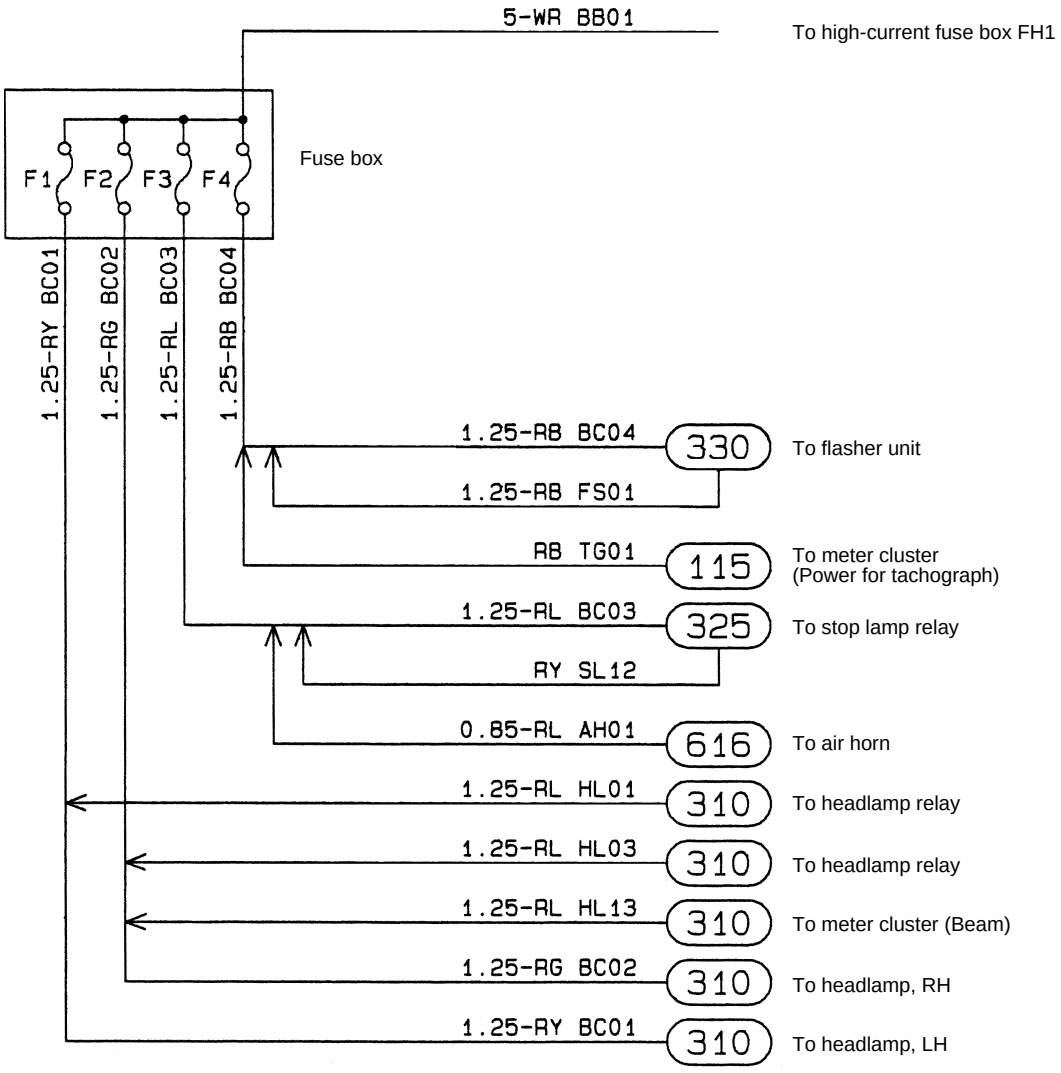

12018

Fuses F5 to F8

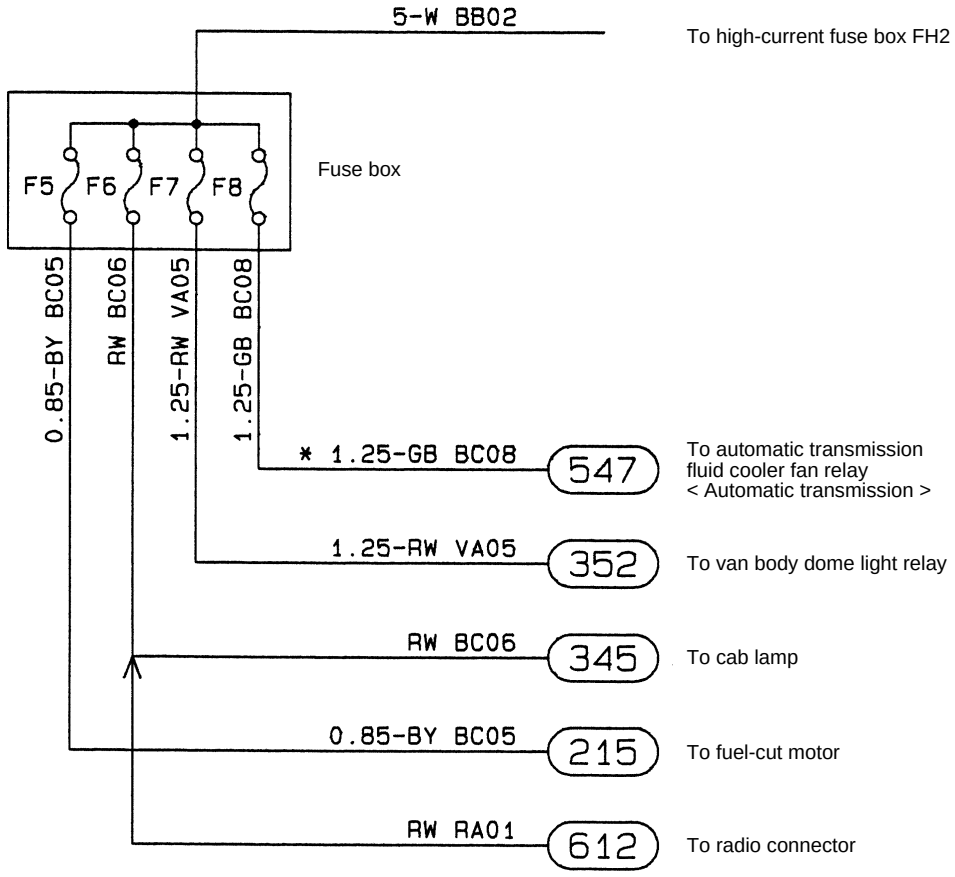

*: Automatic transmission

12019

Fuses F13 to F18

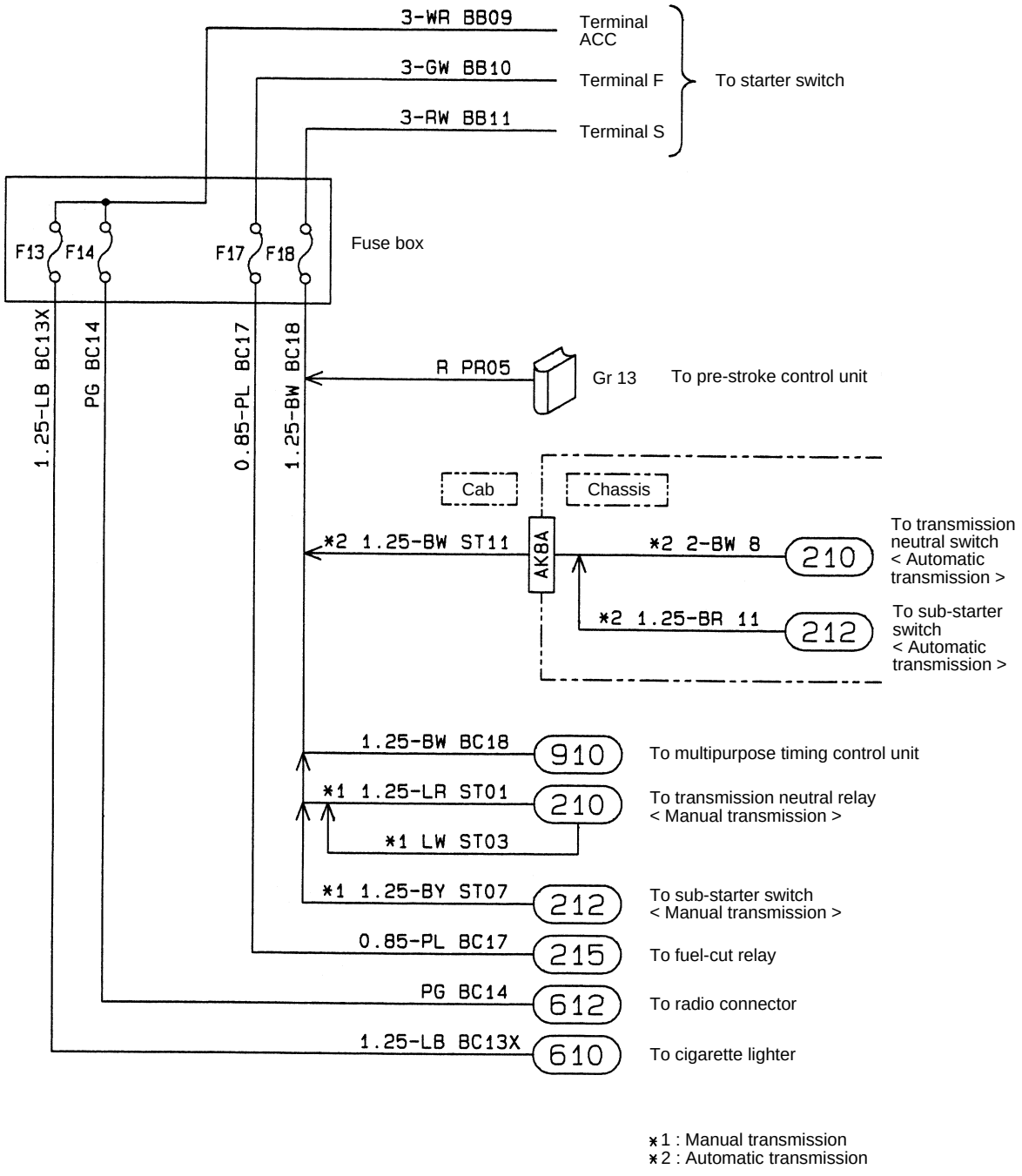

Fuses F19 to F22

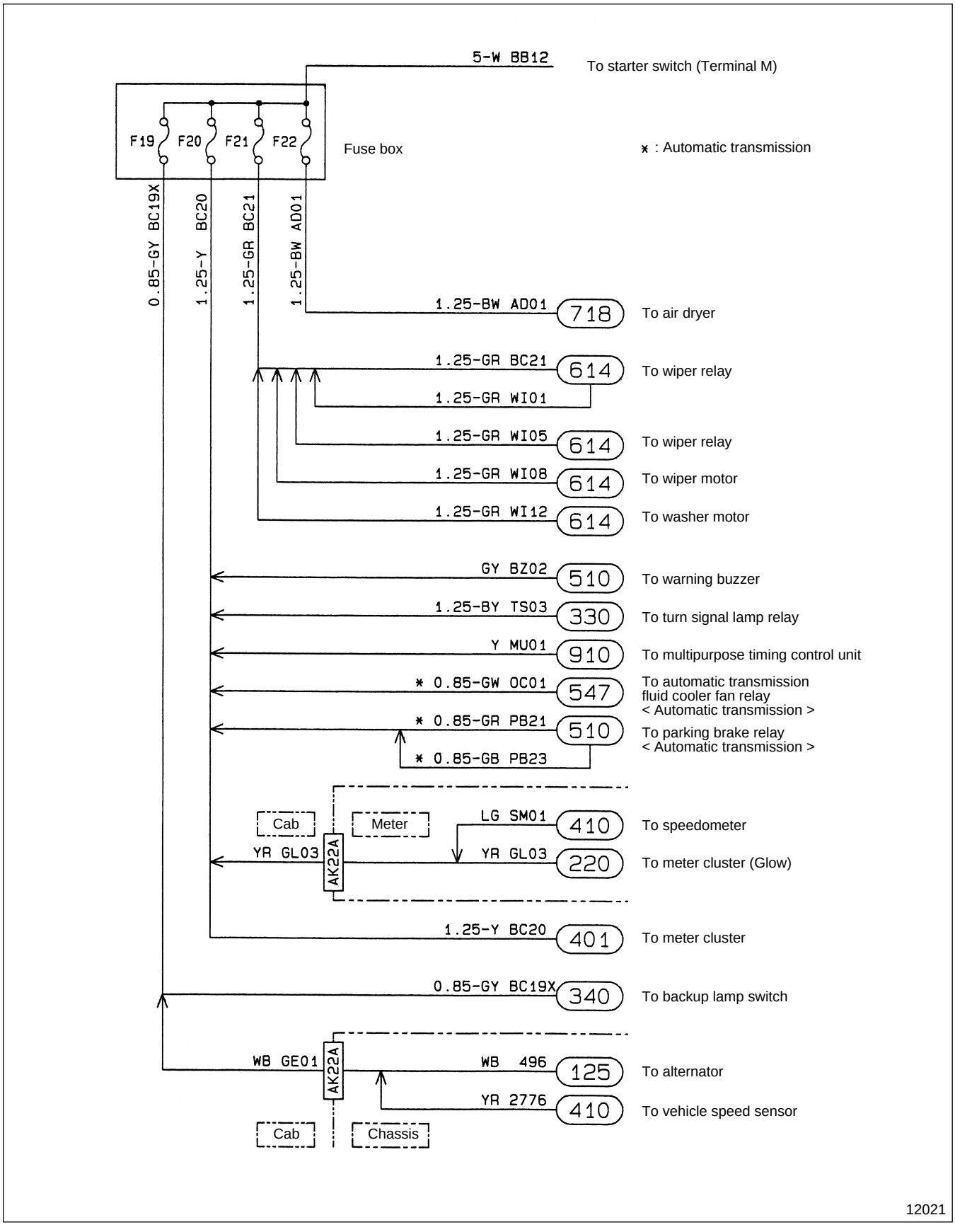

Fuses F27 to F30

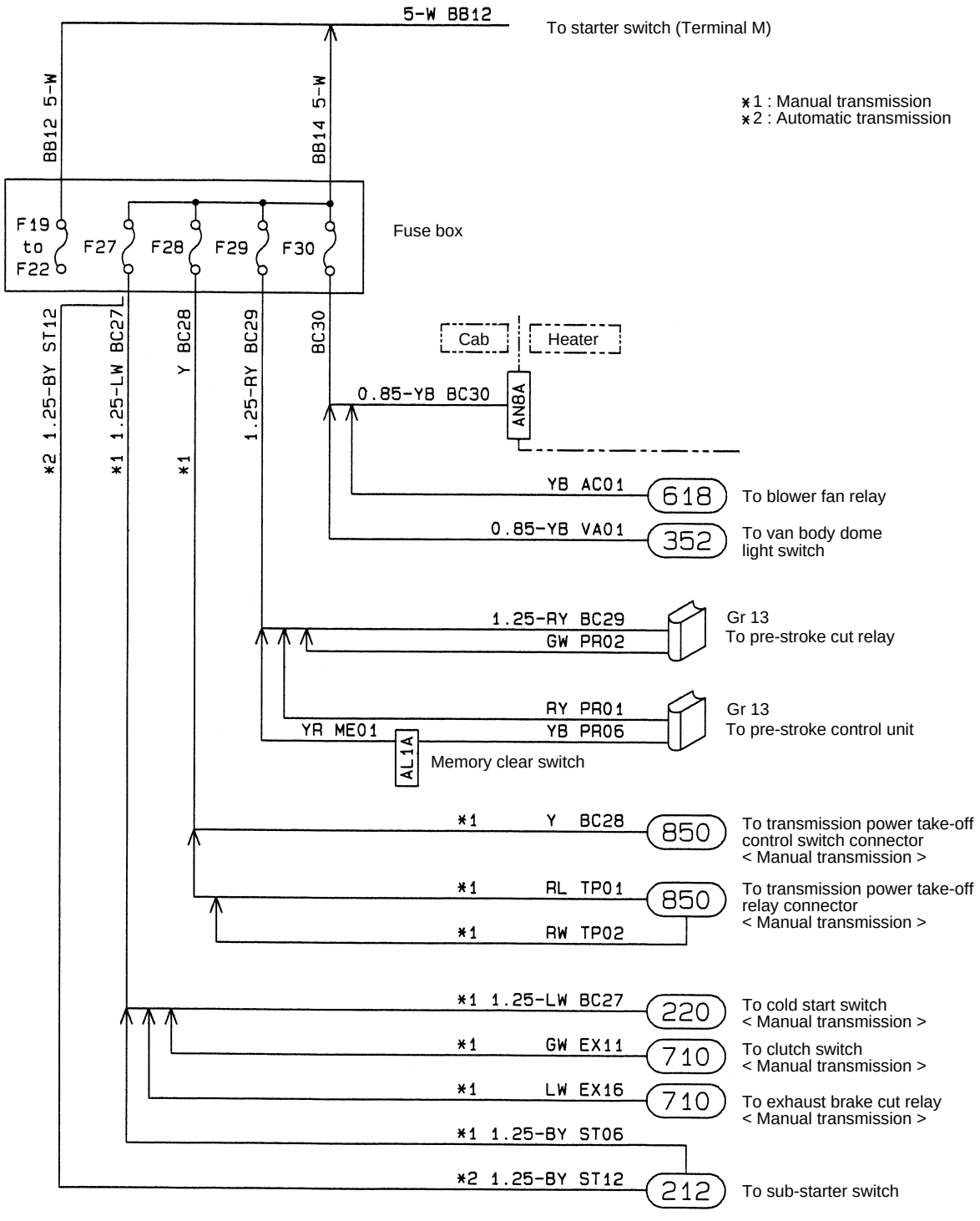

Fuses F31 to F34

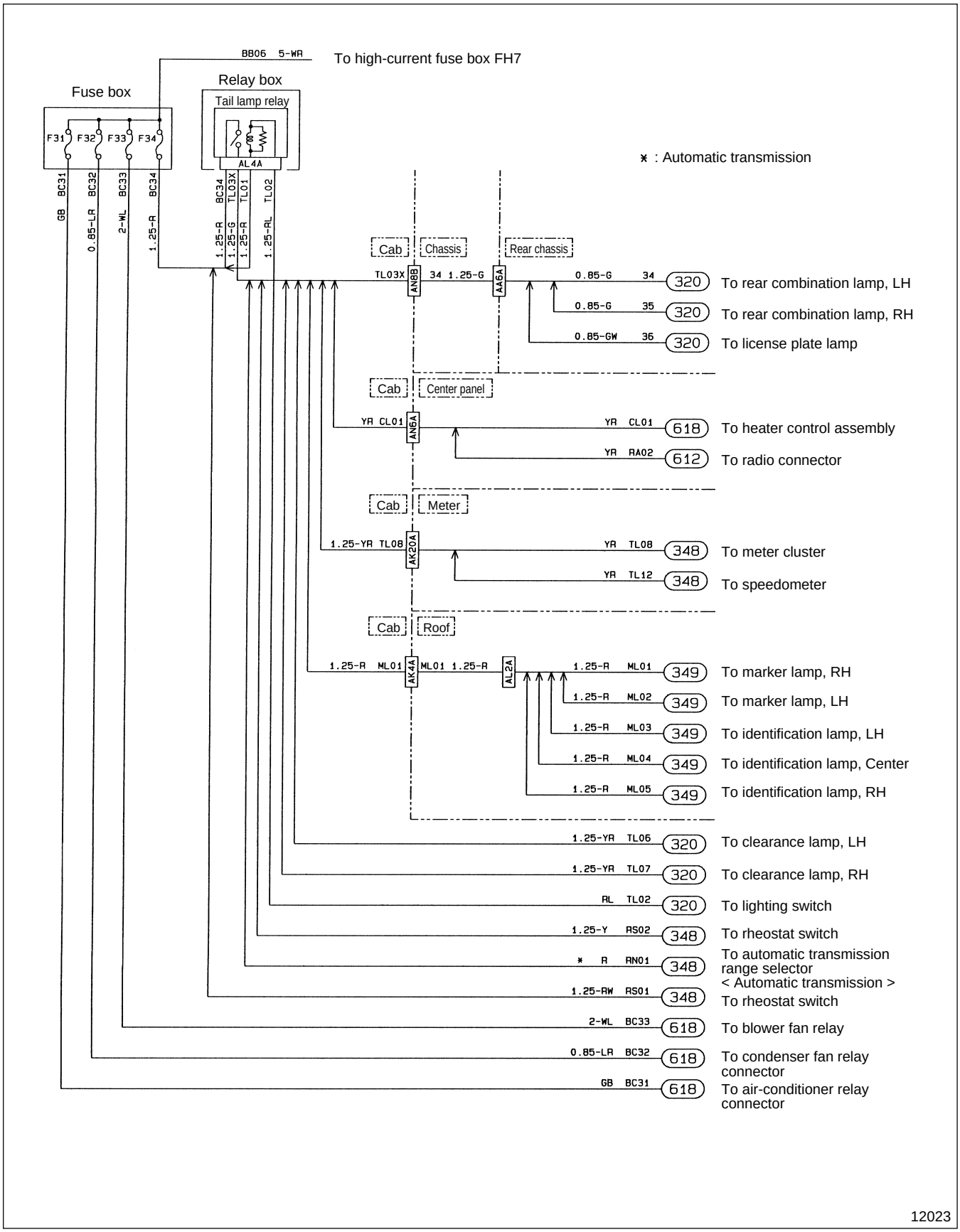

M E M O

125 BATTERY CHARGING CIRCUIT

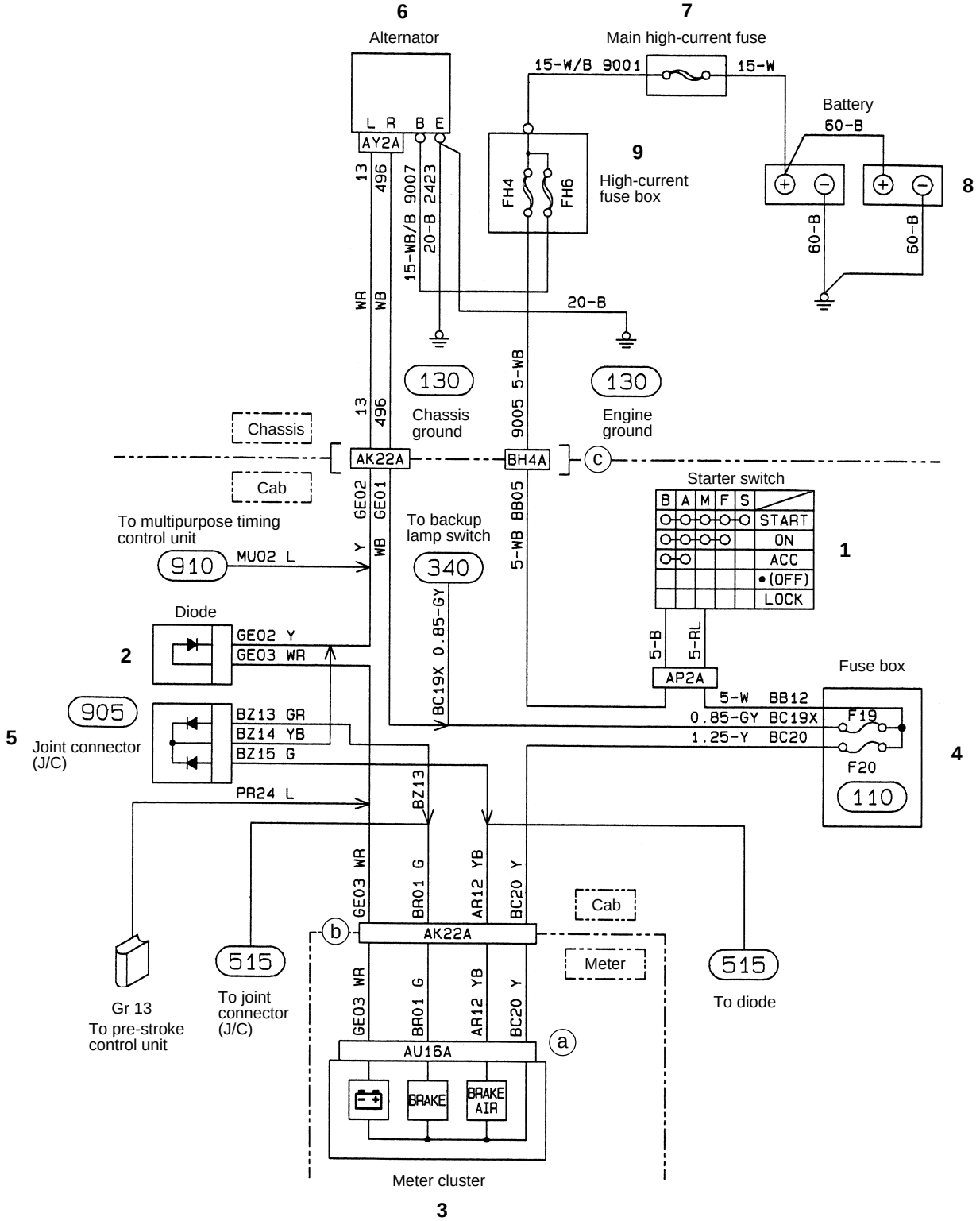

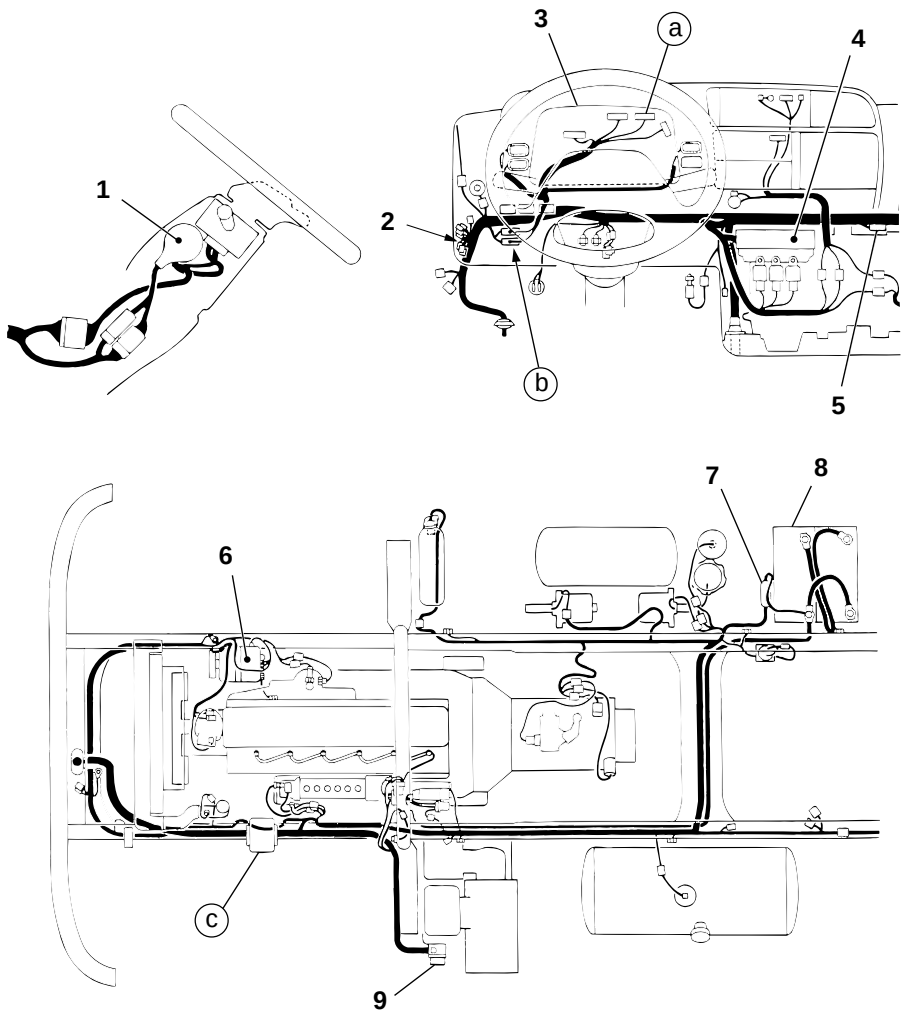

12703

1 Starter switch 🕮 (210)
2 Diode
3 Meter cluster 🕮 (401)
4 Fuse box 🕮 (104)
5 Joint connector (J/C) 🕮 (905)
6 Alternator 🕮 (106)
7 Main high-current fuse 🕮 (104)
8 Battery 🕮 (101)
9 High-current fuse box 🕮 (104)

Ground Point

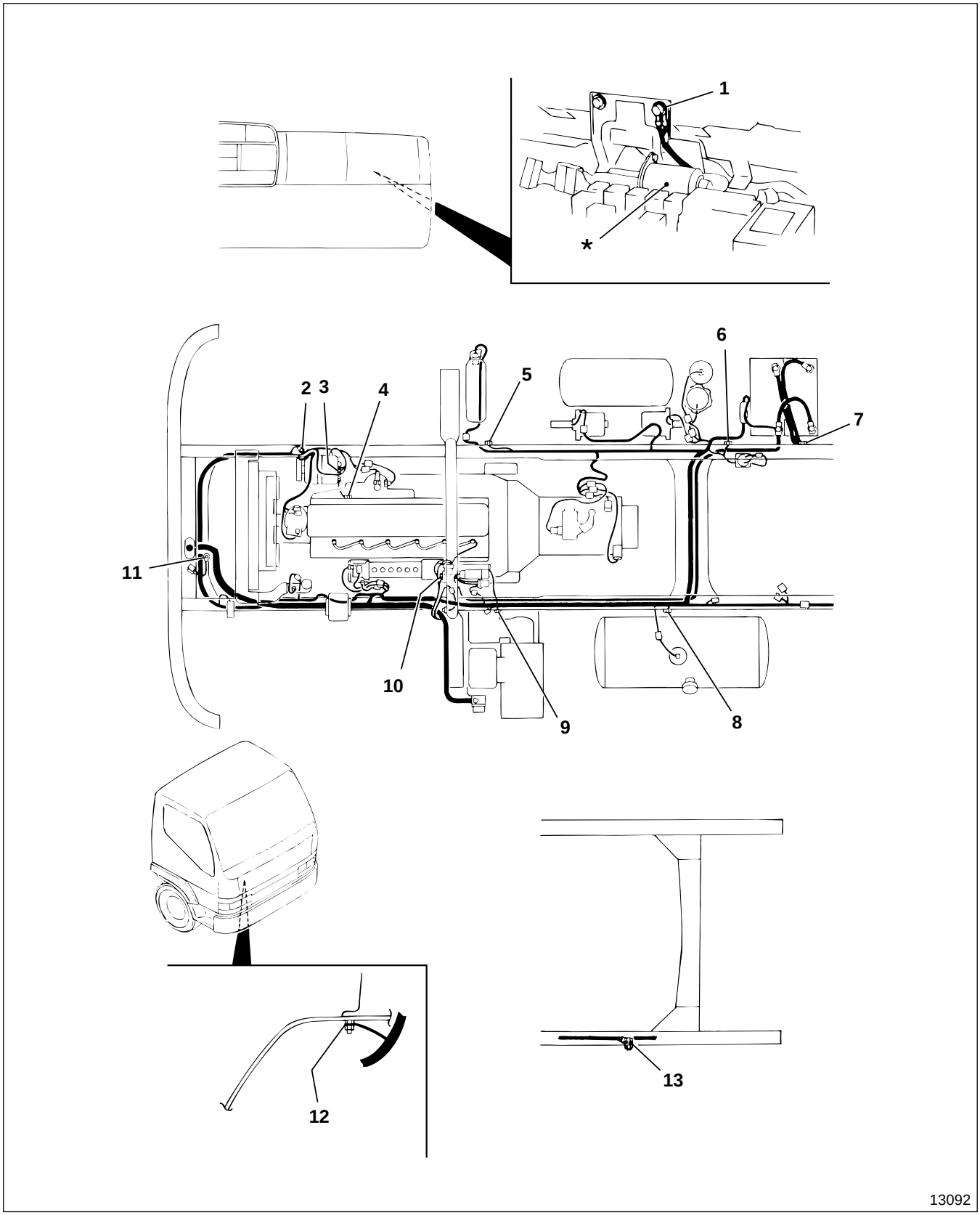

* : Wiper motor

Location	Name	Circuit No.	Wire diameter-wire color	Remarks
1	Cab ground	EA01	3–B	
2	Chassis ground	2423	20–B	
3	Alternator ground	2423	20–B	
4	Alternator ground	—	5–B	
5	Chassis ground	1575	1.25–B	
		1600	1.25–B	A/T
6	Chassis ground	1704	0.85-BR	
		1705	B	
7	Battery ground	—	60–B	
8	Chassis ground	74	B	
		1582	B	A/T
9	Engine ground	—	—	
10	Chassis ground	19	1.25–B	
11	Chassis ground	6	1.25–B	
		19	1.25–B	
		210	3–B	
		9617	3–B	
12	Cab ground	EA02	3–B	
13	Rear chassis ground	38	0.85–B	
		39	0.85–B	

A/T : Automatic transmission

Entire Ground

- This diagram indicates grounding points.
- See the following pages for branching of grounding (wiring for ☆). (in circuit No. order)

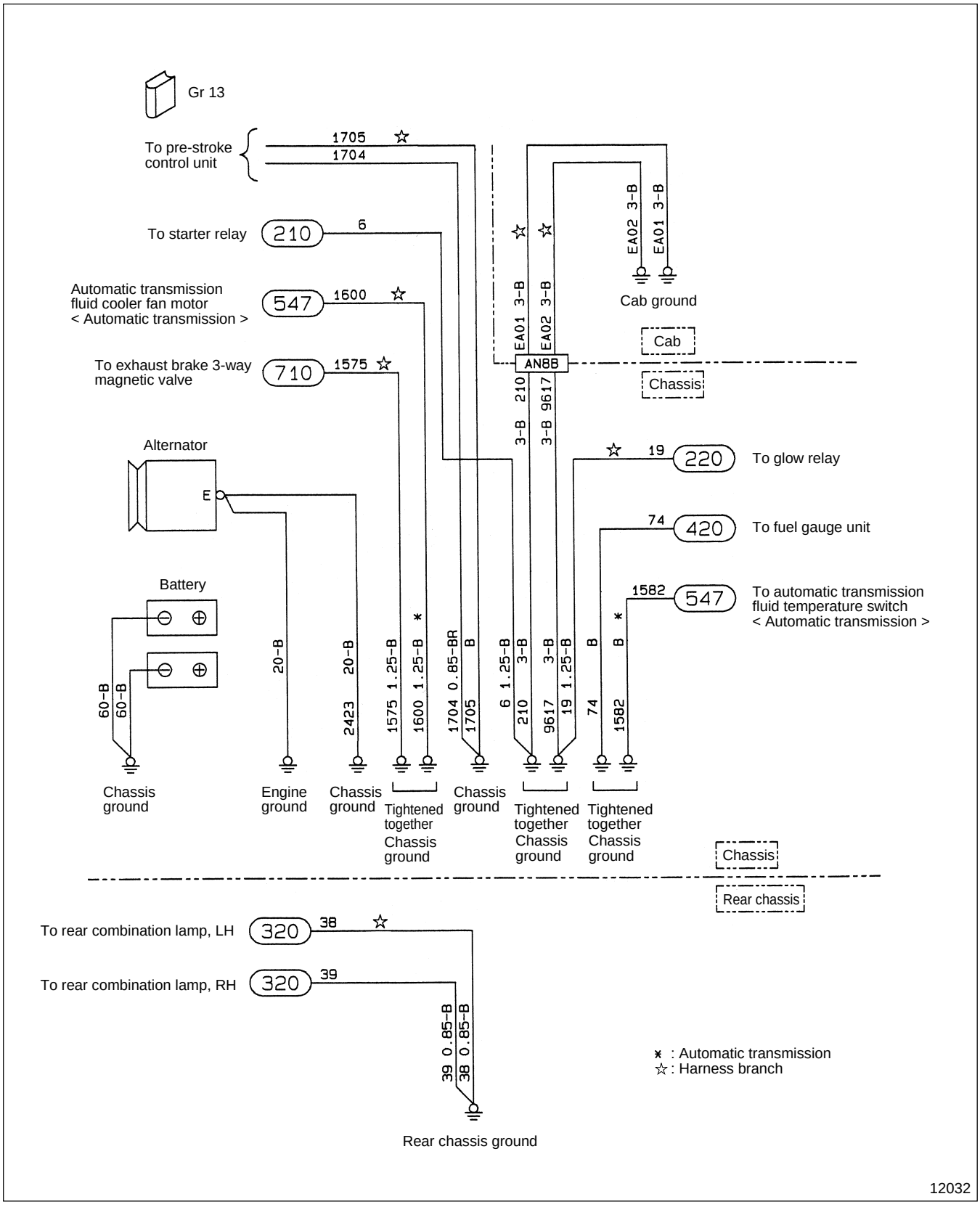

Circuit No.19 Chassis Ground

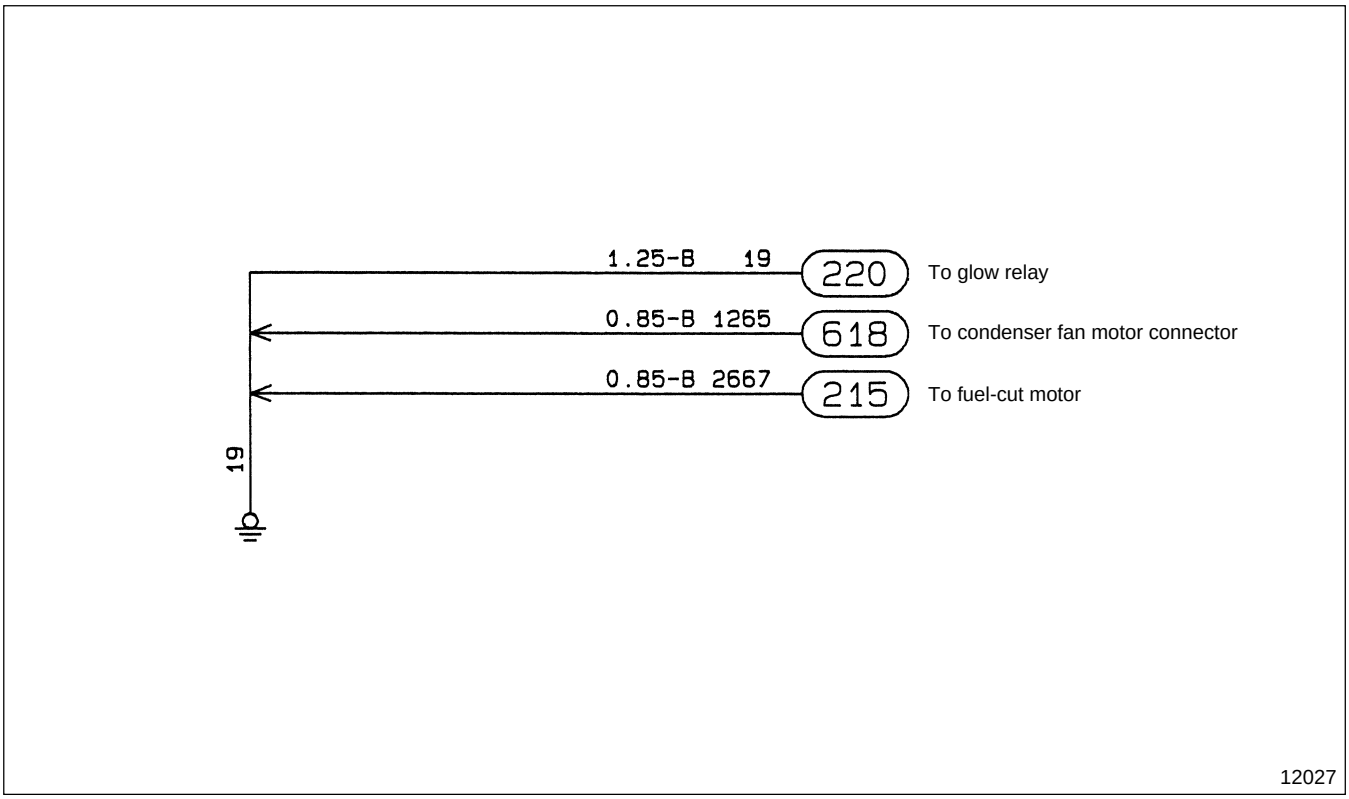

Circuit No.38 Rear Chassis Ground

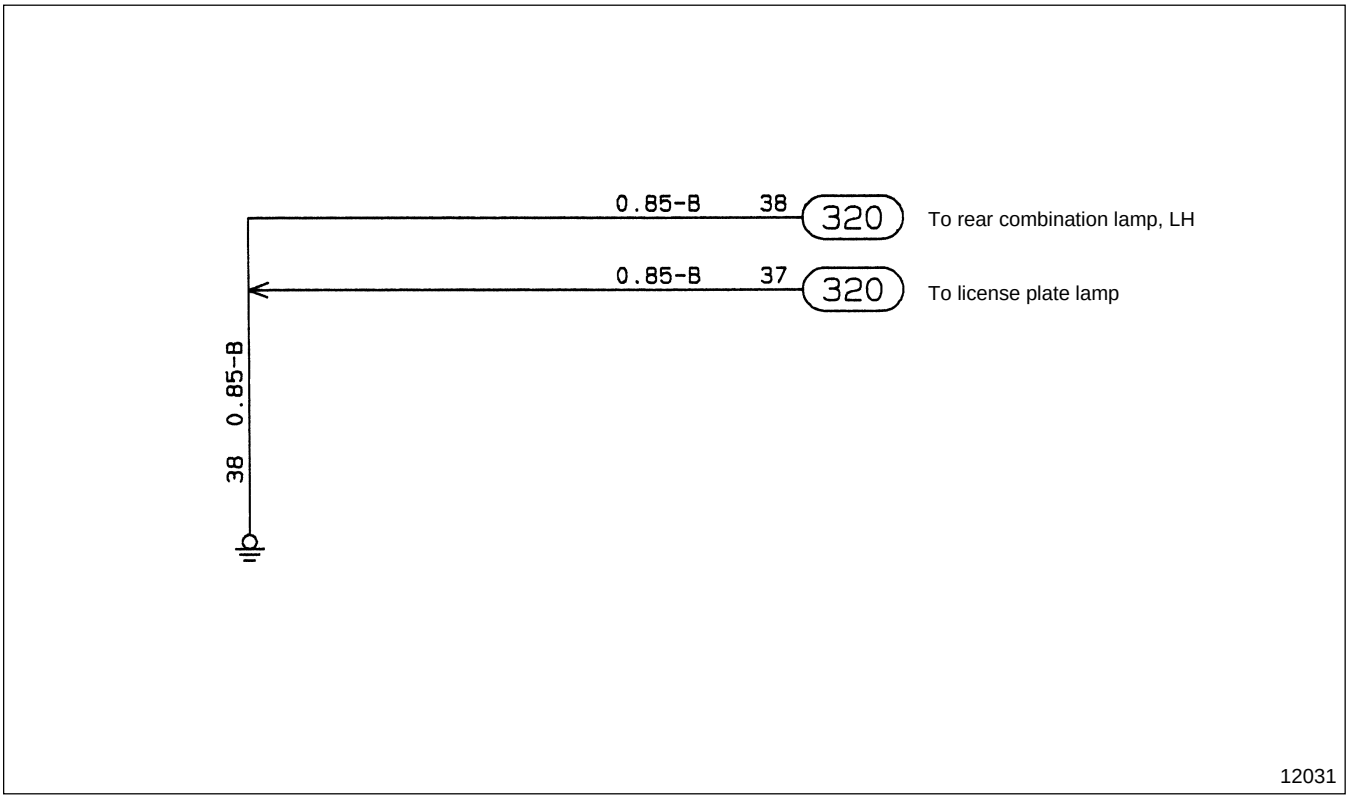

Circuit No.1575 Chassis Ground

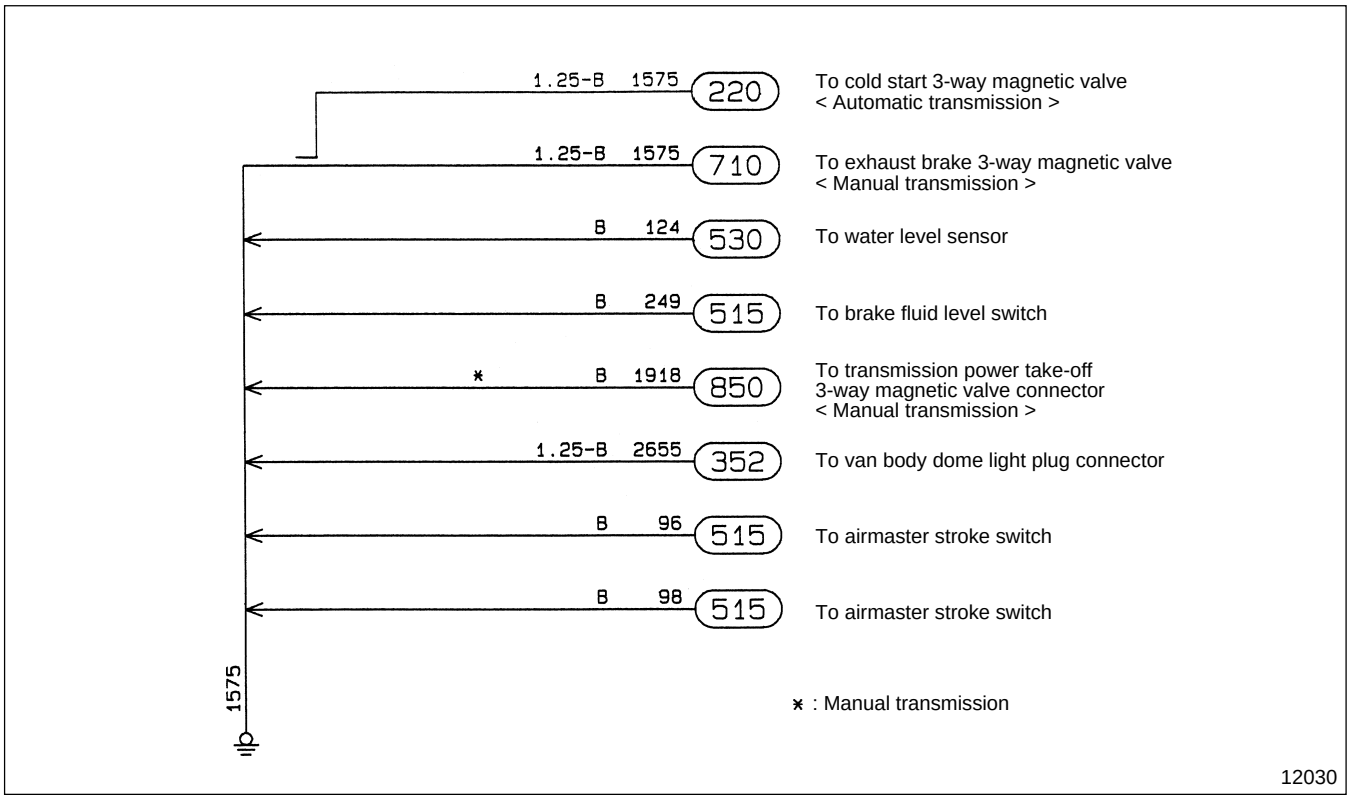

Circuit No.1600 Chassis Ground < Only for Automatic Transmission >

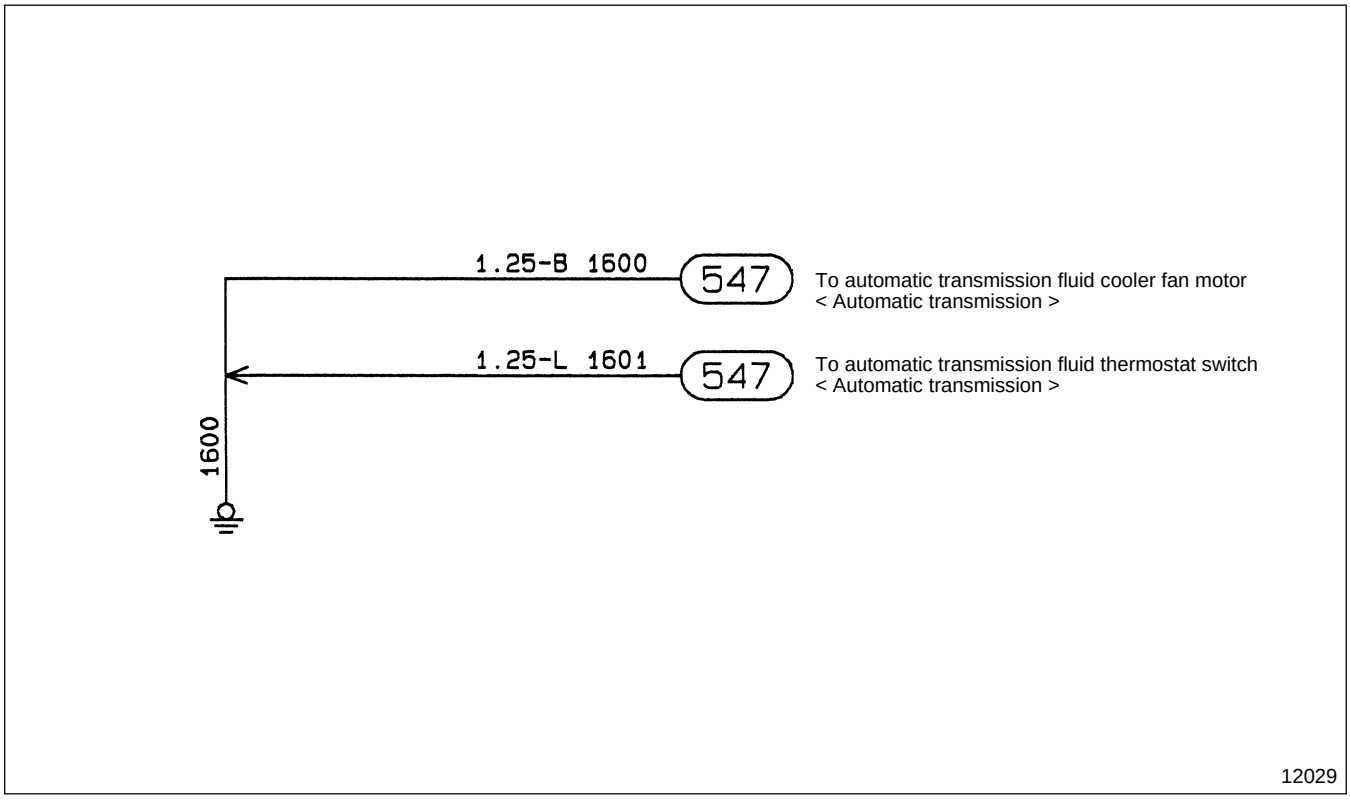

Circuit No.1705 Chassis Ground

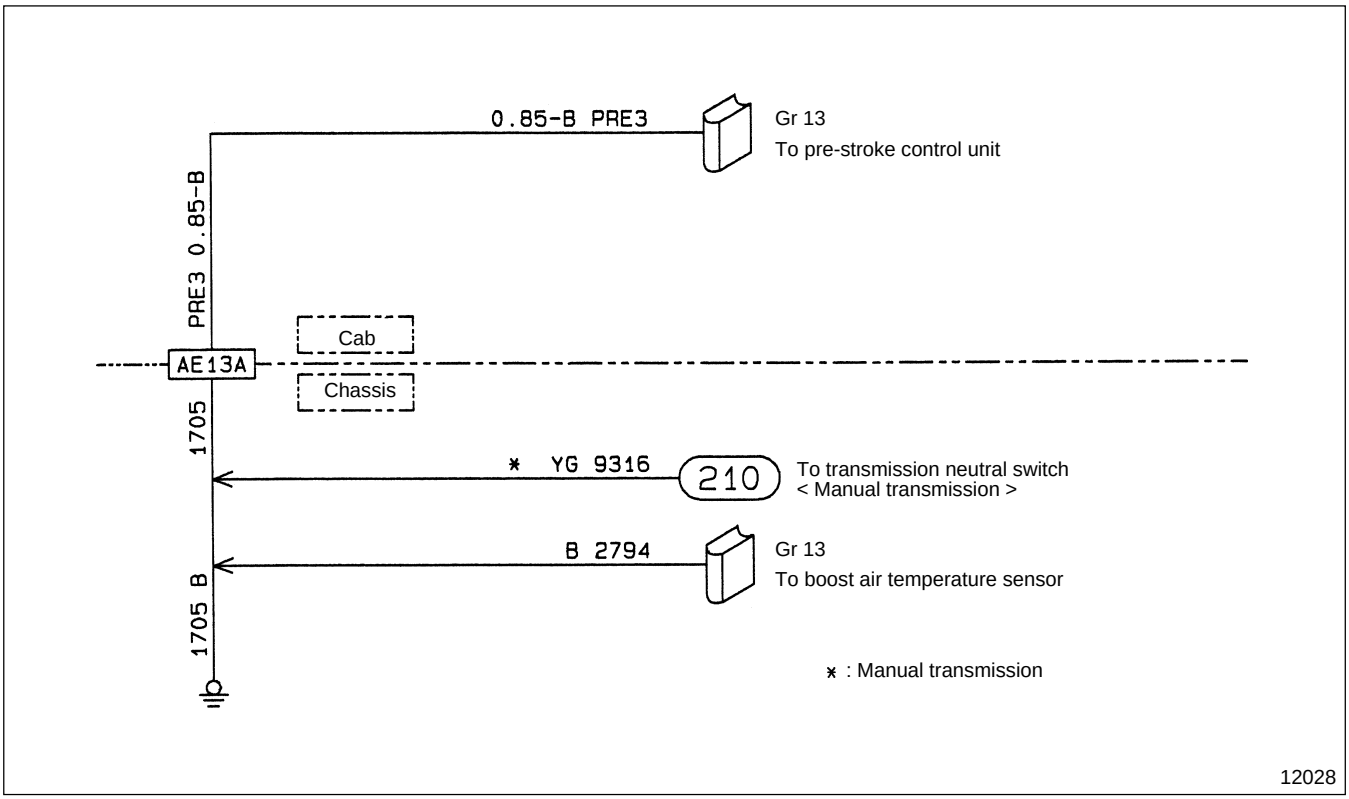

Circuit No.EA01 Cab Ground

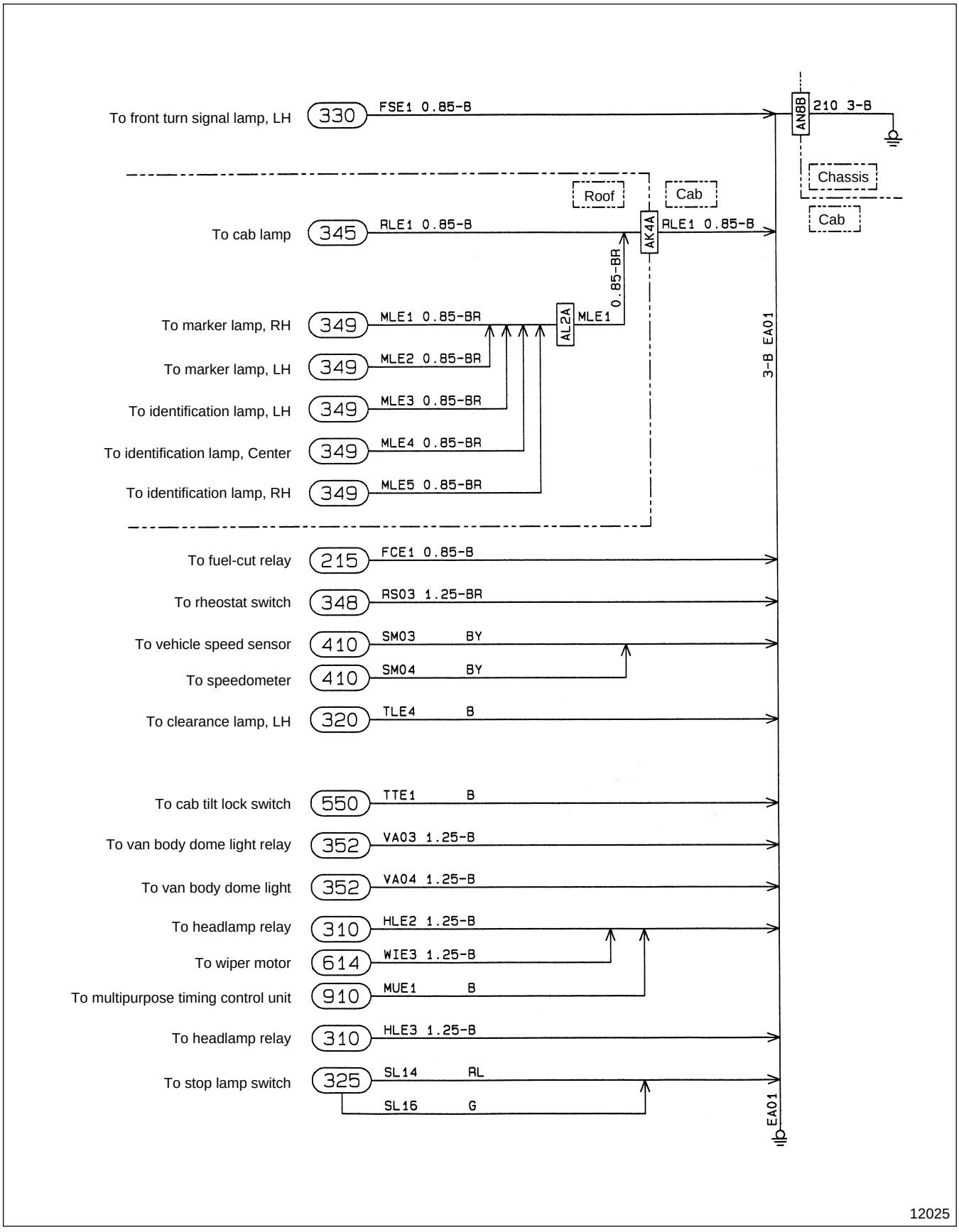

Circuit No.EA02 Cab Ground

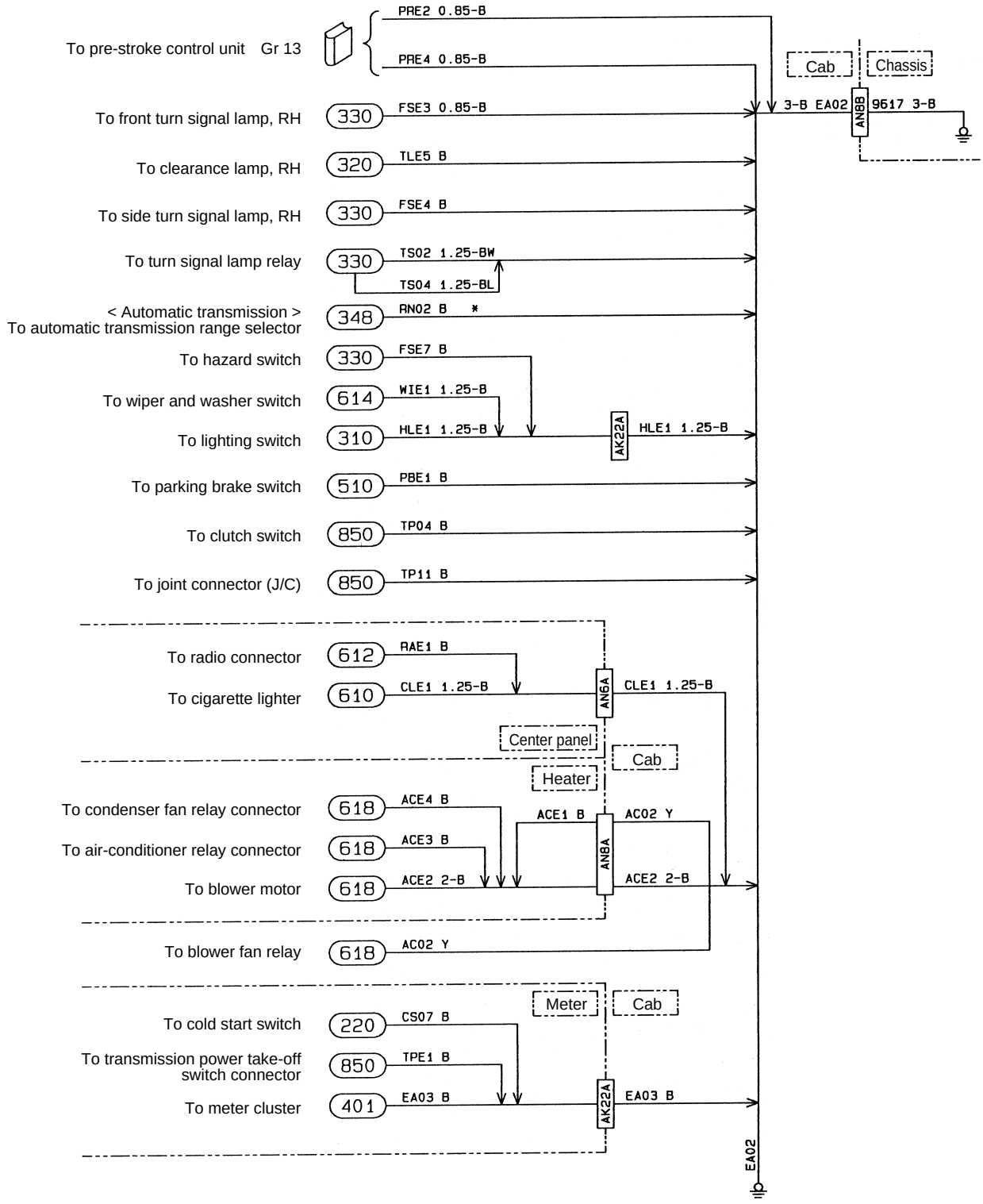

2 STARTING, PREHEATING AND STOPPING ENGINE

SPECIFICATIONS 54-2-2

STRUCTURE AND OPERATION 54-2-3

TROUBLESHOOTING 54-2-12

200 INSPECTION AND ADJUSTMENT MOUNTED IN VEHICLE
Inspection of Engine Preheating System 54-2-14

201 STARTER 54-2-15

210 ENGINE STARTING CIRCUIT
< Manual Transmission > 54-2-28
< Automatic Transmission > 54-2-32

212 SUB-STARTER CIRCUIT
< Manual Transmission > 54-2-36
< Automatic Transmission > 54-2-38

215 ENGINE STOPPING CIRCUIT 54-2-40

220 ENGINE PREHEATING AND COLD START CIRCUIT
< Manual Transmission > 54-2-44
< Automatic Transmission > 54-2-48

SPECIFICATIONS

Item		Specifications
Starter	Manufacturer	MITSUBISHI ELECTRIC
	Reduction gear system	Planetary gear
	Model	M8T55171
	Power V–kW	12–3.5
	Magnetic switch operating voltage V	8 or less
Starter relay	Model	U1X15072
	Voltage rating V–A	12–4
	Magnet closing voltage V	8 or less
	Magnet opening voltage V	3.5 or less
	Allowable cutoff current A	200
Glow plug	Model	Sheathed type
	Voltage–amperage V–A	11–5.5
Glow relay	Model	U1T06292
	Voltage–amperage V–A	12–127
	Magnet closing voltage V	8 or less
	Magnet opening voltage V	3.5 or less
	Allowable cutoff current A	200
Fuel-cut motor	Minimum operating voltage V	10 or less
	Operating amperage A	10 or less

Starter

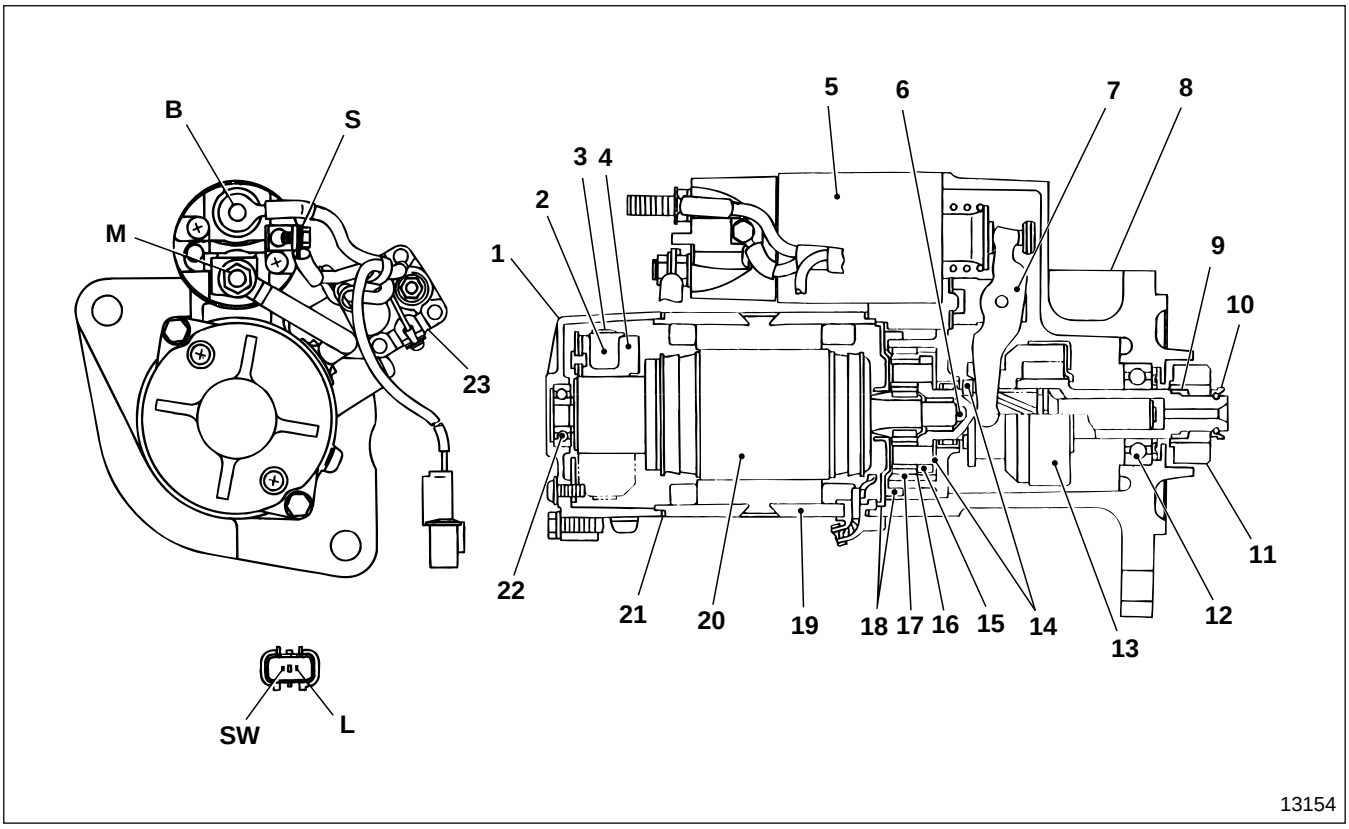

1 Rear bracket
2 Brush
3 Brush spring
4 Brush holder
5 Magnetic switch
6 Ball
7 Lever
8 Front bracket
9 Spring
10 Pinion stopper
11 Pinion
12 Front bearing
13 Overrunning clutch
14 Washer
15 Gear shaft
16 Internal gear
17 Planetary gear
18 Rubber packing
19 Yoke assembly
20 Armature
21 Rubber packing
22 Rear bearing
23 Starter relay

B : Terminal B
L : Terminal L
M : Terminal M
S : Terminal S
SW : Terminal SW

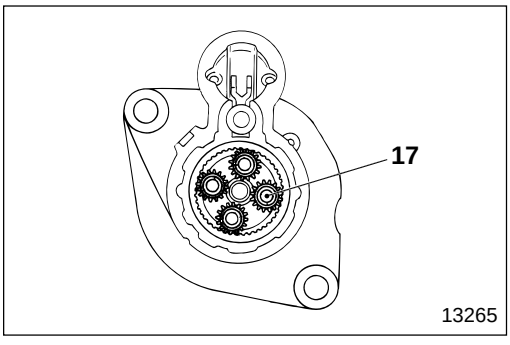

This starter uses planetary gear **17** for the reduction gear system.

Engine Starting Circuit
< Manual Transmission >

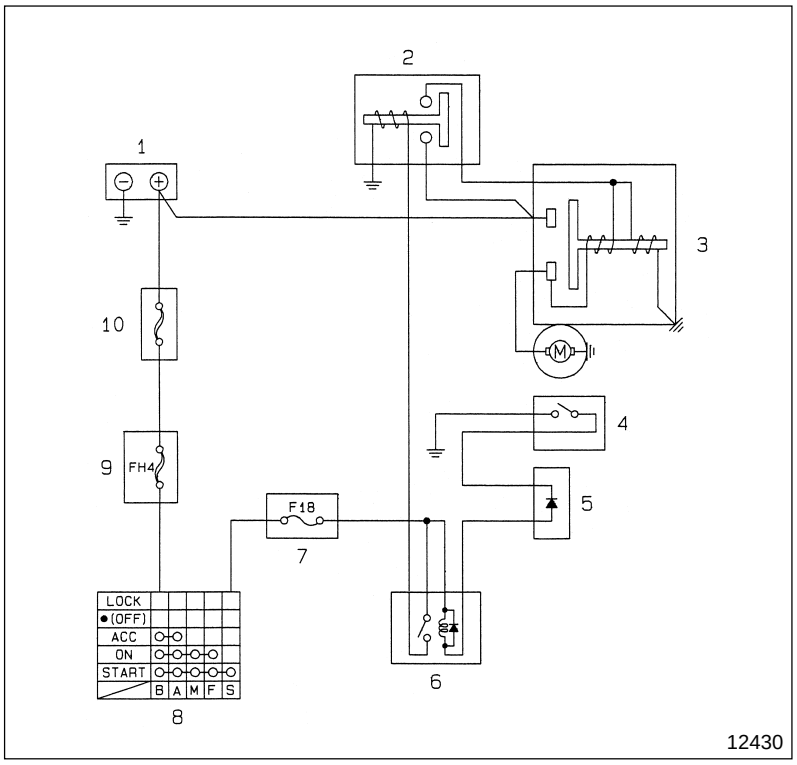

1 Battery
2 Starter relay
3 Starter
4 Transmission neutral switch
5 Diode
6 Transmission neutral relay
7 Fuse box
8 Starter switch
9 High-current fuse box
10 Main high-current fuse

< Automatic Transmission >

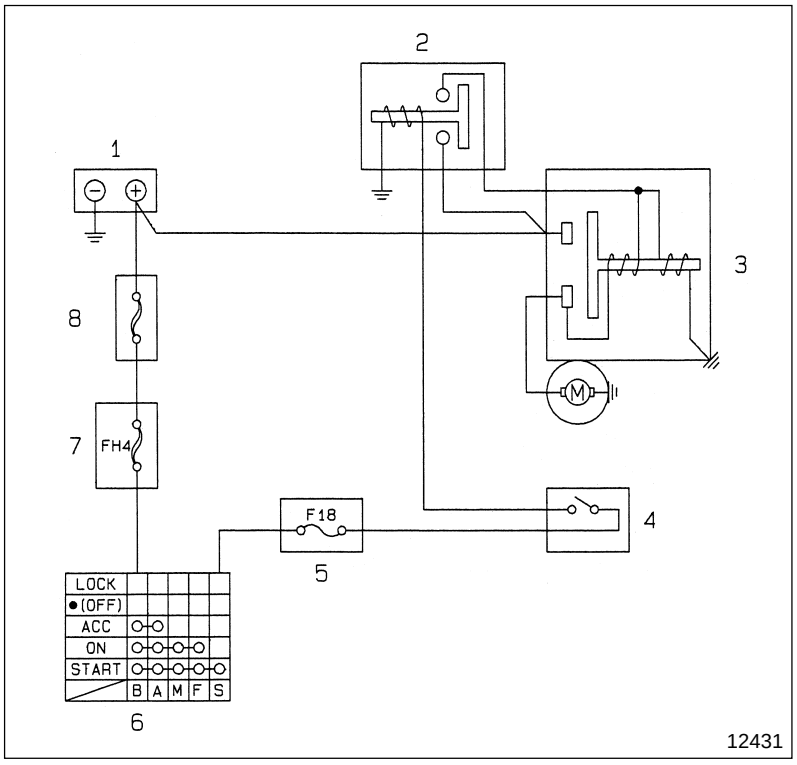

1 Battery
2 Starter relay
3 Starter
4 Transmission neutral switch
5 Fuse box
6 Starter switch
7 High-current fuse box
8 Main high-current fuse

Sub-starter Circuit
< Manual Transmission >

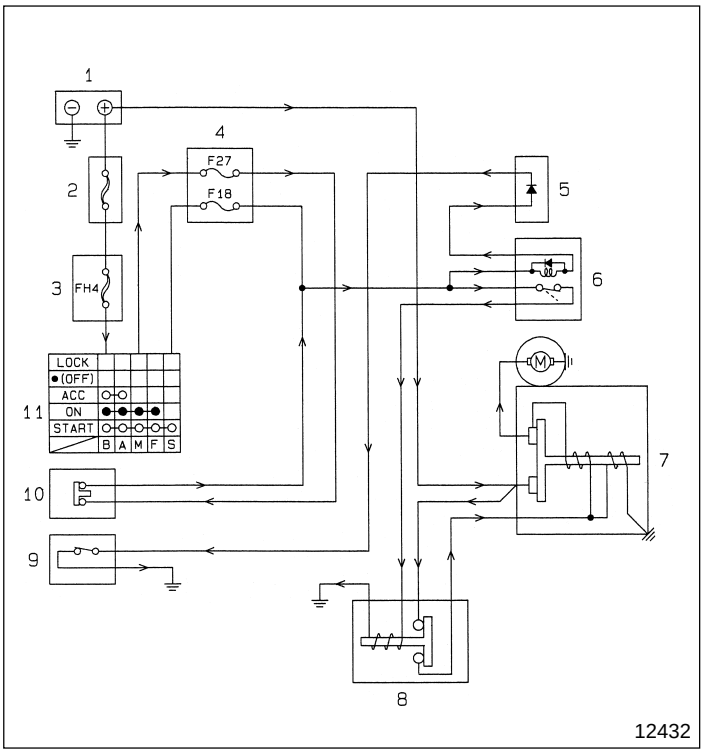

1 Battery
2 Main high-current fuse
3 High-current fuse box
4 Fuse box
5 Diode
6 Transmission neutral relay
7 Starter
8 Starter relay
9 Transmission neutral switch
10 Sub-starter switch
11 Starter switch

Position of starter switch **11** : ON
Position of sub-starter switch **10** : ON
1→2→3→11→4 (F27)→10→6 (coil)→5→9→Ground
1→2→3→11→4 (F27)→10→6 (contact point)
→8 (coil)→Ground
Starter relay **8** operates to turn starter **7**.

< Automatic Transmission >

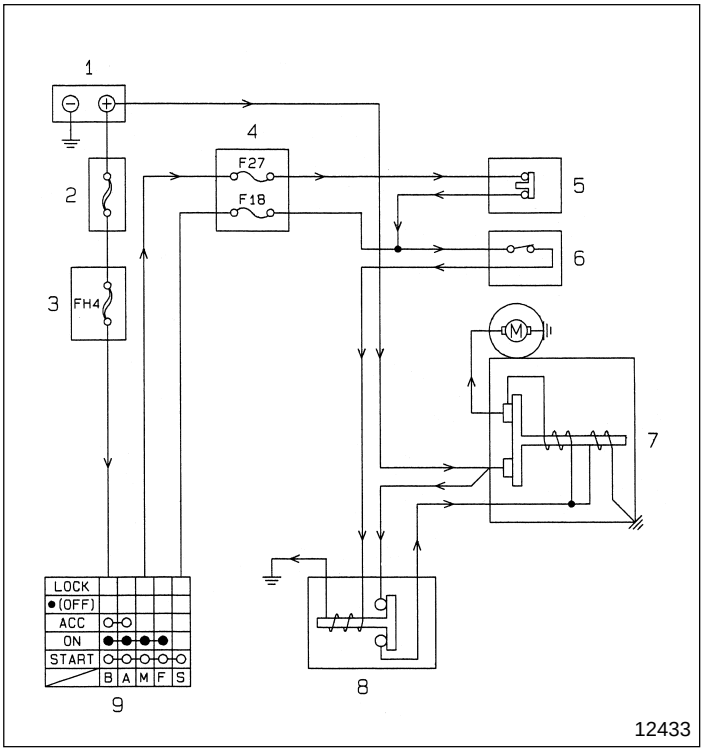

1 Battery
2 Main high-current fuse
3 High-current fuse box
4 Fuse box
5 Sub-starter switch
6 Transmission neutral switch
7 Starter
8 Starter relay
9 Starter switch

Position of starter switch **9** : ON
Position of sub-starter switch **5** : ON
1→2→3→9→4 (F27)→5→6→8 (coil)→Ground
Starter relay **8** operates to turn starter **7**.

Engine Stopping Circuit

Gr 13

Engine Preheating and Cold Start Circuit

< Manual Transmission >

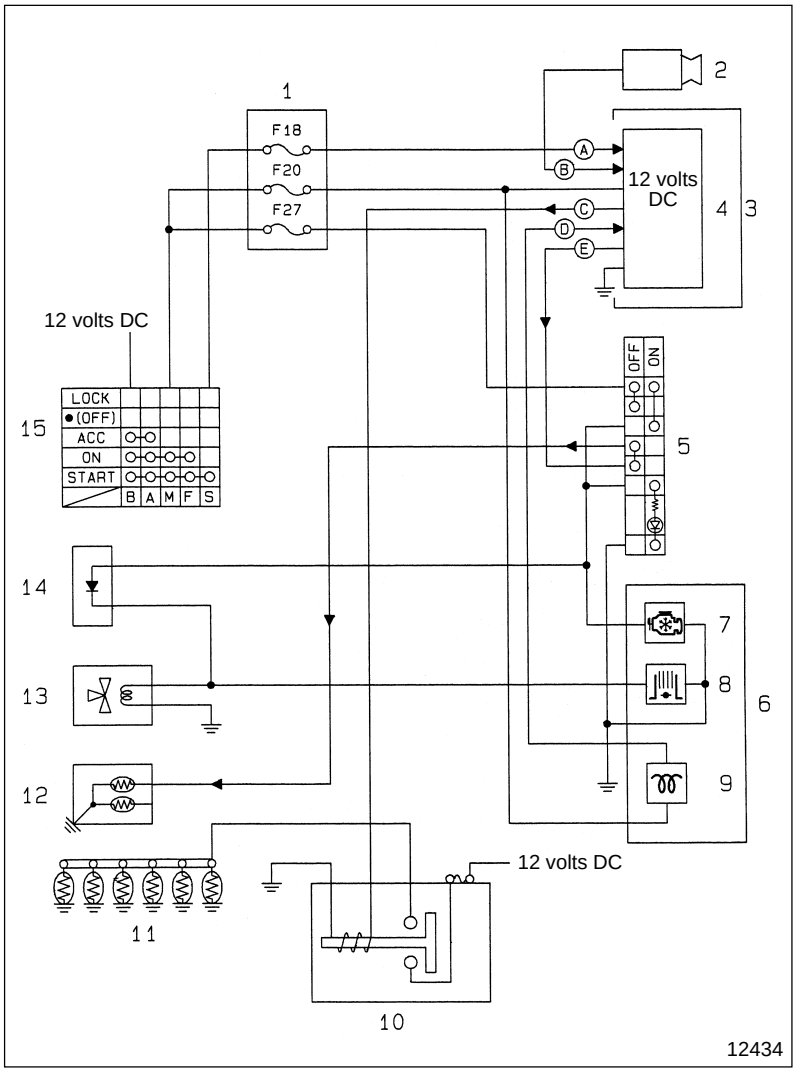

1 Fuse box
2 Alternator
3 Relay box
4 Multipurpose timing control unit
P54-9-2
5 Cold start switch
6 Meter cluster
7 Cold start indicator lamp
8 Exhaust brake indicator lamp
9 Engine preheating indicator lamp
10 Glow relay
11 Glow plug
12 Water temperature sensor
13 Exhaust brake 3-way magnetic valve
14 Diode
15 Starter switch

Ⓐ Engine start signal
Ⓑ Alternator charge signal
Ⓒ Glow relay activation signal
Ⓓ lighting-up signal
Ⓔ Engine coolant temperature signal

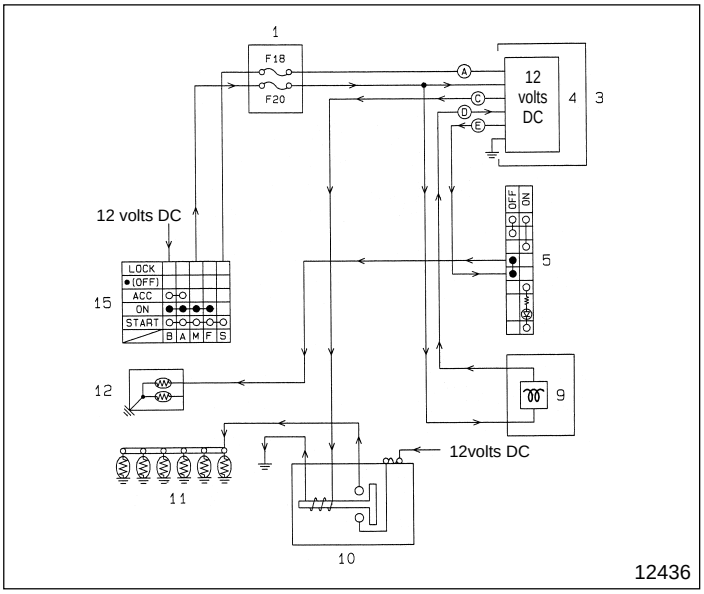

12436

● **Engine preheating circuit**

This circuit improves the engine starting performance when the engine coolant temperature is low. The preheating system is controlled by multipurpose timing control unit **4**. P54-9-2

Basic preheating operation

Operation mode P54-2-9

When engine coolant temperature is low (Approximately 60°C {140°F} or less)

Position of starter switch **15** : ON

15→1 (F20)→4→Ground
└Ⓔ→5→12→Ground

Multipurpose timing control unit **4** detects the engine coolant temperature.

- When the engine coolant temperature is low, multipurpose timing control unit **4** outputs glow relay activation signal Ⓒ.
  4—Ⓒ→10→Ground

- Glow relay **10** operates to feed power to glow plug **11** and lights up engine preheating indicator lamp **9**.
  10 (contact point)→11→Ground
  15→1 (F20)→9—Ⓓ→4→Ground

When engine coolant temperature is high (Approximately 60°C {140°F} or more)

- Position of starter switch **15** : ON
  15→1 (F20)→4→Ground
  └Ⓔ→5→12→Ground

  Multipurpose timing control unit **4** detects the engine coolant temperature.
- When the engine coolant temperature is high, multipurpose timing control unit **4** does not output glow relay activation signal Ⓒ, so no preheating is performed.

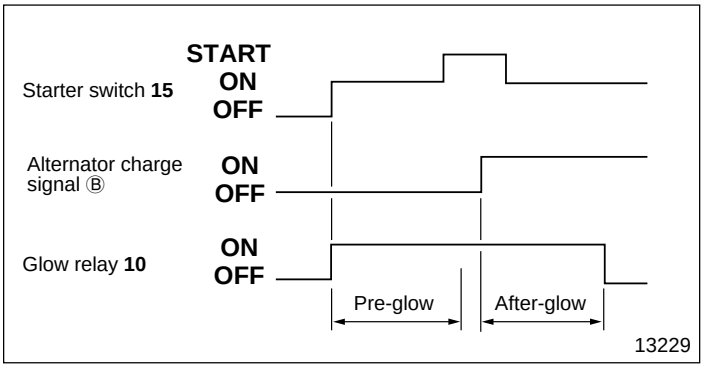

13229

Pre-glow and after-glow

- There are two types of preheating: one is pre-glow, performed before starting the engine; the other is after-glow, performed after starting the engine. They are both controlled by start signal Ⓐ and alternator charge signal Ⓑ.

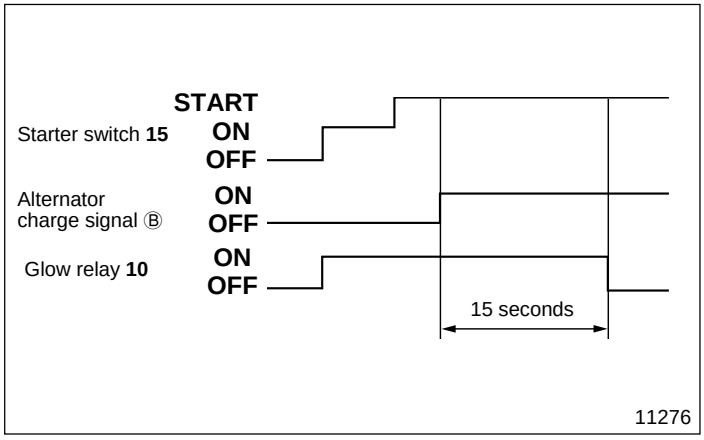

Fail-safe

- If the contacts of the glow relay driving relay in multipurpose timing control unit **4** are welded, engine preheating indicator lamp **9** blinks to alert the driver of the fault.
- When all of the following conditions are satisfied, the fail-safe function turns off glow relay **10**.
  - Coolant temperature is 60°C {140°F} or less.
  - Engine start signal Ⓐ is ON.
  - Alternator charge signal Ⓑ is ON for 15 seconds.

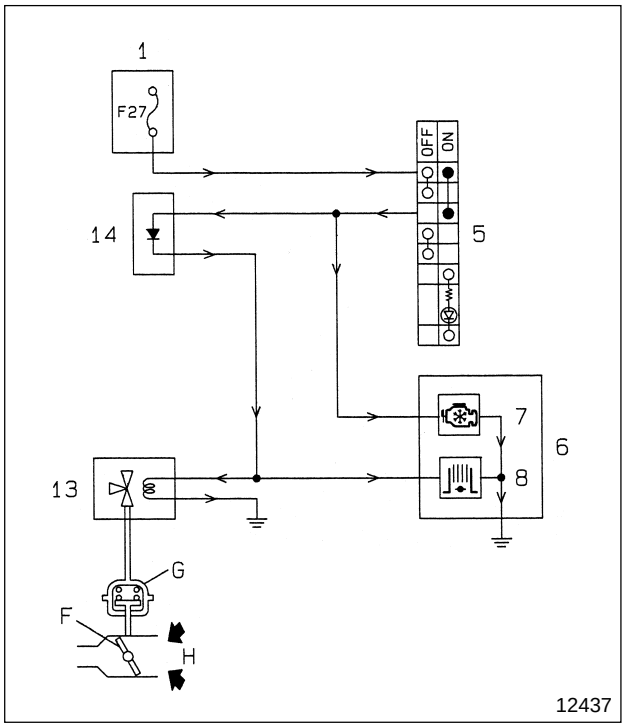

● **Cold start circuit**

This circuit helps the engine preheating performance when the ambient temperature is low.

Position of cold start switch **5** : ON

1→5→7
5→14→8→Ground
5→13→Ground

This circuit forces exhaust brake 3-way magnetic valve **13** to operate, closing exhaust brake butterfly valve **F**.

This decreases incoming cool air **H** from the engine exhaust system and reduces preheating time.

F : Exhaust brake butterfly valve
G : Exhaust brake unit
H : Cool air from engine exhaust system

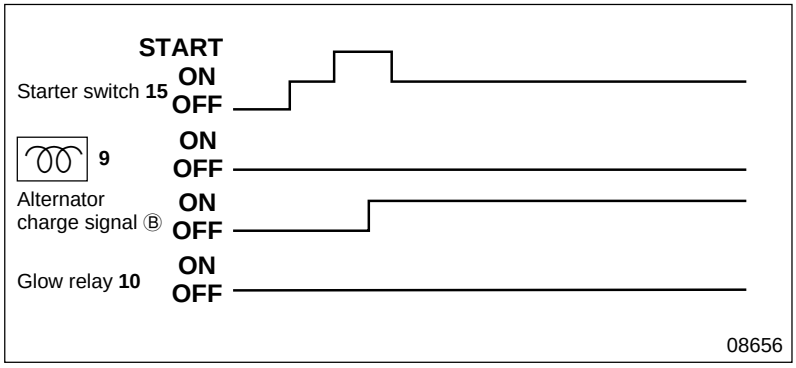

Operation mode

- Where the engine coolant temperature is 60°C {140°F} or more.

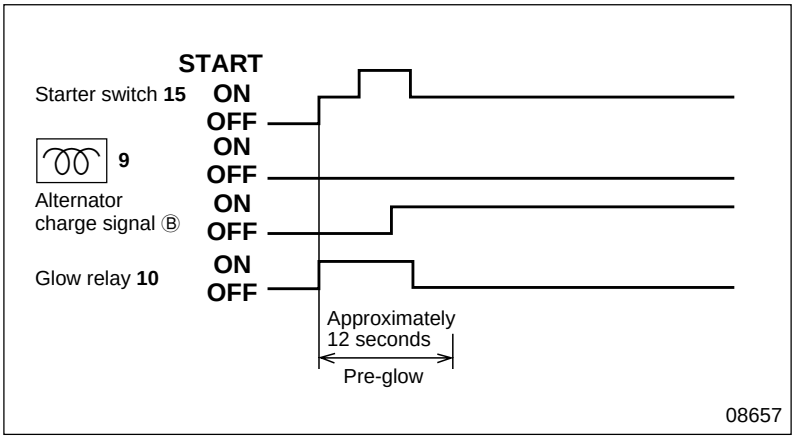

- Where the engine coolant temperature is 0 to 60°C {32 to 140°F}.

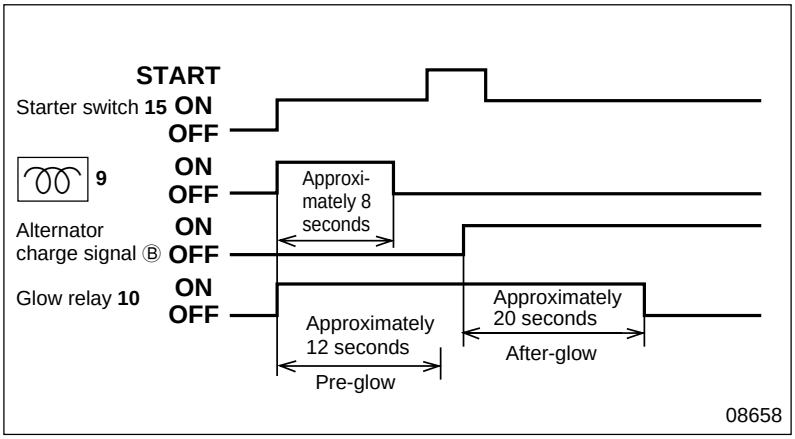

- Where the engine coolant temperature is 0°C {32°F} or less.

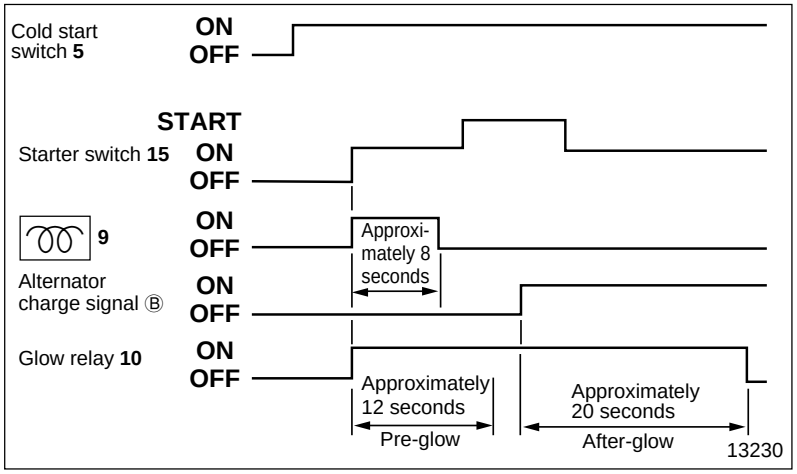

Operation mode when cold start switch is used

- When starter switch **15** is turned ON after cold start switch **5** is turned ON.

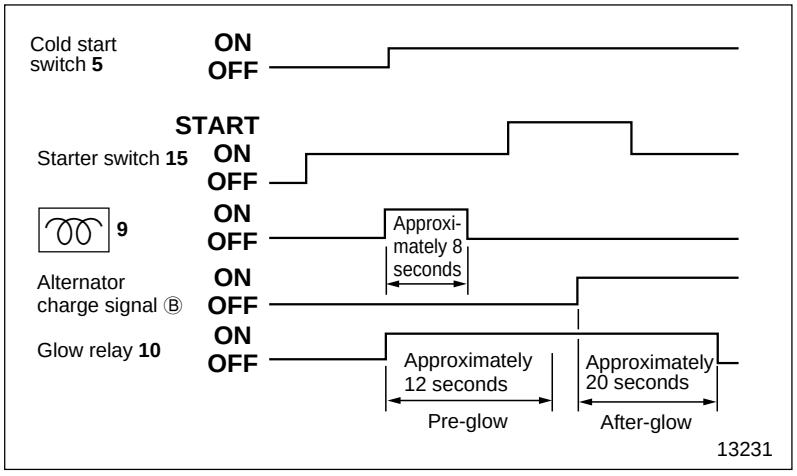

- When cold start switch **5** is turned ON after starter switch **15** is turned ON.
  (Where the engine coolant temperature is 0°C {32°F} or more.)

< Automatic Transmission >

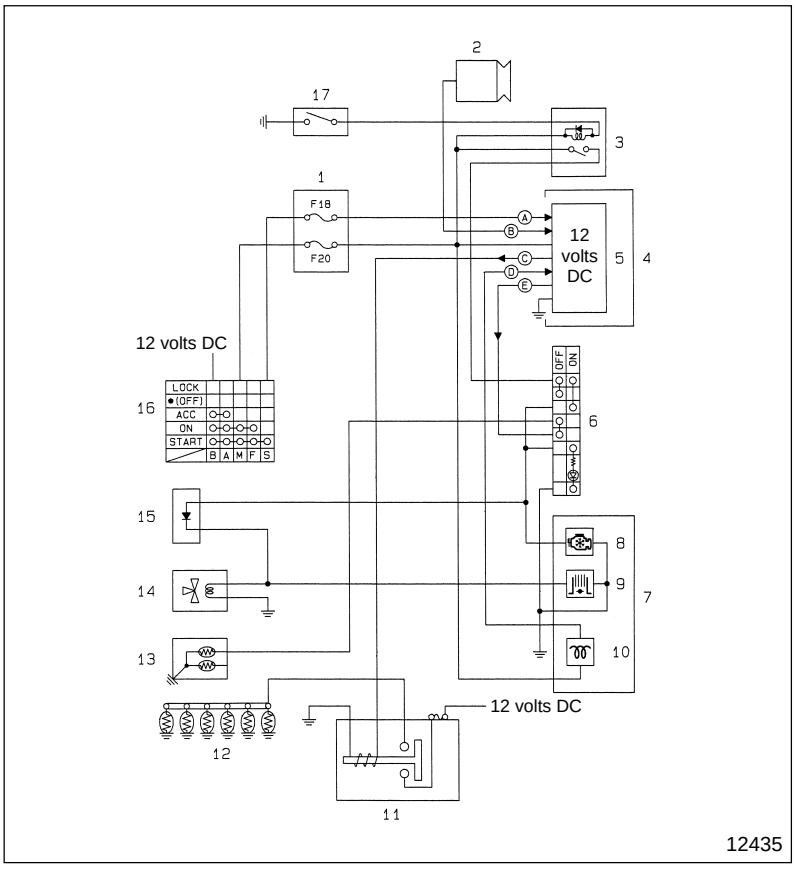

1 Fuse box
2 Alternator
3 Parking brake relay
4 Relay box
5 Multipurpose timing control unit
P54-9-2
6 Cold start switch
7 Meter cluster
8 Cold start indicator lamp
9 Exhaust brake indicator lamp
10 Engine preheating indicator lamp
11 Glow relay
12 Glow plug
13 Water temperature sensor
14 Exhaust brake 3-way magnetic valve
15 Diode
16 Starter switch
17 Parking brake switch

Ⓐ Engine start signal
Ⓑ Alternator charge signal
Ⓒ Glow relay activation signal
Ⓓ lighting-up signal
Ⓔ Engine coolant temperature signal

The engine preheating and cold start circuits of automatic transmission vehicles are the same as for manual transmission vehicles, except that parking brake relay **3** is installed in the cold start circuit part in automatic transmission vehicles.
54-2-6

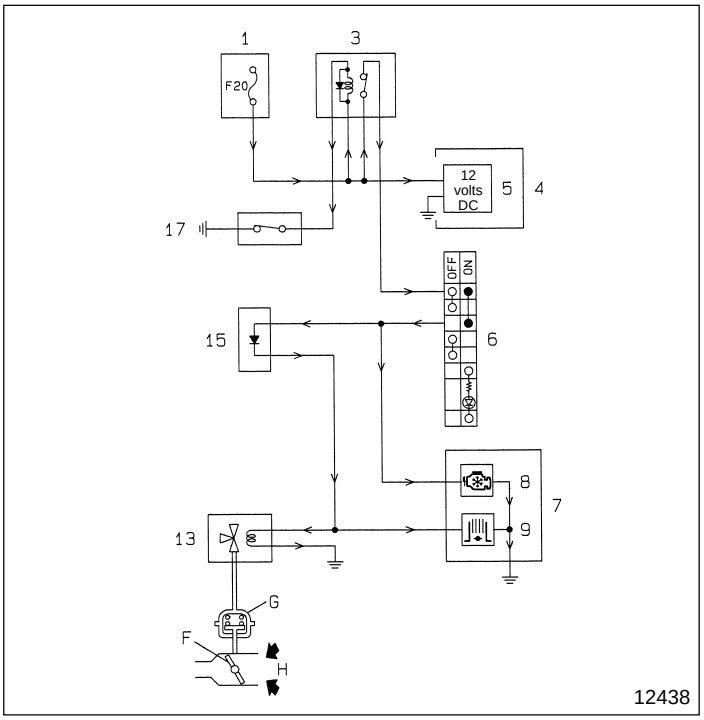

● Cold start circuit

This circuit is formed only when the parking brake is working. The current flow is as follows.
The operating mode is the same as in manual transmission vehicles. P54-2-9

Position of starter switch **16** : ON
1→3 (coil)→17→Ground
1→3 (contact point)→6→8→Ground
6→15→14→Ground
15→9→Ground

F : Exhaust brake butterfly valve
G : Exhaust brake unit
H : Cold air from engine exhaust system

TROUBLESHOOTING

Symptoms / Possible causes		Starter does not work	Starter works, but engine does not start: Pinion does not engage with ring gear	Starter works, but engine does not start: Pinion engages with ring gear, but does not rotate	Starter works, but engine does not start: Flywheel rotates, but engine does not start	Engine does not stop	Engine cannot be preheated	Engine hard to start	Remarks
Connector connection faulty, harness broken, grounding faulty		○			○	○	○	○	
Fuse blown		○							
Battery charge insufficient		○		○					
Starter	Magnetic switch contact point stuck or melted	○							
	Magnetic switch coil broken	○							
	Overrunning clutch malfunctioned		○						
	Pinion worn or damaged		○						
Starter relay faulty		○							
Starter switch faulty		○				○			
Flywheel ring gear worn or damaged			○						Gr 11
Fuel-cut relay faulty					○	○			
Fuel-cut motor faulty					○	○			
Engine stop cable broken or damaged					○	○			Gr 13
Engine stop cable adjusted incorrectly						○			Gr 13
Glow plug faulty							○	○	
Glow relay faulty							○	○	
Water temperature sensor faulty							○	○	
Multipurpose timing control unit faulty							○	○	
Connecting plate connection faulty							○	○	Gr 11
Transmission neutral switch faulty < Manual transmission >		○							
Transmission neutral relay faulty < Manual transmission >		○							
Sub-starter switch faulty									
Cold start switch faulty									
Exhaust brake 3-way magnetic valve faulty									
Parking brake relay faulty < Automatic transmission >									

Possible causes \ Symptoms		Engine does not start although sub-starter switch is turned ON	Cold start function does not work	Remarks
Connector connection faulty, harness broken, grounding faulty		○	○	
Fuse blown		○	○	
Battery charge insufficient		○	○	
Starter	Magnetic switch contact point stuck or melted	○		
	Magnetic switch coil broken	○		
	Overrunning clutch malfunctioned			
	Pinion worn or damaged			
Starter relay faulty		○		
Starter switch faulty		○		
Flywheel ring gear worn or damaged				Gr 11
Fuel-cut relay faulty				
Fuel-cut motor faulty				
Engine stop cable broken or damaged				Gr 13
Engine stop cable adjusted incorrectly				Gr 13
Glow plug faulty				
Glow relay faulty				
Water temperature sensor faulty			○	
Multipurpose timing control unit faulty			○	
Connecting plate connection faulty				Gr 11
Transmission neutral switch faulty < Manual transmission >		○		
Transmission neutral relay faulty < Manual transmission >		○		
Sub-starter switch faulty		○		
Cold start switch faulty			○	
Exhaust brake 3-way magnetic valve faulty			○	
Parking brake relay faulty < Automatic transmission >			○	

Inspection of Engine Preheating System

Service standards

Location	Maintenance item			Standard value	Limit	Remedy
—	Pre-glow time	Water temperature	60°C {140°F} or more	Does not pre-glow	—	Inspect
			0 to 60°C {32 to 140°F}	Approximately 12 seconds	—	
			0°C {32°F} or less	Approximately 12 seconds	—	
	After-glow time	Water temperature	60°C {140°F} or more	Does not after-glow	—	
			0 to 60°C {32 to 140°F}	Does not after-glow	—	
			0°C {32°F} or less	Approximately 20 seconds	—	
	Indicator lamp lighting time	Water temperature	60°C {140°F} or more	Does not light	—	
			0 to 60°C {32 to 140°F}	Does not light	—	
			0°C {32°F} or less	Approximately 8 seconds	—	

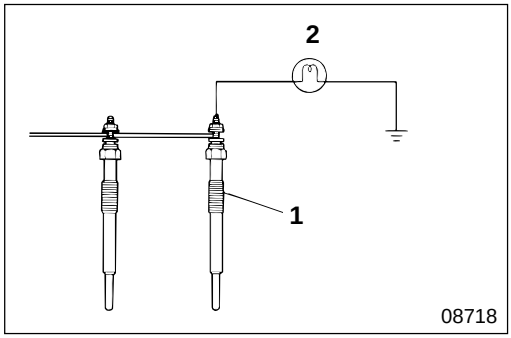

- Turn the starter switch OFF.
- Turn the cold start switch OFF.
- Connect inspection lamp **2** to glow plug **1**.

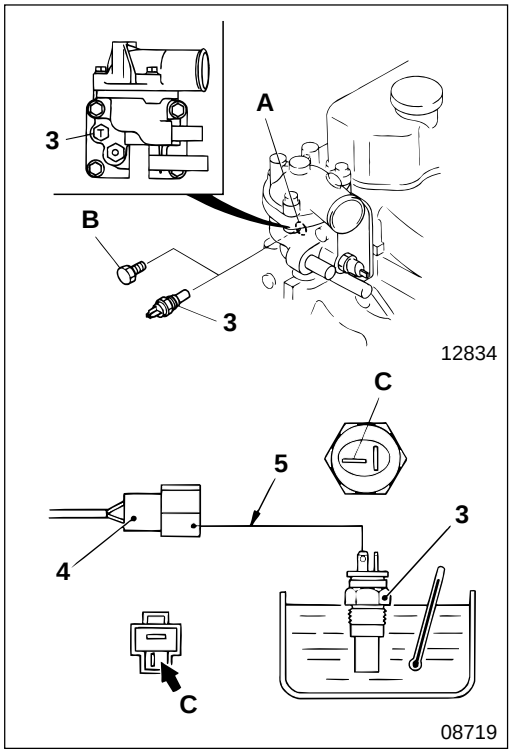

- Remove water temperature sensor **3** from the engine and plug sensor mounting part **A** with plug **B** (M16×1.5 mm).
  Removal and installation of water temperature sensor **3** Gr 14
- Connect extension harness **5** between water temperature sensor **3** and connector **4**.

NOTE

Connect extension harness 5 to terminal C of the multipurpose timing control unit.

- Put water temperature sensor **3** into a container filled with water.
- Carry out the following inspection while changing the water temperature in the container. If any fault is found, inspect each unit.

(1) Inspection of pre-glow time and indicator lamp lighting time

Turn the starter switch ON but do not start the engine. Make sure that the pre-glow time and the indicator lamp lighting time at each water temperature conform to the standard value.

- For pre-glow time inspection, measure the lighting time of inspection lamp **2**.
- For indicator lamp lighting time inspection, measure the lighting time of lamp within the meter cluster directly.

(2) Inspection of after-glow time

Start the engine and measure the lighting time of inspection lamp **2** from the point lamp within the meter cluster goes off, and make sure that the after-glow time conforms to the standard value.

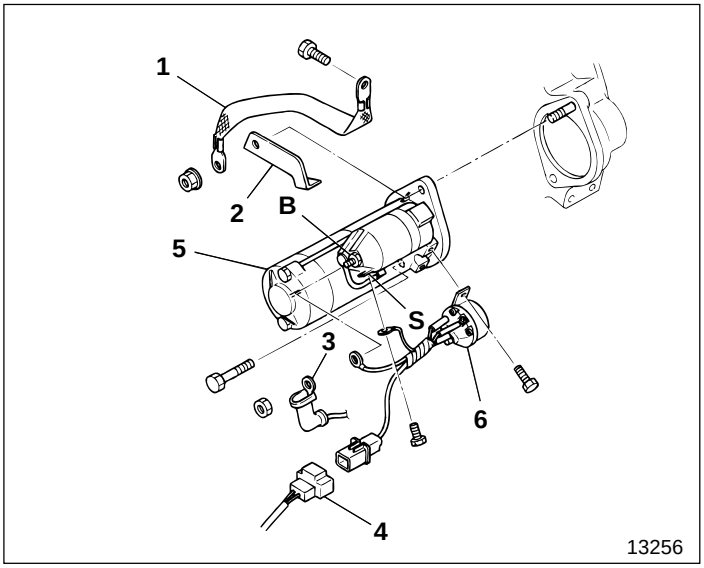

● **Removal sequence**

1 Ground strap (Engine ground)
2 Bracket
3 Starter cable (to battery connection)
4 Chassis harness
5 Starter 🕮 54-2-16
6 Starter relay

B : Terminal B
S : Terminal S

WARNING⚠

Never touch the starter with tools when you remove the harness from terminal B. This is because voltage is always supplied to it from starter cable 3, and you will short-circuit the starter. Before removing the harness from terminal B, remove the ⊖ battery terminal and tape it up to insulate it.

● **Installation sequence**

Follow the removal sequence in reverse.

Starter

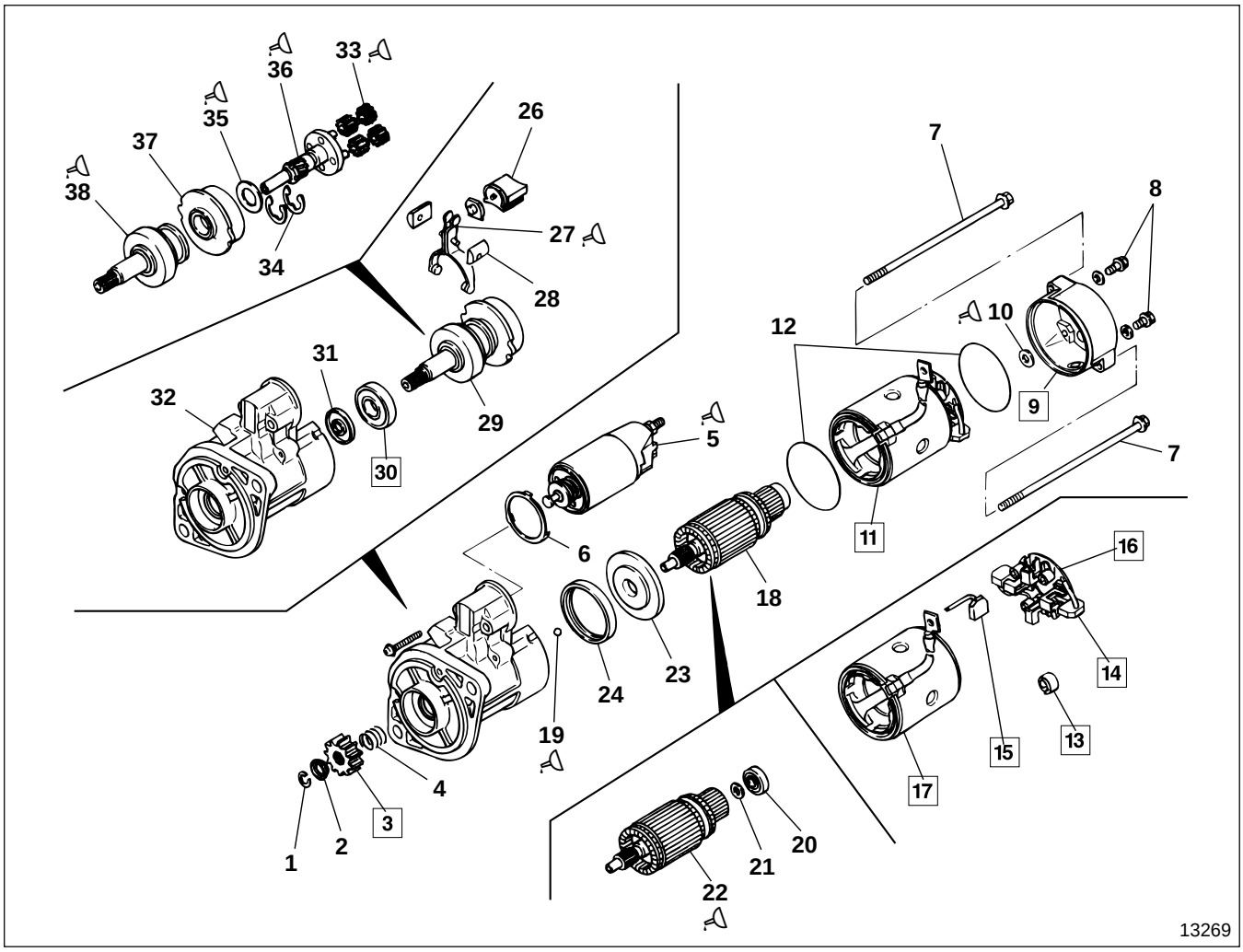

● **Disassembly sequence**

1 Stopper ring
2 Pinion stopper
3 Pinion
4 Spring
5 Magnetic switch
6 Shim
7 Bolt
8 Screw
9 Rear bracket
10 Conical washer
11 Yoke and brush holder assembly
12 Rubber packing
13 Brush spring
14 Brush ⊖
15 Brush ⊕
16 Brush holder assembly
17 Yoke assembly
18 Armature assembly
19 Ball
20 Rear bearing
21 Washer
22 Armature
23 Cover
24 Rubber packing
25 Front bracket assembly
26 Rubber packing
27 Lever
28 Bushing
29 Gear shaft and overrunning clutch assembly
30 Front bearing
31 Dust seal
32 Front bracket
33 Planetary gear
34 Washer
35 Washer
36 Gear shaft
37 Internal gear
38 Overrunning clutch

CAUTION⚠

- **When removing yoke and brush holder assembly 11, make sure you first pull out brushes 14, 15 from brush holder assembly 16 to avoid damaging the commutator of armature 22.**
- **Do not remove bearings 20, 30 unless they are faulty.**
- **Make sure you do not drop armature assembly 18 when you remove yoke and brush holder assembly 11 from front bracket assembly 25.**
- **Be careful not to lose ball 19, since it might come out together with armature assembly 18 when you remove it.**

NOTE

- **You do not have to remove pinion 3 when you disassemble or inspect only the motor assembly, for example: when inspection of the brush assembly is required.**
- **Except for the above, make sure you remove pinon 3 before disassembling any parts.**

● **Assembly sequence**

Follow the disassembly sequence in reverse.

NOTE

Whenever magnetic switch 5 has been replaced, be sure to adjust the pinion gap.

● **Inspection after assembly**

🕮 P54-2-18

Service standards

Unit : mm {in.}

Location	Maintenance item		Standard value	Limit	Remedy
—	Pinion gap		0.5 to 2.0 {0.02 to 0.079}	—	Adjust
—	No-load characteristic (11 V when current flowing)	Current	180 A or less	—	Inspect
		Revolutions per minute	3800 rpm or more	—	
13	Pressure of brush spring		29 to 39 N {6.6 to 8.8 lbf, 3 to 4 kgf}	20 N {4.4 lbf, 2 kgf}	Replace
14, 15	Length of brush		18 {0.71}	11 {0.43}	Replace
18	Armature assembly	Outer diameter of commutator	32 {1.26}	31.4 {1.24}	Replace
		Deflection of commutator periphery	—	0.05 {0.002} or more	Replace
		Mica depth between segments	0.5 {0.02}	0.2 {0.0079} or less	Correct or replace

Lubricant

Location	Points of application	Kinds	Quantity
5	Contact surface between lever and magnetic switch	Multipurpose grease [NLGI No.2 Li soap]	As required
10	Conical washer	Multipurpose grease [NLGI No.2 Li soap]	As required
19	Ball	MOLYKOTE ® AG650	As required
22, 33	Teeth of armature gear and planetary gear	MOLYKOTE ® AG650	As required
22, 36	Friction surfaces of gear shaft and armature	MOLYKOTE ® AG650	As required
27	Friction surfaces of lever and overrunning clutch	Multipurpose grease [NLGI No.2 Li soap]	As required
35	Washer	MOLYKOTE ® AG650	As required
36, 38	Friction surfaces of gear shaft and overrunning clutch	Multipurpose grease [NLGI No.2 Li soap]	As required
38	Spline of overrunning clutch	Multipurpose grease [NLGI No.2 Li soap]	As required

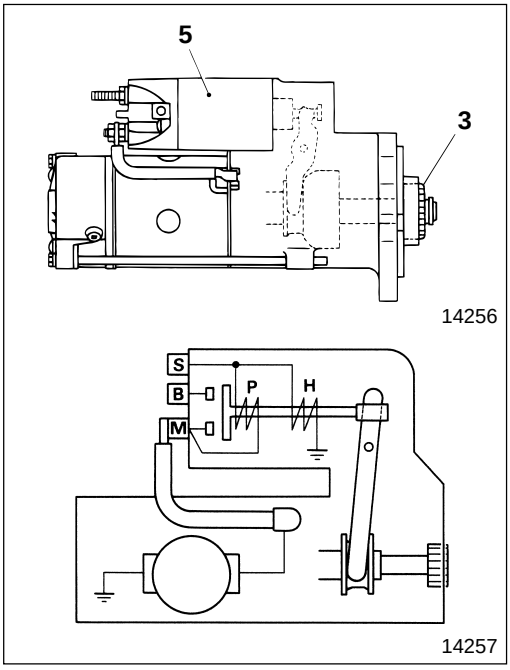

◆ Service procedure

● **Inspection after assembly**

Inspections after assembling the starter should be carried out with current fed to the starter.

WARNING⚠

- **Do not touch pinion 3 because it jumps out and turns when current is fed to the starter.**
- **Take care not to burn your hand, magnetic switch 5 might be hot after inspection.**

CAUTION⚠

- **The current feeding time to the starter should be within 10 seconds at pull-in coil P side and within 30 seconds at holding coil H side. If the current feeding time exceeds these limits the coil might burn due to overheating.**
- **When current is flowing into the starter, a current of over 100 amperes is fed. When inspecting, use thick cable, such as a booster cable, and make secure connections.**

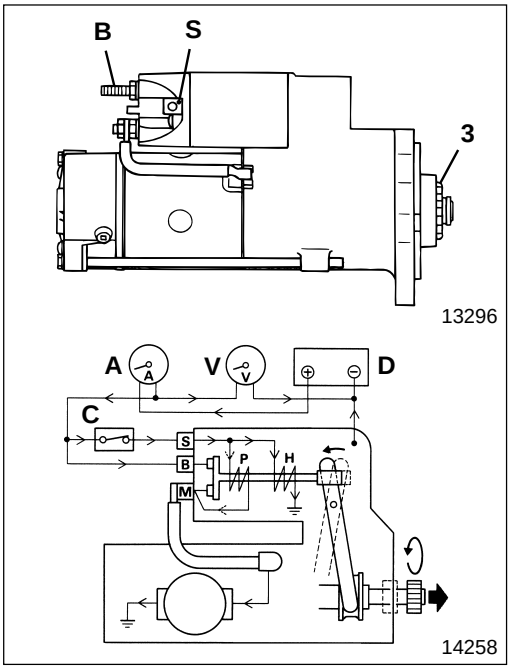

(1) Performance test

- Connect the starter as illustrated.
  A : Ammeter
  B : Terminal B of starter
  C : Switch
  D : DC power supply (12 volts)
  S : Terminal S of starter
  V : Voltmeter
- Set the voltage to 11 volts DC.

CAUTION⚠

Up to 12 volts can be loaded.

- The following work should be done with current fed to the starter. You must complete the full procedure of measuring the intensity of the current and the number of revolutions within 30 seconds.
  - Turn switch **C** ON and feed current into the starter. In this state, pinion **3** jumps out and rotates.

CAUTION⚠

When switch C is turned ON, current is fed both to pull-in coil P and holding coil H. When a large amount of current is fed into terminal M from DC power supply D, via terminal B of the starter, the current stops flowing into the pull-in coil but continues to flow into the holding coil.

To avoid burning the holding coil, be sure to carry out the performance test within 30 seconds.

- Measure the intensity of the current and the number of revolutions of the starter. Train a strobe light on pinion **3** to measure the revolutions.
- Turn switch **C** OFF to stop current to the starter.
- If the measured value deviates from the standard value, disassemble the starter again and inspect it.

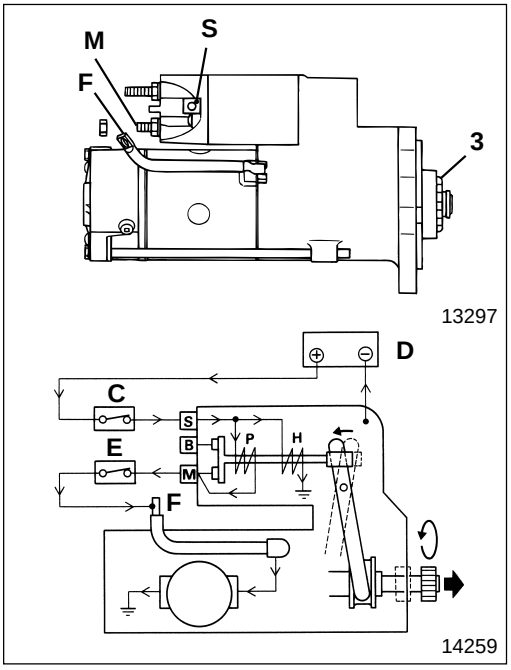

(2) Pinion gap

[Inspection]

- Connect the starter as illustrated.
  - **C** : Switch
  - **D** : 12 volts DC
  - **E** : Switch
  - **F** : Cable
  - **M** : Terminal M of starter
  - **S** : Terminal S of starter

- The following work should be done with current fed to the starter. You must complete the full procedure for measuring the pinion gap within 30 seconds.
  - Turn switches **C** and **E** ON and feed current to the starter. In this state, pinion **3** jumps out and rotates.

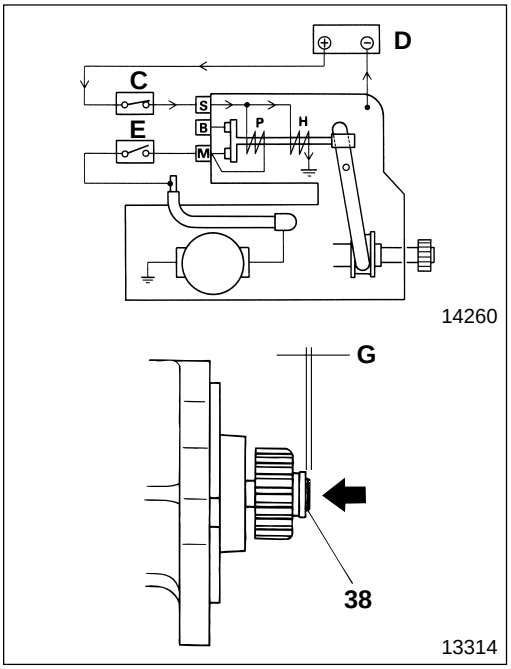

- Within five seconds of pinion **3** rotating, turn switch **E** OFF to stop rotation of the pinion.

CAUTION ⚠

When switches C and E are turned ON, current is fed both to pull-in coil P and holding coil H. The circuit is wired in such a way that the voltage is not applied to terminal B of the starter, so the current continues to flow into the pull-in coil while pinion 3 rotates.

To avoid burning the pull-in coil, be sure to turn switch E OFF within 5 seconds of the pinion rotating.

- Push the tip of overrunning clutch **38** lightly and measure pinion gap **G** in the axial direction.
- Turn switch **C** OFF to stop current to the starter.
- If the measured value deviates from the standard value, adjust the pinion gap as follows.

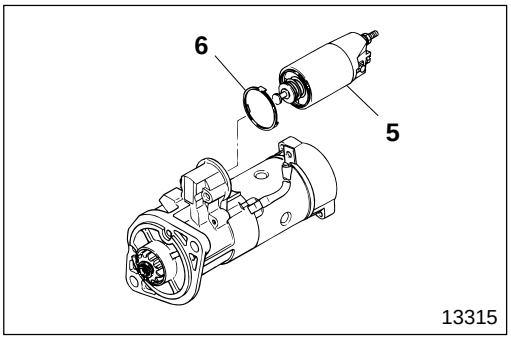

[Adjustment]

- Remove magnetic switch **5** from front bracket assembly **25**.
- Change the thickness of shims **6**. Adding shims decreases pinion gap **G**.
- Type of shim : 0.5, 0.25 mm {0.02, 0.0098 in.}

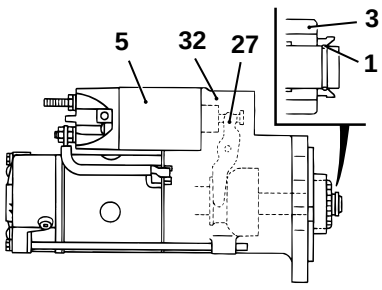

14261

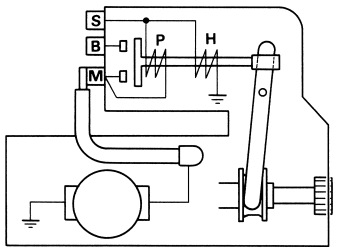

14257

3 Pinion

[Removal]
Feed current to the starter and protrude pinion **3** to remove the pinion.

WARNING⚠

- **Do not touch pinion 3 because it jumps out and turns when current is fed to the starter.**
- **Take care not to burn your hand, magnetic switch 5 might be hot after inspection.**

CAUTION⚠

- **The current feeding time to the starter should be within 10 seconds at pull-in coil P side and within 30 seconds at holding coil H side. If the current feeding time exceeds these limits, the coil might burn due to overheating.**
- **Before making pinion 3 jump out, be sure to feed current to the starter to obtain the correct state. If current is not fed to the starter and lever 27 is pulled to protrude the pinion, front bracket 32 or the lever might be damaged due to the shock produced on removal of stopper ring 1.**
- **The current, when fed to the starter, is over 100 amperes. When inspecting, use thick cable, such as a booster cable, and make secure connections.**

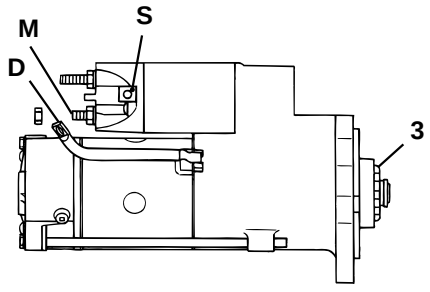

13297

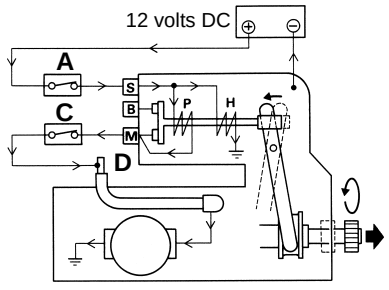

14259

- Connect the starter as illustrated.
  A : Switch
  C : Switch
  D : Cable
  M : Terminal M of starter
  S : Terminal S of starter

- The following work should be done while current is flowing into the starter. You must complete the full procedure for removing pinion **3** within 30 seconds.
- Turn switches **A** and **C** ON and feed current to the starter. In this state, pinion **3** jumps out and rotates.

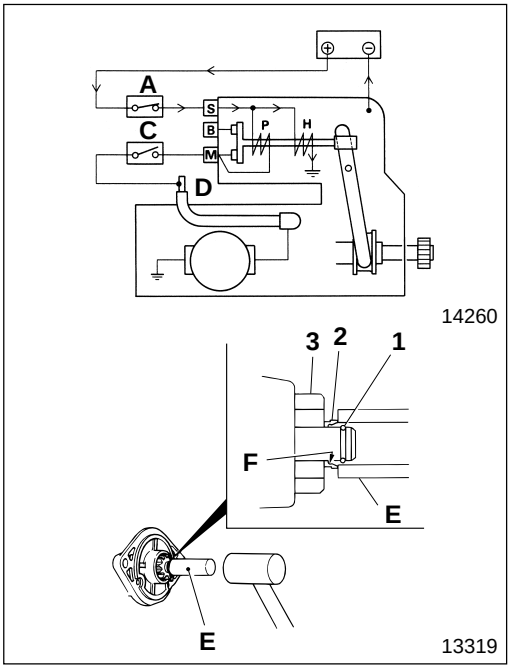

- Within 5 seconds of pinion **3** rotating, turn switch **C** OFF to stop rotation of the pinion.

CAUTION

When switches A and C are turned ON, current is fed both to pull-in coil P and holding coil H. The circuit is wired in such a way that the voltage is not applied to terminal B of the starter, so the current continues to flow into the pull-in coil while pinion 3 rotates.

To avoid burning the pull-in coil, be sure to turn switch C OFF within five seconds after the pinion rotates.

- Apply pipe-shaped tool **E** onto pinion stopper **2**.
- Hit tool **E** lightly using a mallet to remove stopper ring **1** from ring groove **F** of pinion stopper **2**.
- Remove stopper ring **1** and pinion **3**.
- Turn switch **A** OFF to stop current to the starter.

NOTE

When the current to the starter is stopped, stopper ring 1 might fall back into ring groove F of pinion stopper 2 because pinion 3 is pushed inside.

If this occurs, feed current to the starter again and carry out the work.

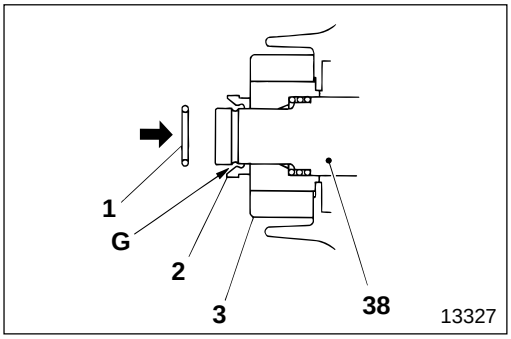

[Installation]

When installing pinion **3**, it is not necessary to feed current to the starter.

- Install pinion stopper **2** and pinion **3** onto overrunning clutch **38** in the direction as illustrated.
- Fit stopper ring **1** into ring groove **G** of overrunning clutch **38**.

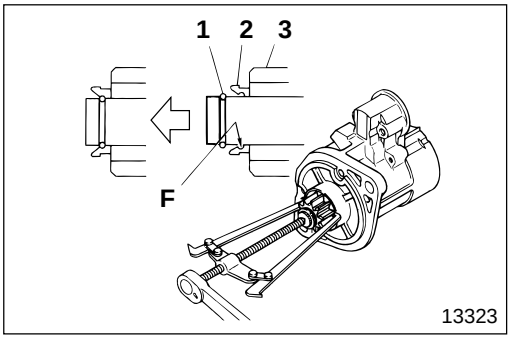

- Pull pinion **3** firmly and set stopper ring **1** on groove **F** of pinion stopper **2**.

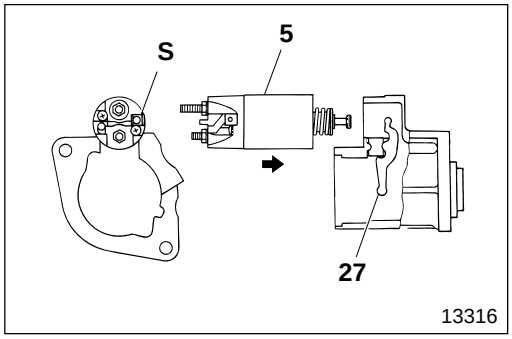

5 Magnetic switch

[Installation]
Install magnetic switch **5** to lever **27**, with terminal **S** facing the direction as illustrated.

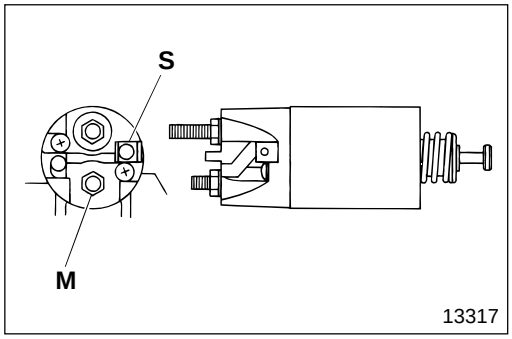

[Inspection]

(1) Testing for coil discontinuity

- Make sure that there is continuity between terminals **S** and **M**.
- If there is no continuity, replace magnetic switch **5**.

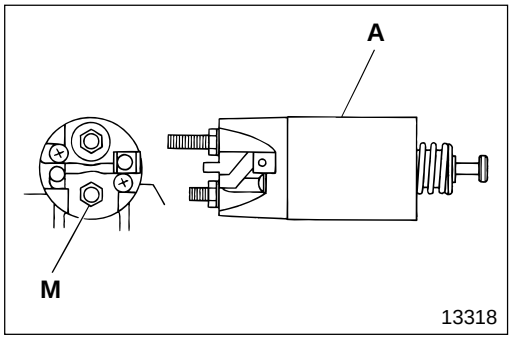

- Make sure that there is continuity between terminal **M** and body **A** of magnetic switch **5**.
- If there is no continuity, replace magnetic switch **5**.

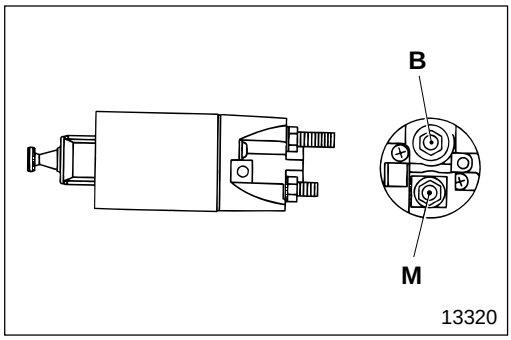

(2) Inspection of welded connections

- Make sure that there is no continuity between terminals **B** and **M**.
- If there is continuity, replace magnetic switch **5**.

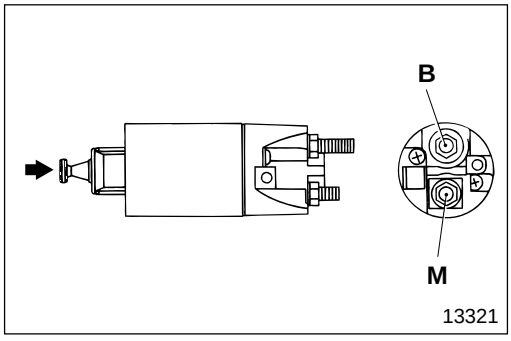

(3) Inspection of connections

- Push the tip of magnetic switch **5** to close the internal connection.
- Make sure that there is continuity between terminals **B** and **M**.
- If there is no continuity, replace magnetic switch **5**.

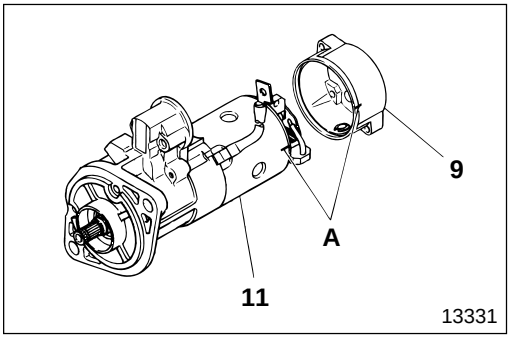

9 **Installation of rear bracket**

A : Alignment mark

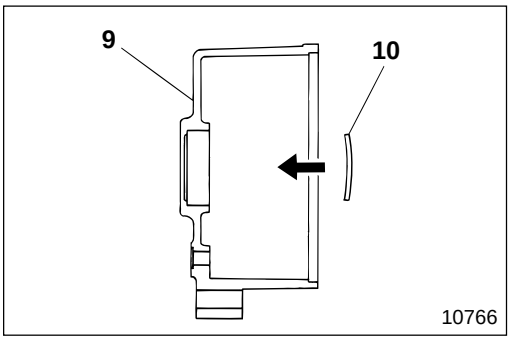

10 **Installation of conical washer**

Install conical washer **10** to rear bracket **9** in the direction as illustrated.

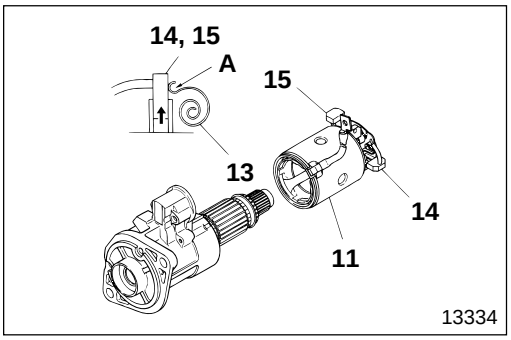

11 **Removal and installation of yoke and brush holder assembly**

- Pull point **A** of brush spring **13** to pull out brushes **14**, **15**.
- After pulling out brushes **14**, **15**, secure them with brush spring **13** as illustrated.
- Remove yoke and brush holder assembly **11**.
- For installation, reverse the removal procedure.

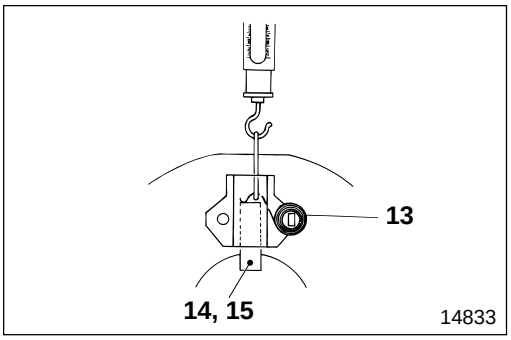

13 **Inspection of brush spring**

- Use new brushes **14**, **15** and measure the load when brush spring **13** is detached from the brushes.
- If the measured value is higher than the limit, replace brush spring **13**.

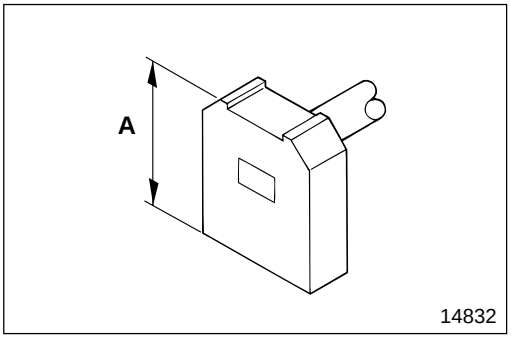

14 **15** **Inspection of brush**

(1) Length of brush

If the measured value is lower than the limit, replace brushes **14**, **15**.

A : Length of brush

NOTE

To replace brush ⊖ 14, replace entire brush holder assembly 16.

(2) Contact surface with commutator

If the surface where the brushes contact the commutator is rough or is worn unevenly, polish the surface with emery paper (300 to 500 grit).

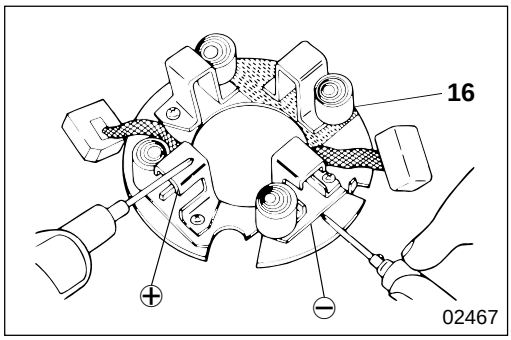

16 Inspection of brush holder assembly

- Make sure that there is no continuity between the ⊕ side of the brush holder and the ⊖ side of the holder plate.
- If there is continuity, they are grounded. Replace brush holder assembly **16**.

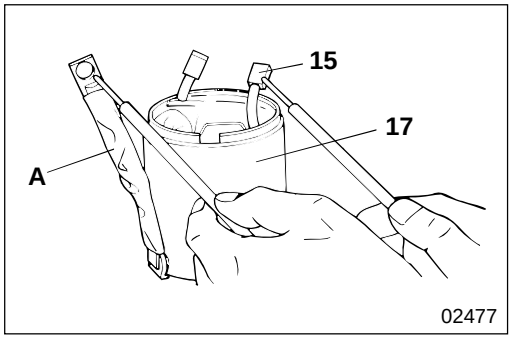

17 Inspection of yoke assembly

(1) Testing for coil disconnection

- Make sure that there is continuity between cable **A** and brush ⊕ **15**.
- If there is no continuity, they are disconnected. Replace brush ⊕ **15** or yoke assembly **17**.

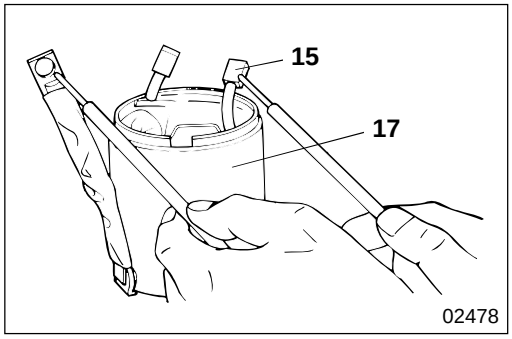

(2) Testing for coil grounding

- Make sure that there is no continuity between yoke assembly **17** and brush ⊕ **15**.
- If there is continuity, they are short-circuited. Inspect the insulated point. If it is hard to repair, replace brush ⊕ **15** or yoke assembly **17**.

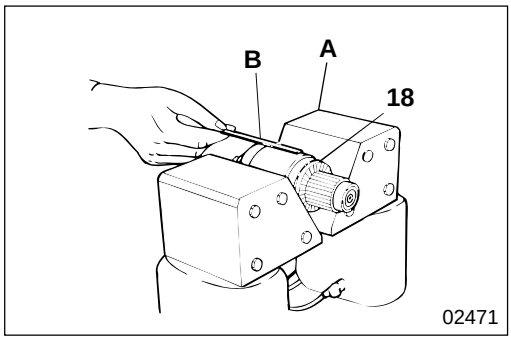

18 Inspection of armature assembly

(1) Testing for coil short-circuit

- Place iron rod **B** parallel to armature assembly **18**.
  A : Armature tester
- Rotate armature assembly **18** slowly.
- If iron rod **B** is pulled or shakes, it indicates that armature assembly **18** is short-circuited, so replace it.

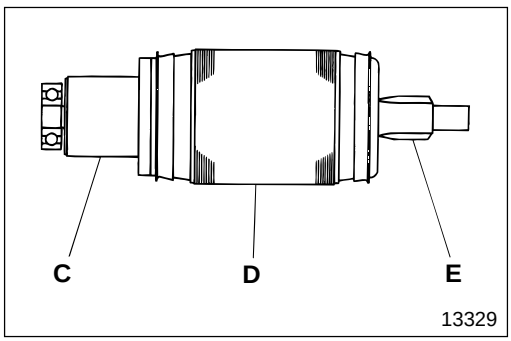

(2) Testing for coil grounding

- Make sure that there is no continuity between commutator **C** and core **D** (or shaft **E**).
- If there is continuity between them, they are short-circuited. Replace armature assembly **18**.

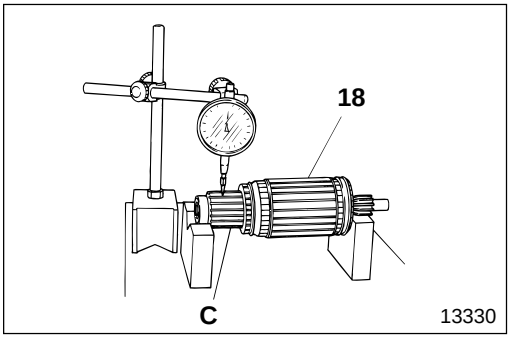

(3) Deflection of commutator

If the measured value is higher than the limit, adjust the outer diameter of commutator **C** within the limit.

(4) Rough commutator surface

- If the surface is rough or has stepped wear, polish the surface with emery paper (300 to 500 grit).
- After polishing, check deflection of commutator **C**.

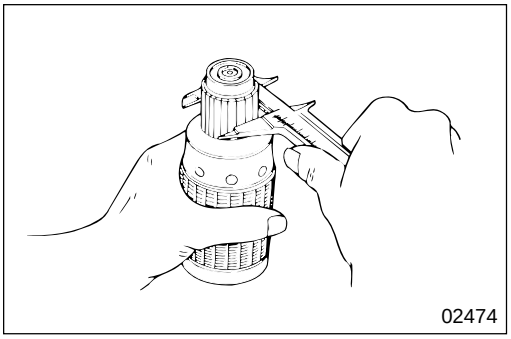

(5) Outer diameter of commutator

If the measured value is higher than the limit, replace armature assembly **18**.

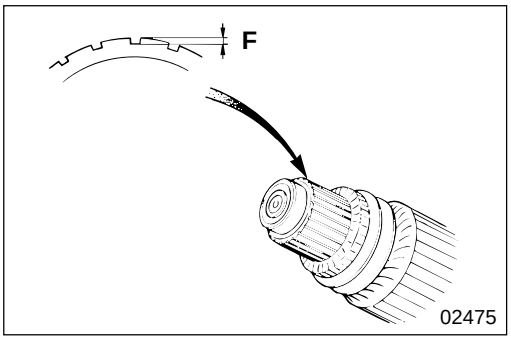

(6) Mica depth between segments

- If the measured value is lower than the limit, correct or replace armature assembly **18**.
  F : Mica depth

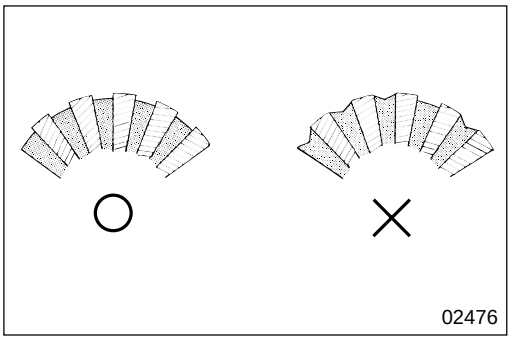

- If the mica is worn as illustrated, replace armature assembly **18**.
  ○ : Good
  × : Faulty

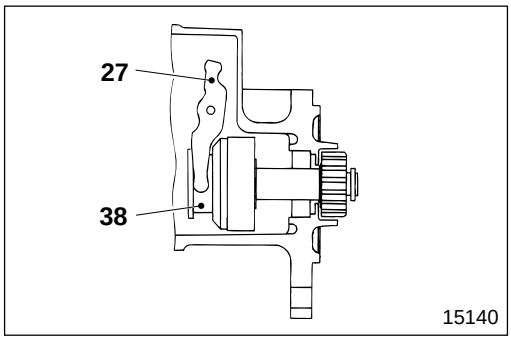

27 **Installation of lever**

Install lever **27** onto overrunning clutch **38** in the direction as illustrated.

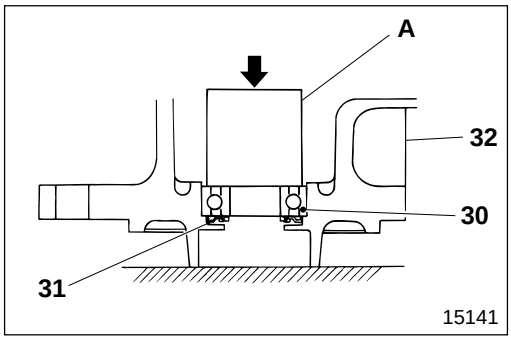

30 **Installation of front bearing**

- Install dust seal **31** before press-fitting front bearing **30**.
- Press-fit front bearing **30** into front bracket **32** using pipe-shaped tool **A**.

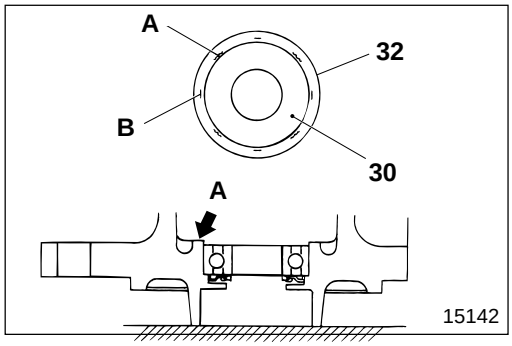

- Re-caulk front bracket **32**.

NOTE

Do not re-caulk previously caulked points B.

A : Caulking points (4 points)

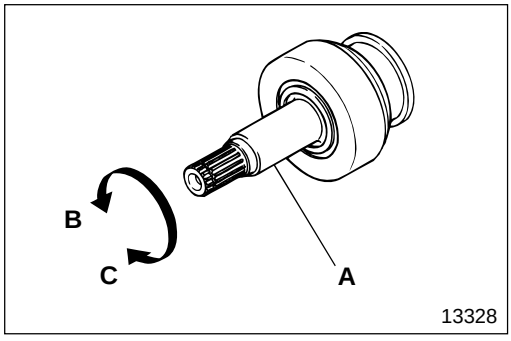

38 **Installation of overrunning clutch**

Carry out the following inspection. If any fault is found, replace overrunning clutch **38**.

- Make sure that shaft **A** turns smoothly when turned in direction **B**.
- Make sure that shaft **A** locks when turned in direction **C**.

M E M O

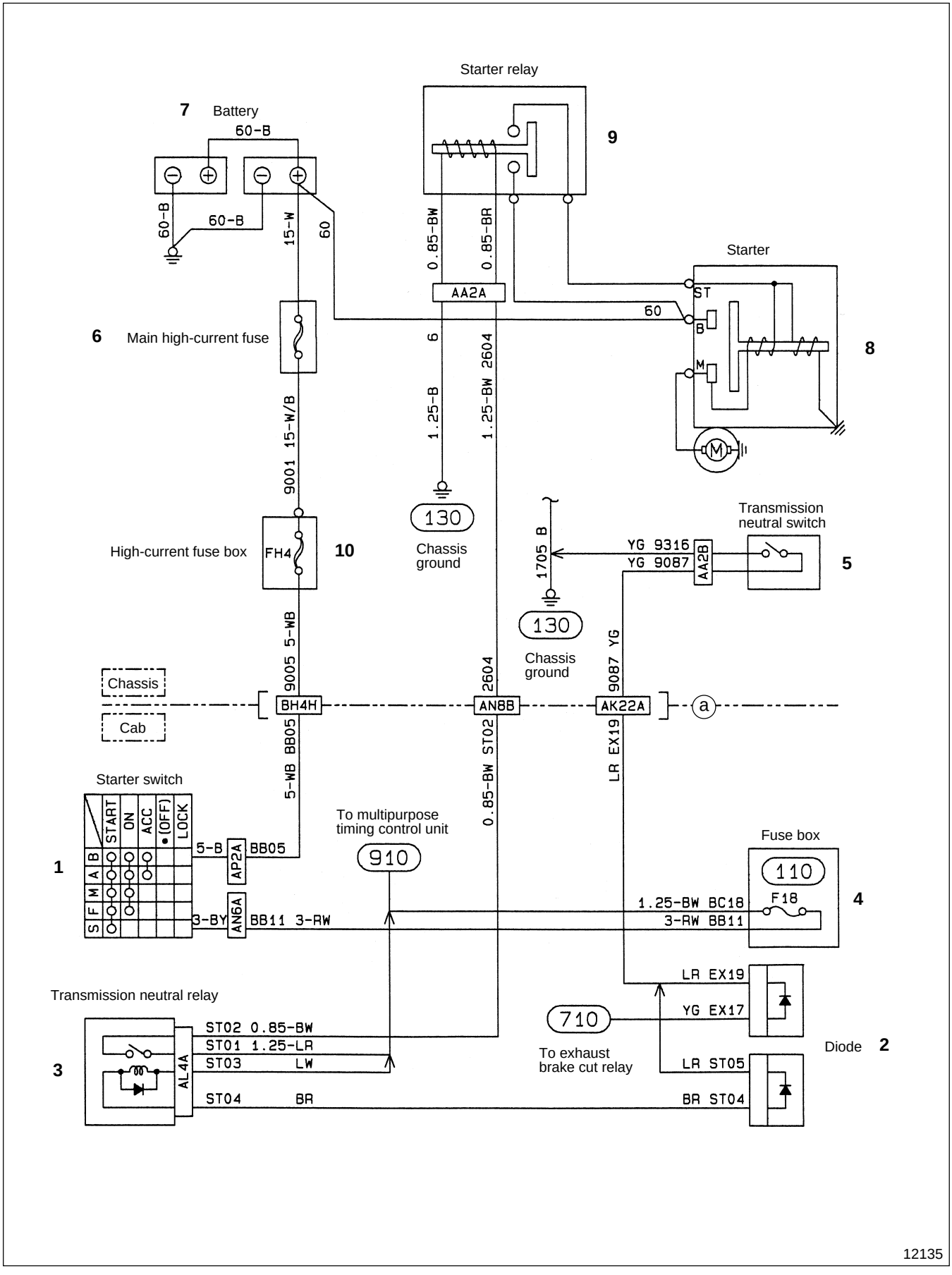
Starter relay
7 Battery
60-B
9
60-B
60-B
15-W
60
0.85-BW
0.85-BR
AA2A
Starter
ST
60
B
M
8
6 Main high-current fuse
6
1.25-BW 2604
1.25-B
9001 15-W/B
130
Chassis ground
Transmission neutral switch
1705 B
YG 9316
YG 9087
AA2B
5
High-current fuse box
FH4
10
130
Chassis ground
9005 5-WB
9087 YG
Chassis
Cab
BH4H
AN8B
AK22A
a
5-WB BB05
0.85-BW ST02
LR EX19
Starter switch
To multipurpose timing control unit
910
Fuse box
110
F18
4
1.25-BW BC18
3-RW BB11
1
S F M A B START ON ACC (OFF) LOCK
5-B
AP2A
BB05
3-BY
AN6A
BB11 3-RW
LR EX19
YG EX17
710
To exhaust brake cut relay
Diode
2
Transmission neutral relay
3
AL4A
ST02 0.85-BW
ST01 1.25-LR
ST03 LW
ST04 BR
LR ST05
BR ST04
12135

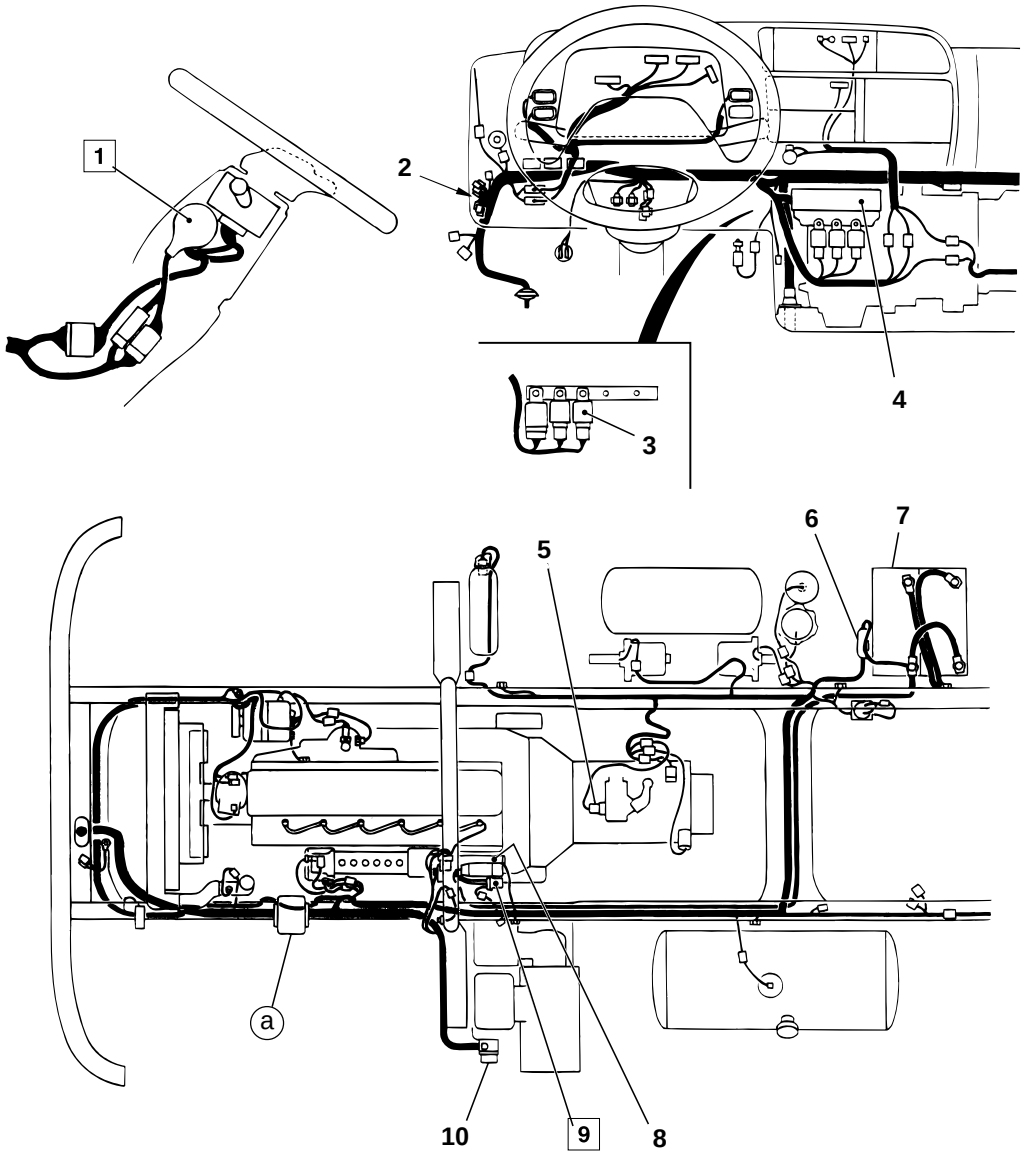

12721

1 Starter switch
2 Diode
3 Transmission neutral relay 🕮 (604)
4 Fuse box 🕮 (104)
5 Transmission neutral switch 🕮 (802)
6 Main high-current fuse 🕮 (104)
7 Battery 🕮 (101)
8 Starter 🕮 (201)
9 Starter relay
10 High-current fuse box 🕮 (104)

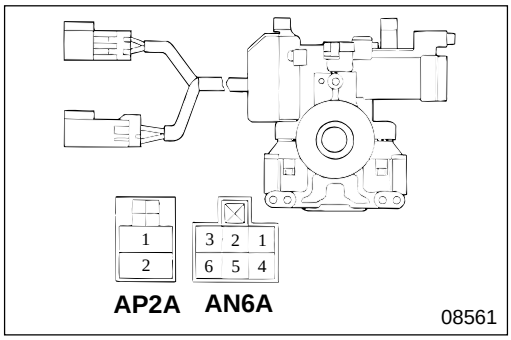

◆ Service procedure

1 **Inspection of the starter switch**

- Follow the table below to inspect continuity :

	AP2A		AN6A		
	②	①	③	④	②
LOCK					
•(OFF)					
ACC	○		○		
ON	○	○	○	○	
START	○	○	○	○	○
	B	M	A	F	S

○—○ : There is continuity between terminals ○ and ○.

- If any fault is found, replace starter switch **1**. Gr 37

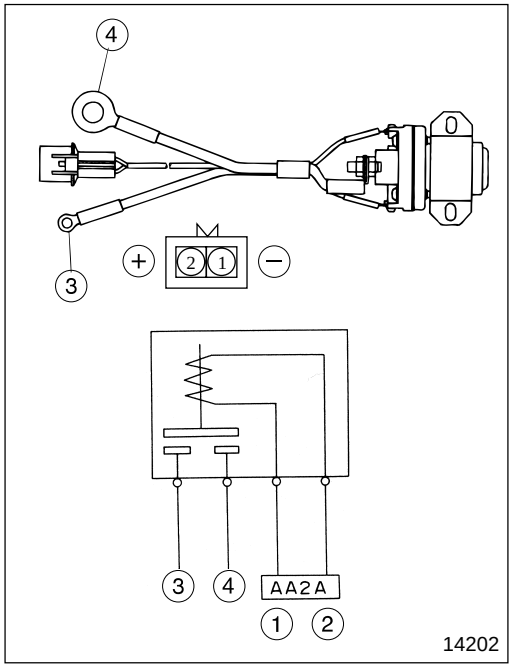

9 **Inspection of starter relay**

- Follow the table below to inspect continuity :

	④	③	②	①
No current			○	○
Current	○	○	⊕	⊖

○—○ : There is continuity between terminals ○ and ○.

⊕—⊖ : Indicates that 12 volts DC is applied to the line between the terminals.

- If any fault is found, replace starter relay **9**. P54-2-15

M E M O

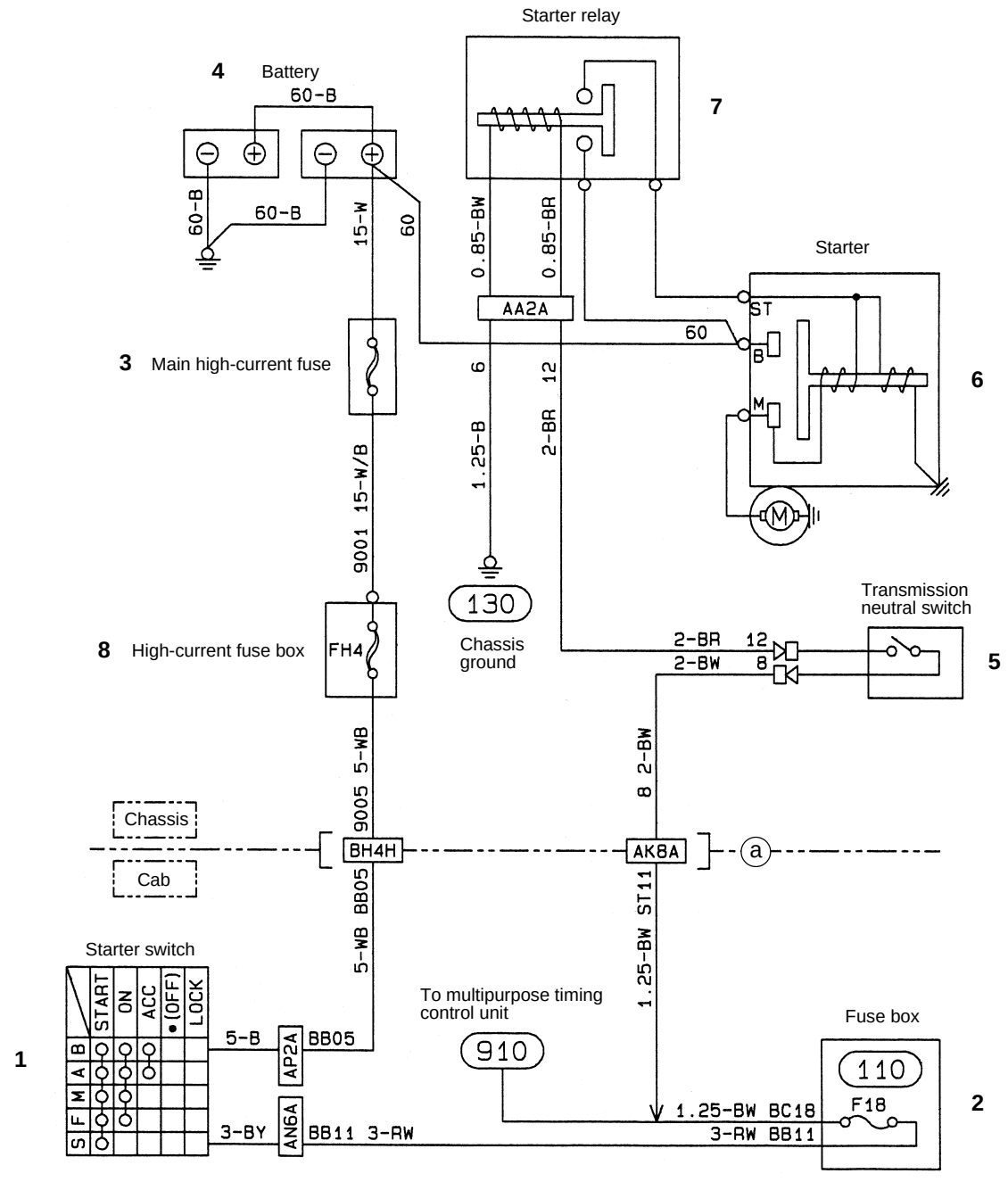
Starter relay
4 Battery
60-B
7
60-B
60-B
15-W
60
0.85-BW
0.85-BR
Starter
AA2A
ST
60
B
M
6
3 Main high-current fuse
6
12
1.25-B
2-BR
9001 15-W/B
130
Chassis ground
Transmission neutral switch
8 High-current fuse box
FH4
2-BR 12
2-BW 8
5
9005 5-WB
8 2-BW
Chassis
Cab
BH4H
AK8A
a
5-WB BB05
1.25-BW ST11
Starter switch
To multipurpose timing control unit
Fuse box
1
B
A
M
F
S
START
ON
ACC
(OFF)
LOCK
5-B
AP2A
BB05
910
110
F18
2
1.25-BW BC18
3-RW BB11
3-BY
AN6A
BB11 3-RW

12136

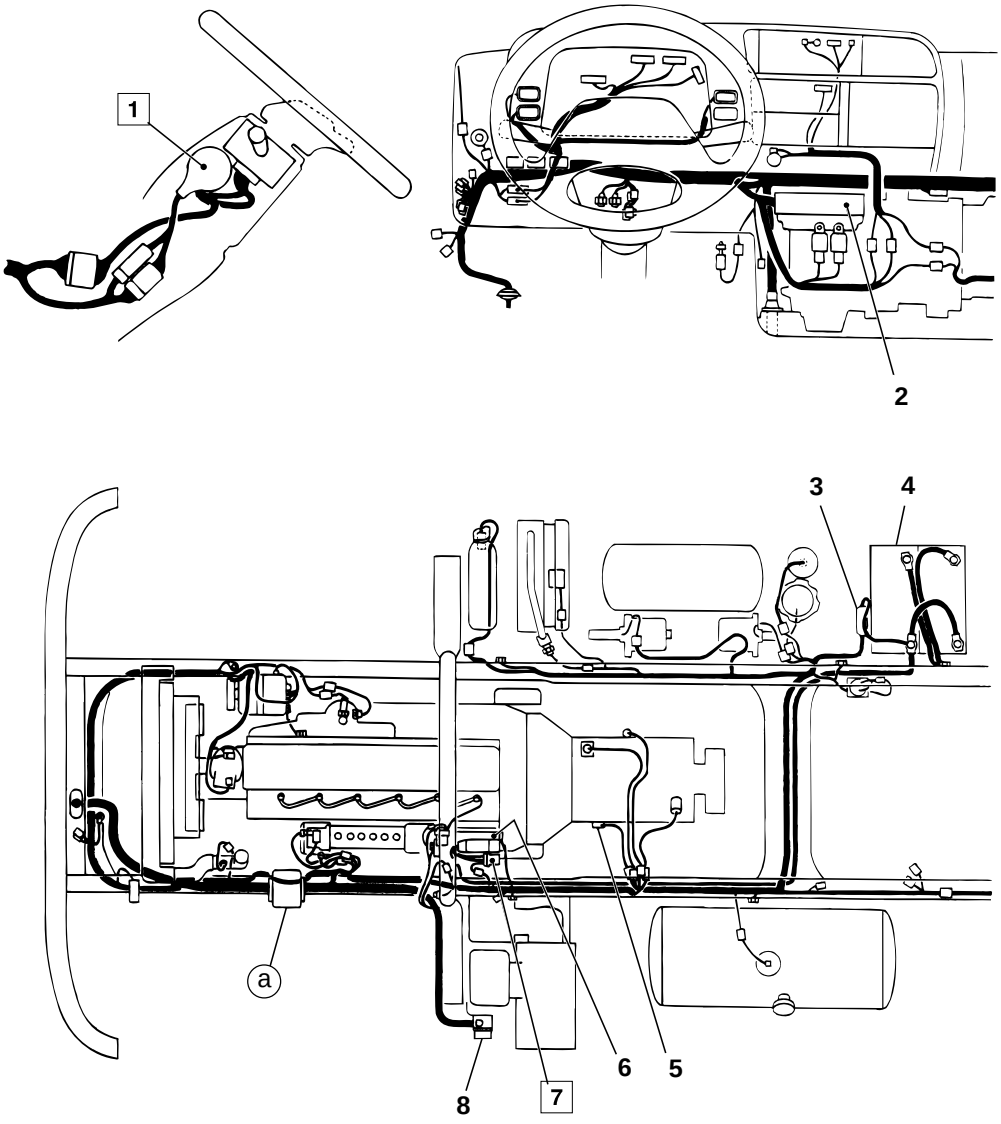

12722

1 Starter switch
2 Fuse box 📖 104
3 Main high-current fuse 📖 104
4 Battery 📖 101
5 Transmission neutral switch 📖 802
6 Starter 📖 201
7 Starter relay
8 High-current fuse box 📖 104

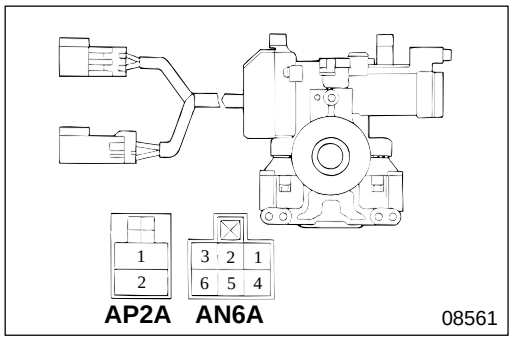

◆ Service procedure

1 **Inspection of the starter switch**

- Follow the table below to inspect continuity :

	AP2A		AN6A		
	②	①	③	④	②
LOCK					
•(OFF)					
ACC	○		○		
ON	○	○	○	○	
START	○	○	○	○	○
	B	M	A	F	S

○—○ : There is continuity between terminals ○ and ○.

- If any fault is found, replace starter switch **1**. Gr 37

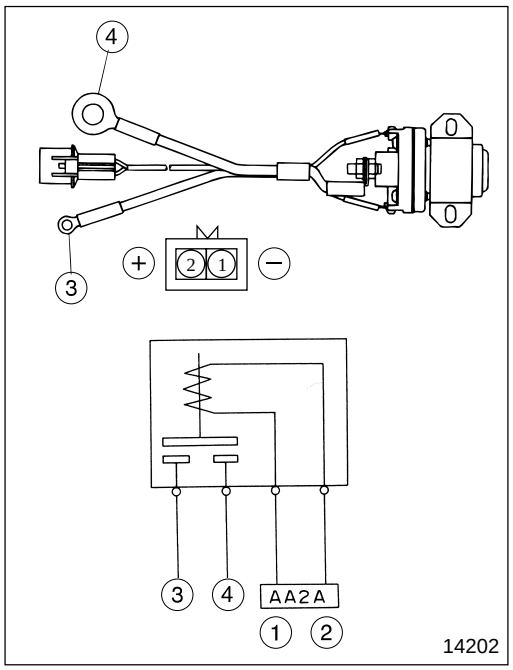

7 **Inspection of starter relay**

- Follow the table below to inspect continuity :

	④	③	②	①
No current			○	○
Current	○	○	⊕	⊖

○—○ : There is continuity between terminals ○ and ○.
⊕—⊖ : Indicates that 12 volts DC is applied to the line between the terminals.

- If any fault is found, replace starter relay **7**. 54-2-15

M E M O

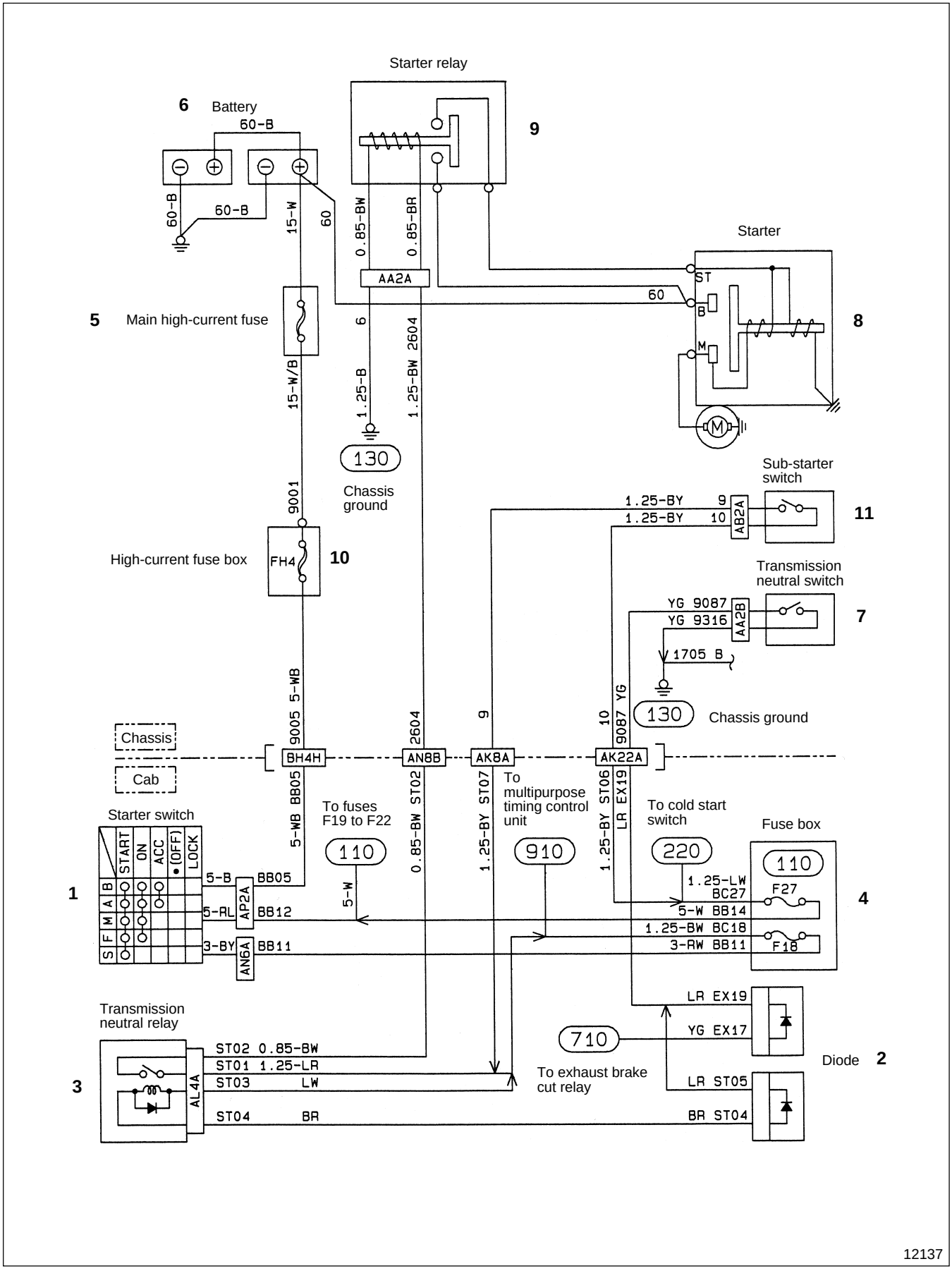
Starter relay
6
Battery
60-B
9
60-B
60-B
15-W
60
0.85-BW
0.85-BR
AA2A
Starter
ST
60
B
M
8
5
Main high-current fuse
6
1.25-BW 2604
1.25-B
130
Chassis ground
15-W/B
9001
Sub-starter switch
1.25-BY 9
1.25-BY 10
AB2A
11
High-current fuse box
FH4
10
Transmission neutral switch
YG 9087
YG 9316
AA2B
7
1705 B
130
Chassis ground
9005 5-WB
2604
9
10
9087 YG
Chassis
Cab
BH4H
AN8B
AK8A
AK22A
To multipurpose timing control unit
1.25-BY ST07
1.25-BY ST06
LR EX19
To cold start switch
Fuse box
To fuses F19 to F22
5-WB BB05
0.85-BW ST02
Starter switch
START
ON
ACC
(OFF)
LOCK
B
A
M
F
S
110
910
220
110
F27
1.25-LW BC27
5-W BB14
1.25-BW BC18
3-RW BB11
F18
4
1
5-B
BB05
AP2A
5-RL
BB12
3-BY
AN6A
BB11
5-W
Transmission neutral relay
LR EX19
YG EX17
710
Diode
2
To exhaust brake cut relay
LR ST05
BR ST04
3
AL4A
ST02 0.85-BW
ST01 1.25-LR
ST03 LW
ST04 BR
12137

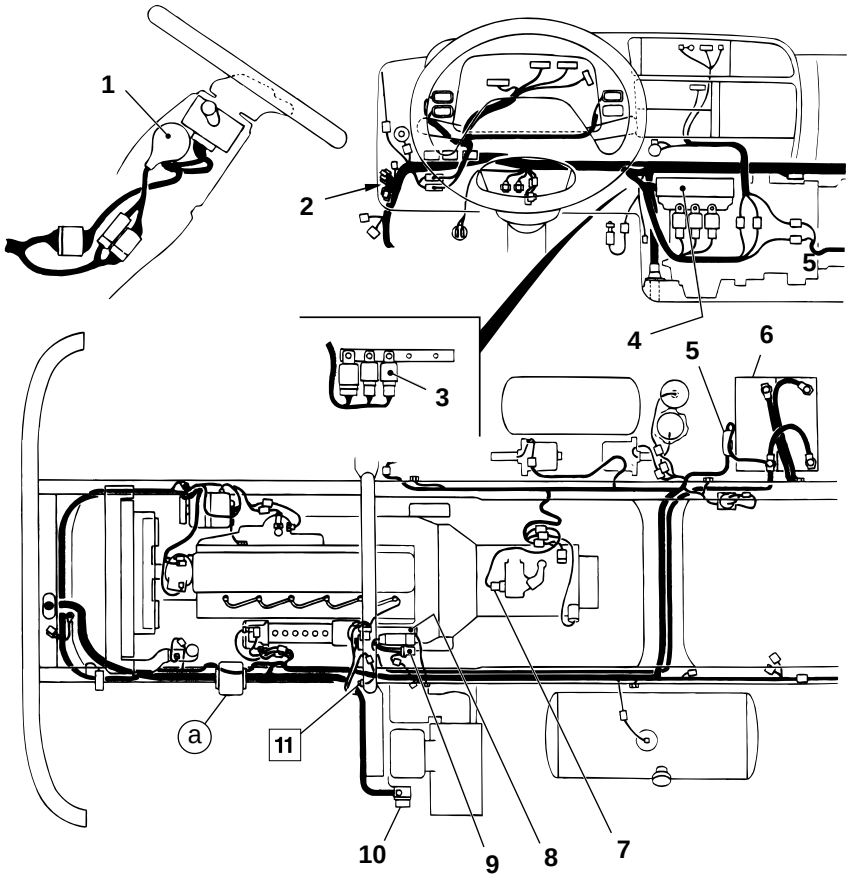

12723

1 Starter switch 📖 (210)
2 Diode
3 Transmission neutral relay 📖 (604)
4 Fuse box 📖 (104)
5 Main high-current fuse 📖 (104)
6 Battery 📖 (101)
7 Transmission neutral switch 📖 (802)
8 Starter 📖 (201)
9 Starter relay 📖 (210)
10 High-current fuse box 📖 (104)
11 Sub-starter switch

◆ Service procedure

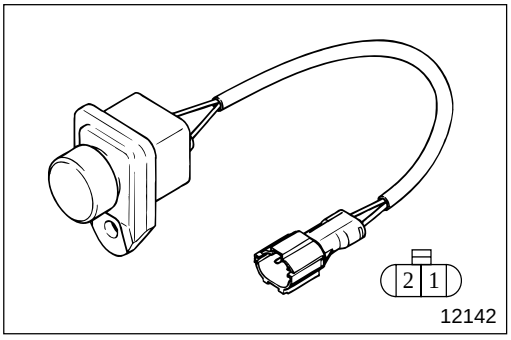

12142

11 **Inspection of sub-starter switch**

- Follow the table below to inspect continuity :

	①	②
ON	○—○	
OFF		

○—○ : There is continuity between terminals ○ and ○.

- If any fault is found, replace sub-starter switch **11**.

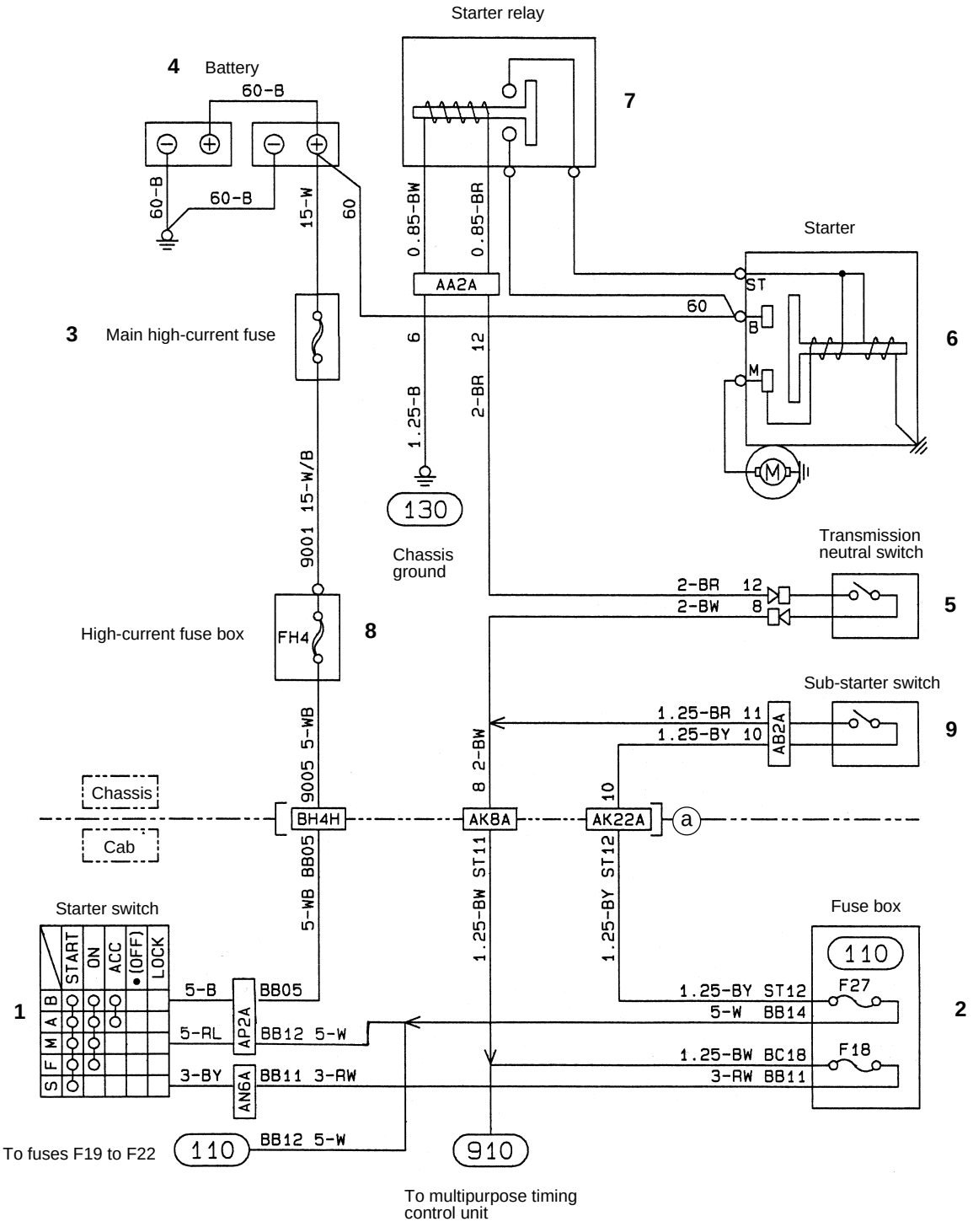
Starter relay
4 Battery
60-B
7
60-B
60-B
15-W
60
0.85-BW
0.85-BR
Starter
AA2A
ST
60
B
M
6
3 Main high-current fuse
6
12
2-BR
1.25-B
9001 15-W/B
130
Chassis ground
Transmission neutral switch
2-BR 12
2-BW 8
5
High-current fuse box
FH4
8
Sub-starter switch
1.25-BR 11
1.25-BY 10
AB2A
9
9005 5-WB
8 2-BW
10
Chassis
Cab
BH4H
AK8A
AK22A
a
5-WB BB05
1.25-BW ST11
1.25-BY ST12
Starter switch
Fuse box
110
F27
1.25-BY ST12
5-W BB14
2
1
S F M A B
START
ON
ACC
• (OFF)
LOCK
5-B
BB05
AP2A
5-RL
BB12 5-W
F18
1.25-BW BC18
3-RW BB11
3-BY
BB11 3-RW
AN6A
To fuses F19 to F22
110
BB12 5-W
910
To multipurpose timing control unit

12138

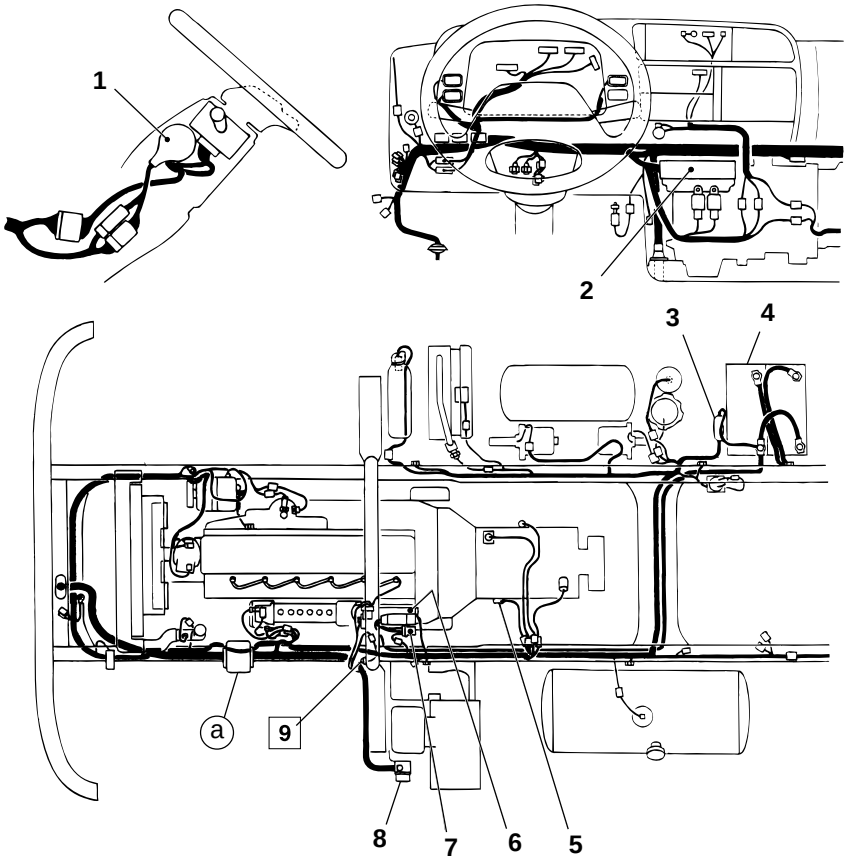

12724

1 Starter switch 🕮 (210)
2 Fuse box 🕮 (104)
3 Main high-current fuse 🕮 (104)
4 Battery 🕮 (101)
5 Transmission neutral switch 🕮 (802)
6 Starter 🕮 (201)
7 Starter relay 🕮 (210)
8 High-current fuse box 🕮 (104)
9 Sub-starter switch

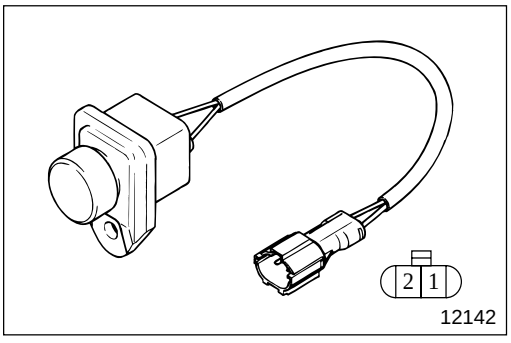

12142

◆ Service procedure

9 **Inspection of sub-starter switch**

- Follow the table below to inspect continuity :

	①	②
ON	○—○	
OFF		

○—○ : There is continuity between terminals ○ and ○.

- If any fault is found, replace sub-starter switch **9**.

215 ENGINE STOPPING CIRCUIT

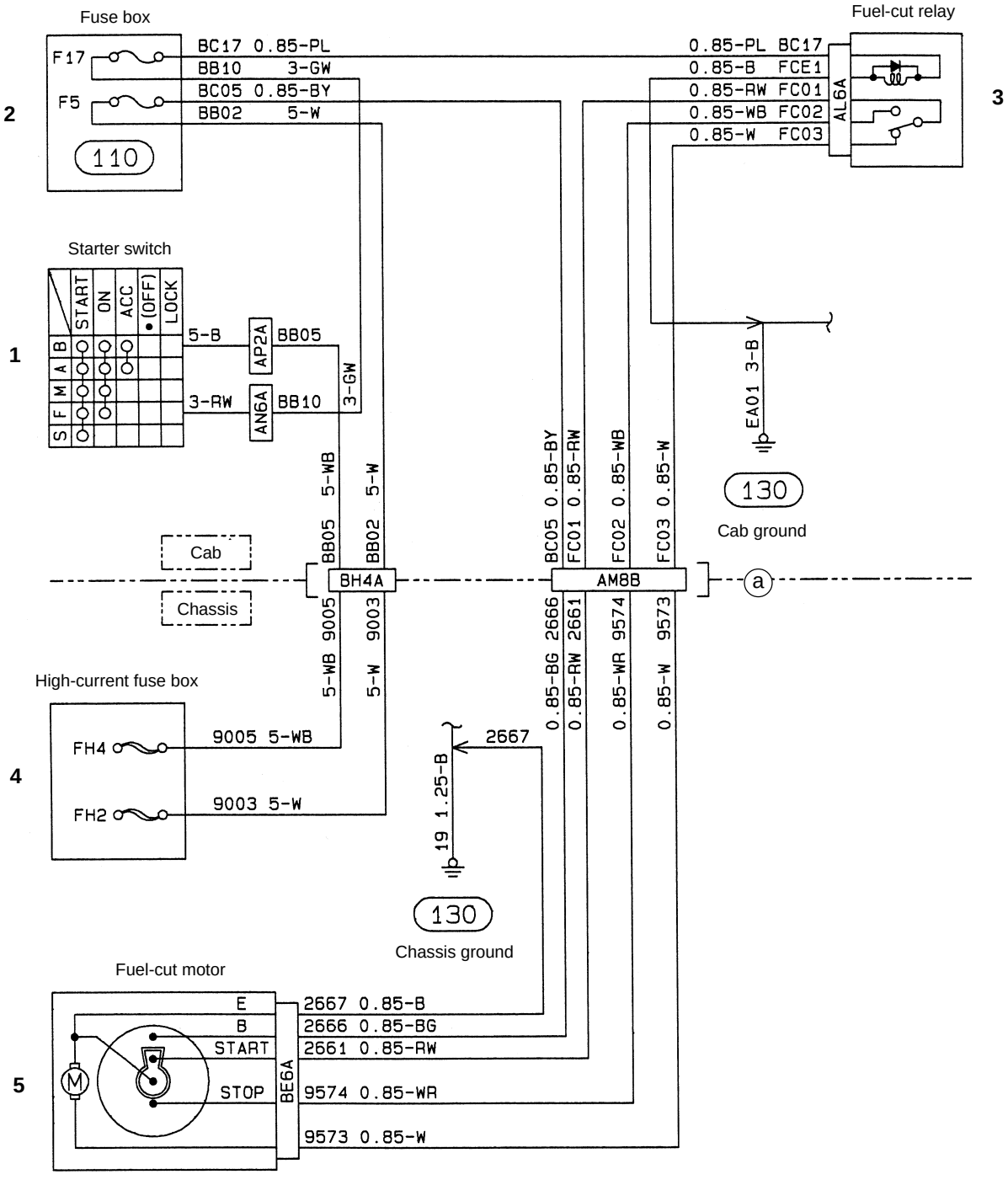

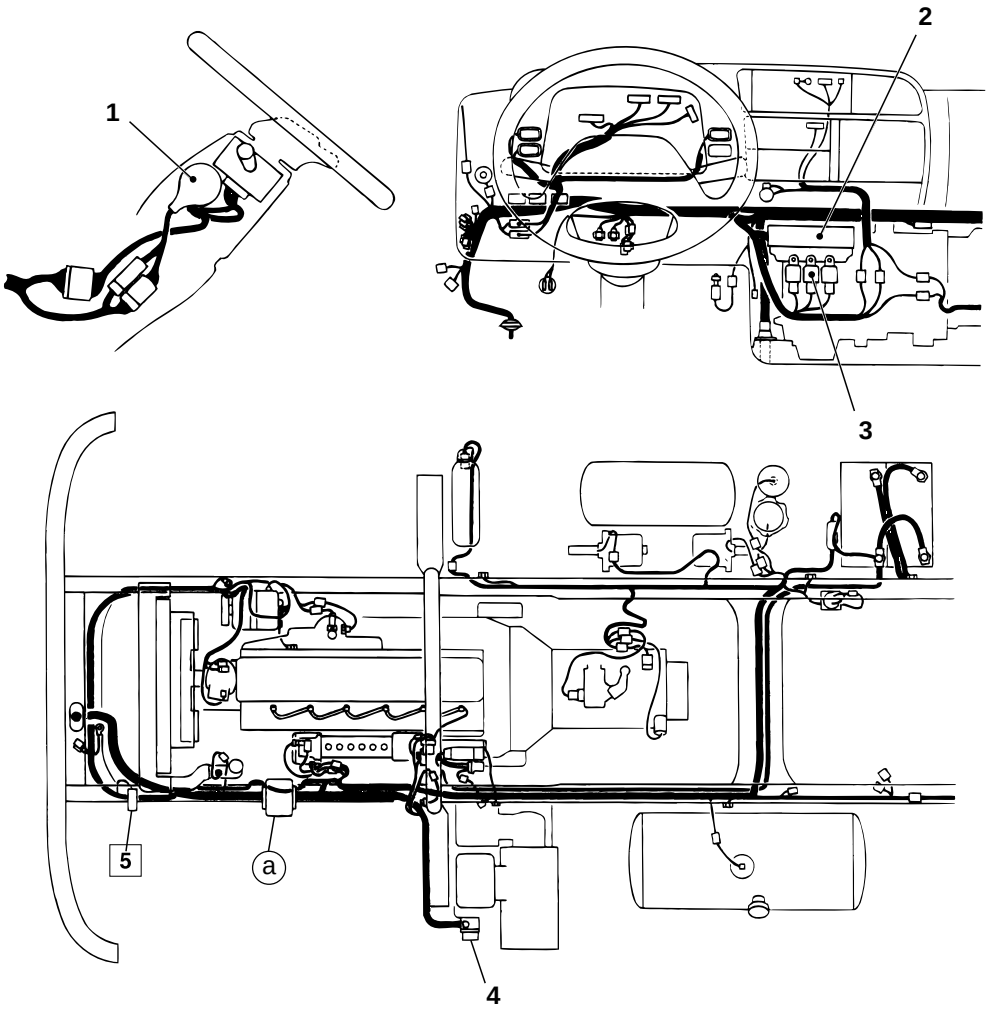

1 Starter switch 🕮 (210)
2 Fuse box 🕮 (104)
3 Fuel-cut relay 🕮 (604)
4 High-current fuse box 🕮 (104)
5 Fuel-cut motor

◆ Service procedure

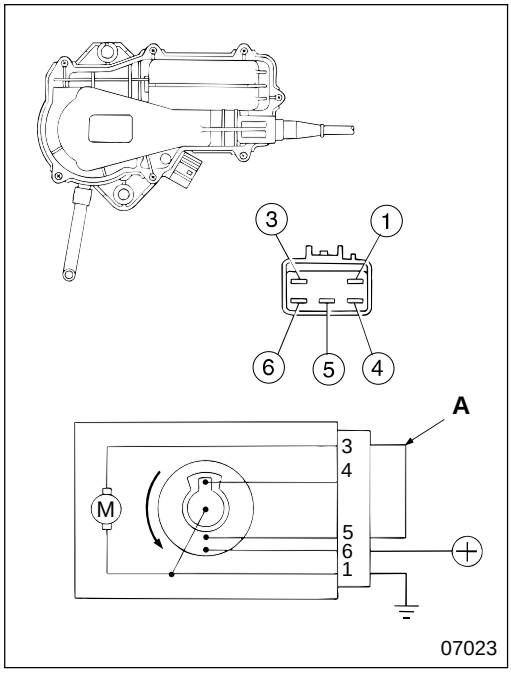

5 Inspection of fuel-cut motor

Inspect the following. If any fault is found, replace fuel-cut motor **5**.

(1) When starter switch is OFF (Fuel-cut state)

- Connect inspection harness **A** between terminals ③ and ⑤.
- Apply 12 volts DC between terminals ① and ⑥ to ensure that fuel-cut motor **5** works correctly.

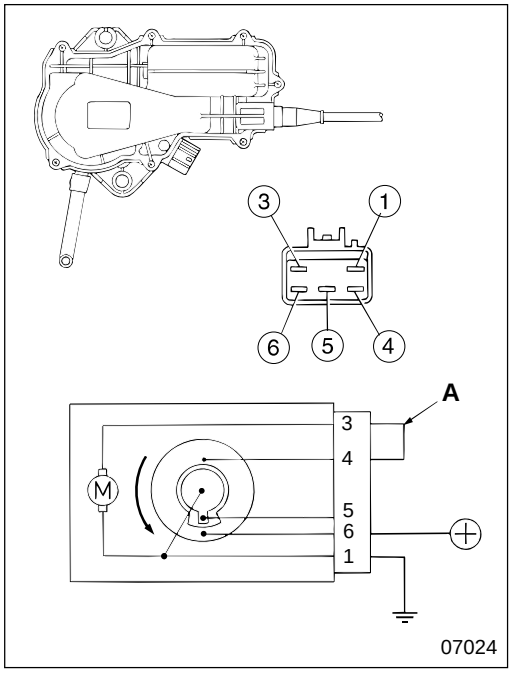

(2) When starter switch is ON (Fuel-cut reset state)

- Connect inspection harness **A** between terminals ③ and ④.
- Apply 12 volts DC between terminals ① and ⑥ to ensure that fuel-cut motor **5** works correctly.

M E M O

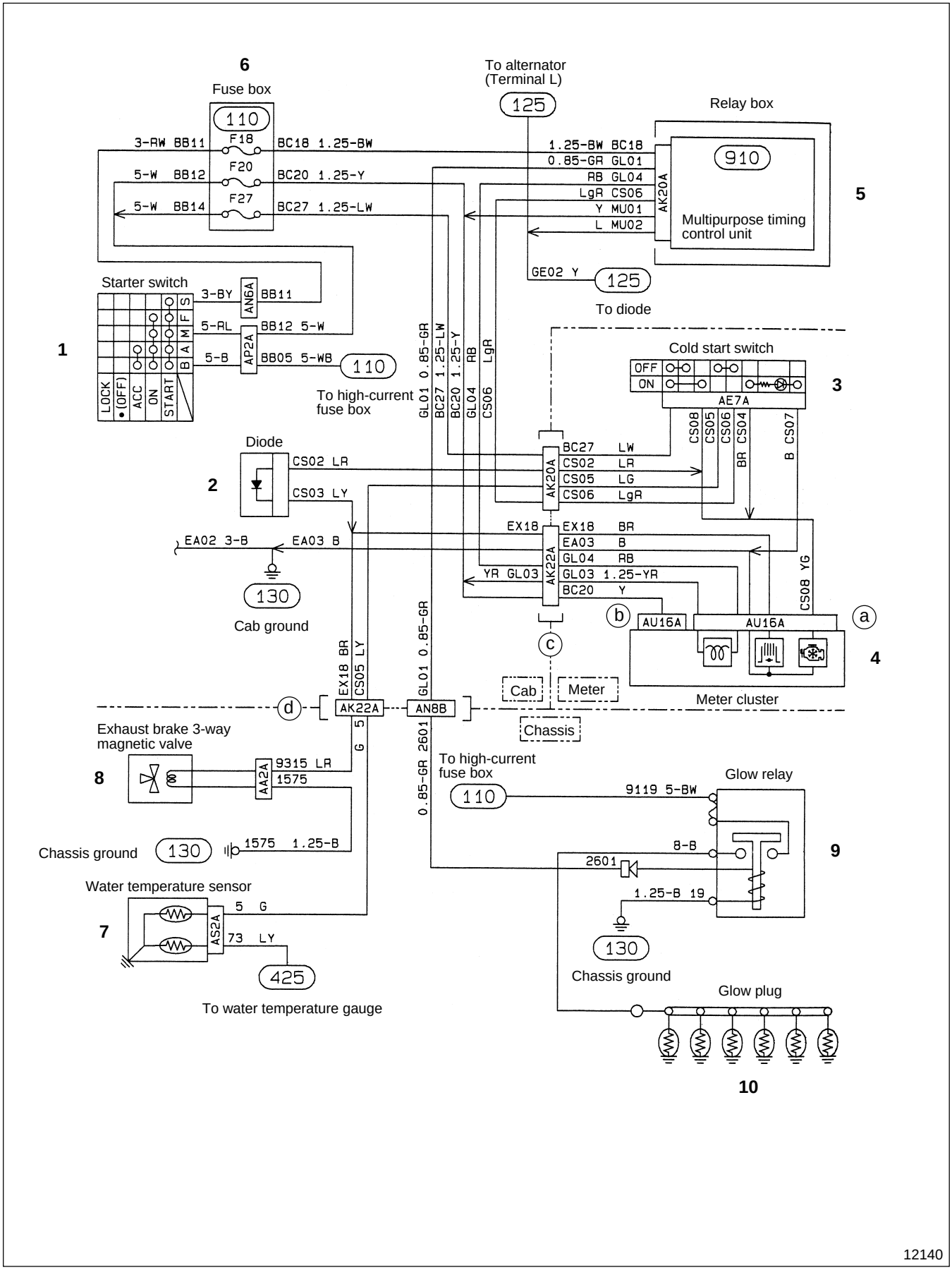
6
Fuse box
110
F18
F20
F27
3-RW BB11
BC18 1.25-BW
5-W BB12
BC20 1.25-Y
5-W BB14
BC27 1.25-LW
To alternator
(Terminal L)
125
Relay box
910
1.25-BW BC18
0.85-GR GL01
RB GL04
LgR CS06
Y MU01
L MU02
AK20A
Multipurpose timing control unit
5
GE02 Y
125
To diode
Starter switch
3-BY
AN6A
BB11
5-RL
BB12 5-W
5-B
AP2A
BB05 5-WB
110
To high-current fuse box
LOCK
(OFF)
ACC
ON
START
B A M F S
1
GL01 0.85-GR
BC27 1.25-LW
BC20 1.25-Y
GL04 RB
CS06 LgR
Cold start switch
OFF
ON
AE7A
3
CS08
CS05
CS06
CS04
BR
B CS07
Diode
2
CS02 LR
CS03 LY
BC27 LW
CS02 LR
CS05 LG
CS06 LgR
AK20A
EX18
EX18 BR
EA03 B
GL04 RB
GL03 1.25-YR
BC20 Y
AK22A
EA02 3-B
EA03 B
130
Cab ground
YR GL03
CS08 YG
b
AU16A
AU16A
a
4
c
Cab
Meter
Meter cluster
d
EX18 BR
CS05 LY
AK22A
AN8B
GL01 0.85-GR
Chassis
Exhaust brake 3-way magnetic valve
8
9315 LR
1575
AA2A
G 5
To high-current fuse box
0.85-GR 2601
110
9119 5-BW
Glow relay
Chassis ground
130
1575 1.25-B
8-B
2601
1.25-B 19
9
Water temperature sensor
7
5 G
73 LY
AS2A
130
Chassis ground
425
To water temperature gauge
Glow plug
10
12140

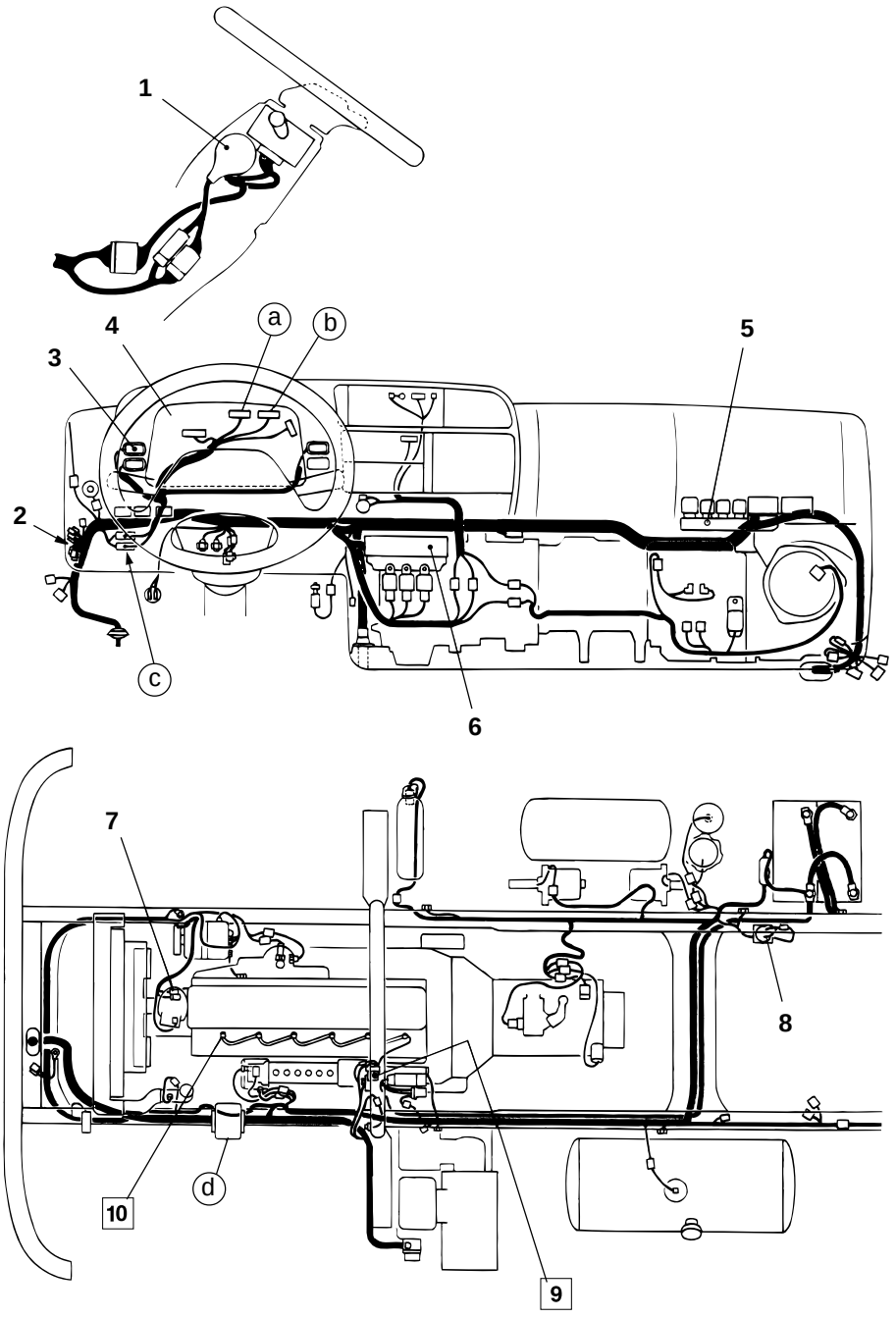

12726

1 Starter switch 🕮 210
2 Diode
3 Cold start switch 🕮 601
4 Meter cluster 🕮 401
5 Relay box 🕮 604
6 Fuse box 🕮 104
7 Water temperature sensor 🕮 801
8 Exhaust brake 3-way magnetic valve 🕮 701
9 Glow relay
10 Glow plug

Service standards

Location	Maintenance item	Standard value	Limit	Remedy
10	Resistance of glow plug (at ambient temperature)	1.0 Ω (Reference value)	—	Replace

◆ Service procedure

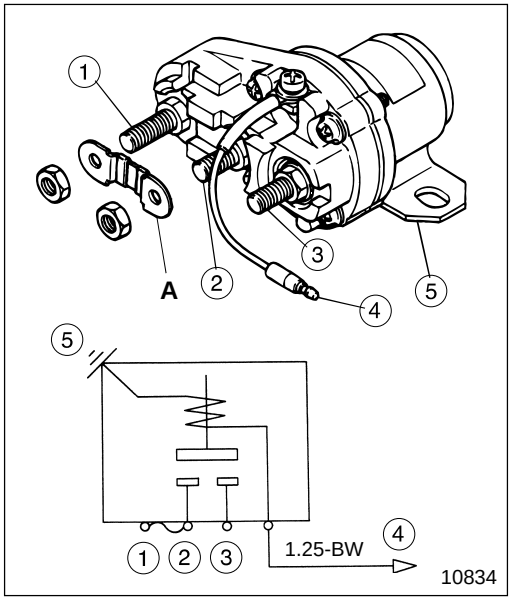

9 **Inspection of glow relay**

(1) Inspection of fuse

If any fault is found, replace fuse **A** (127 amperes).

(2) Inspection of body

- Follow the table below to inspect continuity :

	①	②	③	④	⑤
No current	○—○				
Current	○—○—○			⊕	⊖

○—○ : There is continuity between terminals ○ and ○.
⊕—⊖ : Indicates that 12 volts DC is applied to the line between the terminals.
A : Fuse (127 amperes)

- If any fault is found, replace glow relay **9**.

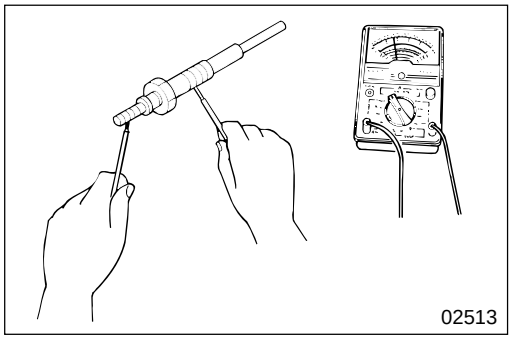

10 **Inspection of glow plug**

- Measure the resistance of glow plug **10** as illustrated.
- If the measured value deviates from the standard value, replace glow plug **10**.

M E M O

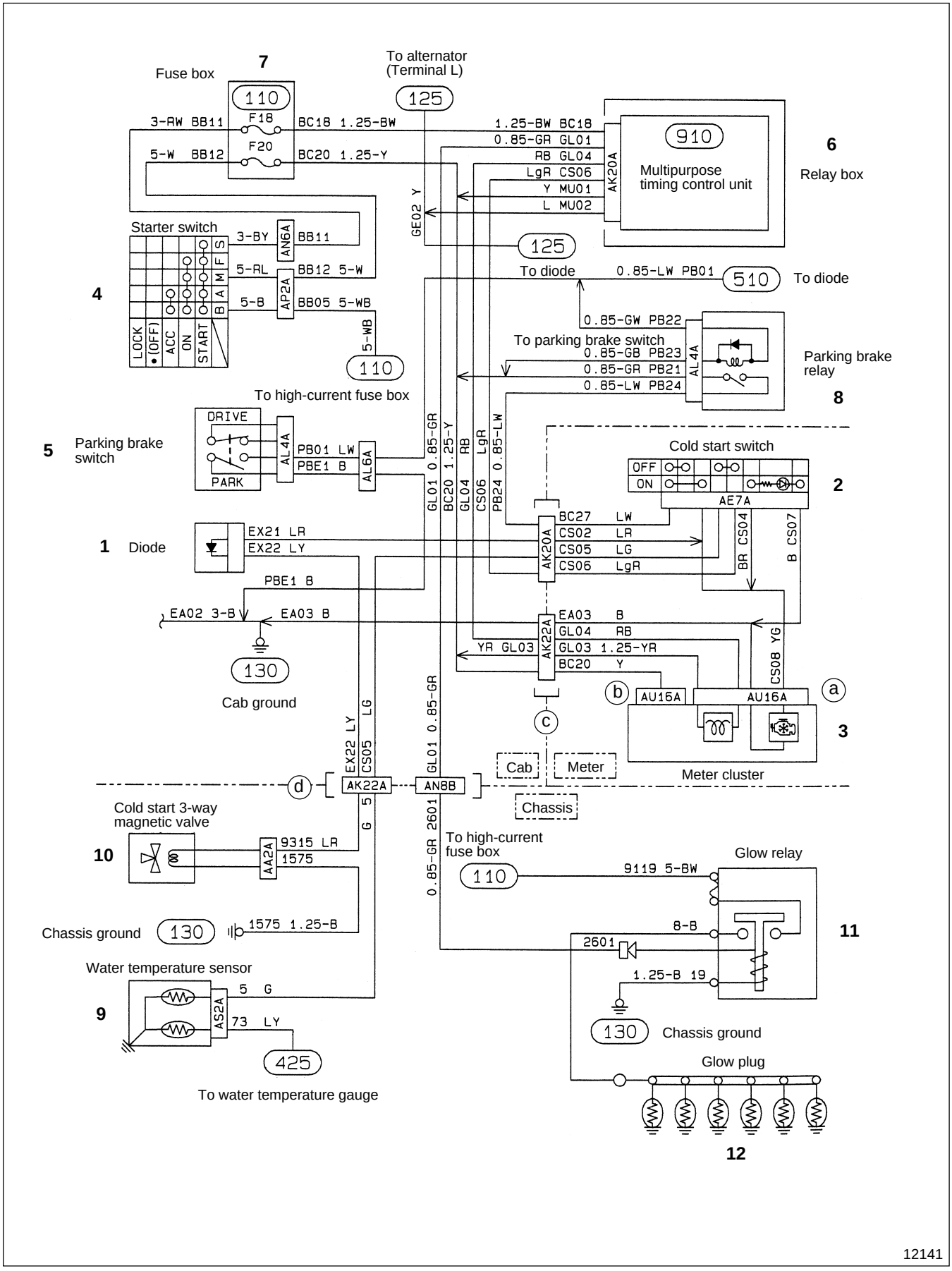
7
Fuse box
110
F18
F20
3-RW BB11
BC18 1.25-BW
5-W BB12
BC20 1.25-Y
To alternator
(Terminal L)
125
1.25-BW BC18
0.85-GR GL01
RB GL04
LgR CS06
Y MU01
L MU02
AK20A
910
Multipurpose
timing control unit
6
Relay box
GE02 Y
125
Starter switch
4
LOCK
• (OFF)
ACC
ON
START
B A M F S
3-BY
AN6A
BB11
5-RL
BB12 5-W
5-B
AP2A
BB05 5-WB
5-WB
110
To diode
0.85-LW PB01
510
To diode
0.85-GW PB22
To parking brake switch
0.85-GB PB23
0.85-GR PB21
0.85-LW PB24
AL4A
Parking brake
relay
8
To high-current fuse box
5
Parking brake
switch
DRIVE
PARK
AL4A
PB01 LW
PBE1 B
AL6A
GL01 0.85-GR
BC20 1.25-Y
GL04 RB
CS06 LgR
PB24 0.85-LW
Cold start switch
OFF
ON
AE7A
2
1
Diode
EX21 LR
EX22 LY
AK20A
BC27 LW
CS02 LR
CS05 LG
CS06 LgR
BR CS04
B CS07
PBE1 B
EA02 3-B
EA03 B
EA03 B
GL04 RB
GL03 1.25-YR
BC20 Y
YR GL03
AK22A
CS08 YG
130
Cab ground
b
AU16A
AU16A
a
3
c
EX22 LY
CS05 LG
GL01 0.85-GR
Cab
Meter
Meter cluster
d
AK22A
AN8B
Chassis
Cold start 3-way
magnetic valve
10
9315 LR
1575
AA2A
G 5
To high-current
fuse box
0.85-GR 2601
110
9119 5-BW
Glow relay
Chassis ground
130
1575 1.25-B
8-B
2601
1.25-B 19
11
Water temperature sensor
9
5 G
73 LY
AS2A
130
Chassis ground
425
To water temperature gauge
Glow plug
12
12141

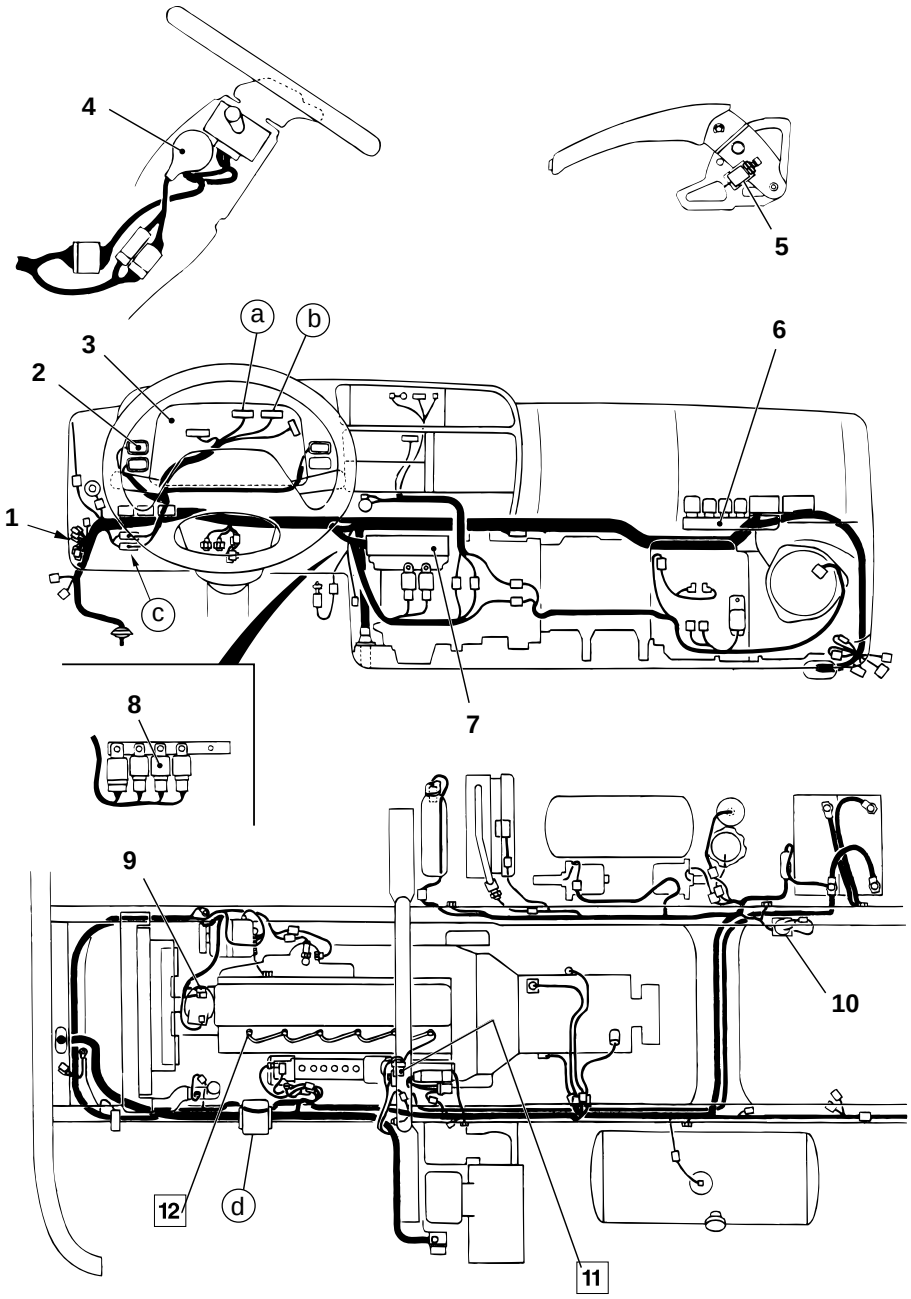

12727

1 Diode
2 Cold start switch 🕮 (601)
3 Meter cluster 🕮 (401)
4 Starter switch 🕮 (210)
5 Parking brake switch 🕮 (510)
6 Relay box 🕮 (604)
7 Fuse box 🕮 (104)
8 Parking brake relay 🕮 (604)
9 Water temperature sensor 🕮 (801)
10 Cold start 3-way magnetic valve 🕮 (701)
11 Glow relay
12 Glow plug

Service standards

Location	Maintenance item	Standard value	Limit	Remedy
12	Resistance of glow plug (at ambient temperature)	1.0 Ω (Reference value)	—	Replace

◆ Service procedure

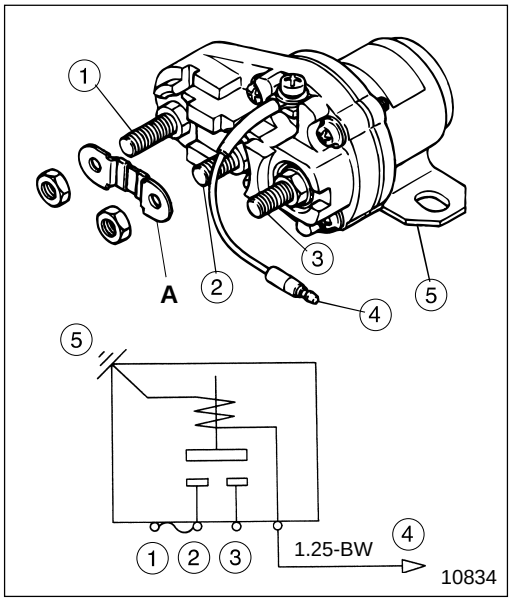

11 **Inspection of glow relay**

(1) Inspection of fuse

If any fault is found, replace fuse **A** (127 amperes).

(2) Inspection of body

- Follow the table below to inspect continuity :

	①	②	③	④	⑤
No current	○—○				
Current	○—○—○			⊕	⊖

○—○ : There is continuity between terminals ○ and ○.
⊕—⊖ : Indicates that 12 volts DC is applied to the line between the terminals.
A : Fuse (127 amperes)

- If any fault is found, replace glow relay **11**.

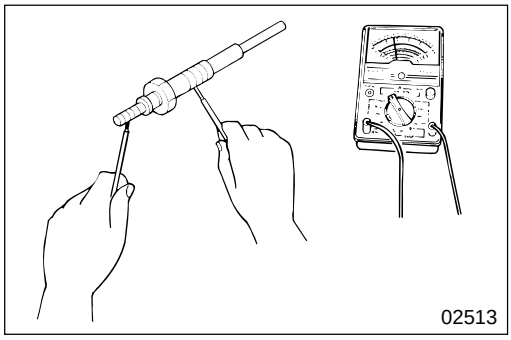

12 **Inspection of glow plug**

- Measure the resistance of glow plug **12** as illustrated.
- If the measured value deviates from the standard value, replace glow plug **12**.

3 LIGHTING

SPECIFICATIONS 54-3-2

STRUCTURE AND OPERATION 54-3-4

TROUBLESHOOTING 54-3-6

300 INSPECTION AND ADJUSTMENT MOUNTED IN VEHICLE
Headlamp Aiming 54-3-8

310 HEADLAMP CIRCUIT 54-3-10

320 TAIL LAMP, CLEARANCE LAMP AND LICENSE PLATE LAMP CIRCUITS 54-3-12

325 STOP LAMP CIRCUIT 54-3-14

330 TURN SIGNAL LAMP AND HAZARD LAMP CIRCUITS 54-3-18

340 BACKUP LAMP CIRCUIT 54-3-20

345 CAB LAMP CIRCUIT 54-3-24

348 ILLUMINATION LAMP CIRCUIT 54-3-28

349 MARKER LAMP AND IDENTIFICATION LAMP CIRCUITS 54-3-30

352 VAN BODY DOME LIGHT CIRCUIT 54-3-32

SPECIFICATIONS

Item			Specifications
Voltage		V	12
Headlamp	Model		Sealed beam
	Type		Reflex type
	HIGH beam	W	50
	HIGH/LOW beam	W	60/40
Front turn signal lamp (also used as hazard lamp)		W	21
Clearance lamp		W	7.5
Side turn signal lamp (also used as hazard lamp)		W	10
Rear combination lamp	Stop/Tail	W	27/8
	Turn (also used as hazard lamp)	W	27
Backup		W	27
License plate lamp		W	7.5
Cab lamp		W	10
Identification lamp		W	7.5
Clearance and side marker lamp		W	7.5
Back buzzer	Rated voltage	V	12
	Rated current	mA	50 or less
	Sound pressure	dB	85±10 (at 1 m {3.3 ft})
	Frequency Times/minute		85±15

M E M O

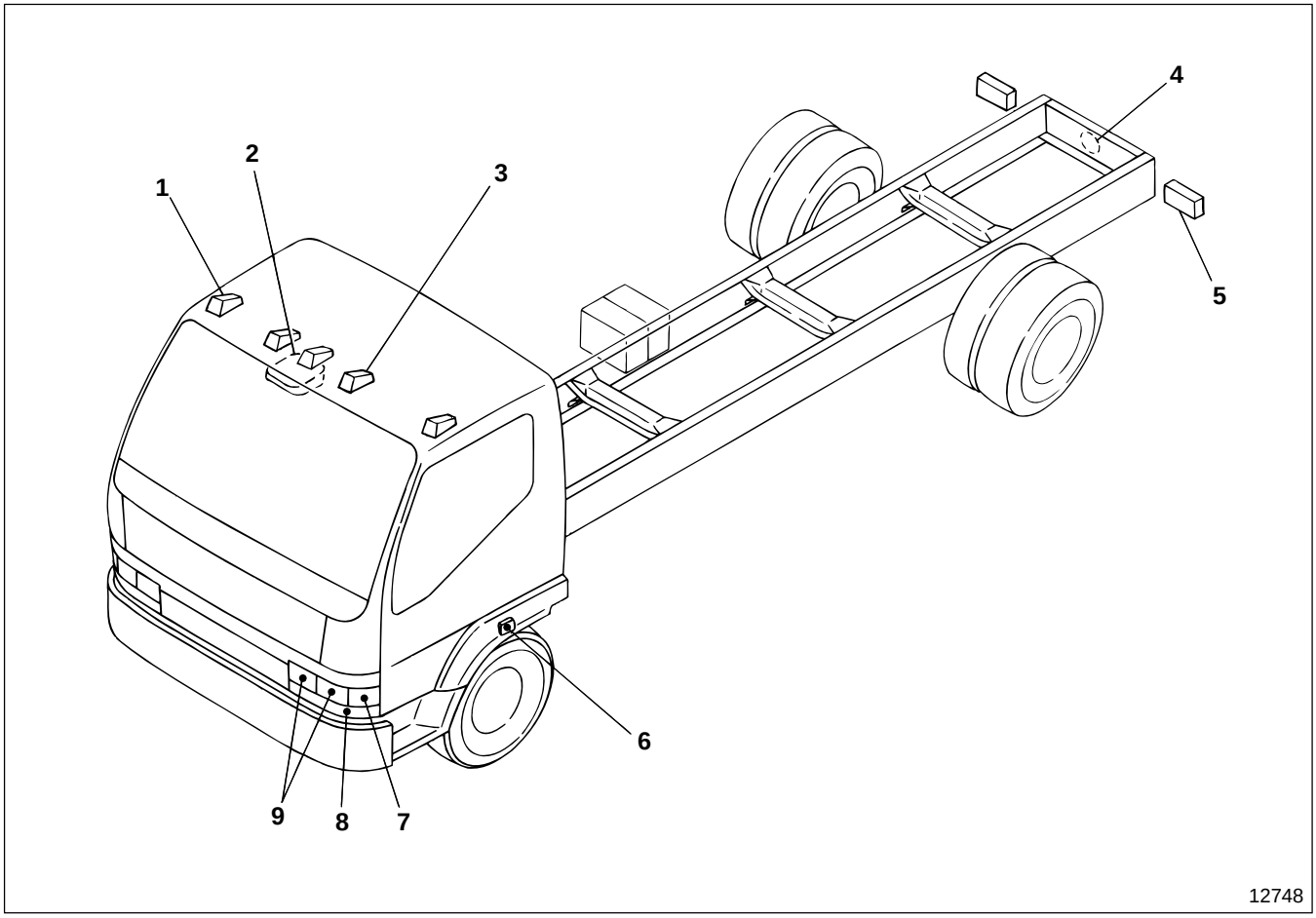

1 Clearance and side marker lamp
2 Cab lamp
3 Identification lamp
4 License plate lamp
5 Rear combination lamp
6 Side turn signal lamp
7 Clearance lamp
8 Front turn signal lamp
9 Headlamp

Headlamp

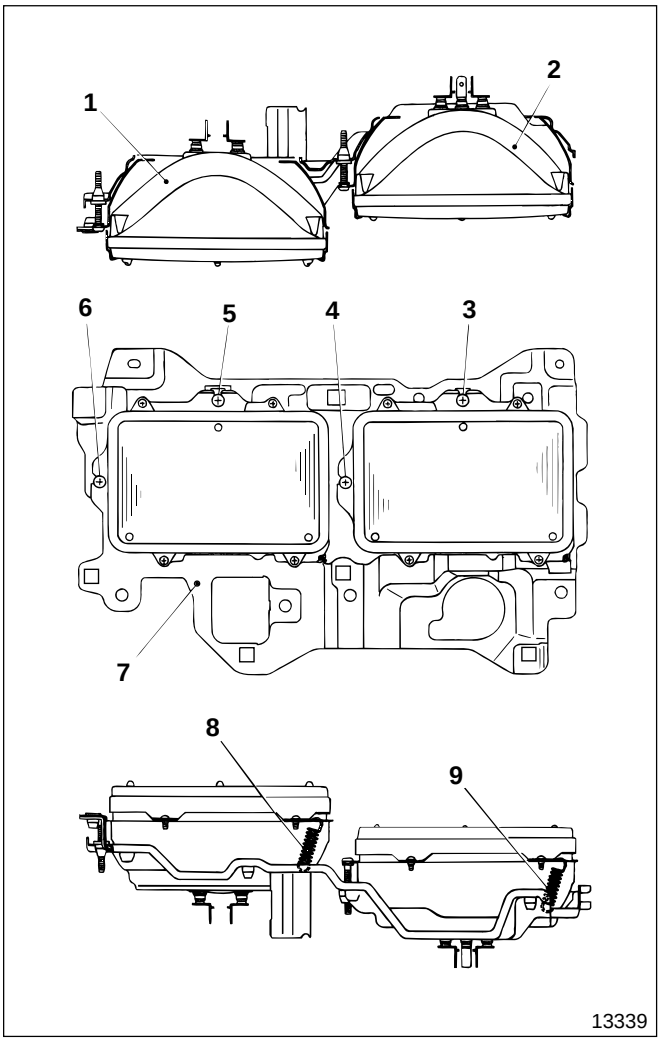

1 Sealed beam unit (HIGH beam)
2 Sealed beam unit (HIGH/LOW beam)
3 Screw (HIGH/LOW beam, vertical adjustment)
4 Screw (HIGH/LOW beam, horizontal adjustment)
5 Screw (HIGH beam, vertical adjustment)
6 Screw (HIGH beam, horizontal adjustment)
7 Housing
8 Extension spring
9 Extension spring

- The headlamp unit consists of sealed beam units **1, 2** separately installed in housing **7**. Sealed beam unit **1** is for HIGH beam, and sealed beam unit **2** is for HIGH/LOW beam.
- The headlamp aiming can be adjusted by changing the installation angle of sealed beam units **1, 2**.
- To adjust the installation angle of sealed beam unit **1**, turn screws **5, 6**. Extension spring **8** sets the angle of the sealed beam unit.
- To adjust the installation angle of sealed beam unit **2**, turn screws **3, 4**. Extension spring **9** sets the angle in the same way as for sealed beam unit **1**.

TROUBLESHOOTING

Possible causes \ Symptoms		Headlamp				Tail lamp, clearance lamp, license plate lamp, clearance and side marker lamp, identification lamp	
		Does not light	Dim	HIGH beam does not light	LOW beam does not light	Does not light	Stop lamp does not light
Connector connection faulty, harness broken, grounding faulty		○				○	○
Fuse blown		○				○	○
Battery charge insufficient			○				
Alternator output insufficient			○				
Bulb burnt-out		○				○	○
Power (wattage) of bulb is lower than specified value							
Power (wattage) of bulb is higher than specified value							
Combination switch	Lighting switch faulty	○				○	
	Dimmer switch faulty			○	○		
	Turn signal switch faulty						
	Hazard switch faulty						
Relay box	Headlamp relay (HIGH/LOW) faulty	○		○	○		
	Tail lamp relay faulty					○	
	Flasher unit faulty						
	Stop lamp relay faulty						○
Stop lamp switch faulty							○
Meter cluster faulty							
Backup lamp switch faulty							
Back buzzer faulty							
Door switch faulty							
Cab lamp faulty							
Rheostat switch faulty							
Turn signal lamp relay faulty							
Tail lamp bulb burnt-out							
Van body dome light relay faulty							
Van body dome light switch faulty							

Symptoms / Possible causes		Turn signal lamp (also used as hazard lamp)					Backup lamp does not light	Back buzzer does not sound	Cab lamp does not light	Meter and heater control illumination lamps do not light	Meter and heater control illumination lamps cannot be adjusted	Van body dome light does not light
		Does not light	Does not go off	Blinks too slowly	Blinks too quickly	Blink interval uneven						
Connector connection faulty, harness broken, grounding faulty		○					○	○	○	○		○
Fuse blown		○					○		○	○		○
Battery charge insufficient			○									
Alternator output insufficient			○									
Bulb burnt-out		○			○		○		○	○		○
Power (wattage) of bulb is lower than specified value					○							
Power (wattage) of bulb is higher than specified value				○								
Combination switch	Lighting switch faulty											
	Dimmer switch faulty											
	Turn signal switch faulty	○	○									
	Hazard switch faulty	○	○									
Relay box	Headlamp relay (HIGH/LOW) faulty											
	Tail lamp relay faulty									○		
	Flasher unit faulty	○	○	○	○	○						
	Stop lamp relay faulty											
Stop lamp switch faulty												
Meter cluster faulty												
Backup lamp switch faulty							○	○				
Back buzzer faulty								○				
Door switch faulty									○			
Cab lamp faulty									○			
Rheostat switch faulty										○	○	
Turn signal lamp relay faulty		○										
Tail lamp bulb burnt-out								○				
Van body dome light relay faulty												○
Van body dome light switch faulty												○

Headlamp Aiming

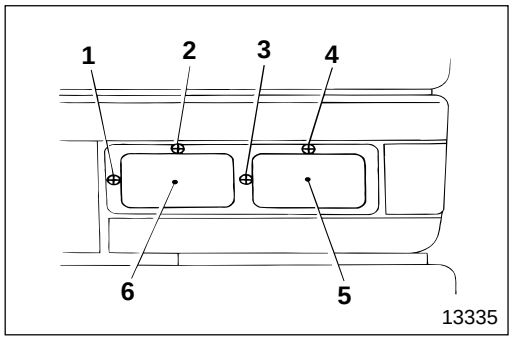

1 Screw (HIGH beam, horizontal adjustment)
2 Screw (HIGH beam, vertical adjustment)
3 Screw (HIGH/LOW beam, horizontal adjustment)
4 Screw (HIGH/LOW beam, vertical adjustment)
5 HIGH/LOW beam
6 HIGH beam

To adjust the headlamp move the optical axis of HIGH beam **6** by turning screws **1, 2**; and move the optical axis of HIGH/LOW beam **5** by turning screws **3, 4.** You need to adjust the aiming of both the HIGH and the HIGH/LOW beams on both the left and right headlamps.

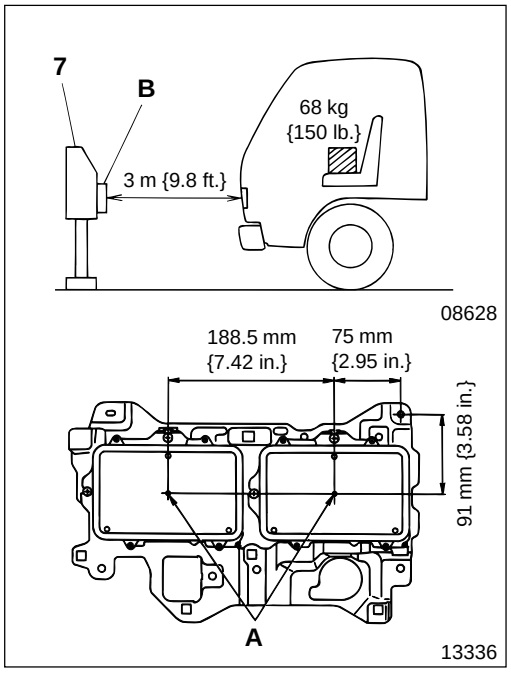

(1) Preparatory work before adjustment

- Park the vehicle on a level place.

WARNING

You must put wheel chocks securely in place.

- Unload the vehicle and make sure no one is in it.
- Inflate the tires to specified pressure. Gr 31
- Seat one person or an equivalent mass (68 kg {150 lb}) in the vehicle.
- Start the engine and check that the battery is being charged.
- Place convergent headlamp tester **7** in line with HIGH beam **6** or HIGH/LOW beam **5** of either the left or right headlamp at a distance of **3** m {9.8 ft}.
- Align the center of convergent lens **B** of convergent headlamp tester **7** with lamp center **A** of HIGH beam **6** or HIGH/LOW beam **5** . (The illustration shows a left headlamp.)
- When adjusting one headlamp, mask the other to avoid light leakage.

(2) Adjustment

WARNING

Do not mask a lit headlamp for more than 10 minutes or the heat generated might cause a fire.

CAUTION

When completing the adjustment using screws 1 to 4, the action must be finished in the tightening direction.

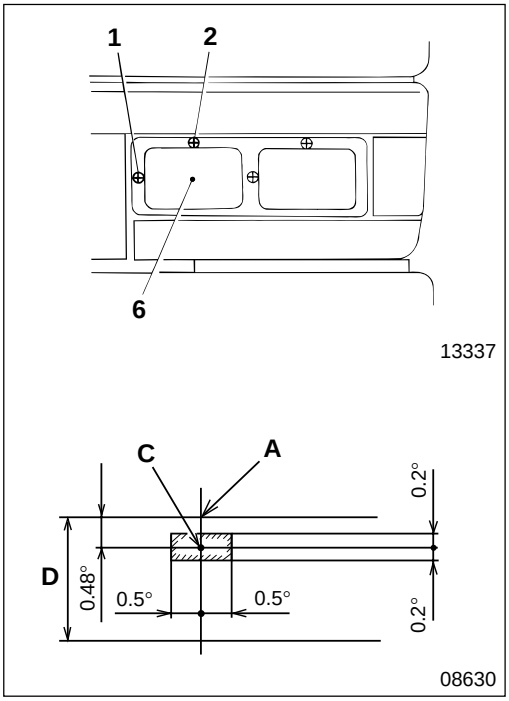

● **Adjustment of HIGH beam unit**

- Turn on HIGH beam **6**.
- Adjust as follows so that the optical axis (maximum illumination point) **C** of HIGH beam **6** is located as illustrated:
  - Vertical adjustment: Turn screw **2** to adjust.
  - Horizontal adjustment: Turn screw **1** to adjust.

  The aiming of both left and right HIGH beams **6** should be adjusted to the position as illustrated.

▨ : Tolerance of adjustment

A : Center of headlamp
D : Height from the ground to headlamp center

	Adjusting direction for optical axis			
	Upward	Downward	Leftward	Rightward
Screw 1	—	—	(Counter-clockwise)	(Clockwise)
Screw 2	(Clockwise)	(Counter-clockwise)	—	—

Turning direction of the screws in the table is as viewed from the front.

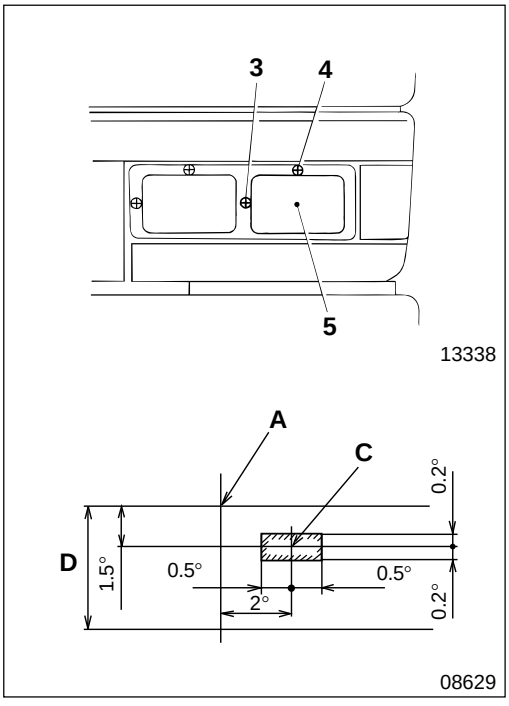

● **Adjustment of HIGH/LOW beam unit**

- Turn on the LOW beam of HIGH/LOW beam **5**.
- Adjust as follows so that the optical axis (maximum illumination point) **C** of HIGH/LOW beam is located as illustrated:
  - Vertical adjustment: Turn screw **4** to adjust.
  - Horizontal adjustment: Turn screw **3** to adjust.

  The aiming of both left and right HIGH/LOW beams **5** should be adjusted to the position as illustrated.

▨ : Tolerance of adjustment

A : Center of lamp
D : Height from the ground to headlamp center

	Adjusting direction for optical axis			
	Upward	Downward	Leftward	Rightward
Screw 3	—	—	(Counter-clockwise)	(Clockwise)
Screw 4	(Clockwise)	(Counter-clockwise)	—	—

Turning direction of the screws in the table is as viewed from the front.

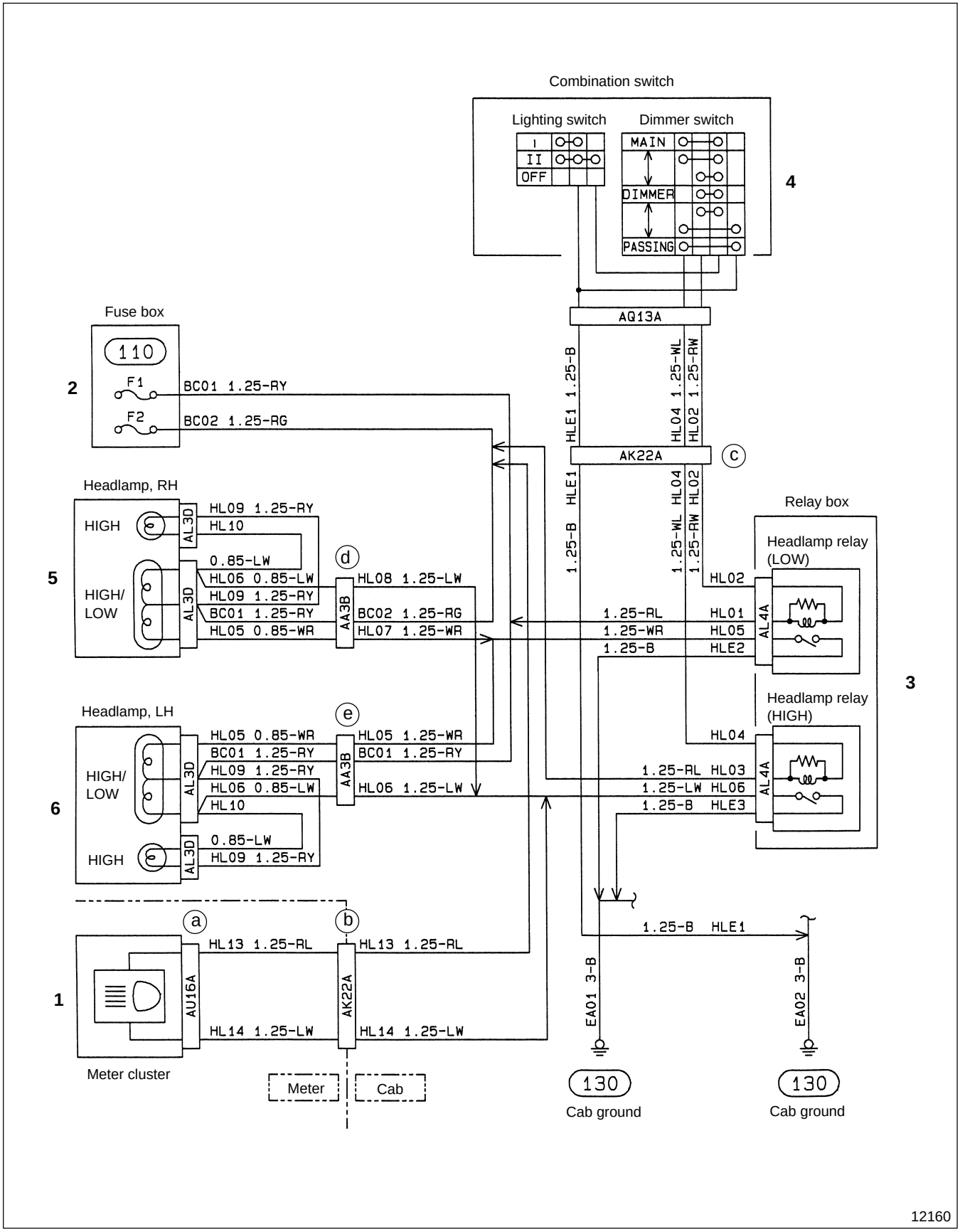
Combination switch
Lighting switch
Dimmer switch
I
II
OFF
MAIN
DIMMER
PASSING
4
AQ13A
Fuse box
110
F1
F2
2
BC01 1.25-RY
BC02 1.25-RG
HLE1 1.25-B
HL04 1.25-WL
HL02 1.25-RW
AK22A
c
Headlamp, RH
HIGH
HIGH/
LOW
AL3D
HL09 1.25-RY
HL10
0.85-LW
HL06 0.85-LW
HL09 1.25-RY
BC01 1.25-RY
HL05 0.85-WR
5
d
AA3B
HL08 1.25-LW
BC02 1.25-RG
HL07 1.25-WR
1.25-B HLE1
1.25-WL HL04
1.25-RW HL02
Relay box
Headlamp relay
(LOW)
HL02
HL01
HL05
HLE2
AL4A
1.25-RL
1.25-WR
1.25-B
3
Headlamp, LH
e
HL05 0.85-WR
BC01 1.25-RY
HL09 1.25-RY
HL06 0.85-LW
HL10
0.85-LW
HL09 1.25-RY
HL05 1.25-WR
BC01 1.25-RY
HL06 1.25-LW
6
Headlamp relay
(HIGH)
HL04
HL03
HL06
HLE3
1.25-RL
1.25-LW
1.25-B
a
b
HL13 1.25-RL
HL14 1.25-LW
AU16A
AK22A
1
Meter cluster
Meter
Cab
1.25-B HLE1
EA01 3-B
EA02 3-B
130
Cab ground
130
Cab ground
12160

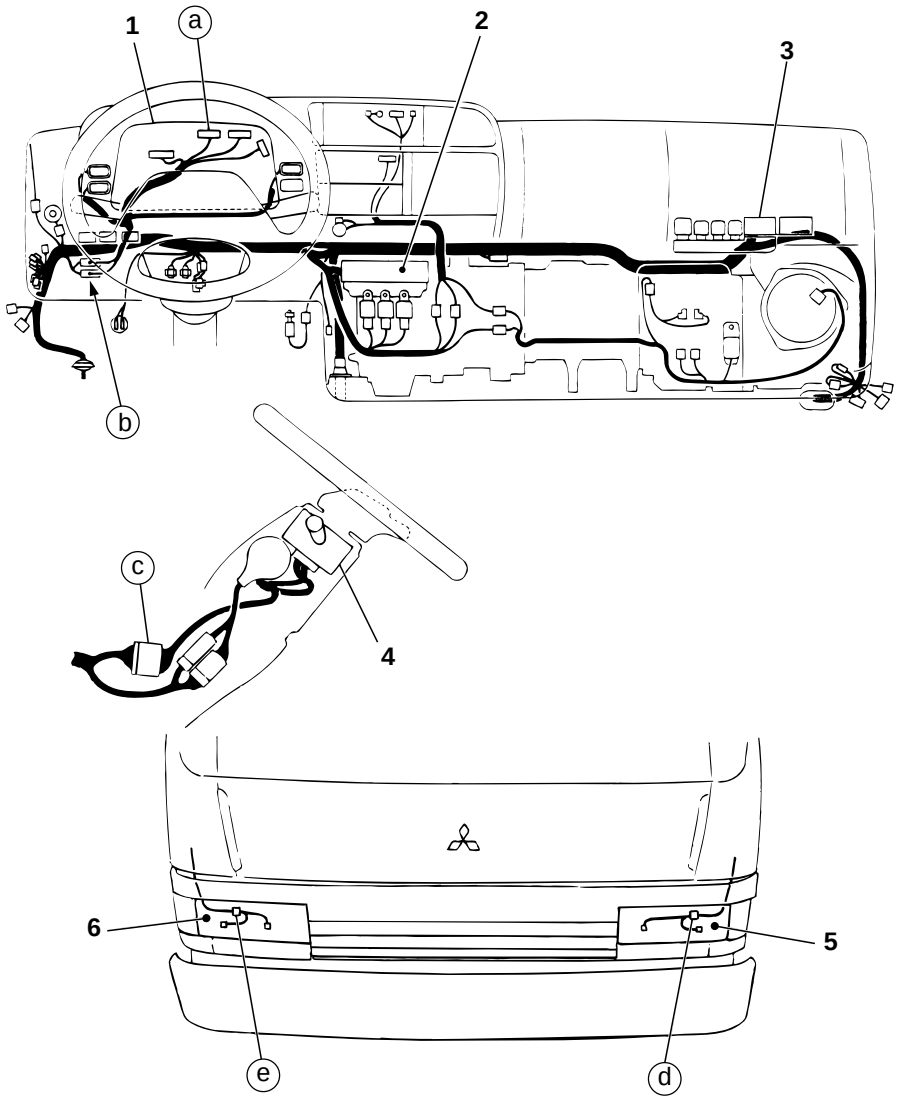

1 Meter cluster 401
2 Fuse box 104
3 Relay box 604
4 Combination switch 601
5 Headlamp, RH 300
6 Headlamp, LH 300

320 TAIL LAMP, CLEARANCE LAMP AND LICENSE PLATE LAMP CIRCUITS

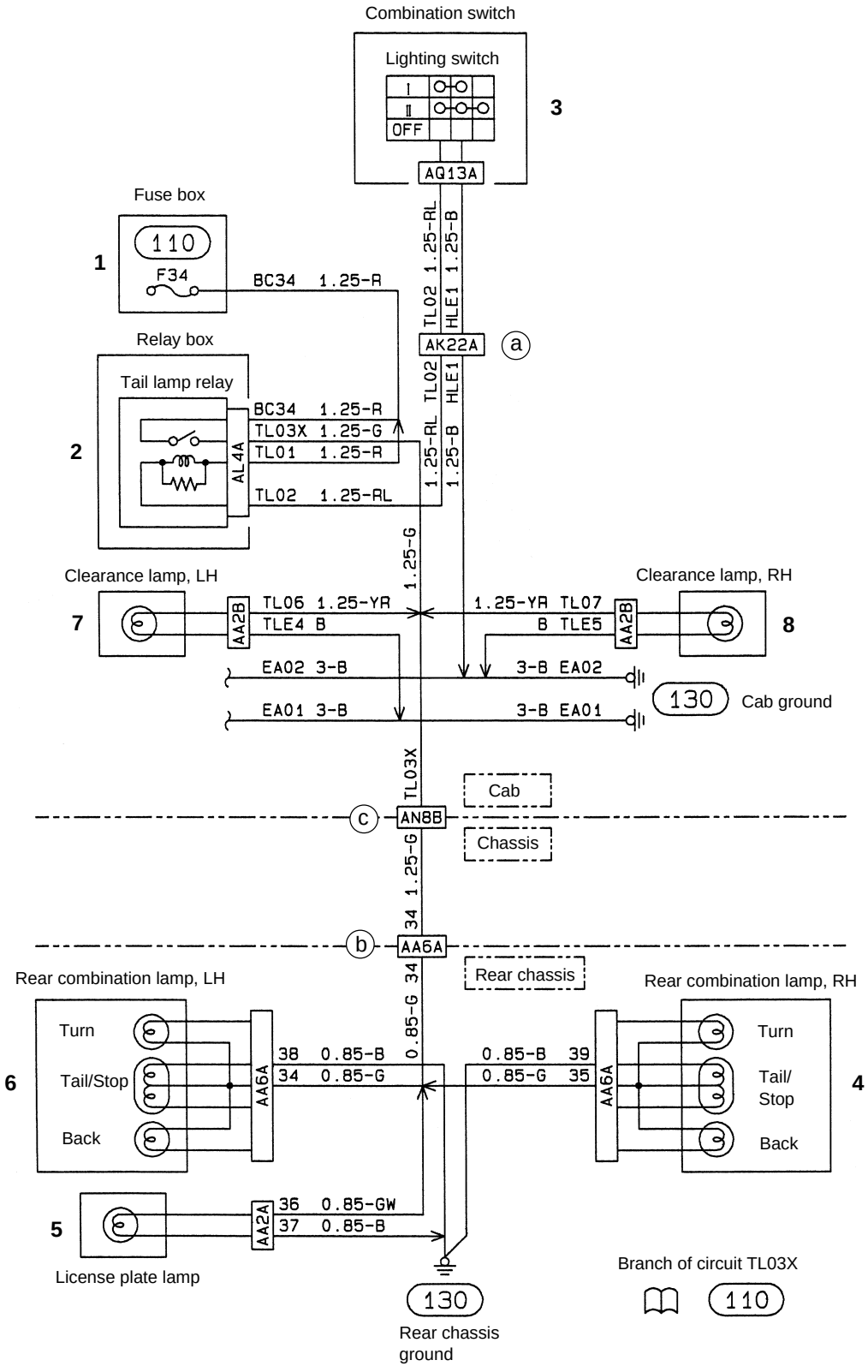

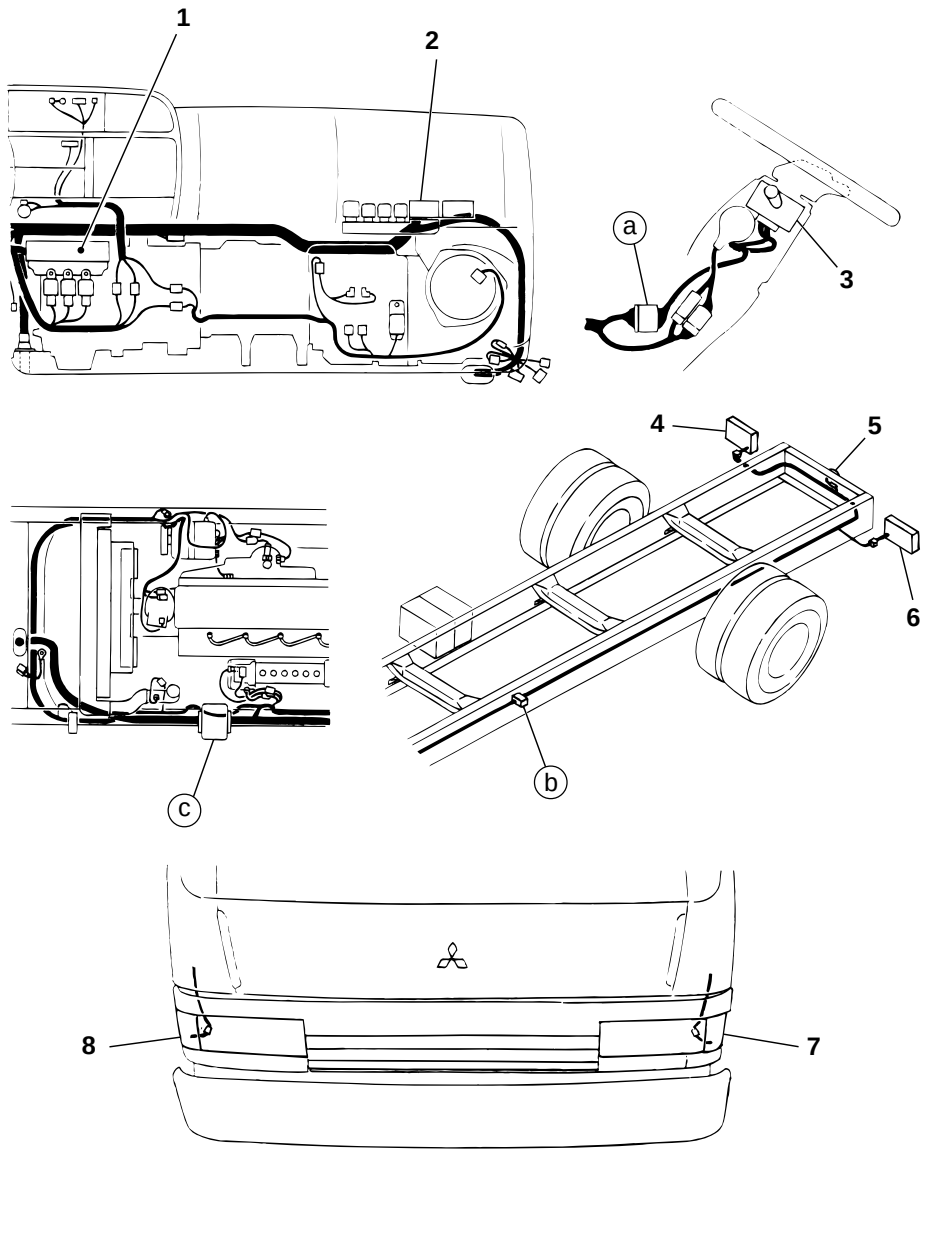

12750

1 Fuse box 🕮 (104)
2 Relay box 🕮 (604)
3 Combination switch 🕮 (601)
4 Rear combination lamp, RH
5 License plate lamp
6 Rear combination lamp, LH
7 Clearance lamp, LH
8 Clearance lamp, RH

325 STOP LAMP CIRCUIT

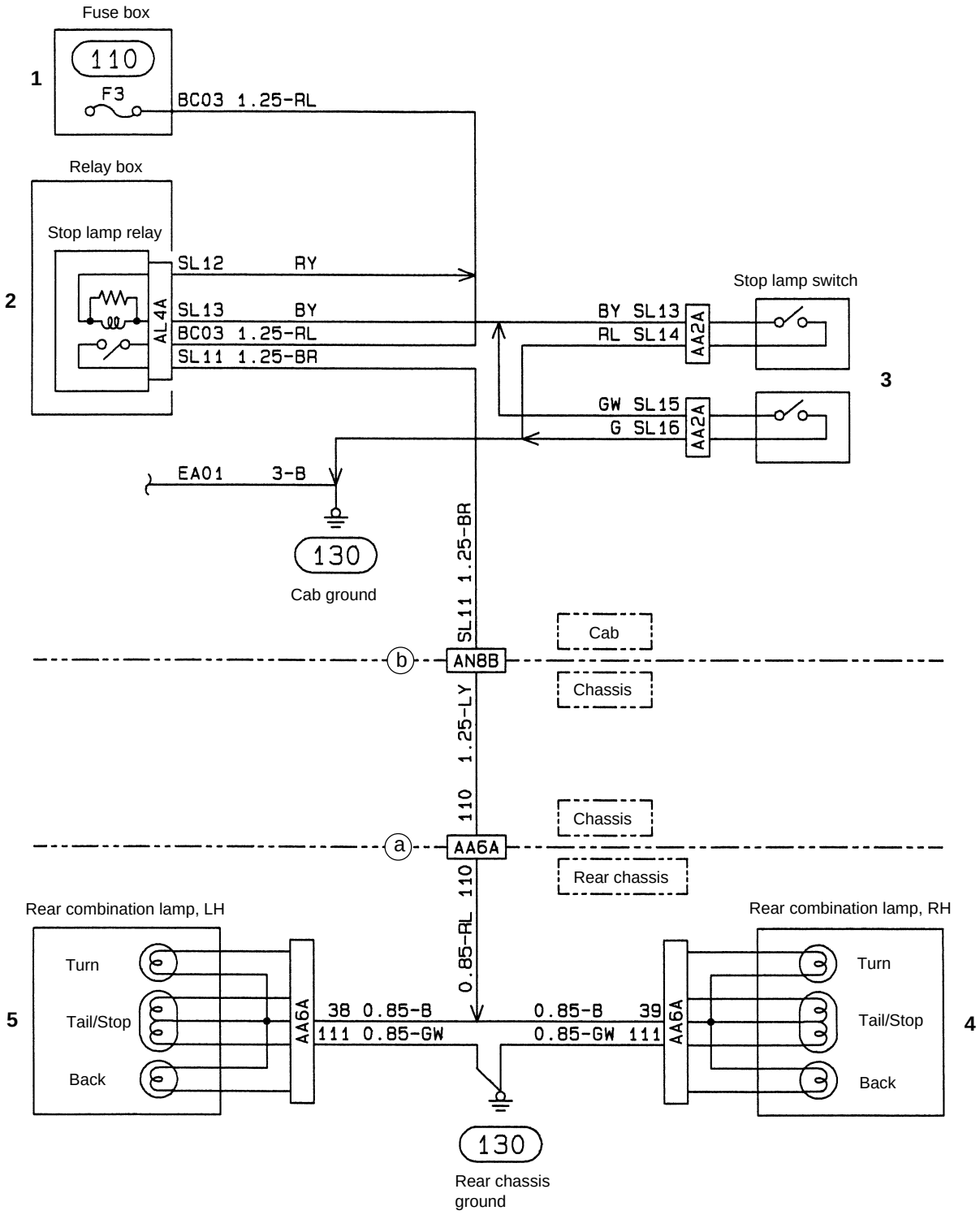

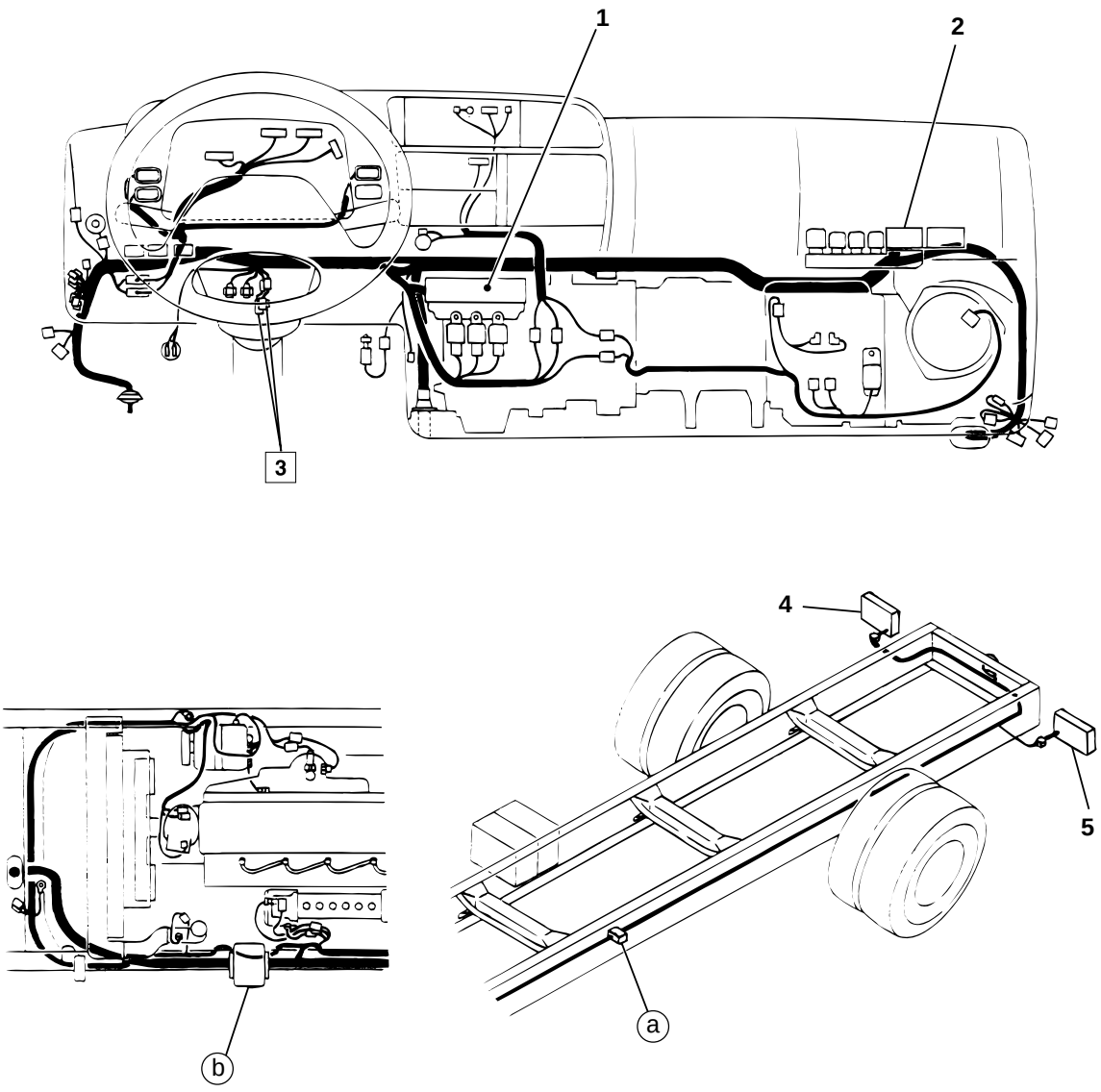

1 Fuse box 104
2 Relay box 604
3 Stop lamp switch
4 Rear combination lamp, RH
5 Rear combination lamp, LH

Service standards

Location	Maintenance item	Standard value	Limit	Remedy
3	Operating pressure of stop lamp switch	29±9.8 kPa {4.3±1.4 lbf/in², 0.3±0.1 kgf/cm²}	—	Replace

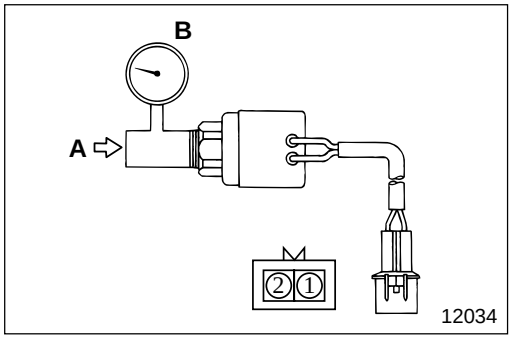

◆ Service procedure

3 **Inspection of stop lamp switch**

Carry out the following inspection. If any fault is found, replace stop lamp switch **3**.

- Make sure that there is no continuity between terminals ① and ② when air pressure **A** is not applied to stop lamp switch **3**.
- Apply air pressure **A** to the stop lamp switch gradually starting from 0 kPa {0 lbf/in², 0 kgf/cm²}.
  Measure air pressure **A** when continuity is present between terminals ① and ② to make sure that the value conforms to the standard value.
  B : Air pressure gauge

M E M O

330 TURN SIGNAL LAMP AND HAZARD LAMP CIRCUITS

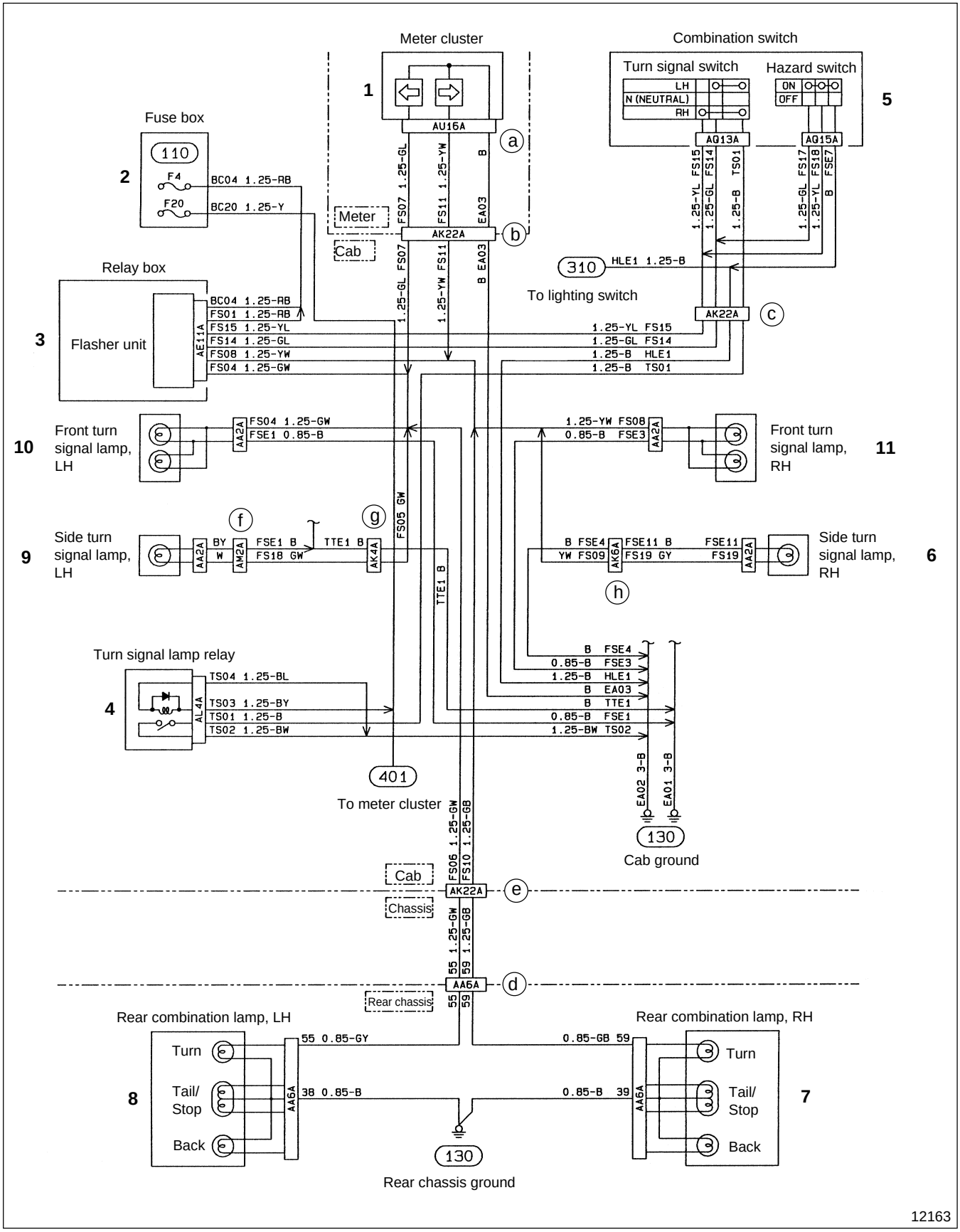

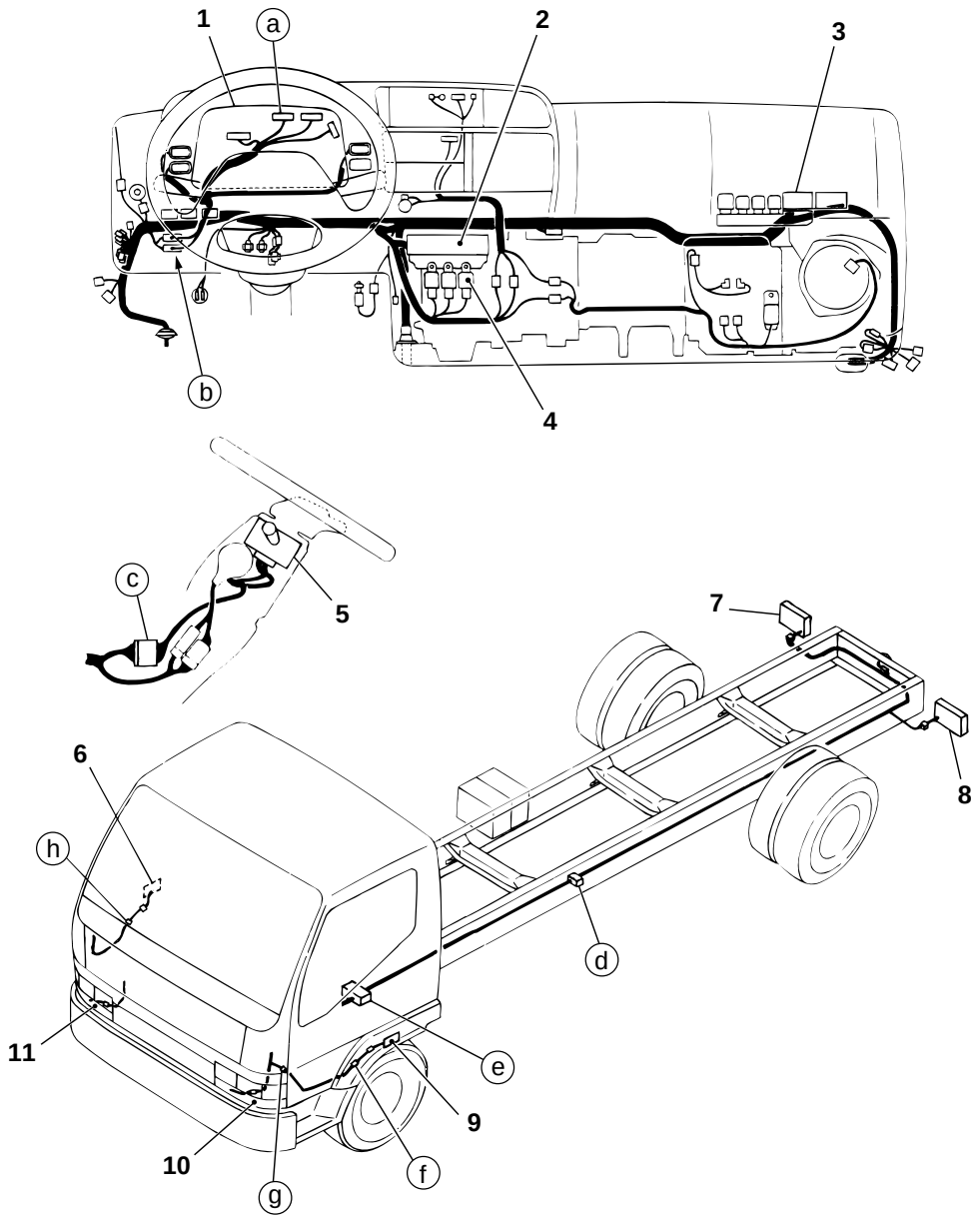

12752

1 Meter cluster 401
2 Fuse box 104
3 Relay box 604
4 Turn signal lamp relay 604
5 Combination switch 601
6 Side turn signal lamp, RH
7 Rear combination lamp, RH
8 Rear combination lamp, LH
9 Side turn signal lamp, LH
10 Front turn signal lamp, LH
11 Front turn signal lamp, RH

340 BACKUP LAMP CIRCUIT

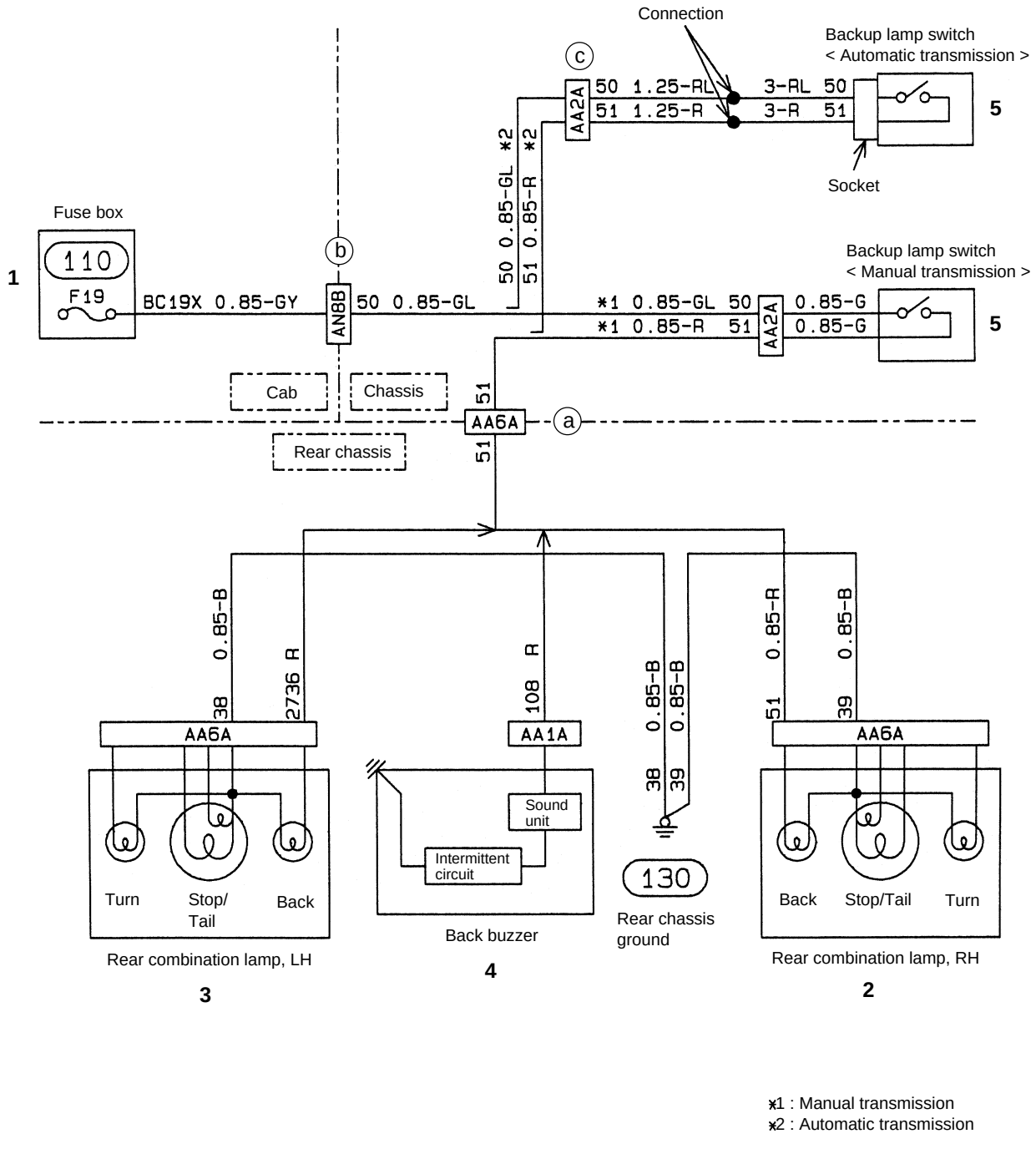

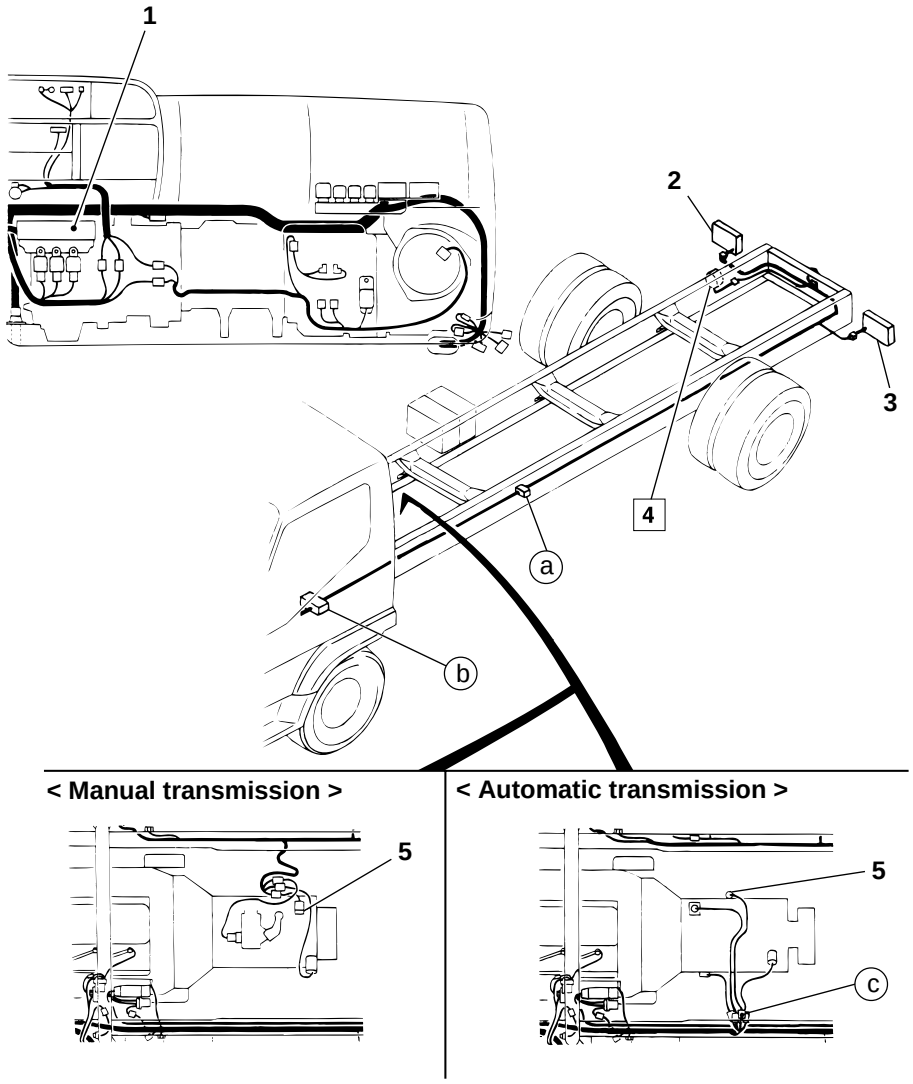

1 Fuse box 📖 (104)
2 Rear combination lamp, RH
3 Rear combination lamp, LH
4 Back buzzer
5 Backup lamp switch 📖 (802)

◆ Service procedure

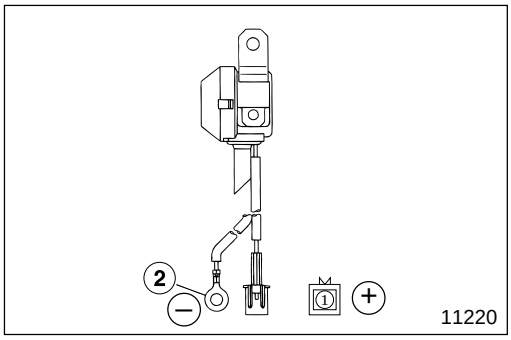

4 **Back buzzer**

[Inspection]
- Make sure that back buzzer **4** sounds intermittently when you apply 12 volts DC between terminals ① and ②.
- If any fault is found, replace back buzzer **4**.

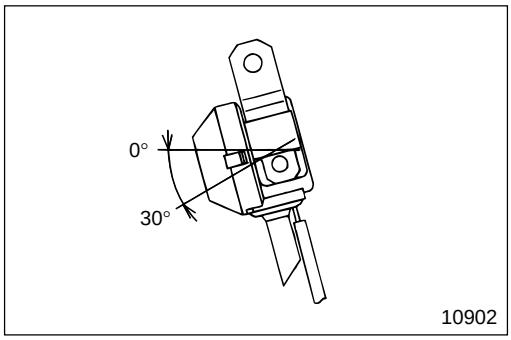

[Installation]
Install back buzzer **4** to the frame within the angle range as illustrated.

CAUTION⚠

Be careful to install back buzzer 4 within the illustrated angle range or the back buzzer will not be drained normally.

M E M O

345 CAB LAMP CIRCUIT

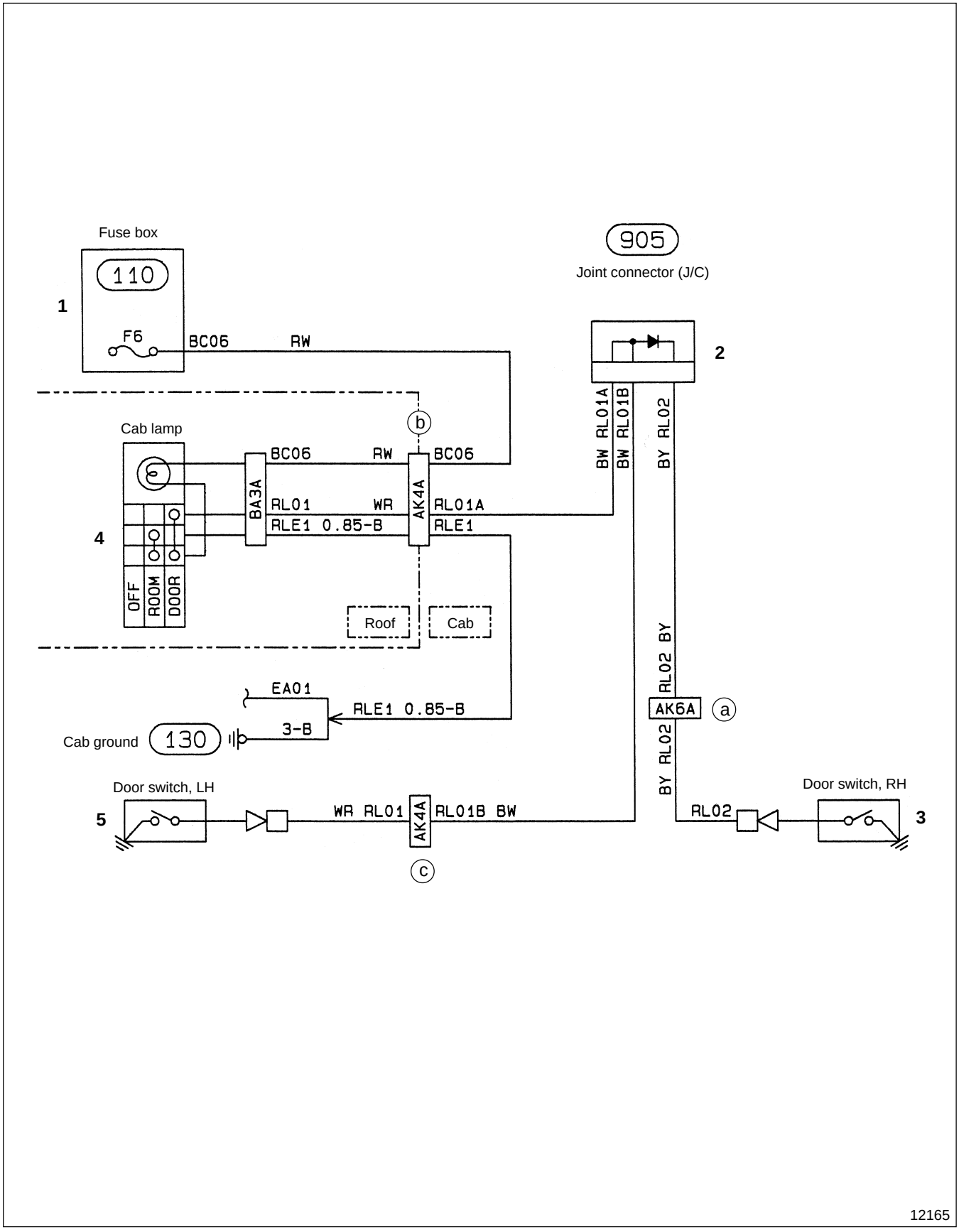

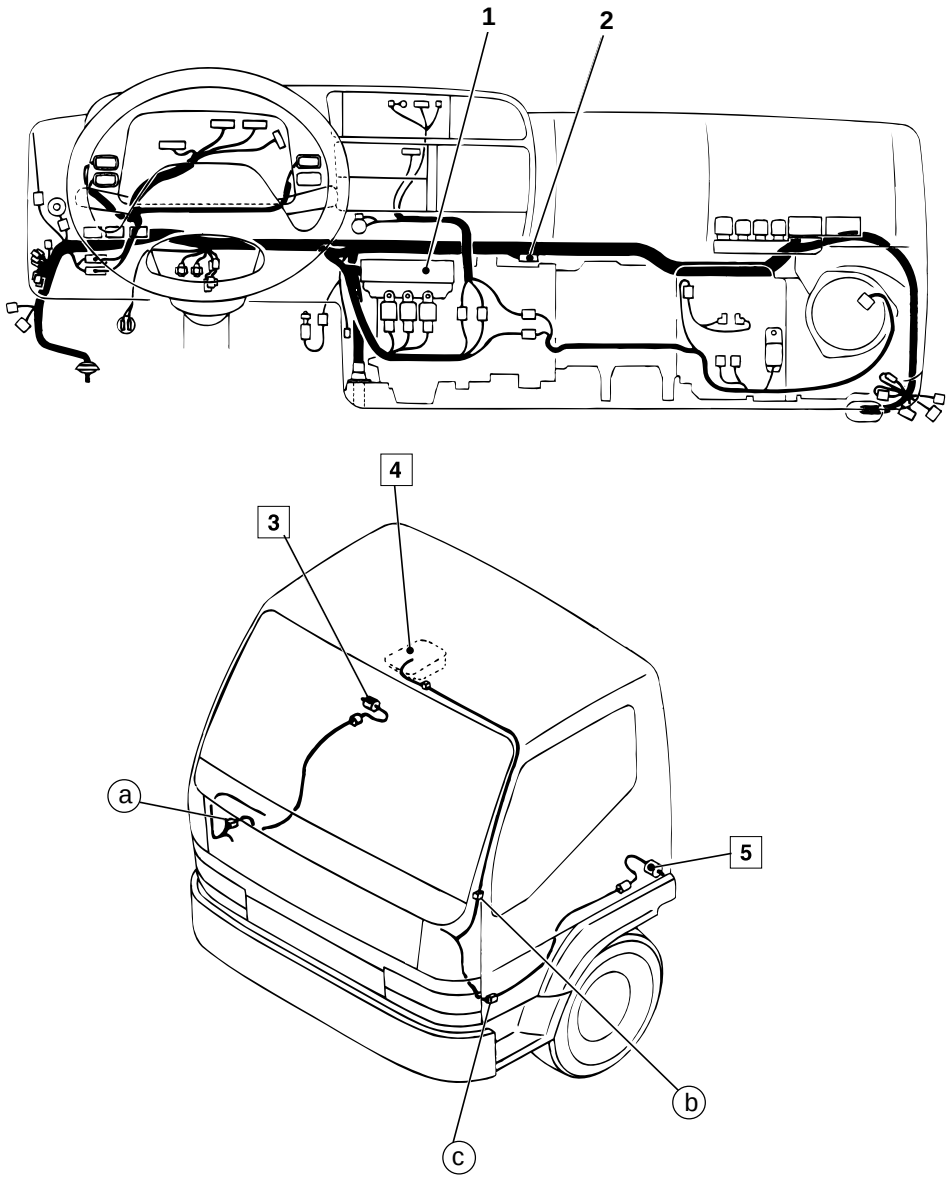

1 Fuse box 104
2 Joint connector (J/C) 905
3 Door switch, RH
4 Cab lamp
5 Door switch, LH

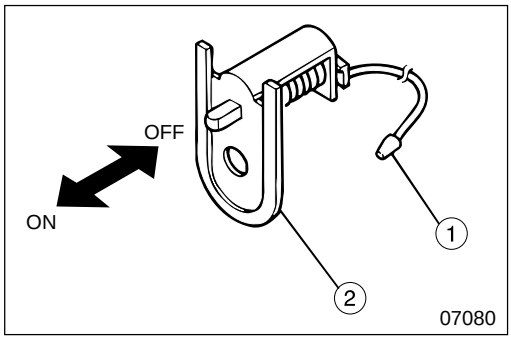

◆ Service procedure

3 **5** **Inspection of door switches**

- Follow the table below to inspect continuity:

	①	②
OFF		
ON	○—○	

○—○ : There is continuity between terminals ○ and ○.

- If any fault is found, replace door switches **3**, **5**. Gr 42

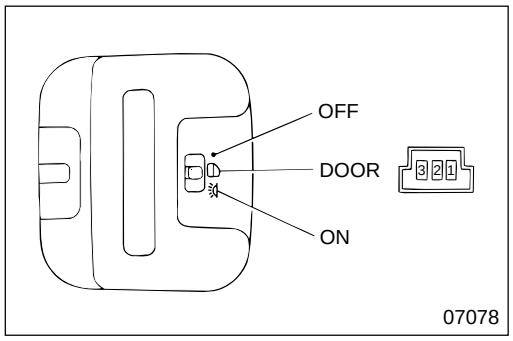

4 **Inspection of cab lamp**

- Follow the table below to inspect continuity:

	①	②	③
OFF			
DOOR	○—○		
ON	○—	——	—○

○—○ : There is continuity between terminals ○ and ○. (When valve is installed.)

- If any fault is found, replace cab lamp **4**.

M E M O

348 ILLUMINATION LAMP CIRCUIT

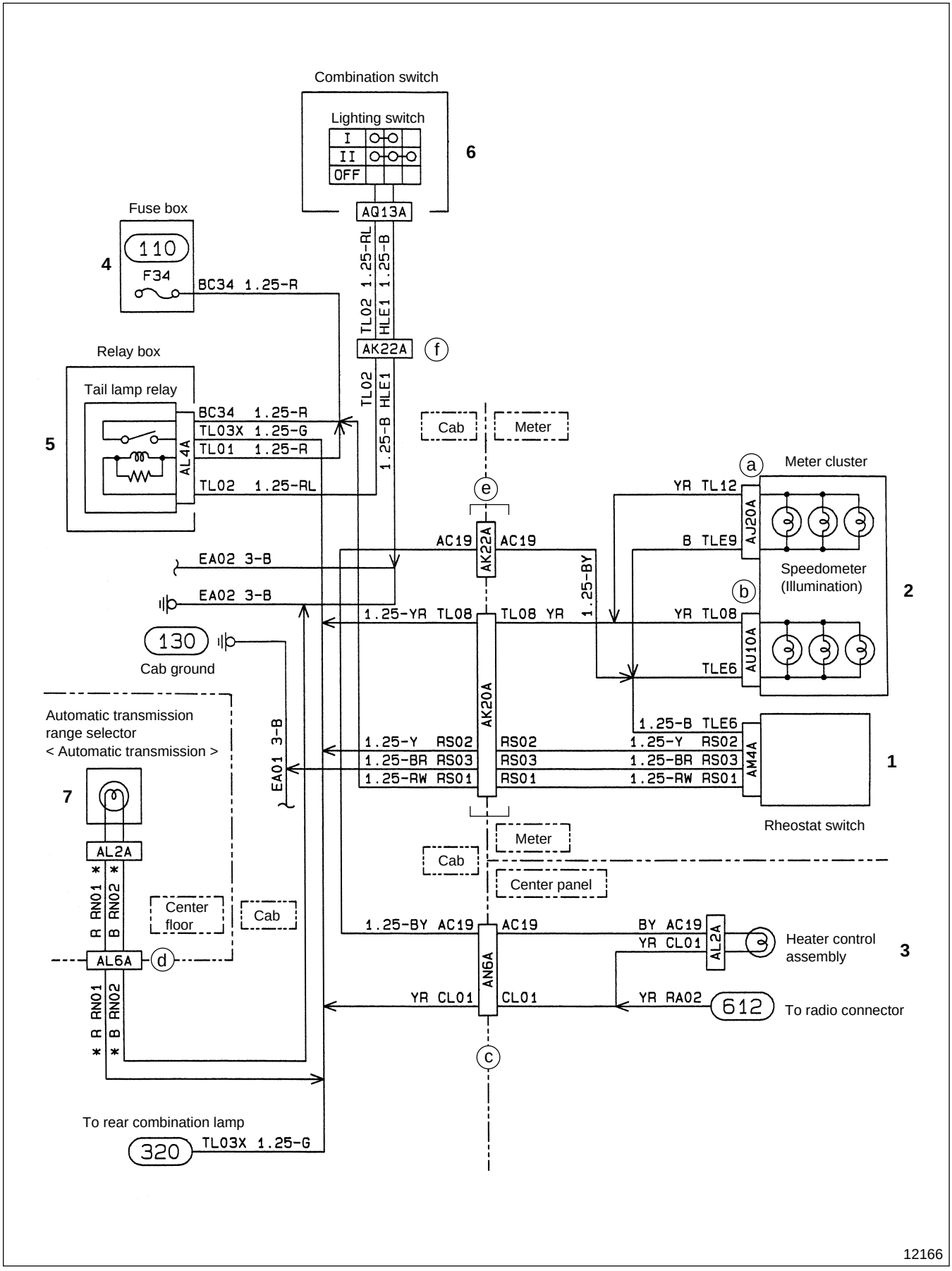

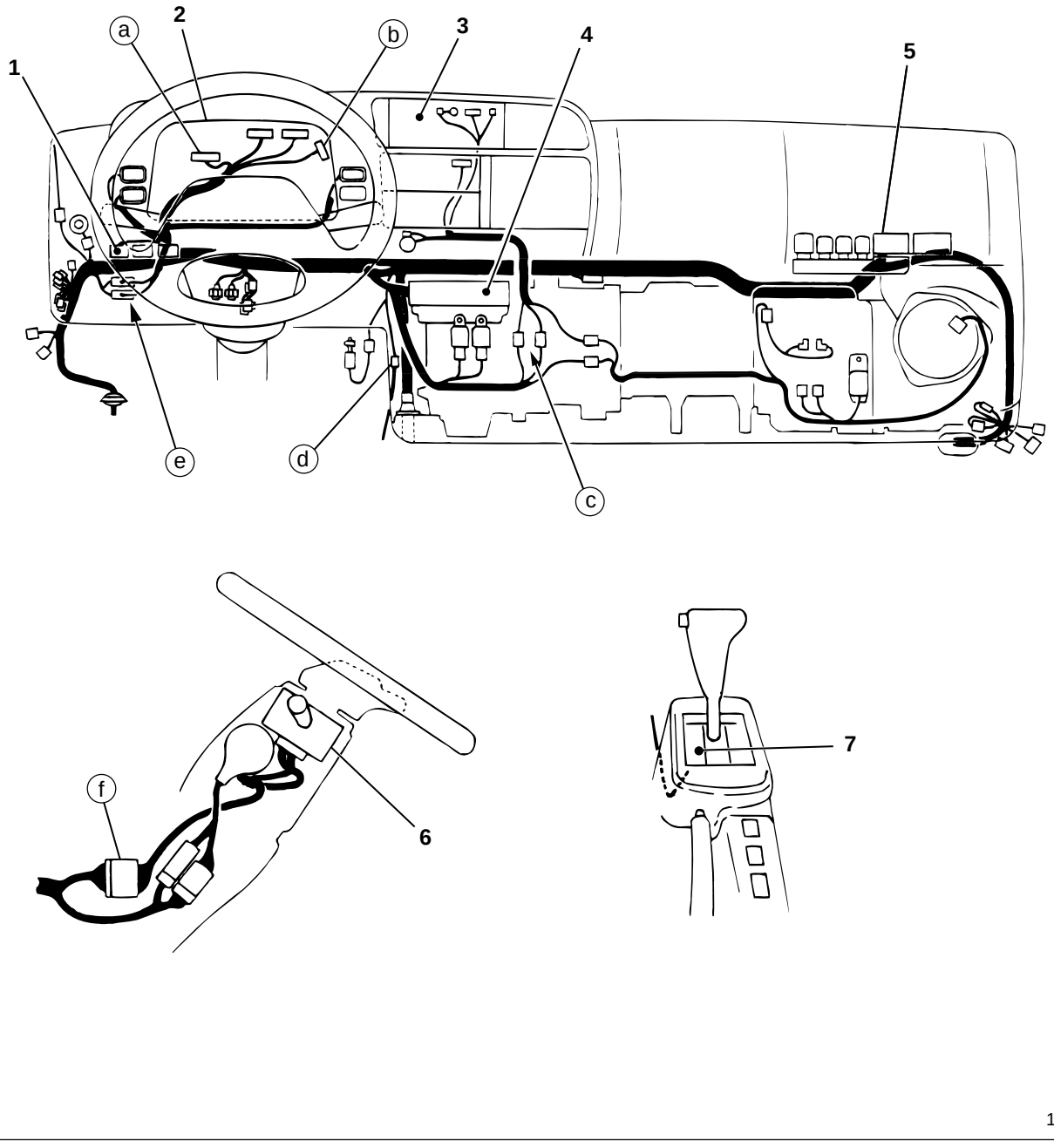

1 Rheostat switch 🕮 (601)
2 Meter cluster 🕮 (401)
3 Heater control assembly 🕮 (618)
4 Fuse box 🕮 (104)
5 Relay box 🕮 (604)
6 Combination switch 🕮 (601)

349 MARKER LAMP AND IDENTIFICATION LAMP CIRCUITS

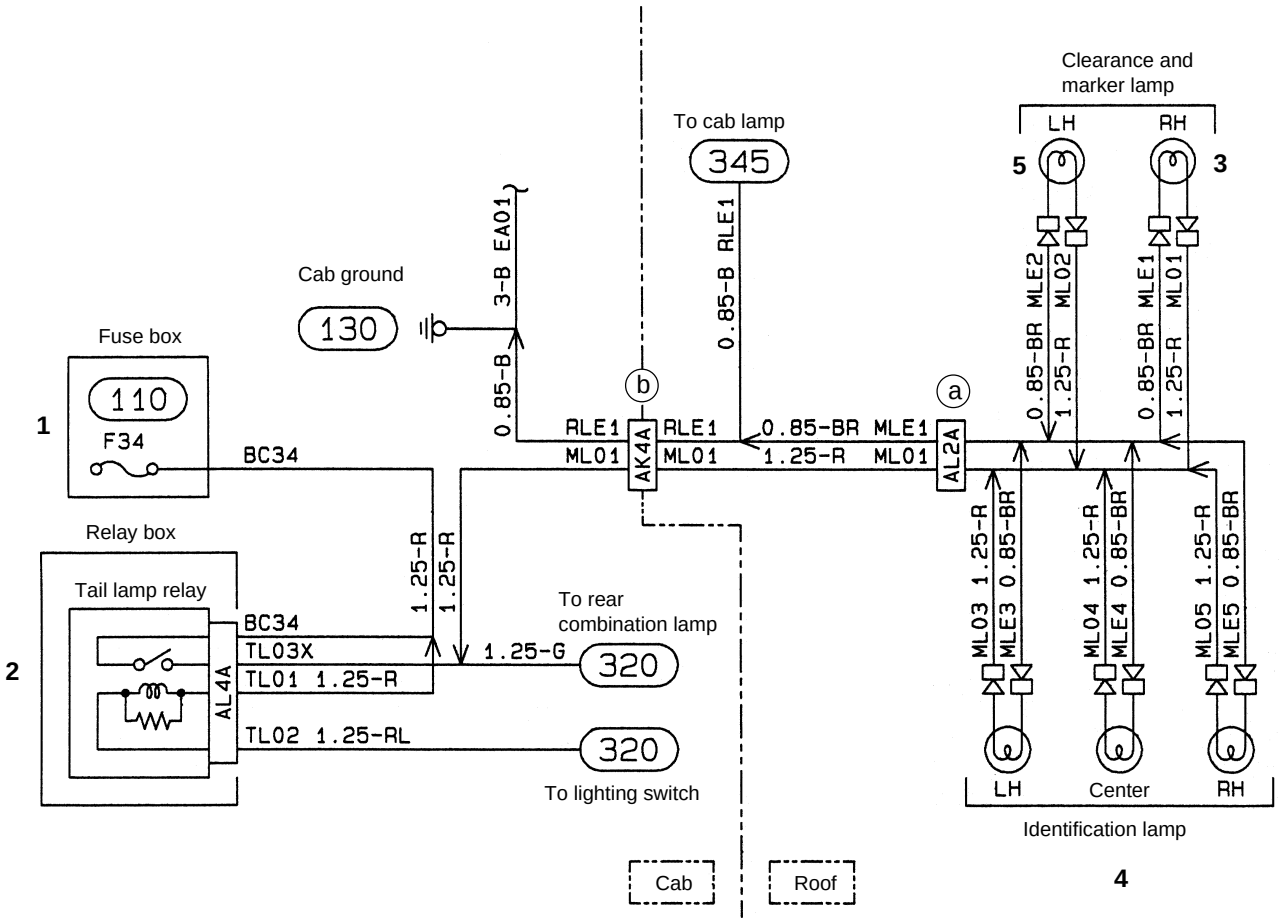

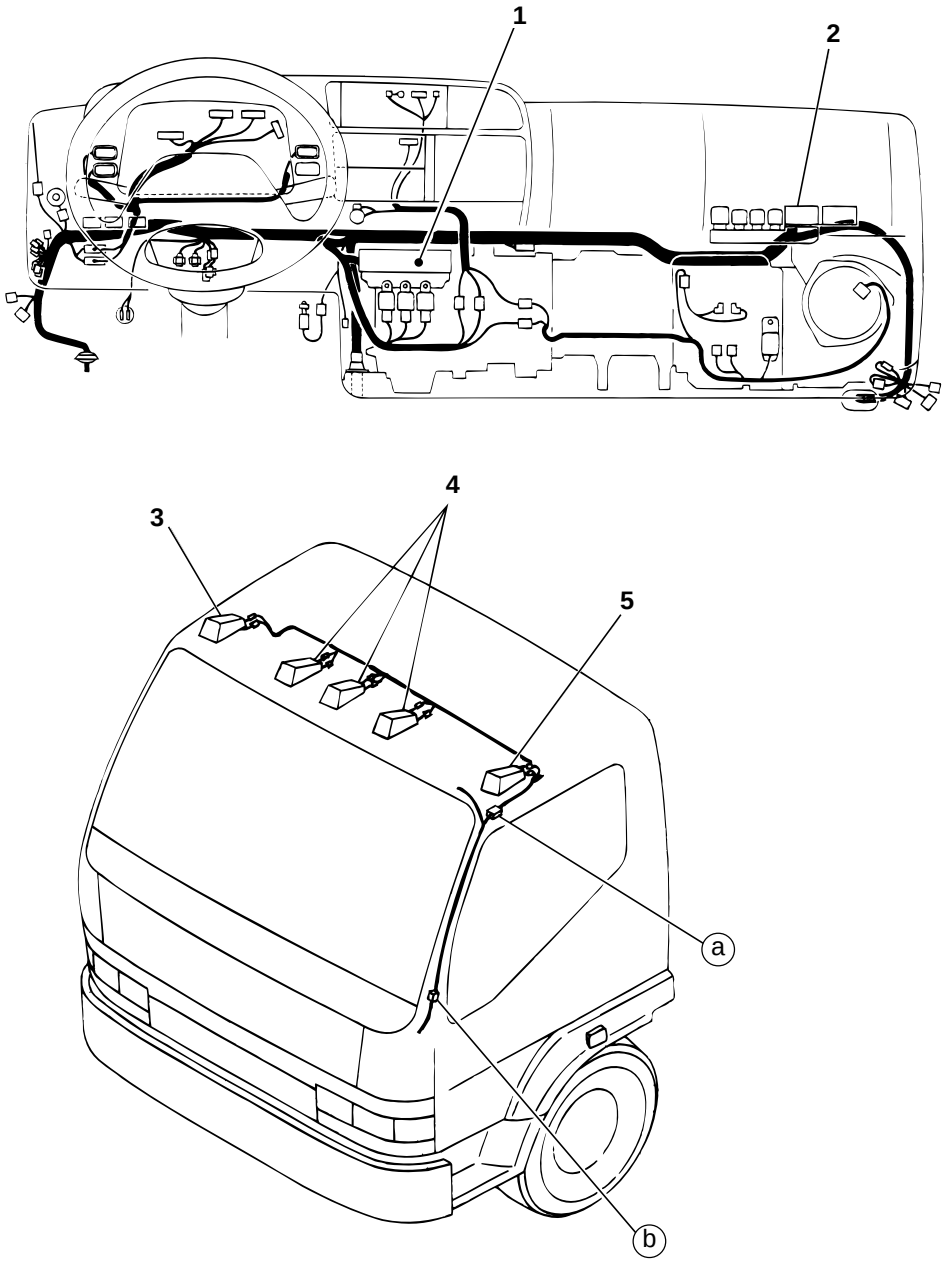

1 Fuse box 📖 (104)
2 Relay box 📖 (604)
3 Clearance and side marker lamp, RH
4 Identification lamp
5 Clearance and side marker lamp, LH

352 VAN BODY DOME LIGHT CIRCUIT

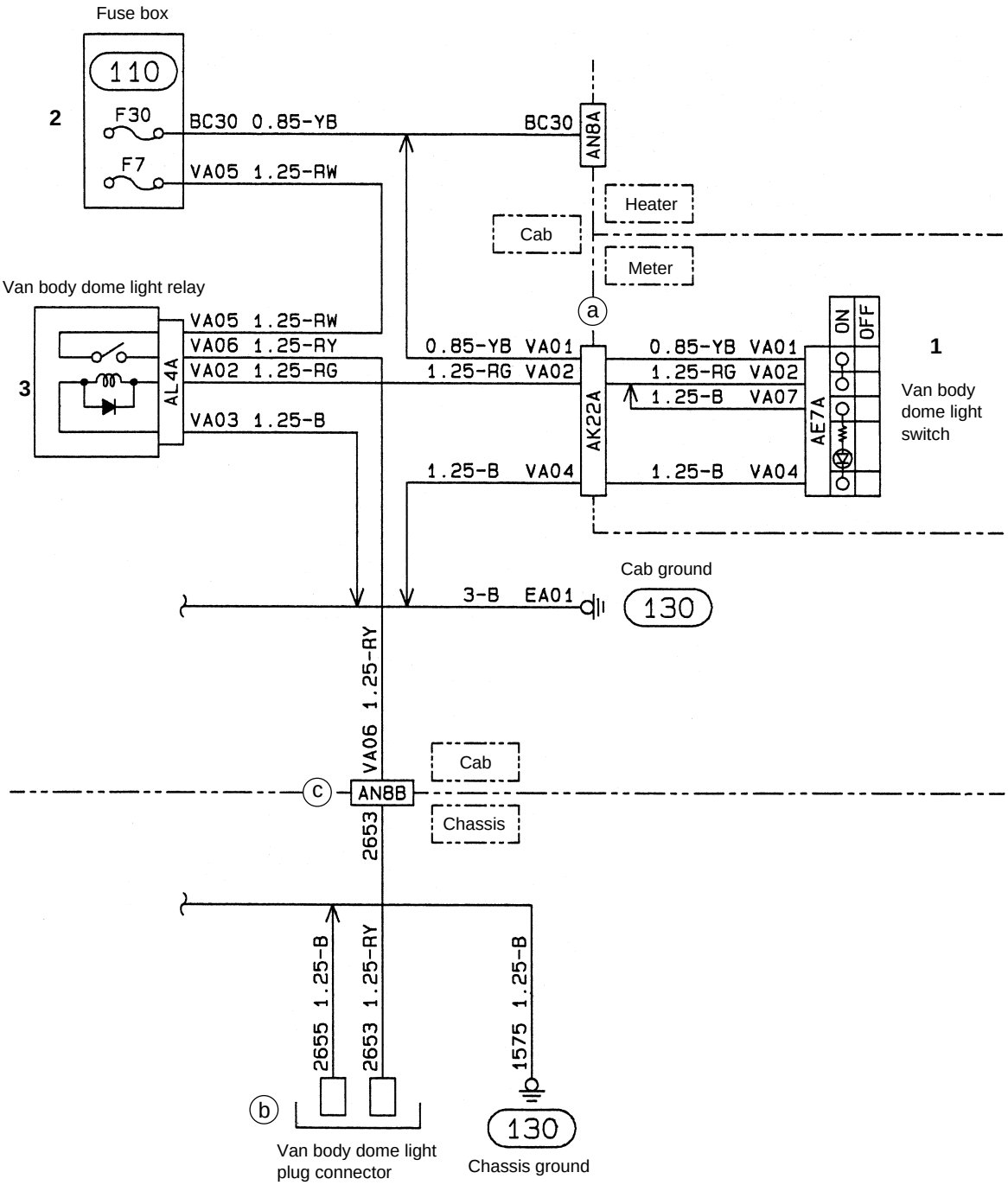

12168

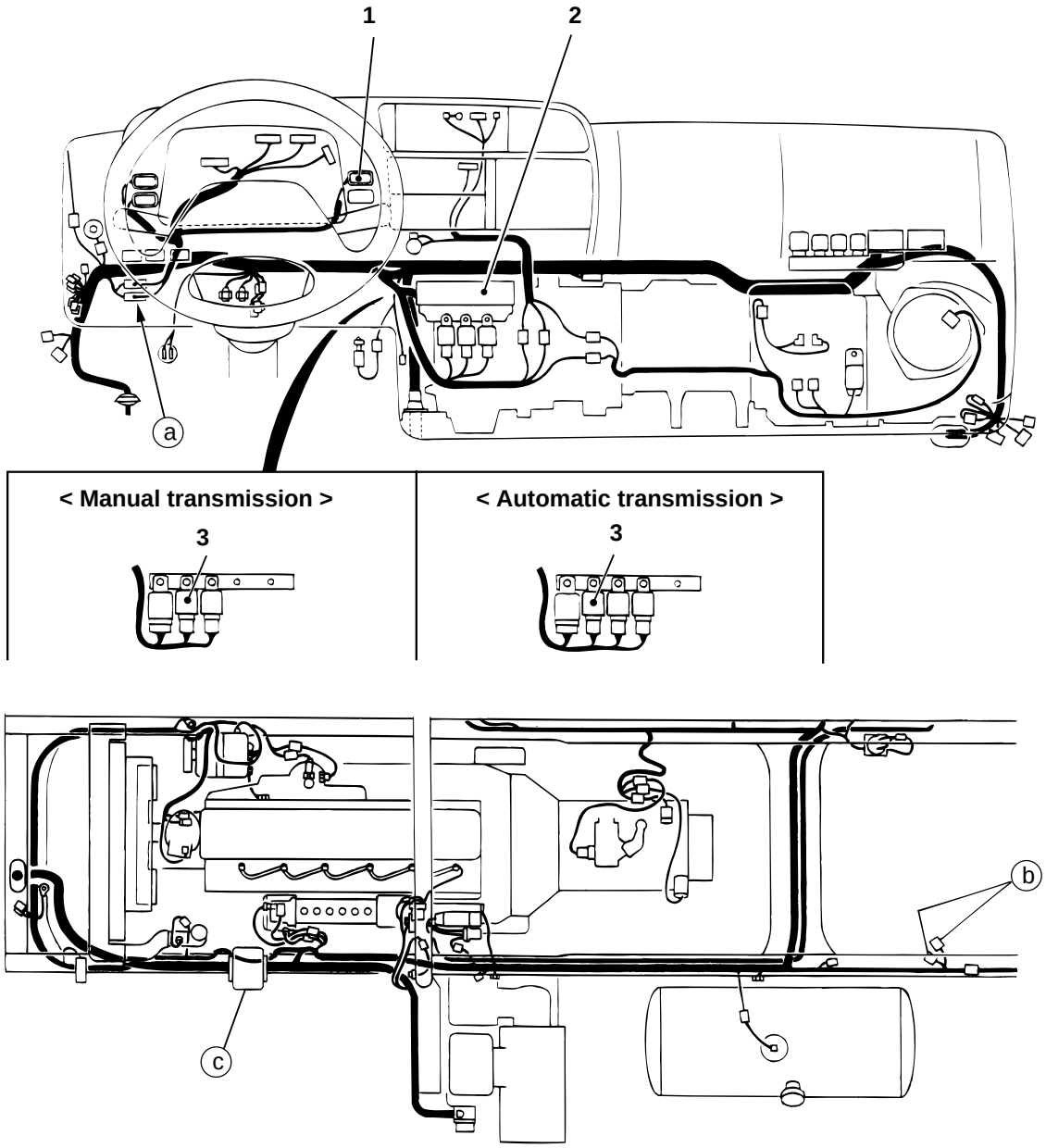

1 Van body dome light switch 🕮 (601)
2 Fuse box 🕮 (104)
3 Van body dome light relay 🕮 (604)

4 METER

SPECIFICATIONS 54-4-2

TROUBLESHOOTING 54-4-3

401 METER CLUSTER 54-4-4

410 SPEEDOMETER AND TACHOMETER CIRCUITS 54-4-10

420 FUEL GAUGE CIRCUIT 54-4-12

425 WATER TEMPERATURE GAUGE CIRCUIT 54-4-16

SPECIFICATIONS

Item			Specifications
Meter cluster	Manufacturer		NIPPONDENSO
	Voltage	V	12
	Lighting bulb	W	3.4
	Indicator lamp bulb	W	1.4
	Warning lamp bulb	W	1.4

Possible causes \ Symptoms		Needle does not move	Needle movement unstable	Indication error large	Meter generates noise	Remarks
Connector connection faulty, harness broken, grounding faulty		○	○			
Fuse blown		○				
Inner circuit of meter cluster faulty		○	○	○		
Printed board of meter cluster faulty		○				
Tachometer	Engine revolution sensor coil broken	○				
	Engine revolution sensor installed incorrectly	○	○			Gr 13
	Tachometer faulty	○	○	○	○	
Speedometer	Vehicle speed sensor faulty	○				
	Vehicle speed sensor installation faulty		○			
	Tires incorrect			○		Gr 31
	Tires worn and tire pressure incorrect			○		Gr 31
	Transmission L-joint incorrect (gear ratio different)			○		Gr 22
	Transmission speedometer gear incorrect (gear ratio different)			○		Gr 22
	Installation angle of transmission speedometer gear bush incorrect (not set at correct gear ratio point)			○		Gr 22
	Speedometer faulty	○	○	○	○	
Water temperature gauge	Water temperature sensor faulty	○		○		
	Water temperature gauge faulty	○		○		
	Thermostat does not close	○				Gr 14
Fuel gauge	Fuel gauge unit faulty	○		○		
	Fuel gauge faulty	○		○		

401 METER CLUSTER

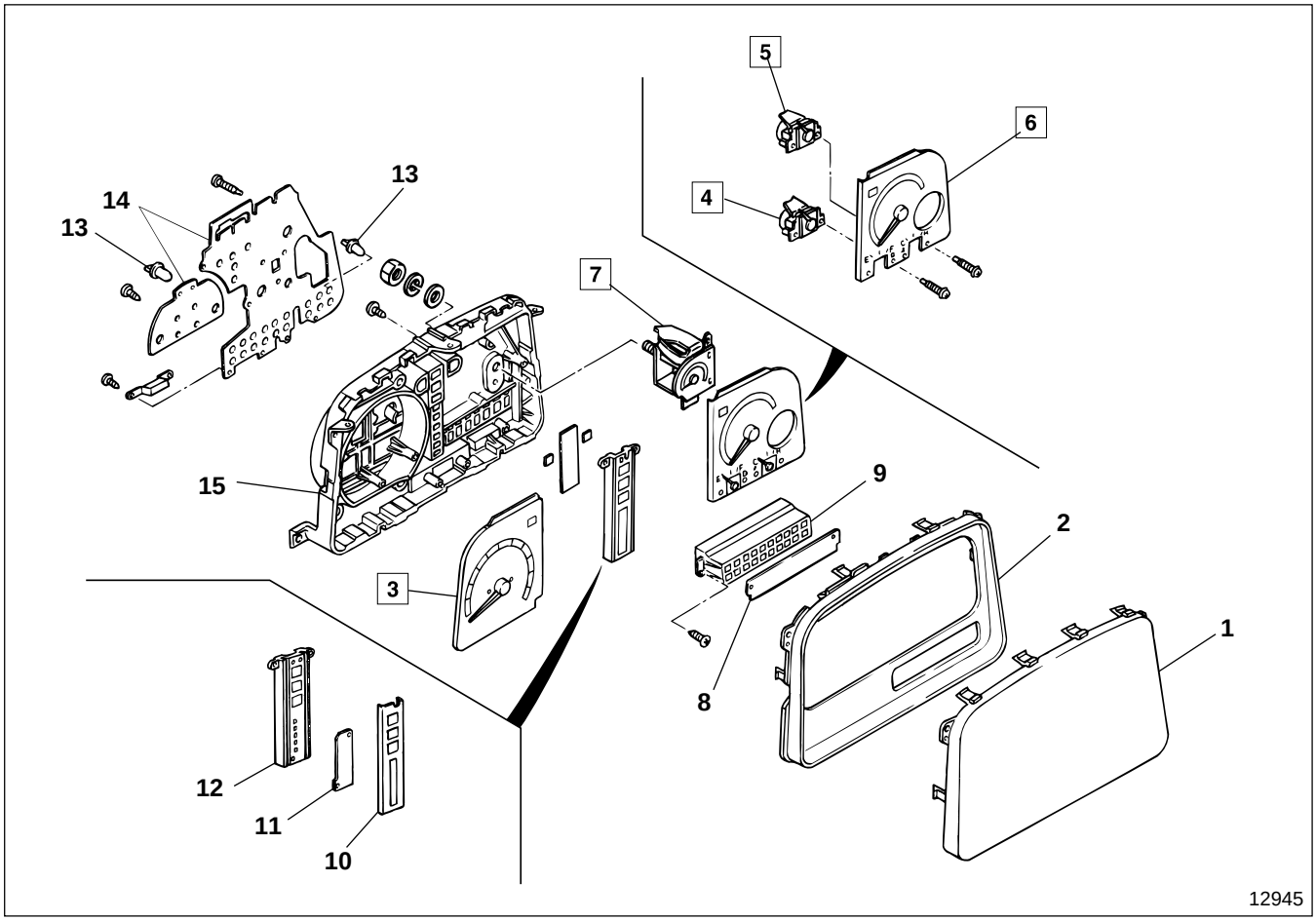

● **Disassembly sequence**

1 Meter glass
2 Window plate
3 Speedometer
4 Fuel gauge
5 Water temperature gauge
6 Tachometer
7 Air pressure gauge
8 Indicator plate
9 Indicator case
10 Plate cover
11 Indicator plate < Automatic transmission >
12 Indicator case
13 Bulb
14 Printed board
15 Meter case

● **Assembly sequence**

Follow the disassembly sequence in reverse.

Removal and installation of meter cluster Gr 42

Service standards

Location	Maintenance item			Standard value	Limit	Remedy
3	Indication area of speedometer assembly		At 10 mph	16.1±3.2 km/h {10±2 mph}	—	Replace
			At 20 mph	32.2 $^{+3.2}_{-2.4}$ km/h {20 $^{+2}_{-1.5}$ mph}		
			At 40 mph	64.4 $^{+4}_{-1.6}$ km/h {40 $^{+2.5}_{-1}$ mph}		
			At 50 mph	80.5 $^{+4.8}_{0}$ km/h {50 $^{+3}_{0}$ mph}		
			At 60 mph	96.6 $^{+4.8}_{0}$ km/h {60 $^{+3}_{0}$ mph}		
4	Resistance of fuel gauge	Needle position	FULL	4 Ω	—	Replace
			1/2	50 Ω		
			EMPTY	135 Ω		
5	Resistance of water temperature gauge	Needle position	65°C {149°F}	84.4 Ω	—	Replace
			100°C {212°F}	26.5 Ω		
6	Indication range of tachometer 20±2°C {68±3.6°F} 13±0.2 V		At 550 rpm	550±50 rpm	—	Replace
			At 1000 rpm	1000±70 rpm		
			At 1500 rpm	1500±110 rpm		
			At 2000 rpm	2000±110 rpm		
			At 2500 rpm	2500±110 rpm		
			At 3000 rpm	3000±110 rpm		
			At 4500 rpm	4500±125 rpm		
7	Indication range of air pressure gauge		At 275.8 kPa {40 lbf/in², 2.8 kgf/cm²}	275.8±50 kPa {40±7 lbf/in², 2.8±0.5 kgf/cm²}	—	Replace
			At 519.9 kPa {75.4 lbf/in², 5.3 kgf/cm²}	519.9±50 kPa {75.4±7 lbf/in², 5.3±0.5 kgf/cm²}		
			At 827.4 kPa {120 lbf/in², 8.4 kgf/cm²}	827.4±50 kPa {120±7 lbf/in², 8.4±0.5 kgf/cm²}		
			At 896.3 kPa {130 lbf/in², 9.1 kgf/cm²}	896.3±50 kPa {130±7 lbf/in², 9.1±0.5 kgf/cm²}		
			At 1103.2 kPa {160 lbf/in², 11.3 kgf/cm²}	1103.2±50 kPa {160±7 lbf/in², 11.2±0.5 kgf/cm²}		
	Tolerance of reading by two needles under the same pressure		At 519.9 kPa {75.4 lbf/in², 5.3 kgf/cm²}	±50 kPa {±7 lbf/in², 0.5 kgf/cm²}		
			At 896.3 kPa {130 lbf/in², 9.1 kgf/cm²}	±50 kPa {±7 lbf/in², 0.5 kgf/cm²}		

◆ Service procedure

3 Inspection of speedometer

- Measure the indication area of speedometer **3** at various speed ranges using a speedometer tester.
- If the measured value deviates from the standard value, carry out the following inspection. If the inspection does not indicate a fault, replace speedometer **3**.

(1) Inspection of vehicle speed sensor body 802

(2) Inspection of installed condition of vehicle speed sensor

Gr 22 < Manual transmission >
Gr 23 < Automatic transmission >

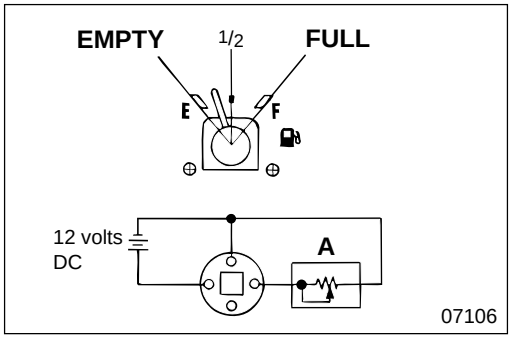

4 Inspection of fuel gauge

- Connect a variable resistor to fuel gauge **4** as illustrated.
  A : Variable resistor
- Measurement order
  FULL → 1/2 → EMPTY

NOTE

The movement of the gauge needle is subject to hysteresis (oscillation). Be sure to measure following the measurement order.

- Increase the value of variable resistor **A** gradually from 0 Ω.
- Measure the resistance respectively when the needle of fuel gauge **4** indicates FULL, 1/2 and EMPTY.
- If the measured value deviates from the standard value, replace fuel gauge **4**.

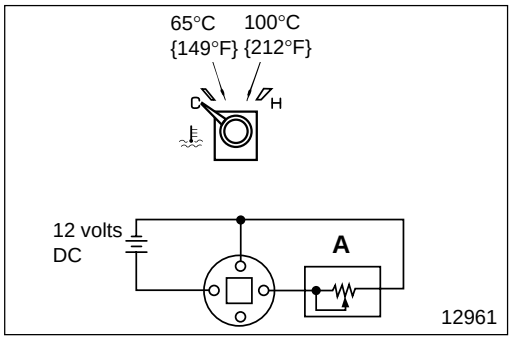

5 Inspection of water temperature gauge

- Connect a variable resistor to water temperature gauge **5** as illustrated.
  A : Variable resistor
- Measurement order
  Low temperature → High temperature

NOTE

The movement of the gauge needle is subject to hysteresis (oscillation). Be sure to measure following the measurement order.

- Increase the value of variable resistor **A** gradually from 0 Ω.
- Measure the resistance respectively when the needle of water temperature gauge **5** indicates 65°C {149°F} and 100°C {212°F}.
- If the measured value deviates from the standard value, replace water temperature gauge **5**.

6 Inspection of tachometer

- Measure the indication area of tachometer **6** at various revolution ranges using an engine revolution counter.
- If the measured value deviates from the standard value, carry out the following inspection. If the inspection does not indicate a fault, replace tachometer **6**.

(1) Inspection of the engine revolution sensor body 801

(2) Inspection of the installed condition of the engine revolution sensor **Gr 13**

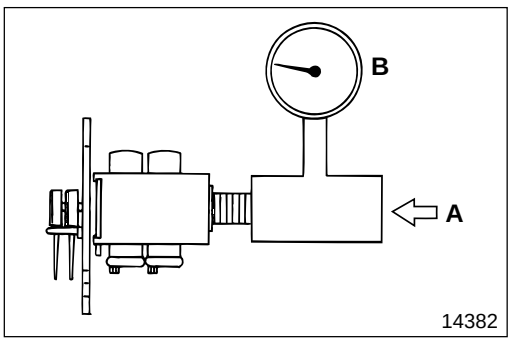

7 Inspection of air pressure gauge

- Apply air pressure **A** to air pressure gauge **7**.
  B : Air pressure gauge
- Measure the indication area of air pressure gauge **7** at standard pressure.
- If the measured value deviates from the standard value, replace air pressure gauge **7**.

M E M O

Meter Cluster Internal Circuit

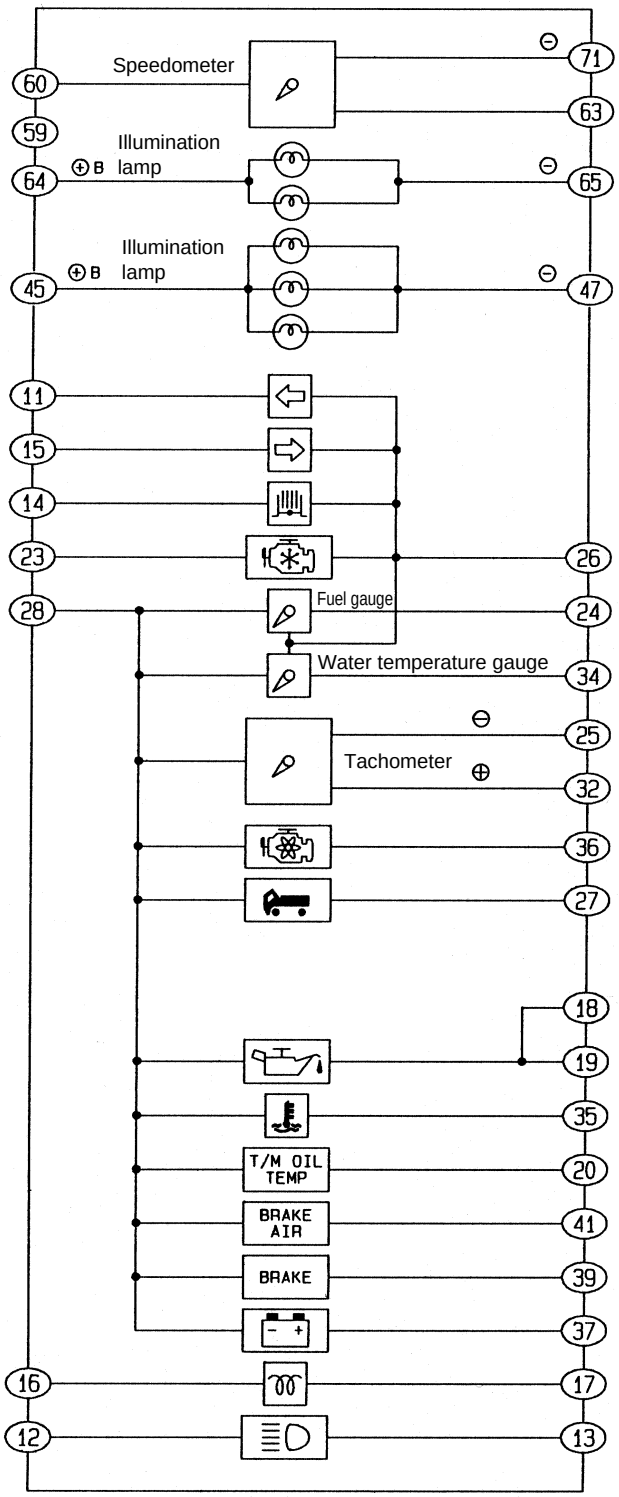

12633

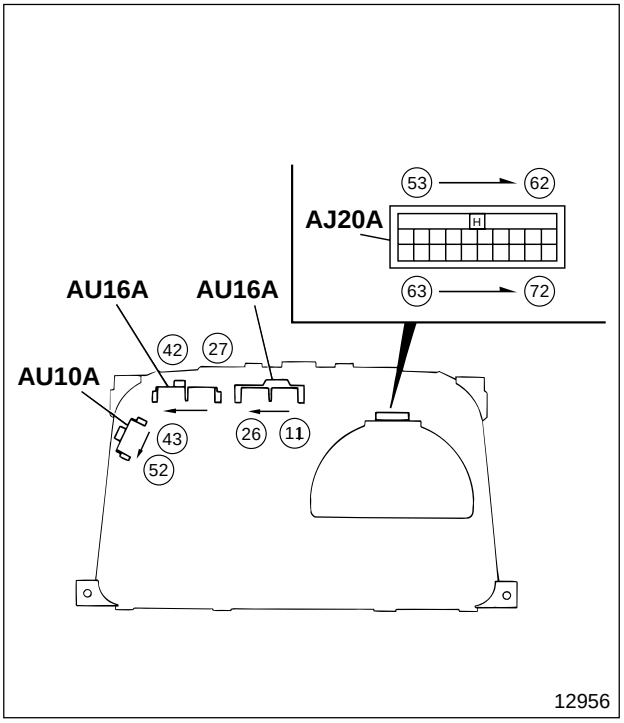

Terminal No.	AU16A
11	Turn, LH ⊕
12	Beam ⊕
13	Beam ⊖
14	Exhaust brake ⊕
15	Turn, RH ⊕
16	Glow ⊕
17	Glow ⊖
18	—
19	—
20	ATF temperature ⊖
21	—
22	—
23	Cold start ⊕
24	Fuel gauge unit ⊖
25	Pre-stroke control ⊖
26	Ground

Terminal No.	AU16A
27	Cab tilt ⊖
28	Starter switch terminal M
29	—
30	Door ⊖
31	—
32	Pre-stroke control ⊖
33	—
34	Water temperature ⊖
35	Water level, overheating ⊖
36	Pre-stroke control ⊖
37	Alternator ⊖
38	—
39	Parking brake ⊖
40	—
41	Low-air pressure ⊖
42	—

Terminal No.	AU10A
43	—
44	—
45	Illumination ⊕
46	—
47	Illumination ⊖
48	Engine oil pressure ⊖
49	—
50	—
51	—
52	Engine oil bypass alarm ⊖

Terminal No.	AJ20A
53 to 59	—
60	Starter switch terminal M
61	—
62	—
63	Vehicle speed sensor (Signal)
64	Illumination ⊕
65	Illumination ⊖
66 to 70	—
71	Ground
72	—

ATF : Automatic transmission fluid

410 SPEEDOMETER AND TACHOMETER CIRCUITS

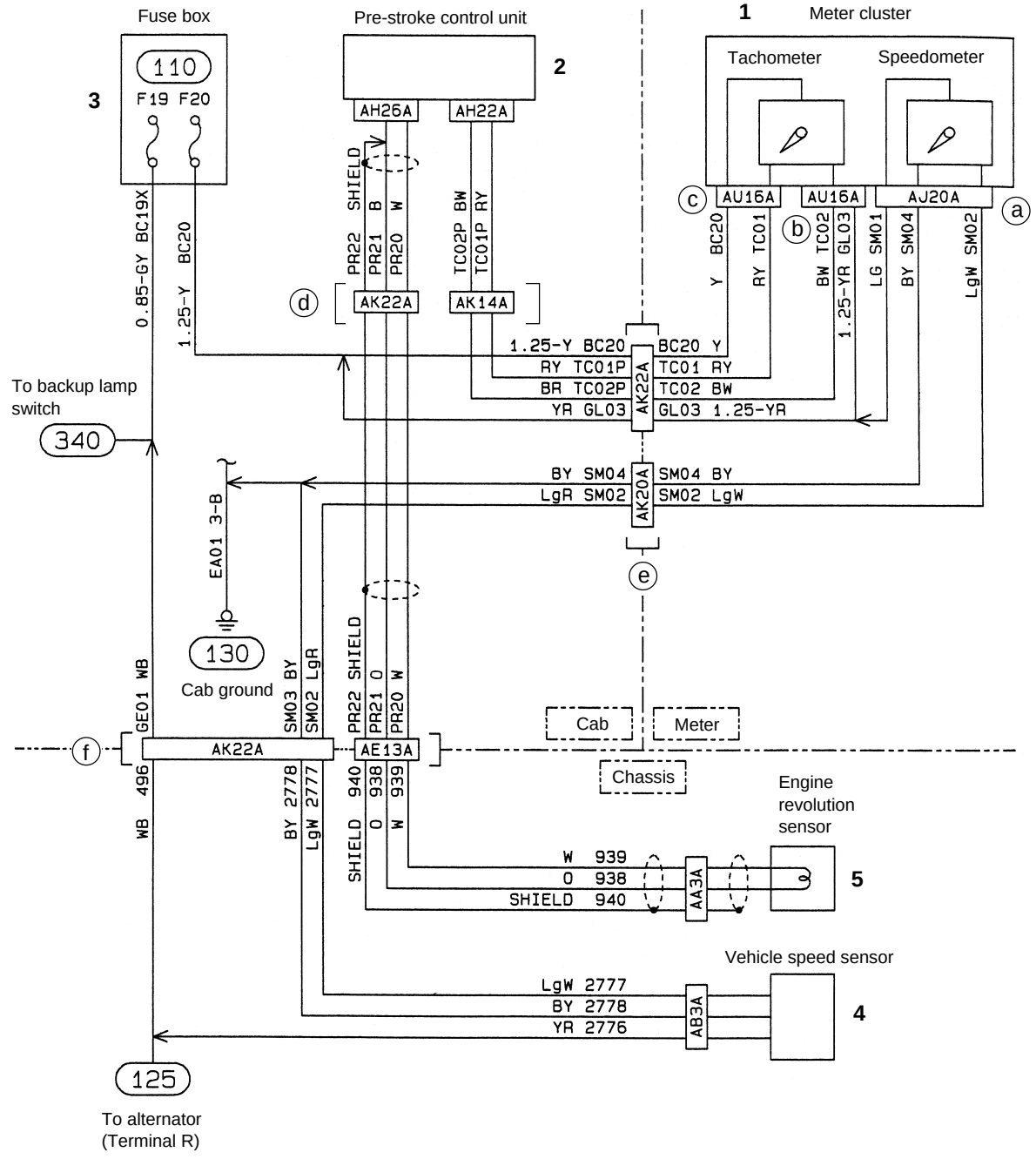

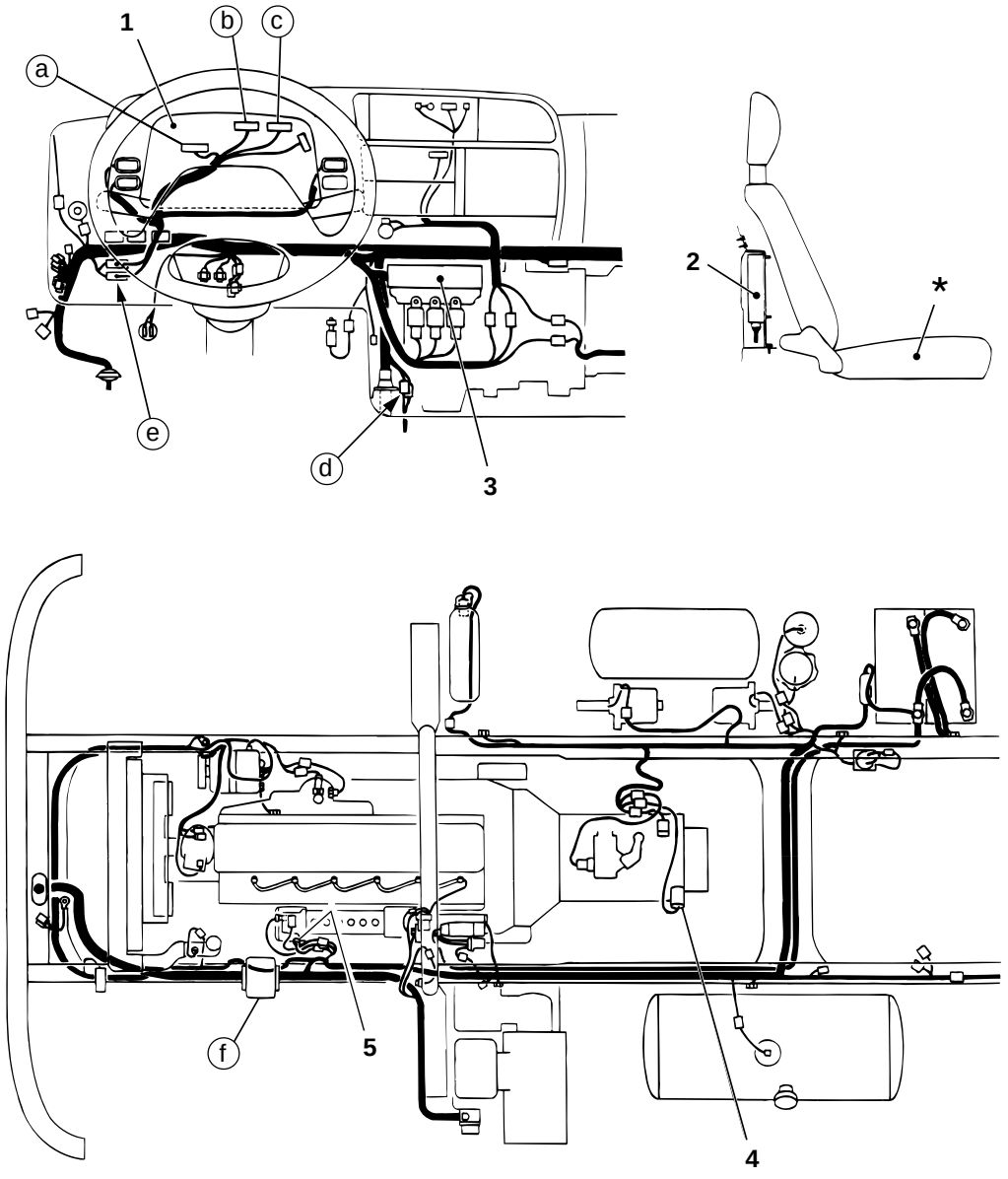

12699

1 Meter cluster 401
2 Pre-stroke control unit 604
3 Fuse box 104
4 Vehicle speed sensor 802
5 Engine revolution sensor 801

***** : Passenger's seat

420 FUEL GAUGE CIRCUIT

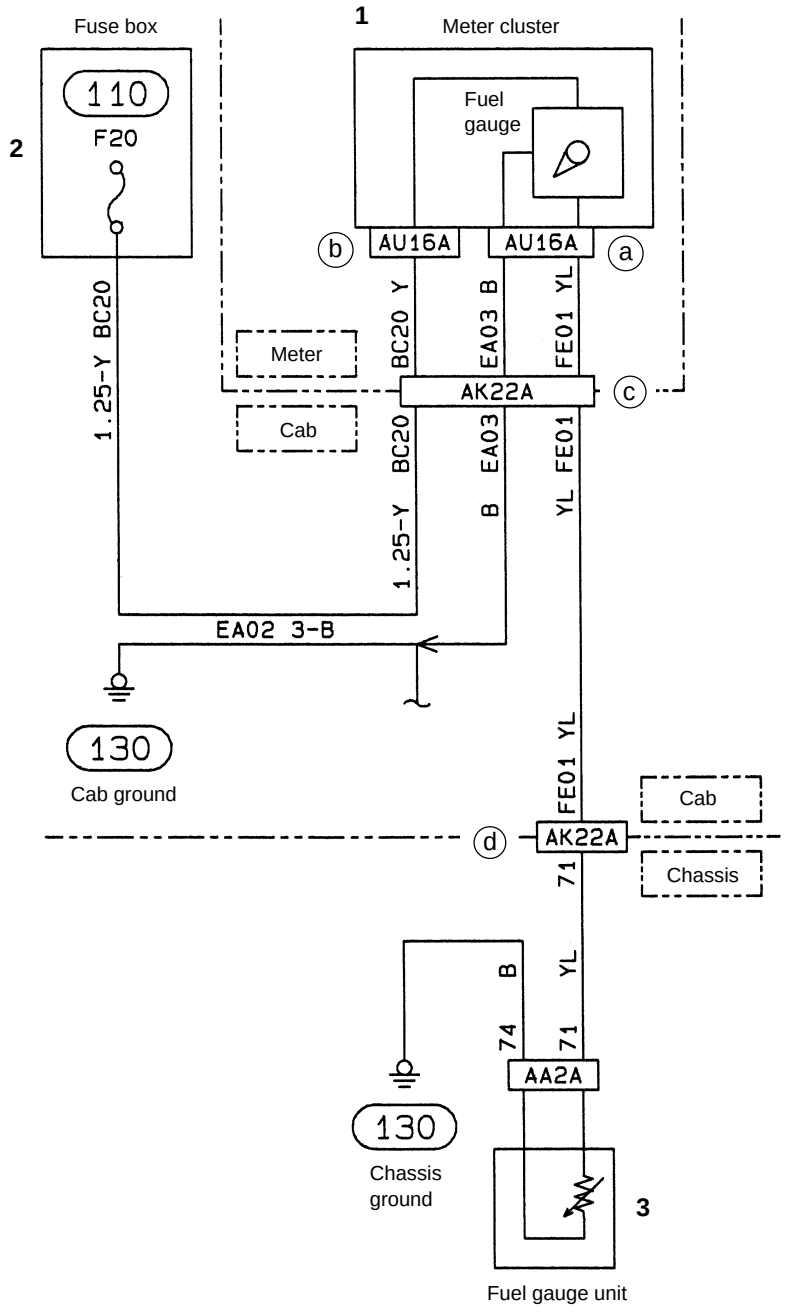

12213

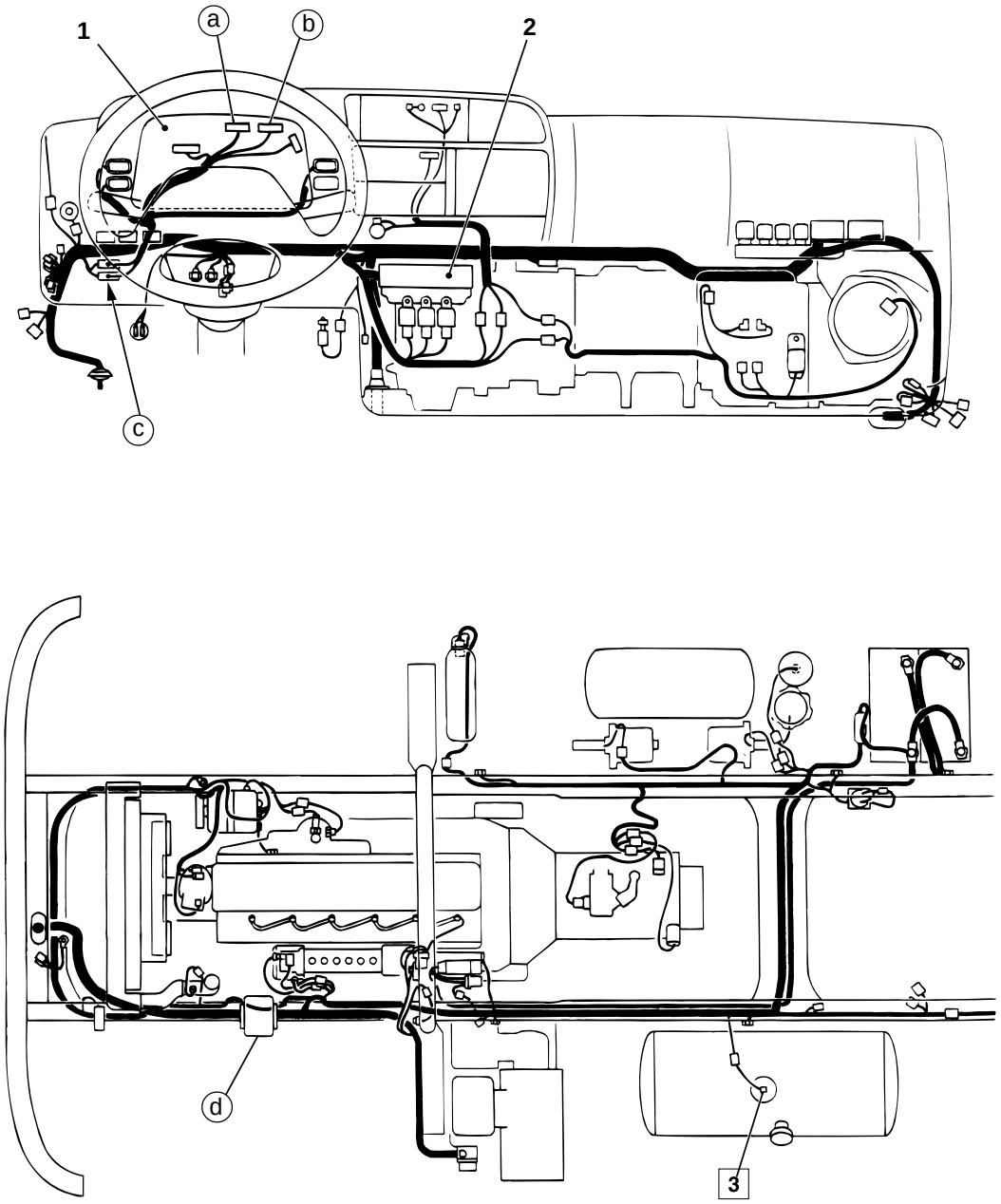

12700

1 Meter cluster 401
2 Fuse box 104
3 Fuel gauge unit

Service standards

Location	Maintenance item			Standard value	Limit	Remedy
3	Resistance of fuel gauge unit	Float arm location	EMPTY	150±10 Ω	—	Replace
			1/2	50±3 Ω		
			FULL	0^{+2}_{0} Ω		

( ): Reference values

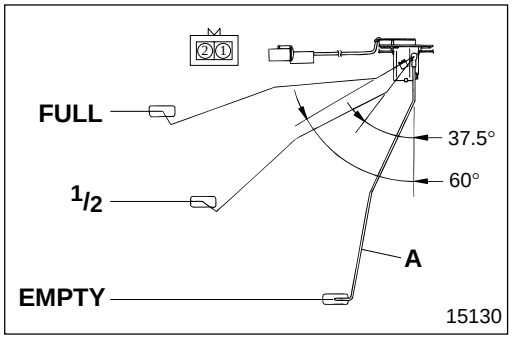

◆ Service procedure

3 **Inspection of fuel gauge unit**

- Measure the resistance between terminals ① and ② when float arm **A** makes contact with both end stoppers (**E** and **F**) and midpoint positions of the movable range, respectively.
- If the measured value deviates from the standard value, replace fuel gauge unit **3**.

M E M O

425 WATER TEMPERATURE GAUGE CIRCUIT

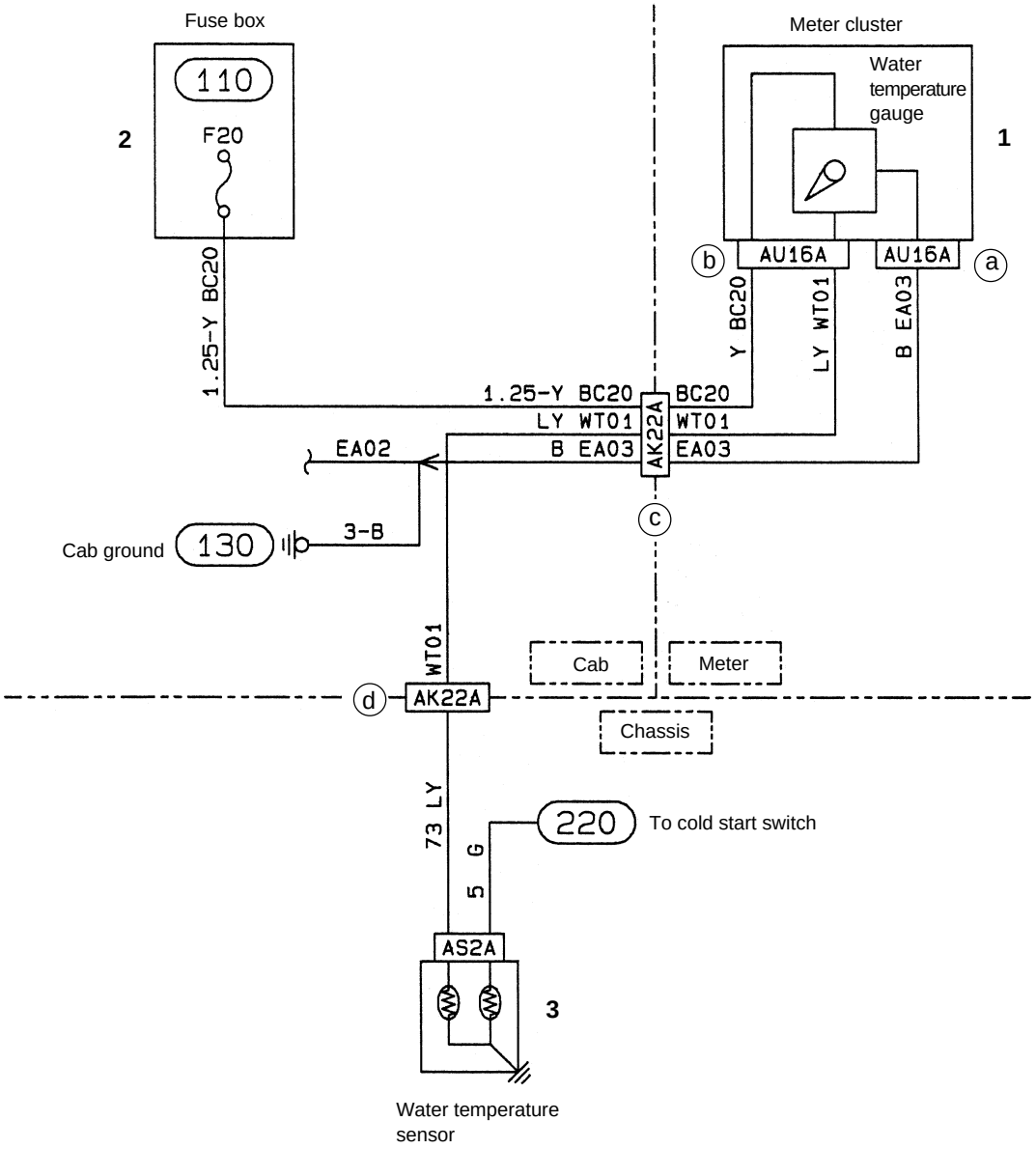

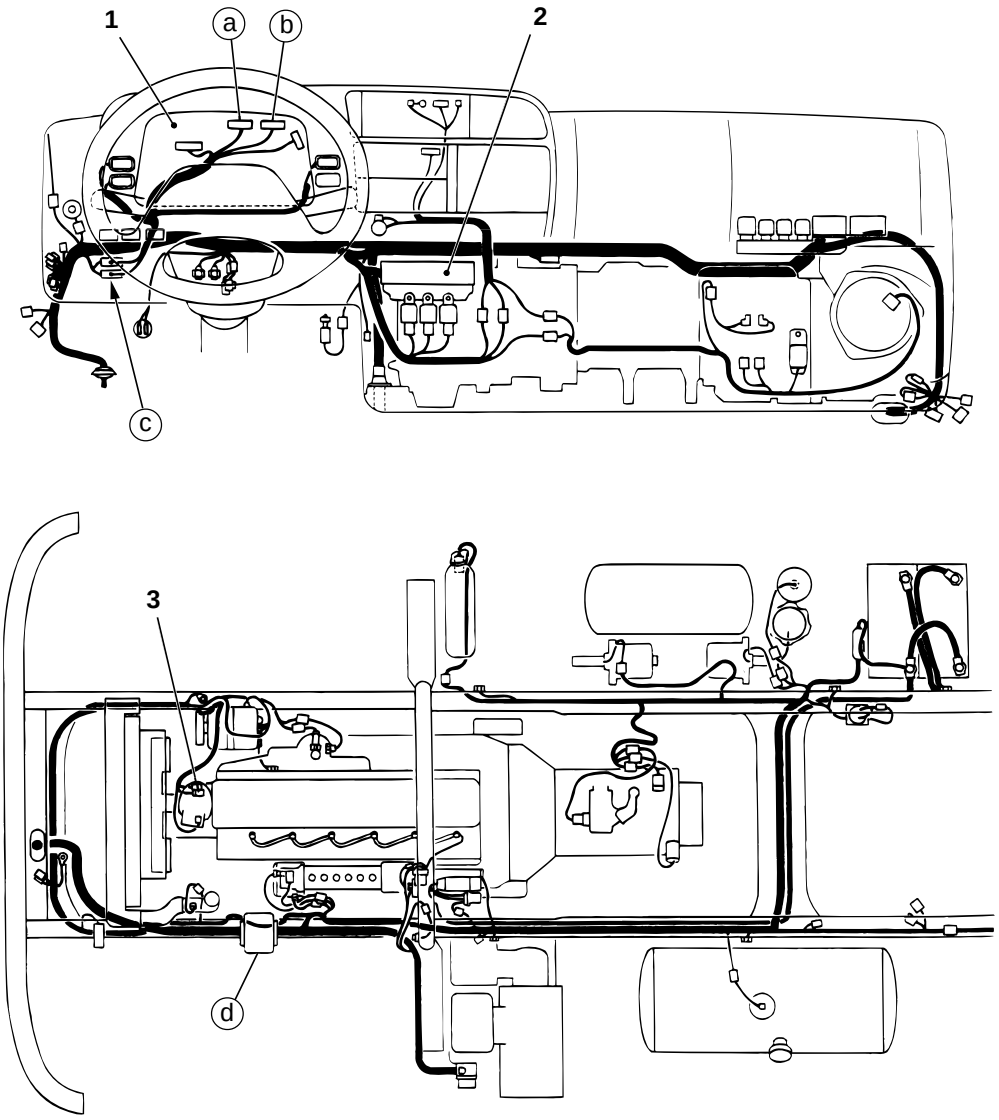

12701

1 Meter cluster 401
2 Fuse box 104
3 Water temperature sensor 801

5 INDICATOR AND WARNING

TROUBLESHOOTING 54-5-2

500 INSPECTION AND ADJUSTMENT MOUNTED IN VEHICLE
- **Inspection of Brake Fluid Level Switch 54-5-5**

510 PARKING BRAKE INDICATOR CIRCUIT BRAKE **..... 54-5-6**

515 BRAKE WARNING CIRCUIT BRAKE AIR BRAKE **..... 54-5-8**

530 WATER LEVEL WARNING CIRCUIT **..... 54-5-12**

536 ENGINE OIL PRESSURE WARNING CIRCUIT **..... 54-5-16**

537 OVERHEATING WARNING CIRCUIT **..... 54-5-18**

547 AUTOMATIC TRANSMISSION FLUID TEMPERATURE WARNING CIRCUIT T/M OIL TEMP **..... 54-5-20**

550 CAB TILT WARNING CIRCUIT **..... 54-5-24**

For details on the following indicator and warning lamps, see the relevant sections.



TROUBLESHOOTING

Symptoms / Possible causes		Lamps do not light with starter switch turned ON (engine not started)	BRAKE: Lamp does not light although parking brake lever is pulled	BRAKE: Lamp does not go out although parking brake lever is returned	BRAKE: Lamp does not light although brake fluid level is insufficient	BRAKE: Warning buzzer does not sound although brake fluid lever is insufficient	BRAKE: Lamp lights although brake fluid level is sufficient	BRAKE AIR: Lamp does not light although air pressure level in air tank is low	BRAKE AIR: Warning buzzer does not sound although air pressure level in air tank is low	BRAKE AIR: Lamp lights although air pressure level in air tank is sufficient	Remarks
Connector connection faulty, harness broken, grounding faulty		○	○		○	○		○	○		
Fuse blown		○	○		○			○			
Meter cluster	Internal circuit faulty	○	○	○	○		○	○		○	
	Bulb burnt-out	○	○		○			○			
Warning buzzer faulty			○	○		○			○		
Parking brake switch faulty			○	○							
Parking brake relay faulty <Automatic transmission>			○	○							
Brake fluid level switch faulty					○		○				
Low air pressure switch faulty								○		○	
Air master stroke switch faulty							○				
Air master faulty							○				Gr 35
Cab tilt lock switch	Switch body faulty										
	Installation faulty										Gr 42
Overheating switch faulty											
Water level sensor faulty											
Multipurpose timing control unit faulty											
Engine oil pressure switch faulty											
Engine oil bypass alarm switch faulty											
Automatic transmission fluid thermostat switch faulty											

Symptoms / Possible causes		Lamp does not light although engine coolant level is insufficient	Lamp lights although engine coolant level is sufficient	Lamp does not light although engine coolant over-heating	Lamp lights when not overheating	Warning buzzer does not stop sounding although parking brake lever is pulled	Lamp does not light although engine oil hydraulic pressure is low	Lamp lights although engine oil hydraulic pressure is sufficient	Warning buzzer does not stop sounding although parking brake lever is pulled	Remarks
Connector connection faulty, harness broken, grounding faulty		○		○		○	○		○	
Fuse blown		○		○			○			
Meter cluster	Internal circuit faulty	○	○	○	○		○	○		
	Bulb burnt-out	○		○			○			
Warning buzzer faulty						○			○	
Parking brake switch faulty										
Parking brake relay faulty < Automatic transmission >										
Brake fluid level switch faulty						○				
Low air pressure switch faulty										
Air master stroke switch faulty										
Air master faulty										Gr 35
Cab tilt lock switch	Switch body faulty									
	Installation faulty									Gr 42
Overheating switch faulty				○	○					
Water level sensor faulty		○	○							
Multipurpose timing control unit faulty		○	○							
Engine oil pressure switch faulty							○	○		
Engine oil bypass alarm switch faulty							○	○		
Automatic transmission fluid thermostat switch faulty										

Symptoms / Possible causes		T/M OIL TEMP: Lamp does not light although automatic transmission fluid temperature is high	T/M OIL TEMP: Lamp lights although automatic transmission fluid temperature is appropriate	Warning buzzer does not stop sounding although parking brake lever is pulled	Lamp lights although cab is locked to rear cab mounting	Lamp does not light although cab is not locked to rear cab mounting	Remarks
Connector connection faulty, harness broken, grounding faulty		○		○		○	
Fuse blown		○				○	
Meter cluster	Internal circuit faulty	○	○		○	○	
	Bulb burnt-out	○				○	
Warning buzzer faulty				○			
Parking brake switch faulty							
Parking brake relay faulty < Automatic transmission >							
Brake fluid level switch faulty							
Low-air pressure switch faulty							
Air master stroke switch faulty							
Air master faulty							Gr 35
Cab tilt lock switch	Switch body faulty				○	○	
	Installation faulty				○		Gr 42
Overheating switch faulty							
Water level sensor faulty							
Multipurpose timing control unit faulty							
Engine oil pressure switch faulty							
Engine oil bypass alarm switch faulty							
Automatic transmission fluid thermostat switch faulty		○	○				

Inspection of Brake Fluid Level Switch

Service standards

Unit : mm {in.}

Location	Maintenance item	Standard value	Limit	Remedy
—	Warning lamp lighting position for brake fluid level switch	$57^{+3.5}_{-0.5}$ {$2.24^{+0.14}_{-0.02}$}	—	Replace

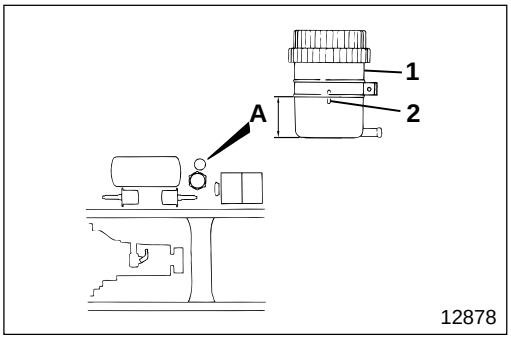

- Start engine.
- Drain the brake fluid gradually from fluid tank assembly **1**.

CAUTION

If brake fluid is spilt on any part of the vehicle, wipe it off immediately, since the solvent in the fluid can damage the paintwork.

- Measure height **A** of brake fluid level switch **2** when BRAKE warning lamp within the meter cluster lights.
- If the measured value deviates from the standard value, remove and check fluid tank assembly **1**.

Removal and installation : Gr 35
Inspection : 515

510 PARKING BRAKE INDICATOR CIRCUIT

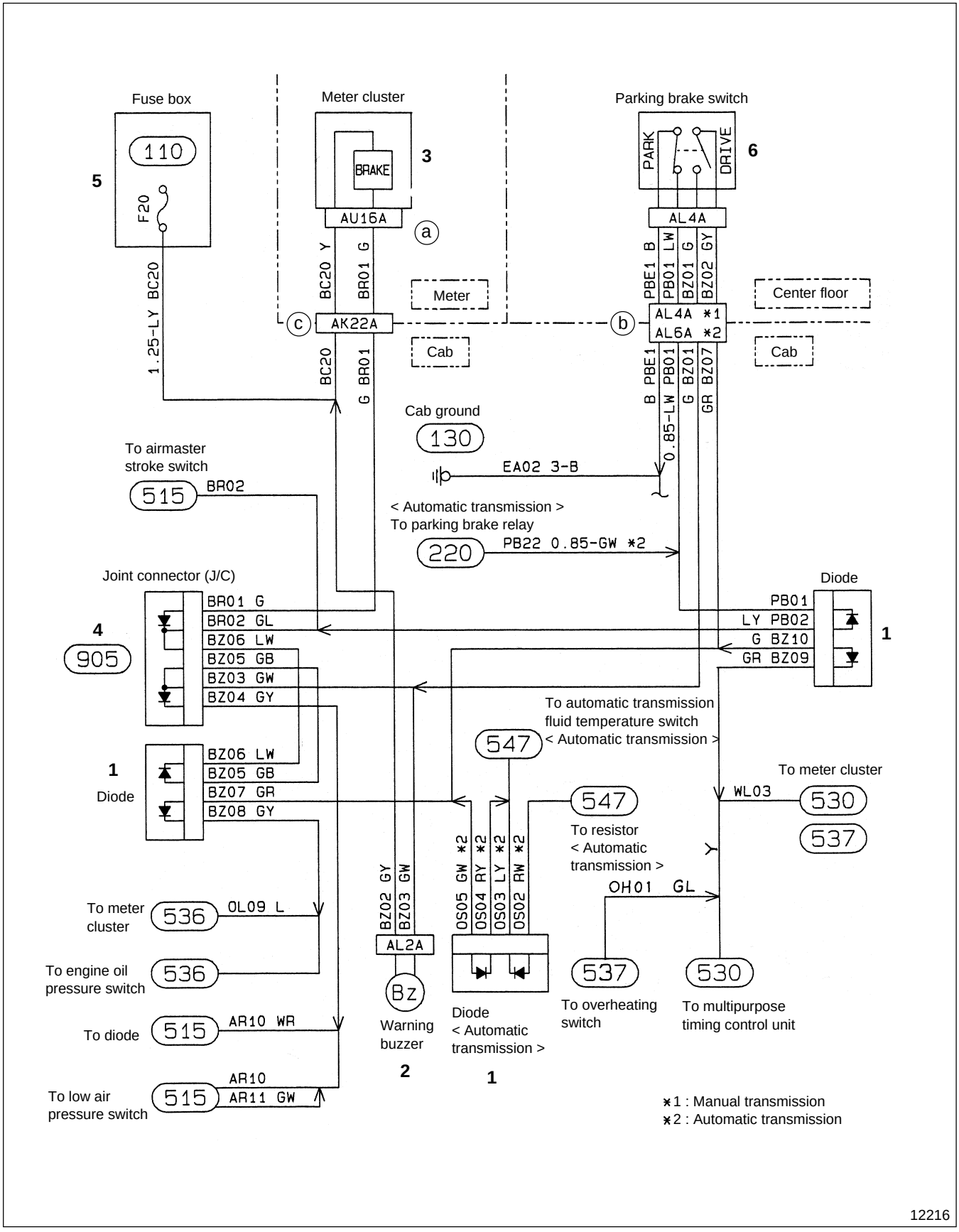

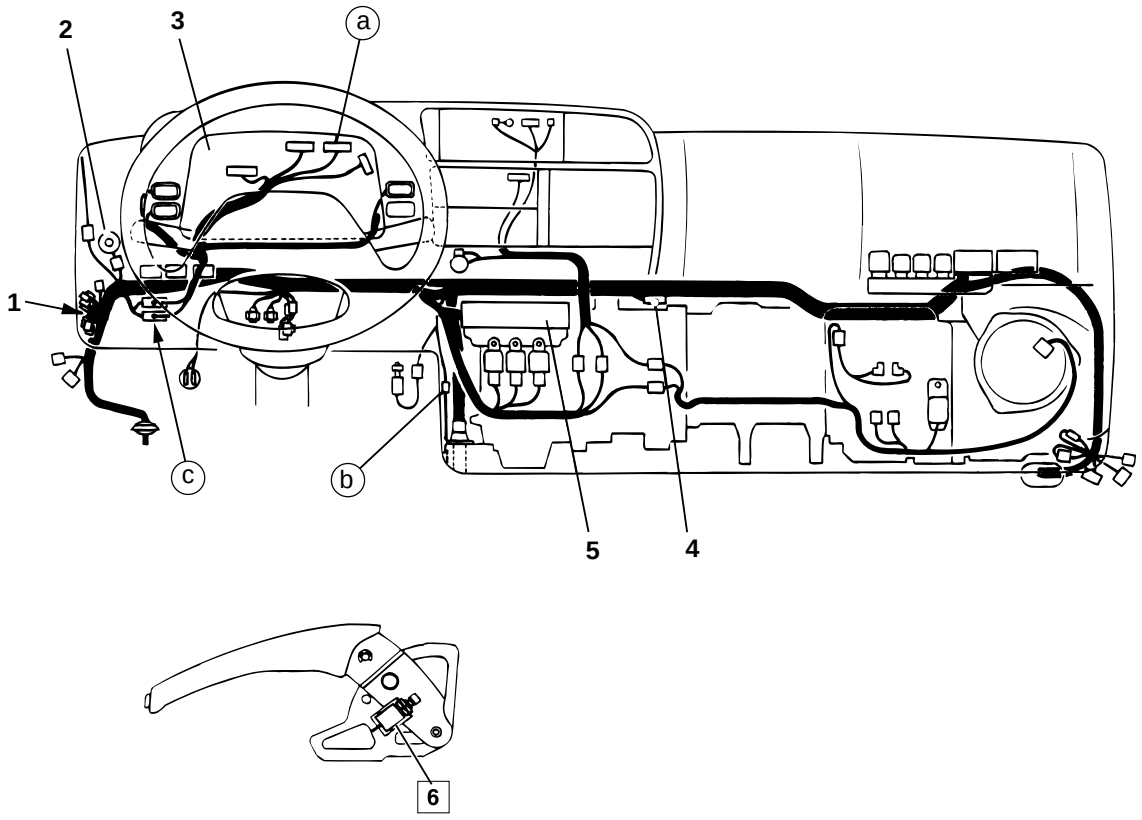

1 Diode
2 Warning buzzer 🕮 (606)
3 Meter cluster 🕮 (401)
4 Joint connector (J/C) 🕮 (905)
5 Fuse box 🕮 (104)
6 Parking brake switch

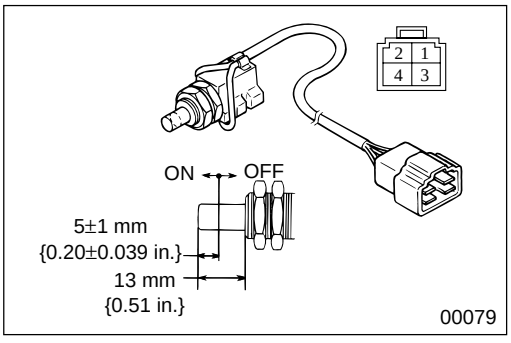

◆ Service procedures

6 Inspection of parking brake switch

- Follow the table below to inspect continuity:

	①	②	③	④
ON (PARK)		○		○
OFF (DRIVE)	○		○	

○——○ : There is continuity between terminals ○ and ○.

- If any fault is found, replace parking brake switch **6**. Gr 36

515 BRAKE WARNING CIRCUIT

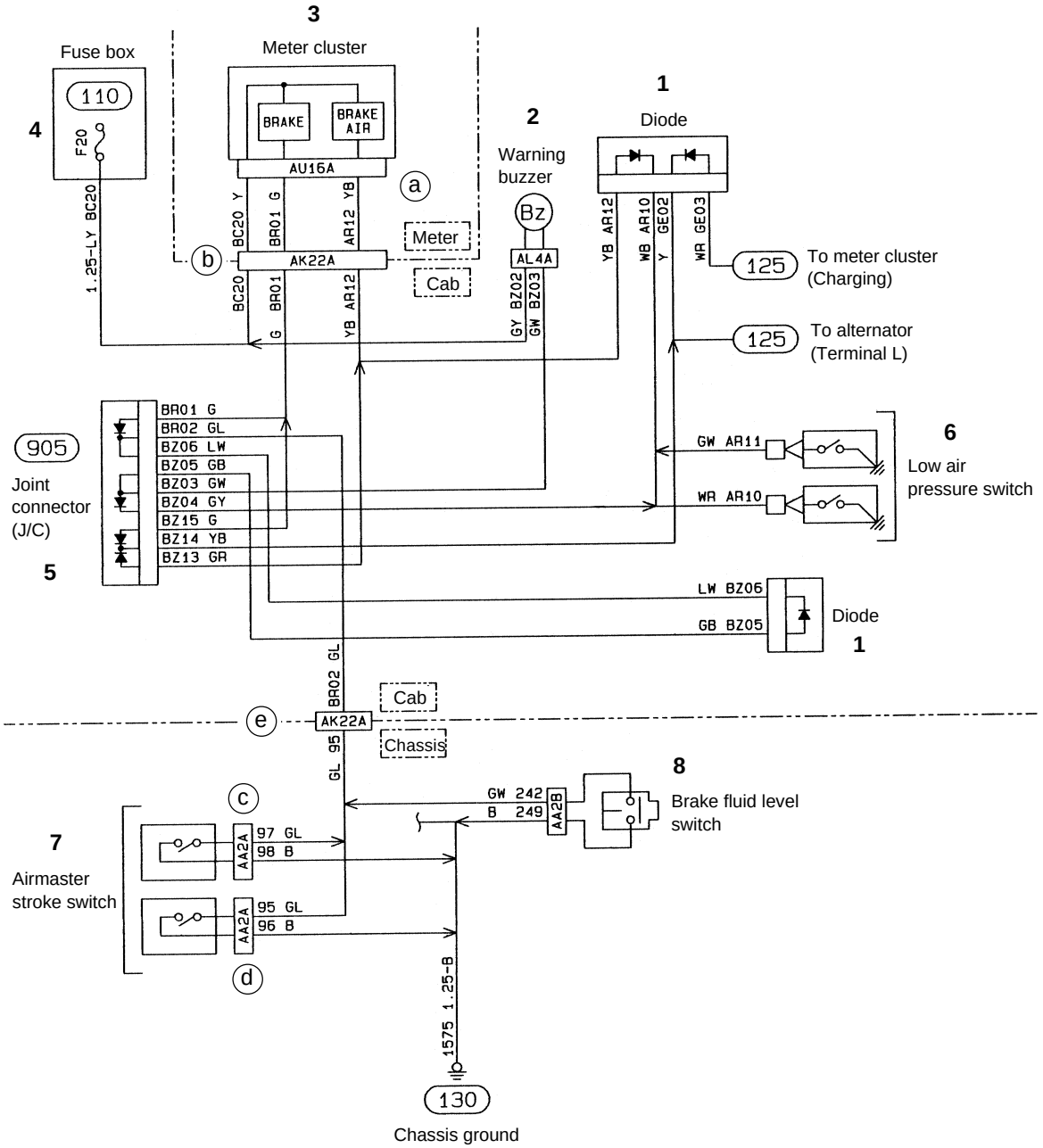

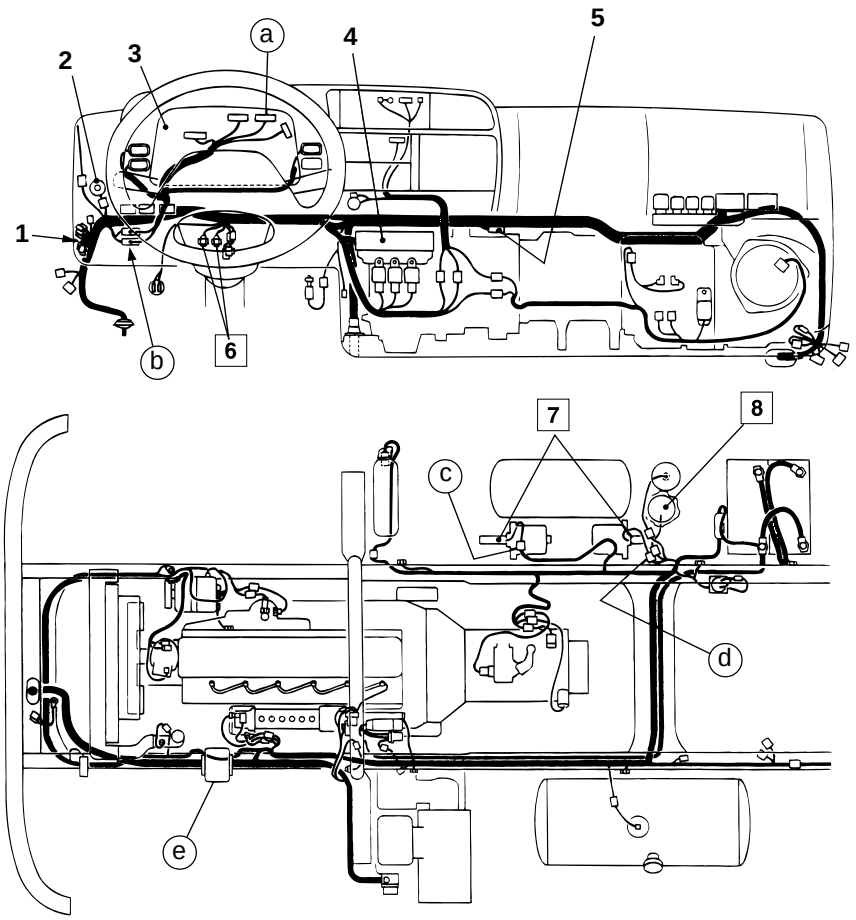

12712

1 Diode
2 Warning buzzer 606
3 Meter cluster 401
4 Fuse box 104
5 Joint connector (J/C) 905
6 Low air pressure switch
7 Air master stroke switch
8 Brake fluid lever switch

Service standards

Unit : mm {in.}

Location	Maintenance item		Standard value	Limit	Remedy
6	Low air pressure switch operating pressure	When applying pressure	470 to 510 kPa {68 to 74 lbf/in^2, 4.8 to 5.2 kgf/cm^2}	—	Replace
		When releasing pressure	470 to 560 kPa {68 to 81 lbf/in^2, 4.8 to 5.7 kgf/cm^2}	—	
8	Continuity position of brake fluid level switch		$57\ ^{+3.5}_{-0.5}$ {$2.24\ ^{+0.14}_{-0.02}$} (Equivalent to 345 cm^3 {21.1 cu.in., 345 cc})	—	Replace

◆ Service procedure

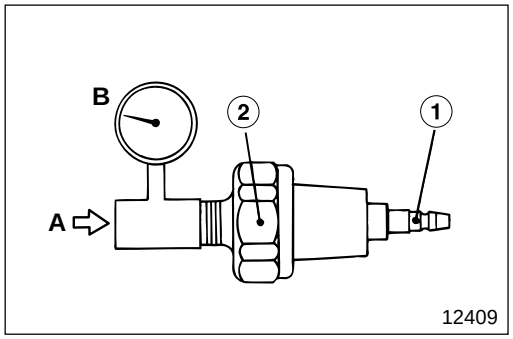

6 **Inspection of low air pressure switch**

Carry out the following inspection. If any fault is found, replace low air pressure switch **6**.

- Make sure that there is continuity between terminals ① and ② (Body) when air pressure **A** is not applied to low air pressure switch **6**.
- Apply air pressure **A** to low air pressure switch **6** gradually starting from 0 kPa {0 lbf/in², 0 kgf/cm²}.
  Measure the air pressure when continuity is lost between terminals ① and ② (Body) to make sure that the measured value conforms to the standard value.
  B : Air pressure gauge
- When air pressure **A** of 785 kPa {115 lbf/in², 8 kgf/cm²} has been applied to low air pressure switch **A**, gradually release the air pressure.
  Measure the air pressure when continuity is present between terminals ① and ② (Body) and make sure that the measured value conforms to the standard value.

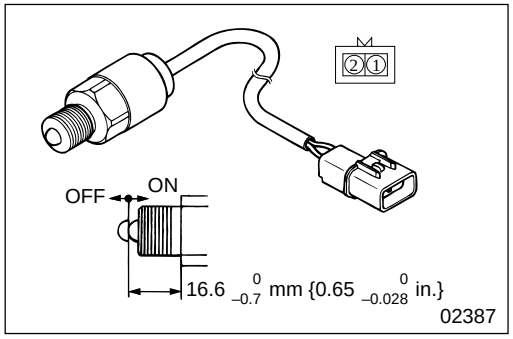

7 ollow the table below to inspect continuity:

	①	②
OFF		
ON	○——○	

○——○ : There is continuity between terminals ○ and ○.

- If any fault is found, replace air master stroke switch **7**. Gr 35

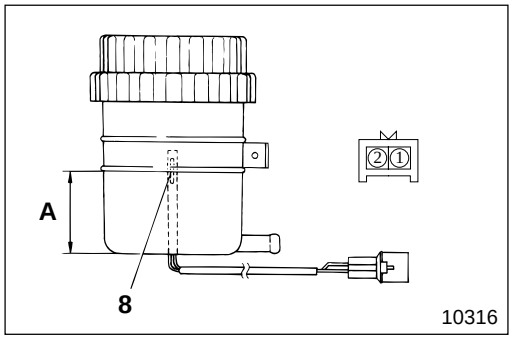

8 **Inspection of brake fluid level switch**

- Drain the brake fluid gradually from the brake fluid tank assembly.

CAUTION ⚠

If brake fluid is spilt on any part of the vehicle, wipe it off immediately, since the solvent in the fluid can damage the paintwork.

- Measure height **A** of brake fluid level switch **8** when continuity is present between terminals ① and ②.
- If the measured value deviates from the standard value, replace the fluid tank assembly. Gr 35

M E M O

530 WATER LEVEL WARNING CIRCUIT

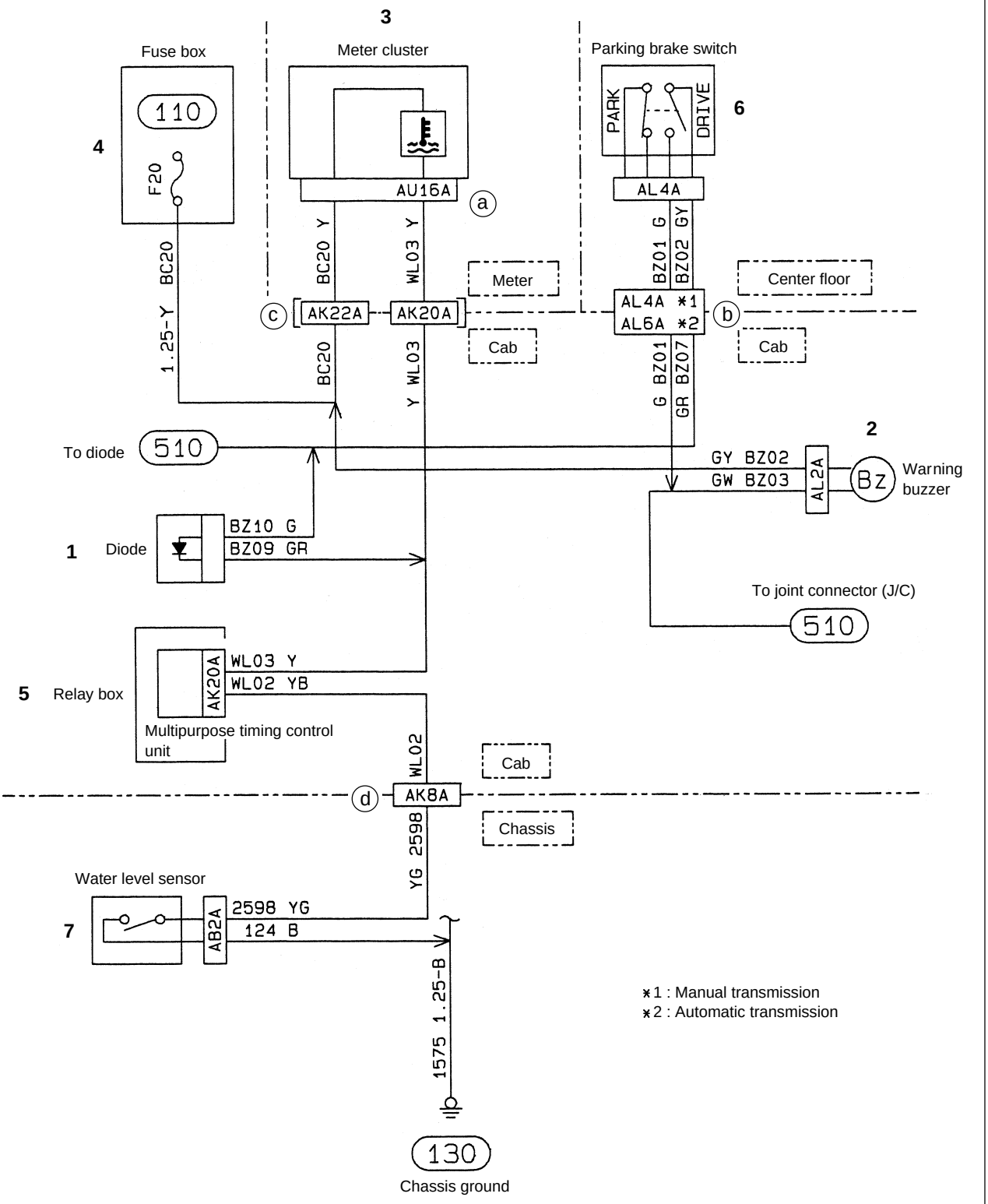

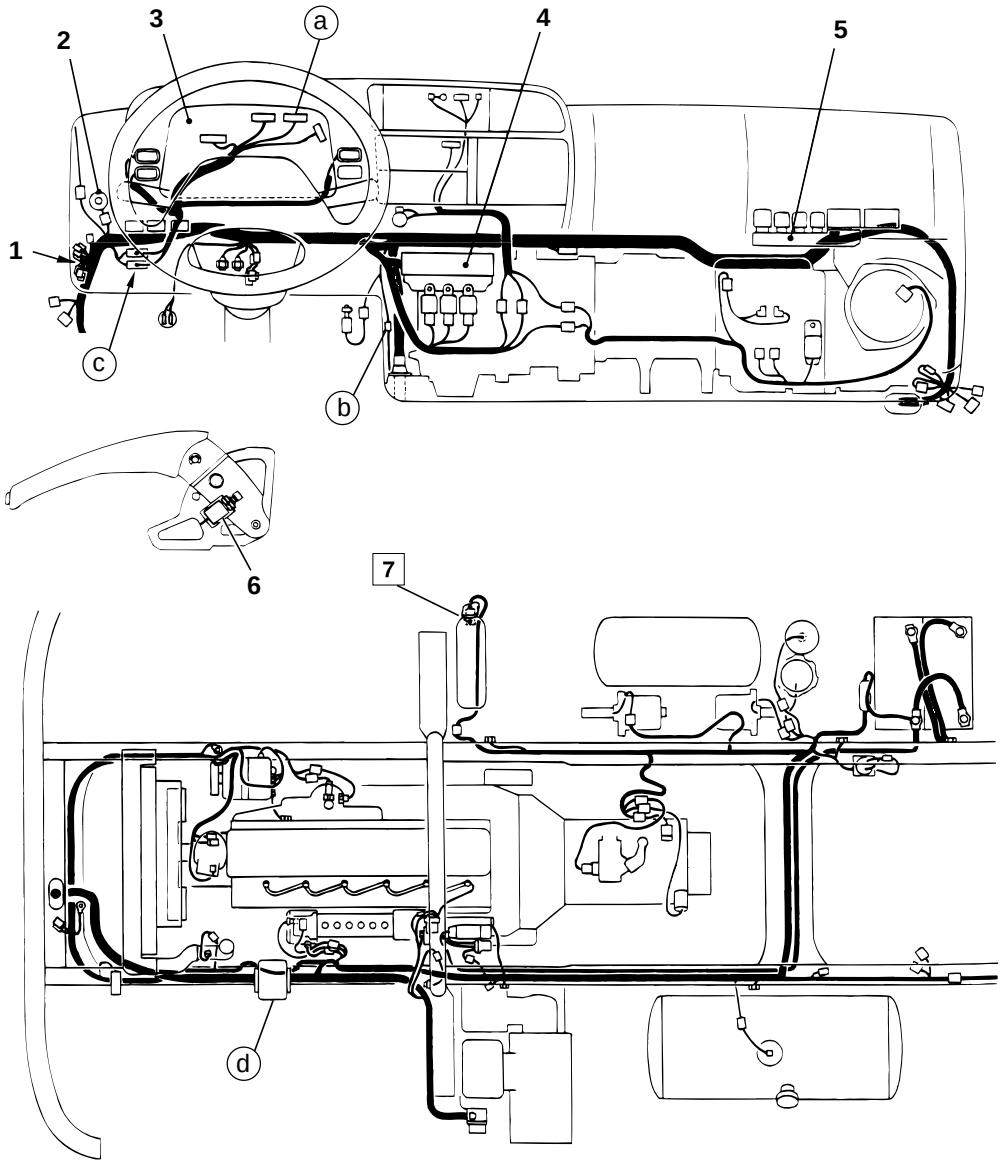

1 Diode
2 Warning buzzer 🕮 (606)
3 Meter cluster 🕮 (401)
4 Fuse box 🕮 (104)
5 Relay box 🕮 (604)
6 Parking brake switch 🕮 (510)
7 Water level sensor

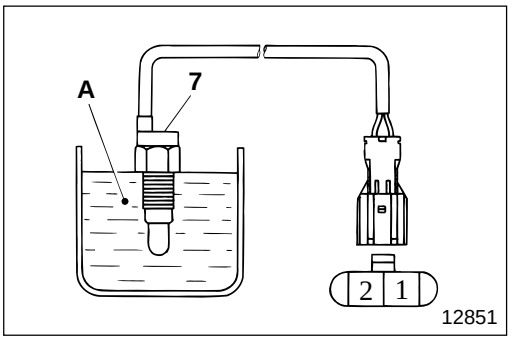

◆ Service procedure

7 **Inspection of water level sensor**

- Follow the table below to inspect continuity:

	①	②
When water level sensor is out of the water		
When water level sensor is in the water	○——○	

○——○: There is continuity between terminals ○ and ○.

- If any fault is found, replace water level sensor **7**. Gr 14
  A : Engine coolant

M E M O

536 ENGINE OIL PRESSURE WARNING CIRCUIT

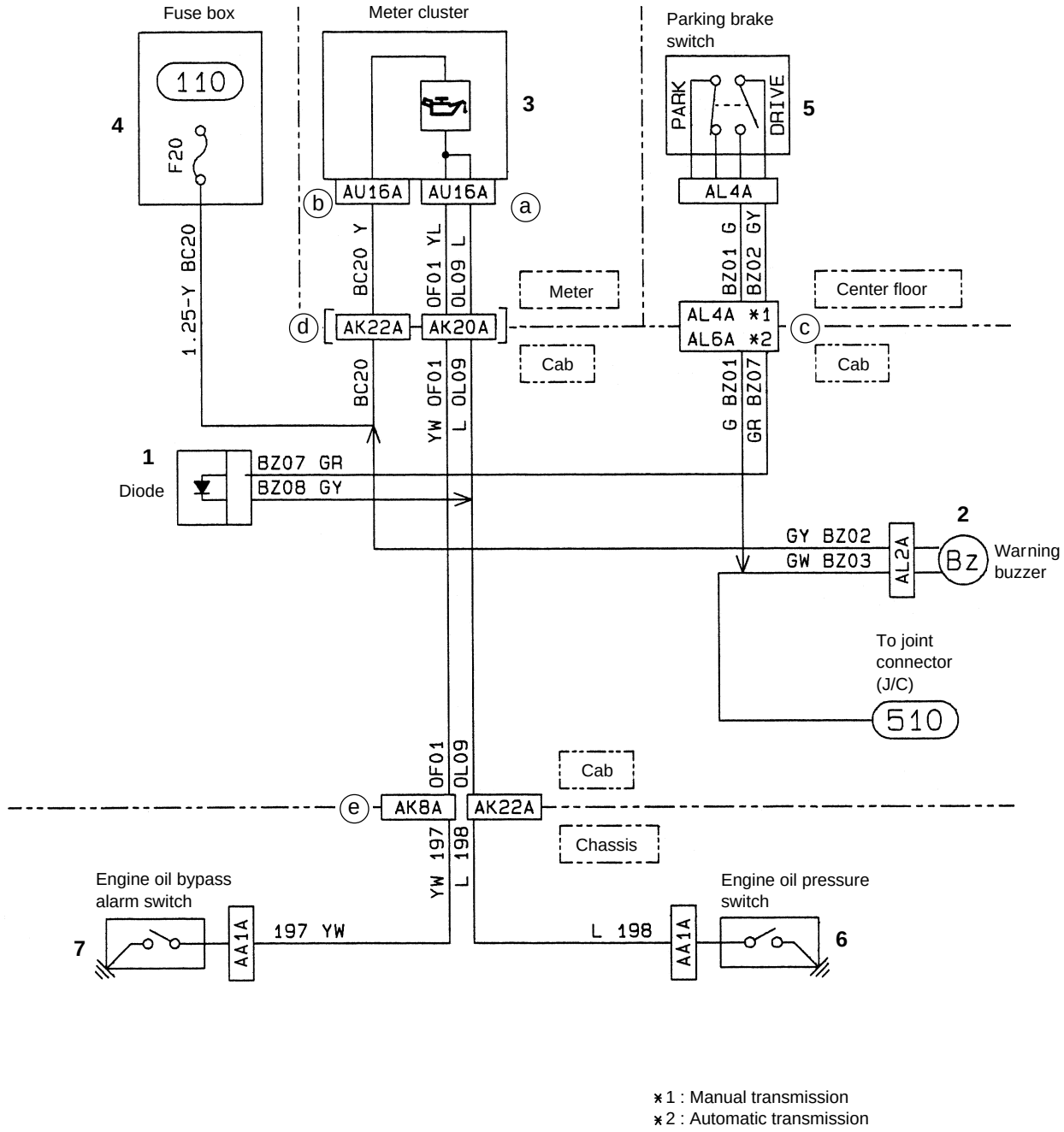

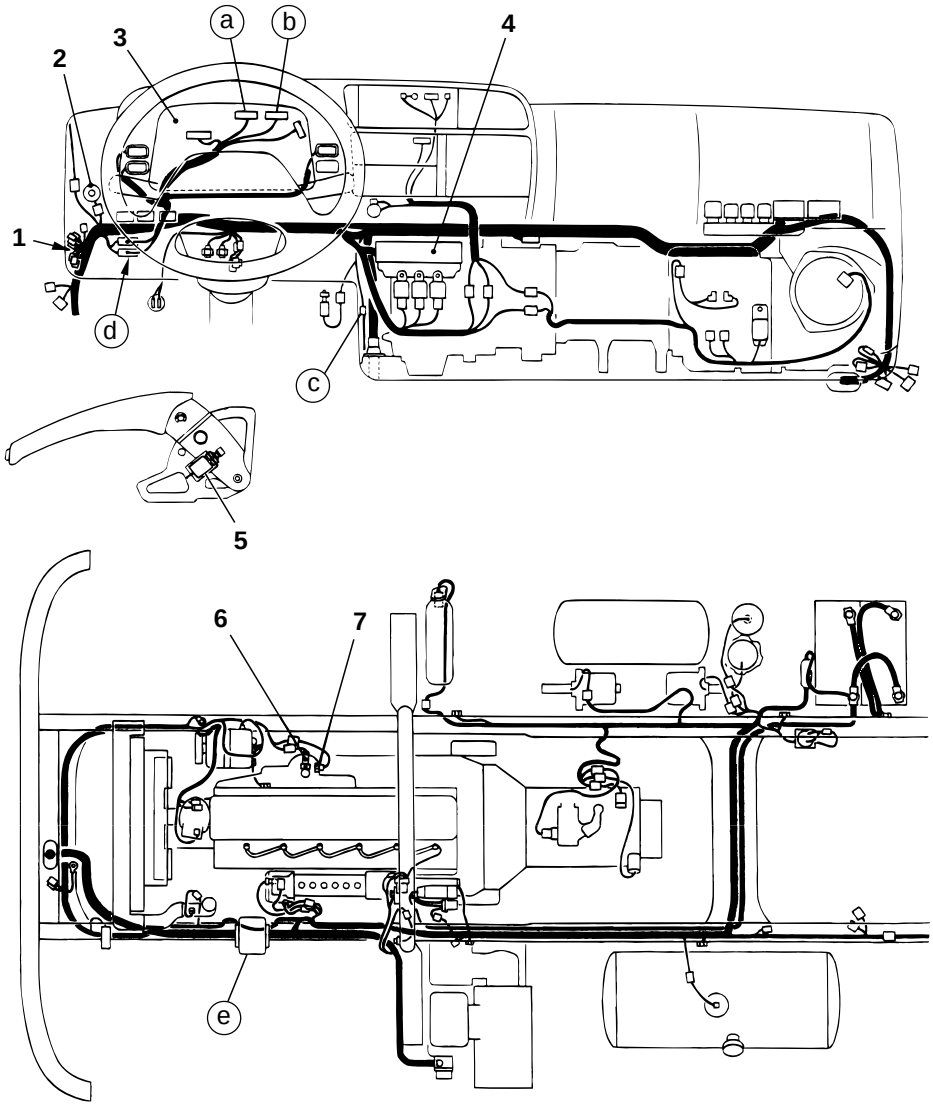

1 Diode
2 Warning buzzer 606
3 Meter cluster 401
4 Fuse box 104
5 Parking brake switch 510
6 Engine oil pressure switch 801
7 Engine oil bypass alarm switch 801

537 OVERHEATING WARNING CIRCUIT

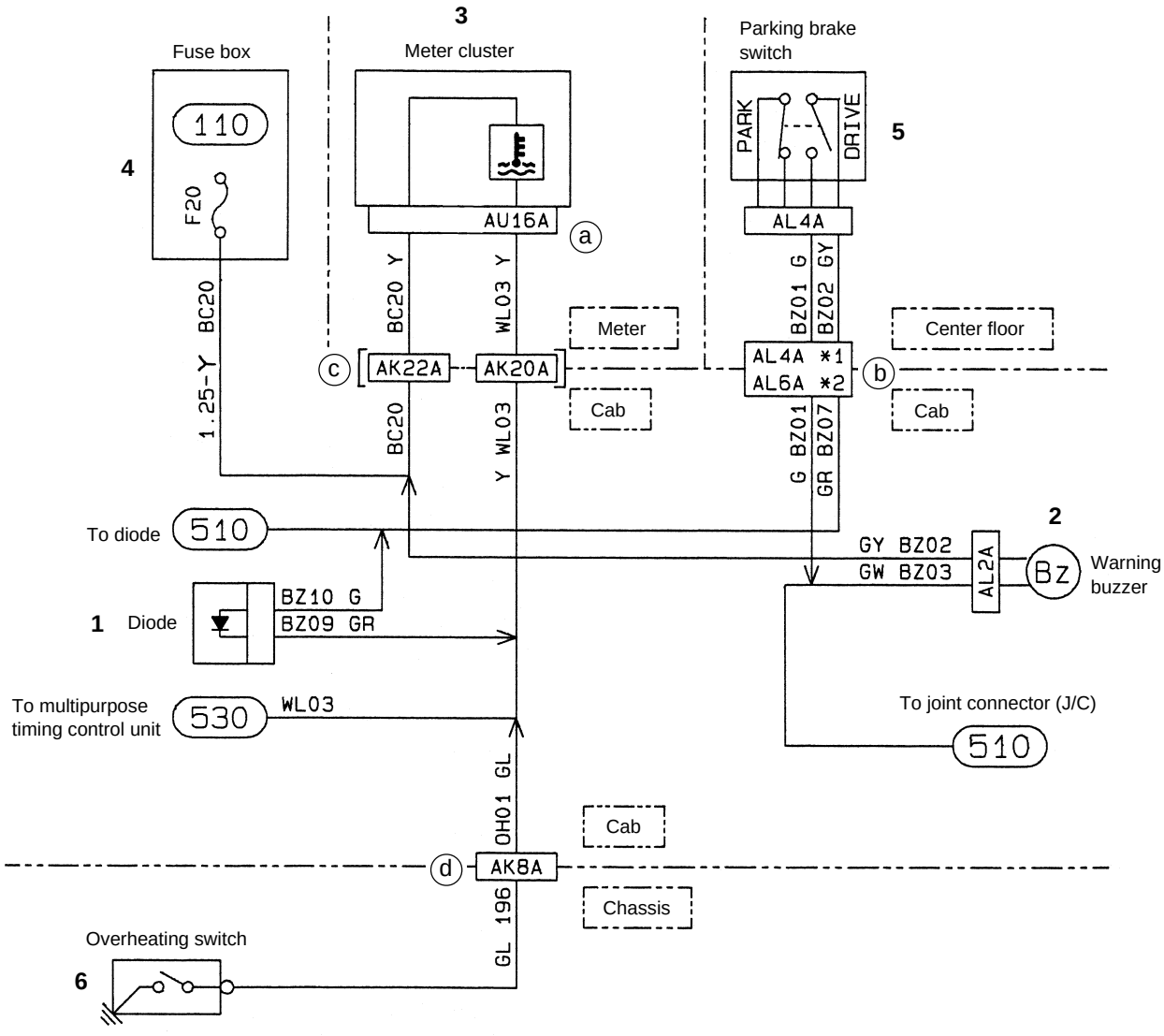

13081

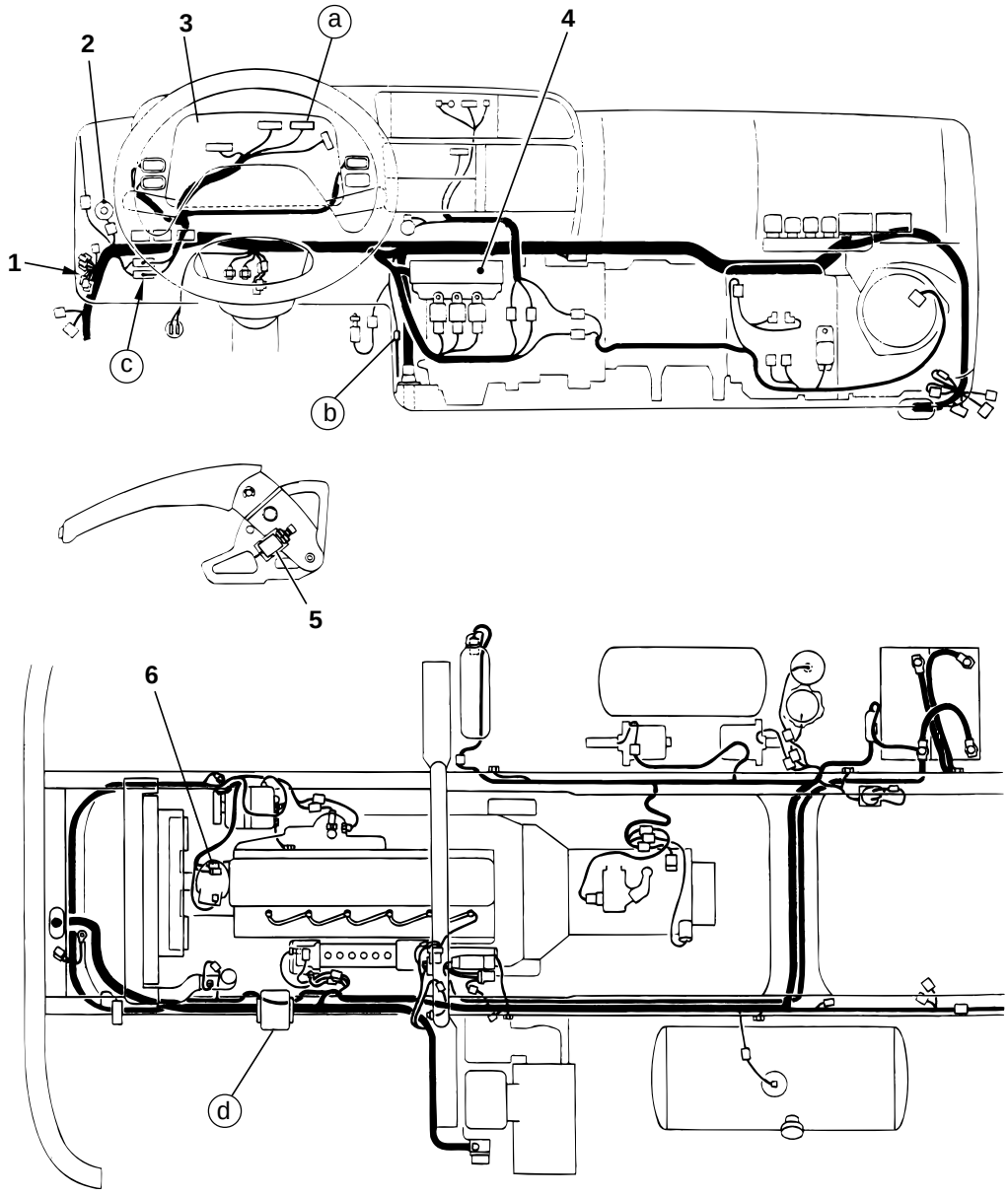

13082

1 Diode
2 Warning buzzer 🕮 (606)
3 Meter cluster 🕮 (401)
4 Fuse box 🕮 (104)
5 Parking brake switch 🕮 (510)
6 Overheating switch 🕮 (801)

547 AUTOMATIC TRANSMISSION FLUID TEMPERATURE WARNING CIRCUIT

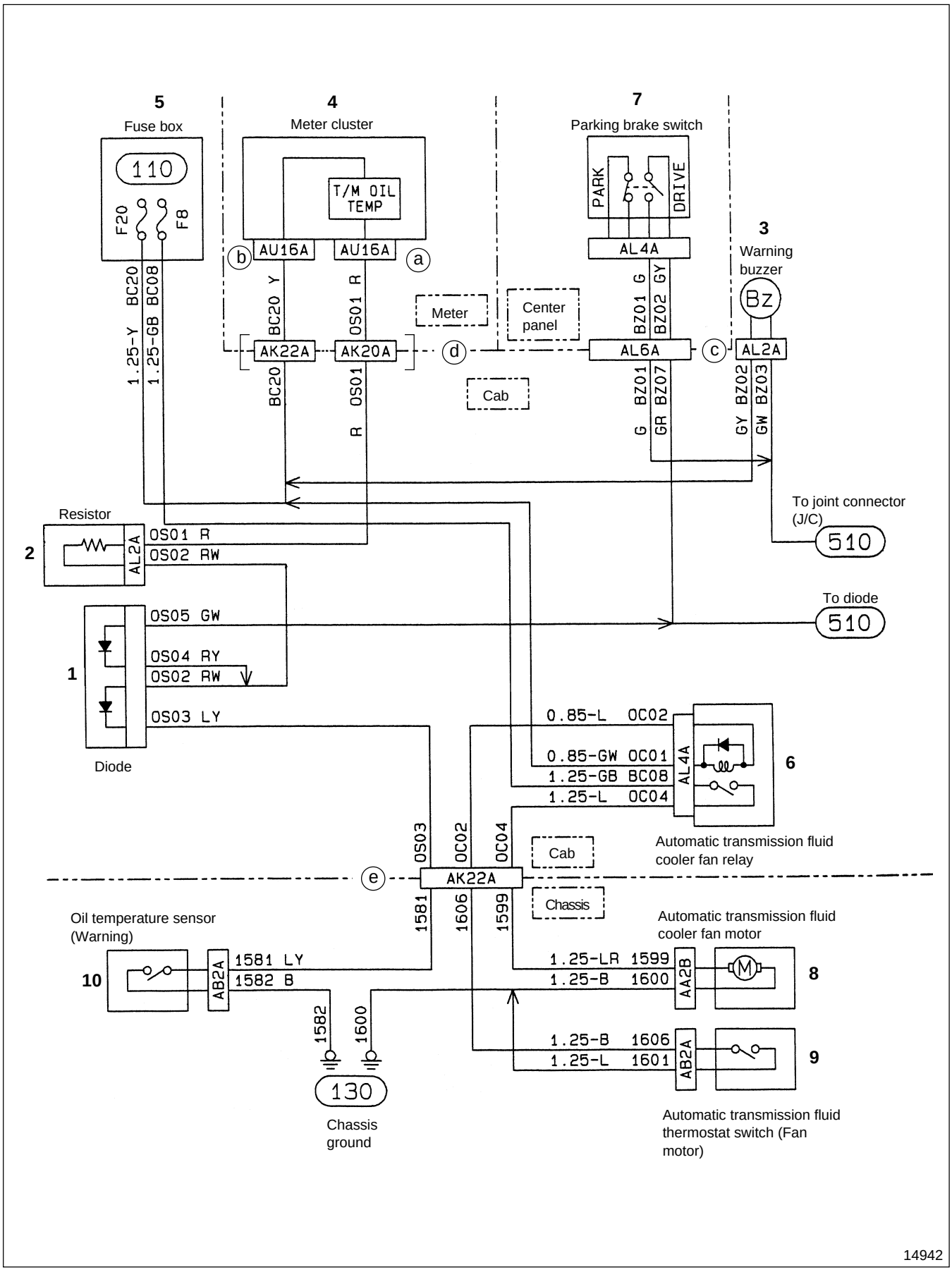

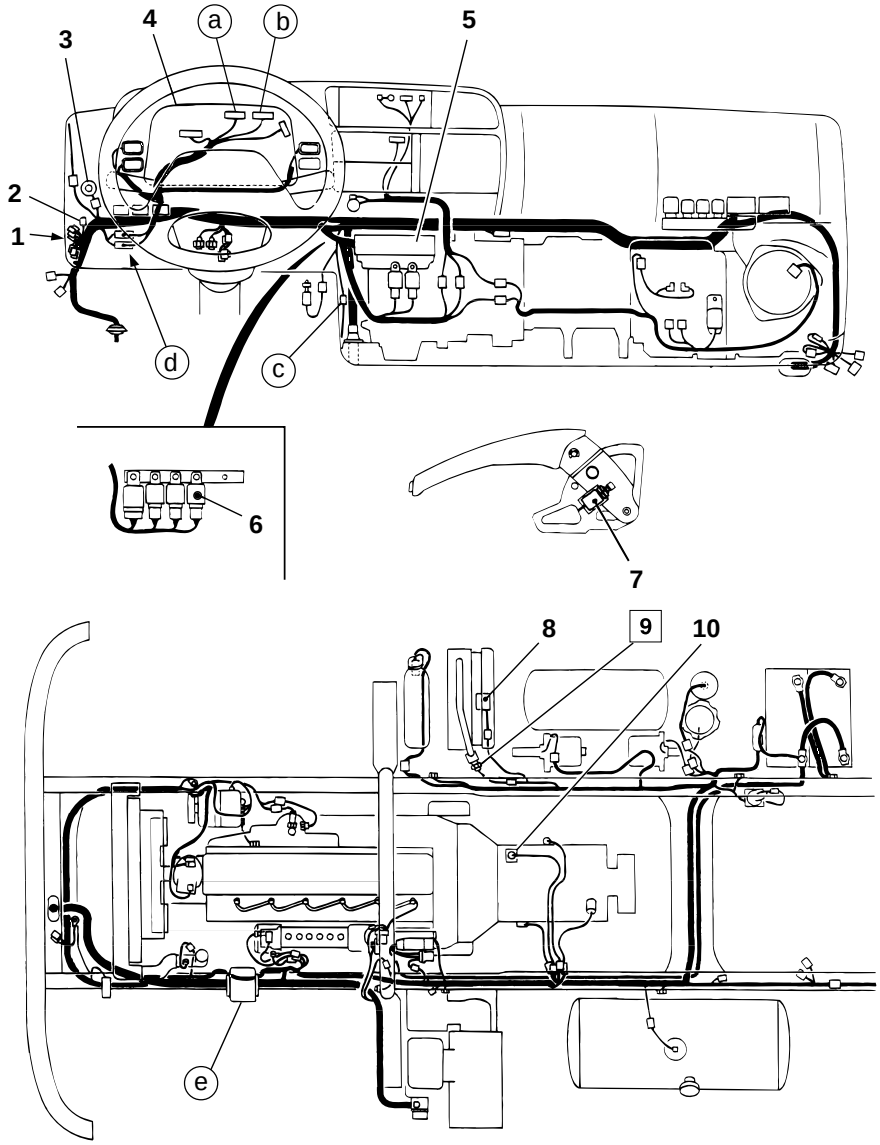

15022

1 Diode
2 Resistor
3 Warning buzzer 🕮 (606)
4 Meter cluster 🕮 (401)
5 Fuse box 🕮 (104)
6 Automatic transmission fluid cooler fan relay
7 Parking brake switch 🕮 (510)
8 Automatic transmission fluid cooler fan motor
9 Automatic transmission fluid thermostat switch
10 Automatic transmission fluid temperature switch 🕮 (802)

Service standards

Location	Maintenance item		Standard value	Limit	Remedy
9	Operating temperature of automatic transmission fluid thermostat switch	When increases (OFF→ON)	108±3°C {226±5.4°F}	—	Replace
		When decreases (ON→OFF)	101°C {214°F} or more		

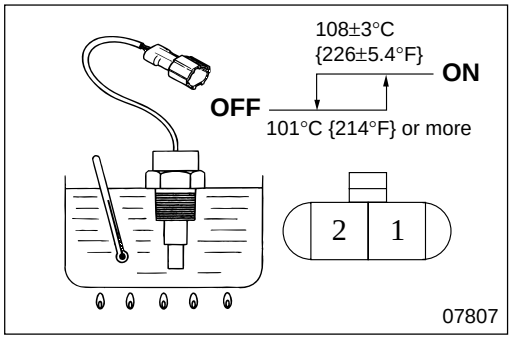

◆ Service procedure

9 **Inspection of automatic transmission fluid thermostat switch**

Carry out the following inspection. If any fault is found, replace automatic transmission fluid thermostat switch **9**. Gr 23

- Make sure that there is no continuity between terminals ① and ② at room temperature (20±5°C {68±9°F}).
- Place automatic transmission fluid thermostat switch **9** in a container filled with engine oil and raise the oil temperature while stirring the oil. Measure the temperature when there is continuity between terminals ① and ②, and make sure that the measured value conforms to the standard value.
- Lower the oil temperature and measure the temperature when continuity is lost between terminals ① and ②, and make sure that the measured value conforms to the standard value.

M E M O

550 CAB TILT WARNING CIRCUIT

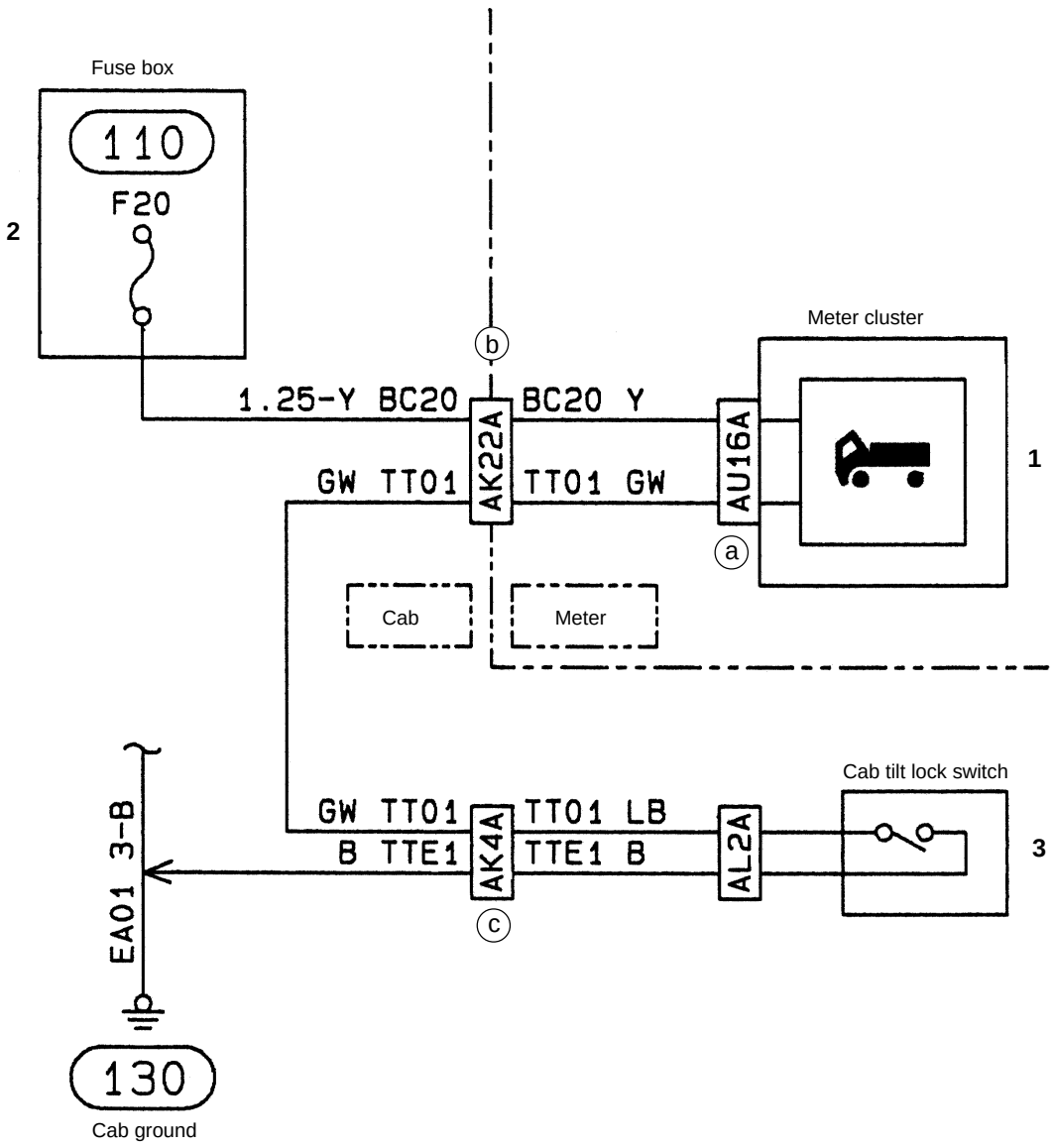

12220

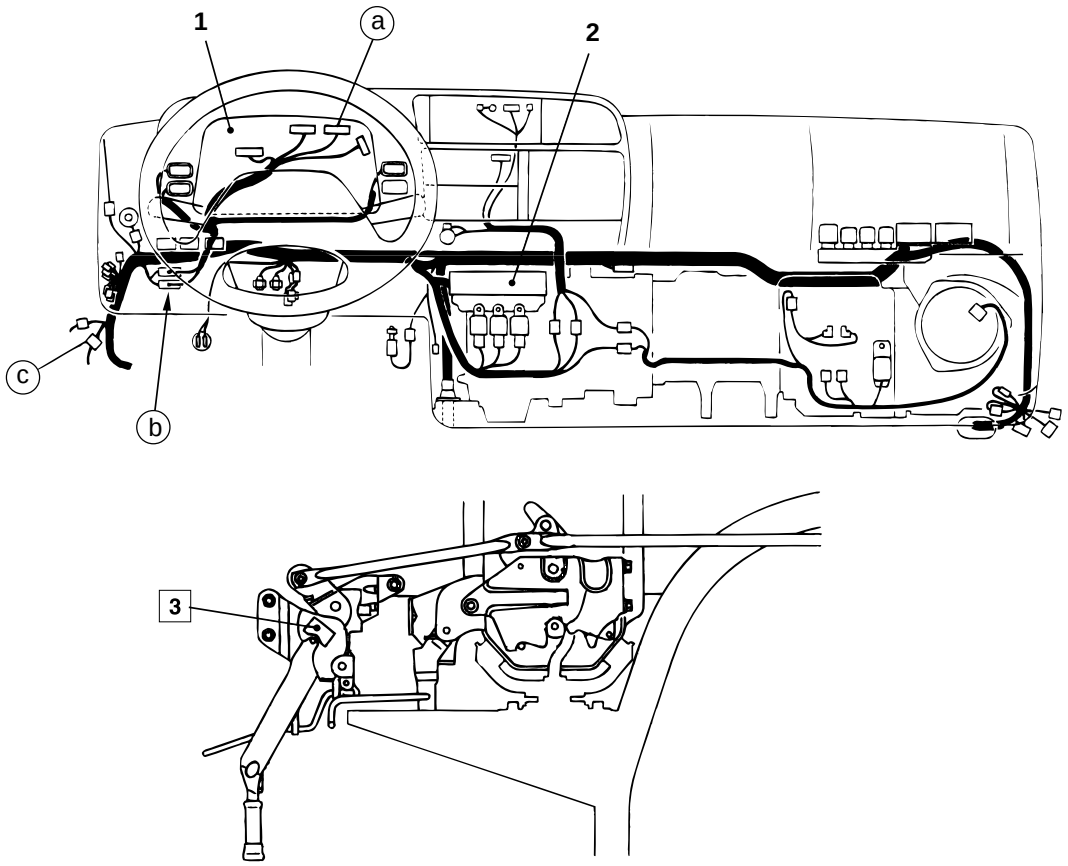

1 Meter cluster 📖 401
2 Fuse box 📖 104
3 Cab tilt lock switch

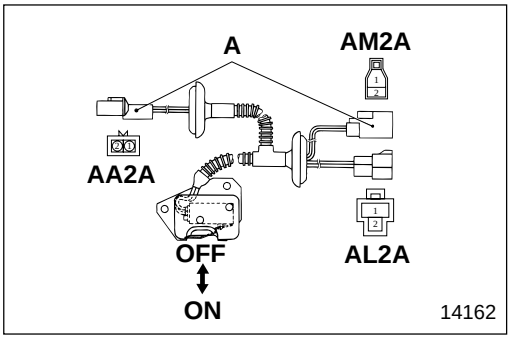

◆ Service procedure

3 Inspection of cab tilt lock switch

- Follow the table below to inspect continuity:
  AL2A

	①	②
ON	○——○	
OFF		

○——○ : There is continuity between terminals ○ and ○.
A : Side turn signal lamp harness (AA2A, AM2A)

- If any fault is found, replace cab tilt lock switch **3**. Gr 42

⑥ CAB SIDE ELECTRICS

SPECIFICATIONS 54-6-2

TROUBLESHOOTING 54-6-2

601 SWITCH 54-6-4

604 RELAY AND CONTROL UNIT 54-6-8

606 WARNING BUZZER 54-6-11

610 CIGARETTE LIGHTER CIRCUIT 54-6-12

612 AUDIO CIRCUIT 54-6-14

614 WIPER AND WASHER CIRCUIT 54-6-16

616 HORN CIRCUIT 54-6-20

618 HEATER CIRCUIT 54-6-22

SPECIFICATIONS/TROUBLESHOOTING

SPECIFICATIONS

Item			Specifications
Minimum operating voltage of relay		V	8 or less
Speaker	Rated input	W	15
	Maximum input	W	30
	Impedance	Ω	4±0.6
Air horn	Rated voltage	V	12
	Rated current	A	3.2 or less
	Sound pressure	dB	115^{0}_{-5} (at 2 m {6.6 ft})
Warning buzzer	Rated voltage	V	12
	Rated current	mA	150 or less
	Sound pressure	dB	75±10 (at 1 m {3.3 ft})

TROUBLESHOOTING

Symptoms / Possible causes	Cigarette lighter		Audio					Remarks
	Does not glow	Does not return	Specific frequency band does not work	Spurious noise generated	Sound quality poor	Sound from one side only	Left and right volume different	
Connector connection faulty, harness broken, grounding faulty	○			○		○		
Fuse blown	○							
Cigarette lighter faulty	○	○						
Antenna and antenna cable connection faulty				○				
Speaker faulty			○	○	○	○	○	
Left and right speaker impedance different							○	

Accessory noise generation source

Accessory	Noise	Symptoms
Alternator	Whistling	High pitch sound when accelerator pedal suddenly depressed (Stops soon after engine stopped)
Water temperature gauge	Scratching	Occurs when engine running (Continues for a while after engine stops)
Engine oil pressure switch	Rattling	Depends on engine speed (Does not occur during idling)
Fuel gauge unit	Scratching	Occurs when engine suddenly revved, while running on rough roads, or starter switch turned ON
Flasher unit	Banging	When turn signal blinks
Horn	Hissing	Occurs when horn button pressed or released
Wiper motor	Whining	Depends on windshield wiper speed
Washer motor	Whining	When windshield washer operates

Symptoms / Possible causes	Horn				Remarks
	No Sound	Continuous sound	Small sound	Sound quality poor	
Connector connection faulty, harness broken, grounding faulty	○				
Fuse blown	○				
Horn switch faulty	○	○			
Horn faulty	○		○	○	
Horn stay warped			○	○	
Battery voltage insufficient	○		○		
Air leaking from air system	○		○	○	

Installation Position

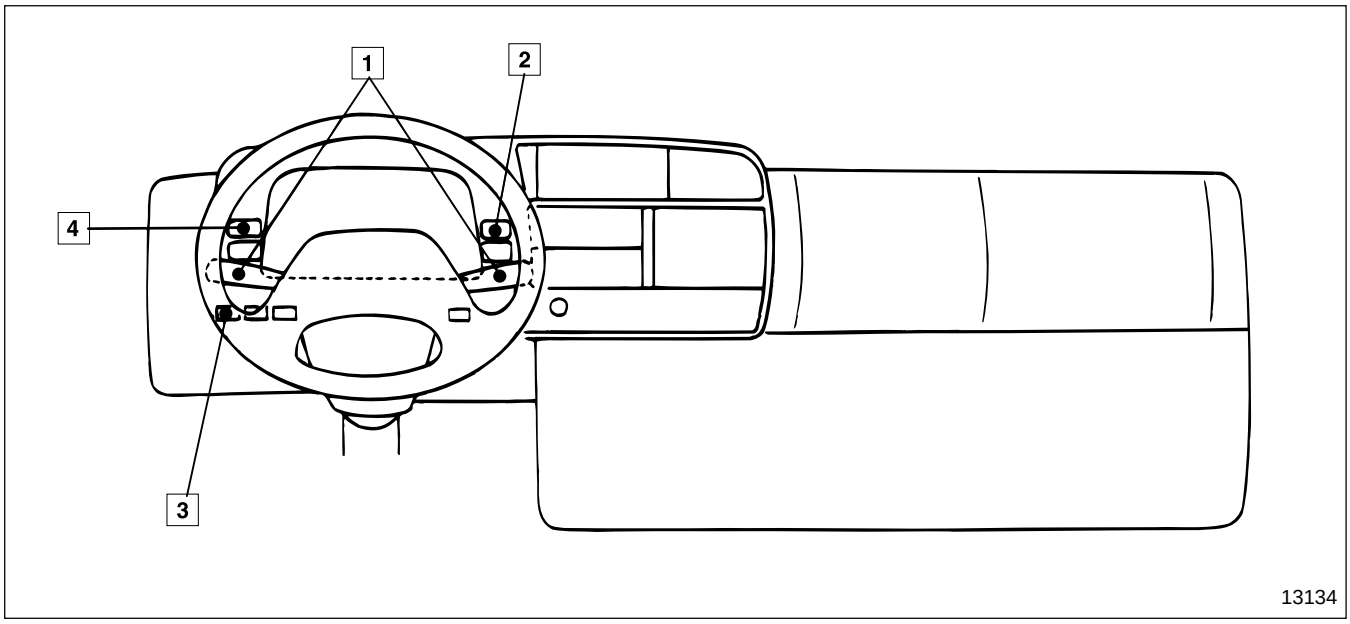

1 Combination switch
2 Van body dome light switch
3 Rheostat switch
4 Cold start switch

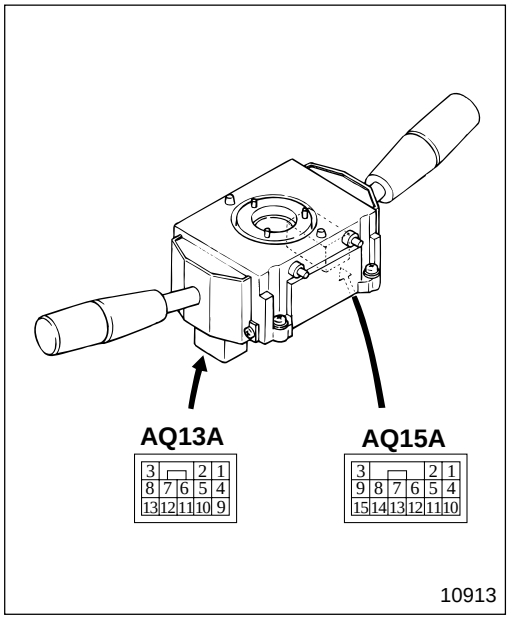

◆ Service procedure

1 **Inspection of combination switch**

- Operate combination switch **1**.
- Check for continuity between connector terminals, referring to the connector connection table.
  There is continuity between terminals ○ and ○ in the table.

- If any fault is found, replace combination switch **1**.

AQ13A Connector connection table

		①	②	③	⑦	⑧	⑨	⑩	⑪	Body ground	Internal connection
Lighting switch	OFF										
	I	○						○			
	II	○						○			○
Dimmer switch	Main						○				○
	↕						○		○		○
	Dimmer								○		○
	↕	○					○		○		○
	Passing	○					○				
Turn signal switch	LH			○	○						
	N (neutral)										
	RH			○		○					
Horn switch	OFF										
	ON		○							○	

AQ15A Connector Connection Table

		①	②	③	⑤	⑥	⑦	⑧	⑨	⑭	⑮
Wiper switch	OFF										
	INT (intermittent)			○							○
	LO (LOW)		○								○
	HI (HIGH)	○	○								○
	WASH (washer)									○	○
Exhaust brake switch	OFF										
	ON				○	○					
Hazard switch	OFF										
	ON						○	○	○		

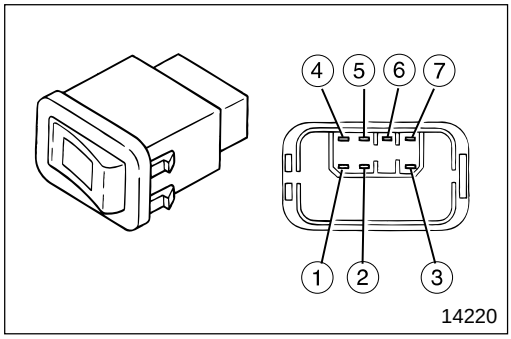

2 **Inspection of van body dome light switch**

- Follow the table below to inspect continuity:

	①	⑤	⑦	LED (Operation indication light)	③
ON	○—○		○	—W— ▷|	○
OFF					

○—○ : There is continuity between terminals ○ and ○.

- If any fault is found, replace van body dome light switch **2**.

3 **Inspection of rheostat switch**

- Rheostat switch **3** contains a control circuit, because of this it is difficult to inspect rheostat switch **3** independently, therefore you should inspect the rheostat switch indirectly, by inspecting the system harness and the related parts.
- If no fault is found in the related parts but the system is faulty, replace rheostat switch **3**.

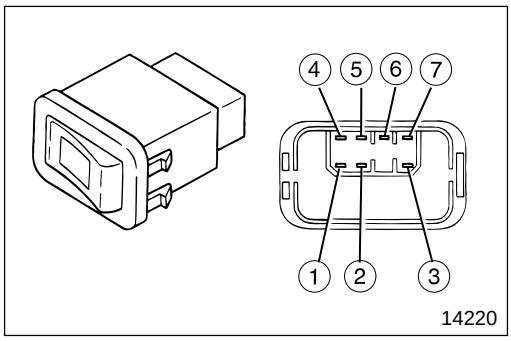

4 **Inspection of cold start switch**

- Follow the table below to inspect continuity:

	①	⑥	⑤	②	④	⑦	LED (Operation indication light)	③
ON	○		○			○	—W— ▷|	○
OFF	○—○			○—○				

○—○ : There is continuity between terminals ○ and ○.

- If any fault is found, replace cold start switch **4**.

M E M O

Installation Position

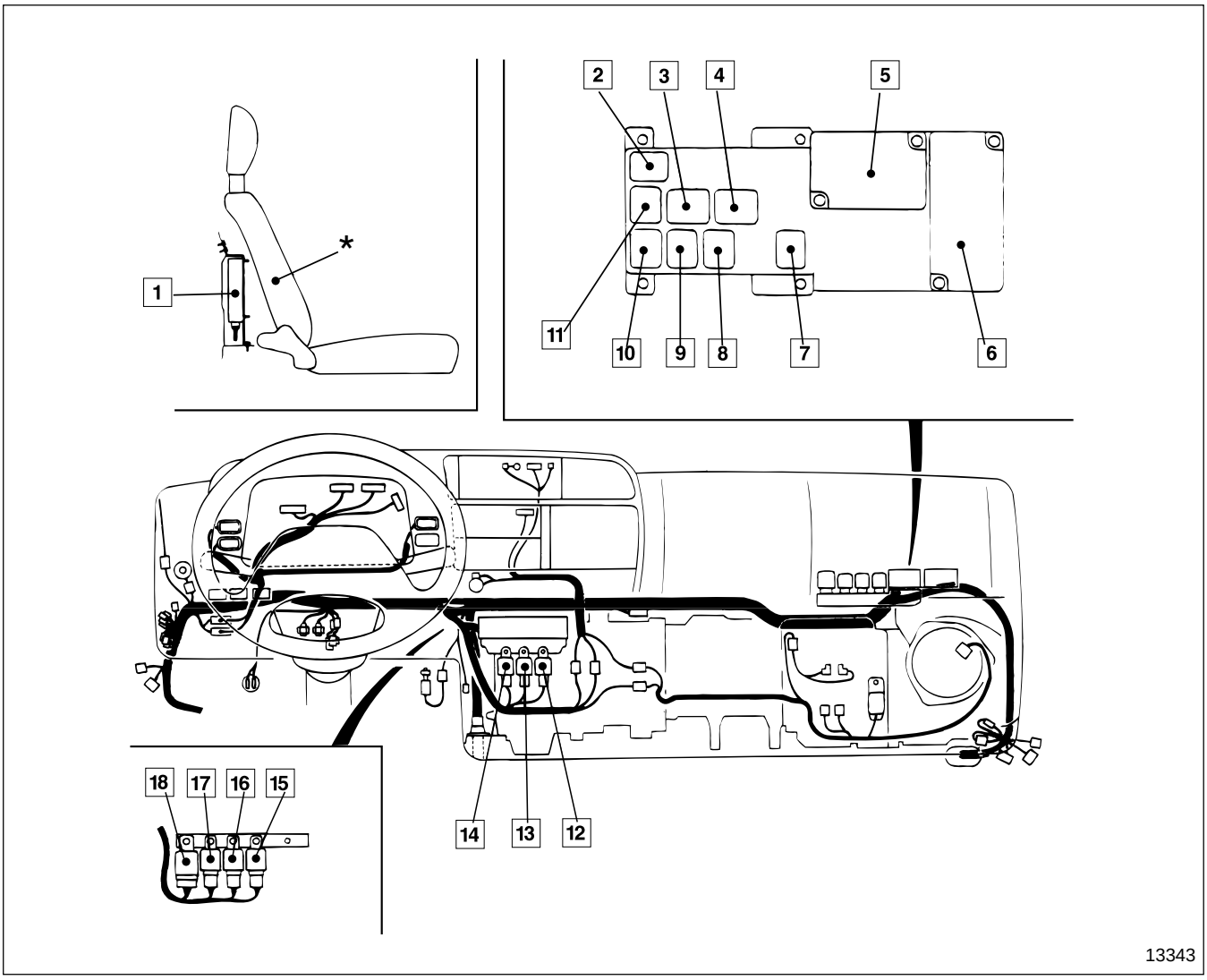

1 Pre-stroke control unit
2 Pre-stroke cut relay
3 Wiper relay (LOW)
4 Wiper relay (HIGH)
5 Flasher unit
6 Multipurpose timing control unit
7 Stop lamp relay
8 Tail lamp relay
9 Headlamp relay (HIGH)
10 Headlamp relay (LOW)
11 Blower fan relay
12 Turn signal lamp relay
13 Fuel-cut relay
14 Exhaust brake cut relay (Time lag relay) < Manual transmission >
15 Automatic transmission fluid cooler fan relay < Automatic transmission >
16 Transmission neutral relay < Manual transmission >
17 Van body dome light relay
18 Transmission power take-off relay < Option >

***** : Passenger's seat

Service standards

Location	Maintenance item	Standard value	Limit	Remedy
14	Exhaust brake cut relay time lag (Time lag relay)	10±3.5 seconds	—	Replace

◆ Service procedure

1 5 6 Inspection of control unit

Since it is difficult to check each unit separately, judge the soundness of each unit indirectly by checking switches, harnesses, and related parts in the system.

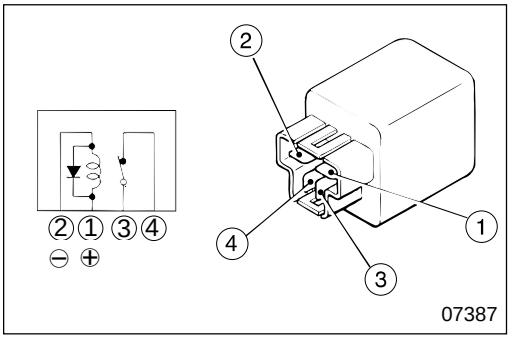

2 Inspection of relay (Close type 4-pin)

- Follow the table below to inspect continuity:

	①	②	③	④
No current	○—○		○—○	
Current	⊕—⊖		◌----◌	

○—○ : There is continuity between terminals ○ and ○.
⊕—⊖ : Indicates that 12 volts DC is applied to the line between the terminals.
◌----◌ : Indicates that continuity between the terminals is lost.

- If any fault is found, replace the relay.

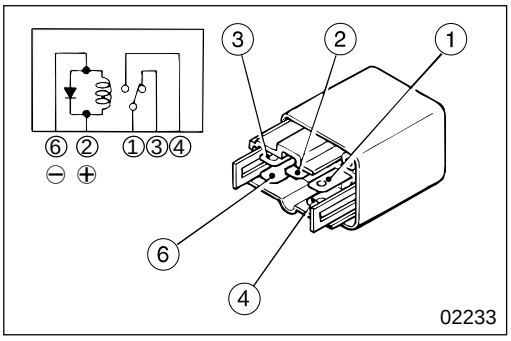

3 4 13 18 Inspection of relay (Open type 5-pin)

- Follow the table below to inspect continuity:

	①	②	③	④	⑥
No current	○—○				
		○—○			○—○
Current	○—○			○—○	
		⊕—⊖			⊕—⊖

○—○ : There is continuity between terminals ○ and ○.
⊕—⊖ : Indicates that 12 volts DC is applied to the line between the terminals.

- If any fault is found, replace the relay.

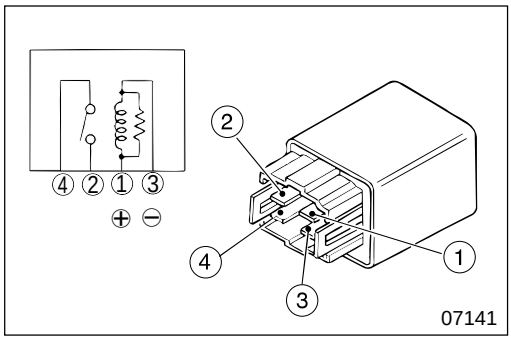

7 to 11 Inspection of relay (Open type 4-pin)

- Follow the table below to inspect continuity:

	①	②	③	④
No current	○		○	
Current	⊕		⊖	○

○——○ : There is continuity between terminals ○ and ○.
⊕——⊖ : Indicates that 12 volts DC is applied to the line between the terminals.

- If any fault is found, replace the relay.

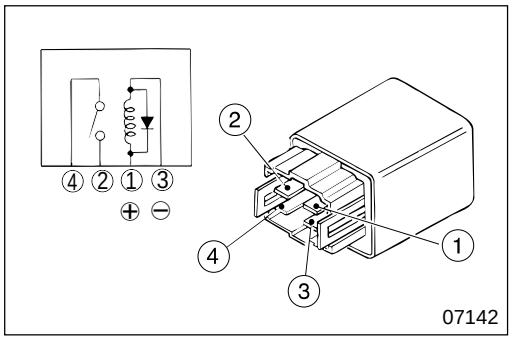

12 15 to 17 Inspection of relay (Open type 4-pin)

- Follow the table below to inspect continuity:

	①	②	③	④
No current	○		○	
Current	⊕		⊖	○

○——○ : There is continuity between terminals ○ and ○.
⊕——⊖ : Indicates that 12 volts DC is applied to the line between the terminals.

- If any fault is found, replace the relay.

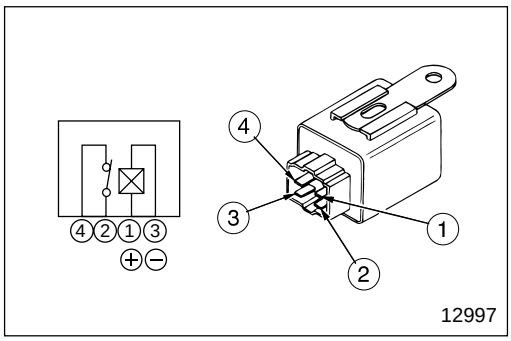

14 Inspection of relay (Close type 4-pin time lag relay)

- Follow the table below to inspect continuity:

	①	②	③	④	Remarks
No current	○		○		—
Current	⊕		⊖	○ ----- ○	Measure time lag until continuity between the terminals is lost

○——○ : There is continuity between terminals ○ and ○.
⊕——⊖ : Indicates that 12 volts DC is applied to the line between the terminals.
○ ----- ○ : Indicates that continuity between the terminals is lost.

- If any fault is found, replace the relay.

Installation Position

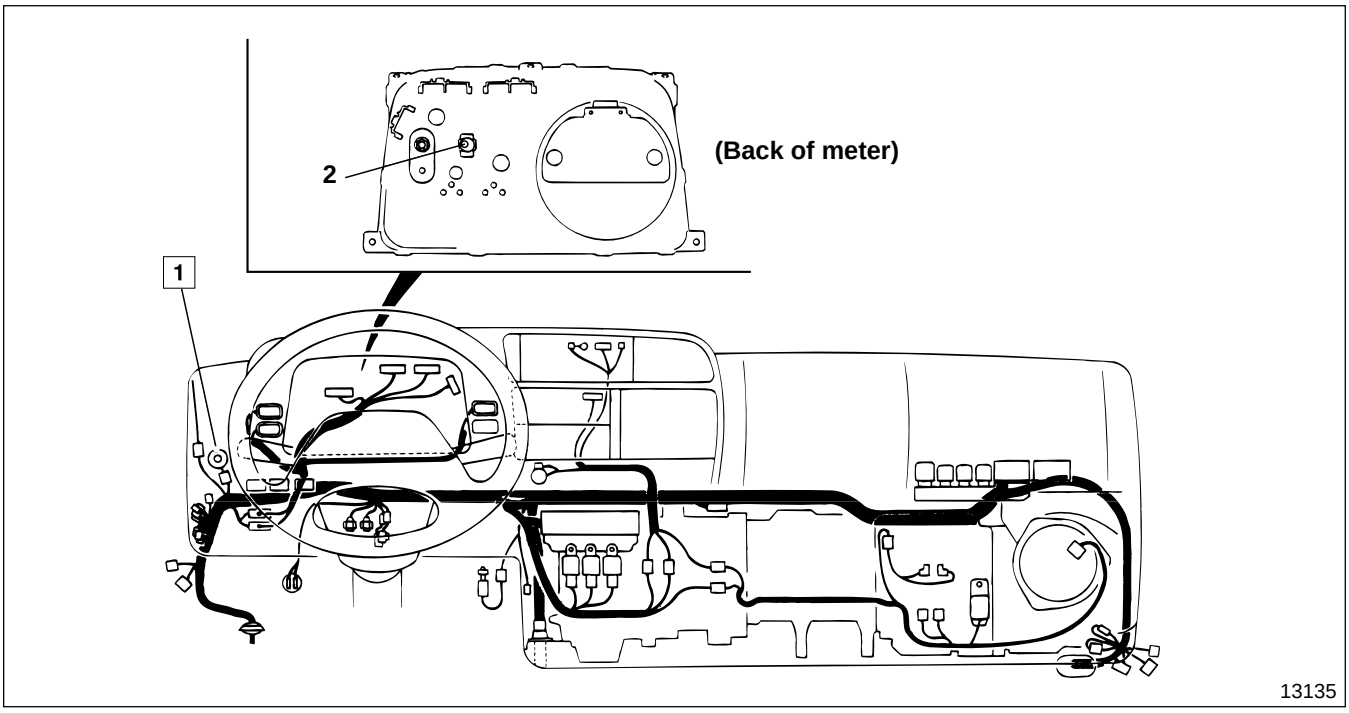

1 Warning buzzer
2 Meter warning buzzer 401

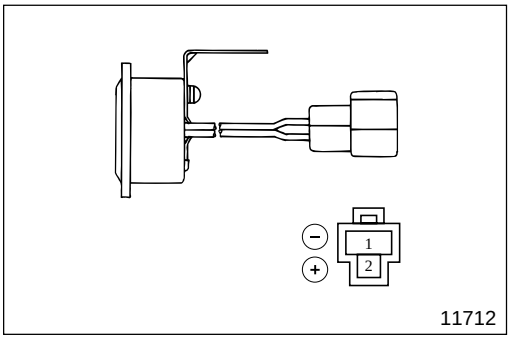

◆ Service procedure

1 Inspection of warning buzzer

- Make sure that warning buzzer **1** sounds when you apply 12 volts DC between terminals ① and ②.
- If any fault is found, replace warning buzzer **1**.

610 CIGARETTE LIGHTER CIRCUIT

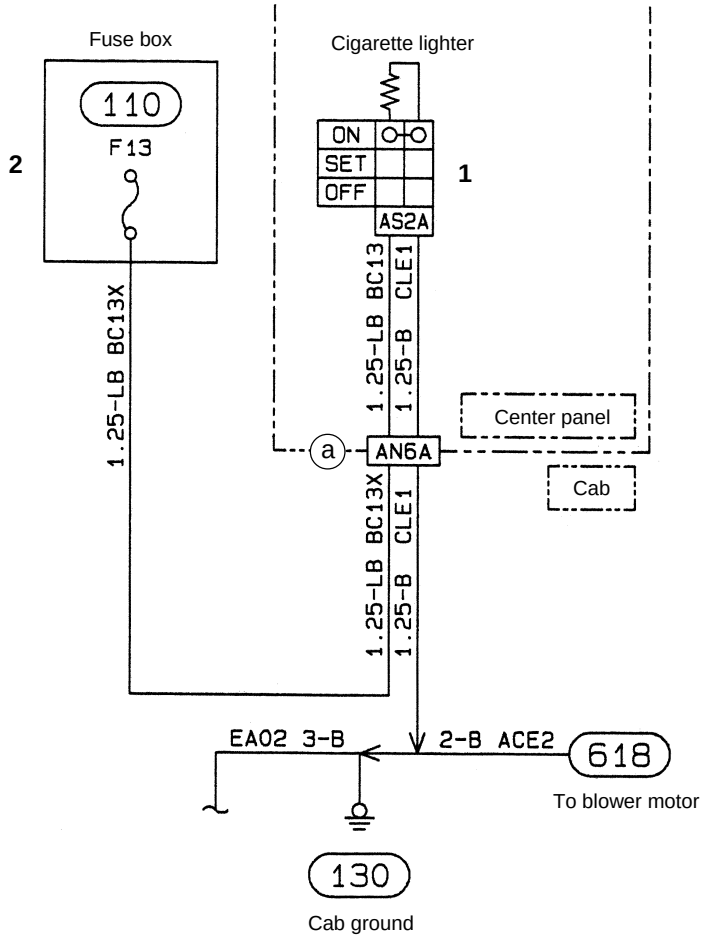

12221

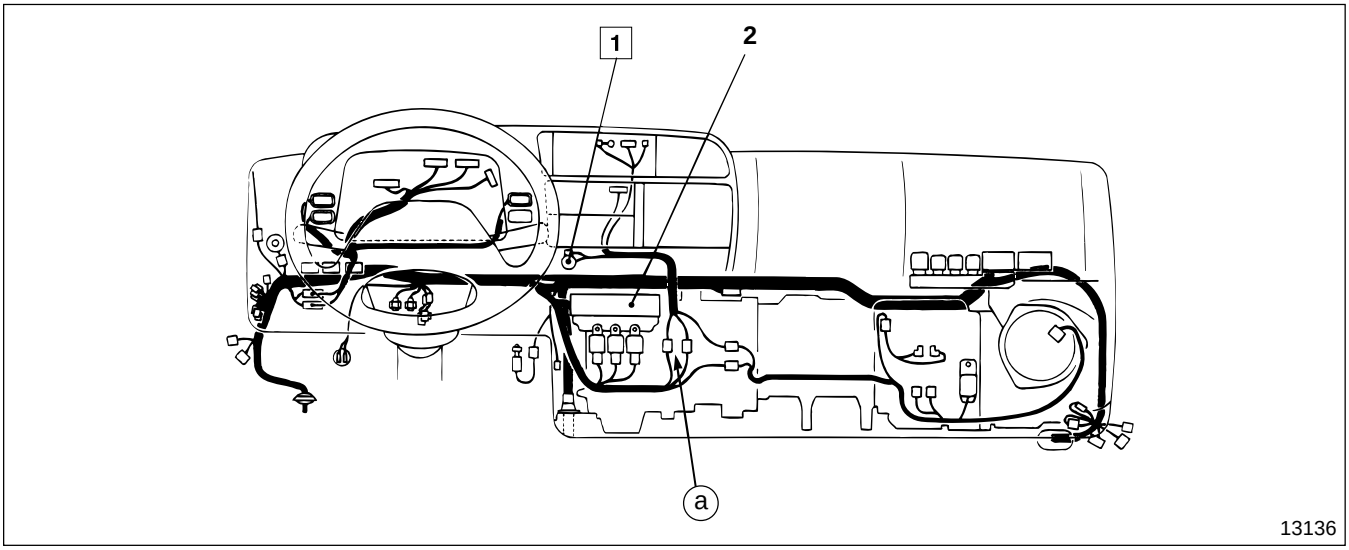

1 Cigarette lighter
2 Relay box (604)
3 Fuse box (104)

Service standards

Location	Maintenance item	Standard value	Limit	Remedy
1	Cigarette lighter plug return time	15±5 seconds	—	Replace

◆ Service procedure

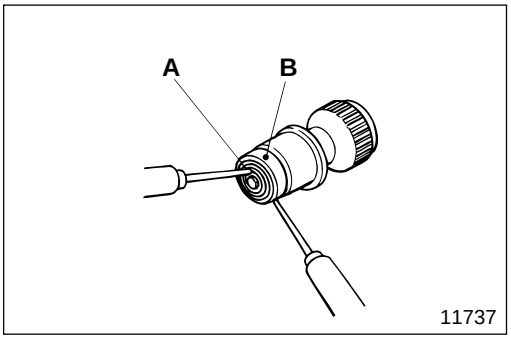

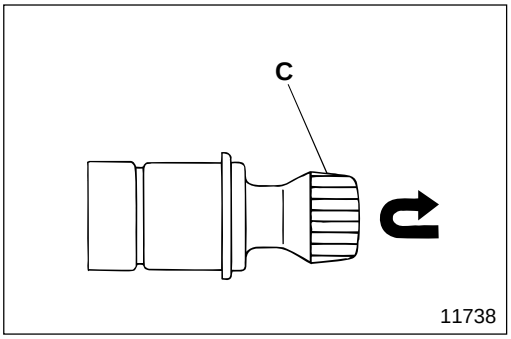

1 **Inspection of cigarette lighter**

Carry out the following inspection. If any fault is found, replace cigarette lighter **1** :

- Make sure that there is continuity between heater element **A** and body **B**.
- Make sure that plug **C** returns to its original position quickly when it is pushed in.
- Turn the starter switch to ACC or ON.
- Push plug **C** into the socket of the vehicle.
- Measure the time required for pushed-in plug **C** to return to its original position.
- Make sure that heater element **A** is glowing.

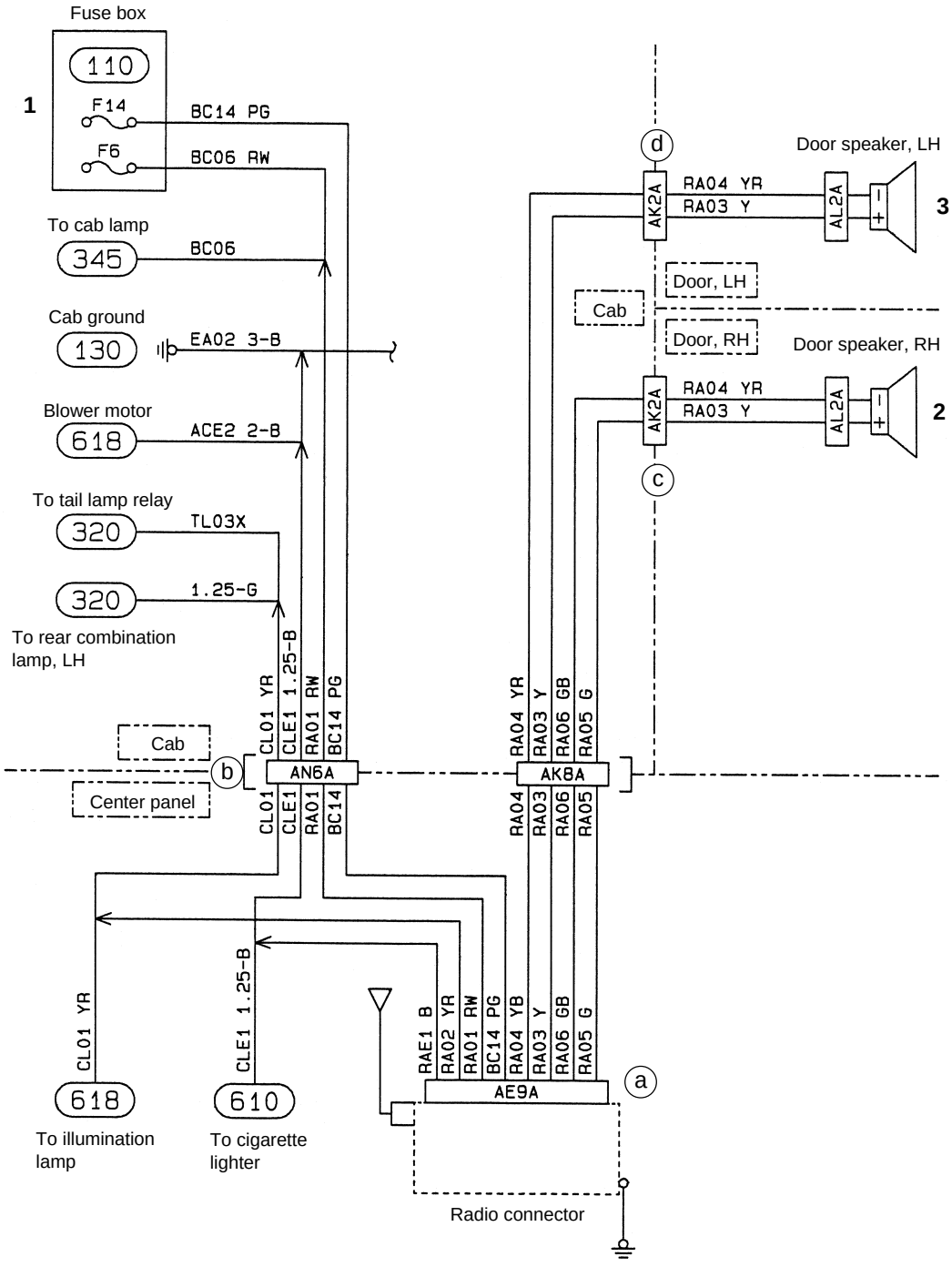
Fuse box
110
1
F14
BC14 PG
F6
BC06 RW
To cab lamp
345
BC06
Cab ground
130
EA02 3-B
Blower motor
618
ACE2 2-B
To tail lamp relay
320
TL03X
320
1.25-G
To rear combination lamp, LH
Cab
Center panel
b
AN6A
CL01 YR
CLE1 1.25-B
RA01 RW
BC14 PG
CL01
CLE1
RA01
BC14
AK8A
RA04 YR
RA03 Y
RA06 GB
RA05 G
RA04
RA03
RA06
RA05
d
Door speaker, LH
AK2A
RA04 YR
RA03 Y
AL2A
3
Door, LH
Cab
Door, RH
Door speaker, RH
AK2A
RA04 YR
RA03 Y
AL2A
2
c
CL01 YR
CLE1 1.25-B
RAE1 B
RA02 YR
RA01 RW
BC14 PG
RA04 YB
RA03 Y
RA06 GB
RA05 G
AE9A
a
618
610
To illumination lamp
To cigarette lighter
Radio connector
12222

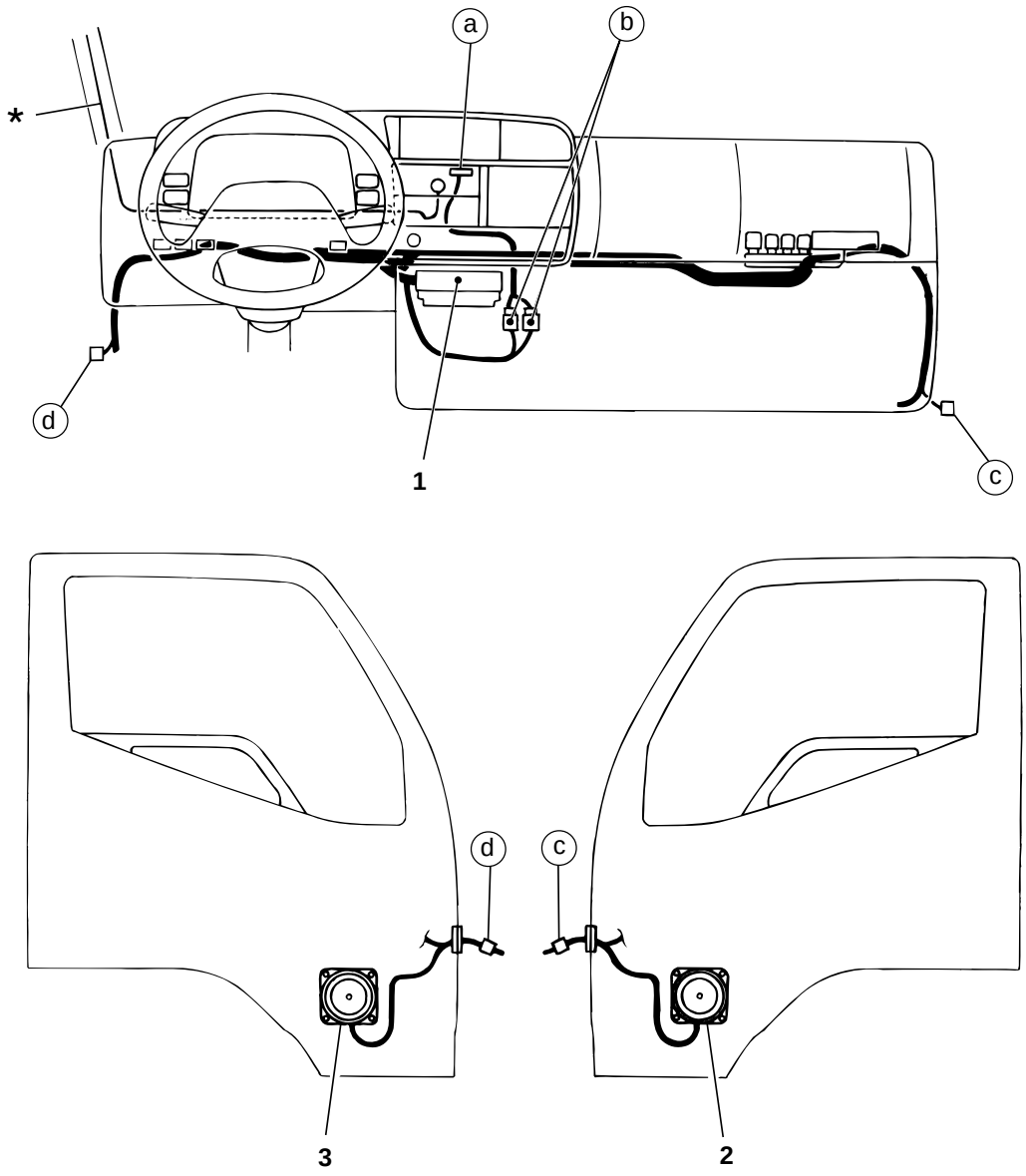

1 Fuse box 104
2 Door speaker, RH
3 Door speaker, LH

***** : Antenna cable

614 WIPER AND WASHER CIRCUIT

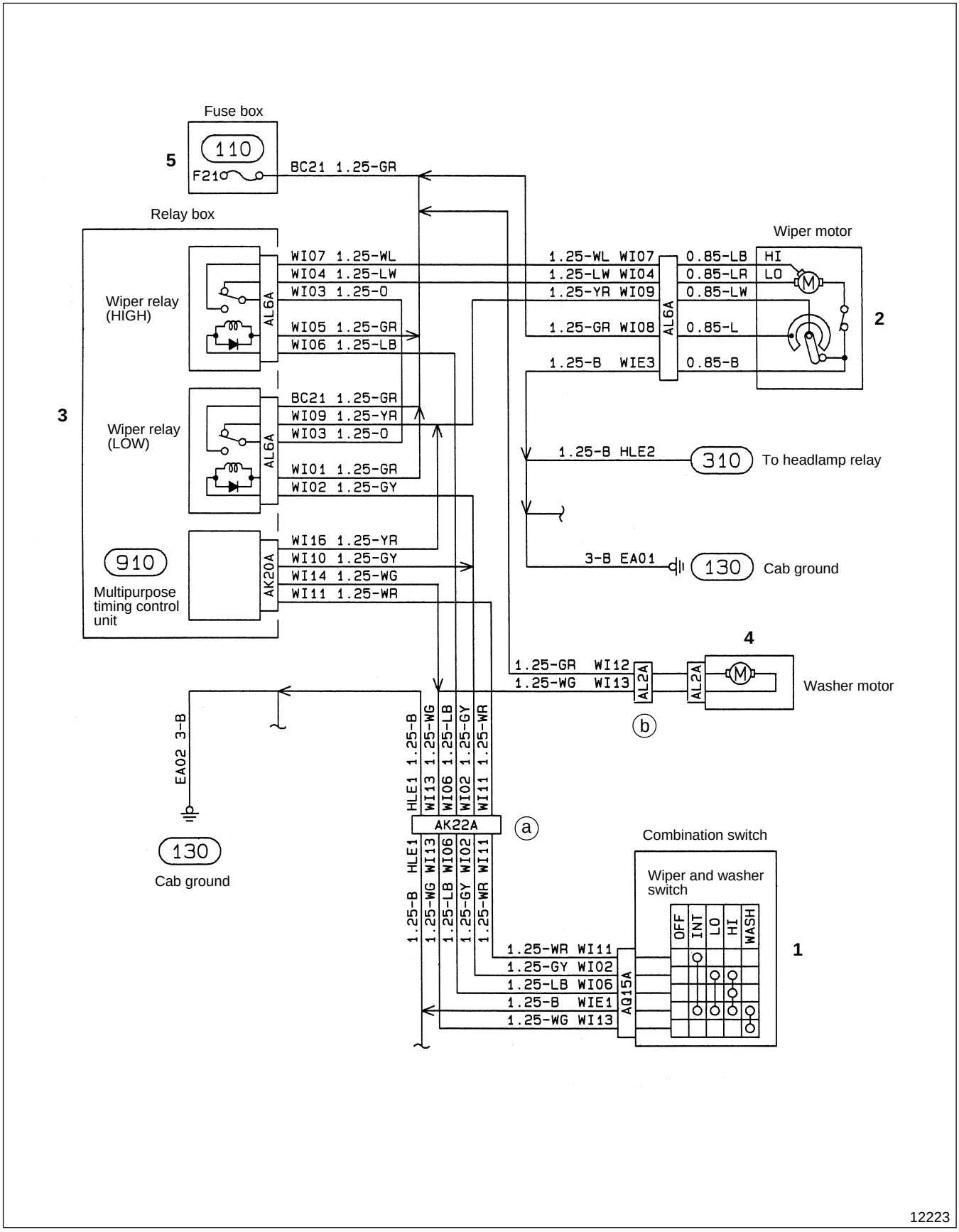

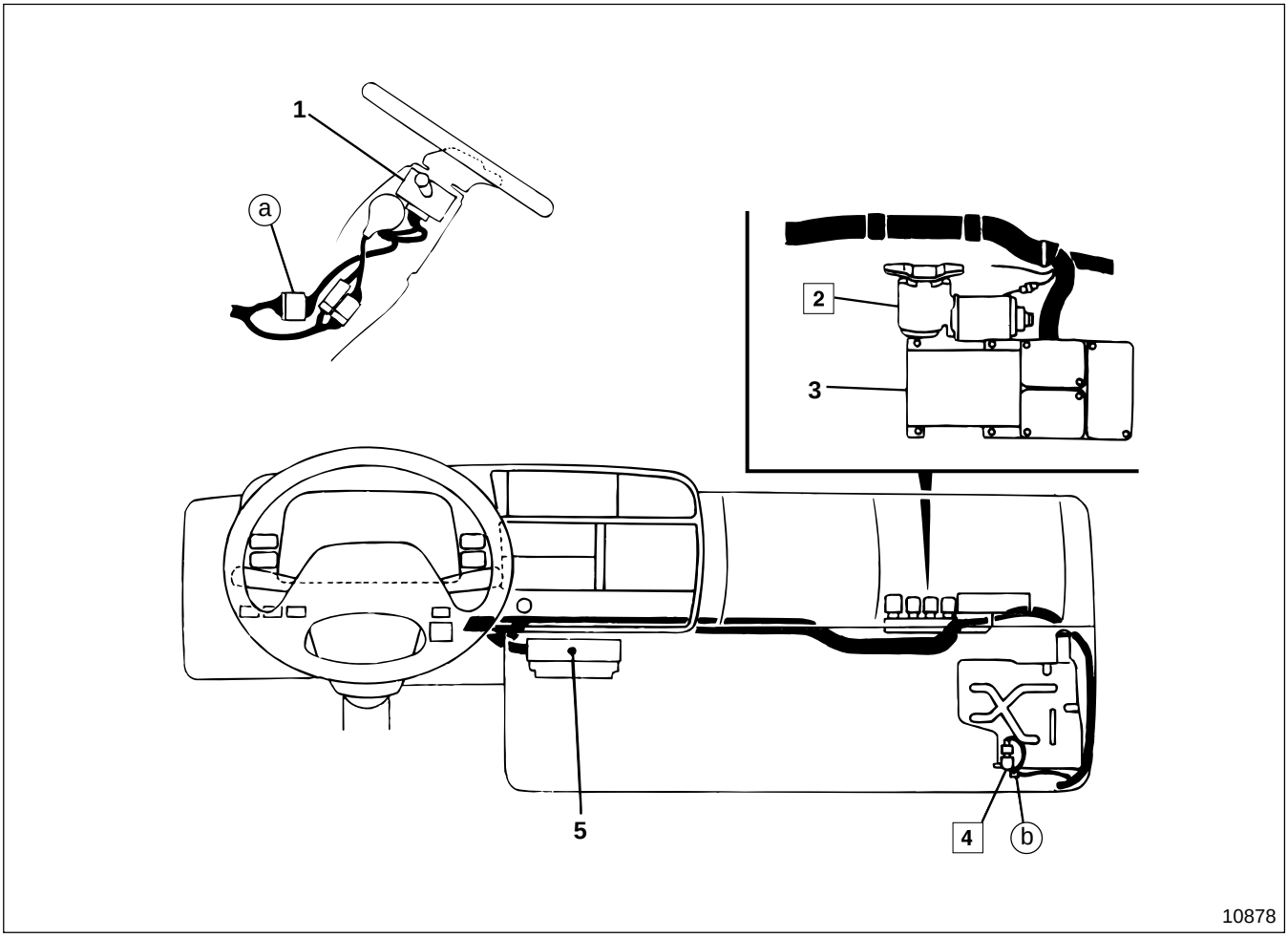

1 Combination switch 601
2 Wiper motor
3 Relay box 604
4 Washer motor
5 Fuse box 104

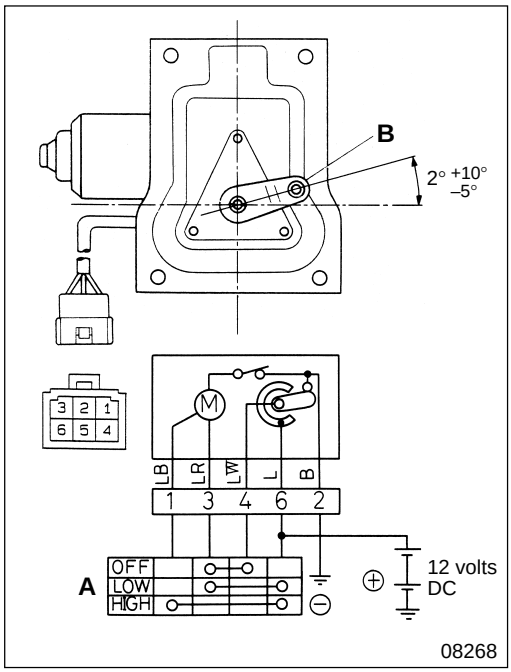

◆ Service Procedure

3 Inspection of wiper motor

- Connect wiper motor **3** as illustrated.
  A : Switch
- Carry out the following inspection. If any fault is found, replace wiper motor **3**. Gr 42

(1) Inspection of motor operation

- Make sure that wiper motor **3** turns at high speed when you turn switch **A** to HIGH.
- Make sure that wiper motor **3** turns at low speed when you turn switch **A** to LOW.

(2) Inspection of automatic stopping position

- Turn switch **A** to LOW to turn wiper motor **3** at low speed.
- When crank arm **B** is at any position other than the automatic stopping position (other than the illustrated angle), turn switch **A** to OFF.
- Make sure that crank arm **B** stops at the automatic stopping position (within the illustrated angle).

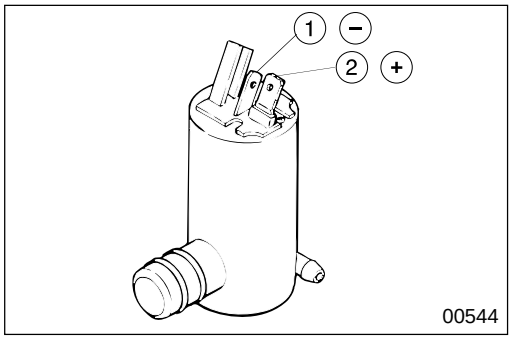

5 Inspection of washer motor

- Apply 12 volts DC between terminals ① and ② and make sure that washer motor **5** operates.
- If washer motor **5** does not operate, replace it. Gr 42

M E M O

616 HORN CIRCUIT

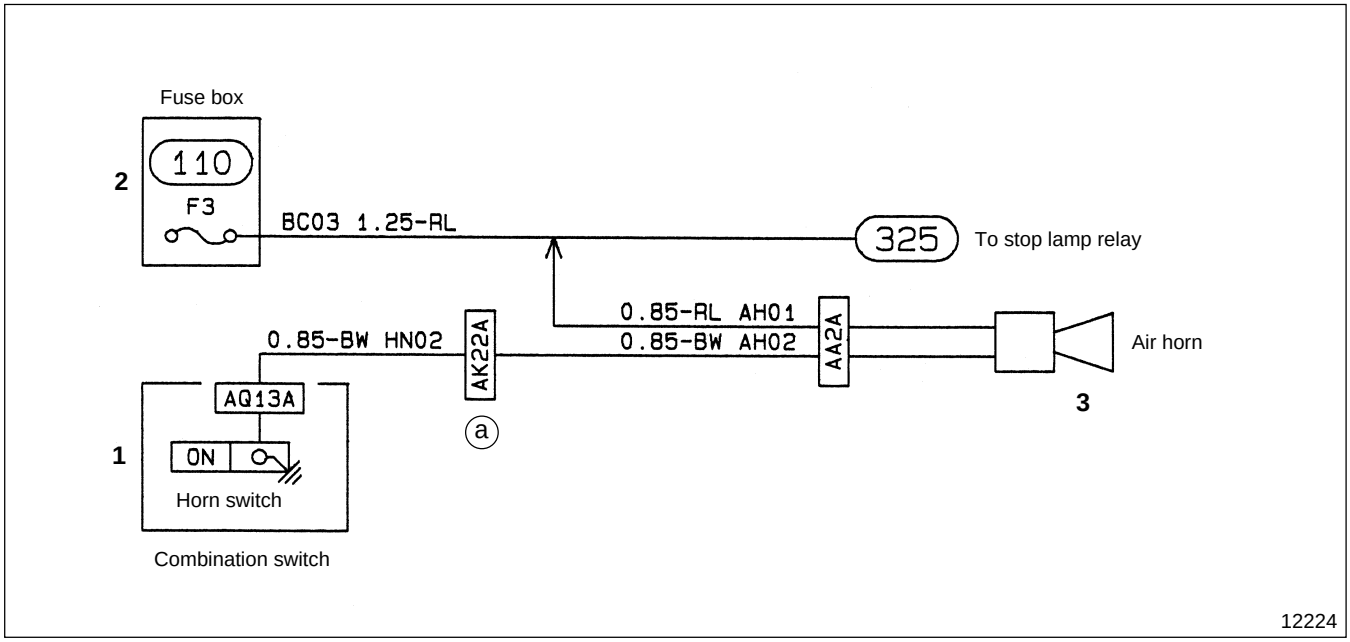

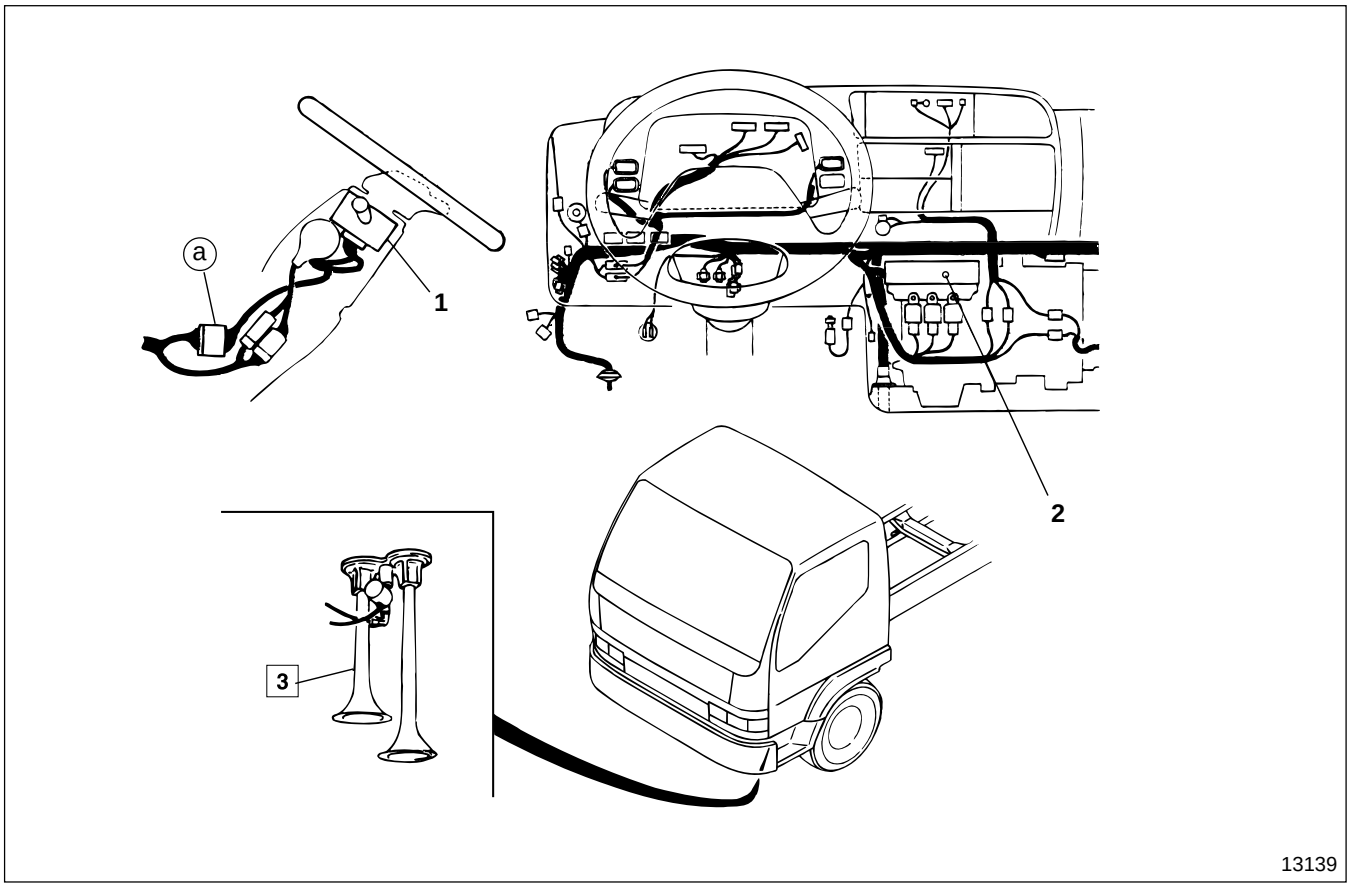

1 Combination switch 🕮 601
2 Fuse box 🕮 104
3 Air horn

Service standards

Location	Maintenance item	Standard value	Limit	Remedy
3	Minimum operating voltage of air horn valve 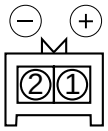 14314	10 V or less	—	Replace
	Operating air pressure of horn	195 to 980 kPa {28 to 142 lbf/in^2, 2 to 10 kgf/cm^2}	—	Replace

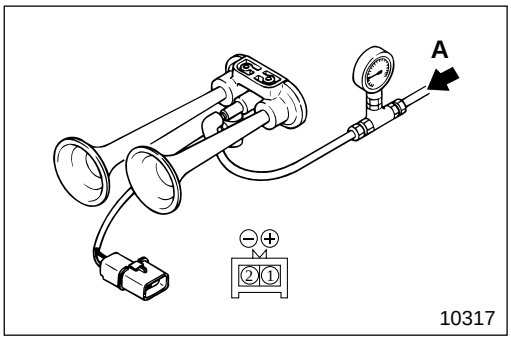

◆ Service procedure

3 **Inspection of air horn**

Carry out the following inspection. If any fault is found, replace air horn **3**.

(1) Minimum operating voltage of air horn valve

- Apply air pressure **A** of 785 kPa {115 lbf/in^2, 8 kgf/cm^2} to air horn **3**.
- Apply voltage between terminals ① and ② starting from 0 volt DC gradually.
- Measure the voltage when air horn **3** sounds.

(2) Operating air pressure of horn

- Apply 12 volts DC between terminals ① and ②.
- Apply air pressure **A** to air horn **3** starting from 0 kPa {0 lbf/in^2, 0 kgf/cm^2} gradually.
- Measure air pressure **A** when air horn **3** sounds.

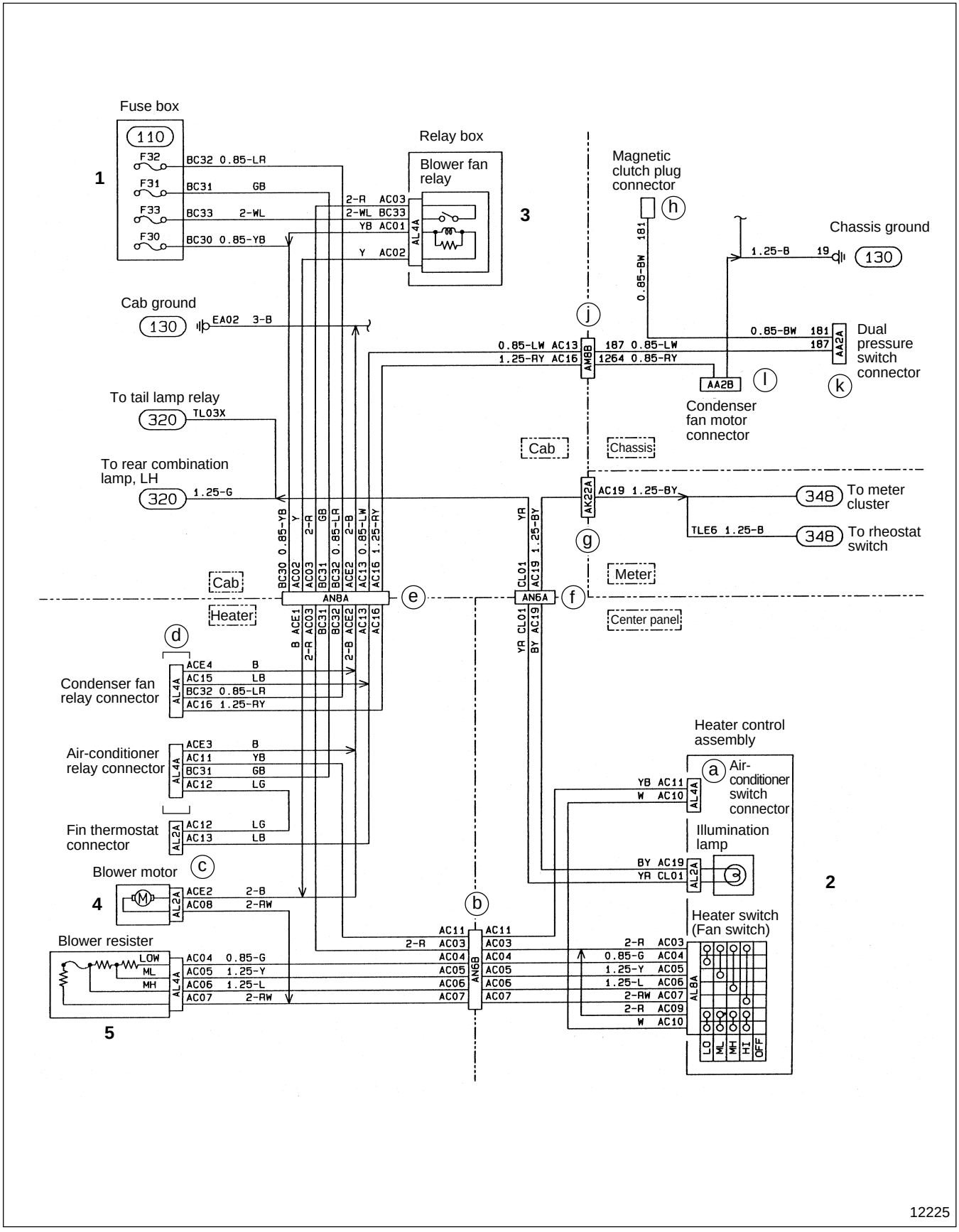
Fuse box
110
F32
F31
F33
F30
BC32 0.85-LR
BC31 GB
BC33 2-WL
BC30 0.85-YB
1
Relay box
Blower fan relay
AL4A
2-R AC03
2-WL BC33
YB AC01
Y AC02
3
Magnetic clutch plug connector
h
0.85-BW 181
Chassis ground
1.25-B 19
130
Cab ground
130
EA02 3-B
j
0.85-LW AC13
1.25-RY AC16
AM8B
187 0.85-LW
1264 0.85-RY
0.85-BW 181
187
AA2A
Dual pressure switch connector
k
AA2B
l
Condenser fan motor connector
To tail lamp relay
320
TL03X
To rear combination lamp, LH
320
1.25-G
Cab
Chassis
AK22A
AC19 1.25-BY
348
To meter cluster
TLE6 1.25-B
348
To rheostat switch
g
Meter
Cab
Heater
AN8A
e
AN6A
f
Center panel
BC30 0.85-YB
AC02 Y
AC03 2-R
BC31 GB
BC32 0.85-LR
ACE2 2-B
AC13 0.85-LW
AC16 1.25-RY
CL01 YR
AC19 1.25-BY
d
ACE4 B
AC15 LB
BC32 0.85-LR
AC16 1.25-RY
Condenser fan relay connector
AL4A
ACE3 B
AC11 YB
BC31 GB
AC12 LG
Air-conditioner relay connector
AL2A
AC12 LG
AC13 LB
Fin thermostat connector
Blower motor
c
M
4
ACE2 2-B
AC08 2-RW
AL2A
Blower resister
LOW
ML
MH
AC04 0.85-G
AC05 1.25-Y
AC06 1.25-L
AC07 2-RW
AL4A
5
b
AN6B
AC11
AC03
AC04
AC05
AC06
AC07
Heater control assembly
a
Air-conditioner switch connector
YB AC11
W AC10
AL4A
Illumination lamp
BY AC19
YR CL01
AL2A
3
2
Heater switch (Fan switch)
2-R AC03
0.85-G AC04
1.25-Y AC05
1.25-L AC06
2-RW AC07
2-R AC09
W AC10
AL8A
LO
ML
MH
HI
OFF
12225

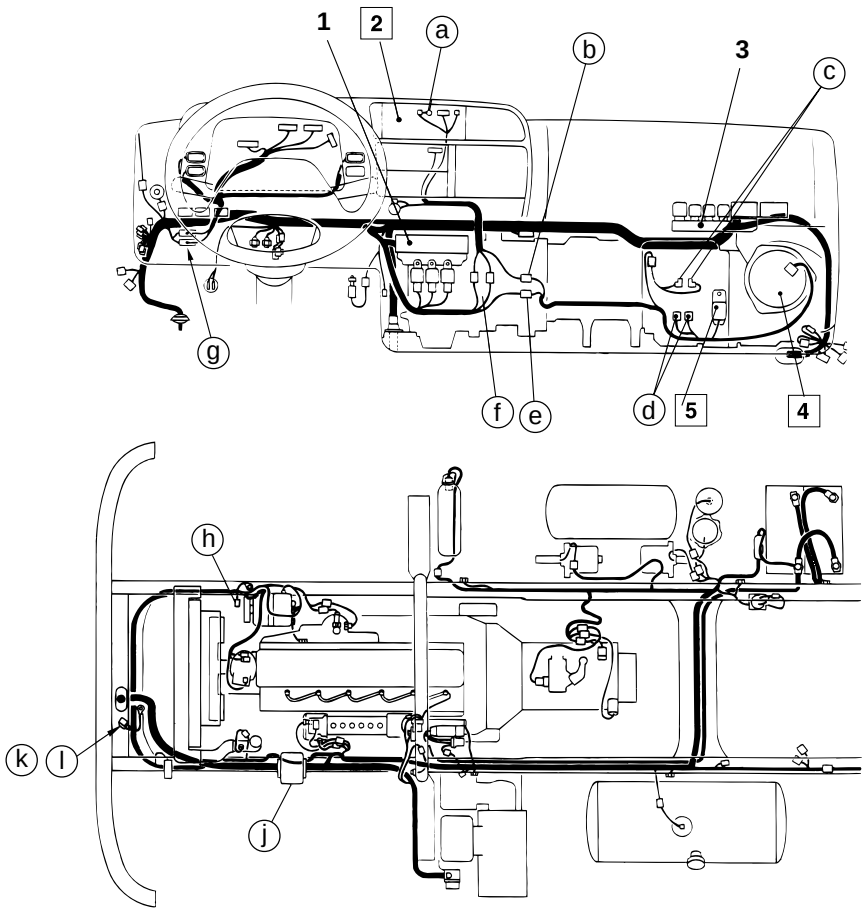

13140

1 Fuse box (104)
2 Heater control assembly
3 Relay box (604)
4 Blower motor
5 Blower resistor

Service standards

Location	Maintenance item		Standard value	Limit	Remedy
5	Resistance of blower resistor  14315	① - ②	0.81 Ω	—	Replace
		① - ③	0.28 Ω		
		① - ④	1.94 Ω		

◆ Service procedure

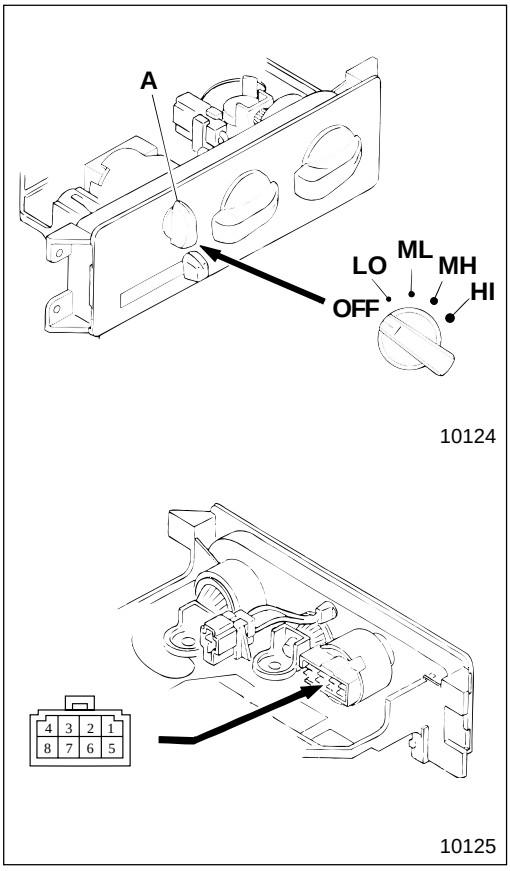

2 Inspection of heater control assembly

Inspection of blower switch A

- Follow the table below to inspect continuity:

	⑧	②	⑦	③	⑥	⑤	④
OFF							
LO (LOW)	○—○					○—○	
ML (MIDDLE LOW)	○—	—○				○—○	
MH (MIDDLE HIGH)	○—	—	—○			○—○	
HI (HIGH)	○—	—	—	—○		○—○	

○—○ : There is continuity between terminals ○ and ○.

- If any fault is found, replace blower switch **A**.

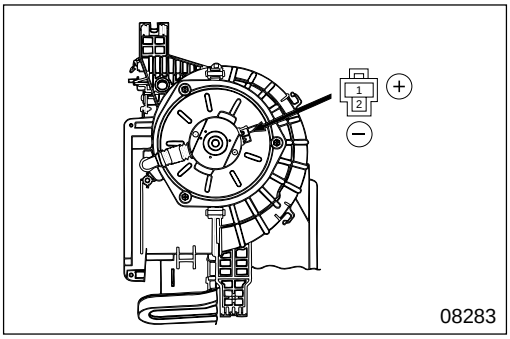

4 Inspection of blower motor

- Make sure that blower motor **4** operates when 12 volts DC is applied between terminals ① and ②.
- If any fault is found, replace blower motor **4**.

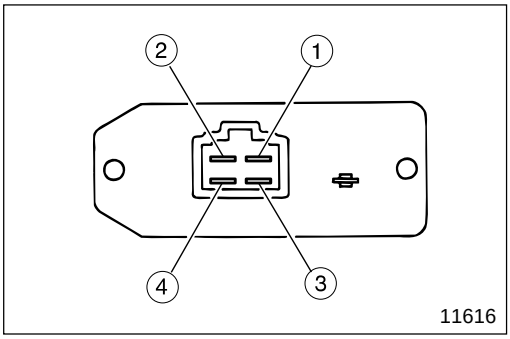

5 Inspection of blower resistor

- Measure resistance between terminals ① and ② (MIDDLE LOW), ① and ③ (MIDDLE HIGH) and ① and ④ (LOW).
- If the measured value deviates from the standard value, replace blower resistor **5**.

7 CHASSIS ELECTRICS

701 MAGNETIC VALVE 54-7-2

710 EXHAUST BRAKE CIRCUIT < Manual Transmission > ... 54-7-4

718 AIR DRYER CIRCUIT 54-7-8

701 MAGNETIC VALVE

Installing Position

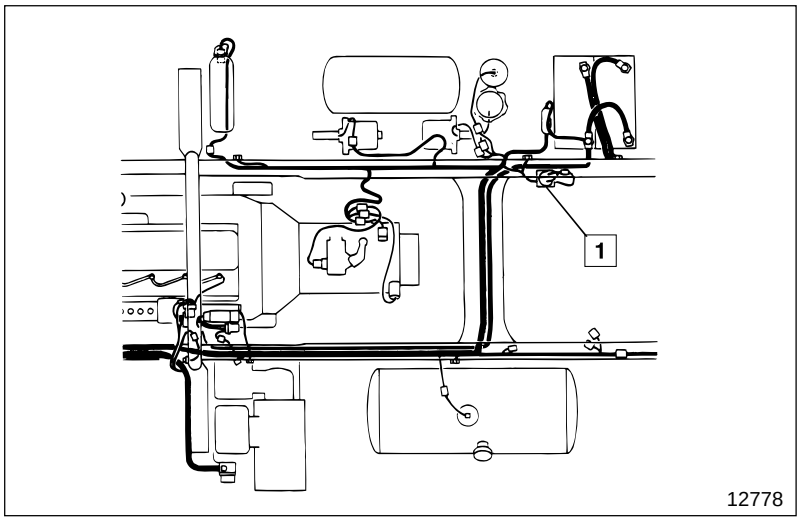

1 3-way magnetic valve

Service standards

Location	Maintenance item	Standard value	Limit	Remedy
1	Minimum operating voltage of 3-way magnetic valve 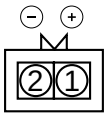 14318	10 V or less	—	Replace

◆ Service procedure

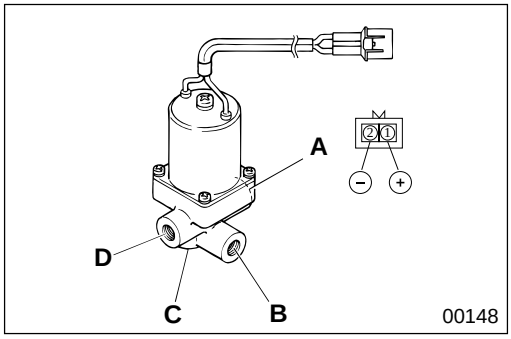

1 Inspection of 3-way magnetic valve

Carry out the following inspection. If any fault is found, replace 3-way magnetic valves **1** :

Air circuit table (There is air continuity between terminals ○ and ○.)

	Input port B	Output port D	Unused A	Exhaust port C
ON	○	○		
OFF		○		○

(1) Operation inspection

- Apply voltage between terminals ① and ②, increasing gradually from 0 volt.
- Measure voltage (minimum operating voltage) when magnetic valves **1** starts operating. (You can tell if the magnetic valves are ON or OFF by listening for an operating sound.)

(2) Airtightness inspection

- When magnetic valve is ON :
  - Close output port **D**.
  - Apply **12** volts DC between terminals ① and ②.
  - Make sure that there is no air leaking from exhaust port **C** when air pressure (295 to 980 kPa {43 to 140 lbf/in^2, 3 to 10 kgf/cm^2}) is applied to input port **B**.
- When magnetic valve is OFF :

  Make sure that there is no air leaking from exhaust port **C** or output port **D** when air pressure (295 to 980 kPa {43 to 140 lbf/in^2, 3 to 10 kgf/cm^2}) is applied to input port **B**.

M E M O

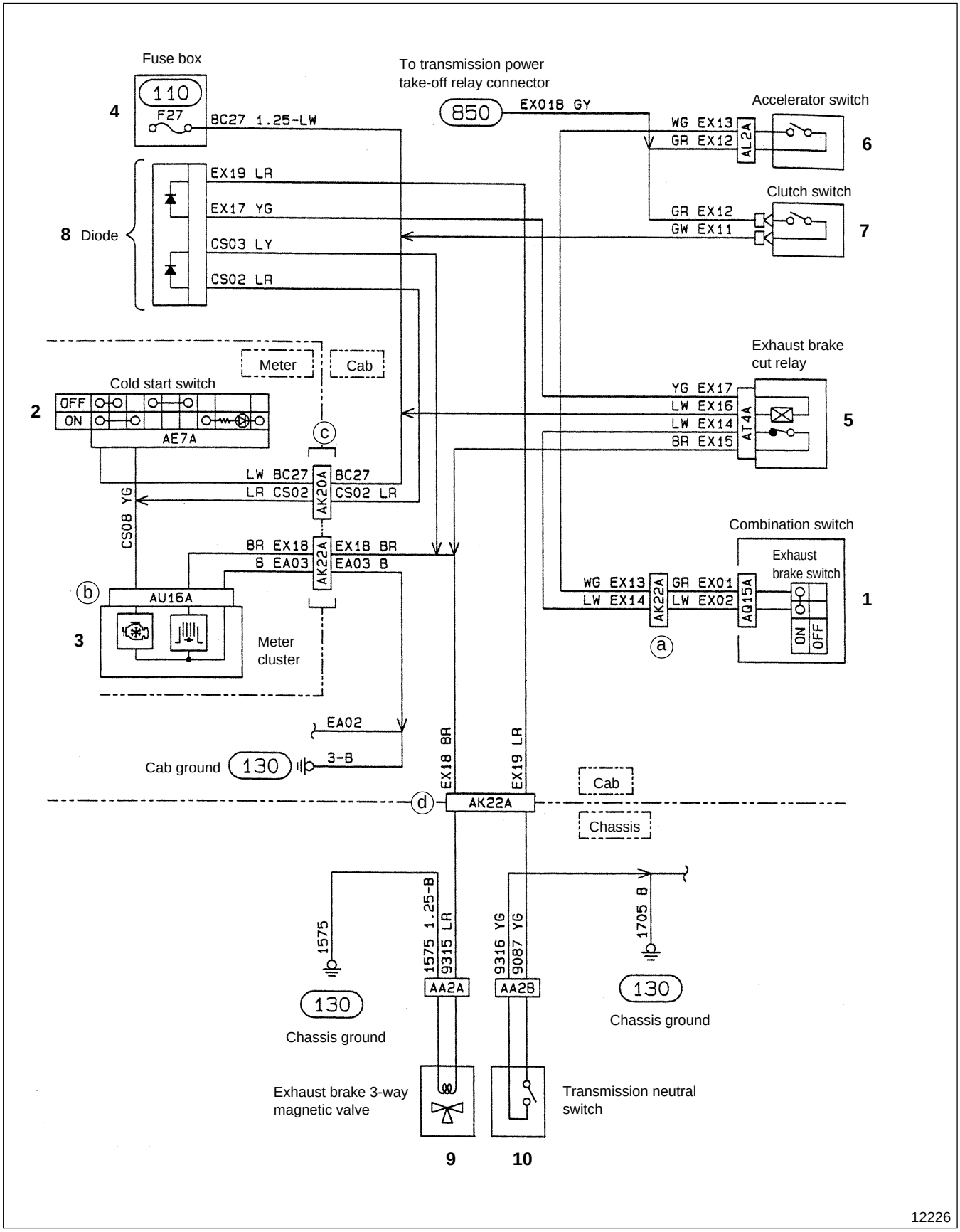
Fuse box
110
F27
4
BC27 1.25-LW
To transmission power take-off relay connector
850
EX01B GY
Accelerator switch
WG EX13
GR EX12
AL2A
6
Clutch switch
GR EX12
GW EX11
7
8 Diode
EX19 LR
EX17 YG
CS03 LY
CS02 LR
Meter
Cab
Cold start switch
OFF
ON
AE7A
2
c
Exhaust brake cut relay
YG EX17
LW EX16
LW EX14
BR EX15
AT4A
5
LW BC27
LR CS02
BC27
CS02 LR
AK20A
CS08 YG
BR EX18
B EA03
EX18 BR
EA03 B
AK22A
Combination switch
Exhaust brake switch
WG EX13
LW EX14
GR EX01
LW EX02
AG15A
ON
OFF
1
b
AU16A
3
Meter cluster
a
EA02
Cab ground
130
3-B
EX18 BR
EX19 LR
d
AK22A
Cab
Chassis
1575
1575 1.25-B
9315 LR
9316 YG
9087 YG
1705 B
AA2A
AA2B
130
Chassis ground
130
Chassis ground
Exhaust brake 3-way magnetic valve
Transmission neutral switch
9
10
12226

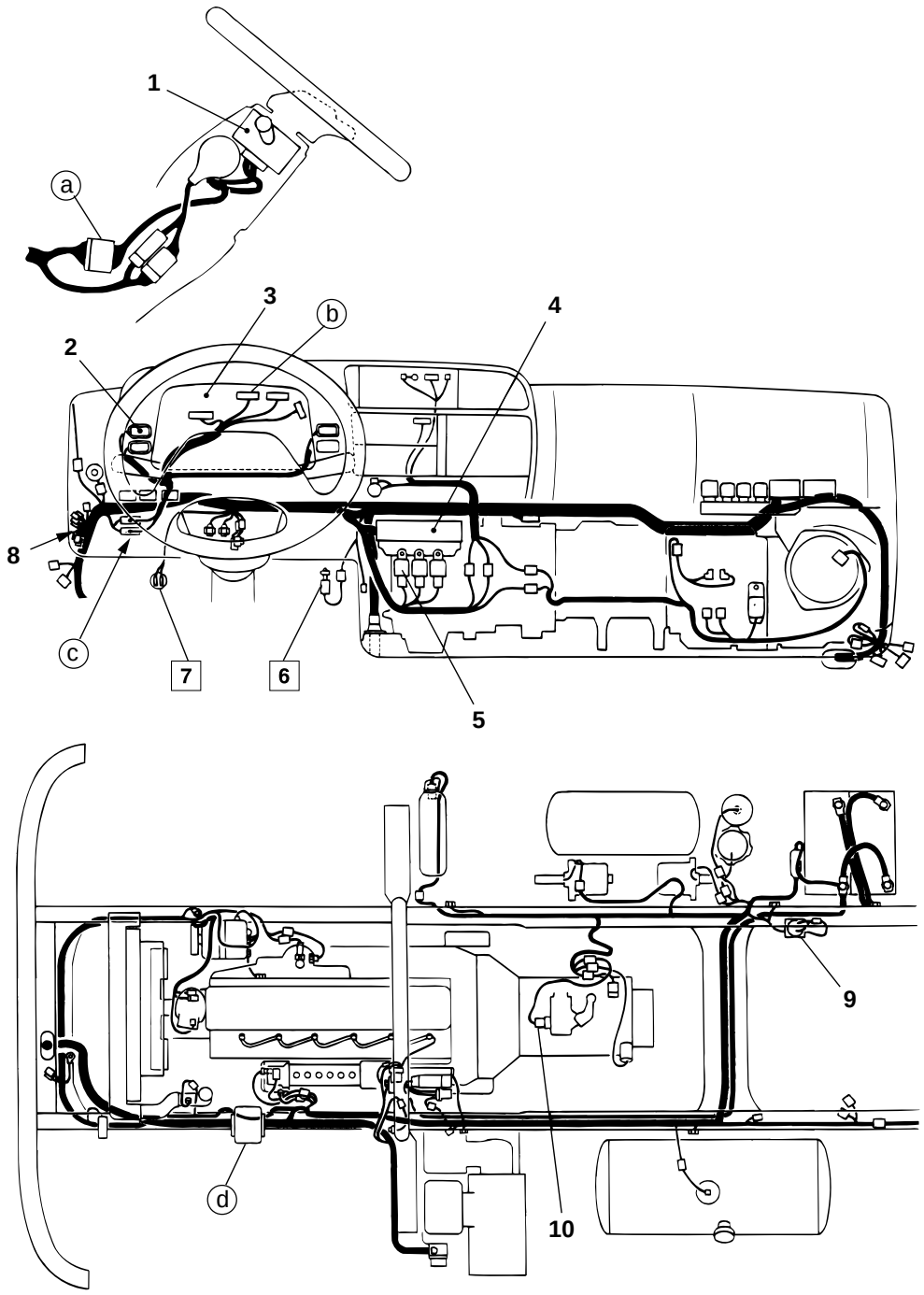

1 Combination switch 🕮 601
2 Cold start switch 🕮 601
3 Meter cluster 🕮 401
4 Fuse box 🕮 104
5 Exhaust brake cut relay 🕮 604
6 Accelerator switch
7 Clutch switch
8 Diode
9 Exhaust brake 3-way magnetic valve 🕮 701
10 Transmission neutral switch 🕮 802

◆ Service procedure

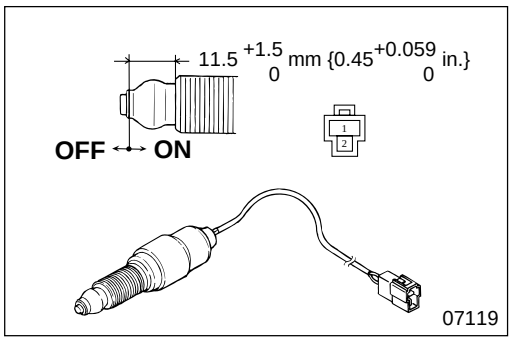

6 **Inspection of accelerator switch**

- Follow the table below to inspect continuity:

	①	②
OFF		
ON	○—○	

○—○ : There is continuity between terminals ○ and ○.

- If any fault is found, replace accelerator switch **6**. Gr 13

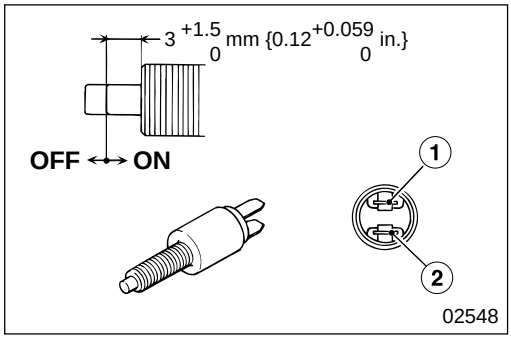

7 **Inspection of clutch switch**

- Follow the table below to inspect continuity:

	①	②
OFF		
ON	○—○	

○—○ : There is continuity between terminals ○ and ○.

- If any fault is found, replace clutch switch **7**. Gr 21

M E M O

(718) AIR DRYER CIRCUIT

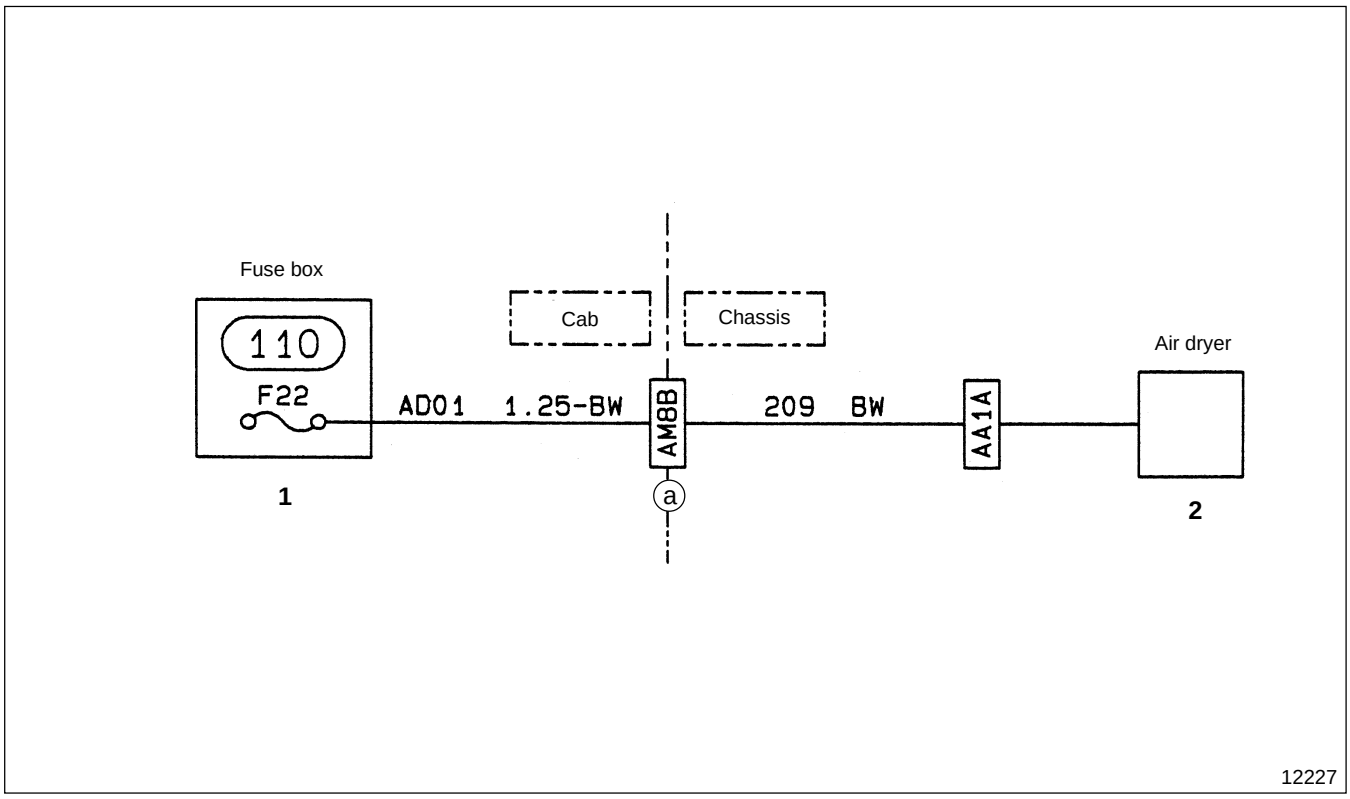

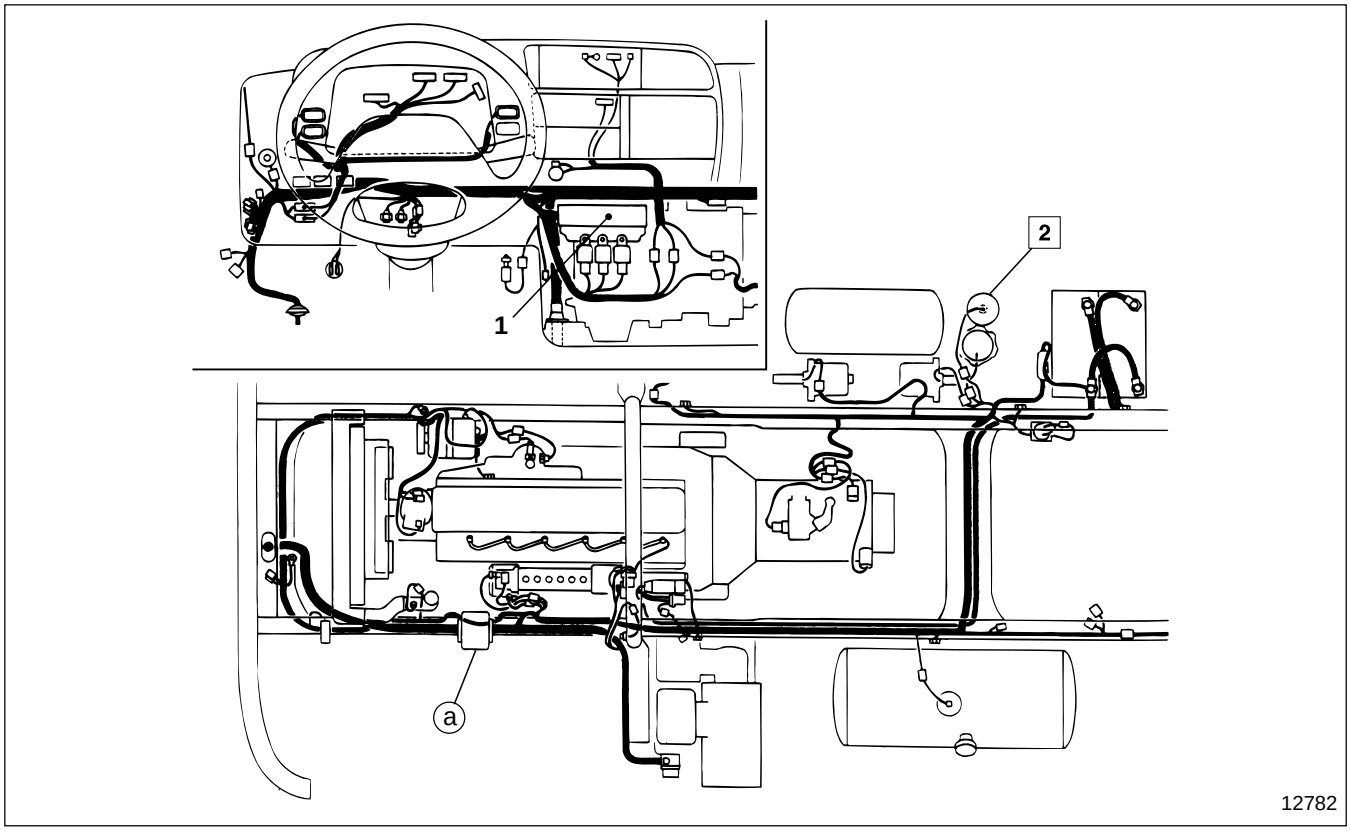

1 Fuse box (104)
2 Air dryer Gr 35

Service standards

Location	Maintenance item	Standard value	Limit	Remedy
2	Operating temperature of complete thermostat	4±4.0°C {39±7.2°F}	—	Replace

◆ Service procedure

2 **Air dryer**

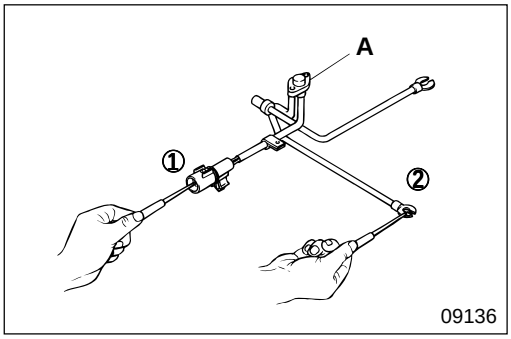

(1) Inspection of complete thermostat

Carry out the following inspection. If any fault is found, replace the complete thermostat. Gr 35

- Make sure that there is no continuity between terminals ① and ② at room temperature 20°C {68°F}.
- Cool thermostat **A** in a refrigerator, etc.
  Measure the temperature when there is continuity between terminals ① and ②, and make sure that the measured value conforms to the standard value.

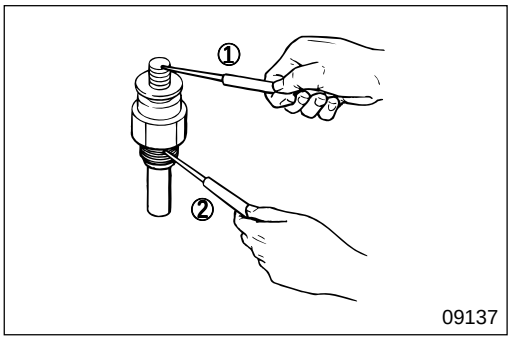

(2) Inspection of heater

- Make sure that there is continuity between terminals ① and ②.
- If any fault is found, replace the heater. Gr 35

8 ENGINE AND TRANSMISSION ELECTRICS

801 ENGINE ELECTRICS 54-8-2

802 TRANSMISSION ELECTRICS
< Manual Transmission > 54-8-6
< Automatic Transmission > 54-8-8

850 TRANSMISSION POWER TAKE-OFF CIRCUIT
< Option > 54-8-10

Installation Position

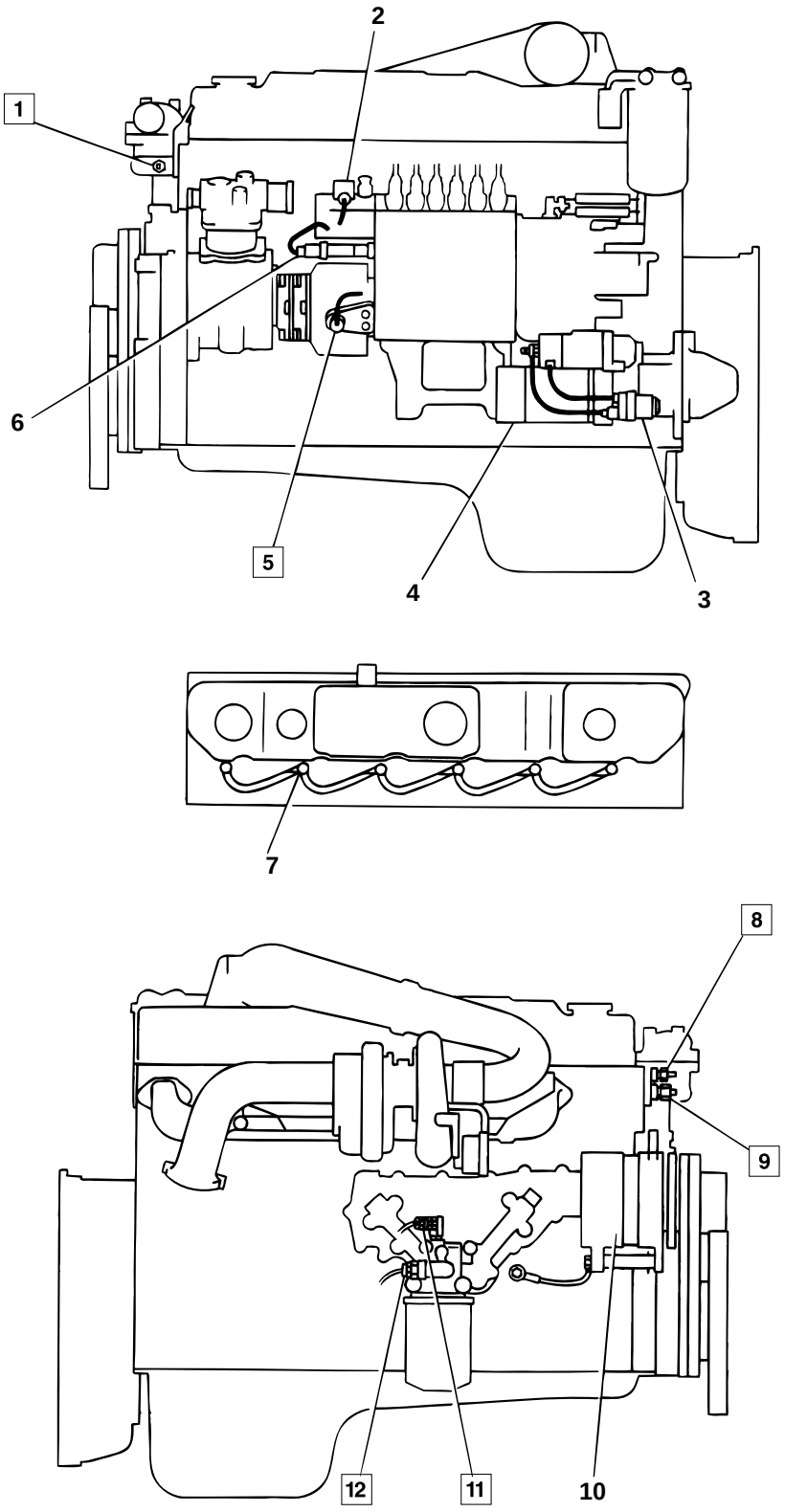

1 Water temperature sensor (Connects to pre-stroke control unit) Gr 13
2 Pre-stroke actuator Gr 13
3 Starter relay 210
4 Starter 201
5 Engine revolution sensor
6 Control rod position sensor Gr 13
7 Glow plug 220
8 Water temperature sensor (Connects to water temperature gauge and multipurpose timing control unit)
9 Overheating switch
10 Alternator 106
11 Engine oil pressure switch
12 Engine oil bypass alarm switch

Service standards

Location	Maintenance item			Standard value	Limit	Remedy
5	Resistance of engine revolution sensor (At room temperature 25°C {77°F}) 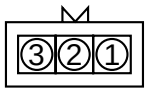 14366		①–②	2.1 to 2.5 k Ω	—	Replace
8	Resistance of water temperature sensor 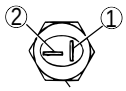 Body 14321	① – (Body) (Water temperature gauge side)	50°C {122°F}	(153.9 Ω)	—	Replace
			80°C {176°F}	51.9 $^{+4.9}_{-4.4}$ Ω		
			100°C {212°F}	27.4 $^{+1.9}_{-1.2}$ Ω		
		② – (Body) (Multipurpose timing control unit side)	20°C {68°F}	3.25±0.33 kΩ		
			60°C {140°F}	(620 Ω)		
			80°C {176°F}	(300 Ω)		
9	Operating temperature of overheating switch	When temperature increases (ON→OFF)		110±2°C {230±36°F}	—	Replace
		When temperature decreases (OFF→ON)		110±4°C {230±7.2°F}	—	
11	Operating pressure of engine oil pressure switch			49±9.8 kpa {7.1±1.4lbf/in², 0.5±0.1 kgf/cm²}	—	Replace
12	Operating pressure of engine oil bypass alarm switch			140±20 kPa {20±2.8 lbf/in², 1.4±0.2 kgf/cm²}	—	Replace

The values in ( ) are reference values.

◆ Service procedures

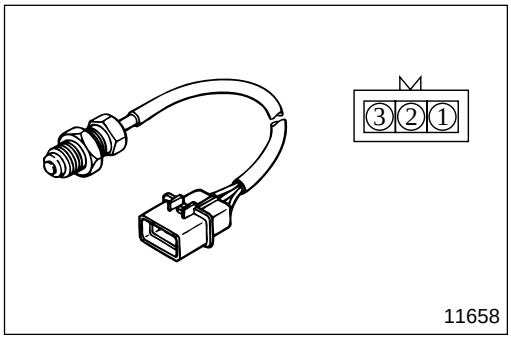

11658

5 Inspection of engine revolution sensor

- Measure the resistance between terminals ① and ②.
- If the measured value deviates from the standard value, replace engine revolution sensor **5**. Gr 13

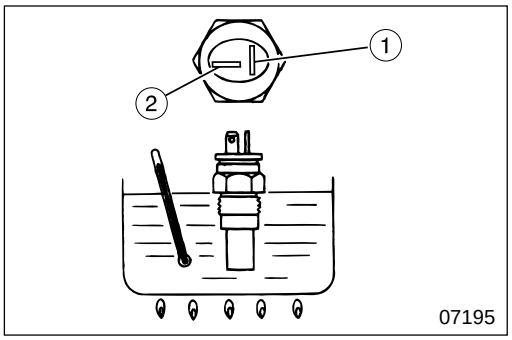

8 **Inspection of water temperature sensor**

- Place water temperature sensor **8** in engine oil in a container.
- Raise the oil temperature to the specified values and stir the oil.
- Measure the resistance between terminal ① and the body, and terminal ② and the body.
  Terminal ① : Water temperature gauge connection
  Terminal ② : Multipurpose timing control unit connection
- If the measured value deviates from the standard value, replace water temperature sensor **8**. Gr 14

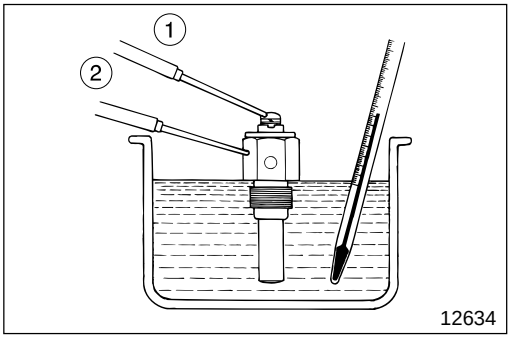

9 **Inspection of overheating switch**

Carry out the following inspection. If any fault is found, replace overheating switch **9**. Gr 14

- Make sure that there is no continuity between terminals ① and ② (Body) at room temperature (20°C {68°F}).
- Place overheating switch **9** in a container filled with engine oil and raise the oil temperature while stirring the oil.
  Measure the temperature when there is continuity between terminals ① and ② (Body), and make sure that the measured value conforms to the standard value.
- Lower the oil temperature and measure the temperature when continuity is lost between terminals ① and ② (Body), and make sure that the measured value conforms to the standard value.

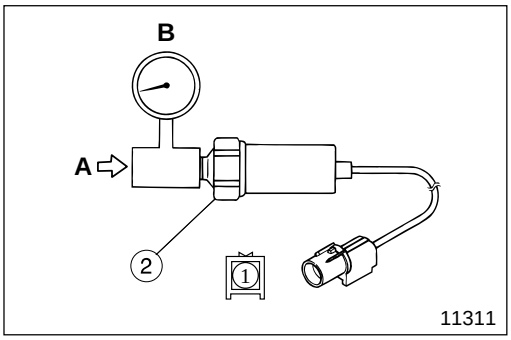

11 **Inspection of engine oil pressure switch**

Carry out the following inspection. If any fault is found, replace engine oil pressure switch **11**. Gr 12

- Make sure that there is continuity between terminals ① and ② (Body) when air pressure **A** is not applied to engine oil pressure switch **11**.
- Apply air pressure **A** to engine oil pressure switch **11** gradually starting from 0 kpa {0 lbf/in^2, 0 kgf/cm^2}.
  Measure the air pressure when continuity is lost between terminals ① and ② (Body), and make sure that the measured value conforms to the standard value.
  B : Air pressure gauge

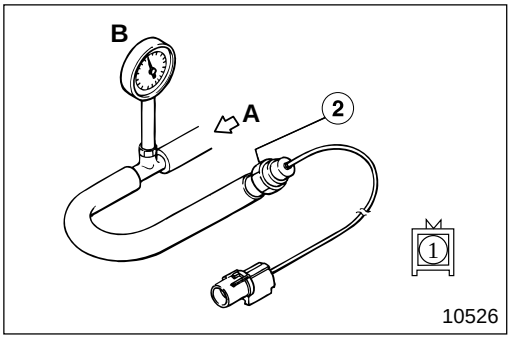

12 **Inspection of engine oil bypass alarm switch**

Carry out the following inspection. If any fault is found, replace engine oil bypass alarm switch **12**. Gr 12

- Make sure that there is no continuity between terminals ① and ② (Body) when air pressure **A** is not applied to engine oil bypass alarm switch **12**.
- Apply air pressure **A** to engine oil bypass alarm switch **12** gradually starting from 0 kpa {0 lbf/in^2, 0 kgf/cm^2}.
  Measure the air pressure when continuity is present between terminals ① and ② (Body), and make sure that the measured value conforms to the standard value.
  B : Air pressure gauge

M E M O

Installation Position

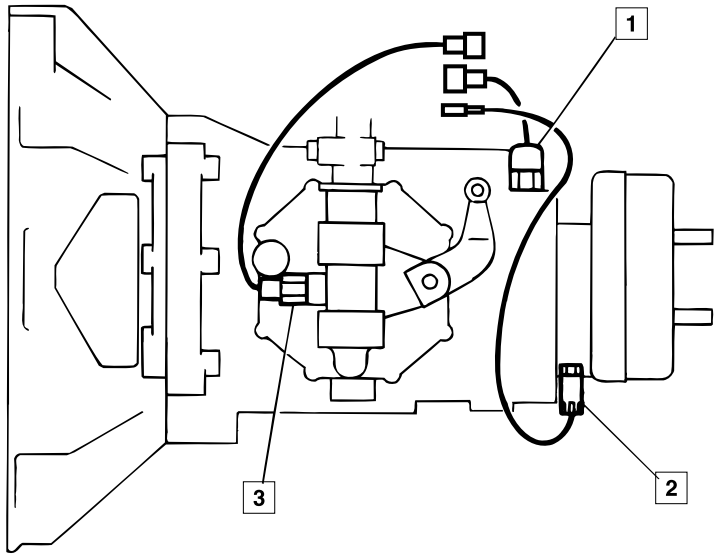

13926

1 Backup lamp switch
2 Vehicle speed sensor
3 Transmission neutral switch

Service standards

Location	Maintenance item			Standard value	Limit	Remedy
2	Pulse output voltage of vehicle speed sensor (8 pulses) 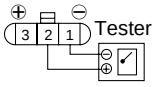 14367	①–②	Low pulse	1.5 V or less	—	Replace
			High pulse	12 V–(0.5 V or less)	—	

◆ Service procedure

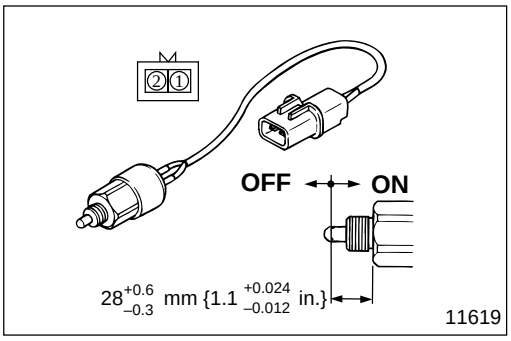

1 **Inspection of Backup lamp switch**

- Follow the table below to inspect continuity

	①	②
OFF		
ON	○—○	

○—○ : There is continuity between terminals ○ and ○.

- If any fault is found, replace backup lamp switch **1**. Gr 22

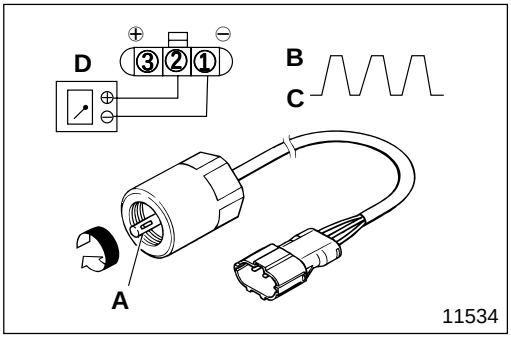

2 **Inspection of vehicle speed sensor**

- Apply 12 volts DC between terminals ① and ③, and rotate shaft **A** of vehicle speed sensor **2** slowly.
- At this state, measure the maximum voltage (High pulse voltage **B**) and the minimum voltage (Low pulse voltage **C**) generated between terminals ① and ②.
  D : Tester
- If the measured value deviates from the standard value, replace vehicle speed sensor **2.** Gr 22

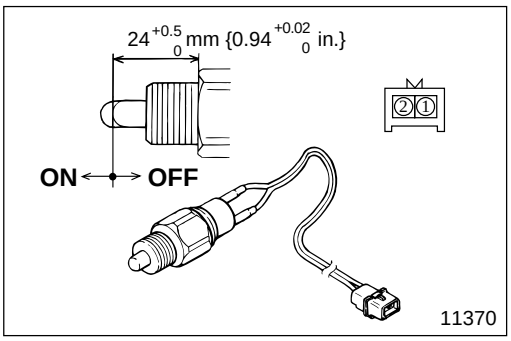

3 **Inspection of transmission neutral switch**

- Follow the table below to inspect continuity

	①	②
OFF		
ON	○—○	

○—○ : There is continuity between terminals ○ and ○.

- If any fault is found, replace transmission neutral switch **3**. Gr 22

Installation Position

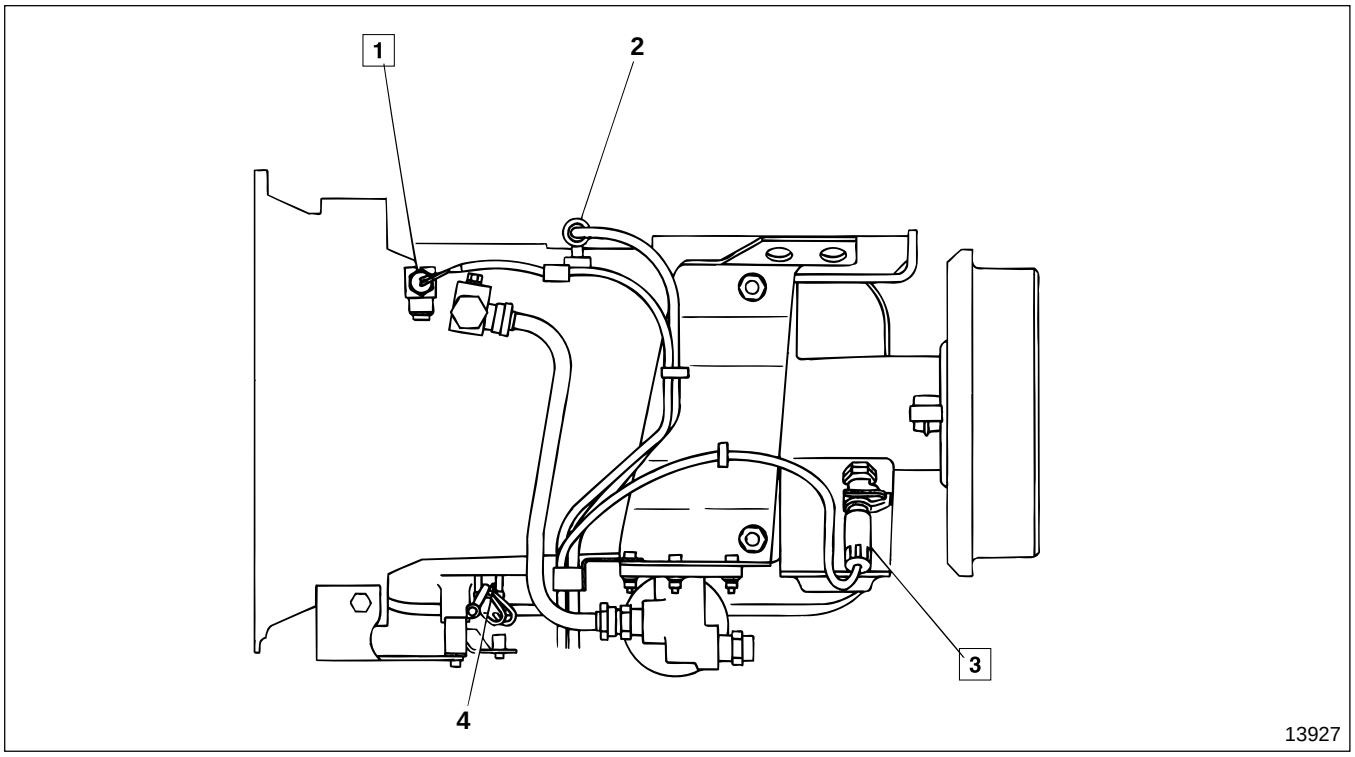

1 Automatic transmission fluid temperature switch
2 Backup lamp switch Gr 23
3 Vehicle speed sensor
4 Automatic transmission neutral switch Gr 23

Service standards

Location	Maintenance item			Standard value	Limit	Remedy
1	Operating temperature of automatic transmission fluid temperature switch	When increases (OFF→ON)		140±3°C {284±5.4°F}	—	Replace
		When decreases (ON→OFF)		133°C {271°F} MIN		
3	Output voltage of vehicle speed sensor 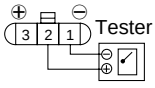	①–②	Low pulse	1.5 V or less	—	Replace
			High pulse	12 V–(0.5 V or less)	—	

◆ Service procedure

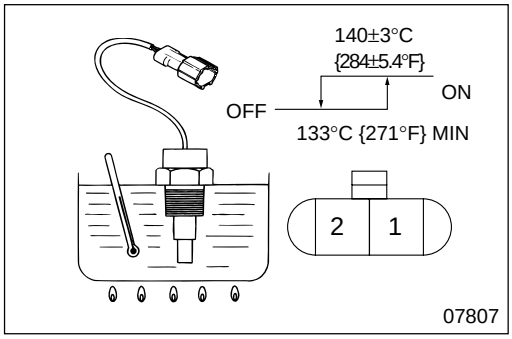

1 **Inspection of automatic transmission fluid temperature switch**

Carry out the following inspection. If any fault is found, replace automatic transmission fluid temperature switch **1**. Gr 23

- Make sure that there is no continuity between terminals ① and ② at room temperature (20±5°C {68±9°F}).
- Place automatic transmission fluid temperature switch **1** in a container filled with engine oil and raise the oil temperature while stirring the oil. Measure the temperature when there is continuity between terminals ① and ②, and make sure that the measured value conforms to the standard value.
- Lower the oil temperature and measure the temperature when continuity is lost between terminals ① and ②, and make sure that the measured value conforms to the standard value.

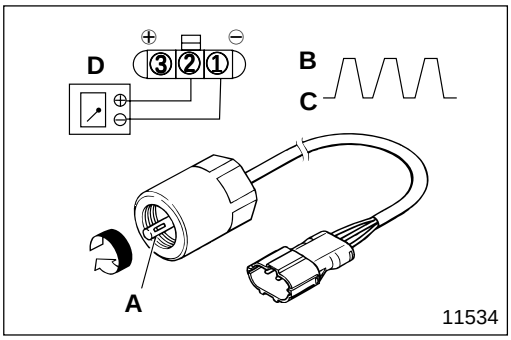

3 **Inspection of vehicle speed sensor**

- Apply 12 volts DC between terminals ① and ③, and rotate shaft **A** of vehicle speed sensor **3** slowly.
- At this state, measure the maximum voltage (High pulse voltage **B**) and the minimum voltage (Low pulse voltage **C**) generated between terminals ① and ②.
  D : Tester
- If the measured value deviates from the standard value, replace vehicle speed sensor **3**. Gr 23

850 TRANSMISSION POWER TAKE-OFF CIRCUIT < Option >

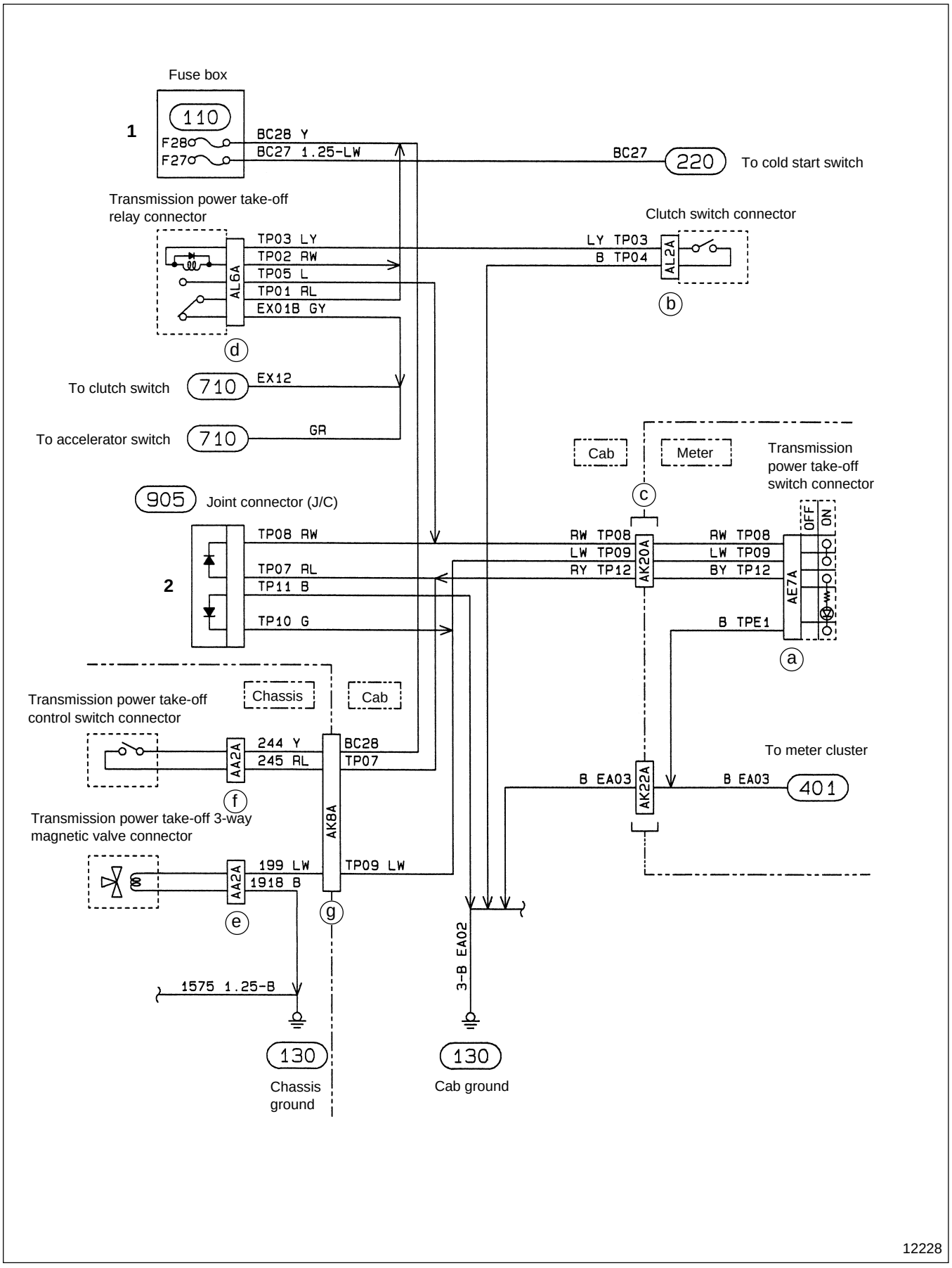

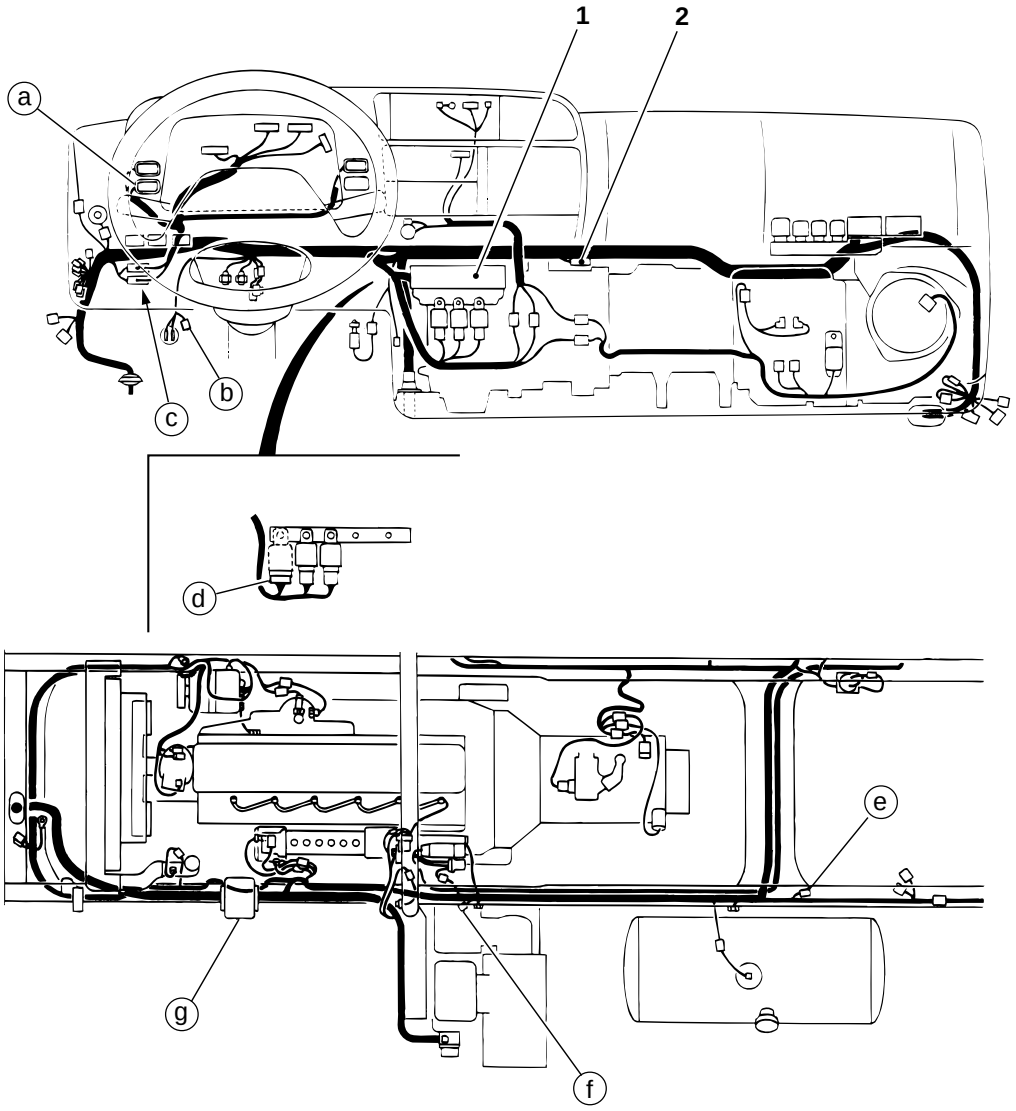

14223

1 Fuse box 104
2 Joint connector 905

9 OTHERS

STRUCTURE AND OPERATION 54-9-2

905 JOINT CONNECTOR 54-9-6

910 MULTIPURPOSE TIMING CONTROL UNIT CIRCUIT 54-9-8

Multipurpose Timing Control Unit

- The multipurpose timing control unit controls the following functions:

Intermittent wiper activation function	Gr 42
Wiper activation function (Even if the wiper switch is OFF, this function automatically activates the wiper when the window washer works)	Gr 42
Engine preheating function	Gr 54-2-6
Water level warning function	Gr 14

- Sensors and switches are fitted to these systems as information sources for the multipurpose timing control unit.
- Using the information provided, circuits in the multipurpose timing control unit control the functions mentioned above.

● Internal structure of multipurpose timing control unit

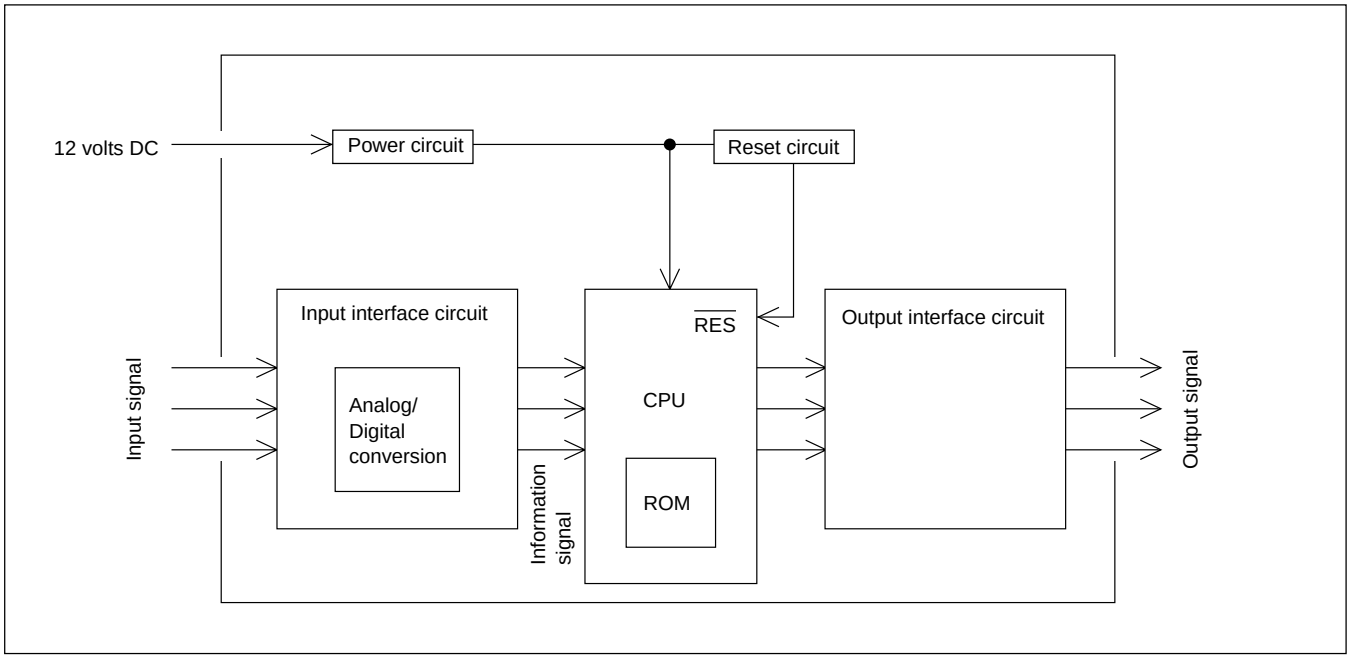

- The internal structure mainly consists of the input interface circuit, *1CPU, *2ROM, and the output interface circuit.
  - *1CPU : Central Processing Unit. Compares the input information with information stored in the memory to output commands.
  - *2ROM : Read Only Memory. Stores fixed data and programs that are not erased even after the power is turned off.
- Input signals are transmitted from information sources, such as sensors and switches, to the input interface circuit.
- The input interface circuit converts these input signals from analog signals to digital signals. This enables the CPU to calculate data and transmits them to the CPU as information signals.
- The CPU compares the information signals with the data in the ROM, calculates the signals, and sends them to the output interface circuit.
- The output interface circuit issues commands to systems, based on the above comparison and calculated results, as output signals.
- Sequential execution of the above processes allows optimum control over functions.

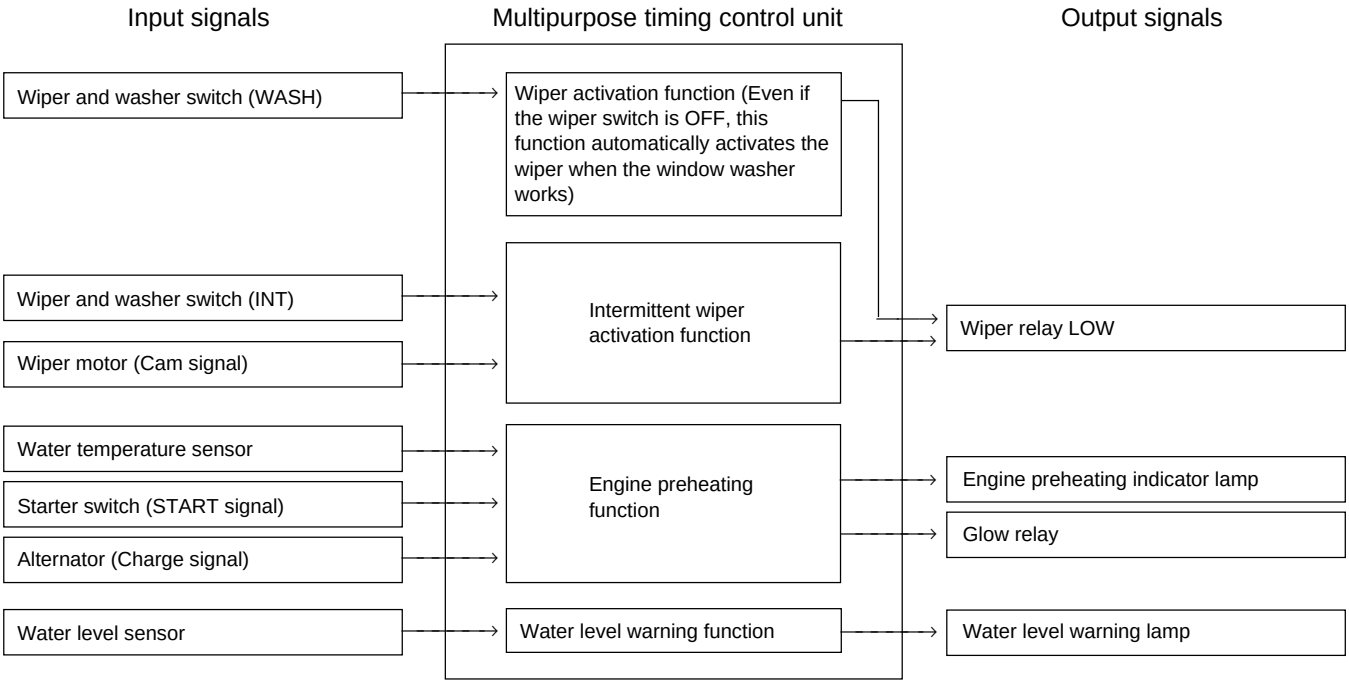

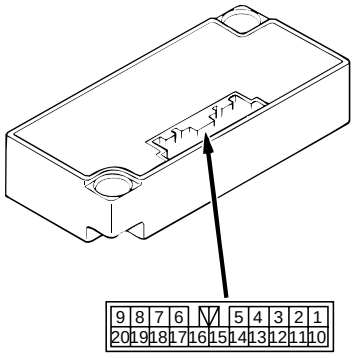

07504

Terminal No.	Connecting destinations	Terminal No.	Connecting destinations
1	Glow relay	11	—
2	Wiper motor (Cam signal)	12	Water level warning lamp
3	Engine preheating indicator lamp	13	—
4	Wiper relay LOW	14	Cab ground
5	—	15	—
6	—	16	Alternator terminal L (Charge signal)
7	Washer switch	17	—
8	—	18	Starter switch (Start signal)
9	Water temperature sensor	19	Wiper switch (Intermittent)
10	Starter switch (ON power supply)	20	Water level sensor

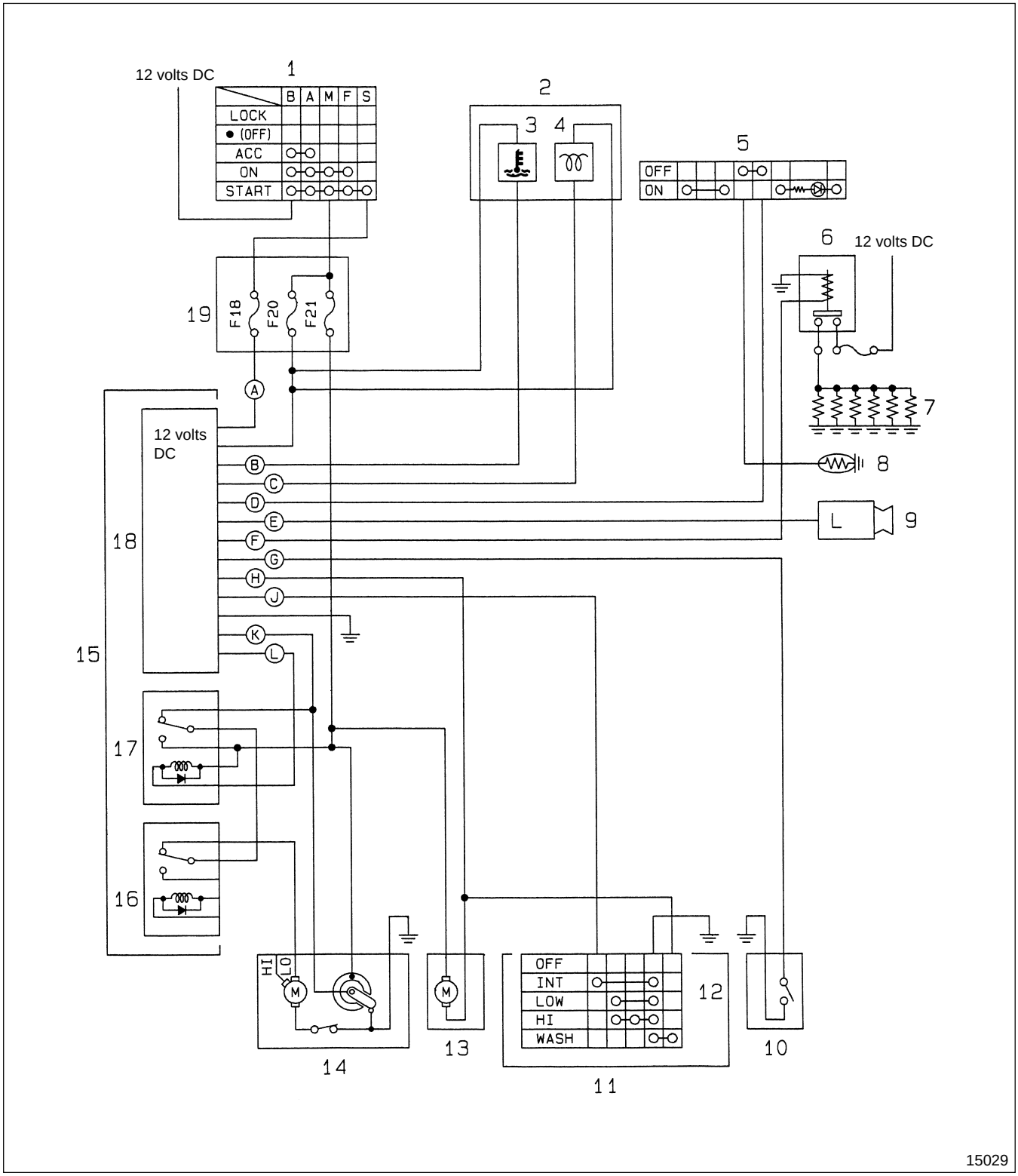
12 volts DC
1
B A M F S
LOCK
● (OFF)
ACC
ON
START
2
3 4
5
OFF
ON
6
12 volts DC
19
F18
F20
F21
A
12 volts DC
7
8
B
C
D
E
L
9
18
F
G
H
J
K
15
L
17
16
HI
LO
M
M
OFF
INT
LOW
HI
WASH
12
14
13
11
10
15029

	Main functions of sensors	Information signals
1 Starter switch	Detection of START position	Ⓐ : Start signal
2 Meter cluster		
3 Water level warning lamp		Ⓑ :  light-up signal
4 Engine preheating indicator lamp		Ⓒ :  light-up signal
5 Cold start switch		
6 Glow relay		Ⓕ : Glow relay activation signal
7 Glow plug		
8 Water temperature sensor	Detection of engine coolant temperature	Ⓓ : Engine coolant temperature signal
9 Alternator	Output of alternator charge signal	Ⓔ : Alternator charge signal
10 Water level sensor	Detection of engine coolant level	Ⓖ : Engine coolant level signal
11 Combination switch		
12 Wiper and washer switch		Ⓙ : Intermittent wiper switch signal
13 Washer motor		Ⓗ : Washer switch signal
14 Wiper motor		Ⓚ : Wiper motor cam signal
15 Relay box		
16 Wiper relay HIGH		
17 Wiper relay LOW	Intermittent wiper operation	Ⓛ : Wiper relay activation signal
18 Multipurpose timing control unit		
19 Fuse box		

Installation Position

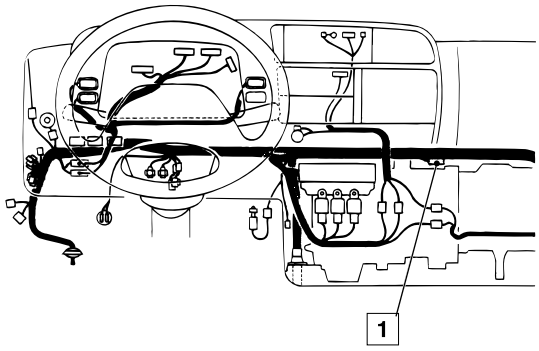

13412

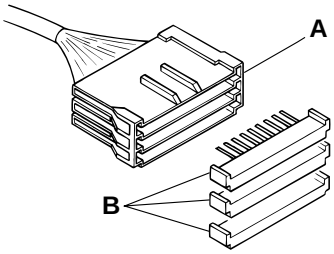

07217

1 Joint connector

A : Housing
B : Joint

◆ Service procedure

1 Joint connector

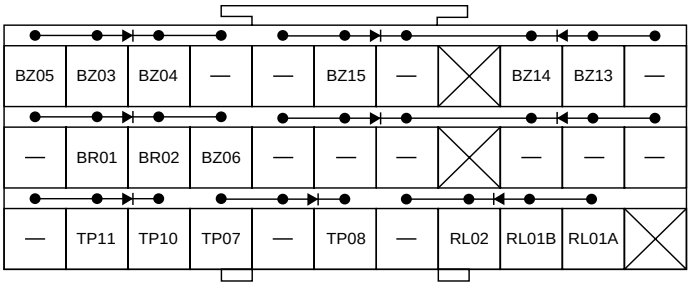

12229

	Circuit No.	Wire color	Destinations	Index No.	Remarks
Black-1	BZ05	GB	Diode	515	
	BZ03	GW	Warning buzzer	515	
	BZ04	GY	AR10	515	
	BZ13	GR	AR12	515	
	BZ15	G	BR01	515	
	BZ14	YB	GE02	215	
Black-2	BR01	G	Meter cluster (Brake)	515	
	BR02	GL	Air master stroke switch	515	
	BZ06	LW	Diode	515	
Black-3	TP11	B	EA02	—	T/M PTO (Ground)
	TP10	G	TP09	—	T/M PTO
	TP07	RL	Transmission control switch	—	T/M PTO
	RL01A	BW	Cab lamp	345	
	TP08	RW	Transmission power take-off switch	—	T/M PTO
	RL02	BY	Door switch, RH	345	
	RL01B	BW	Door switch, LH	345	

T/M PTO : Transmission power take-off < Option >

910 MULTIPURPOSE TIMING CONTROL UNIT CIRCUIT

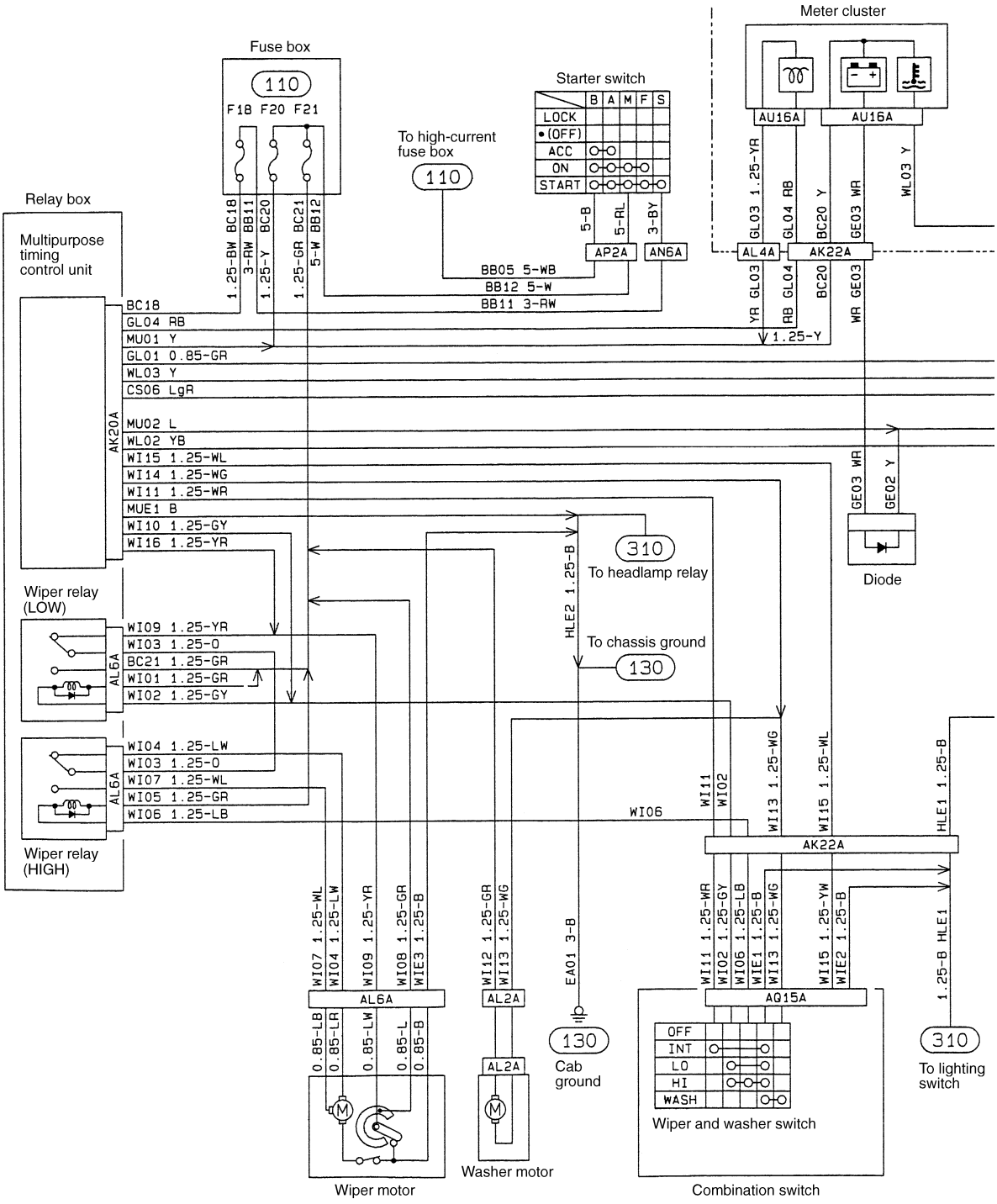

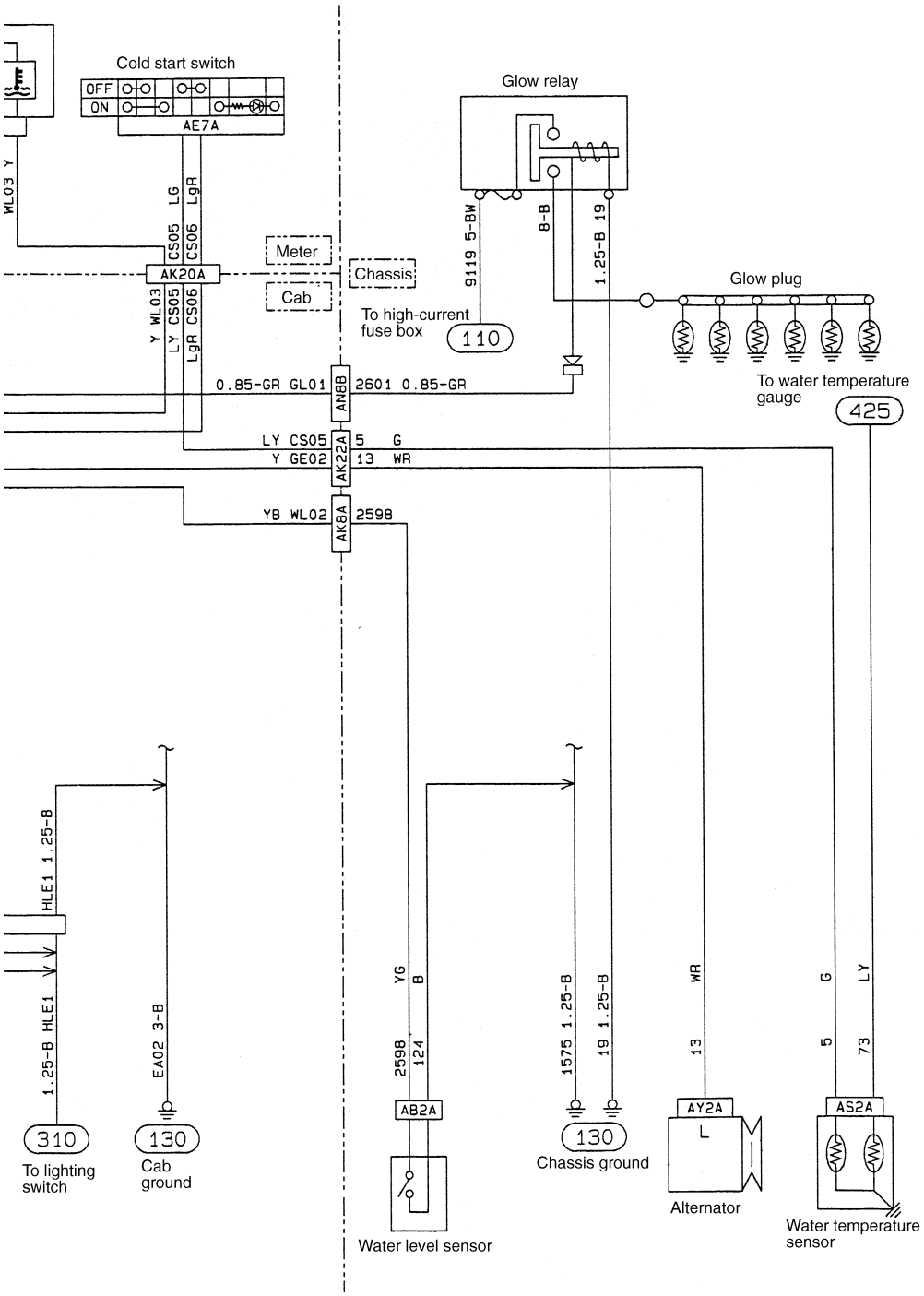
Cold start switch
OFF
ON
AE7A
Glow relay
WL03 Y
CS05 LG
CS06 LgR
AK20A
Meter
Cab
Chassis
9119 5-BW
8-B
1.25-B 19
Glow plug
To high-current fuse box
110
Y WL03
LY CS05
LgR CS06
0.85-GR GL01
AN8B
2601 0.85-GR
To water temperature gauge
425
LY CS05
Y GE02
AK22A
5 G
13 WR
YB WL02
AK8A
2598
HLE1 1.25-B
1.25-B HLE1
EA02 3-B
YG B
2598 124
1575 1.25-B
19 1.25-B
13 WR
5 G
73 LY
AB2A
AY2A
L
AS2A
310
130
130
To lighting switch
Cab ground
Chassis ground
Alternator
Water level sensor
Water temperature sensor

12230

MITSUBISHI FUSO

FH

Service Manual

Group 55A
Air Conditioner

Group 55B
Heater

BACK HOME

MITSUBISHI FUSO TRUCK OF AMERICA, Inc.

Pub No. TWME9502-00

MITSUBISHI
FUSO

FH

Service Manual

Group 55A
Air-conditioner

Table of Contents

BACK

HOME

MITSUBISHI FUSO TRUCK OF AMERICA, Inc.

Pub No. TWME9502-55A

FOREWORD

This service manual describes the maintenance data consisting of constructive & functional outlines, inspection, and repair service of MITSUBISHI FUSO GENUINE TRUCK CAB AIR CONDITIONER.

Table of contents

1. SPECIFICATIONS 1
2. OUTLINES OF REFRIGERATION SYSTEM 2
3. CONSTRUCTION 4
4. TROUBLE SHOOTING 11
5. REMOVAL AND INSTALLATION 18
6. TREATMENT AFTER INSTALLATION 21
7. MAINTENANCE 27
8. COOLING UNIT ASSEMBLY 28
9. COMPRESSOR & CLUTCH ASSEMBLY 30

1. SPECIFICATIONS

Item			Description
Vehicle name & model			FE
*Cooling capacity (on JIS conditions)			4,200 W (3,600 kcal/h, 14,300 B.T.U/h)
Compresssor	Model		MSC90T
	Displacement		90 cc
	Maximum revolution		MAX 9,000 min^{-1} (9,000 rpm)
	Compressor oil		SUNPAG 56, 120cc (7.3 cu.in)
Magnetic clutch	Type		Dry single disc magnet
	Voltage & input		DC 12V, 38 W
Cooling unit assembly	Type		Laminated type
Controls	Air flow control		Rotary switch, Four step type
	Temperature control		Electric thermostat
Condenser	Type		Corrugated fin type
Receiver assembly			Cylinder type, approx 350 cc (21.4 cu.in)
Protective equipment	Frost prevention (thermostat)		OFF : 33 °F (0.5 °C) ON : 38 °F (3.5 °C)
	Relief valve		Open : 3.50 ~ 4.10 MPaG (508 ~ 594 Lb/in^2G, 35.7 ~ 41.8 kgf/cm^2G) Close : 2.94 MPaG (427 Lb/in^2G, 30 kgf/cm^2G)
	Dual pressure switch	Low pressure switch	OFF : 0.2 MPaG (28 Lb/in^2G, 2 kgf/cm^2G) ON : 0.225 MPaG (32 Lb/in^2G, 2.25 kgf/cm^2G)
		High pressure switch	OFF : 2.94 MPaG (418 Lb/in^2G, 30 kgf/cm^2G) ON : 2.35 MPaG (334 Lb/in^2G, 24 kgf/cm^2G)
	Fuse (Blower fan) Fuse (Magnetic clutch)		15 A 15 A
Refrigerant and quantity			HFC - 134a, 1.4 lb (650 g)

*The * marked cooling capacity is based on JIS conditions
Compressor speed : 1,800 rpm
Condensing temperature : 131 °F (55 °C)
Cooling unit inlet air dry bulb temperature : 80.6 °F (27 °C)
Cooling unit inlet air wet bulb temperature : 67.1 °F (19.5 °C)
Terminal voltage : DC 12V

2. OUTLINES OF REFRIGERATION SYSTEM

2.1 Air system

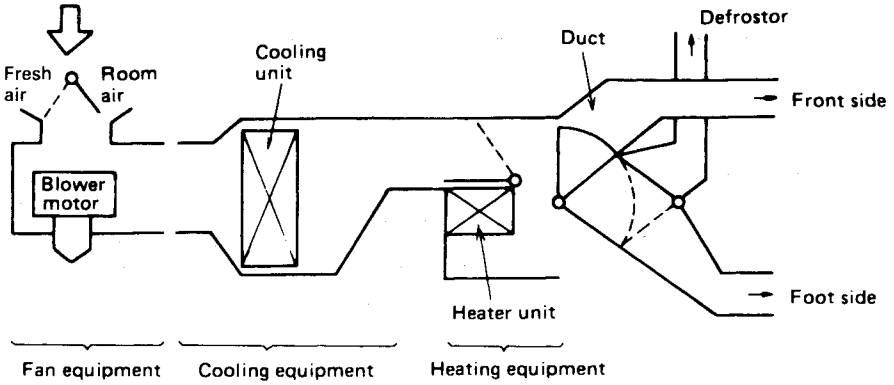

Cooling operation

Fresh air is induced to the cooling unit assembly by a blower fan, where it is cooled down and dehydrated, then discharged at the front side outlet through a duct.

Heating operation

Fresh air is induced to the heater unit by a blower fan through the cooling unit assembly, where it is heated, then discharged at the foot side outlet through a duct.

Dehumidifying operation

Fresh air is induced to the cooling by a blower fan,where it is cooled down and dehydrated,and succeedingly to the heater unit for warming, then discharged at the front side outlet through a duct.

Temperaure control

Cooled air and warmed air are mixed for temperature control of the room inside.

2.2 Refrigerating cycle

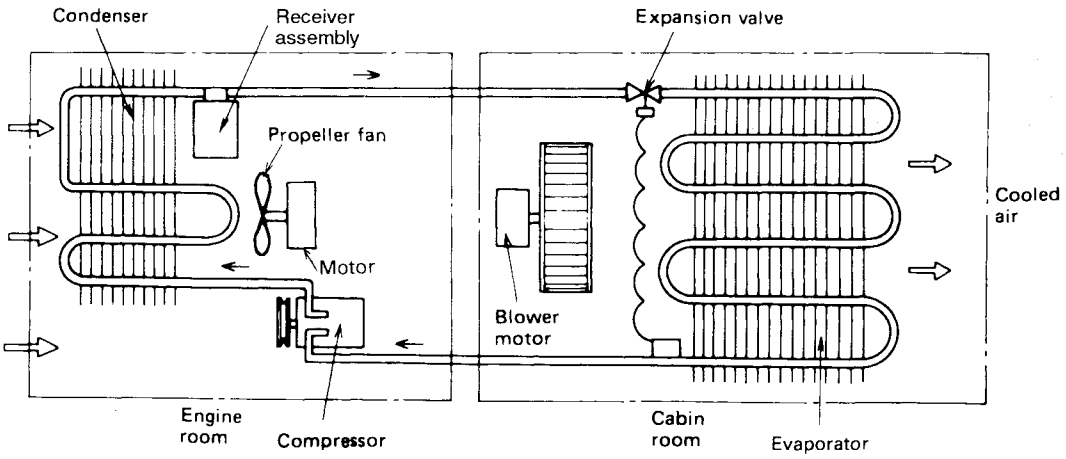

While the refrigerant, HFC-134a is cooling the air drawn into the evaporator, it evaporates and becomes a gas. This gas is compressed to high pressure and temperature in the compressor, and sent into the condenser where it is cooled and becomes liquid.

This cooling in the condenser is carried out by the open air passing through the condenser sucked by radiator fan and vehicle motion of the vehicle. The liquid refrigerant flows through the receiver assembly where water and dirt are removed, and then it enters the expansion valve. Here the liquid refrigerant is throttled and changed to a mixture of liquid and gas in low temperature and low pressure, and is sent to the evaporator.

In the evaporator, the refrigerant absorbs heat from the surroundings and becomes a gas. That is, because the evaporator itself is cooled at this time, the return air to the cooling unit is cooled, and the interior of the vehicle becomes cool. In this way the refrigerant flow makes a complete circuit.

2.3 Electrical system

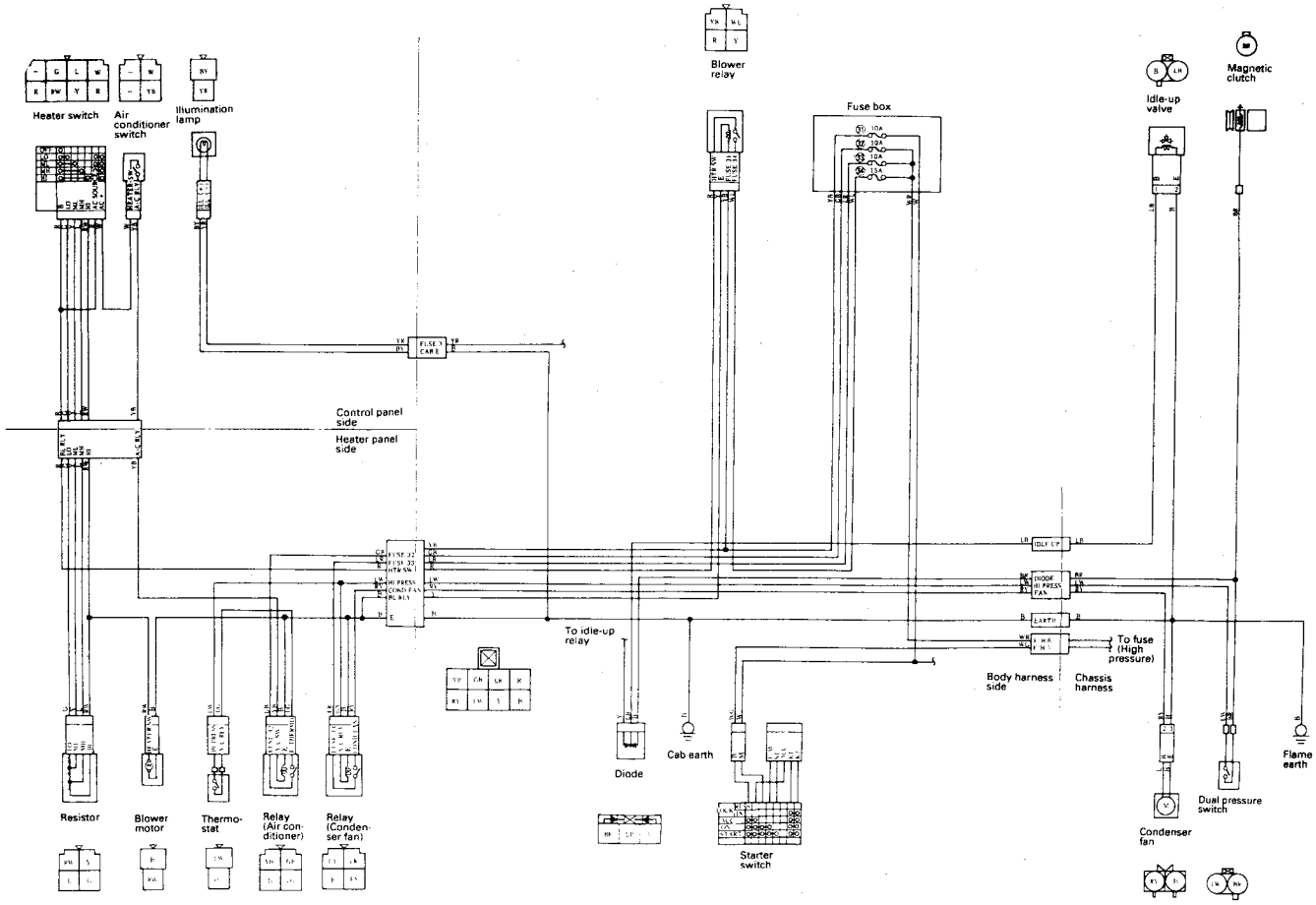

The power source is supplied from the TRUCK battery. When the blower switch is put ON, the power relay becomes ON, and electricity is connected to the magnetic clutch of the compresssor. The magnetic clutch switches ON or OFF by air conditioner switch, thermostat, and low pressure switch as the controls for operation service, or safety protection.

The cabin room air temperature is set to a preset point by adjusting the temp.control lever, and the opening degree of the air mix damper.

3. CONSTRUCTION

3.1 Engine room

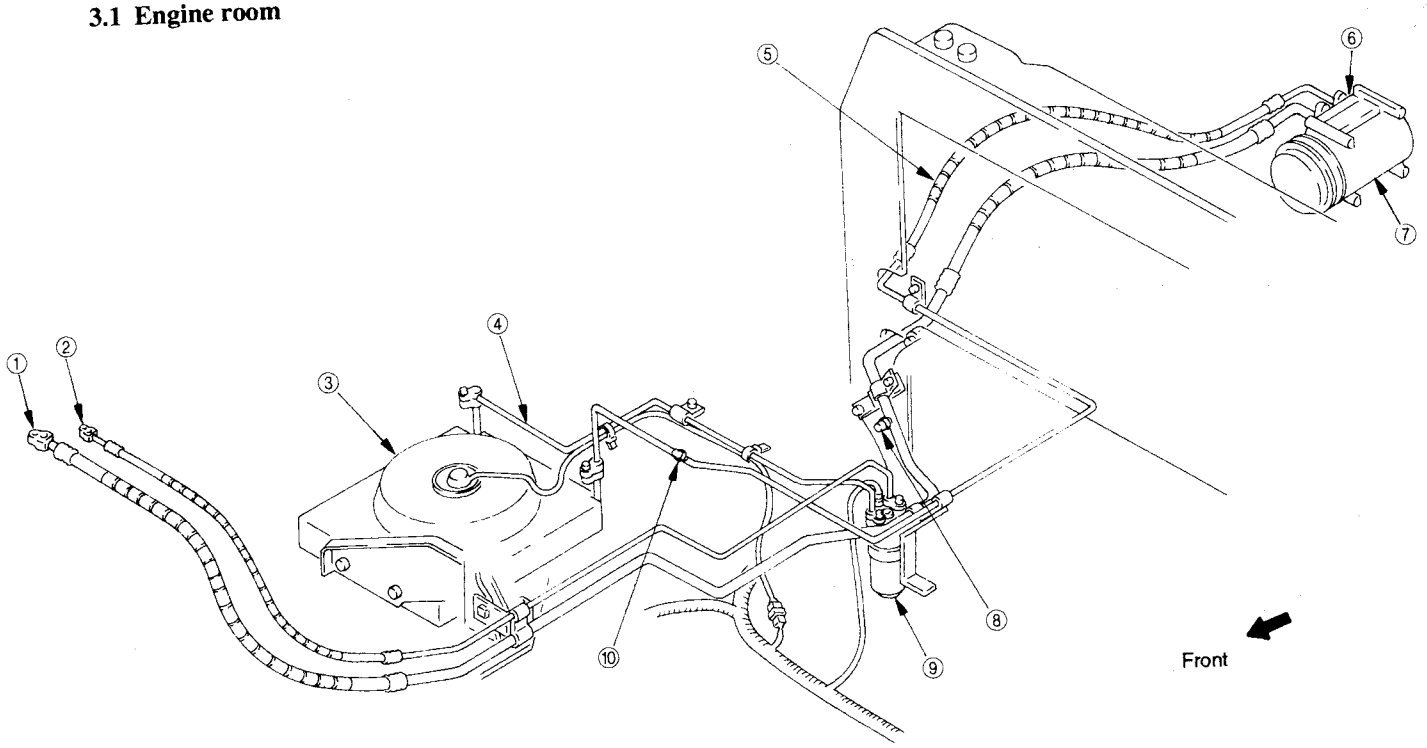

① Suction hose
② Liquid hose
③ Side condenser assembly
④ Pipe (LQ)
⑤ Discharge hose
⑥ Relief valve
⑦ Compressor & clutch assembly
⑧ Check valve (LP)
⑨ Receiver assembly
⑩ Check valve (HP)

3.2 Cabin room

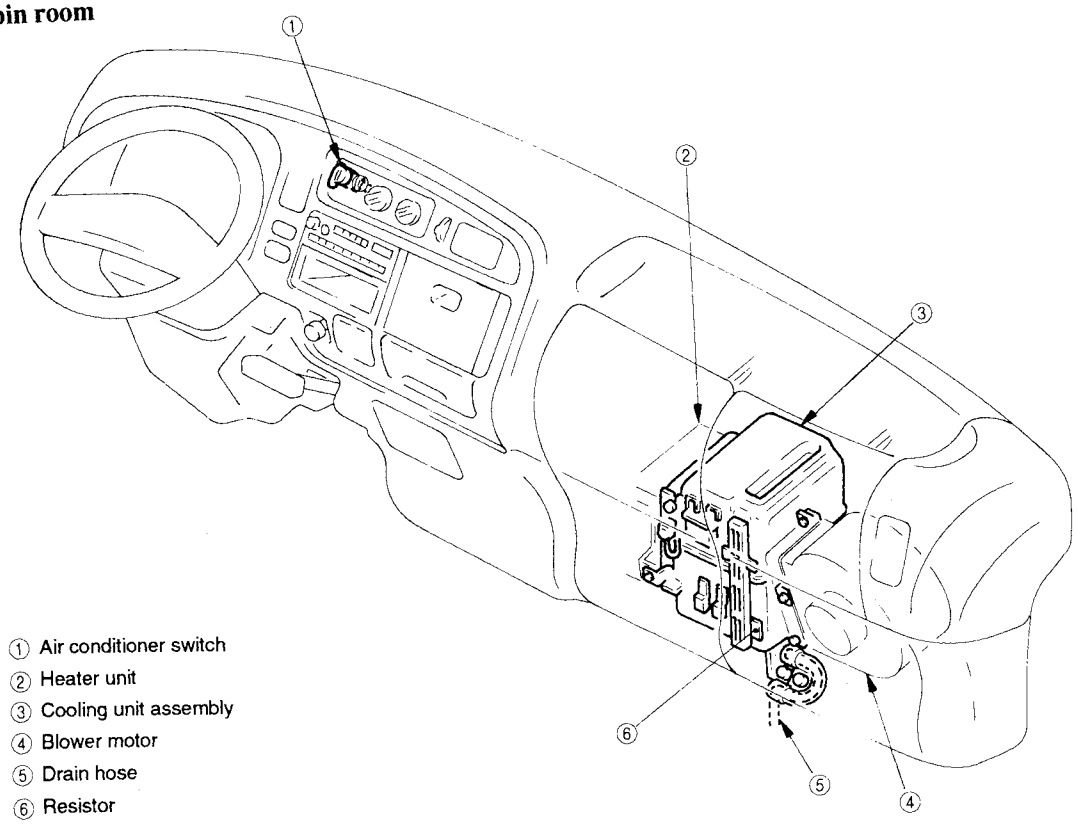

① Air conditioner switch
② Heater unit
③ Cooling unit assembly
④ Blower motor
⑤ Drain hose
⑥ Resistor

3.3 Control system

(1) Controls in panel
Do not run the air conditioner when it is child.

Air conditioner switch
By select the air conditioner switch initially in cooling or drying operation, the compressor starts running.

Fan switch
The air flow is selectable, out of the below four volume.

OFF	No air flow
○	Gentle
○	Low
○	Medium
○	High

Air outlet mode select switch
The air outlet is selected by positioning in cooling and heating operation.

- .....The conditioned air is discharged at the center and both side outlets directed by the louvers as required.
- .....The conditioned air is discharged at the center and both side and foot outlets directed by the louvers as required.
- .....The conditioned air is discharged at the foot outlets directed by the louvers as required.
- .....The conditioned air for dehumidifying is discharged at the foot outlets and to the front glass.
- .....The conditioned air for dehumidifying is discharged to the front glass.

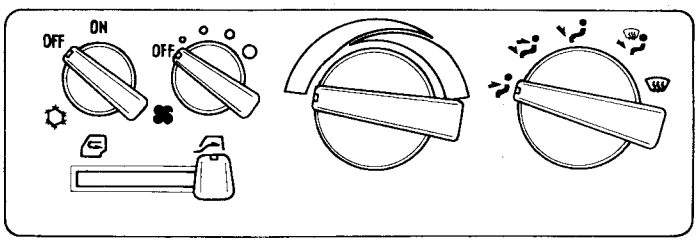

Shift lever, air sirculation
The resirculation air is selectable out of the below sirculation models.

- .....ROOM AIR CIRCULATION
- .....FRESH AIR INTAKE

Temperature control switch
The discharged air temperature is controllable by selecting the position of the control lever in cooling, heating or drying operation.

BLUE ZONE ..... For cool air blow

RED ZONE ..... For warm air blow

By turning the switch toward the BLUE and RED ZONE sides, the supply air temperature becomes more cooler and warmer respectively.

(2) Oeration control

Operation mode	Setting control lever	Air delivery	Remarks
COOL	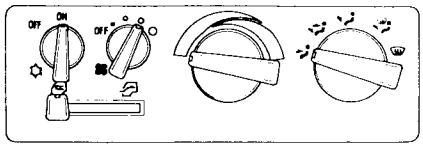	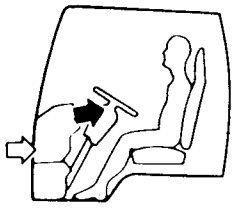	Earlier cooling service, or conditioning at dusty, polluted air prevailing places: Shift lever, air circulation – –
HEAT	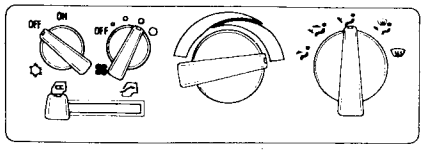	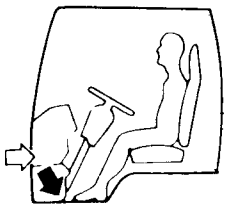	Earlier cooling service, or conditioning at dusty, polluted air prevailing places: Shift lever, air circulation Air outlet mode select switch —
DEHUMIDIFY	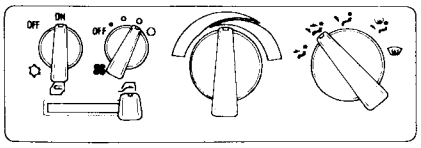	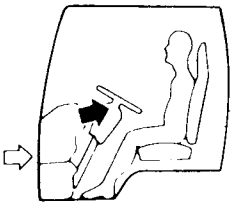	Wetty conditioning in head cooled, and foot warmed : Shift lever, air outlet Air outlet mode select switch —
DEFROST	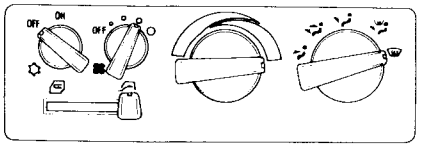	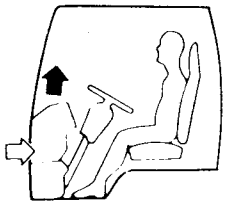	
VENTILATION	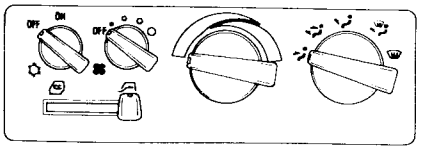	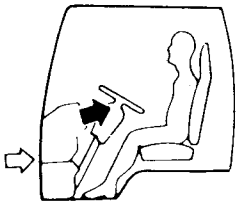	

3.4 Compressor and clutch assembly

3.4.1 Compressor

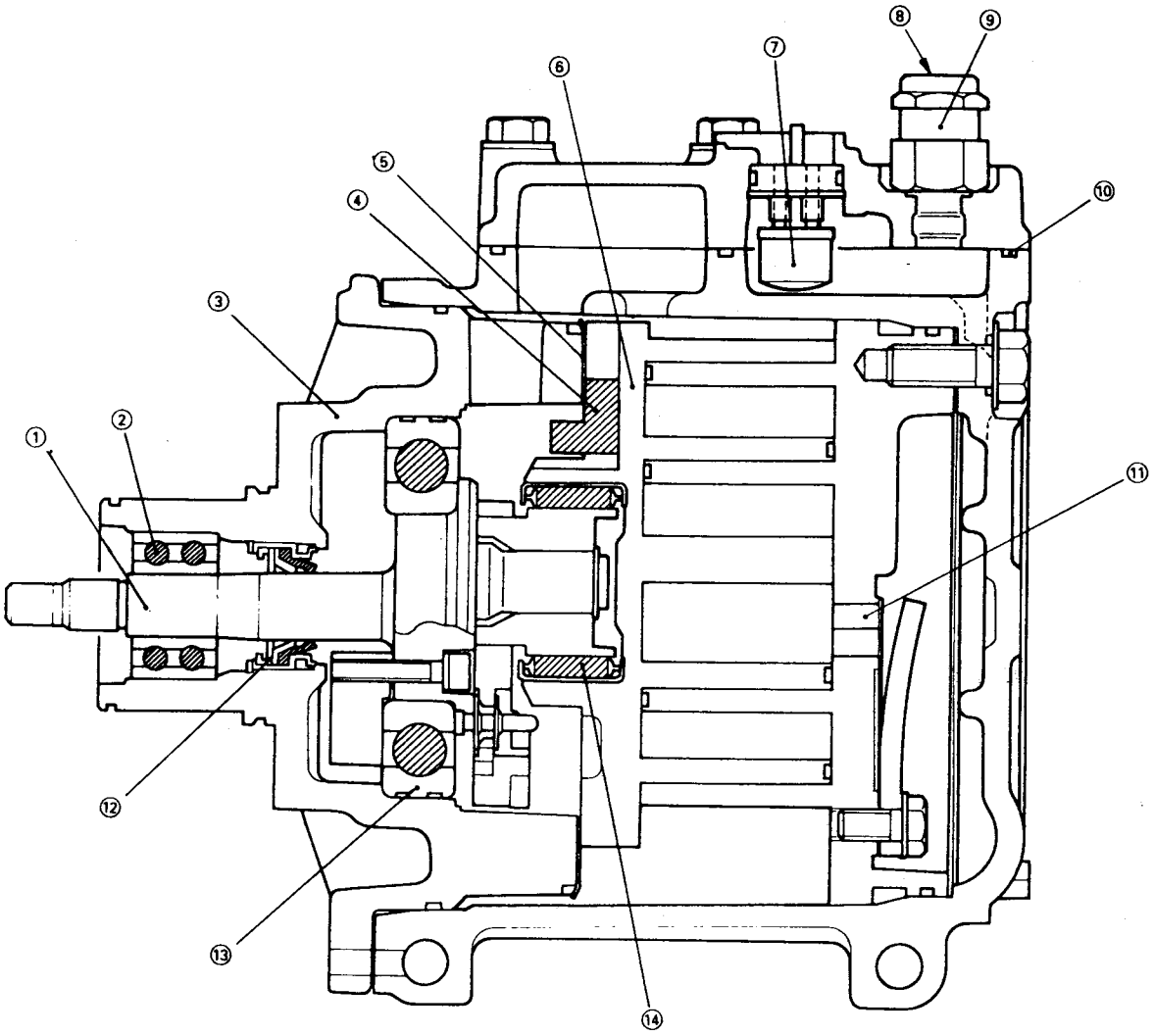

① Crankshaft
② Bearing
③ Front case assembly
④ Housing assembly
⑤ Thrust plate
⑥ Orbit scroll assembly
⑦ Thermostat
⑧ Dust seal
⑨ H/P relief valve
⑩ O ring
⑪ Port hole
⑫ Shaft seal
⑬ Bearing
⑭ Needle bearing

3.4.2 Check valve

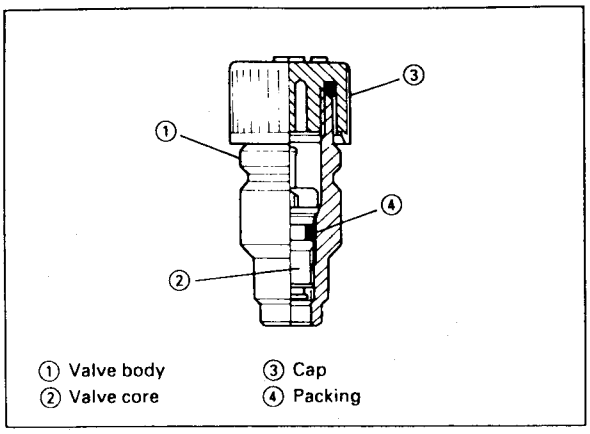

The suction hose and discharge hose are provided with check valve, and designed for gas evacuation and charging service. (shown above)

In the valves, a valve rubber tube, as in automobile tire tubes, is provided as shown in the figure.

Slackening the flare nut on the gauge manifold causes the passage to close automatically by the spring force, and tightening the flare nut causes the passage to open while pressing the compressed spring.

3.4.3 Magnetic clutch

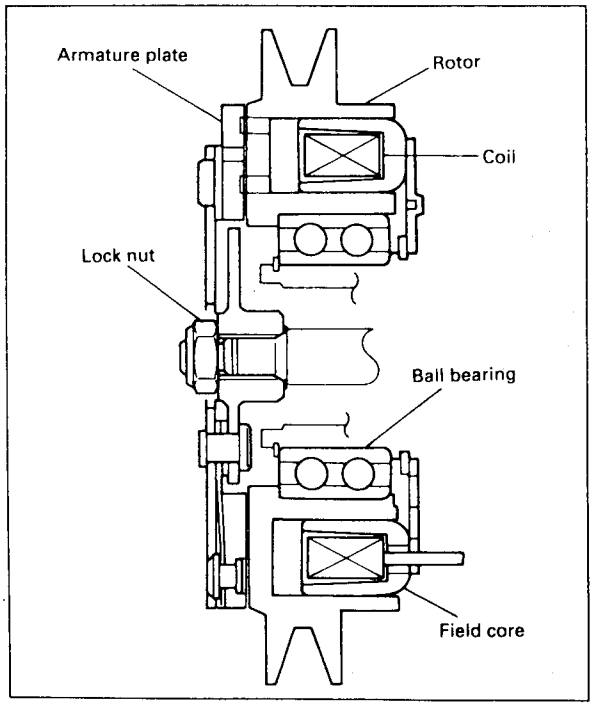

The magnetic clutch is mounted on the compressor crankshaft to start and stop the compressor.

This means that the magnetic clutch is actuated to control the compressor operation electrically by the thermostat.

3.5 Side condenser assembly

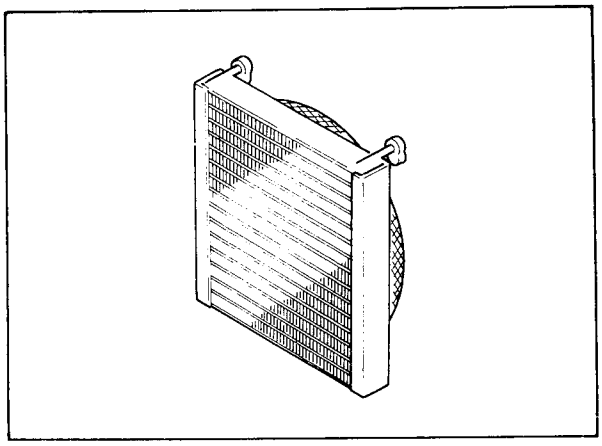

The condenser is a means to liquefy the refrigerant gas. As the condenser is cooled by the air pulled in by the condenser fan, the refrigerant in the condenser is cooled into liquid. Therefore, when any obstacle prevents the air from flowing evenly to the condenser or the air flow is short circuited, the cooling effect is reduced, with a decrease in the performance of the condenser. When the vehicle is driven at a high speed, the air flow increases resulting in an increase of the cooling effect, and performance of the condenser.

3.6 Relief valve

The relief valve is mounted to the compressor & clutch assembly. The relief valve is usually closed by spring. If pressure of refrigerant in air conditioner system is higher than spring pressure, refrigerant is discharged from relief valve. The pressure drop due to discharge refrigerant, and relief valve is closed again.

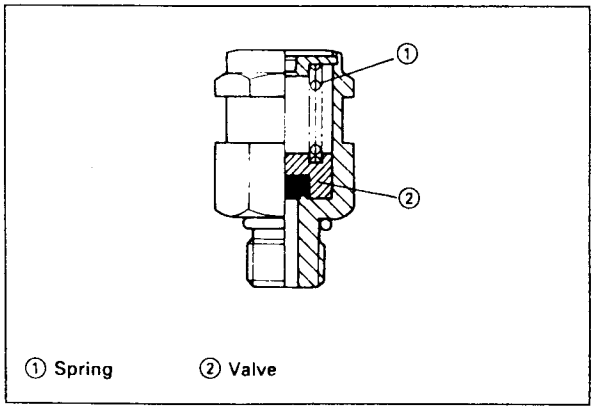

Preset : MPaG (Lb/in²G, kgf/cm²G)

Open	3.50~4.10 (508~594, 35.7~41.8)
Close	2.94 (427, 30)

3.7 Receiver assembly

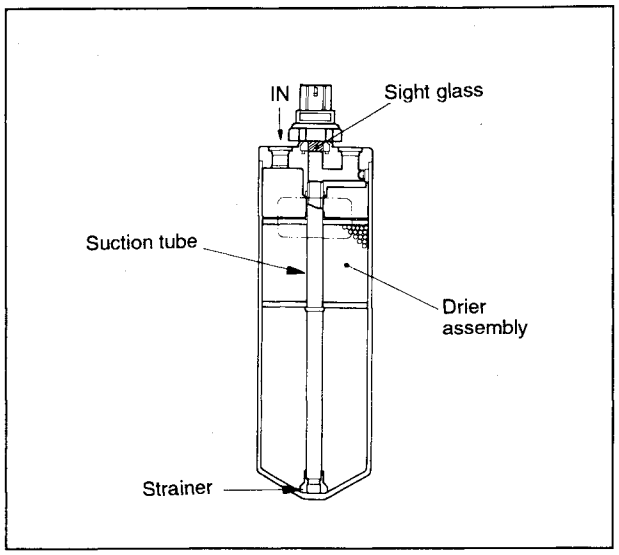

A receiver assembly is served as a refrigerant reservoir located between the condenser and the expansion valve.

The receiver assembly consists of a filter and a sight glass. The filter is used to remove dust, the drier is used to remove moisture from the refrigerant in the circuit, and the sight glass is used to check the refrigerant charge.

Any moisture in the refrigerant may not only corrode metal surfaces in the refrigerant circuit, but also cause the throttle of the expansion valve to be frosted, resulting in the interruption of refrigerant circulation.

Therefore,the receiver assembly must be handled very carefully. When storing or installing it,care should be taken to protect it from the deterioration of drying performance due to exposure to the air.

The retardation of heat exchange, or any fire around the refrigerant circuit will cause excessive pressurization or heating of the refrigerant. Should such an accident occur, the refrigerant in the circuit must be expelled to the outside to prevent the above hazards.

The sight glass is a sort of peep window used to check the refrigerant flow in the refrigerant circuit.

The sight glass appears clear when the refrigerant flow is enough, and shows bubbles flowing when the refrigerant flow is short.

3.8 Cooling unit assembly

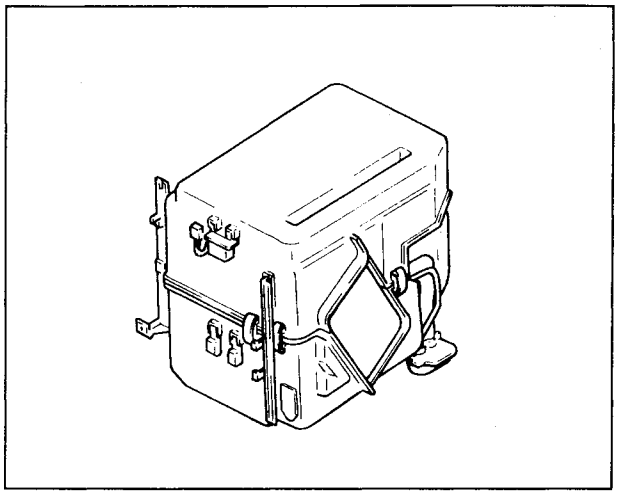

Evaporator core

The evaporator core is a type of corrugated fin and tube.

The tube is arranged in zigzag to achieve high efficiency, and to make the core system compact.

A thicker reinforced plastic plate is used as the enclosure to inclease heat and shock resistance,and to protect the core from humidity. This case is a split type, and in a simple design to facilitate installation on the floor panel and the instrument panel frame of the vehicle.

3.9 Expansion valve

The expansion valve is mounted at the inlet of the cooling unit. The liquid refrigerant from the receiver is led to it through a narrow passage (for throttle action), where-in, the liquid refrigerant is condensed with pressure dropping and at the same time the flow rate is adjusted before the refrigerant is sent to the cooling unit. The refrigeration load in the cooling unit is not constant, but usually fluctuates over a certain range. So the refrigerant flow should undergo the control in design. An automatic expansion valve performs this function automatically. The air conditioner uses a thermal type automatic expansion valve.

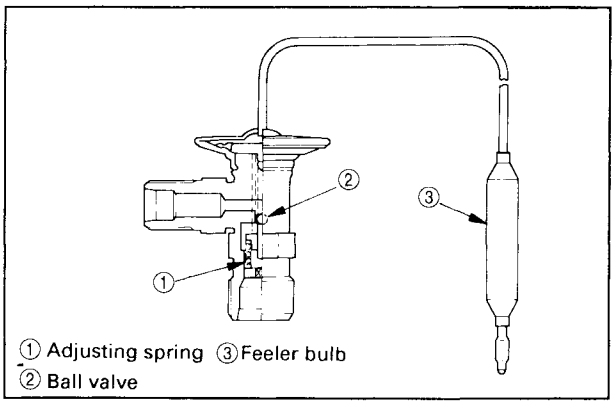

3.10 Dual pressure switch

The dual pressure switch, fixed to the receiver functions as a protector for stopping the compressor (OFF) at a preset value of pressure in the refrigerant circuit.

Preset : MPaG (Lb/in²G, kgf/cm²G)

	L.P.SW	H.P.SW
OFF	0.2 (28, 2)	2.94 (418, 30)
ON	0.225 (32, 2.25)	2.35 (334, 24)

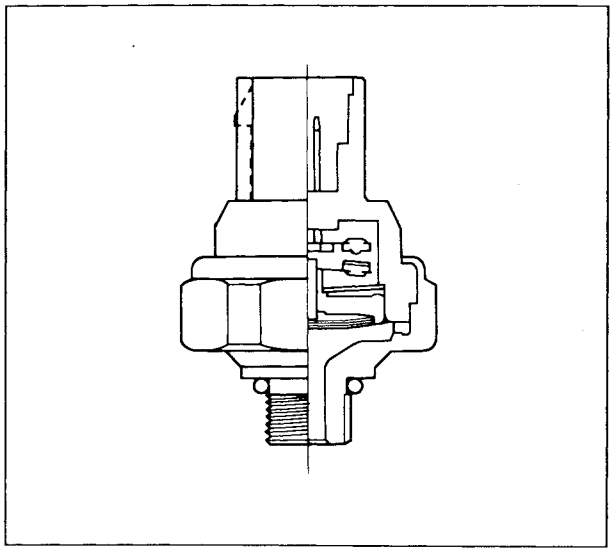

3.11 Power relay

The power relay is excited at a closed position of the micro switch and enables the magnetic clutch to be ready for engaging electrically.

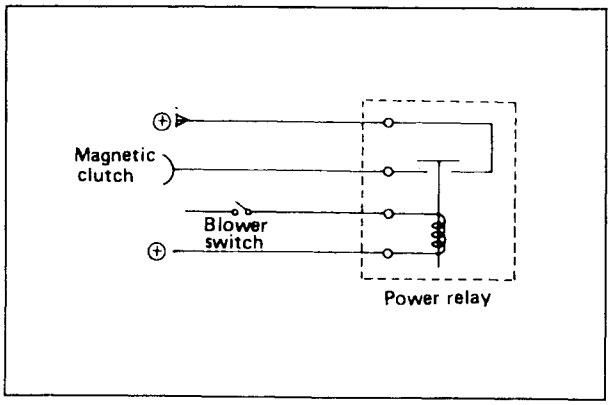

3.12 Air conditioner switch

The air conditioner switch functions as an operation controller for starting or stopping the compressor in cooling and dehumidifying

Set the it to the "ON" position, the magnetic clutch becomes engaged and the compresssor starts.

Set the it to the "OFF" position, the magnetic clutch becomes disengaged and the compresssor stops.

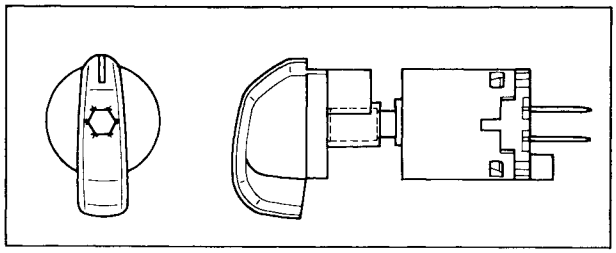

3.13 Thermostat

The thermostat is mounted on the evaporator case.

It senses the temperature of the evaporator fins, and controls the compressor operation for ON or OFF as specified below.

Preset : °F(°C)

OFF	33 (0.5)
ON	38 (3.5)

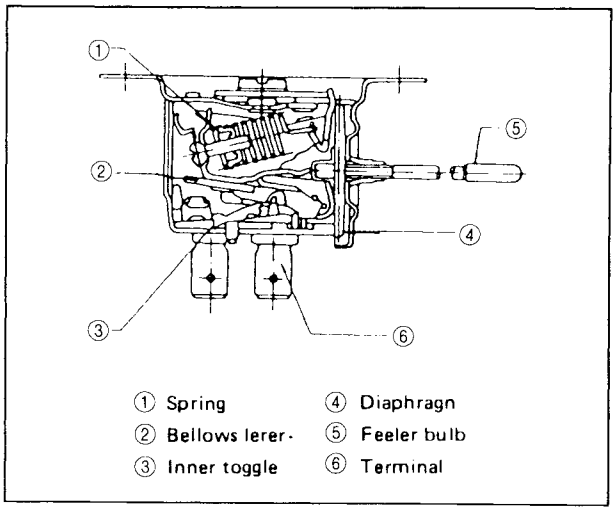

4. TROUBLE SHOOTING

4.1 General precautions

(1) When handling refrigerant (HFC-134a), the following precautions must be observed.
   a. Always wear eye protection and a pair of gloves which handling refrigerant.
   b. Be careful the liquid refrigerant dose not contact the skin.
   c. Keep the refrigerant container blow 100 degrees F (40 degrees C).
   d. Do not handle the refrigerant in an enclosed area having an open flame.The refrigerant may produce a poisonous gas.
   e. When dumping the refrigerant from the system, release it slowly so as not to expell all the compressor oil.

(2) If liquid refrigerant strikes eye or skin.
   a. Do not rub eye or skin.
   b. Splash large quantities of cool water on the eye or skin.
   c. Rush to a physician or hospital for immediate professional treatment.

4.2 Trouble cause and remedy

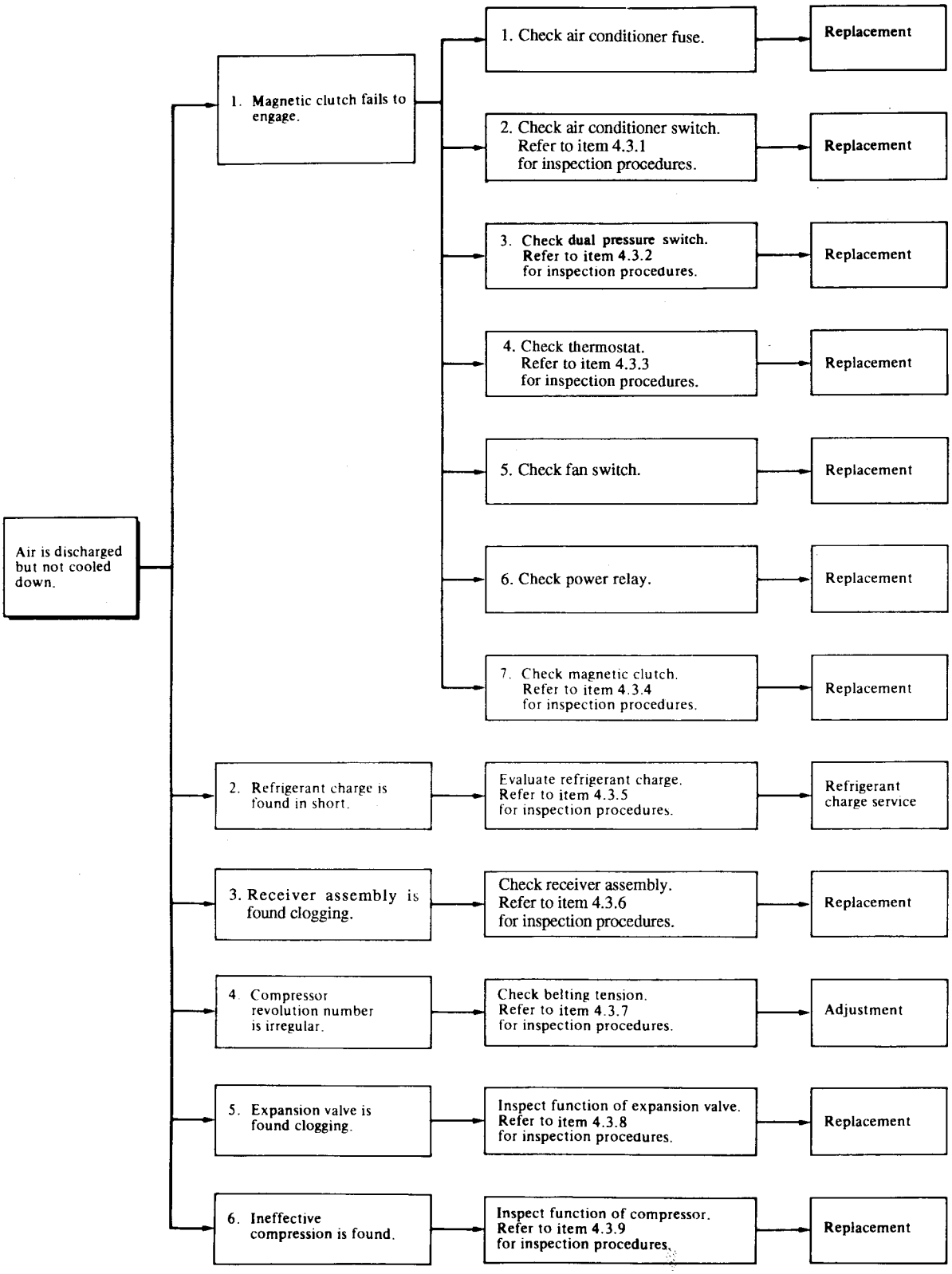

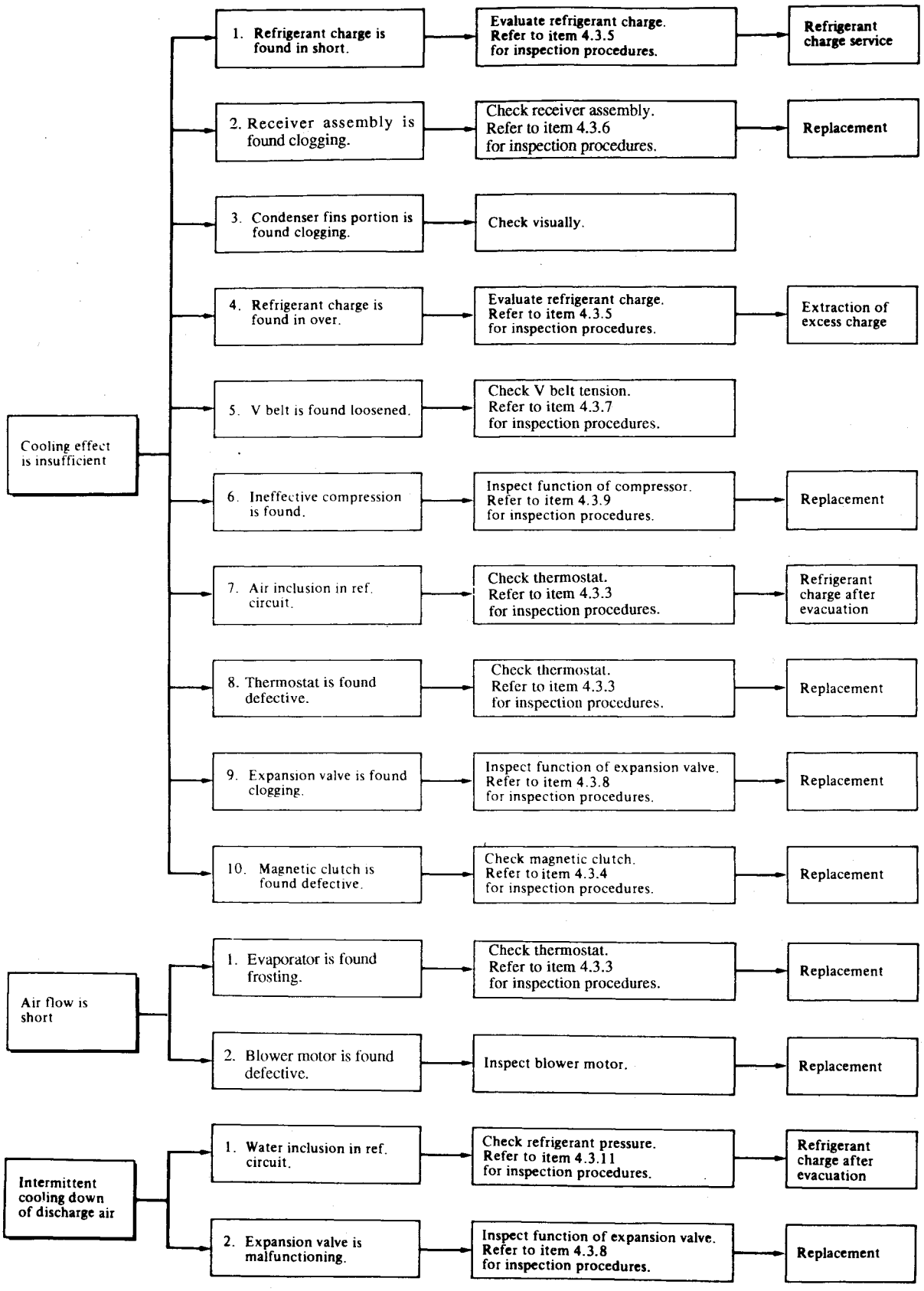
Cooling effect is insufficient
1. Refrigerant charge is found in short.
Evaluate refrigerant charge. Refer to item 4.3.5 for inspection procedures.
Refrigerant charge service
2. Receiver assembly is found clogging.
Check receiver assembly. Refer to item 4.3.6 for inspection procedures.
Replacement
3. Condenser fins portion is found clogging.
Check visually.
4. Refrigerant charge is found in over.
Evaluate refrigerant charge. Refer to item 4.3.5 for inspection procedures.
Extraction of excess charge
5. V belt is found loosened.
Check V belt tension. Refer to item 4.3.7 for inspection procedures.
6. Ineffective compression is found.
Inspect function of compressor. Refer to item 4.3.9 for inspection procedures.
Replacement
7. Air inclusion in ref. circuit.
Check thermostat. Refer to item 4.3.3 for inspection procedures.
Refrigerant charge after evacuation
8. Thermostat is found defective.
Check thermostat. Refer to item 4.3.3 for inspection procedures.
Replacement
9. Expansion valve is found clogging.
Inspect function of expansion valve. Refer to item 4.3.8 for inspection procedures.
Replacement
10. Magnetic clutch is found defective.
Check magnetic clutch. Refer to item 4.3.4 for inspection procedures.
Replacement
Air flow is short
1. Evaporator is found frosting.
Check thermostat. Refer to item 4.3.3 for inspection procedures.
Replacement
2. Blower motor is found defective.
Inspect blower motor.
Replacement
Intermittent cooling down of discharge air
1. Water inclusion in ref. circuit.
Check refrigerant pressure. Refer to item 4.3.11 for inspection procedures.
Refrigerant charge after evacuation
2. Expansion valve is malfunctioning.
Inspect function of expansion valve. Refer to item 4.3.8 for inspection procedures.
Replacement

ɛction procedures

r conditioner switch

ug the air conditioner switch.

:k the continuity between terminals of the air itioner switch with a tester.

:inuity

itch position	Terminal's number	Result, in normal
OFF	①—②	No
ON	①—②	Yes

Terminal's number / h ion	1	2
OFF	○	
ON	○—○	

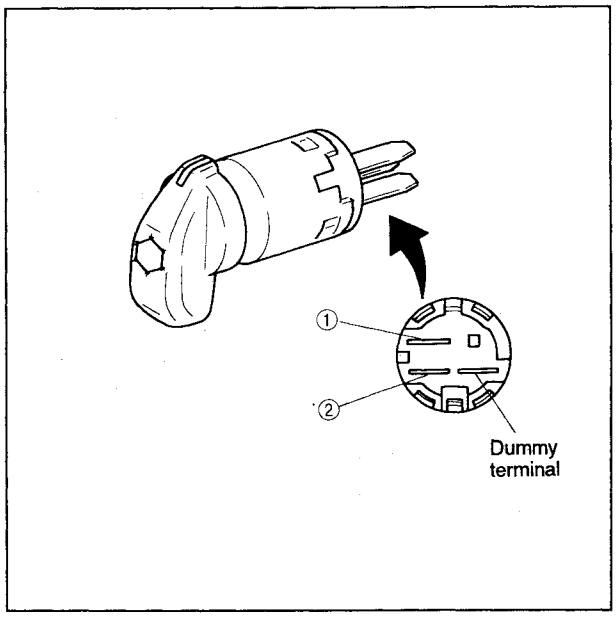

)ual pressure switch

dual pressure switch is attached to the receiver)ly for controlling the operation of the air oner by checking the inside pressure of the r assembly.

MPaG (Lb/in²G, kgf/cm²G)

High side	Low side
2.94 (418, 30)	0.2 (28, 2)
2.35 (334, 24)	0.225 (32, 2.25)

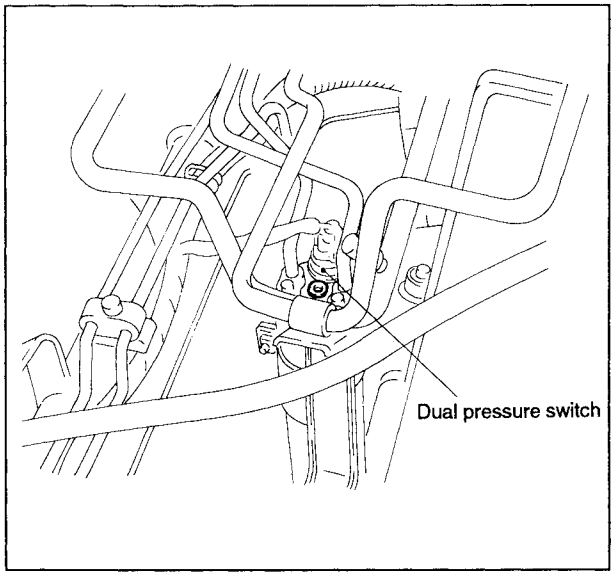

ıplug the connector at the receiver assembly.

ıeck the continuity between terminals of the nnector with a tester.

hen electric continuity is found, connect the nnector to the high pressure switch.

:tach the high pressure gauge and low pressure ıuge.

perate the air conditioner.

)ver the surface of the condenser by using a piece ' paper.

'hen the high pressure exceeds 2.94 MPaG (418 b/in²G, 30 kgf/cm²G), if the magnetic clutch is ırned off, the switch is normal.

' the magnetic clutch is not turned off, replace ressure switch with new one.

Check the accuracy of the preset as below.

ı) Stop the air conditioner.

)) Purge the air conditioner of refrigerant slowly starting at over 0.225 MPaG (32 Lb/in²G, 2.25kgf/cm²G).

(c) At reading the pressure 0.2 MPaG (28 Lb/in²G, 2 kgf/cm²G), the switch opens.

(d) Here, stop the purging, then turn it to charging.

(e) At reading the pressure 0.225 MPaG (32 Lb/in²G, 2.25 kgf/cm²G), the switch closes.

If the dual pressure switch does not meet specifications, replace the switch.

4.3.3 Thermostat

The thermostat is mounted on the evaporator case. It controls the operation of the air conditioner by sensing the temperature of the evaporator fins.

Preset : °F (°C)

OFF	33 (0.5)
ON	38 (3.5)

(1) Check the accuracy of the preset as below.
  (a) Soak the sensor of the thermostat in ice-water of below 33 °F (0.5 °C).
  (b) Check the cotinuity between the switch terminals.
  (c) Pull the sensor out of the ice-water, and check the continuity at over 38 °F (3.5 °C) of the sensor.

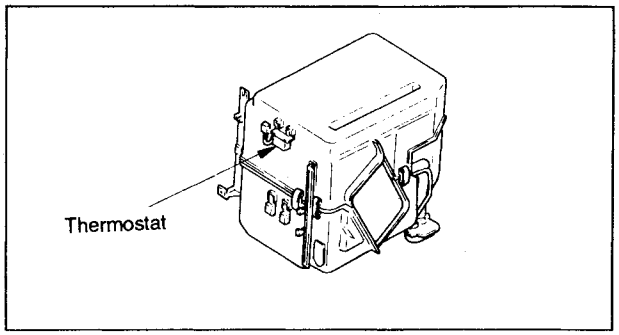

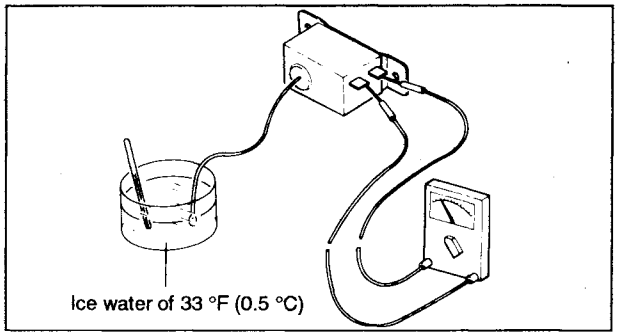

4.3.4 Magnetic clutch

(1) Disconnect the wiring to the magnetic clutch.
(2) Apply a positive side power voltage to the magnetic clutch through the wiring.
(3) In the case of regular functioning, the pulley and magnetic clutch are engaged with a clicking sound. The failing means any malfunction of the magnetic clutch.

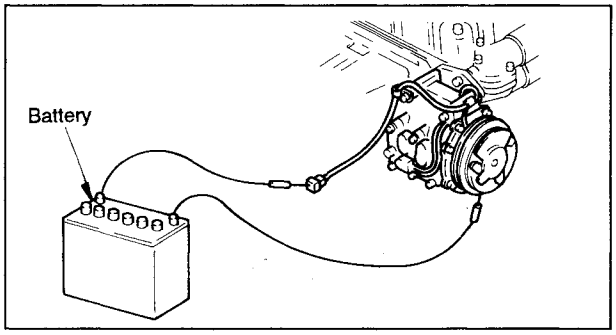

4.3.5 Refrigerant charge

(1) Set the temperature control lever at the cool position.
(2) Open doors of the room.
(3) Set the blower switch at the ON position.
(4) Adjust the engine revolution at 1500 rpm.
(5) Operate the air conditioner switch for comp. ON.
(6) Watch the sight glass of the receiver assembly at the inside of the engine room.
  (a) If judged as insufficient refrigerant charging, repair the leaks, then charge it additionally.
  (b) If judged as over charging of refrigerant, extract an excess refrigerant.
(7) Diagnosis by pressure reading
  (a) Short of refrigerant :
  Lower pressure for both L.P. and H.P. reading
  (b) Express of refrigerant :
  Higher pressure for L.P. and H.P. reading

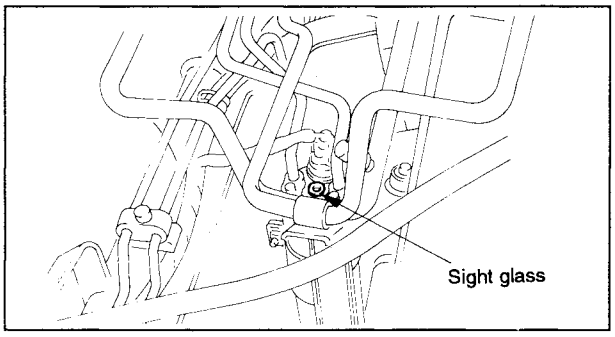

Sight glass		Remarks
Proper refrigerant level	Bubble	1. Bubble occasionally appears. 2. Bubble disappear if speed is a little increased.

Insufficient refrigerant	Bubble	Considerable bubbles appear. If the system is extremely short of refrigerant, the sight glass appear white.
Excessive refrigerant		1. No bubbles appear. 2. Slight bubbles appear if speed is decreased.

4.3.6 Receiver assembly

(1) While operating the air conditioner, touch the refrigerant piping with a hand at the inlet and outlet portions.

(a) Sensed temperature difference :

It is possible that clogging is happening at the inside, liquid receiver assembly is to be replaced with a new one.

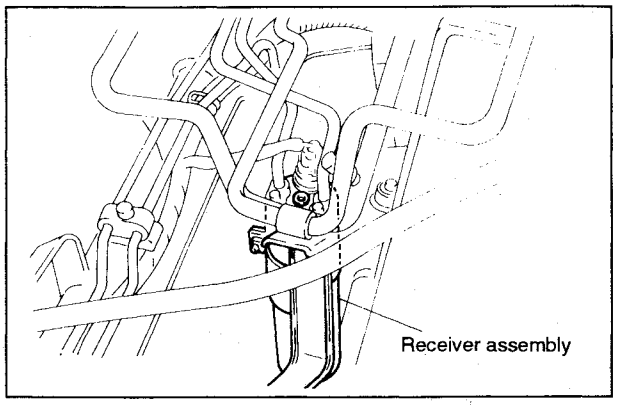

4.3.7 Belt tension

(1) Depress the V belt with a thumb at the ⬅ marked position, and adjust the stretching as below.

Stretching degree : 7 ~ 10 mm (0.28 ~ 0.40 in) (deflection)

(2) Adjustment

(a) Loosen the nut of the tension pulley.

(b) Control the belting tension by the adjusting bolt.

(c) After finishing, retighten the nut as before.

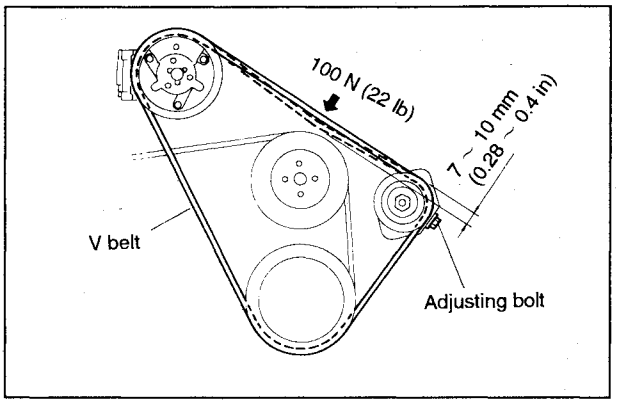

4.3.8 Expansion valve

⚠CAUTION

The test should be applied to only the case of the other components being free from troubles, and the expansion malfunctioning singly.

(1) Build up the test circuit with a gauge manifold.

(2) Soak the sensor bulb in ice water of 32 °F (0 °C), and of 50 °F (10 °C) respectively.

(3) Pressurize the H.P. side with dry nitrogen gas of 1.03MPaG (10.5 kgf/cm²G).

(4) Check the reading of the L.P. side pressure gauge for the standard range.

At 32 °F (0 °C) --- 0.127 MPaG (18.4 Lb/in²G, 1.3 kgf/cm²G)

At 50 °F (10 °C) --- 0.23 MPaG (33.4 Lb/in²G, 2.35 kgf/cm²G)

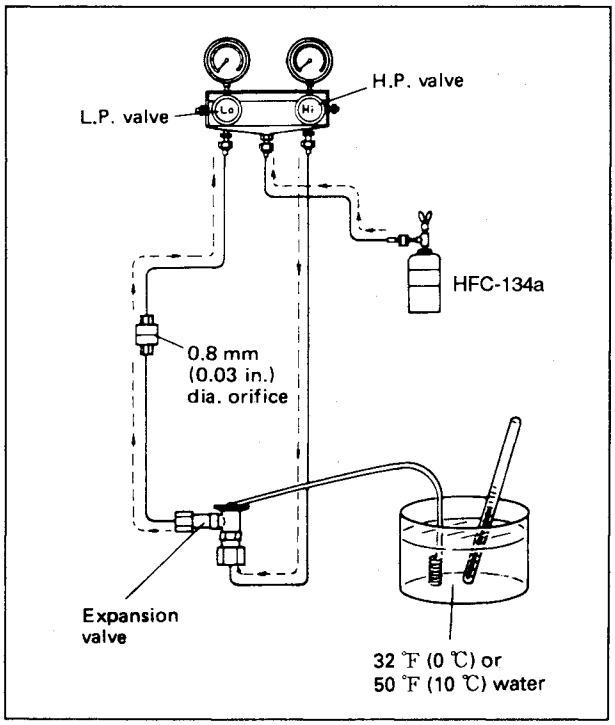

4.3.9 Pressure check

(1) Mount a low pressure gauge hose and a high pressure gauge hose on the check valve.

(2) Drive the air conditioner.

(3) Showing of higher L.P. side pressure and lower H.P. side pressure evidences ineffective compression.

Standard pressure

L.P. side pressure	About 0.26 MPaG (38.4 Lb/in²G, 2.7 kgf/cm²G)
H.P. side pressure	About 1.42 MPaG (207.6 Lb/in²G, 14.6 kgf/cm²G)

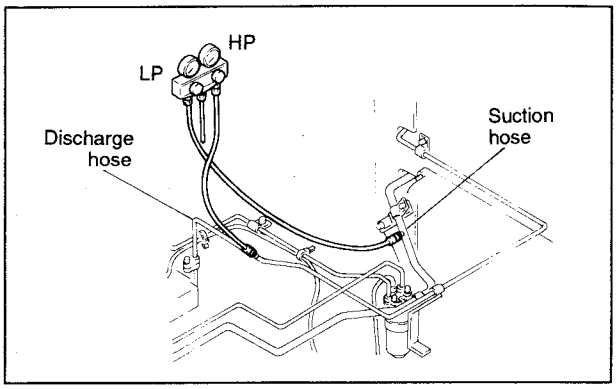

4.3.10 Air inclusion in ref.circuit

The abnormal reading of the refrigerant circuit evidences afraid air inclusion.

A little higher L.P. side pressure Noticeably higher H.P. side pressure

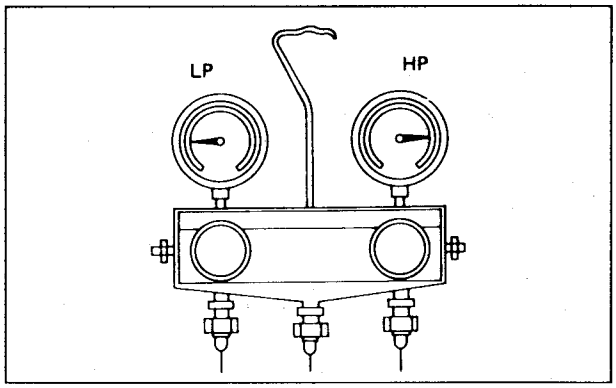

4.3.11 Moisture inclusion in ref. circuit

(1) During the operation, cooled air supply is interrupted periodically with a time interval.
This phenomenon evidences afraid water inclusion.

(2) Check the refrigerant pressure at a stop of the cooled air supply to make sure of the water inclusion.

L.P. side pressure ..... Almost vacuum
H.P. side pressure ..... Noticeably low

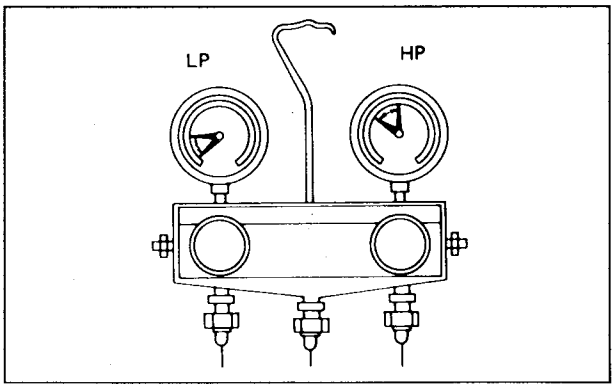

5. REMOVAL AND INSTALLATION

5.1 Precaution for removal and installation.

1. Disconnect the (-) ground cable from the battery, and place a cover on the battery.

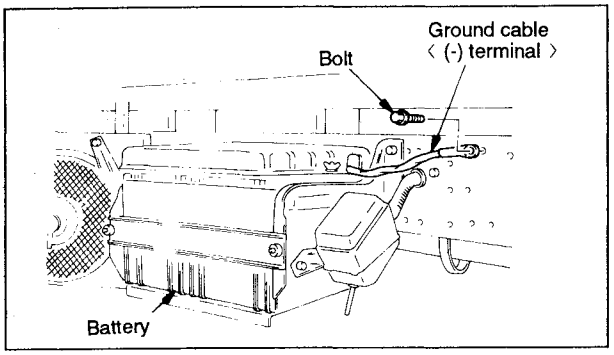

2. Make certain all the openings are covered with caps in order to prevent entry of foreign substances such as dust and dirt.
3. Never tamper with the brake and fuel systems, including the brake tubes and hoses.
4. Avoid doing the work in a dusty place or outdoors in rainy weather. If tubes or functional parts are removed, put a cap in position immediately in order to prevent entry of dust and moisture.
5. Connect the charging hose of the gauge manifold to the check valves (suction and discharge) of the suction hose and discharge hose, and recover the refrigerant by refrigerant recovery unit until its pressure is reduced to 0 kPaG (0 psiG, 0 kgf/cm²G). (Make sure that there is no internal pressure in the equipment.)

   Abrupt discharging might result in the discharge of the refrigerant oil from the compressor.
6. When coupling the flared tube, coat the flared portion with the compressor oil at the inner side.
7. Make sure to use the wheel chocks.

5.2 Removal

5.2.1 Inside the engine room

(1) Compressor & clutch assembly
   (a) Withdraw the wiring of the magnetic clutch at the connector.
   (b) Remove the V belt by loosening fixature of the tension pulley.
   (c) Take of the archor bolts : M8 × 100, 3 pcs and M8 × 130, 1 pc.
   (d) Dismount the compressor.

(2) Receiver assembly
   (a) Unplug the dual pressure switch at the connector.
   (b) Separate the interconnecting refrigerant pipe of the receiver assembly.

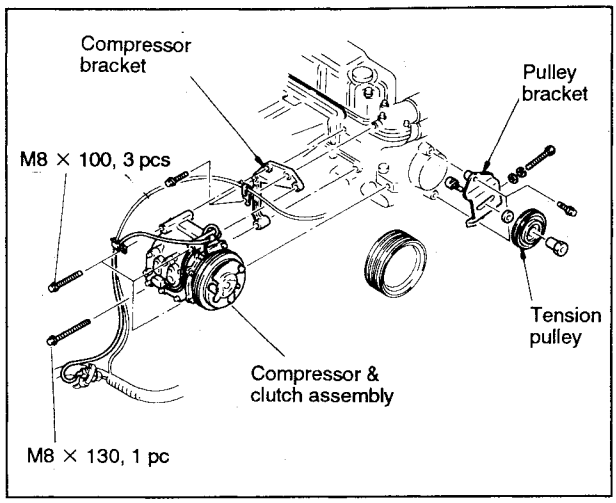

   (c) Take off the fixing bolt : M8 × 20, 2 pcs.
   (d) Dismount the receiver assembly.

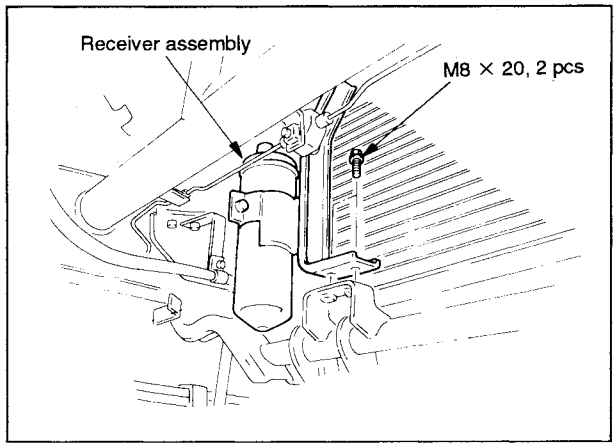

(3) Side condenser assembly
   (a) Unplug the condencer fan harness at the vehicle side harness.
   (b) Take off the fixing bolt : M8 × 20, 2 pcs and M8 × 25, 2 pcs.
   (c) Dismount the side condenser assembly (and baffle plate).

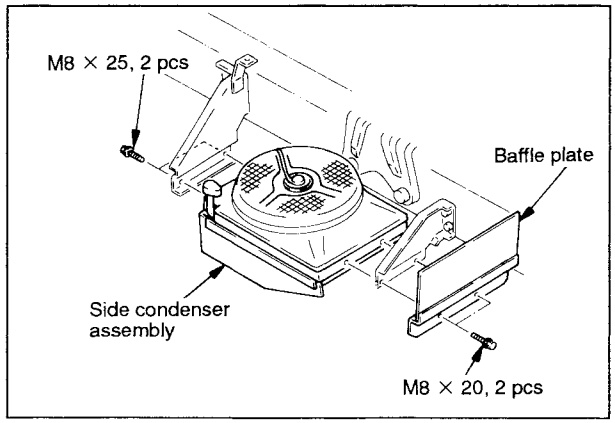

5.2.2 Cabin room

(1) Cooling unit assembly

(a) Separate the interconnecting refrigerant pipes of the cooling unit assembly.

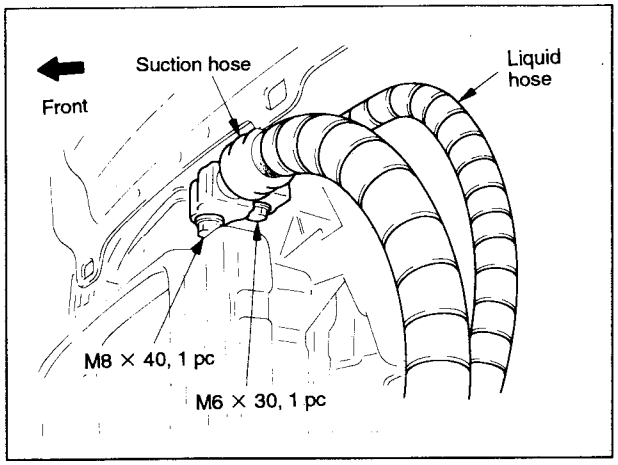

(b) Withdraw the wiring of the cooling unit assembly at the connectors.

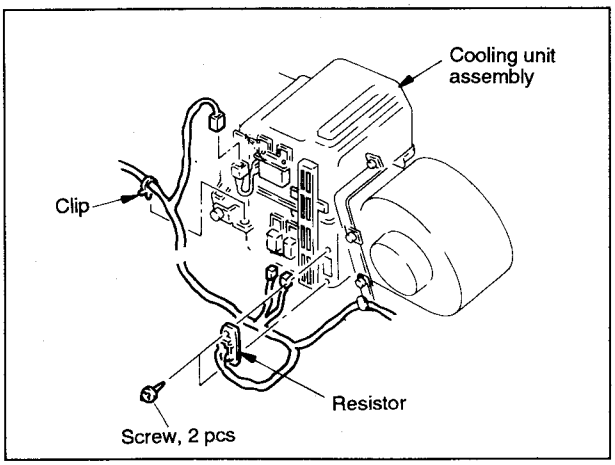

(c) Take off the fixing bolts : M8 × 20, 2 pcs.

(d) Dismount the drain hose cover.

(e) Reconnect the drain hose from the cooling unit assembly.

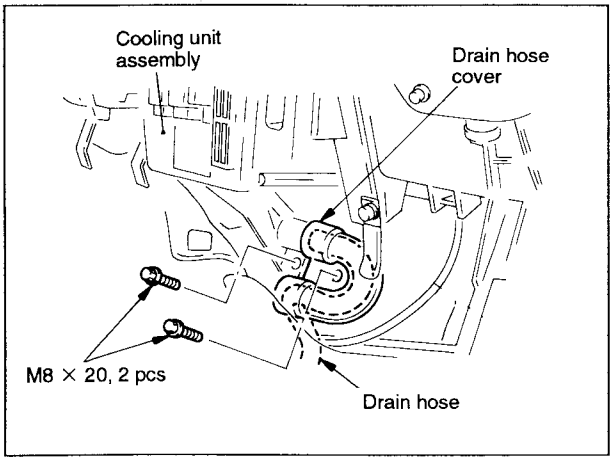

(f) Take off the fixing screws : M6 × 16, 6 pcs.

(g) Dismount the cooling unit assembly.

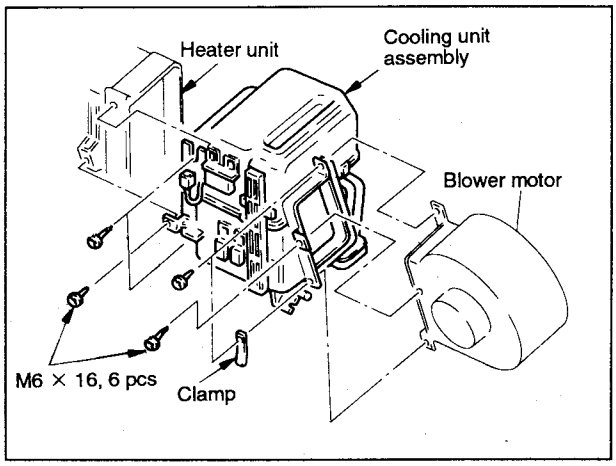

(2) Air conditioner switch

Pull out the air conditioner switch.

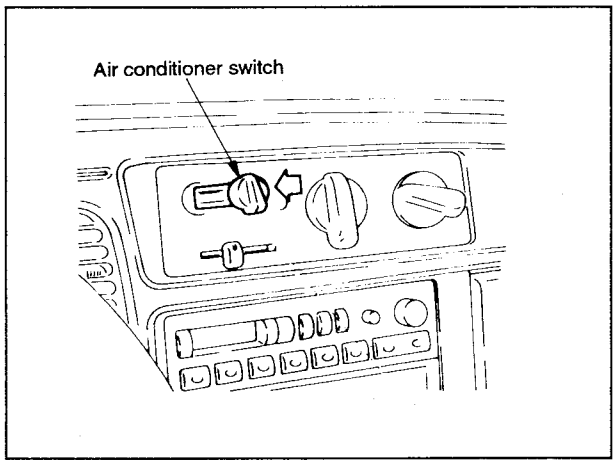

5.3 Installation

Installation is performed in the opposite sequence of removal.

○ Torques for tightening coupler of refrigerant tubing.

Nm (Lb.ft.kgm)

Compressor suction hose	29-34 (21 ~ 24, 3.0 ~ 3.5)
Compressor discharge hose	20-25 (14 ~ 18, 2.0 ~ 2.5)
Compressor inlet hose	20-25 (14 ~ 18, 2.0 ~ 2.5)
Compressor outlet hose	12-14 (8.6 ~ 10, 1.2 ~ 1.5)
Liquid receiver assembly inlet and outlet hoses	12-14 (8.6 ~ 10, 1.2 ~ 1.5)
Cooling unit inlet hose	12-14 (8.6 ~ 10, 1.2 ~ 1.5)
Cooling unit outlet hose	29-34 (21 ~ 24, 3.0 ~ 3.5)

○ Torques for tightening general bolt and nut

Nm (Lb.ft. kgm)

Nominal size	Pitch	Tightening torque		
		Head mark 4	Head mark 7	Head mark 8
M 5	0.8	3-4 (2.1 ~ 2.9, 0.3 ~ 0.4)	5-6 (3.6 ~ 4.3, 0.5 ~ 0.6)	5-7 (3.6 ~ 5, 0.5 ~ 0.7)
M 6	1.0	5-6 (3.6 ~ 4.3, 0.5 ~ 0.6)	9-11 (6.4 ~ 7.9, 0.9 ~ 1.1)	8-12 (5.7 ~ 8.6, 0.8 ~ 1.2)
M 8	1.25	12-14 (8.6 ~ 10, 1.2 ~ 1.5)	19-24 (13.6 ~ 17, 2.0 ~ 2.5)	19-29 (13.6 ~ 21, 2.0 ~ 3.0)
M10	1.25	24-29 (17 ~ 21, 2.5 ~ 3.0)	38-48 (27 ~ 34, 4.0 ~ 5.0)	43-58 (30.7 ~ 41.4, 4.5 ~ 6.0)
M10	1.5	17-26 (12 ~ 18.6, 1.8 ~ 2.7)	32-48 (23 ~ 34.3, 3.3 ~ 5.0)	41-58 (29.3 ~ 41.4, 4.3 ~ 6.0)
M12	1.25	34-43 (24.3 ~ 31, 3.5 ~ 4.5)	58-77 (41 ~ 55, 6.0 ~ 8.0)	82-106 (58.6 ~ 75.7, 8.5 ~ 11.0)
M14	1.5	72-82 (51 ~ 59, 7.5 ~ 8.5)	115-134 (82 ~ 96, 12.0 ~ 14.0)	125-173 (89.3 ~ 123.6, 13.0 ~ 18.0)

NOTE

For the cases of spring washer seated, and thread or seating surface coated with oil, the value shall be reduced down to 85 percent of the data listed.

6. TREATMENT AFTER INSTALLATION

6.1 Check and adjustment

After installation, check the following points and confirm that everything is normal, then charge the gas, and do the performance and operation tests.

(1) Check if any abnormal vehicle performance, happens or not by installing the air conditioner.

(2) Check the operation of the magnetic clutch. (with the compressor disengaged)

(3) Check if any parts left unmounted or any tool left in the vehicle.

(4) Check to ensure that the temperature control lever operates properly.

(5) Check the tension of the belt.

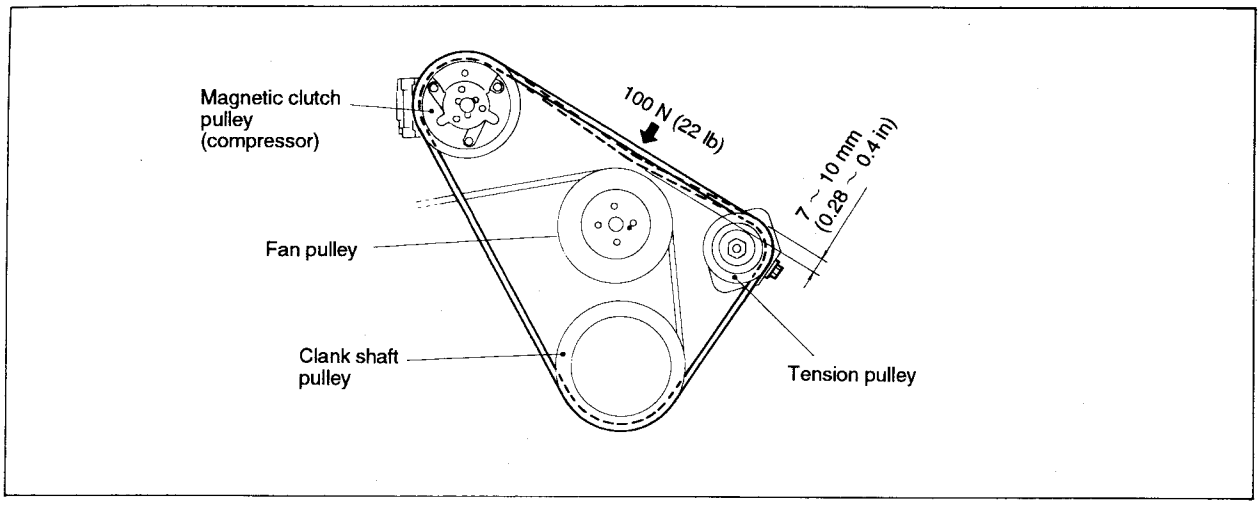

6.2 Leak test

After all the piping works are completed, conduct an leak test by the following procedure to check any leaks at the flare coupling, etc. and then evacuate the system. If this leak test is omitted and evacuation is immediately started, there is no way of detecting possible leak. If there are leaks, the specified vacuum cannot be attained. In order to save the service time be sure to conduct the leak test before evacuation.

6.2.1 Test points

(1) All pipe joint.

(2) Shaft seal and check valve on the compressor.

6.2.2. Test procedure

(1) For the gas leak test, the use of an electric gas leak detector is recommended. (HFC-134a SAE Approved)

(2) Perform the test at a place as in free from air flowing.

(3) The refrigerant is heavier than air. Leaks will concentrate at the bottom. Make certain that the testing tube is applied below the check point.

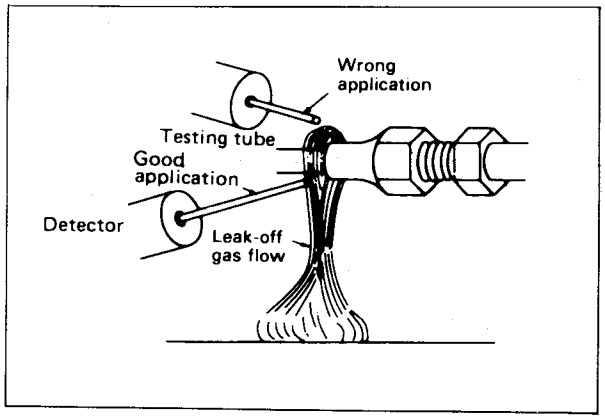

(4) The test should be performed patiently. Make certain that testing tube is moved slowly [approx. 10 mm/sec. (0.4 in./sec.)].

(5) The high pressure side refrigerant circuit should be tested for gas leaks during operation. Those areas which are dangerous or hard to test during operation (including areas around the compressor and condenser) should be tested direct after shutdown.

(6) The low pressure side refrigerant circuit should be tested during shutdown after the gas pressure has balanced.

(7) The test should be performed on the basis of the following standards:

Gas leak test standards

Test Point / Instrument	Compressor shaft seal	Other parts
Electric gas leak detector	Pointer shall not swing more than 0.1 mA at the low sensitivity.	Pointer must not swing more than 0.1 mA at the high sensitivity.
Halide torch gas leak detector	Flame colour (moss green) shall not change.	

⚠ WARNING

- **Smoking should be forbidden if a gas leak is detected.**
- **If a flame is applied to the refrigerant, toxic phosgene gas will be produced. Do not keep the detector in contact with a leaky point for a long time.**

- Leak test procedure

1. Attach refrigerant supply and gauge set as shown with all valves closed. Open refrigerant supply valve on can.
2. Loosen the center charging hose fitting at the manifold gauge end to blow any air from the hose until it hisses for a few seconds, then retighten it.
3. Open both gauge valves to partially charge the system and then close both valves.
4. The system can then be checked for leaks using an electronic leak detector.
5. If leaks are found that require the system to be opened (to repair or replace hoses, fittings, etc.), release any charge in the system.
6. After checking and repairing leaks, system must be evacuated.

6.3 System Charging

GENERAL PRECAUTIONS

⚠WARNING

When handling refrigerant (HFC-134a), the following precautions must be observed.

— Always wear eye protection and gloves while handling refrigerant.

— Be careful that liquid refrigerant does not contact the skin.

If liquid refrigerant strikes eye or skin:

— Do not rub on skin.

— Splash large quantities of cool water on the eye or skin.

— Flush eyes or skin with cool water for 5 minutes.

— Rush to a physician or hospital for immediate professional treatment.

— Do not attempt to treat it yourself.

— Keep the refrigerant (HFC-134a) container below 104°F (40°C).

— Do not handle the refrigerant in an enclosed area having an open flame; the refrigerant may produce a poisonous gas.

— Use approved recovery equipment to recover HFC-134a refrigerant before attempting service of this or any other HFC-134a system.

— Do not attempt to leak test an HFC-134a system with high pressure air or nitrogen. Mixing HFC-134a with a concentrated quantity of air may be combustible in the presence of ignition.

6.3.1 Evacuation

INSTALLATION OF SIMPLE HFC-134a EQUIPMENT

(1) Connect the manifold gauge to the service valves.

(2) Connect the packless valve to the vacuum pump.

(3) With the charge valve handle turned back all the way, install the service can.

(4) Connect the equipment as illustrated.

⚠CAUTION

1. **Do not connect the high and low pressure sides adversely. (Connect high pressure side to the condenser and low pressure side to the cooling unit assembly)**
2. **The indications "DIS" and "SUC" on the compressor indicate high and low pressure sides respectively.**

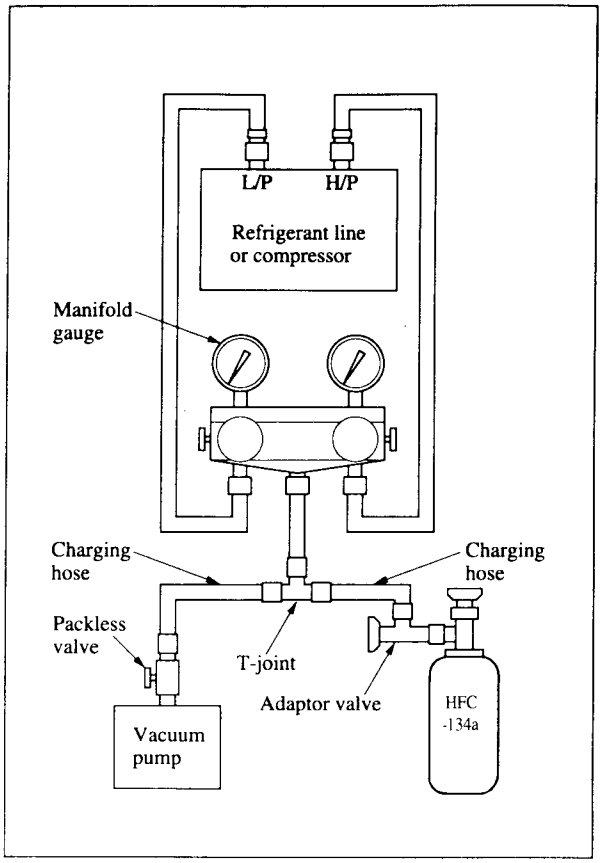

6.3.2 Evacuate the System

The refrigerant system must be evacuated before charging. Charge using HFC-134a refrigerant only. HFC-134a is available in bulk tanks. Follow the safety precautions for handling HFC-134a as listed in this section.

Follow the evacuation procedure below and at right.

This procedure assumes no HFC-134a refrigerant has been introduced into the system. If evacuating a charged system, it is necessary to recover the existing HFC-134a refrigerant before continuing with these instructions. Refer to the recovery equipment manufacturer's instructions for proper refrigerant recovery.

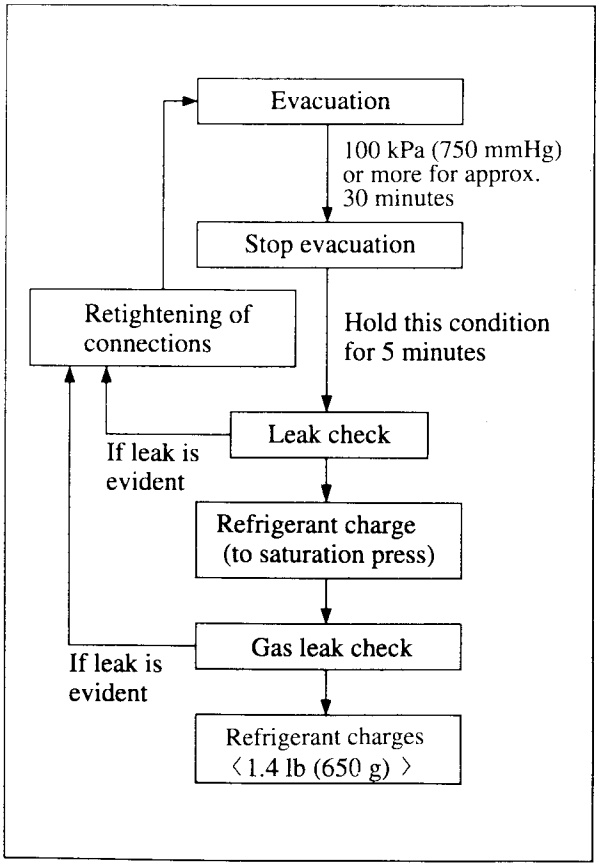

(1) Start up the vacuum pump.

⚠CAUTION

1. **Do not use the compressor for evacuation.**
2. **Do not operate the compressor in the vacuum condition; damage may occur.**

(2) Open the manifold gauge handles and the packless valve.

(3) Evacuate to a vacuum reading of 100 kPa (750 mmHg) or higher (approx. 30 minutes).

(4) Turn back the packless valve all the way and close the service valve.

(5) Stop the vacuum pump and allow to stand for 5 minutes.

(6) Check for leak. (Good if the vacuum is held.)

CHARGING WITH BULK TANK

(1) Open the charge valve to charge the system with refrigerant.

(2) When the refrigerant is no longer drawn in, turn back the high pressure side manifold gauge handle.

(3) Check for refrigerant leaks using a leak detector.

(4) Start the engine.

(5) Operate the air conditioner and set at the lowest temperature (MAX. COOL).

(6) Fix the engine speed at 1,500 rpm.

(7) Continue charging system until proper refrigerant quantity is introduced into the system.

⚠CAUTION

If the bulk tank is inverted, liquid refrigerant may be drawn into the compressor damaging it by liquid compression.

Keep the bulk tank upright to ensure that refrigerant is charged in gas state.

(8) Upon completion of charging, turn back the low pressure side manifold gauge handles.

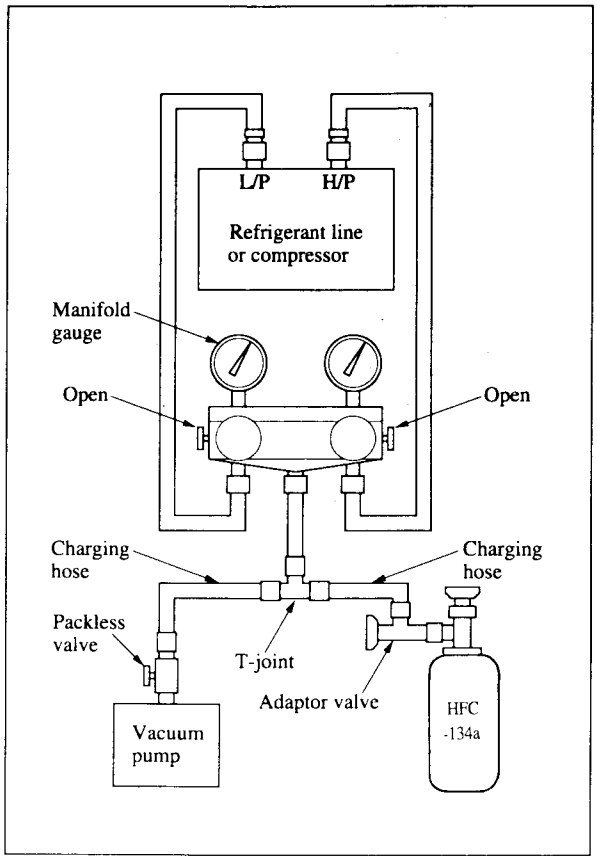

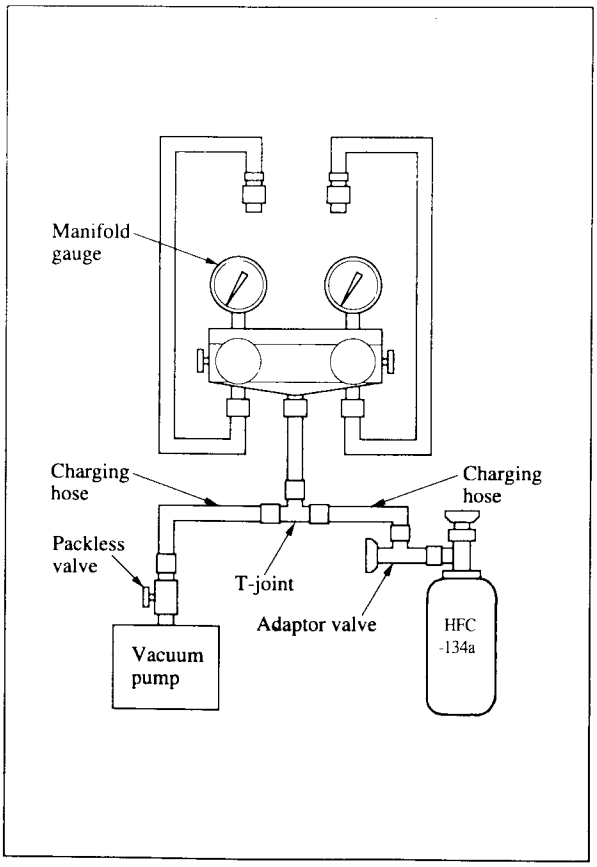

6.3.3 Removal of Charge Equipment

(1) Close the charge valve.

(2) Remove the manifold gauge from each service valve.

⚠CAUTION

Do not remove the bulk tank, T-joints and adaptor valves but keep them connected for next charge operation.

CORRECTING LOW REFRIGERANT LEVEL

Locate the source of the low refrigerant level, recover system, repair system, evacuate system, charge system, check for leaks.

⚠CAUTION

If the bulk tank is not emptied completely, keep the charge valve connected to the can for next charging.

6.3.4 Discharging System

Use the refrigerant recovery unit which can be purchased in local market to discharge refrigerant gas from the system.

⚠CAUTION

Refer to that Refrigerant Recovery Unit Instruction Manual for operation which is attached on the unit.

LIQUID CHARGE, through high side using charging station:

⚠CAUTION

Do not run engine when performing liquid charge; compressor will be damaged.

(1) After the system is evacuated, close gauge valves, connect center hose to refrigerant supply. Loosen center fitting at gauge to blow any air out of the hose and then retighten.

(2) Following charging station manufacturer's instructions charge the system until 1.4 lb (650 g) of refrigerant is pumped into the system.

(3) When system is fully charged, close high gauge valve and refrigerant supply valve, then quickly disconnect gauge hoses from service valves.

(4) After charging the system, refer to Pre-Delivery Inspection.

6.4 Performance test

6.4.1 Preparation

Reinstall all vehicle parts that were removed for installation of the air conditioner at their original positions, adjust the mounting, and test the following items.

1. Installation of grommets
   Install the specified grommets

6.4.2 Stationary performance test

1. Operating conditions
   a. Place the vehicle in the shade with doors open.
   b. Keep the return air temperature between 77 to 86°F (25 to 30°C). (Adjust by changing the opening degree of the doors).
   c. Set the fan switch to the max position.
   d. Turn the thermostat control lever to the cool position.
   e. Set the engine speeed to approx. 1,500 rpm.
   f. Set the high pressure at 1.17 to 1.37 MPa (170 to 200 Lb/in²G, 12 to 14 kgf/cm²G). (If the high side pressured does not rise up, place paper or the like in front of the condenser.)

2. Test procedure

Operate the air conditioner for more than 10 minutes under the above operating conditions in order to stabilize the high and low pressures. Then perform the test by the following procedure:

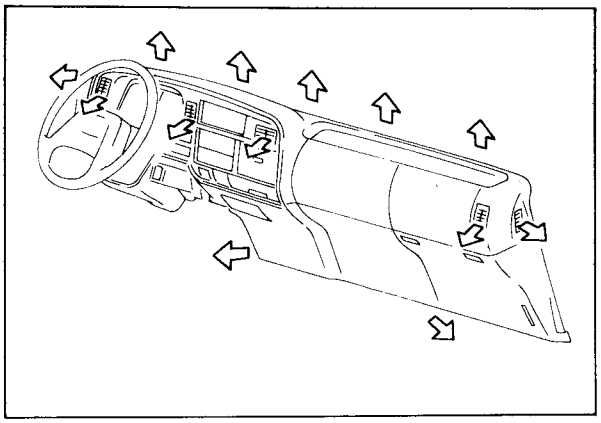

a. Measure the outlet air temperature at the inside space of the outlet grille.

b. Measure the air conditioner intake air temperature, humidity, etc., and the items shown in the Table of Measuring Items at a position free from the effects of cool outlet air.

c. The intersecting point of the plotted line perpendicular to the point which corresponds to the air conditioner intake and outlet air temperature difference and the plotted line perpendicular to the point which corresponds to the relative humidity of intake air should be between the oblique lines in bigure.

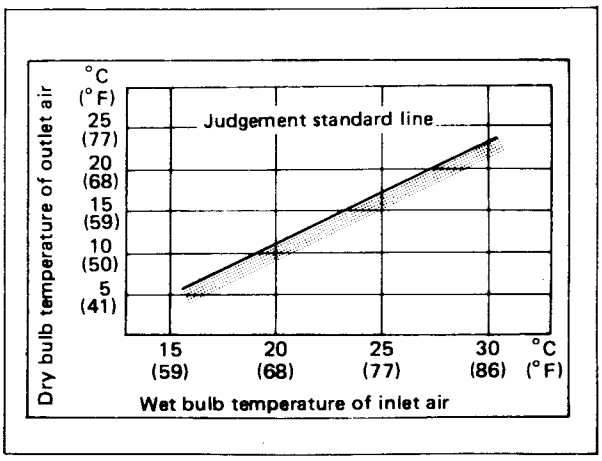

7. MAINTENANCE

No.	Check point	Service and inspection intervals				
		When used only in summer (approx. for three months)		When used in all seasons		
		At the beginning of season	At the end of season	Every 5,000 km (3,000 miles)	Every 10,000 km (6,000 miles)	Every 20,000 km (12,000 miles)
1	Check condenser and radiator fin for clogging.	○	○	○		
2	Retighten all bolts.	○			○	
3	Check for refrigerant leaks.	○			○	
4	Check refrigerant level.	○		○		
5	Check V-belt tension.	○		○		
6	Check operation of magnetic clutch.	○			○	
7	Check operation of thermostat.	○				○
8	Cooling unit assembly performance test.	○		○		
9	Compressor overhaul.		Every four years			Every 40,000 km (24,000 miles)

⚠ CAUTION

Even after the hot season is over, the air conditioner should be kept ready for operation all year round. Do not remove the V-belt or other parts.
This is because the air conditioner must be operated once a week for several minutes regardless of the season in order to prevent gas leaks caused by drying of the compressor shaft seal, and also to maintain the compressor itself in the best condition.

8. COOLING UNIT ASSEMBLY

8.1 Components

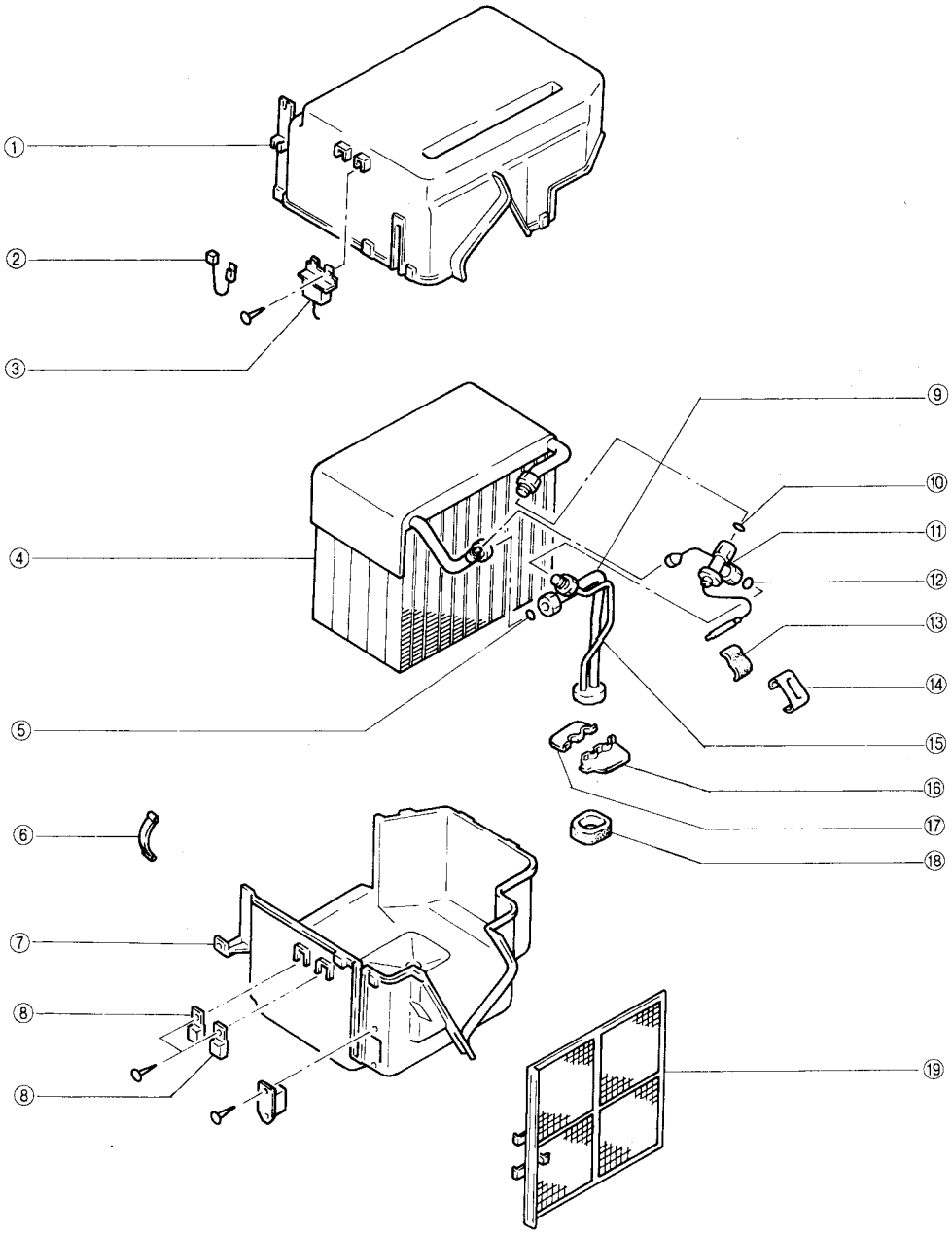

① Cooler case (upper)
② Joint harness
③ Thermostat
④ Evaporator
⑤ O-ring
⑥ Clip
⑦ Cooler case (lower)
⑧ Power relay
⑨ Pipe
⑩ O-ring
⑪ Expansion valve
⑫ O-ring
⑬ Insulation rubber
⑭ Clip
⑮ Baffle plate
⑯ Battle plate
⑰ Insulation rubber
⑱ Air filter

8.2 Cautions in disassembling

(1) Direct after disconnecting the refrigerant piping blind the opening to prevent dust and moisture etc. from entering in it.

(2) When disconnecting the expansion valve, surely apply two spanners to prevent unstable twisting from applying with the one for supporting and the other for torquing at the connection.

(3) Pipings in the cooling unit assembly should be handled gently. Particularly, the ingress and egress portions should be from any bending trouble in carrying it.

(4) If the cooling unit assembly is stored, or transported on disassembled condition, be careful not to deform the fins.

(5) When disconnecting the wirring, avoid pulling it with the insulation cover catched, but apply force by pinching the terminals or by catching the connectors.

8.3 Disassembling

(1) Remove the clips for jointings the upper & lower side cooler case with a flat type screwdriver.

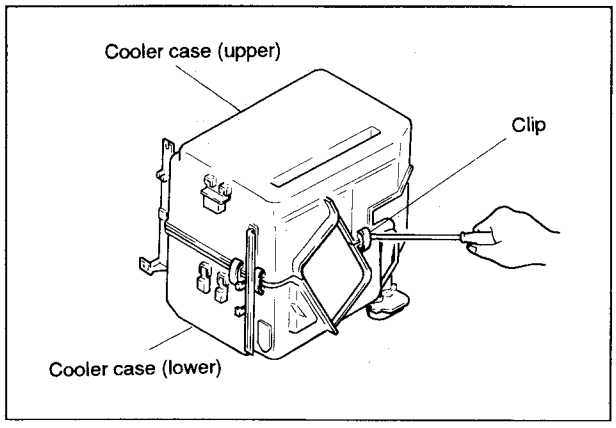

(2) Dismount the cooler case (upper).

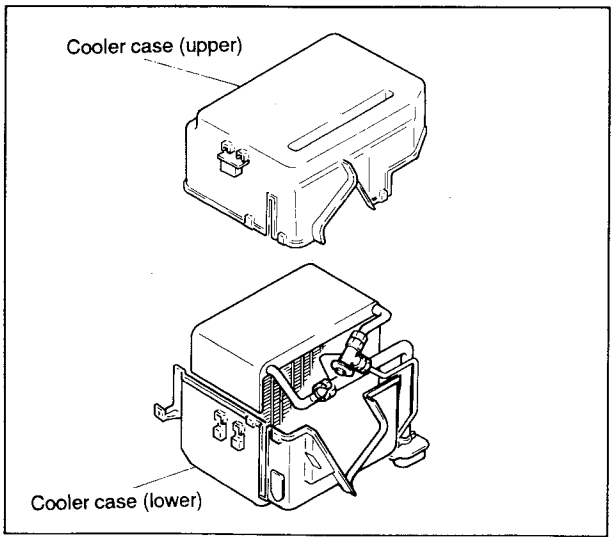

(3) Dismount the evaporator.

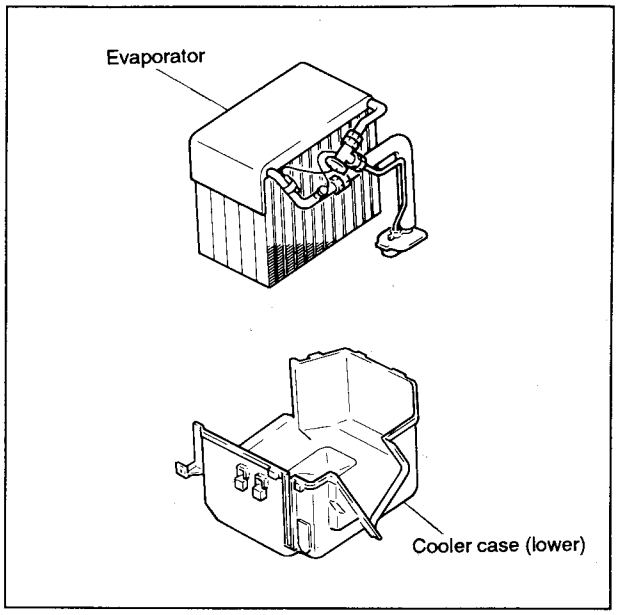

(4) Separate the expantion valve.
Dismount the feeler bulb at the suction side.

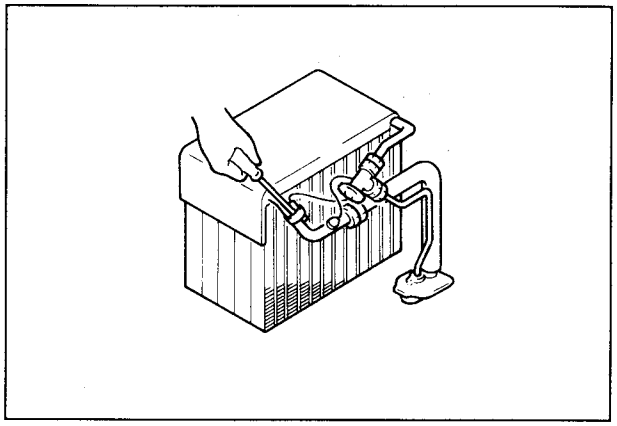

(5) Disconnect the expansion valve from the circuit.

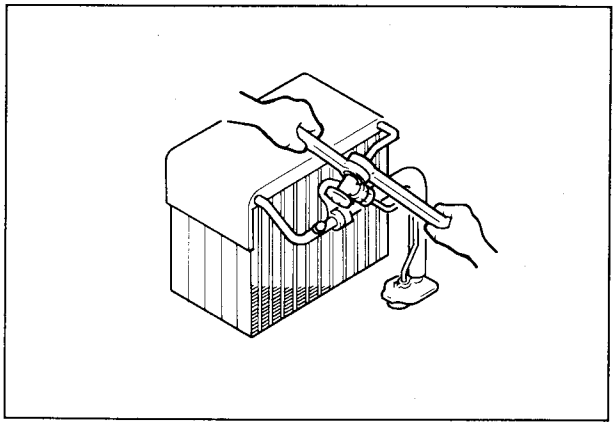

9. COMPRESSOR & CLUTCH ASSEMBLY

9.1 Disassembling the clutch.

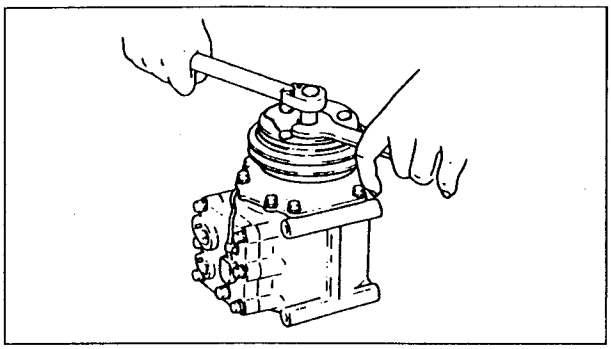

(1) Removal of armature plate.
   (a) Lock up the armature plate with a armature plate fixture and remove the lock nut.
   (b) Remove the armature plate.

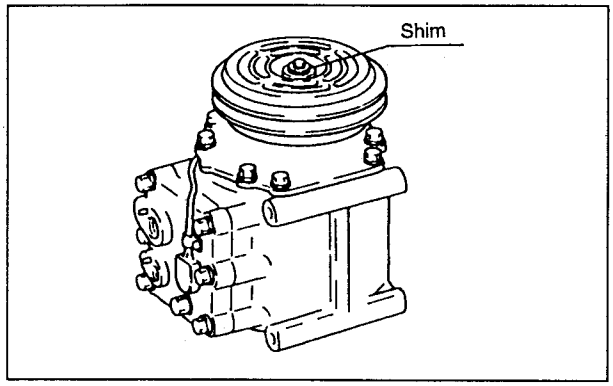

(2) Remove the shim.

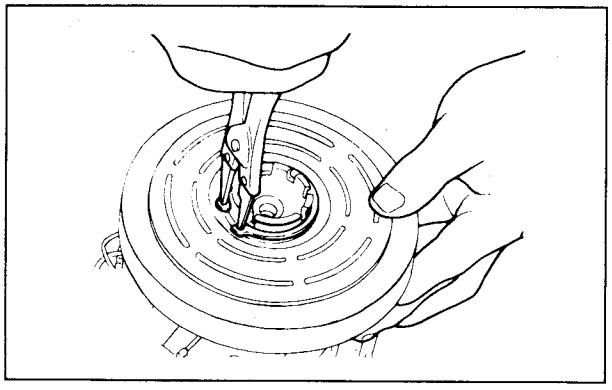

(3) Withdrawing rotor.
   (a) Remove the snap ring at the front case side with snap ring pliers.
   (b) Withdraw the rotor toward you and remove it from the front case.

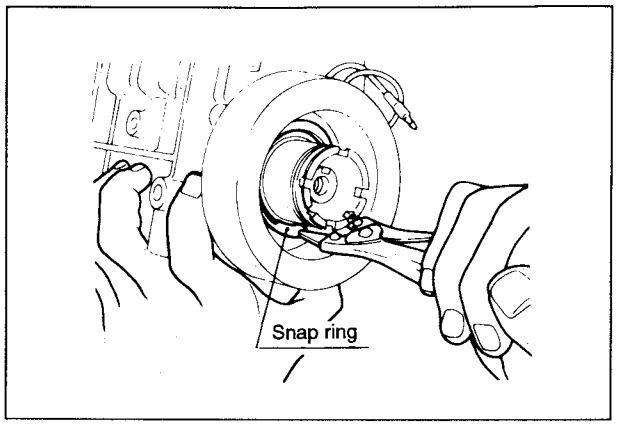

(4) Removal of field core.
   (a) Remove the snap ring for fixing the field core with snap ring pliers.

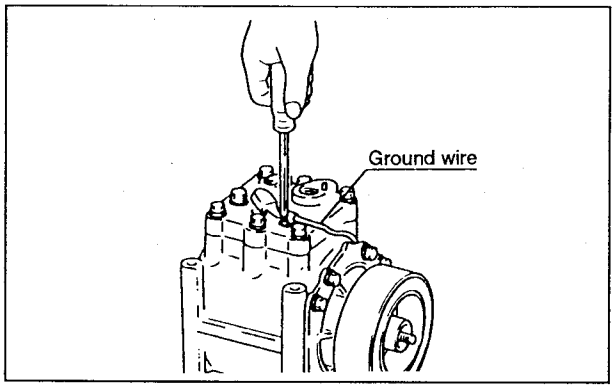

   (b) Remove the ground wire with a cross point screwdriver and withdraw the field core toward you to remove it from the crankcase.

(5) Removal of key.
   Remove the key from the shaft using the top of a flat type screwdriver.

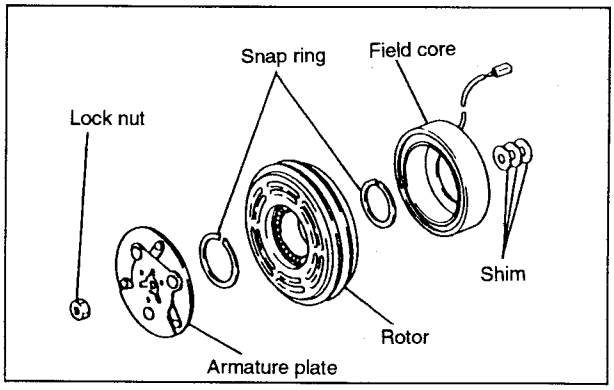

(6) Components of magnetic clutch.

9.2 Reassembly the clutch.

(1) Insert the key into the crankshaft.

(2) Insert the field core.

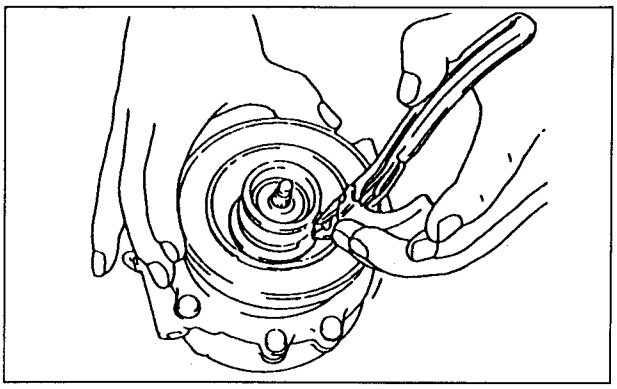

(a) Insert the field core into the front case and position it with a knock pin.

(b) Insert the snap ring for fixing field core into the groove and fix it with snap ring pliers as shown the below.

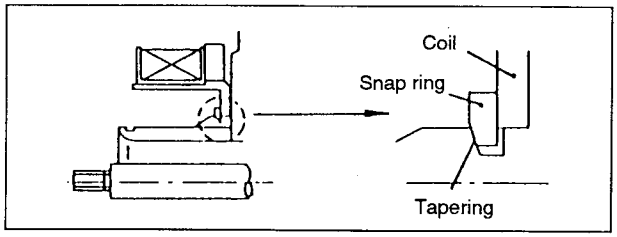

(c) Connect the ground wire.

(3) Insert the rotor into the front case.

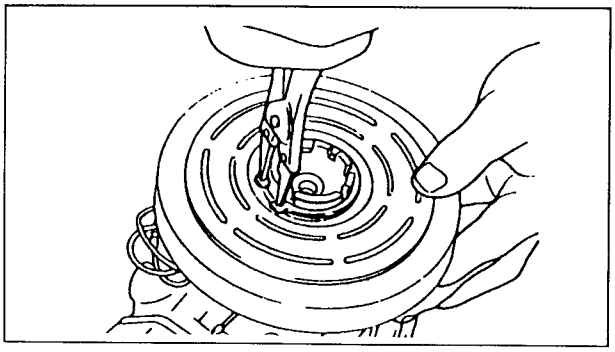

(4) Insert the snap ring for the front case side into the groove with snap ring pliers.

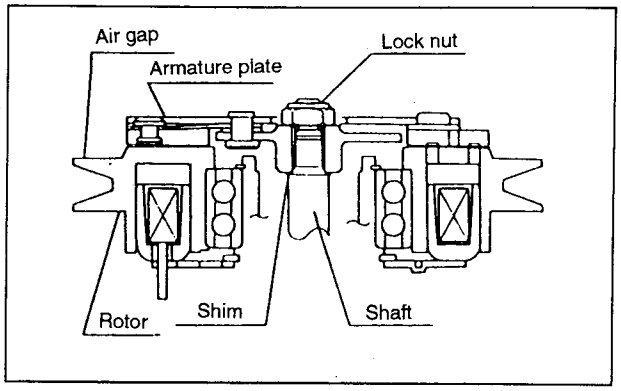

(5) Install the armature plate.

(a) Place a shim on the end of the shaft and insert the armature plate, adjusting to the key.

(b) Tighten the center bolt to the specified torque, 15.7 N.m (160 kgf.cm), with in-between plain washer.

(c) Measure the air gap.
The air gap shoud be within 0.4 to 0.65 mm (0.016 ~ 0.026 in).
Adjust it by shim if it is not within the specifications. Adjusting shim : 0.1, 0.3, 0.5, or 0.8 mm (0.004, 0.012, 0.02, or 0.03 in).

9.3 Special tool figure

The dimensions are in millimeter

(1) Armature plate fixture

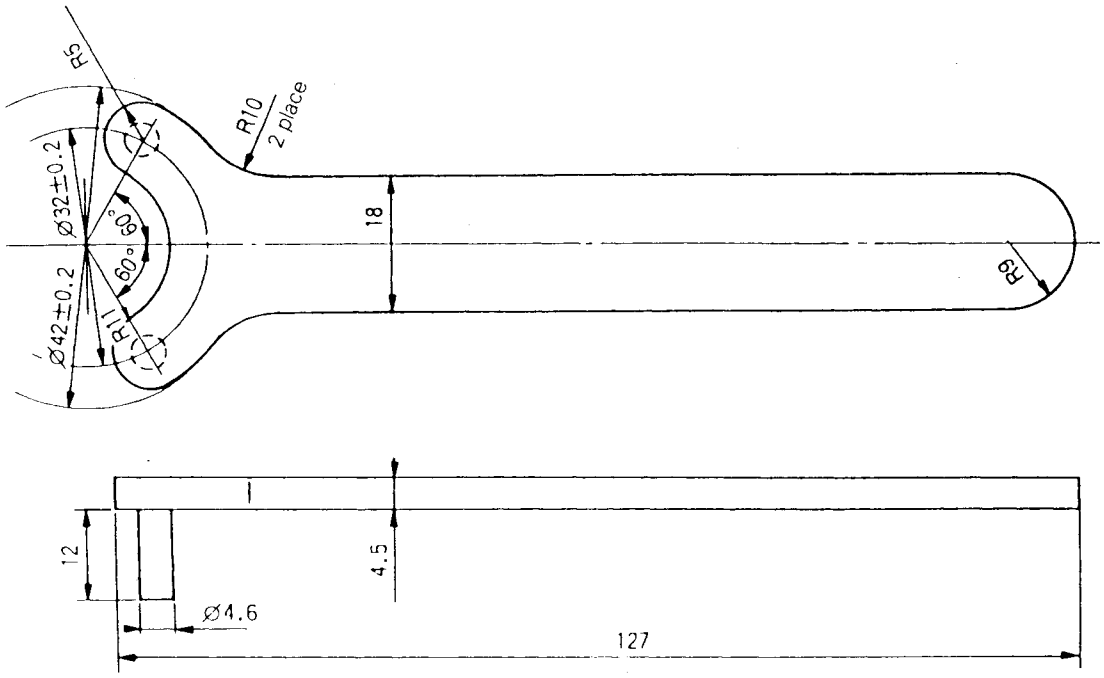

MITSUBISHI
FUSO

FH

Service Manual

Group 55B
Heater

Table of Contents

BACK

HOME

MITSUBISHI FUSO TRUCK OF AMERICA, Inc.

Pub No. TWME9502-55B

GROUP 55B HEATER

SPECIFICATIONS 2
STRUCTURE AND OPERATION 3
TROUBLESHOOTING 9
HEATER HOSE 10
HEATER CONTROL 12
AIR DUCT 15
HEATER UNIT AND BLOWER ASSEMBLY 16

SPECIFICATIONS

Items		Specifications
System	Type	Inside/outside air combining, hot-water type heating system
	Standard voltage V	12
	Damper changeover system	Manual cable type
Blower assembly	Manufacturer	NIPPONDENSO
	Power consumption W	170
	Maximum rotation rpm	3450
Heater unit assembly	Manufacturer	NIPPONDENSO
	Temperature control system	Air mixing type
	* Heating performance kW {BTU/h, kcal/h}	*3.53 {12060, 3040}

* : Heating performance is shown under the following conditions.
Temperature difference : 65°C {119°F}
Water flow : 6 L/min {0.0035 ft³/s}
Voltage : 12 V DC

Heater

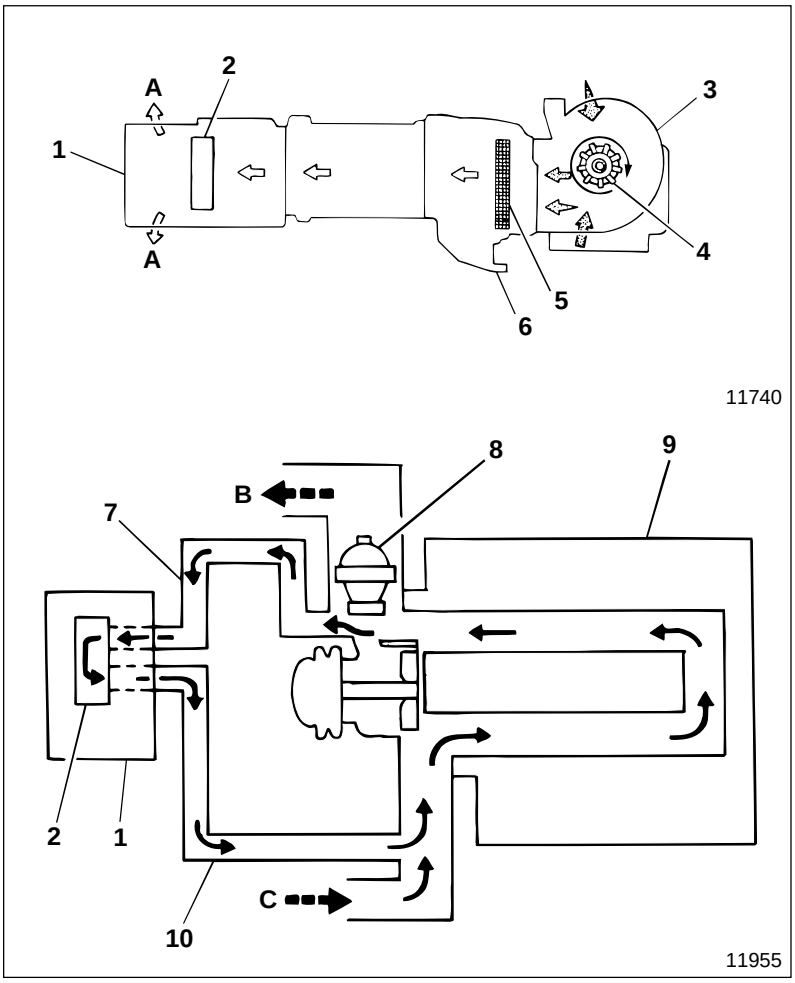

1 Heater unit
2 Heater core
3 Blower assembly
4 Fan
5 Air filter
6 Duct assembly
7 Heater hose (Heater in)
8 Thermostat
9 Engine
10 Heater hose (Heater out)

A : To duct
B : To radiator
C : From radiator

Outside air (Intake)

Inside air (Circulation)

Filtered air

- Warm engine coolant that has absorbed heat from engine **9** does not flow through thermostat **8** but circulates as follows:
  7→2→10→9
  ↑ ┘
- Air sent to heater unit **1** from blower assembly **3** is warmed by heater core **2** (heat exchanger). Then the ducts deliver the warmed air to the cab.

Heater Electric Circuit

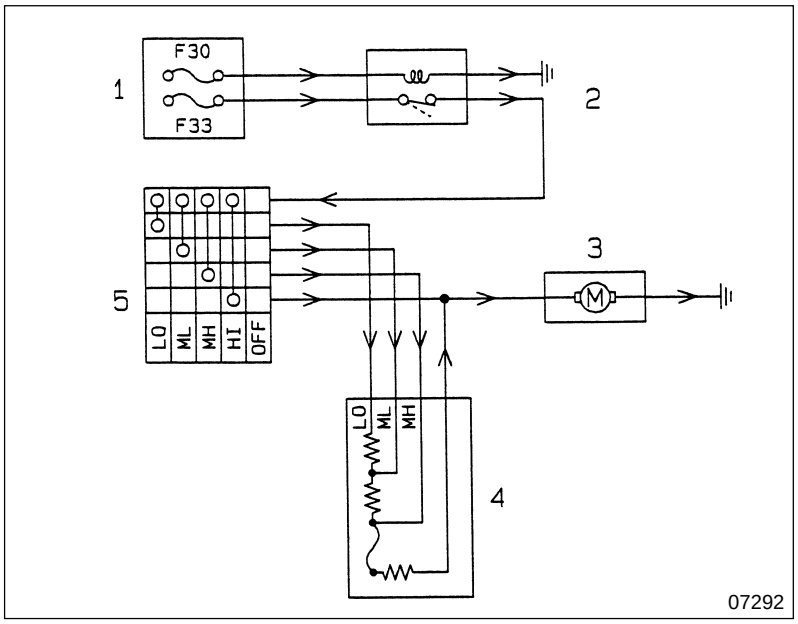

1 Fuse box
2 Blower fan relay
3 Blower motor
4 Blower resistor
5 Fan switch (Heater switch)

- The resistance of blower resistor **4** controls blower motor **3**, which in turn controls the air flow, except when the air flow is set to HI (high speed). When the air flow is set to HI, the current does not flow through the blower resistor.

Fan switch 5 set to LO position

- 1 (F30)→2 (coil)→Ground
- 1 (F33)→2 (contact point)→5 (LO)→4 (LO)→3→Ground

Fan switch 5 set to HI position

- 1 (F30)→2 (coil)→Ground
- 1 (F33)→2 (contact point)→5 (HI)→3→Ground

Fan switch 5 set to either ML or MH position

The current flows through blower resistor **4** in the same way as when set to LO position, routing ML or MH respectively instead of LO.

Air Duct

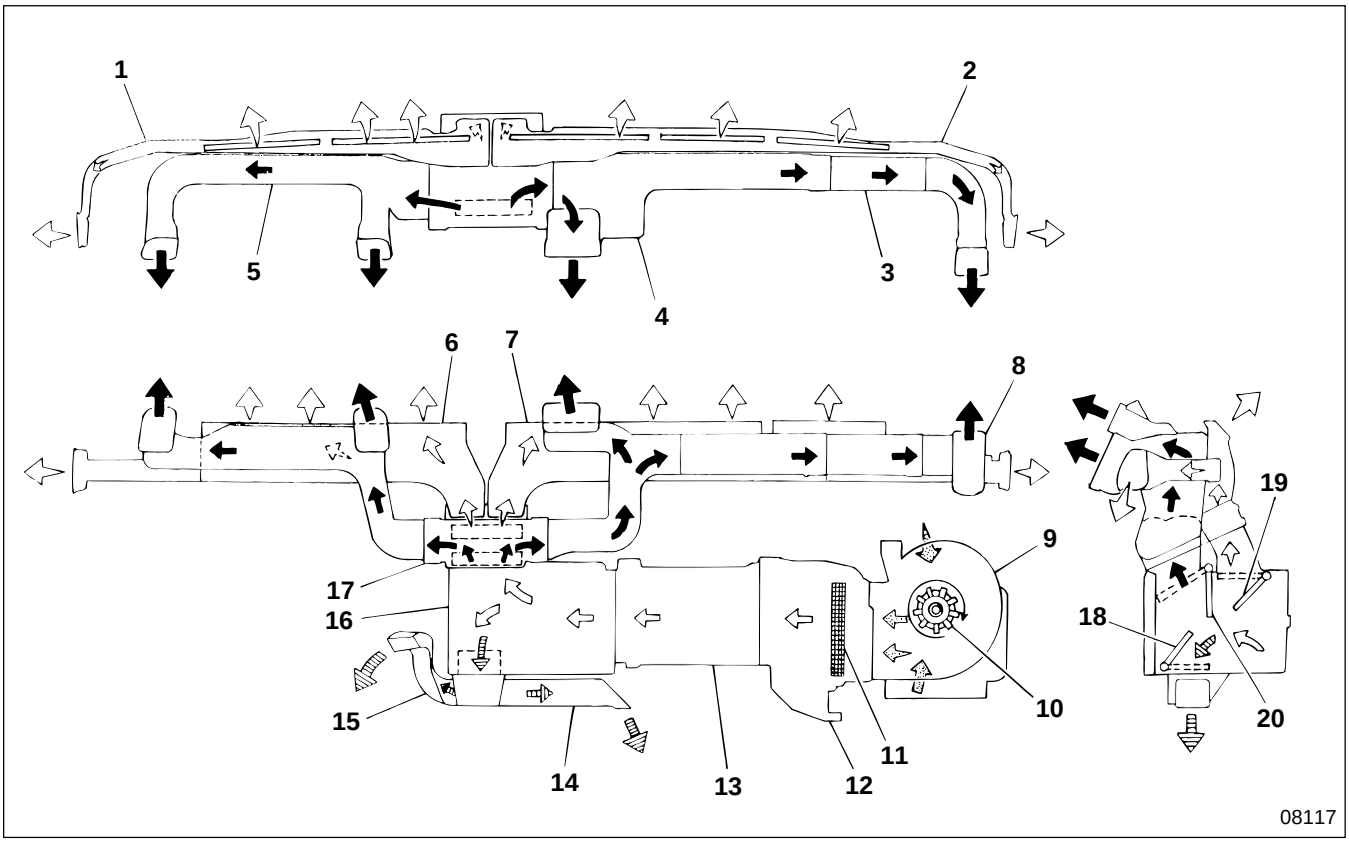

1 Defroster side duct, LH
2 Defroster side duct, RH
3 Face duct B
4 Center face duct
5 Face duct, LH
6 Front defroster, LH
7 Front defroster, RH
8 Face duct A
9 Blower assembly
10 Fan
11 Air filter
12 Duct assembly < without air-conditioner >
Cooling unit < with air-conditioner : option >
13 Joint duct
14 Foot duct, RH
15 Foot duct, LH
16 Heater unit
17 Center duct
18 Damper (FOOT)
19 Damper (DEF)
20 Damper (FACE)

Outside air (Intake) Inside air (Circulation) Filtered air (in heater and cooling unit)

Air (FACE) ( )Air (DEF) Air (FOOT)

Since dampers **18**, **19, 20** of heater unit **16** are opened and shut by the switching operation of the heater control assembly, the outside air and inside air coming from blower assembly **9** flow as illustrated.

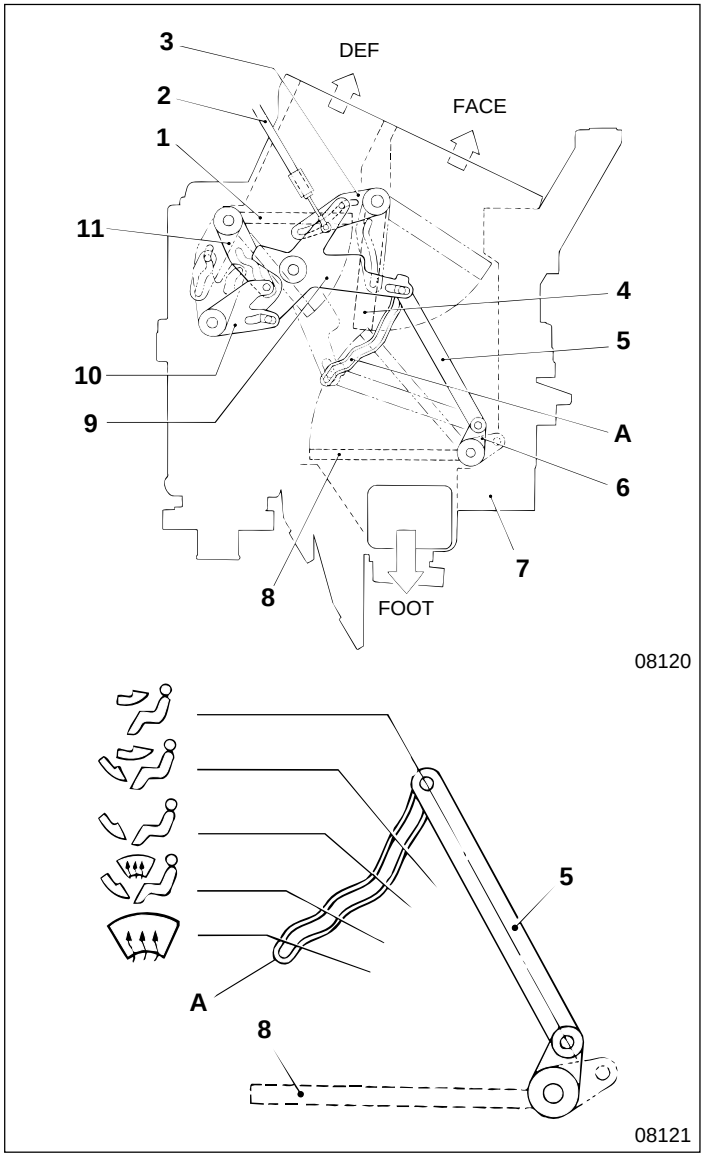

● **Mode changeover system**

1 Damper (DEF)
2 Mode changeover control cable
3 Lever
4 Damper (FACE)
5 Lever
6 Lever
7 Heater unit
8 Damper (FOOT)
9 Lever
10 Lever
11 Lever

A : Rail

- The opening and closing of dampers **1**, **4**, **8** is mechanically controlled by the movement of mode changeover control cable **2**, transmitted as follows:
  2→9→3→4 (FACE)
  →5→6→8 (FOOT)
  →10→11→1 (DEF)

  Levers **3**, **5**, **6**, **10**, **11** move together with lever **9**. Dampers **1**, **4** , **8** move together with levers **3**, **6**, **11**, the degree of opening is determined by the shape of the lever grooves.

- Lever **5** is connected to rail **A**. Since the lever moves along the groove of the rail, damper **8** (FOOT) can be opened and closed in combination with other modes to activate bi-level mode.

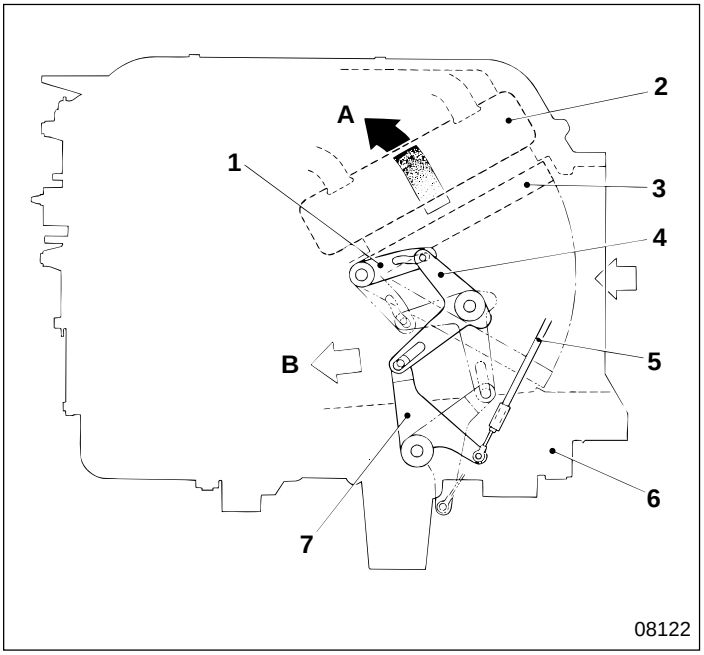

● **Air mixing control**

1 Lever
2 Heater core
3 Damper
4 Lever
5 Air mixing control cable
6 Heater unit
7 Lever

A : Warm air
B : Unwarmed air

- The degree of opening of damper **3** controls the flow of both air **A** that has passed through and been warmed by heater core **2**, and air **B** that has not been warmed.
- Damper **3** is mechanically operated by the movement of air mixing control cable **5**, transmitted as follows:
  5→7→4→1→3
  Lever 1 moves together with damper **3**.

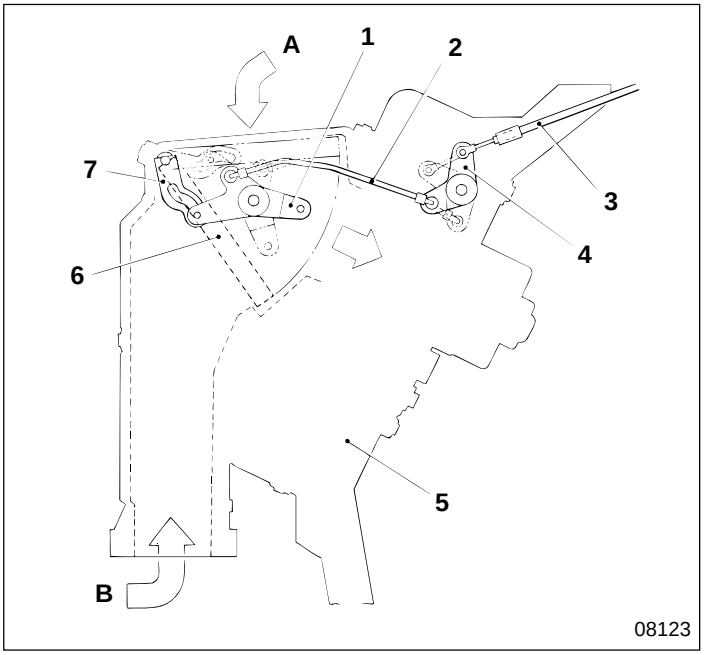

● **Air intake control**

1 Lever
2 Rod
3 Inside/outside air changeover control cable
4 Lever
5 Blower assembly
6 Damper
7 Lever

A : Inside air
B : Outside air

- Changeover of air intake from inside to outside is controlled by the opening and closing of damper **6**.
- Damper **6** is mechanically operated by the movement of inside/outside air changeover control cable **3**.
  3→4→2→1→7→6
  Lever 7 moves together with damper **6**.

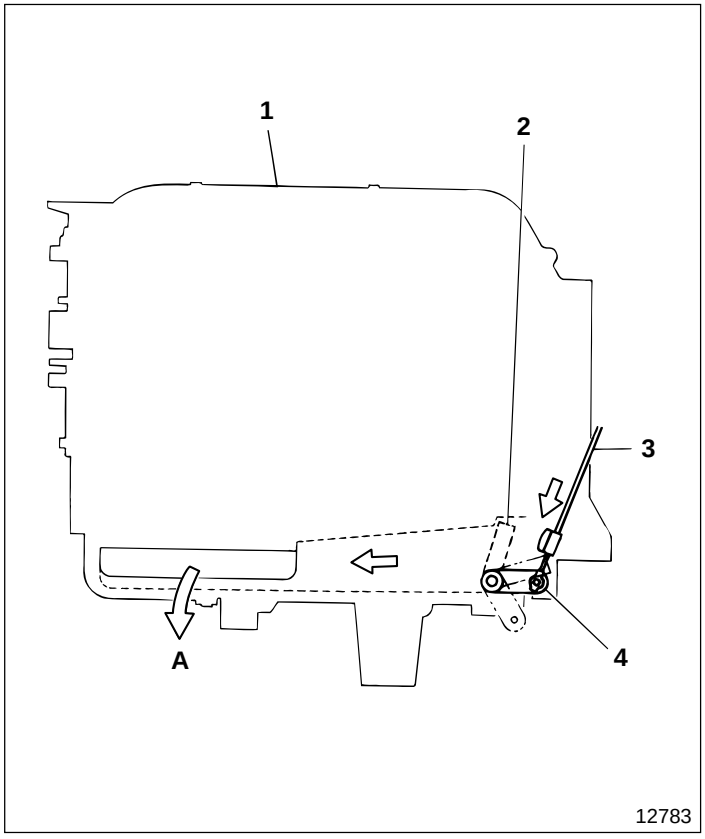

● **Air flow bypass changeover**

1 Heater unit
2 Damper
3 Air flow bypass changeover control cable
4 Lever

A : Air not warmed by heater core

- Damper **2** is opened and closed to change the air flow from warm air to air that has not passed through and been warmed by heater core **2**.
- Damper **2** is mechanically operated by the movement of air flow bypass changeover control cable **3**, transmitted as follows:
  3→4→2
  Lever **4** moves together with damper **2**.

Symptoms / Possible causes	Air does not flow from vents	Heater does not work well	Airflow control setting cannot be changed	Drafts from vents	Temperature control setting cannot be adjusted	Outside/inside air control cannot be changed	Air volume from vents unstable	Control switches operation heavy	Air flow bypass cannot be changed	Remarks
Blower motor coil broken or short-circuited	○									
Blower motor relay contact point melted, coil broken or short-circuited	○									
Blower resistor operation malfunctioning							○			
Mode damper opening and closing faulty			○	○				○		
Air mixing damper opening and closing faulty				○	○			○		
Inside/outside air changeover damper opening and closing faulty				○		○		○		
Heater control assembly faulty	○	○	○	○	○	○				
Thermostat does not close		○								Gr 14
Coolant amount insufficient		○								Gr 14
Connector connection faulty, harness broken or grounding faulty	○		○	○	○	○				
Fuse blown	○									
Heater pipes clogged, loose or connection faulty		○								
Duct connection faulty				○						
Heater unit clogged		○								
Control cable sliding movement faulty, installation faulty			○	○		○		○		
Control cable connecting lever of units bent			○	○		○		○		
Control cable connecting lever sliding parts of units worn or lubricated insufficiently			○	○		○		○		
Air flow bypass changeover damper opening and closing faulty									○	

HEATER HOSE

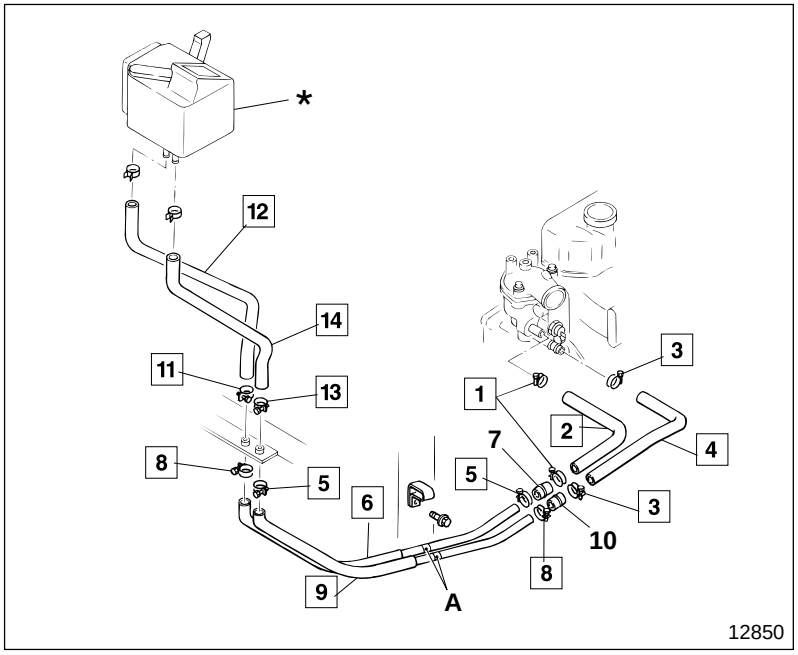

● **Disassembly sequence**

1 Hose clamp
2 Heater hose (Engine out)
3 Hose clamp
4 Heater hose (Engine in)
5 Hose clamp
6 Heater hose (Engine out)
7 Water pipe
8 Hose clamp
9 Heater hose (Engine in)
10 Water pipe
11 Hose clamp
12 Heater hose (Heater in)
13 Hose clamp
14 Heater hose (Heater out)

***** : Heater unit
A : White mark

NOTE

- **Drain engine coolant from radiator before removing hoses.** Gr 14
- **Make sure that white mark A on heater hoses 6, 9 are clearly visible before removing parts. If there are no marks, make identification marks before removing parts.**

● **Assembly sequence**

Follow the disassembly sequence in reverse.

CAUTION ⚠

- **Be sure that hoses are inserted securely to prevent coolant leaking.**
- **Make sure not to mix up heater hoses 2, 4, 6, 9, 12, 14 when connecting them because mistaken connection would damage the heater unit.**

◆ Service procedure

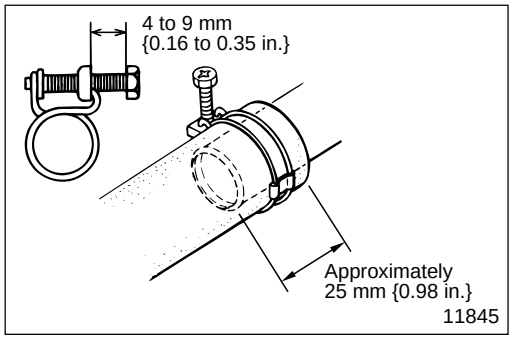

1 to **6** **8** **9** **11** to **14** **Installation of heater hose and hose clamp**

- Install heater hoses **2**, **4**, **6**, **9**, **12**, **14** conform to the dimension as illustrated.
- Tighten hose clamps **1**, **3**, **5**, **8**, **11**, **13** to conform to the dimension as illustrated.

M E M O

HEATER CONTROL

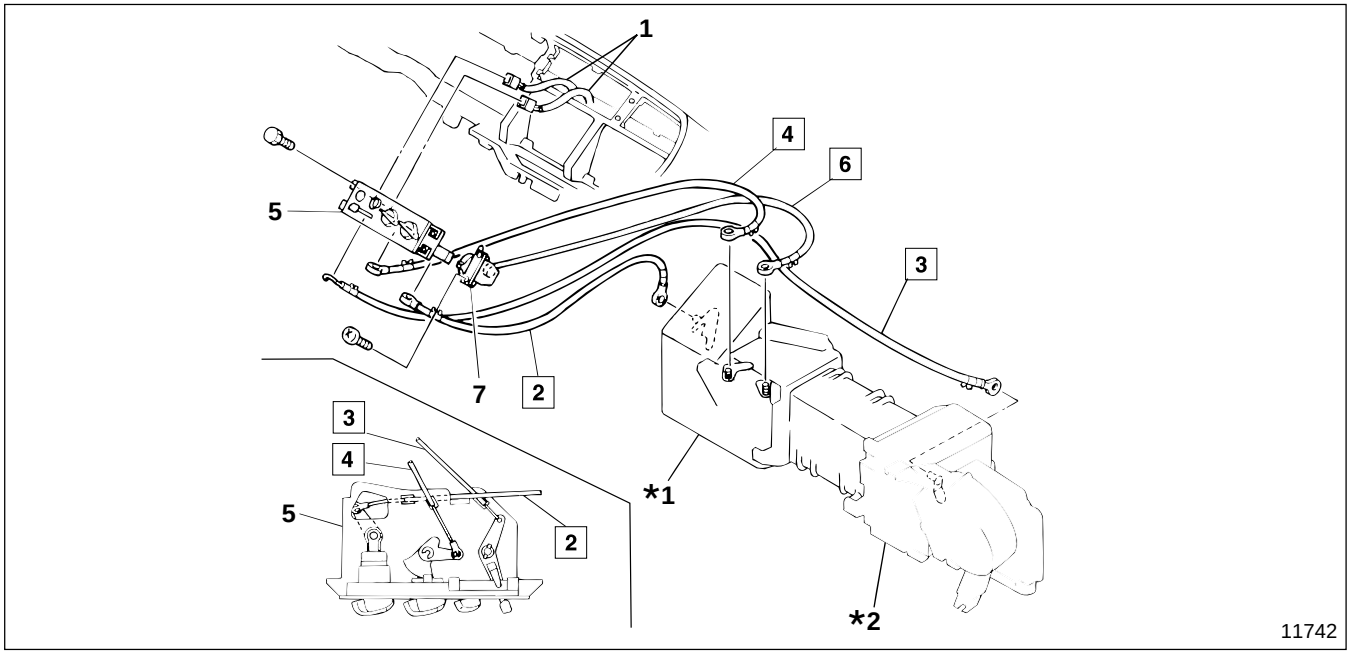

● **Disassembly sequence**

1 Harness
2 Mode changeover control cable
3 Inside/outside air changeover control cable
4 Air mixing control cable
5 Heater control assembly Gr 54
6 Air bypass changeover control cable
7 Air bypass control lever

***1** : Heater unit assembly P55-16
***2** : Blower assembly P55-16

● **Assembly sequence**

Follow the disassembly sequence in reverse.

◆ Service procedure

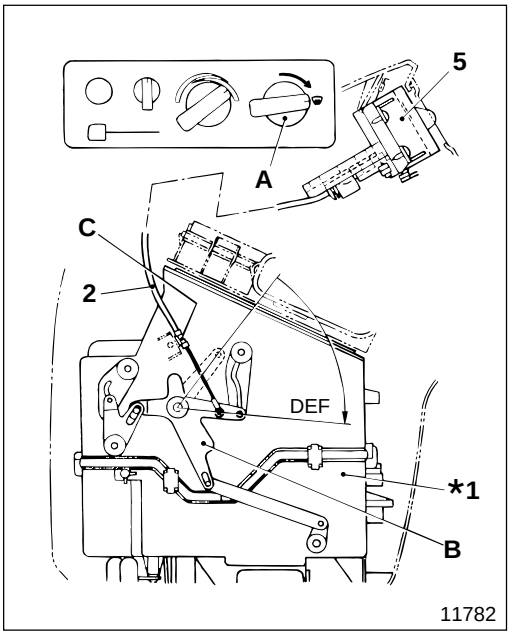

2 Installation of mode changeover control cable

- Turn mode changeover control dial **A** of heater control assembly **5** to (DEF).
- Turn mode changeover damper lever **B** of heater unit assembly ***1** to DEF.
- Under these conditions, install mode changeover control cable **2** onto mode changeover damper lever **B** and fasten it with clip **C**.

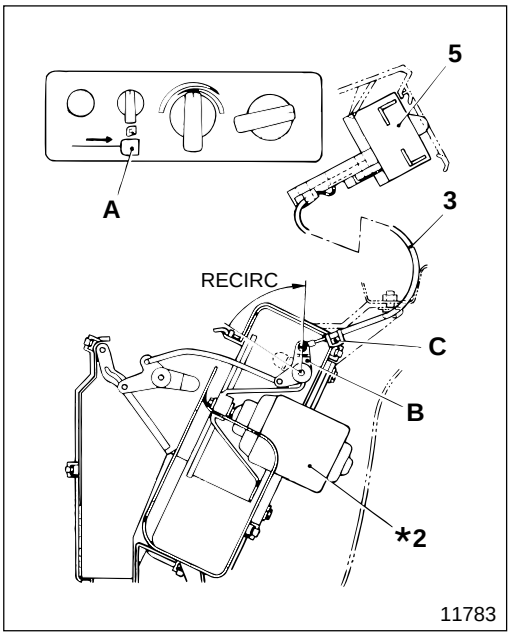

3 Installation of inside/outside air changeover control cable

- Set inside/outside changeover lever **A** of heater control assembly **5** to (RECIRC : Inside air).
- Turn inside/outside air changeover damper lever **B** of blower assembly ***2** to RECIRC.
- Under these conditions, install inside/outside air changeover control cable **3** onto inside/outside air changeover damper lever **B** and fasten it with clip **C**.

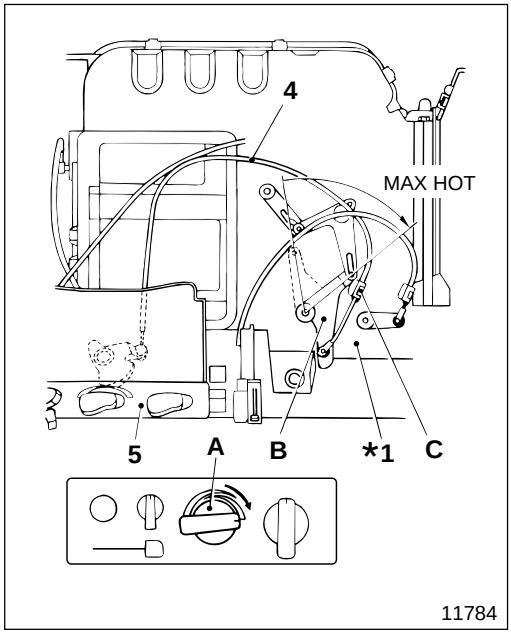

4 Installation of air mixing control cable

- Fully turn temperature control dial **A** of heater control assembly **5** clockwise to MAX HOT (maximum heating).
- Turn air mixing damper lever **B** of heater unit assembly ***1** to MAX HOT (maximum heating).
- Under these conditions, install air mixing control cable **4** onto air mixing damper lever **B** and fasten it with clip **C**.

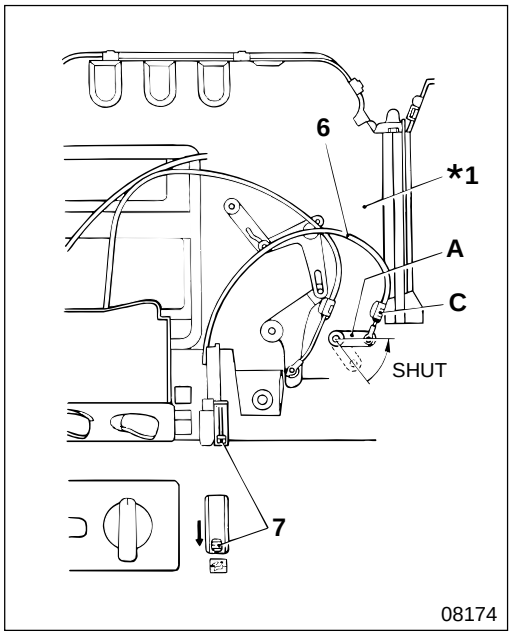

6 Installation of air bypass changeover control cable

- Set air bypass changeover control lever **7** to SHUT.
- Set air bypass lever **A** of heater unit assembly ***1** to SHUT.
- Under these conditions, install air bypass changeover control cable **6** onto air bypass lever **7** and fasten it with clip **C**.

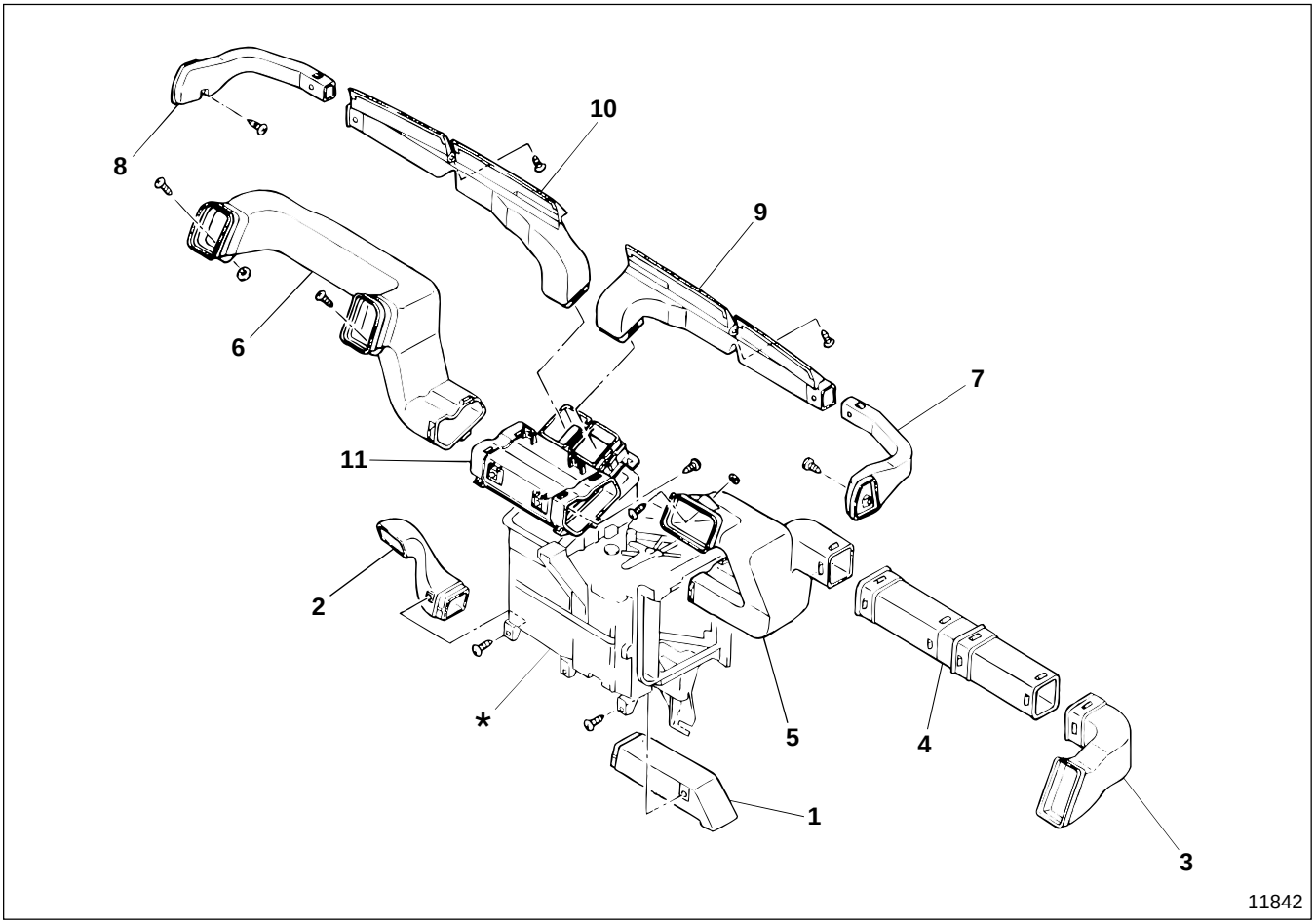

● **Disassembly sequence**

1 Foot duct, RH
2 Foot duct, LH
3 Face duct A
4 Face duct B
5 Center face duct
6 Face duct, LH
7 Defroster side duct, RH
8 Defroster side duct, LH
9 Front defroster duct, RH
10 Front defroster duct, LH
11 Center duct

***** : Heater unit

● **Assembly sequence**

Follow the disassembly sequence in reverse.

HEATER UNIT AND BLOWER ASSEMBLY

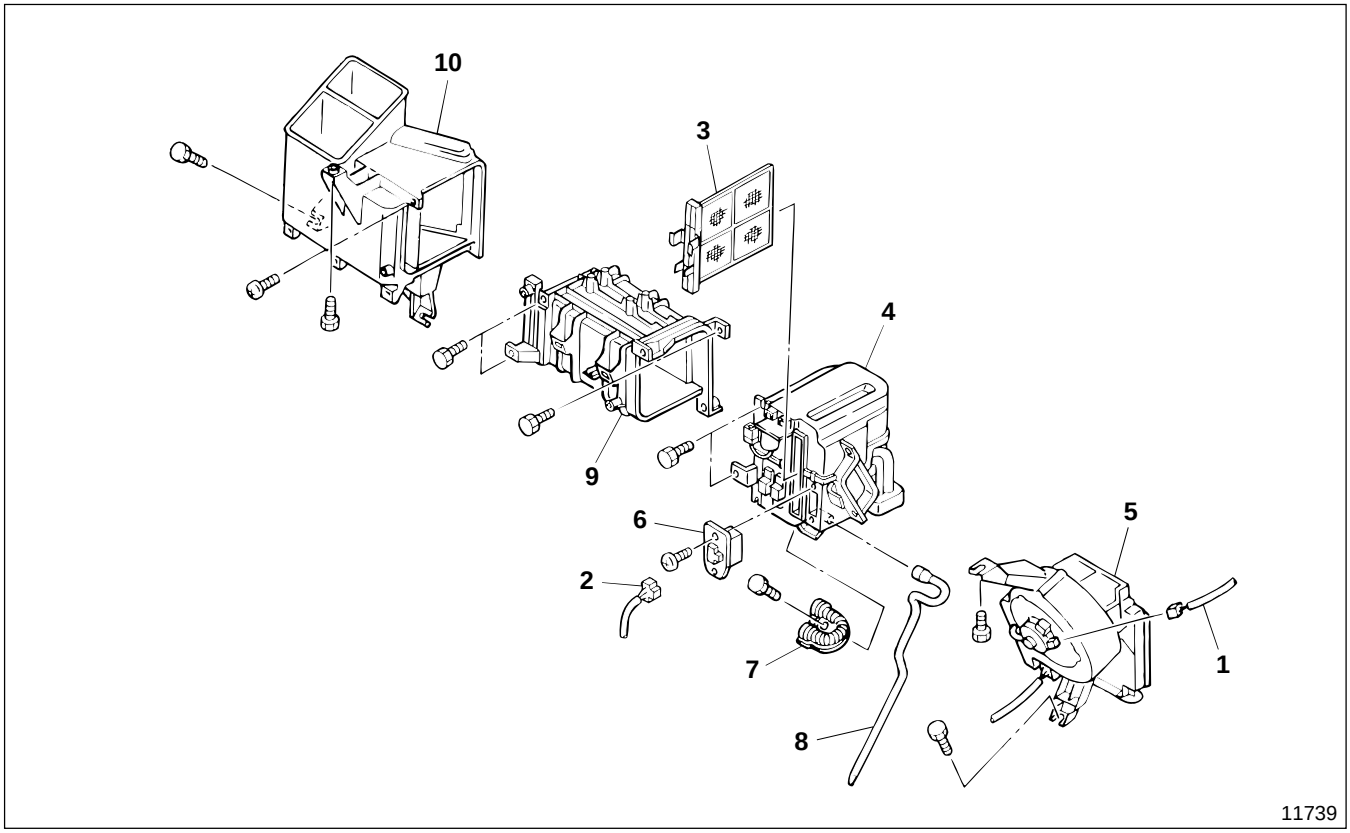

● **Disassembly sequence**

1 Harness
2 Harness
3 Air filter
4 Duct assembly
5 Blower assembly Gr 54
6 Blower resistor Gr 54
7 Cover
8 Drain hose
9 Joint duct
10 Heater unit assembly

● **Assembly sequence**

Follow the disassembly sequence in reverse.

FK.FM

SERVICE MANUAL

FOREWORD

This Service Manual contains maintenance and repair methods for personnel involved in the maintenance and repair of the Mitsubishi Fuso Truck FK, FM Series. Read this manual carefully as an aid to providing correct, efficient and fast maintenance. Please note, however, that due to continued vehicle improvements the specifications and numbers given for use in maintenance might change without notice. If you have any questions, or encounter a problem, please do not hesitate to contact your nearest Mitsubishi Fuso Dealer or Distributor.

May 1995

HOME

GROUP INDEX

HOW TO READ THIS MANUAL

GENERAL 00

MAINTENANCE SCHEDULE 01

REMOVAL AND INSTALLATION OF ENGINE 10

ENGINE 11

LUBRICATION 12

FUEL AND ENGINE CONTROL 13

COOLING 14

INTAKE AND EXHAUST 15

CLUTCH 21

MANUAL TRANSMISSION
< M060S5, S6, M070S6 > 22A

< M8S2x5 > 22B

AUTOMATIC TRANSMISSION 23

PROPELLER SHAFT 25

FRONT AXLE 26

REAR AXLE 27

WHEEL AND TIRE 31

FRONT SUSPENSION 33

REAR SUSPENSION 34

BRAKE
< AIR OVER HYDRAULIC BRAKE > 35A

< FULL AIR BRAKE > 35B

PARKING BRAKE
< CENTER PARKING BRAKE > 36A

< WHEEL PARKING BRAKE > 36B

STEERING 37

FRAME 41

CAB 42

ELECTRICAL 54

AIR-CONDITIONER 55A

HEATER 55B

MITSUBISHI
FUSO

FK.FM
Service Manual

How to Read this Manual

Table of Contents

BACK

HOME

MITSUBISHI FUSO TRUCK OF AMERICA, Inc.

Pub No. TWME9503-H

HOW TO READ THIS MANUAL

HOW THIS MANUAL IS COMPILED ii

GENERAL EXPLANATION OF THIS MANUAL iii

TERMS AND UNITS xiii

HOW TO READ THIS MANUAL

How This Manual Is Compiled

- This manual is compiled by classifying various systems into certain groups.
- Each group contains specifications; troubleshooting; maintenance service standards; ⓣ tightening torque; ⚠ lubricant, fluid and sealant; 🔧 special tools; and service procedure.
- Group 54 Electrical is divided into subgroups 1 to 9 and each subgroup has its own index No. ((100) to (999)) for systematic documentation.

  The index No. has the following format:

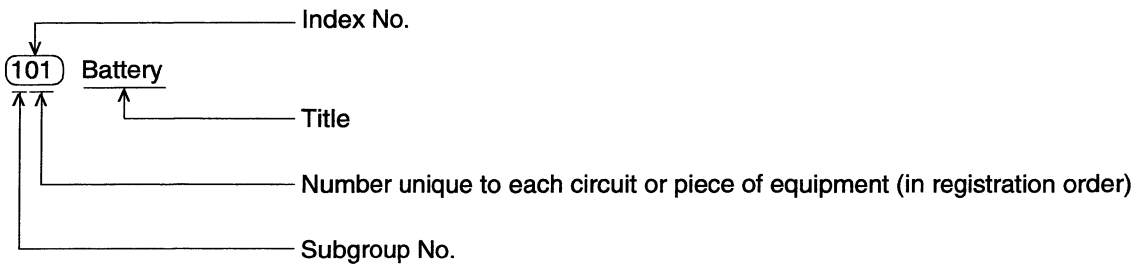

- Page enumeration is independent by every group where first page is always 1.

Group No.	Group denomination	Contents
00	General	Model coding system, power train table, chassis No., engine No., power train label, vehicle identification No., precautions for maintenance operation, table of standard tightening torques, connector configuration chart
01	Maintenance schedule	Maintenance schedule tables, maintenance operations, lubrication
10	Removal and installation of engine	Removal and installation of engine from vehicle
11	Engine	Engine body
12	Lubrication	Lubrication system, oil pressure system
13	Fuel and engine control	Fuel system, engine control, pre-stroke control injection pump system
14	Cooling	Cooling system
15	Intake and exhaust	Intake and exhaust system, turbocharger, intercooler
21	Clutch	Clutch body and clutch control system
22A	Manual transmission < M060S5, S6, M070S6 >	Transmission body and transmission control system
22B	Manual transmission < M8S2x5 >	Transmission body and transmission control system
23	Automatic transmission	Transmission control system, oil cooler system
25	Propeller shaft	Front and rear propeller shafts, center bearing assembly
26	Front axle	Front axle and wheel alignment
27	Rear axle	Axle drive mechanism
31	Wheel and tire	Wheel and tire
33	Front suspension	Leaf suspension mechanism
34	Rear suspension	Leaf suspension mechanism

Group No.	Group denomination	Contents
35A	Brake < Air over hydraulic brake >	Brake mechanism, dual brake valve, brake booster (airmaster), air compressor, air dryer, exhaust brake system
35B	Brake < Full air brake >	Brake mechanism, dual brake valve, air compressor, air dryer, exhaust brake system
36A	Parking brake < Center parking brake >	Control system, center brake body
36B	Parking brake < Wheel parking brake >	Control system, parking brake control valve, spring brake valve
37	Steering	Steering system, power steering booster, oil pump
41	Frame	Frame repair
42	Cab	Cab mounting and tilt, door, exterior fittings, interior fittings
54	Electrical	Power supply, charging and grounding system, engine start and stop systems, lighting system, meter system, indicator and warning systems, cab electric devices, chassis electric devices, engine and transmission electric devices
55A	Air-conditioner	Air-conditioner
55B	Heater	Heater

General Explanation of This Manual

● **Specifications**
Particulars relative to maintenance service are made.

● **Structure and operation**
(1) Regarding conventional equipment, descriptions are made in brief.
(2) Regarding new equipment, descriptions of system and operating condition are made in detail.

● **Troubleshooting**
Symptoms of troubles and possible causes are described comparatively.

● **Inspection and adjustment mounted in vehicle**
Descriptions are made regarding inspection and adjustment of units mounted in vehicle.

● **Service procedure**
In principle, an explanation is given at the spread title page so that the service procedure can be understood. Servicing points are explained as a supplementary explanation.

HOW TO READ THIS MANUAL

Regarding the design of this manual

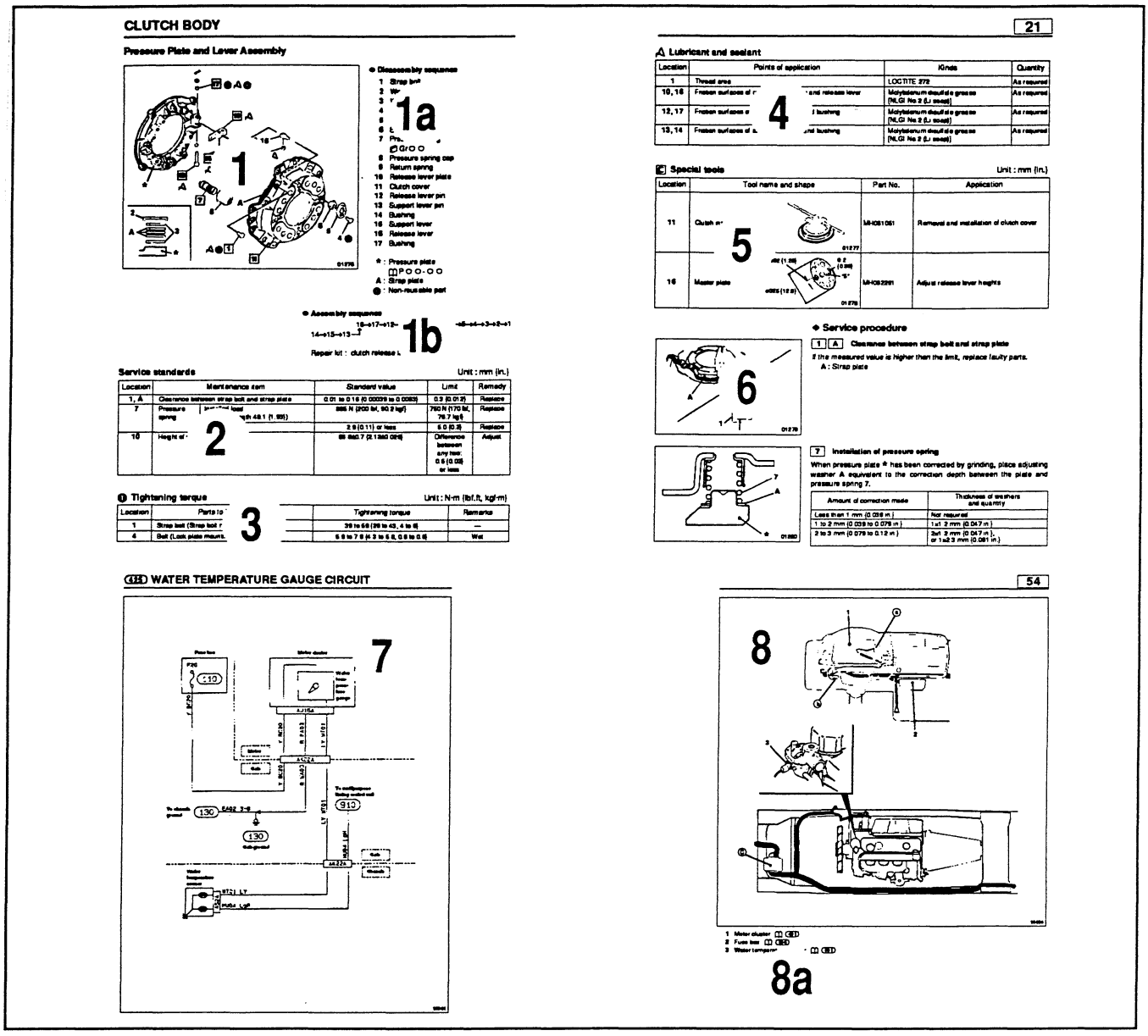

1. .....Illustration for disassembly and assembly or removal and installation : 3-D exploded view of component parts is displayed.
   1a. .....Names of parts show an example of the disassembly (removal) sequence.
   1b. .....When the assembly (installation) sequence differs from the disassembly (removal) sequence, an example of the assembly (installation) sequence is shown.
2. .....Service standards are shown collectively, classified by location.
3. .....Tightening torques are shown collectively, classified by location.
4. .....Points of lubricant, fluid and sealant application are shown collectively, classified by location.
5. .....Special tools to be used are shown collectively, classified by location.
6. .....When it is considered hard to understand the service procedure, just by the foregoing description, a supplementary description of the service procedure is given.
7. .....Various system circuits are illustrated starting from the fuses. Battery to fuse wiring is treated as a power supply circuit.
8. .....Circuit diagram of parts, connectors and harnesses.
   8a. .....Part names.

1. Illustration for disassembly and assembly or removal and installation

This shows that the appropriate service procedure is described in the text.

This shows the key No. of the part. In the text, this No., is referred to uniformly throughout.

CLUTCH BODY

Pressure Plate and Lever Assembly

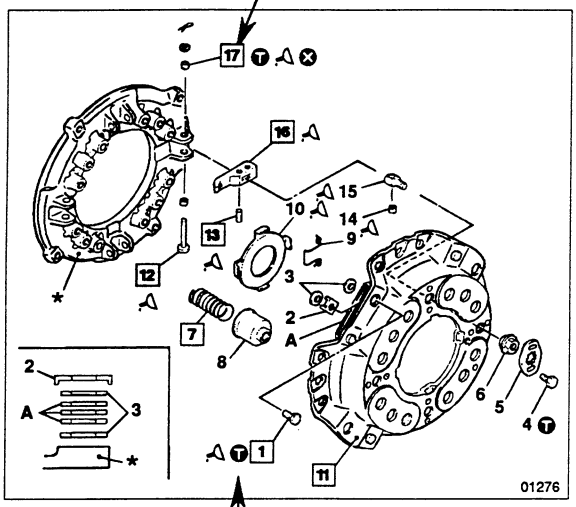

● Disassembly sequence

1 Strap bolt
2 Washer
3 Washer
4 Bolt
5 Lock plate
6 Support nut
7 Pressure spring
Gr ○ ○
8 Pressure spring cap
9 Return spring
10 Release lever plate
11 Clutch cover
12 Release lever pin
13 Support lever pin
14 Bushing
15 Support lever
16 Release lever
17 Bushing

* : Pressure plate
P ○ ○ - ○ ○
A : Strap plate
⊗ : Non-reusable part

● Assembly sequence

16→17→12→10→9→8→7→6→5→4→3→2→1
14→15→13→↑

Repair kit : clutch rel e lever kit

This shows an example of the disassembly (removal) sequence.

This shows that the service procedure is described in another section.

P ○ ○ - ○ ○
: shows reference page within the same group.

Gr ○ ○
: shows reference group within the same book.

No service procedure is referred to in this section, but the item can be an objective of various procedures.

Meaning of symbols

- T : shows that the tightening torque is specified.
- : shows that application of lubricant, fluid or sealant is required.
- ⊗ : shows that the part should not be reused.

This is shown when the assembly (installation) sequence is not the reverse of the disassembly (removal) sequence.

This shows that a repair kit is available.

2. Service standards table

Only the relevant service standards are shown.

Service standards Unit : mm {in.}

Location	Maintenance item		Standard value	Limit	Remedy
1, 11	Clearance between strap bolt and strap plate		0.01 to 0.16 {0.00039 to 0.0063}	0.3 {0.012}	Replace
7	Pressure spring	Installed load (Installed length 49.1 {1.93})	835 N {185 lbf, 85 kgf}	710 N {160 lbf, 72.3 kgf}	Replace
		Tilt	2.9 {0.11} or less	5.0 {0.20}	Replace

This shows the key No. of the relevant part.

3. Tightening torque table

This shows specified tightening torque.

Ⓣ Tightening torque Unit : N·m {lbf.ft, kgf·m}

Location	Parts to be tightened	Tightening torque	Remarks
1	Strap bolt (Strap bolt mounting)	39 to 59 {29 to 43, 4 to 6}	—
4	Bolt (Lock plate mounting)	5.9 to 7.8 {4.3 to 5.8, 0.6 to 0.8}	Wet

This shows that the item is to be tightened wet.

This shows the key No. of the relevant part.

4. Lubricant, fluid and sealant table

Only the relevant lubricant, fluid and sealant are shown.

This shows the application point.

Lubricant, fluid and sealant

Location	Points of application	Kinds	Quantity
1	Thread area of bolt	LOCTITE 272	As required
10, 16	Friction surfaces of release lever plate and release lever	Molybdenum disulfide grease [NLGI No.2 (Li soap)]	As required

This shows the key No. of the relevant part.

This shows the specified brand.

5. Special tools table

Only the relevant special tools are shown.

Purpose of special tools is shown.

Special tools

Unit : mm {in.}

Location	Tool name and shape	Part No.	Application
11	Clutch installer 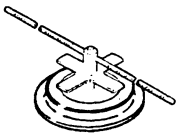 01277	MH061051	Removal and installation of clutch cover
16	Master plate 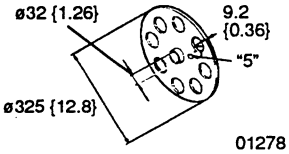 01278	MH062291	Adjust release lever heights

This shows the key No. of the relevant part.

Quote this number when placing an order for the part.

6. Service procedure

This indicates a special service tool.

This shows the key No. of the relevant part.

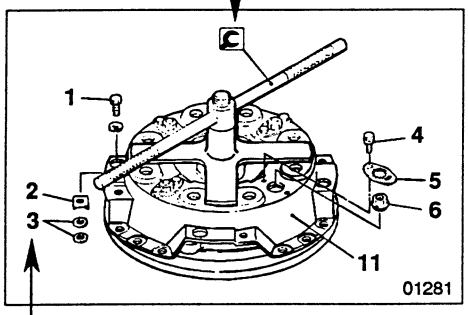

01281

11 Removal and installation of clutch cover

- Depress pressure spring **7** using clutch installer, then remove the following parts:
  Strap bolt **1**, washer **2**, washer **3**, bolt **4**, lock plate **5**, support nut **6**
- Loosen the clutch installer gradually, then remove clutch cover **11** when the pressure spring is fully released.
- For installation, follow the removal sequence in reverse.

Servicing procedures of disassembly (removal), assembly (installation), inspection, adjustment, etc. are shown collectively.

The key No. referred to in the text is always the same as the key No. shown in the illustration.

7. Circuit Description

- The circuits show systems classified by index numbers.
- Only the functioning wires in the system are described. When a wire is connected to the system circuit, but does not function in the system, the wire is referred to by an index number. (*4-1*)
- The connector installation point mark corresponds to the marks in the vehicle layout so that the connector installation points can be checked during inspection. (*3-1, 3-2*)
- In basic descriptions, the fuse box is considered as the power source for a circuit. The circuit from the battery to the fuse box is separately described as a power circuit and referred to by the index number in each circuit. (*4-2*)
  However, for circuits that require a description of the circuit from the battery, the battery is considered as the power source.
- Switches and relays in the circuit diagram are shown in the state where no current flows through the circuit.

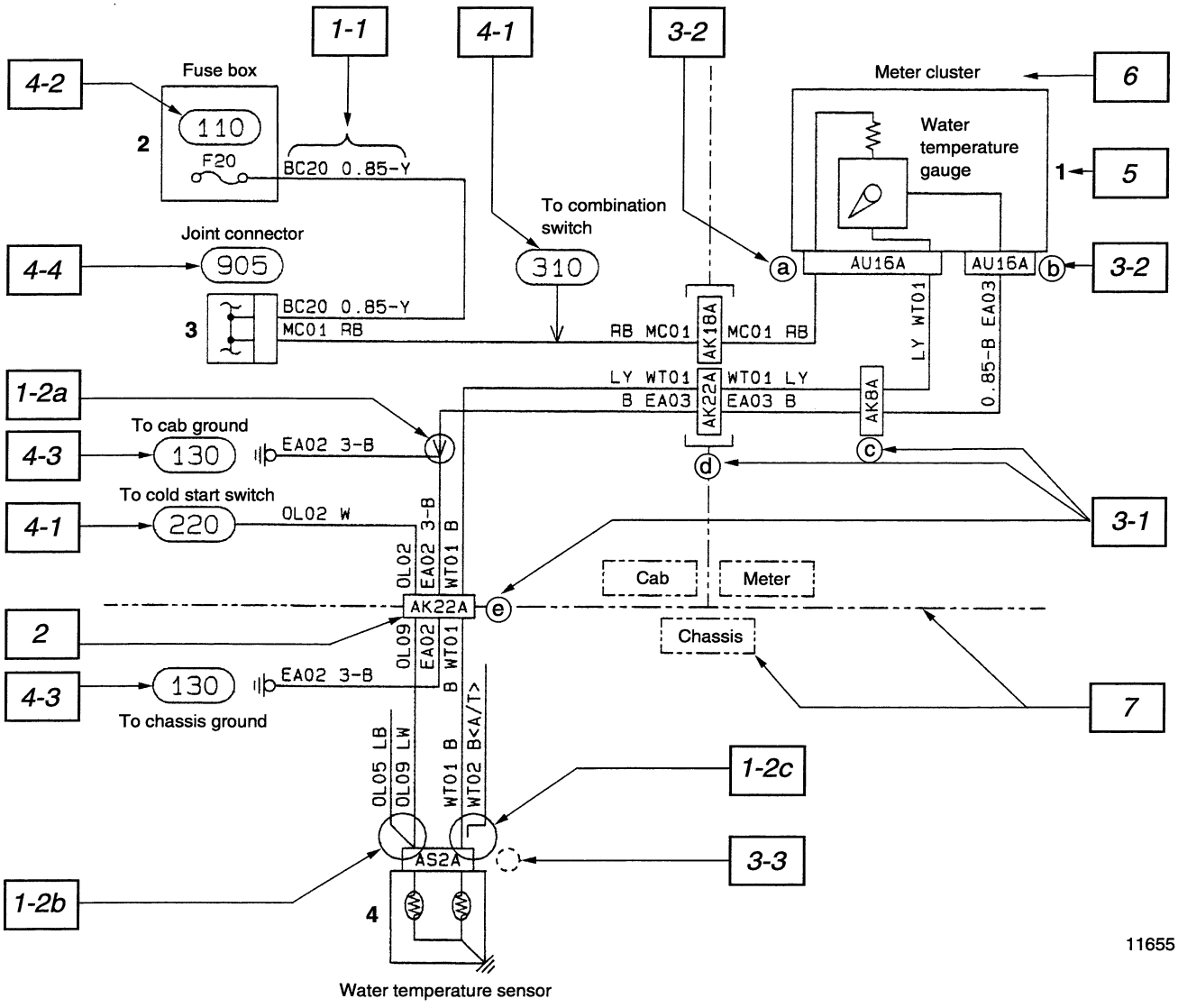

- Items described in circuit diagram
  - *1* Wire
  - *2* Connector
  - *3* Connector installation point mark
  - *4* Index number
  - *5* Key number
  - *6* Part name
  - *7* Indication of harness installation area on the vehicle

For details, see overleaf.

1 Wire

1-1 Circuit number, cross section of conductor and color of wire are indicated for each wire.

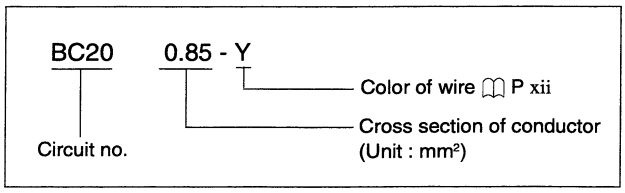

As 0.5 mm² cross section wire is the most commonly used, the cross section indication is omitted when it is 0.5 mm². All the other figures are indicated as illustrated.

Example : 0.5 mm²; BC20 Y 0.85 mm²; BC20 0.85-Y 5 mm²; BC20 5-Y

1-2 Different types of wire connection are indicated as follows:

1-2a When wire is connected normally.

(Indicated by an arrow. The arrow direction, however, does not indicated the current flow direction.)

1-2b When two or more wires are connected to a connector terminal.

1-2c When the type of wire or connection differs according to specifications.

2 Connector

Connector type is indicated in a box □ . Whether the connector is female or male is not indicated. 🖻 Gr ○ ○

Though several connectors can be installed in one point on an actual vehicle, only the connector related to the system is indicated in the circuit diagram.

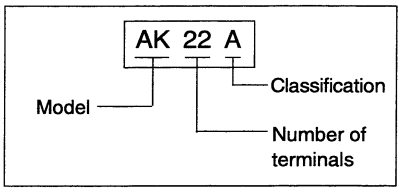

3 Connector installation point mark

Connector installation point marks (ⓐ, ⓑ, ⓒ ...) indicate the installation positions on a vehicle corresponding to the vehicle layout. The marks are indicated only where the actual installation position on the vehicle is difficult to check or when you need to distinguish the connector in question from among several other connectors at the same point.

3-1 When the actual position on the vehicle is difficult to check.

A mark is indicated for each connector. When several connectors are installed at one point they are indicated by a mark in [ ].

3-2 When it is difficult to identify the connector in question because there are several connectors of the same type.

3-3 When the connector installation point is clear enough, the mark is not indicated.

4 Index number

The index number (110) in a circuit diagram shows the connecting destination that is not directly used in the system or indicates another diagram that provides a detailed description of each unit. This can be used as a reference to check the relationship with other circuits. Different types of index numbers are indicated as follows:

4-1 To show the connecting destination with another circuit.

4-2 To show the power circuit from the battery and the connecting destination with another circuit connected to the fuse.

4-3 To show the grounding position on the vehicle and the connecting destination of another circuit that is grounded.

4-4 To show a diagram that describes the details of a unit that has complex wiring.

5 Key number

Key numbers correspond to those in the vehicle layout.

6 Part name

Part names are preceded by key numbers.

7 Installation area of harness on the vehicle

This indicates the area where the harness is installed on the vehicle using border lines so that the connector installation positions can be checked easily.

8. Vehicle layout description

- Vehicle layout describes installation points of parts, connectors and harnesses.

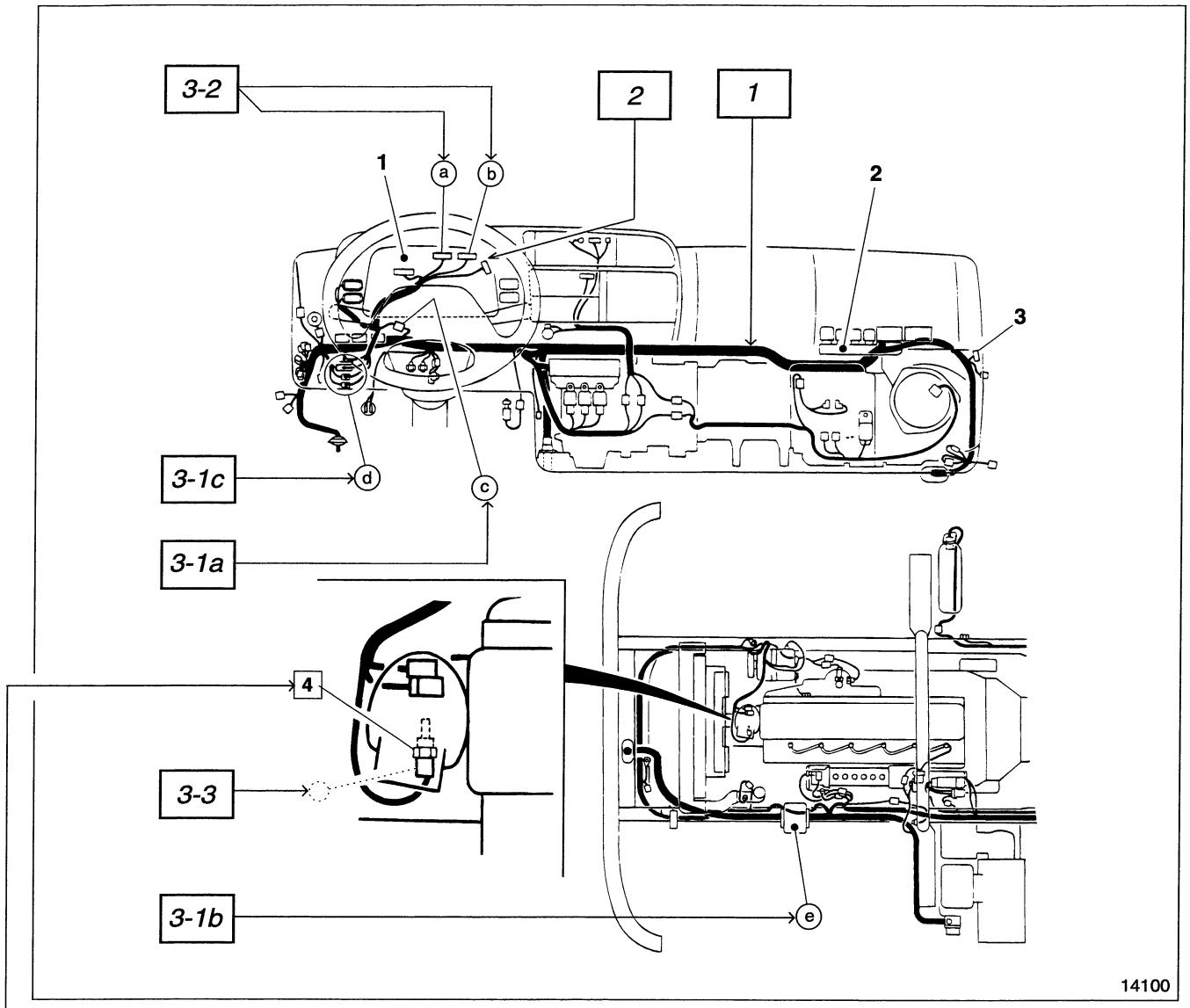

1 Meter cluster 📖 (401)
2 Fuse box 📖 (104)
3 Joint connector 📖 (905)
4 Water temperature sensor Gr 14

8-1
4
5
6
8-2
9

- Items described in vehicle layout
  - *1* Wire
  - *2* Connector
  - *3* Connector installation point mark
  - *4* Index number
  - *5* Key number
  - *6* Part name
  - (*7* Described only in circuit diagram)
  - *8* Reference mark
  - *9* Reference group

For details, see overleaf.

1 Wire

This indicates the wiring status of the harness actually installed on the vehicle.

2 Connector

The connector installation point is indicated briefly (in a two dimensional or three dimensional drawing).

3 Connector installation point mark

The connector installation point marks are normally indicated clockwise, starting from the top left of the layout. The marks correspond to those in the circuit diagram. However, some of the marks directly indicated in the circuit diagram are indicated indirectly as follows in the vehicle layout.

3-1 When it is difficult to recognize the connector position on the actual vehicle

3-1a Indicates the connector in question.

3-1b Indicates the connector box or bracket for the connector in question, but does not indicate the connector itself.

3-1c Indicates the area where connectors, including the one in question, are located, but does not indicate the connector itself.

(This indication is used when several connectors are installed in one area and the connectors are not fixed with clips, and it is difficult to identify the actual position of the connector in question solely by the wiring status of the harness.)

3-2 When connectors of the same type are located closely together, and it is difficult to identify which is the one in question

3-3 Marks are not indicated when the connector position is clear enough.

4 Index number

In the vehicle layout, the index number is indicated so that parts can be easily inspected. For this reason, index numbers do not indicate the connecting destination of a circuit, as in the circuit diagram, but indicate the numbers where removal and installation, inspection, or adjustment procedures are described.

5 Key number

Key numbers are normally indicated clockwise, starting from the top left of the layout. The numbers correspond to those in the circuit diagram. When the key number is enclosed in a box, the service procedure for the part is described.

6 Part name

(*7* Described only in circuit diagram)

8 Reference mark

Two types of reference mark are indicated as follows:

8-1 When referring to a part in the same group : 🕮

8-2 When referring to a part in another group : 📦

9 Reference group

HOW TO READ THIS MANUAL

● Wire Colors

Example: WB means a wire whose ground color is white and whose stripe is black.

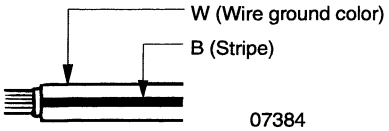

07384

Wire ground color		Wire ground color + Stripe							
W	White	WR	White red	WB	White black	WL	White blue	WG	White green
B	Black	BW	Black white	BY	Black yellow	BR	Black red		
R	Red	RW	Red white	RB	Red black	RY	Red yellow	RG	Red green
Y	Yellow	YR	Yellow red	YB	Yellow black	YG	Yellow green	YL	Yellow blue
G	Green	GW	Green white	GR	Green red	GY	Green yellow	GB	Green black
Br	Brown	BrW	Brown white						
L	Blue	LW	Blue white	LR	Blue red	LY	Blue yellow	LB	Blue black
Lg	Yellow green	LgR	Yellow green red	LgY	Yellow green yellow	LgB	Yellow green black	LgW	Yellow green white
O	Orange								
P	Pink	PB	Pink black						

RL	Red blue
YW	Yellow white
GL	Green blue
LO	Blue orange

● Sealed Wire

A sealed wire is clearly identified as follows:

Example

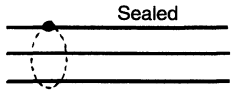

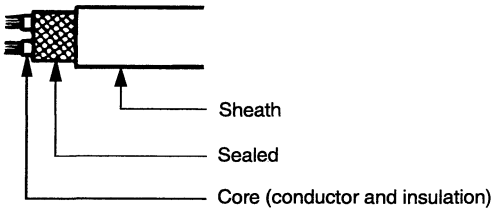

07385

● Symbol Mark

Battery	Fuse	High current fuse	Motor	Lamp	Switch
				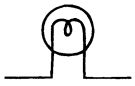	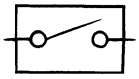

Switch	Ground	Diode	Emitting diode	Zener diode	Condenser
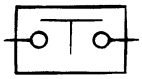			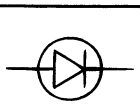		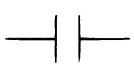

Transistor	Relay	3-way magnetic valve
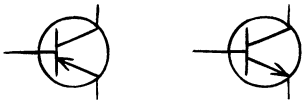	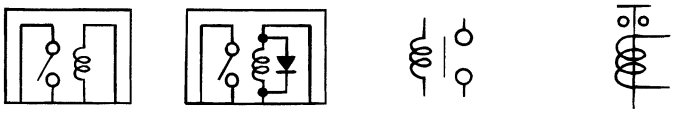	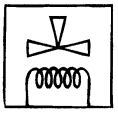

Terms and Units

The terms and units in this manual are defined as follows.

- This service manual contains important cautionary instructions and supplementary information under the following four headings which identify the nature of the instructions and information:

DANGER⚠ ——— Precautions that should be taken in handling potentially dangerous substances such as battery fluid and coolant additives.

WARNING⚠ ——— Precautionary instructions, which, if not observed, could result in serious injury or death.

CAUTION⚠ ——— Precautionary instructions, which, if not observed, could result in damage to or destruction of equipment or parts.

NOTE Suggestions or supplementary information for more efficient use of equipment or a better understanding.

- **Front and rear**

The forward running direction of the vehicle is the front and the reversing direction is the rear.

- **Left and right**

Left hand side and right hand side, when facing the forward running direction of the vehicle, are respectively left and right.

- **Terms of service standards**

(1) Standard value

Standard value dimensions in designs indicating: the design dimensions of individual parts, the standard clearance between two parts when assembled, and the standard value for an assembly part, as the case may be.
The figure in [ ] is the basic diameter.

(2) Limit

When the value of a part exceeds this, it is no longer serviceable in respect of performance and strength and must be replaced or repaired.

- **Tightening torque**

Excessive or insufficient tightening torque has particular importance in respect of performance. Accordingly, tightening torque is specified in locations that are to be tightened.
Where there is no specified figure for tightening torque, follow the table covering standard tightening torques.
When the item is to be tightened in a wet state, wet is indicated. Where there is no indication, read it as dry, and tighten at specified torque.

- **Unit**

Length, weight, surface area and capacity are in SI units. Imperial and metric units are given in brackets. Temperatures are given in degrees Celsius with degrees Fahrenheit given in brackets.

BACK HOME

MITSUBISHI FUSO

FK.FM

Service Manual

1996 Group 00 - General

1997 Model Changes

1998 Model Changes

1999 Model Changes

2000 Model Changes

2001 Model Changes

MITSUBISHI FUSO TRUCK OF AMERICA, Inc.

MITSUBISHI FUSO

Service Manual

Table of Contents

BACK

HOME

FK/FM 2001
Model Year Changes

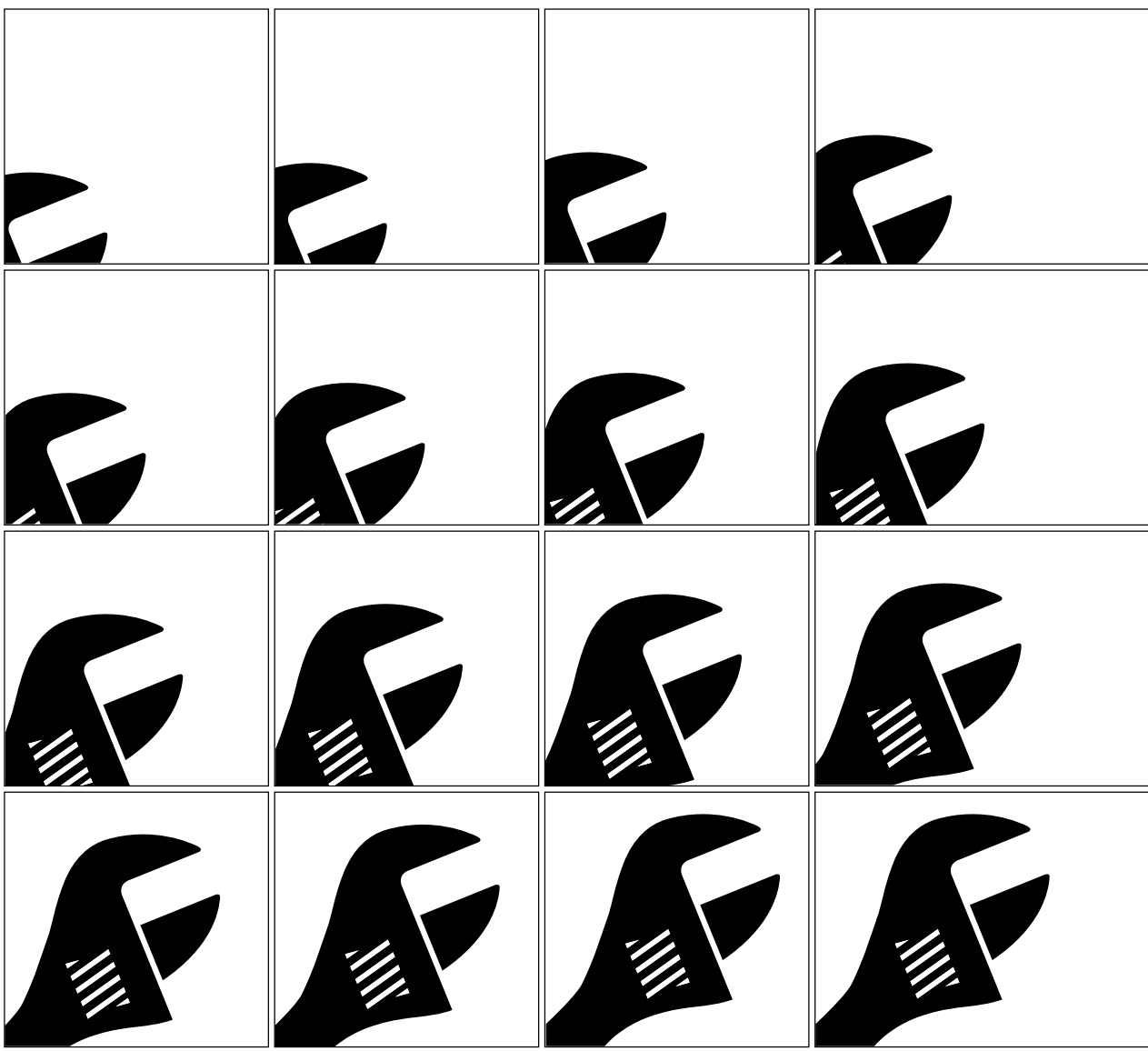

Pub. No. TWME9503-5

FK/FM
SERVICE MANUAL

FOREWORD

This Service Manual contains maintenance and repair methods for personnel involved in the maintenance and repair of 2001 model Mitsubishi Fuso Truck FK/FM series.
Read this manual carefully as an aid to providing correct, efficient and fast maintenance.
Please note, however, that due to continuous improvements on the specifications, numbers and description for maintenance might be changed without prior notice.
If you have any questions, or encounter a problem, please do not hesitate to contact your nearest Mitsubishi Fuso dealer or distributor.

© Mitsubishi Motors Corporation, May 2000

MITSUBISHI FUSO TRUCK OF AMERICA, Inc.

GROUP INDEX

2001 MODEL CHANGES

GENERAL 00

MAINTENANCE SCHEDULE 01

ENGINE 11

BRAKE 35A

ELECTRICAL 54

2001 MODEL CHANGES

Item	’01 Model	⇦	’00 Model
Gr 00 General Power Train Table and Vehicle Identification Number updated	🕮 Gr 00		—
Gr 01 Maintenance Schedule Maintenance Operation provided with additional information	🕮 Gr 01		—
Gr 11 Engine • Descriptions for newly introduced flywheel power take-off incorporated	🕮 Gr 11		—
• On vehicles with flywheel power take-off, the pointer on the flywheel is provided in a different position	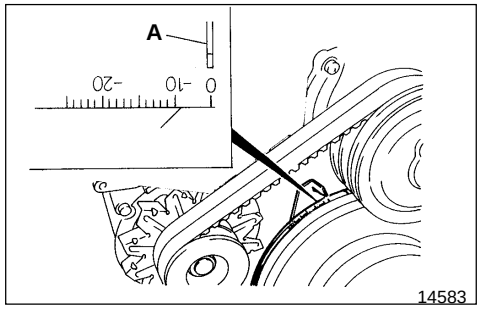 **A**: Pointer		
Gr 13 Fuel and engine control • Part No. and type of Read Only Memory (ROM) pack are different	MK 386562 (MRT-E7)		MK 344606 (MTR-E6)
• Descriptions for working load sensor added which is installed on engine control of newly introduced version with flywheel power take-off	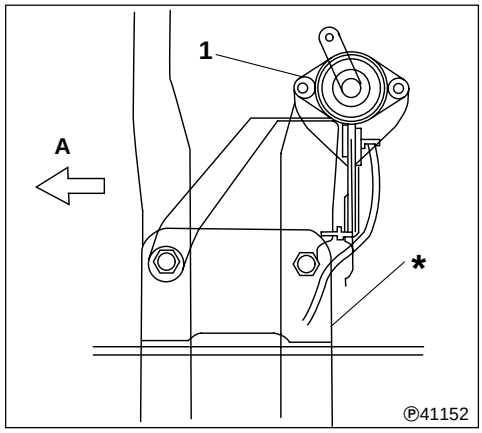 **1** Work load sensor **A**: Front of vehicle *****: Cab bridge		

Service standards

Location	Maintenance item			Standard value	Limit	Remedy
1	Output voltage of work load sensor  Ⓟ40148	④ | ⑤	Idling position	0.85 ± 0.1V	—	Replace
			Full-load position	3 ± 0.1V	—	Adjust

Item	’01 Model	⇦	’00 Model
	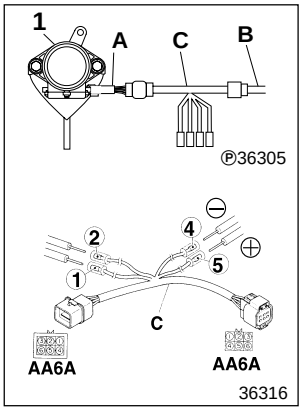		◆ **Service procedure** 1 **Inspection of work load sensor** • Disconnect the harness **A** for work load sensor **1** from the cab side harness **B**, and connect a separately prepared inspection harness **C** between harnesses **A** and **B**. • Check the output voltage of the work load sensor **1** according to the table below, and adjust it if necessary.

Lever position		AA6A: Harneses for work load sensor inspection ④: GND (⊖)	AA6A: Harneses for work load sensor inspection ⑤: Output (⊕)
Standard value	***a** Output voltage (idling position)	0.85 ± 0.1V	
	***b** Output voltage (full-load position)	3 ± 0.1V	

⊕ ⊖ show the polarities of tester probes to be connected when measuring output voltage.
***a**: Measure with the accelerator pedal in the idling position
***b**: Measure with the accelerator pedal in the full-load position
D: Idling position
E: Full-load position

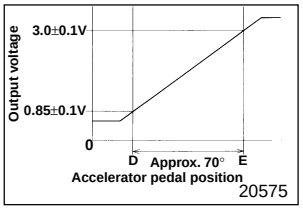

• If the output voltage measurement corresponding to the full-load position deviates from the standard value, adjust it using the full-load stopper bolt **F**.

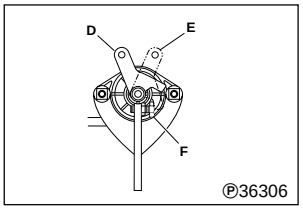

• If the output voltage measurement corresponding to the idling position deviates from the standard value, replace the work load sensor **1**.

Gr 35A Brake (Air over hydraulic brake) Descriptions for new air dryer for F■617 incorporated	🕮 Gr 35A	—

Item	'01 Model ⇦ '00 Model	
Gr 54 Electrical 1 POWER, CHARGING AND GROUND • Fuse box changed because of adoption of mirror heater	(104) FUSE 🕮 P54-7	
6 CAB SIDE ELECTRICS • Mirror heater circuit added.	(629) MIRROR HEATER CIRCUIT 🕮 P54-8	
7 CHASSIS ELECTRICS • Standard value of thermostat operating temperature given in (718) AIR DRYER CIRCUIT changed	4 ± 4.0°C {39.2° ± 7.2°F}	7 ± 4.0°C {44.6° ± 7.2°F}
8 ENGINE AND TRANSMISSION ELECTRICS • Transmission power take-off circuit added.	(850) TRANSMISSION POWER TAKE-OFF CIRCUIT 🕮 P54-10	

GROUP 00 GENERAL

POWER TRAIN TABLE 00-2

VEHICLE IDENTIFICATION NUMBER 00-3

PRECAUTIONS FOR MAINTENANCE OPERATION 00-4

POWER TRAIN TABLE

Model	Engine model	Clutch model	Transmission model	Propeller shaft	Rear axle model	Final reduction and gear ratio
FK617H, J, K, L G. V. W. 10430 kg {23000 lb}	6D16T3 200 HP/2600 rpm 434 ft.lbs/1600 rpm (SAE, Gross)	C6M35	M060S6 6.875/0.786	P4	R050T(M)	D050H 4.875
FK617K, L, G. V. W. 10430 kg {23000 lb}		Torque converter (TC290-1.72)	M4A4 (Allison AT542) 3.454/1.000			D050H 4.625
FK617F, J, L, M, P G. V. W. 11790 kg {25995 lb}	6D16T3 200 HP/2600 rpm 434 ft.lbs/1600 rpm (SAE, Gross)	C6M35	M060S6 6.875/0.786	P8	R060T	D8H 5.857
FK617J, L, M, P G. V. W. 11790 kg {25995 lb}		Torque converter (TC290-1.72)	M4A4 (Allison AT545) 3.454/1.000			D8H 4.875
FM617J, L, M, P G. V. W. 13610 kg {30000 lb}	6D16T3 200 HP/2600 rpm 434 ft.lbs/1600 rpm (SAE, Gross)	C6M35	M060S6 6.875/0.786			D8H 6.166
FM617L, M, P G. V. W. 13610 kg {30000 lb}		Torque converter (TC290-1.72)	M4A4 (Allison AT545) 3.454/1.000			D8H 5.571
FK657J, L, M, P G. V. W. 14920 kg {32900 lb}	6D16T3 200 HP/2600 rpm 434 ft.lbs/1600 rpm (SAE, Gross)	C6M35	M060S6 6.875/0.786			D8H 6.166
	6D16T2 230 HP/2600 rpm 521 ft.lbs/1600 rpm (SAE, Gross)	C7M38	M070S6 8.064/1.000	P10		D8H 4.625
			M8S2×5 10.060/1.000			
		Torque converter (TC415-2.35)	M100A6 (Allison) MD3060 3.487/0.652			D8H 6.666

VEHICLE IDENTIFICATION NUMBER

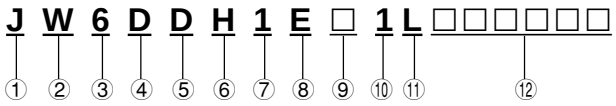

①	Country	J : Japan
②	Make	W : Mitsubishi Fuso
③	Vehicle type	6 : Incomplete Vehicle
		7 : Truck
④	Gross vehicle weight/Brake system	D : 19501 to 26000 lbs/Air over hydraulic
		E : 26001 to 33000 lbs/Air over hydraulic
		F : 26001 to 33000 lbs/Full air
⑤	Line	D : FK617
		E : FM617
		F : FM657
⑥	Series (Wheelbase)	F : 3.5 to 3.79 m {11.48 to 12.43 ft.}
		H : 4.1 to 4.39 m {13.45 to 14.40 ft.}
		J : 4.4 to 4.69 m {14.43 to 15.38 ft.}
		K : 4.7 to 4.99 m {15.41 to 16.37 ft.}
		L : 5.0 to 5.29 m {16.40 to 17.35 ft.}
		M : 5.3 to 5.59 m {17.38 to 18.33 ft.}
		N : 5.6 to 5.89 m {18.37 to 19.32 ft.}
		P : 5.9 to 6.19 m {19.35 to 20.30 ft.}
⑦	Cab chassis type	1 : Chassis cab
		3 : Mixer
⑧	Engine	E : 7.545 ℓ Diesel turbocharged and charge air cooled
⑨	Check digit	
⑩	Model year	1 : 2001
⑪	Plant	K : Kawasaki-1
		L : Kawasaki-2
		M : Kawasaki-3
⑫	Plant sequential number	

PRECAUTIONS FOR MAINTENANCE OPERATION

DANGER ⚠

This product contains or emits chemicals known to the State of California to cause cancer and birth defects or other reproductive harm.

GROUP 01 MAINTENANCE SCHEDULE

MAINTENANCE OPERATIONS

- **Battery 01-2**
- **Fuse 01-6**

MAINTENANCE OPERATIONS

Battery

DANGER ⚠

- **Since flammable hydrogen gas is generated by the battery, be sure to obey the following warnings:**
  - **Do not short-circuit the ⊕ and ⊖ terminals on the battery.**
  - **Keep sparks and lit cigarettes away from the battery.**
  - **Do not wear metal objects on your arms and lean over the battery.**
- **Because the battery electrolyte is diluted sulfuric acid and is corrosive, when handling the battery wear safety glasses and rubber gloves to protect the eyes and hands.**
- **Battery posts, terminals and related accessories contain lead and lead compounds. Wash hands after handling.**

WARNING ⚠

To prevent a short-circuit be sure that the disconnected battery cables do not accidentally touch the battery terminals.

CAUTION ⚠

- **Make sure that you disconnect the battery cable ⊖ first when you disconnect the battery cables.**
- **Make sure that all electrical switches of the vehicle are OFF before connecting the battery cables.**
- **Make sure that you connect the battery cable ⊕ before you connect the battery cable ⊖.**

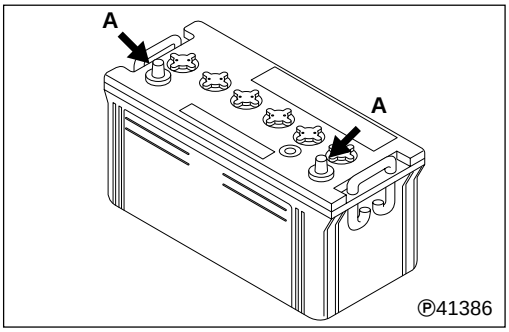

Visual inspection

- If terminal **A** is corroded, scrub off the corrosion using a wire brush.
- If cracks or defects are found on the battery, replace it since the cracks or defects can cause liquid spills.

CAUTION ⚠

Make sure you grease the ⊕ side of terminal A because it is easily corroded.

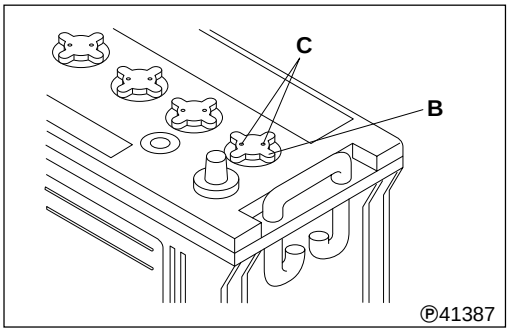

- If bleed hole **C** of vent plug **B** is clogged, clean the hole.

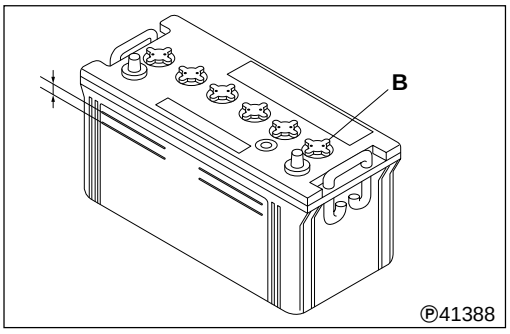

Inspection of fluid level

- Make sure that the battery electrolyte level is between the UPPER and LOWER level lines.
- If the level is below the LOWER level line, remove vent plug **B** and fill the battery with distilled water or battery replenisher to the UPPER level line.

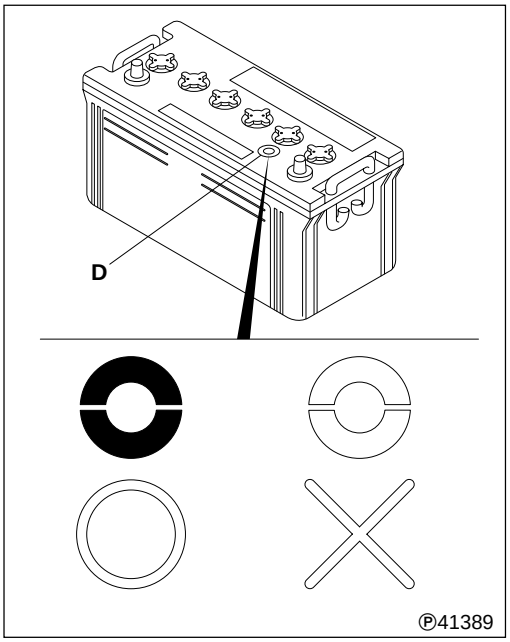

Measurement of specific gravity

You can tell the specific gravity of the battery electrolyte by the color shown in indicator **D**.

Blue : Good
White : Charge or replace

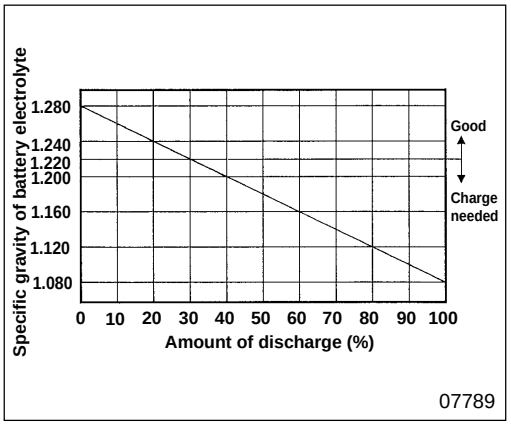

Charging

- Although, as a rule, charging of the battery should be done with the battery removed from the vehicle, if you have to charge the battery while it is on the vehicle, make sure that you stop the engine and disconnect the battery cable ⊖.
- Remove vent plug **B** before charging the battery.
- For the recommended charge time and current, see the following table to avoid overcharging.

	Charge current (A)	Charge time (H)	Upper limit of fluid temperature (°C {°F})
Normal charge	$\frac{\text{Value of 5-hour rating capacity}}{10}$	$\frac{\text{*Amout of discharge (Ah)}}{\text{Charge current (A)}} \times 1.2$ (to 1.5)	45 {113}
Quick charge	$\frac{\text{Value of 5-hour rating capacity}}{1.5}$	0.5	55 {131}

* Amount of discharge (Ah) = 5-hour rating capacity (Ah) $\times \frac{\text{Amount of discharge (\%)}}{100}$

- Use the graph shown on the left to calculate the amount of discharge (%).
- Use diluted sulfuric acid, made up of sulfuric acid and refined or distilled water, as the battery electrolyte.
- The specific gravity of fully-charged battery electrolyte is 1.280 with the temperature at 20°C {68°F}.

DANGER ⚠

- **Do not let the battery electrolyte level rise and overflow while charging the battery.**
- **Keep work lights away from the battery while charging it or it might explode.**
- **Be careful not to generate sparks while charging the battery because it is dangerous.**
- **After charging the battery, tighten vent plug B, wash away sulfuric acid from the battery using water, and dry the surface.**
- **Be sure to check the electrolyte level before charging the battery. Charging with the electrolyte level below the lower limit (LOWER LEVEL) can cause premature deterioration, heat generation and explosion of the battery.**

MEMO

Fuse

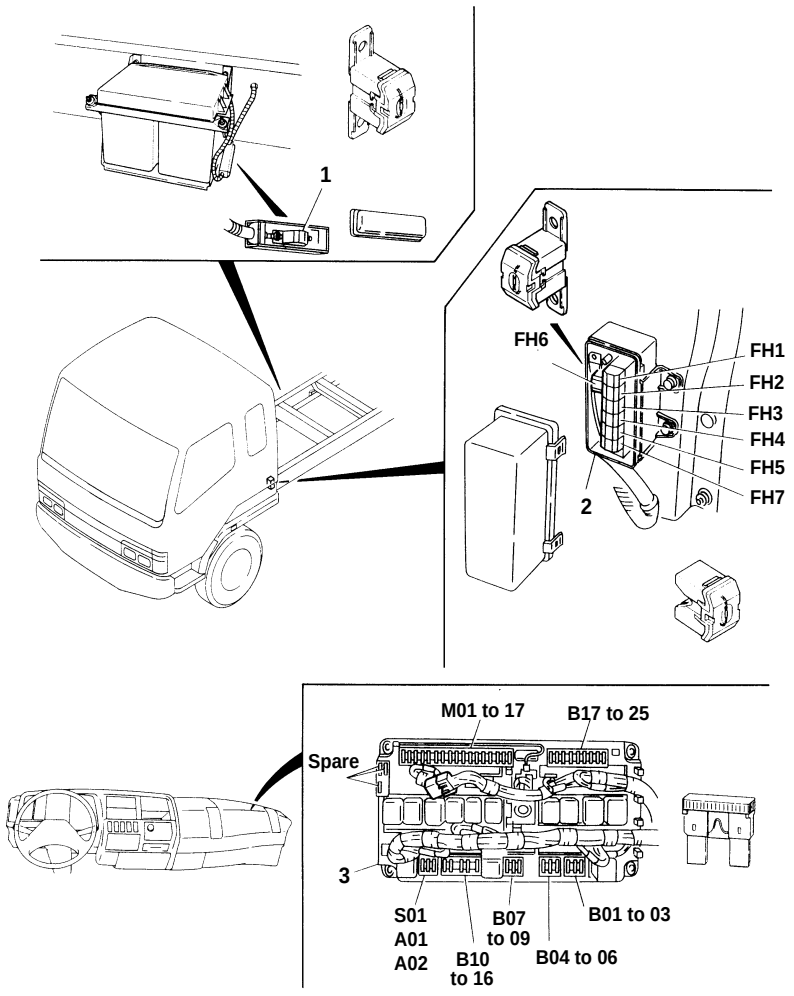

12033

1 Main high-current fuse
2 High-current fuse box
3 Relay and fuse box

CAUTION ⚠

- **If a fuse blows, make sure you identify and remedy the cause, then replace the fuse.**
- **Make sure that you replace the fuse with one having the same rating.**
- **Make sure that you remove the ⊖ terminal of the battery cable before removing main high-current fuse 1 and high-current fuses FH1 to 7.**

Main high-current fuse

Fuse No.	Main load	Capacity
—	High-current fuse box	140A

High-current fuse box

Fuse No.	Main load	Capacity
FH1	Starter switch (Terminal M)	50A
FH2	Fuse box (B07 to 16)	40A
FH3	Fuse box (B18 to 24)	40A
FH4	Fuse box (B01 to 04)	40A
FH5	Glow relay (Terminal B)	50A
FH6	Alternator (Terminal B)	140A
FH7	Fuse box (B6)	40A
FH8	ABS	40A

Fuse box

Fuse No.	Main load	Capacity
A01	Audio	10A
A02	Cigarette lighter	15A
B01	Reserve power (BATT)	10A
B02	Reserve power (ACC)	10A
B03	Van body dome light relay	15A
B04	Socket connector	20A
B05	Power window	25A
B06	Glow heater	20A
B07	Stop lamp	10A
B08	Turn/hazard	15A
B09	Tail lamp	20A
B10	Headlamp relay	10A
B11	—	—
B12	Headlamp RH	15A
B13	—	—
B14	—	—
B15	Headlamp LH	10A
B16	—	—
B17	Spare	—
B18	* Air-conditioner	20A
B19	—	—
B20	ABS	30A
B21	—	—
B22	Cab lamp	10A
B23	Mirror heater	10A
B24	—	—
B25	Horn	15A
M01	Automatic transmission	10A
M02	Transmission power take-off	10A
M03	—	—
M04	Reserve power (MAIN)	10A
M05	Neutral switch	10A
M06	Automatic transmission	20A
M07	Mirror heater	10A
M08	Pre-stroke cut relay	10A
M09	Air conditioner	20A
M10	—	—
M11	Control unit	10A
M12	ABS electronic control unit	10A
M13	Turn/hazard	10A
M14	Air dryer	15A
M15	Meter, speed indicator, DRL	10A
M16	Backup lamp	10A
M17	Wiper	15A
S01	Safety relay	10A

* : Fuses are provided for these pieces of equipment only where they are installed.

ABS : Anti-lock brake system
DRL : Daytime running light

GROUP 11 ENGINE

STRUCTURE AND OPERATION 11-2

FLYWHEEL POWER TAKE-OFF 11-4

TIMING GEARS 11-8

CRANKSHAFT AND CRANKCASE 11-12

Timing Gears

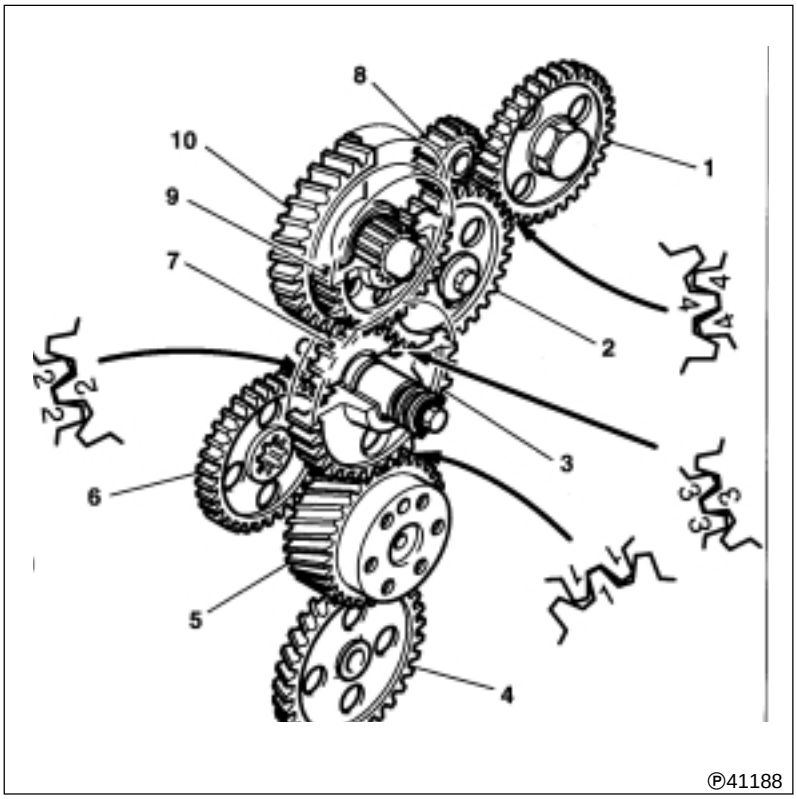

1 Camshaft gear
2 No. 2 idler gear
3 No. 1 idler gear (outer)
4 Oil pump gear
5 Crankshaft gear
6 Air compressor drive gear
7 No. 1 idler gear (inner)
8 Power steering pump gear
9 Power take-off idler gear
10 Power take-off idler gear

Each gear is stamped with a timing gear alignment mark ("**1**", "**2**", "**3**", or "**4**",) to facilitate reassembly.

Flywheel Power Take-Off

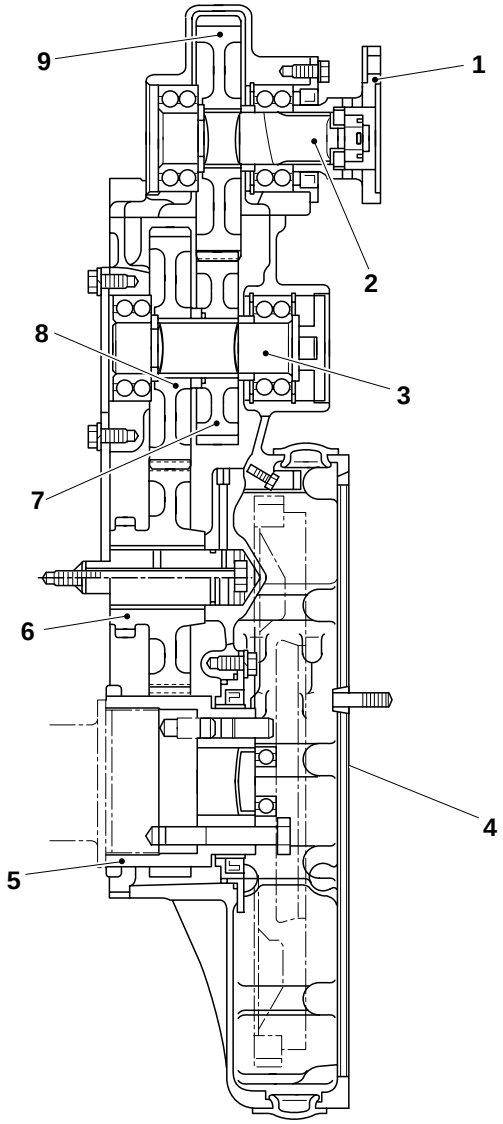

Ⓟ41189

1 Flange
2 Power take-off shaft
3 Power take-off idler shaft
4 Flywheel housing
5 Crankshaft gear
6 No. 1 idler gear
7 Power take-off idler gear
8 Power take-off idler gear
9 Power take-off gear

- The flywheel power take-off is mounted on the upper part of the flywheel housing **4** and takes the power out through the crankshaft gear **5**.

FLYWHEEL POWER TAKE-OFF

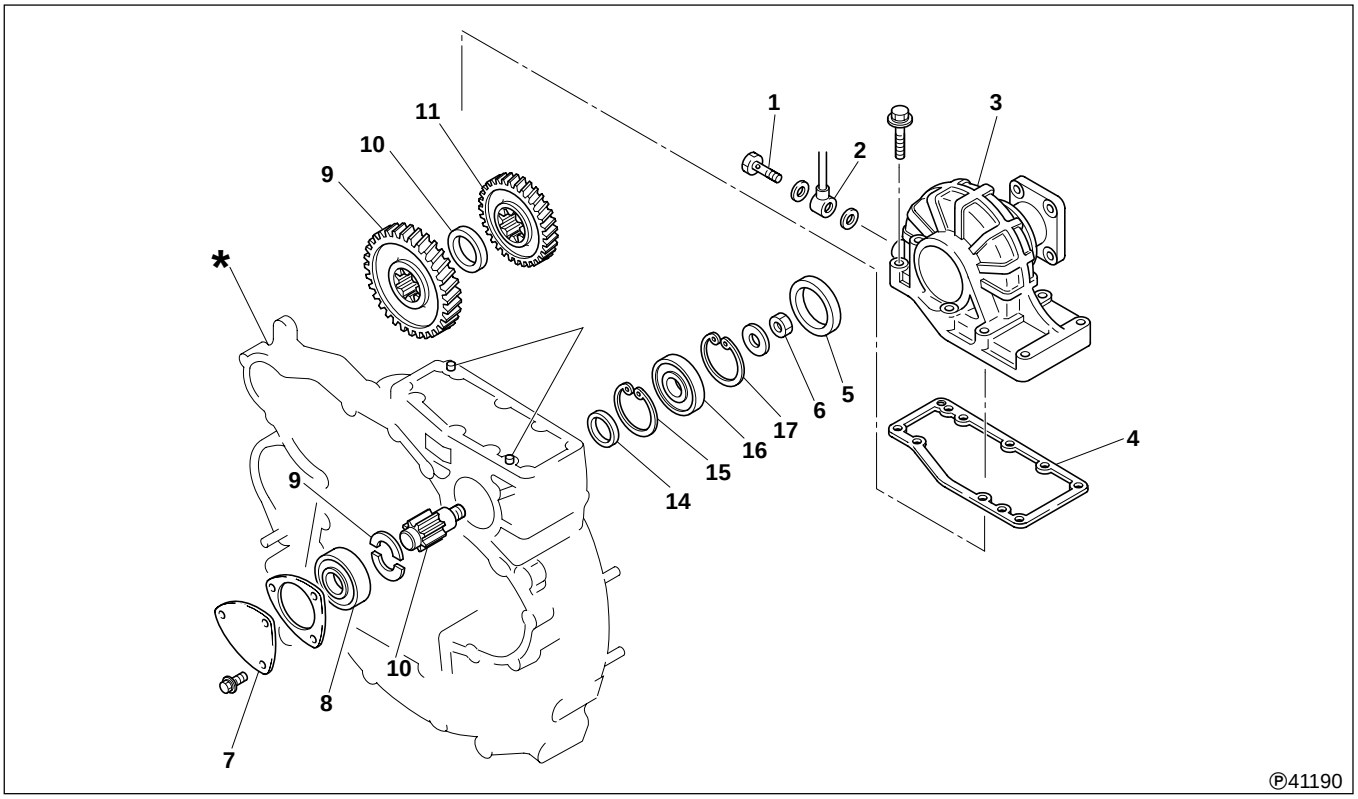

● **Pre-disassembly inspection**

P.11-5

● **Disassembly sequence**

1 Eye bolt
2 Oil pipe
3 Flywheel power take-off head assembly P.11-6
4 Shim
5 Seal cap
6 Nut
7 Cover
8 Ball bearing
9 Cotter
10 Power take-off idler shaft
11 Power take-off idler gear A
12 Spacer
13 Power take-off idler gear B
14 Spacer
15 Snap ring
16 Ball bearing
17 Snap ring

*: Flywheel housing Gr.11

A : Locating pin

● **Assembly sequence**

Follow the disassembly sequence in reverse.

Service standards

Unit: mm {in.}

Location	Maintenance item		Standard value	Limit	Remedy
—	Gear backlash	Between power take-off idler gear A and No.1 idler gear	0.08 to 0.20 {0.0031 to 0.0079}	0.35 {0.014}	Reference value
		Between power take-off gear and power take-off idler gear B	0.08 to 0.20 {0.0031 to 0.0079}	0.35 {0.014}	Reference value
		Power take-off gear total backlash	0.12 to 0.32 {0.0047 to 0.0125}	—	Adjust or replace
3	Static friction torque		390 N·m {290 lbf.ft, 40 kgf·m} or more	—	Reference value

❶ Tightening torques

Unit: N·m {ft.lbs, kgf·m}

Location	Parts to be tightened	Tightening torque	Remarks
1	Eye bolt	21 {15, 2.1}	—
6	Nut (power take-off idler shaft mounting)	295 {215, 30}	—

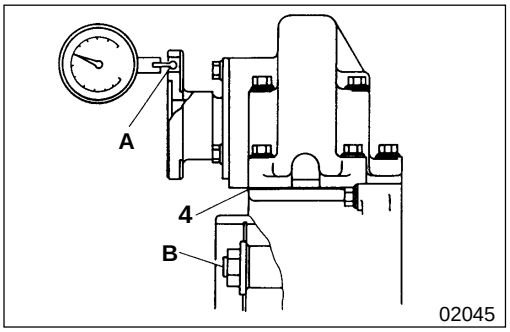

◆ Service procedure

● **Pre-disassembly inspection**

- **Backlash of gears**
  - Measure the total backlash of the power take-off idler gear A, No. 1 idler gear and power take-off gear on the 100 mm{3.94 in.} dia. pitch circle A at the power take-off flange section. If the measurement is out of the specification, correct with shim 4.

    Thickness of available shims: 0.1, 0.2, 0.3 mm {0.0039, 0.0079, 0.012 in.}
  - Measure the backlash between the power take-off gear and power take-off idler gear **B** on the 100 mm{3.94 in.} dia. pitch circle at the power take-off flange section while holding the power take-off idler shaft **B**. If the measurement is out of the specification, correct with shim **4**.

    Thickness of available shims: 0.1, 0.2, 0.3 mm {0.0039, 0.0079, 0.012 in.}

FLYWHEEL POWER TAKE-OFF

Flywheel Power Take-Off Head Assembly

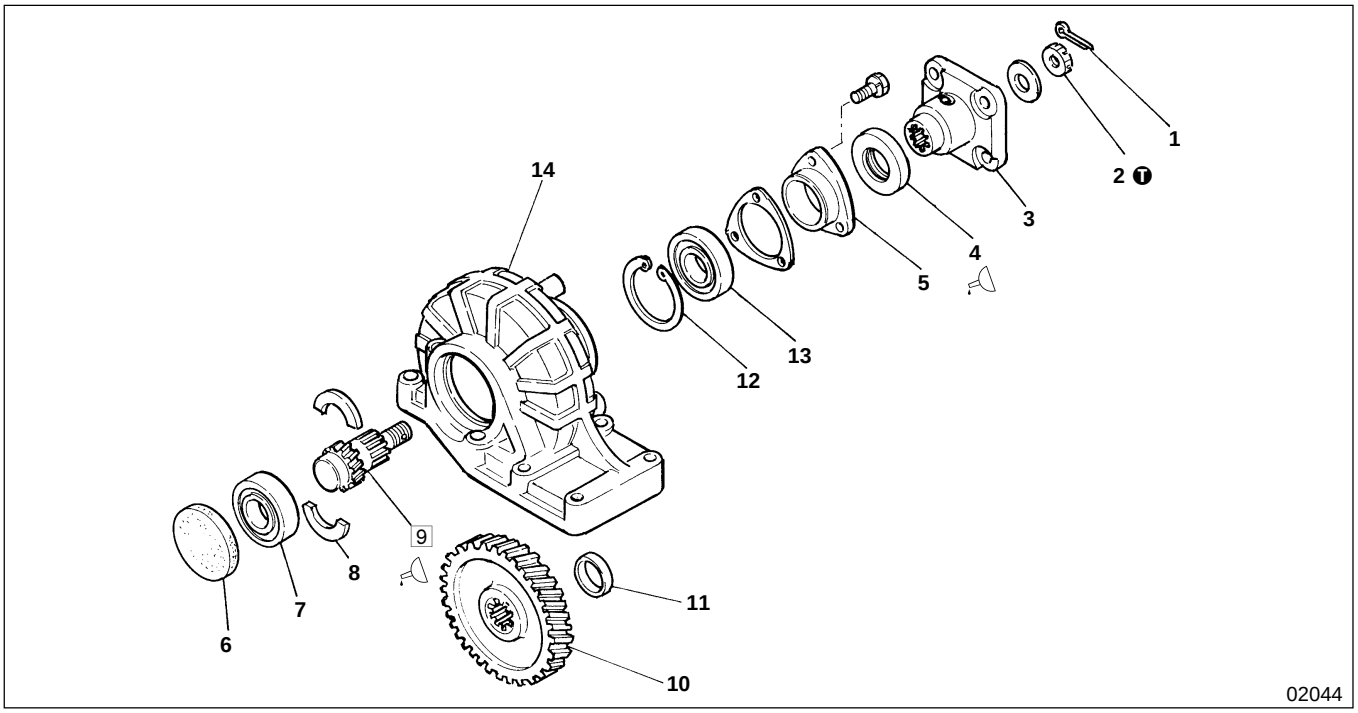

● **Disassembly sequence**

1 Split pin
2 Nut
3 Flange
4 Oil seal
5 Rear cover
6 Seal cap
7 Ball bearing
8 Cotter
9 Power take-off shaft
10 Power take-off gear
11 Spacer
12 Snap ring
13 Ball bearing
14 Cover

● **Assembly sequence**

Follow the disassembly sequence in reverse.

Service standards

Unit: mm {in.}

Location	Maintenance item	Standard value	Limit	Remedy
—	Power take-off shaft end play	0 to 0.8 {0 to 0.031}	—	Replace

T Tightening torques

Unit: N·m {ft.lbs, kgf·m}

Location	Parts to be tightened	Tightening torque	Remarks
2	Nut (flange mounting)	125 {93, 12.8}	—

Lubricant

Location	Points of application	Specified lubricant	Quantity
4	Oil seal lip	Li-soap grease	As required
9	Power take-off spline	MITSUBISHI wheel bearing grease	As required

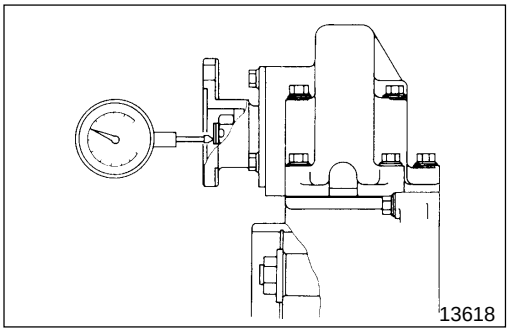

◆ Service procedure

● **Pre-disassembly inspection**

Power take-off shaft end play

If the measurement exceeds the limit, replace the defective part(s).

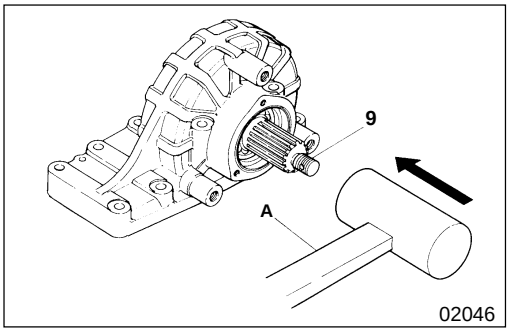

9 **Removal of power take-off shaft**

A: Plastic hammer

TIMING GEARS

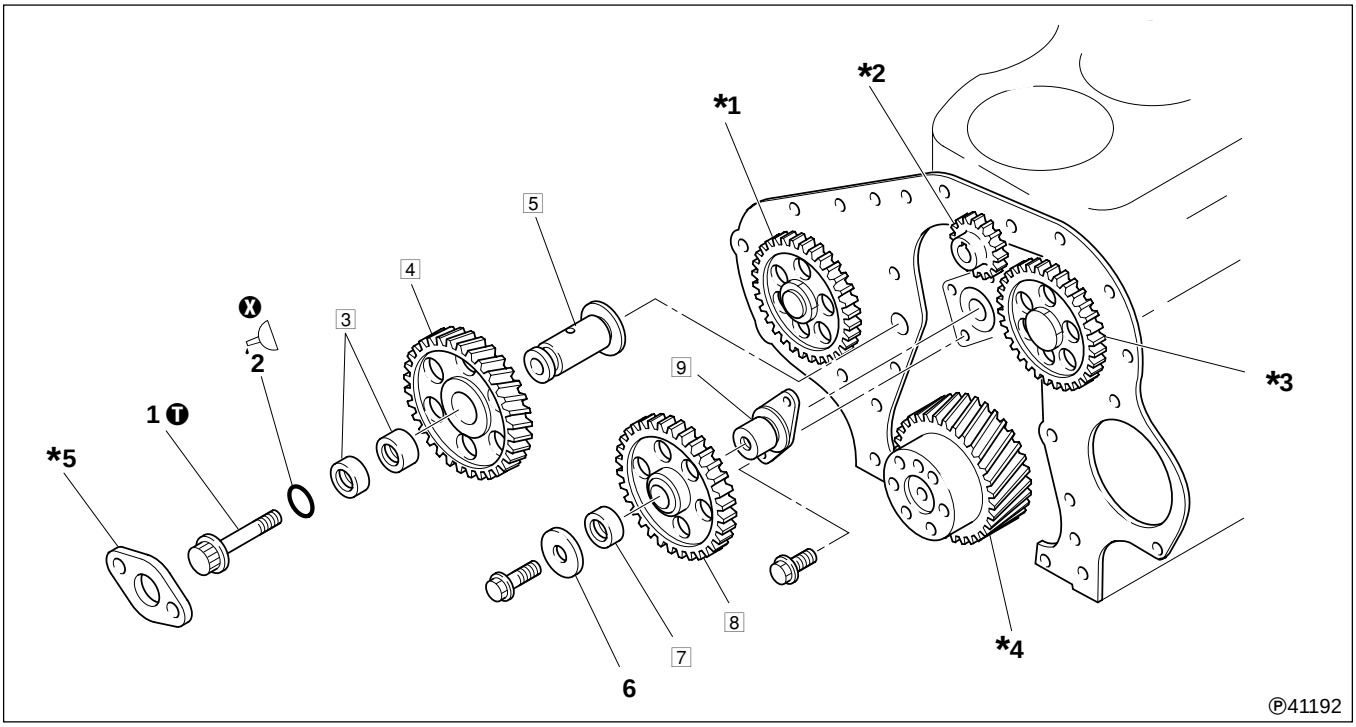

● **Pre-disassembly inspection**

P.11-15

● **Disassembly sequence**

1 Bolt
2 O-ring
3 No. 1 idler gear bushing
4 No. 1 idler gear
5 No. 1 idler shaft
6 Thrust washer
7 No. 2 idler gear bushing
8 No. 2 idler gear
9 No. 2 idler shaft

***1** Drive gear
***2** Power steering oil pump gear
***3** Camshaft gear Gr.11
***4** Crankshaft gear Gr.11
***5** Thrust plate Gr.11

Ⓧ: Non-reusable part

● **Assembly sequence**

Follow the disassembly sequence in reverse.

Service standards

Unit: mm {in.}

Location	Maintenance item		Standard value (Basic diameter in [ ])	Limit	Remedy
—	Gear backlash	Between No. 1 idler gear and crankshaft gear	0.07 to 0.20 {0.0028 to 0.0079}	0.35 {0.014}	Replace
		Between No. 1 idler gear and No.2 idleer gear	0.10 to 0.20 {0.0039 to 0.0079}	0.35 {0.014}	Replace
		Between No. 1 idler gear and drive gear	0.10 to 0.20 {0.0039 to 0.0079}	0.35 {0.014}	Replace
		Between No. 2 idler gear and camshaft gear	0.12 to 0.26 {0.0047 to 0.010}	0.35 {0.014}	Replace
		Between No. 2 idler gear and power steering oil pump gear	0.06 to 0.17 {0.0024 to 0.0067}	0.35 {0.014}	Replace
		Between camshaft gear and power steering oil pump gear	0.06 to 0.17 {0.0024 to 0.0067}	0.35 {0.014}	Replace
3, 5	No. 1 idler gear bushing-to-idler shaft clearance		[40 {1.57}] 0.03 to 0.07 {0.0012 to 0.0028}	0.2 {0.0079}	Replace
4	No. 1 idler gear end play		0.1 to 0.6 {0.0039 to 0.024}	1.0 {0.03937}	Replace
7, 9	No. 2 idler gear bushing-to-idler shaft clearance		[32 {1.26}] 0.01 to 0.05 {0.00039 to 0.0020}	0.2 {0.0079}	Replace
8	No. 2 idler gear end play		0.05 to 0.20 {0.002 to 0.0079}	0.4 {0.016}	Replace

Tightening torques

Unit: N·m {ft.lbs, kgf·m}

Location	Parts to be tightened	Tightening torque	Remarks
1	Bolt (No. 1 idler shaft installation)	135 to 165 {100 to 120, 14 to 17}	—

Lubricant

Location	Points of application	Specified lubricant	Quantity
2	Entire periphery of O-ring	Engine oil	As required

Special tools

Unit: mm

Location	Tool name and shape	Part No.	Application
3, 7	Idler Gear Bushing Remover/Installer | | **A** | **B** | | No. 1 idler gear bushing | ϕ 40 {1.57} | ϕ 44 {1.73} | | No. 2 idler gear bushing | ϕ 32 {1.26} | ϕ 35 {1.38} | 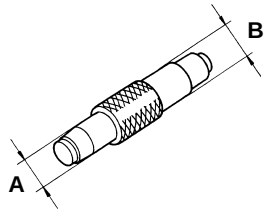 02066	<No. 1> MH061228 <No. 2> MH061779	Removing and fitting idler gear bushings

◆ Service procedure

● **Pre-disassembly inspection**

(1) Gear backlash

For each gear pair, measure backlash at three or more points. If any measurement exceeds the specified limit, replace the defective part(s).

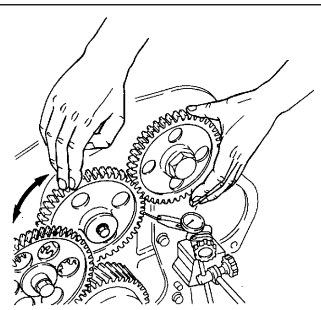

02068

(2) No. 2 idler gear end play

If the measurement exceeds the specified value, replace the defective part(s).

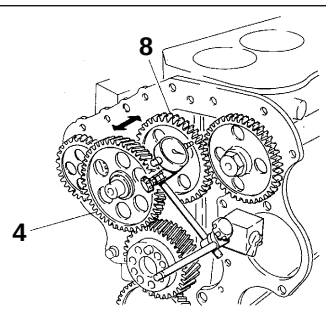

02077

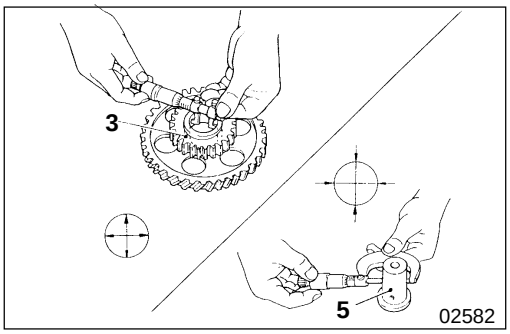

3 5 **No. 1 idler shaft and No. 1 idler gear bushing**

[Inspection]

If the clearance exceeds the specified limit, replace the defective part(s).

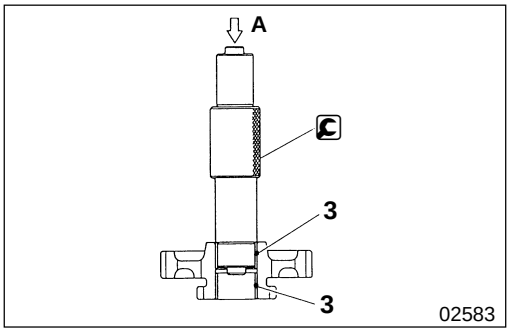

No. 1 idler gear bushing

[Removal]

The No. 1 idler gear bushing **3** consists of two pieces. Remove them at the same time.

A: Press

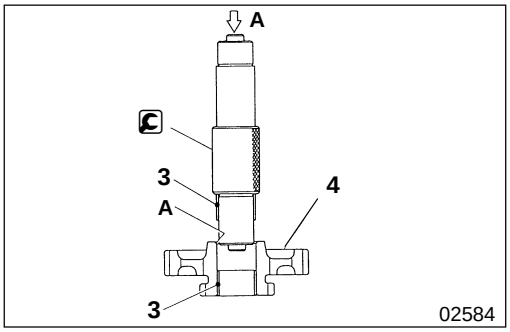

[Installation]

- Using the Idler Gear Bushing Installer, press-fit both pieces of No. 1 idler gear bushing **3** into the No. 1 idler gear **4** at the same time from the upper and lower sides.

  A: Press

- After installation, measure the clearance again. If the measurement is below the nominal value range, ream the bushing **3**.

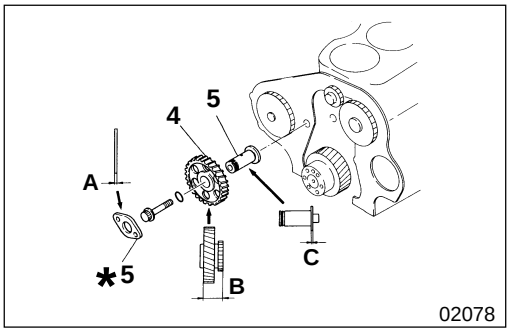

4 **No.1 idler gear end play**

Measure the illustrated dimensions of the parts, then calculate the end play **D**. If the end play exceeds the limit, replace the defective part(s).

72.15 mm {2.84 in.} – (A + B + C) = D

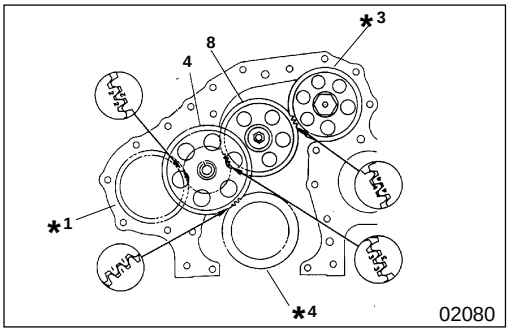

4 8 **Installation of No. 1 and No. 2 idler gears**

- Fit the idler gears **4**, **8** such that their alignment marks "**1**", "**2**", "**3**" and "**4**" are aligned with the corresponding alignment marks.

  ***1**: Drive gear
  ***3**: Camshaft gear
  ***4**: Crankshaft gear

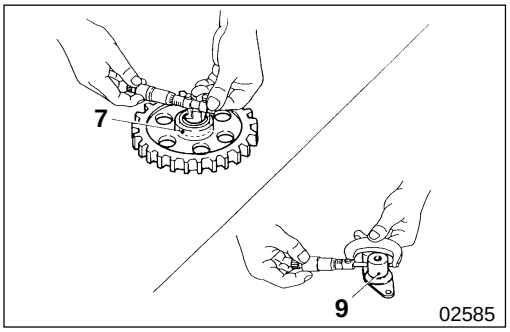

7 9 **No. 2 idler gear bushing and No. 2 idler shaft**

[Inspection]

If the clearance exceeds the specified limit, replace the defective part(s).

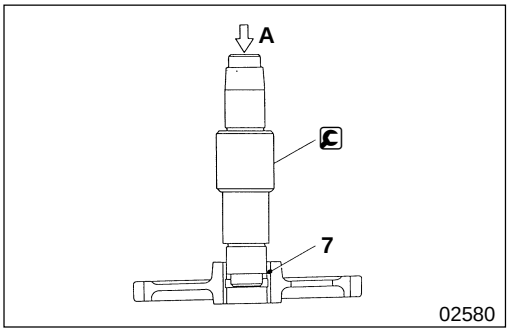

No. 2 idler gear bushing

[Removal]

A: Press

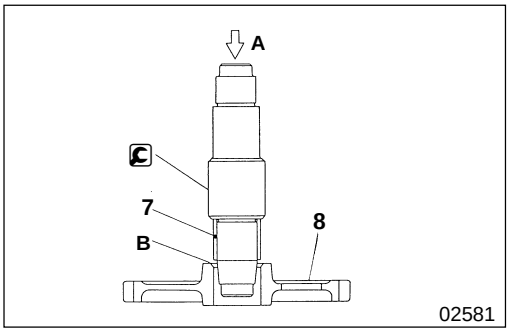

[Installation]

- Press-fit the No. 2 idler gear bushing **7** into the No. 2 idler gear **2** using the C Idler Gear Bushing Installer. Install the bushing with the chamfered side **B** toward the gear.

  A: Press

- After installation, measure the clearance again. If the measurement is below the nominal value range, ream the No. 2 idler gear bushing **7**.

CRANKSHAFT AND CRANKCASE

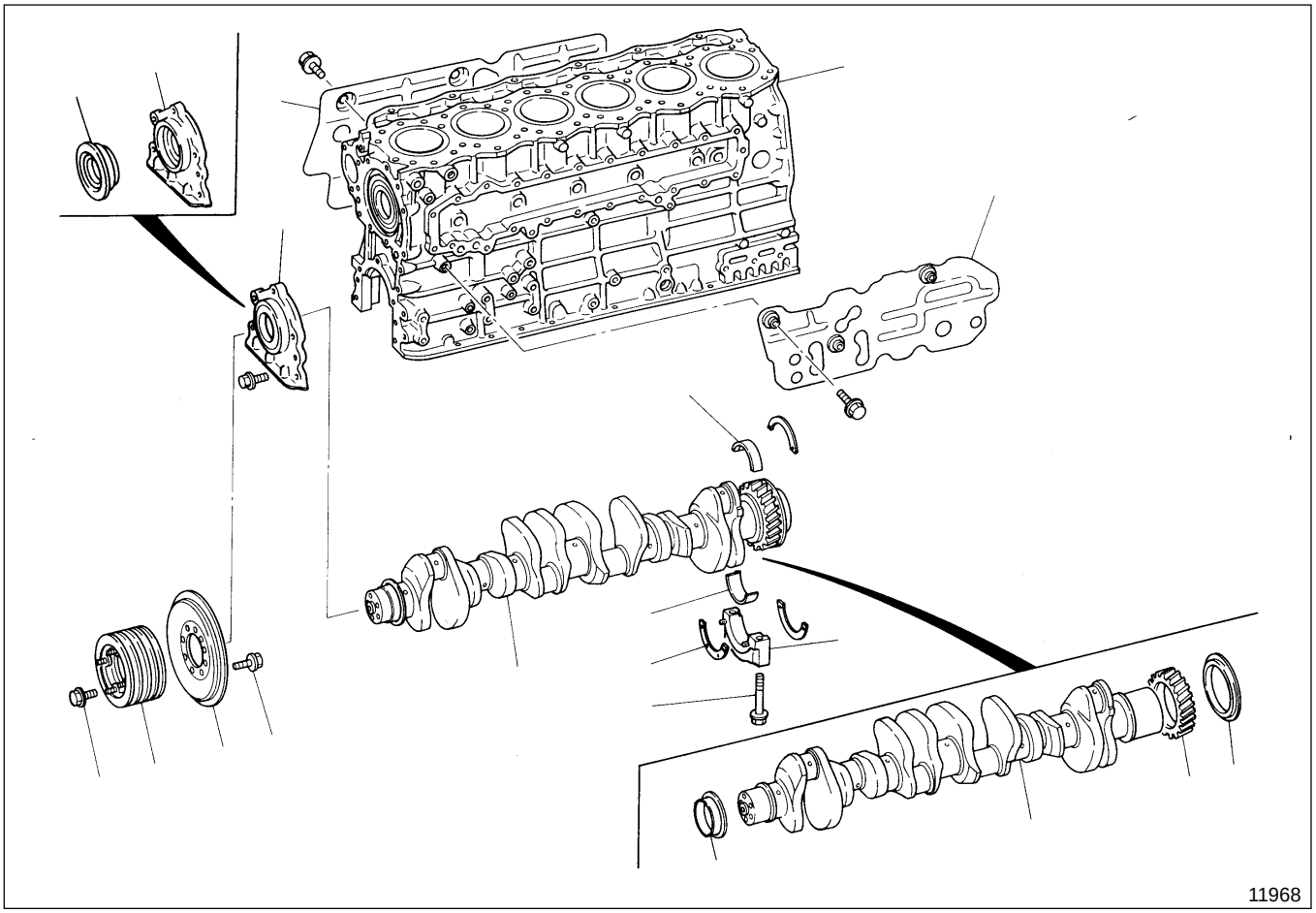

● **Pre-disassembly inspection**

P.11-15

● **Disassembly sequence**

1 Bolt
2 Crankshaft pulley
3 Bolt
4 Torsional damper
5 Front cover assembly
6 Front oil seal
7 Front cover
8 Bolt
9 Lower main bearing
10 Main bearing cap
11 Thrust plate
12 Crankshaft assembly
13 Front oil seal slinger
14 Rear oil seal slinger
15 Crankshaft gear
16 Crankshaft
17 Upper main bearing
18 Crankcase cover LH
19 Crankcase cover RH
20 Crankcase

Ⓧ: Non-reusable part

CAUTION ⚠

Do not remove the front oil seal slinger 13, rear oil seal slinger 14 and crankshaft gear 15.

● **Assembly sequence**

Follow the disassembly sequence in reverse.

Service standards

Unit: mm {in.}

Location	Maintenance item			Standard value (Basic diameter in [ ])	Limit	Remedy
9, 17	Main bearing	Oil clearance		[80 {3.15}] 0.05 to 0.10 {0.0020 to 0.0039}	0.15 {0.0059}	Replace
		Span when free		—	Less than 85.5 {3.366}	Replace
16	Crankshaft	End play		0.10 to 0.25 {0.0039 to 0.0098}	0.4 {0.016}	Replace
		Bend		0.025 {0.00098} or less	0.1 {0.0039}	Correct or replace
		Pin and journal	Roundness	0.01 {0.00039} or less	0.03 {0.0012}	Correct or replace
			Cylindricity	0.006 {0.00024} or less	—	Correct or replace
20	Crankcase top surface distortion			0.07 {0.0028} or less	0.2 {0.0079}	Replace

❶ Tightening torques

Unit: N·m {ft.lbs, kgf·m}

Location	Parts to be tightened	Tightening torque	Remarks
1	Bolt (crankshaft pulley installation)	185 {135, 19}	—
3	Bolt (torsional damper installation)	78 {58, 8}	—
8	Bolt (main bearing cap installation)	78 {58, 8}+90°	• Wet • Reusable up to three times

Lubricant and/or sealant

Location	Points of application	Specified lubricant and/or sealant	Quantity
5	Front cover assembly surface in contact with crankcase	Threebond 1207C	As required
6	Front oil seal lip	Engine oil	As required
8	Bolt threads	Engine oil	As required
9, 17	Main bearing inside surfaces	Engine oil	As required

Special tools

Unit: mm {in.}

Location	Tool name and shape	Part No.	Application
10	Main Bearing Cap Extracter 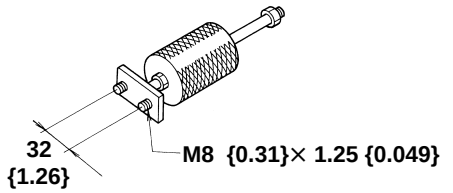 02097	(Use locally purchased equivalent)	Removing main bearing caps
	Socket Wrench 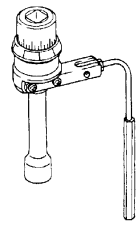 01984	(Use locally purchased equivalent)	Fitting main bearing caps
13	Front Oil Seal Slinger Installer 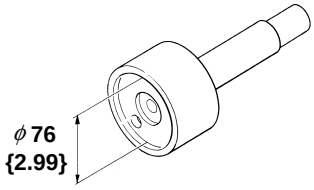 13625	MH062710	Installing front oil seal slinger
14	Rear Oil Seal Slinger Installer 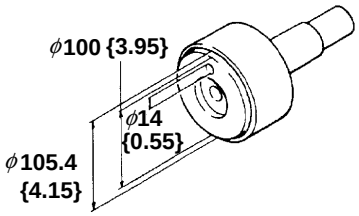 02051	MH061470	Installing rear oil seal slinger
15	Gear Puller 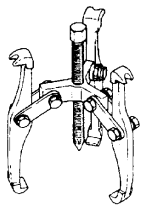 02065	(Use locally purchased equivalent)	Removing crankshaft gear

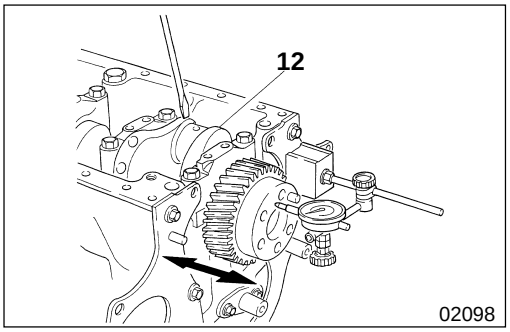

◆ Service procedure

● **Pre-disassembly inspection**

Crankshaft end play

If the measurement exceeds the specified limit, replace the defective part(s).

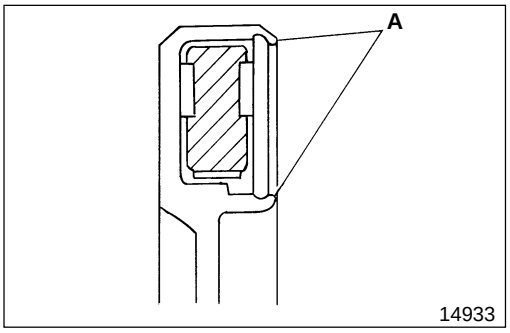

4 **Torsional damper**

CAUTION ⚠

The torsional damper is of a viscous type and filled with silicone oil. It can cause oil leaks at the staked portion A and thereby fail to function properly if handled roughly. To prevent this, pay attention to the following:

- **Ensure that the staked portion A is free from dents and other damages.**
- **Never give shocks such as by hammering or dropping it.**
- **Avoid trundling or stacking with heavy objects.**

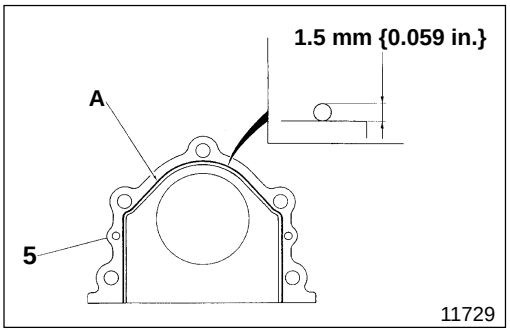

5 **Installation of front cover assembly**

- Apply an even, unbroken bead of sealant **A** to the surface of the front cover assembly **5** that contacts the crankcase **20** when installed.
- Fit the front cover assembly **5** onto the crankcase **20** within 3 minutes of applying the sealant **A**.

CAUTION ⚠

- **Ensure that the sealant application position on the front cover assembly 5 is clean before applying sealant.**
- **When fitting the front cover assembly 5, hold it firmly in position to prevent spreading the sealant.**
- **After fitting the front cover assembly 5, wait at least an hour before starting the engine.**
- **Apply a new bead of sealant A whenever the mounting bolts of the front cover assembly 5 have been loosened.**

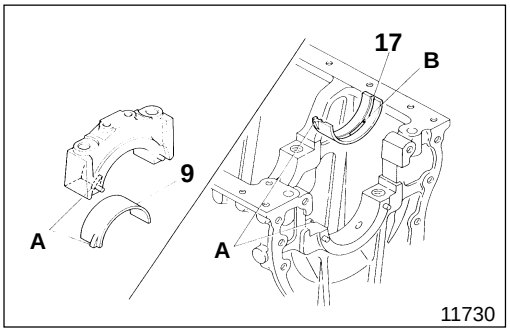

9 17 **Main bearings**

[Installation]

Install the main bearings **9**, **17** such that their lugs **A** fit into the corresponding grooves.

CAUTION ⚠

The upper main bearing 17 has an oil hole B. The lower main bearing 9 has no oil hole. Take care not to confuse the upper and lower parts.

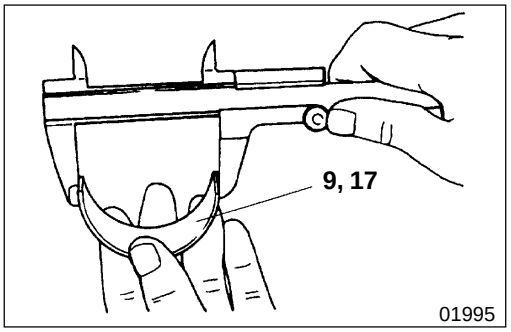

[Inspection]

CAUTION ⚠

- **Do not attempt to manually expand either bearing 9, 17 if its span is insufficient.**
- **Upper and lower bearings 9, 17 must be replaced as a set.**

(1) Span when free

If either bearing's span when free exceeds the specified limit, the bearings **9**, **17** must be replaced.

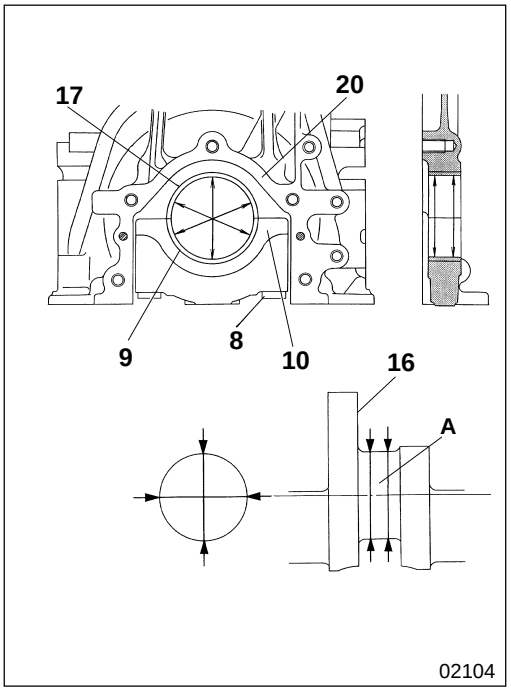

(2) Main bearing-to-crankshaft clearance

- Fit the upper main bearing **17** into the crankcase **20** and the lower main bearing **9** into the main bearing cap **10**. Then, tighten the bolts **8** to their specified torque.
- Measure the internal diameters of the main bearings **9**, **17** and the journal outside diameter **A** of the crankshaft **16**. If the clearance exceeds the specified limit, replace the defective part(s).

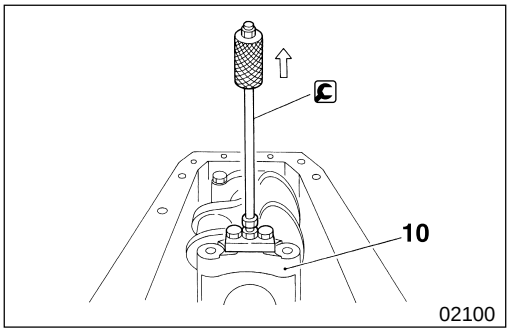

10 **Main bearing caps**
: Main Bearing Cap Extractor

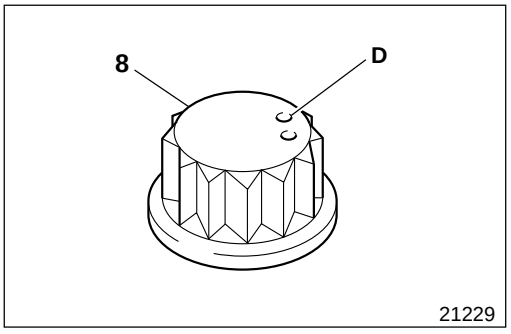

[Installation]

CAUTION ⚠

- **Before fitting any bolt 8, check the punch marks D on its head. Do not use the bolt if there are more than two punch marks.**
- **The punch marks indicate the number of times each bolt has been tightened using the plastic area tightening method. Any bolt that already has three punch marks must be replaced.**

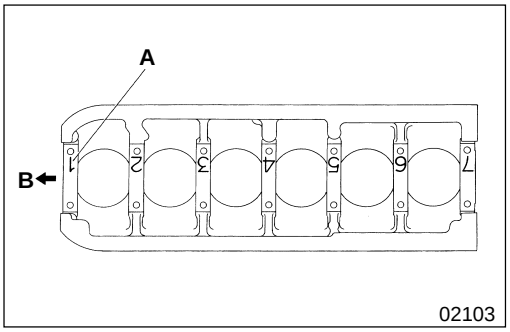

- Starting at the front of the engine **B**, fit the main bearing caps **10** in the order of the numbers **A** embossed on them and such that the numbers are in the positions illustrated.

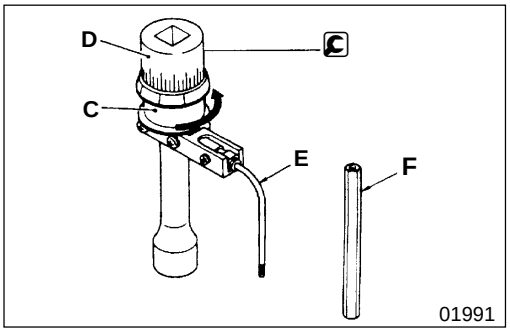

- Tighten the bolts **8** to the specified torque. Then, turn the bolts further in accordance with the following procedure:
- Turn the holder **C** of the C Socket Wrench counter-clockwise to tension the built-in spring.

  D: Socket
  E: Rod
  F: Rod (extension)

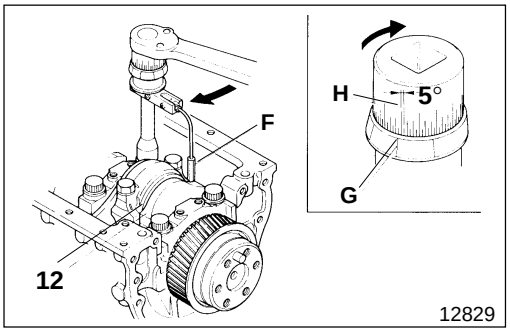

- Set the socket wrench such that the built-in spring forces the rod (extension) **F** against the crankshaft assembly **12**.
- Align any inscribed line **G** on the holder **C** with any inscribed line **H** on the socket. (Use this point as reference 0° position.)
- From the above reference position, turn the socket **D** by 90° clockwise. (One gradation on the scale represents 5°.)

CAUTION ⚠

By performing the above procedure, the bolt 8 is tightened to the plastic area. Do no attempt to tighten further after turning specified angle.

- After tightening, perform the following checks:
  - Turn the crankshaft by hand to check for smooth rotation.
  - Measure the crankshaft end play.

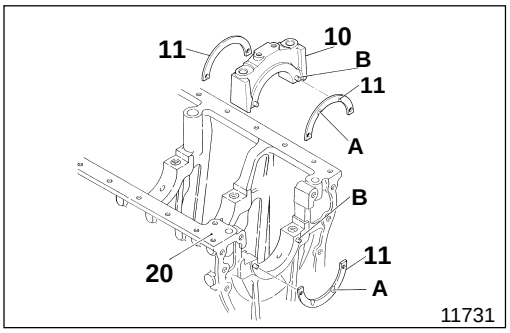

11 **Installing thrust plates**

Fit a thrust plate **11** on each side of the main bearing caps **10** and at the rear end of the crankcase **20** such that the oil grooves **A** are on the outside.

B: Locating pin

CAUTION ⚠

If any oversize thrust plates 11 are to be used, make sure that the upper and lower thrust plates installed at the rear end of the crankcase 20 are of the same size. However, the thrust plates installed on both sides of the main bearing cap 10 may be different in size.

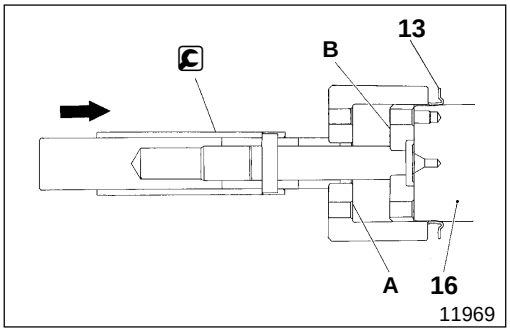

13 **Installation of front oil seal slinger**

Using the Front Oil Seal Slinger Installer, drive the front oil seal slinger **13** onto the crankshaft **16** until the tool's end face **A** is pressed firmly against the guide **B**.

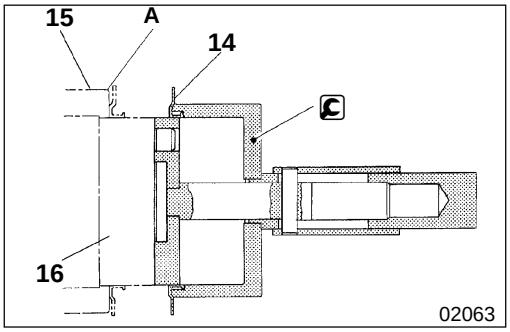

14 **Installation of rear oil seal slinger**

Using the Rear Oil Seal Slinger Installer, drive the rear oil seal slinger **14** onto the crankshaft **16** until it touches the end surface **A** of the crankshaft gear **15**.

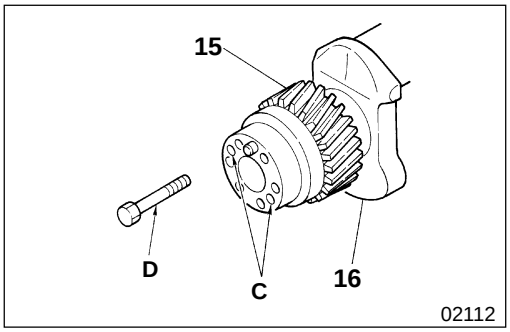

15 **Crankshaft Gear**

<With flywheel power take-off>

[Removal]

Screw the flywheel mounting bolts **D** evenly into the threaded holes **C** in the crankshaft **16** to remove the gear. The gear can also be removed by using the Gear Puller.

CAUTION ⚠

Do not tap off the crankshaft gear 15 since this could damage it.

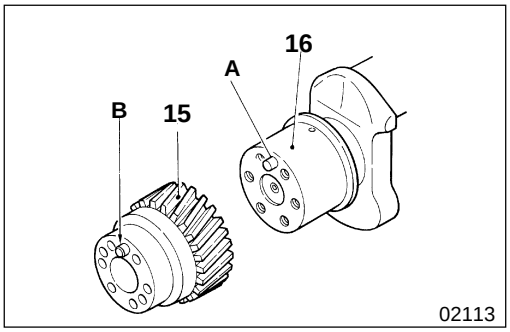

[Installation]

- Using a piston heater or the like, heat the crankshaft gear **15** to a temperature of approximately 100°C {212°F}.

WARNING ⚠

Be careful not to get burned.

- Align the locating pin **A** on the crankshaft **16** with the dowel pin **B** on the crankshaft gear **15**. Then, drive the gear into position by striking its end face with a plastic mallet.

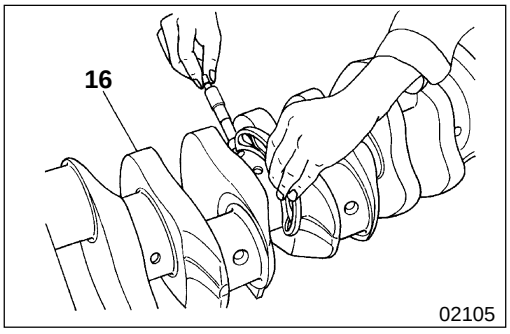

16 **Crankshaft**

[Inspection]

(1) Roundness and cylindricity of crankshaft journal and pin

If either measurement exceeds the specified limit, grind it to undersize or replace the crankshaft **16**.

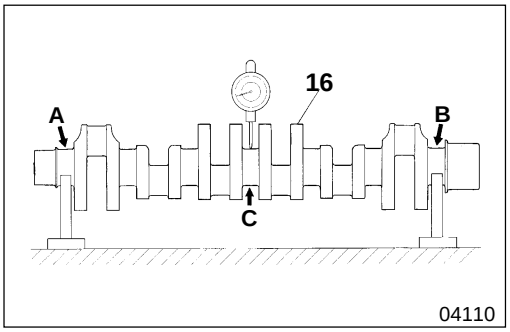

(2) Bend

- Support the crankshaft **16** at its No.1 journal **A** and No. 7 journal **B**. Measure the extent of bending in the crankshaft at the center of the No.4 journal **C**.
- If the measurement exceeds the specified limit, replace the crankshaft.

CAUTION ⚠

Turn the crankshaft 16 through one revolution. One-half of the dial indicator reading represents the extent of bending.

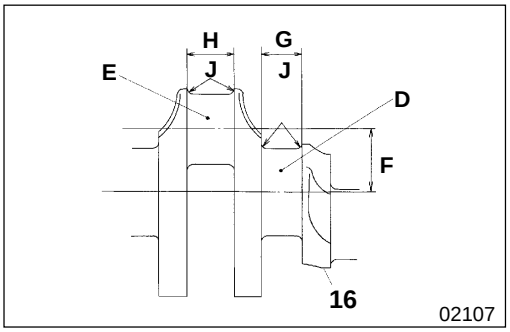

[Rectification]

CAUTION ⚠

If the crankshaft 16 is rectified by grinding, the main bearings 9, 17 must be replaced with undersized ones.

- Grind such that the center-to-center distance **F** between the journal **D** and pin **E** never be changed.

  F: $57.5\ ^{+0.025}_{-0.075}$ mm $\left\{2.26\ ^{+0.00098}_{-0.00295}\ \text{in.}\right\}$
- Grind such that the journal width **G** and pin width **H** do not change.

  G: 37 mm {1.45 in.}

  H: $42\ ^{+0.2}_{0}$ mm $\left\{1.65\ ^{+0.0078}_{0}\ \text{in.}\right\}$
- Finish the corner fillet smoothly and to the specified radius **J**.

  J: R5 ± 2 mm {R0.02 ± 0.0079 in.}
- Carry out a magnetic inspection to check for cracks caused by grinding. Also, check that the Shore hardness of the surface has not dropped below Hs 75.

Crankshaft undersize dimensions — Unit: mm {in.}

	Degree of undersize			
	0.25 {0.0098}	0.50 {0.020}	0.75 {0.030}	1.00 {0.039}
Finished journal diameter	83.685 to 83.705 {3.294 to 3.295}	83.435 to 83.455 {3.284 to 3.285}	83.185 to 83.205 {3.274 to 3.275}	82.935 to 82.955 {3.265 to 3.266}
Finished pin diameter	64.67 to 64.69 {2.5460 to 2.5468}	64.42 to 64.44 {2.5362 to 2.5370}	64.17 to 64.19 {2.5263 to 2.5271}	63.92 to 63.94 {2.5165 to 2.5173}
Roundness	0.01 {0.00039} or less			
Cylindricity	0.006 {0.00024} or less			

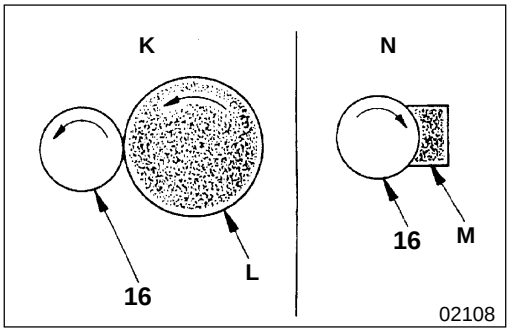

- When grinding **K**, turn the crankshaft **16** counter-clockwise as viewed from its front end. The grinder **L** should rotate in the same direction.
- When finishing **N** the crankshaft **16** with whetstone or sandpaper **M**, rotate the crankshaft clockwise.

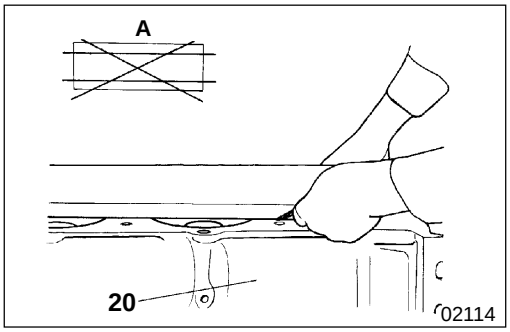

20 Inspecting crankcase upper surface distortion

If distortion exceeds the specified limit, correct it with a surface grinder.

A: Measurement positions

CAUTION ⚠

When grinding the crankcase 20, take care that the piston projections stay within specification.

GROUP 35A BRAKE
(AIR OVER HYDRAULIC BRAKE)

SPECIFICATIONS 35A-2

STRUCTURE AND OPERATION 35A-3

AIR DRYER..... 35A-4

SPECIFICATIONS

Air Dryer

Item		Specifications
Manufacturer		NABCO
Type		DR-31
Heater capacity V-W		12-50
Thermostat operating temperature °C {°F}	ON	4 ± 4 {39.2 ± 7.2}
	OFF	20 {68} or lower
Purge chamber capacity L {qts}		1.4 {1.48}
Required time for recycling desiccant sec.		50

Air Dryer

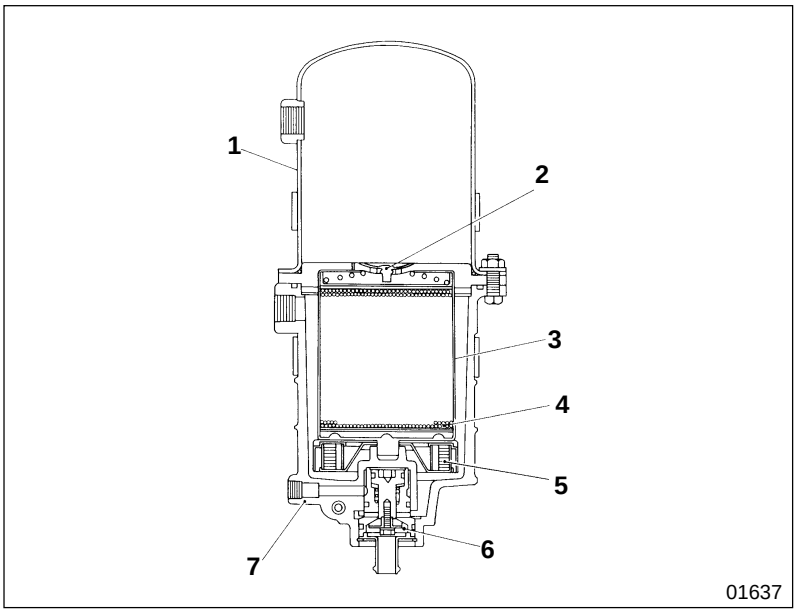

1 Purge chamber
2 Check valve
3 Case
4 Desiccant
5 Oil filter
6 Valve
7 Body

The air dryer removes moisture and oil from the air compressed by the air compressor, protecting the brake system.

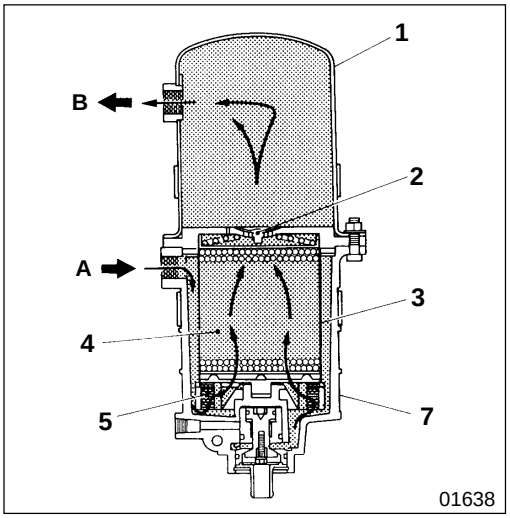

Dehumidification

- The pressurized air from the air compressor enters the air dryer through delivery port **A**. First, it flows in body **7** where moisture and oil are separated from the air and collected in the bottom. Then, the air passes through oil filter **5** where oil mist and dust are removed. Next, it is delivered into case **3** where moisture contained in the air is removed by desiccant **4**.
- As the air travels from the bottom to the top of case **3**, it comes into contact with more dried desiccant **4**. This removes residual moisture from the air, drying the air as it reaches the top of the case. The air passes through check valve **2** and purge chamber **1**, and is delivered to the air tank through exhaust port **B**.

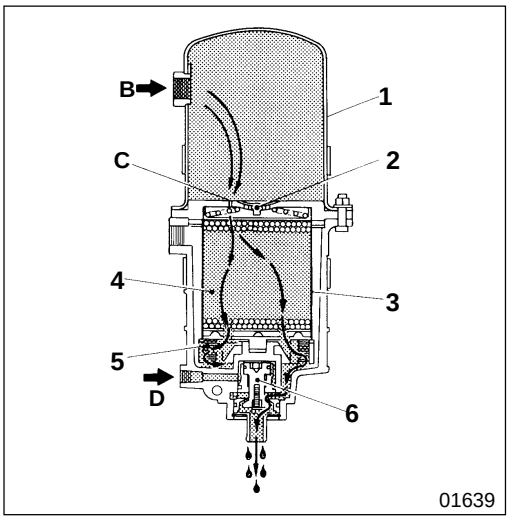

Regeneration of desiccant

- When the supply of air from the air compressor stops, command pressure **D** from the air pressure governor opens valve **6** of the control port of the air dryer. This allows the pressure in case **3** to clean oil filter **5** and release the condensed water and oil into the atmosphere.
- Because of quick pressure reduction in the case, the dry air in purge chamber **1** flows through orifice **C** in the case **3** where the air expands under the reduced pressure, becoming super dry air. This air flows back through case **3** while removing the moisture from desiccant **4**, and is discharged together with moisture into the atmosphere, thereby recycling the desiccant.

AIR DRYER

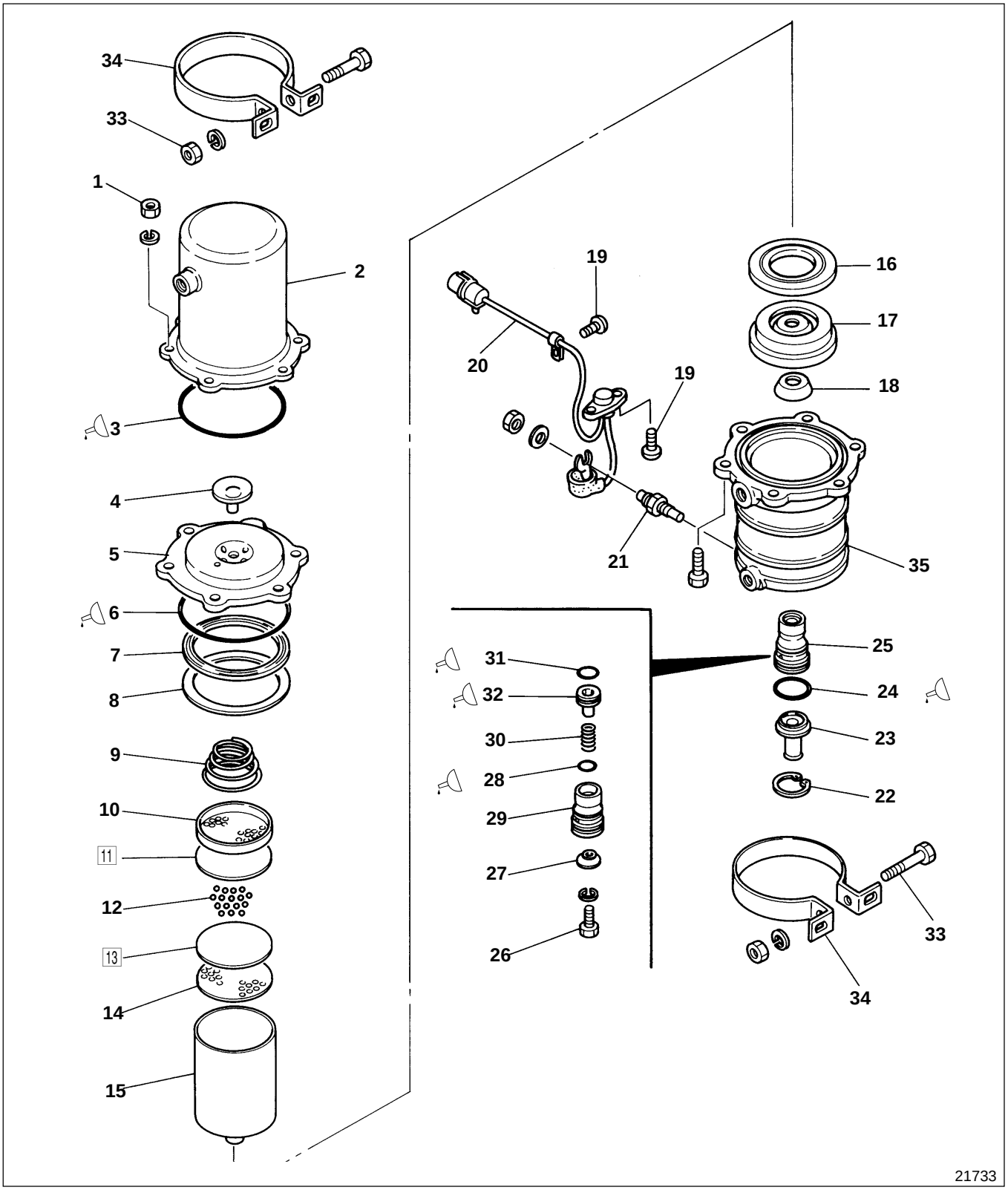
34
33
1
2
3
4
5
6
7
8
9
10
11
12
13
14
15
19
20
19
16
17
18
21
35
31
32
30
28
29
27
26
25
24
23
22
33
34
21733

● **Disassembly sequence**

1 Nut
2 Purge chamber
3 O-ring
4 Check valve
5 Cover assembly
6 O-ring
7 Sealing
8 Case guide
9 Set spring
10 Filter plate
11 Filter
12 Desiccant
13 Filter
14 Filter plate
15 Case
16 Filter gasket
17 Oil filter
18 Gasket ring
19 Screw
20 Thermostat assembly
21 Heater
22 Retaining ring
23 Exhaust cover
24 O-ring
25 Valve body assembly
26 Bolt
27 Valve assembly
28 O-ring
29 Valve body
30 Valve spring
31 O-ring
32 Piston
33 Bolt
34 Bracket
35 Body

Ⓧ: Non-reusable part

● **Assembly sequence**

Follow the disassembly sequence in reverse.

Repair kit: Air dryer kit

● **Inspection after assembly**

📖 P.35A-78

Ⓣ Tightening torque

Unit: N·m {ft.lbs, kgf·m}

Location	Parts to be tightened	Tightening torque	Remarks
1	Nut (Purge chamber and body mounting)	8.8 to 13.7 {6.5 to 10, 0.9 to 1.4}	—
26	Bolt (Valve assembly mounting)	3.9 to 6.9 {2.9 to 5.1, 0.4 to 0.7}	—
33	Bolt (Bracket mounting)	4.9 to 5.9 {3.6 to 4.3, 0.5 to 0.6}	—

Lubricant

Location	Points of application	Specified lubricant	Quantity
—	O-ring and piston sliding surface	Multipurpose grease [NLGI No. 2 (Li soap)]	As required

◆ Service procedure

● Inspection after assembly

Inspection for air leakage

- Plug the air outlet port of the air dryer completely, and apply pressures of 49 kPa {7.1 lbf/in^2, 0.5 kgf/cm^2} and 880 kPa {130 lbf/in^2, 9 kgf/cm^2} from the air inlet port. Check to ensure that each section except valve assembly **30** is free from any air leaks. As for the valve assembly, a small amount of air leaks not exceeding 20 cm^3 {1.22 cu. in.}/min is permissible.
- Check to ensure that there are no air leaks in the air dryer body when an air pressure of 880 kPa {130 lbf/in^2, 9 kgf/cm^2} is applied from the command pressure port of the air dryer.

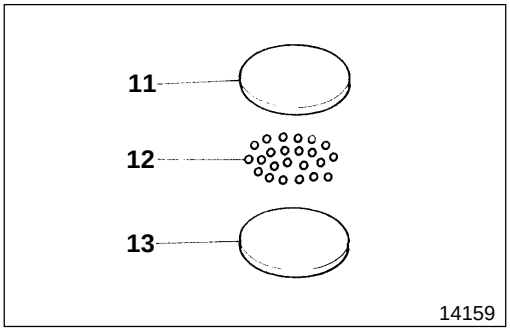

11 13 Installation of filter

Install filters **11** and **13** with their softer layer facing desiccant **12**.

GROUP 54 ELECTRICAL

1 POWER, CHARGING AND GROUND

SPECIFICATIONS 5
STRUCTURE AND OPERATION 5
TROUBLESHOOTING 1
100 INSPECTION AND ADJUSTMENT MOUNTED IN VEHICLE
• Inspection of Alternator 1
• Inspection of Regulator 1
101 BATTERY 54-4
104 FUSE 54-7
106 ALTERNATOR 5-
110 POWER CIRCUIT 1
115 RESERVE POWER CIRCUIT 5
125 BATTERY CHARGING CIRCUIT 1
130 GROUND 1

2 STARTING, PREHEATING, AND STOPPING ENGINE

SPECIFICATIONS 1
STRUCTURE AND OPERATION 1
TROUBLESHOOTING 1
200 INSPECTION AND ADJUSTMENT MOUNTED IN VEHICLE
Inspection of Engine Preheating System 1
201 STARTER 3
210 ENGINE STARTING CIRCUIT 4
212 SUB-STARTER CIRCUIT 1
220 ENGINE PREHEATING AND COLD START CIRCUIT
<Manual Transmission> 2
<Automatic Transmission> 2

3 LIGHTING

SPECIFICATIONS 1
STRUCTURE AND OPERATION 1
TROUBLESHOOTING 1
300 INSPECTION AND ADJUSTMENT MOUNTED IN VEHICLE
Headlamp Aiming 1
310 HEADLAMP CIRCUIT 1
313 DAYTIME RUNNING LIGHT CIRCUIT 5
320 TAIL LAMP, CLEARANCE LAMP AND LICENSE PLATE LAMP CIRCUITS 1
325 STOP LAMP CIRCUIT 1
330 TURN SIGNAL LAMP AND HAZARD LAMP CIRCUITS 1
340 BACKUP LAMP CIRCUIT 1
345 CAB LAMP CIRCUIT 1
348 ILLUMINATION LAMP CIRCUIT 1
349 MARKER LAMP AND IDENTIFICATION LAMP CIRCUITS 1
352 VAN BODY DOME LIGHT CIRCUIT 1

4 METER

SPECIFICATIONS 1
TROUBLESHOOTING 1
401 METER CLUSTER 5
410 SPEEDOMETER AND TACHOMETER CIRCUITS 4
420 FUEL GAUGE CIRCUIT 1
425 WATER TEMPERATURE GAUGE CIRCUIT 1

5 INDICATOR AND WARNING

TROUBLESHOOTING 1

500 INSPECTION AND ADJUSTMENT MOUNTED IN VEHICLE
• Inspection of Brake Fluid Level Switch <Air over hydraulic brake> 1

510 PARKING BRAKE INDICATOR CIRCUIT [PARK BRAKE]
<Center Parking Brake> 1
<Wheel Parking Brake> 1

515 BRAKE WARNING CIRCUIT [BRAKE FLUID] [BRAKE AIR] ... 4

530 WATER LEVEL WARNING CIRCUIT 1

536 ENGINE OIL PRESSURE WARNING CIRCUIT 1

537 OVERHEATING WARNING CIRCUIT 1

547 AUTOMATIC TRANSMISSION FLUID TEMPERATURE WARNING CIRCUIT [T/M OIL TEMP] 1

548 TRANSMISSION HIGH/LOW INDICATOR CIRCUIT
<10-speed Transmission> 1

550 CAB TILT WARNING CIRCUIT 1

6 CAB SIDE ELECTRICAL

SPECIFICATIONS 1

TROUBLESHOOTING 1

601 SWITCH 1

604 RELAY AND CONTROL UNIT 1

606 WARNING BUZZER 1

610 CIGARETTE LIGHTER CIRCUIT 1

612 AUDIO CIRCUIT 1

614 WIPER AND WASHER CIRCUIT 1

616 HORN CIRCUIT 1

618 HEATER CIRCUIT 1

622 POWER WINDOW AND AUTO DOOR LOCK CIRCUIT 5

629 MIRROR HEATER CIRCUIT 54-8

7 CHASSIS ELECTRICAL

701 MAGNETIC VALVE 1

710 EXHAUST BRAKE CIRCUIT 4
<Manual Transmission>

718 AIR DRYER CIRCUIT 1

8 ENGINE AND TRANSMISSION ELECTRICAL

801 ENGINE 1

802 TRANSMISSION 1
<Manual Transmission (5-speed, 6-speed Transmission)> 1
<Manual Transmission (10-speed Transmission)> 1
<Automatic Transmission> 1

850 TRANSMISSION POWER TAKE-OFF CIRCUIT <Option> 54-10

9 OTHERS

STRUCTURE AND OPERATION 1

910 MULTIPURPOSE TIMING CONTROL UNIT CIRCUIT 1

1: '96 Model Gr 54 (Pub No. TWME9503-54)
2: '97 Model Gr 54 (Pub No. TWME9503-1)
3: '98 Model Gr 54 (Pub No. TWME9503-2)
4: '99 Model Gr 54 (Pub No. TWME9503-3)
5: '00 Model Gr 54 (Pub No. TWME9503-4)

MEMO

101 BATTERY

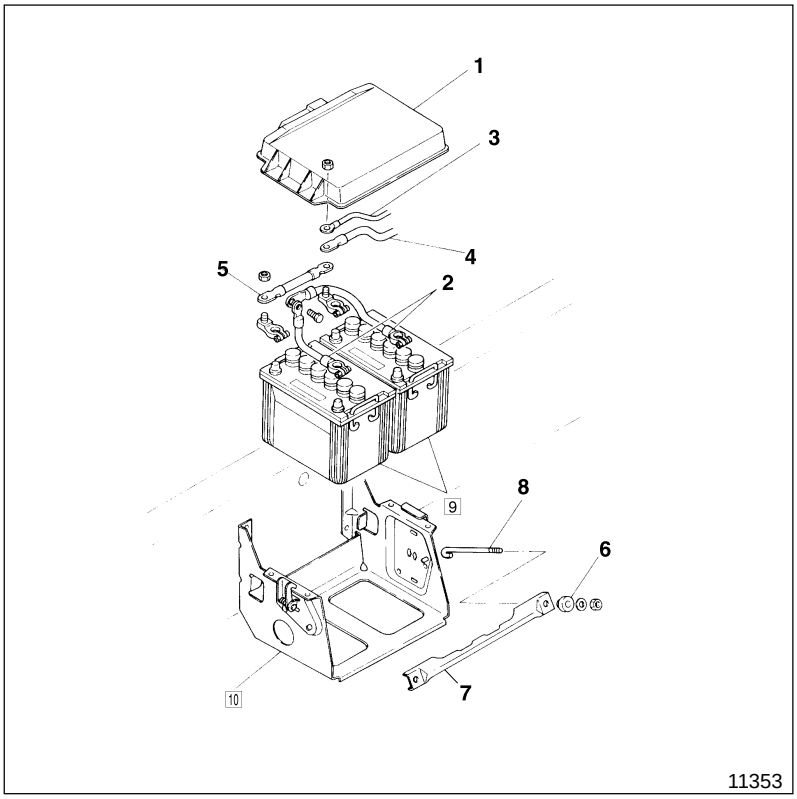

● **Removal sequence**

1 Battery cover
2 Battery cable ⊖
3 Harness (Main high-current fuse)
4 Starter cable
5 Battery cable ⊕
6 Rubber Cushion
7 Angle frame
8 Set bolt
9 Battery
10 Battery box

● **Installation sequence**

Follow the removal sequence in reverse.

DANGER ⚠

- **Because flammable hydrogen gas is generated from battery 9, be sure to obey the following.**
  - **Never attempt to short-circuit the positive and negative terminals of battery 9, and generate sparks, or smoke a cigarette near it.**
  - **Do not wear metal objects on your arms or do not lean over battery 9.**
- **Sulfuric acid of the electrolyte is very corrosive. Whenever handling battery 9, wear safety goggles and rubber gloves to protect your eyes and hands.**
- **Battery posts, terminals and related accessories contain lead and lead compounds. Wash hands after handling.**

WARNING ⚠

When you disconnect battery cables 2 to 5, disconnect battery cable ⊖ 2 first.

CAUTION ⚠

- **Make sure that all electrical switches of the vehicle are off before connecting battery cables 2 and 5.**
- **Be sure to connect battery cable ⊕ 5 first before you connect battery cable ⊖ 2.**
- **To prevent a short-circuit, take care that disconnected battery cables 2 and 5 do not accidentally touch the battery terminals.**

Service standards

Location	Inspection item	Standard value	Limit	Remedy
9	Specific gravity of battery electrolyte (20°C {68°F})	1.220 to 1.290	—	Charge or replace

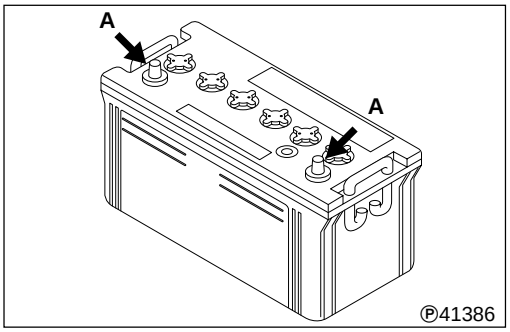

◆ Service procedure

9 Inspection of battery

(1) Visual inspection

- If terminal **A** is corroded, scrub off the corrosion using a wire brush.
- If cracks or defects are found on battery **9**, replace it because the cracks or defects can cause liquid spills.

CAUTION ⚠

Be sure to apply grease to the ⊕ side of terminal A because it is easily corroded.

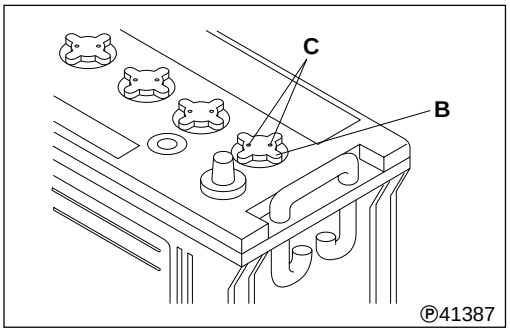

- If the air bleed hole **C** of vent plug **B** is clogged, clean the hole.

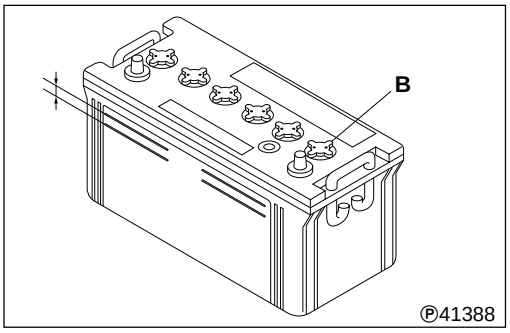

(2) Inspection of fluid level

- Confirm that the level of battery electrolyte is between the UPPER and LOWER LEVEL lines.
- If the level is below the LOWER LEVEL line, remove vent plug **B** and replenish the distilled water or battery fluid to the UPPER LEVEL.

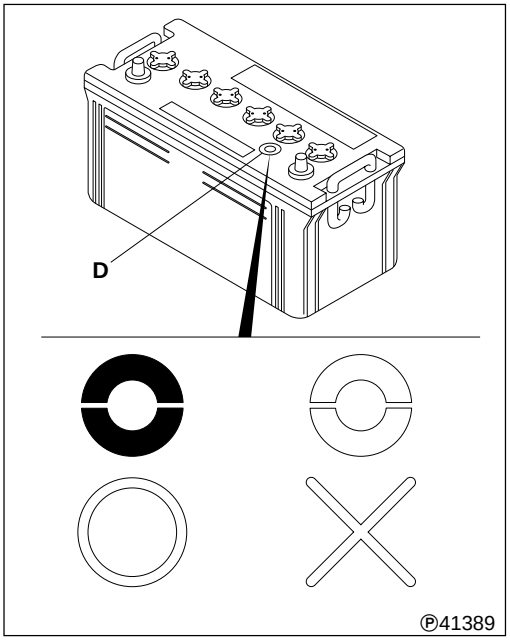

(3) Specific gravity measurement

You can tell the specific gravity of the battery electrolyte by the color shown in indicator **D**.

Blue : Good
White : Charge or replace

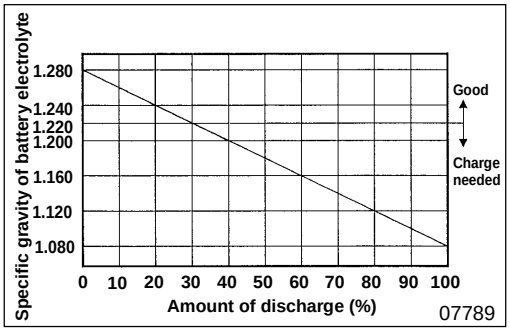

(4) Charging

- Battery **9** must be, as a rule, charged in the off-vehicle condition. If it is charged on vehicle, however, be sure to remove the grounding cable before starting the procedure.
- The battery must be charged with its all of vent plugs removed.
- For the recommended charge time and current, see the following table to avoid overcharging.

	Charge current (A)	Charge time (H)	Upper limit of fluid temperature (°C {°F})
Normal charge	Value of 5-hour rating capacity/10	{*Amount of discharge (Ah)/ Charge current (A)} × 1.2 (to 1,5)	45 {113}
Quick charge	Value of 5-hour rating capacity/1.5	0.5	55 {131}

* Amount of discharge (Ah) = 5-hour rating capacity (Ah) × [Amount of discharge (%)]/100

- Use the graph shown on the left to calculate the amount of discharge (%).
- For the battery electrolyte, use diluted sulfuric acid, made up of sulfuric acid and refined or distilled water.
- The specific gravity of fully-charged battery electrolyte is 1.280 at the liquid temperature of 20°C {68°F}.

DANGER ⚠

- **Do not let the battery electrolyte level rise and overflow while charging the battery.**
- **Keep open flame away from the battery while charging it or it might explode.**
- **Be careful not to generate sparks while charging the battery because it is dangerous.**
- **After charging the battery, tighten the vent plugs, wash away sulfuric acid from the battery using water, and dry the surface.**
- **Be sure to check the electrolyte level before charging the battery. Charging with the electrolyte level below the lower limit (LOWER LEVEL) can cause premature deterioration, heat generation and explosion of the battery.**

10 Inspection of battery box

- If battery box **10** is corroded, scrub off the corrosion off of it using a wire brush and apply acid resistant coating.
- If the battery box **10** is corroded excessively, deformed or cracked, replace it with a new one.

Main high-current fuse

Fuse No.	Main load	Capacity
—	High-current fuse box	140A

High-current fuse box

Fuse No.	Main load	Capacity
FH1	Starter switch (Terminal M)	50A
FH2	Fuse box (B07 to 16)	40A
FH3	Fuse box (B18 to 24)	40A
FH4	Fuse box (B01 to 04)	40A
FH5	Glow relay (Terminal B)	50A
FH6	Alternator (Terminal B)	140A
FH7	Fuse box (B6)	40A
FH8	ABS	40A

Fuse box

Fuse No.	Main load	Capacity
A01	Audio	10A
A02	Cigarette lighter	15A
B01	Reserve power (BATT)	10A
B02	Reserve power (ACC)	10A
B03	Van body dome light relay	15A
B04	Socket connector	20A
B05	Power window	25A
B06	*Automatic transmission	10A
B07	Stop lamp	10A
B08	Turn/hazard	15A
B09	Tail lamp	20A
B10	Headlamp relay	10A
B11	—	—
B12	Headlamp RH	15A
B13	—	—
B14	—	—
B15	Headlamp LH	10A
B16	—	—
B17	Spare	—
B18	*Air-conditioner	20A
B19	—	—
B20	ABS	30A
B21	—	—

* marks indicate changed parts or added parts.

Fuse No.	Main load	Capacity
B22	Cab lamp	10A
B23	*Mirror heater	*10A
B24	—	—
B25	Horn	15A
M01	Automatic transmission	10A
M02	Transmission power take-off	10A
M03	—	—
M04	Reserve power (MAIN)	10A
M05	Neutral switch	10A
M06	Automatic transmission	20A
M07	*Mirror heater	*10A
M08	Pre-stroke cut relay	10A
M09	Air-conditioner	20A
M10	—	—
M11	Control unit	10A
M12	ABS electronic control unit	10A
M13	Turn/hazard	10A
M14	Air dryer	15A
M15	Meter, speed indicator, DRL	10A
M16	Backup lamp	10A
M17	Wiper	15A
S01	Safety relay	10A

* : Fuses are provided for these pieces of equipment only where they are installed.

ABS : Anti-lock brake system
DRL : Daytime running light

629 MIRROR HEATER CIRCUIT

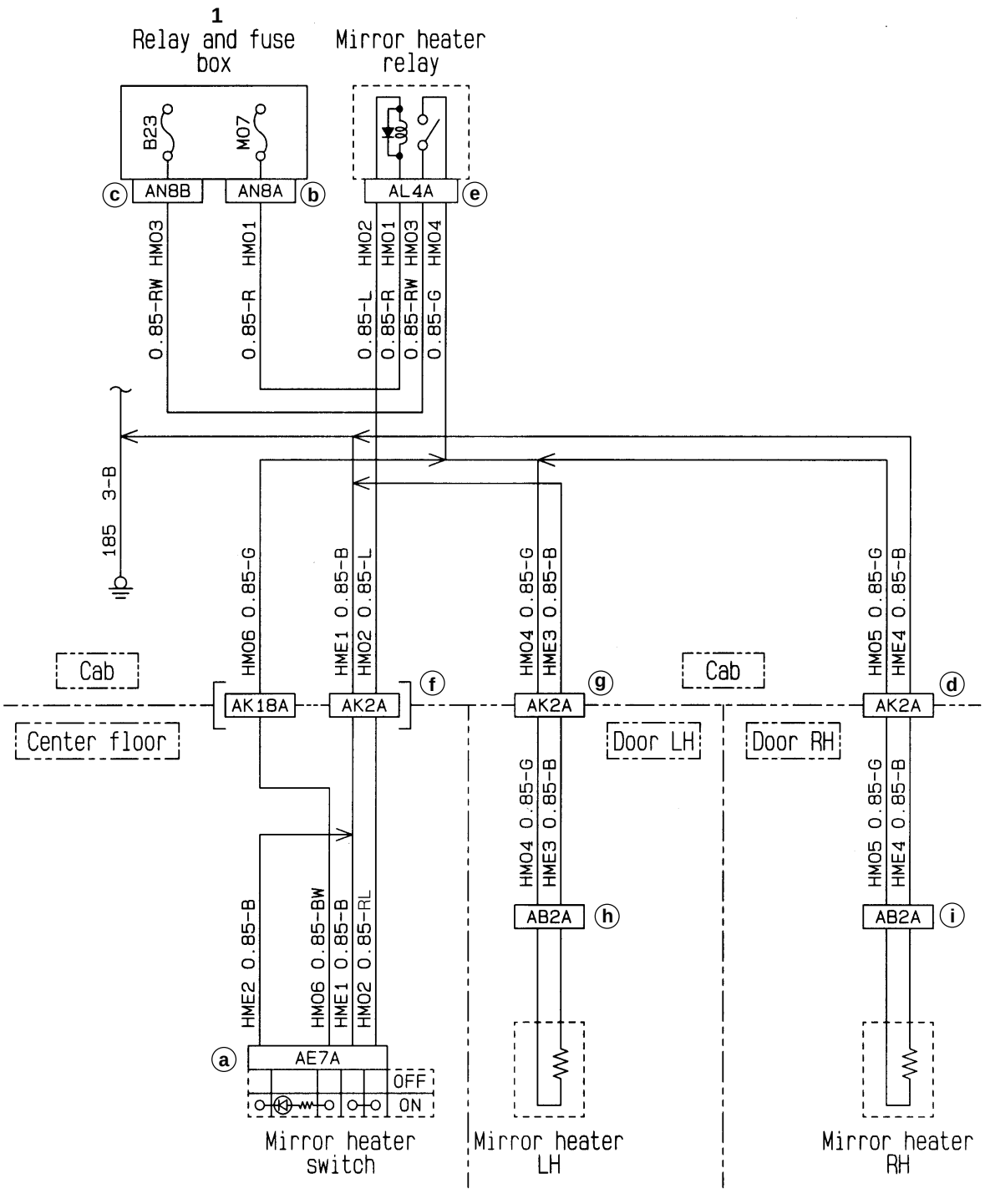

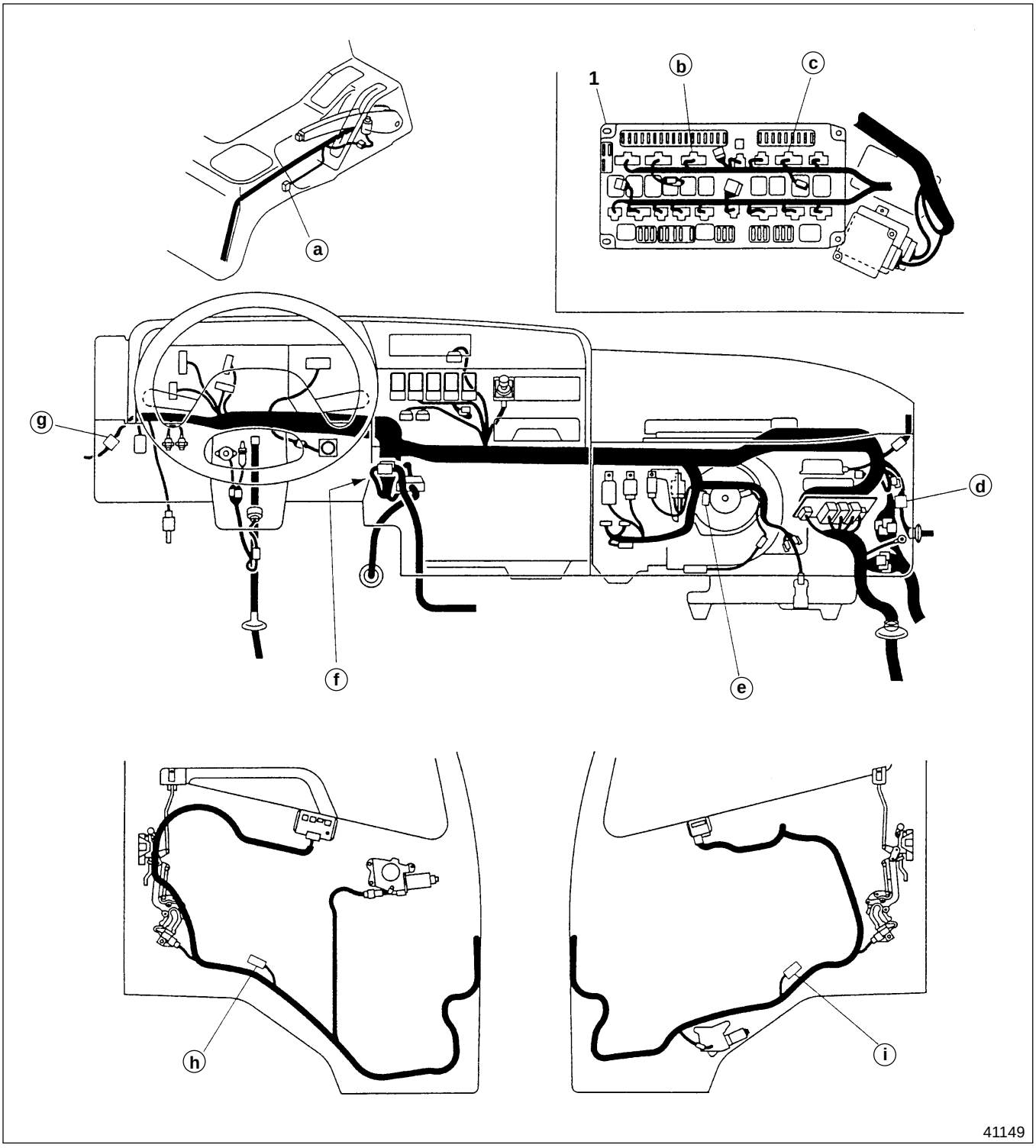

1 Relay and fuse box

850 TRANSMISSION POWER TAKE-OFF CIRCUIT

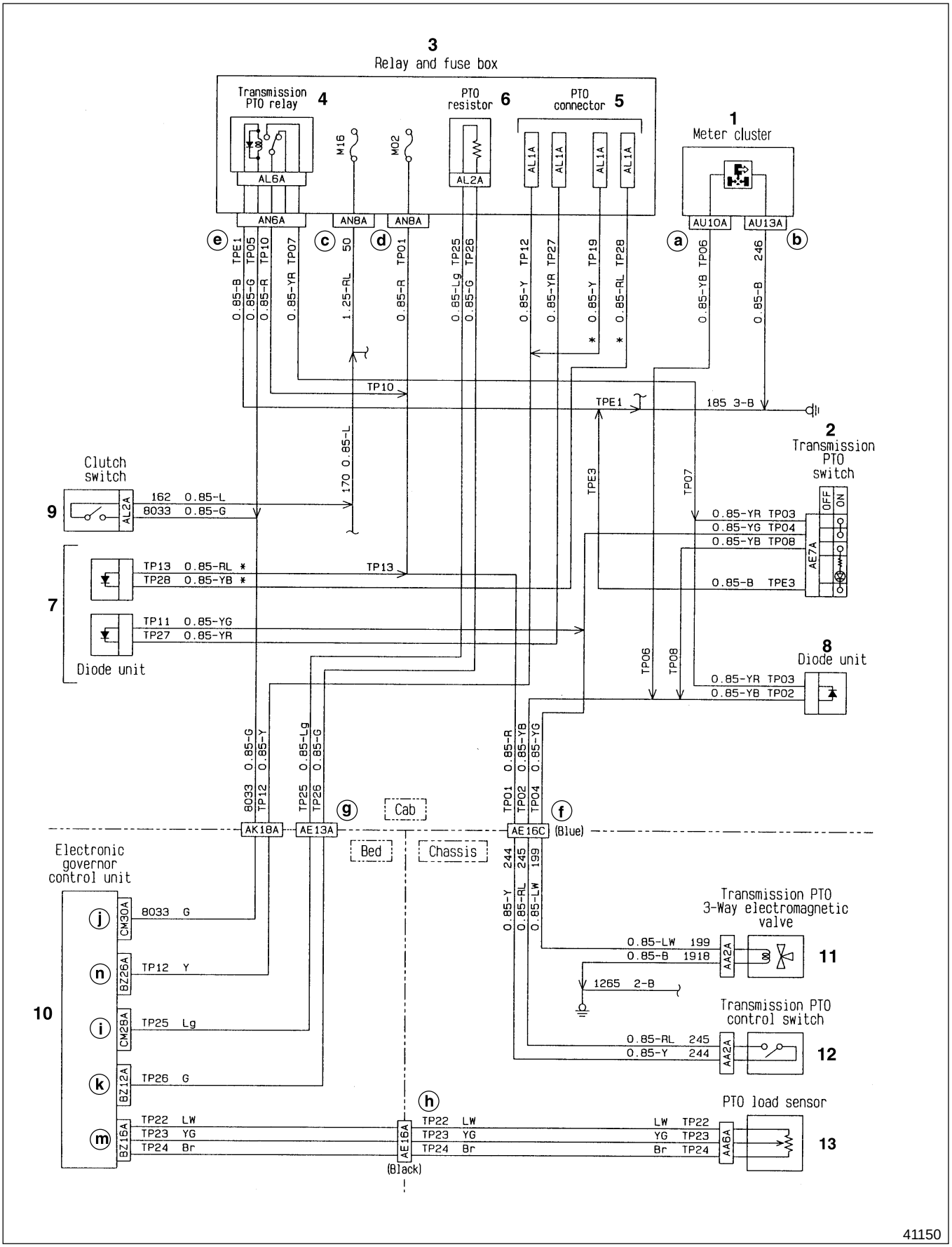

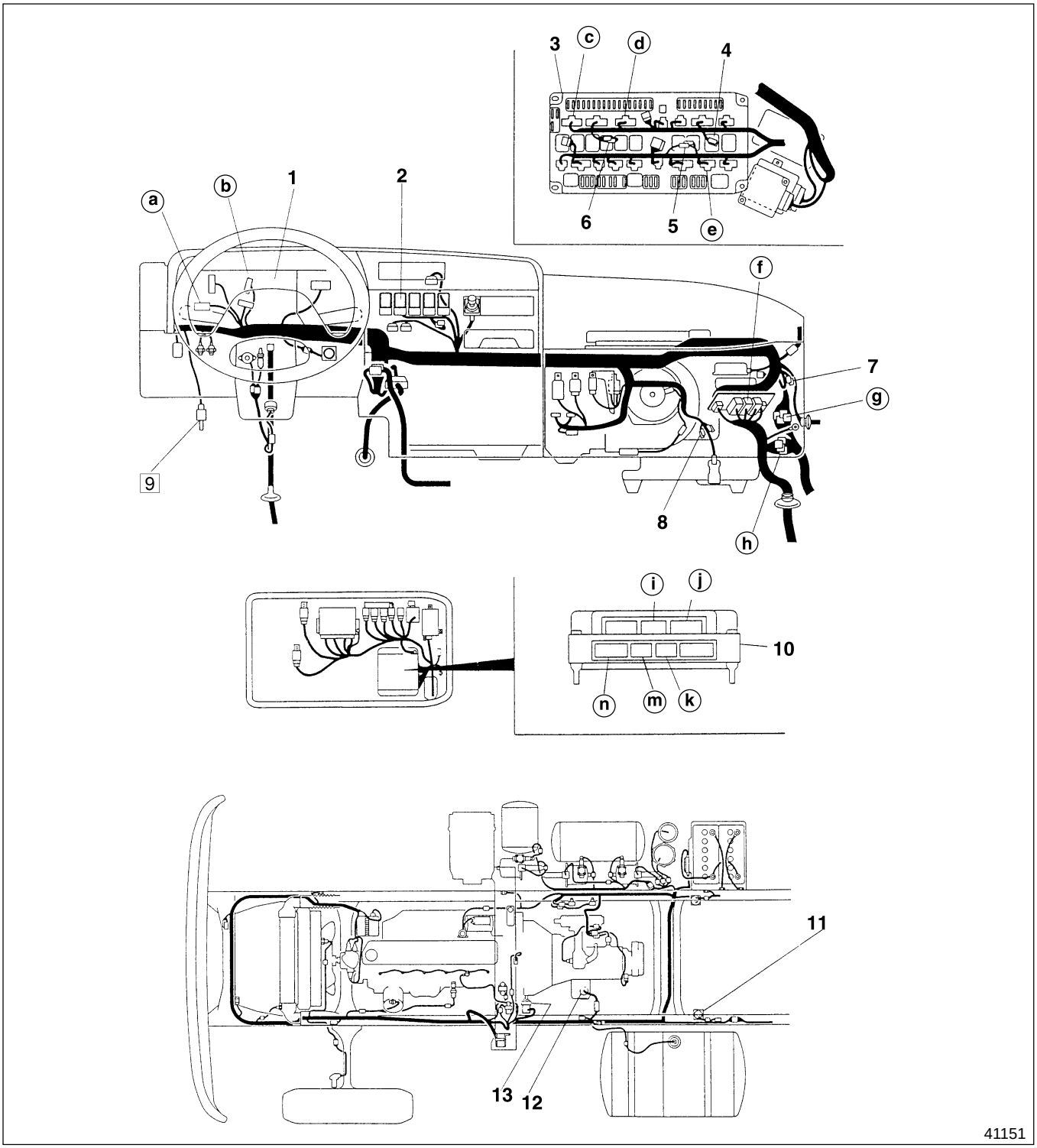

1 Meter cluster 1 (401)
2 Transmission power take-off switch
3 Relay and fuse box
4 Transmission power take-off relay
5 Power take-off connector
6 Power take-off resistor
7 Diode unit
8 Diode unit
9 Clutch switch
10 Electronic governor control unit 2
11 Transmission power take-off 3-way electromagnetic valve
12 Transmission power take-off control switch
13 Power take-off load sensor

1: '00 model Gr 54 (TWME9503-4)
2: '99 model Gr 13 (TWME9503-313)

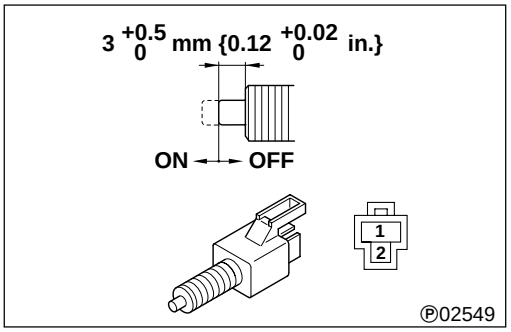

◆ Service procedure

9 Inspection of clutch switch

- Follow the table below to check for continuity.

	①	②
OFF		
ON	○———	———○

○——○ : There is continuity between terminals.

- If any fault is found, replace the clutch switch **9**.

PTO: Power take-off

MITSUBISHI FUSO

Service Manual

Table of Contents

BACK

HOME

FK/FM 2000
Model Year Changes

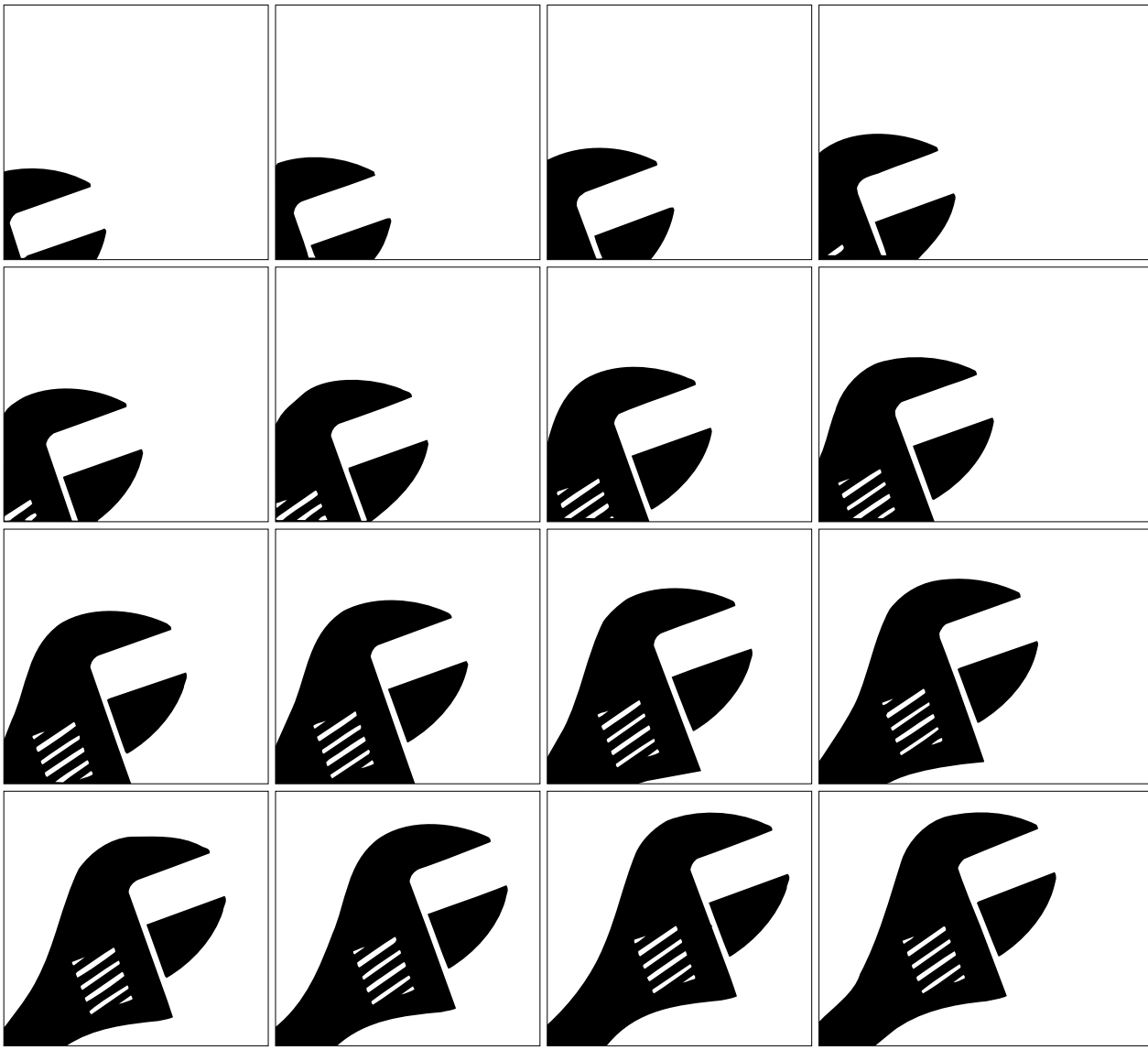

Pub. No. TWME9503-4

FK/FM

SERVICE MANUAL

FOREWORD

This Service Manual contains maintenance and repair methods for personnel involved in the maintenance and repair of 2000 model Mitsubishi Fuso Truck FK/FM series.
Read this manual carefully as an aid to providing correct, efficient and fast maintenance.
Please note, however, that due to continuous improvements on the specifications, numbers and description for maintenance might be changed without prior notice.
If you have any question, or encounter a problem, please do not hesitate to contact your nearest Mitsubishi Fuso dealer or distributor.

© Mitsubishi Motors Corporation, May 1999

MITSUBISHI FUSO TRUCK OF AMERICA, Inc.

GROUP INDEX

2000 MODEL CHANGES

GENERAL 00

ANTI-LOCK BRAKE SYSTEM 35C

CAB 42

ELECTRICAL 54

2000 MODEL CHANGES

2000 MODEL CHANGES

Item	’00 Model	⇦	’99 Model
Gr 00 General • Manual transmission of FK617 has been changed to 6-speed, and differential gear ratio has also been changed accordingly. • The vehicle identification number has changed.	🕮 Gr 00 General		—

Item	’00 Model ⇦ ’99 Model

Gr 12 Lubrication

- Oil cooler bypass valve has been relocated.

< ’00 Model >

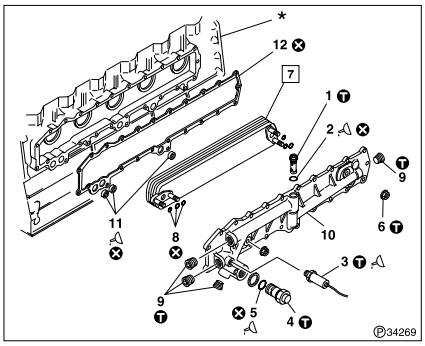

● **Disassembly sequence**

1 Bypass valve
2 O-ring
3 Engine oil pressure switch
4 Regulator valve
5 O-ring
6 Nut
7 Oil cooler element
8 O-ring
9 Oil cooler plug
10 Oil cooler cover
11 O-ring
12 Gasket

* : Crankcase assembly
⊗ : Non-reusable parts

● **Assembly sequence**

Follow the disassembly sequence in reverse.

Service standard Unit: mm {in.}

Location	Maintenance item	Standard value	Limit	Remedy
1	Bypass valve opening pressure	294±20 kPa {43±2.8 lbf/in², 3.0±0.2 kgf/cm²}	—	Replace
7	Oil cooler element air leak (Air pressure: 1470 kPa {215 lbf/in², 15 kgf/cm²}, 15 sec)	0 cm³ {0 cu. in.}	—	Replace

(T) Tightening torque Unit: N·m {lbf.ft, kfg·m}

Location	Parts to be tightened	Tightening torque	Remarks
1	Bypass valve	14.7 to 19.6 {11 to 14, 1.5 to 2}	—
3	Engine oil pressure switch	15 to 22 {11 to 16, 1.5 to 2.2}	—
4	Regulator valve	98 to 118 {72 to 87, 10 to 12}	—
6	Nut (Oil cooler element mounting)	19.6±4.9 {14±3.6, 2.0±0.5}	—
9	Oil cooler plug	41.1±9.8 {33±7.2, 4.5±1}	—

Lubricant and/or sealant

Location	Points of application	Specified lubricant and/or sealant	Quantity
3	Wrap around threaded part of engine oil pressure switch	Thread tape	3-1/2 turns
2, 5, 11	Oil cooler O-ring	Engine oil	As required

< 99 Model >

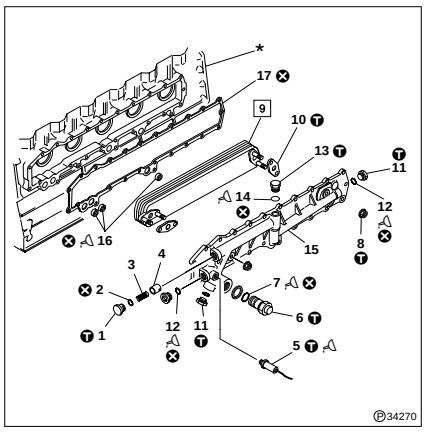

● **Disassembly sequence**

1 Bypass valve plug
2 O-ring
3 Bypass valve spring
4 Bypass valve
5 Engine oil pressure switch
6 Regulator valve
7 O-ring
8 Nut
9 Oil cooler element
10 Gasket
11 Oil cooler plug
12 O-ring
13 Oil cooler plug
14 O-ring
15 Oil cooler cover
16 O-ring
17 Gasket

* : Crankcase assembly
⊗ : Non-reusable parts

● **Assembly sequence**

Follow the disassembly sequence in reverse.

Service standards Unit: mm {in.}

Location	Maintenance item		Standard value	Limit	Remedy
3	Bypass valve spring	Free length	104.3±1 {4.11±0.039}	—	Replace
		Installation load (installation length)	84±3 N {19±0.7 lbf, 8.6±0.3 kgf}	—	Replace
9	Oil cooler element air leak (Air pressure: 1000 kPa {145 lbf/in², 10.2 kgf/cm²}, 15 sec)		0 cm³ {0 cu.in}	—	Replace

(T) Tightening torque Unit: N·m {lbf.ft, kfg·m}

Location	Parts to be tightened	Tightening torque	Remarks
1	Bypass valve plug	34.5±4.9 {25±3.6, 3.5±0.5}	—
5	Engine oil pressure switch	15 to 22 {11 to 16, 1.5 to 2.2}	—
6	Regulator valve	98 to 118 {72 to 87, 10 to 12}	—
8	Nut (Oil cooler element mounting)	20±4.9 {14±3.6, 2.0±0.5}	—
11	Oil cooler plug	25±4.9 {18±3.6, 2.5±0.5}	—
13	Oil cooler plug	34.5±4.9 {25±3.6, 3.5±0.5}	—

Lubricant and/or sealant

Location	Points of application	Specified lubricant and/or sealant	Quantity
5	Wrap around threaded part of engine oil pressure switch	Thread tape	3-1/2 turns
7, 12, 14, 16	Oil cooler O-ring	Engine oil	As required

Item	'00 Model	⇦ '99 Model
Gr 13 Fuel and engine control • Part No. and type of ROM pack have been changed.	MK 344606 (MRT-E6)	MK 327927 (MRT-E4)
• Vehicles with automatic transmission are equipped with cruise control. These vehicles are provided with cruise control main switch, cruise control relay and cruise control switch. (Electric circuit diagram is the same as that of manual transmission vehicles.)	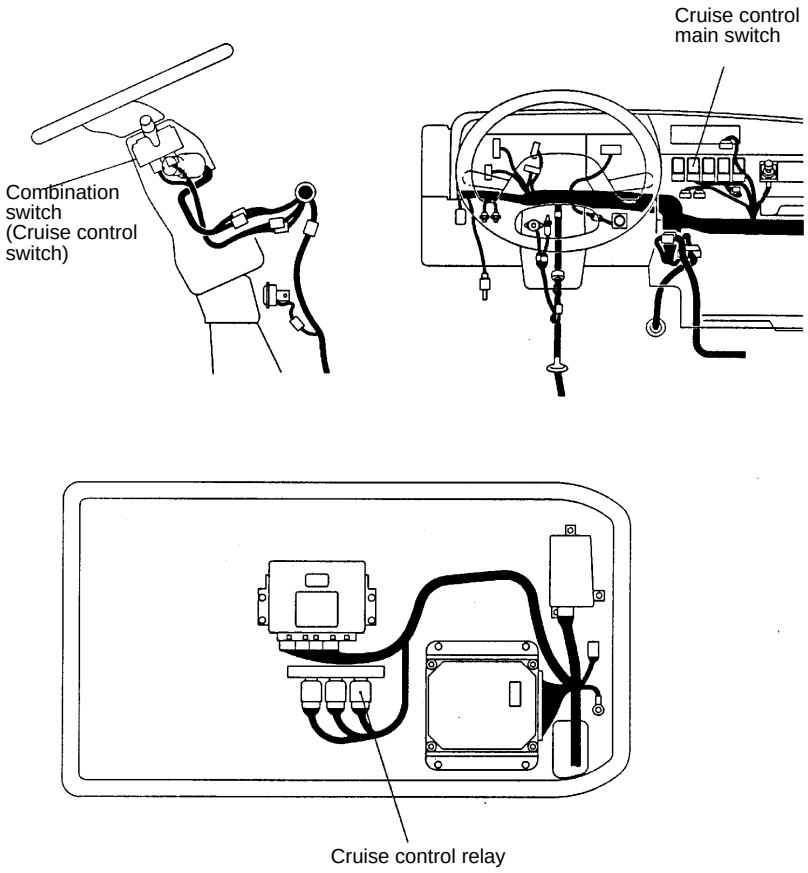 36129	

Item	’00 Model ⇦ ’99 Model

Gr 14 Cooling

- Water pump assembly has been changed to an integrated unit that cannot be disassembled.

< ’00 Model >

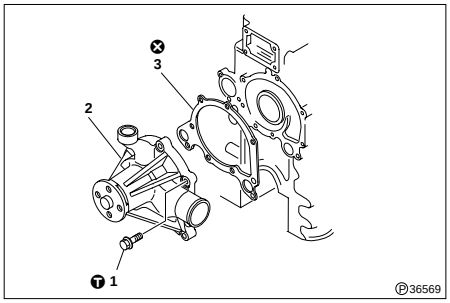

● **Disassembly sequence**

1 Bolt
2 Water pump assembly
3 Gasket

⊗: Non-reusable parts

● **Assembly sequence**

Follow the disassembly sequence in reverse.

CAUTION ⚠

Water pump assembly 2 is an integrated unit type that cannot be disassembled. If the pump is defective, replace the assembly.

Ⓣ Tightening torque Unit: N·m {lbf.ft, kfg·m}

Location	Parts to be tightened	Tightening torque	Remarks
1	Bolt (Water pump assembly mounting)	9.8 {7.2, 1.0}	—

< ’99 Model >

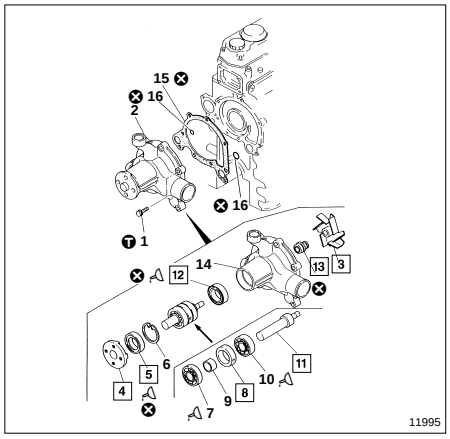

● **Diassembly sequence**

1 Bolt
2 Water pump
3 Impeller
4 Flange
5 Front oil seal
6 Snap ring
7 Bearing
8 Outer spacer
9 Inner spacer
10 Bearing
11 Water pump shaft
12 Rear oil seal
13 Unit seal
14 Water pump case
15 Gasket
16 O-ring

⊗: Non-reusable parts

● **Assembly sequence**

16→15→2→1

2: 14→12, 11→10 →9→8→7→6→5→4→13→3

Service standards Unit: mm {in.}

Location	Maintenace item	Standard value (Basic diameter in [ ])	Limit	Remedy
3, 11	Impeller-to-water pump shaft interference	[11.8] 0.03 to 0.06	—	Reassembly allowed only twice
4, 11	Flange-to-water pump shaft interference	[25] 0.05 to 0.08	—	Reassembly allowed only twice

Ⓣ Tightning torque Unit: N·m {lbf.ft, kgf·m}

Location	Parts to be tightened	Tightening torque	Remarks
1	Bolt (Water pump assembly mounting)	9.8 {7.2, 1.0}	—

Lubricant

Location	Points of application	Specified lubricant	Quantity
5	Lip area of front oil seal	Engine oil	As required
7, 10	Interior and exterior peripheries on installation of bearing	Engine oil	As required
12	Lip area of rear oil seal	Engine oil	As required

2000 MODEL CHANGES

Item	'00 Model	⇦	'99 Model
Gr 35C Anti-lock brake system • Shape of wheel speed sensors has been changed.	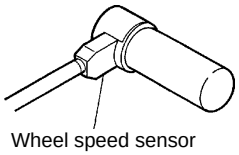 Wheel speed sensor 37176		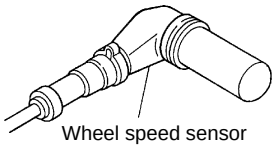 Wheel speed sensor 37177
• In FK, wheel speed sensor installations have been changed.	🕮 Gr 35C Anti-lock brake system (ABS)		—
Gr 42 Cab • Power window system equipped with central door lock switch is used for door windows.	🕮 Gr 42 Cab		—
Gr 54 Electrical **1 POWER, CHARGE AND GROUND** • Capacities of main high-current fuses main load specifications have charged.	140A (104) FUSE 🕮 P54-5		120A
• High-current fuse box main load specifications have changed or added.	FH6 (140A: 100A alternator) 🕮 (104) P54-5 FH8 (40A: ABS hydraulic unit) 🕮 (104) P54-5		
• Capacities of fuses listed on the right and main load specifications have changed.	B02 Reserve power (ACC) 10A B05 Power window 25A B09 Tail lamp 20A B10 Headlamp relay 10A B12 Headlamp RH 15A B13 — — B15 Headlamp LH 10A B16 — — M12 ABS electrical control unit 10A M15 Meter, speed indicator, DRL 10A		B02 — B05 — B09 Tail lamp 15A B10 Headlamp relay 5A B12 Headlamp main LH 10A B13 Headlamp main RH 10A B15 Headlamp dimmer LH 10A B16 Headlamp dimmer RH 10A M12 — M15 Meter, speed indicator 10A
• Alternator capacity has been increased.	100A alternator (106) 🕮 P54-6		80A alternator
• Spare DC output (ACC) has been added.	(115) RESERVE POWER CIRCUIT 🕮 P54-14		
• Chassis harness has been changed due to use of new alternator.	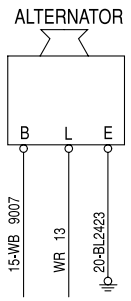 Ⓟ36733		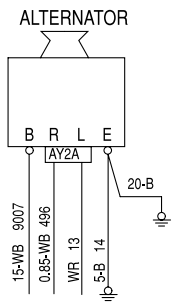 Ⓟ37284

Item	’00 Model ⇦ ’99 Model
• Grounding wire has been added.	

	Ground	Circuit No.	Wire diameter-wire color
1	Cab ground	PWE 1	2-B
2		EGE 1	0.85-B
3	Chassis ground	1265	2-B

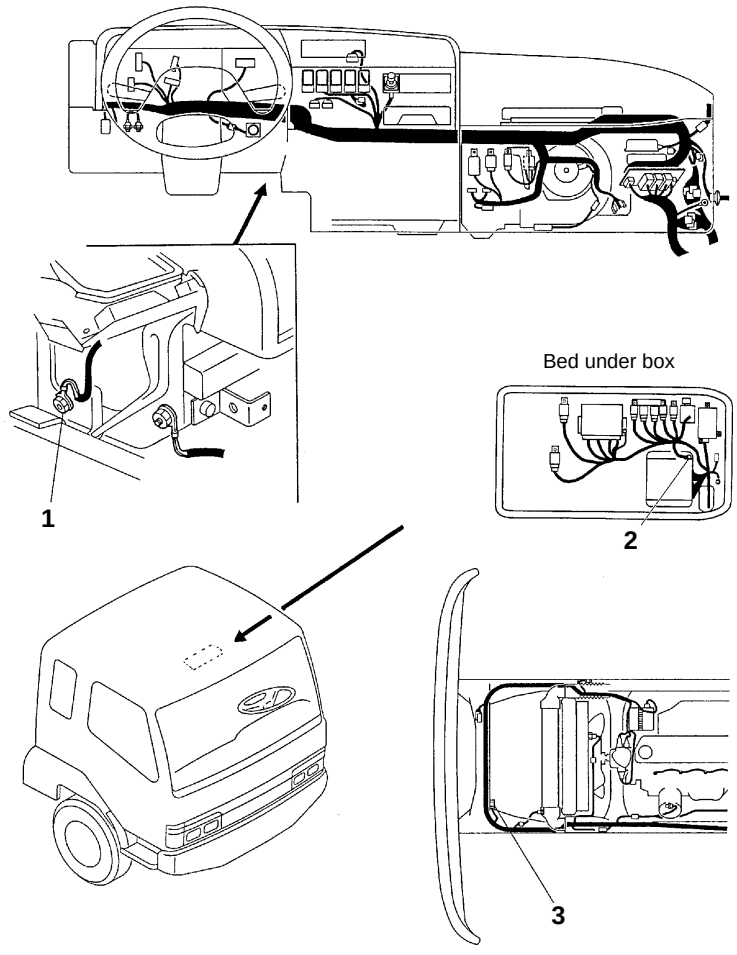

36734

③ **LIGHTING** • Daytime running light system is added.	(313) DAYTIME RUNNING LIGHT CIRCUIT 🕮 P54-16
④ **METER** • Meter cluster has been changed, including addition of indicator.	(401) METER CLUSTER 🕮 P54-20
⑥ **CAB SIDE ELECTRICAL** • Power window and auto door lock circuit is added.	(622) POWER WINDOW AND AUTO DOOR LOCK CIRCUIT 🕮 P54-22

GROUP 00 GENERAL

POWER TRAIN TABLE 00-2

VEHICLE IDENTIFICATION NUMBER 00-3

POWER TRAIN TABLE

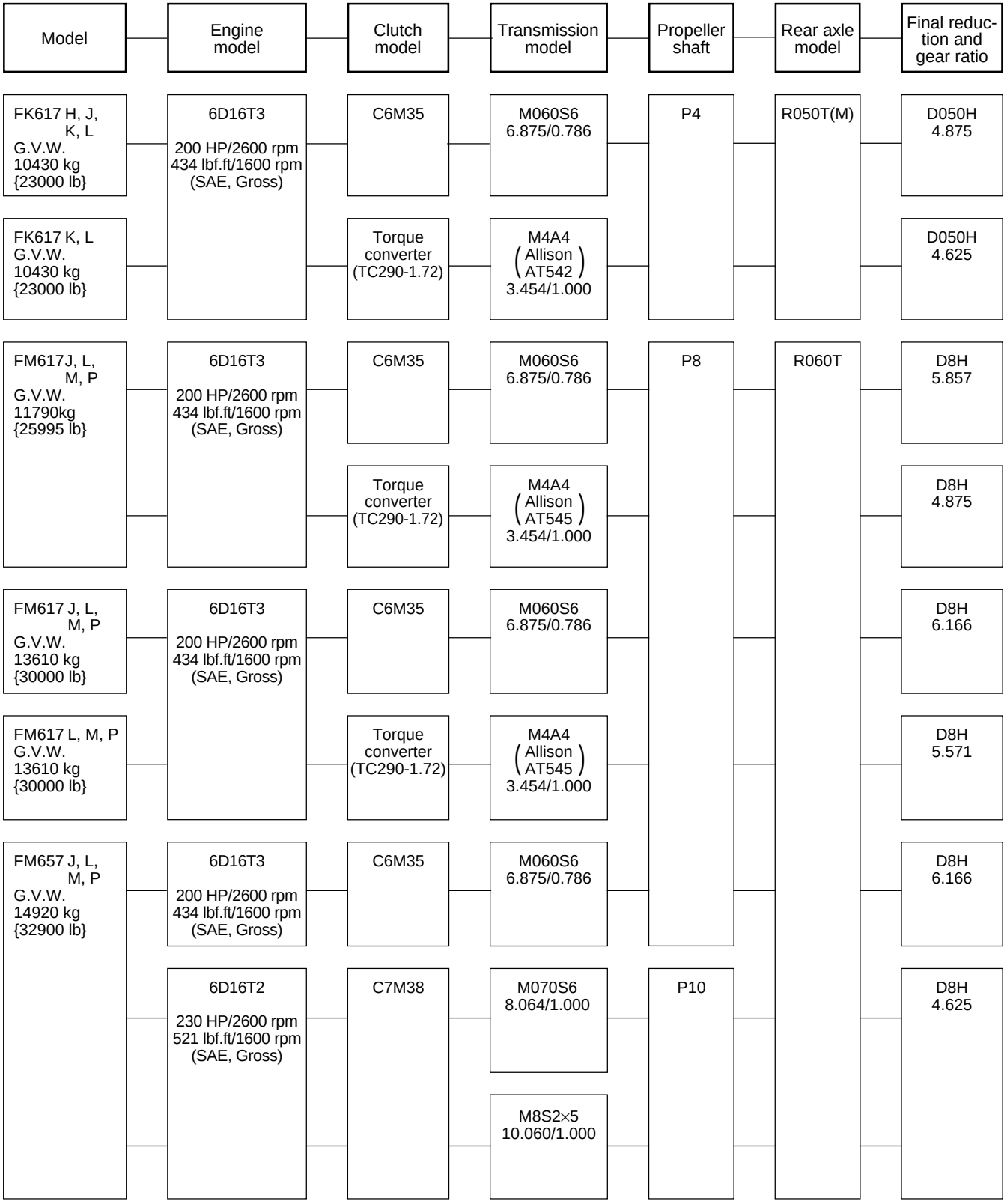

VEHICLE IDENTIFICATION NUMBER

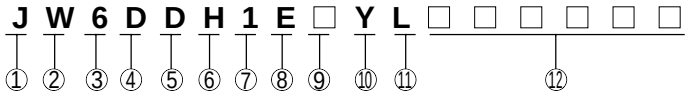

①	Country	J:	Japan
②	Make	W:	Mitsubishi Fuso
③	Vehicle type	6:	Incomplete Vehicle
④	Gross vehicle weight/Brake system	D:	19501 to 26000 lbs/Air over hydraulic
		E:	26001 to 33000 lbs/Air over hydraulic
		F:	26001 to 33000 lbs/Full air
⑤	Line	D:	FK617
		E:	FM617
		F:	FM657
⑥	Series (Wheelbase)	H:	4.1 to 4.39 m {13.45 to 14.40 ft.}
		J:	4.4 to 4.69 m {14.43 to 15.38 ft.}
		K:	4.7 to 4.99 m {15.41 to 16.37 ft.}
		L:	5.0 to 5.29 m {16.40 to 17.35 ft.}
		M:	5.3 to 5.59 m {17.38 to 18.33 ft.}
		N:	5.6 to 5.89 m {18.37 to 19.32 ft.}
		P:	5.9 to 6.19 m {19.35 to 20.30 ft.}
⑦	Cab chassis type	1:	Chassis cab
⑧	Engine	E:	7.545 ℓ Diesel turbocharged and charge air cooled
⑨	Check digit		
⑩	Model year	Y:	2000
⑪	Plant	K:	Kawasaki-1
		L:	Kawasaki-2
		M:	Kawasaki-3
⑫	Plant sequential number	N:	Nakatsu

GROUP 35C ANTI-LOCK BRAKE SYSTEM (ABS)

WHEEL SPEED SENSOR AND ROTOR
< REAR AXLE >..... 35C-2

WHEEL SPEED SENSOR AND ROTOR < REAR AXLE >

< FK >

The following describes the service procedures for wheel speed sensors and rotors only.
Regarding the procedures for servicing other components, refer to Gr 27.

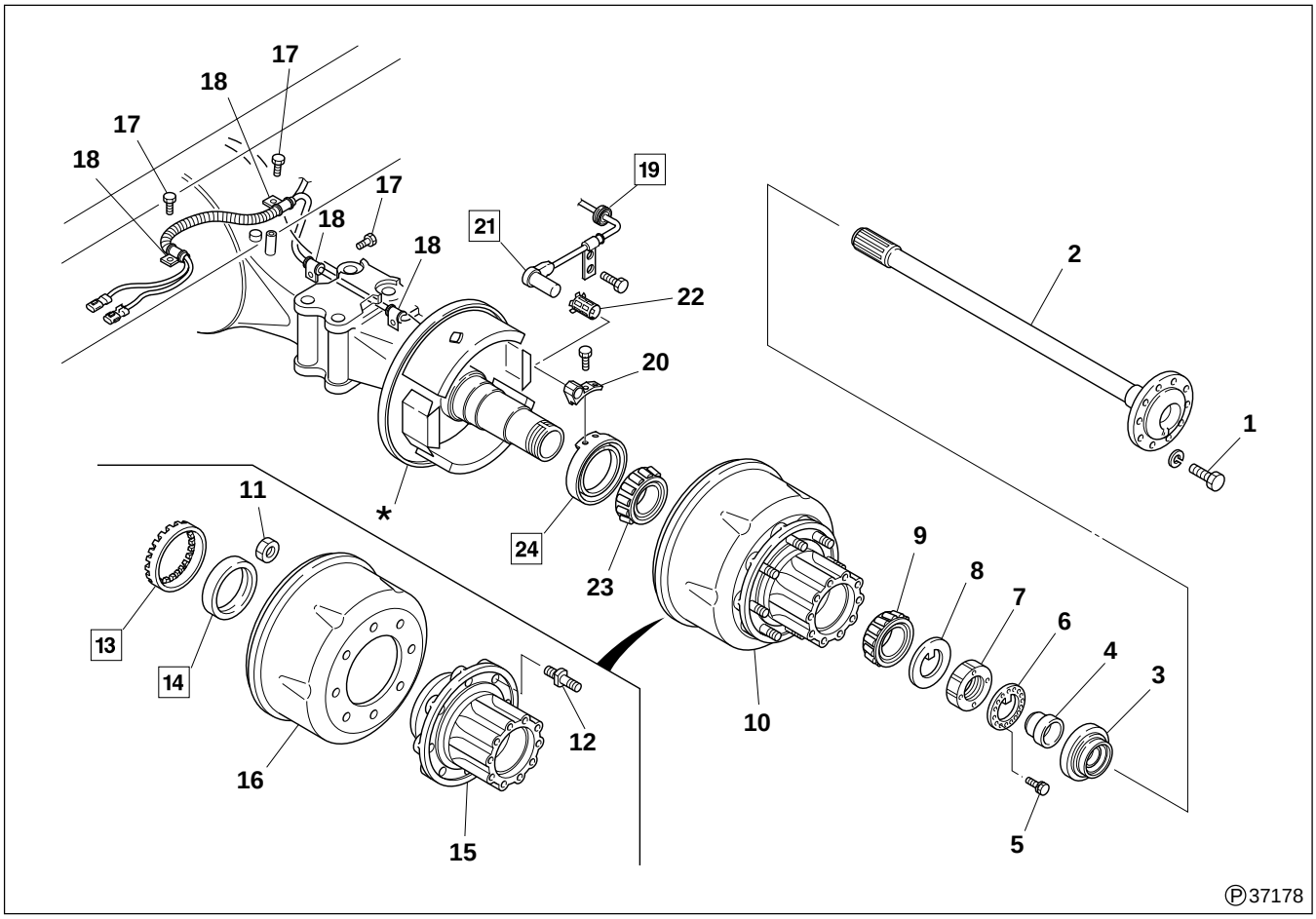

● **Disassembly sequence**

1 Bolt
2 Rear axle shaft
3 Oil seal
4 Oil seal retainer
5 Bolt
6 Lock plate
7 Lock nut
8 Lock washer
9 Outer bearing
10 Hub and brake drum assembly
11 Nut
12 Hub bolt
13 Rotor
14 Oil seal
15 Wheel hub
16 Brake drum
17 Bolt
18 Clip
19 Grommet
20 Sensor holder
21 Wheel speed sensor
22 Spring spacer
23 Inner bearing
24 Oil seal retainer

***** : Rear brake assembly

● **Assembly sequence**

Follow the disassembly sequence in reverse.

- Do not remove oil seal retainer **4** unless it is damaged (scratches, bending, tilting).

CAUTION

- **When removing or installing hub and brake drum assembly 10, handle rotor 13 with care to prevent damage. Also, do not damage oil seal 14 during assembly.**
- **Keep oil and grease off lining surface of rear brake assembly * and the inner surface of brake drum 16.**

Service standards

Unit : mm {in.}

Location	Maintenance item		Standard value	Limit	Remedy
13	Wobbling of rotor		0.1 {0.0039}	—	Replace
21	Wheel speed sensor	Resistance between terminals	950 to 1450Ω	—	Replace
		Insulation resistance	1MΩ or higher	—	Replace

Special tools

Unit : mm {in.}

Location	Tool name and shape	Part No.	Application
14	Anti-lock brake system oil seal installer 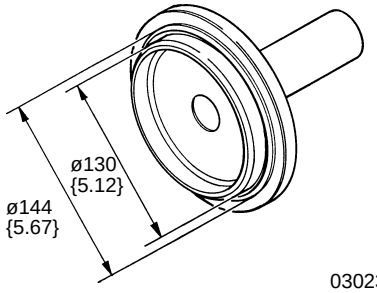	MH062664	Press-fitting of oil seal

◆ Service procedure

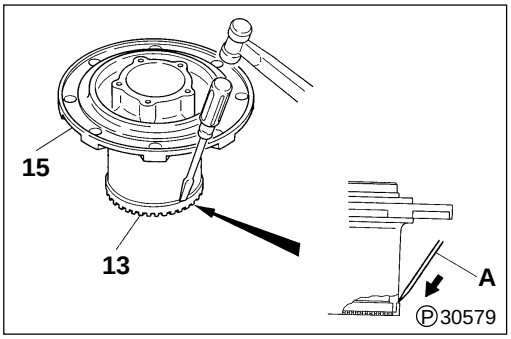

13 **Rotor**

[Removal]

Strike the outer edge of rotor **13** evenly with flat-tip screwdriver **A** to remove the rotor from the wheel hub.

CAUTION⚠

Be careful not to damage wheel hub 15.

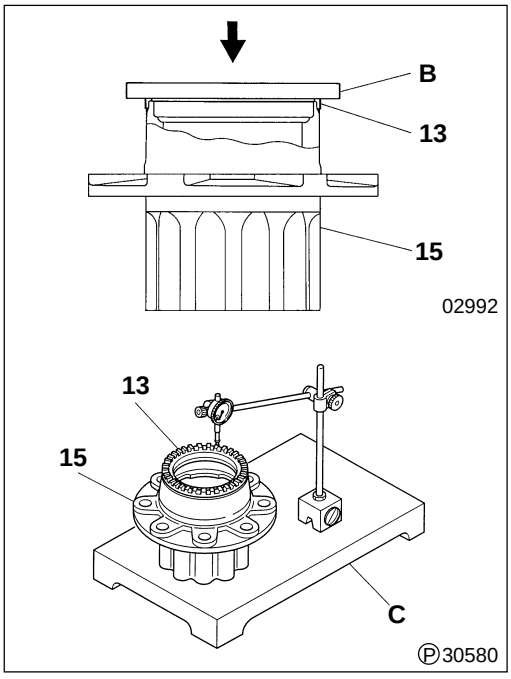

[Installation]

Heat rotor **13** to approximately 150°C {302°F}. Press the rotor evenly with iron plate **B** to press-fit the rotor to wheel hub **15**. Make sure there is no space between the rotor and wheel hub.

[Inspection]

- If the amount of wobbling exceeds the standard value, repeat the assembly procedure from the beginning.
- If the amount of wobbling exceeds the standard value after reassembly, replace defective parts.

C : Base

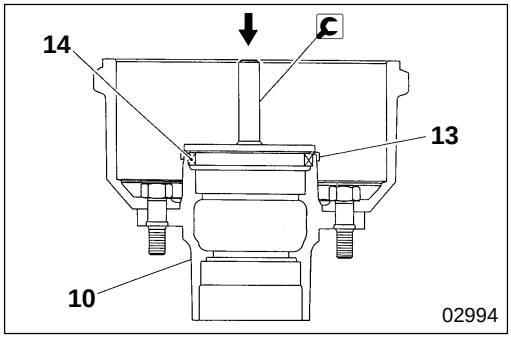

14 Installation of oil seal

NOTE

When hub and brake drum assembly 10 is removed for a service operation and if rotor 13 is still mounted on the wheel hub, use Anti-lock brake system oil seal installer to press-fit oil seal 14.

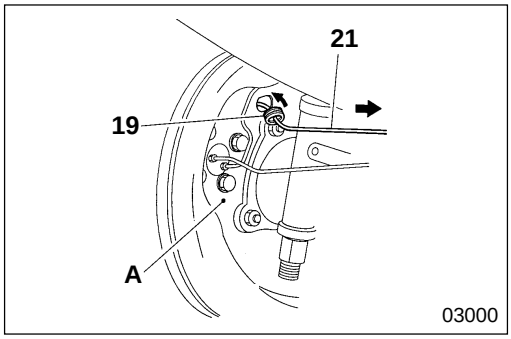

19 Installation of grommet

Mount grommet **19** on back plate **A**, and pull the harness of wheel speed sensor **21** to make sure there is no slack inside the wheel brake.

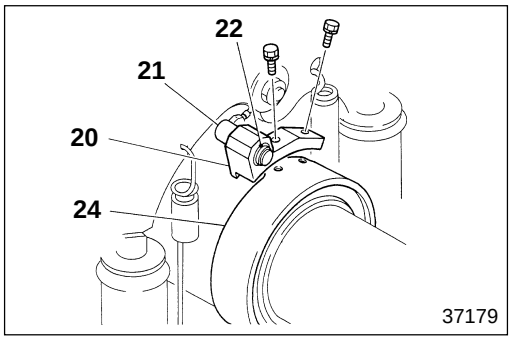

21 Wheel speed sensor

[Removal]

- With wheel speed sensor **21** and spring space **22** installed in sensor holder **20**, remove the sensor holder from oil seal retainer **24**.

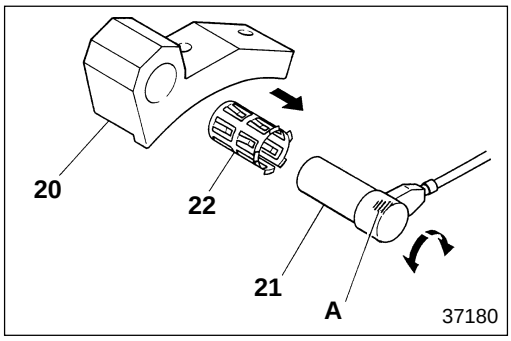

- Hold shaded section **A** of wheel speed sensor **21** with pliers, and remove the sensor by twisting it slightly in left and right directions.

CAUTION

- **When holding wheel speed sensor 21 with pliers, do not grip any section other than shaded area A in the diagram.**
- **When removing wheel speed sensor 21, do not apply force on the sensor, such as by hitting with a hammer, prying with a screwdriver or pulling the harness, since these actions can result in wire breakage.**
- **If wheel speed sensor 21 dismounts easily, replace spring spacer 22.**

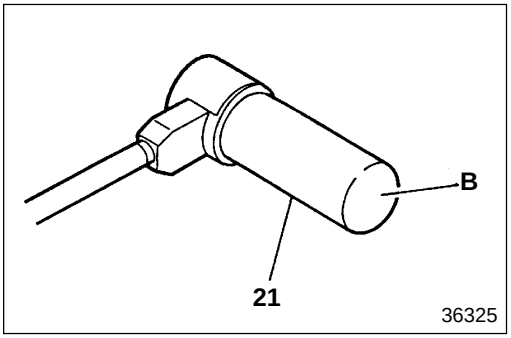

[Inspection]

- Since pole piece section **B** is magnetized by the magnet inside wheel speed sensor **21**, it attracts metals. Do not allow the pole piece to collect metallic objects.

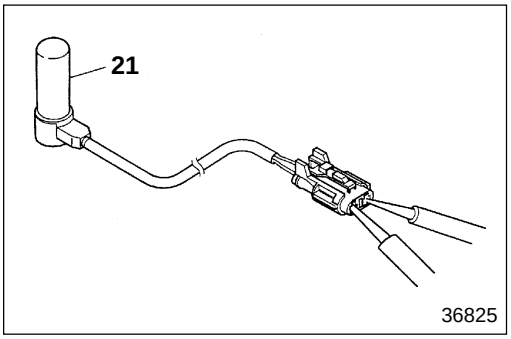

- Measure the resistance between the terminals of wheel speed sensor **21**.
  If the measured value deviates from the standard value, replace the wheel speed sensor.

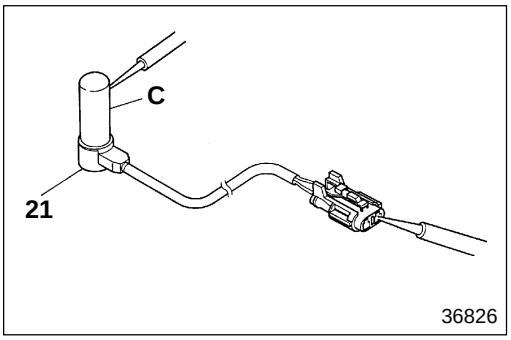

- Measure the insulation resistance between body **C** of wheel speed sensor **21** and each terminal.
  If the measured values deviate from the standard value, replace the wheel speed sensor.

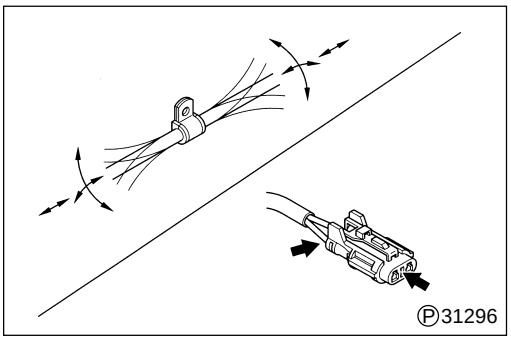

- To check for broken wires, remove the harness clamp section from the vehicle. Bend and extend the harness to check if there is any broken wire in the harness. Also, inspect the connector for proper contact.
  If a defect is found, replace wheel speed sensor **21**.

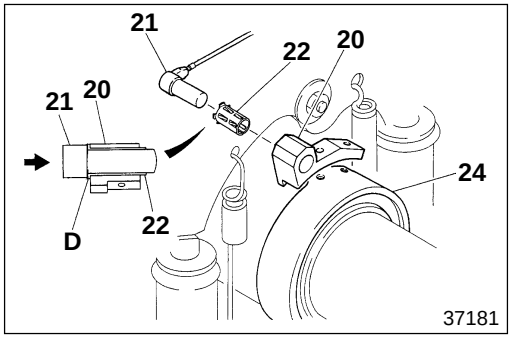

[Installation]

- Insert wheel speed sensor **21** from the back plate, and press until spring spacer **22** and stopper section **D** of the wheel speed sensor contacts sensor holder **20**.
- With wheel speed sensor **21** and spring spacer **22** installed in sensor holder **20**, mount the sensor holder on oil seal retainer **24**.

CAUTION

- **When installing wheel speed sensor 21, do not apply force on the sensor, such as by hitting with a hammer, prying with a screwdriver or pulling the harness, since these actions can result in wire breakage.**
- **Note that wheel speed sensor 21 is different for left and right wheels.**

Location	Harness connector color	Harness connector shape
Left wheel	Gray	Male
Right wheel	Black	Female

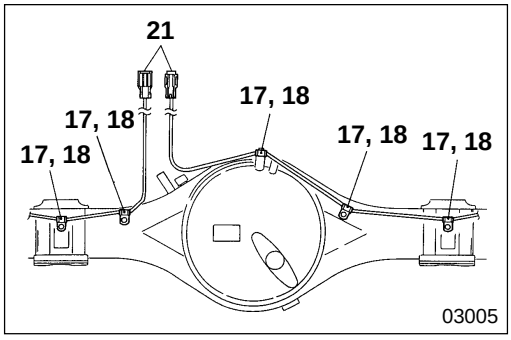

- Rear axle housing section
  Starting from the wheel brake side, secure the harness of wheel speed sensor **21** in place with clip **18** and bolt **17**. Make sure the harness does not interfere with other parts and there is no twist or slack in the harness.

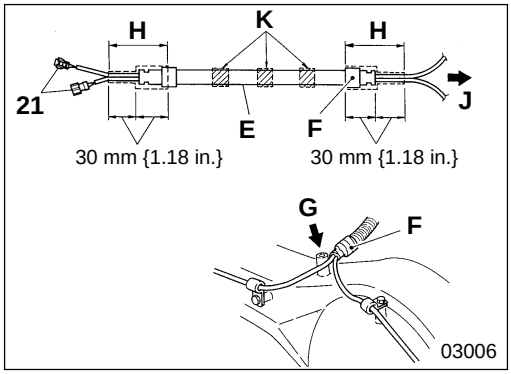

- Binding of harness
  - Gather the harnesses of left and right wheel speed sensors **21**, and bind with corrugated tube **E**.
  - Adjust the position of the corrugated tube **E** so that white tape section **F** is located at clip position **G** on the rear axle housing. Then, turn the corrugated tube so that the slit faces down. Wrap black tape (electric harness tape) on both ends **H** of the corrugated tube. The tape should be placed over the tube end and harness.
    J: Rear axle housing side
  - Wrap tape on the harnesses of wheel speed sensors **21** at sections **K** (three locations at equal intervals).

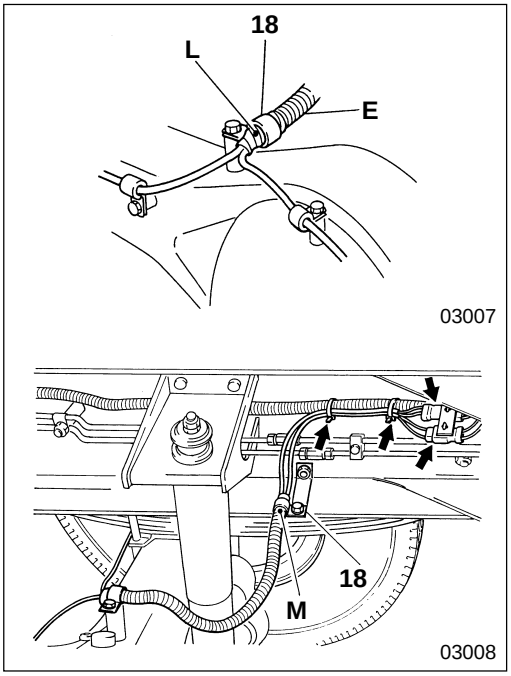

- Clamping of harness
  - Secure section **L** of corrugated tube **E** to the rear axle housing using clip **18**, and attach section **M** of the corrugated tube to the frame using clip **18**.
  - Connect the wheel speed sensor connector to the harness connector on the chassis side, and secure the connectors in place using the bracket.

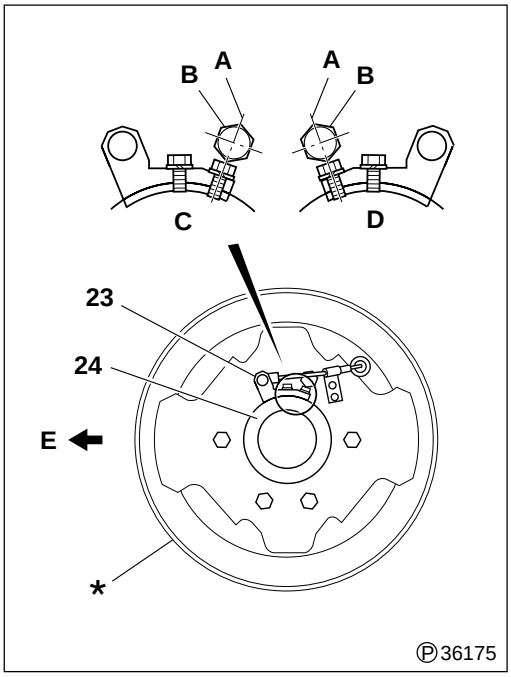

24 **Installation of oil seal retainer**

When installing oil seal retainer **24**, align mounting bolt center **A** of sensor holder **23** with the center line of mounting bolt **B** of brake assembly *.

C : For left wheel
D : For right wheel
E : Front of vehicle

NOTE

The brake assembly diagram shows a left wheel.

GROUP 42 CAB

STRUCTURE AND OPERATION ..... 42 - 2

TROUBLESHOOTING ..... 42 - 6

DOOR ..... 42 - 8

Door Locking System

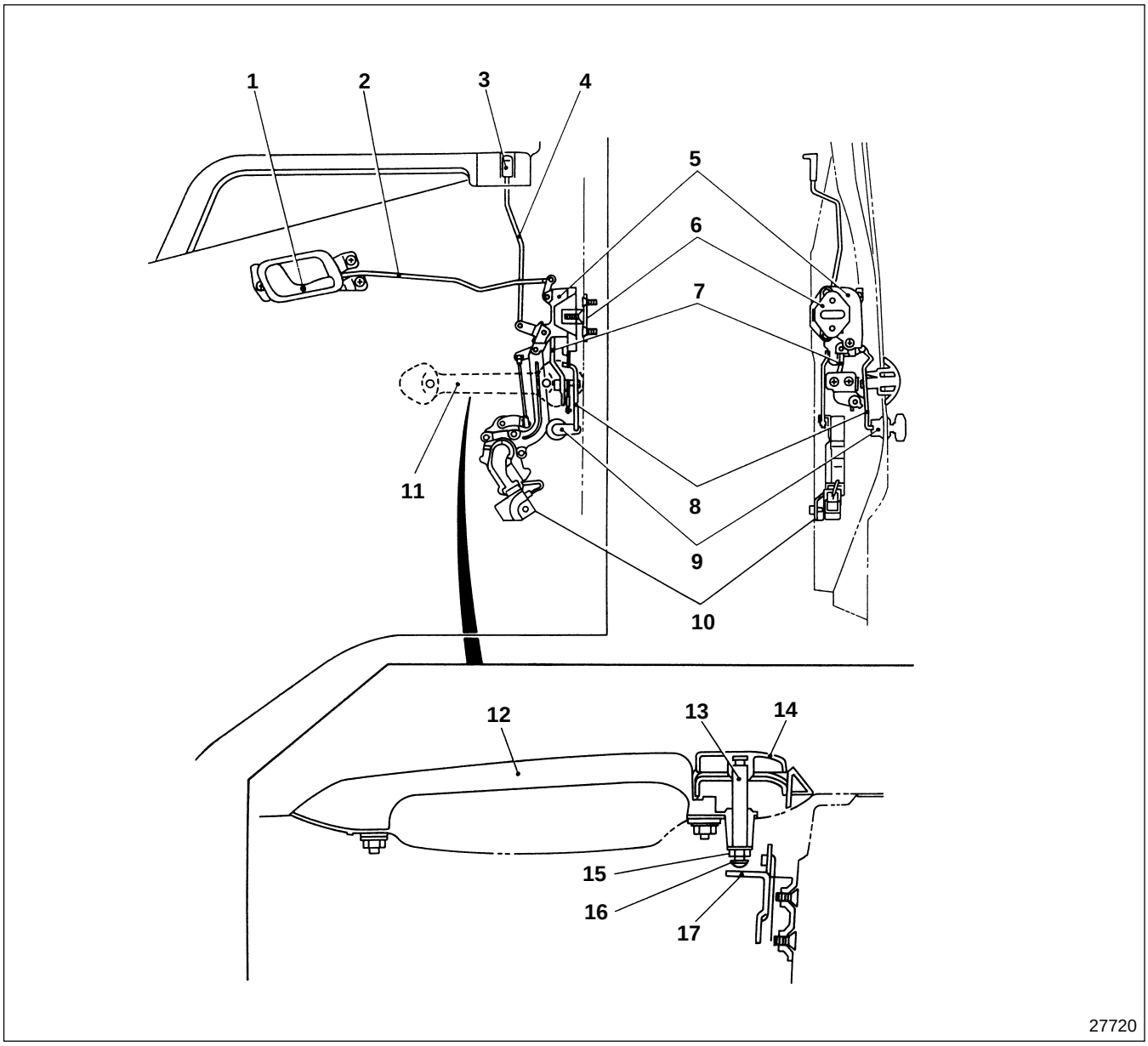

1	Inside handle	**7**	Door opening rod	**13**	Shaft
2	Door opening rod	**8**	Door lock cylinder rod	**14**	Push button
3	Door lock knob	**9**	Door lock cylinder	**15**	Nut
4	Door lock rod	**10**	Door lock actuator	**16**	Screw
5	Door latch	**11**	Outside handle	**17**	Stay
6	Striker	**12**	Handle		

- Push button **14** stroke of outside handle **11** can be adjusted to optimize opening and closing of the door .
- To adjust the stroke, turn screw **16** on shaft **13**.
- The head of screw **16** pushes stay **17**, and this moves door opening rod **7**, releasing door latch **5**.

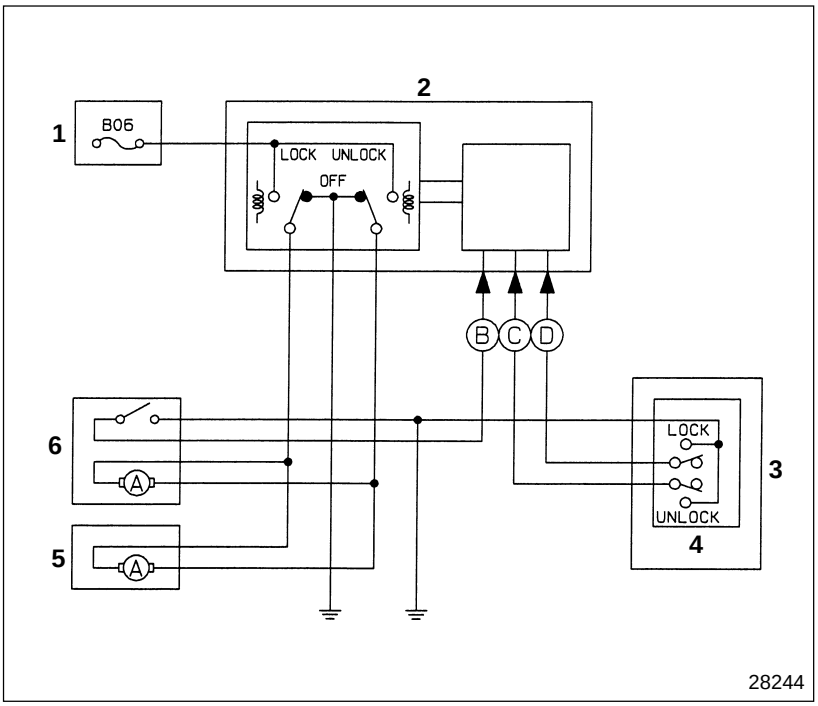

● **Auto door lock system electric circuit**

1 Fuse box
2 Power window electronic control unit
3 Power window switch and automatic door lock switch assembly
4 Automatic door lock switch
5 Passenger's seat side door lock actuator
6 Driver's seat side door lock actuator

A : Actuator

Ⓑ: Door lock and unlock signal by driver's seat side door lock actuator
Ⓒ: Door lock signal by automatic door lock switch
Ⓓ: Door unlock signal by automatic door lock switch

At the driver's seat side, the doors can be locked and unlocked by automatic door lock switch **4**. In addition, the doors can be locked and unlocked by procedures at door lock actuator **6**.

Door Glass Opening System

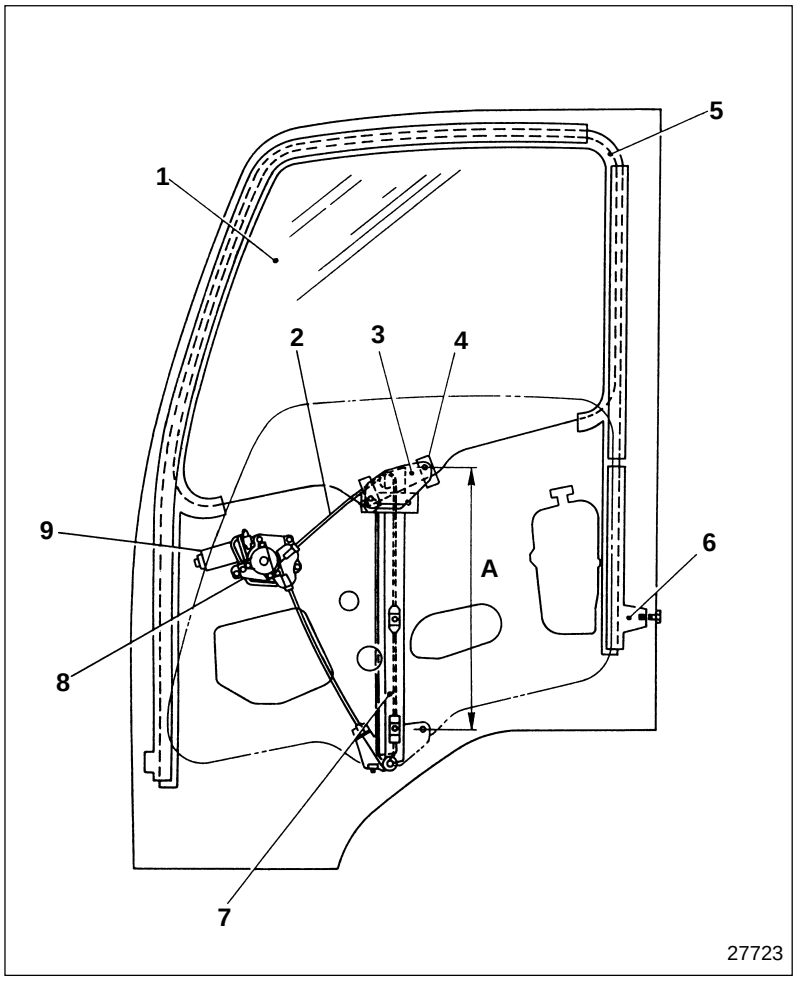

1 Door glass
2 Wire
3 Carrier plate
4 Glass holder
5 Run channel
6 Lower sash
7 Rail
8 Regulator
9 Power window motor

A : Carrier plate moving range

- Regulator **8** is so constructed that it is interlocked with power window motor **9** and carrier plate **3** through wire **2**.
- When power window motor **9** is rotated, carrier plate **3** is wound up or down by wire **2** to raise or lower door glass **1**.

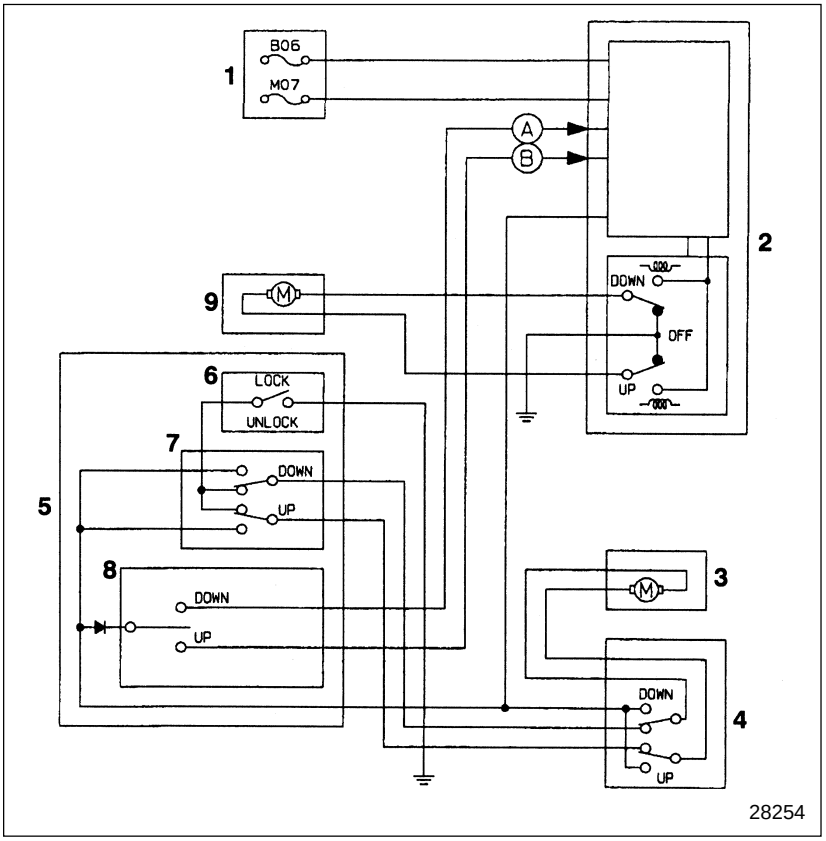

● **Door glass opening system electric circuit**

1 Fuse box
2 Door and mirror electric circuit unit
3 Passenger's seat side power window motor
4 Passenger's seat side power window switch
5 Power window switch assembly (driver's seat side)
6 Power window lock switch
7 Power window switch (to open and close passenger's side door glass from driver's seat)
8 Power window switch (driver's seat side)
9 Driver's seat side power window motor

M : Motor

Ⓐ: DOWN (MANUAL) signal from driver's seat side power window switch
Ⓑ: UP (MANUAL) signal from driver's seat side power window switch

- Driver's seat side power switch assembly **5** consists of power window lock switch **6**, power window switches **7** and **8**, and the automatic door lock switch put together as a unit.
- When power window lock switch **6** is placed at the LOCK position, the passenger's seat side door glass cannot be opened and closed even if the power window switches **4** and **7** are operated.

TROUBLESHOOTING

Door Lock

Symptoms / Possible causes		Inside handle can not open door	Inside handle heavy to operate	Outer handle can not open door	Outer handle heavy to operate	Door does not open and close smoothly	Auto door lock system does not operate: Procedure by key	Auto door lock system does not operate: Procedure by door lock knob	Auto door lock system does not operate: Procedure by auto door lock switch	Remarks
Door setting out of adjustment			○		○	○				
Each door rod	Rod deformed		○		○					
	Rod out of position	○		○			○	○	○	
	Rod interference		○		○					
Door lock cylinder deformed or damaged							○			
Power window and door lock switch assembly defective									○	Gr 54
Door lock actuator defective							○	○	○	
Door latch deformed or damaged			○		○	○				
Fuse of high current fuse blown							○	○	○	Gr 54
Connector improperly connected, harness open-circuited, improperly grounded							○	○	○	
Battery capacity insufficient							○	○	○	
Power window electronic control unit defective							○	○	○	
Striker deformed		○		○		○				
Outer handle out of adjustment					○					

Power Window

Symptoms / Possible causes	Door window glass falls by itself while driving	Power window regulator generates strange sound while driving	Power window does not operate	Power window does not stop	Power window generates strange sound when it operates	Remarks
Power window switch defective			○	○		
Power window control unit defective			○	○		
Power window regulator defective	○	○	○		○	Gr 54
Power window regulator improperly mounted					○	
Fuse or high current fuse blown			○			
Connector improperly connected, harness open-circuited, improperly grounded			○			

DOOR

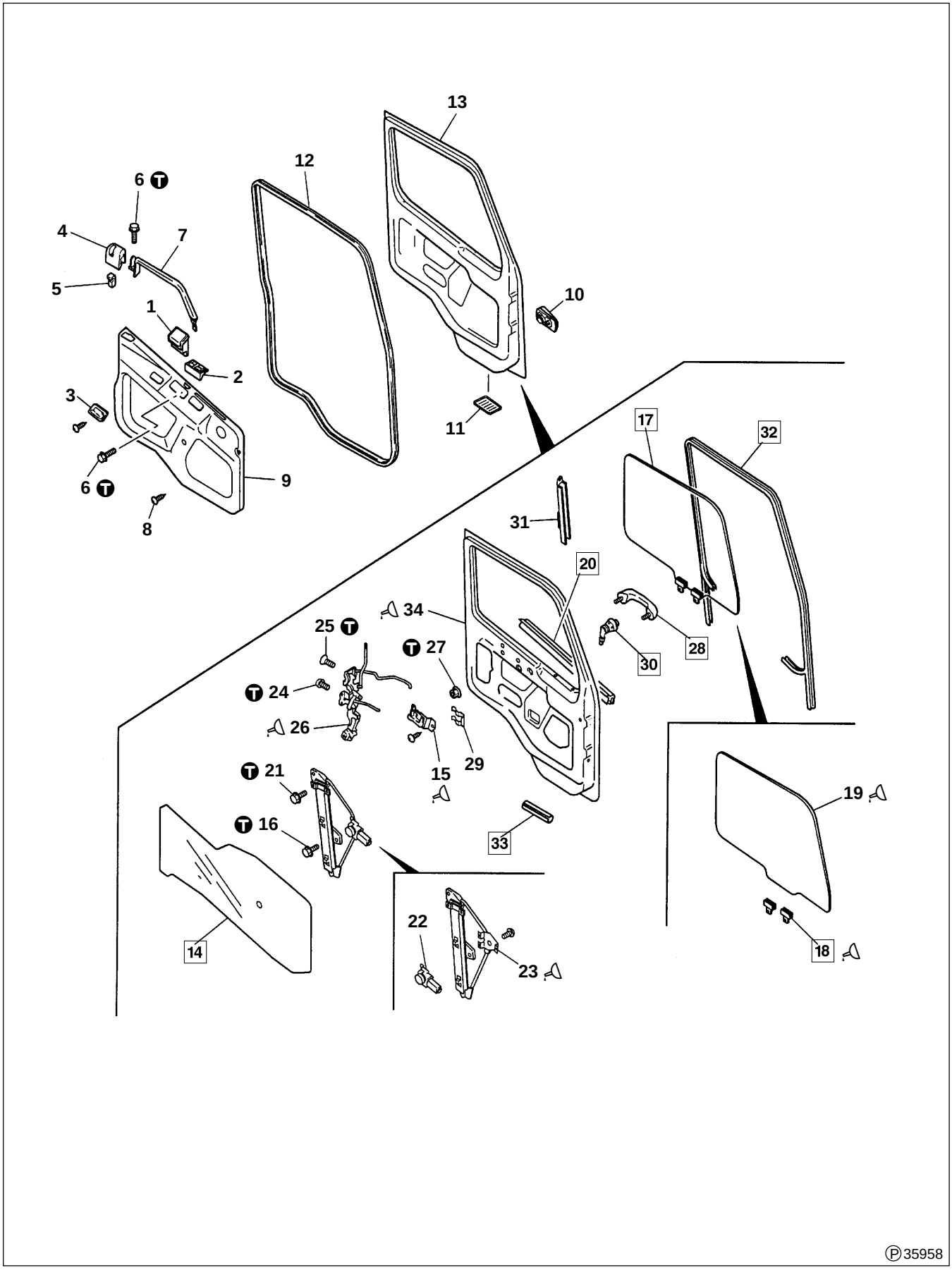
13
12
6 T
4
7
5
1
10
2
3
11
6 T
9
8
17
32
31
20
34
25 T
T 27
28
30
T 24
26
29
15
T 21
19
T 16
33
14
22
23
18
P 35958

● **Disassembly sequence**

1 Ashtray
2 Power window switch Gr 54
3 Inside handle cover
4 Door lock knob cover
5 Door lock knob
6 Bolt
7 Door bar
8 Screw
9 Door trim assembly
10 Front side turn signal lamp Gr 54
11 Step lamp cover
12 Weather strip
13 Door panel assembly
14 Waterproof cover
15 Inside handle
16 Bolt
17 Door glass assembly
18 Glass holder
19 Door glass
20 Door belt line molding
21 Bolt
22 Power window motor Gr 54
23 Regulator & rail assembly
24 Screw
25 Screw
26 Door lock actuator Gr 54
27 Nut
28 Outside handle
29 Clip
30 Door lock cylinder
31 Lower sash
32 Run channel
33 Cushion rubber
34 Door panel

CAUTION ⚠

Do not remove weather strip 12, glass holder 18 and cushion rubber 33 unless abnormalities are found.

● **Assembly sequence**

Follow the disassembly sequence in reverse.

Ⓣ Tightening torque

Unit : N·m {lbf.ft, kgf·m}

Location	Parts to be tightened	Tightening torque	Remarks
6	Bolt (Door cover mounting)	9 to 14 {65 to 100, 0.9 to 1.4}	—
16	Bolt (Door glass assembly mounting)	4 to 6 {29 to 43, 0.4 to 0.6}	—
21	Bolt (Regulator & rail assembly mounting)	4 to 6 {29 to 43, 0.4 to 0.6}	—
24	Screw (Door lock actuator mounting)	4 to 6 {29 to 43, 0.4 to 0.6}	—
25	Screw (Door lock actuator mounting)	4 to 6 {29 to 43, 0.4 to 0.6}	—
27	Nut (Outside handle mounting)	4 to 6 {29 to 43, 0.4 to 0.6}	—

Lubricant and/or sealant

Location	Points of application	Specified lubricant and/or sealant	Quantity
15	Rotating surface of inside handle	Multipurpose grease [NGLI No.2 (Li soap)]	As required
18	Door glass mounting surface of glass holder	YH America Inc. M(RC-50KE) Primer	As required
19	Glass holder mounting surface of door glass	YH America Inc. G(MS-90) Primer	As required
	Glass holder mounting surface, 5 minutes after application of above primer	YH America Inc. WS-70FK Sealant (Urethane Base)	As required
23	Regulator sliding section of regulator & rail assembly	Dynamic GB	As required
26	Sliding surface of door lock actuator	Multipurpose grease [NGLI No.2 (Li soap)]	As required
34	Waterproof cover installation surface of door panel	Butyl tape	As required

◆ Service procedure

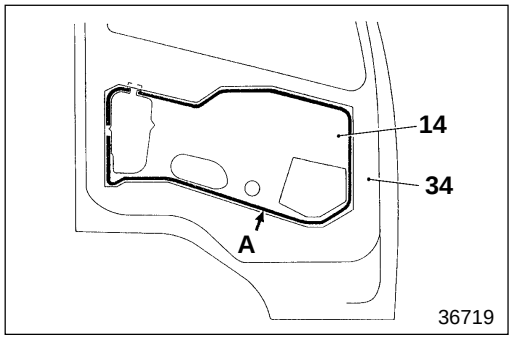

14 **Installation of waterproof cover**

- Apply butyl tape **A** to door panel **34**, as indicated in the illustration.
- Install waterproof cover **14** by pasting onto butyl tape **A**.

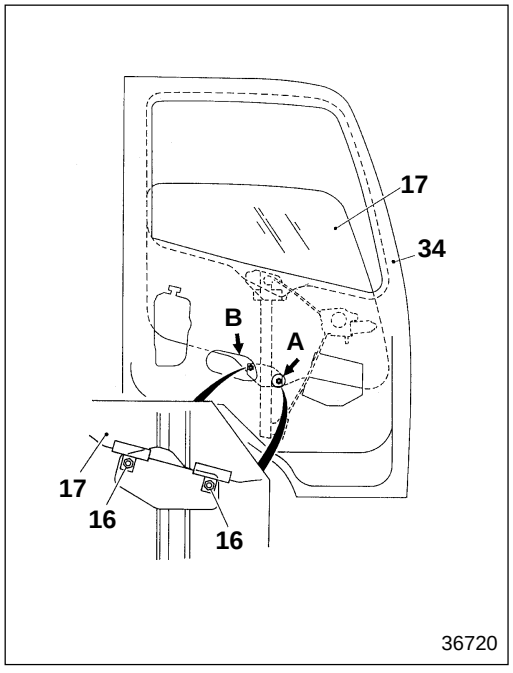

17 **Removal and installation of door glass assembly**

- Move door glass assembly **17** until bolts **16** of the door glass assembly become visible through holes **A** and **B** in the door panel **34**.
- While supporting door glass assembly **17** by hand, remove bolts **16**.
- Remove door glass assembly **17** through the open space in the door.
- To install, follow the removal procedure in reverse.

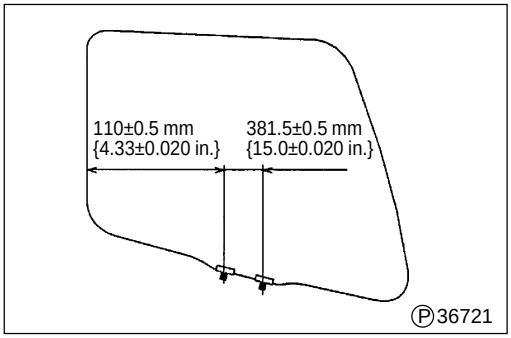

18 **Installation of glass holder**

Install glass holder **18** to door glass **19** at the location indicated in the illustration.

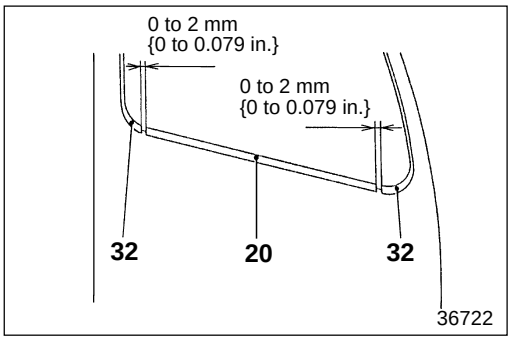

20 **Installation of door belt line molding**

Install door belt line molding **20** so that gaps between the molding and run channel **32** are as indicated in the illustration.

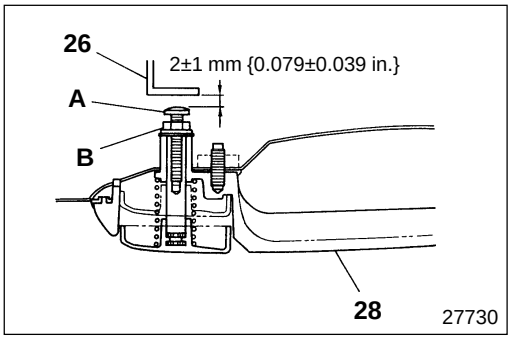

28 **Installation of outside handle**

Turn push bolt **A** of outside handle **28** to adjust the gap between the push bolt and door actuator **26** as indicated in the illustration.

B : Lock nut

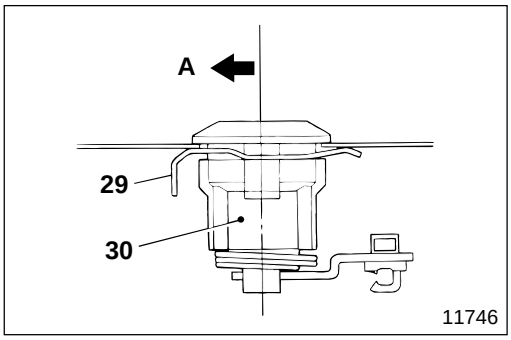

30 **Installation of door lock cylinder**

Install door lock cylinder **30** with clip **29** in the direction indicated in the illustration.

A : Vehicle front side

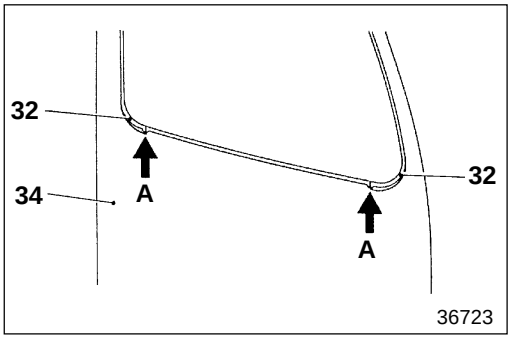

32 **Installation of run channel**

Install run channel **32** by aligning it with notches **A** on door panel **34**.

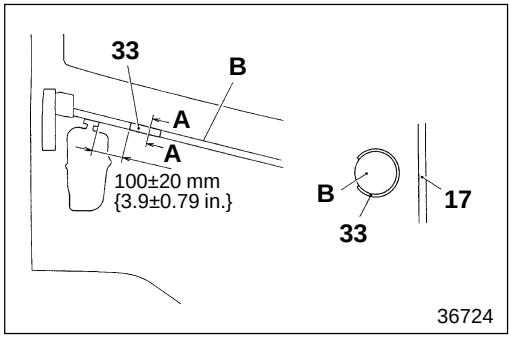

33 **Installation of cushion rubber**

Install cushion rubber **33** to door side beam **B** in the direction indicated in the illustration.

GROUP 54 ELECTRICAL

1 POWER, CHARGING AND GROUND

SPECIFICATIONS 54-3
STRUCTURE AND OPERATION 54-3
TROUBLESHOOTING 1
100 INSPECTION AND ADJUSTMENT MOUNTED IN VEHICLE
• Inspection of Alternator 1
• Inspection of Regulator 1
101 BATTERY 1
104 FUSE 54-5
106 ALTERNATOR 54-6
110 POWER CIRCUIT 1
115 RESERVE POWER CIRCUIT 54-14
125 BATTERY CHARGING CIRCUIT 1
130 GROUND 1

2 STARTING, PREHEATING, AND STOPPING ENGINE

SPECIFICATIONS 1
STRUCTURE AND OPERATION 1
TROUBLESHOOTING 1
200 INSPECTION AND ADJUSTMENT MOUNTED IN VEHICLE
Inspection of Engine Preheating System 1
201 STARTER 3
210 ENGINE STARTING CIRCUIT 4
212 SUB-STARTER CIRCUIT 1
220 ENGINE PREHEATING AND COLD START CIRCUIT
< Manual Transmission > 2
< Automatic Transmission > 2

3 LIGHTING

SPECIFICATIONS 1
STRUCTURE AND OPERATION 1
TROUBLESHOOTING 1
300 INSPECTION AND ADJUSTMENT MOUNTED IN VEHICLE
Headlamp Aiming 1
310 HEADLAMP CIRCUIT 1
313 DAYTIME RUNNING LIGHT CIRCUIT 54-16
320 TAIL LAMP, CLEARANCE LAMP AND LICENSE PLATE LAMP CIRCUITS 1
325 STOP LAMP CIRCUIT 1
330 TURN SIGNAL LAMP AND HAZARD LAMP CIRCUITS 1
340 BACKUP LAMP CIRCUIT 1
345 CAB LAMP CIRCUIT 1
348 ILLUMINATION LAMP CIRCUIT 1
349 MARKER LAMP AND IDENTIFICATION LAMP CIRCUITS 1
352 VAN BODY DOME LIGHT CIRCUIT 1

4 METER

SPECIFICATIONS 1
TROUBLESHOOTING 1
401 METER CLUSTER 54-20
410 SPEEDOMETER AND TACHOMETER CIRCUITS 4
420 FUEL GAUGE CIRCUIT 1
425 WATER TEMPERATURE GAUGE CIRCUIT 1

5 INDICATOR AND WARNING

TROUBLESHOOTING 1

500 INSPECTION AND ADJUSTMENT MOUNTED IN VEHICLE
- Inspection of Brake Fluid Level Switch
  < Air over hydraulic brake > 1

510 PARKING BRAKE INDICATOR CIRCUIT [PARK BRAKE]
< Center Parking Brake > 1
< Wheel Parking Brake > 1

515 BRAKE WARNING CIRCUIT [BRAKE FLUID] [BRAKE AIR] .. 4

530 WATER LEVEL WARNING CIRCUIT 1

536 ENGINE OIL PRESSURE WARNING CIRCUIT 1

537 OVERHEATING WARNING CIRCUIT 1

547 AUTOMATIC TRANSMISSION FLUID TEMPERATURE WARNING CIRCUIT [T/M OIL TEMP] 1

548 TRANSMISSION HIGH/LOW INDICATOR CIRCUIT
< 10-speed Transmission > . 1

550 CAB TILT WARNING CIRCUIT 1

6 CAB SIDE ELECTRICS

SPECIFICATIONS 1

TROUBLESHOOTING 1

601 SWITCH 1

604 RELAY AND CONTROL UNIT 1

606 WARNING BUZZER 1

610 CIGARETTE LIGHTER CIRCUIT 1

612 AUDIO CIRCUIT 1

614 WIPER AND WASHER CIRCUIT 1

616 HORN CIRCUIT 1

618 HEATER CIRCUIT 1

622 POWER WINDOW AND AUTO DOOR LOCK CIRCUIT 54-22

1: '96 Model Gr54 (Pub No. TWME 9503-54)

2: '97 Model Gr54 (Pub No. TWME 9503-1)

3: '98 Model Gr54 (Pub No. TWME 9503-2)

4: '99 Model Gr54 (Pub No. TWME 9503-3)

7 CHASSIS ELECTRICS

701 MAGNETIC VALVE 1

710 EXHAUST BRAKE CIRCUIT 4
< Manual Transmission >

718 AIR DRYER CIRCUIT 1

8 ENGINE AND TRANSMISSION ELECTRICS

801 ENGINE ELECTRICS 1

802 TRANSMISSION ELECTRICS 1
< Manual Transmission (5-speed, 6-speed Transmission) > 1
< Manual Transmission (10-speed Transmission) > 1
< Automatic Transmission > 1

850 TRANSMISSION POWER TAKE-OFF CIRCUIT
< Option > 1

9 OTHERS

STRUCTURE AND OPERATION 1

910 MULTIPURPOSE TIMING CONTROL UNIT CIRCUIT 1

This chapter contains information on the alternator. Items not covered in this chapter are the same as those of '99 model.

SPECIFICATIONS

Item		Specifications
Alternator	Manufacturer	DENSO CORPORATION
	Type	Alternator with built-in regulator (without brush external fan)
	Model	101211-8260
	Output V-A	12-100

STRUCTURE AND OPERATION

Alternator

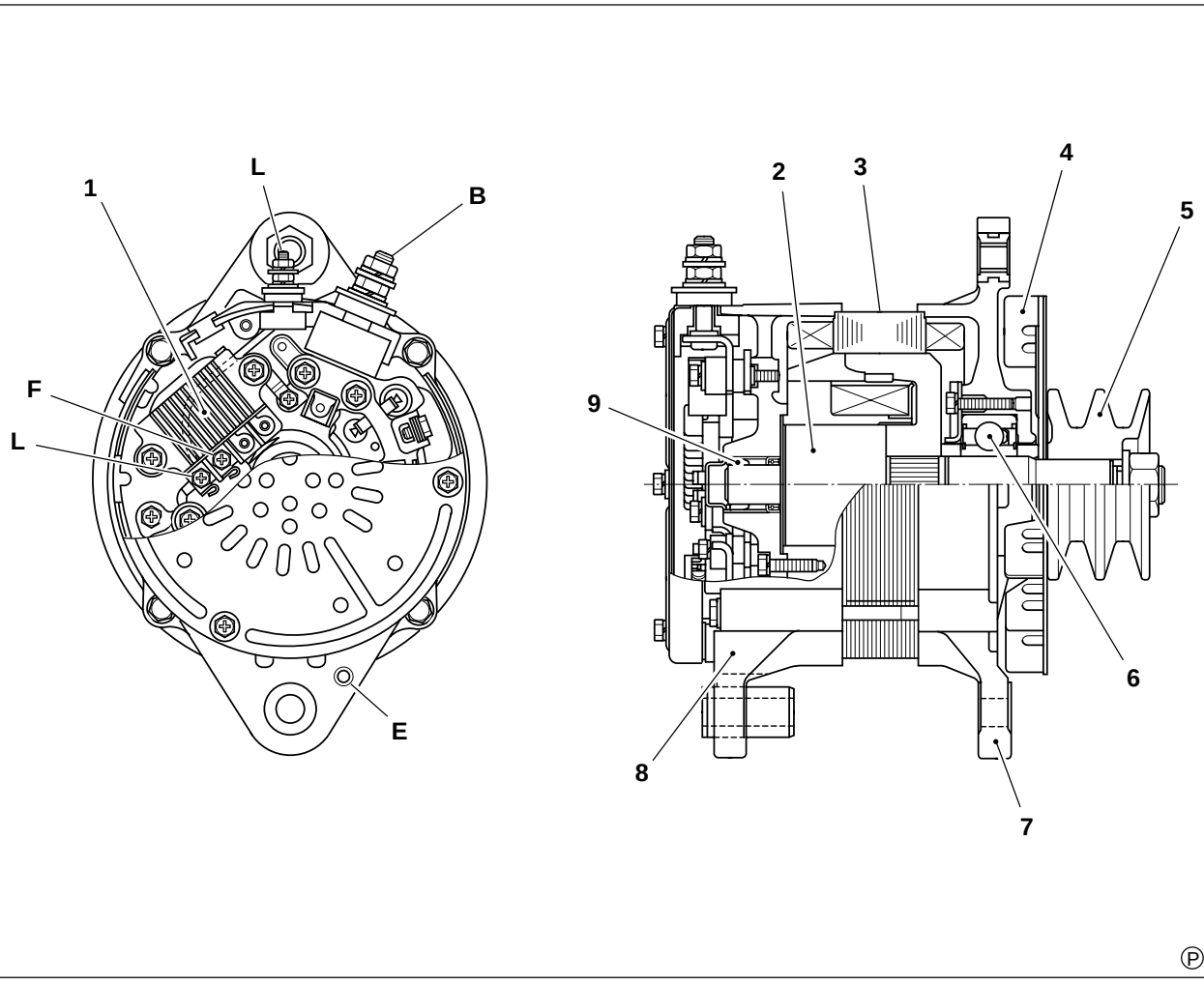

1 Regulator
2 Coil
3 Stator
4 Fan
5 Pulley
6 Front bearing
7 Drive frame
8 Rear frame
9 Rear bearing

B : B terminal
E : E terminal
F : F terminal
L : L terminal

Internal Circuit

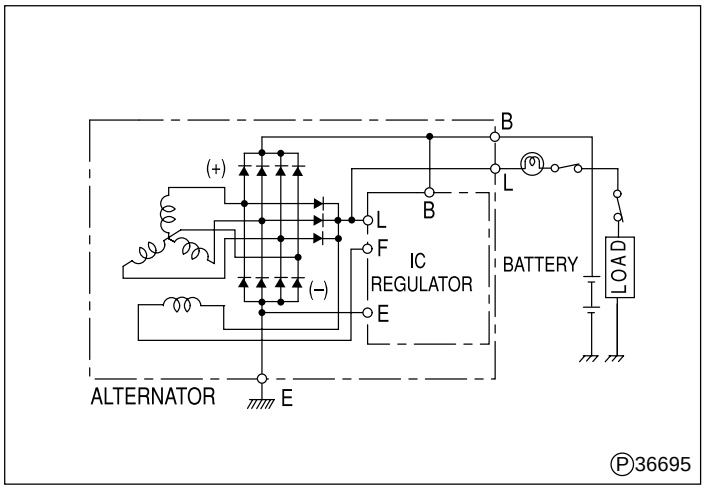

B : B terminal
E : E terminal
F : F terminal
L : L terminal

Main high-current fuse

Fuse No.	Main load	Capacity
—	High-current fuse box	★ 140 A

High-current fuse box

Fuse No.	Main load	Capacity
FH1	Starter switch (Terminal M)	50 A
FH2	Fuse box (B07 to 16)	40 A
FH3	Fuse box (B18 to 24)	40 A
FH4	Fuse box (B01 to 04)	40 A
FH5	Glow relay (Terminal B)	50 A
FH6	Alternator (Terminal B)	★ 140 A
FH7	Fuse box (B6)	40 A
FH8	★ ABS	★ 40 A

Fuse box

Fuse No.	Main load	Capacity
A01	Audio	10 A
A02	Cigarette lighter	15 A
B01	Reserve power (BATT)	10 A
B02	★ Reserve power (ACC)	★ 10 A
B03	Van body dome light relay	15 A
B04	Socket connector	20 A
B05	★ Power window	★ 25 A
B06	Glow heater	20 A
B07	Stop lamp	10 A
B08	Turn/hazard	15 A
B09	Tail lamp	★ 20 A
B10	Headlamp relay	★ 10 A
B11	—	—
B12	★ Headlamp RH	★ 15 A
B13	★ —	★ —
B14	—	—
B15	★ Headlamp LH	15 A
B16	★ —	★ —
B17	Spare	—
B18	* Air-conditioner	20 A
B19	—	—
B20	ABS	30 A
B21	—	—
B22	Cab lamp	10 A
B23	—	—
B24	—	—
B25	Horn	15 A
M01	Automatic transmission	10 A
M02	Transmission power take-off	10 A
M03	—	—
M04	Reserve power (MAIN)	10 A
M05	Neutral switch	10 A
M06	Automatic transmission	20 A
M07	—	—
M08	Pre-stroke cut relay	10 A
M09	Air conditioner	20 A
M10	—	—
M11	Control unit	10 A
M12	ABS electronic control unit	★ 10 A
M13	Turn/hazard	10 A
M14	Air dryer	15 A
M15	Meter, speed indicator, ★ DRL	10 A
M16	Backup lamp	10 A
M17	Wiper	15 A
S01	Safety relay	10 A

★ marks indicate changed parts or added parts.

* Fuses are provided for these pieces of equipment only where they are installed.

ABS: Anti-lock brake system
DRL: Daytime running light

106 ALTERNATOR

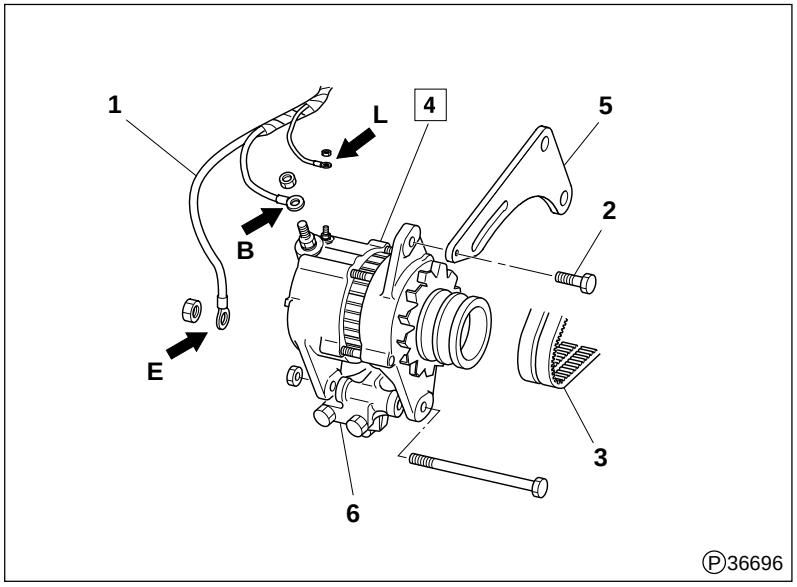

● **Removal sequence**

1 Chassis harness
2 Adjusting bolt
3 V-belts
4 Alternator 📖 P54-8
5 Adjusting plate
6 Alternator bracket

B : To terminal B
E : To terminal E
L : To terminal L

WARNING ⚠

- **Terminal B is always loaded with voltage from the battery, supplied via chassis harness 1. Therefore when you remove the harness from terminal B, make sure that tools do not touch any adjacent parts because this would cause a short-circuit.**
- **Make sure that you disconnect terminal ⊖ of the battery before removing the harness and insulate the terminal with tape.**

● **Installation sequence**

Follow the removal sequence in reverse.

● **Adjustment after installation**

Adjustment of V-belt **3** tension 📖 Gr 14

Service standards

Location	Maintenance item		Standard value	Limit	Remedy
4	Output current (* When engine is hot and 13.5 V is loaded) at 25°C (77°F)	At 1000 rpm	Approx. 20 A	—	Inspect
		At 2000 rpm	Approx. 80 A	—	
		At 3500 rpm	Approx. 100 A	—	
	Adjustment voltage of regulator (At 5000 rpm, 10 A is loaded) at 25°C (77°F)		14.2±0.2 V	—	Replace

* The value of the ambient temperature is measured after running the alternator drive motor at maximum power (5000 rpm) for 30 minutes.

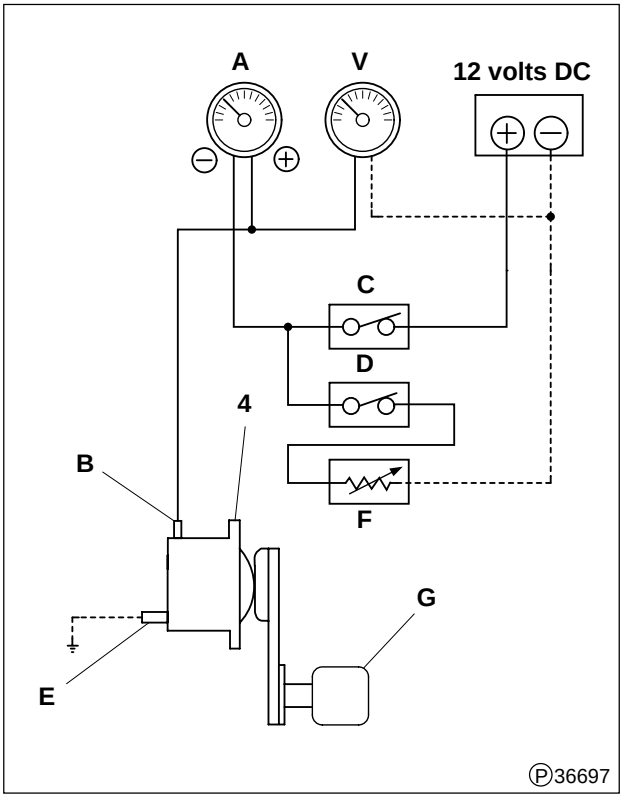

4 Inspection of alternator

(1) Inspection of alternator performance (bench test)

- Connect each unit to alternators **4** as illustrated.

CAUTION⚠

Use sufficiently thick wires for the wiring and make sure all connecting parts are securely connected.

A : Ammeter
B : Terminal B on alternator
C : Switch
D : Switch
E : Terminal E on alternator
F : Load resistance (variable resistance)
G : Alternator drive motor
L : Terminal L on alternator
R : Terminal R on alternator
V : Voltmeter

- Maximize load resistance **F** (load current hardly flows).
- Turn switches **C**, **D** ON.
  With the alternator **4** rotating at 5000 rpm, adjust load resistance **F** to the current specified in the Service Standards table. Then, operate the alternator for 30 minutes.
  Specified output of the alternator : Approx. 12 V-100 A
- Increase the rotation of alternator **4** gradually and measure current at specified rpm.
- If the measured value deviates from the standard value, disassemble and inspect alternator **4**. 🕮 P54-8

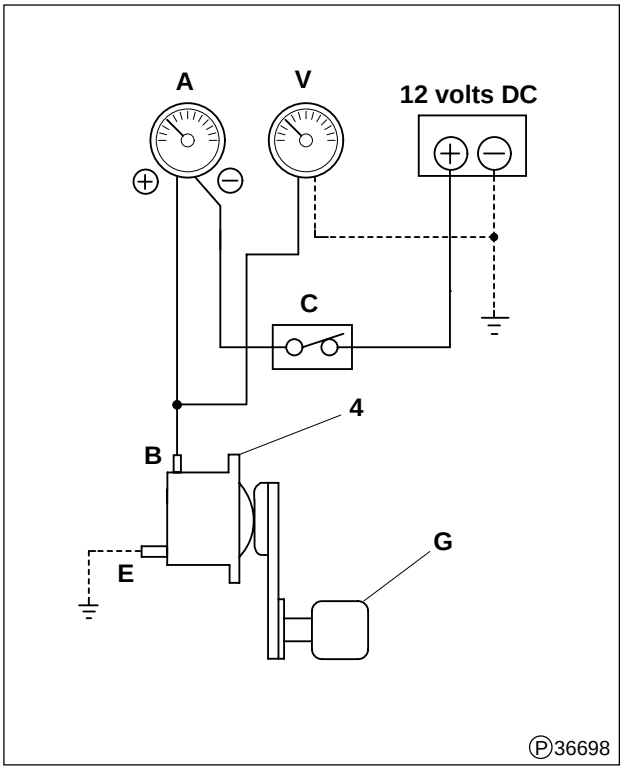

(2) Inspection of regulator (bench test)

- Connect each unit to the alternators as illustrated.
  A : Ammeter
  B : Terminal B on alternator
  C : Switch
  E : Terminal E on alternator
  G : Alternator drive motor
  L : Terminal L on alternator
  R : Terminal R on alternator
  V : Voltmeter
- Turn switch **C** ON.
- Run alternator **4** at low speed.
- Measure the voltage (adjustment voltage) when alternator **4** has reached a speed of 5000 rpm. Make sure at such time that the value of the current is 10 amperes or less.
- If the measured value deviates from the standard value, perform either of the following.
  - If the measured value is higher than the standard value : Replace the regulator
  - If the measured value is lower than the standard value : Before replacing the regulator check the alternator area.

Alternator

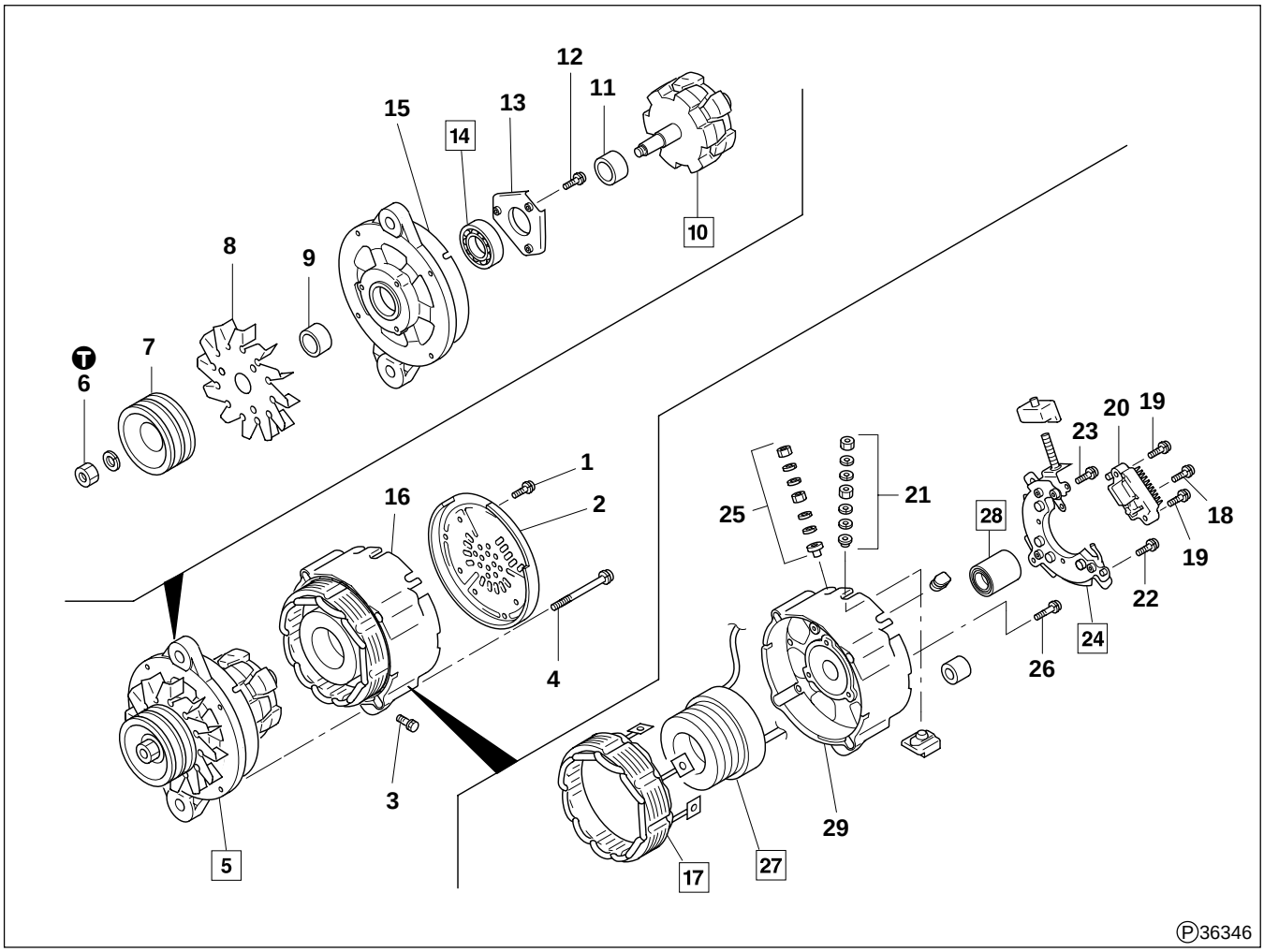

● **Disassembly sequence**

1 Screw
2 Rear cover
3 Screw
4 Bolt
5 Drive frame assembly
6 Nut
7 Pulley
8 Fan
9 Collar
10 Rotor
11 Collar
12 Screw
13 Bearing cover
14 Front bearing
15 Drive frame
16 Rear frame assembly
17 Stator
18 Screw
19 Screw
20 Regulator
21 L terminal
22 Screw
23 Screw
24 Rectifier
25 B terminal
26 Screw
27 Exciting coil
28 Rear bearing
29 Rear frame

NOTE

Do not remove parts 14, 28 unless they are faulty.

● **Assembly sequence**

Follow the disassembly sequence in reverse.

Service standards

Unit : mm {in.}

Location	Maintenance item	Standard value	Limit	Remedy
10	Outer diameter of the portion that presses into the front bearing	25.00 to 25.01 {0.9842 to 0.9846}	24.99 {0.9838}	Replace
	Outer diameter of the portion that presses into the rear bearing	16.99 to 17.00 {0.6689 to 0.6693}	16.98 {0.6685}	
	Outer diameter of the portion that joins with the pulley	22.189 to 22.202 {0.8735 to 0.8741}	22.18 {0.8732}	
17	Resistance between the coil oultet terminals	0.01 to 0.10 Ω	—	Replace
	Resistance between the coil outlet terminal and core	1MΩ min.	—	
27	Resistance between the coil outlet terminal	2 to 3 Ω	—	Replace

Tightening torque

Unit : N·m {lbf.ft, kgf·m}

Location	Parts to be tightened	Tightening torque	Remarks
6	Nut (Pulley mounting)	117.6 to 137.2 {26 to 31, 12 to 14}	—

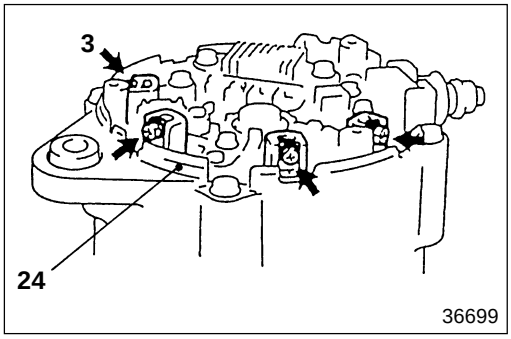

◆ Service procedure

5 **Drive frame assembly**

Remove screw **3** and separate the stator **17** outlet terminal and the rectifier **24**.

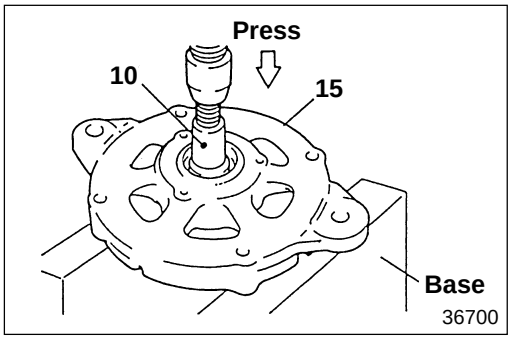

10 **Rotor**

[Removal]

Using a press, remove the rotor **10** from the drive frame **15**.

CAUTION⚠

Do not drop the rotor 10.

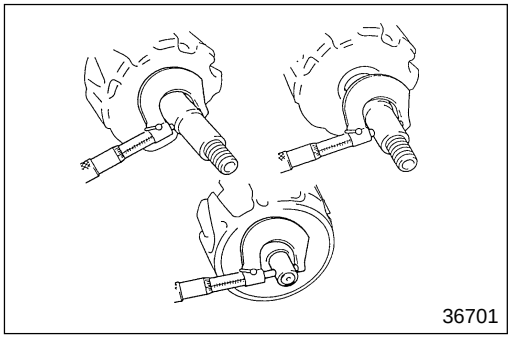

[Inspection]
- Measure the outer diameter of the portion as illustrated.
- If the measured value deviates from the standard value, replace rotor **10**.

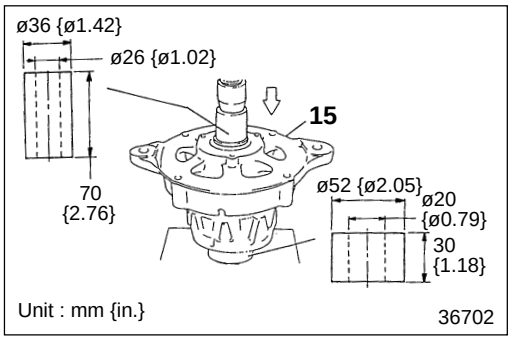

[Installation]
Using a press, press the rotor **10** into the bearing in the drive frame **15**.

CAUTION

Press the rotor 10 while making sure that the rotor's shaft is perpendicular to the bearing. During pressing, make sure not to damage the portion of the rotor 10 that presses into the rear bearing 28.

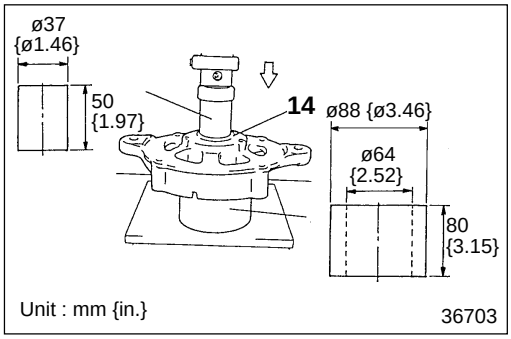

14 **Front bearing**

[Removal]
Using a press, remove the front bearing **14** from the drive frame **15**.

CAUTION

Do not drop the front bearing 14.

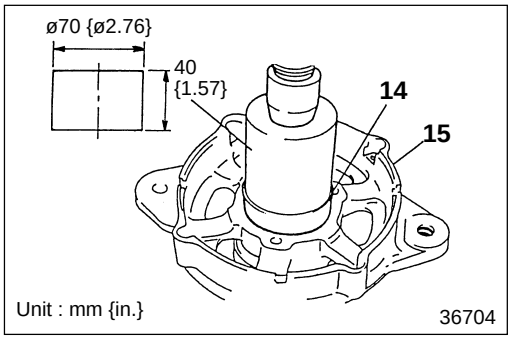

[Installation]
Using a press, press the front bearing **14** into the drive frame **15**.

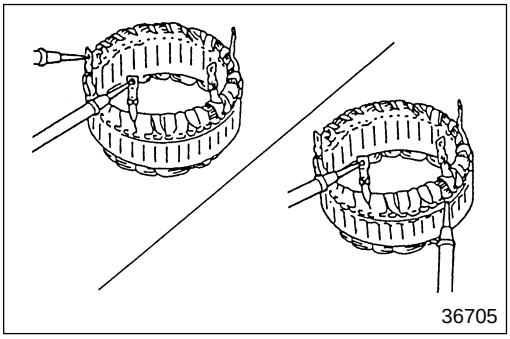

17 **Inspection of stator**

- Measure the resistance between the coil outlet terminals. (using a circuit tester)
- Measure the resistance between the coil outlet terminal and core. (using a multi tester)
- If the measured value deviates from the standard value, replace stator **17**.

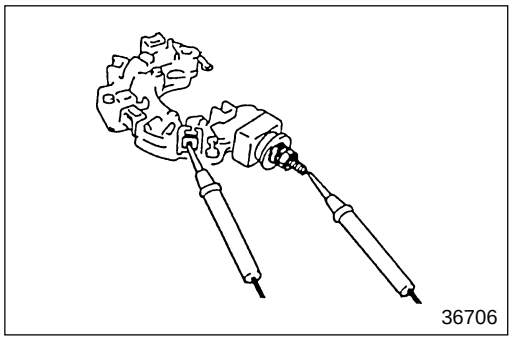

24 **Inspection of rectifier**

- Check for continuity between the **B** terminal and the heat sink.
- When polarity is changed, there is continuity in one direction but not in the opposite direction.

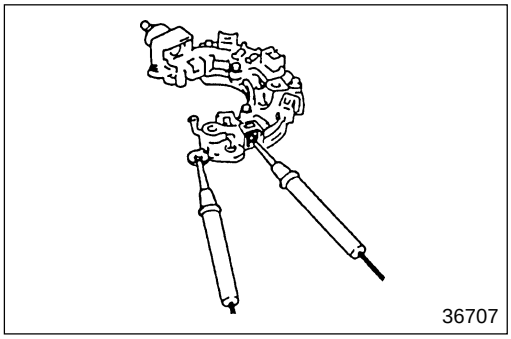

- Check for continuity between the ⊖ terminal and the heat sink.
- When polarity is changed, there is continuity in one direction but not in the opposite direction.

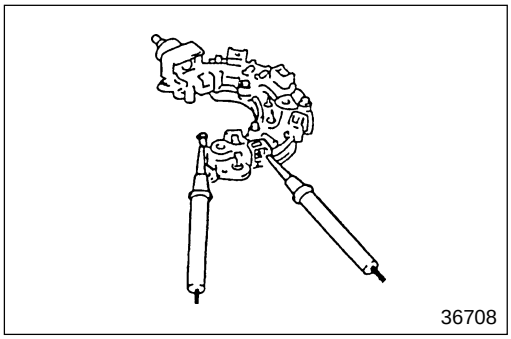

- Check for continuity between the auxiliary diode terminal and the heat sink.
- When polarity is changed, there is continuity in one direction but not in the opposite direction.

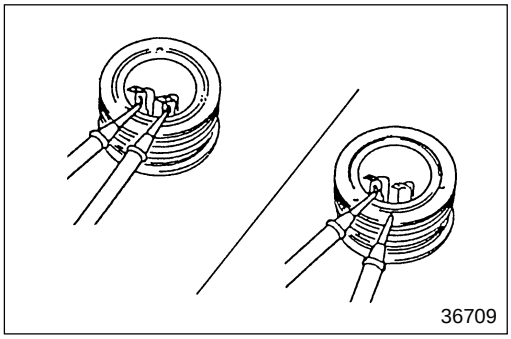

27 **Inspection of exciting coil**

- Measure the resistance between the coil outlet terminal. (using a circuit tester)
- Measure the resistance between the coil outlet terminal and core.
- If the measured value deviates from the standard value, replace exciting coil **27**.

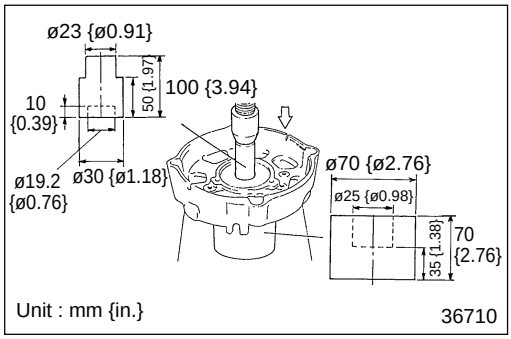

28 **Rear bearing**

[Removal]
Using a press, remove the rear bearing **28** from the rear frame **29**.

CAUTION
Do not drop the rear bearing 28.

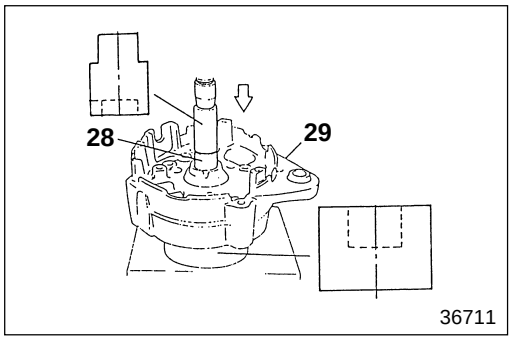

[Installation]
Using a press, press a new rear bearing **28** into the rear frame **29**.

CAUTION
Once a bearing is removed, do not reuse it.

M E M O

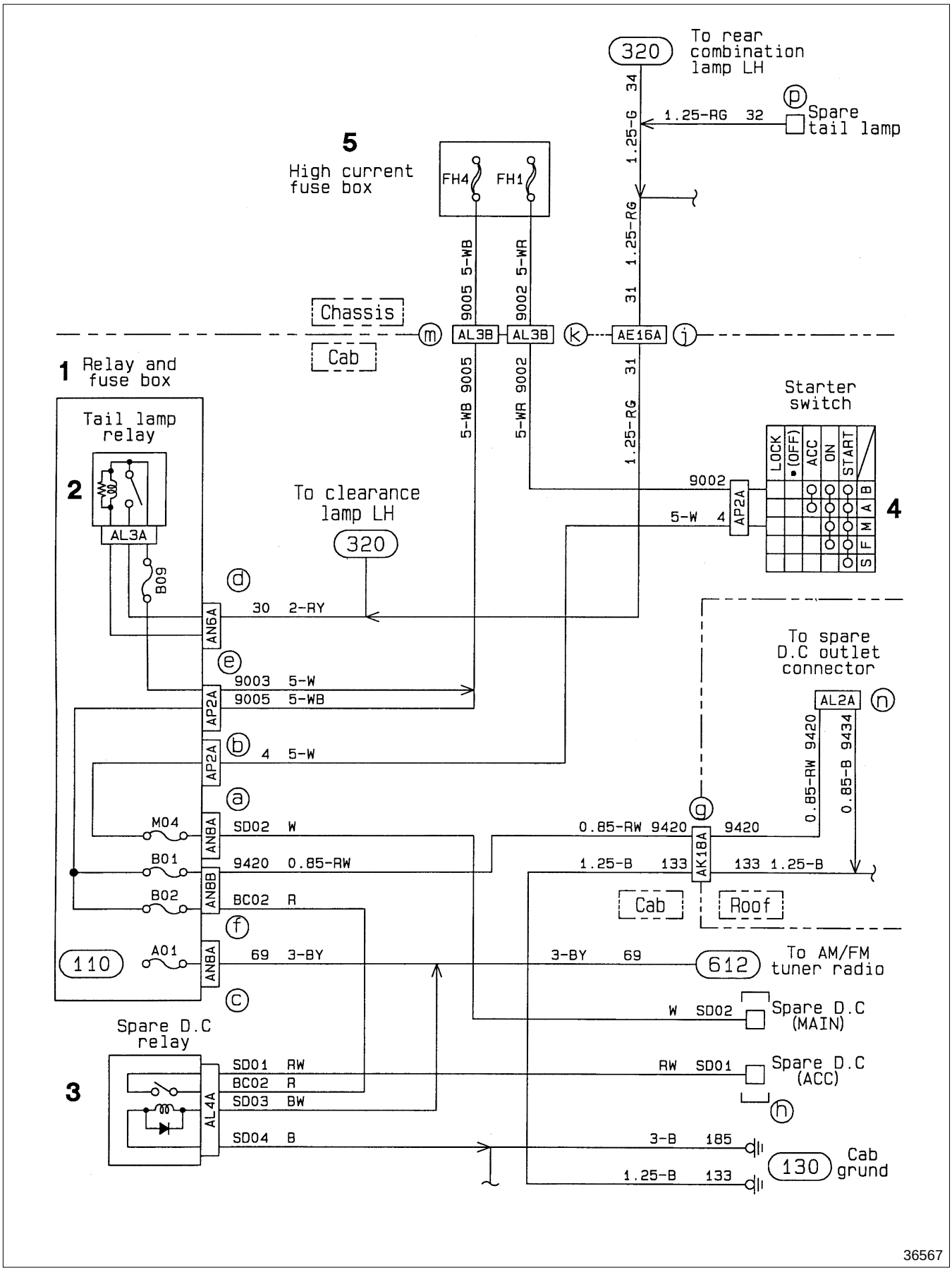
320
To rear combination lamp LH
34
1.25-G
1.25-RG 32
Spare tail lamp
5
High current fuse box
FH4
FH1
9005 5-WB
9002 5-WR
31 1.25-RG
Chassis
Cab
AL3B
AL3B
AE16A
1 Relay and fuse box
Tail lamp relay
2
AL3A
B09
5-WB 9005
5-WR 9002
1.25-RG 31
Starter switch
LOCK
(OFF)
ACC
ON
START
B
A
M
F
S
4
9002
5-W 4
AP2A
To clearance lamp LH
320
30 2-RY
AN6A
9003 5-W
9005 5-WB
AP2A
4 5-W
AP2A
To spare D.C outlet connector
AL2A
0.85-RW 9420
0.85-B 9434
M04
SD02 W
0.85-RW 9420
9420
AN8A
B01
9420 0.85-RW
1.25-B 133
AK18A
133 1.25-B
AN8B
B02
BC02 R
Cab
Roof
110
A01
69 3-BY
AN8A
3-BY 69
612
To AM/FM tuner radio
W SD02
Spare D.C (MAIN)
Spare D.C relay
3
SD01 RW
BC02 R
SD03 BW
AL4A
RW SD01
Spare D.C (ACC)
SD04 B
3-B 185
130
Cab grund
1.25-B 133
36567

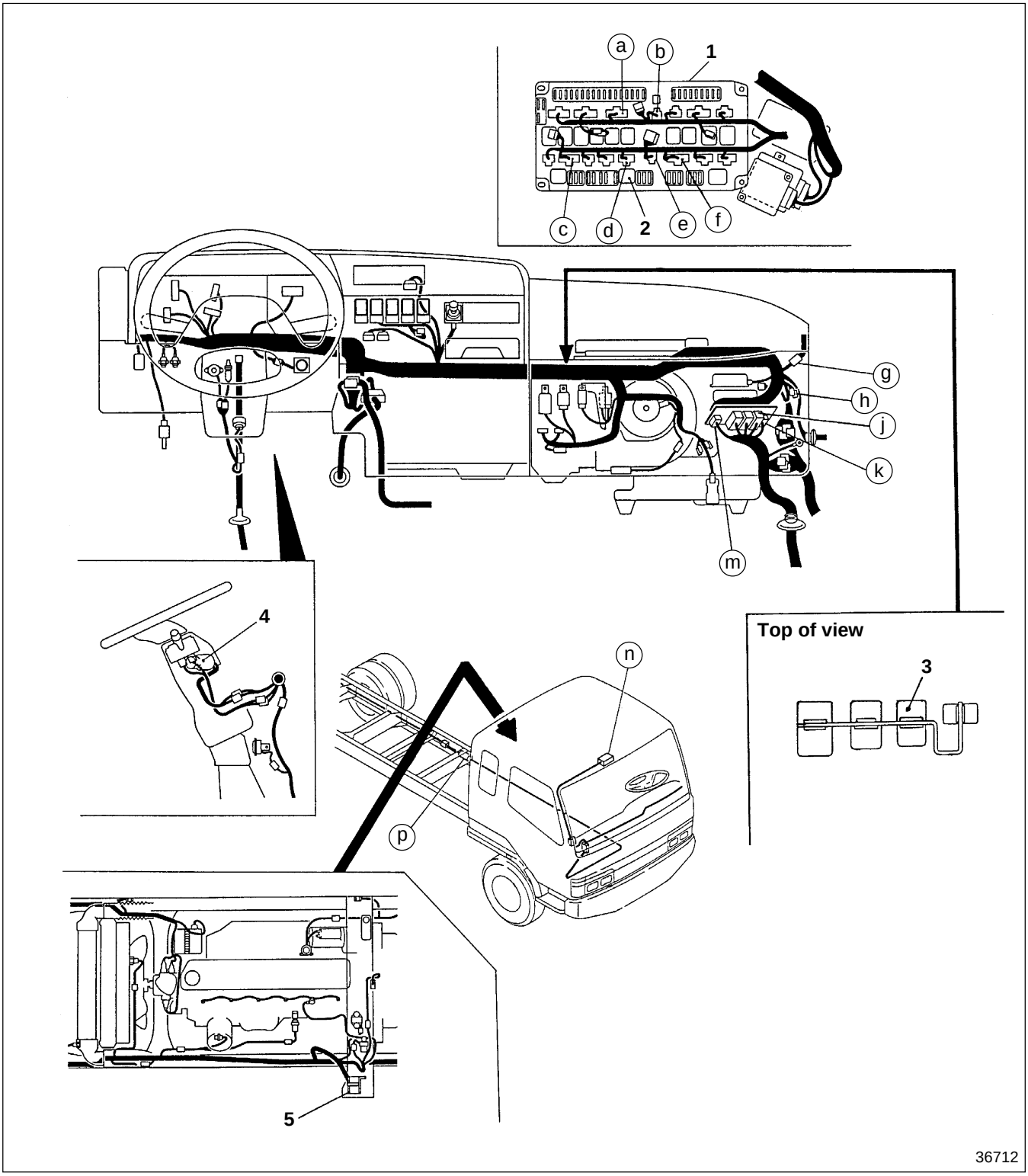

1 Relay and fuse box 📖 (104)
2 Tail lamp relay 🗃 1 (604)
3 Spare DC relay 🗃 1 (604)
4 Starter switch 🗃 1 (210)
5 High-current fuse box 📖 (104)

🗃 1 : '96 model Gr 54 (TWME9503-54)

A - N - Wire Harness Connections

313 DAYTIME RUNNING LIGHT CIRCUIT

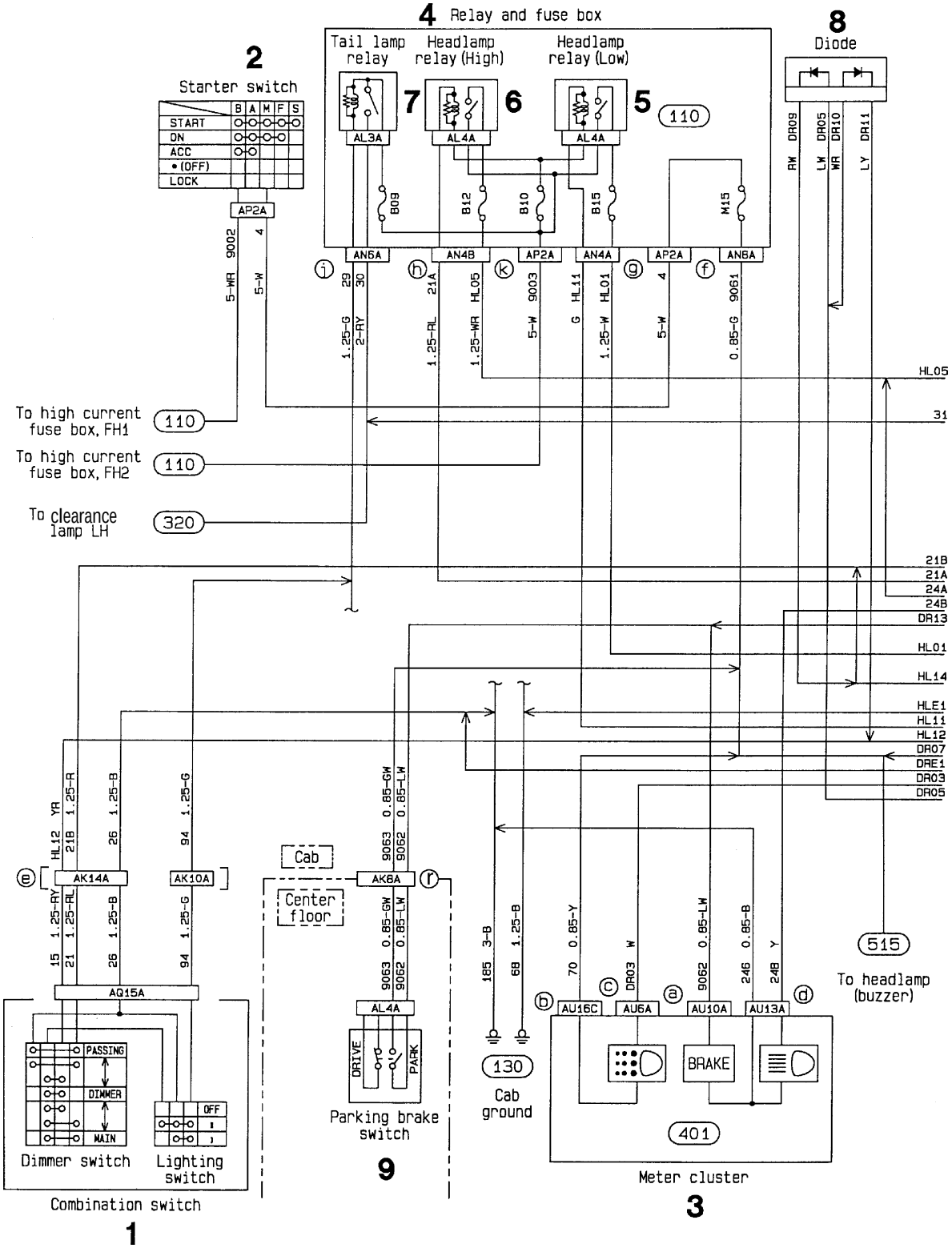

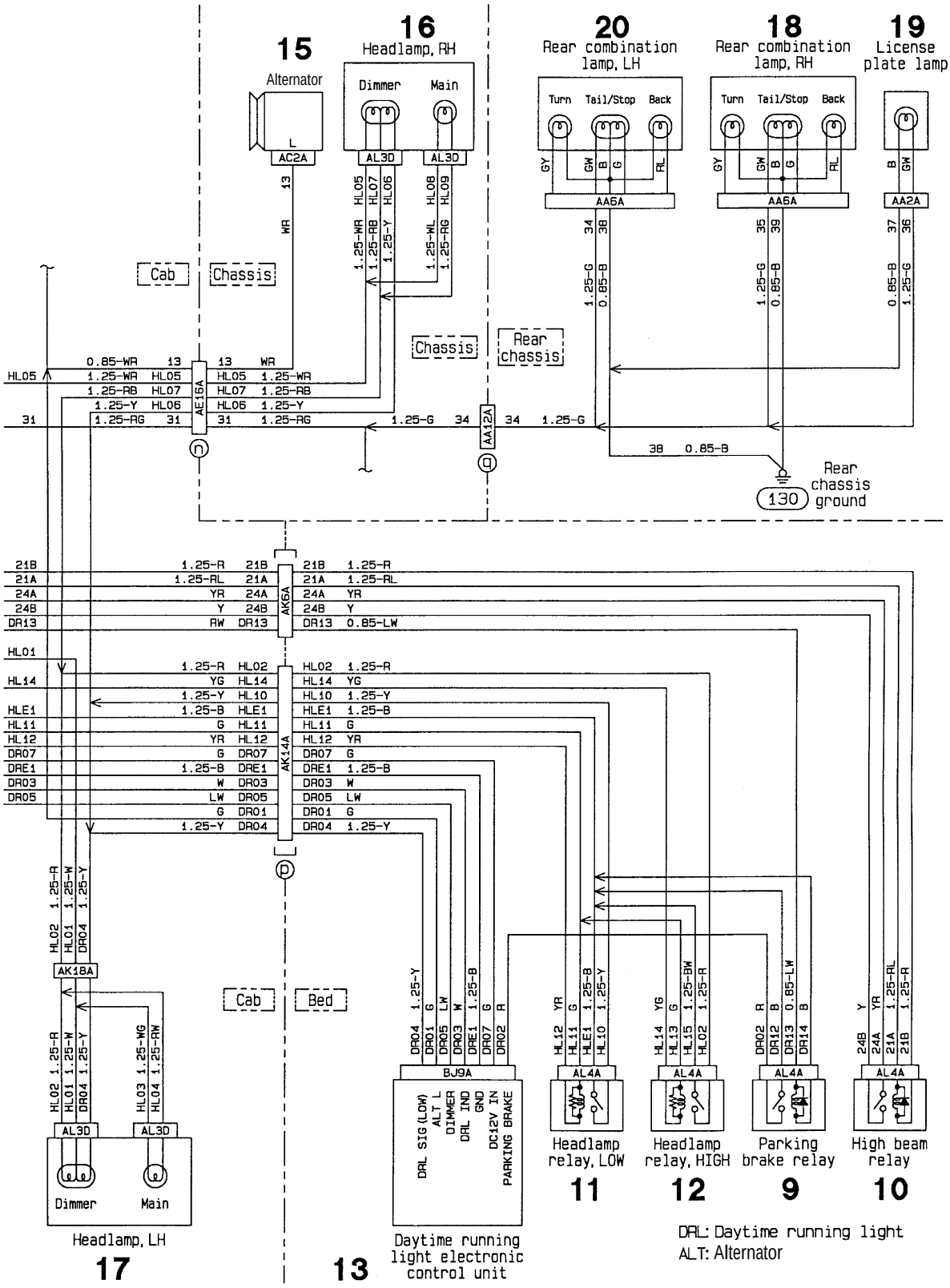
15
Alternator
16
Headlamp, RH
Dimmer
Main
20
Rear combination lamp, LH
18
Rear combination lamp, RH
19
License plate lamp
Turn
Tail/Stop
Back
Cab
Chassis
Rear chassis
Rear chassis ground
130
AC2A
AL3D
AA6A
AA2A
AE16A
AA12A
AK6A
AK14A
AK18A
BJ9A
AL4A
Headlamp, LH
17
13
Daytime running light electronic control unit
DRL SIG (LOW)
ALT L
DIMMER
DRL IND
GND
DC12V IN
PARKING BRAKE
Headlamp relay, LOW
11
Headlamp relay, HIGH
12
Parking brake relay
9
High beam relay
10
DRL: Daytime running light
ALT: Alternator

36566

(313) DAYTIME RUNNING LIGHT CIRCUIT

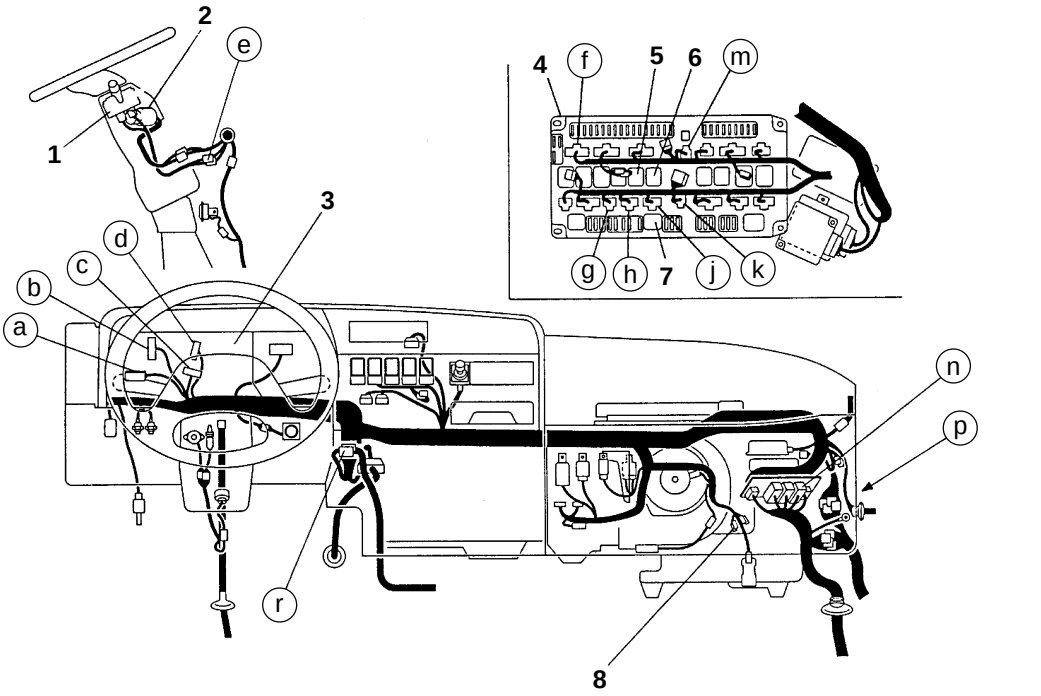

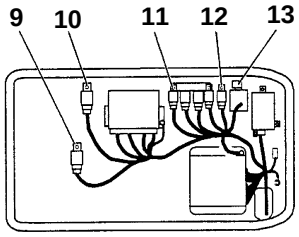

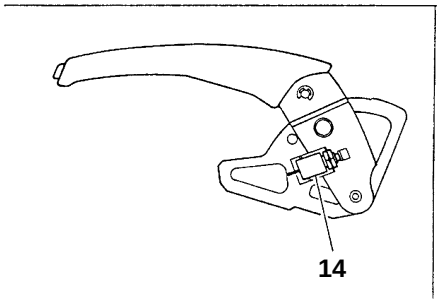

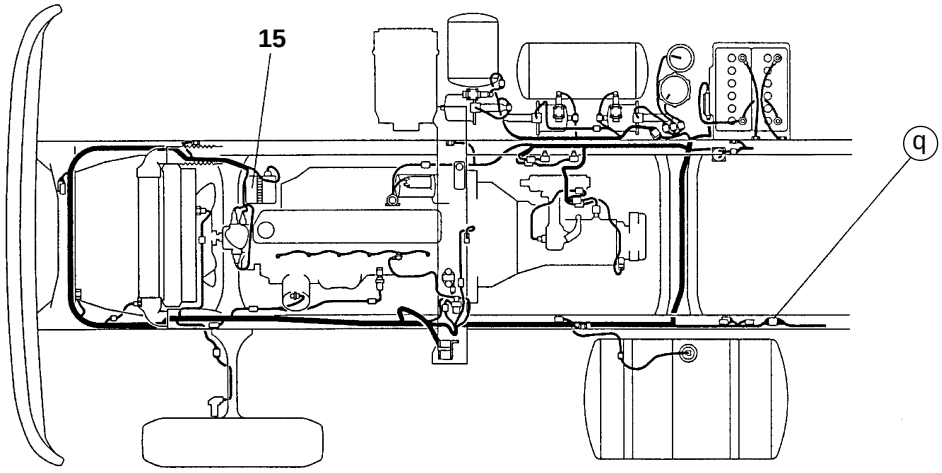

36714

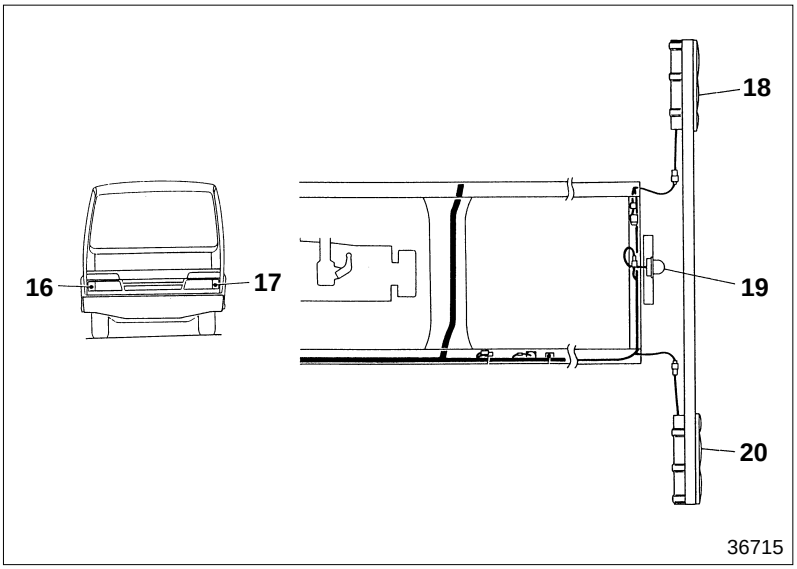

1 Combination switch 1 (601)
2 Starter switch 1 (601)
3 Meter cluster (401)
4 Relay and fuse box 1 (604)
5 Head lamp relay (LOW) 1 (604)
6 Head lamp relay (HIGH) 1 (604)
7 Tail lamp relay 1 (604)
8 Diode
9 Parking brake relay 1 (604)
10 High beam relay 1 (604)
11 Head lamp relay (LOW) 1 (604)
12 Head lamp relay (HIGH) 1 (604)
13 Daytime running light control unit
14 Parking brake switch 1 (601)
15 Alternator (106)
16 Head lamp, RH
17 Head lamp, LH
18 Rear combination lamp, RH
19 License plate lamp
20 Rear combination lamp, LH

1 : '96 model Gr 54 (TWME9503-54)
A - N - Wiring connectors

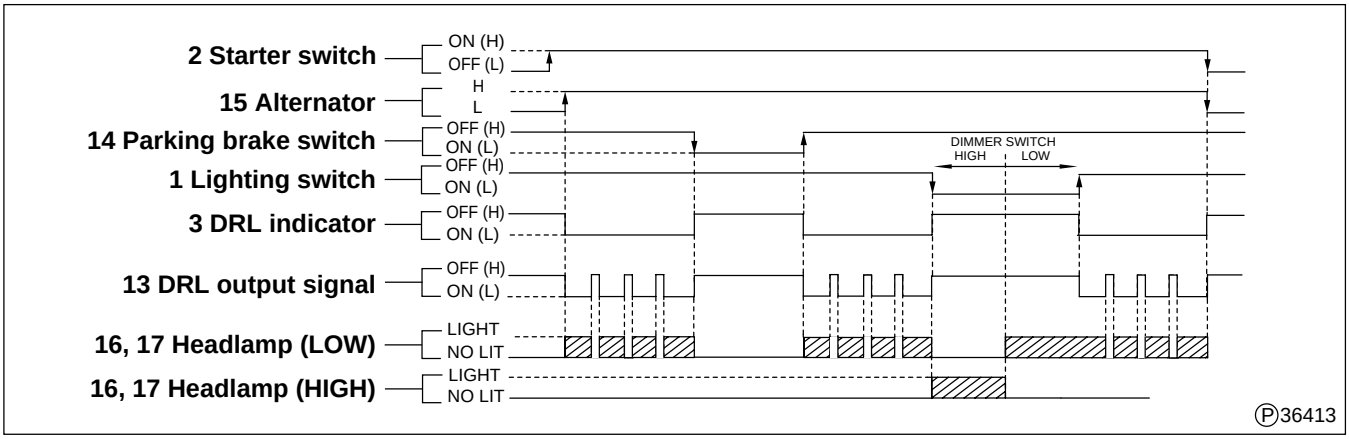

[Outline]
The daytime running light system (DRL) turns on head lamps **16**, **17** in low beam as soon as the engine starts even if the light switch is in the OFF position.
Headlamps **16**, **17** repeat On/Off operations at 120 Hz according to the above timing chart. Because of the cyclic On/Off operations, the headlamps are dimmer than when the headlamp switch is ON.
Explanation of timing chart

- After the engine starts, when alternator **15** begins generating electricity with starter switch **2** in the ON position, headlamps **16**, **17** light.
- When parking brake switch **14** is ON, the DRL turns off to switch off the headlamps.

Meter Cluster Internal Circuit

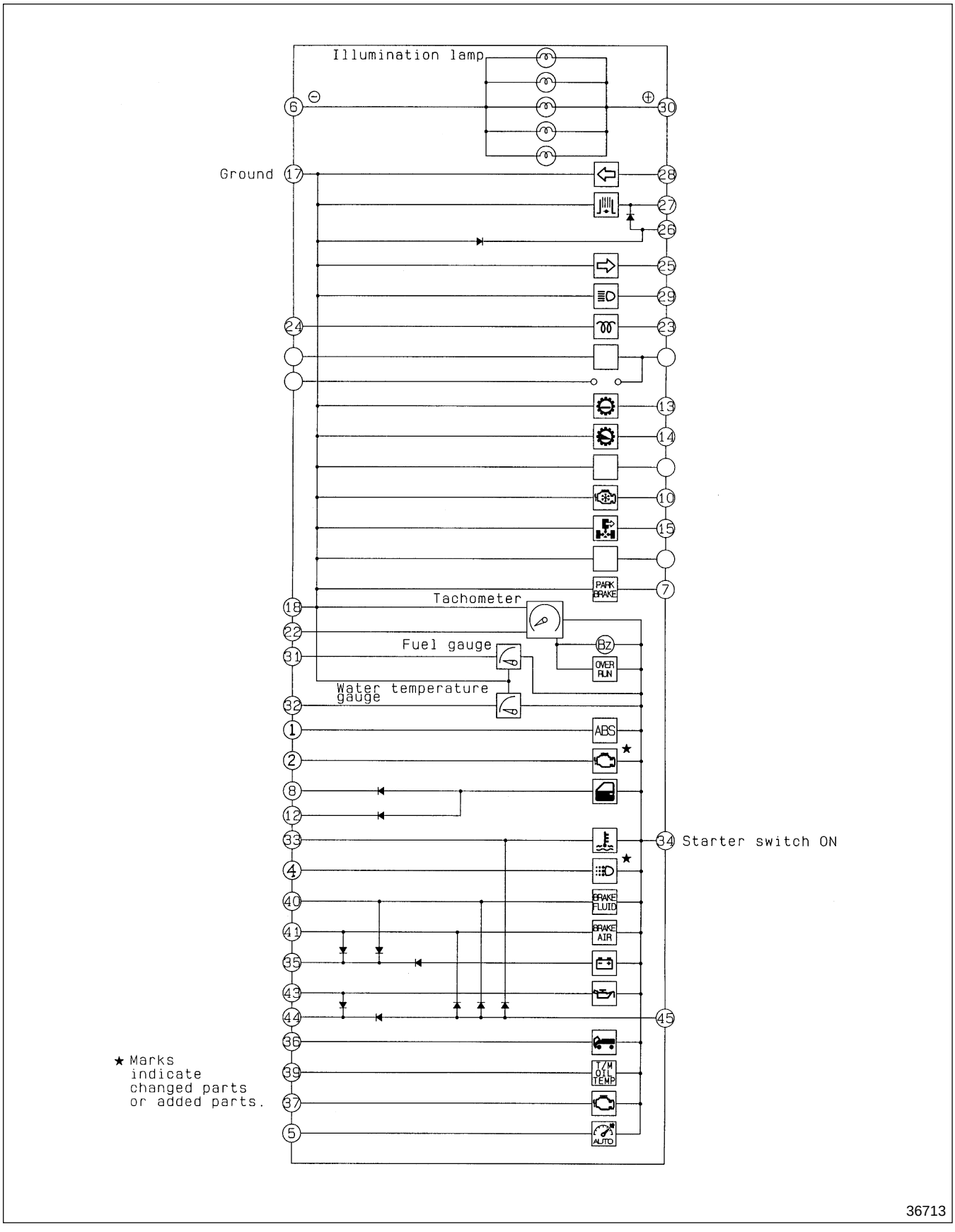

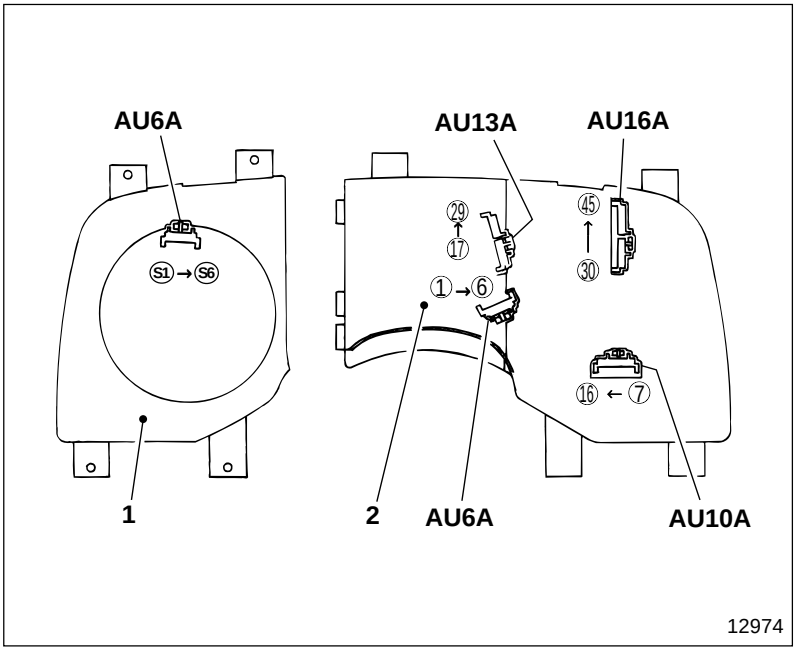

1 Speedometer assembly
2 Meter cluster assembly

Terminal No.	AU6A
1	ABS
2	Electronic control governor
3	—
4	★ DRL
5	Auto cruise set
6	Illumination ⊖

Terminal No.	AU10A
7	Parking brake ⊕
8	Door ⊖
9	—
10	Cold start ⊕
11	—
12	Door ⊖
13	Transmission HIGH ⊕
14	Transmission LOW ⊕
15	PTO
16	—

ATF : Automatic transmission fluid
ABS : Anti-lock brake system
DRL : Daytime running light
★ marks indicate added parts.

Terminal No.	AU13A
17	Ground
18	Tachometer ⊖
19	—
20	—
21	—
22	Tachometer ⊕
23	Glow ⊕
24	Glow ⊖
25	Turn RH ⊕
26	Cold start ⊕
27	Exhaust brake ⊕
28	Turn LH ⊕
29	Beam ⊕

Speedometer

Terminal No.	AU6A
S1	Speed pulse ⊕
S2	Starter switch terminal M
S3	Ground
S4	Illumination ⊕
S5	Illumination ⊖
S6	—

Terminal No.	AU16A
30	Illumination ⊕
31	Fuel gauge unit ⊖
32	Water temperature unit ⊖
33	Water level, overheating
34	Starter switch terminal M
35	Alternator ⊖
36	Cab tilt ⊖
37	Pre-stroke/electronic control ⊖
38	—
39	ATF temperature ⊖
40	Brake fluid ⊖
41	Brake air ⊖
42	—
43	Engine oil bypass alarm ⊖
44	Engine oil pressure ⊖
45	Engine oil and brake ⊕

622 POWER WINDOW AND AUTO DOOR LOCK CIRCUIT

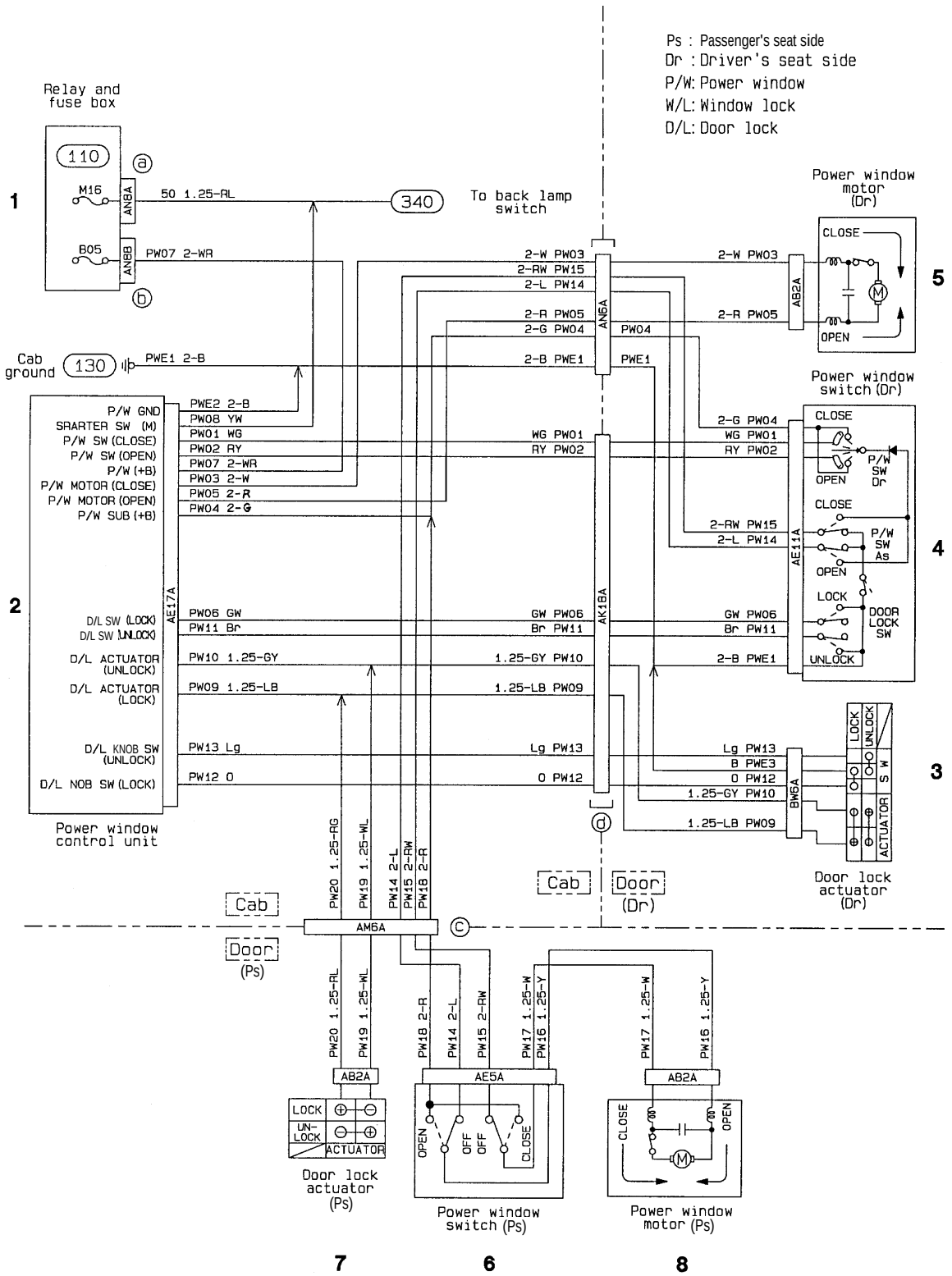

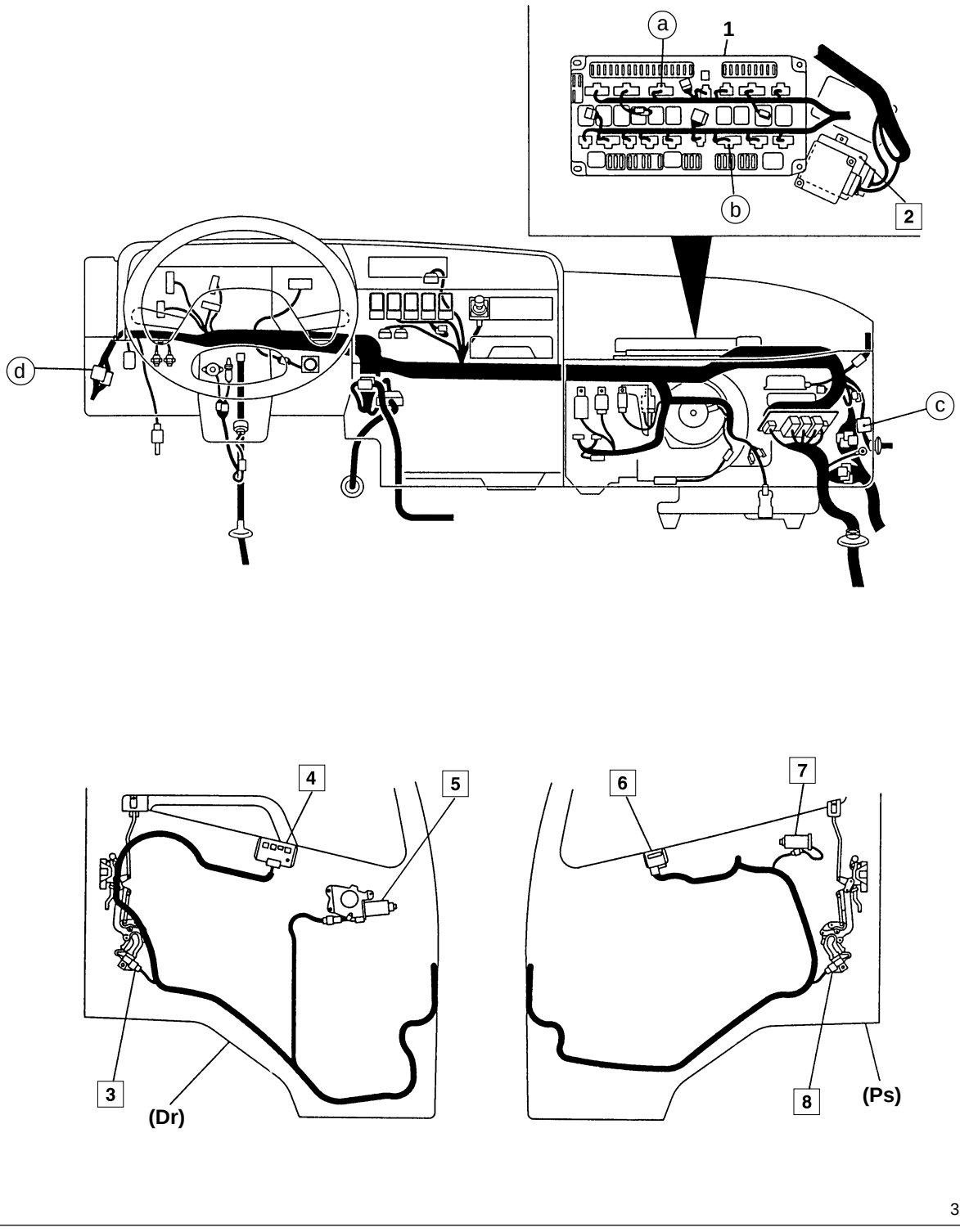

1 Relay and fuse box (104)
2 Power window control unit
3 Door lock actuator
4 Power window switch (Dr)
5 Power window motor
6 Power window switch (Ps)
7 Power window motor
8 Door lock actuator

Ps : Passenger's seat side
Dr : Driver's seat side

◆ Service procedure

2 **Inspection of power window switch & controller**

- Since the units alone cannot be readily checked in the off-vehicle state, check the harness, switch and other related parts in each system.
- If any fault is not found in the related parts, and the problem still remains in the system, replace the control unit or other units.

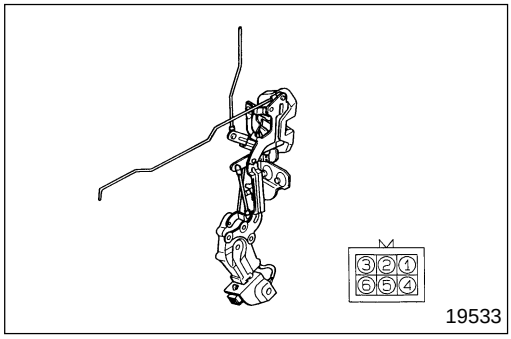

3 **Inspection of door lock actuator (driver's seat side)**

- Follow the table below to check for continuity and operation.

	①	③	②	④	⑤
LOCK		○—○		⊖—⊕	
UNLOCK	○—○			⊕—⊖	

○—○ : There is continuity between terminals.
⊕—⊖ : Indicates the terminals where 12 volts DC is to be applied.

- If any fault is found, replace door lock actuator (driver's seat side) **3**. Gr 42

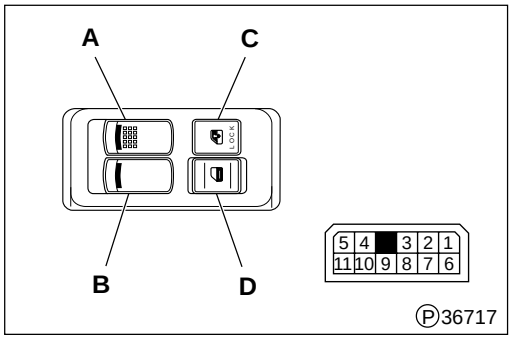

4 **Inspection of power window switch (driver's seat side)**

- Follow the table below to check for operation.

			①	②	⑤	⑥	⑦	⑧	⑨	⑩	⑪
A	UP	Manual		○	———	▶|				○	
		Auto		○	▶| ———	○				○	
	NEUTRAL										
	DOWN	Manual		○	———	▶|					○
		Auto		○	▶| ———	○					○
B	UP			○	———			○			
	NEUTRAL										
	DOWN			○	———				○		
C	UNLOCK		○	———				○			
			○	———					○		
	LOCK										
D	UNLOCK		○	———		○					
	LOCK		○	———			○				

○—○ : There is continuity between terminals.

- If any fault is found, replace the power window and auto door lock switch **4**.

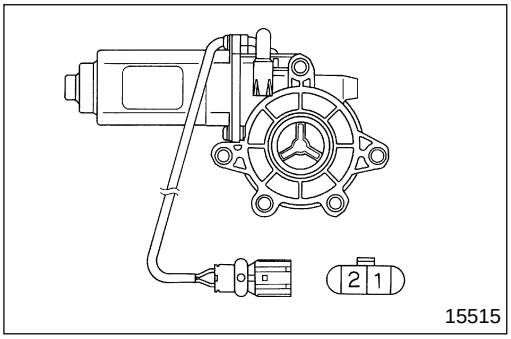

5 7 Inspection of power window motors

- Follow the table below to check for operation.

	①	②
UP (Close)	⊕	⊖
DOWN (Open)	⊖	⊕

⊕—⊖ : Indicates the terminals where 12 volts DC is to be applied.

- If any fault is found, replace power window motors **5** or **7**. 🕮 Gr 42

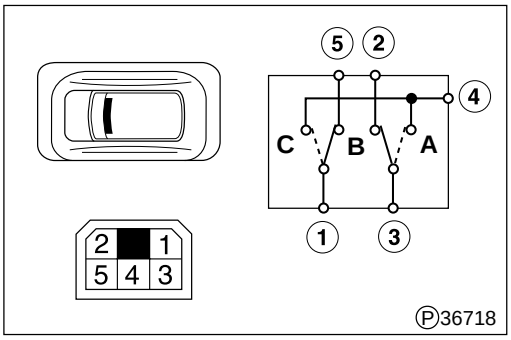

6 Inspection of power window switch

- Follow the table below to check for continuity.

	①	②	③	④	⑤
A: OPEN	○				○
			○	○	
B: NEUTRAL		○	○		
	○				○
C: CLOSE	○			○	
		○	○		

○—○ : There is continuity between terminals.

- If any fault is found, replace power window switch **7**.

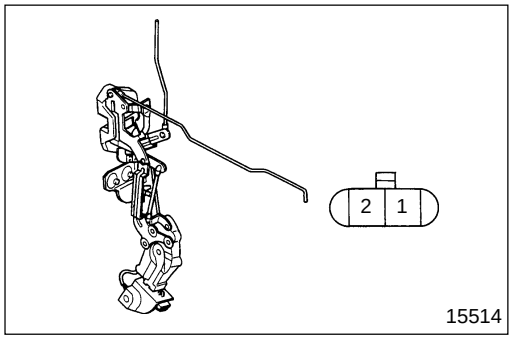

8 Inspection of door lock actuator (passenger's seat side)

- Follow the table below to check for operation.

	①	②
LOCK	⊖	⊕
UNLOCK	⊕	⊖

⊕—⊖ : Indicates the terminals where 12 volts DC is to be applied.

- If any fault is found, replace door lock actuator (passenger's seat side) **8**. 🕮 Gr 42

MITSUBISHI MOTORS

Service Manual

Table of Contents

BACK

HOME

FK.FM 1999
Model Changes

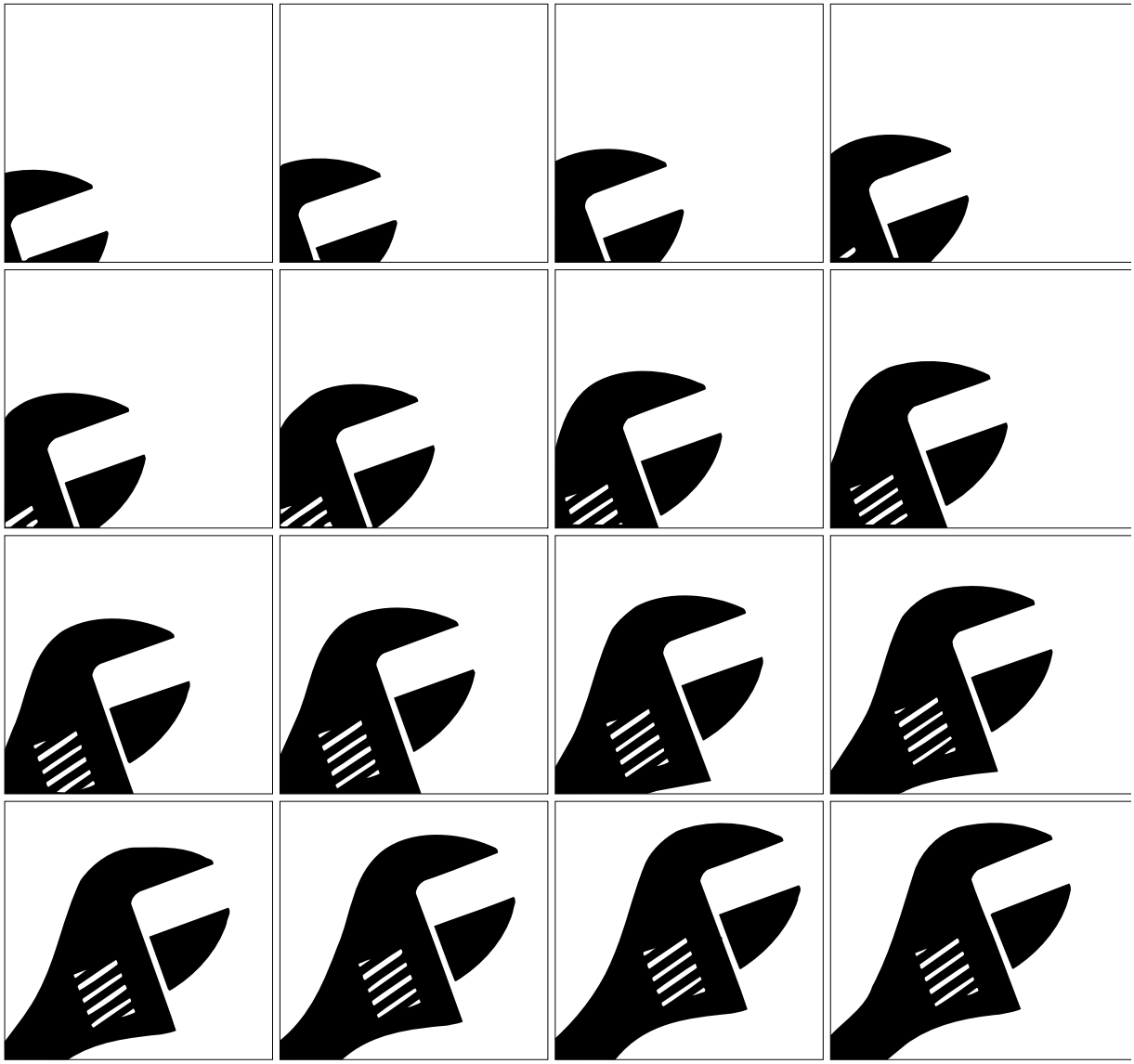

Pub. No. TWME9503-3

FK.FM

SERVICE MANUAL

FOREWORD

This Service Manual contains maintenance and repair methods for personnel involved in the maintenance and repair of 1999 model Mitsubishi Fuso Truck FK, FM series.
Read this manual carefully as an aid to providing correct, efficient and fast maintenance.
Please note, however, that due to continuous improvements on the specifications, numbers and description for maintenance might be changed without prior notice.
If you have any question, or encounter a problem, please do not hesitate to contact your nearest Mitsubishi Fuso dealer or distributor.

© Mitsubishi Motors Corporation, March 1998

MITSUBISHI FUSO TRUCK OF AMERICA, Inc.

GROUP INDEX

1999 MODEL CHANGES

GENERAL 00

BRAKE (AIR OVER HYDRAULIC BRAKE) 35A

STEERING 37

ELECTRICAL 54

1999 MODEL CHANGES

1999 MODEL CHANGES

Item	’99 Model	⇦	’98 Model
Gr 00 General • The vehicle identification number has changed.	🕮 P00-3		—
• Engines of FK617 and FM617 models equipped with automatic transmission are different.	6D16T3 200HP/2600rpm 434lbf.ft/1600rpm (SAE, Gross)		6D16T4 190HP/2600rpm 408lbf.ft/1600rpm (SAE, Gross)
• Wheelbase of FM617 and FM657 has changed. P specification ← N specification	P specification		N specification
Gr 11 Engine • Shape of flywheel in 6D16T3 model with automatic transmission is changed, and adapter is added. Gr 11 Engine < Manual transmission > (Pub. No. TWME9503-11)	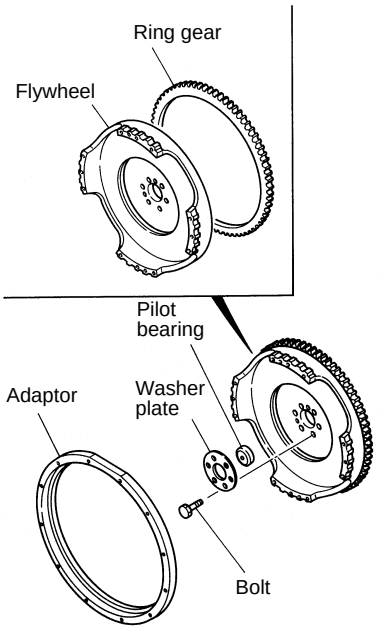 32415		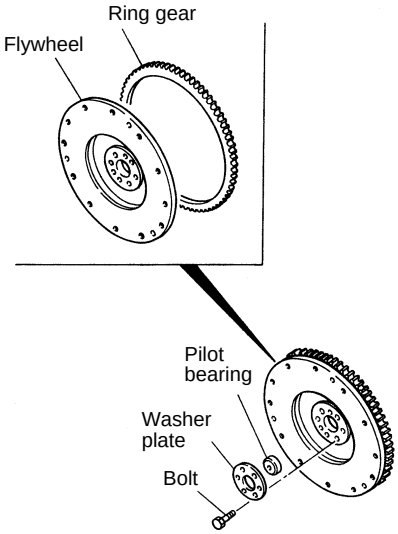 32416
Gr 13 Fuel and engine control • Governor has changed from mechanical type to electronic type. Gr 13 Fuel and engine control ’99 Minor Change (Pub. No. TWME9503-313)	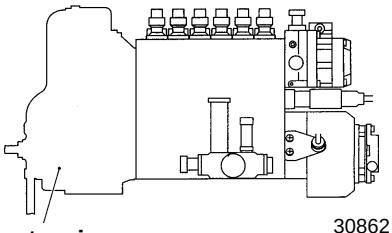 30862 **Electronic governor**		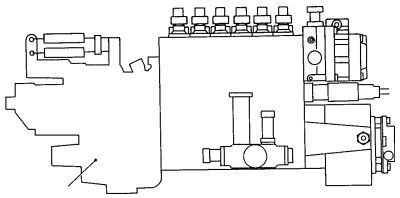 30863 **Mechanical governor**
	Governor type: RED-III Electronic control governor		RLD-J all-speed mechanical governor with boost compensator

Item	’99 Model ⇦	’98 Model
Gr 13 Fuel and engine control • Engine control system changed due to the use of electronic governor. Gr 13 Fuel and engine control '99 Minor Change (Pub. No. TWME 9503-313)	<'99 Model> 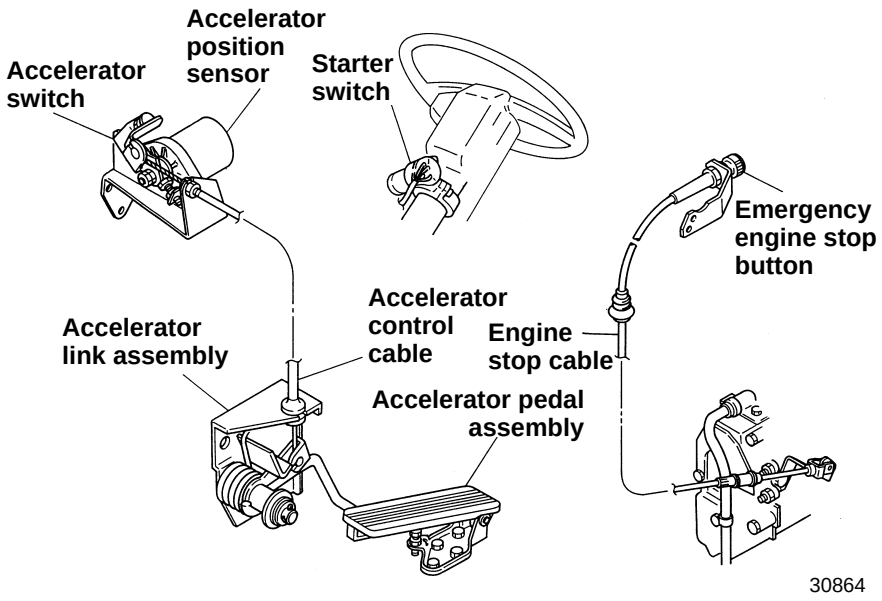 30864 <'98 Model> 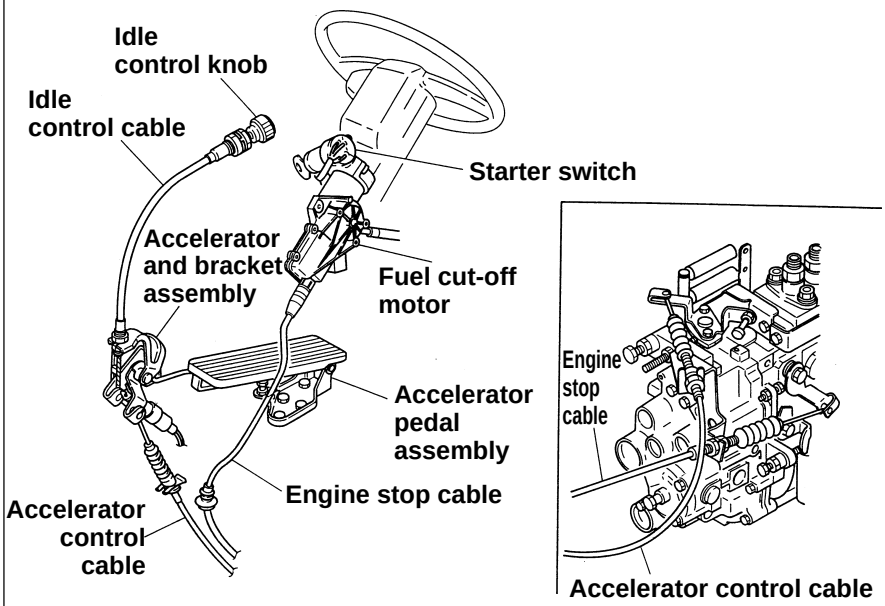 30865	
• Fuel injection timing is different.	2° ± 0.5° BTDC	7° ± 0.5° BTDC
• Injection pump system has changed to electronic control system. Gr 13 Fuel and engine control ’99 Minor Change (Pub. No. TWME 9503-313)	Electronic governor and pre-stroke control injection pump system	Mechanical governor and pre-stroke control injection pump system

Item	'99 Model ⇦ '98 Model

Gr 14 Cooling

- Thermostat cover and case are different.

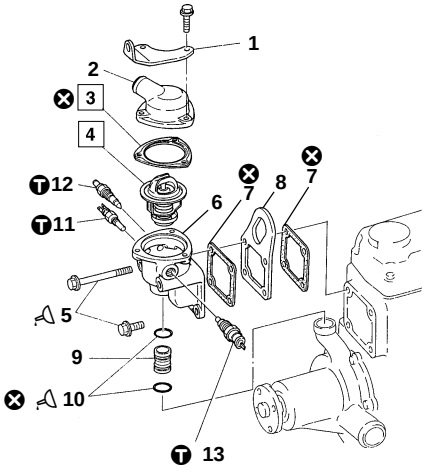

30406

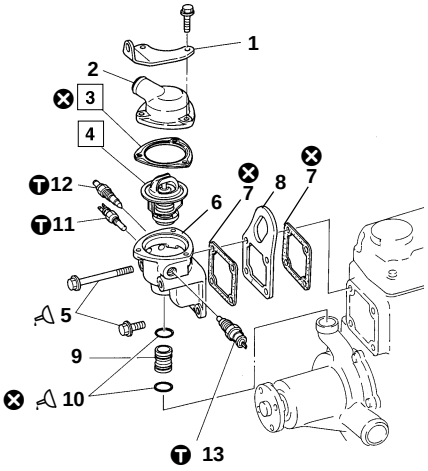

11996

● **Disassembly sequence**

1 Fan shroud stay
2 Thermostat cover
3 Thermostat cover gasket
4 Thermostat
5 Bolt
6 Thermostat case
7 Hanger gasket
8 Front hanger
9 Joint
10 O-ring
11 Water temperature sensor (Water temperature gauge and multipurpose timing control unit) Gr 54
12 Overheating switch Gr 54
13 Water temperature sensor (Pre-stroke control type injection pump) Gr 13
⊗: Non-reusable parts

● **Assembly sequence**

Follow the disassembly sequence in reverse.

Gr 15 Intake and Exhaust

- Boost compensator hose was replaced by boost pressure sensor hose due to the installation of boost pressure sensor.

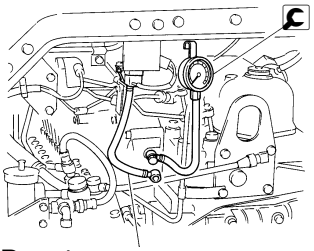

Boost pressure sensor hose 30336

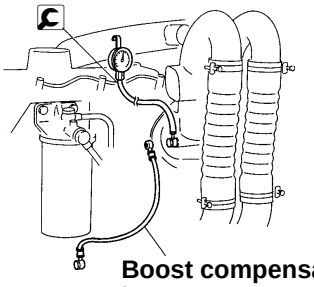

Boost compensator hose 13512

Item	’99 Model	⇦	’98 Model
Gr 21 Clutch • Clutch is different.	C6M35 Gr 21 Clutch (Pub. No. TWME9503-21)		SPICER AR350
Gr 23 Automatic Transmission • Modulator has changed from mechanical type to electric type.	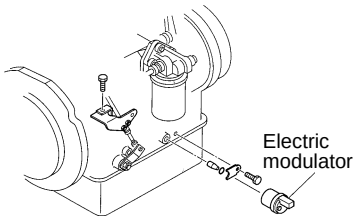 Ⓟ31129		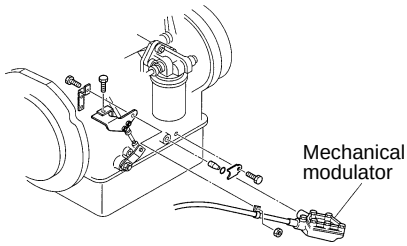 Ⓟ31631

Operating system

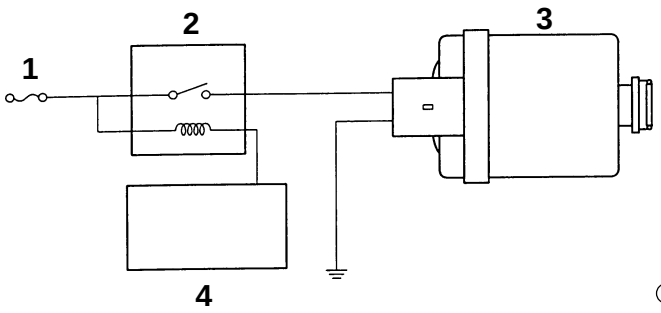

Ⓟ31632

1 Fuse
2 Relay
3 Modulator
4 Electric governor ECU

● **Outline of operating system**

Electronic governor ECU **4** sends a signal via relay **2** to activate modulator **3** for switching between closed-throttle shift and full-throttle shift.

● **Operating conditions**

Throttle opening of 80% or more: ON (Full-throttle shift)
Throttle opening of 65% or less after ON: OFF (Closed-throttle shift)

Item	'99 Model	⇦	'98 Model
Gr 23 Automatic Transmission • ATF temperature sensor is added due to the use of engine output control mechanism which activates in high ATF temperature conditions. • Temperature setting for activating oil temperature warning lamp and mounting position of ATF temperature sensor have been changed. • Removal and inspection procedures for sensors are the same as before.	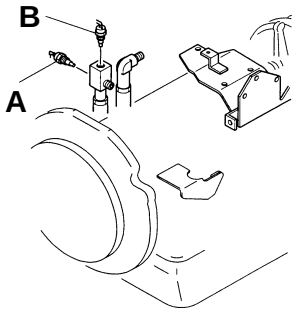 Ⓟ31458 A: For ATF temperature warning lamp operation 145 ± 3°C {293 ± 5.4°F} ON OFF 138°C {280°F} MIN B: For engine output control 140 ± 3°C {284 ± 5.4°F} ON OFF 133°C {271°F} MIN		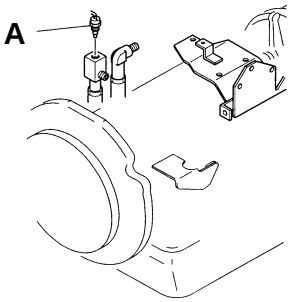 Ⓟ31459 A: For ATF temperature warning lamp operation 140 ± 3°C {284 ± 5.4°F} ON OFF 133°C {271°F} MIN
Gr 26 Front axle • Type and weight of front axle of FK617 are different.	Model F040T modified Mass Approximately kg{lb} 245 {540}		Model F040T Mass Approximately kg{lb} 185 {405}
Gr 33 Front suspention • Grease nipples on forward side of front springs on FM657 have been changed. (Diagrams show left-side front springs viewed from back of vehicles. Right springs are symmetrically arranged.)	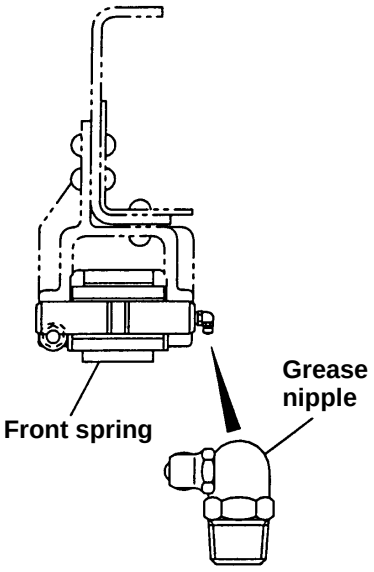		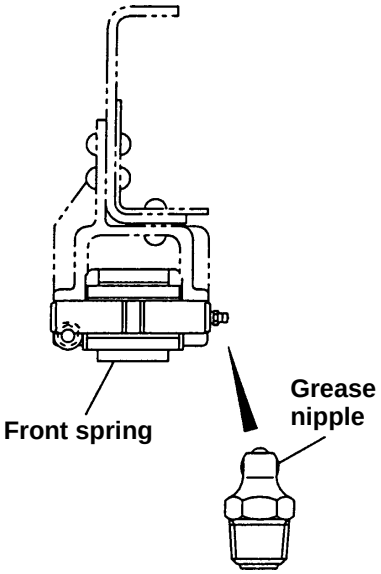 Ⓟ30991

Item	’99 Model	⇦	’98 Model
Gr 32 Front suspension • Grease nipples on the back sides of front springs on FK617 have been changed. (Diagrams show right side front springs viewed from the back of vehicles. Left springs are symmetrically arranged.)	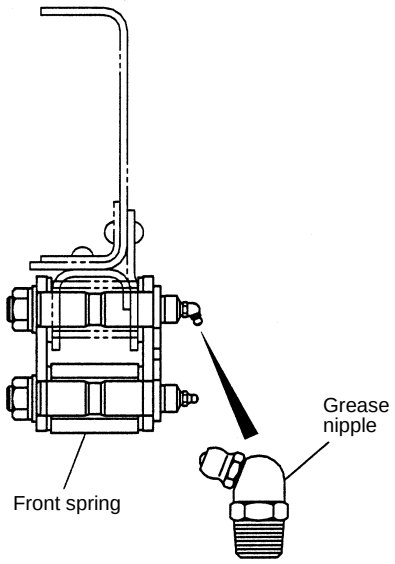		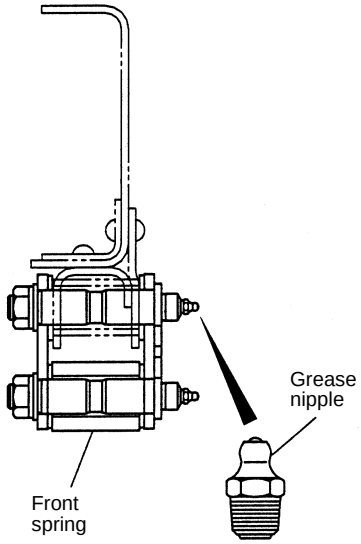 Ⓟ32234
Gr 35A Brake (air over hydraulic brake) • Brake booster (air master) is different.	🕮 Gr 35A Brake (air over hydraulic brake)		—
• Air compressor is different.	Gr 35B Brake <Full Air Brake> (Pub. No. TWME9503-35B)		—
• Air tank capacity is different.	8L + 15L + 22L {2.1gal + 4.0gal + 5.8gal}		8L + 10L + 12L {2.1gal + 2.6gal + 3.2gal}
Gr 35B Brake (full air brake) • Air tank capacity is different.	21L + 21L + 26L {5.5gal + 5.5gal + 6.9gal}		23L + 23L + 30L {6.1gal + 6.1gal + 7.9gal}
• Brake linings of front wheel brakes of FM657 are different.	Brake lining Width × Thickness 150 × 16 mm {5.90 × 0.63 in.}		Brake lining Width × Thickness 140 × 16 mm {5.51 × 0.63 in.}
Gr 35C Anti-lock brake system • Anti-lock brake system (ABS) is added.	Gr 35C Anti-lock brake system (ABS) '99 Minor Change (Pub. No. TWME9503-335C)		—
Gr 36A Parking Brake (Center Parking Brake) • Shape and mounting method of parking brake cable bracket changed.	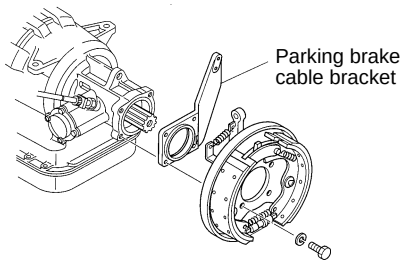 Ⓟ31127		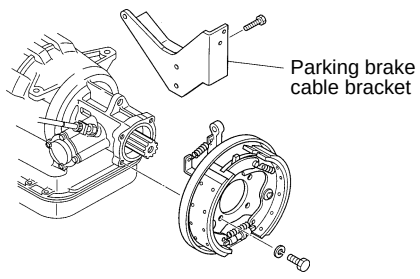 Ⓟ31128

Item	'99 Model	⇦	'98 Model
Gr 37 Steering • Steering wheel is different.	Steering wheel 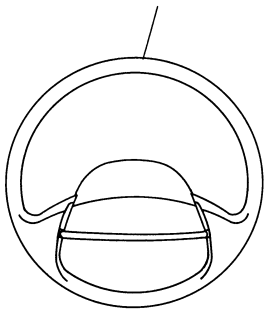 **ø480 mm {18.9 in.}**		Steering wheel 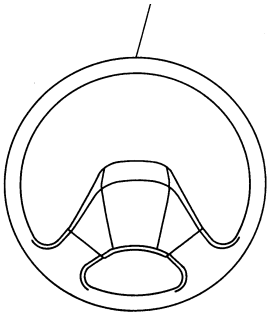 **ø480 mm {18.9 in.}** 30364
• Steering system is different.	🕮 Gr 37 Steering		—
Gr 42 Cab • Side door beams are added as standard equipment.	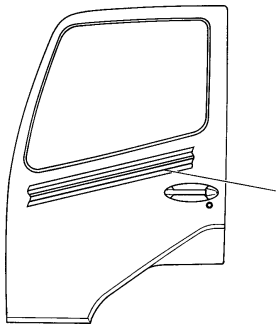 **Side door beam** 30545		
Gr 54 Electrical 1 POWER, CHARGING AND GROUND • Battery has changed.	115E41R		95E41R
• Capacities of fuses listed on the right and main load specifications have changed.	B20 Anti-lock brake system 30A B25 Horn 15A M05 Electronic governor control unit 10A M08 Turn/hazard 10A M11 Electronic governor control unit 5A M12 Anti-lock brake system 5A		— B24 Horn 15A — M08 Turn/hazard 20A M11 Pre-stroke control unit 10A —
2 ENGINE STARTING, PREHEATING AND STOPPING • Engine starting circuit has changed due to the use of neutral start relay.	(210) ENGINE STARTING CIRCUIT 🕮 P54-4		
• (215) Engine stopping circuit was discontinued due to the use of electronic governor. (Fuel cut-off relay and fuel cut-off motor were also discontinued.)	Electronic control engine stopping device Gr 13 Fuel and engine control '99 Minor Change (Pub. No. TWME9503-313)		Electric and cable-operated engine stopping device 🕮 (215) Engine stopping circuit
4 METER • Warning and indicator lamps are added due to the use of electronic governor, cruise control and anti-lock brake system	(Orange) Electronic governor warning lamp (vehicle driveable) (Red) Pre-stroke warning lamp (vehicle not driveable) Cruise control indicator lamp (manual transmission) ABS Anti-lock brake warning lamp		

Item	’99 Model ⇦ ’98 Model
	<Internal circuit of meter cluster> **Meter cluster** 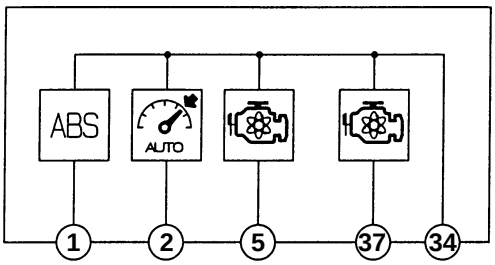 <Back side of meter cluster > 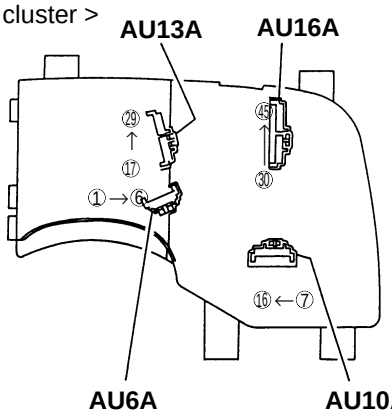 30290

Connector No.	Terminal No.	—
AU6A	1	Anti-lock brake control unit
	2	Electronic governor control unit < Manual transmission>
	5	Electronic governor control unit
AU16A	34	Starter switch terminal (M)
	37	Electronic governor control unit

• Circuits indicated on the right changed due to the use of electronic governor.	(410) SPEEDOMETER AND TACHOMETER CIRCUITS 🕮 P54-8
⑤ INDICATOR AND WARNING • Circuit indicated on the right changed due to the use of anti-lock brake system.	(515) BRAKE WARNING CIRCUIT 🕮 P54-12
⑥ SWITCH • Service procedure for cruise control and resume switch is included in service procedure for combination switch. < Manual transmission >	**Inspection of combination switch** 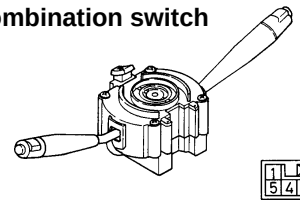  **BX5A** 30291 BX5A connector connection chart

		①	②	③	④	⑤
Set & resume switch and cancel switch	Set		○	○		
	Cancel			○		○
	OFF					
	Resume			○	○	

<table>
<tr><th>Item</th><th>’99 Model ⇦ ’98 Model</th></tr>
<tr><td>7 CHASSIS SIDE ELECTRICAL
• Circuit indicated on the right changed due to the use of electronic governor.</td><td>(710) EXHAUST BRAKE CIRCUIT 🕮 P54-16</td></tr>
<tr><td>8 ENGINE AND TRANSMISSION ELECTRICS
(802) TRANSMISSION ELECTRIC
• Sensor pulse count changed (from 8-pulse type to 25-pulse type) and service procedure is different.</td><td>Vehicle speed sensor
Service standards
<table>
<tr><th colspan="3">Maintenance item</th><th>Standard value</th><th>Limit</th><th>Remedy</th></tr>
<tr><td rowspan="2">Pulse output voltage of vehicle speed sensor
< 25-pulse type >
 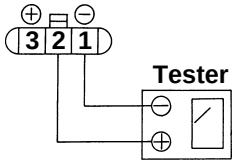

23608</td><td rowspan="2">①-②</td><td>Low level of pulse</td><td>0.5 or less</td><td rowspan="2">–</td><td rowspan="2">Replace</td></tr>
<tr><td>High level of pulse</td><td>8 ± 1V</td></tr>
</table>
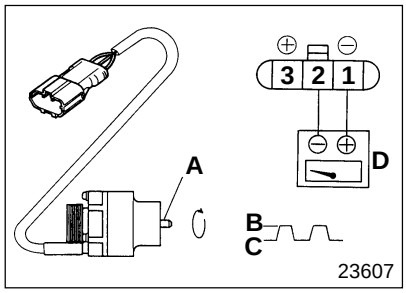

23607
• Turn slowly portion A of vehicle speed sensor with DC12V applied between terminals ① and ③ .
• Read the maximum value (high level B) and minimum value (low level C) of the voltages generated between terminals ① and ②.
D : Tester
• If the measurement is not within the standard voltage, replace vehicle speed sensor.</td></tr>
</table>

GROUP 00 GENERAL

POWER TRAIN TABLE 00-2

VEHICLE IDENTIFICATION NUMBER 00-3

CONNECTOR CONFIGURATION CHART 00-4

POWER TRAIN TABLE

* Indicates changes

Model	Engine model	Clutch model	Transmission model	Propeller shaft	Rear axle model	Final reduction and gear ratio
FK617 H, J, K, L G.V.W. 10430 kg {23000 lb}	6D16T3 200HP/2600rpm 434lbf.ft/1600rpm (SAE, Gross)	C6M35	M060S5 6.875/1.000	P4	R050T(M)	D050H 4.444
FK617 K, L, ★G.V.W. 10430 kg {23000 lb}	★6D16T3 200HP/2600rpm 434 lbf.ft/1600rpm (SAE, Gross)	Torque converter (TC290-1.72)	M4A4 (Alliston AT542) 3.454/1.000			D050H 4.625
FM617J, L, M, P G.V.W. 11790kg {25995 lb}	6D16T3 200HP/2600rpm 434lbf.ft/1600rpm (SAE, Gross)	C6M35	M060S6 6.875/0.786	P8	R060T	D8H 5.857
	★6D16T3 200HP/2600rpm 434lbf.ft/1600rpm (SAE, Gross)	Torque converter (TC290-1.72)	M4A4 (Alliston AT545) 3.454/1.000			D8H 4.875
FM617 J, L, M, P G.V.W. 13610 kg {30000 lb}	6D16T3 200HP/2600rpm 434lbf.ft/1600rpm (SAE, Gross)	C6M35	M060S6 6.875/0.786			D8H 6.166
FM617 L, M, P G.V.W. 13610 kg {30000 lb}	★6D16T3 200HP/2600rpm 434lbf.ft/1600rpm (SAE, Gross)	Torque converter (TC290-1.72)	M4A4 (Alliston AT545) 3.454/1.000			D8H 5.571
FM657 J, L, M, P G.V.W. 14920 kg {32900 lb}	6D16T3 200HP/2600rpm 434lbf.ft/1600rpm (SAE, Gross)	C6M35	M060S6 6.875/0.786			D8H 6.166
	6D16T2 230HP/2600rpm 521lbf.ft/1600rpm (SAE, Gross)	C7M38	M070S6 8.064/1.000	P10		D8H 4.625
			M8S2x5 10.060/1.000			

VEHICLE IDENTIFICATION NUMBER

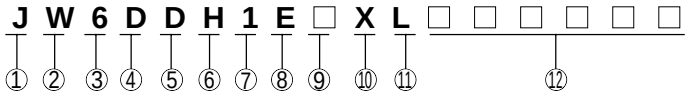

①	Country	J:	Japan
②	Make	W:	Mitsubishi Fuso
③	Vehicle type	6:	Incomplete Vehicle
④	Gross vehicle weight/Brake system	D:	19501 to 26000 lbs/Air over hydraulic
		E:	26001 to 33000 lbs/Air over hydraulic
		F:	26001 to 33000 lbs/Full air
⑤	Line	D:	FK617
		E:	FM617
		F:	FM657
⑥	Series (Wheelbase)	H:	4.1 to 4.39 m {163.8 in.}
		J:	4.4 to 4.69 m {175.6 to 181.9 in.}
		K:	4.7 to 4.99 m {187.4 in.}
		L:	5.0 to 5.29 m {200.0 to 200.8 in.}
		M:	5.3 to 5.59 m {218.5 in}
		P:	5.9 to 6.19 m {239.4 in.}
⑦	Cab chassis type	1:	Chassis cab
⑧	Engine	E:	7.545 l Diesel turbocharged and charge air cooled
⑨	Check digit		
⑩	Model year	X:	1999
⑪	Plant	L:	Kawasaki-2
		M:	Kawasaki-3
⑫	Plant sequential number		

CONNECTOR CONFIGURATION CHART

- Connectors are added due to the use of electronic governor and anti-lock brake system.

Type (numeral indicates number of terminals)		Female – Male
BN	BN1A	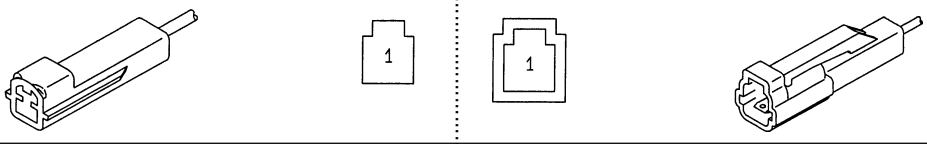
BX	BX5A	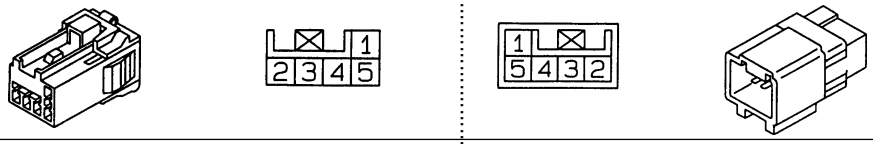
BZ	BZ12A	
	BZ16A	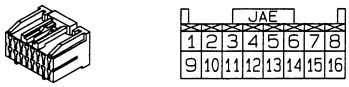
	BZ22A	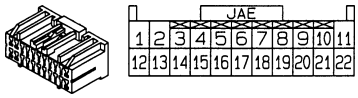
	BZ26A	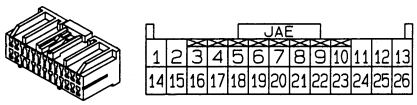
		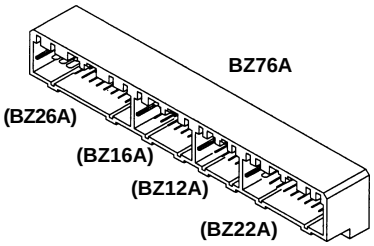
CB	CB16A	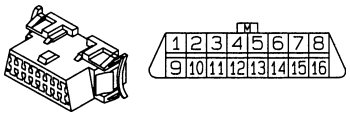
CM	CM28A	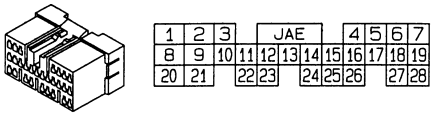
	CM30A	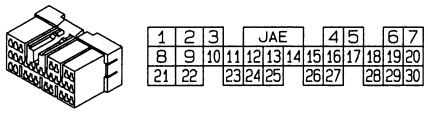
	CM35A	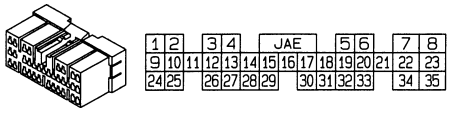

Type (numeral indicates number of terminals)		Female – Male
CU	CU6A	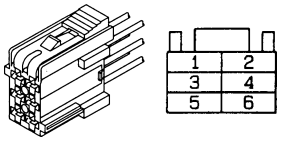
	CU9A	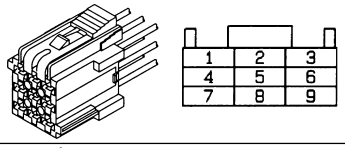
	CU15A	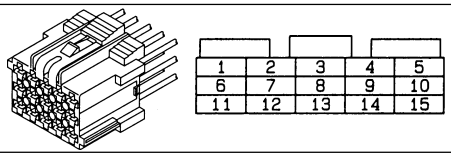
	CU17A	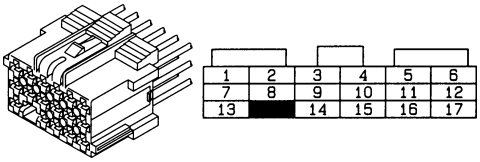

GROUP 35A BRAKE (AIR OVER HYDRAULIC BRAKE)

SPECIFICATIONS 35A-2

BRAKE BOOSTER (AIRMASTER) 35A-4

For details other than brake booster, please refer to the Shop Manual Chassis FK, FM '96 (Pub. No. TWME9503-35A) Group 35A Brake (Air Over Hydraulic Brake).

SPECIFICATIONS

Item			Specifications
Brake booster (Airmaster)	Power cylinder Inner diameter×Stroke	mm {in.}	ø114.3×98 {4.50×3.86}
	Hydraulic cylinder Inner diameter×Stroke	mm {in.}	ø22.2×95 {0.87×3.74}
	Operating starting pressure	kPa {lbf/in^2, kgf/cm^2}	18±9.8 {2.6±1.4, 0.18±0.1}
	Residual pressure	kPa {lbf/in^2, kgf/cm^2}	78 to 125 {11 to 18, 0.8 to 1.3}
	Manufacturer		JIDOSHA KIKI

M E M O

BRAKE BOOSTER (AIRMASTER)

Airmaster Assembly

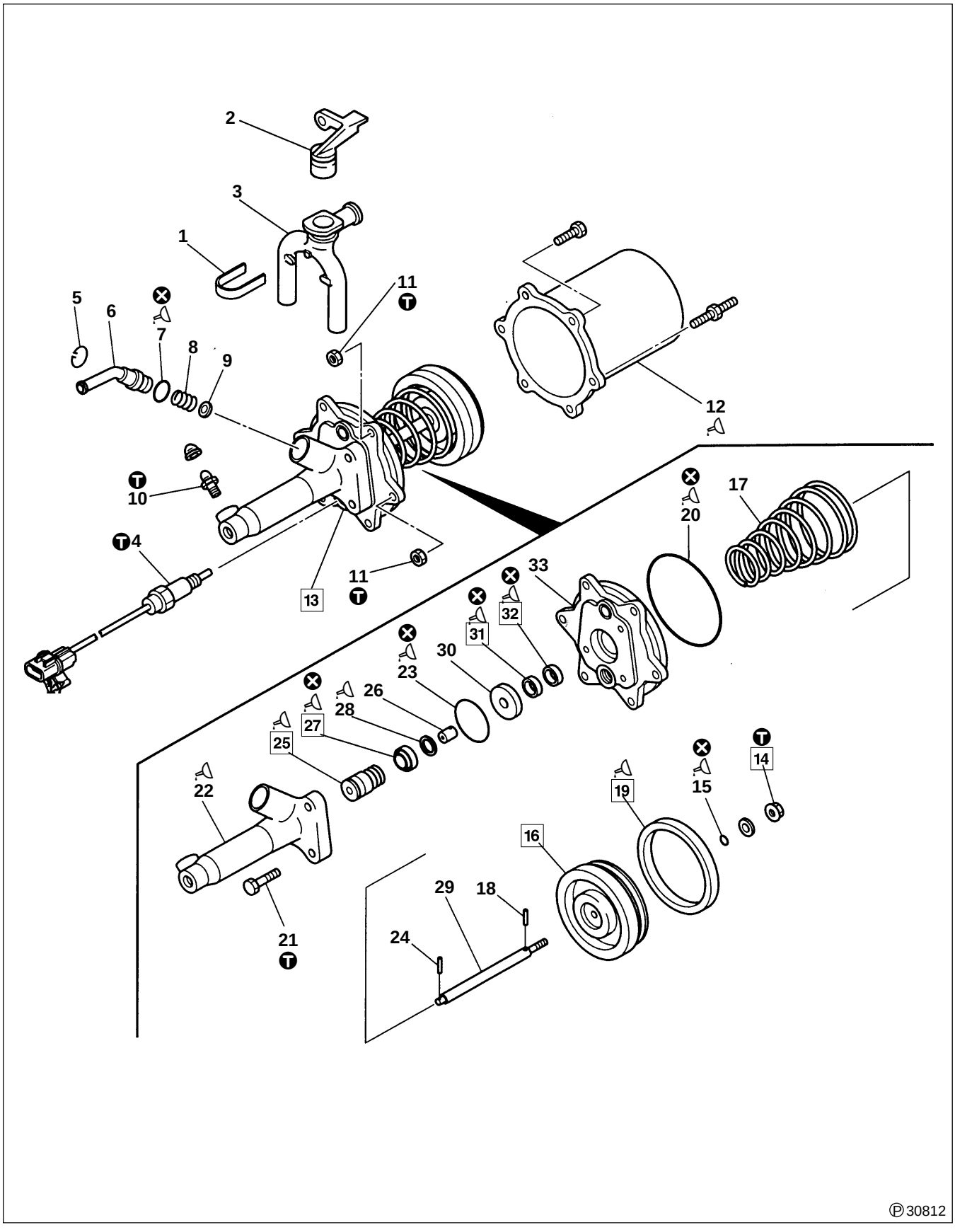

● **Disassembly sequence**

1 Clamp
2 Holder
3 Exhaust cover
4 Stroke switch
🕮 Gr 54
5 Retaining ring
6 Connector
7 O-ring
8 Spring
9 Valve assembly
10 Air bleeder
11 Nut
12 Cylinder shell
13 Body assembly
14 Nut
15 O-ring
16 Piston plate
17 Return spring
18 Straight pin
19 Cup packing
20 O-ring
21 Bolt
22 Hydraulic cylinder
23 O-ring
24 Straight pin
25 Hydraulic piston
26 Valve seal assembly
27 Cup packing
28 Backup ring
29 Push rod
30 Washer
31 Oil seal
32 Oil seal
33 End plate

⊗: Non-reusable parts

● **Assembly sequence**

Follow the disassembly sequence in reverse.

Repair kit: Brake booster kit

● **Inspection of function after assembly**

🕮 P35A-6

Service standards

Unit : mm {in.}

Location	Maintenance item	Standard value (Basic diameter in [ ])	Limit	Remedy
12, 16	Clearance between cylinder shell and piston plate	[114.3] 0.9 to 1.6 {[4.50] 0.035 to 0.063}	2.0 {0.079}	Replace piston plate
17	Return spring load (Installed length:132 {5.20})	137.3±20N {31±4.4 lbf, 14±2 kgf}	107.3 N {26 lbf, 12 kgf}	Replace
22, 25	Clearance between hydraulic cylinder and hydraulic piston	[22.2] 0.04 to 0.11 {[0.87] 0.0016 to 0.0043}	0.2 {0.0079}	Replace hydraulic piston
29	Push rod deflection	0.05 {0.002}	0.15 {0.0059}	Replace

Ⓣ Tightening torque

Unit : N·m {lbf.ft, kgf·m}

Location	Parts to be tightened	Tightening torque	Remarks
4	Stroke switch	8 to 12 {5.8 to 8.7, 0.8 to 1.2}	Overtightening prohibited
10	Air bleeder	7 to 12 {5.1 to 8.7, 0.7 to 1.3}	—
11	Nut (Mounting of body assembly and cylinder shell)	11 to 15 {8 to 12, 1.1 to 1.6}	—
14	Nut (Mounting of piston plate and push rod)	11 to 15 {8 to 12, 1.1 to 1.6}	Punch for installation
21	Bolt (Mounting of hydraulic cylinder)	20 to 29 {14 to 22, 2 to 3}	—

BRAKE BOOSTER (AIRMASTER)

Lubricant and/or fluid

Location	Points of application	Specified lubricant and/or fluid	Quantity
7, 23	Entire surface of O-ring	Brake fluid (SAE J1703f or FMVSS No. 116, DOT3)	As required
12	Cylinder shell bore	Multipurpose grease [NLGI No.2 (Li soap)]	10 g (0.35 oz)
15, 20	O-ring	Multipurpose grease [NLGI No.2 (Li soap)] or Silicon grease	As required
19	Entire surface of cup packing	Multipurpose grease [NLGI No.2 (Li soap)]	5 g (0.18oz)
22, 25 27	Entire surface of cup packing, and friction surfaces of hydraulic piston and hydraulic cylinder	Brake fluid (SAE J1703f or FMVSS No. 116, DOT3)	As required
31	Entire surface of oil seal	Silicon oil	As required
32	Groove on oil seal	Silicon grease	As required

Special tools

Location	Tool name and shape	Part No.	Application
13	Stand	✱910-00450	Working bench
16	Holder	✱910-24831	Removal and installation of piston plate
27	Cup Insert Guide	✱910-23295	Mounting of cup packing
31, 32	Puller	✱910-20350	Removal of oil seal
31, 32	Press-fit bar	✱910-20195	Press-fitting of oil seal
–	Portable Tester	✱916-00021	Function check after assembly

✱ JIDOSHA KIKI part No.

◆ Service procedure

● Inspection of function after assembly

(1) Install the brake booster on the vehicle, and conduct the performance test using Portable Tester.

- Setting up of pressure gauge
  - Connect a pressure gauge (PG4) for measuring the command pressure to the air supply port of the power cylinder.
  - Remove air bleeder **10** from the hydraulic cylinder and connect an oil pressure gauge (PG2). Then bleed air from the inside of the tester.
- Raise the air pressure in the air tank to 590 kPa {85 PSI, 6 kgf/cm^2), then inspect the functions given in the following table with the engine stopped.

Test item	Test condition	Standard value in assembled condition	Limit	Remedy
Air-tightness at full load	Air pressure decrease after keeping brake pedal fully depressed for 15 seconds	–	Air pressure gauge (PG4) reading less than 59 kPa {8.5 PSI,0.6 kgf/cm^2}	Replace O-ring **15** and/or cup packing **19**
Operation at full load	Confirm that command air pressure (PG4) is 590 kPa {85 PSI, 6 kgf/cm^2} with the brake pedal fully depressed	Oil pressure gauge (PG2) reading 14.0 to 15.4 MPa {2030 to 2230 PSI, 143 to 157 kgf/cm^2}	Oil pressure gauge (PG2) reading 13.7 to 15.7 Mpa {1990 to 2280 PSI, 140 to 160 kgf/cm^2}	Replace hydraulic piston **26** and/or cup packing **27**
Brake booster operation starting pressure	Depress brake pedal grad ually and read the com-mand pressure when oil pressure gauge (PG2) starts rising	Air pressure gauge (PG4) reading 14 to 33 kPa {2.0 to 4.8 PSI, 0.14 to 0.34 kgf/cm^2}	Air pressure gauge (PG4) reading 43 kPa {6.3 PSI, 0.44 kgf/cm^2}	Replace valve seal assembly **26**, cup packing **19** and/or cup packing **27**
Residual pressure	When brake pedal is released after depressed	Oil pressure gauge (PG2) reading 78 to 125 kPa {11 to 18 PSI, 0.8 to 1.3 kgf/cm^2}	Oil pressure gauge (PG2) reading 59 to 155 kPa {8.5 to 23.0 PSI, 0.6 to 1.6 kgf/cm^2}	Replace valve assembly **9** and/or spring **8**

(2) After completion of the above tests, conduct the function test of stroke switch **4**. Loosen the air bleeder so as to allow fluid to leak out. Depress the brake pedal to let the power piston move full stroke so that stroke switch **4** may be operated. Then confirm that the brake warning lamp on the meter cluster comes on.

(3) Always bleed the brake system and pour brake fluid to the "**H**" line of the brake fluid tank after performing the brake booster function check.

◆ Service procedure

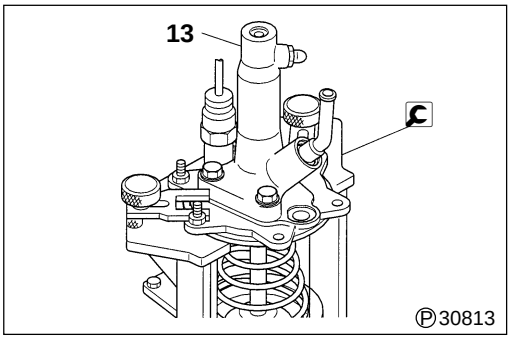

13 **Installation of body assembly**

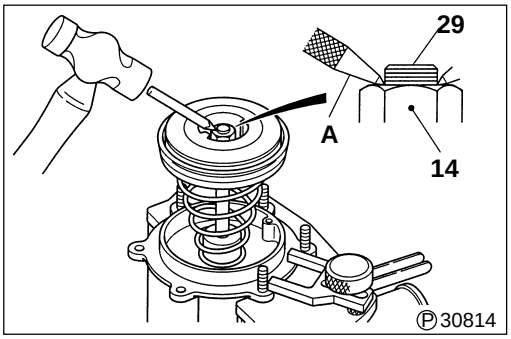

14 **Installation of nut**

After tightening nut **14** at specified torque, stake the nut and push rod **29** thread area.

A : Center punch

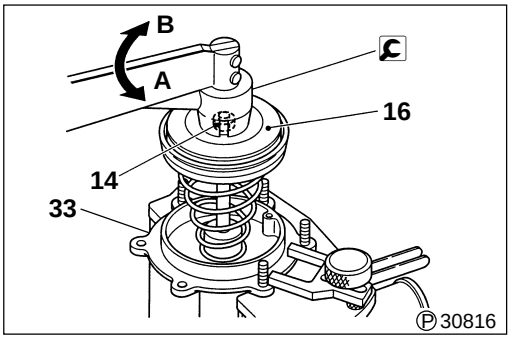

16 **Removal and installation of piston plate**

A : Removal
B : Installation

NOTE

To install, while pressing piston plate 16 to end plate 33 with sufficient force, tighten nut 14 to specified torque.

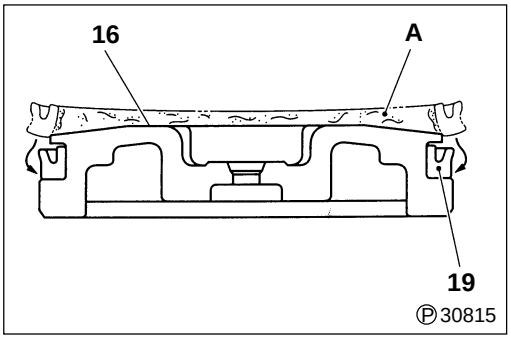

19 **Installation of cup packing**

A : Grease

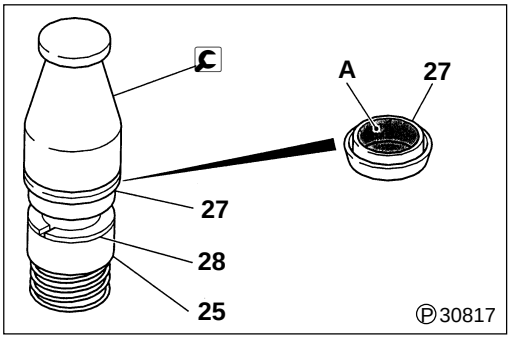

27 **Installation of cup packing**

A : Brake fluid

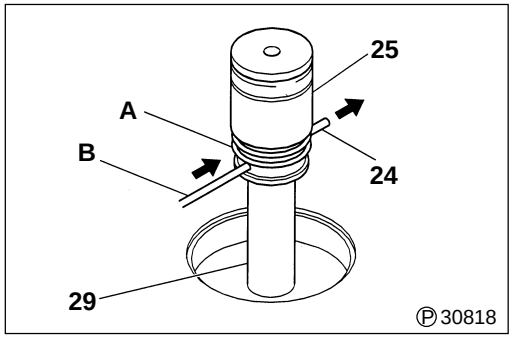

25 **Hydraulic piston**

[Removal]

A : Spring

B : Needle

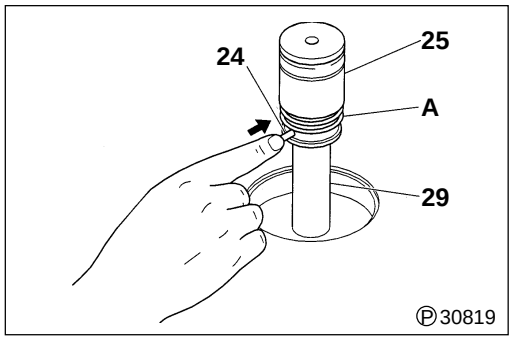

[Installation]

Align the holes of hydraulic piston **25**, valve seal assembly **26** and push rod **29**, and insert straight pin **24**.

A : Spring

NOTE

After inserting straight pin 24, make sure that the hydraulic piston spring is hanging over the straight pin and working as a stopper.

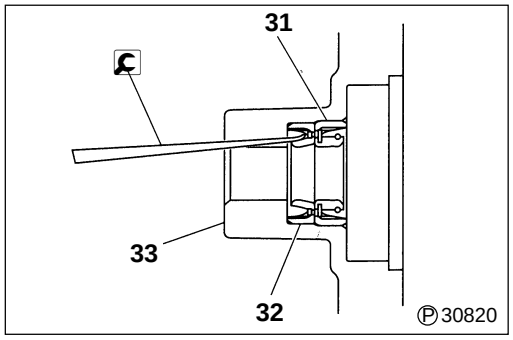

31 **32** **Oil seals**

[Removal]

CAUTION ⚠

Remove oil seals 31, 32 by tapping evenly. Be careful not to scratch inner surface of end plate 33.

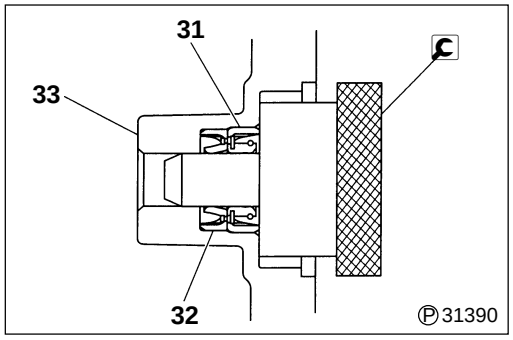

[Installation]

Install oil seals on end plate **33** in the direction shown in the diagram.

M E M O

GROUP 37 STEERING

STEERING SYSTEM 37-2

For details other than steering system, please refer to the Shop Manual Chassis FK, FM '96 (Pub. No. TWME9503-37) Group 37 steering.

STEERING SYSTEM

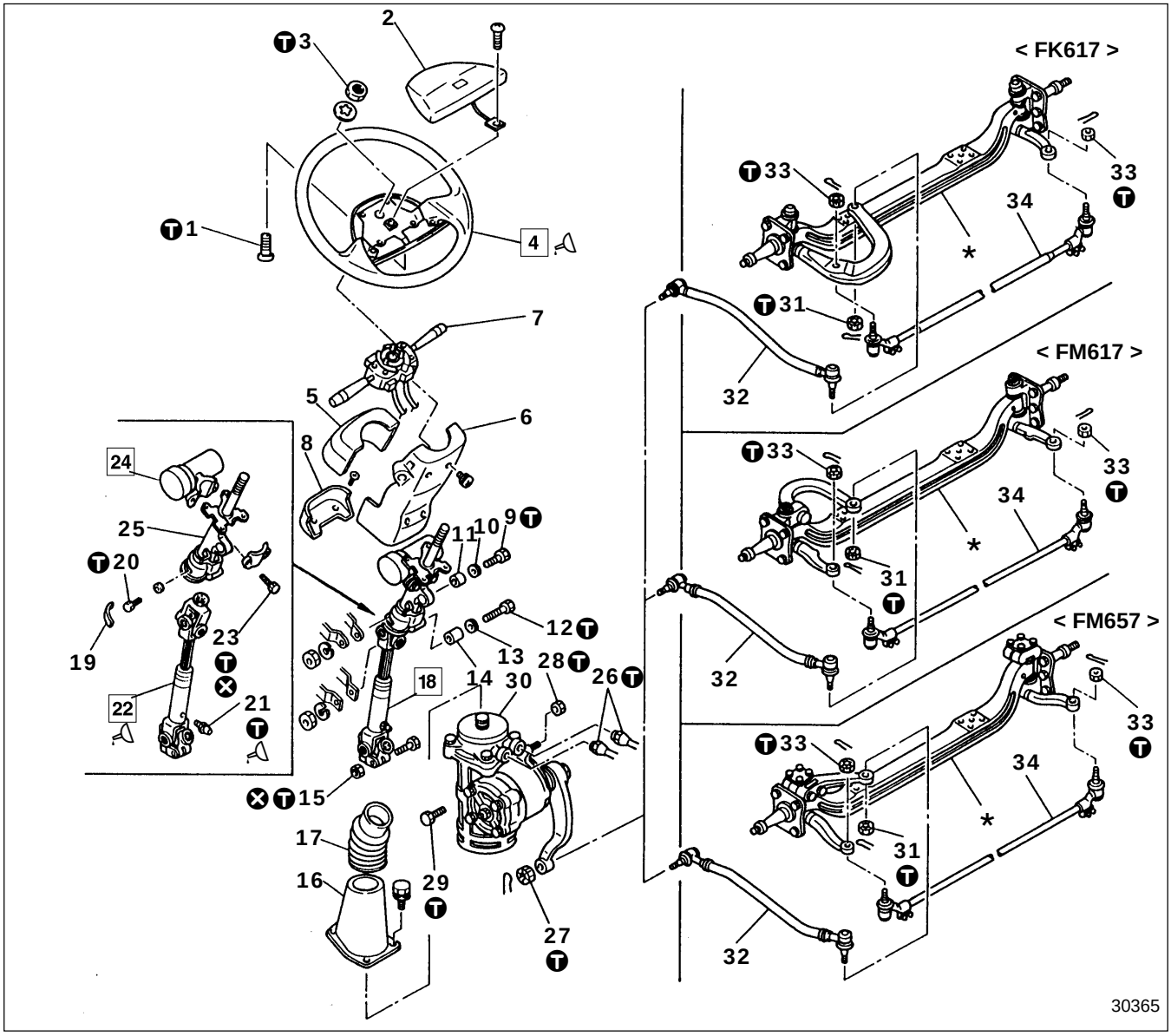

● **Removal sequence**

1 Screw
2 Steering wheel pad
3 Nut
4 Steering wheel
5 Front column cover
6 Rear column cover
7 Combination switch Gr 54
8 Harness cover
9 Bolt
10 Wave washer
11 Collar
12 Bolt
13 Wave washer
14 Collar
15 Nut
16 Support
17 Dust cover
18 Steering shaft assembly
19 Seal
20 Bolt
21 Grease nipple
22 Steering lower shaft assembly
23 Head cutting bolt
24 Starter switch Gr 54
25 Steering upper shaft assembly
26 Oil pipe Gr 37
27 Nut
28 Nut
29 Bolt
30 Power steering booster Gr 37
31 Nut
32 Drag link Gr 37
33 Nut
34 Tie rod saaembly Gr 37

* : Front axle assembly Gr 26
⊗ : Non-reusable parts

CAUTION⚠

When disconnecting oil pipe 26, clean the port to keep it free from dust and other foreign particles.

● **Installation sequence**

Follow the removal sequence in reverse.

Service standards

Unit : mm {in.}

Location	Maintenance item	Standard value	Limit	Remedy
22, **25**	Play in rotating direction of joint	15' or less	—	Replace
	Play in axial direction of steering shaft	0.2 {0.0079} or less	—	Replace
22	Play in rotating direction of spline	30' or less	—	Replace

Tightening torque

Unit : N·m {lbf.ft, kgf·m}

Location	Parts to be tightened		Tightening torque	Remarks
1	Screw (Steering wheel pad mounting)		3.9 {2.9, 0.4}	—
3	Nut (Steering wheel mounting)		68 to 78 {50 to 57, 6.9 to 7.9}	—
9	Bolt (Upper lever and steering shaft assembly mounting)		9.8 {7.2, 1}	—
12	Bolt (Lower lever and steering shaft assembly mounting)		36 {27, 3.7}	—
15	Nut (Steering shaft assembly and integral power steering assembly mounting)		51.42±2.45 {38±1.8, 5.25±0.25}	—
20	Bolt (Steering lower shaft assembly mounting)		48 to 63 {35 to 46, 4.9 to 6.4}	—
21	Grease nipple		2.9 to 4.9 {2.2 to 3.6, 0.3 to 0.5}	—
23	Head cutting bolt (Starter switch mounting)		13.7±1.0 {10±1.1, 1.4±0.1}	—
26	Oil pipe mounting		67±13 {49±9.4, 6.8±1.3}	—
27	Nut (Drag link assembly and integral power steering assembly mounting)	FK617, FM617	190±48 {140±35, 19.4±4.85}	—
		FM657	353±88 {260±65, 36±9}	—
28	Nut (Integral power steering booster assembly mounting)	FK617, FM617	175.4±26.5 {130±20, 17.9±2.7}	—
		FM657	341±51 {250±38, 34.8±5.2}	—
29	Bolt (Integral power steering booster assembly mounting)	FK617, FM617	175.4±26.5 {130±20, 17.9±2.7}	—
		FM657	341±51 {250±38, 34.8±5.2}	—
31	Nut (Drag link assembly and front axle assembly mounting)	FK617, FM617	190±48 {140±35, 19.4±4.85}	—
		FM657	353±88 {260±65, 36±9}	—
33	Nut (Tie rod assembly and front axle assembly mounting)	FK617, FM617	190±48 {140±35, 19.4±4.85}	—
		FM657	270±68 {200±50, 27.6±6.9}	—

Lubricant

Location	Points of application	Specified lubricant	Quantity
4	Horn contact ring on combination switch side	Wheel bearing grease [NLGI No.2 (Li soap)]	As required
21	Supply via grease nipple after assembling spline	Chassis grease [NLGI No.1 (Ca soap)]	Supply until grease overflows from grease escape hole
22	Spline	Chassis grease [NLGI No.1 (Ca soap)]	As required

Special tools

Unit : mm

Location	Tool name and shape	Part No.	Application
4	Steering wheel puller 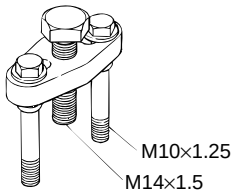	MH062421	Removal of steering wheel

◆ Service procedure

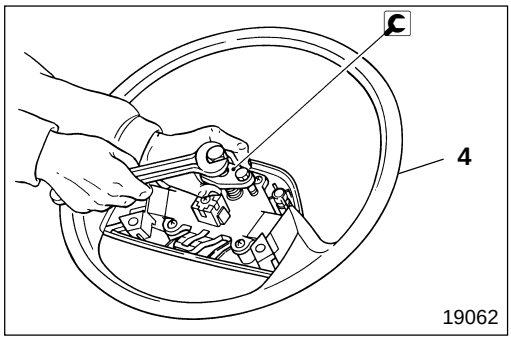

4 **Removal of steering wheel**

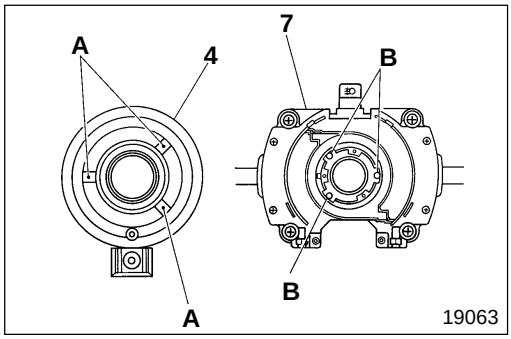

[Installation]
Align slots **A** in steering wheel **4** with cancel cam protrusions **B** of combination switch **7**.

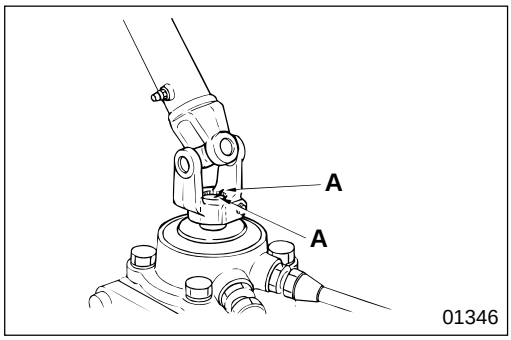

18 **Removal of steering shaft assembly**

A : Alignment mark

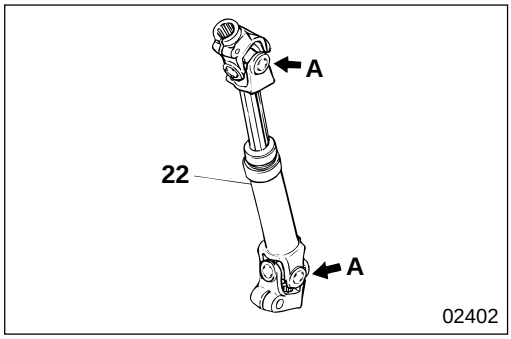

22 **Steering lower shaft assembly**

When the spline of steering lower shaft assembly **22** has been disconnected, align marks **A** on the yokes to face the same direction.

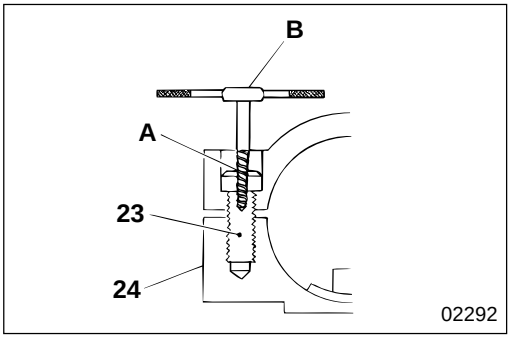

24 **Starter switch**

[Removal]

- Grip one end of the column in a vise, then drill a ø5.5 to 6 mm {0.22 to 0.24 in.} hole 10 to 15 mm {0.39 to 0.59 in.} deep in surface **A**, where the head was cut off, of head cutting bolt **23** for mounting starter switch **24**.
- Screw in screw extractor **B** counterclockwise, then remove head cutting bolt **23** from the steering column.

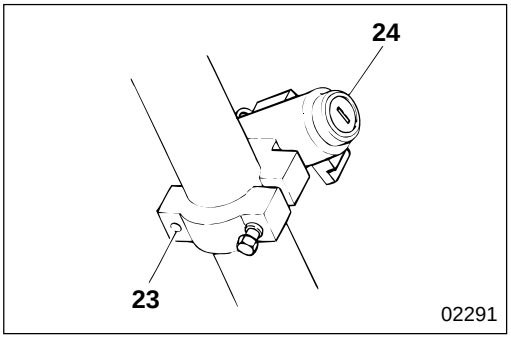

[Installation]

- Tighten new head cutting bolt **23** at specified torque to cut the head off the bolt.
- Check the steering lock mechanism after installation.

GROUP 54 ELECTRICAL

1 POWER, CHARGING AND GROUND

SPECIFICATIONS 1
STRUCTURE AND OPERATION 1
TROUBLESHOOTING 1
100 INSPECTION AND ADJUSTMENT MOUNTED IN VEHICLE
• Inspection of Alternator 1
• Inspection of Regulator 1
101 BATTERY 1
104 FUSE 1
106 ALTERNATOR 1
110 POWER CIRCUIT 1
115 RESERVE POWER CIRCUIT 1
125 BATTERY CHARGING CIRCUIT 1
130 GROUND 1

2 STARTING, PREHEATING, AND STOPPING ENGINE

SPECIFICATIONS 1
STRUCTURE AND OPERATION 1
TROUBLESHOOTING 1
200 INSPECTION AND ADJUSTMENT MOUNTED IN VEHICLE
Inspection of Engine Preheating System 1
201 STARTER 3
210 ENGINE STARTING CIRCUIT 54-4
212 SUB-STARTER CIRCUIT 1
220 ENGINE PREHEATING AND COLD START CIRCUIT
< Manual Transmission > 2
< Automatic Transmission > 2

3 LIGHTING

SPECIFICATIONS 1
STRUCTURE AND OPERATION 1
TROUBLESHOOTING 1
300 INSPECTION AND ADJUSTMENT MOUNTED IN VEHICLE
Headlamp Aiming 1
310 HEADLAMP CIRCUIT 1
320 TAIL LAMP, CLEARANCE LAMP AND LICENSE PLATE LAMP CIRCUITS 1
325 STOP LAMP CIRCUIT 1
330 TURN SIGNAL LAMP AND HAZARD LAMP CIRCUITS 1
340 BACKUP LAMP CIRCUIT 1
345 CAB LAMP CIRCUIT 1
348 ILLUMINATION LAMP CIRCUIT 1
349 MARKER LAMP AND IDENTIFICATION LAMP CIRCUITS 1
352 VAN BODY DOME LIGHT CIRCUIT 1

4 METER

SPECIFICATIONS 1
TROUBLESHOOTING 1
400 METER CLUSTER 1
410 SPEEDOMETER AND TACHOMETER CIRCUITS 54-8
420 FUEL GAUGE CIRCUIT 1
425 WATER TEMPERATURE GAUGE CIRCUIT 1

5 INDICATOR AND WARNING

TROUBLESHOOTING 1

500 INSPECTION AND ADJUSTMENT MOUNTED IN VEHICLE
- Inspection of Brake Fluid Level Switch
  < Air over hydraulic brake > 1

510 PARKING BRAKE INDICATOR CIRCUIT [PARK BRAKE]
< Center Parking Brake > 1
< Wheel Parking Brake > 1

515 BRAKE WARNING CIRCUIT [BRAKE FLUID] [BRAKE AIR] .. 54-12

530 WATER LEVEL WARNING CIRCUIT 1

536 ENGINE OIL PRESSURE WARNING CIRCUIT 1

537 OVERHEATING WARNING CIRCUIT 1

547 AUTOMATIC TRANSMISSION FLUID TEMPERATURE WARNING CIRCUIT [T/M OIL TEMP] 1

548 TRANSMISSION HIGH/LOW INDICATOR CIRCUIT
< 10-speed Transmission > . 1

550 CAB TILT WARNING CIRCUIT 1

6 CAB SIDE ELECTRICS

SPECIFICATIONS 1

TROUBLESHOOTING 1

601 SWITCH 1

604 RELAY AND CONTROL UNIT 1

606 WARNING BUZZER 1

610 CIGARETTE LIGHTER CIRCUIT 1

612 AUDIO CIRCUIT 1

614 WIPER AND WASHER CIRCUIT 1

616 HORN CIRCUIT 1

618 HEATER CIRCUIT 1

1: '96 Model Gr54 (Pub No. TWME 9503-54)

2: '97 Model Gr54 (Pub No. TWME 9503-1)

3: '98 Model Gr54 (Pub No. TWME 9503-2)

7 CHASSIS ELECTRICS

701 MAGNETIC VALVE 1

710 EXHAUST BRAKE CIRCUIT 54-16
< Manual Transmission >

718 AIR DRYER CIRCUIT 1

8 ENGINE AND TRANSMISSION ELECTRICS

801 ENGINE ELECTRICS 1

802 TRANSMISSION ELECTRICS 1
< Manual Transmission (5-speed, 6-speed Transmission) > 1
< Manual Transmission (10-speed Transmission) > 1
< Automatic Transmission > 1

850 TRANSMISSION POWER TAKE-OFF CIRCUIT
< Option > 1

9 OTHERS

STRUCTURE AND OPERATION 1

910 MULTIPURPOSE TIMING CONTROL UNIT CIRCUIT 1

M E M O

210 ENGINE STARTING CIRCUIT

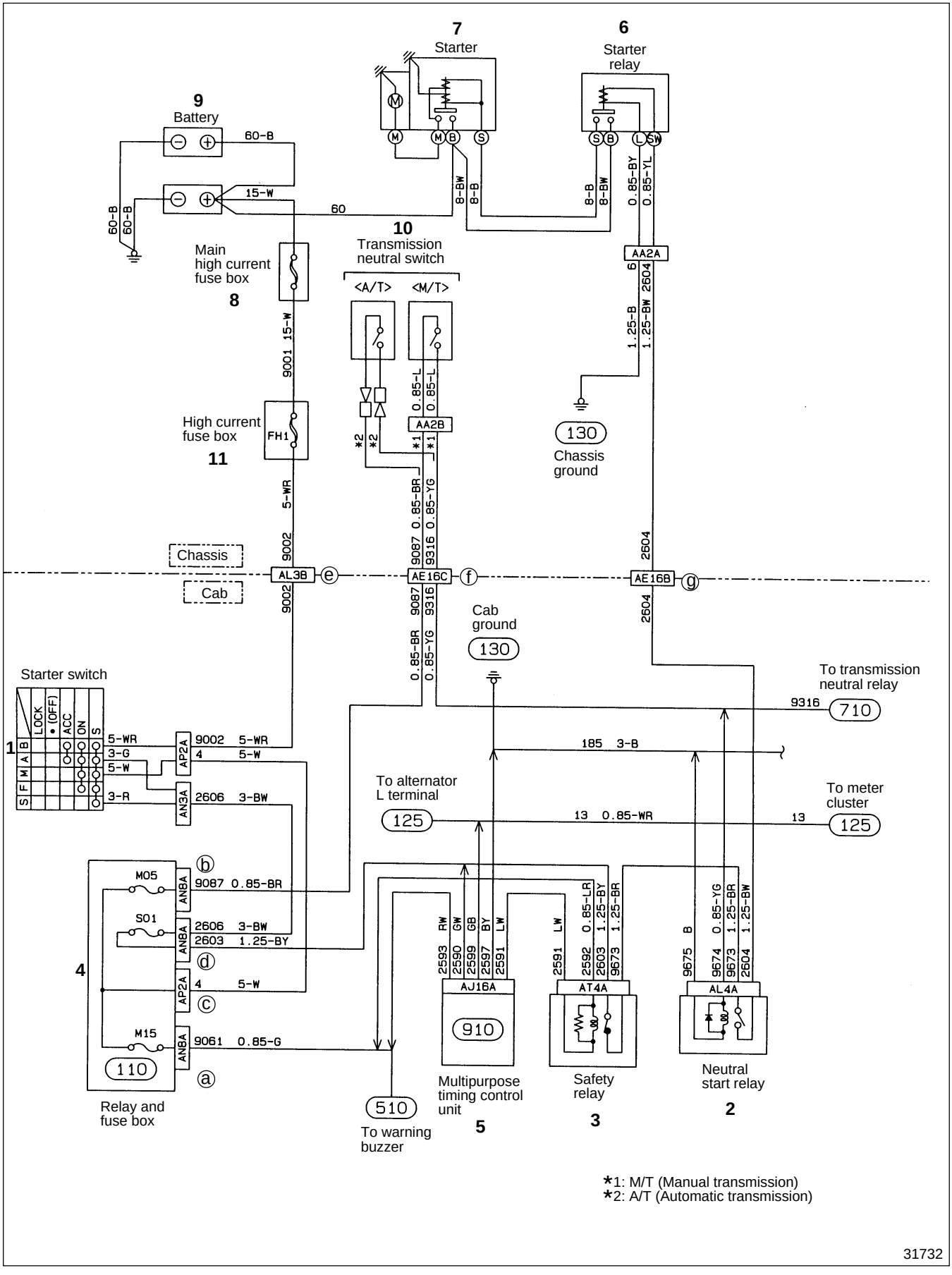

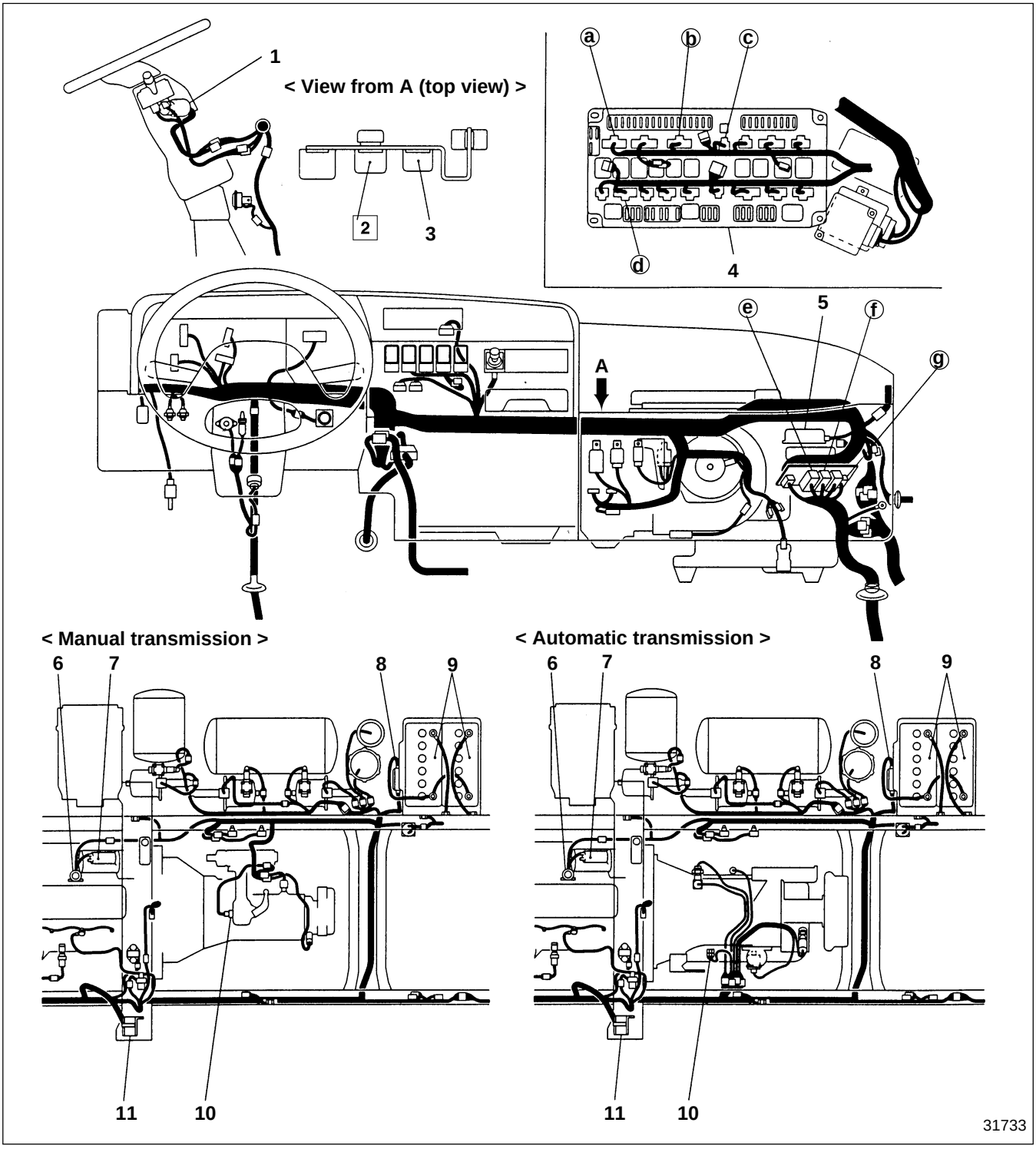

1 Starter switch 1 (210)
2 Neutral start relay
3 Safety relay 1 (604)
4 Relay and fuse box 1 (104)
5 Multipurpose timing control unit (604)
6 Starter relay 1 (210)
7 Starter 2 (201)
8 Main high current fuse box 1 (104)
9 Battery 1 (101)
10 Transmission neutral switch 1 (802)
11 High current fuse box 1 (104)

1: '96 Model Gr 54 (Pub No. TWME 9503-54)
2: '98 Model Gr 54 (Pub No. TWME 9503-2)

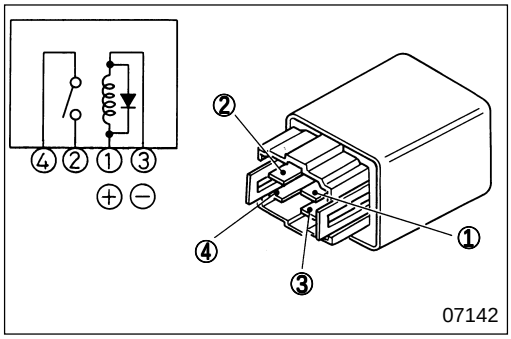

◆ Service procedure

2 **Inspection of relay (Open type 4-pin)**

- Follow the table below to check for continuity and operation.

	①	②	③	④
No current	○——○			
Current	⊕——⊖	○——○		

○——○: There is continuity between terminals ○ and ○.
⊕——⊖: Indicates that 12 volts DC is applied to the line between the terminals.

- If any fault is found, replace the relay **2**.

M E M O

410 SPEEDOMETER CIRCUIT

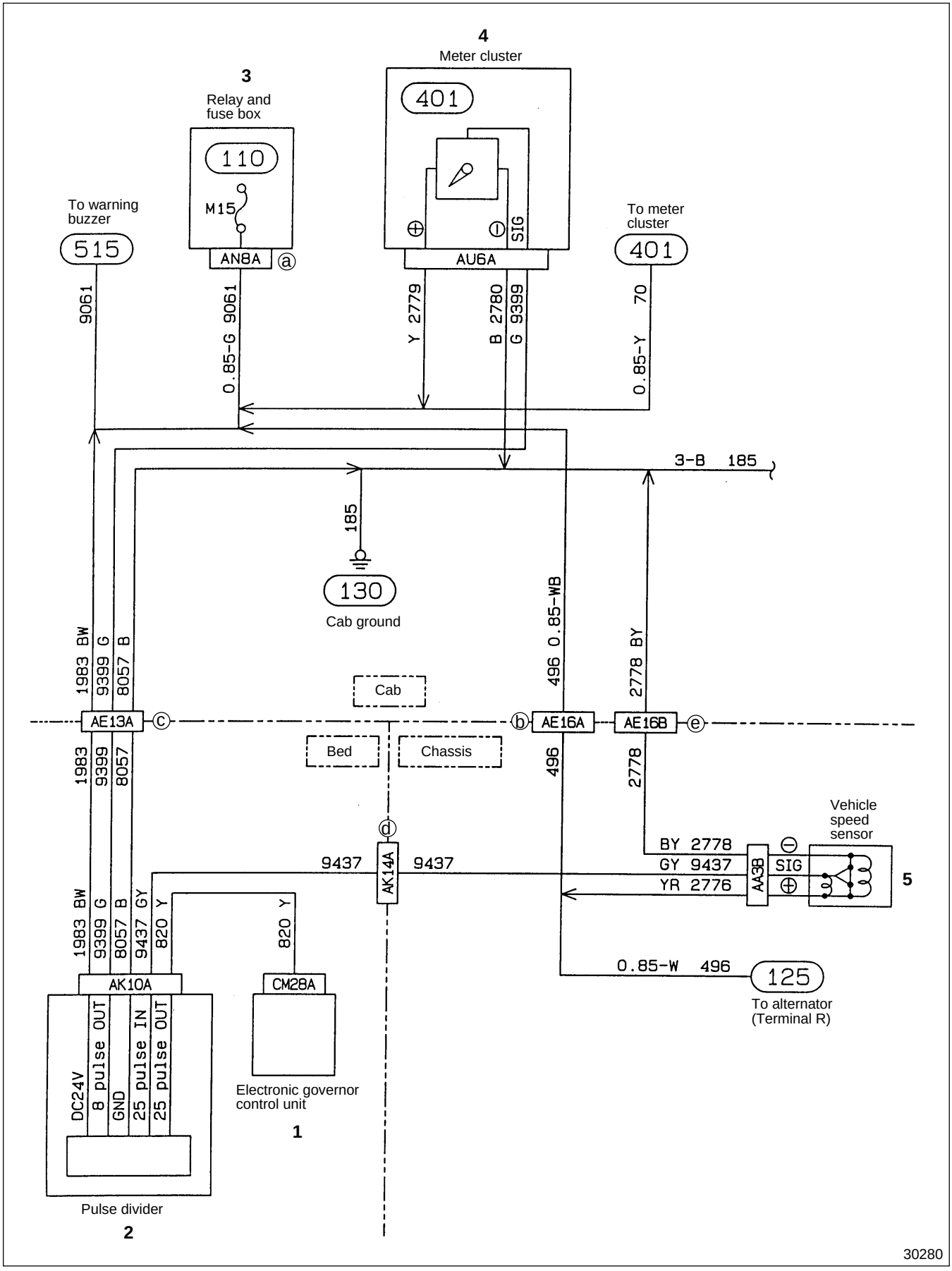

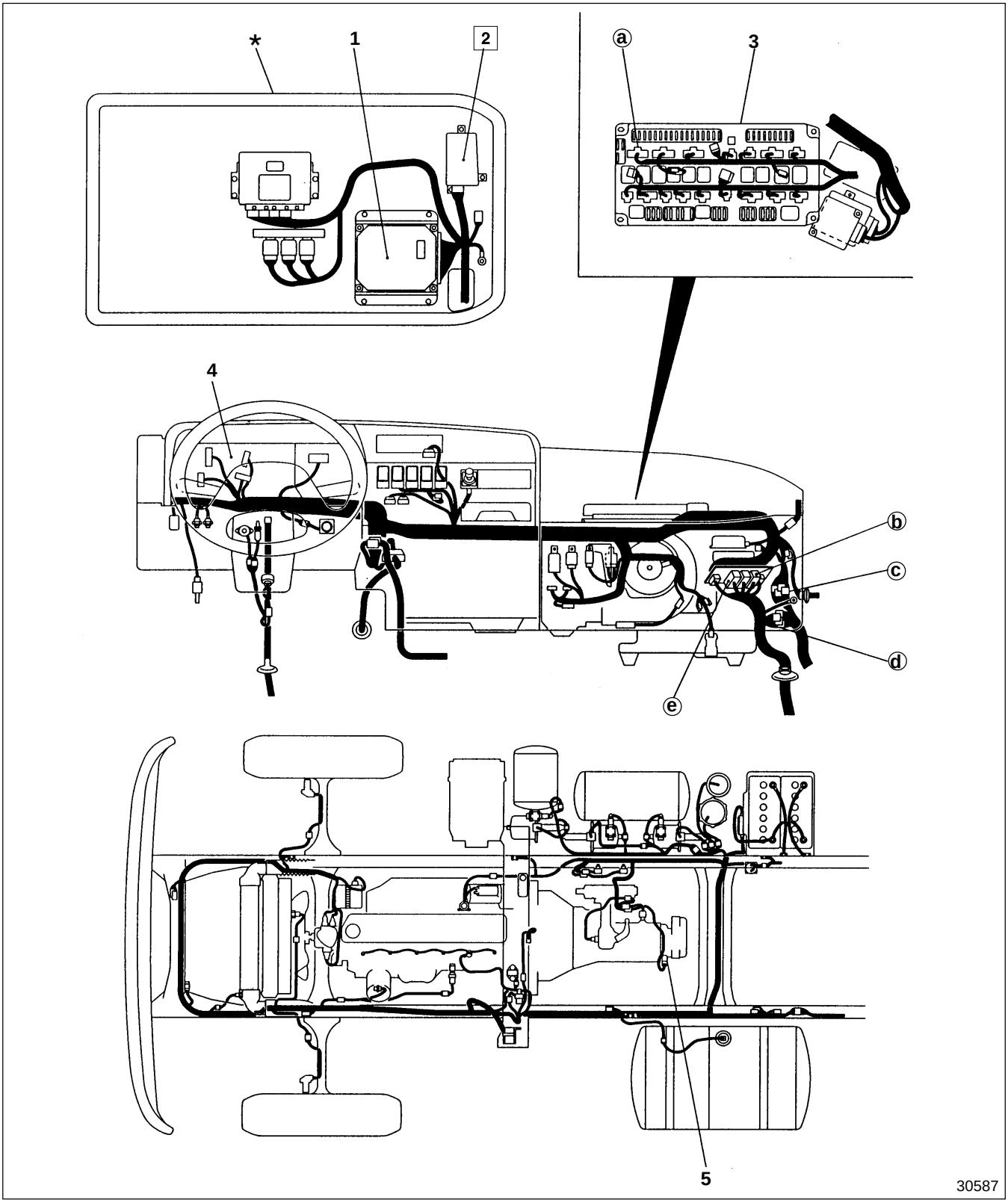

1 Electronic governor control unit 🗀 Gr 13
2 Pulse divider
3 Relay and fuse box 🗀 1 (104)
4 Meter cluster 🗀 1 (401)
5 Vehicle speed sensor 🗀 Outline of changes

***** : Bed under box
(behind assistant driver's seat side)
🗀 1: '96 Model Gr 54 (Pub No. TWME 9503-54)

Service standards

Location	Maintenance item			Standard value	Limit	Remedy
2	Output voltage of pulse divider	8-pulse	Low pulse	1.5V or less	—	Replace
			High pulse	8±1V		
		25-pulse	Low pulse	0.6V or less		
			High pulse	8±1V		

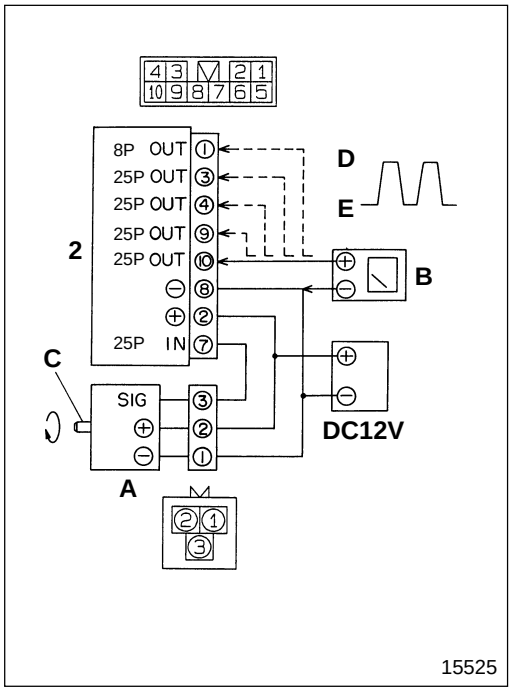

◆ Service procedure

2 **Inspection of pulse divider**

- Make test setup of the pulse divider **2** as shown.

  A : Speed sensor (25-pulse)
  B : Tester

- Slowly rotate the shaft **C** of the speed sensor **A** by hand and measure the maximum voltage (high pulse voltage **D**) and minimum voltage (low pulse voltage **E**) generated between each of the pulse divider **2**'s output terminals ①, ③, ④, ⑨ and ⑩ and the terminal ⑧.
- Confirm that the measurements are same as the voltages generated by the speed sensor **A**. 📦 Outline of changes
- If any fault is found, replace the pulse divider **2**.

M E M O

515 BRAKE WARNING CIRCUIT < Air Over Hydraulic Brake >

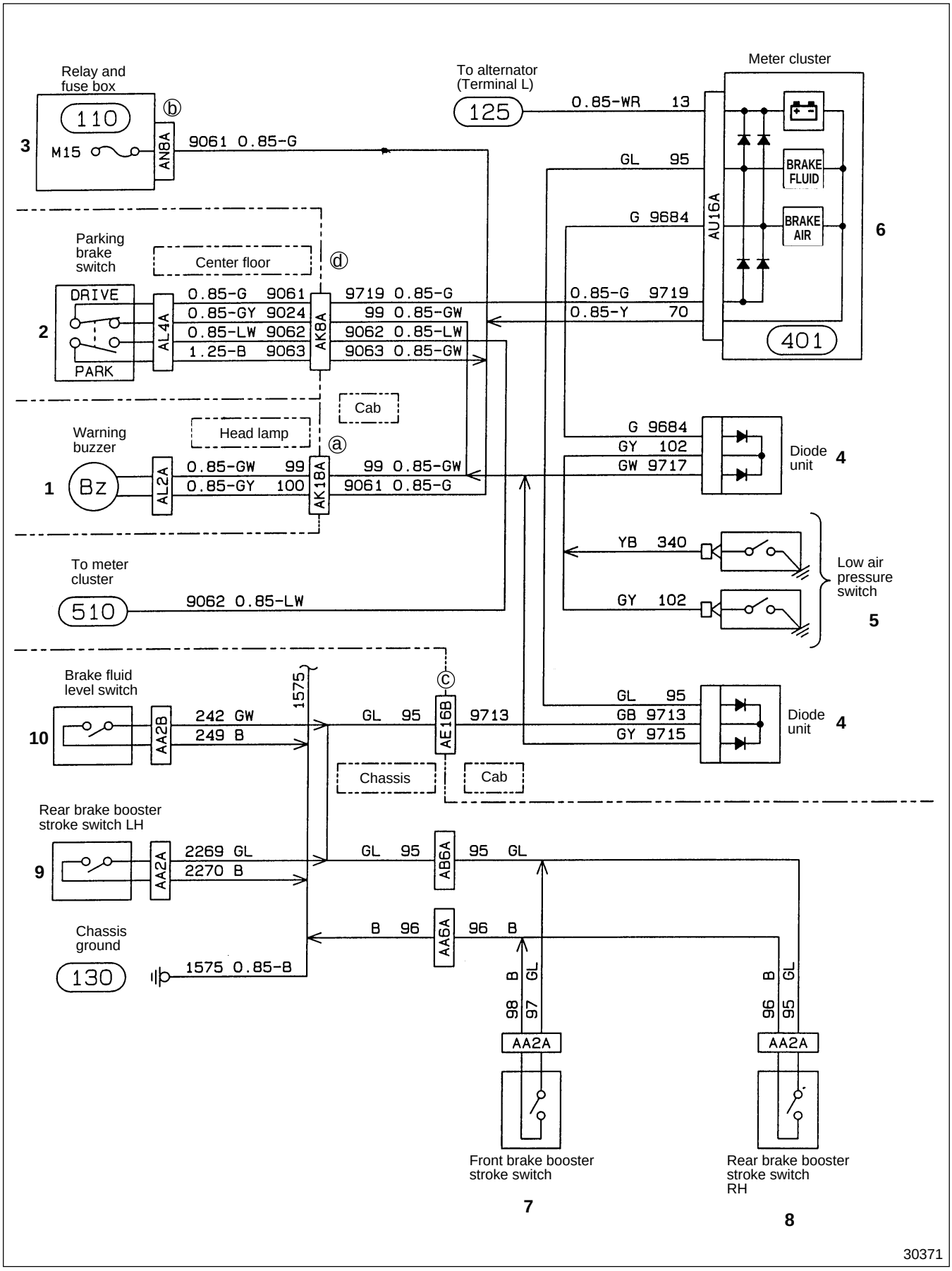

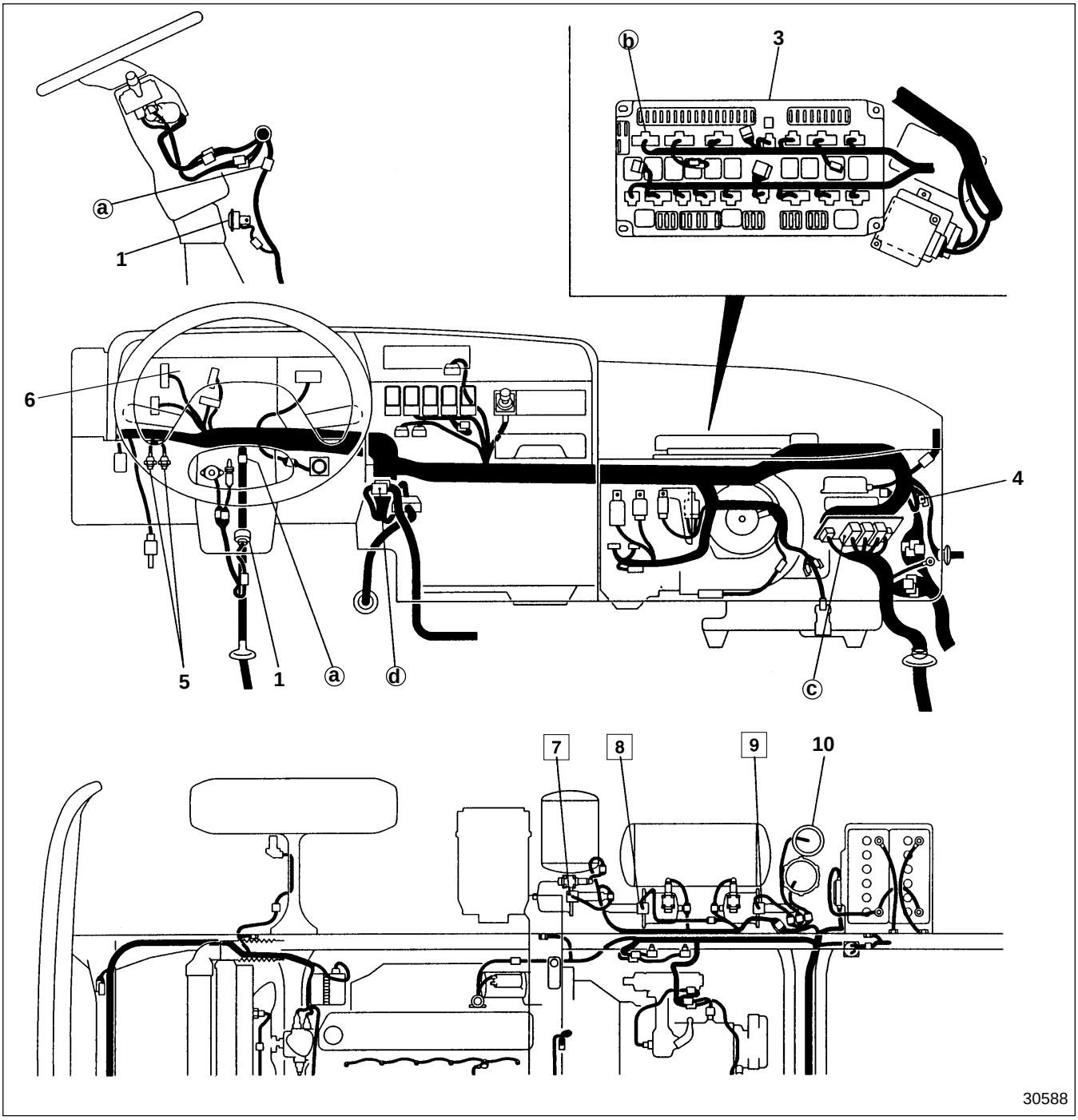

1 Warning buzzer 606
2 Parking brake switch 510
3 Relay and fuse box 104
4 Diode unit
5 Low air pressure switch 515
6 Meter cluster 401
7 Front brake booster stroke switch
8 Rear brake booster stroke switch RH
9 Rear brake booster stroke switch LH
10 Brake fluid level switch 515

: '96 Model Gr 54 (Pub No. TWME 9503-54)

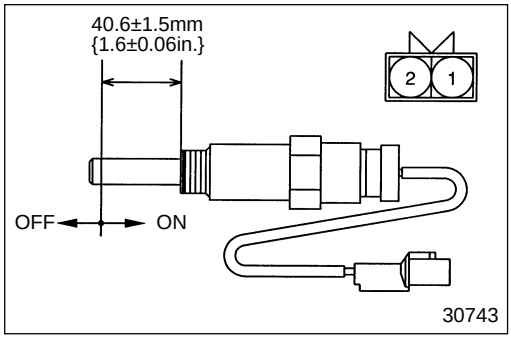

◆ Service procedure

7 **8** **9** **Inspection of brake booster stroke switch**

- Follow the table below to check for continuity.

	①	②
OFF		
ON	○—○	

○—○: There is continuity between terminals.

- If any fault is found, replace the brake booster stroke switches **7**, **8**, **9**.
  Gr 35A

M E M O

710 EXHAUST BRAKE CIRCUIT < Manual Transmission >

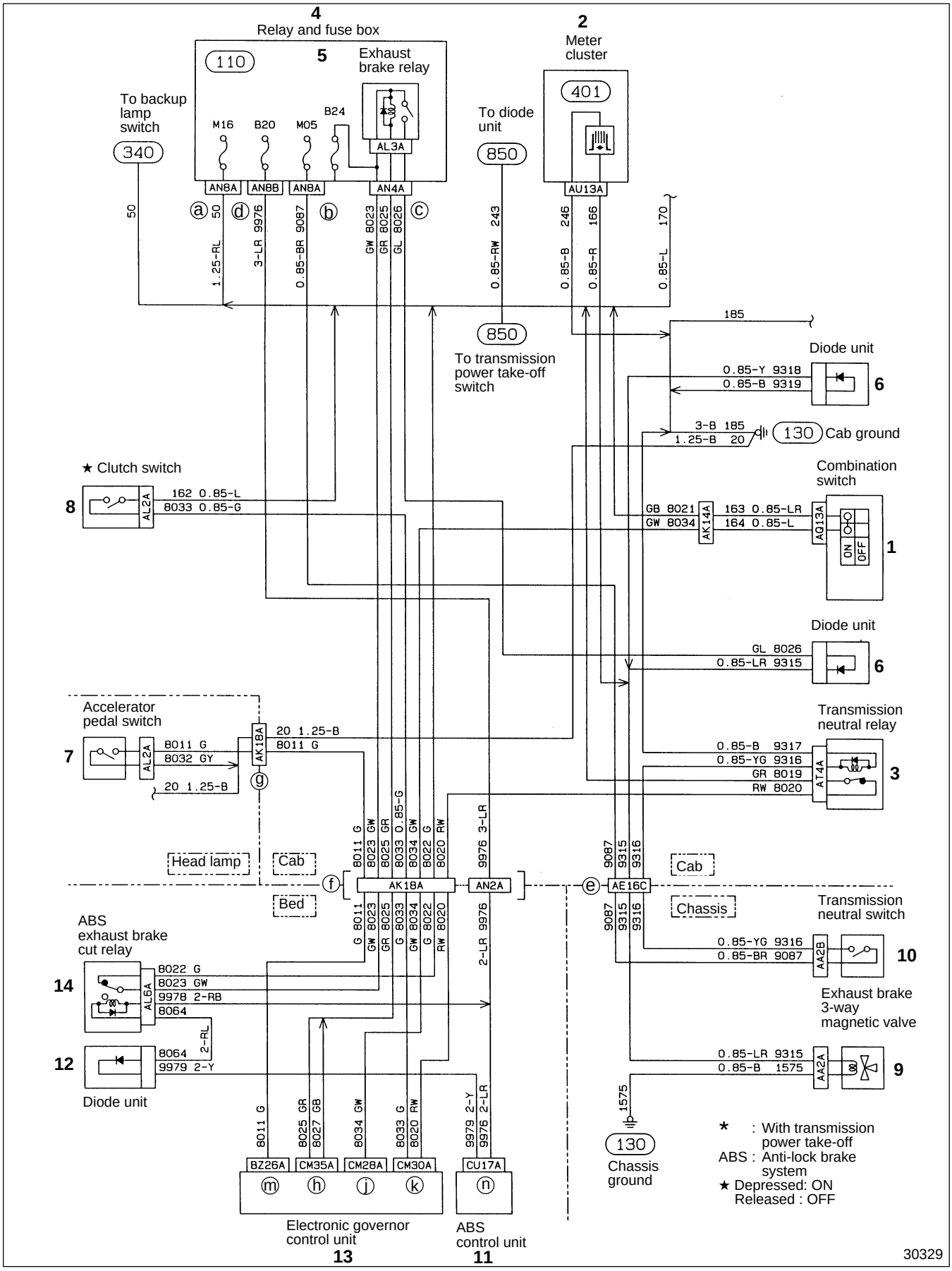

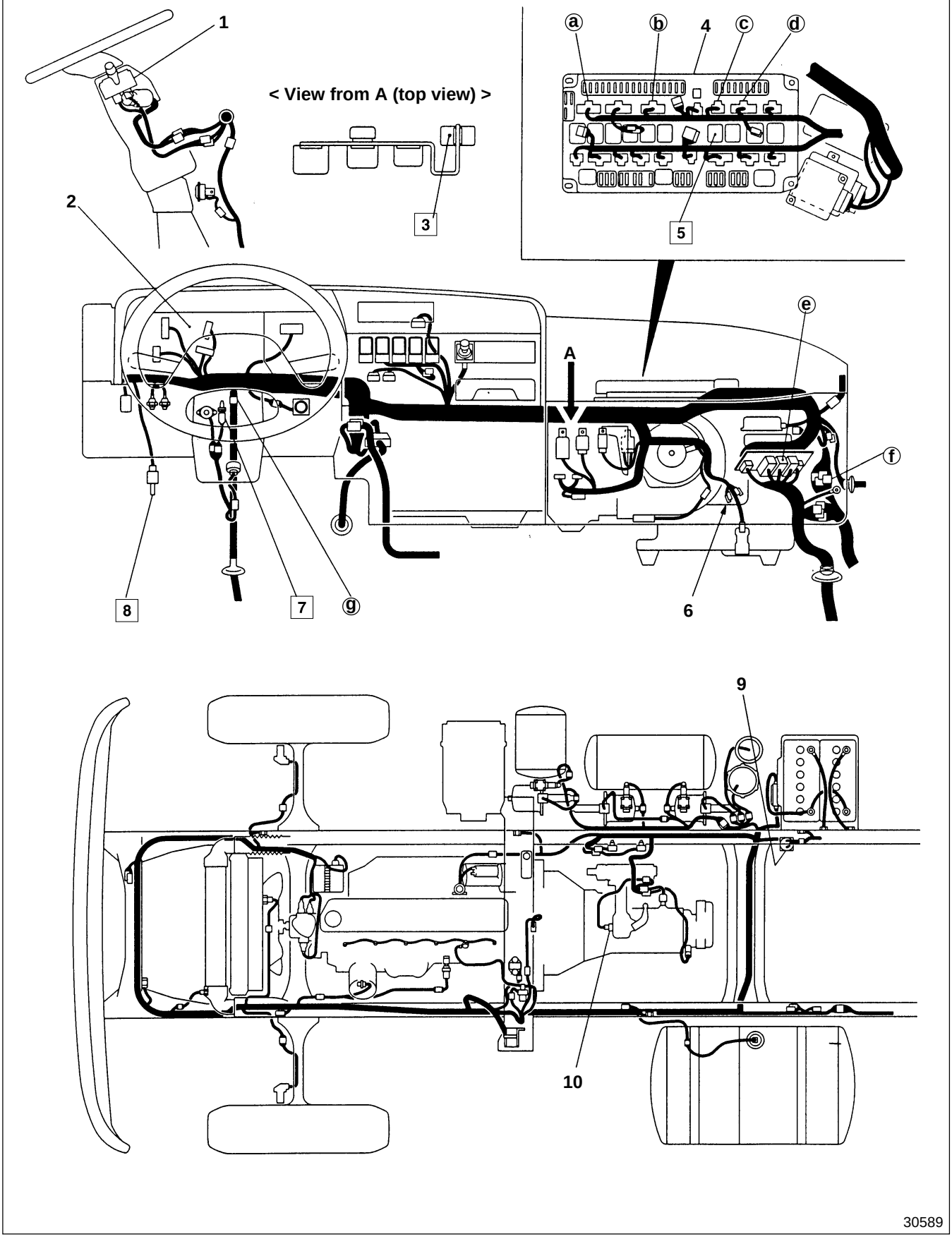
1
2
3
< View from A (top view) >
a
b
4
c
d
5
A
e
f
g
6
7
8
9
10
30589

710 EXHAUST BRAKE CIRCUIT < Manual Transmission >

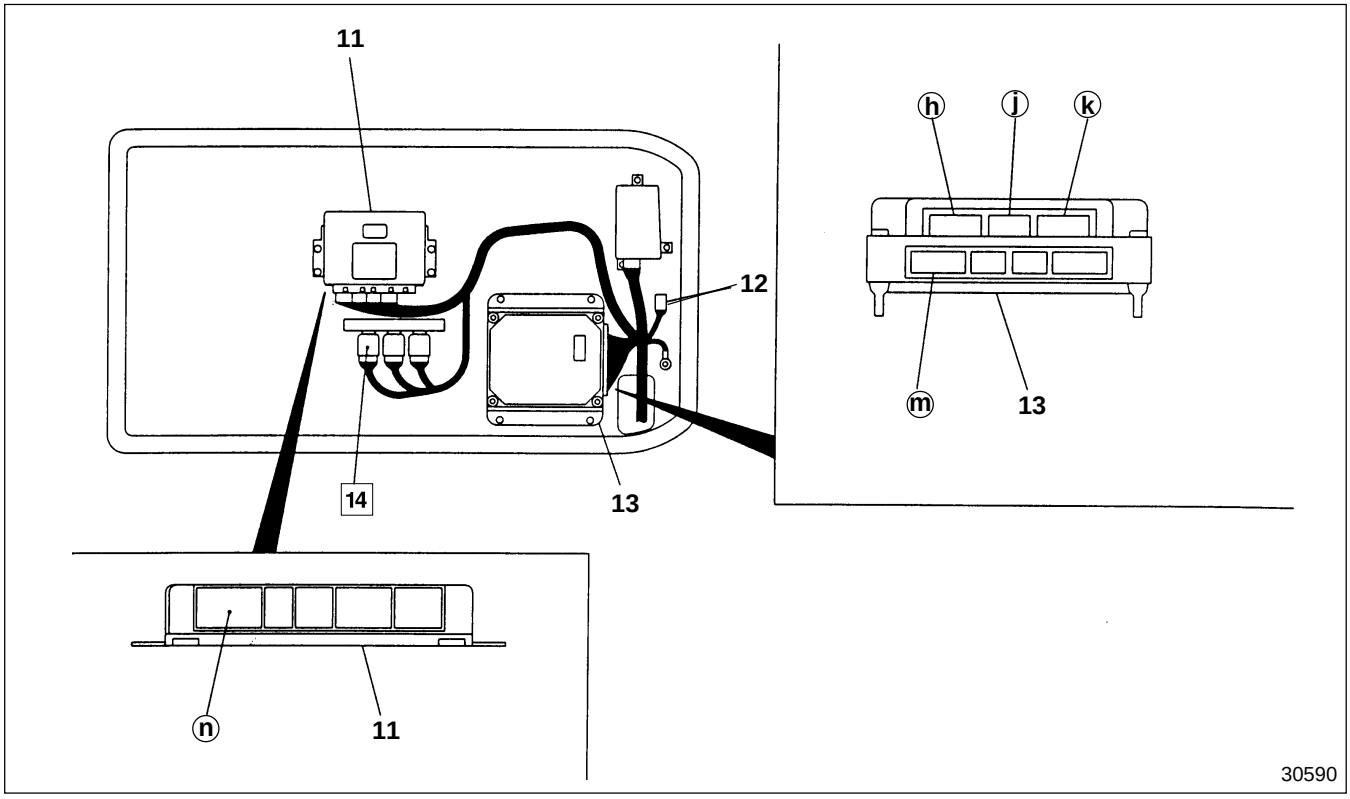

1 Combination switch 1 601
2 Meter cluster 1 401
3 Transmission neutral relay 1 604
4 Relay and fuse box 1 104
5 Exhaust brake relay
6 Diode unit
7 Accelerator switch
8 Clutch switch
9 Exhaust brake 3-way magnetic valve 1 701
10 Transmission neutral switch 1 802
11 ABS control unit Gr 35C
12 Diode unit
13 Electronic governor control unit Gr 13
14 ABS exhaust brake cut relay

1 : '96 Model Gr 54 (Pub No. TWME 9503-54)

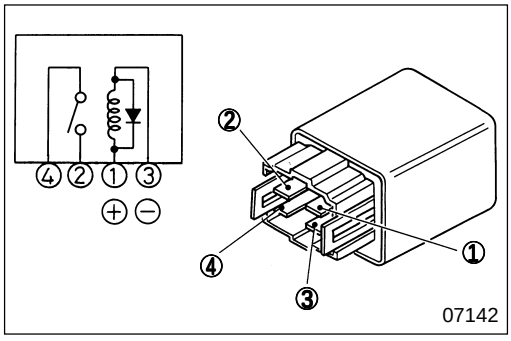

◆ Service procedure

3 Inspection of relay (Open type 4-pin)

- Follow the table below to check for continuity and operation.

	①	②	③	④
No current	○		○	
Current	⊕		⊖	○

○—○: There is continuity between terminals ○ and ○.
⊕—⊖: Indicates that 12 volts DC is applied to the line between the terminals.

- If any fault is found, replace the relay.

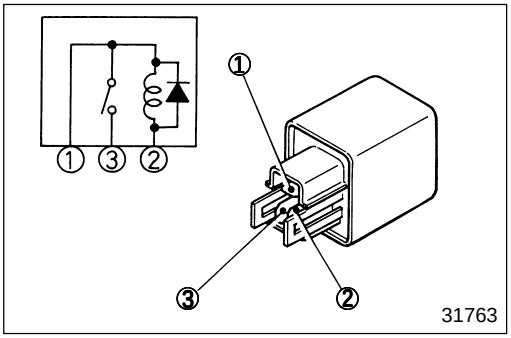

5 Inspection of relay (Open type 3-pin)

- Follow the table below to check for continuity and operation.

	①	②	③	
No current	○——○			
Current	⊕——⊖	○——○		

○——○: There is continuity between terminals ○ and ○.
⊕——⊖: Indicates that 12 volts DC is applied to the line between the terminals.

- If any fault is found, replace the relay **5**.

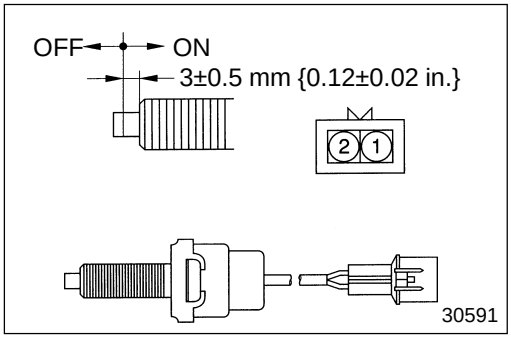

7 Inspection of accelerator switch

- Follow the table below to check for continuity.

	①	②
OFF		
ON	○——○	

○——○: There is continuity between terminals ○ and ○.

- If any fault is found, replace the accelerator switch **7**.

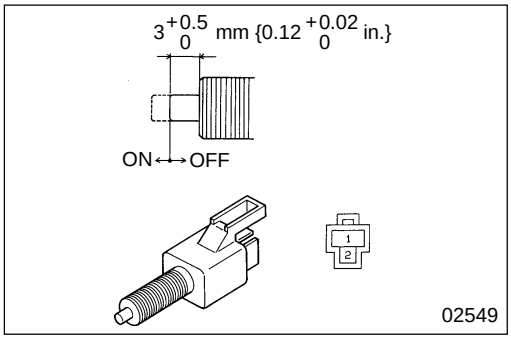

8 Inspection of clutch switch

- Follow the table below to check for continuity.

	①	②
OFF		
ON	○——○	

○——○: There is continuity between terminals.

- If any fault is found, replace the clutch switch **8**.

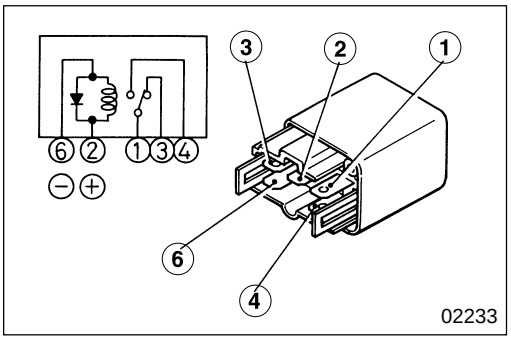

14 Inspection of relay (Open type 5-pin)

- Follow the table below to check for continuity and operation.

	①	②	③	④	⑥
No current	○——○	○——○			
Current	○——○	⊕——⊖			

○——○: There is continuity between terminals ○ and ○.
⊕——⊖: Indicates that 12 volts DC is applied to the line between the terminals.

- If any fault is found, replace the relay **14**.

MITSUBISHI MOTORS

Service Manual

Table of Contents

BACK

HOME

MODEL CHANGES

FK.FM 1998

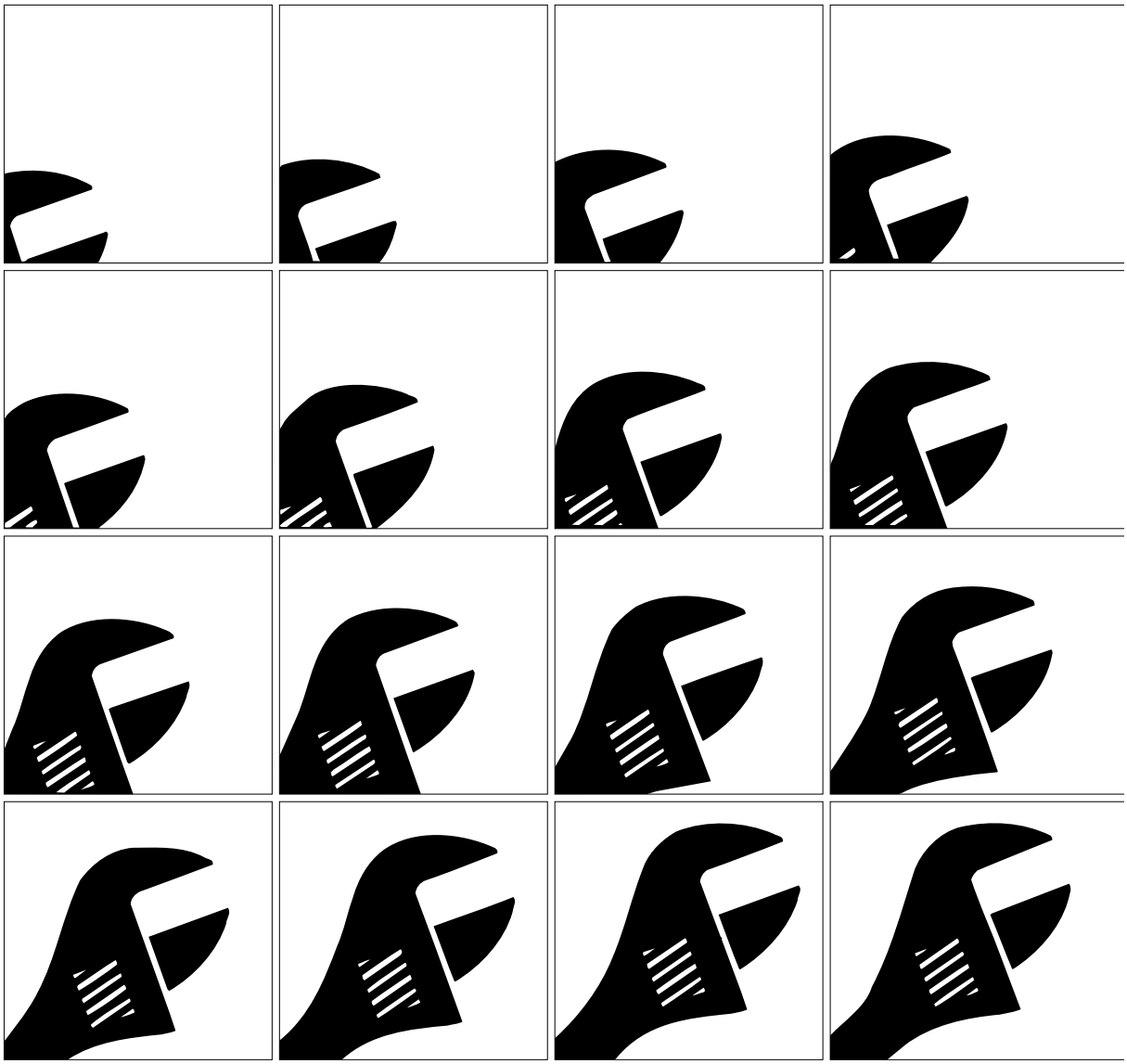

Pub. No. TWME9503-2

FK.FM

SERVICE MANUAL

FOREWORD

This Service Manual contains maintenance and repair methods for personnel involved in the maintenance and repair of 1998 model Mitsubishi Fuso Truck FK, FM series.
Read this manual carefully as an aid to providing correct, efficient and fast maintenance.
Please note, however, that due to continuous improvements on the specifications, numbers and description for maintenance might be changed without prior notice.
If you have any question, or encounter a problem, please do not hesitate to contact your nearest Mitsubishi Fuso dealer or distributor.

© Mitsubishi Motors Corporation 1997 Apr.

MITSUBISHI FUSO TRUCK OF AMERICA, Inc.

1998 MODEL CHANGES

Item	’98 Model	⇦	’97 Model
Gr 00 General • Modified vehicle identification number.	See page 6 in this manual		—
Gr 01 Maintenance Schedule • Power steering booster and oil pump internal rubber parts replacement interval is changed.	Every 48 months		Every 24 months
• Power steering hose replacement interval is changed.	Every 48 months		Every 24 months
• Engine oil viscosity of manual transmission is changed. (Applies to ’96 model and later)	SAE 30 or SAE 40		SAE 40 or SAE 50
Gr 13 Fuel and Engine Control • Water separator changed from dual type to single type.	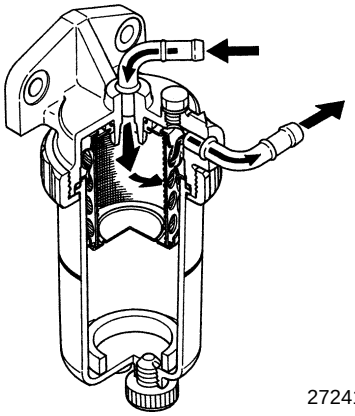 27241		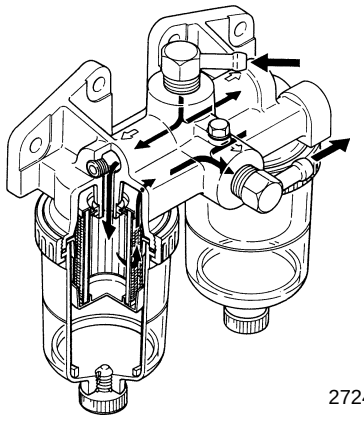 27242

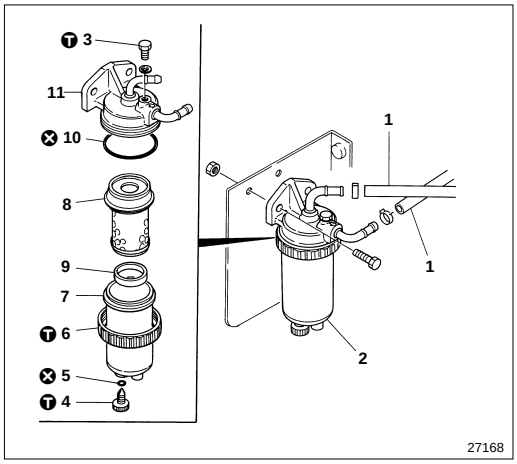

27168

● **Disassembly sequence**

1 Fuel feed hose
2 Water separator assembly
3 Air vent plug
4 Drain plug
5 O-ring
6 Ring nut
7 Case
8 Screen assembly
9 Water level ring
10 O-ring
11 Head

⊗ : Non-reusable parts

WARNING⚠
- **Fuel ignites easily. Do not get it near flame or heat.**
- **Wipe up any spilled gas oil because it can cause a fire.**

● **Assembly sequence**

Follow the disassembly sequence in reverse.

T Tightening torque Unit : N·m {lbf.ft, kgf·m}

Location	Parts to be tightened	Tightening torque	Remarks
3	Air vent plug	8 to 12 {5.8 to 8.7, 0.8 to 1.2}	—
4	Drain plug	3 to 4 {2.2 to 2.9, 0.3 to 0.4}	—
6	Ring nut	23 to 27 {17 to 20, 2.3 to 2.8}	—

Item	’98 Model ⇦ ’97 Model

Gr 14 Cooling

- Modified reservoir tank cap and level identification.

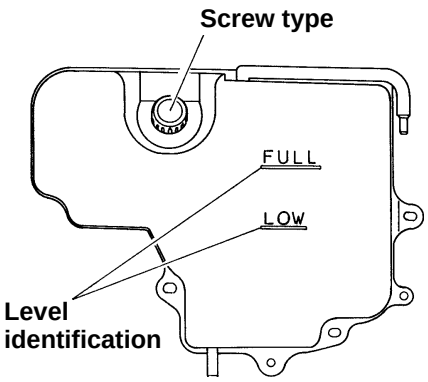

27269

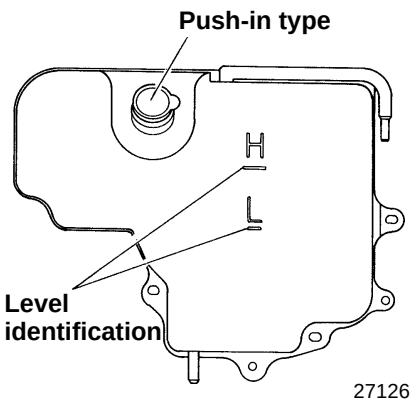

27126

Gr 22A Manual Transmission

< M060S5, S6, M070S6 >

- Oil types and viscosity are added to specifications.
  (Applies to ’96 model and later)

SPECIFICATIONS

Item		Specifications			
Mode of control		Floor shift remote control			
Transmission model		M060S5	M060S6	M060S6	M070S6
Gear ratio	1st	6.875	6.875	8.064	8.064
	2nd	4.189	4.189	5.443	5.443
	3rd	2.460	2.460	3.064	3.064
	4th	1.542	1.542	1.824	1.824
	5th	1.000	1.000	1.321	1.321
	6th	—	0.786	1.000	1.000
	Reverse	6.875	6.875	7.354	7.354
Oil	Gear Oil	General : API GL-3 SAE 80 Warm region : API GL-3 SAE 90 Tropical region : API GL-4 SAE 90			
	Engine Oil	Long period of high-speed driving : API CC SAE 30 or SAE 40 : API CC/SF SAE 30 or SAE 40			
	Quantity L{qts}	6.1 {6.4} : ’96 model 5.6 {5.9} : ’97 model	6.7 {7.1}	7.3 {7.7}	8.1 {8.6}
Mass kg {lb}		134 {295}	151 {339}	168 {370}	176 {388}
Power shift manufacturer		JIDOSHA KIKI			

Gr 22B Manual Transmission

< M8S2×5 >

- Oil types and viscosity are added to specifications.
  (Applies to ’96 model and later)

SPECIFICATIONS

Item		Specifications	
Mode of control		Floor shift remote control	
Transmission model		M8S2×5 splitter-changeover, direct-drive, 10-speed type	
Gear ratio	Splitter	LOW	HIGH
	1st	10.060	7.767
	2nd	5.894	4.551
	3rd	3.466	2.676
	4th	2.055	1.587
	5th	1.295	1.000
	Reverse	10.002	7.722
Oil	Gear Oil	General : API GL-3 SAE 80 Warm region : API GL-3 SAE 90 Tropical region : API GL-4 SAE 90	
	Engine Oil	Long period of high-speed driving : API CC SAE 30 or SAE 40 : API CC/SF SAE 30 or SAE 40	
	Quantity L{qts}	17 {18.0}	
Mass kg {lb}		277 {610}	
Power shift manufacturer		JIDOSHA KIKI	

Item	’98 Model ⇦ ’97 Model

• Increased return spring installed load in the selector lever case.

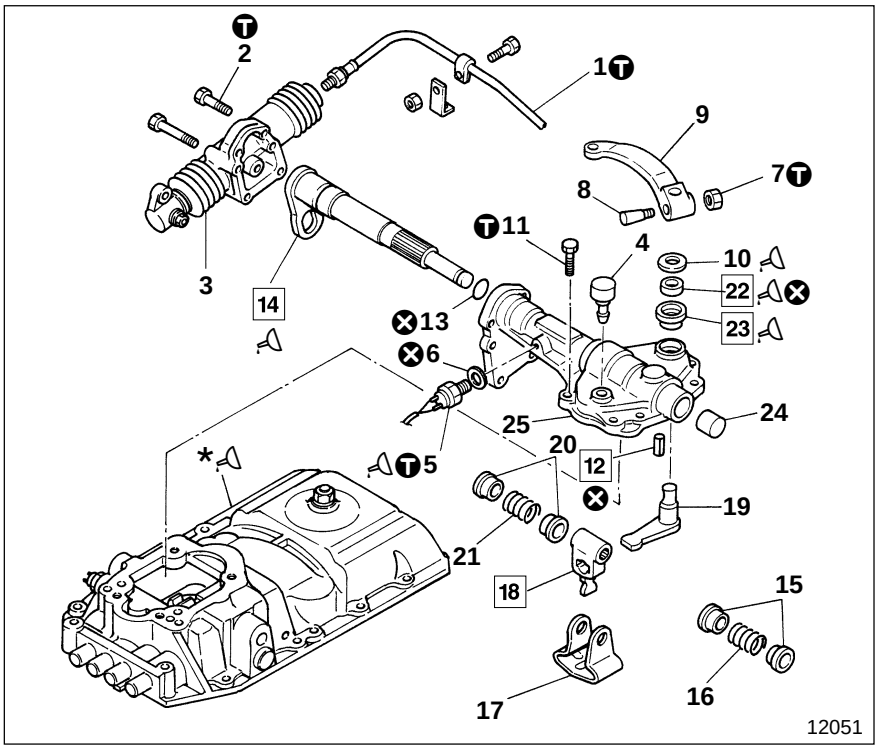

Service standards Unit : mm {in.}

Location	Maintenance item		Standard value	Limit	Remedy
16	4th and 5th return spring load (installed length 37.6 {1.48})	’98 model	39 N {8.8 lbf, 4.0 kgf}	31 N {7.1lbf, 3.2 kgf}	Replace
		’97 model	19 N {4.2 lbf, 1.89 kgf}	15 N {3.3 lbf, 1.51 kgf}	
21	1st and reverse return spring load (installed length 27.6 {1.09})	’98 model	130 N {29 lbf, 13.3 kgf}	104 N {23 lbf, 10.6 kgf}	Replace
		’97 model	100 N {22 lbf. 10.2 kgf}	80 N {18 lbf, 8.16 kgf}	

• Reduced shift rail poppet spring installed load.

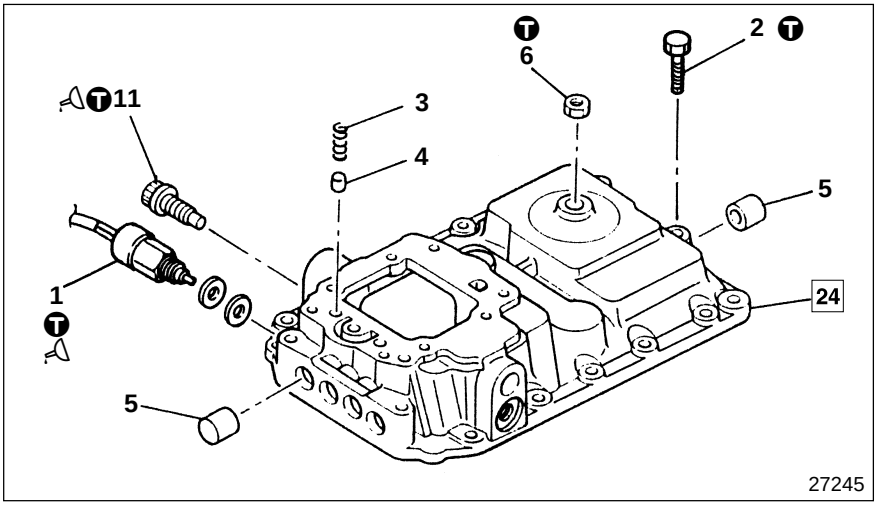

Service standards Unit : mm {in.}

Location	Maintenance item			Standard value	Limit	Remedy
3	Poppet spring load	(Installed length 32.9 {1.30})	’98 model	88 N {20 lbf, 9.0 kgf}	71 N {16 lbf, 7.2 kgf}	Replace
		(Installed length 32.9 {1.30})	’97 model	162 N {36 lbf, 16.5 kgf}	129 N {29 lbf, 13.2 kgf}	Replace

Item	’98 Model ⇦ ’97 Model
• Improved power shift features with modifications to the power shift assembly valve striker etc.	**’98 Model** 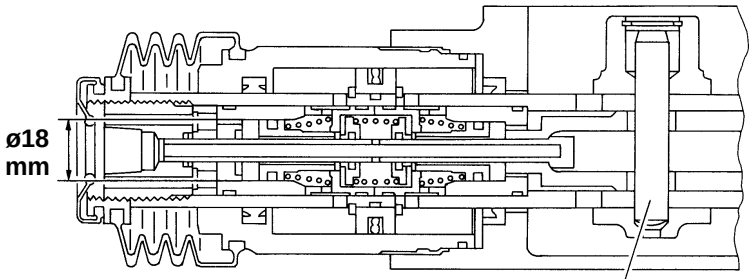 27247 See pages 8 to 12 in this manual. ⇧ **’97 Model** 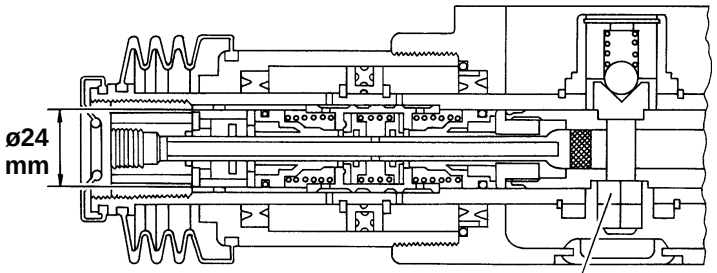 27248
Gr 54 Electrical • Modified the starter reduction gear system from a one-step inner contact spur gear to a planetary gear system.	**’98 Model** 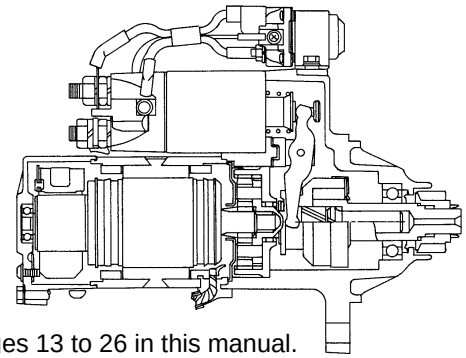 See pages 13 to 26 in this manual. 27270 ⇧ **’97 Model** 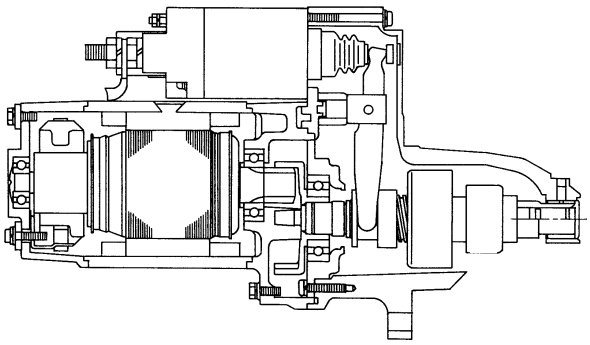 27271

VEHICLE IDENTIFICATION NUMBER : ’98 MODEL

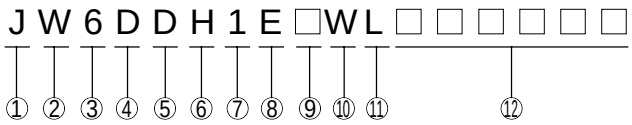

①	Country	J :	Japan
②	Make	W :	Mitsubishi Fuso
③	Vehicle type	6 :	Incomplete Vehicle
④	Gross vehicle weight/Brake system	D :	8851 to 11800 kg {19501 to 26000 lbs}/Air over hydraulic
		E :	11801 to 14970 kg {26001 to 33000 lbs}/Air over hydraulic
		F :	11801 to 14970 kg {26001 to 33000 lbs}/Full air
⑤	Line	D :	FK617
		E :	FM617
		F :	FM657
⑥	Series (Wheelbase)	H :	4.1 to 4.4 m {161.4 to 173.2 in.}
		J :	4.4 to 4.7 m {173.2 to 184.9 in.}
		K :	4.7 to 5.0 m {184.9 to 196.7 in.}
		L :	5.0 to 5.3 m {196.7 to 208.5 in.}
		M :	5.3 to 5.6 m {208.5 to 220.3 in.}
		N :	5.6 to 5.9 m {220.3 to 232.1 in.}
⑦	Cab chassis type	1 :	Chassis cab
⑧	Engine	E :	460 CID Diesel turbocharged and charge air cooled
⑨	Check digit		
⑩	Model year	W :	1998
⑪	Plant	L :	Kawasaki-2
		M :	Kawasaki-3
⑫	Plant sequential number		

(’96 model)→ *00-5*

M E M O

POWER SHIFT ASSEMBLY : ’98 MODEL

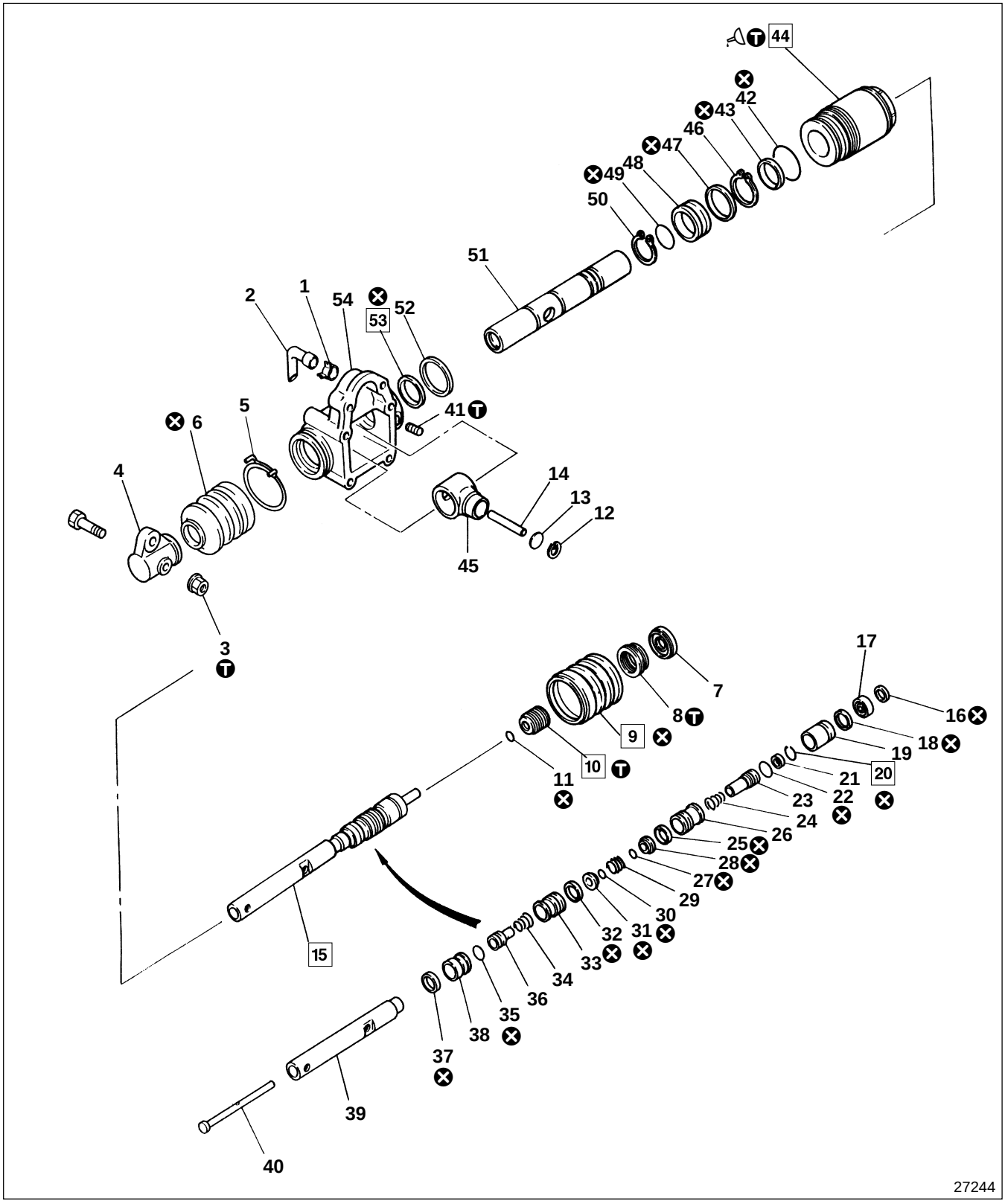

● **Inspection before diassembly**

P10

● **Disassembly sequence**

1 Clamp
2 Hose
3 Nut
4 Lever
5 Clamp
6 Boot
7 Cover
8 Nut
9 Boot
10 Connector
11 O-ring
12 Retaining ring
13 Plate
14 Straight pin
15 Valve assembly
16 Filter
17 Collar
18 Square ring
19 Tube
20 Retaining ring
21 Plate
22 O-ring
23 Lifter
24 Spring
25 Square ring
26 Seat
27 O-ring
28 Seal assembly
29 Spring
30 O-ring
31 Seal assembly
32 Square-ring
33 Seat
34 Spring
35 O-ring
36 Lifter
37 Square-ring
38 Tube
39 Rod
40 Pipe
41 Set screw
42 O-ring
43 Packing
44 Cylinder
45 Striker
46 Retaining ring
47 Piston packing
48 Piston
49 O-ring
50 Retaining ring
51 Shift rod
52 Plate
53 Cup packing
54 Housing

⊗ : Non-reusable parts

● **Assembly sequence**

Follow the disassembly sequence in reverse.

CAUTION⚠

Be sure to mount springs 24, 29 and 34 in the correct order.

Service standards

Unit : mm {in.}

Location	Maintenance item	Standard value	Limit	Remedy
24	Spring load (Installed length 13 {0.51})	38 N {8.6 lbf, 3.9 kgf}	31 N {7.1 lbf, 3.2 kgf}	Replace
29	Spring load (Installed length 10 {0.39})	13 N {2.9 lbf, 1.3 kgf}	9.8 N {2.2 lbf, 1.0 kgf}	Replace
34	Spring load (Installed length 13 {0.51})	9.8 N {2.2 lbf, 1.0 kgf}	7.8 N {1.8 lbf, 0.8 kgf}	Replace

Ⓣ Tightening torque

Unit : N·m {lbf.ft, kgf·m}

Location	Parts to be tightened	Tightening torque	Remarks
3	Nut (Lever mounting)	24 to 27 {17 to 20, 2.4 to 2.7}	—
8	Nut	59 to 69 {43 to 51, 6 to 7}	—
10	Connector	7.8 to 12 {5.8 to 8.7, 0.8 to 1.2}	—
41	Set screw	2.0 to 3.4 {1.4 to 2.5, 0.2 to 0.35}	—
44	Cylinder	78 to 98 {58 to 72, 8 to 10}	—

Lubricant and/or sealant

Location	Points of application	Specified lubricant and/or sealant	Quantity
—	All friction surfaces	Multipurpose grease [NLGI No.2 (Li soap)]	As required
44	Thread area of cylinder	LOCTITE 242 or THREEBOND 1401B	As required

Special tools

Location	Tool name and shape	Part No.	Application
10	Connector	*910-25790	Installation and removal of connector
15	Sleeve	*910-24800	For valve assembly insertion
20	Insertion tool	*910-22011	For retaining ring insertion
	Insertion tool	*910-26500	
44	Socket	*910-21982	Installation and removal of cylinder

* JIDOSHA KIKI part No.

◆ Service procedure

● Inspection before disassembly

(1) Apply 735 kPa {105 lbf/in^2, 7.5 kgf/cm^2} of pressure to the power shift assembly from the connector, check the airtightness when not operating (valve in neutral), and when operating valve is pressed and pulled. If the measured value deviates from the standard value, replace the faulty parts.

Maintenance item	Standard value	
Airtightness when not operating	Decrease of pressure after 15 seconds	9.8 kPa {1.4 lbf/in^2, 0.1 kgf/cm^2}
Airtightness when operating		49 kPa {7.1 lbf/in^2, 0.5 kgf/cm^2}

(2) Measure the sliding resistance in the disengagement direction. If the measured value deviates from the standard value, replace the faulty parts, or grease them.

Maintenance item	Standard value
Resistance in shifting direction	38 N {8.6 lbf, 3.9 kgf}

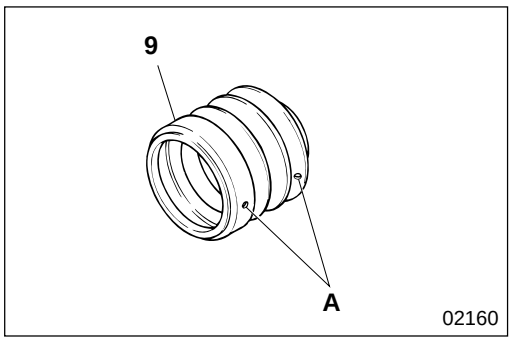

9 **Installation of boot**

When you install boot **9** on housing **54**, point drain holes **A** downward.

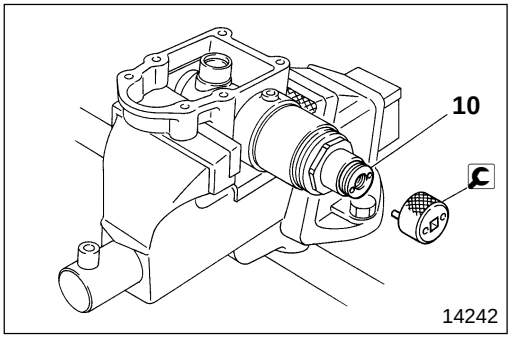

10 **Installation and removal of connector**

: Connector

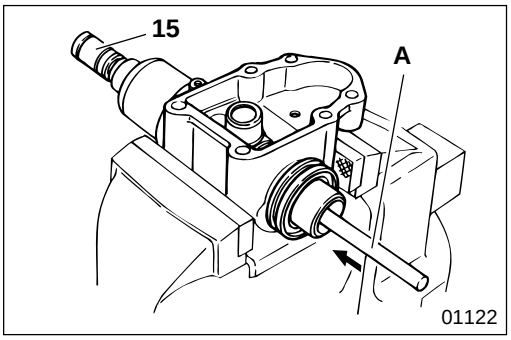

15 **Valve assembly**

[Removal]

Gently push valve assembly **15** off the shift rod from the lever side with rod A.

CAUTION

Use of excessive force to remove valve assembly 15 may result in damage.

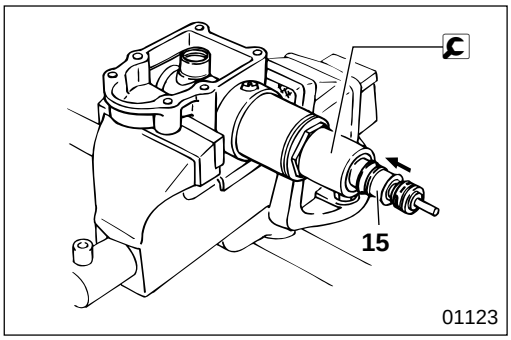

[Installation]

- Apply grease to valve assembly **15**.
- Taking care not to damage the seals, install valve to shift rod with sleeve.

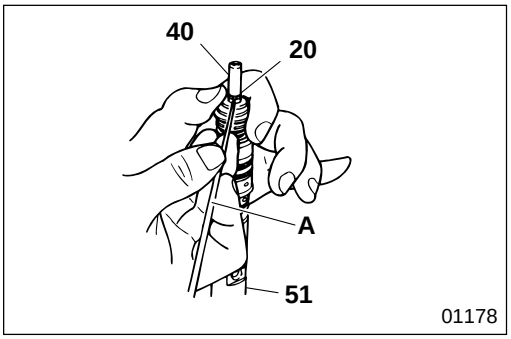

20 **Retaining ring**

[Removal]

- Secure shift rod **51** with a vise to prevent damage.
- Remove retaining ring **20** from pipe **40** with needle shaped object **A**.

CAUTION

- **When retaining ring 20 is removed, all valve parts are disconnected.**
- **To avoid wrong assembly, arrange all valve parts in correct order before assembly.**

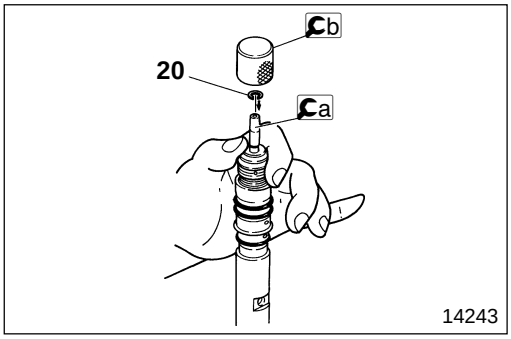

[Installation]

- Attach valve parts to pipe **40**.
- Connect a insertion tool to end of pipe **40**.
- Insert retaining ring **20** correctly in groove in pipe **40** with b insertion tool.

CAUTION

Do not use excessive force when inserting retaining ring 20.

POWER SHIFT ASSEMBLY : ’98 MODEL

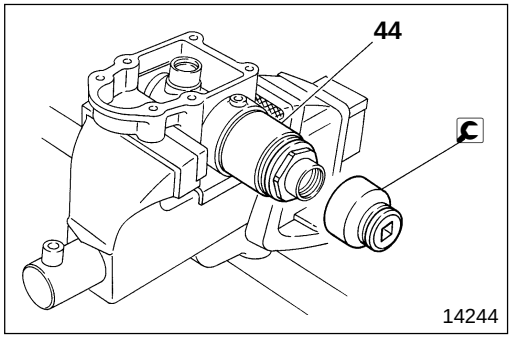

44 **Installation and Removal of the Cylinder**

: Socket

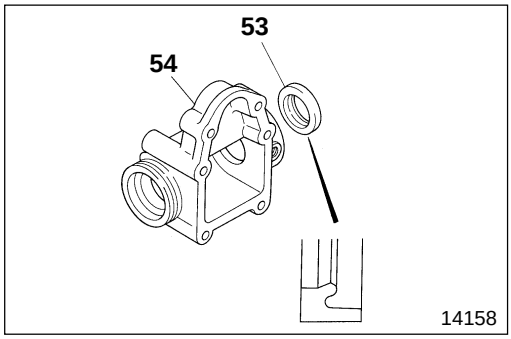

53 **Installing cup packing**

GROUP 54 ELECTRICAL

2 STARTING, PREHEATING AND STOPPING ENGINE

STARTER : ’98 MODEL

SPECIFICATIONS 14

STRUCTURE AND OPERATION 15

201 STARTER 16

Items not covered in this manual are the same as those of

2 STARTING, PREHEATING AND STOPPING ENGINE **:** ’97 MODEL.

SPECIFICATIONS

Item		Specifications
Starter	Manufacturer	MITSUBISHI ELECTRIC
	Reduction gear system	Planetary gear
	Model	M9T50071
	Power V–kW	12–5
	Magnetic switch operating voltage V	8 or less

Starter

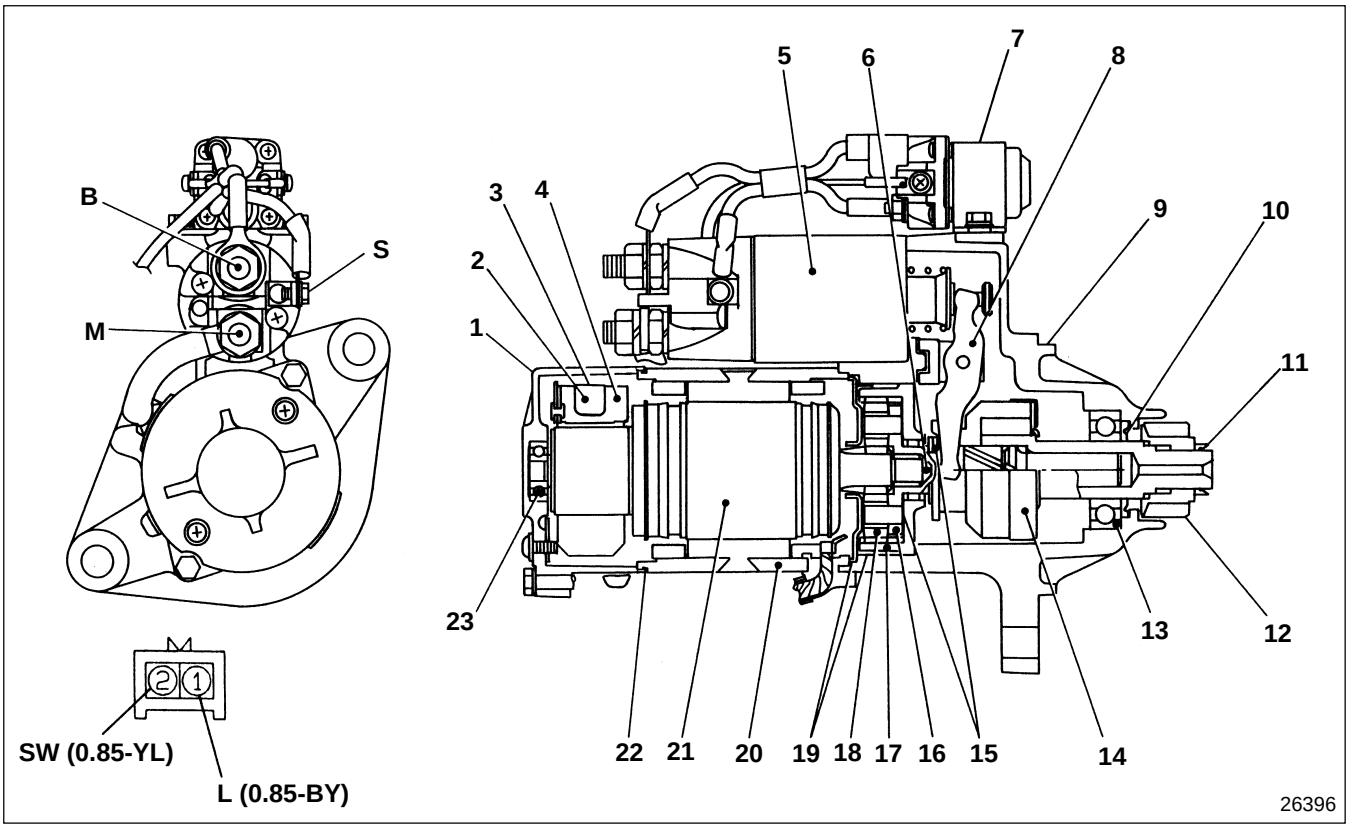

1 Rear bracket
2 Brush
3 Brush spring
4 Brush holder
5 Magnetic switch
6 Ball
7 Starter relay
8 Lever
9 Front bracket
10 Spring
11 Pinion stopper
12 Pinion
13 Front bearing
14 Overrunning clutch
15 Washer
16 Gear shaft
17 Internal gear
18 Planetary gear
19 Rubber packing
20 Yoke assembly
21 Armature
22 Rubber packing
23 Rear bearing

B : Terminal B
L : Terminal L
M : Terminal M
S : Terminal S
SW : Terminal SW

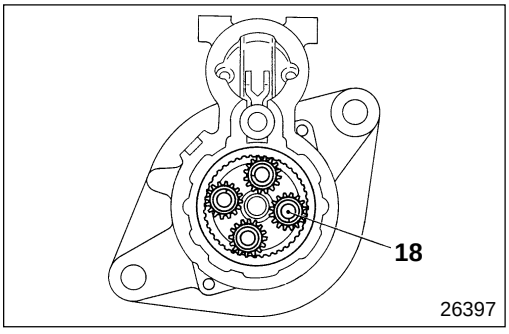

This starter uses planetary gear **18** for the reduction gear system.

Starter

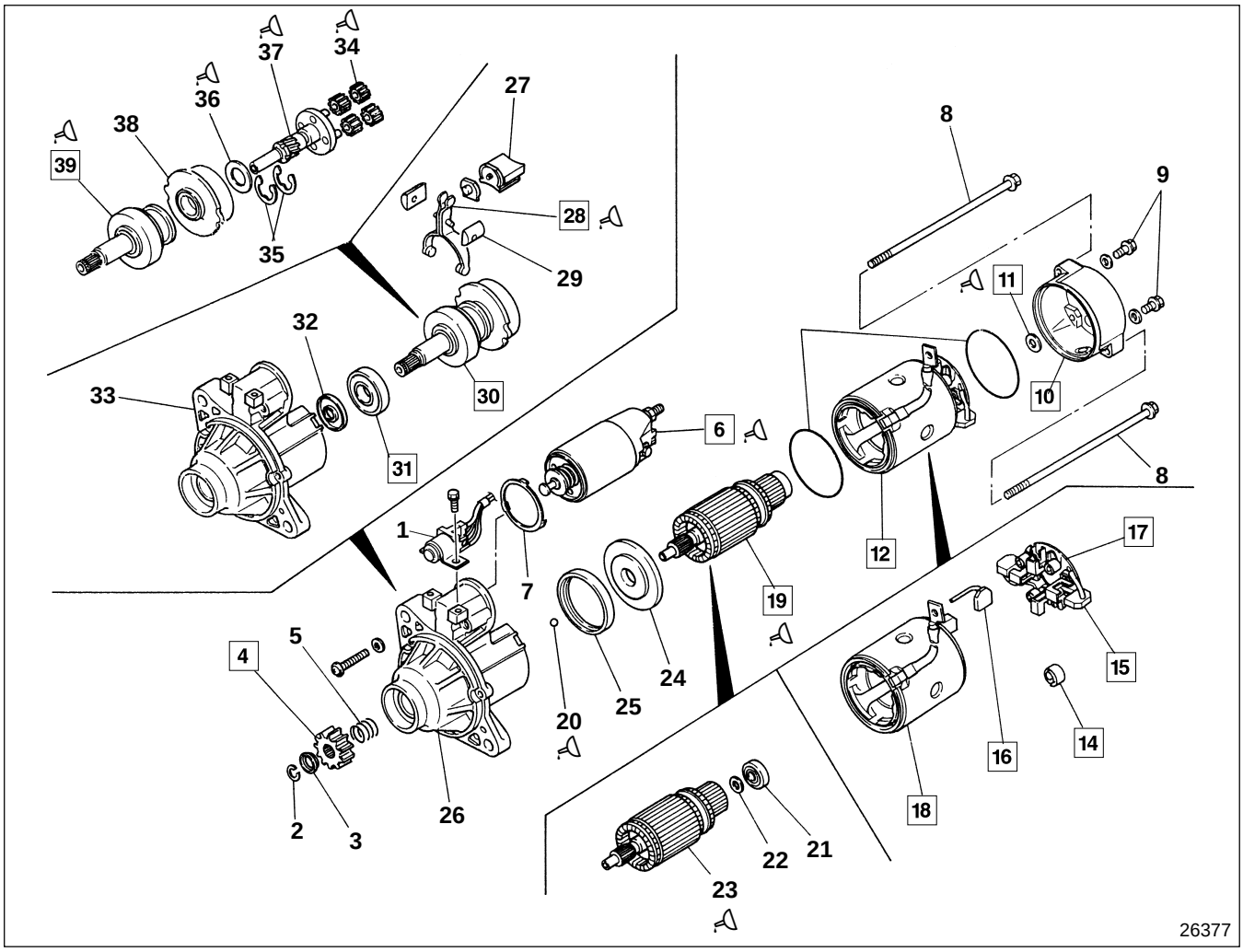

● **Disassembly sequence**

1 Starter relay
2 Stopper ring
3 Pinion stopper
4 Pinion
5 Spring
6 Magnetic switch
7 Shim
8 Bolt
9 Screw
10 Rear bracket
11 Conical washer
12 Yoke and brush holder assembly
13 Rubber packing
14 Brush spring
15 Brush ⊖
16 Brush ⊕
17 Brush holder assembly
18 Yoke assembly
19 Armature assembly
20 Ball
21 Rear bearing
22 Washer
23 Armature
24 Cover
25 Rubber packing
26 Front bracket assembly
27 Rubber packing
28 Lever
29 Bushing
30 Gear shaft and overrunning clutch assembly
31 Front bearing
32 Dust seal
33 Front bracket
34 Planetary gear
35 Washer
36 Washer
37 Gear shaft
38 Internal gear
39 Overrruning clutch

CAUTION⚠

- **When removing yoke and brush holder assembly 12, make sure you first pull out brushes 15, 16 from brush holder assembly 17 to avoid damaging the commutator of armature 23.**
- **Do not remove bearings 21, 31 unless they are faulty.**
- **Make sure you do not drop armature assembly 19 when you remove yoke and brush holder assembly 17 from front bracket assembly 26.**
- **Be careful not to lose ball 20, since it might come out together with armature assembly 19 when you remove it.**

NOTE

- **You do not have to remove pinion 4 when you disassemble or inspect only the motor assembly, for example: when inspection of the brush assembly is required.**
- **Except for the above, make sure you remove pinon 4 before disassembling any parts.**

● **Assembly sequence**

Follow the disassembly sequence in reverse.

NOTE

Whenever magnetic switch 6 has been replaced, be sure to adjust the pinion gap.

● **Inspection after assembly**

🕮 P18

Service standards

Unit : mm {in.}

Location	Maintenance item		Standard value	Limit	Remedy
—	Pinion gap		0.5 to 2.0 {0.02 to 0.079}	—	Adjust
—	No-load characteristic (11 V when current flowing)	Current	230 A or less	—	Inspect
		Revolutions per minute	3600 rpm or more	—	
14	Pressure of brush spring		29 to 39 N {6.6 to 8.8 lbf, 3 to 4 kgf}	20 N {4.4 lbf, 2 kgf}	Replace
15, 16	Length of brush		18 {0.71}	11 {0.43}	Replace
19	Armature assembly	Outer diameter of commutator	32 {1.26}	31.4 {1.24}	Replace
		Deflection of commutator periphery	—	0.05 {0.002} or more	Replace
		Mica depth between segments	0.5 {0.02}	0.2 {0.0079} or less	Correct or replace

Lubricant

Location	Points of application	Specified lubricant	Quantity
6	Contact surface between lever and magnetic switch	Multipurpose grease [NLGI No.2 Li soap]	As required
11	Conical washer	Multipurpose grease [NLGI No.2 Li soap]	As required
20	Ball	MOLYKOTE ® AG650	As required
23, 34	Teeth of armature gear and planetary gear	MOLYKOTE ® AG650	As required
23, 37	Friction surfaces of gear shaft and armature	MOLYKOTE ® AG650	As required
28	Friction surfaces of lever and overrunning clutch	Multipurpose grease [NLGI No.2 Li soap]	As required
36	Washer	MOLYKOTE ® AG650	As required
37, 39	Friction surfaces of gear shaft and overrunning clutch	Multipurpose grease [NLGI No.2 Li soap]	As required
39	Spline of overrunning clutch	Multipurpose grease [NLGI No.2 Li soap]	As required

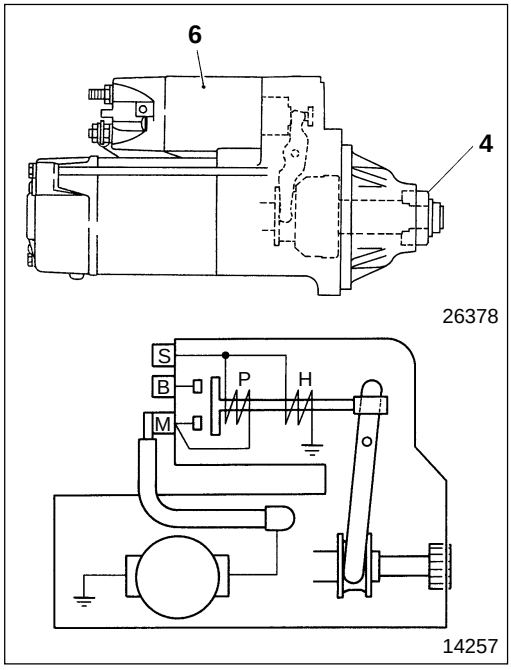

◆ Service procedure

● Inspection after assembly

Inspect starter post-assembly while connecting power to the starter.

WARNING⚠

- **Keep hands well away when connecting power to starter as pinion 4 flies out rotating.**
- **Be careful when touching magnet switch 6 during inspection procedure as it may become hot.**

CAUTION⚠

- **Power connection time to the starter should be less than 10 seconds for the pull-in coil and 30 seconds for the holding coil. If power is on for longer than this, coils may over-heat and seize.**
- **When power is turned on to the starter, the current exceeds 100A, so use thick wiring like booster cable wire for the inspection. All connections must be properly secured.**

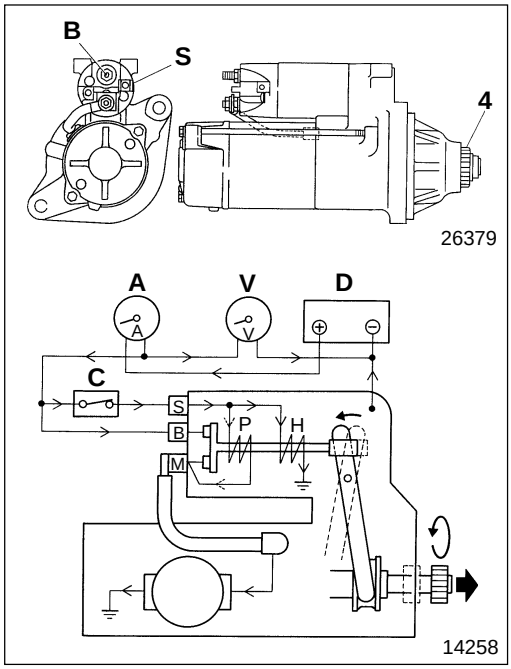

(1) Performance test

- Wiring should be as shown in the diagram.
  A : Ammeter
  B : Starter terminal **B**
  C : Switch
  D : DC power
  S : Starter terminal **S**
  V : Voltmeter
- Set voltage at 12 volts DC.

CAUTION⚠

Do not increase voltage beyond 12V.

- The following operations are performed by connecting power to the starter so ensure that no more than 30 seconds at a time is required to complete measurement of the starter's current flow and revolution frequency.
  - Turn switch **C** on and connect power to starter. Pinion **4** flies out rotating.

CAUTION⚠

- **When switch C is turned on, power is connected to both pull-in coil P and holding coil H. The moment strong electric current from DC power D flows from starter terminal B to terminal M, current flow to pull-in coil P ceases, but continues to holding coil H.**
- **To prevent the holding coil from burning out, ensure the operation does not exceed 30 seconds.**

  - Measure the current, and revolution frequency of the starter. Revolution frequency is measured by applying a strobe etc., to pinion **4**.
  - Turn off switch **C**, and stop power connection to starter.
- If measured values deviates from the limits, disassemble the starter again and check it.

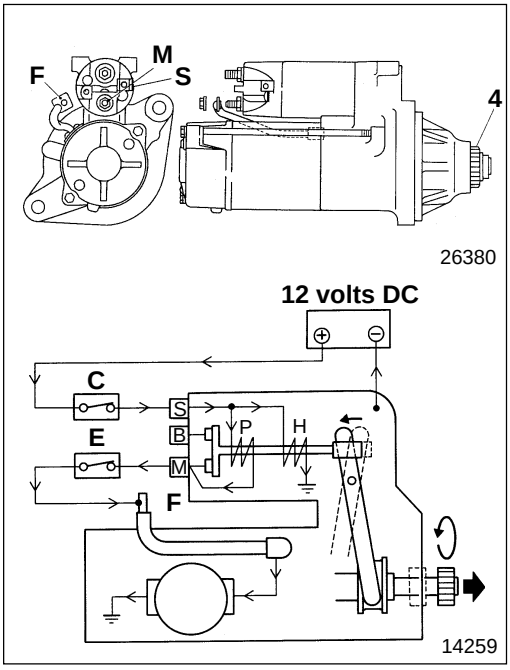

(2) Pinion gap

[Inspection]

- Starter wiring should be as shown in the diagram.
  C : Switch
  E : Switch
  F : Cable
  M : Starter terminal **M**
  S : Starter terminal **S**

- The following operations are performed by connecting power to the starter so ensure that no more than 30 seconds at a time is required to complete measurement of the pinion gap.
  - Turn switch **C** and switch **E** on and connect power to the starter. Pinion **4** flies out rotating.

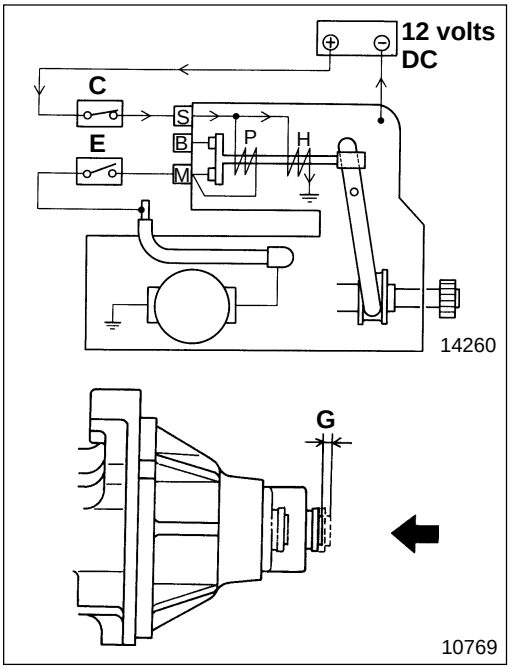

  - Turn switch **E** off (within 5 seconds) after pinion **4** starts rotating, and it stops.

CAUTION ⚠

When switch C and switch E are turned on, power is connected to both pull-in coil P and holding coil H. Voltage does not flow to starter terminal B with this wiring, and when pinion 4 is rotating current flows to the pull-in coil.
To prevent the pull-in coil from burning out, turn off switch E within 5 seconds after the pinion rotation.

  - Measure axial movement of **G** (the pinion gap) when lightly pressing the end of overrunning clutch **39**.
  - Turn off switch **C** and stop power connection to starter.
- If values measured deviates from the limits, make the following adjustments.

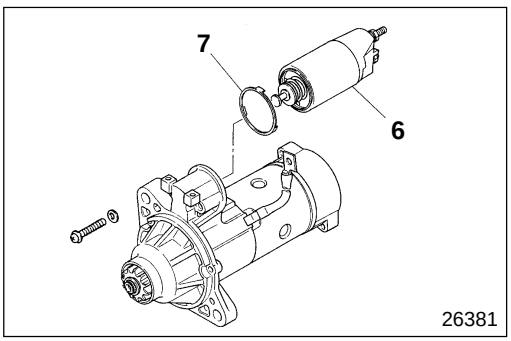

[Adjustment]

- Remove magnet switch **6** from front bracket assembly **26**.
- Adjust thickness of shim **7**.
  Increasing the number of shims decreases pinion gap **G**.
  Shim type: 0.25, 0.5 mm.

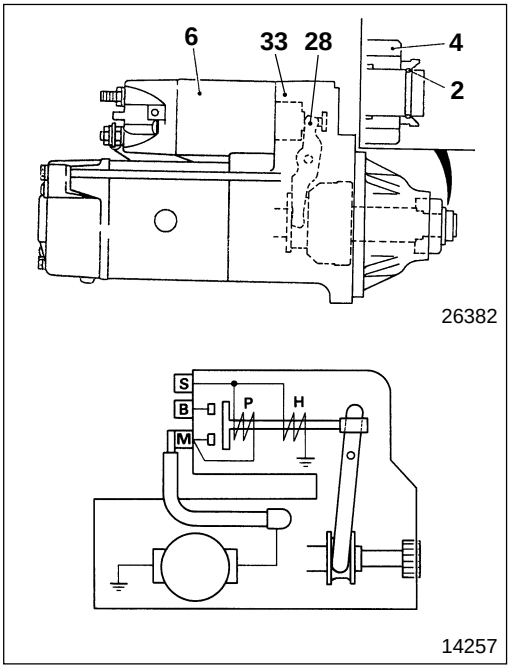

3 Pinion

[Removal]
Removal of pinion **4** is performed by connecting power to the starter and making the pinion fly out.

WARNING

- **When connecting power to the starter, pinion 4 comes out rotating so keep hands well away.**
- **Be careful when touching magnet switch 6 as it may become hot during inspection.**

CAUTION

- **Power connection time should be less than 10 seconds for the pull-in coil and 30 seconds for the holding coil.**
  If power is on for longer than this, coils may over-heat and seize.
- **Connecting power is the only correct method for getting pinion 4 to come out. If the pinion is got out by pulling lever 28, without connecting power, front bracket 33 and the lever may be damaged due to impact when stopper ring 2 disconnects.**
- **When power is connected to the starter, the current exceeds 100A, so use thick wiring like booster cable wire for the inspection. All connections must be properly secured.**

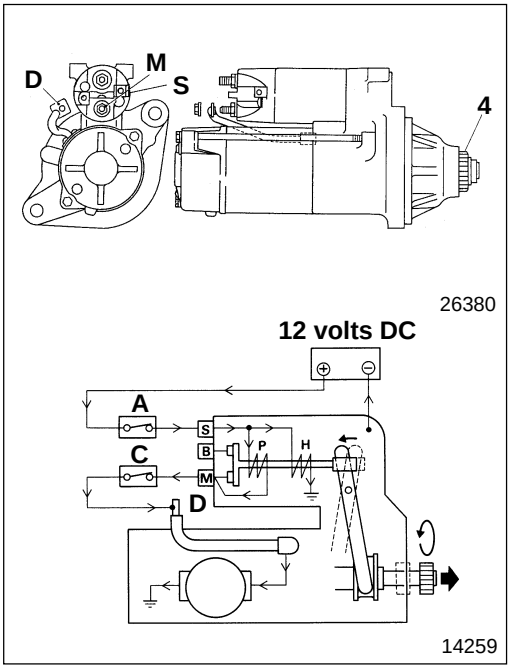

- Wiring should be as shown in the diagram.
  A : Switch
  C : Switch
  D : Cable
  M : Starter terminal **M**
  S : Starter terminal **S**

- The following operations are performed by connecting power to the starter to ensure that no more than 30 seconds at a time is required until pinion **4** is removed.
  - Turn switch **A** and switch **C** on and turn power on to starter. Pinion **4** flies out rotating.

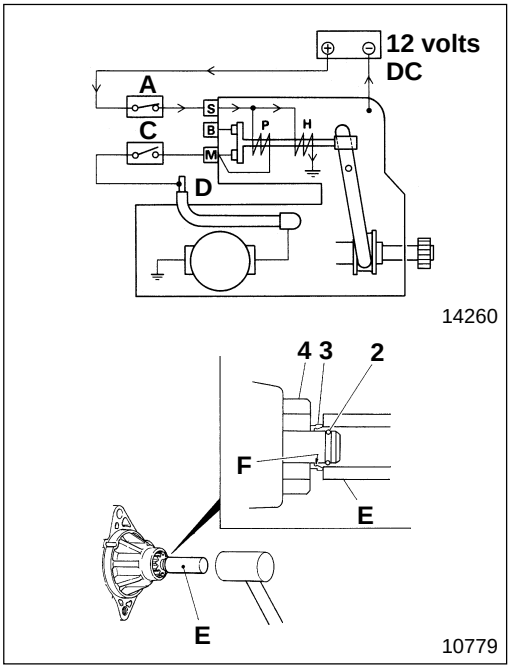

- Turn switch **C** off (within **5** seconds) after pinion **4** starts rotating, and it stops.

CAUTION

When switch A and switch C are turned on, power is connected to both pull-in coil P and holding coil H. Voltage does not flow to starter terminal B with this wiring, and when pinion 4 is rotating, current flows to pull-in coil P.

To prevent pull-in coil P from burning out, turn off switch C (within 5 seconds) after the pinion rotation.

- Apply pipe **E** to pinion stopper **3**.
- Tap **E** gently with a hammer, and remove stopper ring **2** from ring groove **F** in pinion stopper **3**.
- Unfasten stopper ring **2**, and remove pinion **4**.
- Turn switch **A** off and disconnect power to starter.

CAUTION

When power to the starter is stopped, pinion 4 pulls in and stopper ring 2, may go right back inside ring groove F of pinion stopper 3.

If so, turn starter power back on and perform the operation again.

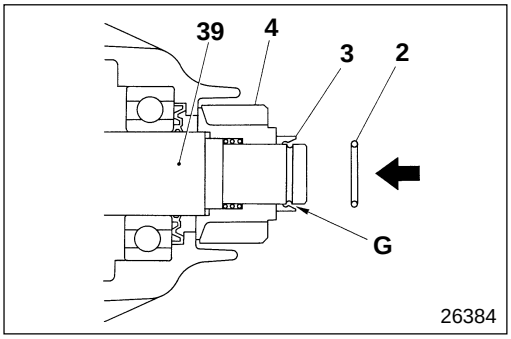

[Installation]

It is not necessary to connect power to the starter when installing pinion **4**.

- Install pinion stopper **3** and pinion **4** on over-running clutch **39** as illustrated.
- Attach stopper ring **2** in ring groove **G** in over-running clutch **39**.

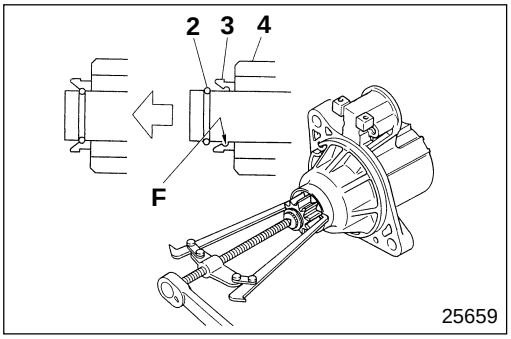

- Pull pinion **4** hard to secure stopper ring **2** firmly in ring groove **F** of pinion stopper **3**.

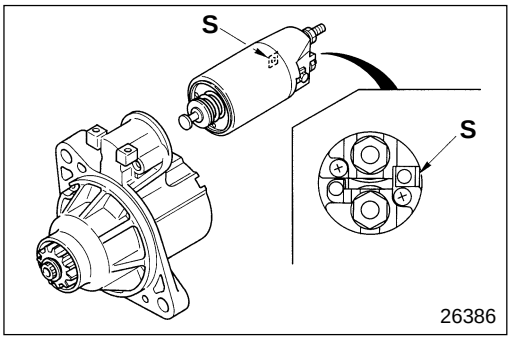

6 Magnetic switch

[Installation]
Install magnetic switch **6** onto lever **28** in the direction as illustrated.
S : Terminal **S**

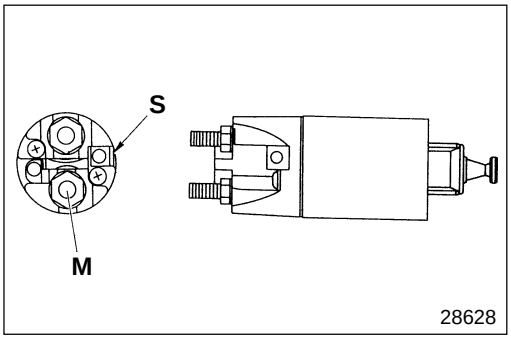

[Inspection]
Carry out the inspection as follows. If any fault is found, replace magnetic switch **6**.

(1) Testing for coil discontinuity

- Check that there is continuity between terminals **S** and **M**.

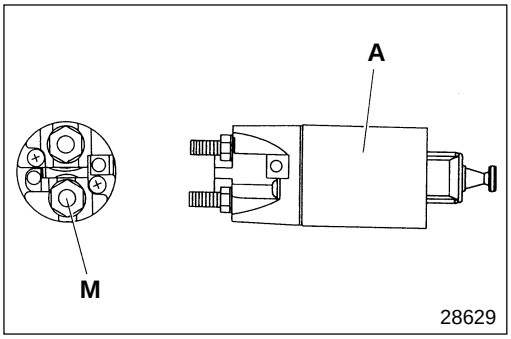

- Check that there is continuity between terminal **M** and the body **A** of magnetic switch **6**.

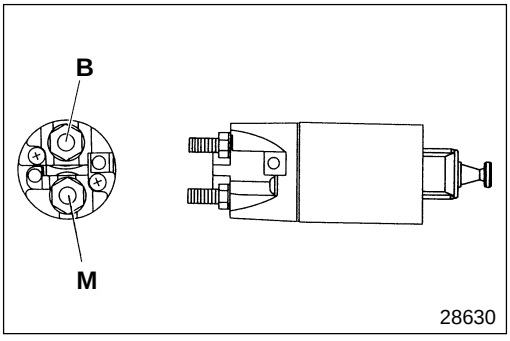

(2) Inspection of welded connections

- Check that there is no continuity between terminals **B** and **M**.

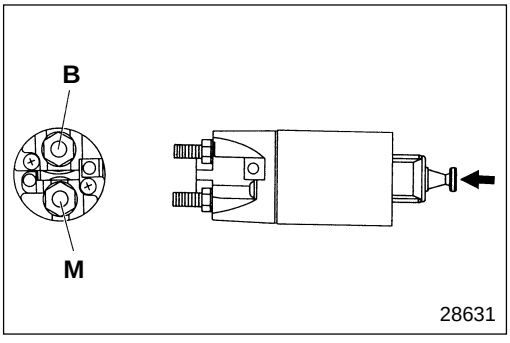

(3) Inspection of connections

- Push the tip of magnetic switch **6** to close the internal connection.
- Check that there is continuity between terminals **B** and **M**.

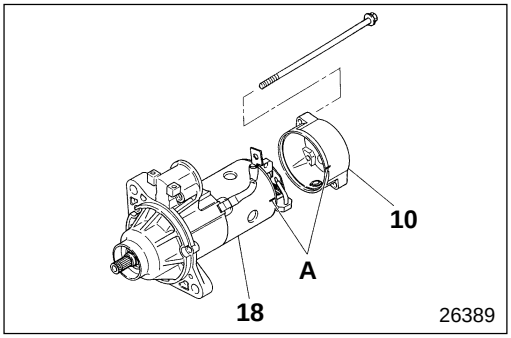

10 **Installation of rear bracket**

A : Counter mark

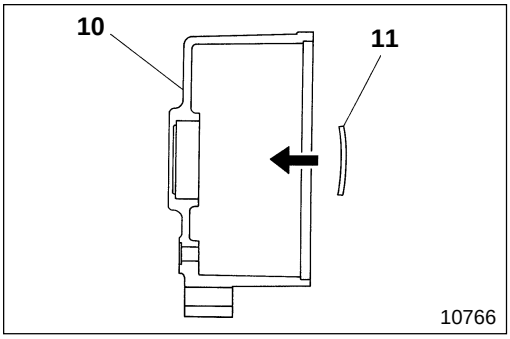

11 **Installation of conical washer**

Install conical washer **11** on rear bracket **10** facing the direction as shown.

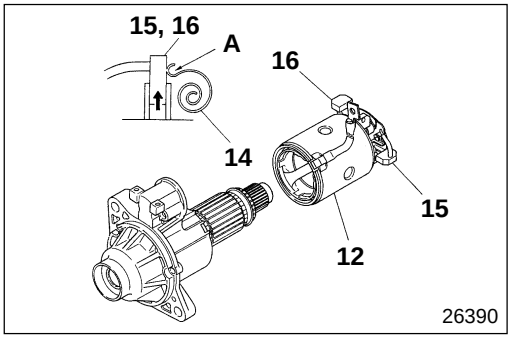

12 **Removal and installation of yoke and brush holder assembly**

- Pull part **A** of brush spring **14** and lift up brushes **15** and **16**.
- Secure the lifted brushes **15** and **16** with brush spring **14** as shown.
- Remove yoke and brush holder assembly **12**.
- The assembly sequence follows the disassembly sequence in reverse.

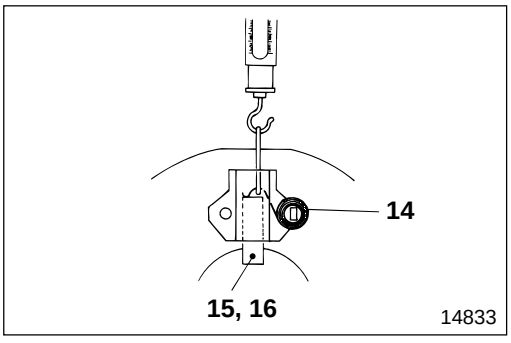

14 **Inspection of brush spring**

- Use new brushes **15**, **16** and measure the load when brush spring **14** is detached from the brushes.
- If the measured value is lower than the limit, replace brush spring **14**.

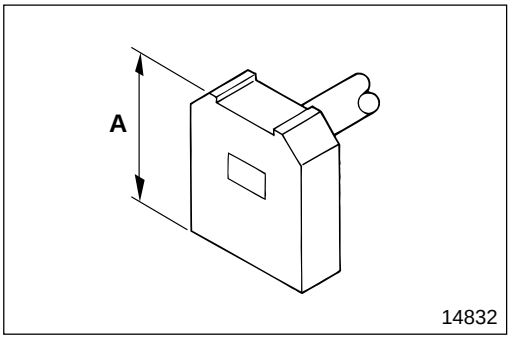

15 **16** **Inspection of brush**

(1) Length of brush

If the measured value is lower than the limit, replace brushes **15**, **16**.

A : Length of brush

(2) Contact surface with commutator

If the surface where the brushes contact the commutator is rough or is worn unevenly, polish the surface with emery paper (300 to 500 grit).

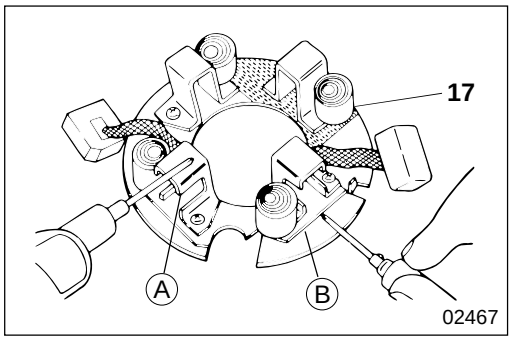

17 Inspection of brush holder assembly

- Clean the ⊕ side of the brush holder **A** and - side of the brush holder **B** well, and check that there is no continuity between them.
- If there is continuity, they are grounded. Replace brush holder assembly **17**.

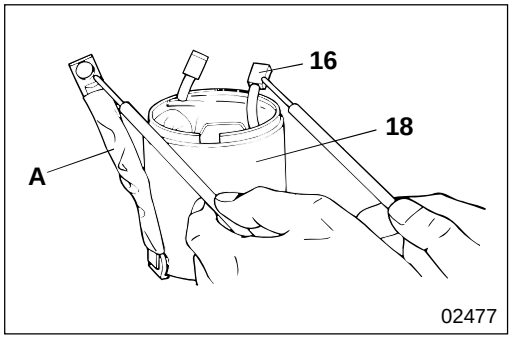

18 Inspection of yoke assembly

(1) Testing for coil disconnection

- Check that there is continuity between cable **A** and brush ⊕ **16**.
- If there is no continuity, they are disconnected. Replace brush ⊕ **16** or yoke assembly **18**.

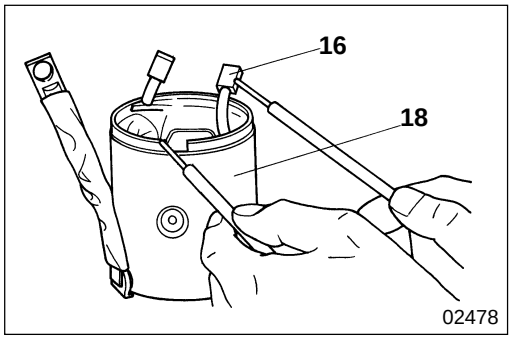

(2) Testing for coil grounding

- Check that there is no continuity between yoke assembly **18** and brush ⊕ **16**.
- If there is continuity, they are grounded. Locate the disconnection. If it is hard to repair, replace brush ⊕ **16** or yoke assembly **18**.

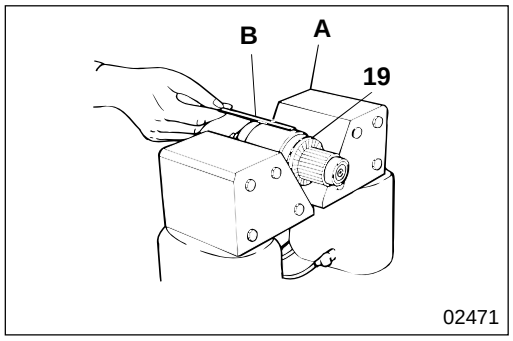

19 Inspection of armature assembly

(1) Testing for coil short-circuit

- Place iron rod **B** parallel to armature assembly **19**.
  A : Armature tester
- Rotate armature assembly **19** slowly.
- If iron rod **B** is pulled or shakes, it indicates that armature assembly is short-circuited, replace armature assembly.

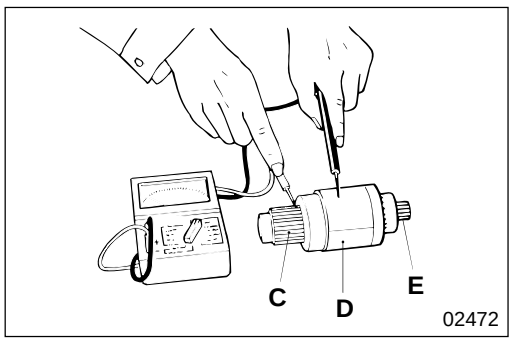

(2) Testing for coil grounding

- Check that there is no continuity between commutator **C** and core **D** (or shaft **E**).
- If there is continuity between them, they are grounded. Replace armature assembly **19**.

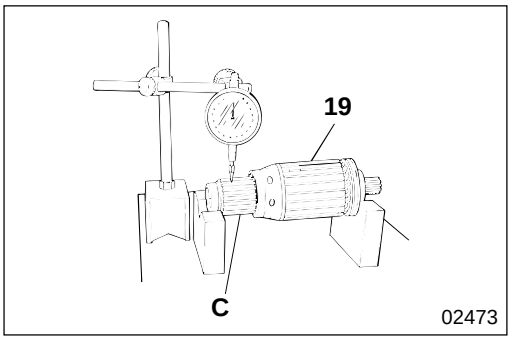

(3) Deflection of commutator

If the measured value is higher than the limit, adjust the outer diameter of commutator **C** within the limit.

(4) Condition of commutator surface

- If the surface is rough or has stepped wear, polish the surface with emery paper (300 to 500 grit).
- After polishing, check deflection of commutator **C**.

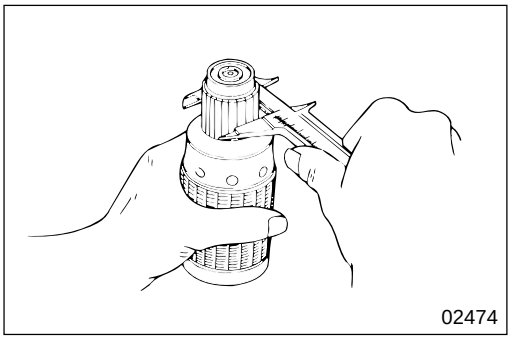

(5) Outer diameter of commutator

If the measured value is higher than the limit, replace armature assembly **19**.

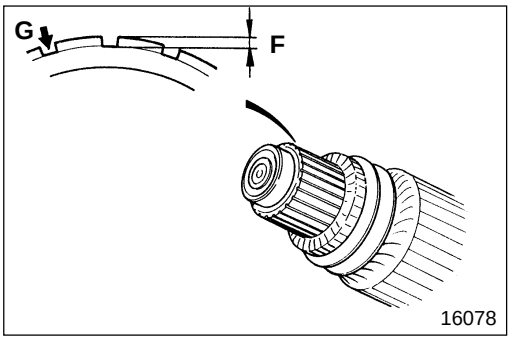

(6) Mold depth between segments

- If the measured value is lower than the limit, correct or replace armature assembly **19**.
  F : Mold depth
- Correct by shaving part **G** as shown.

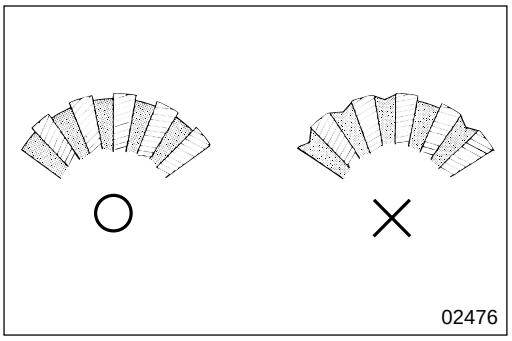

- If the mold is worn as illustrated, replace armature assembly **19**.
  ○ : Good
  × : Faulty

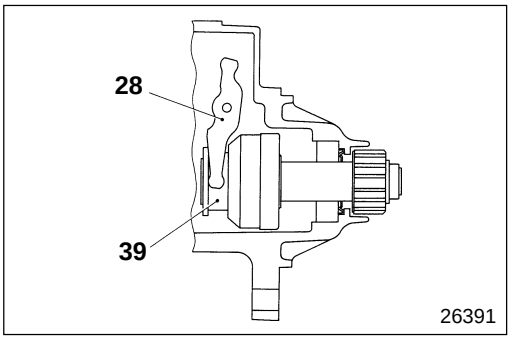

28 Installation of lever

Install lever **28** on over running clutch **39** facing the direction as shown.

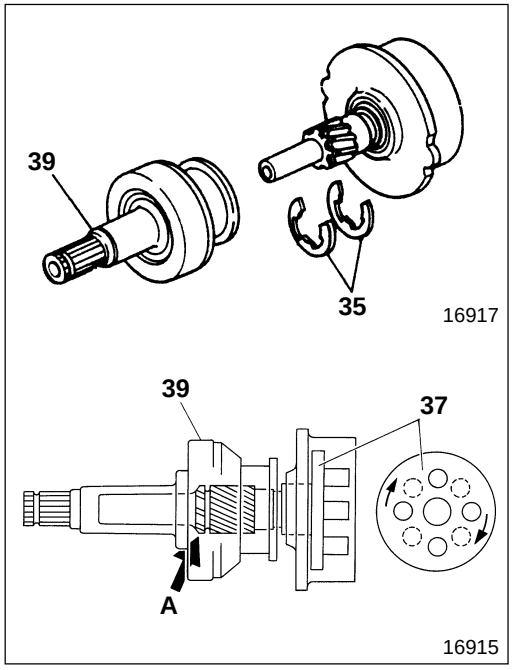

30 Gear shaft and overrunning clutch assembly

Remove washer **35** and remove gear shaft and overrrunning assembly from overrunning clutch **39**.

If gear spline **A** of gear shaft gear shaft is stuck inside overrung clutch and cannot be removed, perform the following;

- Press gear shaft **37** against overrunning clutch **39**.
- Rotate gear shaft **37** by 1/8 of a turn, move the location of spline part **A** and remove.

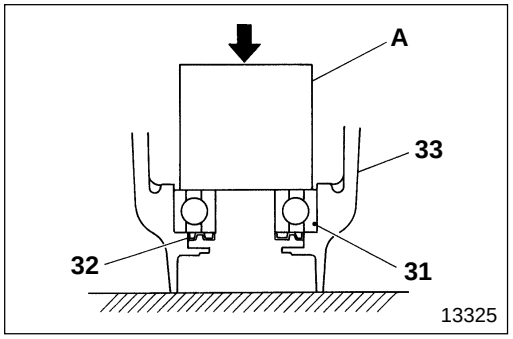

31 Installation of the front bearing

- Install dust seal **32** before pressing in front bearing **31**.
- Press front bearing **31** into front bracket **33** with pipe-shaped tool **A**.

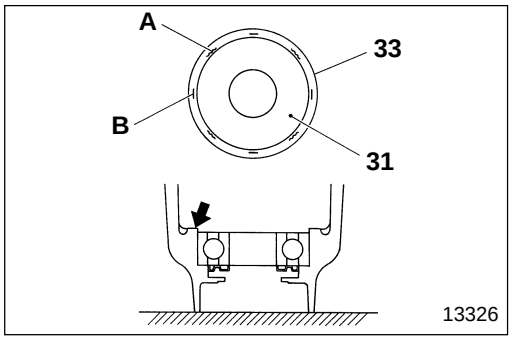

- Caulk front bracket **33** side again.

CAUTION ⚠

Avoid old caulk point B when caulking.

A : Caulking points (4).

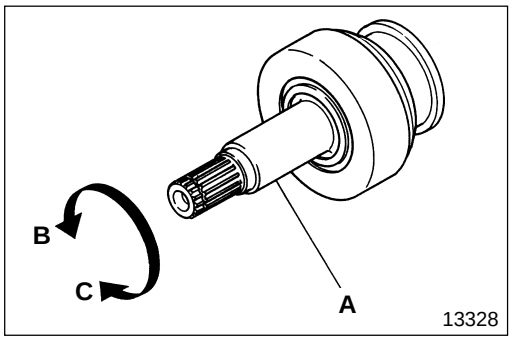

39 Inspection of over running clutch

Inspect the following points and replace over running clutch **39** if abnormalities are detected.

- Check that shaft **A** rotates smoothly when rotated in direction **B**.
- Check that shaft **A** locks properly when rotated in direction **C**.

MITSUBISHI FUSO

Service Manual

Table of Contents

BACK

HOME

MODEL CHANGES

FK.FM 1997

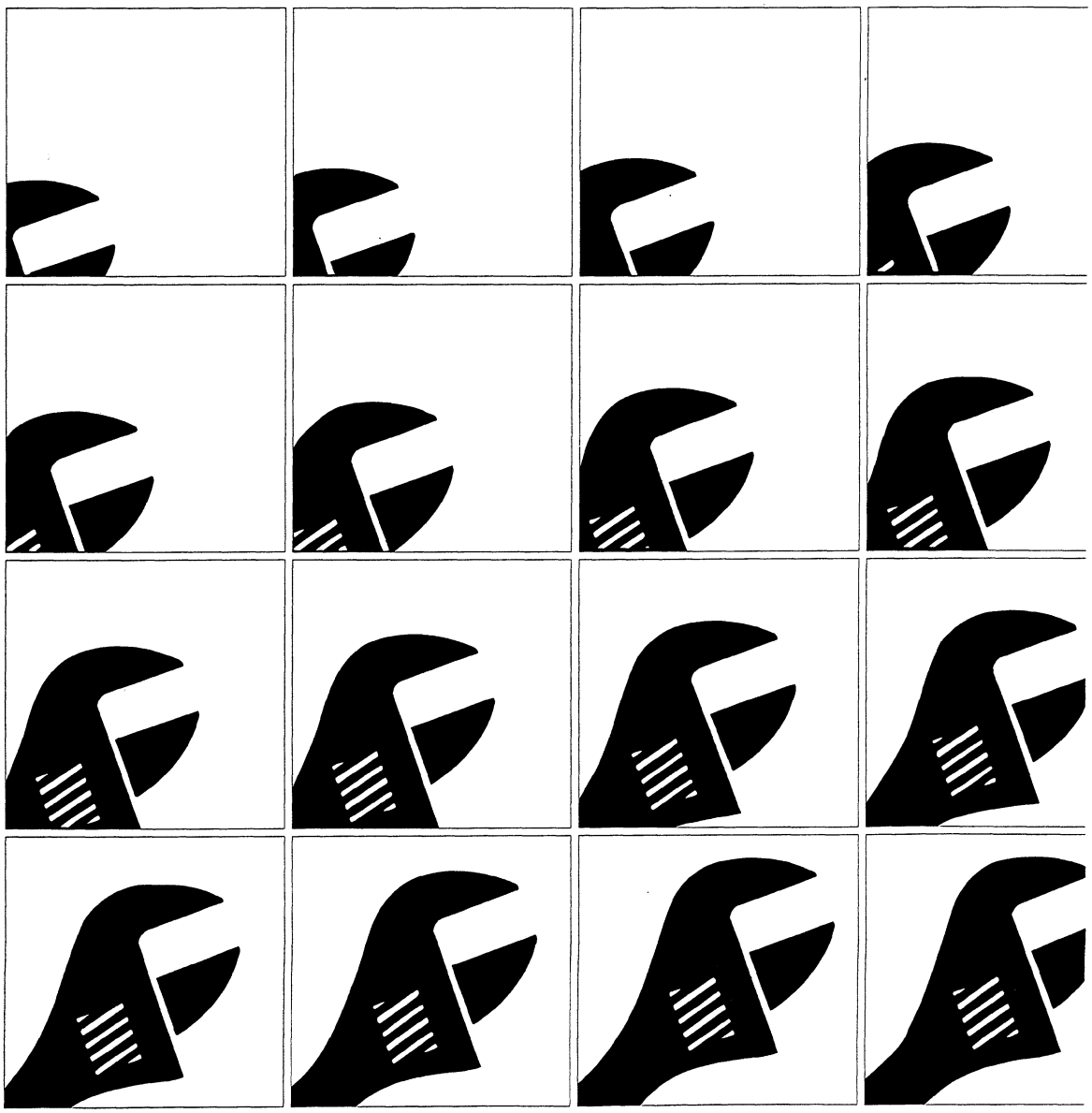

Pub. No. TWME9503-1

FK.FM

SERVICE MANUAL

FOREWORD

This Service Manual contains maintenance and repair methods for personnel involved in the maintenance and repair or 1997 model Mitsubishi Fuso Truck FK, FM series.
Read this manual carefully as an aid to providing correct, efficient and fast maintenance.
Please note, however, that due to continuous improvements on the specifications, numbers and description for maintenance might be changed without prior notice.
If you have any question, or encounter a problem, please do not hesitate to contact your nearest Mitsubishi Fuso dealer or distributor.

© Mitsubishi Motors Corporation 1996 July

MITSUBISHI FUSO TRUCK OF AMERICA, Inc.

1997 MODEL CHANGES

Item	'97 Model ⇦	'96 Model
Gr 00 General **The power train has been changed.** • Clutch C6M35 has been replaced with clutch C6M35 (Spicer AR 350), and direct drive transmission, M060S6 with overdrive transmission M060S6. The power train has also been changed.	See page 3 in this manual.	—
Gr 11 Engine • A flywheel for clutch C6M35 (Spicer AR 350) has been added.	See pages 4 to 5 in this manual.	—
Gr 13 Fuel and engine control • Seals have been added to injection pumps to fit within the legal restriction. **CAUTION ⚠** **Injection pumps should not be adjusted by anyone other than the specified ZEXEL service stations.**	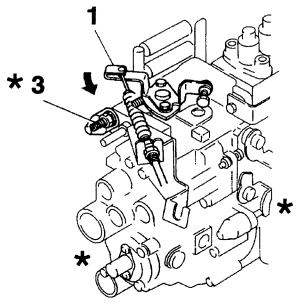 20778 *** : Sealed part**	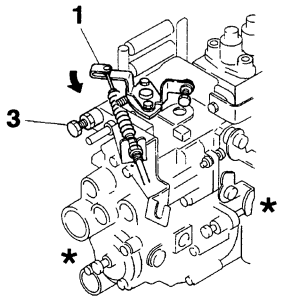 13114 *** : Sealed part**
Gr 21 Clutch • Clutch C6M35 has been replaced with clutch C6M35 (Spicer AR 350).	See pages 6 to 13 in this manual.	—
Gr 22A Manual transmission • Direct drive transmission, M060S6 has been replaced with overdrive transmission, M060S6.	'96 model is equipped with overdrive transmission M060S6. For details refer to the revised edition of Group 22A Manual Transmission < M060S5, S6, M070S6 >. 🗀 Gr 22A (Pub. No. TWME9620)	—
Gr 31 Wheel and tire • The number of wheel mounting hub bolts has been reduced from ten to eight.	See pages 14 to 15 in this manual.	—
Gr 54 Electrical • The sub-starter switch and the sub-starter circuit have been eliminated.	The eliminated sub-starter circuit is same as Group 54 ('96 model) engine starting circuit. 🗀 Gr 54 ('96 model)	—
• The cold starter switch, cold starter 3-way magnetic valve (automatic transmission only), and cold start indicator lamp have been eliminated.	See pages 16 to 19 in this manual.	

POWER TRAIN TABLE ('97 MODEL)

* indicates changes

Model	Engine model	Clutch model	Transmission model	Propeller shaft	Rear axle model	Final reduction and gear ratio
FK617H, J, K, L G.V.W. 10430 kg {23000 lb}	6D16T3 200 HP/2600 rpm 434 lbf.ft/1600 rpm (SAE, Gross)	* C6M35 (SPICER AR350)	M060S5 6.875/1.000	P4	R050T(M)	D050H 4.444
FK617K, L G.V.W. 10430 kg {23000 lb}	6D16T4 190 HP/2600 rpm 408 lbf.ft/1600 rpm (SAE, Gross)	Torque converter (TC290-1.72)	M4A4 (Allison AT542) 3.454/1.000			D050H 4.625
FM617J, L, M, N G.V.W. 11790 kg {25995 lb}	6D16T3 200 HP/2600 rpm 434 lbf.ft/1600 rpm (SAE, Gross)	* C6M35 (SPICER AR350)	* M060S6 6.875/0.786	P8	R060T	* D8H 5.857
	6D16T4 190 HP/2600 rpm 408 lbf.ft/1600 rpm (SAE, Gross)	Torque converter (TC290-1.72)	M4A4 (Allison AT545) 3.454/1.000			D8H 4.875
FM617J, L, M, N G.V.W. 13610 kg {30000 lb}	6D16T3 200 HP/2600 rpm 434 lbf.ft/1600 rpm (SAE, Gross)	* C6M35 (SPICER AR350)	* M060S6 6.875/0.786			* D8H 6.166
FM617L, M, N G.V.W. 13610 kg {30000 lb}	6D16T4 190 HP/2600 rpm 408 lbf.ft/1600 rpm (SAE, Gross)	Torque converter (TC290-1.72)	M4A4 (Allison AT545) 3.454/1.000			D8H 5.571
FM657J, L, M, N G.V.W. 14920 kg {32900 lb}	6D16T3 200 HP/2600 rpm 434 lbf.ft/1600 rpm (SAE, Gross)	* C6M35 (SPICER AR350)	* M060S6 6.875/0.786			* D8H 6.166
	6D16T2 230 HP/2600 rpm 521 lbf.ft/1600 rpm (SAE, Gross)	C7M38	M070S6 8.064/1.000	P10		D8H 4.625
			M8S2x5 10.060/1.000			

('96 model) → *00-3*

FLYWHEEL AND TIMING GEAR

Flywheel

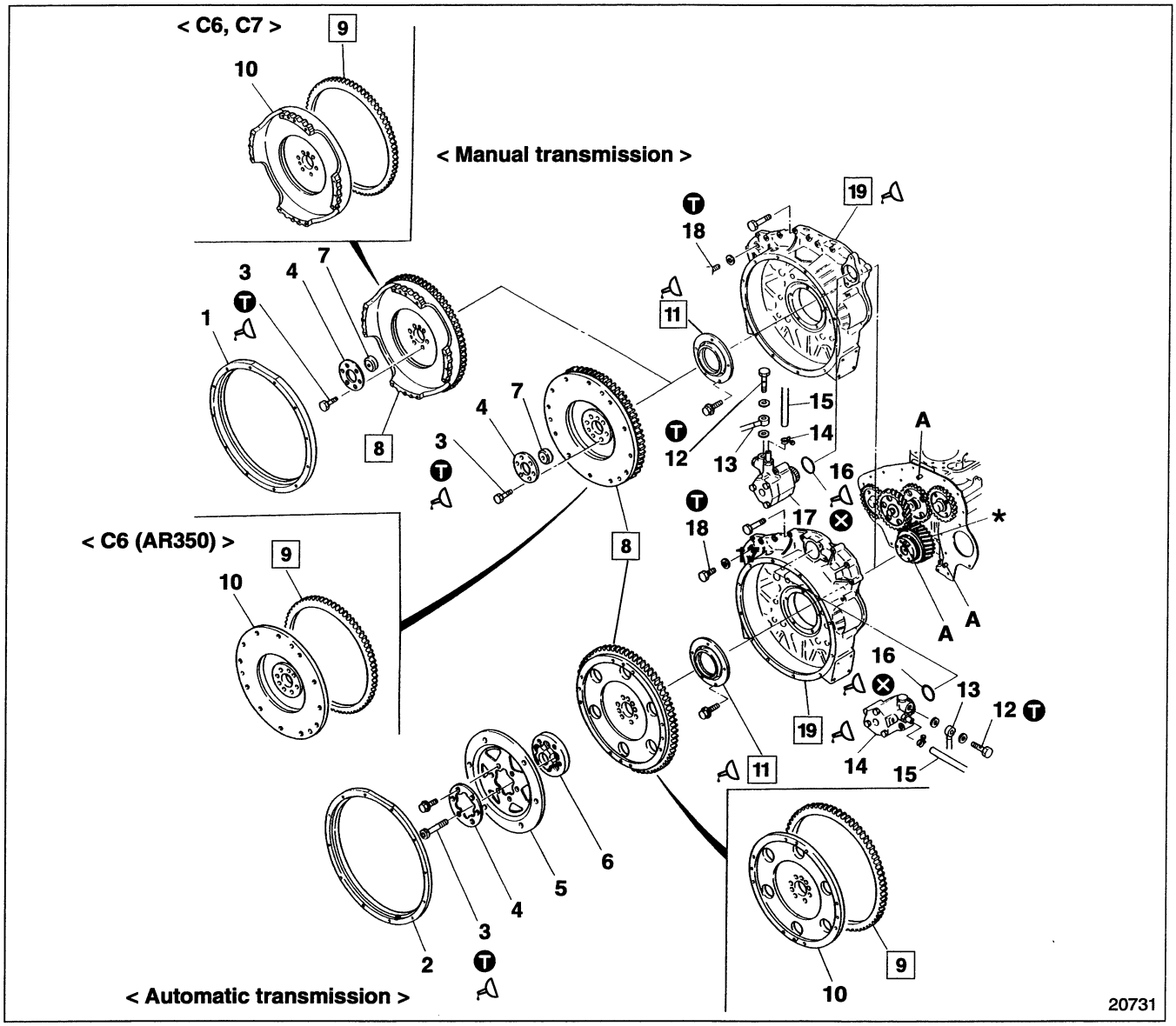

● **Disassembly sequence**

1 Adaptor < Except for vehicles with C6 (AR350) and M8 transmission >
2 Flywheel housing adaptor < Automatic transmission >
3 Bolt
4 Washer plate
5 Flex plate < Automatic transmission >
6 Flywheel adaptor < Automatic transmission >
7 Pilot bearing < Manual transmission >
8 Flywheel assembly
9 Ring gear
10 Flywheel
11 Rear oil seal
12 Eye bolt
13 Power steering oil pipe
14 Clamp
15 Suction hose
16 O-ring
17 Power steering oil pump Gr 37
18 Plug
19 Flywheel housing

* : Crankshaft assembly P11-56
A : Positioning pin
⊗ : Non-reusable parts

● **Assembly sequence**

Follow the disassembly sequence in reverse.

Service standards

Unit : mm {in.}

Location	Maintenance item			Standard value	Limit	Remedy
8	Flywheel assembly < Manual transmission >	Distortion of friction surface		0.05 {0.0020} or less	0.2 {0.0079}	Correct or replace
		Height from bolt mounting surface to friction surface	C6	20 {0.79}	19 {0.75}	Replace
			C6(AR350)	19 {0.75}	18 {0.71}	Replace
			C7	26.5 {1.04}	25.5 {1.00}	Replace
		Wobble of friction surface when installed		—	0.2 {0.0079}	Correct or replace
19	Eccentricity of spigot when installed			—	0.2 {0.0079}	Inspect or replace

('96 model) → *11-41*

Group 21
Clutch

< C6M35 (AR 350) > : '97 MODEL

Items not covered in this manual are the same as those of C6M35 : '96 model.

SPECIFICATIONS

Item		Specifications
Clutch	Model	C6M35 (AR350)
Drive type		Strap drive
Clutch disc	Type	Dry, single plate type
Pressure plate	Type	Diaphragm spring type
Control system		Hydraulic pressure type
Clutch master cylinder	Manufacturer	NABCO
Clutch power cylinder	Manufacturer	NABCO

Clutch < C6 (AR 350) >

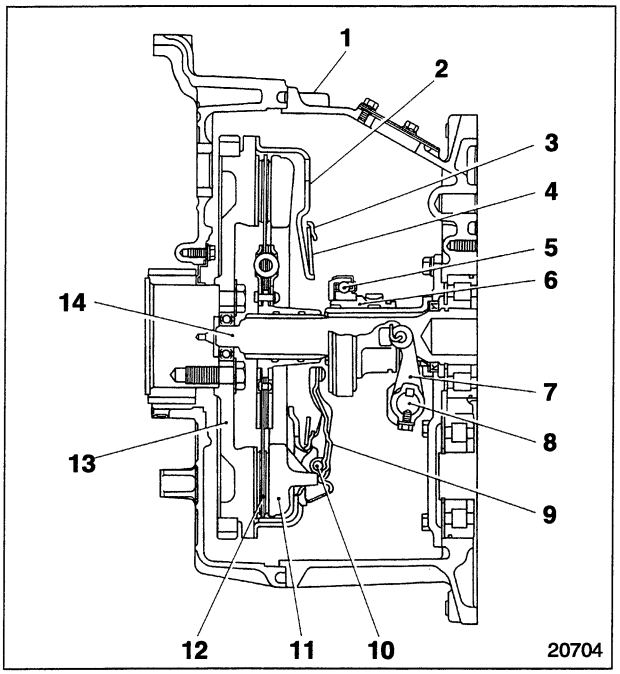

1 Clutch housing
2 Bracket
3 Spring ring
4 Belle spring
5 Release bearing
6 Clutch shifter
7 Release fork
8 Release fork shaft
9 Release lever
10 Pivot pin
11 Pressure plate
12 Clutch disc
13 Flywheel
14 Drive pinion

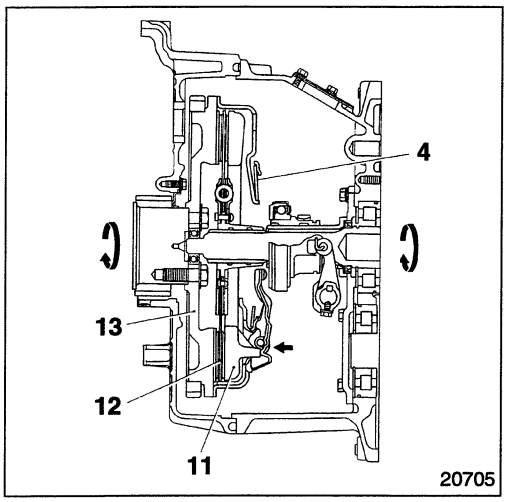

When clutch pedal is released

- Pressure plate **11**, activated by belle spring **4**, forces clutch disc **12** against flywheel **13**.
- Clutch disc **12** forced against flywheel **13** runs together with the flyweel and transmits power from the engine to transmission drive pinion **14**.

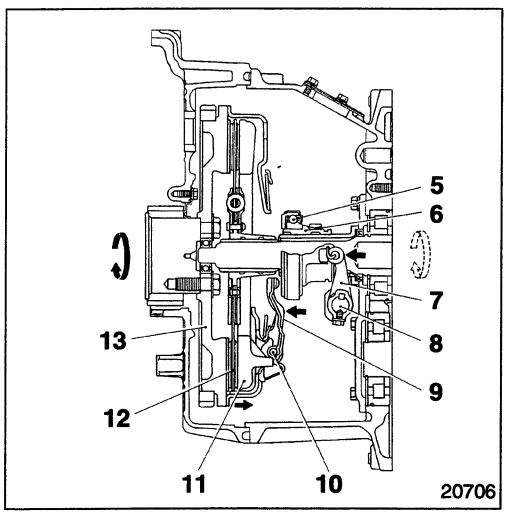

When clutch pedal is depressed

- Hydraulic pressure generated within the clutch master cylinder activates the clutch power cylinder.
- Release fork shaft **8** actuates release fork **7** and pushes release bearing **5** forward toghther with clutch shifter **6**, pushing release lever **9**.
- Release lever **9**, with pivot pin **10** acting as the fulcrum. Retracts pressure plate **11**, which opens a clearance between clutch disc **12** and flywheel **13**, cutting off power transmission from the engine.

Possible causes \ Symptoms		Clutch disengaged but drags	Clutch slips	Clutch does not engage smoothly	Clutch makes noise on disengagement	Clutch makes noise on engagement	Judder when vehicle starting	Remarks
Clutch cover assembly	Release bearing faulty	○			○			
	Release lever heights uneven	○	○	○			○	
	Pressure plate warped or faulty	○	○	○			○	
	Belle spring fatigued		○	○		○		
	Loose strap rivets						○	
	Strap plate bent				○			
Clutch disc	Disc deformed	○		○			○	
	Disc rivets loose			○			○	
	Disc torsion spring fatigued or damaged		○	○	○	○	○	
	Spline worn	○			○	○	○	
	Spline area rusted	○		○				
	Facing worn		○					
	Facing surface hardened		○	○			○	
	Facing oily or greasy		○	○			○	
Clutch pedal	Pedal free play insufficient		○					
	Pedal free play excessive	○						
	Pedal stroke insufficient	○						
	Return spring fatigued		○					
	Pedal friction surfaces faulty			○			○	
Clutch master cylinder	Piston and piston cup sliding movement faulty	○	○	○				
	Spring fatigued	○	○	○				
	Brake fluid passage port clogged	○	○	○				
Clutch power cylinder	Return spring fatigued	○	○	○				
	Piston and piston cup sliding movement faulty	○	○	○				
	Brake fluid passage port clogged	○	○	○				
Clutch control	Release bearing faulty						○	
	Clutch shifter sliding movement faulty						○	
	Clutch shifter lubrication insufficient						○	
	Clutch release fork deformed						○	
Transmission drive pinion spline worn		○				○		Gr 22A
Engine idling speed too slow						○		Gr 13
Engine mounting fatigued							○	Gr 10
Flywheel warped, deformed or worn forming steps		○	○	○			○	Gr 11
Flywheel pilot bearing faulty		○			○			
Air mixed in clutch hydraulic system		○						
Clutch hydraulic system leaking		○						

CLUTCH BODY < C6 (AR 350) >

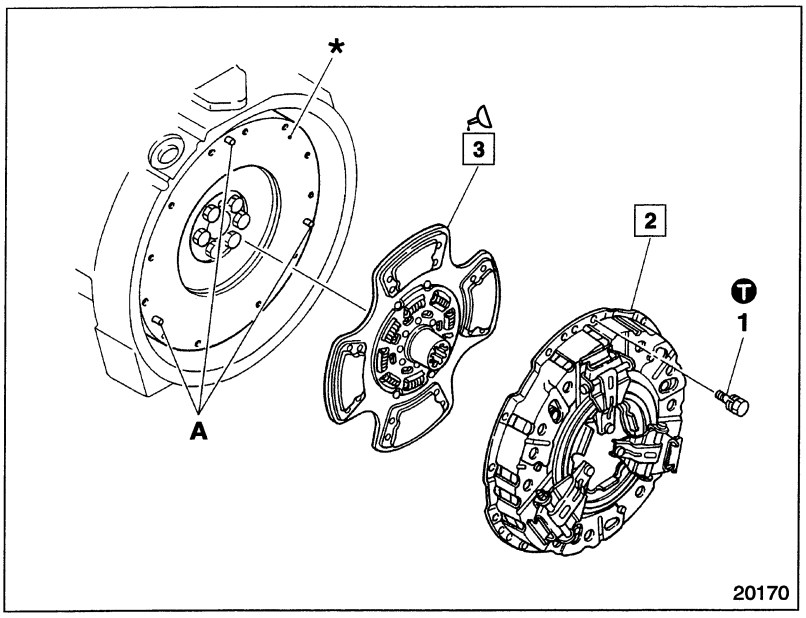

● **Removal sequence**

1 Bolt
2 Clutch cover assembly
3 Clutch disc

*** :** Flywheel Gr 11
A : Positioning pins (three points)

WARNING

Be careful when you handle clutch cover assembly 2 because it is rather heavy.

● **Installation sequence**

Follow the removal sequence in reverse.

CAUTION

Be careful not to get oily substances on clutch disc 3 surfaces because this will cause the clutch to slip.

Service standards

Unit : mm {in.}

Location	Maintenance item		Standard value	Limit	Remedy
2	Flatness of pressure plate		0.13 {0.005} or less	0.6 {0.024}	Replace
	Wear amount of pressure plate (Measured at specified positions)		—	0.4 {0.016}	Replace
	Heights of release lever uneven		0.89 {0.035} or less	1.78 {0.07}	Replace
3	Clutch disc	Radial runout	1.2 {0.047} or less	—	Replace
		Lateral runout	1.2 {0.047} or less	1.8 {0.071}	Replace
		Play in rotation of spline	0.05 to 0.23 {0.0020 to 0.0091}	0.5 {0.020}	Replace
		Depth from facing surface to cup	1.27 {0.05}	{0.2}	Replace

Tightening torque

Unit : N·m {lbf.ft, kgf·m}

Location	Parts to be tightened	Tightening torque	Remarks
1	Bolt (Clutch cover assembly mounting)	17 to 25 {12 to 19, 1.7 to 2.6}	—

Lubricant

Location	Points of application	Kinds	Quantity
3	Spline of clutch disc	Molybdenum disulfide grease [NLGI No.2 (Li soap)]	3 to 5 g {0.11 to 0.18 oz}

Special tools

Unit : mm {in.}

Location	Tool name and shape	Part No.	Application
2	Ship block 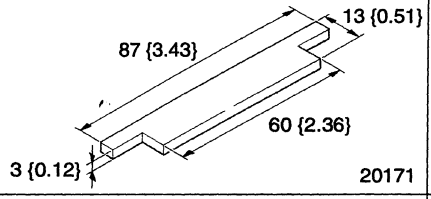	MH063407	Removal and installation of clutch cover assembly
2, 3	Clutch alignment arbor 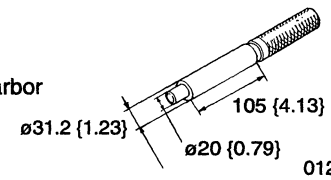	MH063406	Holds clutch disc

◆ Service procedure

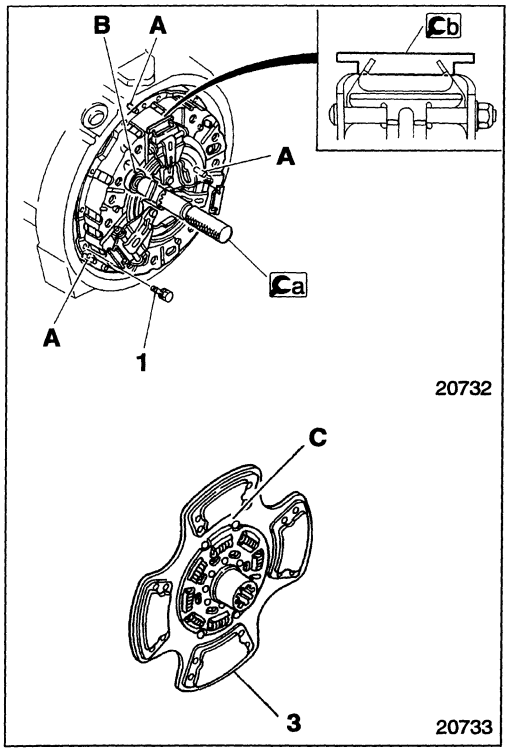

2 Clutch cover assembly

[Removal]

- Insert Ca clutch alignment arbor in flywheel pilot bearing **B** to hold clutch disc **3**.
- Insert Cb ship block in clutch cover assembly **2**, then remove bolt **1**.
- For installation, follow the removal sequence in reverse.
- Install clutch disc **3** so that part No. **C** is visible.
- Tighten bolts **1** gradually, in diagonal order, to specified torque.

CAUTION ⚠

- **Beware, if you do not use Cb ship blocks (three points) to remove bolt 1, the force of the belle spring might push out pressure plate and release lever damaging the strap plate. It might even come apart from knock pin A and drop off.**
- **Remember to remove ship blocks after installation (three points). If the ship blocks are left on, the clutch will not engage.**

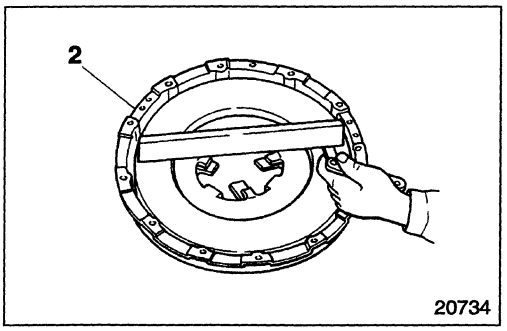

[Flatness of pressure plate]

If the measured value is higher than the limit, replace clutch cover assembly **2**.

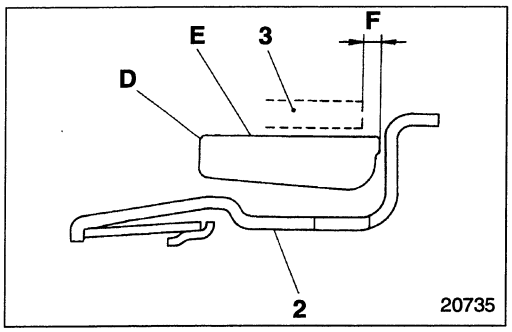

[Wear amount of pressure plate]

- To check clutch cover assembly **2** pressure plate **D** for wear, measure the amount of wear on friction surface **E** according to the following procedure. If the measured value is higher than the limit, replace the clutch cover assembly.

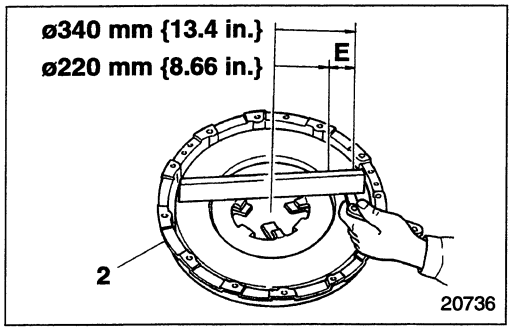

- Measure the clearance between datum face **F** (area not in contact with clutch disc **3**) and friction surface **E** (area as illustrated). The measured value represents the amount of wear.

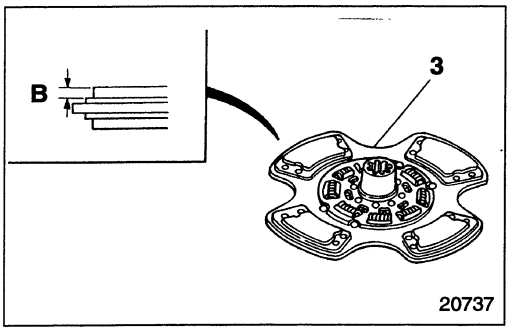

3 Clutch disc

(1) Height of facing

Measure dimension **B** as illustrated.
If the measured value does not conform to the limit, replace clutch disc **3**.

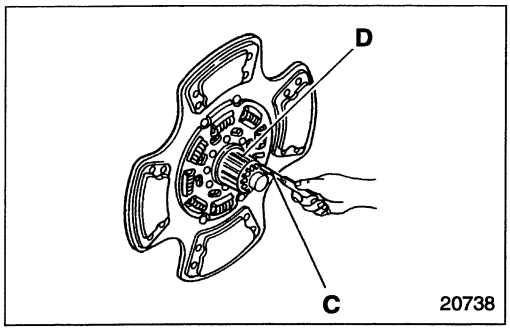

(2) Play in direction of revolution

- Reshape feeler gauge **C** for insertion into drive pinion spline **D**, and measure play.
- If the measured value is higher than the limit, replace clutch disc **3** or the drive pinion.
- Carry out the same measurement on new clutch disc **3**. If the measured value is higher than the limit, replace the drive pinion.

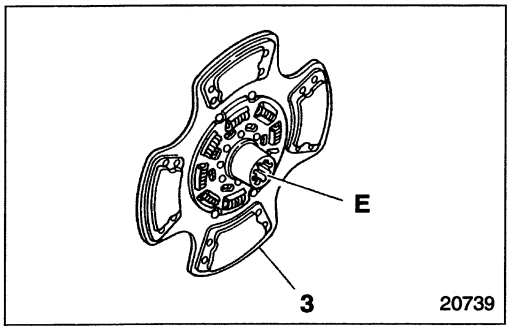

(3) Applying grease

Apply grease evenly to spline **E** and the entire tooth surface of clutch disc **3**. Apply grease to the grease groove of the spline up to its large diameter.

CAUTION⚠

Be careful not to apply too much grease because excessive grease causes grease leakage from spline E and makes the clutch slippery.

MEMO

SPECIFICATIONS ('97 MODEL)

SPECIFICATIONS

Item / Vehicle model	Tire size	Air pressure kPa {Psi, kgf/cm²}		Application wheel
		Front	Rear	
FK617	9R22.5-12PR	750 {105, 7.50}	675 {95, 6.75}	22.5x6.75-152-12
FM617	11R22.5-14PR	750 {105, 7.50}	675 {95, 6.75}	22.5x7.50-162-13
FM657	11R22.5-14PR	750 {105, 7.50}	675 {95, 6.75}	22.5x7.50-162-13

31-2 ← ('96 model)

< Single tire '97 model >

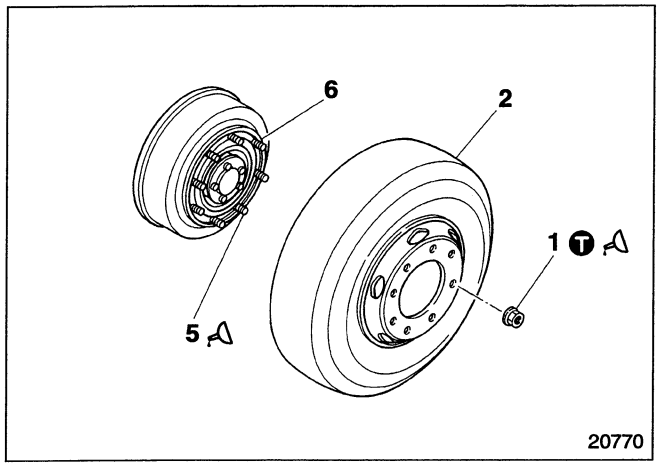

< Double tire '97 model >

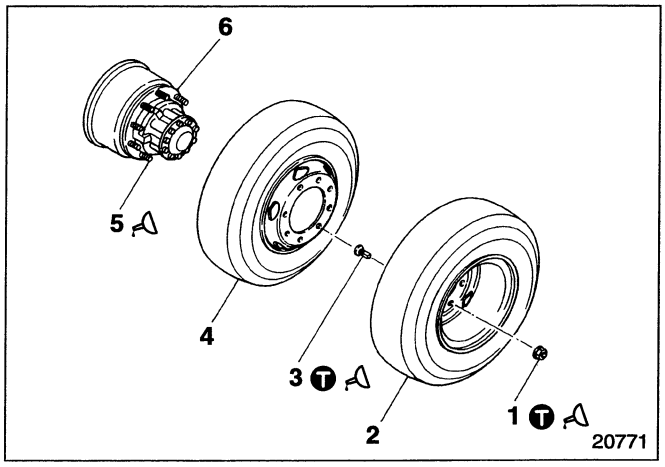

31-4 ← ('96 model)

Service standards ('97 model)

Unit : mm {in.}

Location	Maintenance item		Standard value	Limit	Remedy
1	Horizontal deflection of tire (When assembled)		3.5 {0.14} or less	—	—
2	Disc wheel < 22.5×6.75-152-12 >	Flatness	0.2 {0.0079} or less	—	—
		Horizontal deflection	2.0 {0.079} or less	—	—
		Vertical deflection	1.8 {0.071} or less	—	—
	Disc wheel < 22.5×7.50-162-13 >	Flatness	0.2 {0.0079} or less	—	—
		Horizontal deflection	2.0 {0.079} or less	—	—
		Vertical deflection	1.8 {0.071} or less	—	—

31-6 ← ('96 model)

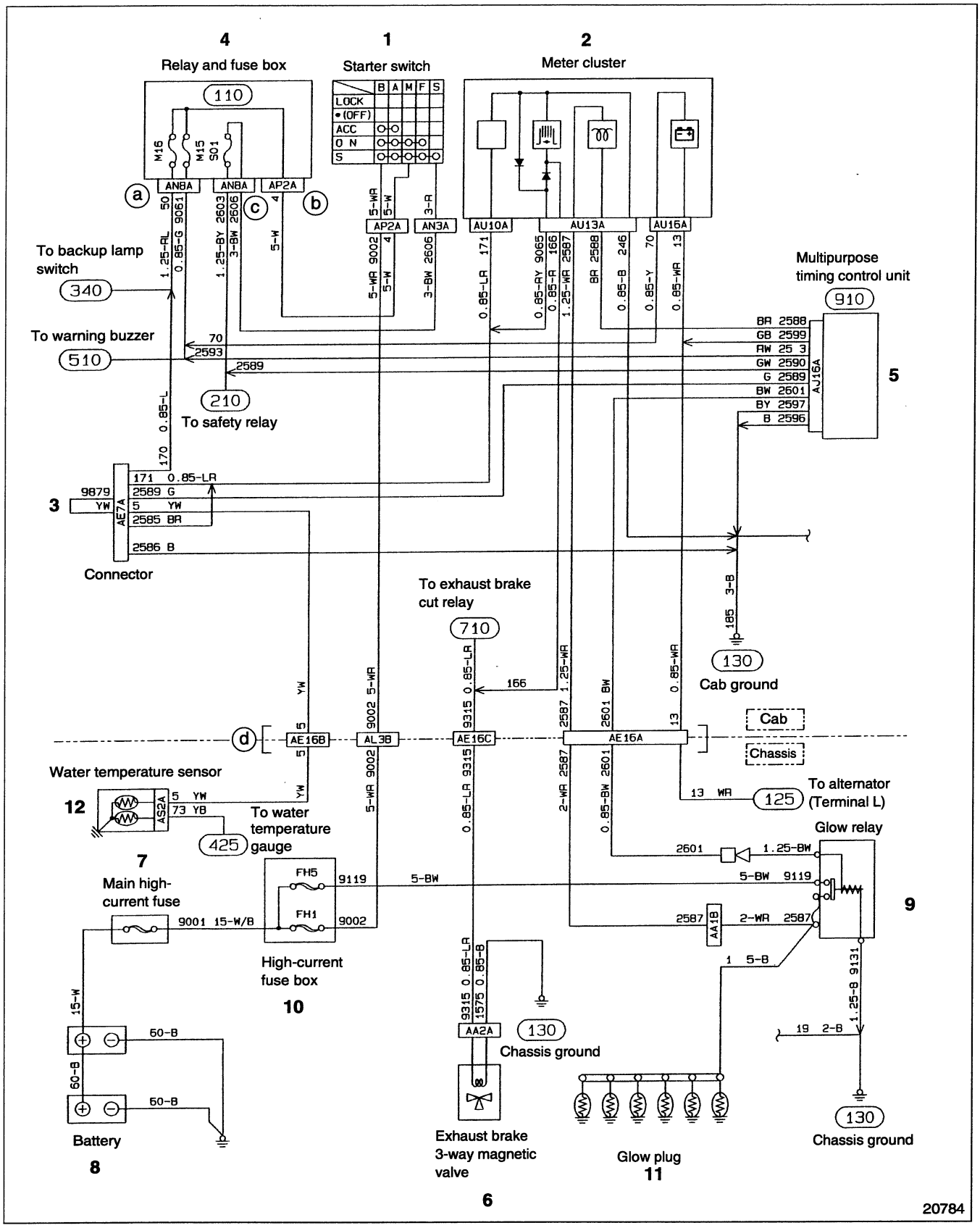

54-2-42 ← ('96 model)

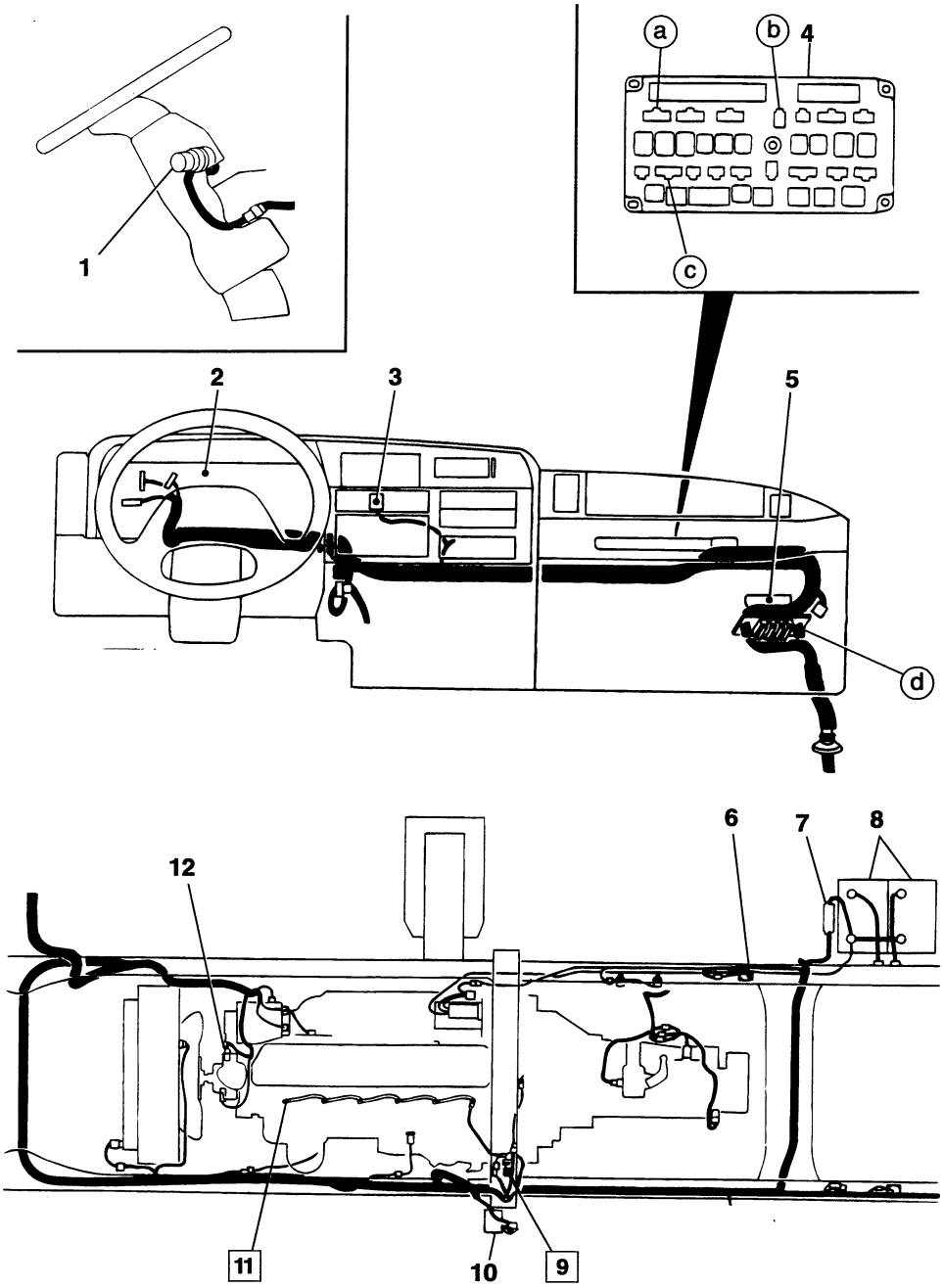

12865

1 Starter switch 🕮 (210)
2 Meter cluster 🕮 (401)
3 Connector
4 Relay and fuse box 🕮 (104)
5 Multipurpose timing control unit 🕮 (604)
6 Exhaust brake 3-way magnetic valve 🕮 (701)
7 Main high-current fuse 🕮 (104)
8 Battery 🕮 (101)
9 Glow relay
10 High-current fuse box 🕮 (104)
11 Glow plug
12 Water temperature sensor 🕮 (801)

('96 model) → *54-2-43*

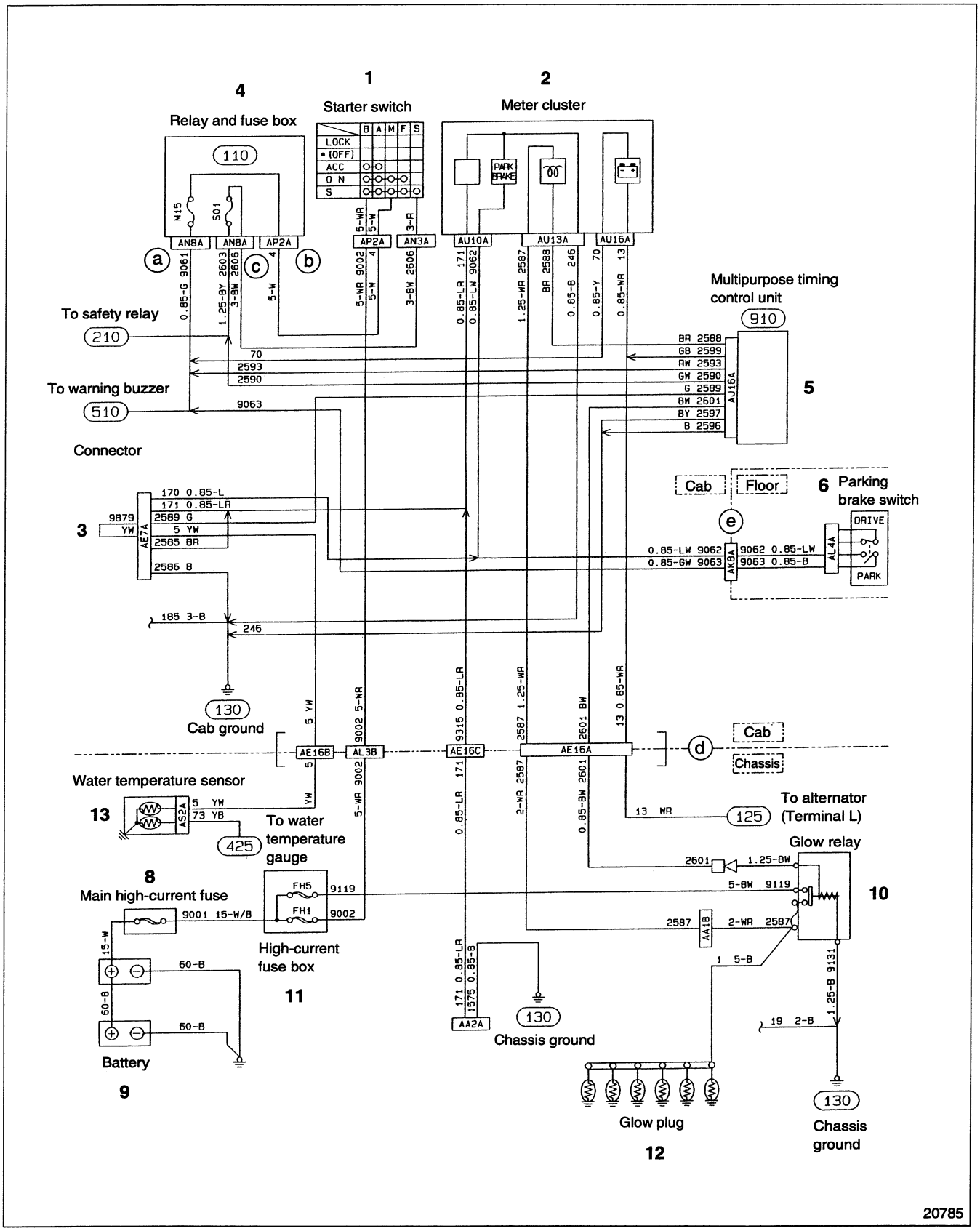

20785

54-2-46 ← ('96 model)

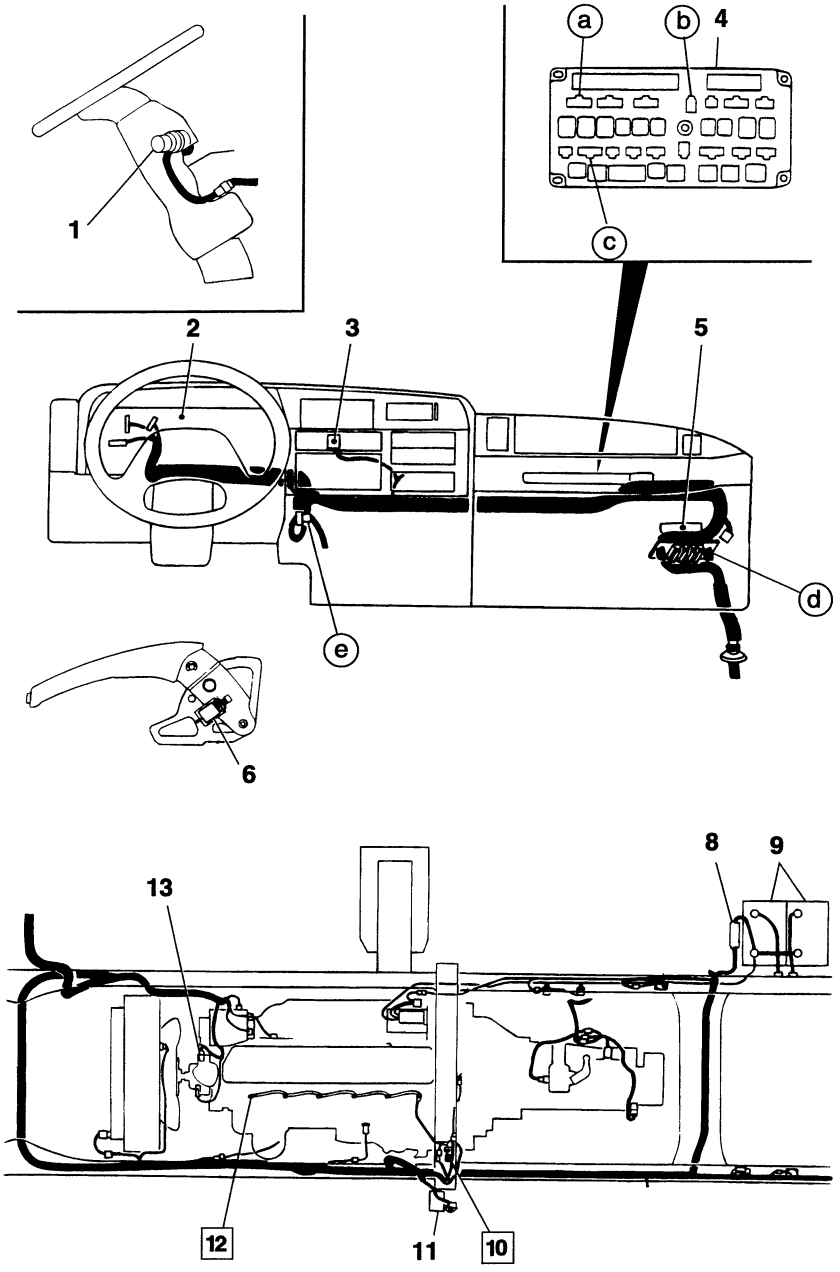

1 Starter switch 🕮 (210)
2 Meter cluster 🕮 (401)
3 Connector
4 Relay and fuse box 🕮 (104)
5 Multipurpose timing control unit 🕮 (604)
6 Parking brake switch 🕮 (510)
8 Main high-current fuse 🕮 (104)
9 Battery 🕮 (101)
10 Glow relay
11 High-current fuse box 🕮 (104)
12 Glow plug
13 Water temperature sensor 🕮 (801)

('96 model) → *54-2-47*

MITSUBISHI
FUSO

FK.FM
Service Manual

Group 00
General

Table of Contents

BACK

HOME

MITSUBISHI FUSO TRUCK OF AMERICA, Inc.

Pub No. TWME9503-00

GROUP 00 GENERAL

MODEL CODING SYSTEM 2
POWER TRAIN TABLE 3
CHASSIS NUMBER AND ENGINE NUMBER 4
POWER TRAIN LABEL 4
VEHICLE IDENTIFICATION NUMBER 5
PRECAUTIONS FOR MAINTENANCE OPERATION 6
TABLE OF STANDARD TIGHTENING TORQUES 18
CONNECTOR CONFIGURATION CHART 22

MODEL CODING SYSTEM

Equipment Model Code

Equipment name	Model description	Code description
Engine	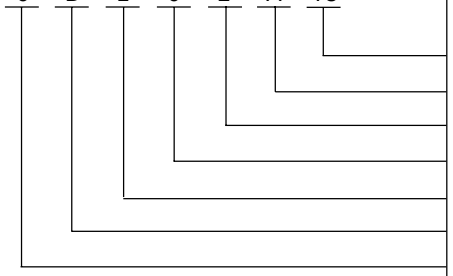	With turbocharger Stands for automobile Remodeling sequence Version number Series number Stands for diesel engine No. of cylinders (6 : Six cylinders) } These are omitted in the Service Manual
Clutch	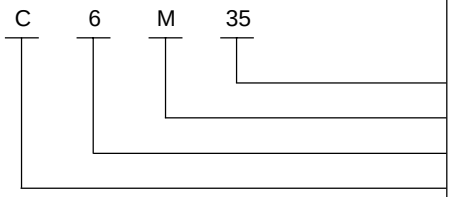	Disc outer diameter Facing material (M : Cera-metallic) Loading capacity of major type (tonnage) Stands for clutch
Transmission	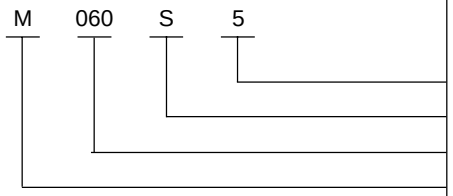	No. of forward speeds Meshing (S : Synchromesh, A : Automatic) Loading capacity of major type (tonnage) Stands for transmission
	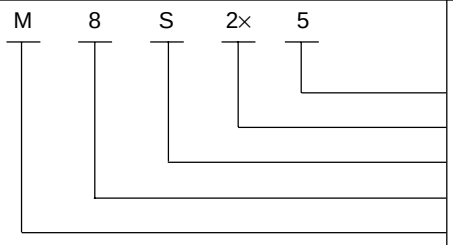	No. of forward speeds High-and-low two step selection Meshing (S : Synchromesh) Typical weight of vehicle in which the transmission is installed Stands for transmission
Propeller shaft	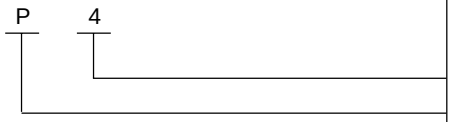	Loading capacity of major type (tonnage) Stands for propeller shaft
Reduction and differential	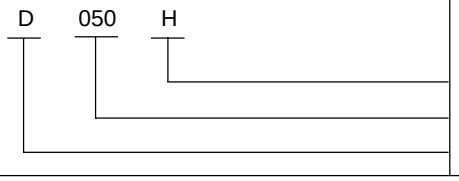	Teeth shape (H : hypoid gear) Loading capacity of major type (tonnage) Stands for reduction and differential

POWER TRAIN TABLE

Model	Engine model	Clutch model	Transmission model	Propeller shaft	Rear axle model	Final reduction and gear ratio
FK617H, J, K, L G.V.W. 10430 kg {23000 lb}	6D16T3 200 HP/2600 rpm 434 lbf.ft/1600 rpm (SAE, Gross)	C6M35	M060S5 6.875/1.000	P4	R050T(M)	D050H 4.444
FK617K, L G.V.W. 10430 kg {23000 lb}	6D16T4 190 HP/2600 rpm 408 lbf.ft/1600 rpm (SAE, Gross)	Torque converter (TC290-1.72)	M4A4 (Allison AT542) 3.454/1.000			D050H 4.625
FM617J, L, M, N G.V.W. 11790 kg {25995 lb}	6D16T3 200 HP/2600 rpm 434 lbf.ft/1600 rpm (SAE, Gross)	C6M35	M060S6 8.064/1.000	P8	R060T	D8H 4.625
	6D16T4 190 HP/2600 rpm 408 lbf.ft/1600 rpm (SAE, Gross)	Torque converter (TC290-1.72)	M4A4 (Allison AT545) 3.454/1.000			D8H 4.875
FM617J, L, M, N G.V.W. 13610 kg {30000 lb}	6D16T3 200 HP/2600 rpm 434 lbf.ft/1600 rpm (SAE, Gross)	C6M35	M060S6 8.064/1.000			
FM617L, M, N G.V.W. 13610 kg {30000 lb}	6D16T4 190 HP/2600 rpm 408 lbf.ft/1600 rpm (SAE, Gross)	Torque converter (TC290-1.72)	M4A4 (Allison AT545) 3.454/1.000			D8H 5.571
FM657J, L, M, N G.V.W. 14920 kg {32900 lb}	6D16T3 200 HP/2600 rpm 434 lbf.ft/1600 rpm (SAE, Gross)	C6M35	M060S6 8.064/1.000			D8H 4.875
	6D16T2 230 HP/2600 rpm 521 lbf.ft/1600 rpm (SAE, Gross)	C7M38	M070S6 8.064/1.000	P10		D8H 4.625
			M8S2×5 10.060/1.000			

CHASSIS NUMBER AND ENGINE NUMBER/POWER TRAIN LABEL

CHASSIS NUMBER AND ENGINE NUMBER

The serial numbers for chassis and engines are assigned to the respective vehicles and engines in manufacturing sequence: each vehicle and engine has its own number. These numbers are required for registration and incidental inspection of the vehicle. Please do not fail to mention these numbers to the dealers when ordering spare parts.

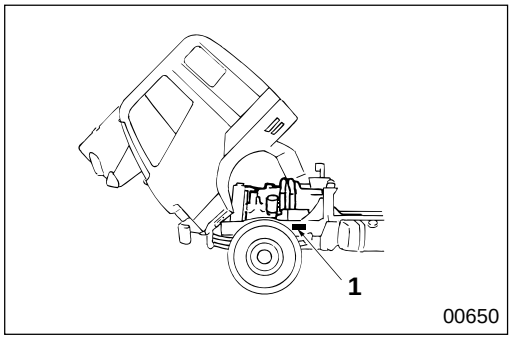

Chassis number

Chassis number **1** is punch-marked on the frame by the left-side front wheel.

Example : FK617H–□□□□□□

Vehicle model

Chassis number

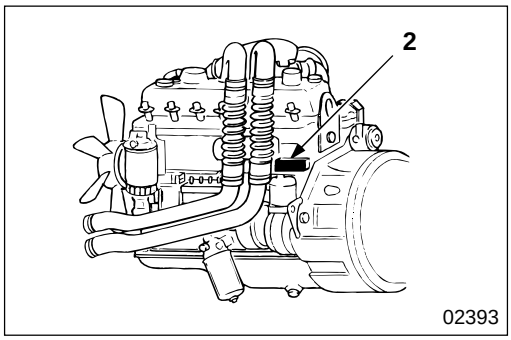

Engine number

Engine number **2** is punch-marked on the left of the crankcase.

Example : 6D16–□□□□□□

Engine number

Engine model

POWER TRAIN LABEL

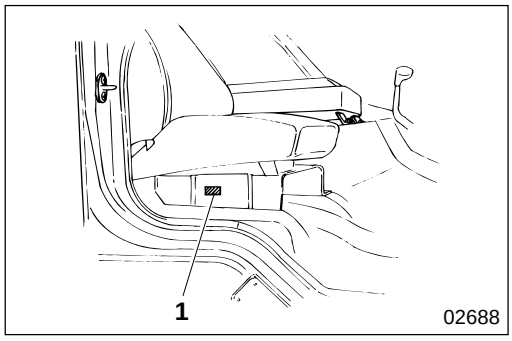

Power train label **1** located in the position illustrated indicates the vehicle model, chassis number and information relevant to the vehicle's power transmission components.

VEHICLE IDENTIFICATION NUMBER

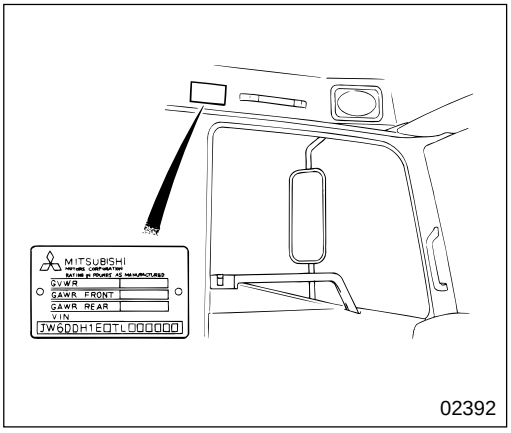

The vehicle identification number is punch-marked on the plate, which is attached in the position as illustrated.
The vehicle identification number consists of a 17-digit set of alphanumeric characters. Each digit represents the following specifications.

J W 6 D D H 1 E □ T L □ □ □ □ □ □

① ② ③ ④ ⑤ ⑥ ⑦ ⑧ ⑨ ⑩ ⑪ ⑫

①	Country	J :	Japan
②	Make	W :	Mitsubishi Fuso
③	Vehicle type	6 :	Incomplete Vehicle
④	Gross vehicle weight/Brake system	C :	7258 to 8845 kg {16001 to 19500 lbs} /Air over hydraulic
		D :	8851 to 11800 kg {19501 to 26000 lbs}/Air over hydraulic
		E :	11801 to 14970 kg {26001 to 33000 lbs}/Air over hydraulic
		F :	11801 to 14970 kg {26001 to 33000 lbs}/Full air
⑤	Line	D :	FK617
		E :	FM617
		F :	FM657
⑥	Series (Wheelbase)	C :	2.6 to 2.9 m {8.6 to 9.5 ft.}
		E :	3.2 to 3.5 m {10.5 to 11.5 ft.}
		G :	3.8 to 4.1 m {12.5 to 13.4 ft.}
		K :	4.7 to 5.0 m {14.5 to 16.4 ft.}
		L :	5.0 to 5.3 m {16.4 to 17.4 ft.}
		M :	5.3 to 5.6 m {17.4 to 18.4 ft.}
		N :	5.6 to 5.9 m {18.4 to 19 ft.}
⑦	Cab chassis type	1 :	Chassis cab
⑧	Engine	E :	460 CID Diesel turbocharged and charge air cooled
⑨	Check digit		
⑩	Model year	T :	1996
⑪	Plant	K :	Kawasaki-1
		L :	Kawasaki-2
⑫	Plant sequential number		

PRECAUTIONS FOR MAINTENANCE OPERATION

In order to determine the condition of the vehicle adequately, attend the vehicle beforehand to find and keep record of the accumulated mileage, operating condition, what the customer's demand is, and other information that may be necessary. Prepare the steps to be taken and perform efficient and wasteless maintenance procedure.

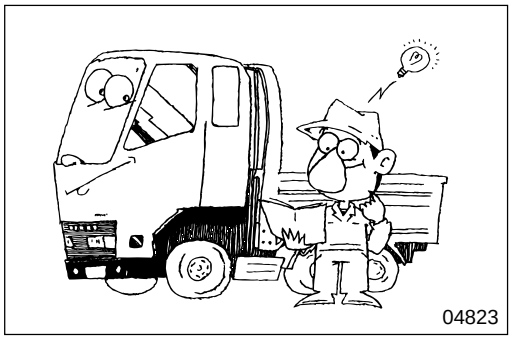
04823

Determine where the fault exists and check for the cause to see whether removal or disassembly of the part is necessary. Then follow the procedure specified by this manual.

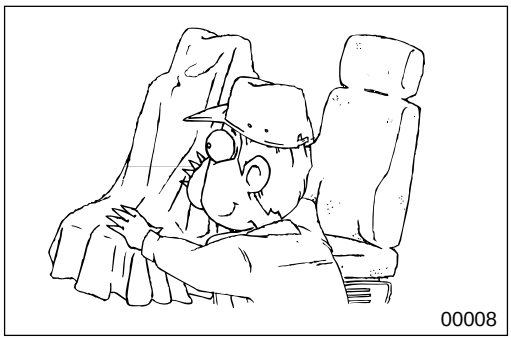
00008

Perform maintenance work at a level area.
Prepare the following.
- To prevent the seats, upholstery, floor and bodywork from being spoiled or scratched, cover with workshop sheet cover(s).

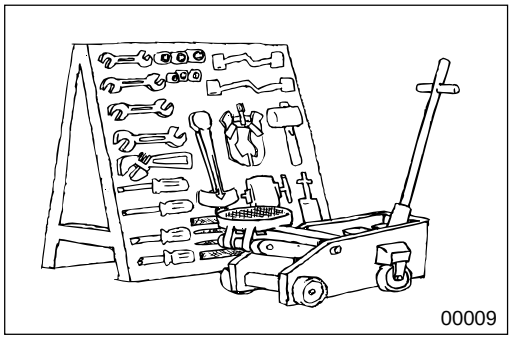
00009

- Prepare general and special tools necessary for the maintenance work.

WARNING⚠

Do not attempt to use tools other than special tools where use of special tools is specified in this manual. This will avoid injury or damage.

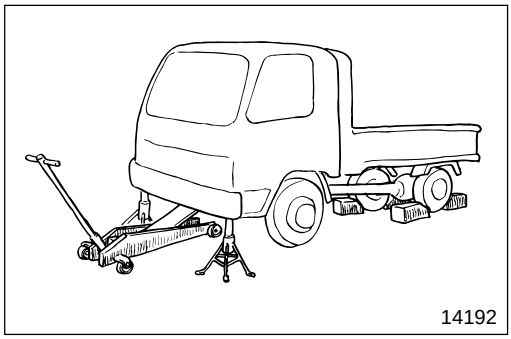
14192

When jacking up the vehicle to work under the vehicle, carry out the following preparatory work:
- Chock the wheels on both sides.
- Jack up the vehicle using a garage jack.
- Support the frame on rigid racks.

WARNING⚠

- **Chock the wheels securely so the vehicle does not move.**
- **Do not remove the chocks until the entire operation is completed.**
- **Supporting a vehicle on a garage jack only is extremely dangerous, so always support the frame on rigid racks.**
- **Leave the garage jack and rigid racks in place until the entire operation is completed. Never remove them during the operation.**

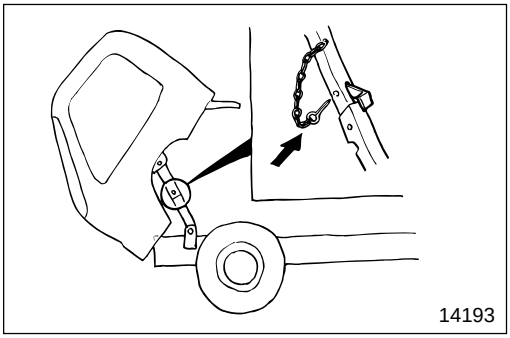

When tilting the cab, be sure to insert the safety pin into the cab stay so that the cab stay remains locked and is not released when the cab is tilted.

Pay special attention to safety when removing or installing heavy items such as engines, transmissions and axles.

When lifting up heavy items using cables, pay special attention to the following points:

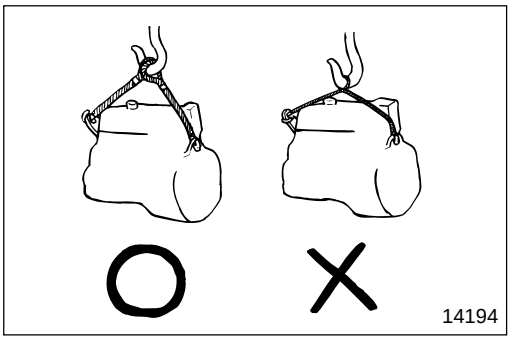

- Check the mass of the item to be lifted and use a cable capable of lifting that mass.

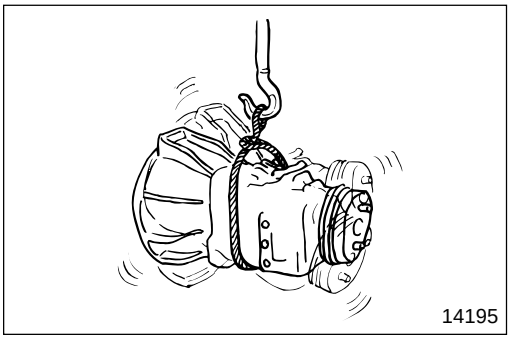

- If you do not have the specified lifting hanger, secure the item using cable taking the point-of-balance of the item into consideration.

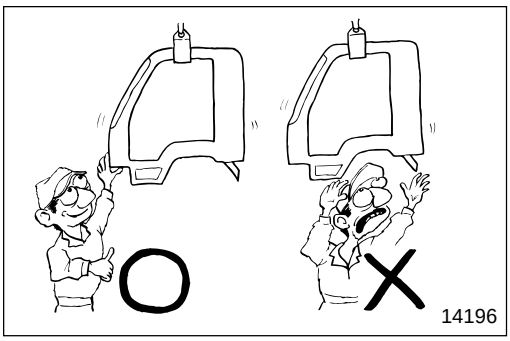

- You must work in a position where you will not be injured even if the cable comes undone and the lifted item falls.

PRECAUTIONS FOR MAINTENANCE OPERATION

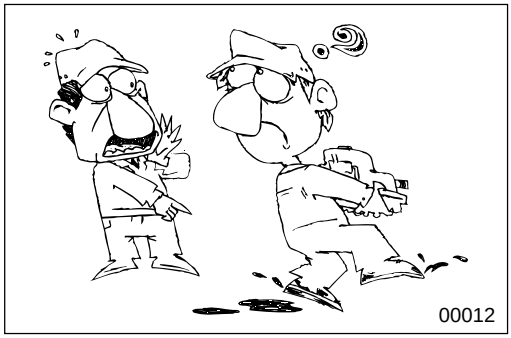

Be particularly careful not to work in shoes that have oily soles and are slippery. When working as a team of two or more, arrange signals in advance and keep confirming safety. Be careful not to accidentally bump switches or levers.

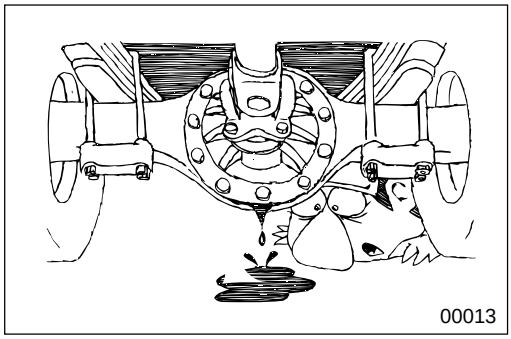

Check for oil leakage before cleaning the area having the fault otherwise you might miss detecting the leakage.

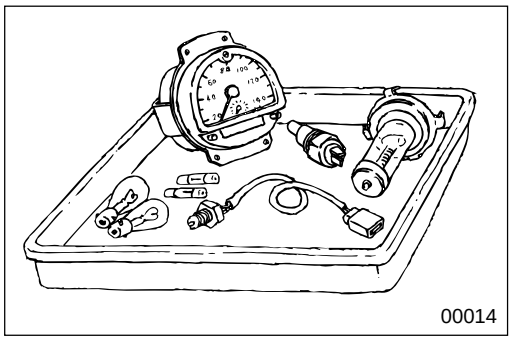

Prepare replacement part(s) beforehand.

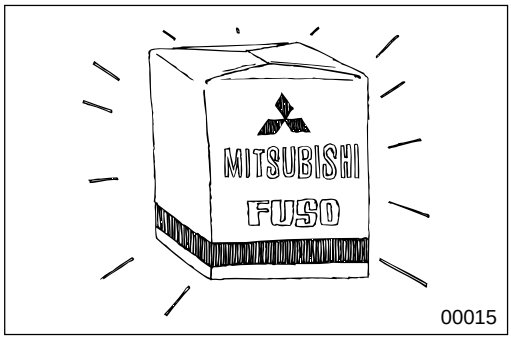

Replace oil seals, packing, O-rings and other rubber parts; gaskets and split pins with new parts whenever any of them has been removed. Use only genuine MITSUBISHI replacement parts.

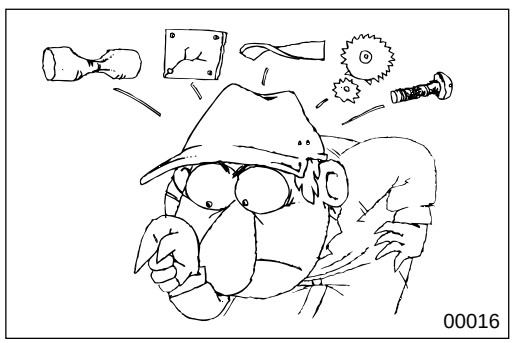

On disassembly, visually inspect all parts for wear and tear, cracks, damage, deformation, degradation, rust, corrosion, smoothness in rotation, fatigue, clogging and any other possible defect.

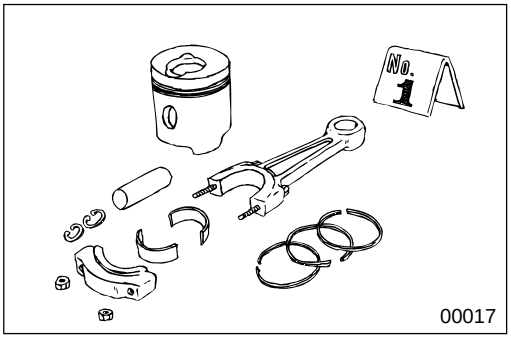

00017

Put alignment marks on part combinations before disassembly and arrange the disassembled parts neatly. This will help avoid mismating of the parts later.
Put the alignment marks, punch marks, etc. where performance and appearance will not be affected.
Cover the area left open after removal of parts to keep it free from dust.

CAUTION⚠

- **Take care to avoid mixing up numerous parts, similar parts, left and right, etc.**
- **Keep new parts for replacement and original (removed) parts separate.**

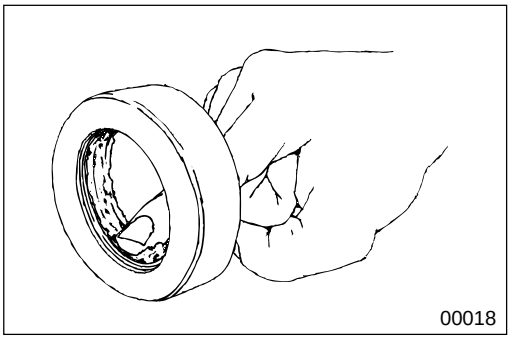
00018

Apply the specified oil or grease to U-packings, oil seals, dust seals and bearings during assembly.
Use only the specified oil, grease, etc. for lubricant, remove the excess immediately after application with a piece of waste, etc.

CAUTION⚠

When the specified lubricant, fluid and sealant is not available, you may use an equivalent.

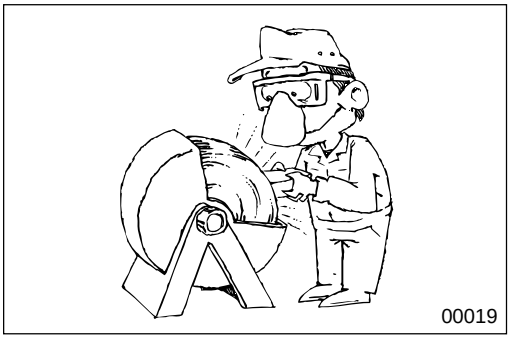
00019

Wear goggles when using a grinder or welder. Pay full attention to safety by wearing gloves when necessary. Watch out for sharp edges, etc. that might injure your hands or fingers.

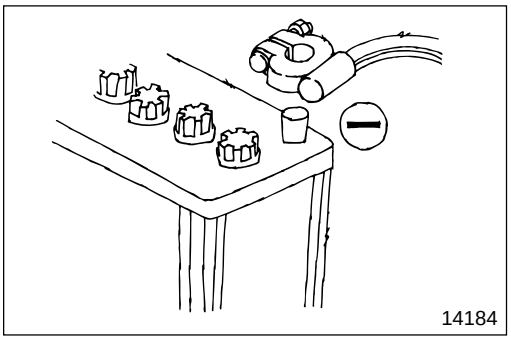
14184

Before carrying out maintenance work on the electric system, disconnect the negative terminals of the batteries to prevent them from short-circuiting and burning-out.

CAUTION⚠

Be sure to turn starter and lighting switches, etc. off before disconnecting or connecting battery terminals, because the semiconductors can be damaged.

PRECAUTIONS FOR MAINTENANCE OPERATION

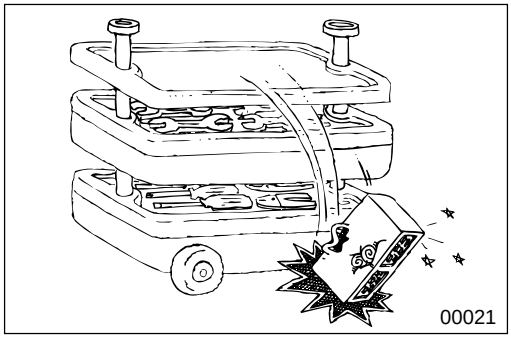

Take care when handling sensors, relays, etc. which are vulnerable to shock and heat. Do not attempt to remove the cover from, or apply paint to, the electronic control unit.

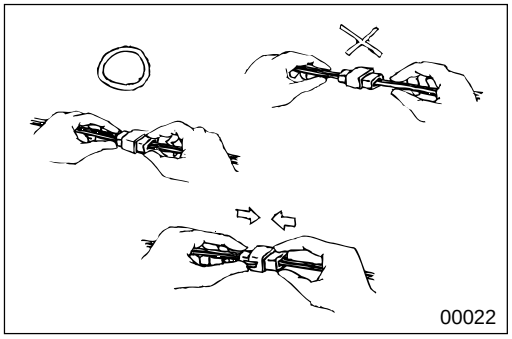

Pull the connector, and not the harness lead, to separate connectors. To separate a lock-type connector, first push toward arrow mark. To reconnect a lock-type connector, press the separated parts until they click together.

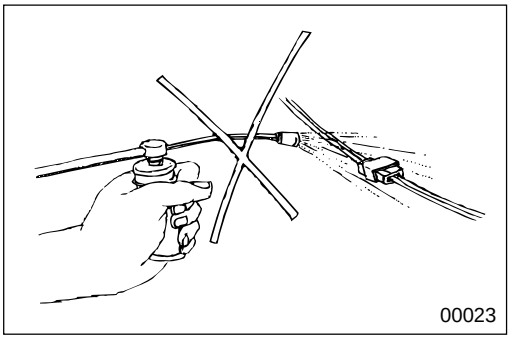

When washing the vehicle, cover the electric system parts and instruments with waterproof material beforehand (Cover with vinyl sheet or the like). Keep water away from harness wire connectors and sensors. If any of them should get wet, wipe them off immediately.

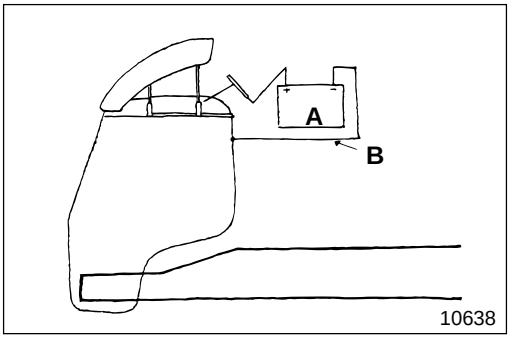

When using an electric welder, such electronic parts that are directly connected to the batteries might be damaged due to the flow of current from the welder that flows through the negative circuit. Parts that have switches might be subject to the same danger if the switches are left on. Therefore, do not fail to observe the following.

A : Welder

B : Connect the negative terminal of the welder as near as possible to the area that is to be welded.

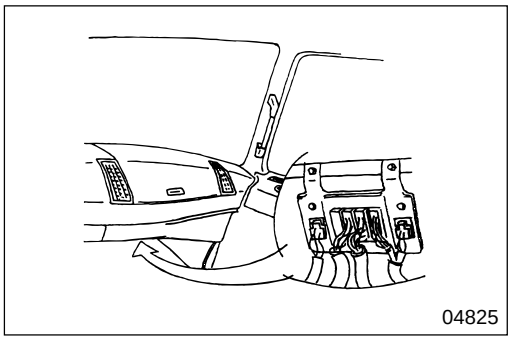

- Disconnect the negative terminals of batteries.
- Disconnect connections between the cab harness wires and the chassis harness wires.

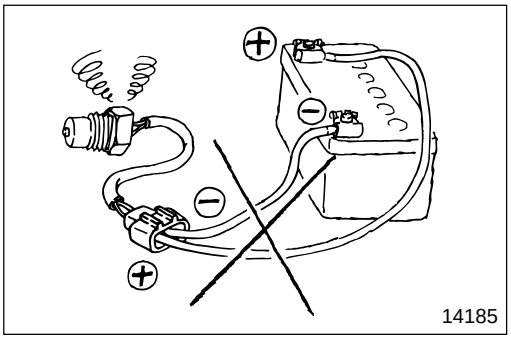

To apply voltage for testing, check that the positive and negative cables are connected properly, then increase voltage gradually from 0 volt. Do not apply voltage higher than the specified value.
In particular, pay close attention to the electronic control unit and sensors, since they are not always fed the battery voltage.

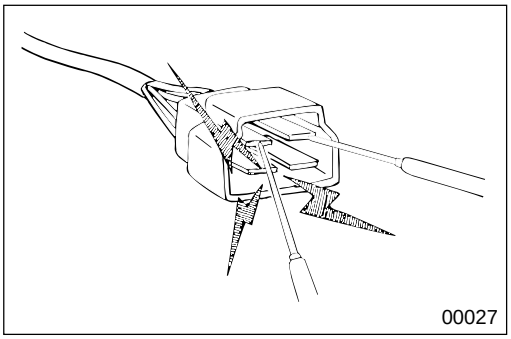

When using testers or the like for continuity tests, be careful not to allow test probes to touch the wrong terminals.

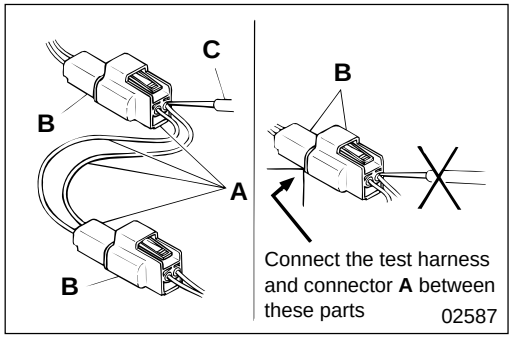

Measurement procedures using connectors

- **Test with connectors engaged (continuity through circuit obtained)**

  < Waterproof connector >

  Prepare a test harness and connectors **A**, then connect if between the two parts of harness **B** that is to be tested. Check the circuit by touching test probe **C** to the test connector.

  Never insert the test probe from the harness side of the waterproof connection, or waterproof performance might be diminished causing corrosion of the connector.

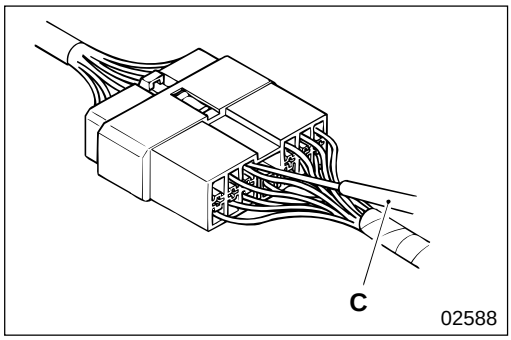

< Non-waterproof connector >

Insert test probe **C** from the harness side of the connector. Where control units, etc. have connectors that are too small to accept the test probe, do not force the test probe into them.

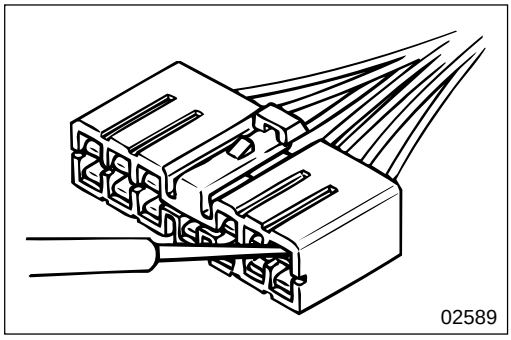

- **Test with connectors disengaged**

  Using female pins

  Insert a test probe into a terminal. However, do not force the probe into the terminal, or it will cause a poor contact.

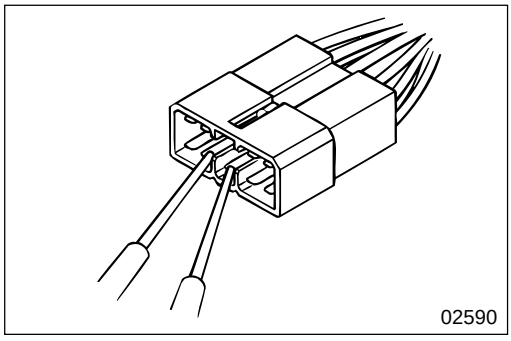

Using male pins

Touch the pins directly using test probes.

CAUTION⚠

Be sure that you do not short circuit the connector pins when you use the test probe because this could damage the internal circuit of the electronic control unit.

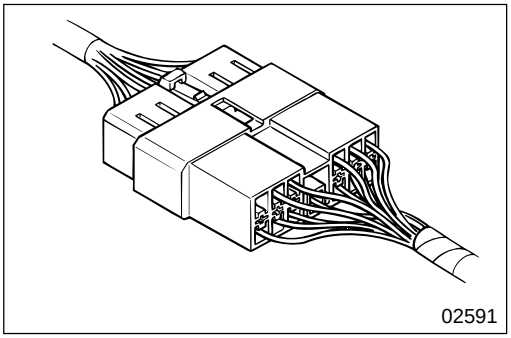

Connector inspection procedures

- **Visual inspection**

  Check for loose connection and poor engagement.

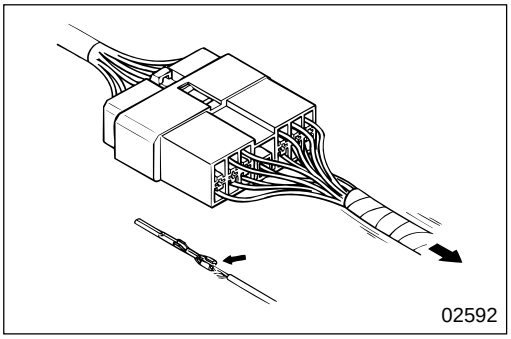

Check if harnesses are broken by pulling gently around the terminals.

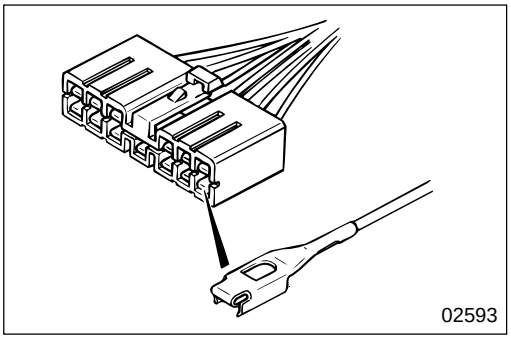

Check for a decrease in contact pressure between the male and female terminals.

Check for poor contact caused by connector pins having fallen out, rusted terminals or foreign particles.

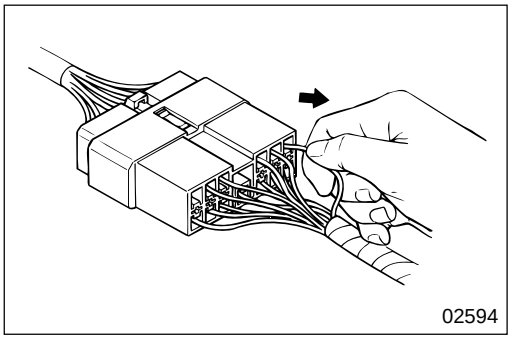

- **Connector pin fall out inspection**

  Damaged connector pin stoppers can cause poor engagement of the terminals (male and female pins) even if the connector body is secured, and might cause some pins to fall out. Check if the pins have fallen out from the connector by pulling each harness gently.

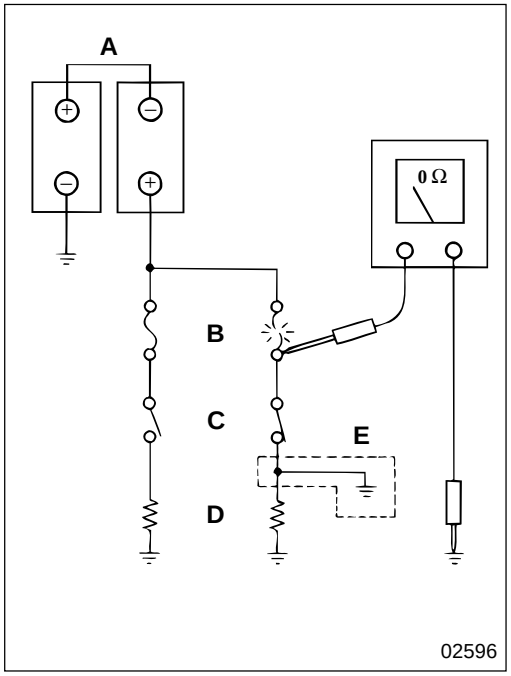

Inspection procedures for blown fuses

Remove fuse **B** and measure resistance between the loaded side of the fuse and ground.
Turn on all circuit switches (connected to the fuse). If the resistance value reading is approximately 0 Ω, a short has occurred between the switch and the loaded point. A value of other than zero may indicate that the fuse was blown by a temporary short but the short is no longer present.

The major causes of a short circuit are as follows:
- Harness stuck onto the vehicle body.
- Harness sheath damaged by friction or heat.
- Water in connectors or circuits.
- Mistakes (accidental short circuits)

  A : Battery
  B : Fuse
  C : Loaded switch
  D : Load
  E : Short circuit

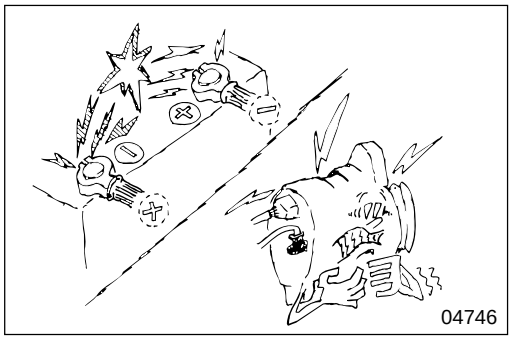

Precautions for handling alternator

When servicing the alternator, pay attention to the following :
- Do not connect the alternator with battery polarities reversed.
  If the alternator is connected with reversed polarities, a large current flow from the battery to the alternator occurs, and the diode or regulator might be damaged.

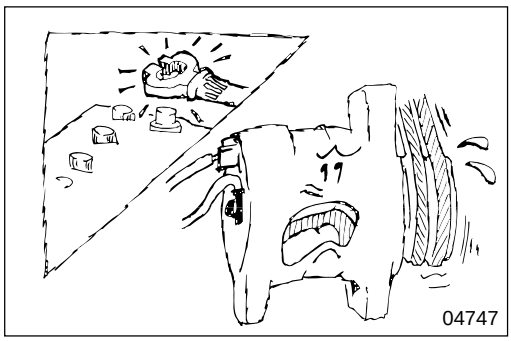

- While the engine is running, do not remove the battery terminals. If the battery terminals are removed at that time, a surge voltage is generated and the diode or regulator might be weakened.

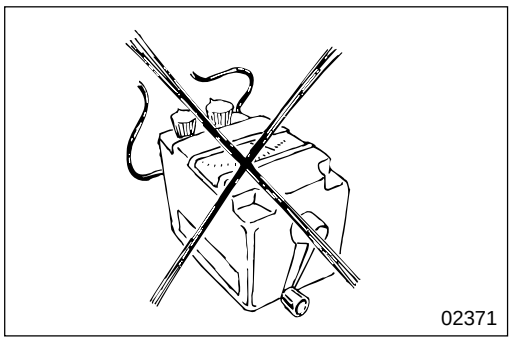

- Do not use a high-voltage tester such as a megger for inspection.
  If a high-voltage tester is used, the diode or regulator might be destroyed.

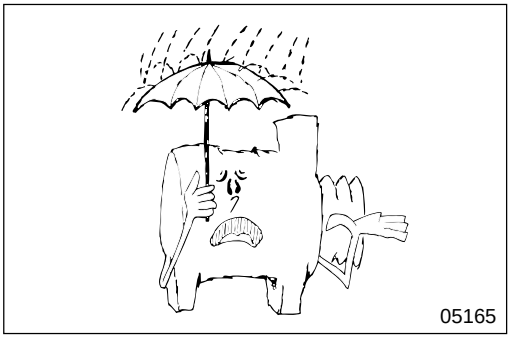

- Do not splash water over the alternator.
  If water is directly splashed over the alternator, individual components will be short-circuited and might be destroyed.

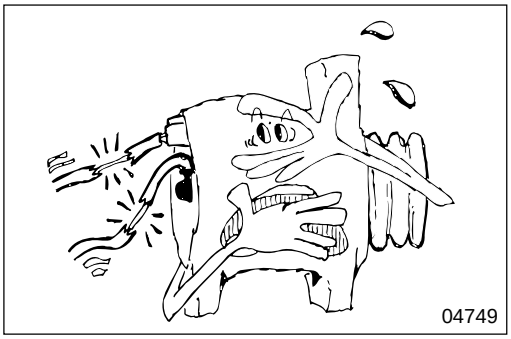

- Do not short-circuit terminal B and terminal L while running the alternator.
  If the terminals are short-circuited while the alternator is running, the diode trio might be destroyed.

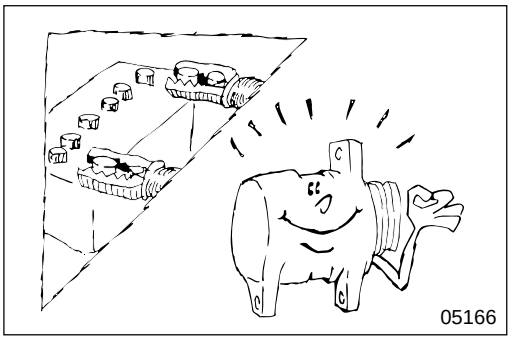

- Disconnect the battery terminals before quick-charging the battery. Quick-charging without disconnecting the battery terminals might damage the diode or regulator.

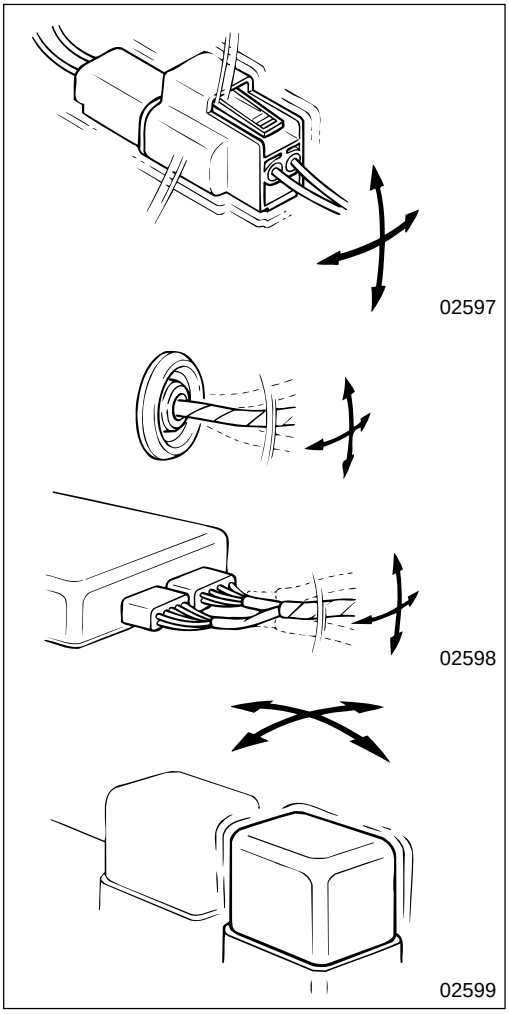

Measures for temporary faults

Temporary faults often occur under certain conditions. So identifying those conditions helps to find possible causes. To find the conditions under which temporary faults occurred, you need to reproduce the faults after interviewing customers in detail about actual driving conditions, weather, frequency of occurence and fault phenomena.
Then determine if the faults were caused by vibration, temperature or other possible elements depending on the actual conditions identified.
If vibration is suspected as a possible cause, inspect individual connectors as follows to check if the fault will occur:

- Shake the connector gently in all four directions of the arrows as illustrated.
- Shake the wiring harness gently in all four directions of the arrows as illustrated.
- Wiggle each sensor or piece of equipment by hand.
- Gently shake the wiring harnesses near movable parts such as suspensions.

The inspection subjects include possible causes related to the diagnosis code outputs and faults, as well as the connectors and other parts in the inspection procedure.

M E M O

TABLE OF STANDARD TIGHTENING TORQUES

- Use specified bolts and nuts and tighten them at specified torques according to the following table, unless otherwise specified.
- Threads and contact seats shall be dry.
- Where there is a difference in strength classification between the nut and bolt (or stud bolt), the torque specified for the bolt shall apply.

Hex-head Bolt and Stud Bolt

Unit : N·m {lbf.ft, kgf·m}

Strength classification	4 T		7 T		8 T	
Repre-sentation / Diameter symbol	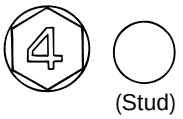 (Stud)		 (Stud)		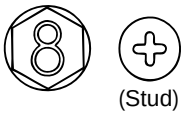 (Stud)	
M 5	2 to 3 {1.4 to 2.2, 0.2 to 0.3}	—	4 to 6 {2.9 to 4.3, 0.4 to 0.6}	—	5 to 7 {3.6 to 5.1, 0.5 to 0.7}	—
M 6	4 to 6 {2.9 to 4.3, 0.4 to 0.6}	—	7 to 11 {5.1 to 8.0, 0.7 to 1.1}	—	8 to 12 {5.8 to 8.7, 0.8 to 1.2}	—
M 8	9 to 14 {6.5 to 10, 0.9 to 1.4}	—	17 to 26 {12 to 19, 1.7 to 2.6}	—	20 to 29 {14 to 22, 2.0 to 3.0}	—
M 10	19 to 28 {14 to 20, 1.9 to 2.8}	18 to 26 {13 to 20, 1.8 to 2.7}	36 to 52 {25 to 40, 3.5 to 5.5}	33 to 49 {25 to 36, 3.5 to 5.0}	45 to 60 {33 to 43, 4.5 to 6.0}	41 to 59 {31 to 50, 4.3 to 6.9}
M 12	35 to 50 {25 to 36, 3.4 to 5.0}	31 to 46 {22 to 34, 3.1 to 4.7}	70 to 95 {51 to 69, 7.0 to 9.5}	65 to 85 {47 to 61, 6.5 to 8.5}	85 to 110 {61 to 80, 8.5 to 11}	75 to 100 {54 to 72, 7.5 to 10}
M 14	60 to 85 {43 to 61, 6.0 to 8.5}	55 to 75 {40 to 54, 5.5 to 7.5}	120 to 160 {87 to 115, 12 to 16}	110 to 140 {80 to 100, 11 to 14}	130 to 180 {94 to 130, 13 to 18}	120 to 160 {87 to 120, 12 to 17}
M 16	90 to 130 {69 to 94, 9.5 to 13}	90 to 120 {65 to 87, 9.0 to 12}	180 to 240 {130 to 175, 18 to 24}	160 to 220 {115 to 160, 16 to 22}	200 to 270 {145 to 195, 20 to 27}	190 to 260 {135 to 190, 19 to 26}
M 18	140 to 190 {100 to 135, 14 to 19}	120 to 160 {87 to 115, 12 to 16}	260 to 340 {180 to 255, 25 to 35}	220 to 290 {160 to 215, 22 to 30}	290 to 390 {215 to 290, 30 to 40}	260 to 340 {190 to 255, 26 to 35}
M 20	190 to 260 {135 to 190, 19 to 26}	170 to 230 {120 to 165, 17 to 23}	350 to 470 {260 to 345, 36 to 48}	320 to 420 {230 to 310, 32 to 43}	410 to 550 {295 to 405, 41 to 56}	370 to 490 {265 to 360, 37 to 50}
M 22	260 to 340 {190 to 255, 26 to 35}	230 to 300 {165 to 225, 23 to 31}	470 to 640 {345 to 470, 48 to 65}	430 to 570 {310 to 420, 43 to 58}	550 to 740 {405 to 540, 56 to 75}	490 to 670 {360 to 490, 50 to 68}
M 24	340 to 450 {255 to 330, 34 to 46}	290 to 390 {210 to 290, 29 to 40}	630 to 840 {455 to 620, 63 to 86}	540 to 730 {395 to 535, 55 to 74}	730 to 980 {535 to 725, 74 to 100}	630 to 840 {460 to 620, 64 to 86}

Hex-head Flange Bolt

Unit : N·m {lbf.ft, kgf·m}

Strength classification	4 T		7 T		8 T	
Repre-sentation / Diameter symbol						
M 6	4 to 6 {2.9 to 4.3, 0.4 to 0.6}	—	8 to 12 {5.8 to 8.7, 0.8 to 1.2}	—	9 to 14 {6.5 to 10, 0.9 to 1.4}	—
M 8	10 to 15 {7.0 to 11, 1.0 to 1.5}	—	19 to 28 {14 to 20, 1.9 to 2.8}	—	22 to 32 {16 to 24, 2.2 to 3.3}	—
M 10	21 to 30 {15 to 22, 2.1 to 3.1}	20 to 28 {14 to 21, 1.9 to 2.9}	39 to 58 {28 to 43, 3.9 to 6.0}	37 to 53 {26 to 39, 3.6 to 5.4}	50 to 65 {36 to 47, 5.0 to 6.5}	45 to 65 {33 to 47, 4.5 to 6.5}
M 12	38 to 54 {27 to 40. 3.8 to 5.5}	35 to 51 {25 to 38, 3.4 to 5.2}	80 to 110 {58 to 80, 8.0 to 11}	70 to 95 {51 to 69, 7.0 to 9.5}	90 to 120 {65 to 87, 9.0 to 12}	85 to 110 {61 to 80, 8.5 to 11}

Hex-head Nut

Unit : N·m {lbf.ft, kgf·m}

Strength classification	4 T		6 T	
Representation / Diameter symbol			   	
	Standard screw	Coarse screw	Standard screw	Coarse screw
M 5	2 to 3 {1.4 to 2.2, 0.2 to 0.3}	—	4 to 6 {2.9 to 4.3, 0.4 to 0.6}	—
M 6	4 to 6 {2.9 to 4.3, 0.4 to 0.6}	—	7 to 11 {5.1 to 8.0, 0.7 to 1.1}	—
M 8	9 to 14 {6.5 to 10, 0.9 to 1.4}	—	17 to 26 {12 to 19, 1.7 to 2.6}	—
M 10	19 to 28 {14 to 20, 1.9 to 2.8}	18 to 26 {13 to 20, 1.8 to 2.7}	36 to 52 {25 to 40, 3.5 to 5.5}	33 to 49 {25 to 36, 3.5 to 5.0}
M 12	35 to 50 {25 to 36, 3.4 to 5.0}	31 to 46 {22 to 34, 3.1 to 4.7}	70 to 95 {51 to 69, 7.0 to 9.5}	65 to 85 {47 to 61, 6.5 to 8.5}
M 14	60 to 85 {43 to 61, 6.0 to 8.5}	55 to 75 {40 to 54, 5.5 to 7.5}	120 to 160 {87 to 115, 12 to 16}	110 to 140 {80 to 100, 11 to 14}
M 16	90 to 130 {69 to 94, 9.5 to 13}	90 to 120 {65 to 87, 9.0 to 12}	180 to 240 {130 to 175, 18 to 24}	160 to 220 {115 to 160, 16 to 22}
M 18	140 to 190 {100 to 135, 14 to 19}	120 to 160 {87 to 115, 12 to 16}	260 to 340 {180 to 255, 25 to 35}	220 to 290 {160 to 215, 22 to 30}
M 20	190 to 260 {135 to 190, 19 to 26}	170 to 230 {120 to 165, 17 to 23}	350 to 470 {260 to 345, 36 to 48}	320 to 420 {230 to 310, 32 to 43}
M 22	260 to 340 {190 to 255, 26 to 35}	230 to 300 {165 to 225, 23 to 31}	470 to 640 {345 to 470, 48 to 65}	430 to 570 {310 to 420, 43 to 58}
M 24	340 to 450 {255 to 330, 34 to 46}	290 to 390 {210 to 290, 29 to 40}	630 to 840 {455 to 620, 63 to 86}	540 to 730 {395 to 535, 55 to 74}

Hex-head Flange Nut

Unit : N·m {lbf.ft, kgf·m}

Strength classification	tion	
4 T / Representation	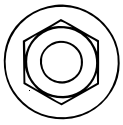	
	Standard screw	Coarse screw
M 6	4 to 6 {2.9 to 4.3, 0.4 to 0.6}	—
M 8	10 to 15 {7.0 to 11, 1.0 to 1.5}	—
M 10	21 to 30 {15 to 22, 2.1 to 3.1}	20 to 28 {14 to 21, 1.9 to 2.9}
M 12	38 to 54 {27 to 40, 3.8 to 5.5}	35 to 51 {25 to 38, 3.4 to 5.2}

TABLE OF STANDARD TIGHTENING TORQUES

Tightening torque for flair nut for general purpose

Unit : N·m {lbf.ft, kgf·m}

Pipe diameter	ø4.76 mm {0.19 in.}	ø6.35 mm {0.25 in.}	ø8 mm {0.31 in.}	ø10 mm {0.39 in.}	ø12 mm {0.47 in.}	ø15 mm {0.59 in.}
Tightening torque	17 {12, 1.7}	25 {19, 2.6}	39 {29, 4.0}	59 {43, 6.0}	88 {65, 9.0}	98 {72, 10.0}

Tightening torque for air piping nylon tube for general purpose {DIN type}

Unit : N·m {lbf.ft, kgf·m}

Standard diameter	6×1 mm {0.24×0.039 in.}	10×1.25 mm {0.39×0.049 in.}	12×1.5 mm {0.47×0.059 in.}	15×1.5 mm {0.59×0.059 in.}
Tightening torque	$20^{+5.9}_{-0}$ {$14^{+4.3}_{-0}$, $2.0^{+0.6}_{-0}$}	$29^{+9.8}_{-0}$ {$22^{+7.2}_{-0}$, $3.0^{+1.0}_{-0}$}	$49^{+9.8}_{-0}$ {$36^{+7.2}_{-0}$, $5.0^{+1.0}_{-0}$}	$54^{+4.9}_{-0}$ {$40^{+7.2}_{-0}$, $5.5^{+1.0}_{-0}$}

Tightening torque for air piping nylon tube for general purpose {SAE type}

Unit : N·m {lbf.ft, kgf·m}

Standard diameter	1/4 in.	3/8 in.	1/2 in.	5/8 in.
Tightening torque	$13^{+3.9}_{-0}$ {$9.4^{+2.9}_{-0}$, $1.3^{+0.4}_{-0}$}	$29^{+4.9}_{-0}$ {$22^{+3.6}_{-0}$, $3.0^{+0.5}_{-0}$}	$49^{+4.9}_{-0}$ {$36^{+3.6}_{-0}$, $5.0^{+0.5}_{-0}$}	$64^{+4.9}_{-0}$ {$47^{+3.6}_{-0}$, $6.5^{+0.5}_{-0}$}

M E M O

CONNECTOR CONFIGURATION CHART

Model (Number shows number of pins)		Connection
AA	AA 1 A	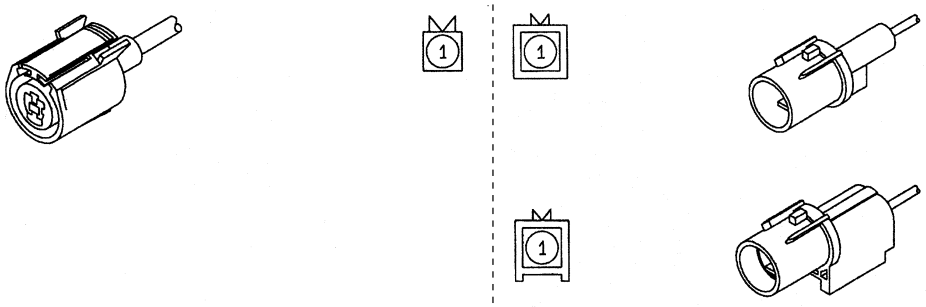
	AA 2 A	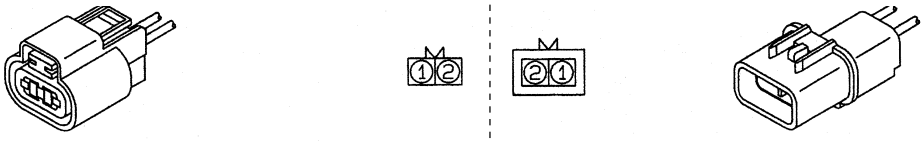
	AA 2 B	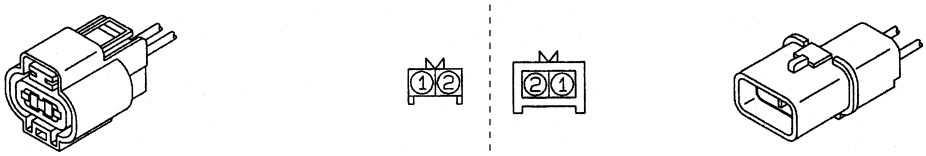
	AA 3 A	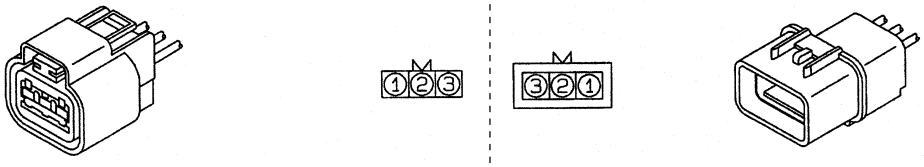
	AA 3 B	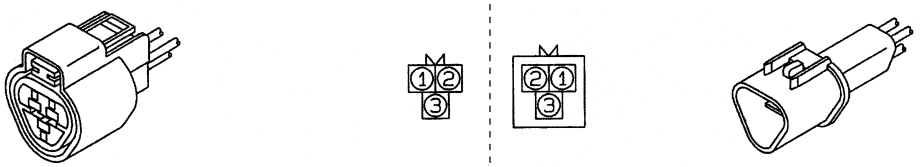
	AA 4 A	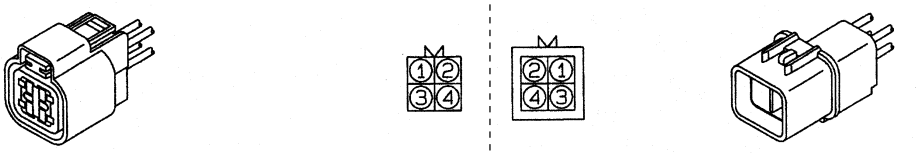
	AA 4 B	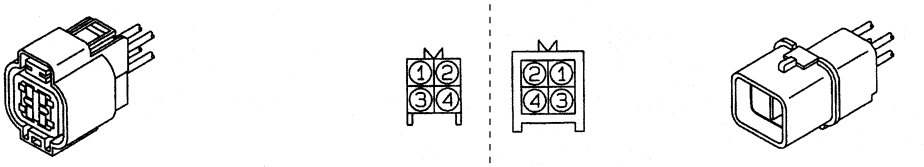
	AA 6 A	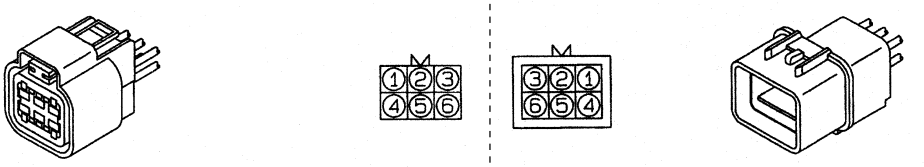

Model (Number shows number of pins)		Connection			
AA	AA 6 B	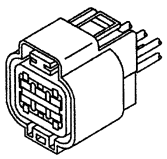		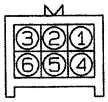	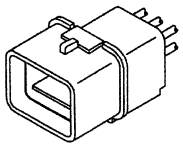
	AA 8 A	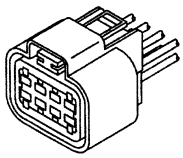	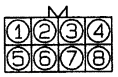	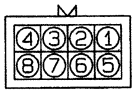	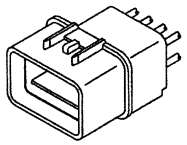
	AA10A	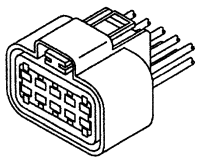	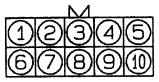	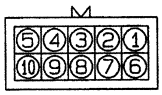	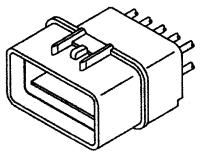
	AA12A	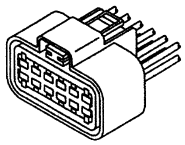	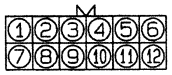	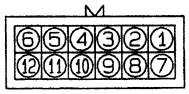	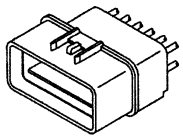
AB	AB 1 A	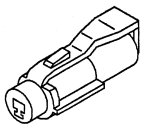			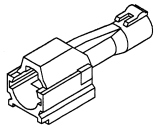
	AB 2 A	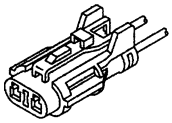	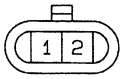	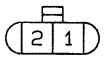	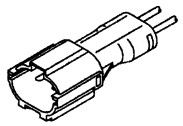
	AB 3 A	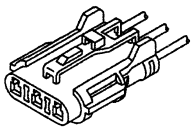	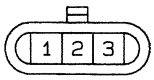	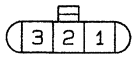	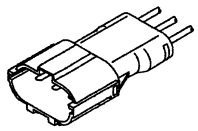
	AB 4 A	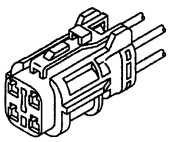	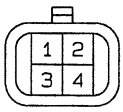	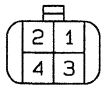	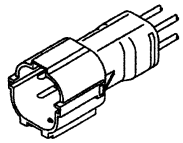
	AB 6 A	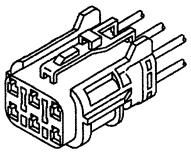	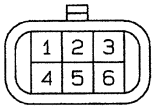	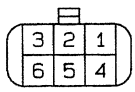	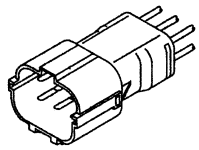

CONNECTOR CONFIGURATION CHART

Model (Number shows number of pins)		Connection			
AC	AC 1 A	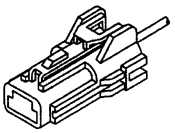			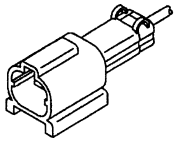
	AC 2 A	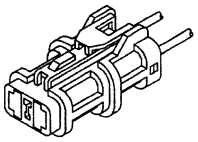			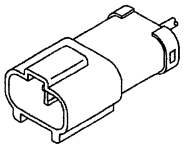
	AC 3 A	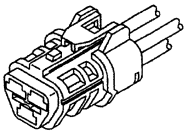		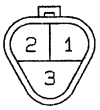	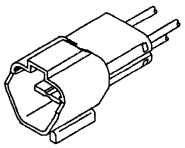
	AC 4 A	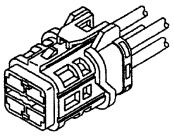	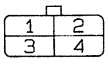	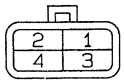	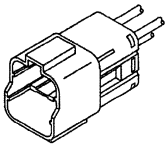
AD	AD 1 A	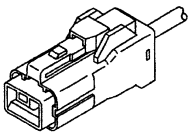			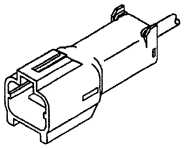
	AD 2 A	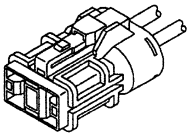	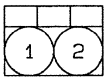	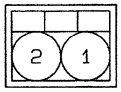	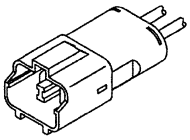
AE	AE 2 A	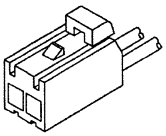			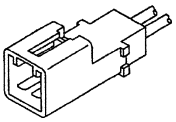
	AE 3 A	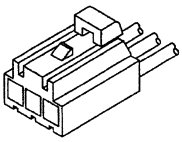	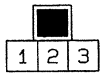	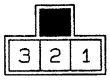	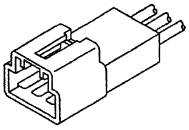
	AE 5 A	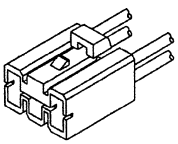	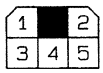	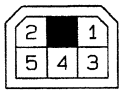	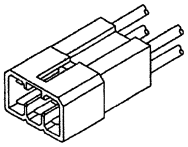

Model (Number shows number of pins)		Connection
AE	AE 7 A	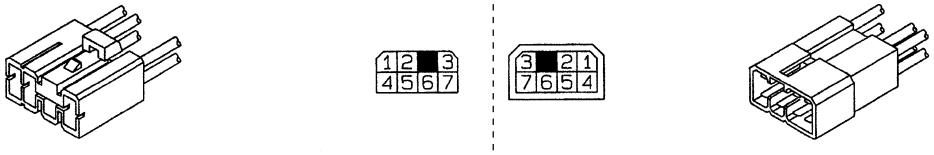
	AE 9 A	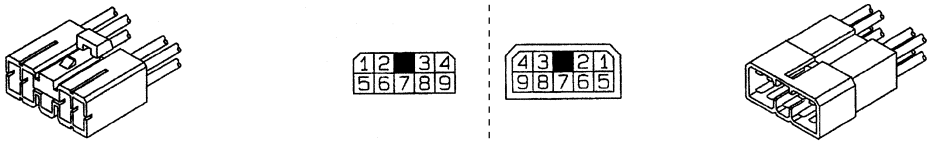
	AE11A	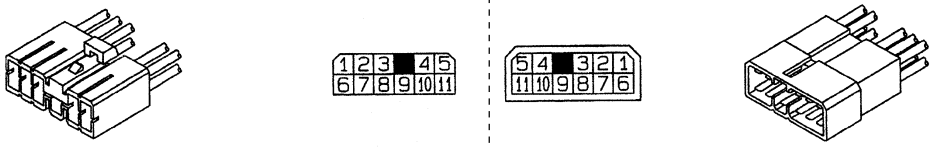
	AE13A	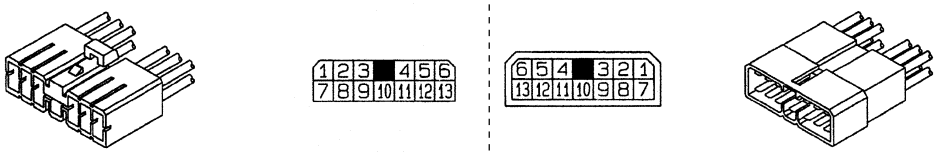
	AE15A	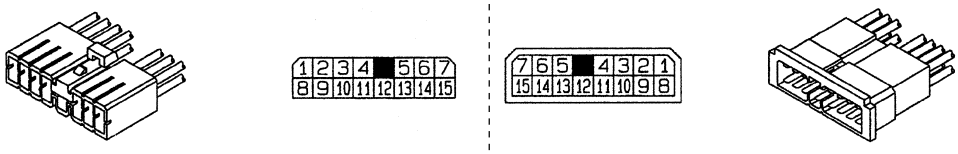
	AE16A (White, Gray, Black)	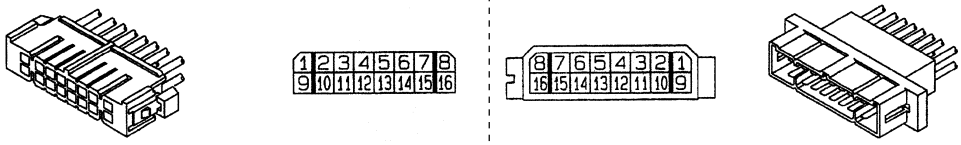
	AE16B (Green)	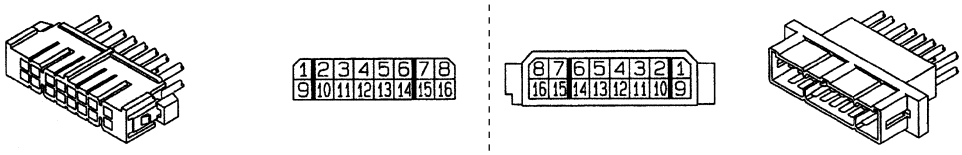
	AE16C (Blue)	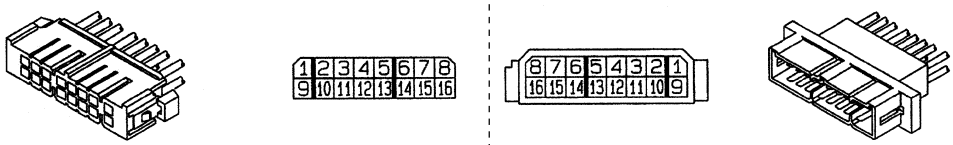
	AE17A	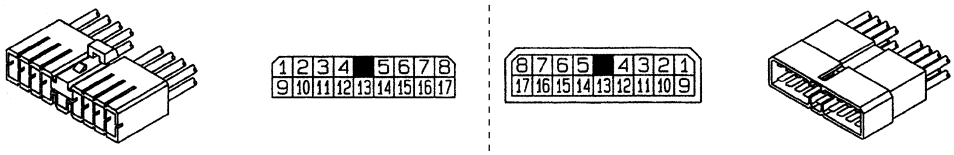

CONNECTOR CONFIGURATION CHART

Model (Number shows number of pins)		Connection
AG	AG16A	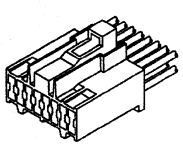 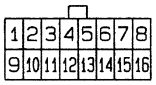
	AG20A	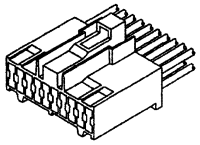 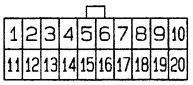
AH	AH10A	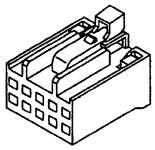 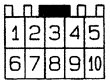 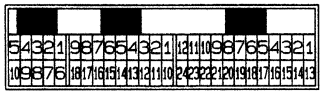 AH10A (AH18A) (AH24A) 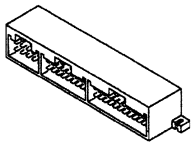
	AH12A	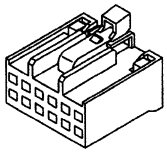 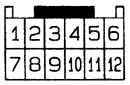 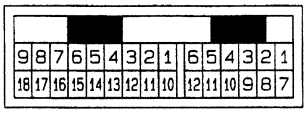 (AH18A) AH12A 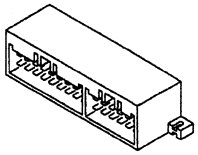
	AH18A	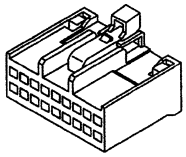 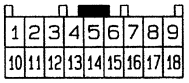 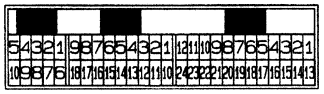 (AH10A) AH18A AH24A 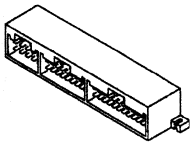

Model (Number shows number of pins)		Connection
AH	AH18B	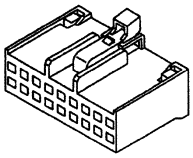 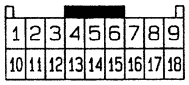 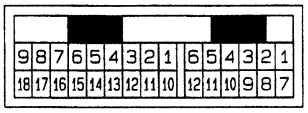 AH18A (AH12A) 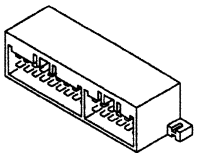
	AH22A	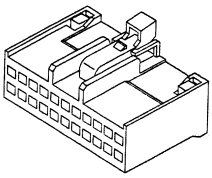 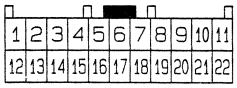 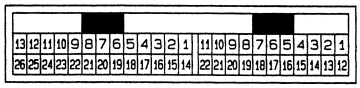 (AH26A) AH22 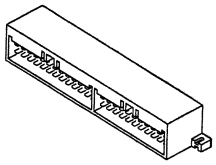
	AH24A	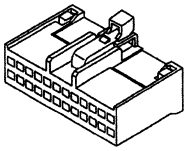 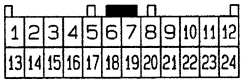 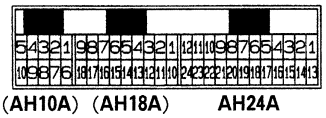 (AH10A) (AH18A) AH24A 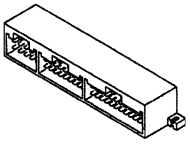
	AH26A	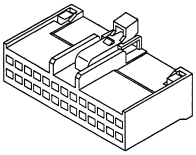 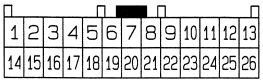 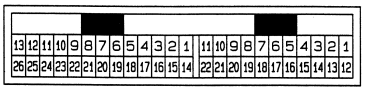 AH26A (AH22) 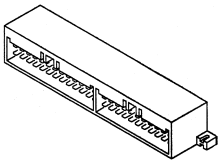

CONNECTOR CONFIGURATION CHART

Model (Number shows number of pins)		Connection
AJ	AJ 2 A	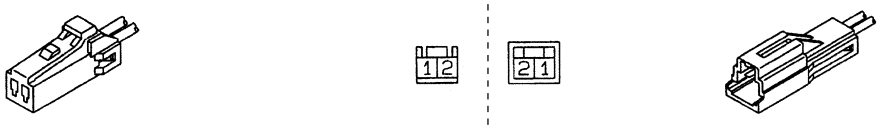
	AJ 4 A	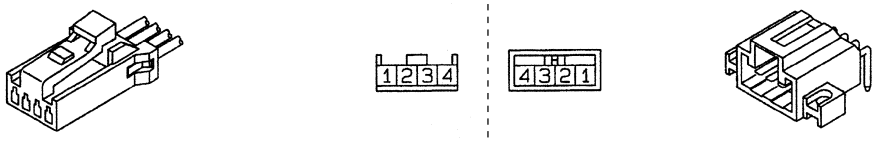
	AJ 8 A	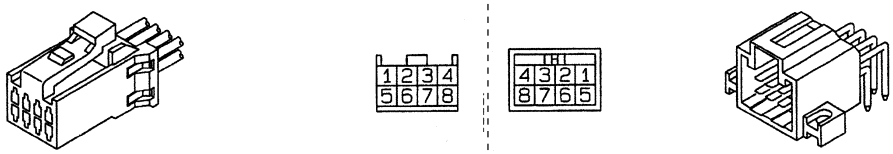
	AJ10A	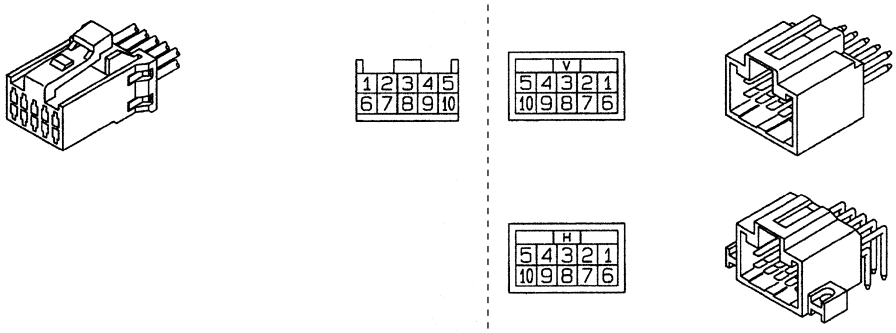
	AJ12A	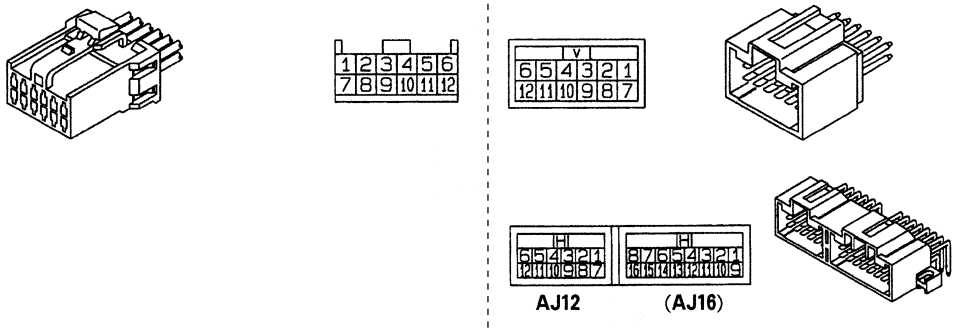

Model (Number shows number of pins)		Connection
AJ	AJ16A	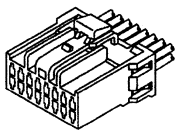 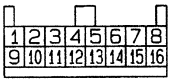 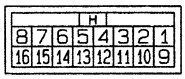 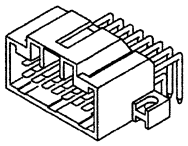 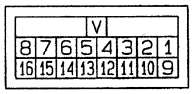 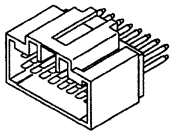 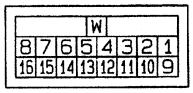 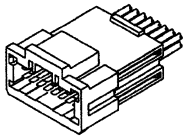  (AJ12A) AJ16A 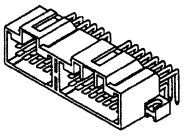 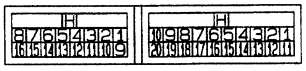 AJ16A (AJ20A) 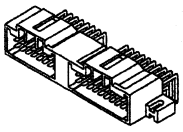

CONNECTOR CONFIGURATION CHART

Model (Number shows number of pins)		Connection
AJ	AJ20A	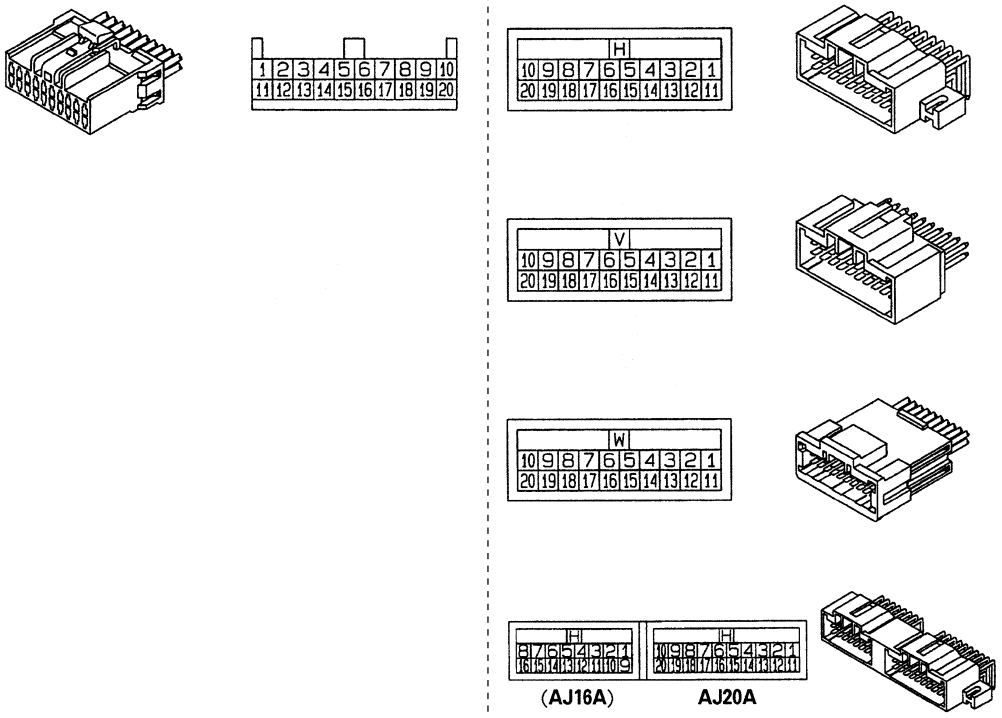
AK	AK 2 A	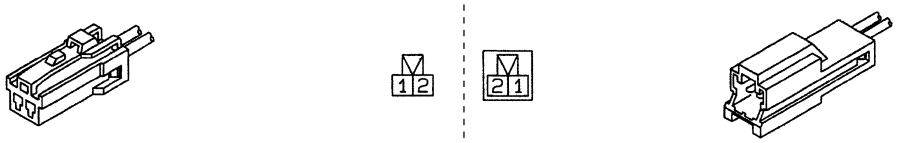
	AK 3 A	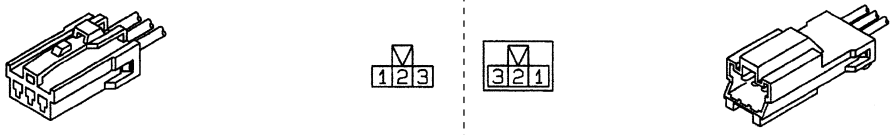
	AK 4 A	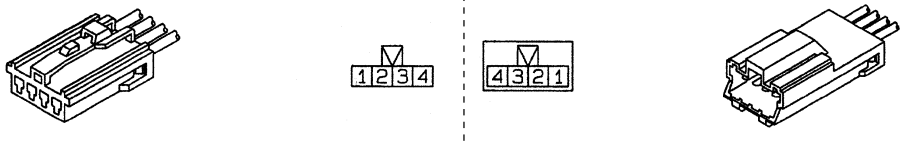
	AK 6 A	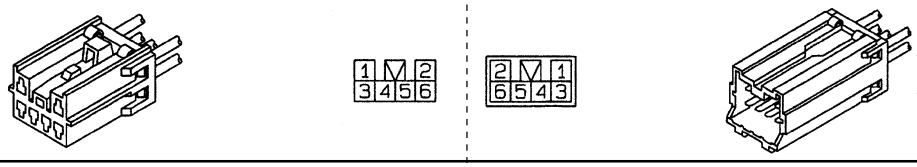

Model (Number shows number of pins)		Connection
AK	AK 8 A	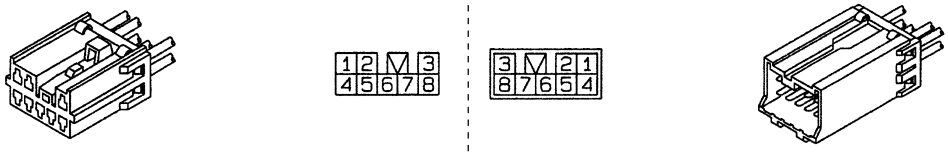
	AK10A	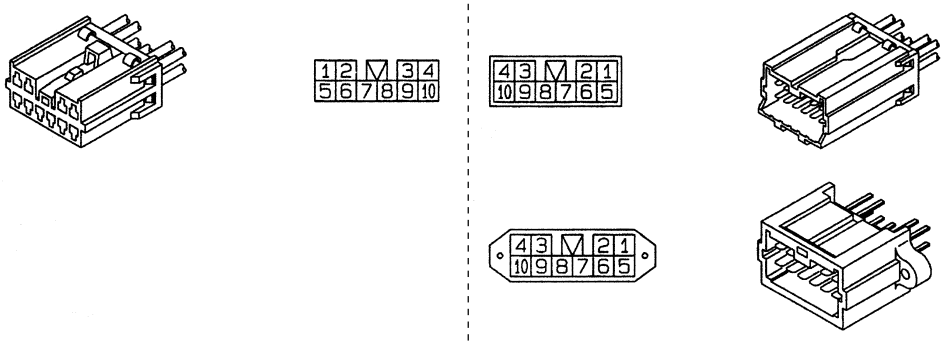
	AK14A	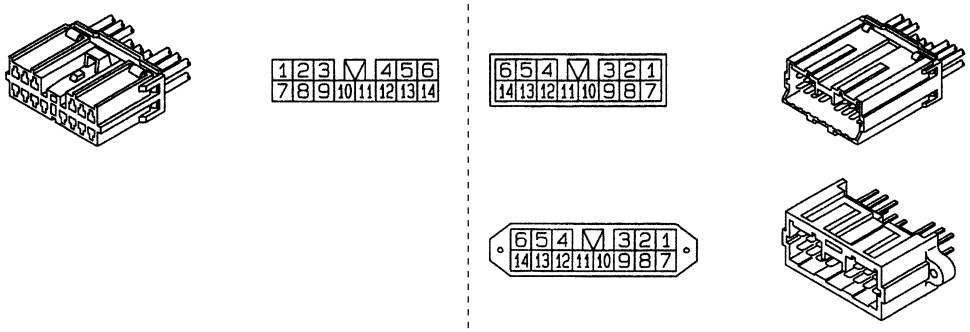
	AK18A	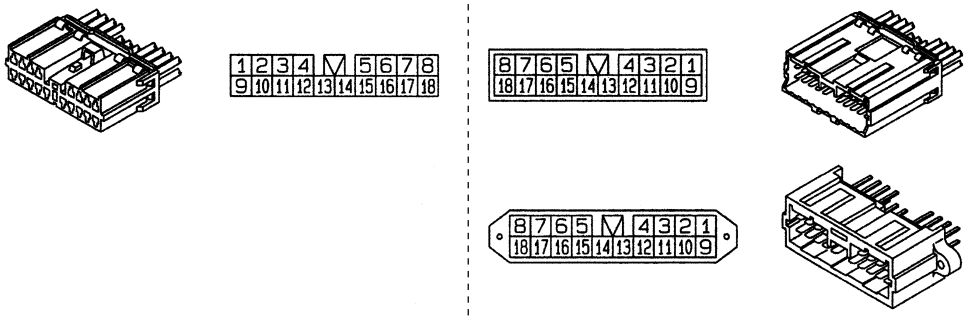
	AK20A	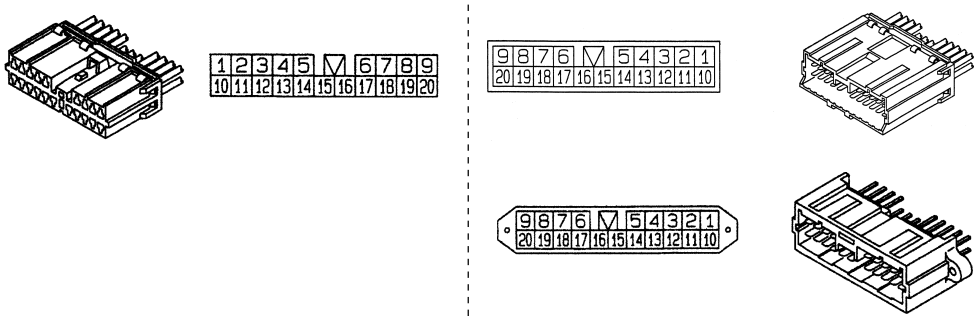

CONNECTOR CONFIGURATION CHART

Model (Number shows number of pins)		Connection
AK	AK20B	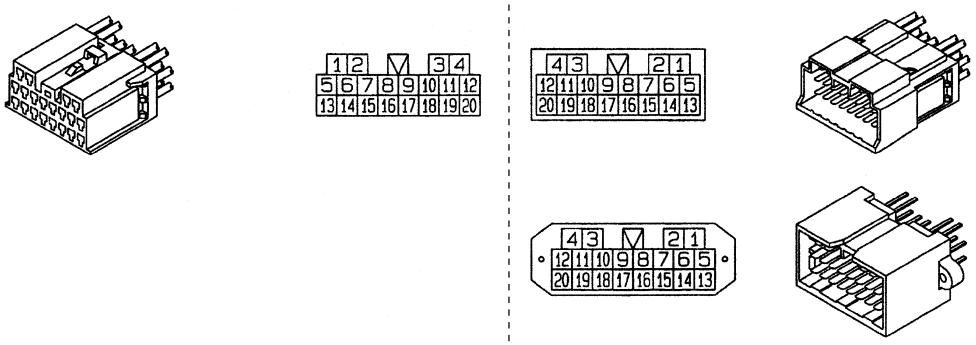
	AK22A	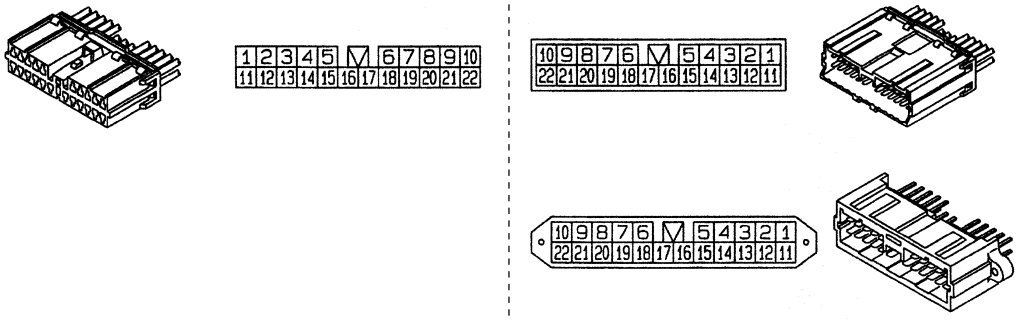
	AK22B	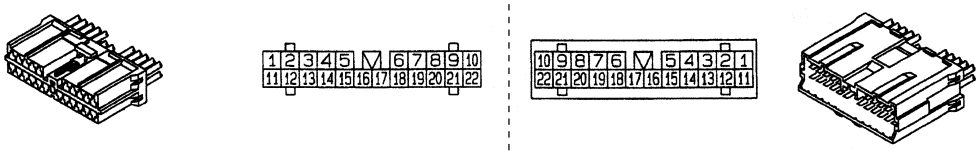
AL	AL 1 A	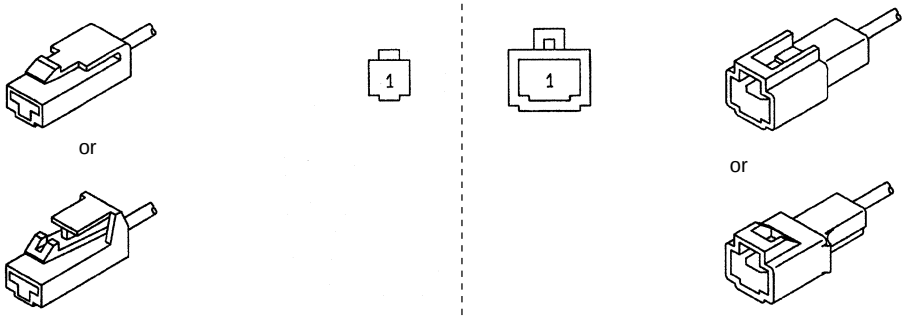
	AL 2 A	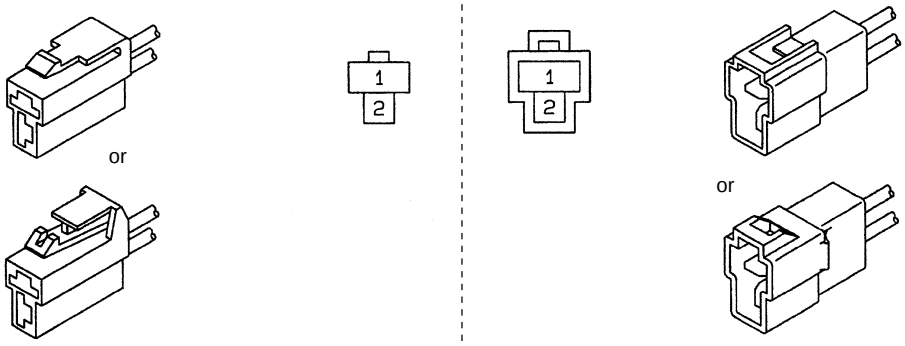

Model (Number shows number of pins)		Connection
AL	AL 2 B	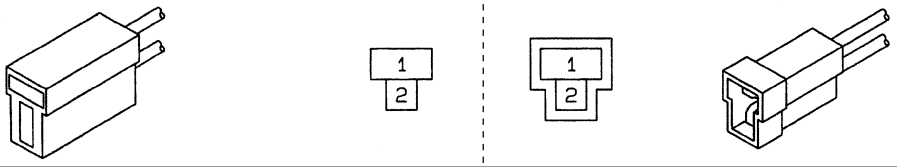
	AL 3 A	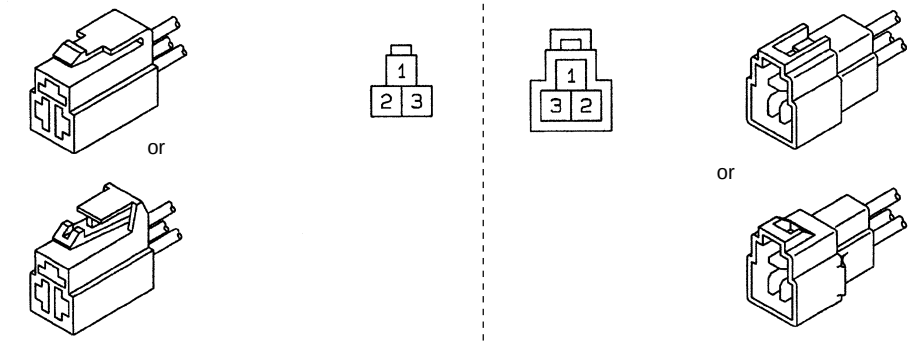
	AL 3 B	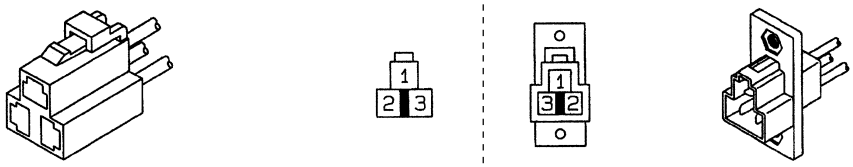
	AL 3 C	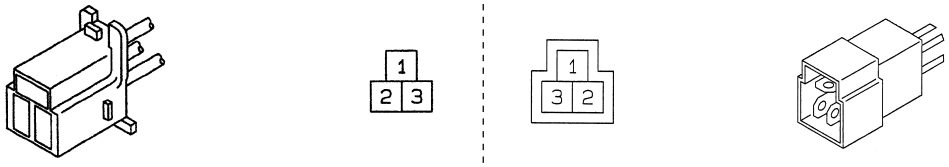
	AL 3 D	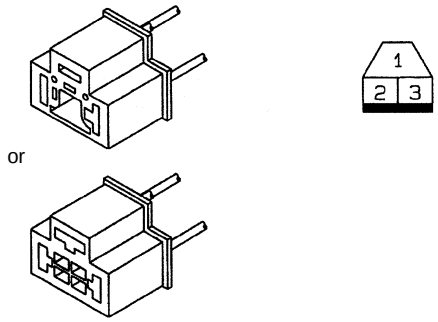
	AL 3 E	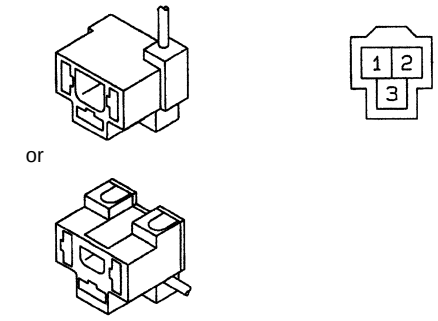

CONNECTOR CONFIGURATION CHART

Model (Number shows number of pins)		Connection
AL	AL 4 A	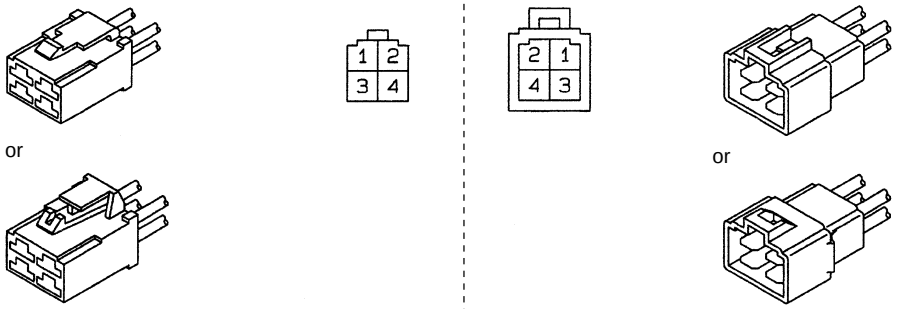
	AL 4 B	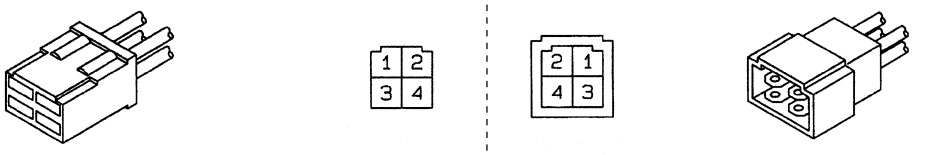
	AL 6 A	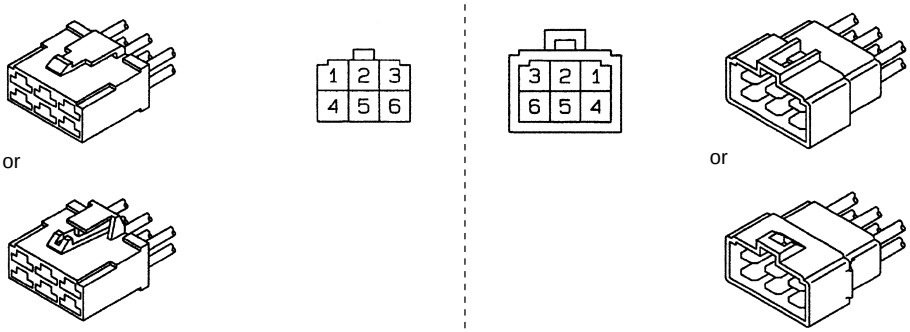
	AL 6 B	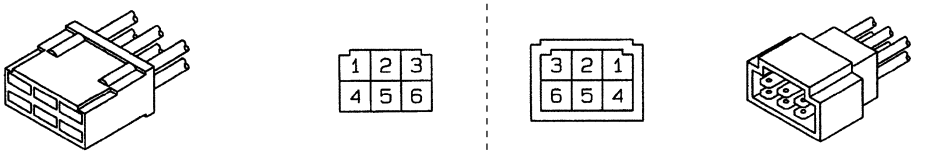
	AL 8 A	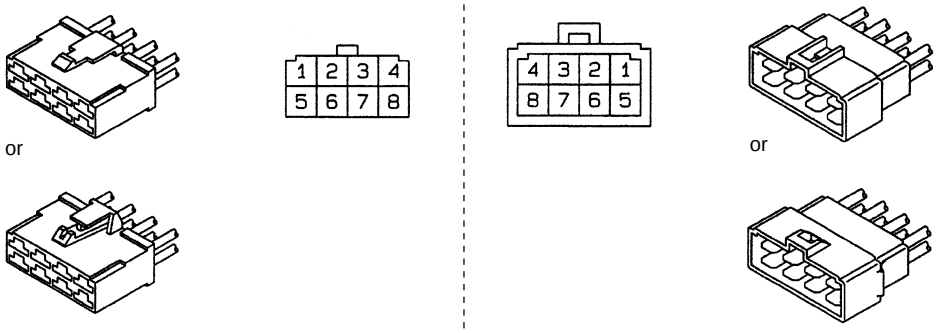
	AL 8 B	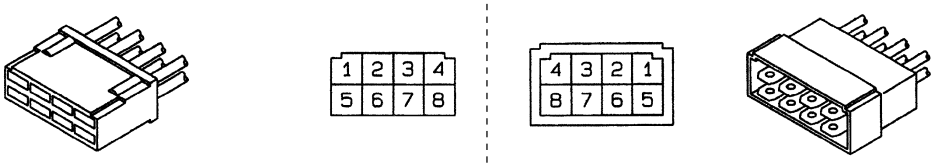

Model (Number shows number of pins)		Connection
AM	AM 2 A	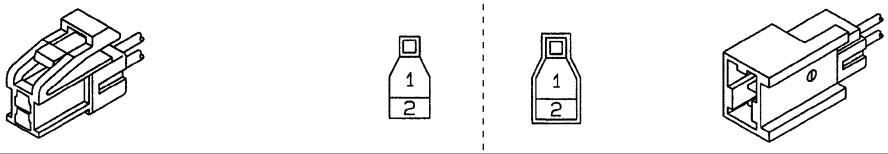
	AM 2 B	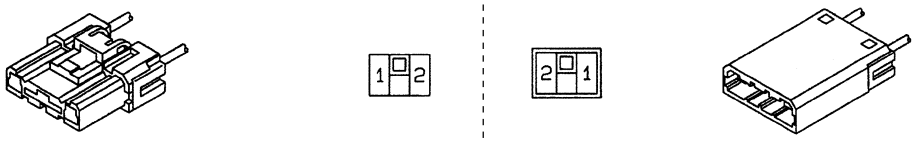
	AM 2 C	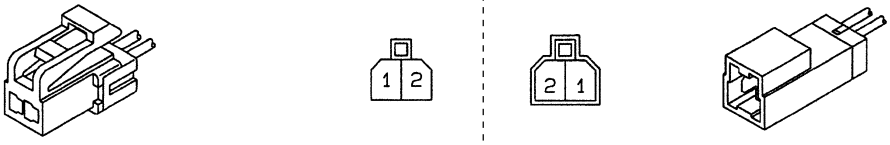
	AM 4 A	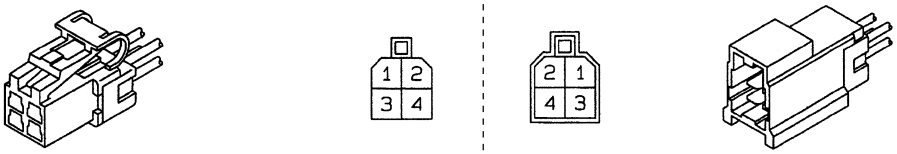
	AM 4 B	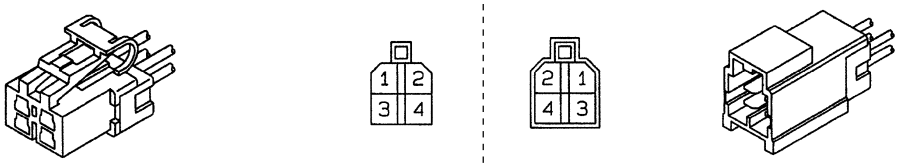
	AM 6 A	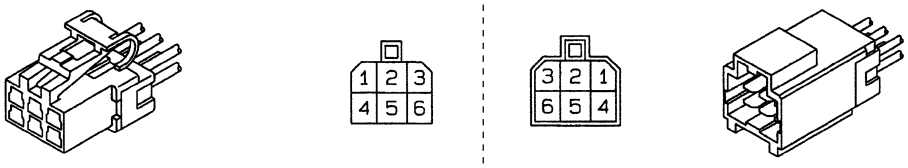
	AM 6 B	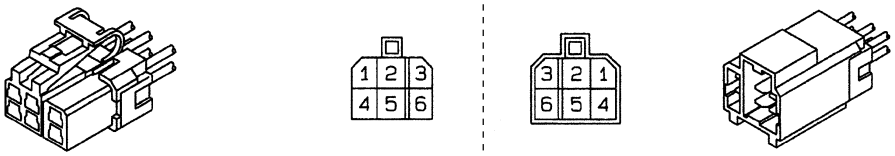
	AM 8 A	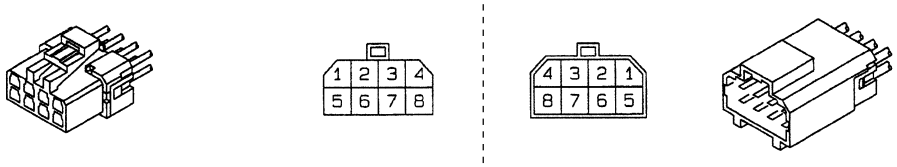
	AM 8 B	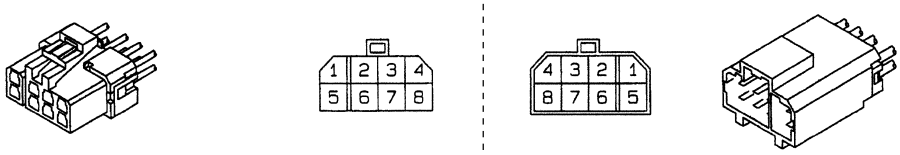

CONNECTOR CONFIGURATION CHART

Model (Number shows number of pins)		Connection			
AM	AM10A	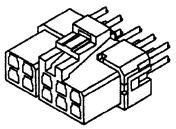	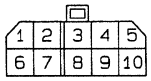	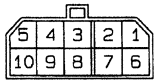	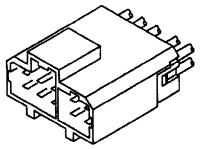
AN	AN 1 A	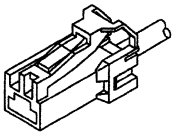			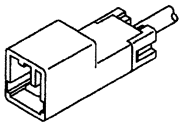
	AN 2 A	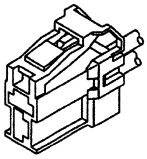			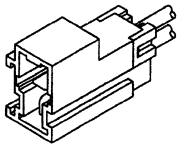
	AN 3 A	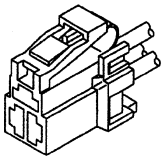	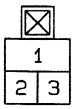	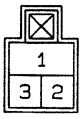	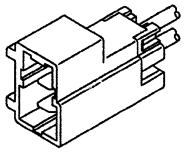
	AN 4 A	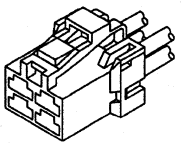	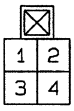	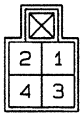	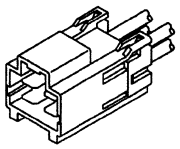
	AN 4 B	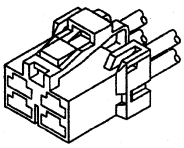	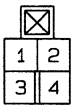	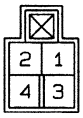	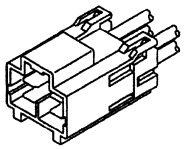
	AN 6 A	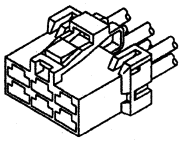	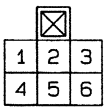	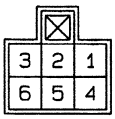	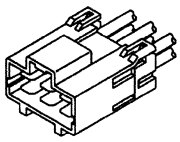
	AN 6 B	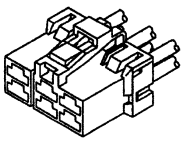	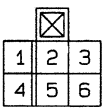	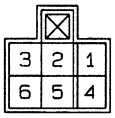	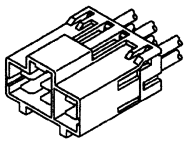
	AN 8 A	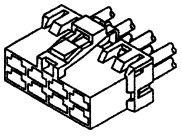	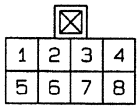	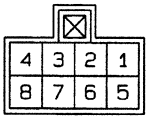	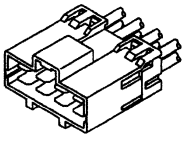

Model (Number shows number of pins)		Connection			
AN	AN 8 B	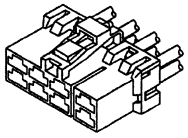	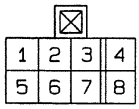	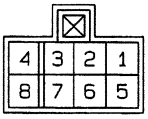	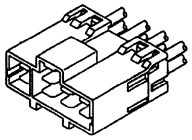
AP	AP 1 A	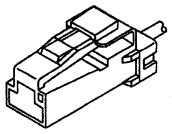	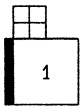	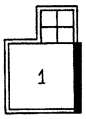	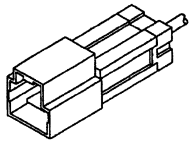
	AP 1 B	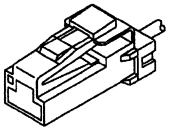	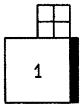	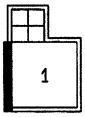	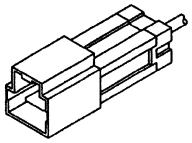
	AP 2 A	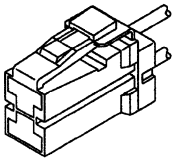	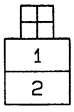	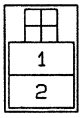	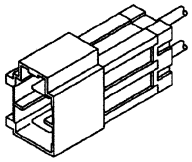
	AP 2 B	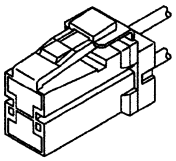	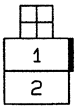	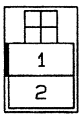	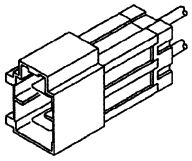
	AP 2 C	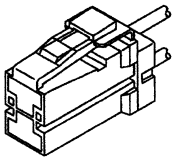	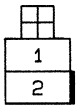	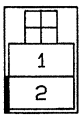	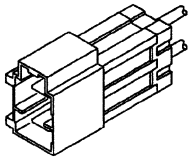
AQ	AQ 3 A	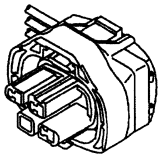			
	AQ 3 B	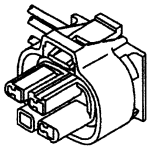			
	AQ13A	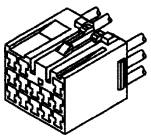	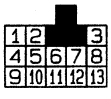	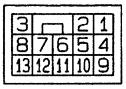	

CONNECTOR CONFIGURATION CHART

Model (Number shows number of pins)		Connection
AQ	AQ15A	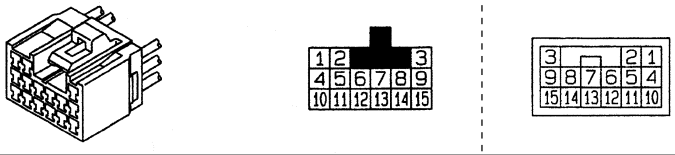
	AQ20A	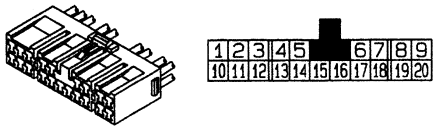
AR	AR 2 A	
	AR 2 B	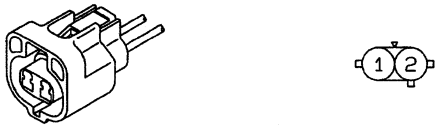
	AR 2 C	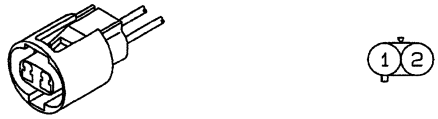
	AR 2 D	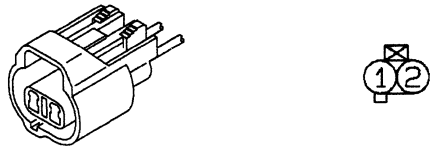
	AR 2 E	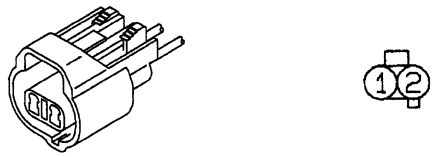
	AR 2 F	

Model (Number shows number of pins)		Connection
AR	AR 3 A	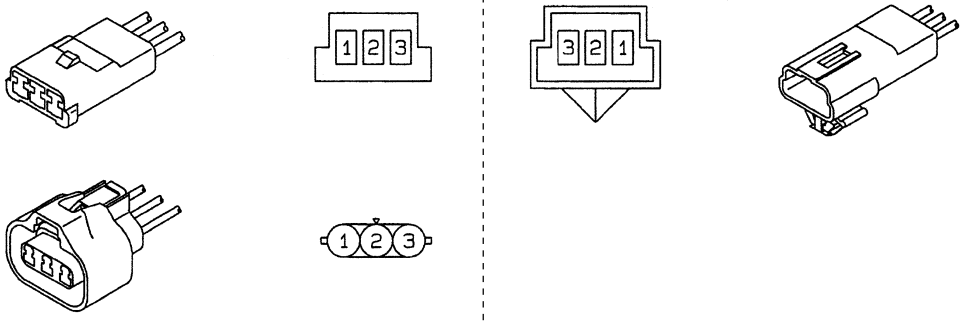
AS	AS 1 A	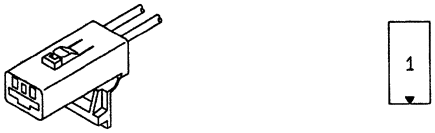
	AS 2 A	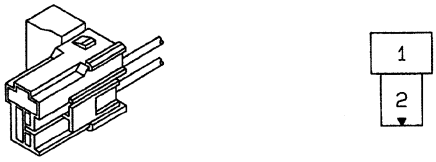
	AS 2 B	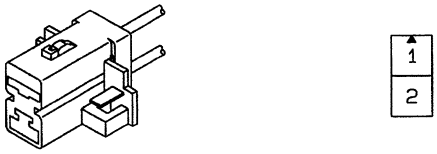
AT	AT 4 A	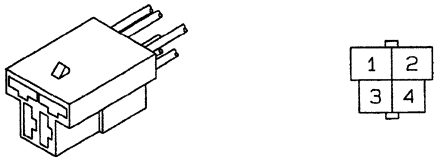
AU	AU 6 A	
	AU 8 A	
	AU10A	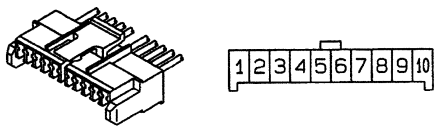

CONNECTOR CONFIGURATION CHART

Model (Number shows number of pins)		Connection
AU	AU12A	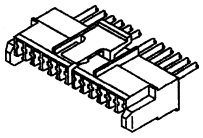 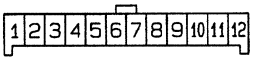
	AU13A	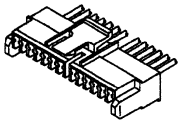 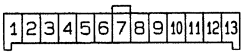
	AU16A	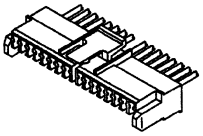 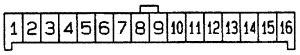
AV	AV 1 A	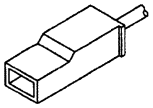 
	AV 2 A	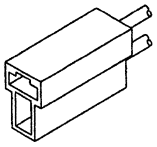 
AW	AW 1 A	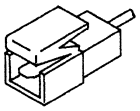   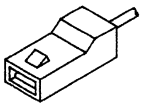
	AW 1 B	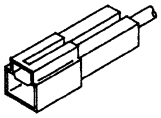   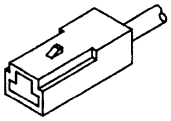
	AW 2 A	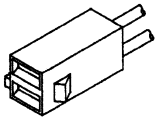   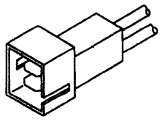
AX	AX 4 A	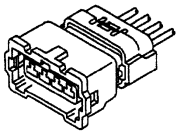  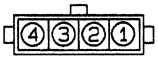 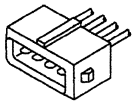

Model (Number shows number of pins)		Connection			
AY	AY 2 A	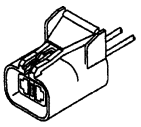			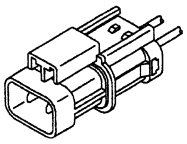
AZ	AZ 2 A	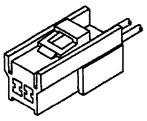			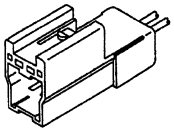
BA	BA 3 A	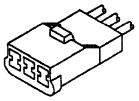	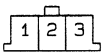	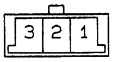	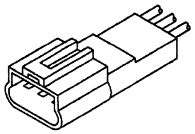
BB	BB 2 A	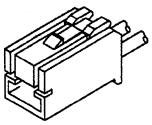			
	BB 3 A	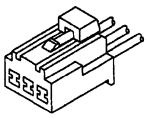	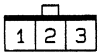	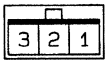	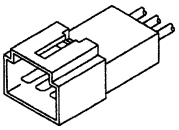
BC	BC 3 A	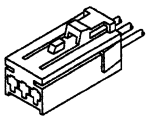	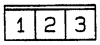	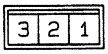	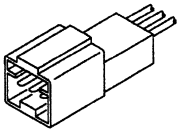
BD	BD 8 A	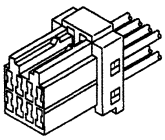	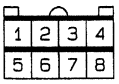	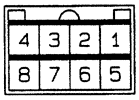	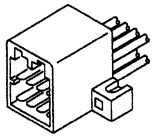
BE	BE 6 A				
BF	BF12A	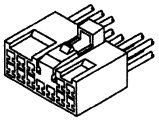	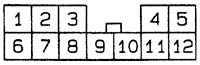	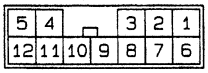	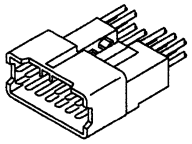

CONNECTOR CONFIGURATION CHART

Model (Number shows number of pins)		Connection
BG	BG16A	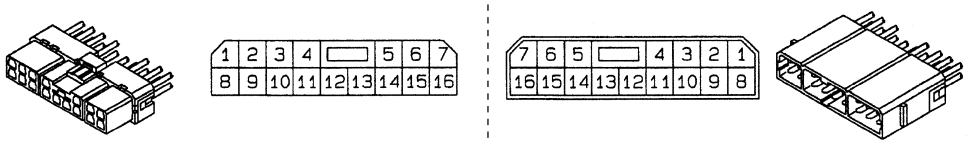
BH	BH 4 A	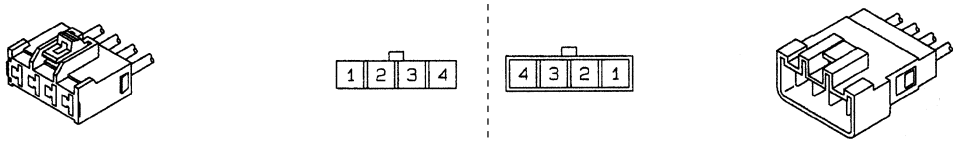
BJ	BJ 9 A	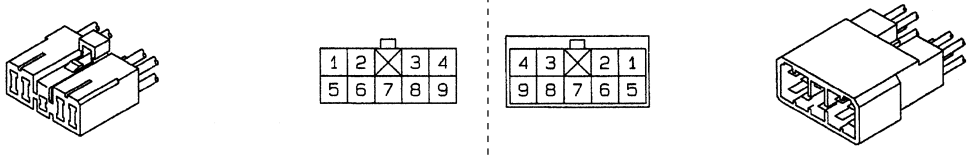
BL	BL 2 A	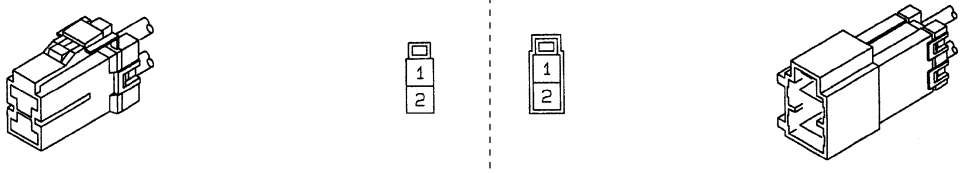
BM	BM 2 A	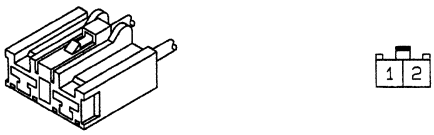
	BM 2 B	
	BM 2 C	
BN	BN 1 A	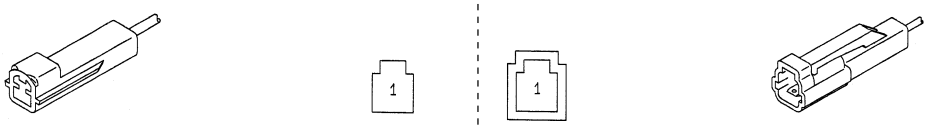

MITSUBISHI
FUSO

FK.FM
Service Manual

Group 01
Maintenance Schedule

Table of Contents

BACK

HOME

MITSUBISHI FUSO TRUCK OF AMERICA, Inc.

Pub No. TWME9503-01

MAINTENANCE SCHEDULE

HOW TO READ THE MAINTENANCE SCHEDULE TABLES 2

MAINTENANCE SCHEDULE TABLES 3

MAINTENANCE OPERATIONS 7
- Replacement of Oil Filter 7
- Replacement of Fuel Filter 8
- Draining of Water Separator Condensation 9
- Cleaning of Fuel Feed Pump Gauze Filter 9
- Bleeding of Air from Fuel Line 10
- Adjustment of V-Belt Tension 11
- Cleaning and Replacement of Air Cleaner Element 13
- Inspection of Clutch Pedal Free Play 14
- Tire 15
- Inspection of Brake Lining Thickness 21
- Battery 21
- Fuse 24

LUBRICATION 26
- Engine Oil 27
- Clutch Fluid (Brake Fluid) 29
- Manual Transmission Gear Oil 31
- Automatic Transmission Fluid and Oil Filter 32
- Rear Axle Gear Oil 35
- Power Steering Fluid 36
- Brake Fluid 38
- Greasing Various Areas of Chassis 42

HOW TO READ THE MAINTENANCE SCHEDULE TABLES

Example Table :

*1 : 30000 km/18000 miles or 6 months, whichever occurs first.
*2 : 60000 km/36000 miles or 12 months, whichever occurs first.
*3 : FK617, FM617
*4 : FM657
Ⓔ : Exhaust emission items
Ⓝ : Noise control items

Inspection and maintenance (1)		Time of inspection and maintenance (2)					Working procedures (3)	Remarks (4)
		Pre-operation checks	New vehicle at 4000 km/2500 miles	Inspection interval: Every 10000 km/6000 miles	Inspection interval: Every 30000 km/18000 miles *1	Inspection interval: Every 60000 km/36000 miles *2		
ENGINE								
1	Air, fuel, oil or coolant leakage from engine			×			Check engine for air, fuel, oil and coolant leakage	Gr 11, 12, 13, 14
2	Ⓔ Ⓝ Engine starting performance, speed, noise and exhaust gas conditions			×			Check for engine starting performance, idling speed, abnormal engine noise, dark smoke or other abnormal exhaust gas during idling and acceleration. Check engine speed on tachometer	Gr 11, 13, 15
3	Retightening of inlet and exhaust manifold bolts					×	Check manifold bolts for looseness	Gr 15
4	Ⓔ Va…		×			×	Check valve clearance with fe…	
				Every 20000 km/12000 miles			Replace element…	

(1) This column contains the maintenance and inspection items.
(2) The periods between inspection and service are based on the assumption that the vehicle will be driven approximately 60000 kilometers (36000 miles) per year.
Inspections which must be made are indicated by an "×" or by the appropriate period between servicing.
(3) This column provides a simplified explanation of the operational procedures involved for each inspection or maintenance item.
(4) The Gr. No. refers to the "group number" in this vehicle Service Manual. For visual checks and simple inspections, see the sections labelled "Working Procedures".

*1 : 30000 km/18000 miles or 6 months, whichever occurs first.
*2 : 60000 km/36000 miles or 12 months, whichever occurs first.
*3 : FK617, FM617
*4 : FM657
Ⓔ : Exhaust emission items
Ⓝ : Noise control items

	Inspection and maintenance	Time of inspection and maintenance					Working procedures	Remarks
				Inspection interval				
		Pre-operation checks	New vehicle at 4000 km/2500 miles	Every 10000 km/ 6000 miles	Every 30000 km/ 18000 miles *1	Every 60000 km/ 36000 miles *2		
ENGINE								
1	Air, fuel, oil or coolant leakage from engine			×			Check engine for air, fuel, oil and coolant leakage	Gr 11, 12, 13, 14
2	Ⓔ Ⓝ Engine starting performance, speed, noise and exhaust gas conditions			×			Check for engine starting performance, idling speed, abnormal engine noise, dark smoke or other abnormal exhaust gas during idling and acceleration. Check engine speed on tachometer	Gr 11, 13, 15
3	Retightening of inlet and exhaust manifold bolts					×	Check manifold bolts for looseness	Gr 15
4	Ⓔ Valve clearance		×			×	Check valve clearance with feeler gauge	Gr 11
5	Ⓔ Oil filter replacement			Every 20000 km/ 12000 miles On new vehicles, replace the first filter at 10000 km/6000 miles			Replace element	Gr 12
6	Ⓔ Ⓝ Check injection nozzles			Every 90000 km/ 54000 miles			Check and clean injection nozzles	Gr 13
7	Ⓔ Ⓝ Fuel injection pressure and spray pattern of injection nozzles			Every 250000 km/ 150000 miles			Remove injection nozzle and check with nozzle tester	Gr 13
8	Ⓔ Ⓝ Fuel injection timing					×	Turn crankshaft in normal running direction and check injection starting timing of No.1 cylinder	Gr 13
9	Ⓔ Cleaning fuel feed pump filter					×	Remove connector from fuel feed pump inlet and clean filter inside connector with gas oil	
10	Ⓔ Fuel filter replacement				×		Replace element	Gr 13
11	Ⓔ Water separator water discharge	×					Loosen water separator drain plug to discharge water	Gr 13
12	Ⓔ Removal of water and sediment from fuel tank			Every 24 months			Remove fuel tank drain plug and remove water and sediment	Gr 13
13	Retightening of fuel tank bracket bolts			×			Check mounting bolts for looseness and retighten to a torque of 69 to 93 N·m {51 to 69 lbf.ft, 7 to 9.5 kgf·m}	Gr 13
14	Ⓔ Replacing fuel hose in engine compartment			Every 24 months			Replace fuel hose in engine compartment	Gr 13
15	Ⓔ Check fuel line outside of engine compartment			Every 24 months			Check fuel line outside of engine compartment. Replace if necessary	Gr 13
16	Ⓔ Ⓝ V-belt tension and damage	×		×			Press midpoint of V-belt firmly with your finger to measure deflection and check for belt damage	Gr 14
17	Coolant level and leakage from cooling system	×					Check coolant level and if level is low, check for coolant leakage	Gr 14
18	Coolant replacement			Every 24 months			Replace with new coolant	Gr 14
19	Radiator cap condition			×			Check radiator cap for sealing and mounting condition	Gr 14
20	Ⓔ Cooling system hose clamp position and clamping condition			×			Check clamp position and clamping condition of cooling system hose	Gr 14
21	Ⓔ Turbocharger rotor play			Every 250000 km/ 150000 miles			Check whether rotor has excessive end play using a dial indicator	Gr 15
22	Ⓔ Ⓝ Cleaning of air cleaner	×					Check air cleaner dust indicator. If the red signal appears, clean the element	Gr 15
23	Ⓔ Ⓝ Air cleaner element replacement			Every 50000 km/ 30000 miles			Replace element	Gr 15
24	Ⓔ Ⓝ Damage of inlet system, looseness of clamp and loss of parts			×			Check inlet system for damage and check that all parts are installed	Gr 15
25	Ⓔ Ⓝ Exhaust system			×			Check the exhaust system for damage, corrosion and loose connections causing leakage	Gr 15
26	Starter function					×	Operate starter switch and check the switch functions properly	Gr 54
27	Alternator function					×	Check function with a circuit tester	Gr 54

MAINTENANCE SCHEDULE TABLES

*1 : 30000 km/18000 miles or 6 months, whichever occurs first.
*2 : 60000 km/36000 miles or 12 months, whichever occurs first.
*3 : FK617, FM617
*4 : FM657
Ⓔ : Exhaust emission items
Ⓝ : Noise control items

	Inspection and maintenance	Time of inspection and maintenance					Working procedures	Remarks
				Inspection interval				
		Pre-operation checks	New vehicle at 4000 km/2500 miles	Every 10000 km/ 6000 miles	Every 30000 km/ 18000 miles *1	Every 60000 km/ 36000 miles *2		
POWER TRAIN								
28	Air or oil leakage from power train			×			Check power train for air and oil leakage	
29	Clutch pedal play			×			Press clutch lightly and check that play is adequate	Gr 21
30	Clutch function			×			(1) Press the clutch pedal to check for unusual noise or stiffness. Also check if gearshift engages quietly (2) Check the clutch does not slip and engages smoothly	Gr 21
31	Manual transmission gearshift control looseness				×		In NEUTRAL position, check shift lever for looseness. With shift lever in each gear position, check engagement condition and degree of looseness. Also check if control cable is damaged	Gr 22A, B
	Automatic transmission range selector linkage and throttle (modulator) linkage condition				×		Shifting to each shift range must be done firmly and securely	Gr 23
32	Propeller shaft couplings and bearings looseness		×	×			(1) Check flange yoke bolt and center bearing attaching bolt for looseness (2) Turn propeller shaft manually to check for spline looseness (3) Check looseness between spider and needle roller bearing On new vehicle inspection at 4000 km/2500 miles, check only the bolts for looseness	Gr 25
FRONT AND REAR AXLES								
33	Axle shaft torsion and cracks					×	Remove axle shaft and check for torsion, bending, and cracks	Gr 27
34	Front wheel hub bearing looseness				×		With front axle jacked up, move the wheel up and down holding the top and bottom of the tire to check for bearing looseness	Gr 26
35	Rear wheel hub bearing damage					×	Disassemble rear wheel and check for hub bearing wear and damage	Gr 27
36	Retightening wheel nuts		×	×			Check wheel nuts for looseness	Gr 31
37	Disc wheel damage			×			Check disc wheel for corrosion, deformation and cracks	Gr 31
38	Tire inflation pressure, cracking, tread groove depth, abnormal wear, etc.	×		×			(1) Measure inflation pressure with tire gauge, and check that tire tread groove is deep enough (2) Check tire tread and side walls for cracks, damage, uneven wear, stepped wear and other abnormal wear	Gr 31
39	Tire rotation			×			Rotate all tires	Gr 31
SUSPENSION SYSTEM								
40	Looseness, play and damage of suspension system				×		Check suspension system for looseness, play and damage	Gr 33, 34
41	Damage and looseness of leaf springs	×			×		Check leaf springs for damage and looseness	Gr 33, 34
42	Retightening U-bolts		×		×		Check U-bolts for looseness	Gr 33, 34
43	Oil leakage and damage of shock absorbers				×		Check for oil leakage and damage of cylinder, etc.	Gr 33, 34
BRAKING SYSTEM								
44	Air pressure and its charging speed	×					After discharging air from air tank, start and run the engine at idle and measure time taken to charge air to specified pressure in air tank	Gr 35A, B
45	Air and fluid leakage from braking system			×			Check braking system for air and fluid leakage	Gr 35A, B
46	Looseness, play and damage of braking system parts			×			Check braking system parts for looseness, play and damage	Gr 35A, B
47	Condensation in air tank	×					Open drain cock and check for condensation in the air tank	Gr 35A, B

*1 : 30000 km/18000 miles or 6 months, whichever occurs first.
*2 : 60000 km/36000 miles or 12 months, whichever occurs first.
*3 : FK617, FM617
*4 : FM657
Ⓔ : Exhaust emission items
Ⓝ : Noise control items

Inspection and maintenance		Time of inspection and maintenance					Working procedures	Remarks
				Inspection interval				
		Pre-operation checks	New vehicle at 4000 km/2500 miles	Every 10000 km/ 6000 miles	Every 30000 km/ 18000 miles *1	Every 60000 km/ 36000 miles *2		
48	Brake pedal play and stroke			×			Press pedal lightly to measure play. Check pedal depression angle and air output pressure	Gr 35A, B
49	Foot brake effectiveness	×		×			While driving the vehicle at low speed, check braking effect and check for uneven braking	Gr 35A, B
50	Operation of exhaust brake	×		×			Check exhaust brake operation	Gr 35A, B
51	Exhaust brake control cylinder packing replacement			Every 12 months			Check exhaust brake control cylinder packing; replace if necessary	Gr 35A, B
52	Operation of air dryer			×			Open drain cock of air tank and make sure there is no drainage. If there is a small amount of drainage from the FK series, remove the plug from the air dryer and check the color of the indicator. If it is pink, replace the desiccant	Gr 35A, B
53	Check drain from air dryer exhaust port			×			Check to see that oil is not discharged abnormally from exhaust port of air dryer	Gr 35A, B
54	Air dryer disassembly and inspection					×	FK series : Remove the plug from the air dryer and check the color of the indicator. If it is pink, disassemble and replace desiccant FM series : Disassemble air dryer and check every part of it. If more than 1/5 of the desiccant is discolored, replace the desiccant	Gr 35A, B
55	Air dryer desiccant replacement			Every 24 months			Disassemble the air dryer and replace the desiccant and rubber parts	Gr 35A, B
56	Brake shoe clearance				×		Measure clearance with feeler gauge *3	Gr 35A, B
							Measure brake chamber push rod stroke *4	
57	Brake lining wear				×		Check lining wear	Gr 35A, B
58	Brake drum wear					×	Disassemble and check drum for wear, cracks and damage	Gr 35A, B
59	Slack adjuster cracking *4					×	Check slack adjuster for cracks and other damage	Gr 36B
60	Parking brake effectiveness			×			On a slope, check that vehicle can be held stationary	Gr 36A, B
61	Parking brake operation *4	×		×			(1) Check for operation of parking brake control valve (2) Check operation when brake line air pressure is reduced	Gr 36B
62	Parking brake lever stroke *3	×		×			With lever fully pulled, check that lever is locked completely and that there is allowance in pulling stroke	Gr 36A
63	Parking brake drum and lining wear *3					×	Disassemble and check drum for wear, cracks and damage and check lining for wear	Gr 36A
64	Wheel cylinder piston cup and dust seal replacement *3			Every 12 months			Check wheel cylinder piston cup and dust seal; replace if necessary	Gr 35A
65	Brake booster packing, cup and rubber parts replacement *3			Every 12 months			Check brake booster packing, cup and rubber parts; replace if necessary	Gr 35A
66	Brake hose replacement			Every 12 months			Check brake hose; replace if necessary	Gr 35A, B
67	Check valve packing and rubber parts replacement			Every 12 months			Check the check valve packing and rubber parts; replace if necessary	Gr 35A, B
68	Brake valve packing and rubber parts replacement			Every 12 months			Check brake valve packing and rubber parts; replace if necessary	Gr 35A, B
69	Air compressor and pressure gauge hoses replacement			Every 24 months			Replace air compressor and pressure gauge hoses	Gr 35A, B
70	Brake booster power cylinder packing replacement *3			Every 24 months			Replace brake booster power cylinder packing	Gr 35A
71	Brake fluid tank tube replacement *3			Every 24 months			Check and replace brake fluid tank tube	Gr 35A

MAINTENANCE SCHEDULE TABLES

*1 : 30000 km/18000 miles or 6 months, whichever occurs first.
*2 : 60000 km/36000 miles or 12 months, whichever occurs first.
*3 : FK617, FM617
*4 : FM657
Ⓔ : Exhaust emission items
Ⓝ : Noise control items

Inspection and maintenance		Time of inspection and maintenance					Working procedures	Remarks
		Pre-operation checks	New vehicle at 4000 km/2500 miles	Inspection interval: Every 10000 km/6000 miles	Every 30000 km/18000 miles *1	Every 60000 km/36000 miles *2		
STEERING SYSTEM								
72	Fluid leakage from steering system			×			Check steering system for fluid leakage	Gr 37
73	Steering wheel play	×		×			Turn steering wheel right and left to measure play at steering wheel rim. Measure while engine is running	Gr 37
74	Steering operating condition	×		×			Check steering wheel to see if it vibrates, pulls to one side or requires unusual steering effort	Gr 37
75	Looseness and play of steering system (including hoses and pipes)			×			(1) Check steering system for looseness and play (2) Check power steering hoses and pipes for looseness	Gr 37
76	Wheel alignment					×	Measure toe-in, camber, caster and kingpin inclination angles	Gr 26
77	Right and left turning angles and power					×	(1) Check that the stopper bolt is sufficiently tight, without causing damage, and that the steering linkage operates smoothly until stopped by the stopper bolt (2) Check that the steering wheel does not make contact with other parts	Gr 26
78	Power steering booster and oil pump internal rubber parts replacement			Every 24 months			Replace internal rubber parts	Gr 37
79	Power steering hose replacement			Every 24 months			Replace power steering hose	Gr 37
CAB AND FRAME								
80	Looseness and damage of chassis and body			×			(1) Check the frame, cross members and other parts for cracks and damage, also check for loose rivets (2) Also check for body damage and loose mounting bolts	Gr 41, 42
81	Heater and defroster operation			×			Check operation and installation of defroster	Gr 55
82	Reflection of rearview mirrors and reflectors	×					Check for reflecting condition, stains and damage	Gr 42
83	Door lock function			×			Check door lock mechanism functions properly	Gr 42
84	Seat belt mounting condition			×			Check seat belt for damage, buckle and retracting function and mounting condition	Gr 42
ELECTRICAL SYSTEM								
85	Looseness and damage of electrical wiring and connections			×			Check wiring, connectors and battery terminals for looseness and corrosion	Gr 54
86	Battery electrolyte level and specific gravity			Every 20000 km/12000 miles			(1) Check electrolyte level (2) Measure electrolyte specific gravity with hydrometer	Gr 54
87	Operation and damage of the lighting system and turn signal lamps	×		×			(1) Check operation, damage and installation of each lighting unit (2) Check that turn signal lamps are operated by the turn signal switch	Gr 54
88	Operation of horn	×		×			Check operation, damage and mounting condition	Gr 54
89	Operation and fluid level of windshield wiper and washer	×		×			Check operation, damage and mounting condition Check if fluid level in washer tank is okay	Gr 42
90	Gauges and pilot lamps function	×		×			Check function of gauges and pilot lamps	Gr 54
91	Switch function					×	Check operation, damage and installation of each switch	Gr 54
OTHER								
92	Road test of vehicle			×			Drive the vehicle to check for overall vehicle operating condition	

This section explains simple maintenance procedures. See the relevant Group in this manual for further details.

Replacement of Oil Filter

Lubricant

Location	Points of application	Kinds	Quantity
2	Inside oil filter	Engine oil	Approximately 2.3 L {2.4 qts}
	Gasket area of oil filter with thin application	Engine oil	As required

Special tools

Unit : mm {in.}

Location	Tool name and shape	Part No.	Application
2	Oil filter wrench 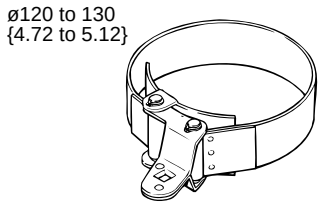 01503	MH061537	Removal of oil filter

WARNING
- **Wipe up any engine oil that has been spilled because it can cause a fire.**
- **Do not touch the engine while it is hot because it will burn you.**

CAUTION

Take care not to spill engine oil on the V-belts, because this would cause them to slip, reducing service life.

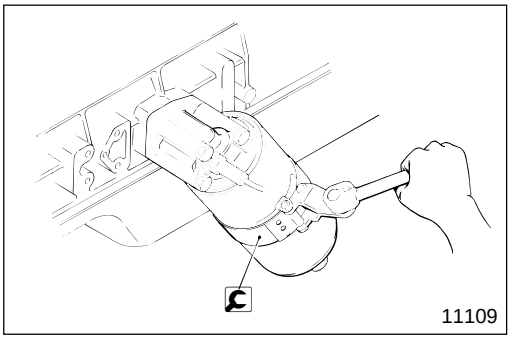
11109

[Removal]

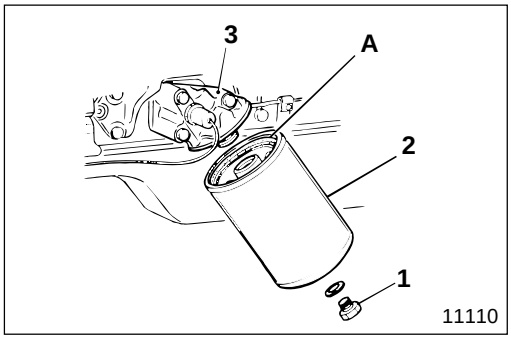

11110

[Installation]
- Clean the surface of oil filter head **3** that makes contact with oil filter **2**.
- Apply engine oil thinly and evenly to gasket area **A** of oil filter **2**.
- Screw in oil filter **2** to oil filter head **3** until gasket area **A** sits on the filter head. From this position, tighten further by rotating by one and one eighth to one and three eighths of a turn.
- After installation, run the engine and check that there is no oil leakage from gasket area **A**.
- Check the oil level and if it is low, top it up.

Replacement of Fuel Filter

Lubricant

Location	Points of application	Kinds	Quantity
2	Gasket contact surfaces of fuel filter and fuel filter head	Engine oil	As required

Special tools

Unit : mm {in.}

Location	Tool name and shape	Part No.	Application
2	Filter wrench 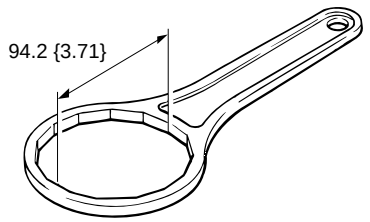 01882	MH061572	Removal of fuel filter

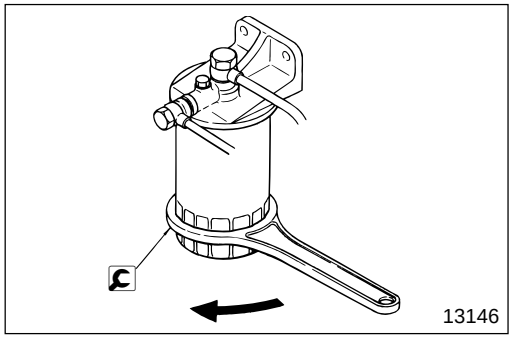
13146

WARNING

- **Fuel ignites easily. Do not get it near flame or heat.**
- **Wipe up any gas oil that has been spilled because it can cause a fire.**
- **Do not use an unsuitable filter because it can cause a fire.**

[Removal]

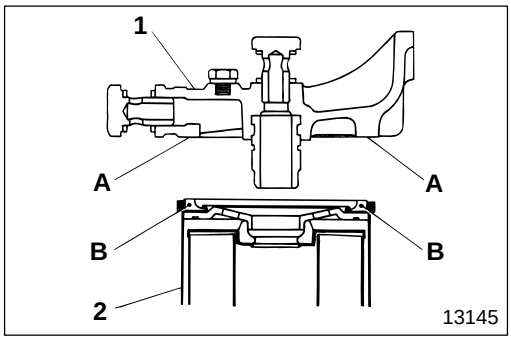

13145

[Installation]

- Install by tightening by three quarters to one full turn after contact surface **A** of fuel filter head **1** contacts gasket **B** of fuel filter **2**. Be sure to tighten by hand.
- After installation, run the engine and check for fuel leakage.

Draining of Water Separator Condensation

Tightening torque

Unit : N·m {lbf.ft, kgf·m}

Location	Parts to be tightened	Tightening torque	Remarks
2	Drain plug	2.9 to 3.9 {2.2 to 2.9, 0.3 to 0.4}	—

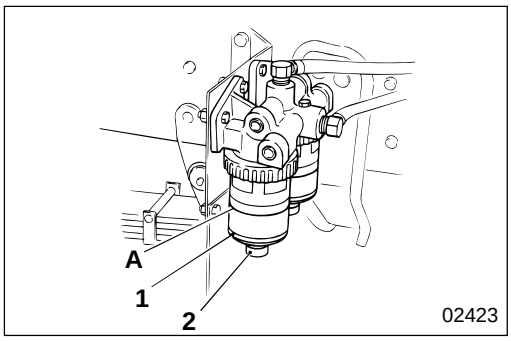

Visually inspect the water separator before driving.
When float **1** reaches red line **A**, drain the condensation as follows:

- Loosen drain plug **2** and drain out the condensation.
- When float **1** has dropped to the bottom, tighten drain plug **2**.
- Carefully wipe the water separator and the surrounding area.
- Check for fuel leakage.

Cleaning of Fuel Feed Pump Gauze Filter

Tightening torque

Unit : N·m {lbf.ft, kgf·m}

Location	Parts to be tightened	Tightening torque	Remarks
2	Eye bolt	25 to 29 {18 to 22, 2.5 to 3}	—

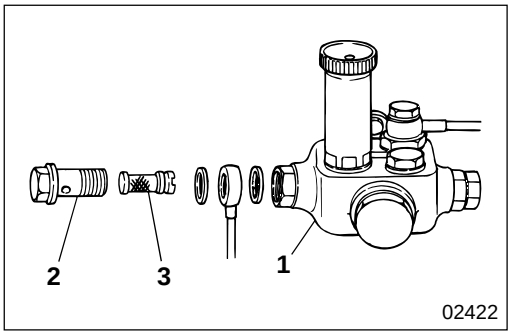

WARNING

- **Fuel ignites easily. Do not get it near flame or heat.**
- **Wipe up any gas oil that has been spilled because it can cause a fire.**
- **Do not use an unsuitable filter because it can cause a fire.**

- Remove eye bolt **2** on the inlet side of fuel feed pump **1**.
- Remove gauze filter **3** from eye bolt **2**.
- Clean gauze filter **3** with gas oil.
- Follow the removal sequence in reverse and reinstall gauze filter **3**. Install eye bolt **2** in the fuel feed pump.
- Bleed the air from the fuel line.
- Start the engine and check for fuel leakage.

Bleeding of Air from Fuel Line

Tightening torque

Unit : N·m {lbf.ft, kgf·m}

Location	Parts to be tightened	Tightening torque	Remarks
2	Air vent plug	7.8 to 12 {5.8 to 8.7, 0.8 to 1.2}	—

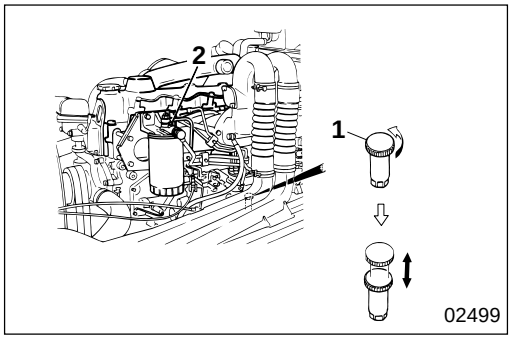

WARNING

- **Fuel ignites easily. Do not get it near flame or heat.**
- **Wipe up any gas oil that has been spilled because it can cause a fire.**

- Turn the top of priming pump **1** of the injection pump counterclockwise and pull it up so the top protrudes.
- Loosen air vent plug **2** of the fuel filter and move the top part of priming pump **1** up and down.
- Move priming pump **1** up and down repeatedly until air bubbles are no longer present in the fuel drained from air vent plug **2**.
- When the fuel being drained is free of air bubbles, tighten air vent plug **2**.
- After moving priming pump **1** up and down another five or six times, push the top down and turn clockwise to drive it in fully.
- After bleeding the air, carefully wipe up spilled fuel and start the engine.
- Check for fuel leakage.

Adjustment of V-Belt Tension

Newly installed V-belts can stretch during their initial running-in period. To prevent this from becoming a problem, run the engine for several minutes after installing the V-belt, then readjust. Perform this cycle several times.

WARNING⚠

You must take special precautions to prevent the engine from rotating while a V-belt is being inspected or adjusted.

CAUTION⚠

- **Make sure that you turn off the engine before attempting to inspect or adjust the V-belts.**
- **Make sure that you fasten all bolts and nuts securely after adjusting the V-belts. Remember that too much tension can damage the V-belts and bearings.**
- **Do not grease V-belts. This causes them to slip, which reduce service life.**

Service standards

Unit : mm {in.}

Location	Maintenance item		Standard value	Limit	Remedy
1, 2	V-belt tension (Each one)	Fan	10 to 15 {0.39 to 0.59}	—	Adjust
		Air-conditioner	7 to 10 {0.28 to 0.39}		

Special tools

Location	Tool name and shape	Part No.	Application
1, 2	Belt tension gauge  03612	MH062345	Measurement of tension of V-belt

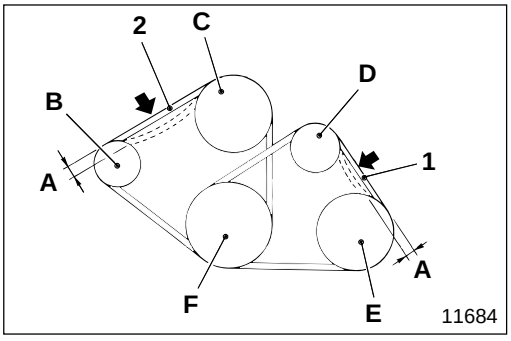

[Inspection]

Measure the extent of flex **A** when the center of V-belts **1**, **2** as illustrated is depressed with a force of 98 N·m {72 lbf.ft, 10 kgf·m}.

- **B** : Alternator pulley
- **C** : Water pump pulley
- **D** : Tension pulley
- **E** : Cooler compressor pulley (Air-conditioner)
- **F** : Crankshaft pulley

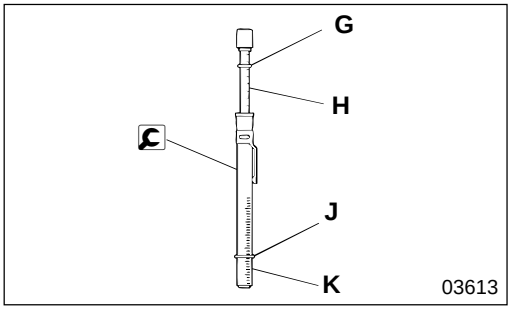

Use of special tool belt tension gauge

- Set upper O-ring **G** of 🔧 belt tension gauge to 98 N·m {72 lbf.ft, 10 kgf·m} (push load) on graduation **H**.
- Set lower O-ring **J** of 🔧 belt tension gauge to graduation **K** (maximum flex of belt).

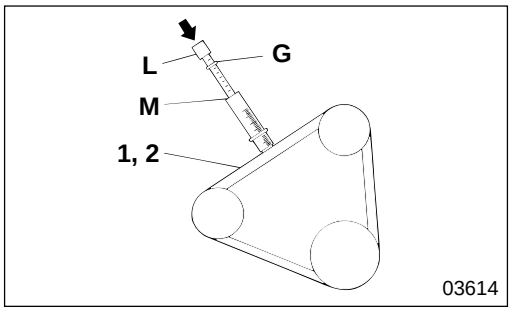

- Place 🔧 belt tension gauge at the center of V-belts **1**, **2** perpendicularly as illustrated and push top **L** all the way down until upper O-ring **G** hits upper edge **M**.

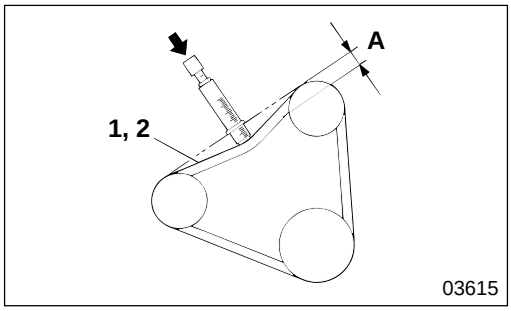

- Measure the extent of flex **A** of V-belts **1**, **2** at this point, and if the measured value deviates from the standard value, adjust as follows:

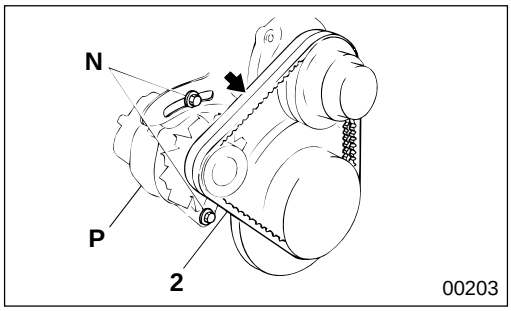

[Adjustment]

(1) Adjustment of tension of V-belts for fan

- Loosen alternator mounting bolts **N** (two points).
- Adjust the tension of V-belt **2** by rocking alternator **P** left and right.
- After adjustment, tighten mounting bolts **N** securely.

CAUTION ⚠

- **Bear in mind that excessive tension of V-belts 2 might damage the belts and bearings that engage with the V-belts.**
- **Be sure to replace V-belts 2 as a set to maintain even tension between them.**
- **Be careful not to let oil stick to V-belts 2. If oil gets onto the belts, it causes slipping, resulting in overheating and insufficient battery charging.**

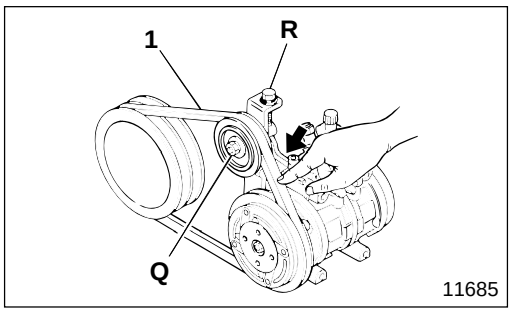

(2) Adjustment of tension of V-belt for air-conditioner

- Loosen tension pulley mounting nut **Q**, and adjust the tension of V-belt **1** moving adjusting bolt **R**.
- After adjustment, tighten mounting nut **Q** securely.

CAUTION ⚠

- **Bear in mind that excessive tension of V-belt 1 might damage the belt and bearings that engage with the V-belt.**
- **Be careful not to let oil stick to V-belt 1. If oil gets onto the belt, it causes slipping, resulting in poor performance of the air-conditioner.**

Cleaning and Replacement of Air Cleaner Element

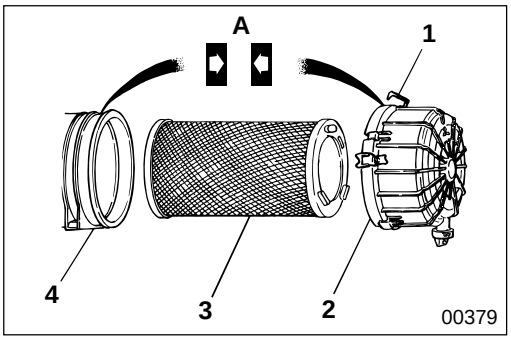

[Removal]
- Remove clamp **1** to remove cover **2**.
- Remove air cleaner element **3**.

[Installation]
Install case **4** and cover **2** by aligning alignment marks **A**.

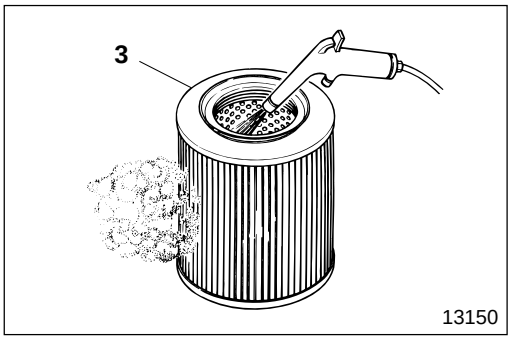

[Cleaning]
- Blow compressed air of 685 kPa {100 lbf/in^2, 7 kgf/cm^2} or less through air cleaner element **3** from the inside.
- When using compressed air, move the blower's nozzle up and down along the pleats of air cleaner element **3** evenly.

CAUTION ⚠
- **Do not tap or hit air cleaner element 3 to remove dust.**
- **Do not blow compressed air through air cleaner element 3 from the outside.**

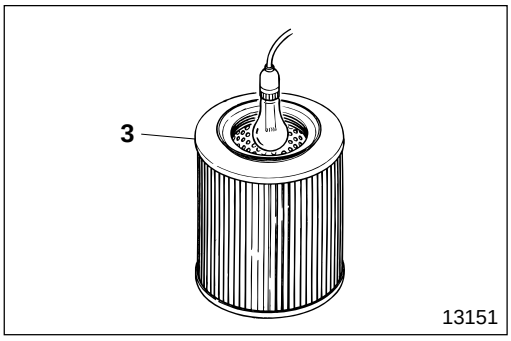

[Inspection]
- Illuminate the inside of air cleaner element **3**.
- If parts of the filter paper are torn or thin, or if the packing of the upper surface of air cleaner element **3** is damaged, replace the air cleaner element.

NOTE

If the dust on air cleaner element 3 is wet due to oil smoke or soot, replace the air cleaner regardless of the scheduled replacement interval.

Inspection of Clutch Pedal Free Play

Service standards

Unit : mm {in.}

Location	Maintenance item		Standard value	Limit	Remedy
1	Clutch pedal free play	Except for FM657 (M8S2×5)	32 to 44 {1.26 to 1.73}	—	Adjust or replace
		FM657 (M8S2×5)	25 to 37 {0.98 to 1.46}	—	

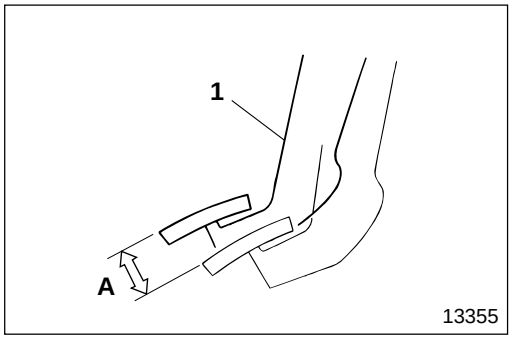

[Confirmation]
Push clutch pedal **1** with your hand and measure the amount of movement **A** (free play) until you meet resistance. If the measured value does not conform to the standard value, adjust by stroke of the clutch power cylinder or the clutch booster push rod, or replace the clutch disc.

[Clutch operation]

- Check for unusual noises when clutch pedal **1** is pressed while the engine is idling, and also for abnormally heavy clutch operation. Also check to be certain that it is not difficult to shift the vehicle into first and reverse gears.
- Gradually release clutch pedal **1** to set the vehicle in motion.
  Check to be sure there is no slippage, and that the clutch engages smoothly.

Tire

Service standards

Unit : mm {in.}

Location	Maintenance item	Standard value	Limit	Remedy
1	Depth of tire tread grooves	—	1.6 {0.063}	Replace

Tightening torque

Unit : N·m {lbf.ft, kgf·m}

Location	Parts to be tightened	Tightening torque	Remarks
2	Wheel nut	400 to 440 {295 to 325, 41 to 45}	Wet

Lubricant

Location	Points of application	Kinds	Quantity
2	Wheel nut spherical area	Chassis grease [NLGI No.1 (Ca soap)] or Wheel bearing grease [NLGI No.1 (Li soap)]	As required
4	Wheel nut (inner) at thread area and spherical area		
6	Thread area of hub bolt		

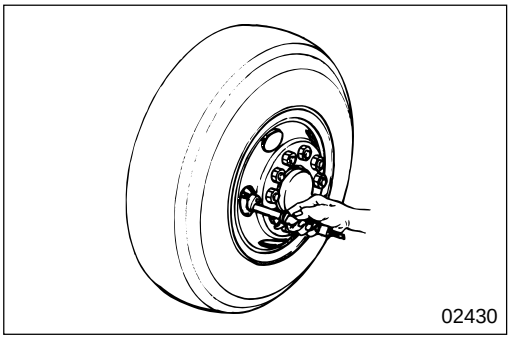

Air pressure

Tire air pressure should be checked before the vehicle is driven, while the tires are still cool.

Model	Tire size	Air Pressure kPa {Psi, kgf/cm^2}
FK	9R 22.5-12PR	Front : 750 {105, 7.50} Rear : 675 {95, 6.75}
FM	11R 22.5-14PR	

CAUTION

- **Make certain that there is no difference in the air pressure between the inner and outer rear tires.**
- **Make certain you use valve caps on the air valves.**
- **It is not necessary to increase the air pressure for high-speed driving.**

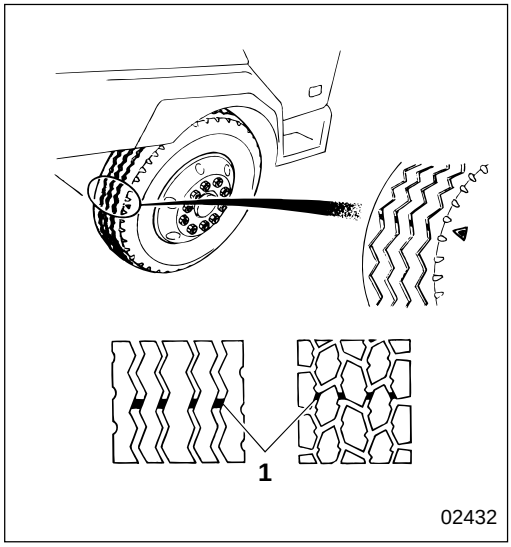

Checking tread depth

- Check all around the tire treads to make sure that the depth of the tread grooves is above the wear limit.
- If the tread grooves are not deep enough, slip sign **A** appears at the position of the ⚠ mark, where the tread groove has worn away.

WARNING⚠

If the depth of the tread grooves is not adequate, the tires will slip on wet roads and present a hazard. Such tires are also extremely dangerous because they are more susceptible to hydroplaning when the vehicle is running at high speeds in the rain. Such tires must be replaced with new ones as soon as possible.

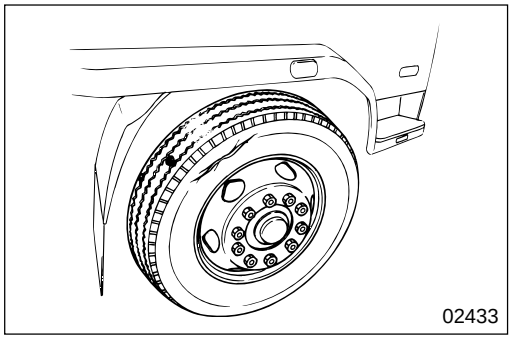

Checking for cracks, damage, and objects embedded in the treads

- Check the tire treads and walls for cracks and damage.
- Check tire treads for uneven wear or other abnormal wear.
- Check if metal objects or nails have penetrated the tires.
- Check for stones embedded between double tires.

WARNING⚠

Badly damaged or worn tires are extremely dangerous, because they can be punctured more easily when the vehicle is running, they must be replaced with new ones as soon as possible.

Removing tires

- Jacking up point
  - For front wheels : Front axle bottom A
  - For rear wheels : Rear axle tube bottom B

< Front wheel >

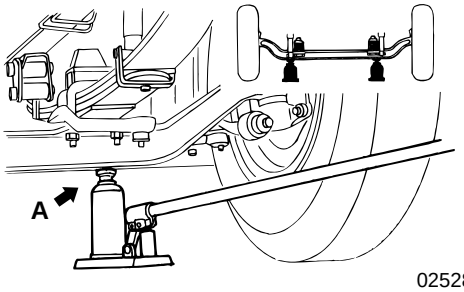

02528

< Rear wheel >

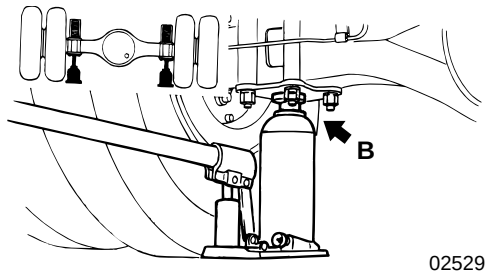

02529

WARNING

- **The jack should be placed on flat, solid ground, and should not be used to raise the vehicle higher than necessary.**
- **Do not use the jack at vehicle locations other than those illustrated.**
- **Keep in mind the danger of a slipping jack. Never crawl under the vehicle while the jack is in use or rock the vehicle. Also, do not start the engine while the vehicle is jacked up.**
- **To increase safety, use supports for the vehicle when it is necessary to leave it jacked up for long periods.**
- **Chock both the tire to be removed and the tire diagonally opposite to it so that they will not rotate when you are removing the tire.**

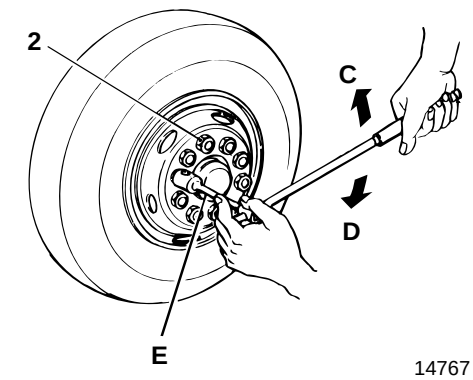

14767

- Loosen wheel nuts **2** slightly. The wheel nuts for right tires **C** have right-hand threads "**R**", and the wheel nuts for left tires **D** have left-hand threads "**L**".

WARNING

Make certain that wheel nut wrench E is fully engaged, all the way to the back of nuts 2. If it is not, it could slip.

CAUTION

Only loosen wheel nuts 2 slightly. Do not remove them.

- Jack up the vehicle carefully, until the tire is slightly off the ground. Remove wheel nuts **2**, then remove the tire.
- When working on the double tires at the rear of the vehicle, first remove the outside tire, then lower the vehicle and loosen the nuts on the inside tire. After doing this, jack the vehicle back up and remove the tire.

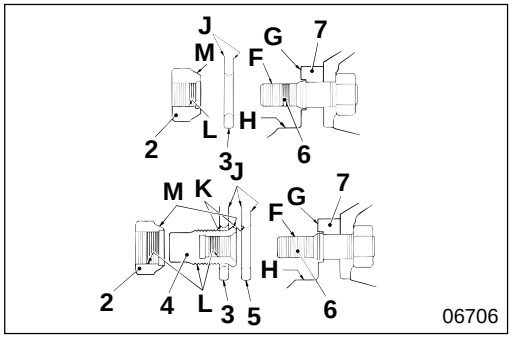

06706

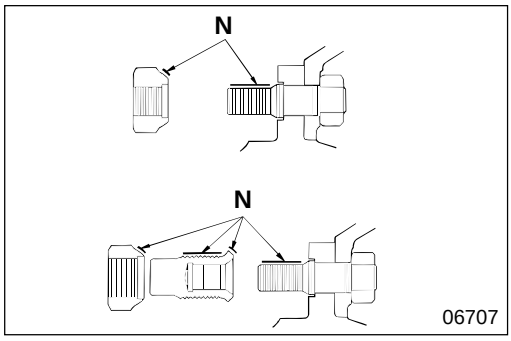

06707

Mounting tires

- To prevent wheel nuts **2**, **4** and hub bolt **6** from becoming loose and to prevent mounting parts (tire assemblies **3**, **5** and hub **7**) from being damaged, remove rust, dust, additional coatings of paint, and foreign particles from the following areas:
  F : Hub bolt thread area
  G : Wheel mounting surface of hub
  H : Wheel alignment area of hub
  J : Disc wheel mating surface
  K : Disc wheel nut mounting surface
  L : Wheel nut thread area
  M : Wheel nut spherical area
  N : Grease application area

WARNING⚠

Never use grease containing molybdenum disulfide, because it would cause loosening of fitted screws.

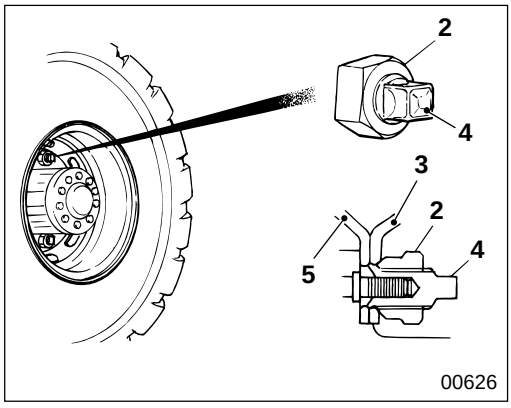

00626

- Put on the double rear tires as follows:
  - After mounting inner tire **5** and fully tightening inner wheel nuts **4**, jack the vehicle up and mount on outer tire **3**, then tighten outer wheel nuts **2**.
  - Even if only outside tire **3** is to be changed, do not mount it until inner wheel nuts **4** have been fastened at the specified torque.
  - Slide the air valves on the inside and outside tires down when mounting the tires.

WARNING⚠

If the threads are scored, or the disc wheel is deformed or cracked, change bolts 6, nuts 2, 4 and disc. Driving the truck before correcting such problems can cause the tire in question to come loose, which could be the source of major accidents.

CAUTION⚠

Check hub bolt 6 threads carefully for scratches before putting the tire on.

- Place the tapered end of wheel nuts **2**, **4** towards the disc wheel and fasten temporarily. Center so that there is no eccentricity between bolts **6** and the disc wheel bolt holes.
- Lower the vehicle.

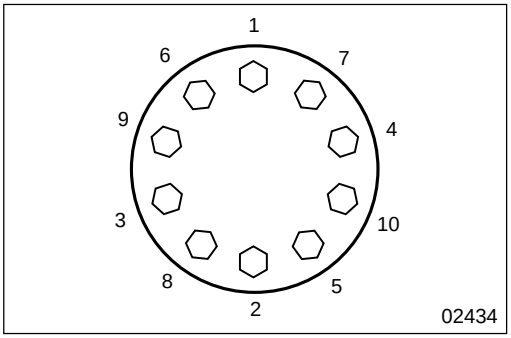

- Tighten the nuts in the order as illustrated, tightening each nut two or three times. To finish, tighten each nut at the specified torque.

WARNING⚠

Always use the specified torque when tightening the wheel nuts. If the wheel nuts are not tightened properly, the wheels could come loose while the vehicle is being driven, which could result in life threatening accidents or the truck being disabled.

CAUTION⚠

Over-tightening the wheel nuts can damage them.

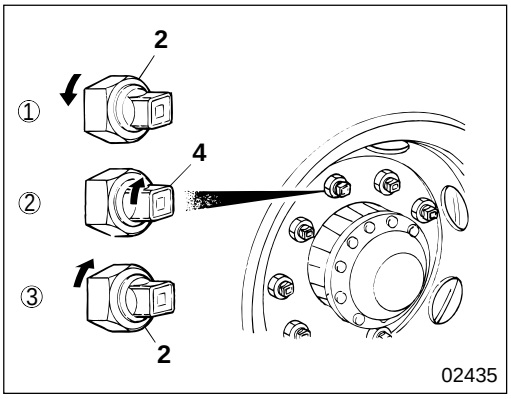

Checking the wheel nuts for looseness

The wheel nuts should be checked for looseness every 10000 km (6000 miles). All the nuts should be tightened at specified torque.

- Check the double rear tires for looseness as follows:

① Loosen outer wheel nuts **2**.
② Tighten inner wheel nuts **4** at specified torque.
③ Tighten outer wheel nuts **2** at specified torque.

CAUTION⚠

If outer wheel nuts 2 are tightened without first being loosened, it might not be possible to tighten them at the specified torque.

Tire rotation

Tires wear differently, according to the location where they are mounted. To make this wear uniform and prolong the life of your tires, they should be rotated every 10000 km (6000 miles) in the rotation order shown below:

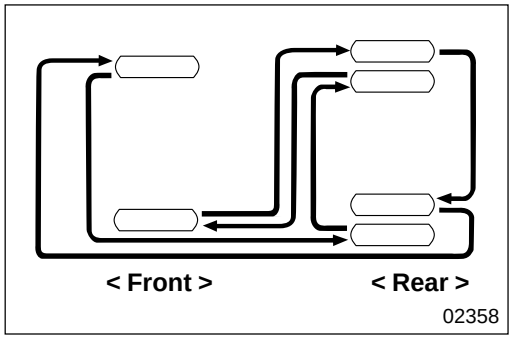

- When the tread patterns for all tires are identical:

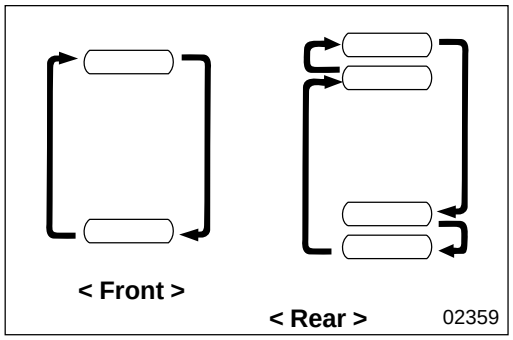

- When the tread patterns are different for the front and rear tires:

CAUTION⚠

- **Always adjust air pressure after running-in new tires.**
- **When using tires of different tread patterns, use rib-type patterns for the front tires and traction type patterns for the rear tires.**
- **Avoid using both radial and biased tires on the same vehicle.**

Inspection of Brake Lining Thickness

Service standards

Unit : mm {in.}

Location	Maintenance item		Standard value	Limit	Remedy
2	Thickness of brake lining	FK617, FM617	—	5.5 {0.22} (Side shoulder means wear limit)	Replace
		FM657	—	6 {0.24} (Side shoulder means wear limit)	Replace

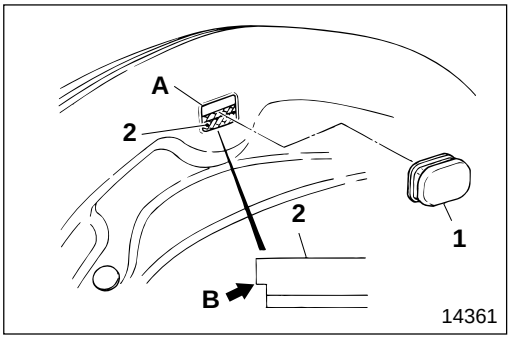

NOTE

Be sure to inspect at two points for each wheel per side.

- Remove check hole plug **1** from the backing plate.
- Inspect through check hole **A** whether brake lining **2** is worn to the point of side shoulder **B** of the brake lining (the limit).
- If the measured value is lower than the limit, replace brake lining **2** on the same axle as a unit.
- After inspection, be sure to reinstall check hole plug **1**.

Battery

DANGER⚠

- **Since flammable hydrogen gas is generated by the battery, be sure to obey the following warnings :**
  - **Do not short-circuit the ⊕ and ⊖ terminals on the battery.**
  - **Keep sparks and lit cigarettes away from the battery.**
  - **Do not wear metal objects on your arms and lean over the battery.**
- **Because the battery electrolyte is diluted sulfuric acid and is corrosive, when handling the battery wear safety glasses and rubber gloves to protect the eyes and hands.**

WARNING⚠

To prevent a short-circuit be sure that disconnected the battery cables do not accidentally touch the battery terminals.

CAUTION⚠

- **Make sure that you disconnect the battery cable ⊖ first when you disconnect the battery cables.**
- **Make sure that all electrical switches of the vehicle are OFF before connecting the battery cables.**
- **Make sure that you connect the battery cable ⊕ before you connect the battery cable ⊖.**

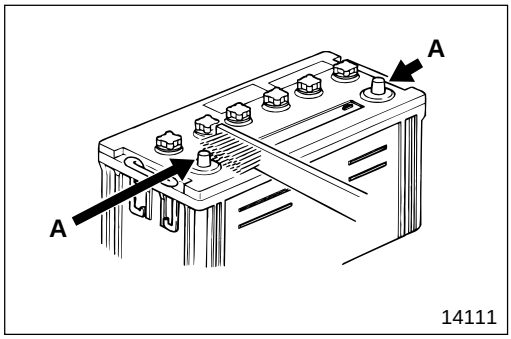

Visual inspection

- If terminal **A** is corroded, scrub off the corrosion from it using a wire brush.
- If cracks or defects are found on the battery, replace it since the cracks or defects can cause liquid spills.

CAUTION ⚠

Make sure you grease the ⊕ side of terminal A because it is easily corroded.

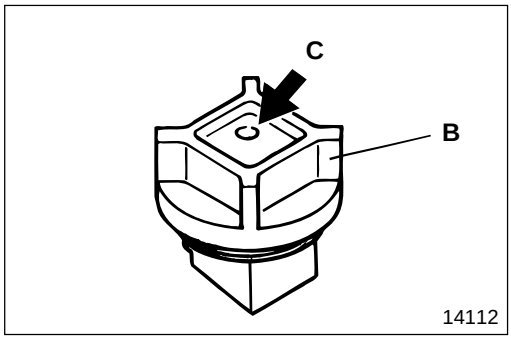

- If bleed hole **C** of vent plug **B** is clogged, clean the hole.

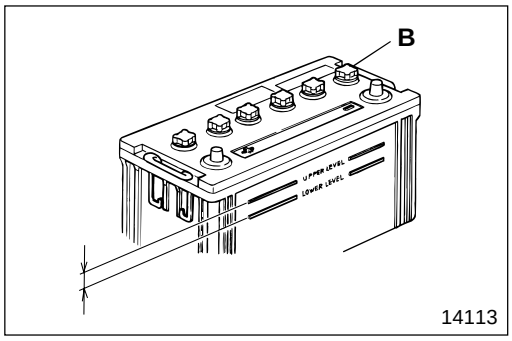

Inspection of fluid level

- Make sure that the battery electrolyte level is between UPPER and LOWER.
- If the level is below LOWER, remove vent plug **B** and fill the battery with distilled water or battery replenisher to UPPER.

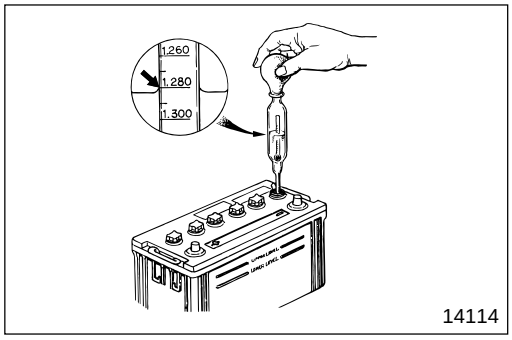

Measurement of specific gravity

Measure the specific gravity of the battery electrolyte. If the measured value is lower than the limit, charge the battery.

NOTE

The specific gravity of the battery electrolyte depends on the liquid temperature. Use the following formula to convert the actual value to the value were the temperature 20°C {68°F}.

$$S_{20}\{68\} = S_t + 0.0007\,(t - 20\{68\})$$

$S_{20}\{68\}$: Specific gravity were the temperature 20°C {68°F}

S_t : Specific gravity actually measured with the temperature at t°C {t°F}

t : Temperature of battery electrolyte

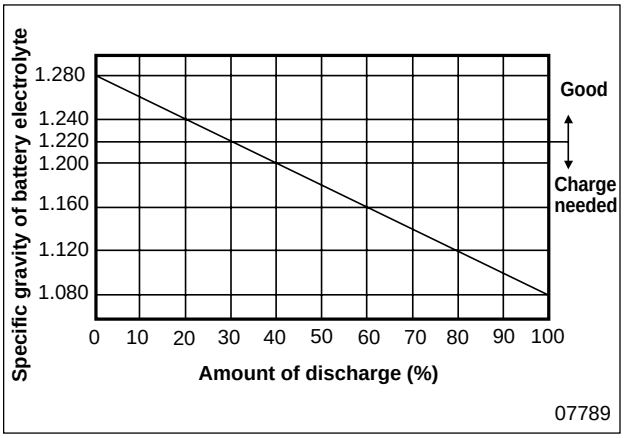

Charging

- Although, as a rule, charging of the battery should be done with the battery removed from the vehicle, if you have to charge the battery while it is on the vehicle, make sure that you stop the engine and disconnect the battery cable ⊖.
- Remove vent plug **B** before charging the battery.
- For the recommended charge time and current, see the following table to avoid overcharging.

	Charge current (A)	Charge time (H)	Upper limit of fluid temperature (°C {°F})
Normal charge	Value of 5-hour rating capacity / 10 {113}	*Amount of discharge (Ah) / Charge current (A) ×1.2(to 1.5)	45
Quick charge	Value of 5-hour rating capacity / 1.5 {131}	0.5	55

* Amount of discharge (Ah)=5-hour rating capacity (Ah)× Amount of discharge (%) / 100

- Use the graph shown on the left to calculate the amount of discharge (%).
- Use diluted sulfuric acid, made up of sulfuric acid and refined or distilled water, as the battery electrolyte.
- The specific gravity of fully-charged battery electrolyte is 1.280 with the temperature at 20°C {68°F}.

DANGER⚠

- **Do not let the battery electrolyte level rise and overflow while charging the battery.**
- **Keep naked lights away from the battery while charging it or it might explode.**
- **Be careful not to generate sparks while charging the battery because its dangerous.**
- **After charging the battery, tighten vent plug B, wash away sulfuric acid from the battery using water, and dry the surface.**

Fuse

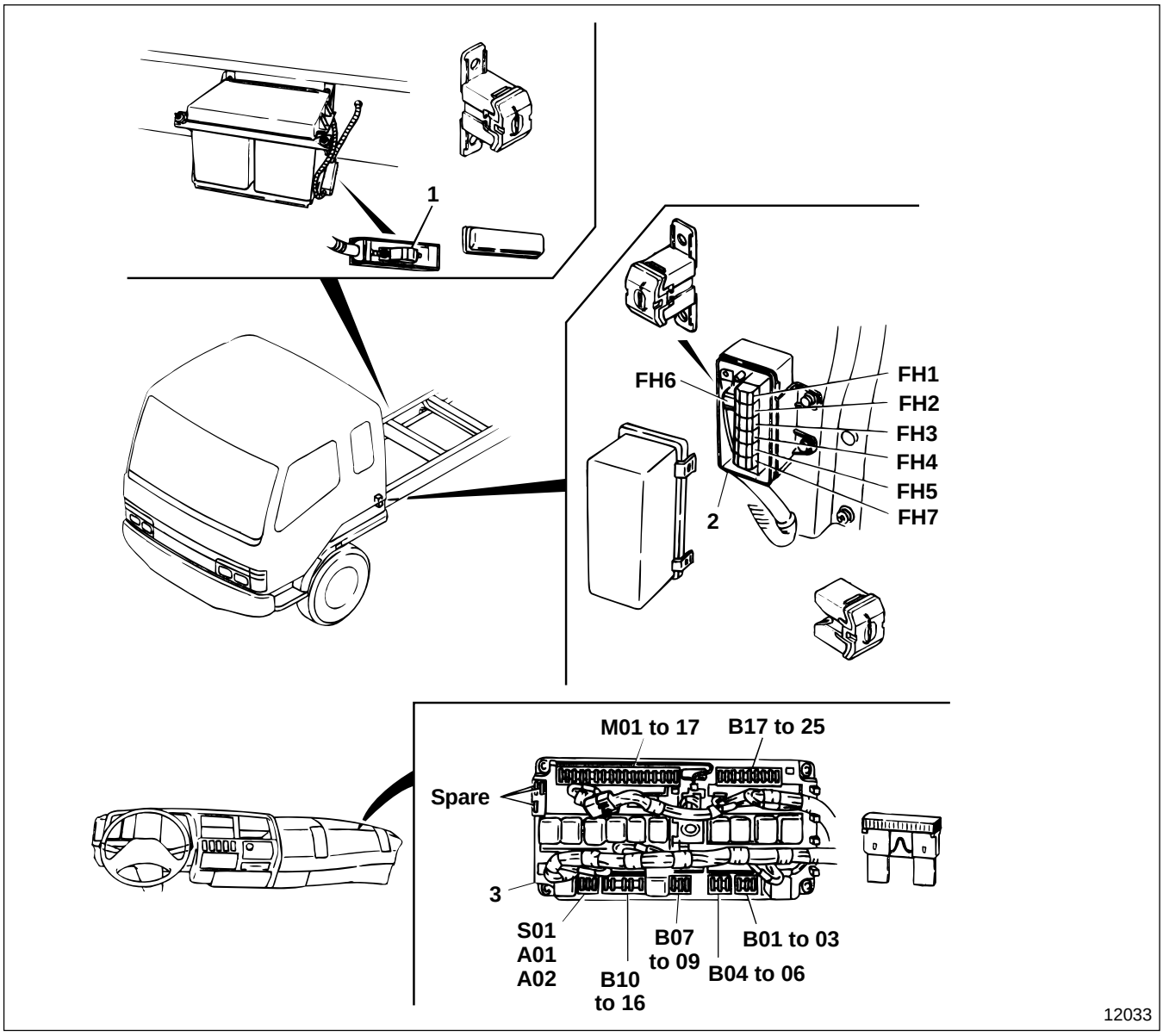

1 Main high-current fuse
2 High-current fuse box
3 Relay and fuse box

CAUTION ⚠

- **If a fuse blows, make sure you identify and remedy the cause, then replace the fuse.**
- **Make sure that you replace the fuse with one having the same rating.**
- **Make sure that you remove the ⊖ terminal of the battery cable before removing main high-current fuse 1 and high-current fuses FH1 to 7.**

Main high-current fuse

Fuse No.	Main load	Capacity
—	High-current fuse box	120 A

High-current fuse box

Fuse No.	Main load	Capacity
FH1	Starter switch (Terminal M)	50 A
FH2	Fuse box (B07 to 16)	40 A
FH3	Fuse box (B18 to 24)	40 A
FH4	Fuse box (B01 to 04)	40 A
FH5	Glow relay (Terminal B)	50 A
FH6	Alternator (Terminal B)	120 A
FH7	Fuse box (B6)	40 A
FH8	—	—

Fuse box

Fuse No.	Main load	Capacity
A01	Audio	10 A
A02	Cigarette lighter	15 A
B01	Reserve power (DC)	10 A
B02	—	—
B03	Van body dome light	15 A
B04	Socket	20 A
B05	—	—
B06	Glow heater	20 A
B07	Stop lamp	10 A
B08	Turn/hazard	15 A
B09	Tail lamp	15 A
B10	Headlamp relay	5 A
B11	—	—
B12	Headlamp main LH	10 A
B13	Headlamp main RH	10 A
B14	—	—
B15	Headlamp dimmer LH	10 A
B16	Headlamp dimmer RH	10 A
B17	—	—
B18	* Air-conditioner	20 A
B19	—	—
B20	—	—
B21	—	—

Fuse No.	Main load	Capacity
B22	Cab lamp	10 A
B23	Fuel-cut motor	10 A
B24	Horn	15 A
B25	—	—
M01	Automatic transmission	10 A
M02	—	—
M03	—	—
M04	Reserve power	10 A
M05	—	—
M06	Automatic transmission	10 A
M07	Power window	20 A
M08	Pre-stroke cut relay	20 A
M09	* Air-conditioner	20 A
M10	—	—
M11	Pre-stroke control unit	10 A
M12	—	—
M13	Fuel-cut relay	10 A
M14	Air dryer	15 A
M15	Meter cluster	10 A
M16	Backup lamp	10 A
M17	Wiper	15 A
S01	Starter relay	10 A

* Fuses are provided for these pieces of equipment only where they are installed.

LUBRICATION

*1 : 30000 km/18000 miles or 6 months, whichever occurs first.
*2 : 60000 km/36000 miles or 12 months, whichever occurs first.
*3 : FK617, FM617
*4 : FM657
Ⓔ : Exhaust emission items
Ⓝ : Noise control items

	Inspection and maintenance	Time of inspection and maintenance					Lubrication procedures	Remarks
				Inspection interval				
		Pre-operation checks	New vehicle at 4000 km/2500 miles	Every 10000 km/ 6000 miles	Every 30000 km/ 18000 miles *1	Every 60000 km/ 36000 miles *2		
1	Ⓔ Engine oil contamination and oil level	×					Engine oil API classification CD, CD/SF, CE, CE/SF or CF-4 Over 30°C {86°F}..... SAE 40 40 to –5°C {104 to 23°F} ..... SAE 30 15 to -15°C {59 to 5°F} ..... SAE 20W-20 Over -15°C {5°F} ..... SAE 15W-40 Below 0°C {32°F}..... SAE 10W-30	Gr 12
	Ⓔ Engine oil replacement		×	×				
2	Clutch fluid tank fluid level	×		×			Brake fluid (SAE J1703f or FMVSS No.116 DOT3)	Gr 21
	Clutch fluid tank fluid replacement					×		
3	Lubrication of clutch fork shaft				×		Wheel bearing grease [NLGI No.2 (Li soap)]	Gr 21
4	Lubrication of clutch shifter			When replacing clutch disc assembly				
5	Manual transmission oil level			×			Gear oil, API classification GL-3 SAE 80 (General) GL-3 SAE 90 (Warm region) GL-4 SAE 90 (Tropical region) Engine oil Long period of high-speed driving API classification CC or CC/SF SAE 40 or SAE 50	Gr 22
	Manual transmission oil replacement		×	Every 50000 km/ 30000 miles				
6	Automatic transmission fluid level			×			Automatic transmission fluid (DEXRON or DEXRON II type)	Gr 23
	Automatic transmission fluid and filter replacement			Every 40000 km/ 25000 miles Replace the fluid at the first 10000 km/6000 miles inspection				
7	Axle housing gear oil level			×			Gear oil API classification GL-5 Below 40°C {104°F} ..... SAE 90 Over 40°C {104°F}..... SAE 140 Use SAE 140 when operating vehicle at high load such as continuous ascent on slopes and when the outside temperature is 10°C {50°F} or more	Gr 27
	Axle housing gear oil replacement		×			×		
8	Hub bearing grease and oil seal replacement					×	Wheel bearing grease [NLGI No.2 (Li soap)]	Gr 26, 27
9	Brake fluid tank fluid level *3	×		×			Brake fluid (SAE J1703f or FMVSS No.116 DOT3)	Gr 35
	Brake fluid tank fluid replacement *3					×		
10	Power steering fluid level			×			Automatic transmission fluid (DEXRON or DEXRON II type)	Gr 37
	Power steering fluid replacement					×		
11	Lubrication of propeller shaft (universal joint, slip joint, center bearing)			×			Wheel bearing grease [NLGI No.2 (Li soap)]	Gr 25
	Lubrication of slack adjuster and brake camshaft *4			×				Gr 35B
12	Lubrication of kingpins			×			Chassis grease [NLGI No.1 (Ca soap)]	Gr 26
13	Lubrication of all chassis parts			×			Chassis grease [NLGI No.1 (Ca soap)]	
14	Lubrication of cab rear mount side cushion				×		Molybdenum disulfide grease [NLGI No.2 (Li soap)]	Gr 42

Engine Oil

Tightening torque

Unit : N·m {lbf.ft, kgf·m}

Location	Parts to be tightened	Tightening torque	Remarks
3	Oil pan drain plug	69 {51, 7}	—

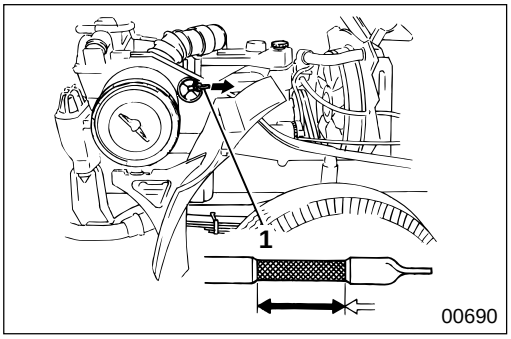

[Inspection]
- Pull out dipstick **1**, wipe off the oil with a cloth.
- Reinsert dipstick **1**, then pull it out carefully.
- Oil level is correct if there is oil sticking to dipstick **1** within the hatched area.
- If the level is low, top it up.
- Tilt the cab.

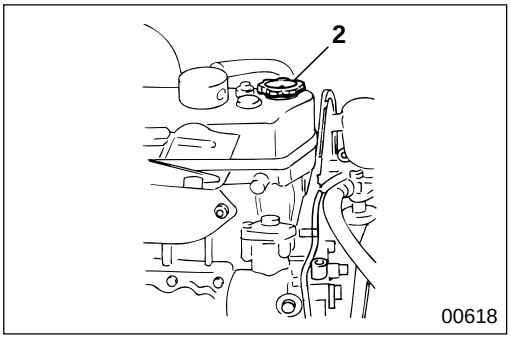

[Replenishment]
- Clean the area surrounding oil filler cap **2** and prevent dust from entering through the filler.
- Remove oil filler cap **2** and top up with engine oil.
- Wait five minutes before checking the oil level.
- Replace filler cap **2**.

WARNING ⚠

- **Wipe up any engine oil that has been spilled because it can cause a fire.**
- **Do not touch the engine while it is hot because it will burn you.**

CAUTION ⚠

Take care not to spill engine oil on the V-belts, because this would cause them to slip, reducing service life.

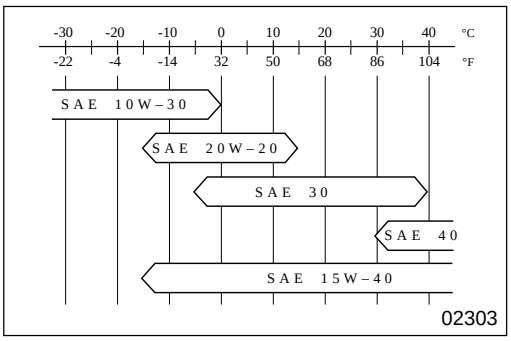

[Replacement]
Since engine oil greatly influences the performance, the life expectancy, and the ability to start the engine, use only oil of the specified grade and viscosity.
The chart illustrates the relationship between oil viscosity and the ambient air temperature.

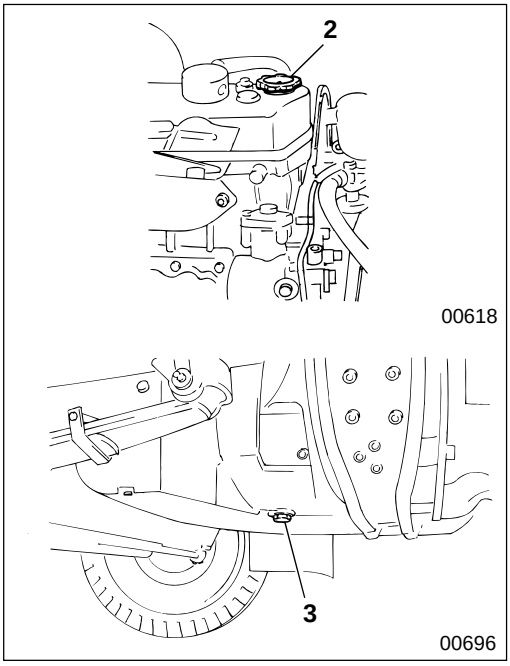

- Clean the area surrounding oil filler cap **2** and prevent dust from entering through the filler.
- Remove oil filler cap **2**.
- Remove oil pan drain plug **3**, and drain the oil. At the same time replace the oil filter.
- After reinstalling drain plug **3**, slowly add engine oil through the oil filler.
- Using the dipstick, check the oil level after more than six minutes have passed.
- Start the engine and let it idle. When the oil has reached all parts, stop the engine. Let 30 minutes pass before checking the oil level again.

Clutch Fluid (Brake Fluid)

Tightening torque

Unit : N·m {lbf.ft, kgf·m}

Location	Parts to be tightened	Tightening torque	Remarks
2	Air bleeder (For air bleeding of clutch power cylinder)	25 to 34 {18 to 25, 2.5 to 3.5}	—

Fluid

Location	Points of application	Kinds	Quantity
1	Fluid tank	Brake fluid (SAE J1703f or FMVSS No.116 DOT3)	As required

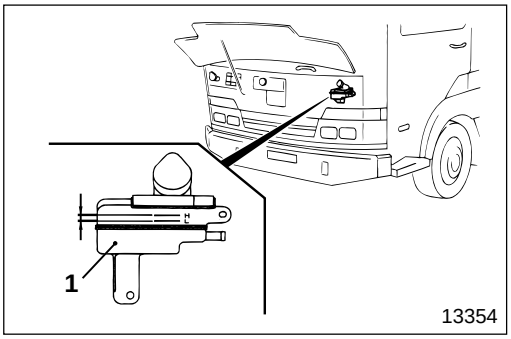

CAUTION

- **Be careful not to splash brake fluid on related parts as this could damage the paintwork.**
- **Be sure to wipe off brake fluid immediately if you splash it on the paintwork.**
- **You must use new brake fluid (SAE J1703f or FMVSS No.116 DOT3). Do not add different quality fluid or mineral oil (gas oil, engine oil, gear oil, automatic transmission fluid, etc.) to the clutch system, because this will cause the rubber parts of the clutch system to swell, resulting in faulty clutch operation.**
- **Do not allow foreign particles or water to become mixed into the brake fluid when refilling, because this will cause faulty clutch operation.**
- **If you use a mug for adding brake fluid, keep it solely for that purpose to prevent contamination from different quality fluids or mineral oils.**

[Inspection and replenishment]

Inspect the level of the brake fluid in fluid tank **1**. It should fall between the "**H**" and "**L**" levels.

If it is below the "**L**" level, lift up the lid flap and remove the cap from fluid tank **1**, then supply the specified brake fluid until the level has come up to the "**H**" level. Do not fill above the "**H**" level.

< Except for FM657 (M8S2×5) >

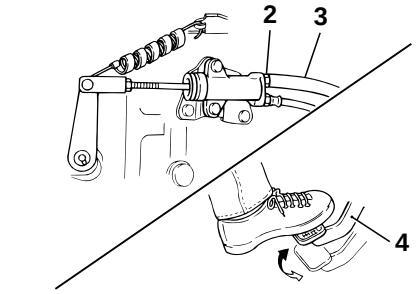

< FM657 (M8S2×5) >

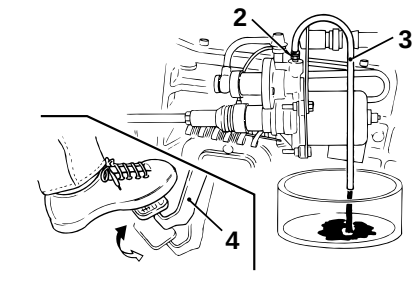

[Replacement]

- Attach vinyl pipe **3** to air bleeder **2** of the clutch power cylinder or the clutch booster.
- Loosen air bleeder **2** and depress clutch pedal 4 several times to drain brake fluid completely.
- Supply new brake fluid to the "**H**" level of fluid tank **1**. Depress clutch pedal **4** repeatedly until the old brake fluid discharged from vinyl pipe **3** is replaced by the new brake fluid.

< Except for FM657 (M8S2×5) >

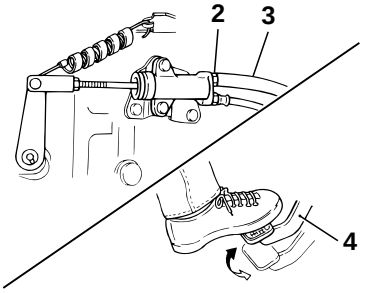

11772

< FM657 (M8S2×5) >

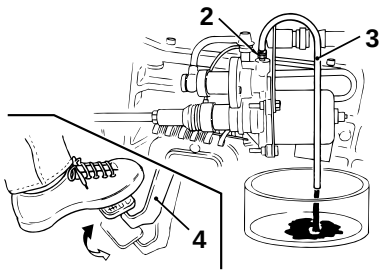

13429

[Air bleeding]

NOTE

Carry out this operation maintaining the brake fluid level in fluid tank 1 between "H" and "L".

- Attach vinyl pipe **3** to air bleeder **2** of the clutch power cylinder or the clutch booster as in the replacement procedure.
- Fill fluid tank **1** with brake fluid, and loosen air bleeder **2** of the clutch power cylinder or the clutch booster, then depress clutch pedal **4** continuously.
- Keep depressing clutch pedal **4**, and tighten air bleeder **2** when air is bled completely.
- Depress clutch pedal **4** several times again, then keep it depressed at its fullest extent.
- With clutch pedal **4** depressed, loosen air bleeder **2** to drain brake fluid containing air. Release the pedal after tightening the air bleeder.
- Repeat this operation until air is no longer present in the fluid being drained.
- When this operation is completed, tighten air bleeder **2** at specified torque.
- Check that brake fluid is at the "**H**" level of fluid tank **1**, and supply new brake fluid if necessary.
- Check for brake fluid leakage from each of the parts with clutch pedal **4** depressed.

Manual Transmission Gear Oil

Tightening torque

Unit : N·m {lbf.ft, kgf·m}

Location	Parts to be tightened	Tightening torque	Remarks
1	Inspection plug	69±15 {51±11, 7±1.5}	—
2	Drain plug	69±15 {51±11, 7±1.5}	—

Sealant

Location	Points of application	Kinds	Quantity
1	Thread area of inspection plug	THREEBOND 1105D	As required
2	Thread area of drain plug	THREEBOND 1105D	As required

WARNING

The engine is hot immediately after the vehicle stopped, so take care not to burn yourself.

< M060S5, S6, M070S6 >

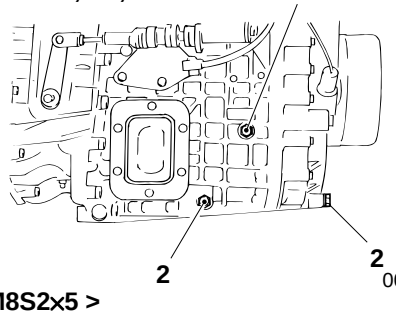

00370

< M8S2x5 >

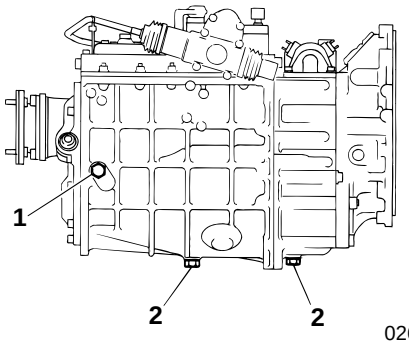

02651

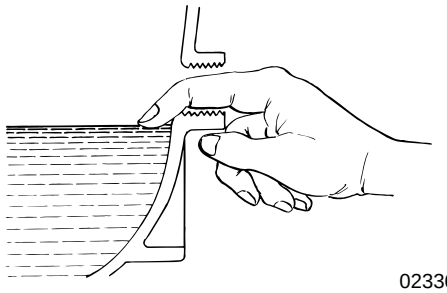

02336

[Inspection and replenishment]

- Remove inspection plug **1** and check whether the oil level is up to the edge of the entrance.
- If the level is low, add oil through the inspection plug hole until the level comes up to the edge of the entrance.

[Replacement]

- Drain the oil after removing inspection plug **1** and drain plug **2**.
- Remove any metal particles sticking to the magnetic part of drain plug **2** before reinstalling the plug.
- Add oil through the inspection plug hole until the level comes up to the edge of the entrance.
- Insert inspection plug **1**.

Automatic Transmission Fluid and Oil Filter

Tightening torque

Unit : N·m {lbf.ft, kgf·m}

Location	Parts to be tightened	Tightening torque	Remarks
4	Drain plug	20 to 27 {15 to 20, 2.05 to 2.75}	—
5	Dipstick guide connector	125 to 135 {91 to 100, 12.55 to 13.76}	—
6	Bolt (Oil pan mounting)	14 to 18 {10 to 13, 1.4 to 1.8}	—
8	Bolt (Oil filter mounting)	14 to 18 {10 to 13, 1.4 to 1.8}	—
12	Oil filter	9.8 to 20 {7 to 14, 1 to 2}	—

Fluid

Location	Points of application	Kinds	Quantity
11	Body of O-ring	Automatic transmission fluid (DEXRON or DEXRON II type)	As required
12	Gasket of oil filter with thin application	Automatic transmission fluid (DEXRON or DEXRON II type)	As required

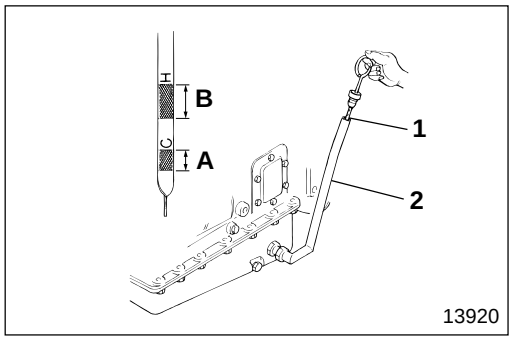

[Inspection and replenishment]

- Park the vehicle on level ground, make sure that the parking brake is fully activated and chock the wheels to keep them from rolling.
- Start the engine and let it idle. To fill the hydraulic circuit with automatic transmission fluid, shift the range selector lever from N → R → N → D → 2 → D → N. Repeat this process five times, finally shifting to N.
- While the engine is still idling, pull out dipstick **1** and wipe off the fluid sticking to it. Reinsert the dipstick, then pull it out again and check the fluid level.
- If the fluid level is inspected right after the engine is started and the fluid temperature is still low (approximately 15 to 49°C {60 to 120°F}), the level should be within area **A** marked COLD on dipstick **1**.
- If the fluid level is inspected after the vehicle has been driven and the fluid temperature is high (approximately 71 to 93°C {160 to 200°F}), the level should be within area **B** marked HOT on dipstick **1**.

WARNING

Take care during the inspection because the engine will be running. Take sufficient care to avoid burns or injuries resulting from contact with moving parts.

NOTE

- **Make sure the vehicle is parked on level ground when you are checking the fluid level.**
- **Make sure the selector lever is in the N position and the engine is idling when you are checking the fluid level. When the engine is stopped, the fluid level appears higher than it actually is.**
- **Be sure to wipe off the dust from the safety cap and the upper part of dipstick guide 2 before you pull out dipstick 1.**
- **To ensure the fluid is correct, reinspect the fluid level after an actual drive.**

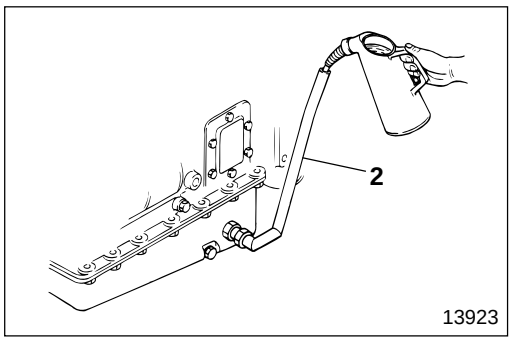

- If the fluid level is low, add automatic transmission fluid (DEXRON or DEXRON II type) through dipstick guide **2** until the correct level on dipstick **1** is reached.

[Replacement]

- Park the vehicle on level ground, chock the wheels and shift the range selector lever to the N position.
- Place a container under oil pan **3**, remove drain plug **4** and drain the fluid.

WARNING⚠

Take care because the fluid temperature immediately after the engine has stopped is very high. To avoid scalds, wait until a safe temperature has been reached before draining the fluid.

NOTE

- **The fluid will drain faster if the engine is first run to raise the fluid temperature.**
- **The fluid cannot be drained from the hydraulic circuit, the torque converter or the oil cooler.**
- **Check the drained fluid for dirt, metal particles and metal fragments.**

< FK >

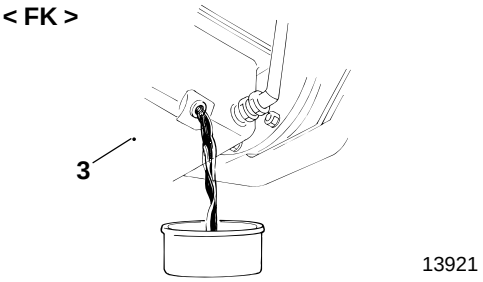

13921

< FM >

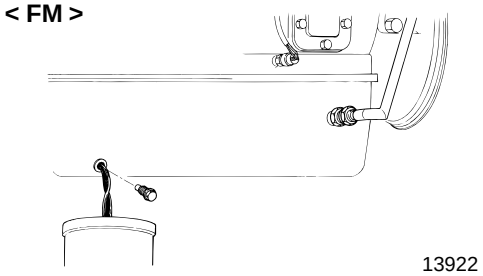

13922

- Remove oil pan **3**, intake pipe **10**, O-ring **11**, gasket **7** and oil filter **9**.
- Clean oil pan **3**.
- Replace O-ring **11**, gasket **7** and oil filter **9**.

< FK >

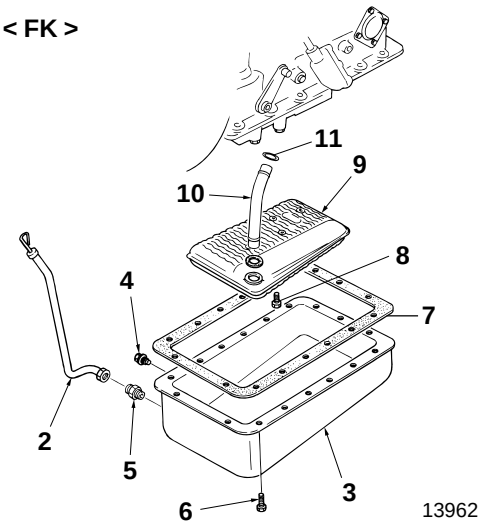

13962

< FM >

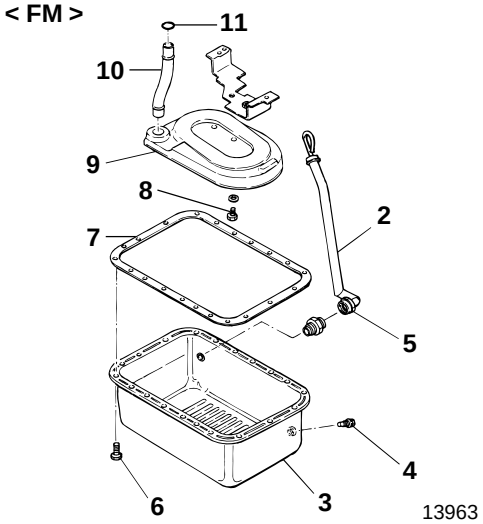

13963

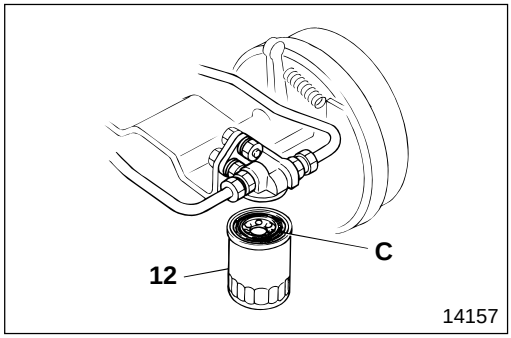

- Remove oil filter **12** (for oil cooler) by turning it counterclockwise.
- Lightly coat gasket **C** with the fluid before installing oil filter **12**. Then tighten the oil filter.

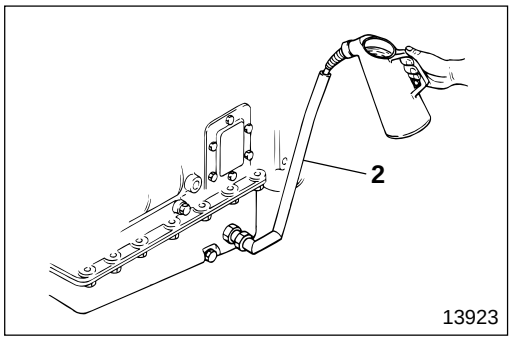

- Supply fluid through dipstick guide **2**.

CAUTION

Make sure that dirt and foreign particles do not become mixed in with the fluid when it is added.

- Shift the range selector lever to the N position, start the engine and let it idle for about one minute.
- After shifting the lever through all positions once, shift it back to N position.

CAUTION

To prevent burning out the interior of the automatic transmission assembly, make sure that the engine is not allowed to race when you do the above.

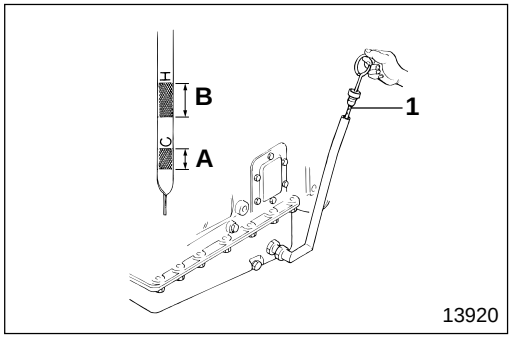

- Check and adjust so that the fluid level is within the specified area on dipstick **1**.

NOTE

- **As the temperature of the fluid rises, so does the fluid level. If you add fluid while the temperature is still low (approximately 15 to 49°C {60 to 120°F}), make sure that the level stays within area A, marked COLD on dipstick 1.**
- **Let the engine idle and, while paying attention to the fluid level, pour in the fluid slowly.**
- **It is sometimes hard to check the fluid level, immediately after supplying fluid, because of the fluid adhering to the interior of dipstick guide 2. If this is the case, check the fluid level several times at intervals.**
- **Be careful not to supply too much fluid because you might mistake the fluid that overflows from the air breather for fluid leakage.**

Rear Axle Gear Oil

Tightening torque

Unit : N·m {lbf.ft, kgf·m}

Location	Parts to be tightened		Tightening torque	Remarks
1	Inspection plug	FK	98 to 115 {72 to 87, 10 to 12}	—
		FM	175 to 195 {130 to 145, 18 to 20}	
2	Drain plug	FK	98 to 115 {72 to 87, 10 to 12}	—
		FM	175 to 195 {130 to 145, 18 to 20}	

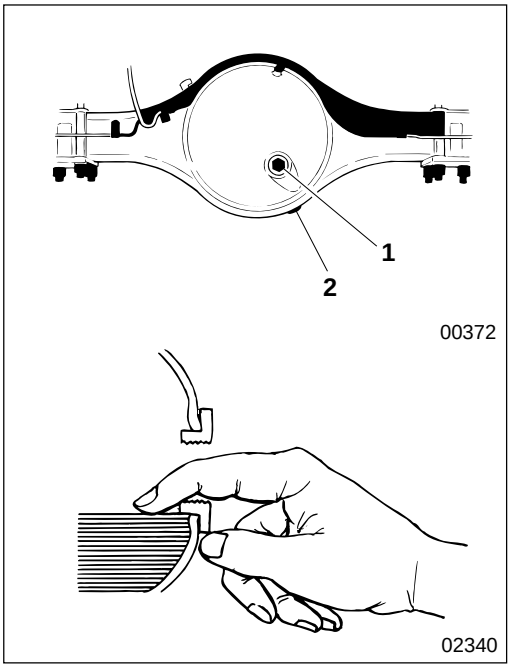

[Inspection and replenishment]

WARNING

The oil temperature is high immediately after the vehicle stopped, so take care not to scald yourself.

- Remove inspection plug **1**, check the oil level and make sure it is up to the edge of the entrance.
- If the oil level is low, add oil through the inspection plug hole until the level comes up to the edge of the entrance.
- Insert inspection plug **1**.

[Replacement]

- Drain the oil after removing inspection plug **1** and drain plug **2**.
- Remove any metal particles sticking to the magnetic part of drain plug **2** before reinstalling the plug.
- Supply oil through the inspection plug hole until the level comes up to the edge of the entrance.
- Reinstall the inspection plug.

LUBRICATION

Power Steering Fluid

Tightening torque

Unit : N·m {lbf.ft, kgf·m}

Location	Parts to be tightened	Tightening torque	Remarks
4	Oil pipe	66.69±12.75 {49±9.4, 6.8±1.3}	—

Fluid

Location	Points of application	Kinds	Quantity
1	Power steering oil tank	Automatic transmission fluid (DEXRON or DEXRON II type)	Between end and "**F**" on filler cap dipstick

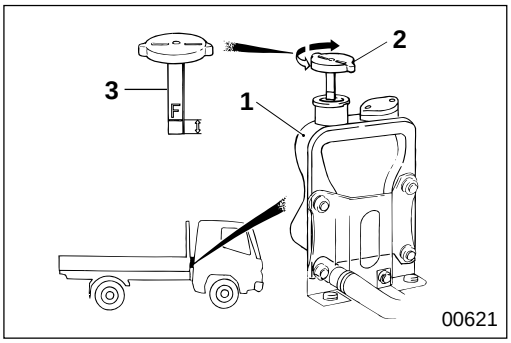

[Inspection and replenishment]

- Straighten the front wheels and stop the engine.
- Remove filler cap **2** of power steering oil tank **1** by turning the filler cap counterclockwise.
- Wipe off the fluid sticking to dipstick **3** on filler cap **2**. Replace the filler cap.

NOTE

Check the fluid level without screwing on filler cap 2.

- Carefully lit up filler cap **2** and check the fluid sticking to dipstick **3** to make sure that the fluid is at a point between the end and "**F**" on the dipstick. If the level is low, add fluid.
- After inspection install filler cap **2** by turning it clockwise.

WARNING⚠

Close filler cap 2 firmly; otherwise power steering fluid will leak and could catch fire. Also wipe up spilled fluid.

CAUTION⚠

If the fluid level is far below the recommended range, the fluid may be leaking.

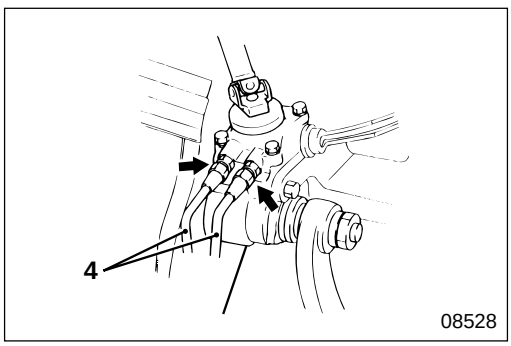

[Replacement]

- Drainage
  - Jack up the front wheels.
  - Disconnect oil pipe **4** connected to the power steering booster.
  - Turn the steering wheel fully left and right repeatedly, and drain the fluid from the power steering booster.
  - After draining the fluid, tighten oil pipe **4** at specified torque.

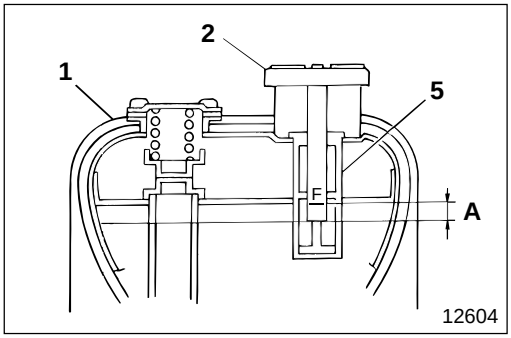

[Supply]

- Pour fluid into power steering oil tank **1** up to the inner port of strainer **5**.
- With the engine stopped, jack up the front wheels and turn the steering wheel fully left and right repeatedly. When the fluid level has dropped, add fluid to maintain the fluid level within range **A**.

NOTE

Check the fluid level without screwing on filler cap 2.

- Start the engine and letting it idle, turn the steering wheel fully left and right repeatedly. When the fluid level has dropped, add fluid to maintain the fluid level within range **A**. Repeat these steps until the fluid level does not drop.
- If there is an abnormal noise, air is still in the system. Turn the steering wheel several times to raise the fluid temperature to approximately 60 to 80°C {140 to 176°F}, then stop the engine and wait for approximately five minutes.
- Lower the front wheels and turn the steering wheel several times. If there is no noise, bleeding is completed.
- When bleeding is finished, check fluid level of power steering oil tank **1**, and pipe and hose connections for fluid leakage.

LUBRICATION

Brake Fluid

Tightening torque

Unit : N·m {lbf.ft, kgf·m}

Location	Parts to be tightened	Tightening torque	Remarks
—	Air bleeder (Airmaster)	6.9 to 12.7 {5.1 to 9.4, 0.7 to 1.3}	—
—	Air bleeder (Wheel brake)	7.8 to 12 {5.8 to 8.5, 0.8 to 1.2}	—

Fluid

Location	Points of application	Kinds	Quantity
—	Fluid tank	Brake fluid (SAE J1703f or FMVSS No.116 DOT3)	As required

Special tools

Unit : mm {in.}

Location	Tool name and shape	Part No.	Application
—	Vinyl hose 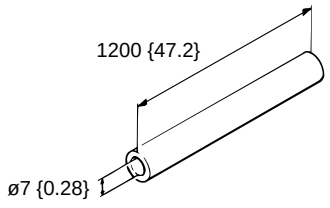	MH033102	Air bleeding

WARNING

- **You must use new brake fluid (SAE J1703f or FMVSS No.116 DOT3).**
- **Do not add different quality fluid or mineral oil (gas oil, engine oil, gear oil, automatic transmission fluid, etc.) to the brake system, because this will cause the rubber parts of the brake system to swell, resulting in brake dragging or ineffective braking.**
- **Be sure not to allow dirt or water to become mixed into brake fluid when refilling, because this will cause the brake to malfunction.**
- **If you use a mug for adding brake fluid, keep it solely for that purpose to prevent contamination from different quality fluids or mineral oils.**

CAUTION

- **Be careful not to splash brake fluid on related parts as this could damage the paintwork.**
- **Be sure to wipe off brake fluid immediately if you splash it on the paintwork.**

NOTE

Supply brake fluid to maintain the “H” level of the brake fluid tank always.

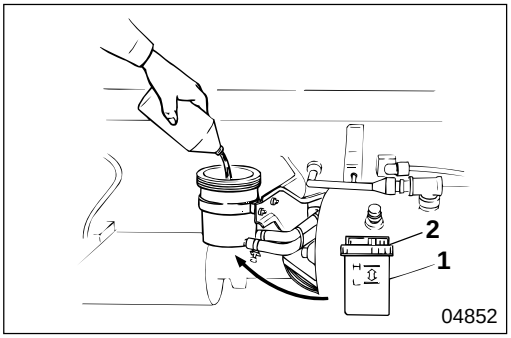

[Inspection and replenishment]
Inspect the level of the brake fluid in fluid tank **1**. It should fall between the "**L**" and "**H**" levels. If it is below the "**L**" level, remove cap **2** from the fluid tank, then supply the specified brake fluid until the level comes up to the "**H**" level. Do not fill above the "**H**" level.

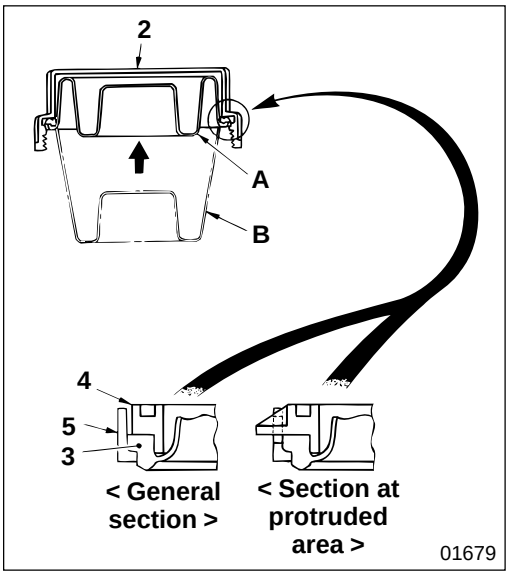

- If diaphragm **3** is not in its normal posture when the brake fluid is supplied, correct it to its normal posture, and install cap **2**. If brake fluid leaks from the cap area after you have supplied brake fluid, check whether the diaphragm is assembled as illustrated.

  4 : Slide ring
  5 : Ring cover
  A : Correct condition of diaphragm when brake fluid is being supplied
  B : Condition when diaphragm is extended when brake fluid has decreased

[Replacement]
- Start engine and let it idle until brake fluid replacement is completed.

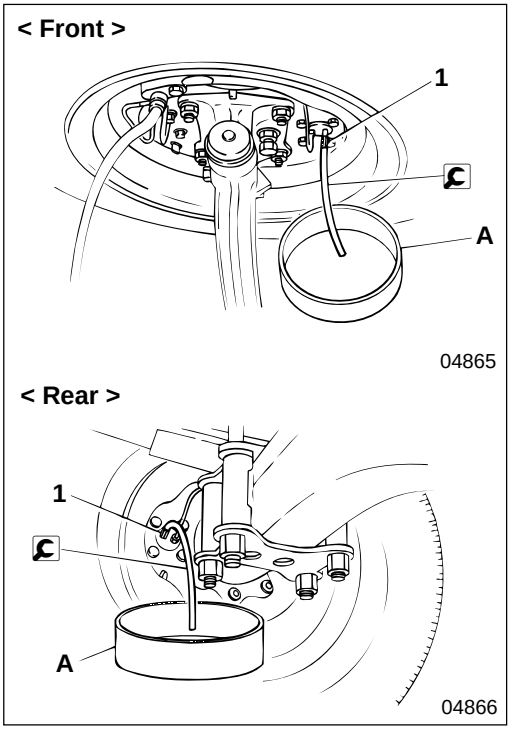

- Attach one end of 🔧 vinyl hose to air bleeder **1** and place the other end in container **A**.

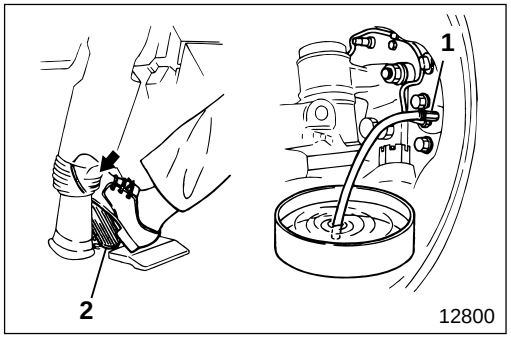

- Loosen air bleeder **1** and repeatedly depress brake pedal **2** to drain brake fluid completely.

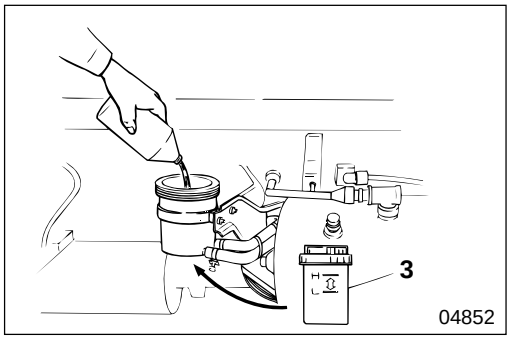

- Maintaining a supply of new brake fluid up to the "**H**" level of fluid tank **3**, depress the brake pedal repeatedly until the old brake fluid of the brake system is replaced with new fluid.
- Carry out air bleeding of the brake system.

[Air bleeding]

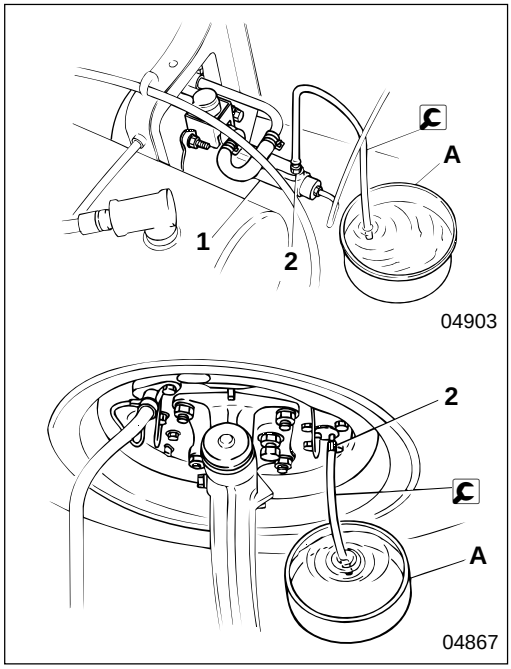

- Start the engine and let it idle until brake fluid replacement is completed.
- Attach one end of vinyl hose to front or rear airmaster **1**. Then, attach one end of another vinyl hose to air bleeder **2** of the wheel brake. Finally, place both free ends in container **A** filled with brake fluid.

- Carry out air bleeding in the following sequence:

Front brake system	Rear brake system
Airmaster for front	Airmaster for rear
↓	↓
Right-hand side wheel brake	Right-hand side wheel brake
↓	↓
Left-hand side wheel brake	Left-hand side wheel brake

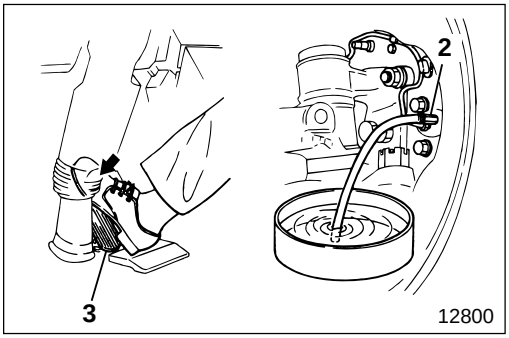

- Depress brake pedal **3** slowly a few times, and with the brake pedal depressed, loosen air bleeder **2** to drain brake fluid containing air.

- Tighten air bleeder **2**, and release brake pedal **3**.
- Repeat this service procedure until air is no longer present in the fluid being drained.
- Tighten air bleeder **2** at specified torque as soon as brake fluid flowing out is free of air bubbles.

- Adjust brake shoe clearance when you have finished air bleeding.
- Check that brake fluid comes up to level "**H**" of fluid tank. If it does not, refill with new brake fluid.
- Depress brake pedal **3** a few times and check for any leakage of brake fluid, then test the brakes.
- When you test the brakes, if the brake fluid warning lamp within the meter cluster lights, it means that air has not been bled completely. Redo air bleeding.

Greasing Various Areas of Chassis

Carefully clean away all dust and dirt from the grease nipples, and use the specified type of grease. The areas to be greased are shown in the following illustration.

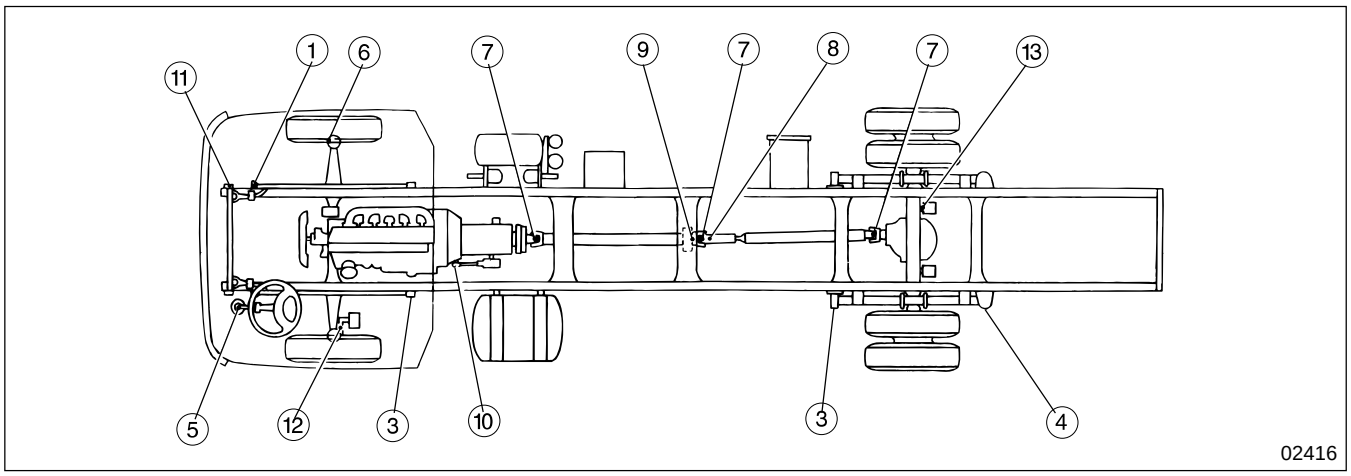

① 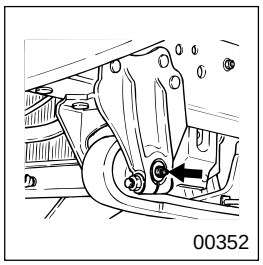

② 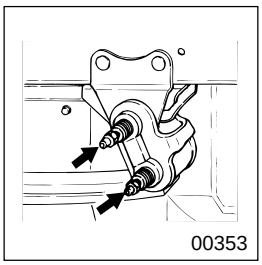

③ 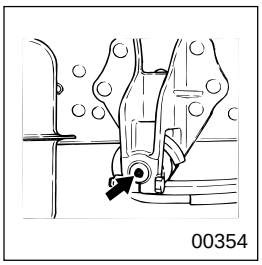

④ 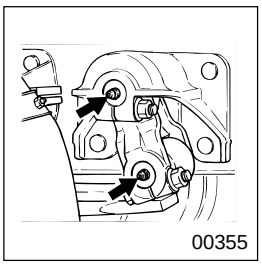

⑤ 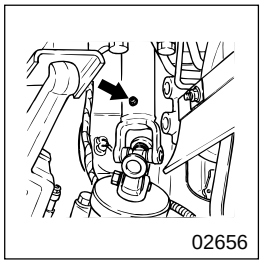

⑥ 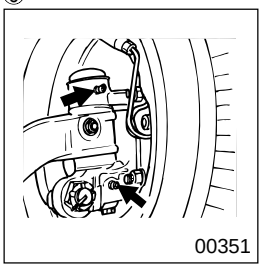

⑦ 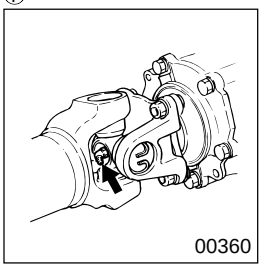

⑧ 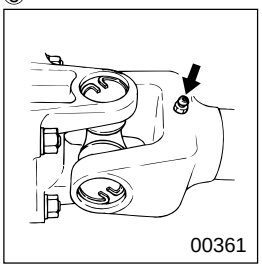

⑨ 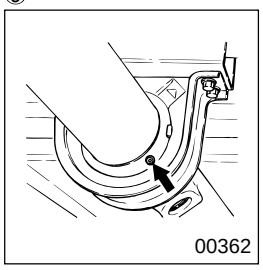

⑩ 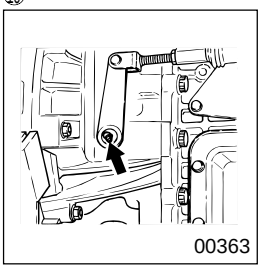

⑪ 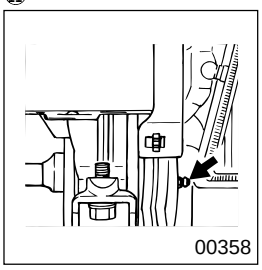

⑫ 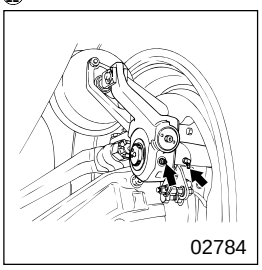

⑬ 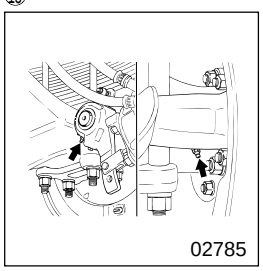

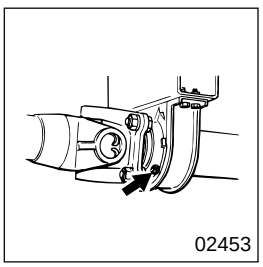

Supply grease to the center bearing until grease overflows from the escape valve at the back of the grease nipple.

① Front spring pin front (left and right, 2 points)
② Front spring pin rear (left and right, 4 points)
③ Rear spring pin front (left and right, 2 points)
④ Rear spring pin rear (left and right, 4 points)
⑤ Steering shaft
⑥ Kingpin bearing (left and right, 4 points)
⑦ Universal joint of propeller shaft
⑧ Slip joint of propeller shaft
⑨ Center bearing of propeller shaft
⑩ Clutch fork shaft (left and right, 2 points)
⑪ Cab hinge (left and right, two points)
⑫ Slack adjuster and camshaft (left and right, two points) < FM657 >
⑬ Slack adjuster and camshaft (left and right, two points) < FM657 >

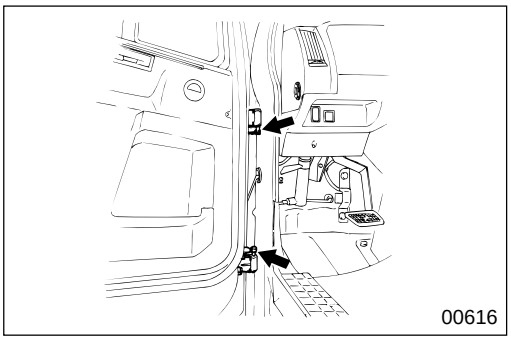
00616

● **Door hinge**

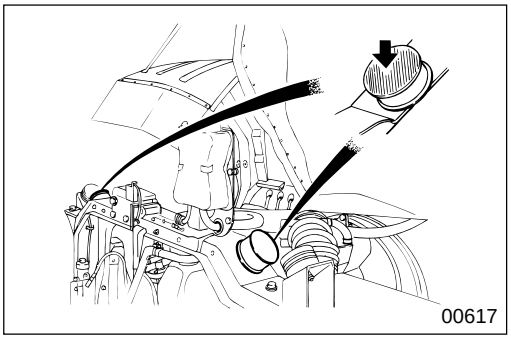
00617

● **Cab rear mount side cushion**

MITSUBISHI
FUSO

FK.FM
Service Manual

Group 10
Removal and Installation of Engine

Table of Contents

MITSUBISHI FUSO TRUCK OF AMERICA, Inc.

BACK HOME

Pub No. TWME9503-10

GROUP 10 REMOVAL AND INSTALLATION OF ENGINE

REMOVAL AND INSTALLATION OF ENGINE

- **Charge and Discharge of Engine Coolant, Removal and Installation of Hoses 2**
- **Removal and Installation of Engine Related Parts 4**
- **Removal and Installation of Engine 6**

REMOVAL AND INSTALLATION OF ENGINE

Charge and Discharge of Engine Coolant, Removal and Installation of Hoses

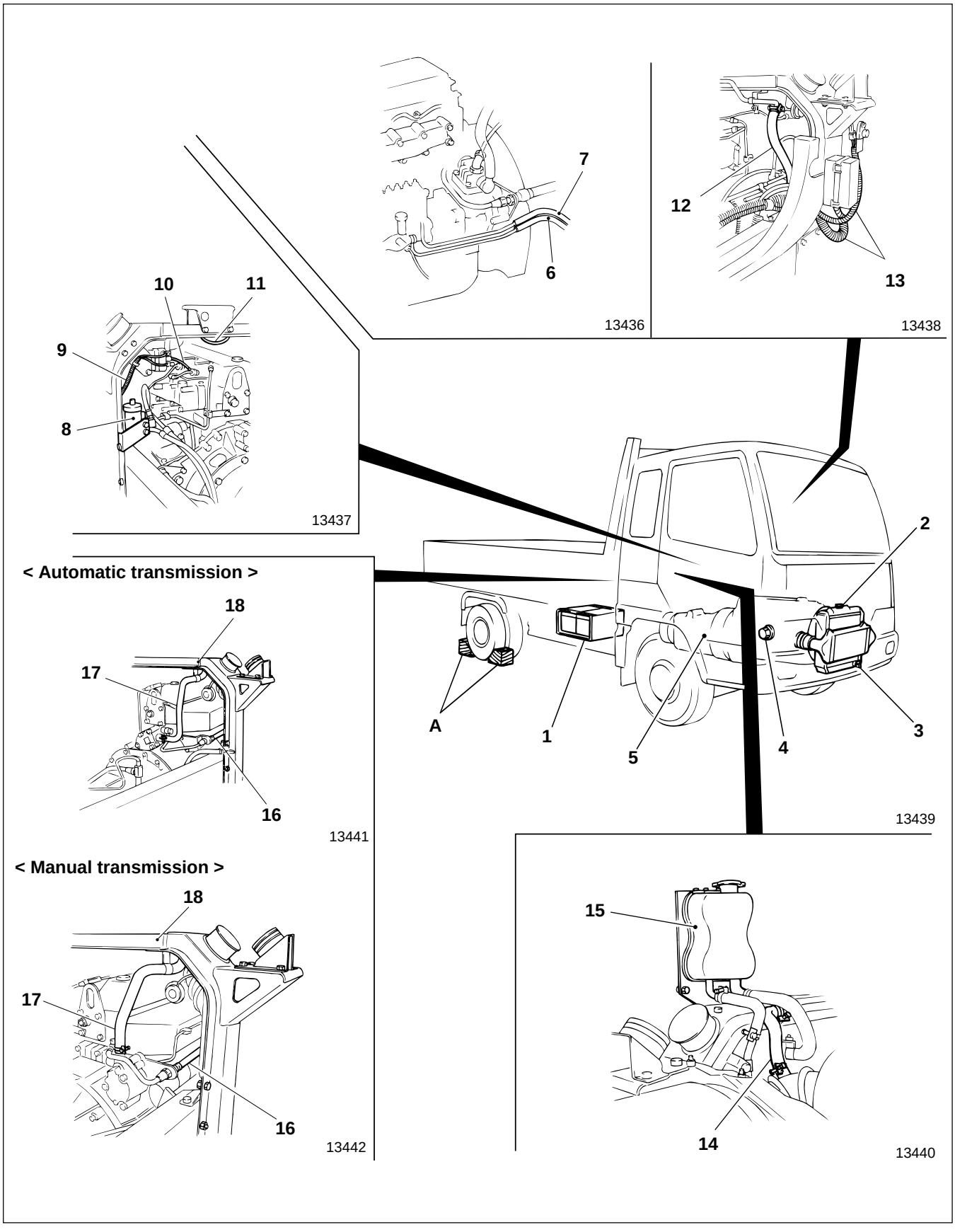

● **Work before removal and after installation**

P10-3

● **Removal sequence**

1 Battery cable ⊖
2 Pressure cap
3 Radiator drain plug Gr 14
4 Crankcase drain plug Gr 14
5 Transmission assembly Gr 22, 23
6 Fuel feed hose
7 Fuel return hose
8 Air pressure governor
9 Harness (Glow relay)
10 Harness (Glow relay)
11 Harness (Cab tilt lock switch)
12 Air outlet hose
13 Harness (Sub starter switch, fuse box)
14 Air outlet hose
15 Power steering oil tank
16 Power steering oil hose
17 Power steering oil hose
18 Cab bridge Gr 42

A : Wheel chock

WARNING

- **You must insert blanking plugs into fuel feed hose 6 and fuel return hose 7 after you remove them and secure them at a higher level than the fuel tank to prevent fuel from flowing out of them. Otherwise a fire might be caused.**
- **You must make sure that the engine coolant is cold before draining it so as not to scald yourself.**
- **It is dangerous to open pressure cap 2, when the coolant temperature is high, without taking due care because the hot water would spray out. Be sure to cover the pressure cap with a cloth and loosen slowly to bleed the pressure before opening fully.**

● **Installation sequence**

Follow the removal sequence in reverse.

◆ Service procedure

● **Work before removal and after installation**

- Discharge, charge, and air bleeding of engine coolant Gr 14
- Discharge, charge, and air bleeding of oil Gr 37
- Air bleeding of fuel system Gr 13

REMOVAL AND INSTALLATION OF ENGINE

Removal and Installation of Engine Related Parts

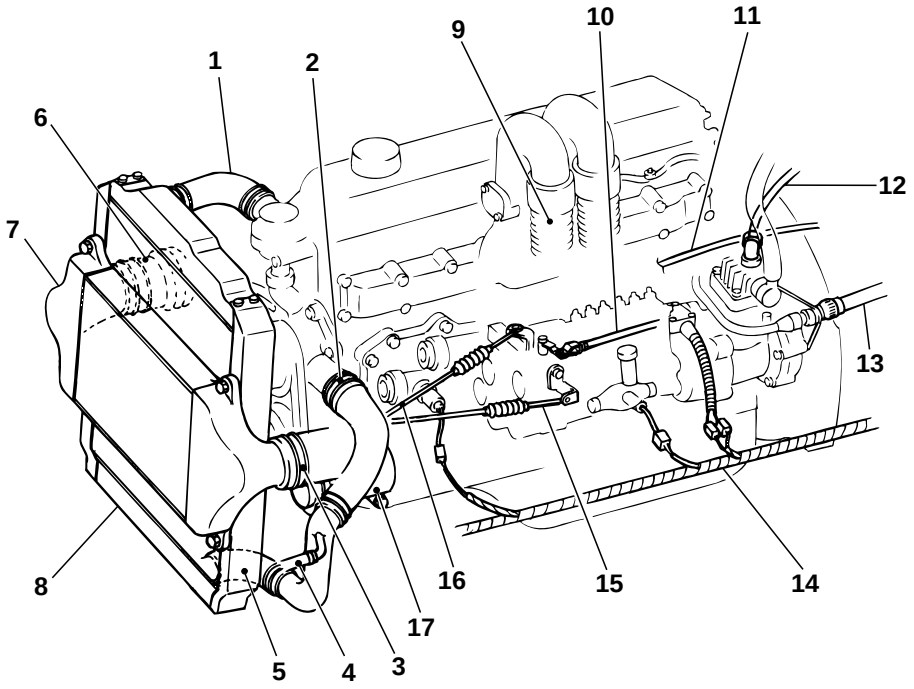

13443

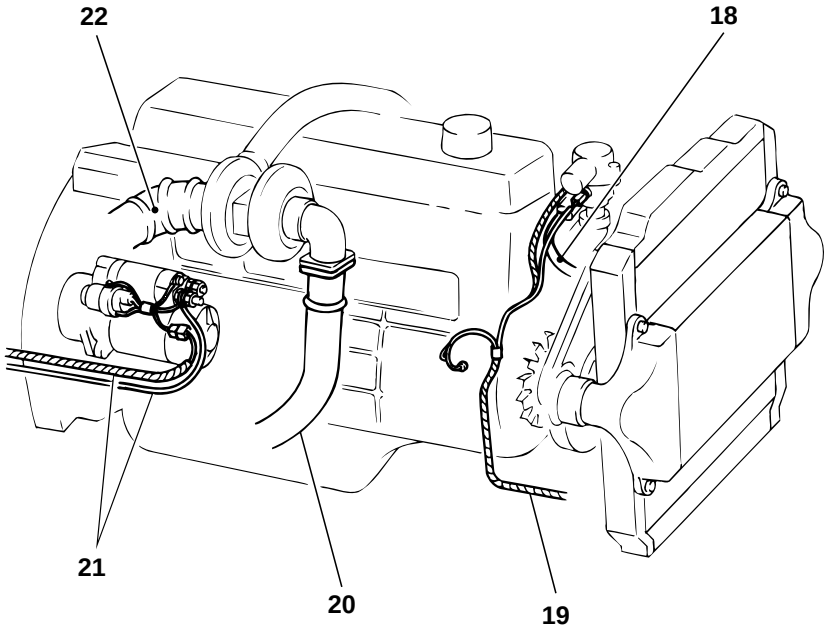

13444

● **Removal sequence**

1 Supply hose Gr 14
2 Inlet hose Gr 14
3 Air intake hose Gr 15
4 Heater hose Gr 55B
5 Outlet hose Gr 14
6 Air intake hose Gr 15
7 Intercooler Gr 15
8 Radiator Gr 14
9 Air intake hose Gr 15
10 Modulator cable Gr 23
11 Selector cable Gr 23
12 Air unloader hose Gr 35A, B
13 Air outlet hose
14 Harness (Chassis harness)
15 Engine stop cable Gr 13
16 Accelerator control cable Gr 13
17 Cooler compressor Gr 55A
18 Heater hose Gr 55B
19 Harness (Chassis harness)
20 Front pipe Gr 15
21 Harness (Chassis harness)
22 Air intake hose Gr 15

NOTE

- **For vehicles fitted with an air-conditioner do not disconnect the hose that goes to the air-conditioner from cooler compressor 17 when you remove it otherwise you will have to recharge the air-conditioner with refrigerant.**
- **After removing cooler compressor 17 tie it to the frame temporarily.**

● **Installation sequence**

Follow the removal sequence in reverse.

REMOVAL AND INSTALLATION OF ENGINE

Removal and Installation of Engine

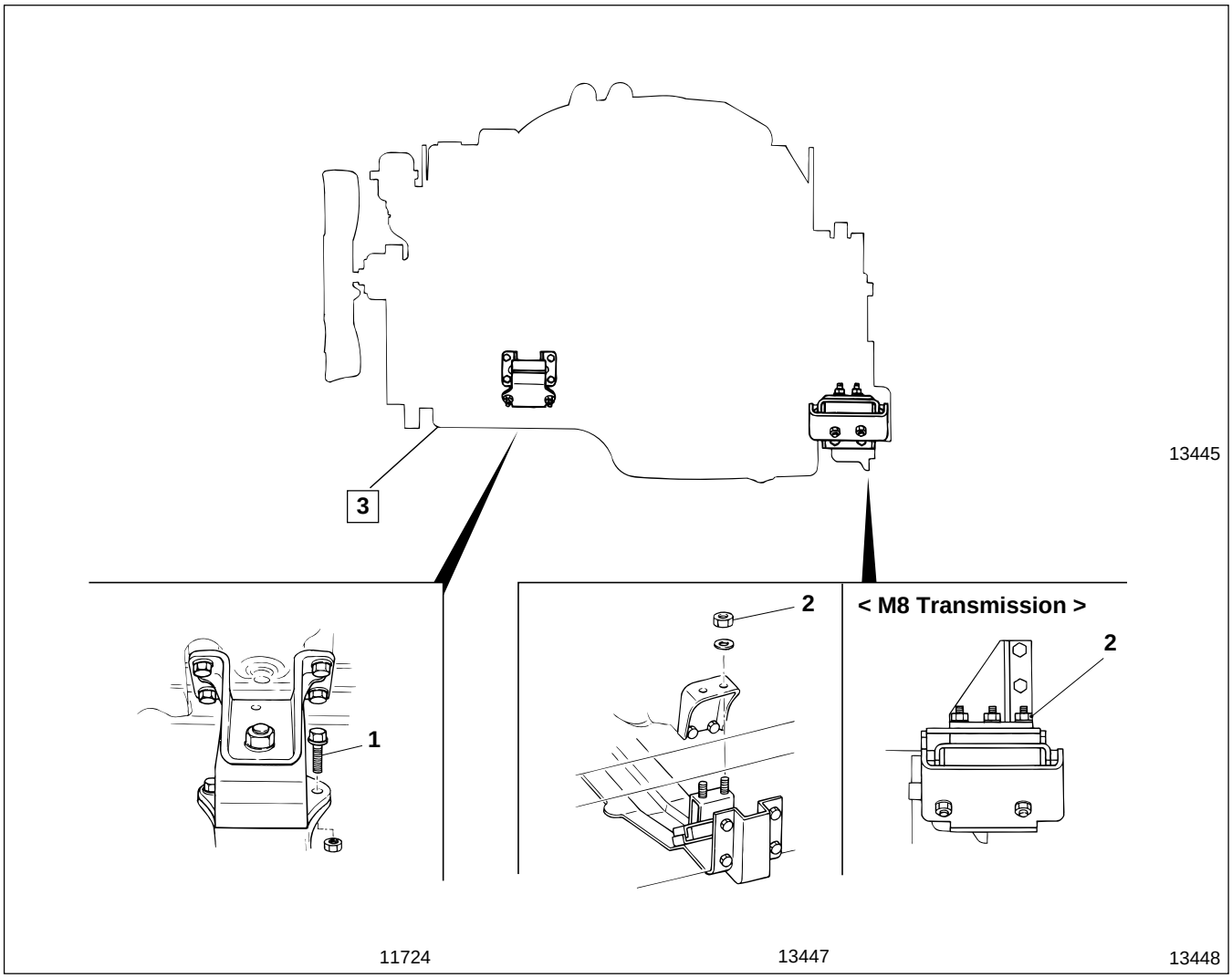

● **Removal sequence**

1 Bolt
2 Nut
3 Engine assembly

WARNING⚠

When you lift engine assembly 3, you must use lifting gear that is strong enough to lift the mass of the engine (approximately 650 kg {1430 lb}).

● **Installation sequence**

Follow the removal sequence in reverse.

◆ Service procedure

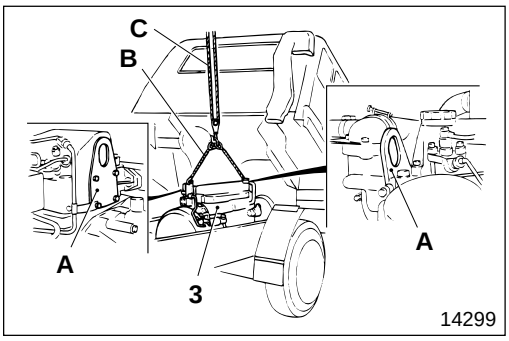

3 **Removal of engine assembly**

- Hook lifting gear **B** to two hangers **A** on engine assembly **3** and lift the engine using crane **C** until the lifting gear becomes taut.
- Make sure that wiring and hoses are disconnected.

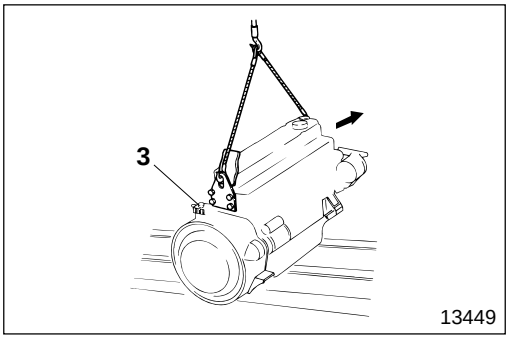

- Lower engine assembly **3** slowly so that it does not hit the frame or cab.
- When the lower part of engine assembly **3** appears from the frame, turn the engine assembly 90° to remove it.

MITSUBISHI
FUSO

FK.FM
Service Manual

Group 11
Engine

Table of Contents

BACK

HOME

MITSUBISHI FUSO TRUCK OF AMERICA, Inc.

Pub No. TWME9503-11

GROUP 11 ENGINE

SPECIFICATIONS 2

STRUCTURE AND OPERATION 3

TROUBLESHOOTING 7

INSPECTION AND ADJUSTMENT MOUNTED IN VEHICLE

- Inspection of Engine Compression 8
- Inspection and Adjustment of Valve Clearance 10

CYLINDER HEAD AND VALVE MECHANISM 12

PISTON, CONNECTING ROD AND CYLINDER SLEEVE 26

FLYWHEEL AND TIMING GEAR 40

CAMSHAFT 50

CRANKSHAFT AND CRANKCASE 56

SPECIFICATIONS

Item		Specifications		
Engine model		6D16T2	6D16T3	6D16T4
Type		6-cylinder in-line, water-cooled 4-cycle diesel		
Combustion chamber type		Direct injection type		
Valve mechanism		Overhead valve (OHV) type		
Maximum output	HP/rpm (SAE Gross)	230/2600	200/2600	190/2600
Maximum torque	lbf.ft/rpm (SAE Gross)	521/1600	434/1600	408/1600
Bore×stroke	mm {in.}	ø118×115 {4.6×4.5}		
Total displacement	cm^3 {cu. in.}	7545 {460.4}		
Compression ratio		18.0		

Cylinder Head and Crankcase

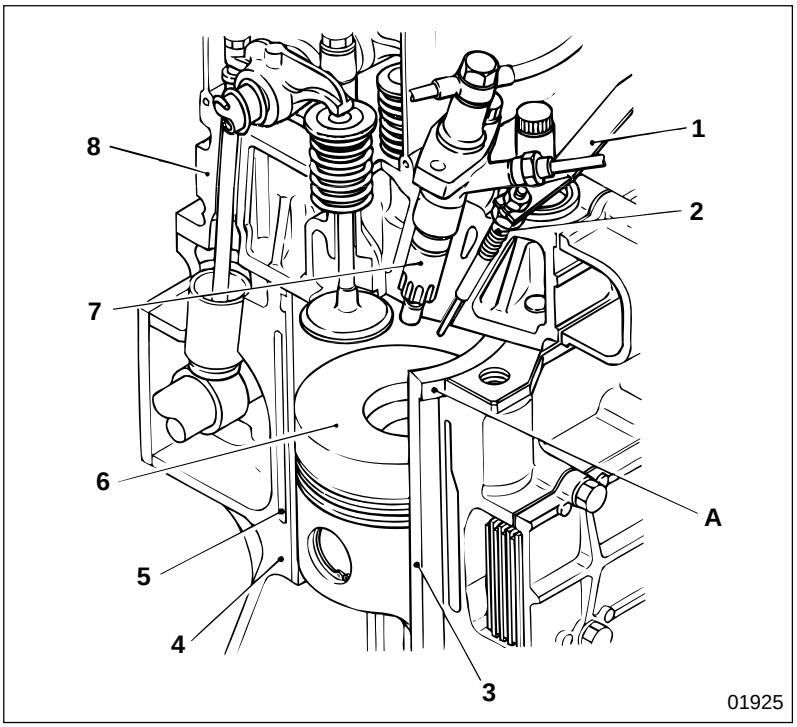

1 Connecting plate
2 Glow plug
3 Cylinder sleeve
4 Crankcase
5 Water jacket
6 Piston
7 Injection nozzle
8 Cylinder head

A: Cylinder size mark stamped
Outer diameter size mark : 1, 2, 3
Inner diameter size mark : A, B

Cylinder sleeve **4** is a dry type press-fitted into crankcase **5**. Removal is easier than for a wet type.

Valve Mechanism

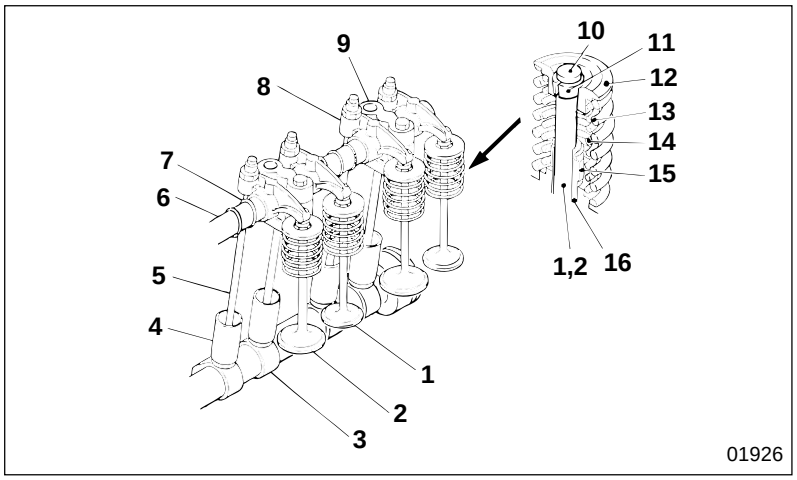

1 Exhaust valve
2 Inlet valve
3 Camshaft
4 Tappet
5 Push rod
6 Rocker shaft
7 Rocker shaft spring
8 Rocker
9 Rocker bracket
10 Valve cap
11 Valve cotter
12 Upper retainer
13 Outer valve spring
14 Inner valve spring
15 Valve stem seal
16 Valve guide

- Valve stem seal **15** is fitted to valve **1, 2** to control the lubricant supplied to valves **1**, **2** and valve guide **16**.
- A combination of variable pitch springs is used for valve springs **13**, **14** to avoid abnormal vibration at high speed. The spiral direction of the two springs is opposite to avoid interference between the two springs.
- The front of the engine has smaller camshaft bearings, so removal and installation is easier from the rear.

Connecting Rod

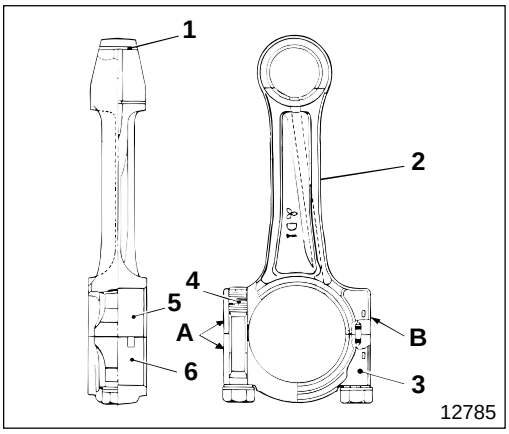

1 Connecting rod bushing
2 Connecting rod
3 Connecting rod cap
4 Connecting rod bolt
5 Upper connecting rod bearing
6 Lower connecting rod bearing

A : Alignment mark
B : Mass mark
(A, B, C, D, E, F, G, H, I, V, W, X, Y, Z)

Piston

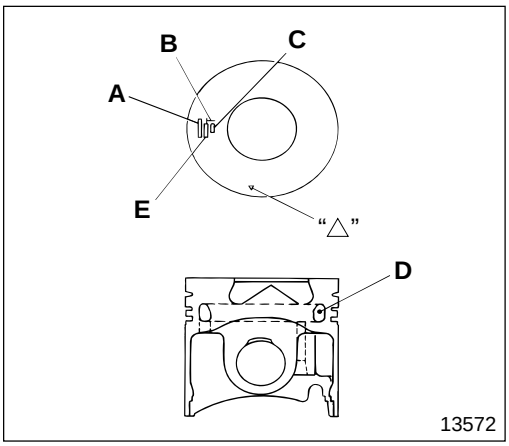

A : Part number
B : Stamped "T"
C : Size mark (A, B)
D : Free space for piston cooling
E : Stamped mass
△ : Front mark

Timing Gear

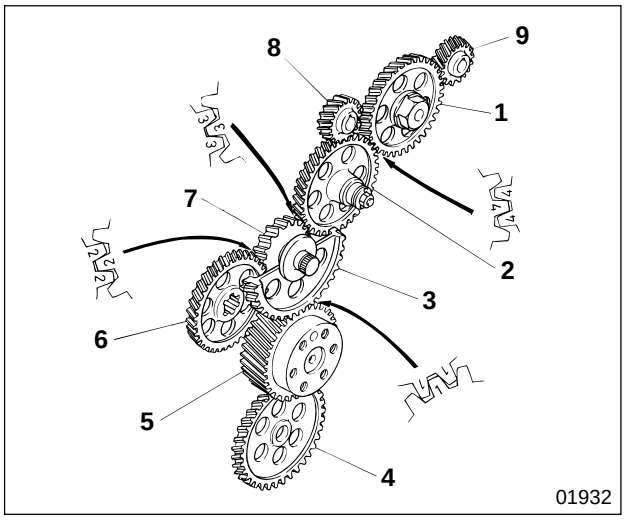

1 Camshaft gear
2 No.2 idler gear
3 No.1 idler gear (Outer)
4 Oil pump gear
5 Crankshaft gear
6 Air compressor drive gear or pump drive gear
7 No.1 idler gear (Inner)
8 Power steering pump gear < 6D16T4 >
9 Power steering pump gear < 6D16T2, 16T3 >

Alignment marks "**1**", "**2**", "**3**", "**4**" are punch-marked on each timing gear to ensure proper engagement of the gears at installation.

Flywheel

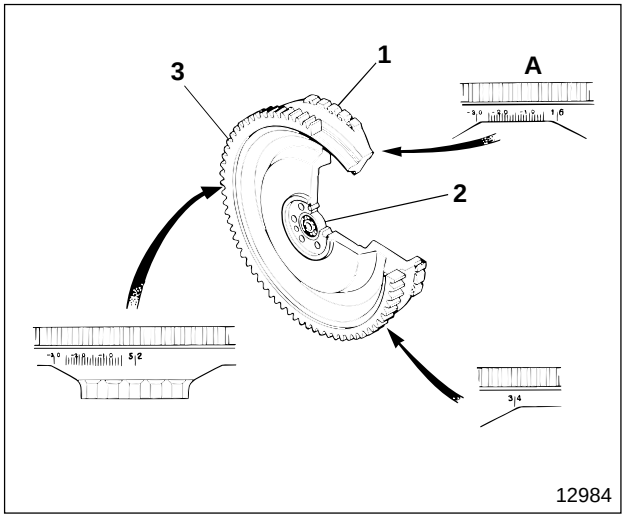

1 Flywheel
2 Pilot bearing < Manual transmission >
3 Ring gear

A : Angle scale and cylinder No.

Symptoms / Possible causes	Decrease of power	Engine noise abnormal	Remarks
Oil viscosity unsuitable	○		Gr 12
Fuel incorrect or unsuitable	○		Gr 13
Valve clearance faulty	○	○	
Head gasket faulty	○	○	
Valve and valve seat worn, and carbon deposits	○	○	
Valve spring fatigued	○	○	
Piston ring worn or damaged	○	○	
Piston ring grooves worn or damaged	○	○	
Injection timing faulty	○	○	Gr 13
Injection pump malfunctioning	○	○	Gr 13
Cooling system malfunctioning	○		Gr 14
Injection nozzle malfunctioning	○	○	Gr 13
Fuel system sucking air	○		Gr 13
Air cleaner mesh clogged	○		Gr 15
Muffler clogged	○		Gr 15
Pipe and hose installation faulty		○	
Ancillary equipment (injection pump, alternator, etc.) or installation faulty		○	Gr 13, 54
V-belt loose or damaged		○	Gr 14
Crankshaft pulley mounted incorrectly		○	
Air cleaner or muffler malfunctioning		○	Gr 15
Rocker shaft and bracket faulty		○	
Rocker shaft bracket lubrication faulty		○	
Timing gear backlash faulty		○	
Timing gear system and idler shaft lubrication faulty		○	
Connecting rod small end bushing worn and piston pin worn		○	
Crankshaft pin and big end bearing of connecting rod worn or damaged		○	
Crankshaft journal and main bearing worn or damaged		○	
Crankshaft and camshaft end play excessive		○	
Tappet and camshaft worn		○	

INSPECTION AND ADJUSTMENT MOUNTED IN VEHICLE

Inspection of Engine Compression

Service standards

Location	Maintenance item		Standard value	Limit	Remedy
—	Engine Compression	Each cylinder (2000 rpm)	2550 kPa {370 lbf/in^2, 26 kgf/cm^2}	1960 kPa {285 lbf/in^2, 20 kg/cm^2}	Inspect
		Pressure difference between each cylinder	—	within 390 kPa {57 lbf/in^2, 4 kgf/cm^2}	Inspect

Special tools

Unit : mm {in.}

Location	Tool name and shape	Part No.	Application
—	Compression gauge adapter 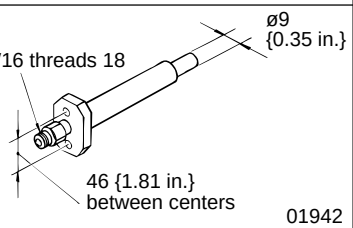	MH061461	Measurement of engine compression

The decrease of engine compression is a signal that it is time to overhaul the engine. It is strongly recommended that this item is inspected periodically and that you record the history of deterioration in engine performance as this will help you to diagnose causes of future irregularities.
When the vehicle is still new or immediately after installation of new parts, there may be a slight increase in engine compression, but normal performance will be restored soon.

- Before inspection make sure that engine oil, starter and battery are in normal condition.
- Before inspecting the vehicle do the following:
  - Run the engine to bring the temperature of the coolant up to approximately 75 to 85°C {167 to 185°F}.
  - Turn all the lights and accessory equipment OFF.
  - Put transmission in neutral. (N range for automatic transmission)
  - Set the steering wheel at center and straight position.

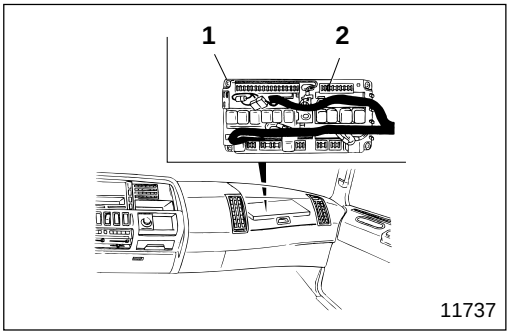

- Remove fuel-cut motor fuse **2** from fuse and relay box **1** in the driver's cab so that no injection of fuel takes place when cranking the engine using the starter.

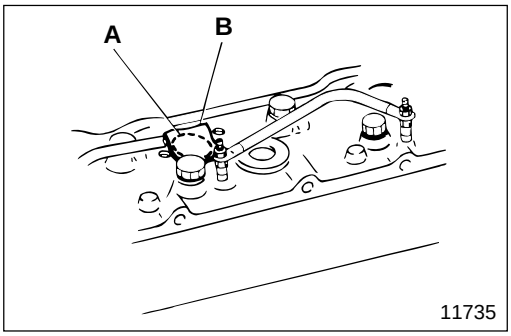

- Remove all the injection nozzles. Gr 13
- Check that no foreign particles are sticking to waste cloth **B** covering injection nozzle mounting hole **A** after cranking the engine.

WARNING

You must stay clear of injection nozzle mounting hole A when you crank the engine during this inspection. Assume that all cylinders have cracked, and that coolant, engine oil, fuel, etc. have seeped into the cylinder chambers. If this is the state when the engine is cranked, there is an extreme danger of these substances being injected out of the injection nozzle mounting hole at high temperature.

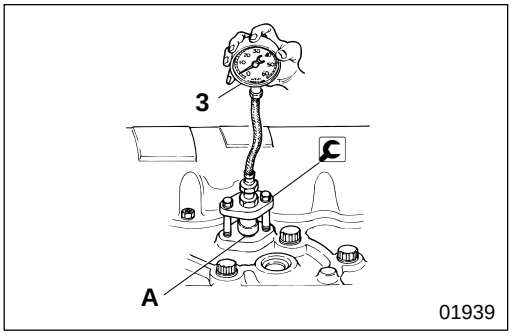

- Mount the nozzle gasket and compression gauge adaptor in injection nozzle mounting hole **A**, then mount compression gauge **3**.
- Measure engine compression while cranking the engine.
- Measure engine compression of cylinders and calculate the difference among the cylinders.
- If the engine compression and pressure difference between each cylinder deviate from the limit, reinspect by pouring a small amount of engine oil into injection nozzle mounting hole **A**.
  - When pressure is high : It is likely that either wear or damage of the slide-contact area of both the piston ring and the cylinder inner surface has taken place.
  - When pressure is low : It is likely that burning of the valve, faulty contact of valve surfaces and/or faults in the cylinder head gasket have developed.

INSPECTION AND ADJUSTMENT MOUNTED IN VEHICLE

Inspection and Adjustment of Valve Clearance

Service standards

Unit : mm {in.}

Location	Maintenance item	Standard value	Limit	Remedy
—	Valve clearance (When engine is cold)	0.4 {0.016}	—	Adjust

Tightening torque

Unit : N·m {lbf.ft, kgf·m}

Location	Parts to be tightened	Tightening torque	Remarks
2	Lock nut	34 {25, 3.5}	—

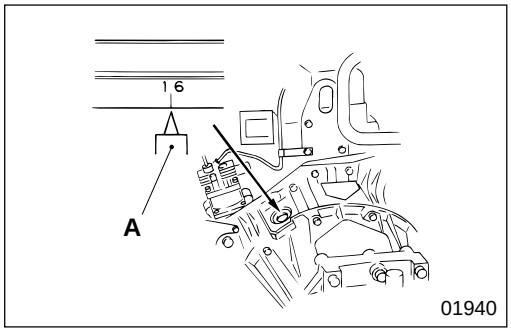

Inspect and adjust the valve clearance while the engine is cold in the following way.

[Inspection]

- Crank the engine to move No.1 or No.6 piston to top dead center, aligning stamped mark "**1.6**" on the flywheel with pointer **A** on the flywheel housing inspection window.

NOTE

The cylinder whose push rod is not pushing up the inlet/outlet rocker is the one whose piston is at top dead center.

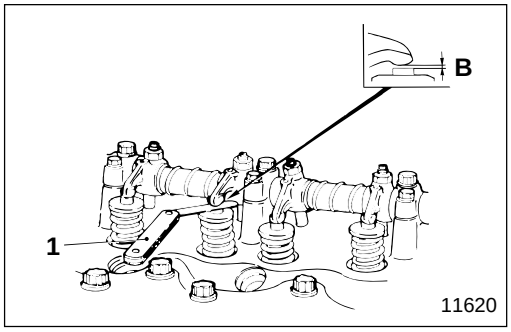

- Measure valve clearance **B** when either No.1 or No.6 piston is at top dead center in accordance with the following tabulated sequence of each valve.

Piston No.	1		2		3		4		5		6	
Valve arrangement	In-take	Ex-haust	In-take	Ex-haust	In-take	Ex-haust	In-take	Ex-haust	In-take	Ex-haust	In-take	Ex-haust
No.1 piston at top dead center	○	○	○	×	×	○	○	×	×	○	×	×
No.6 piston at top dead center	×	×	×	○	○	×	×	○	○	×	○	○

NOTE

Be sure when taking measurements using feeler gauge 1 that some resistance is felt when inserting the gauge. If the gauge can be inserted freely without any resistance, an accurate measurement cannot be obtained.

- If the measured value deviates from the limit, adjust as follows:

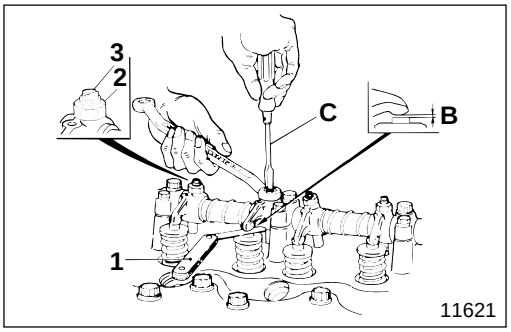

[Adjustment]

- Adjust valve clearance **B** so that feeler gauge **1** encounters some resistance when it is inserted. Do this by loosening lock nut **2** and turning adjusting screw **3**.
- After adjusting, tighten adjusting screw **3** using screwdriver **C** and tighten lock nut **2**. Reinspect valve clearance **B** using feeler gauge **1**.

M E M O

CYLINDER HEAD AND VALVE MECHANISM

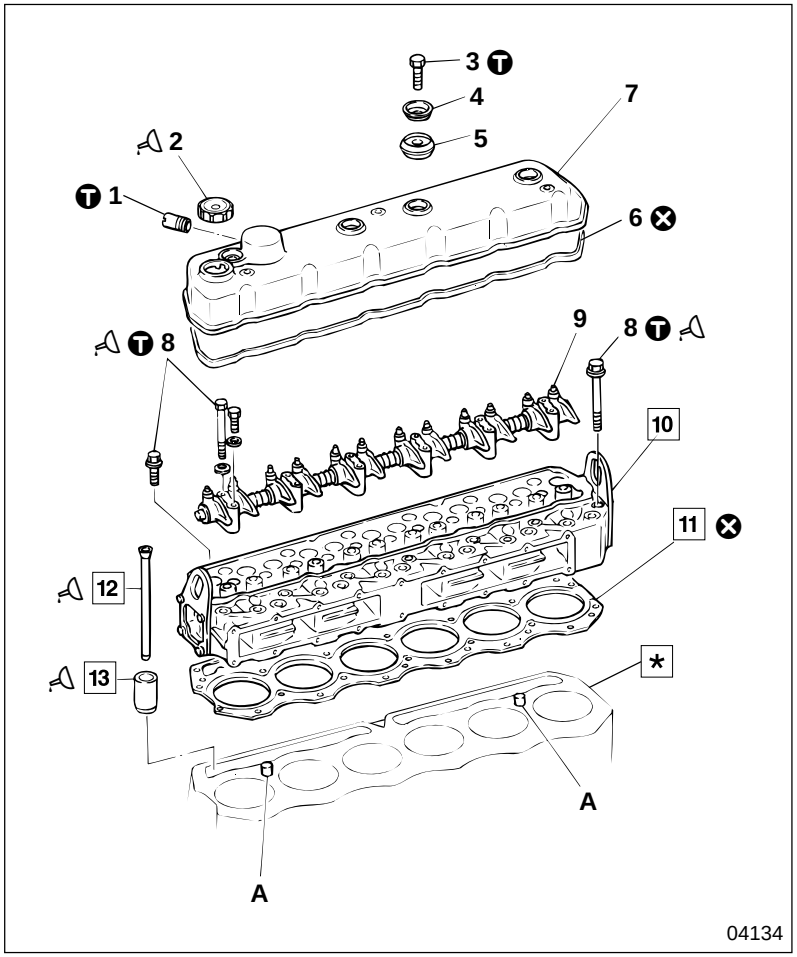

● **Disassembly sequence**

1 Joint
2 Oil filler cap
3 Bolt
4 Plate
5 Rubber
6 Rocker cover gasket
7 Rocker cover
8 Cylinder head bolt
9 Rocker and bracket assembly
P11-16
10 Cylinder head and valve assembly
P11-18
11 Cylinder head gasket
12 Push rod
13 Tappet

***** : Crankcase P11-56
A : Positioning pin
⊗ : Non-reusable parts

● **Assembly sequence**

Follow the disassembly sequence in reverse.

Service standards

Unit : mm {in.}

Location	Maintenance item	Standard value (Basic diameter in [ ])	Limit	Remedy
12	Push rod deflection	—	0.4 {0.016}	Replace
13	Clearance between tappet and crankcase tappet hole	[31] 0.06 to 0.1 {[1.22] 0.0024 to 0.0039}	0.2 {0.0079}	Replace

Ⓣ Tightening torque

Unit : N·m {lbf.ft, kgf·m}

Location	Parts to be tightened		Tightening torque	Remarks
1	Joint		29 {52, 3.0}	—
3	Bolt (Rocker cover mounting)		3.9 {2.9, 0.4}	—
8	Cylinder head bolt	M14 bolt	78 {58, 8}+180°	Wet Reuse up to three times
		M10 bolt	17 {13, 1.75}+34 {25, 3.5}	—

Lubricant

Location	Points of application	Kinds	Quantity
2	Oil filler cap rubber part	Engine oil	As required
8	Thread area of cylinder head bolt	Engine oil	As required
12	Both ends of push rod	Engine oil	As required
13	Outer periphery of tappet	Engine oil	As required

Special tools

Location	Tool name and shape	Part No.	Application
10	Socket wrench 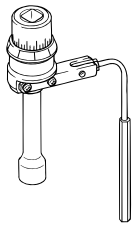 01984	MH061560	Installation of cylinder head and valve assembly

◆ Service procedure

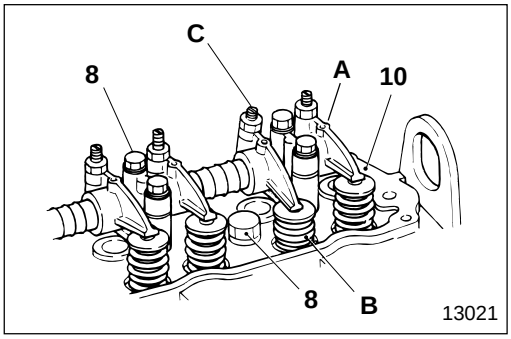

10 Cylinder head and valve assembly

[Removal]

- Before undoing cylinder head bolts **8**, first loosen adjusting screw **C** of rocker **A** that pushes down valve spring **B**.

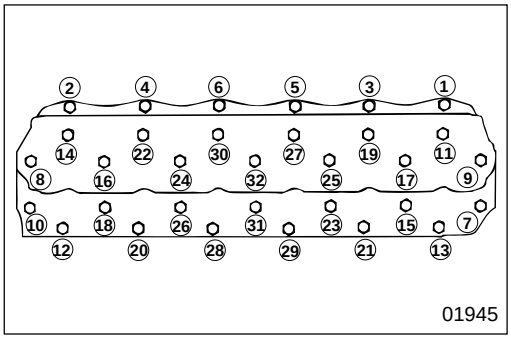

- First loosen cylinder head bolts **8** in the numbered order as illustrated, then remove them.

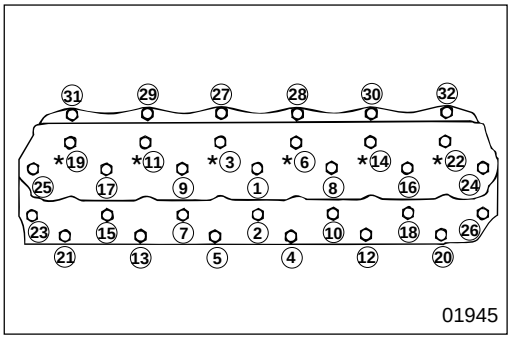

[Installation]

- Center punch the heads of cylinder head bolts **8** < M14 bolts > before installation.

CAUTION⚠

If there are already three center-punch marks, replace the cylinder head bolt 8 with a new one.

- After tightening cylinder head bolts **8** at specified torque (M14 bolt : 78 N·m {58 lbf.ft, 8 kgf·m}, M10 bolt : 17 N·m {13 lbf.ft, 1.75 kgf·m}) in the numbered order as illustrated, tighten further as follows:
  ✱ : Tightened simultaneously with rocker and bracket assembly
  ① to ㉖ : M14 bolt (Wet)
  ㉗ to ㉜ : M10 bolt

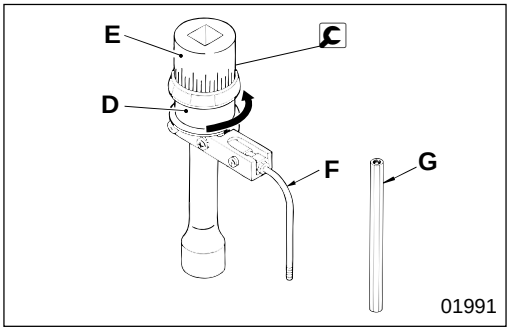

< M14 bolt >

- Turn socket wrench holder **D** counterclockwise and keep the spring in the wrench compressed.
  E : Socket
  F : Rod
  G : Rod (for connection)

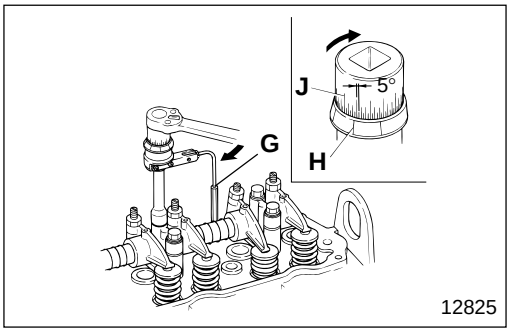

- Set socket wrench holder **D** so that the repercussive force of the spring presses rod **G** (for connection) against adjacent parts such as, rocker shaft bracket or the injection pipe.
- Select a scale that is convenient for reading graduation **H** on holder **D**.
- Tighten further by turning socket **H** clockwise by 180° (setting is in 5° increments), referring to graduation **J** on the selected scale.

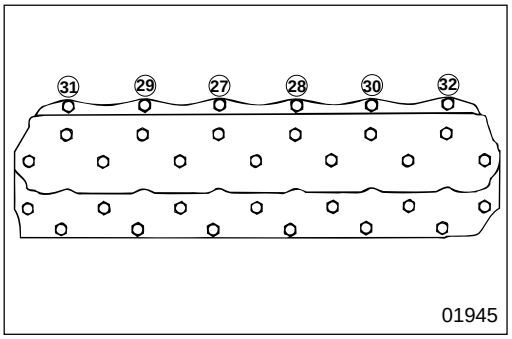

< M10 bolt >

After tightening M14 bolts, tighten cylinder head bolts **8** (M10 bolt) at specified torque (34 N·m {25 lbf.ft, 3.5 kgf·m}) in the numbered order as illustrated.

11 **Cylinder head gasket**

[Removal]

CAUTION

Be careful not to scratch the cylinder head or crankcase * when you remove cylinder head gasket 11.

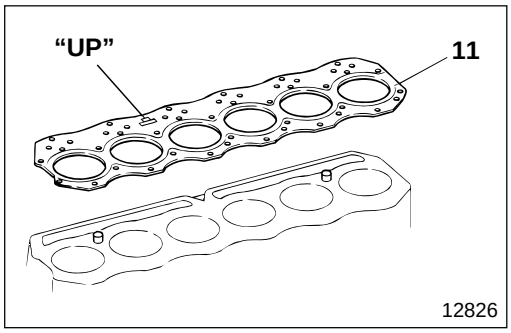

[Installation]

- Install cylinder head gasket **11** onto crankcase * in the direction as illustrated.

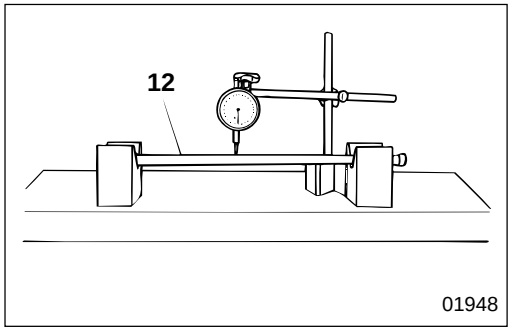

12 **Push rod deflection**

If the measured value is higher than the limit, replace push rod **12**.

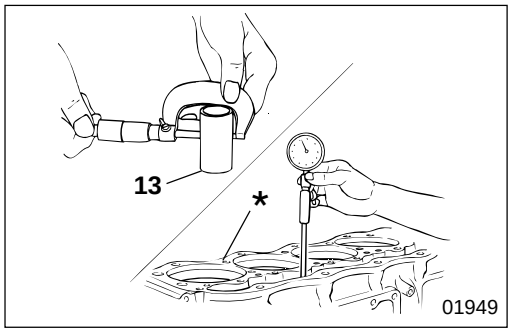

13 ***** **Clearance between tappet and crankcase tappet hole**

If the measured value is higher than the limit, replace the faulty parts.

CYLINDER HEAD AND VALVE MECHANISM

Rocker and Bracket Assembly

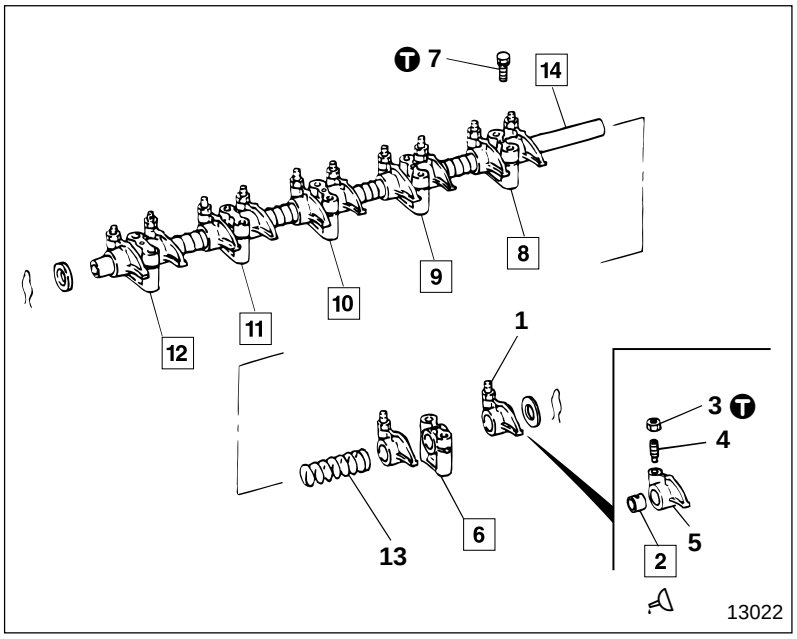

● **Disassembly sequence**

1 Rocker assembly
2 Rocker bushing
3 Lock nut
4 Adjusting screw
5 Rocker
6 No.6 rocker shaft bracket
7 Setting screw
8 No.5 rocker shaft bracket
9 No.4 rocker shaft bracket
10 No.3 rocker shaft bracket
11 No.2 rocker shaft bracket
12 No.1 rocker shaft bracket
13 Rocker shaft spring
14 Rocker shaft

● **Assembly sequence**

Follow the disassembly sequence in reverse.

Service standards

Unit : mm {in.}

Location	Maintenance item	Standard value (Basic diameter in [ ])	Limit	Remedy
2, 14	Clearance between rocker bushing and rocker shaft	[24] 0.01 to 0.08 {[0.94] 0.00039 to 0.0031}	0.12 {0.0047}	Replace rocker bushing

Tightening torque

Unit : N·m {lbf.ft, kgf·m}

Location	Parts to be tightened	Tightening torque	Remarks
3	Lock nut (Adjusting screw mounting)	34 {25, 3.5}	—
7	Setting screw (Rocker shaft mounting)	3.9 {2.9, 0.4}	—

Lubricant

Location	Points of application	Kinds	Quantity
2	Inner surface of rocker bushing	Engine oil	As required

Special tools

Unit : mm {in.}

Location	Tool name and shape	Part No.	Application
2	Rocker bushing puller 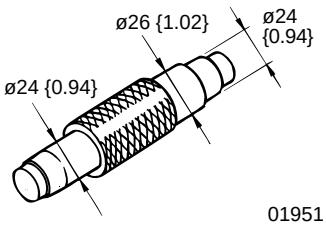	MH061777	Removal and installation of rocker bushing

◆ Service procedure

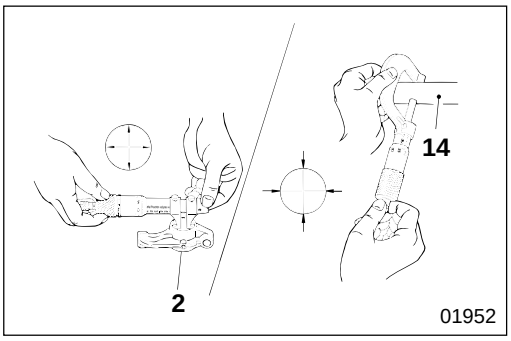

2 **14** **Rocker bushing and rocker shaft**

[Inspection]
If the clearance is higher than the limit, replace the faulty parts.

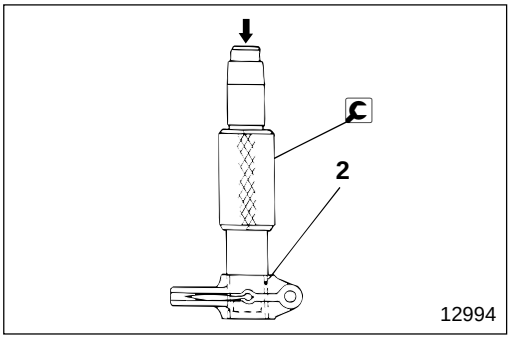

Rocker bushing

[Removal]

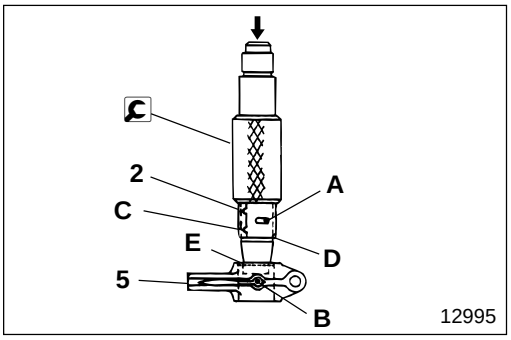

[Press-fitting]
- Align oil hole **A** of rocker bushing **2** with oil hole **B** of rocker **5**.
- Position clinch **C** and split **D** of rocker bushing **2** in the direction as illustrated.
- Press-fit rocker bushing **2** from chamfered side **E** of rocker **5**.

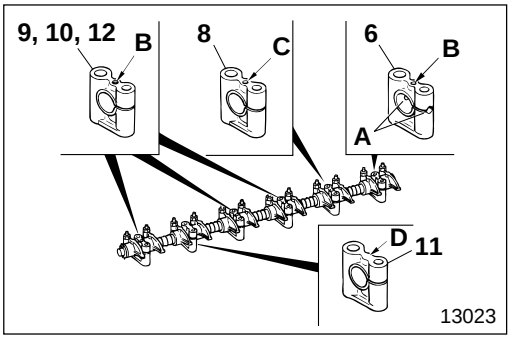

6 **8** **to** **12** **14** **Installation of rocker shaft bracket and rocker shaft**

Rocker shaft bracket

Be careful not to mix up rocker shaft brackets **6**, **8** to **12** when installing.

A : Oil hole
B : Screw hole (Rocker cover mounting bolt : M8)
C : Screw hole (Set screw : M6)
D : No screw hole

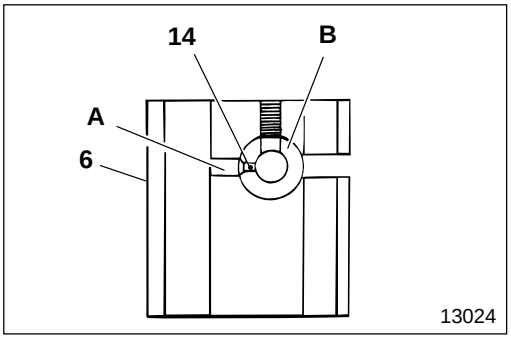

Rocker Shaft

Align oil hole **A** of No.6 rocker shaft bracket **6** with oil hole **B** of rocker shaft **14**.

CYLINDER HEAD AND VALVE MECHANISM

Cylinder Head and Valve Assembly

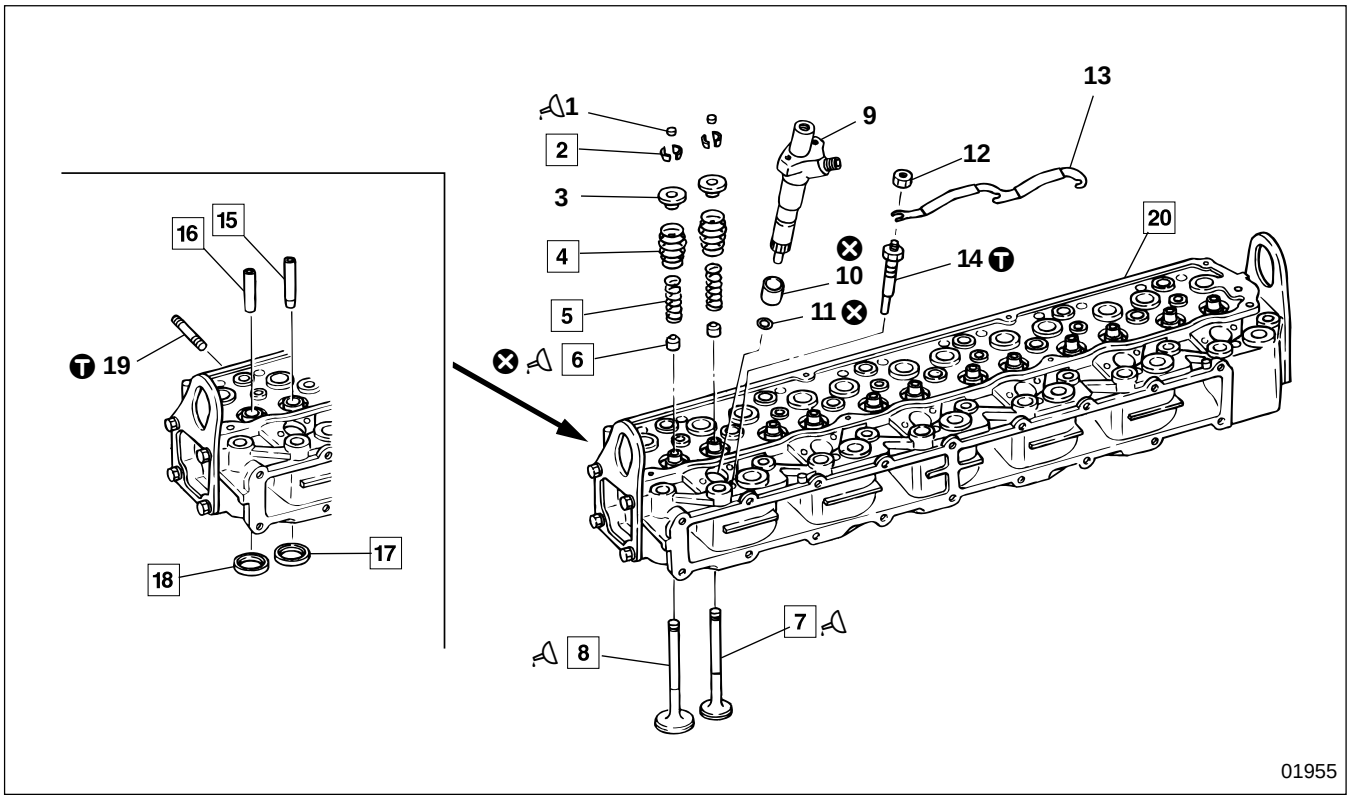

● **Disassembly sequence**

1 Valve cap
2 Valve cotter
3 Upper retainer
4 Outer valve spring
5 Inner valve spring
6 Valve stem seal
7 Exhaust valve
8 Inlet valve
9 Injection nozzle Gr 13
10 Dust seal
11 Nozzle tip gasket
12 Nut
13 Connecting plate
14 Glow plug Gr 54
15 Exhaust valve guide
16 Inlet valve guide
17 Exhaust valve seat
18 Inlet valve seat
19 Stud
20 Cylinder head

⊗ : Non-reusable parts

● **Assembly sequence**

Follow the disassembly sequence in reverse.

CAUTION ⚠

Be careful of the protrusion of glow plug 14 and injection nozzle 9 from the bottom surface of cylinder head 20.

NOTE

When inlet valve 8 and exhaust valve 7 have been removed, replace valve stem seal 6.

Service standards

Unit : mm {in.}

Location	Maintenance item		Standard value (Basic diameter in [ ])	Limit	Remedy
4	Outer valve spring	Free length	67.0 {2.64}	64.0 {2.52}	Replace
		Installed load (Installed length 47.8 {1.88})	330 N {240, 33.5 kgf}	290 N {215 lbf.ft, 29.7 kgf}	Replace
5	Inner valve spring	Free length	55.1 {2.17}	52.1 {2.05}	Replace
		Installed load (Installed length 40.5 {1.59})	92 N {68 lbf.ft, 9.4 kgf}	78 N {58 lbf.ft, 8.0 kgf}	Replace
		Tilt	—	2.0 {0.079}	Replace
7	Exhaust valve	Stem diameter	ø8.93 to 8.94 {0.3515 to 0.3519}	ø8.85 {0.348}	Replace
		Valve recess from the cylinder head bottom surface	1.3 to 1.7 {0.051 to 0.067}	2.0 {0.079}	Inspect each part
		Valve margin	1.5 {0.059}	1.2 {0.047}	Correct or replace
		Valve seat angle	45°±15'	—	Correct or replace
7, 15	Clearance between exhaust valve stem and exhaust valve guide		[9] 0.07 to 0.10 {[0.35] 0.0028 to 0.0039}	0.2 {0.0079}	Replace
8	Inlet valve	Outer diameter of stem	ø8.96 to 8.97 {0.3527 to 0.3531}	ø8.85 {0.348}	Replace
		Valve recess from the cylinder head bottom surface	1.1 to 1.5 {0.043 to 0.059}	1.8 {0.071}	Inspect each part
		Valve margin	1.5 {0.059}	1.2 {0.047}	Correct or replace
		Valve seat angle	45°±15'	—	Correct or replace
8, 16	Clearance between inlet valve stem and inlet valve guide		[9] 0.04 to 0.06 {[0.35] 0.0016 to 0.0024}	0.15 {0.0079}	Replace
17	Seat width of exhaust valve seat		1.8 to 2.2 {0.071 to 0.087}	2.8 {0.11}	Correct or replace
18	Seat width of inlet valve seat		1.8 to 2.2 {0.071 to 0.087}	2.8 {0.11}	Correct or replace
20	Cylinder head	Distortion of bottom	0.08 {0.0031} or less	0.2 {0.0079}	Correct or replace
		Height from top to bottom	94.9 to 95.1 {3.74 to 3.74}	94.5 {3.72}	Replace

Tightening torque

Unit : N·m {lbf.ft, kgf·m}

Location	Parts to be tightened	Tightening torque	Remarks
14	Glow plug	15 to 20 {11 to 14, 1.5 to 2.0}	—
19	Stud (Exhaust manifold mounting)	29 {22, 3}	—

Lubricant

Location	Points of application	Kinds	Quantity
1	Slide contact areas of valve cap and rocker	Engine oil	As required
6	Lip of valve stem seal	Engine oil	As required
7, 8	Valve stem	Engine oil	As required

Special tools

Unit : mm {in.}

Location	Tool name and shape	Part No.	Application
2	**A** : Valve lifter **B** : Valve lifter hook 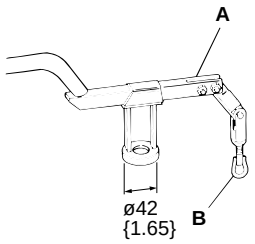	**A** : MH061668 **B** : MH061679	Removal and installation of valve cotter
6	Valve stem seal installer 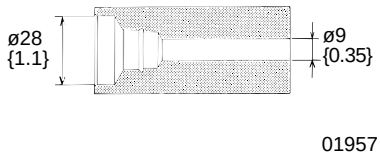	MH061293	Installation of valve stem
7, 8	Valve lapper 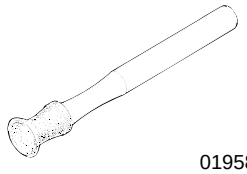	30091-07500	Fitting of valve and valve guide
15, 16	Valve guide remover 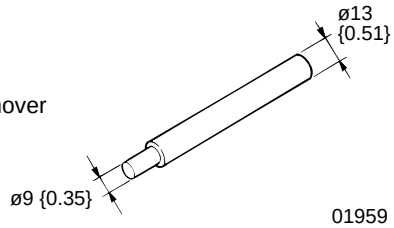	MH061066	Removal of valve guide
	Valve guide installer 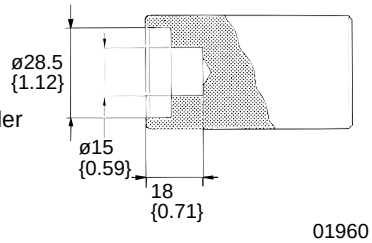	MH061998	Press-fitting of valve guide
17, 18	**A** : Caulking tool body **B** : Caulking ring **C** dimension: Inlet ø49 {1.93}; Exhaust ø42 {1.65} 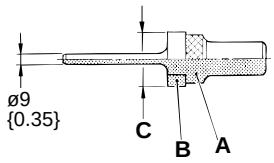	**A** : MH061067 **B** : MH061695 (Inlet) MH061696 (Exhaust)	Press-fitting of valve seat

◆ Service procedure

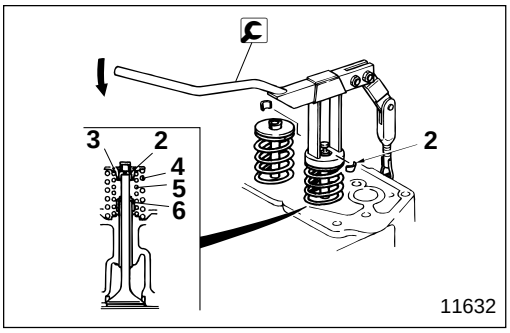

2 **Valve cotter**

[Removal]
Remove valve cotter **2** making sure that valve springs **4**, **5** are squarely and evenly pressed down by 🔧 valve lifter.

[Installation]
Follow the removal procedure in reverse.

CAUTION⚠

Be sure not to press down on valve springs 4, 5 too hard because this would cause upper retainer 3 to contact valve stem seal 6 and damage it.

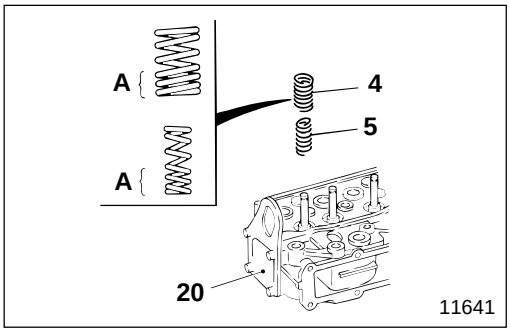

4 **5** **Installation of outer and inner valve springs**

Install outer springs **4** and inner springs **5** in cylinder head **20** in the direction as illustrated.

A : Closely wound area

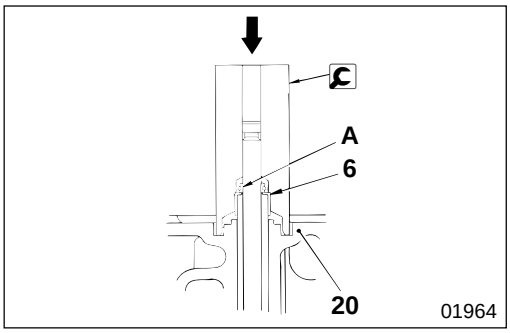

6 **Installation of valve stem seal**

- Apply engine oil to lip **A** of valve stem seal **6**.
- Tap down 🔧 valve stem seal installer until it hits cylinder head **20**.

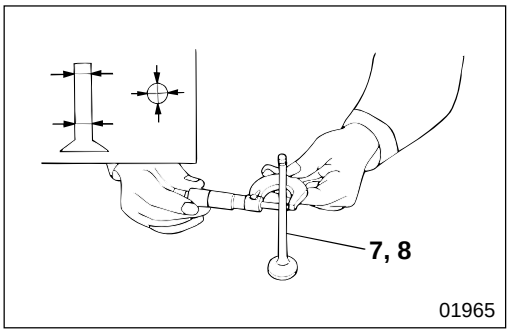

7 **8** **Inlet valve and exhaust valve**

[Inspection]

(1) Inspection of stems

If the measured value is lower than the limit or in the case of excessive wear, replace valves **7**, **8**.

CAUTION⚠

Be sure to lap valve seats 17, 18 when valves 7, 8 are replaced with new ones. 🕮 **P11-23**

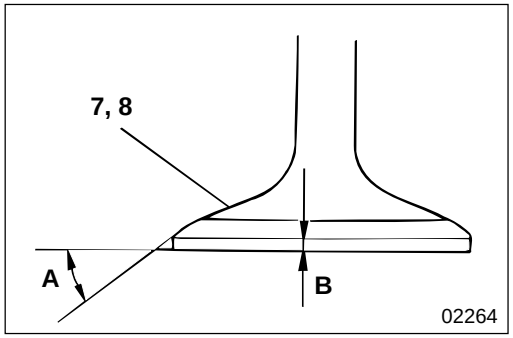

(2) Valve seat angle and valve margin

If the measured value is higher than the limit, correct or replace valves **7**, **8**.

A : Valve seat angle
B : Valve margin

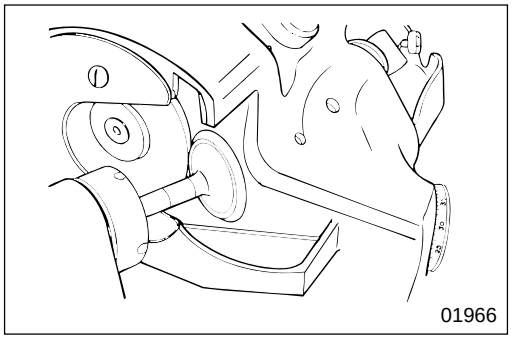

[Correction]

NOTE

- **Be sure to keep the grinding work as light as possible.**
- **Be sure to replace valves 7, 8 after grinding if valve margin deviates from the limit.**
- **Be sure to lap valve 7, 8 and valve seats 17, 18 after grinding.** **P11-23**

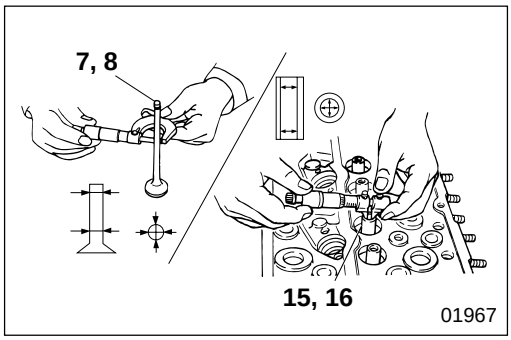

7 **8** **15** **16** **Valve and valve guide**

[Inspection]
When the clearance is higher than the limit, replace the faulty parts.

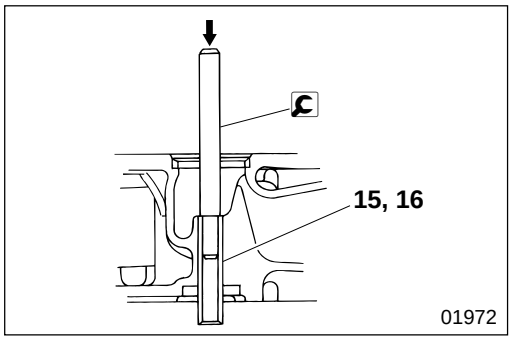

Valve guide

[Removal]

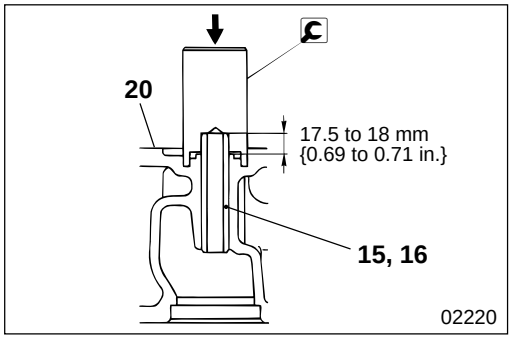

[Installation]

- Tap down valve guides **15**, **16** with valve guide installer until it hits cylinder head **20**.

CAUTION

- **The length of fit of valve guides 15, 16 is standardized. Be sure to use valve guide installer.**
- **Be sure to distinguish between valve guides 15, 16. Exhaust valve guide 15 is longer.**

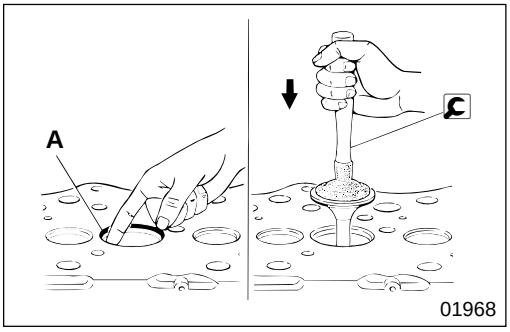

7 8 17 18 **Valve and valve seat**

[Inspection]

- Apply red lead evenly to entire surface **A** of valve seats **17**, **18** that contact valves **7**, **8**.
- Fit valves **7**, **8** to valve seats **17**, **18** and tap once without rotating.

NOTE

Be sure to carry out inspection under the condition that valves 7, 8 and all parts of valve guides 15, 16 are normal.

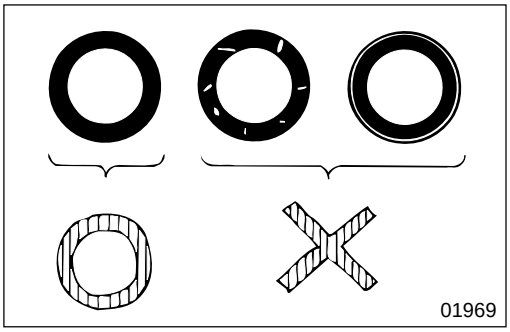

- Check how much red lead has transferred to valves **7**, **8** to determine the contact of the valve and the seat. According to the degree of abnormality, take proper measures to correct it.

Contact conditions	Correction measures
Minor fault	Valve lapping
Major fault	Repair of valve and seat or replacement of both

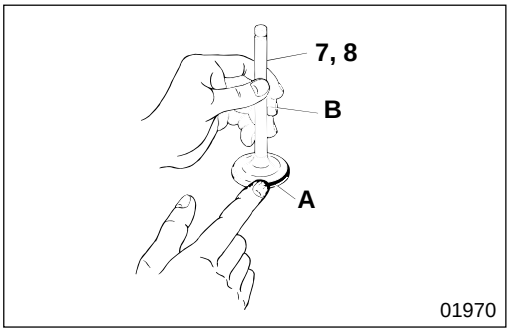

[Correction]

Valve polishing is done in the following manner:

- Apply valve lapping compound thinly to contact surface **A** of valves **7**, **8** with valve seats **17**, **18**.

CAUTION ⚠

Take care not to smear stems B of valves 7, 8 with the compound.

NOTE

- **Start with medium grit compound (120 to 150 grit) and for finishing up, use finer grit (200 grit or finer).**
- **Mixing with a small amount of engine oil will make the compound consistent and make even application easier.**

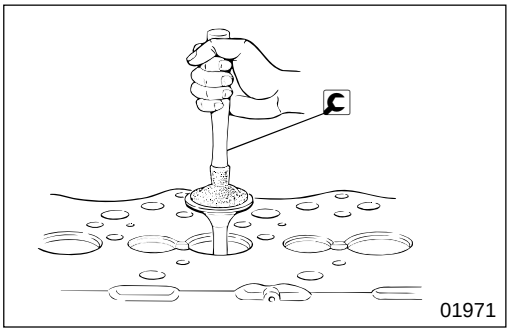

- Tap valves **7**, **8** against valve seats **17**, **18** several times while rotating the valves slightly at each strike.
- Clean off the compound with gas oil.
- Apply engine oil to contact surface **A** of valve seats **17**, **18** and smooth the surface.
- Check the contact of valves **7**, **8** and valve seats **17**, **18**.
- If contact does not take place completely around the seat, replace valve seats **17**, **18**.

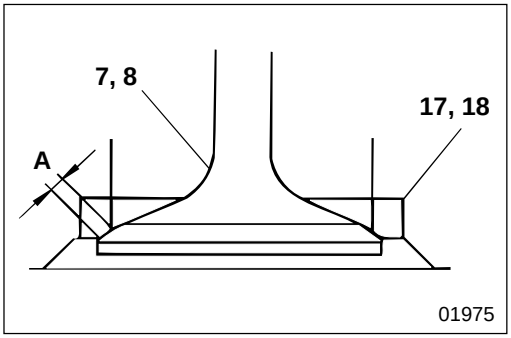

17 **18** **Valve seat**

[Inspection]

(1) Valve seat width

If the measured value is higher than the limit, replace valve seats **17**, **18**.

A : Valve seat width

NOTE

Be sure to lap and fit valves 7, 8 and valve seats 17, 18 after correction or replacement.

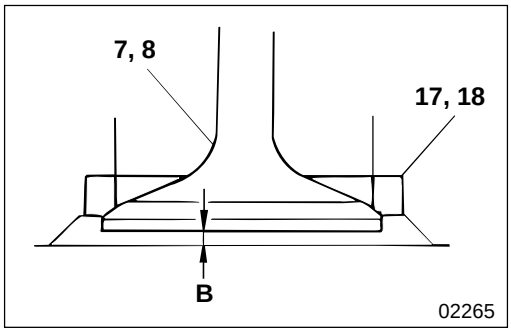

(2) Extent of valve recess from the bottom surface of cylinder head

If the measured value is higher than the limit, correct or replace the faulty parts.

B : Extent of valve recess

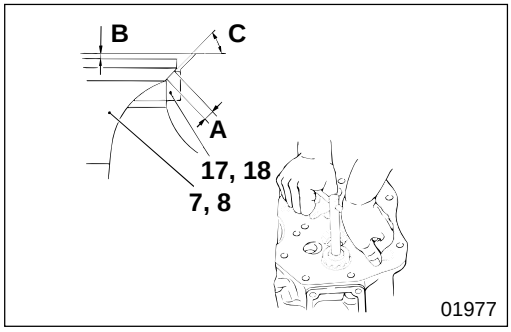

[Correction]

- Grind valve seats **17**, **18** using valve seat cutter or valve seat grinder.
- After grinding, do another light abrasion using 400 grit emery paper placed between the cutter and the seat.
- Adjust the seat width **A** of valves **7**, **8** using 15° or 75° cutter to make seat width conform to the standard value.

C : Valve seat angle

CAUTION ⚠

Be sure that as a result of grinding, recess B of valves 7, 8 does not become higher than the limit.

- After correction is done, be sure to carry out lapping and fitting on valves **7**, **8** and valve seats **17**, **18**.

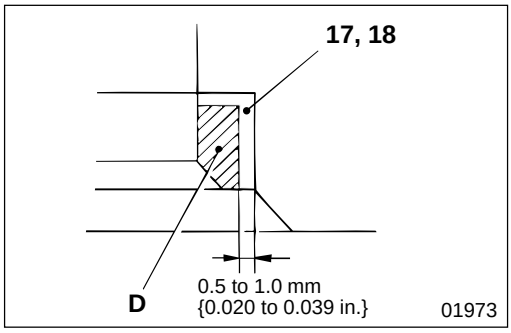

[Removal]

- Valve seats **17**, **18** have been set in by the cooling-off-process, and have to be thinned by grinding off the inner side for removal under normal temperature.

D : Part to be ground

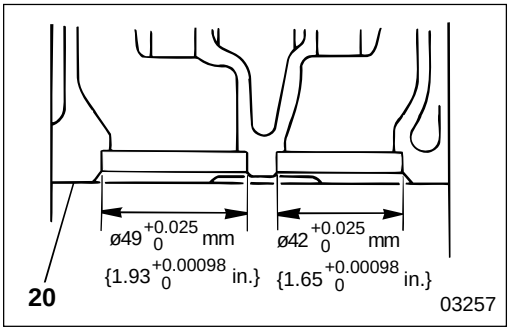

[Installation]

- Make sure that the diameter of valve seat hole of cylinder head **20** conforms to the standard value.
  E : Inlet valve seat hole diameter
  F : Exhaust valve seat hole diameter

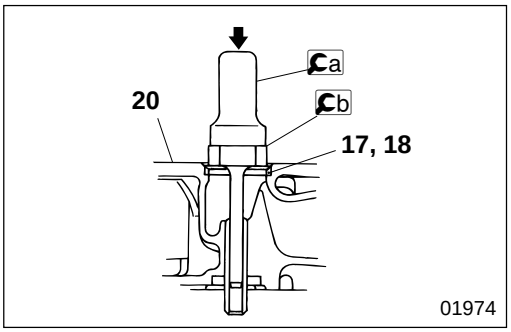

- Immerse valve seats **17**, **18** in liquid nitrogen and cool them substantially. Press-fit into the cylinder head using Ca caulking tool body and Cb caulking rings inlet and exhaust.
- After installation of valve seats **17**, **18**, work until they contact valves **7**, **8** smoothly.

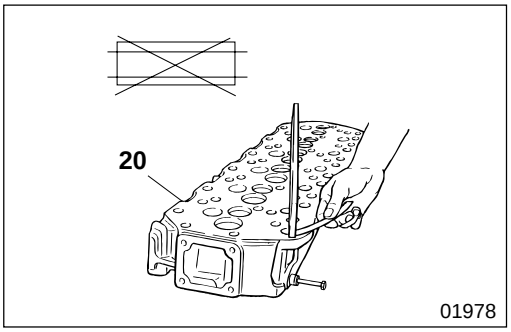

20 Inspection of cylinder head

Measure the extent of distortion of the bottom of cylinder head **20**, and if the measured value is higher than the standard value, grind using a surface grinder.

CAUTION

Be sure to keep the amount of grinding within the limit of the height of cylinder head 20.

PISTON, CONNECTING ROD AND CYLINDER SLEEVE

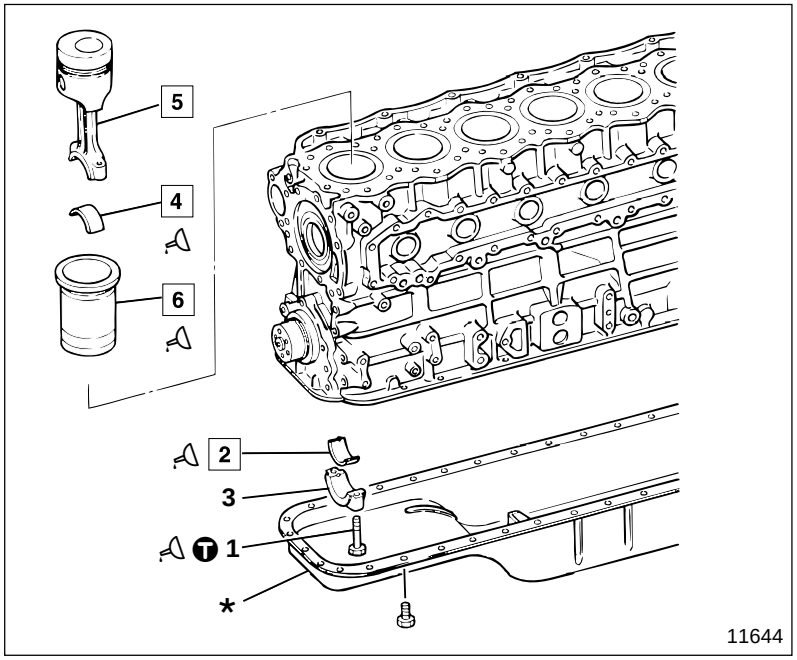

● **Disassembly sequence**

1 Bolt
2 Lower connecting rod bearing
3 Connecting rod cap
4 Upper connecting rod bearing
5 Piston and connecting rod assembly
P11-34
6 Cylinder sleeve

***** : Oil pan Gr 12

● **Assembly sequence**

Follow the disassembly sequence in reverse.

Service standards

Unit : mm {in.}

Location	Maintenance item		Standard value (Basic diameter in [ ])	Limit	Remedy
—	Extent of piston protrusion		0.85 to 1.06 {0.033 to 0.042}	—	Inspect the related parts
—	End play of connecting rod		0.15 to 0.45 {0.0059 to 0.018}	0.6 {0.024}	Replace
2, 4	Connecting rod bearing	Oil clearance	[65] 0.04 to 0.09 [2.56] 0.0016 to 0.0035	0.2 {0.0079}	Replace
		Expansion	—	69.5 {2.74} or less	Replace
5, 6	Clearance between piston and connecting rod assembly and cylinder sleeve		[118] 0.075 to 0.105 {[4, 65] 0.003 to 0.0041}	—	Replace
6	Cylinder sleeve	Extent of flange protrusion	0.03 to 0.10{0.0012 to 0.039}	—	Replace
		Inner diameter	ø118 to 118.03 {4.646 to 4.656}	ø118.25 {4.66}	Replace
		Cylindrical accuracy	0.03 {0.0012} or less	—	Replace

Tightening torque

Unit : N·m {lbf.ft, kgf·m}

Location	Parts to be tightened	Tightening torque	Remarks
1	Bolt	29 {22, 3}+90°±5°	Wet

Lubricant

Location	Points of application	Kinds	Quantity
1	Thread area of bolt	Engine oil	As required
2, 4	Connecting rod bearing inner surface	Engine oil	As required
6	Outer periphery of cylinder sleeve	Engine oil	As required

Special tools

Unit : mm {in.}

Location	Tool name and shape	Part No.	Application
5	Socket wrench 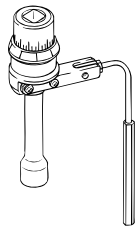 01984	MH061560	Installation of piston and connecting rod assembly
	Piston guide **A** : Piston guide clamp **B** : Piston guide lever 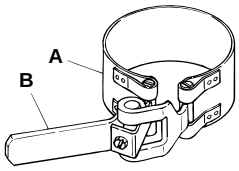 01981	**A** : MH061760 **B** : MH061658	
6	Cylinder sleeve extractor 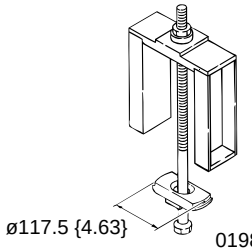 01982	MH061761	Extraction of cylinder sleeve
	Cylinder sleeve installer 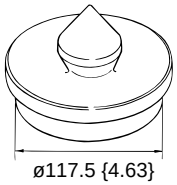 01983	MH061771	Installation of cylinder sleeve

◆ Service procedure

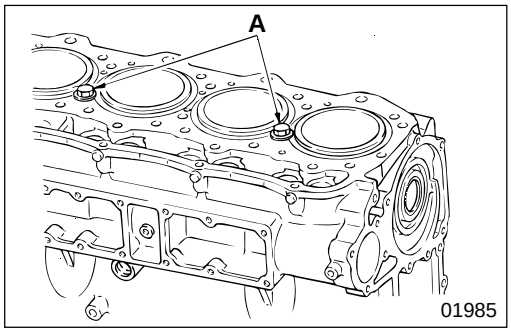

● **Inspection before disassembly**

(1) Extent of piston protrusion from the upper surface of crankcase

NOTE

Always inspect the extent of piston protrusion because it affects the engine performance greatly.

WARNING⚠

Cylinder sleeves 6 might slip out beyond the top surface of the crankcase if the crankcase is cranked, or if the crankshaft is rotated. To avoid this, hold down the sleeves using bolts, tightened down with washers A at the cylinder sleeve flange.

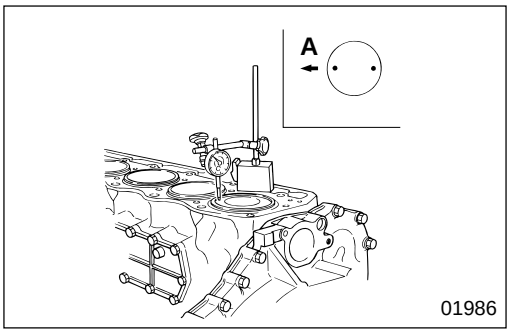

- Measure piston protrusion at two points on the top of the piston, and produce the average value.
  A : Front of the engine
- If the average value deviates from the limit, inspect clearance of the related parts.

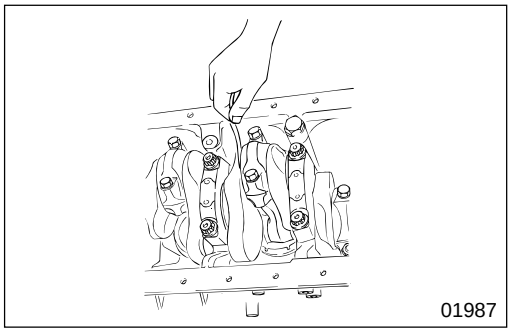

(2) End play of connecting rod

- Measure the end play of each connecting rod.
- If the measured value is higher than the limit, replace the faulty parts.

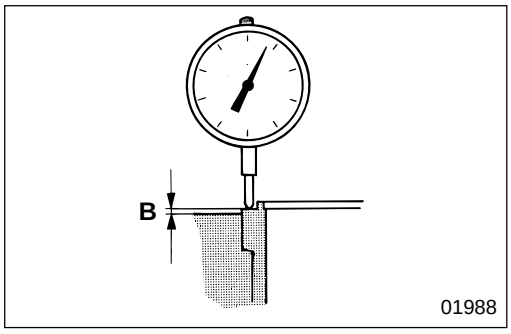

(3) Extent of cylinder sleeve flange area protrusion from the upper surface of crankcase

Replace cylinder sleeve **6** if the measured value deviates from the standard value.

B : Protrusion at cylinder sleeve flange area

CAUTION⚠

Unless the protrusion at the flange of cylinder sleeve 6 is adequate, contact pressure exerted upon the cylinder head gasket around the circumference of the cylinder sleeve will be low, and might cause leakage of combustion gases.

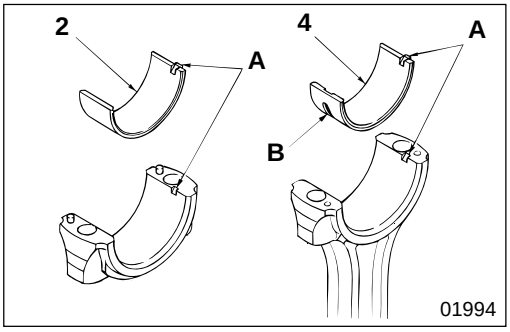

2 **4** **Connecting rod bearing**

[Installation]
Install connecting rod bearings **2**, **4** by matching lugs **A** to the connecting rods.

CAUTION

Be sure to distinguish between upper and lower connecting rod bearings 2, 4. The upper bearing has oil opening B while the lower bearing has no oil opening.

[Inspection]

CAUTION

- **Do not forcibly open or expand connecting rod bearings 2, 4.**
- **When either upper or lower connecting rod bearings 2, 4 needs replacing, replace as a set.**

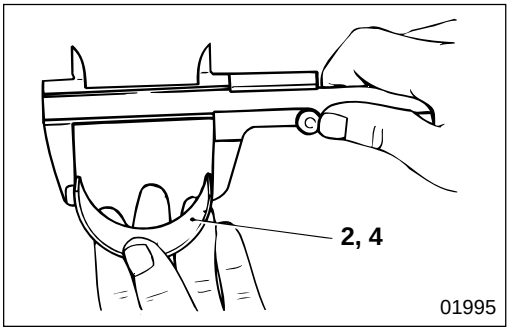

(1) Expansion at free state

If the measured value is lower than the limit, replace connecting rod bearings **2**, **4**.

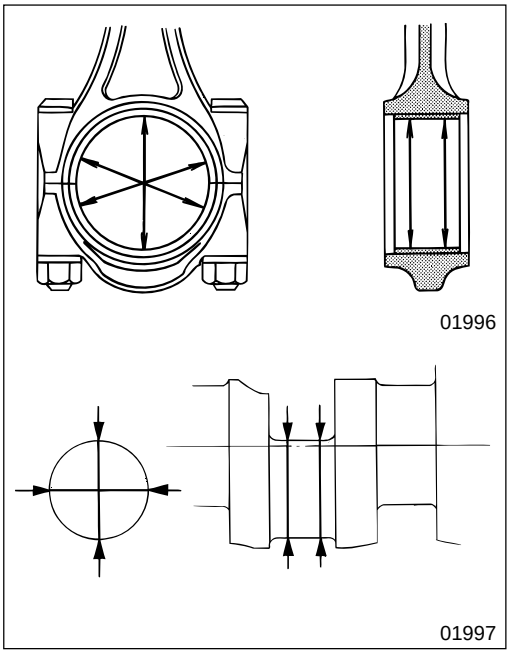

(2) Clearance between connecting rod bearing and crankshaft

If the clearance between connecting rod bearing **2**, **4** and crankshaft is lower than the limit, replace the faulty parts.

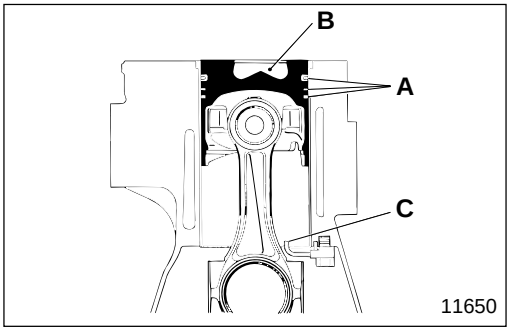

5 Installation of piston and connecting rod assembly

CAUTION ⚠

- **Be sure to fit piston ring A in the correct position.**
  P11-38
- **Be careful not to scratch or damage head B of the piston (a part of the combustion chamber).**
- **Make sure that the connecting rod does not hit oil jet C.**

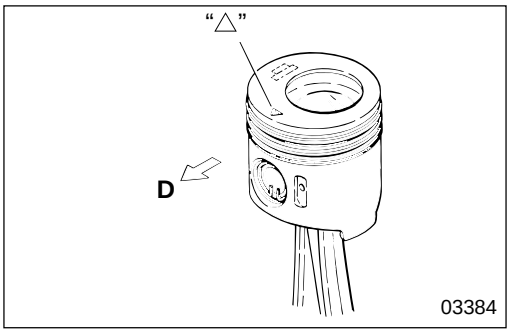

- Install piston front mark "△" directed towards the front of the engine using the following procedure.
  D : Front of the engine

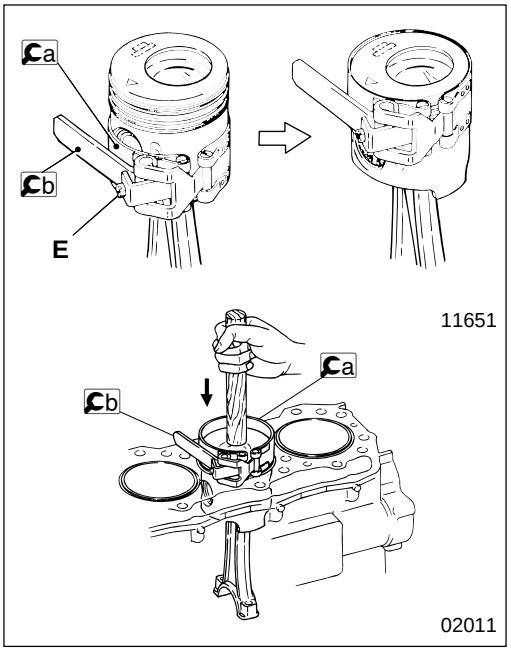

- Match the inner diameter of a piston guide clamp to the outer diameter of the piston skirt by turning adjusting bolt **E** of b piston guide lever.
- After adjusting, set a clamp and b lever at the top of the piston so that the clamp is flush with the top of the piston.

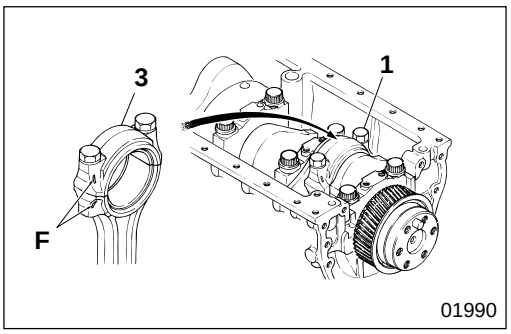

- After the piston is inserted, align alignment marks **F** on the connecting rod with the alignment marks on connecting rod cap **3** and tighten bolt **1** at specified torque. Then tighten the bolt further as follows:

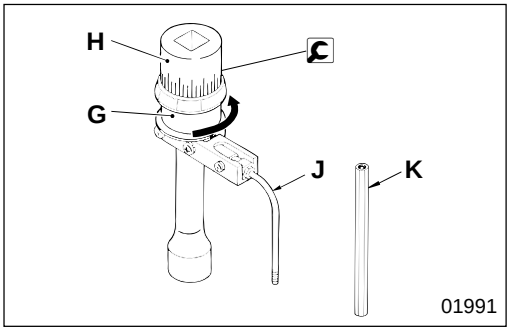

- Turn socket wrench holder **G** counterclockwise and keep the spring in the wrench compressed.
  H : Socket
  J : Rod
  K : Rod (for connection)

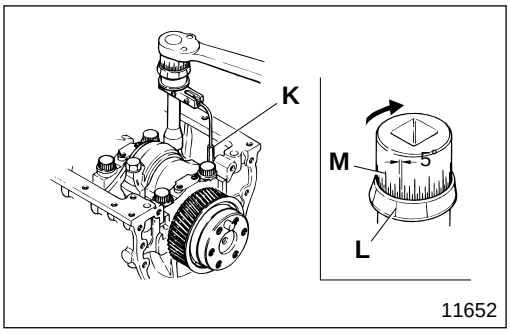

- Set the socket wrench holder **G** so that the repercussive force of its spring presses rod **K** (for connection) against the crankshaft.
- Select a scale that is convenient for reading graduation **L** on holder **G** side.
- Tighten further by turning socket **H** clockwise by 90°±5° (setting is in 5° increments) referring to graduation **M** using the selected scale.

NOTE

After installation of connecting rod cap 3, inspect the following points :

- **End play of the connecting rod : 🕮 P11-28**
- **Piston protrusion : 🕮 P11-28**

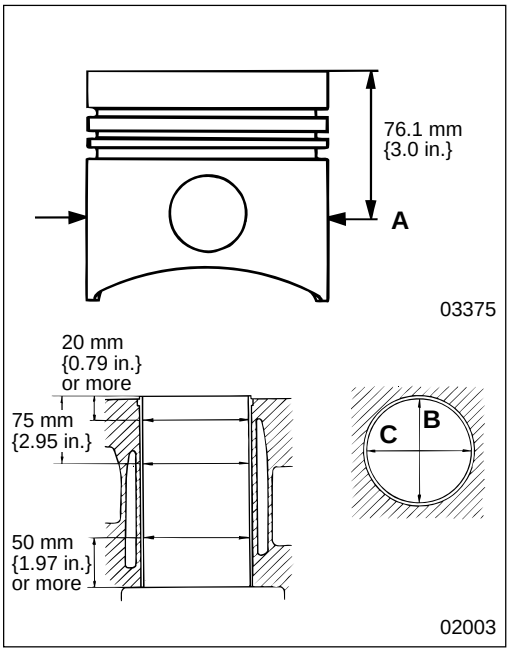

5 **6** **Piston and connecting rod assembly and cylinder sleeve**

[Inspection]
Replace the cylinder sleeve if the clearance deviates from the standard value

A : Position to measure the outer diameter of the piston
B : In the direction of the crankshaft axis
C : At right angles to the crankshaft axis

NOTE

Cylinder sleeve 6 is a thin type so it is impossible to bore it out. Also, do not remove it except for replacement, because it is liable to become deformed when you remove it .

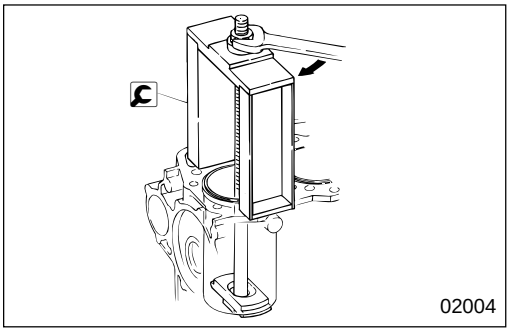

Cylinder sleeve

[Removal]

NOTE

If you have no option other than to reinstall cylinder sleeve 6, paint an alignment mark across the cylinder sleeve and the crankcase before removal so you can replace them in the same position.

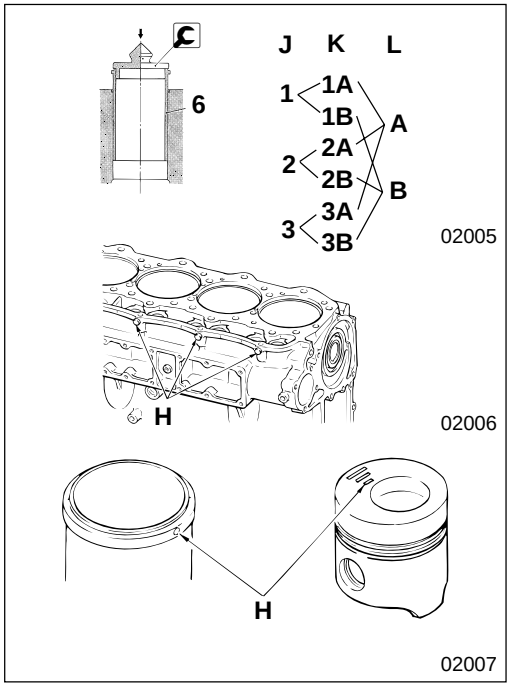

[Installation]
Apply engine oil to the outer surface of cylinder sleeve **6**, hold the entire upper part of cylinder sleeve installer in your hand evenly, and insert the cylinder sleeve slowly into the crankcase.

CAUTION

- **Use size marks H on cylinder sleeve 6, piston and connecting rod assembly 5, and the crankcase, as a reference when replacing the piston and crankcase.**
  - **J : Crankcase size mark**
  - **K : Cylinder sleeve size mark**
  - **L : Piston size mark**
- **Handle cylinder sleeve 6 with utmost care because it is thin; do not subject it to strong impact from a hammer, etc.**

M E M O

PISTON, CONNECTING ROD AND CYLINDER SLEEVE

Piston and Connecting Rod Assembly

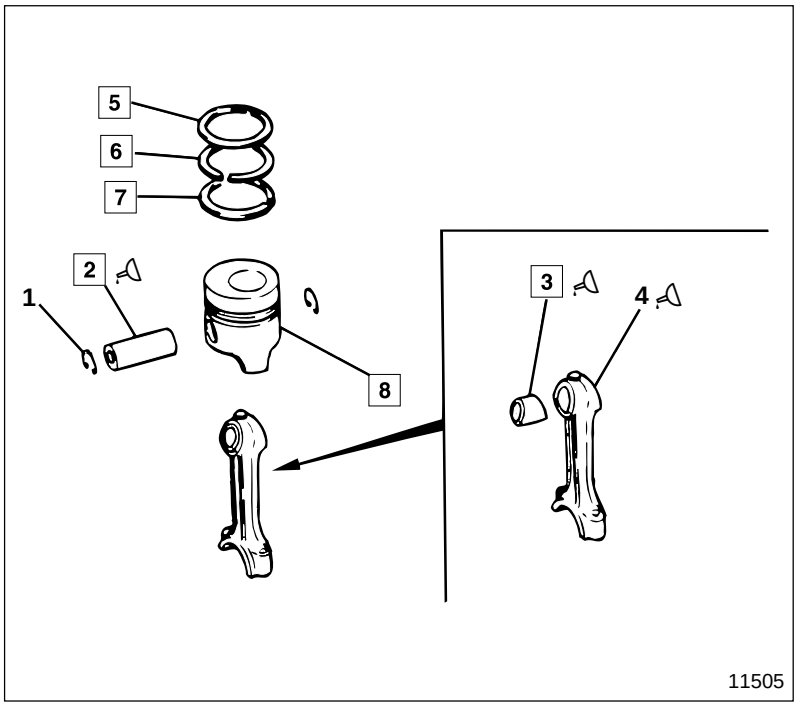

● **Disassembly sequence**

1 Snap ring
2 Piston pin
3 Connecting rod bushing
4 Connecting rod
5 1st compression ring
6 2nd compression ring
7 Oil ring
8 Piston

● **Assembly sequence**

Follow the disassembly sequence in reverse.

Service standards

Unit : mm {in.}

Location	Maintenance item		Standard value (Basic diameter in [ ])	Limit	Remedy
2, 3	Clearance between piston pin and connecting rod bushing		[38] 0.02 to 0.05 {[1.50] 0.00079 to 0.002}	0.1 {0.0039}	Replace
2, 8	Clearance between piston and piston pin		[38] 0.004 to 0.02 {[0.15] 0.00016 to 0.00079}	0.05 {0.002}	Replace
4	Degree of bend and distortion of connecting rod		—	0.05 {0.002}	Repair or replace
5 to 7	Deviation of piston ring fitted position	1st compression ring	0.35 to 0.50 {0.014 to 0.018}	1.5 {0.059}	Replace
		2nd compression ring	0.45 to 0.60 {0.0177 to 0.024}		
		Oil ring	0.35 to 0.55 {0.014 to 0.022}		
5 to 8	Clearance between piston ring and piston ring groove	1st compression ring	0.02 to 0.10 {0.00079 to 0.0039}	0.2 {0.0079}	Replace
		2nd compression ring	0.07 to 0.10 {0.0028 to 0.0039}	0.15 {0.0059}	
		Oil ring	0.03 to 0.06 {0.0012 to 0.0024}		

Lubricant

Location	Points of application	Kinds	Quantity
2	Exterior of piston pin	Engine oil	As required
3	Exterior of connecting rod bushing	Engine oil	As required
4	Bushing attachment area of connecting rod	Engine oil	As required

Special tools

Unit : mm {in.}

Location	Tool name and shape	Part No.	Application
3	Connecting rod bushing puller kit 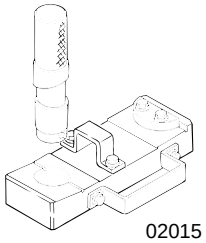 02015	MH062023	Removal and installation of connecting rod bushing
5 to 7	Piston ring tool 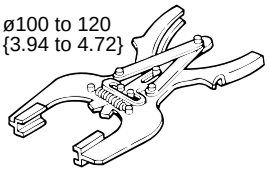 02013	30091-07100	Removal and installation of piston ring

◆ Service procedure

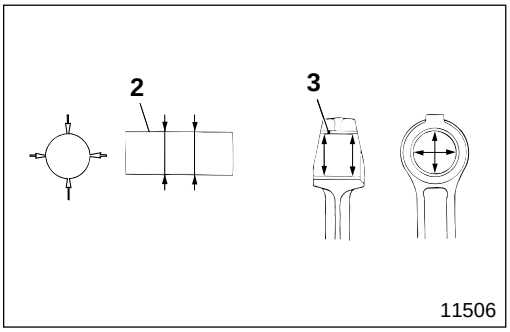

11506

2 **3** **Piston pin and connecting rod bushing**

[Inspection]
If the clearances are higher than the limit, replace the faulty parts.

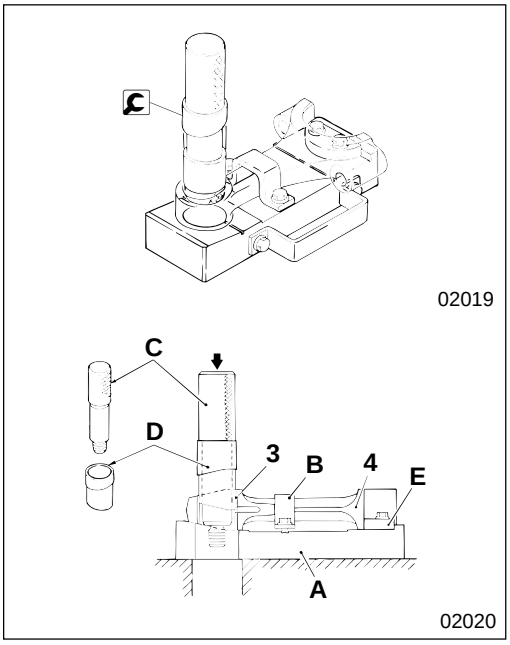

02019
02020

Connecting rod bushing

Use 🔧 connecting rod bushing puller kit to replace connecting rod bushing **3**.
(Components of 🔧 connecting rod bushing puller kit)

A : Base **B** : Bracket **C** : Puller **D** : Collar
E : Plate **F** : Collar **G** : Nut

[Pulling-out]

- Remove upper connecting rod bearing from the big end of connecting rod **4**.
- Place connecting rod **4** on base **A** and fix it to the base at two points, bracket **B** and plate **E**.
- Fit collar **D** in puller **C** in the direction as illustrated, and pull out connecting rod bushing **3** with a gradual load of approximately 49 kN {11020 lbf, 5000 kgf}.

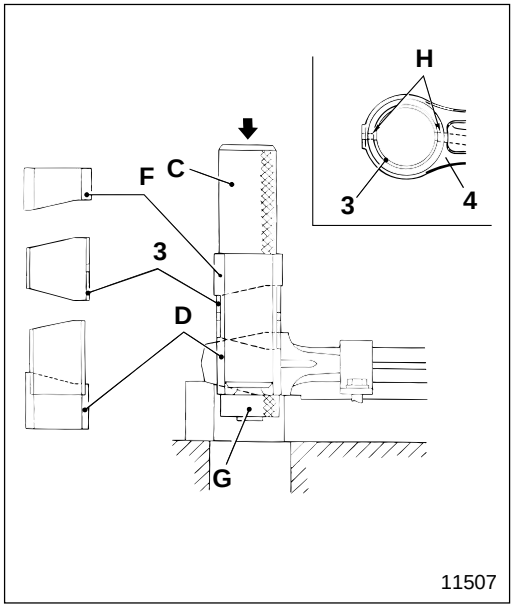

[Press-fitting]
- Apply engine oil to the exterior peripheral area of connecting rod bushing **3** and the inner area of the bushing fitting ring of connecting rod **4**.
- Fit collar **F**, connecting rod bushing **3** and collar **D** in puller **C** in the arrangement and direction as illustrated and mount them with nut **G**.
- Align oiling holes **H** of connecting rod bushing **3** and connecting rod **4**, and gradually press in the bushing with approximately 49 kN {11020 lbf, 5000 kgf} load.
- After press-fitting, ream connecting rod bushing **3** to make its clearance with piston pin **2** conform to the standard value.

NOTE

After press-fitting bushing 3, insert piston pin 2 and make sure that the rod moves smoothly without any excessive play.

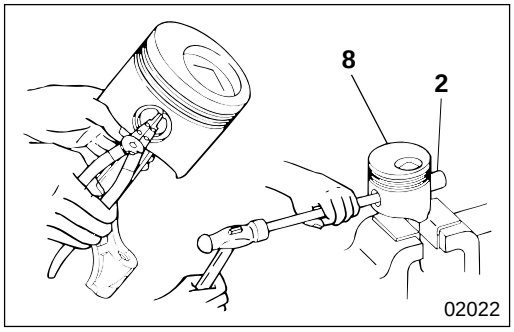

2 4 8 Piston pin and connecting rod and piston

[Disassembly]
- Drift out piston pin **2** using a rod.
- When removal of piston pin **2** is difficult, warm piston **8** using a piston heater or hot water.

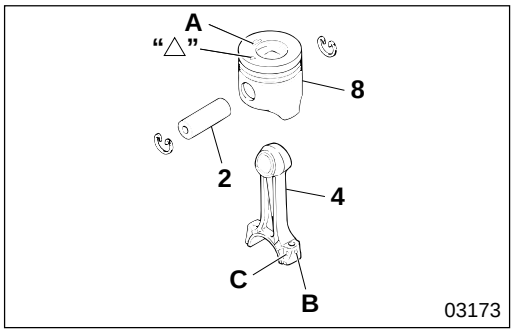

[Installation]
- Apply engine oil to piston pin **2** and assemble connecting rod **4** and piston **8** in the direction as illustrated.
  - **A** : Piston mass (Mass of piston is marked)
  - **B** : Connecting rod mass mark (Alphabetical : A, B, C, D, E, F, G, H, I, V, W, X, Y, Z)
  - **C** : Mounting base of connecting rod cap
  - △ : Front mark
- When piston pin **2** insertion is difficult, warm piston **4** using a piston heater or hot water.

CAUTION⚠
- **Make sure that the total mass error of all pistons 8 in one engine is 10 g {0.35 oz} or less.**
- **Be sure to install connecting rods 4, to be used in one engine, that have identical mass mark B.**
- **Be sure that after inserting piston pin 2 the connecting rod operates smoothly without excessive play.**

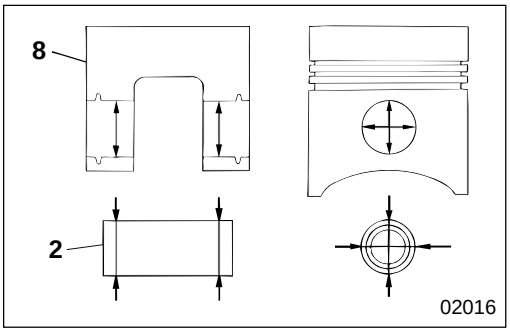

2 **8** **Clearance between piston pin and piston**

If the clearance is higher than the limit, replace the faulty parts.

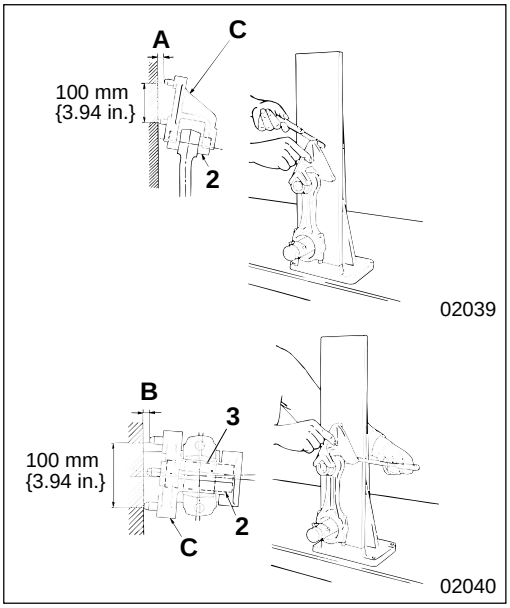

4 **Degree of bend or distortion of connecting rod**

- Mount connecting rod bushing **3** and piston pin **2** to connecting rod **4**.
- Measure degree of bend **A** and distortion **B** of connecting rod **4**. If the measured value is higher than the limit, repair or replace the connecting rod.
  C : Connecting rod aligner (Measuring instrument)

NOTE

- **When making measurements by mounting connecting rod 4 to connecting rod aligner C, make sure that the upper connecting rod bearing and the lower connecting rod bearing are mounted on the rod.**
- **Mount the connecting rod cap by tightening the bolt at specified torque.** **P11-26**

PISTON, CONNECTING ROD AND CYLINDER SLEEVE

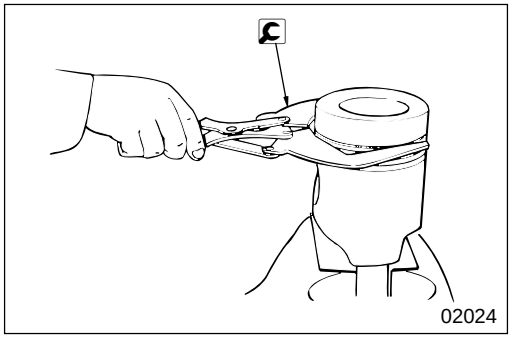

5 to 8 Piston ring and piston

Piston ring
[Removal]

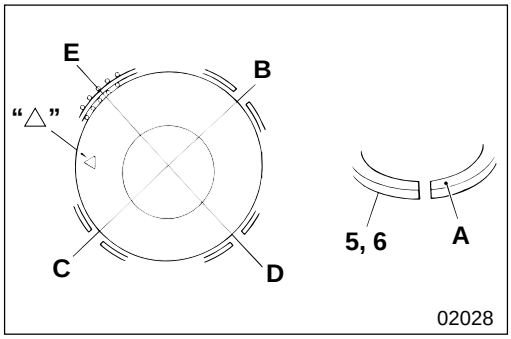

[Installation]
- Install oil ring **7** so that split **D** and the butting joint of expander spring **E** come to the points as illustrated.
- Compression rings **5** and **6** have a manufacturer's mark **A** at the split, and installation should be made with the mark outward.
  B : The split of the 1st compression ring
  C : The split of the 2nd compression ring
  D : Oil ring slit
  E : Oil ring expander spring butt joint
  △ : Front mark of piston

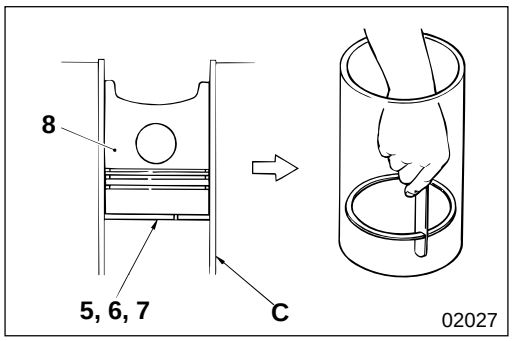

[Inspection]

(1) Clearance of piston ring slit
- Install piston rings **5** to **7** into the crankcase cylinder sleeve using the head of piston **8** to level the piston ring.
- Measure the clearance of the piston ring split while keeping them level and stationary. If the measured value is higher than the limit, replace the piston ring.

NOTE
- **Use piston 8 to ensure that piston rings 5 to 7 are kept level when inserting them into the crankcase cylinder sleeve.**
- **Insert piston rings 5 to 7 into the lower part of the crankcase cylinder sleeve, where the area is less worn, when measuring clearance of piston ring split 5 to 7.**
- **Exchange the whole set of piston rings 5 to 7 as a set if any of the rings is faulty.**

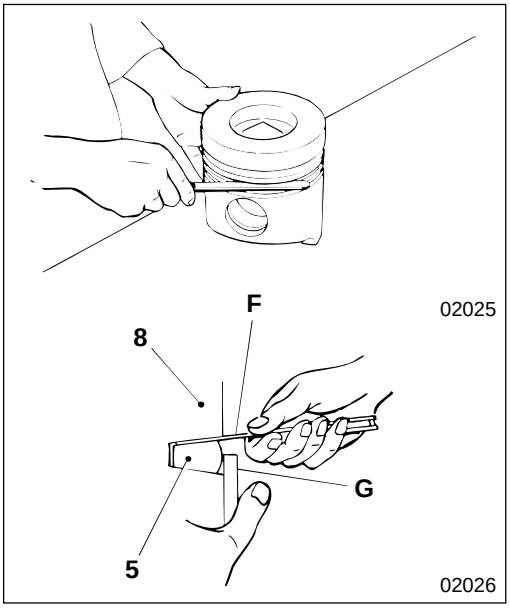

(2) Clearance between piston ring and ring groove

- If the measured value is higher than the limit, replace the faulty parts.
- Measure using feeler gauge **F**, by pressing 1st compression ring **5** against piston **8** with straight edge **G**.

NOTE

- **Measurement has to be conducted around the whole periphery of piston 8 after removing carbon deposits.**
- **Be sure to exchange the whole set of piston rings 5 to 7 as a set if any of the rings is faulty.**

FLYWHEEL AND TIMING GEAR

Flywheel

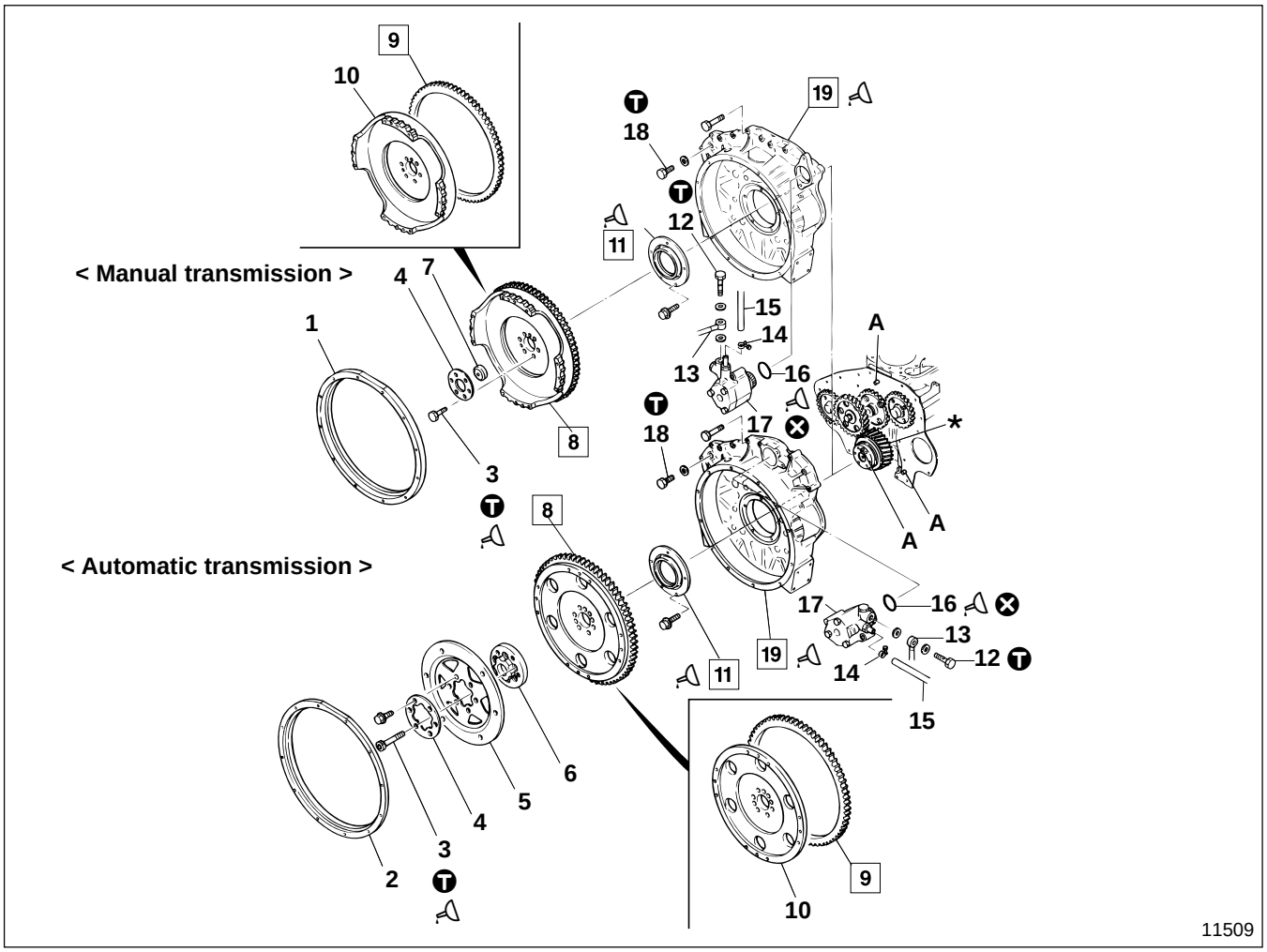

● **Disassembly sequence**

1 Adaptor < Except for vehicles with M8 transmission >
2 Flywheel housing adaptor < Automatic transmission >
3 Bolt
4 Washer plate
5 Flex plate < Automatic transmission >
6 Flywheel adaptor < Automatic transmission >
7 Pilot bearing < Manual transmission >
8 Flywheel assembly
9 Ring gear
10 Flywheel
11 Rear oil seal
12 Eye bolt
13 Power steering oil pipe
14 Clamp
15 Suction hose
16 O-ring
17 Power steering oil pump Gr 37
18 Plug
19 Flywheel housing

***** : Crankshaft assembly P11-56
A : Positioning pin
⊗ : Non-reusable parts

● **Assembly sequence**

Follow the disassembly sequence in reverse.

Service standards

Unit : mm {in.}

Location	Maintenance item		Standard value	Limit	Remedy
8	Flywheel assembly < Manual transmission >	Distortion of friction surface	0.05 {0.0020} or less	0.2 {0.0079}	Correct or replace
		Height from bolt mounting surface to friction surface	20 {0.79}	19 {0.75}	Replace
		Wobble of friction surface when installed	—	0.2 {0.0079}	Correct or replace
19	Eccentricity of spigot when installed		—	0.2 {0.0079}	Inspect or replace

Tightening torque

Unit : N·m {lbf.ft, kgf·m}

Location	Parts to be tightened		Tightening torque	Remarks
3	Bolt (Flywheel mounting)	Manual transmission	98 {72, 10}+150°	Wet Reuse up to three times
		Automatic transmission	250 {190, 26}	Wet
12	Bolt (Power steering oil pipe mounting)		125 {94, 13}	—
18	Plug		88 {65, 9}	—

Lubricant and sealant

Location	Points of application	Kinds	Quantity
3	Thread area of bolt	Engine oil	As required
11	Lip area of rear oil seal	Engine oil	As required
	Flywheel housing mounting surface of rear oil seal	THREEBOND 1207C	As required
16	O-ring	Engine oil	As required
19	Engine mounting surface of flywheel housing	THREEBOND 1207C	As required

Special tools

Location	Tool name and shape	Part No.	Application
8	Socket wrench < Manual transmission > 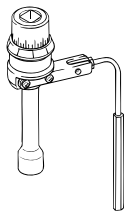 01984	MH062354	Installation of flywheel assembly
	Magnet base < Manual transmission >  00471	MH062356	

◆ Service procedure

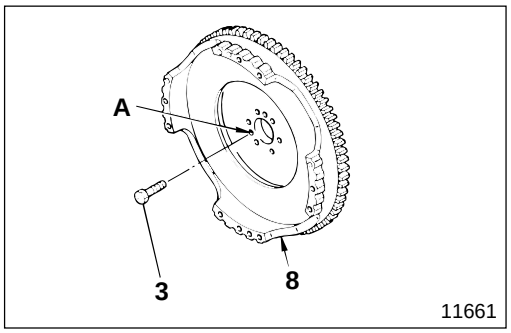

8 **Flywheel assembly**

[Removal]
Screw bolt **3** into extraction hole **A** of flywheel assembly **8** to remove the flywheel assembly.

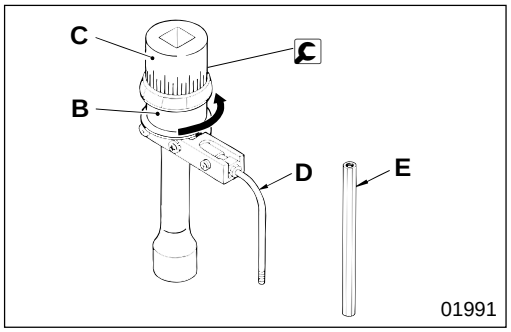

[Installation]
< Manual transmission >
- Center punch the head of bolt **3** before installation.

CAUTION
If there are three punches already, replace with a new bolt.

- After tightening bolt **3** at specified torque, tighten further as follows :
- Turn [C] socket wrench holder **B** counterclockwise and keep the spring in the wrench compressed.
  C : Socket
  D : Rod
  E : Rod (for connection)

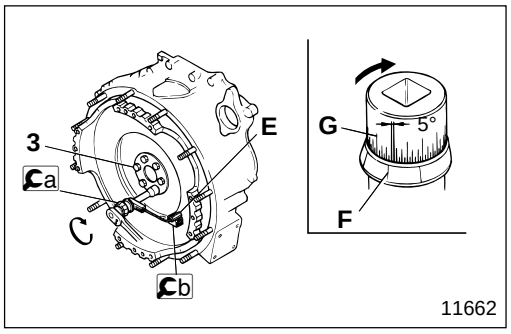

- Set [C] socket wrench holder **B** so that the repercussive force of its spring presses rod **E** (for connection) against [C]b magnetic base.
- Select a scale that is convenient for reading graduation **F** on holder **B** side.
- Tighten further by turning the socket clockwise by 150° (setting is in 5° increments) referring to graduation **G** on the selected scale.

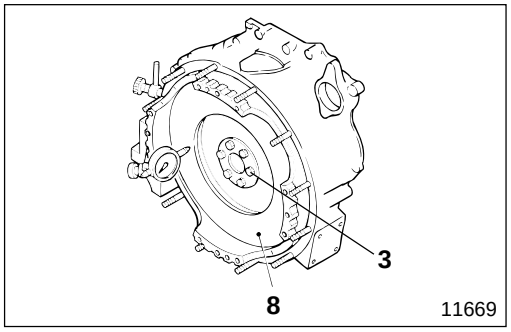

[Inspection]
< Manual transmission >

(1) Wobble

If the measured value is higher than the limit, check the fastening of bolt **3**, the attachment surface of crankshaft assembly, and depending on the condition found, either repair or replace flywheel assembly **8**.

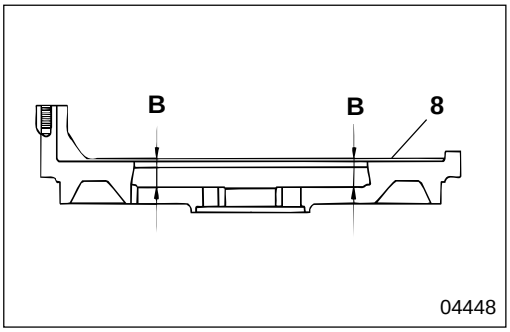

(2) Height of friction surfaces

If the measured value is lower than the limit, repair or replace flywheel assembly **8**.

B : Height from bolt mounting surface to friction surface

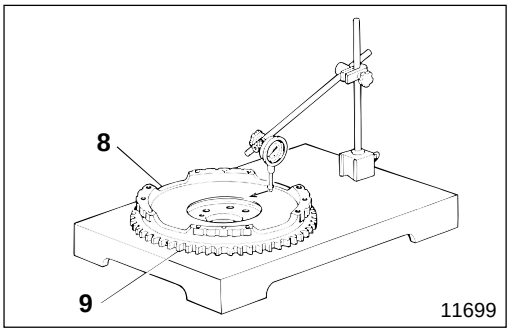

(3) Distortion of friction surface

If the measured value is lower than the limit, repair or replace flywheel assembly **8**.

NOTE

If any fault is found in ring gear 9, replace it first, then begin the inspection.

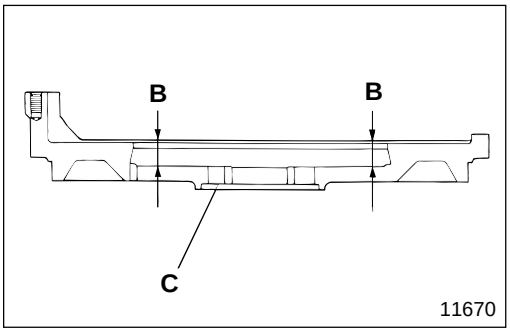

[Correction]

Make sure when grinding the friction surfaces for correction, that height **B** is not lower than the limit while maintaining the degree of parallel with surface **C** within 0.1 mm {0.0039 in.}.

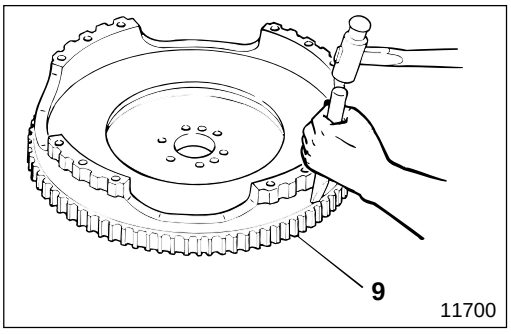

9 Ring gear

[Inspection]

Check and see if there is any damage, wear or other fault, and if any fault is found, replace ring gear **9**.

[Removal]

- Heat up ring gear **9** evenly using an acetylene torch.
- Hammer the outer edge of ring gear **9** evenly until it drops off.

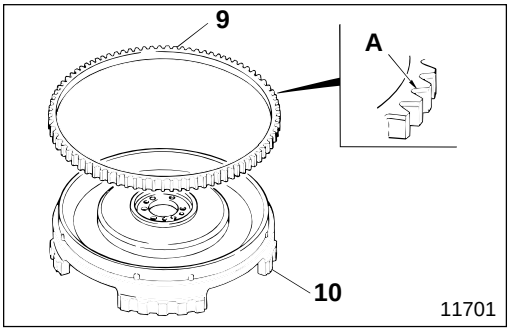

[Installation]

- Heat up ring gear **9** using a piston heater to approximately 100°C {212°F} for three minutes.
- With the side of the chamfered teeth of ring gear **9** facing you, mount it on flywheel **10**.

  A : Chamfered ring gear side

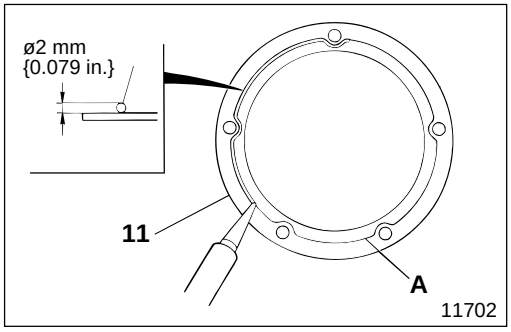

11 **Installation of rear oil seal**

- Apply sealant **B** along line **A** of rear oil seal **11** evenly without break.

CAUTION

- **Be sure the surface of rear oil seal 11, where sealant is to be applied, is clean.**
- **Be sure not to disturb the sealant during installation.**
- **Do not start the engine for at least 30 minutes after installing rear oil seal 11.**
- **Be sure to reapply sealant B if the mounting bolts of rear seal 11 are loosened.**

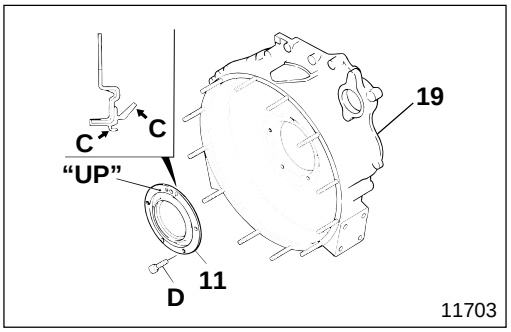

- Apply engine oil to lip area **C** of rear oil seal **11**.
- Install rear oil seal **11** into flywheel housing **19** in the direction as illustrated.

CAUTION

Be sure to reapply sealant B if bolts D (for mounting rear oil seal 11) are loosened or removed by any cause whatsoever after mounting.

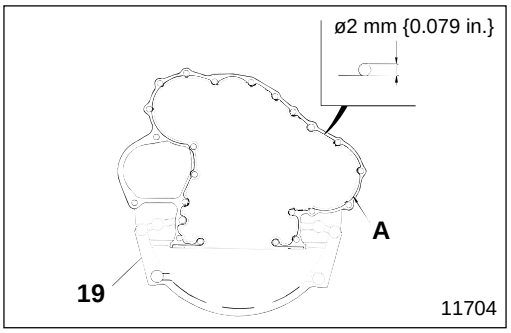

19 **Flywheel housing**

[Installation]

- Apply sealant **A** to the mounting surface of flywheel housing **19**, where the crankcase is to be installed, evenly without break.
- After applying sealant **A**, within three minutes, mount flywheel housing **19** to the crankcase.

CAUTION

- **Be sure the surface of flywheel housing 19, where the sealant is to be applied, is clean.**
- **Be sure not to disturb the sealant during installation.**
- **Do not start the engine for at least 1 hour after installing flywheel housing 19.**
- **Be sure to reapply sealant A if the mounting bolts of rear seal 19 are loosened.**

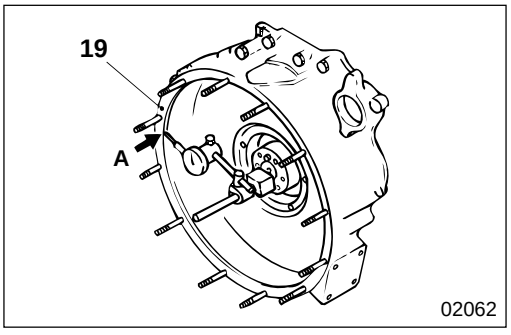

[Inspection]

- Turn crankshaft * and measure the amount of eccentricity (out-of-roundness) at mating recession **A** of flywheel housing **19**.
- Reassemble if the amount of eccentricity exceeds the limit.
- If the amount of eccentricity exceeds the limit after reassembly, replace the faulty parts.

M E M O

FLYWHEEL AND TIMING GEAR

Timing Gear

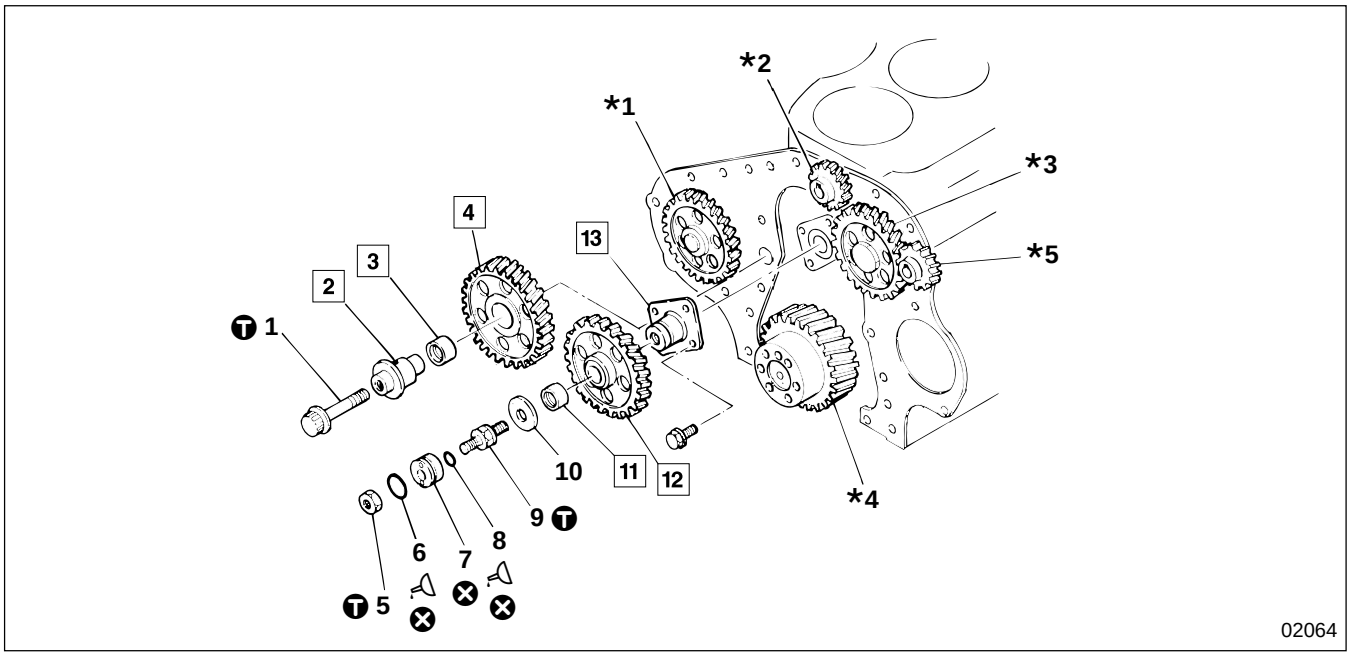

● **Inspection before disassembly**

P11-47

● **Disassembly sequence**

1 Bolt
2 No.1 idler shaft
3 No.1 idler gear bushing
4 No.1 idler gear
5 Nut
6 O-ring
7 Collar
8 O-ring
9 Bolt
10 Thrust washer
11 No.2 idler gear bushing
12 No.2 idler gear
13 No.2 idler shaft

***1** : Drive gear
***2** : Power steering oil pump gear < 6D16T4 >
***3** : Camshaft gear P11-50
***4** : Crankshaft gear P11-56
***5** : Power steering oil pump gear < 6D16T2, 16T3 >
⊗ : Non-reusable parts

CAUTION

Idler gears No.1, 4 are supported by idler shaft No.1, 2, so remove them in combination.

● **Assembly sequence**

Follow the disassembly sequence in reverse.

Service standards

Unit : mm {in.}

Location	Maintenance item		Standard value (Basic diameter in [ ])	Limit	Remedy
—	Backlash of gears	No.1 idler gear and crankshaft gear	0.08 to 0.15 {0.0031 to 0.0059}	0.35 {0.014}	Replace
		No.1 idler gear and No.2 idler gear	0.07 to 0.15 {0.0028 to 0.0059}	0.35 {0.014}	Replace
		No.1 idler gear and drive gear	0.07 to 0.15 {0.0028 to 0.0059}	0.35 {0.014}	Replace
		No.2 idler gear and camshaft gear	0.08 to 0.16 {0.0031 to 0.0063}	0.35 {0.014}	Replace
		No.2 idler gear and power steering oil pump gear < 6D16T4 >	0.07 to 0.15 {0.0028 to 0.0059}	0.35 {0.014}	Replace
		Camshaft gear and power steering oil pump gear < 6D16T2, 16T3 >	0.07 to 0.15 {0.0028 to 0.0059}	0.35 {0.014}	Replace
2, 3	Clearance between No.1 idler shaft and bushing		[37] 0.01 to 0.05 {[1.46] 0.00039 to 0.0020}	0.2 {0.0079}	Replace
4, 12	End play of No.1 and No.2 idler gears		0.05 to 0.15 {0.0020 to 0.0059}	0.3 {0.012}	Replace
11, 13	Clearance between No.2 idler shaft and bushing		[32] 0.01 to 0.05 {[1.24] 0.00039 to 0.0020}	0.2 {0.0079}	Replace

Tightening torque

Unit : N·m {lbf.ft, kgf·m}

Location	Parts to be tightened	Tightening torque	Remarks
1	Bolt (No.1 idler gear mounting)	88 {65, 9.0}	—
5	Nut (Collar mounting)	82 {61, 8.4}	—
9	Bolt (No.2 idler gear mounting)	95 {70, 9.7}	—

Lubricant

Location	Points of application	Kinds	Quantity
6, 8	Body of O-ring	Engine oil	As required

Special tools

Unit : mm {in.}

Location	Tool name and shape	Part No.	Application
2, 4	Gear puller 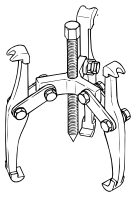 02065	MH061326	Removal of No.1 idler shaft and gear
3, 11	Idler gear bushing puller A: Idler gear bushing No.1: ø37 {1.46}; Idler gear bushing No.2: ø32 {1.26} B: Idler gear bushing No.1: ø40 {1.47}; Idler gear bushing No.2: ø35 {1.38} 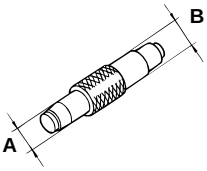 02066	No.1 MH062601 No.2 MH061779	Removal and installation of idler gear bushing
13	Idler gear shaft puller 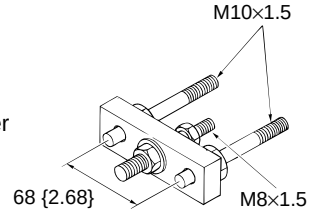 02067	MH062405	Removal of idler gear shaft No.2

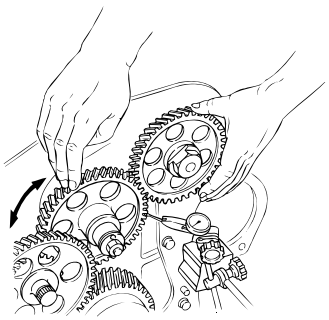
02284

◆ Service procedure

● Inspection before disassembly

(1) Backlash of each gear

Measure three or more locations on the pairing gears and if the measurements are higher than the limit, replace the faulty parts.

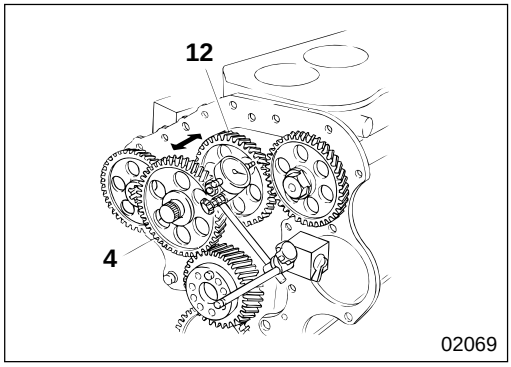

(2) End play of No.1, 2 idler gears

If the measured value is higher than the limit, replace the faulty parts.

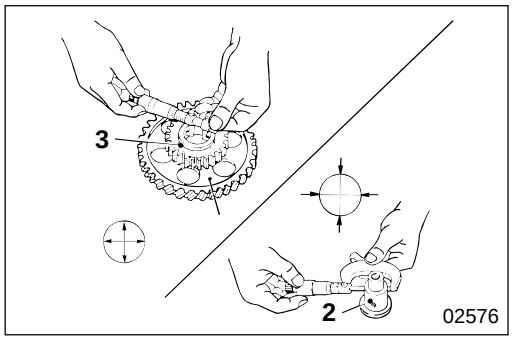

2 3 No.1 idler shaft and No.1 idler gear bushing

[Inspection]
If the clearance is higher than the limit, replace the faulty parts.

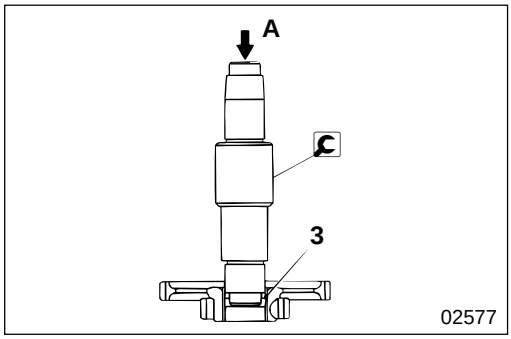

No.1 idler gear bushing

[Removal]
A : press

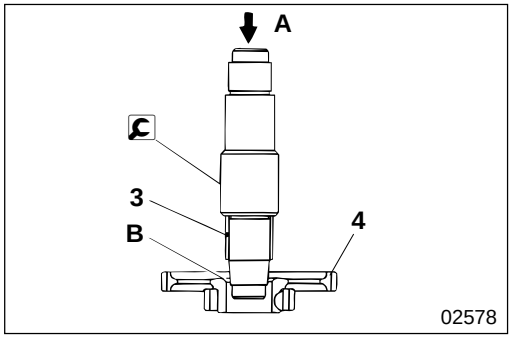

[Press-fitting]

- Press in No.1 idler gear bushing **3** from the chamfered end **B** of No.1 idler gear **4**.
  A : press
- After press-fitting, finish the fitting by adjusting the clearance between idler gear bushing **3** and idler shaft **2** to the standard value.

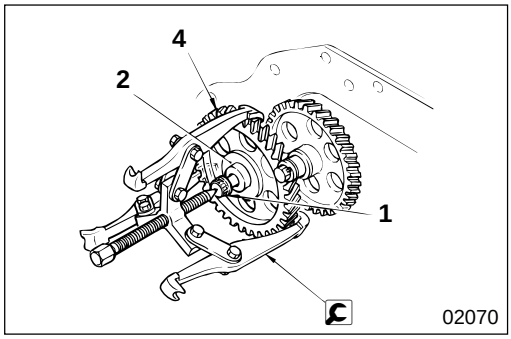

2 4 Removal of No.1 idler shaft and No.1 idler gear

Loosen bolt **1** by about 15 mm {0.59 in.} to remove No.1, 2 idler shafts and No.1, 4 idler gears in combination.

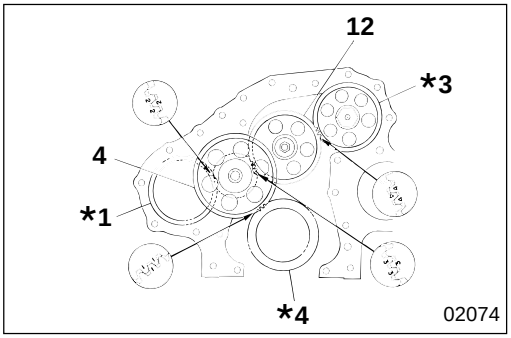

4 **12** **Installation of No.1, 2 idler gears**

Install idler gears **4**, **12** by matching alignment marks "**1**", "**2**", "**3**", "**4**" on the gears that engage with those on the idler gears.

***1** : Drive gear
***3** : Camshaft gear
***4** : Crankshaft gear

NOTE

When aligning each gear with its alignment mark, make sure that pistons No.1, 6 are higher than top dead center.

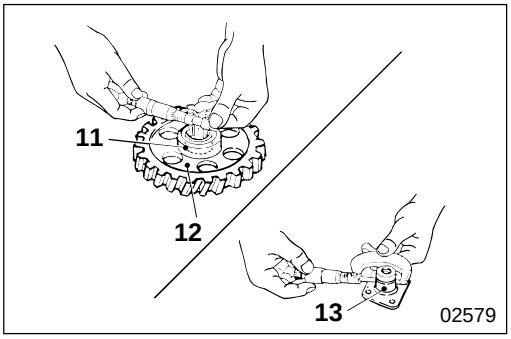

11 **13** **No.2 idler gear bushing and No.2 idler shaft**

[Inspection]
If the clearance is higher than the limit, replace the faulty parts.

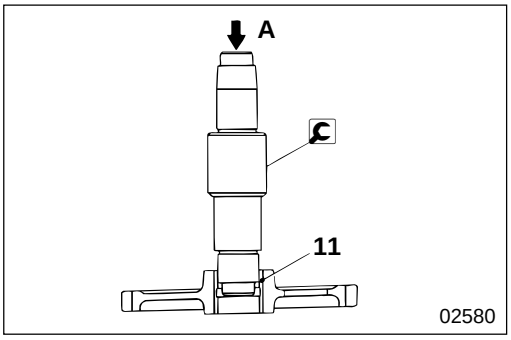

No.2 idler gear bushing

[Removal]
A : press

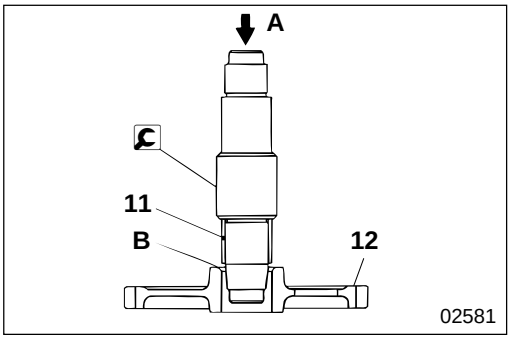

[Installation]

- Press in No.2 idler gear bushing **3** from the chamfered end **B** of No.2 idler gear **12**.
  A : press
- After press-fitting, finish the fitting by adjusting the clearance between idler gear bushing **11** and idler shaft **13** to the standard value.

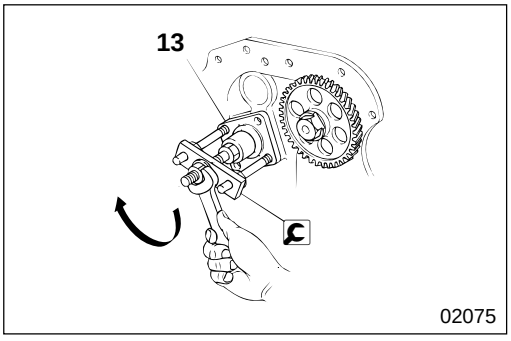

13 **Removal of idler shaft No.2**

CAMSHAFT

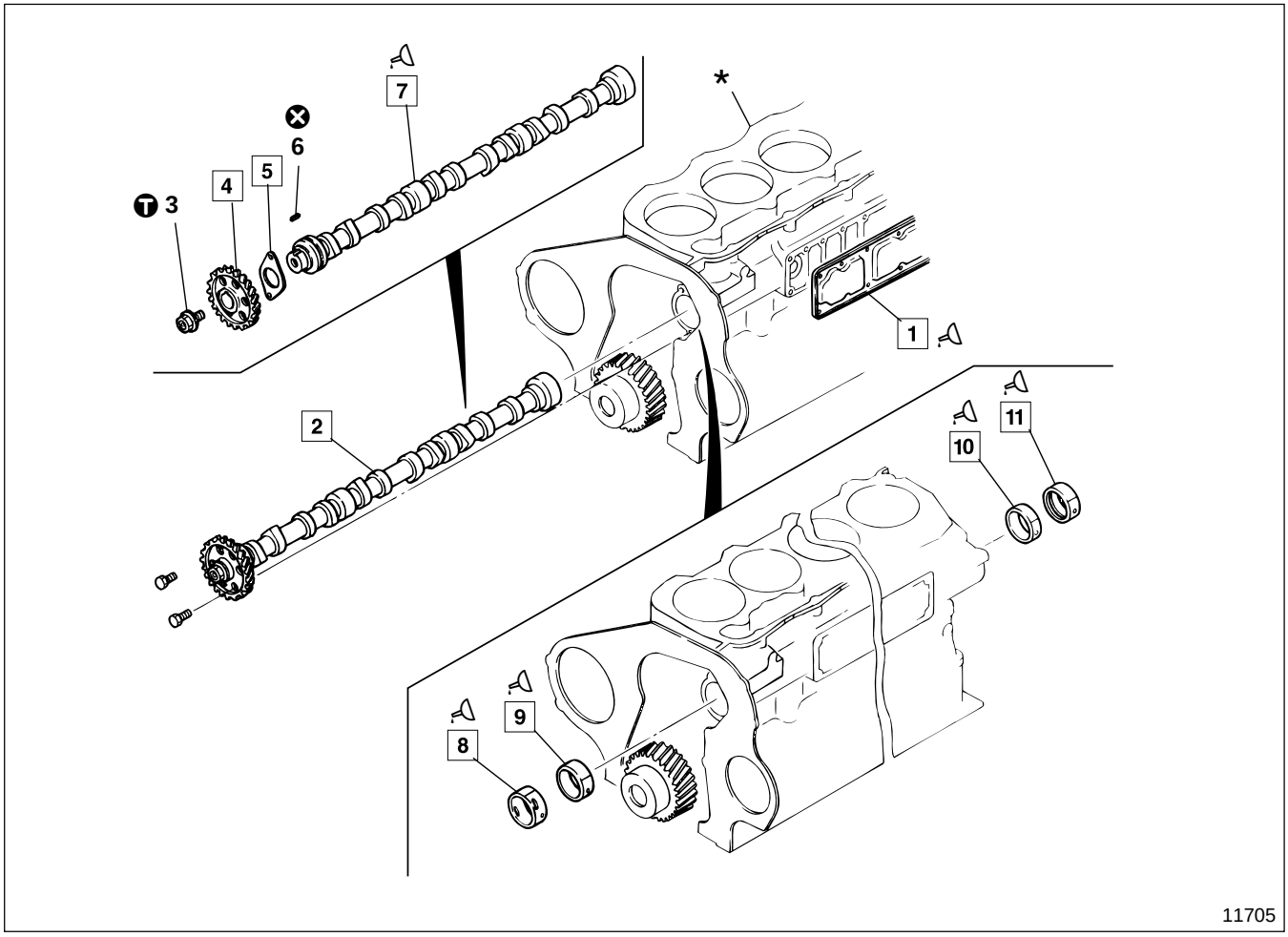

● **Inspection before disassembly**

📖 P11-52

● **Disassembly sequence**

1 Side cover
2 Camshaft assembly
3 Bolt
4 Camshaft gear
5 Thrust plate
6 Key
7 Camshaft
8 No.4 camshaft bushing
9 No.3 camshaft bushing
10 No.2 camshaft bushing
11 No.1 camshaft bushing

***** : Crankcase 📖 P11-56

NOTE

Do not remove camshaft gear 4 unless it is faulty.

● **Assembly sequence**

Follow the disassembly sequence in reverse.

Service standards

Unit : mm {in.}

Location	Maintenance item			Standard value (Basic diameter in [ ])	Limit	Remedy
—	End play of camshaft assembly			0.05 to 0.22 {0.0020 to 0.0087}	0.4 {0.016}	Check related items
7	Camshaft	Difference between long and short diameters	Inlet	6.901 {0.26}	6.40 {0.25}	Long diameter : 49.011 {1.93} Short diameter : 42.110 {1.66}
			Exhaust	7.680 {0.30}	7.18 {0.28}	Long diameter : 49.307 {1.94} Short diameter : 41.627 {1.64}
		Bend		0.02 {0.00079} or less	0.04 {0.0016}	Replace
7 to 11	Clearance between camshaft and camshaft bushing		At No.1 journal	[57.75] 0.05 to 0.10 {[2.27] 0.0020 to 0.0039}	0.25 {0.0098}	Replace
			At No.2 journal	[58.00] 0.05 to 0.10 {[2.28] 0.0020 to 0.0039}		
			At No.3 journal	[58.25] 0.13 to 0.18 {[2.29] 0.0051 to 0.0071}		
			At No.4 journal	[58.50] 0.05 to 0.10 {[2.30] 0.0020 to 0.0039}		

Tightening torque

Unit : N·m {lbf.ft, kgf·m}

Location	Parts to be tightened	Tightening torque	Remarks
3	Bolt (Camshaft gear mounting)	175 {130, 18}	—

Lubricant and sealant

Location	Points of application	Kinds	Quantity
1	Contact surface of side cover to crankcase	THREEBOND 1207C	As required
7	Journal of camshaft	Engine oil	As required
8 to 11	Interior of camshaft bushing	Engine oil	As required

CAMSHAFT

Special tools

Unit : mm {in.}

<table>
<tr><th>Location</th><th>Tool name and shape</th><th>Part No.</th><th>Application</th></tr>
<tr><td rowspan="2">4</td><td>Plug
 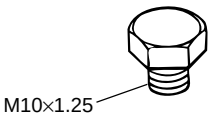

02082</td><td>MF665007</td><td>Blind plug for removal of camshaft gear</td></tr>
<tr><td>Gear puller
 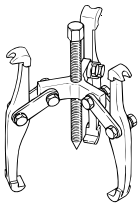
02065</td><td>MH061326</td><td>Removal of camshaft gear</td></tr>
<tr><td>8 to 11</td><td>Camshaft bushing installer and extractor
<table><tr><th></th><th>Dimensions A,C</th><th>Dimension B</th></tr><tr><td>No. 1</td><td>ø62.00 {2.44}</td><td>ø57.75 {2.27}</td></tr><tr><td>No. 2</td><td>ø62.25 {2.45}</td><td>ø58.00 {2.28}</td></tr><tr><td>No. 3</td><td>ø62.50 {2.46}</td><td>ø58.25 {2.29}</td></tr><tr><td>No. 4</td><td>ø62.75 {2.47}</td><td>ø58.50 {2.30}</td></tr></table> 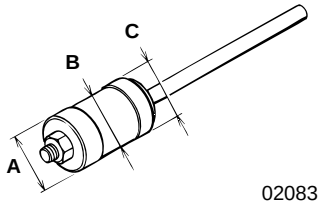

02083</td><td>MH062025</td><td>Removal and installation of camshaft bushing</td></tr>
</table>

◆ Service procedure

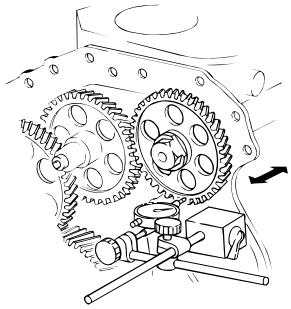
02084

● Inspection before disassembly

Camshaft end play

If the measured value is higher than the limit, replace the thrust plate.

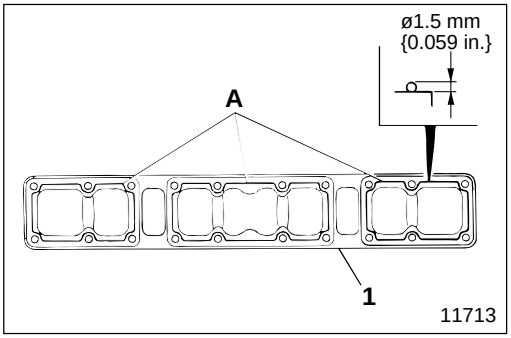

1 Installation of side cover

- Apply sealant **A** to the mounting surface of side cover **1**, evenly without break.
- After applying sealant **A**, within three minutes, mount side cover **1** to the crankcase.

CAUTION

- **Be sure the surface of side cover 1, where the sealant is to be applied, is clean.**
- **Be sure not to disturb the sealant during installation.**
- **Do not start the engine for at least 1 hour after installing side cover 1.**
- **Be sure to reapply sealant A if the mounting bolts of side cover 1 are loosened.**

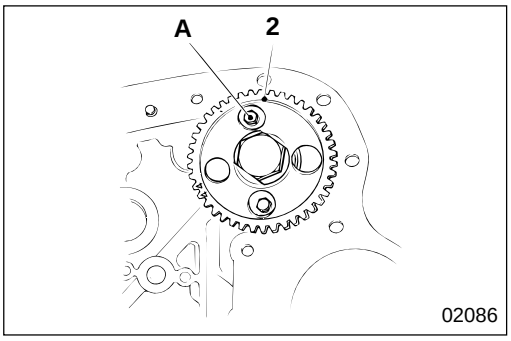

2 Camshaft assembly

[Removal]

- To remove camshaft assembly **2** first remove side cover **1**.
- Then, remove bolt **A** from the hole in camshaft gear **8**, then withdraw camshaft assembly **2** slowly, supporting it with your hand.

CAUTION

Be careful not to damage camshaft bushings 12 to15 when you remove camshaft assembly 2.

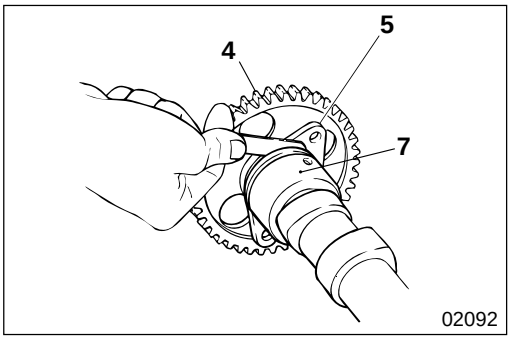

[Installation]

- Before installing camshaft assembly **2**, measure the end play between thrust plate **5** and camshaft **7**.
- If the measured value is higher than the limit, replace thrust plate **5**.
- Install the camshaft assembly by matching the alignment mark on camshaft gear **4** with the alignment mark on the No.2 idler gear. P11-49

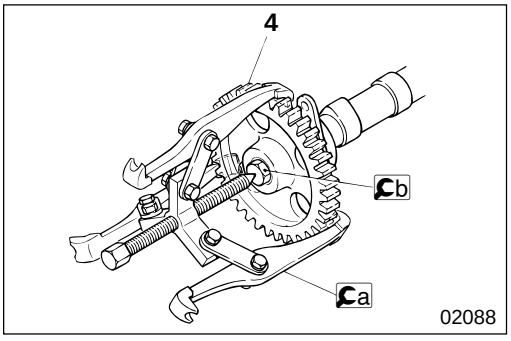

4 Camshaft gear

[Removal]

CAUTION

Never remove camshaft gear 4 by striking, hitting or hammering it.

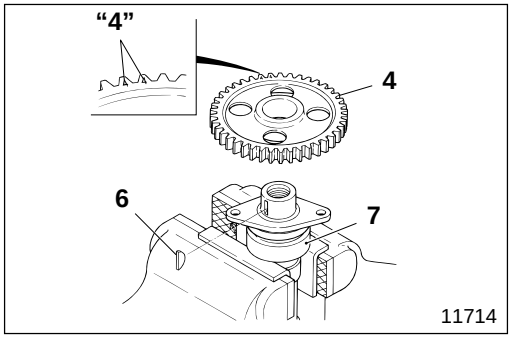

[Installation]
- Install camshaft gear **4** onto camshaft **7** in the direction as illustrated.
- Be sure when finishing the installation to install key **6**.

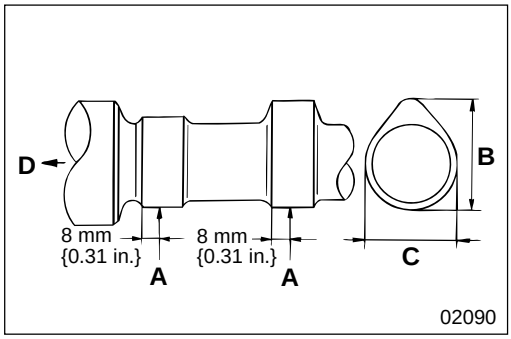

7 Inspection of camshaft

(1) Difference between short diameter and long diameter

If the measured value is lower than the limit, replace camshaft **7**.

NOTE

Measure at point A as illustrated, because the cam is tapered.

B : Long diameter
C : Short diameter
D : Front of the engine

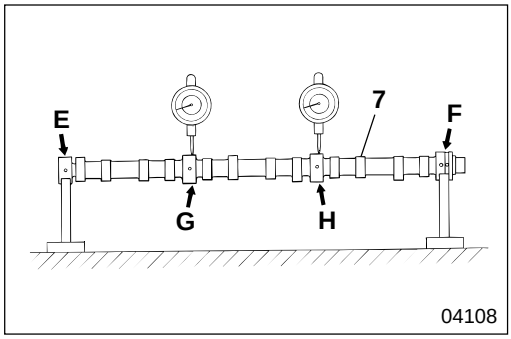

(2) Degree of bend

To measure bend, support camshaft **7** at area **E** of No.1 journal, and area **F** of No.4 journal. Then, measure the amount of bend at area **G** of No.2 journal and area **H** of No.3 journal. If any of the measured values are higher than the limit, replace the camshaft.

NOTE

The degree of bend of camshaft 7 is half of the indicated value of the gauge after rotating the shaft 360°.

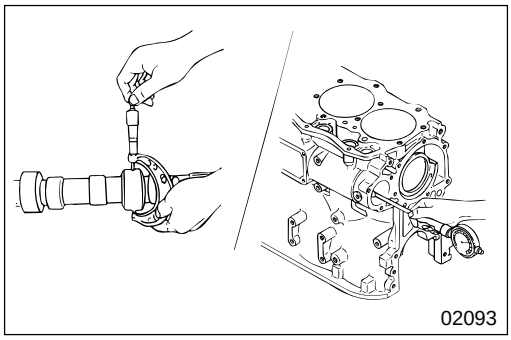

7 to 11 Camshaft and camshaft bushing

[Inspection]
If the measured value is higher than the limit, replace the faulty parts.

NOTE

Measure bushings 8 to 11 mounted in crankcase.

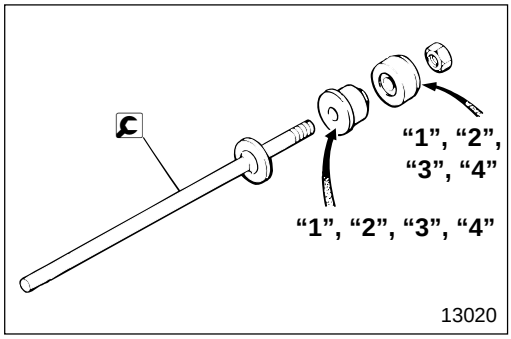

To remove or install the camshaft bushings, use camshaft bushing installers and extractors, which have identification numbers "**1**", "**2**", "**3**" and "**4**" to identify the corresponding bushing.

Bushing No. (From engine front)	Identification marks
1	**1**
2	**2**
3	**3**
4	**4**

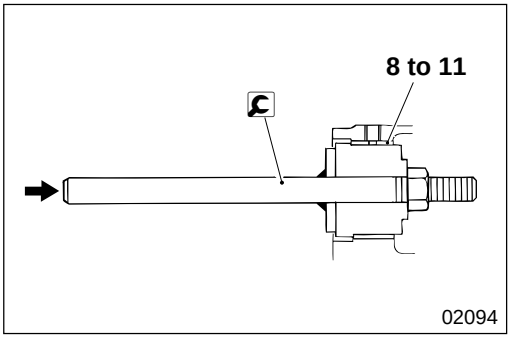

Camshaft bushing

[Removal]

Remove No.4, 3 camshaft bushings **8**, **9** from the rear end of the engine, and No.2, 1 camshaft bushings **10**, **11** from the front end of the engine.

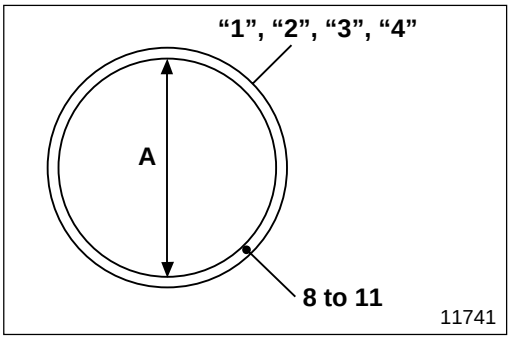

[Press-fitting]

- Identification numbers "**1**", "**2**", "**3**" or "**4**" on camshaft bushings **8** to **11** indicate the corresponding camshaft numbers. If the number is not clear, measure the bushing inner diameter and identify the corresponding camshaft number by referring to the table below :

Bushing No. (From engine front)	Identification number	Inner diameter mm {in.}
No. 1	1	57.75 {2.27}
No. 2	2	58.00 {2.28}
No. 3	3	58.25 {2.29}
No. 4	4	58.50 {2.30}

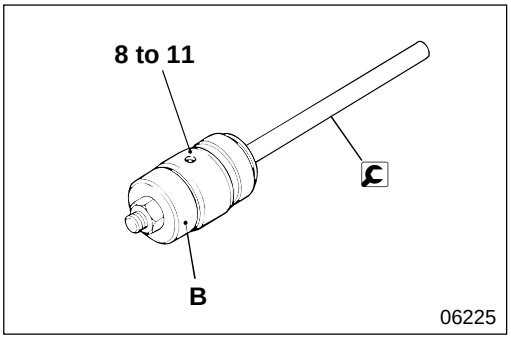

- For press-fitting, mount guide **B** to camshaft bushing installer and extractor.
- Install camshaft bushings **8** to **11** in descending order from No.3 to 1.

NOTE

Install No.3, 4 camshaft bushings 9, 8 from the rear end of the engine, and No.2, 1 camshaft bushings 10, 11 from the front end of the engine.

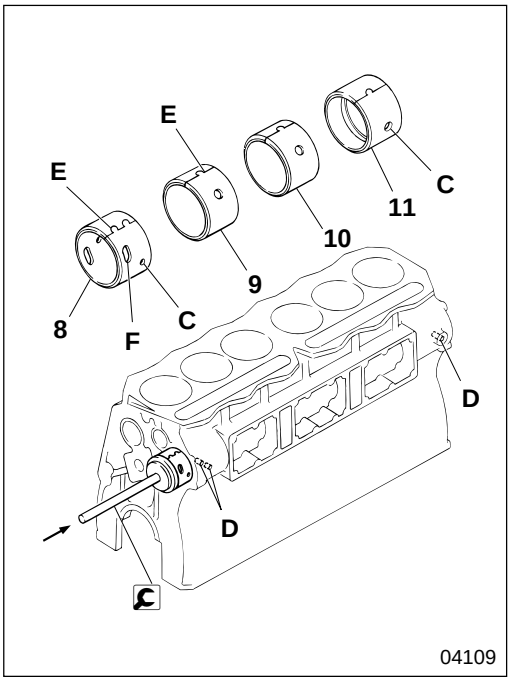

- Install the camshaft bushings by aligning bushing oil port **C** and crankcase oil port **D** at No.1 camshaft bushing **11**, and No.4 camshaft bushing **8**.
  Position bushing No.4 so that the oblong side of oil port **F** comes to the rear of the engine and press bushing No.4 in.
  E : Butting area of bushing

CRANKSHAFT AND CRANKCASE

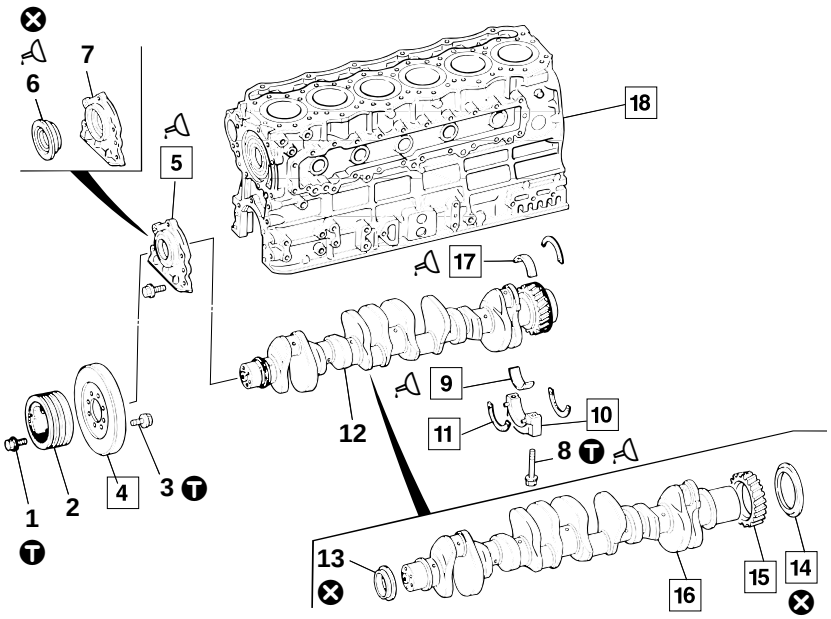

11726

● **Inspection before disassembly**

P11-58

● **Disassembly sequence**

1 Bolt
2 Crankshaft pulley
3 Bolt
4 Torsional damper
5 Front cover assembly
6 Front oil seal
7 Front cover
8 Bolt
9 Lower main bearing
10 Main bearing cap
11 Thrust plate
12 Crankshaft assembly
13 Front oil seal slinger
14 Rear oil seal slinger
15 Crankshaft gear
16 Crankshaft
17 Upper main bearing
18 Crankcase

⊗ : Non-reusable parts

● **Assembly sequence**

Follow the disassembly sequence in reverse.

Service standards

Unit : mm {in.}

Location	Maintenance item			Standard value (Basic diameter in [ ])	Limit	Remedy
—	Crankshaft end play			0.10 to 0.25 {0.0039 to 0.0098}	0.4 {0.016}	Inspect
9, 17	Main bearing	Oil clearance		[80] 0.05 to 0.10 {[3.15] 0.0020 to 0.0039}	0.15 {0.0059}	Replace
		Expansion at free state		—	85.5 {3.37} or less	Replace
16	Crankshaft	Degree of bend		0.05 {0.0020} or less	0.1 {0.0039}	Replace
		Pin and journal	Circular accuracy	0.01 {0.00039} or less	0.03 {0.0012}	Repair or replace
			Cylindrical accuracy	0.006 {0.00024} or less	—	Repair or replace
18	Crankcase top surface distortion			0.07 {0.0028} or less	0.2 {0.0079}	Repair or replace

Ⓣ Tightening torque

Unit : N·m {lbf.ft, kgf·m}

Location	Parts to be tightened	Tightening torque	Remarks
1	Bolt (Crankshaft pulley mounting)	184 {135, 19}	—
3	Bolt (Torsional damper mounting)	78 {58, 8}	—
8	Bolt (Main bearing cap mounting)	78 {58, 8}+90°	Wet Reuse up to three times

Lubricant and sealant

Location	Points of application	Kinds	Quantity
5	Crankcase mounting surface of front cover assembly	THREEBOND 1207C	As required
6	Lip area of front oil seal	Engine oil	As required
8	Thread area of bolt	Engine oil	As required
9, 17	Interior of bearing	Engine oil	As required

Special tools

Unit : mm {in.}

Location	Tool name and shape	Part No.	Application
10	Socket wrench 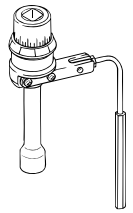 01984	MH061560	Installation of main bearing cap
	Main bearing cap extractor 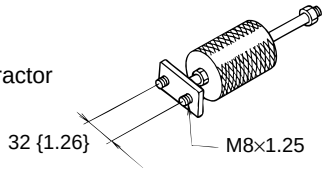 02097	MH061189	Removal of bearing cap
13	Front oil seal slinger installer 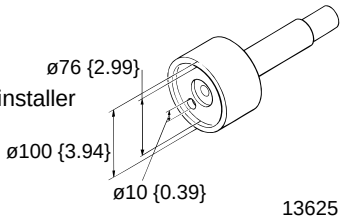 13625	MH062710	Installation of front oil seal slinger
14	Rear oil seal slinger installer 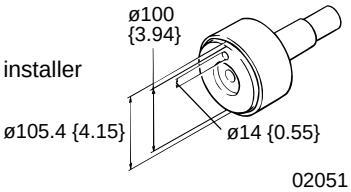 02051	MH061470	Installation of rear oil seal slinger
15	Gear puller 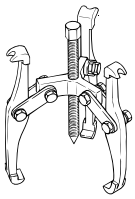 02065	MH061326	Removal of crankshaft gear

◆ Service procedure

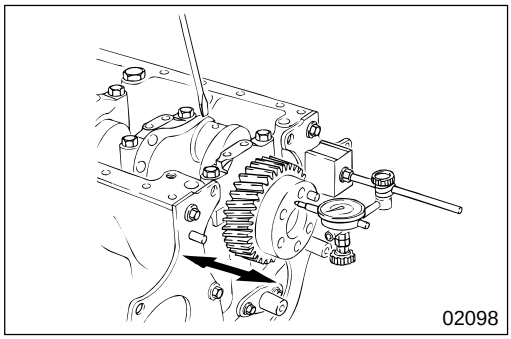

● **Inspection before disassembly**

Crankshaft assembly end play
If the measured value is higher than the limit, replace thrust plates **12** with oversized ones. P11-60
< Available oversize ones >
+0.15, +0.30, +0.45 mm {+0.0059, +0.012, +0.018 in.}

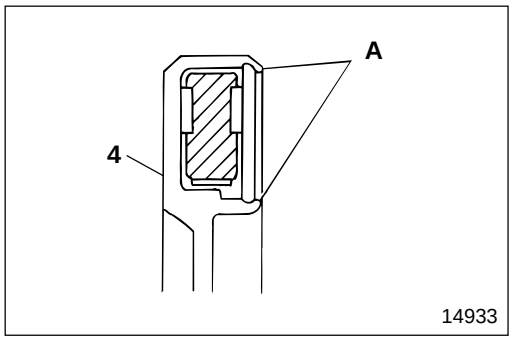

4 **Torsional damper**

CAUTION

Pay attention to the following because silicon oil leakage from caulked area A of viscous type torsional damper 4 might cause damage to its function.

- **Make sure that there are no dents or marks caused by hammer blows in caulked area A.**
- **Be sure not to subject it to shock from hammer blows or by dropping it.**
- **Do not roll it or pile parts up on it.**

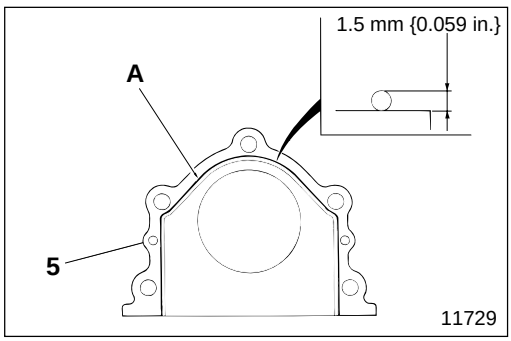

5 **Installation of front cover assembly**

- Apply sealant **A** to the mounting surface of front cover assembly **5** where the crankcase is to be installed, evenly without break .
- After applying sealant **A**, within 3 minutes, mount front cover assembly **5** to the crankcase.

CAUTION

- **Be sure the surface of front cover assembly 5 , where the sealant is to be applied, is clean.**
- **Be sure not to disturb the sealant during installation.**
- **Do not start the engine for at least 1 hour after installing front cover assembly 5.**
- **Be sure to reapply sealant A if the mounting bolts of front cover assembly 5 are loosened.**

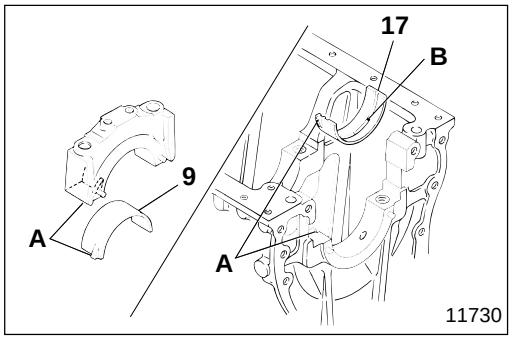

9 **17** **Main bearing**

[Installation]
When installing main bearings **9**, **17** align lugs **A**.

CAUTION

Be sure to distinguish between main bearings 9, 17. The upper bearing has oil opening B while the lower bearing has no oil opening.

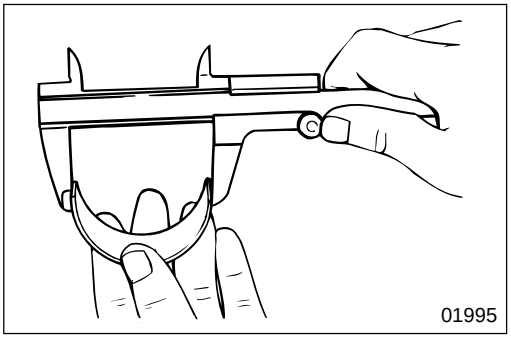

[Inspection]

CAUTION

- **Do not forcibly expand main bearings 9, 17.**
- **Be sure to replace both upper and lower main bearings 9, 17 as a pair when replacement is necessary.**

(1) Expansion at free state

If the measured value is lower than the limit, replace main bearings **9**, **17**.

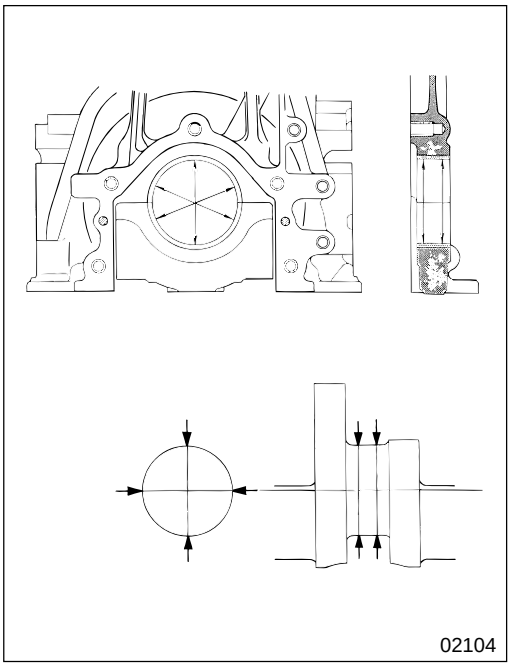

(2) Clearance between main bearing and crankshaft

If the measured value is lower than the limit, replace the faulty parts.

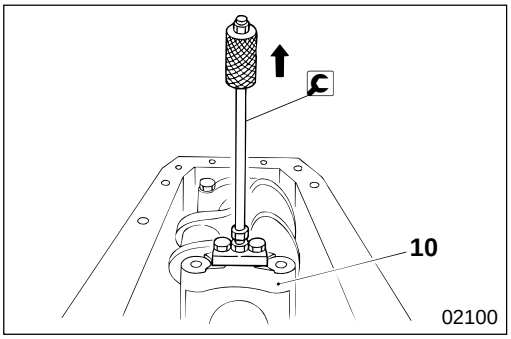

10 Main bearing cap

[Removal]

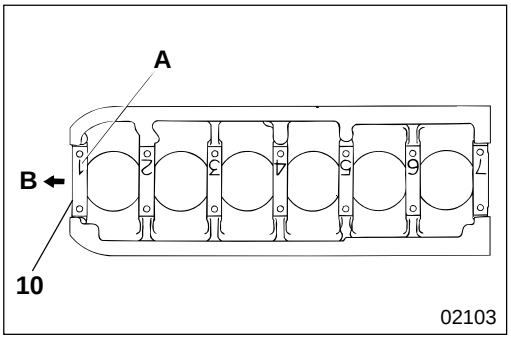

[Installation]

- Install main caps **10** in the direction as illustrated, from punched number **A** at the front of the engine **B**.

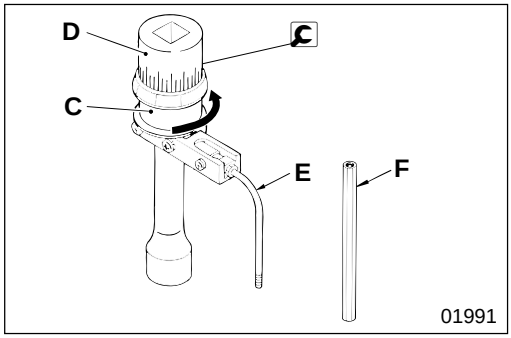

- Center punch the head of bolt **8** before installation.

CAUTION

If there are three punches already, replace with a new bolt.

- Turn socket wrench holder **C** counterclockwise and keep the spring in the wrench compressed.
  D : Socket
  E : Rod
  F : Rod (for connection)

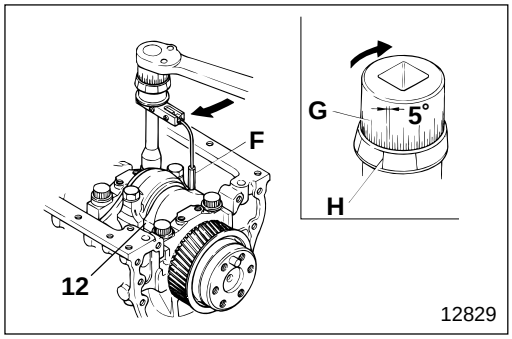

- Set socket wrench holder **C** so that the repercussive force of the spring presses rod **F** (for connection) against crankshaft **12**.
- Select a scale that is convenient for reading graduation **G** on holder **C**.
- Tighten further by turning socket **D** clockwise by 90° (setting is in 5° increments) referring to graduation **H** on the selected scale.
- After installation, check the following points :
  - Crankshaft assembly can be rotated easily by hand.
  - The end play of crankshaft assembly **12**. P11-58

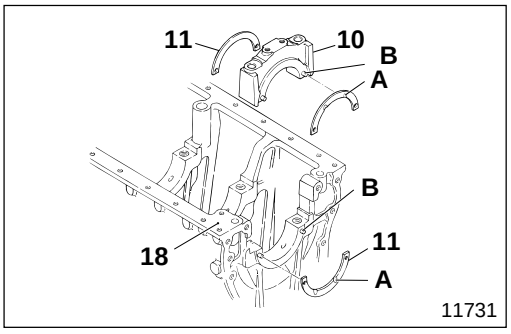

11 **Installation of thrust plate**

Install thrust plates **11** on both ends of rear main bearing cap **10** and the rear end of crankcase **18** with oil grooves **A** facing towards the outside.

B : Positioning pin

NOTE

When installing oversized thrust plates 11, mount them on the front and rear of rear main bearing cap 10. It is not necessary that the thrust plates used are all of the same size, but use the same-size-combination of thrust plates for mounting on the rear of crankcase 18 and on the rear of the rear bearing cap.

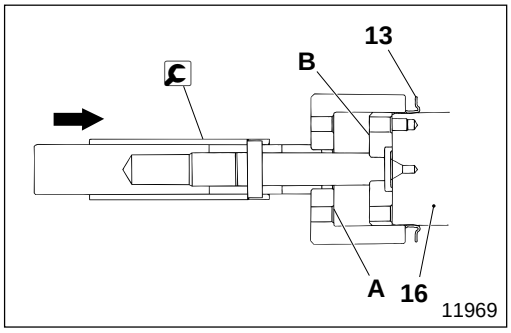

13 **Installation of front oil seal slinger**

To install front oil seal slinger **13**, drive the front oil seal slinger into crankshaft **16** until end surface **A** of front oil seal slinger installer makes secure contact with guide **B**.

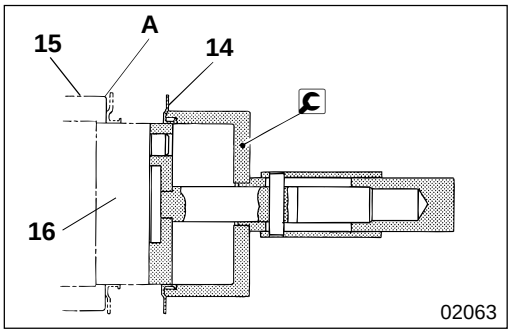

14 **Installation of rear oil seal slinger**

Press in rear oil seal slinger **14** using 🔧 rear oil seal slinger installer until end contacts with end **A** of crankshaft gear **15** securely.

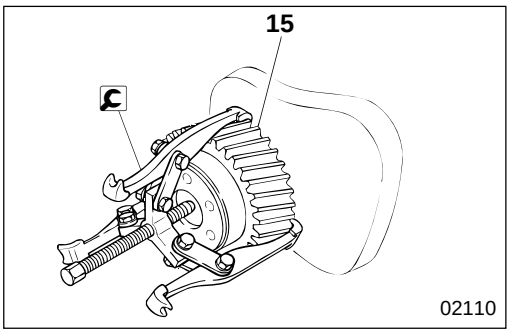

15 **Crankshaft gear**

[Removal]

CAUTION ⚠

Do not tap out crankshaft gear 15, or it might be damaged.

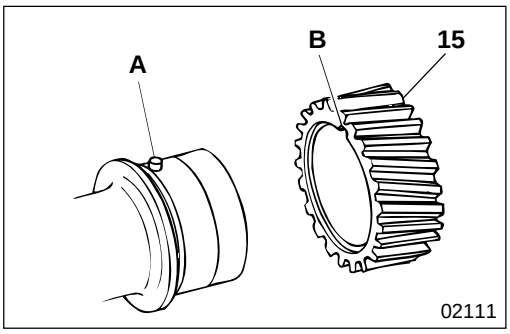

[Installation]

- Warm up crankshaft gear **15** to 100°C {212 °F} using a piston heater.
- Align indents **B** of positioning pin **A** and crankshaft gear **15** with each other, and drift in by lightly tapping the end of the gear using a mallet.

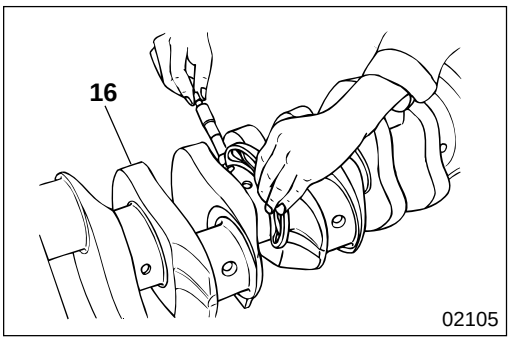

16 **Crankshaft**

[Inspection]

(1) Cylindrical and circular accuracy of the journal and the pin

If the measured value is higher than the limit, grind and correct crankshaft **16** to convert it to the undersize specifications or replace it.

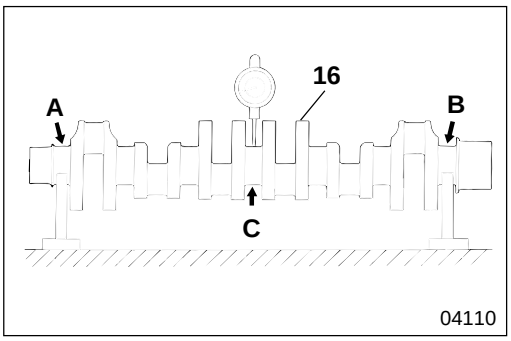

(2) Degree of bend

The degree of bend of crankshaft **16** is measured at No.4 journal **C** by supporting No.1 journal **A** and No.7 journal **B.** If the measured value is higher than the limit, replace the crankshaft.

NOTE

The degree of bend of crankshaft 16 is half of the indicated value of the gauge after rotating the shaft 360°.

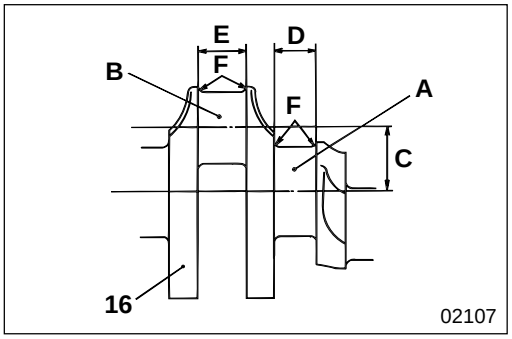

[Correction]

NOTE

Be sure to replace main bearings 9, 17 with those that meet the undersize specifications after crankshaft 16 is corrected by grinding.

- Set **C**, distance between the center line of the journal **A** and that of the pin **B**, constant.
  C : $57.5\ ^{+0.025}_{-0.075}$ mm {$2.26\ ^{+0.00098}_{-0.0030}$ in.}
- Set the width of journal **D** and pin **E** so they are constant.
  D : 37 mm {1.46 in.} (No.7 journal : $37\ ^{+0.025}_{0}$ mm {$1.46\ ^{+0.00098}_{0}$ in.})
  E : $42\ ^{+0.2}_{0}$ mm {$1.65\ ^{+0.0079}_{0}$ in.}
- Finish the fillet **F** smoothly.
  F : R4±0.2 mm {0.0079 in.}
- Check and confirm that there has been no cracking caused by grinding using the magnetic particle inspection method (Magnafluxing). Also make sure the surface hardness has not deteriorated (Shore hardness to be maintained at not less than Hs 75).
- When grinding **G**, set crankshaft **16** and grinder **H** so that they both rotate counterclockwise as viewed from the front of the crankshaft.
- To finish grinding **J** using a grindstone or emery paper **K,** rotate crankshaft **16** clockwise.

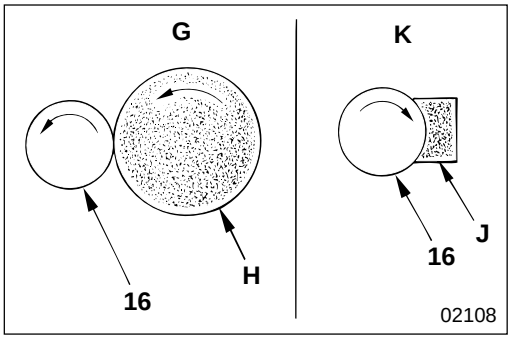

Undersize specifications of crankshaft Unit : mm {in.}

	Undersize scales			
	0.25 {0.0098}	0.50 {0.020}	0.75 {0.030}	1.00 {0.039}
Finish outer diameter of journal	79.685 to 79.705 {3.1371 to 3.1379}	79.435 to 79.455 {3.127 to 3.128}	79.185 to 79.205 {3.117 to 3.118}	78.935 to 78.955 {3.107 to 3.108}
Finish outer diameter of pin	64.67 to 64.69 {2.5460 to 2.5468}	64.42 to 64.44 {2.536 to 2.537}	64.17 to 64.19 {2.526 to 2.527}	63.92 to 63.94 {2.516 to 2.517}
Circular accuracy	0.01 {0.00039} or less			
Cylindrical accuracy	0.006 {0.00024} or less			

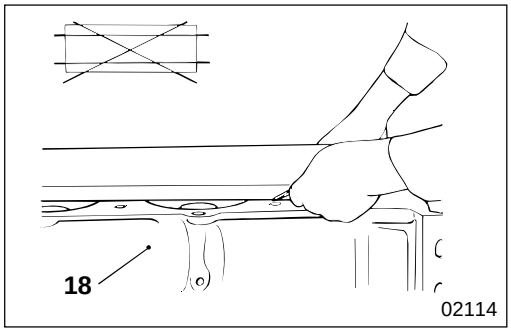

18 **Crankcase top surface distortion**

If the measured value is higher than the limit, grind and correct using a surface grinder.

CAUTION⚠

When grinding crankshaft 18 be sure that the extent of piston protrusion does not deviate from the standard value.
Piston protrusion : 🕮 P11-28

MITSUBISHI
FUSO

FK.FM
Service Manual

Group 12
Lubrication

Table of Contents

BACK

HOME

MITSUBISHI FUSO TRUCK OF AMERICA, Inc.

Pub No. TWME9503-12

GROUP 12 LUBRICATION

SPECIFICATIONS 2

STRUCTURE AND OPERATION 3

TROUBLESHOOTING 10

INSPECTION AND ADJUSTMENT MOUNTED IN VEHICLE

- Replacement of Oil Filter 11
- Replacement of Engine Oil 12
- Measurement of Oil Pressure 13

OIL PAN AND OIL JET 14

OIL PUMP AND OIL STRAINER 16

OIL FILTER 18

OIL COOLER 20

REGULATOR VALVE 22

SPECIFICATIONS

Item			Specifications
Mode of lubrication			Oil pump type
Oil filter type			Spin-on filter paper type
Oil cooler type			Shell and plate type (Multiple-plate type)
Engine oil	Grade		Grade CD or above as per API classification
	Quantity of oil	Oil pan	Approximately 10 {11}
	L {qts}	Oil filter	Approximately 2.3 {2.4}

Lubrication System (Flow of Oil)

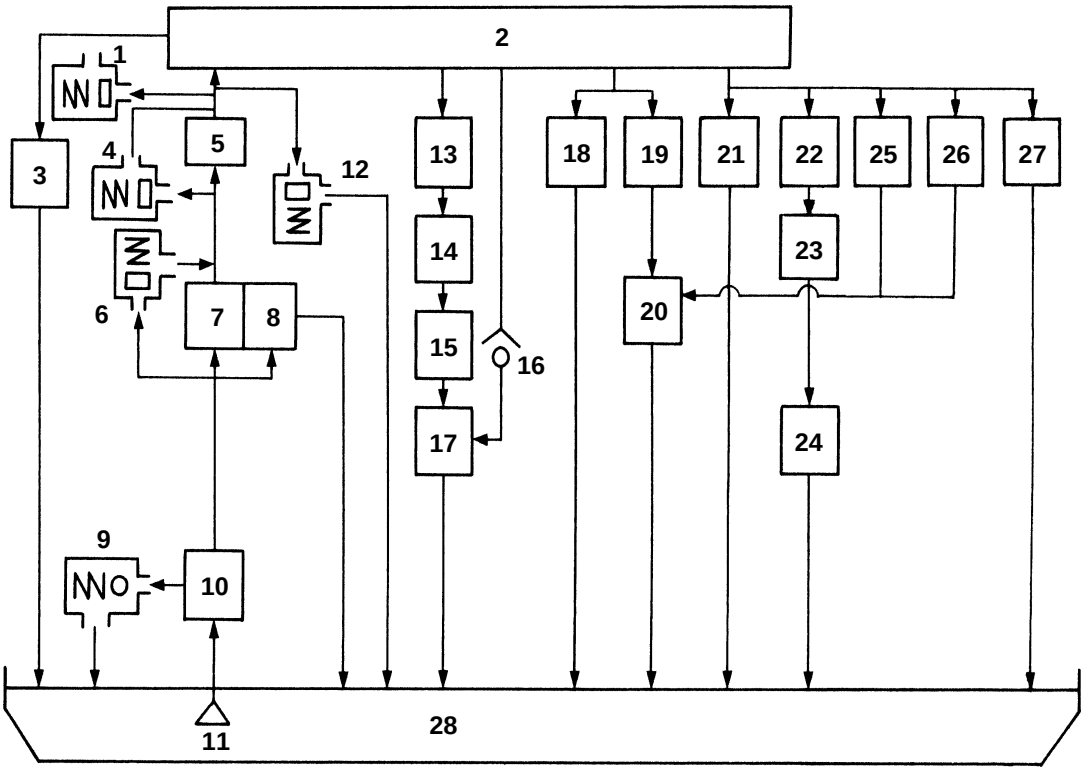

11099

1 Engine oil pressure switch
2 Main oil gallery
3 Water pump
4 Bypass valve
5 Oil cooler
6 Engine oil bypass alarm switch
7 Full-flow filter element
8 Bypass filter element
9 Relief valve (Built-in within oil pump)
10 Oil pump
11 Oil strainer
12 Regulator valve
13 Crankshaft main bearing
14 Connecting rod bearing
15 Connecting rod bushing
16 Check valve for oil jet
17 Piston
18 Injection pump
19 Air compressor
20 Timing gear
21 Camshaft bushing
22 Rocker bushing
23 Push rod
24 Tappet
25 Idler gear shaft No.1
26 Idler gear shaft No.2
27 Turbocharger
28 Oil pan

Oil Pump

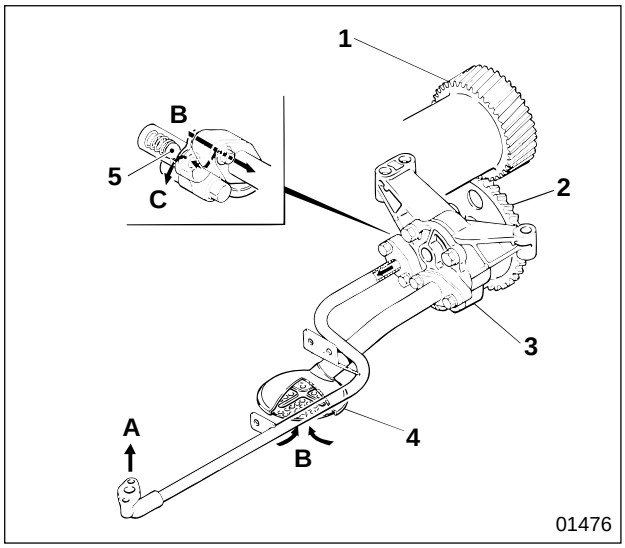

1 Crankshaft gear
2 Oil pump gear
3 Oil pump
4 Oil strainer
5 Relief valve

A : To oil filter
B : From oil pan
C : To oil pan

Oil pump **3** is a gear type, driven by rotation of the crankshaft transmitted by crankshaft gear **1** that engages oil pump gear **2**. Relief valve **5** is installed on the oil pump and when the oil pump discharge pressure becomes higher than standard, part of the engine oil is returned to the oil pan by relief action of the valve, protecting the lubricating system from breakdown caused by excessive oil pressure.

Oil Filter

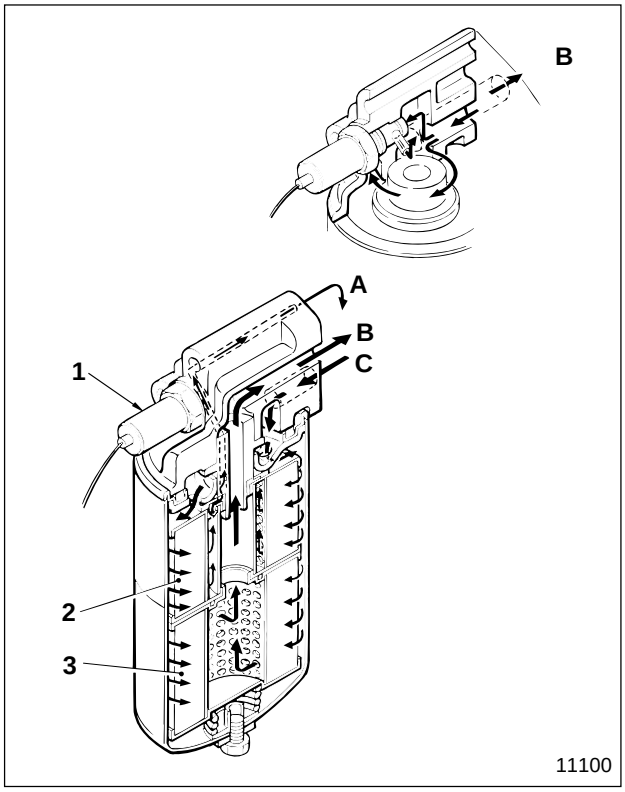

1 Engine oil bypass alarm switch
2 Bypass filter element
3 Full-flow filter element

A : To oil pan
B : To oil cooler
C : From oil pump

This oil filter uses a spin-on filter paper type element that integrates full-flow filter element **3** and bypass filter element **2**.

Operation of engine oil bypass alarm switch

- When the oil filter element is clogged, the engine oil pressure on flow becomes low and might cause seizure of engine parts, engine oil bypass alarm switch **1** is installed to prevent this.

- When the oil filter element is clogged, engine oil bypass alarm switch **1** lets the engine oil flow directly to oil cooler **B**, bypassing full-flow filter element **3**. When the engine oil bypass alarm switch is activated it lights the warning lamp, warning the driver that the oil filter element is clogged.

Oil Cooler

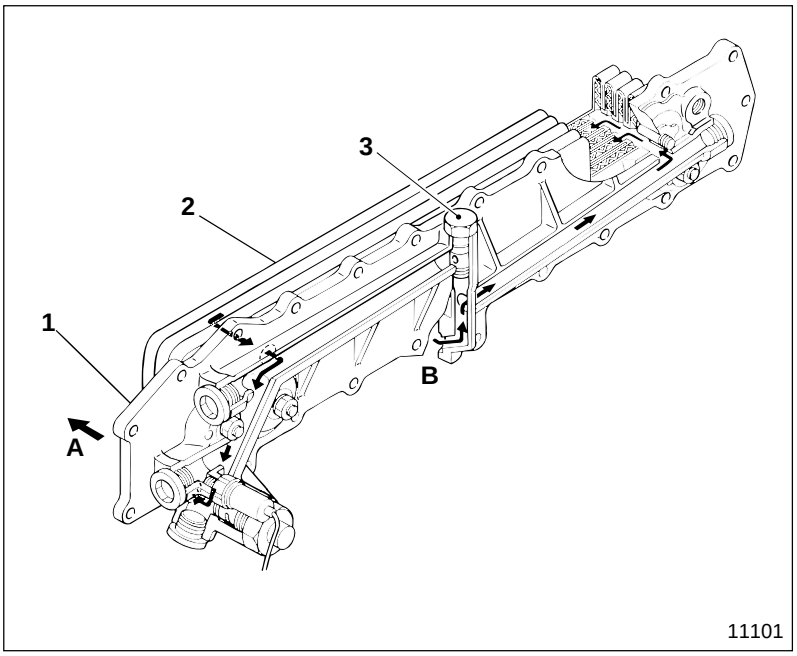

1 Oil cooler cover
2 Oil cooler element
3 Bypass valve

A : To main oil gallery
B : From oil filter

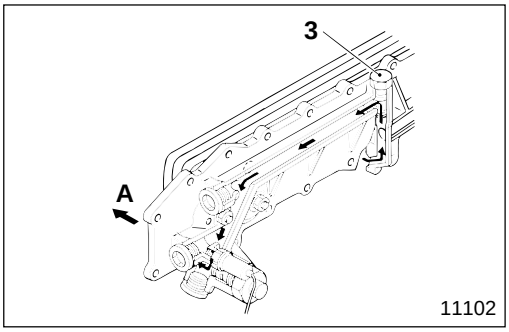

● **Bypass valve**

When the viscosity of the engine oil is high at low temperatures, or when oil cooler element **2** is clogged, flow resistance is high, and if this happens, bypass valve **3** opens to let the engine oil return directly to main oil gallery **A** without going through the oil cooler.

Engine Oil Pressure Switch, Regulator Valve

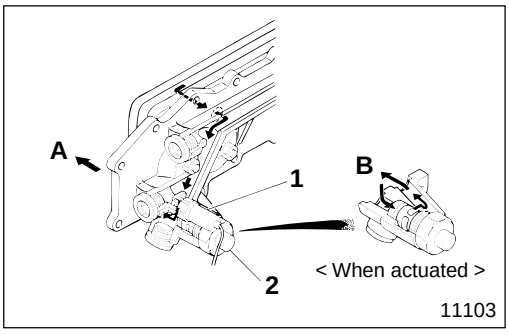

1 Engine oil pressure switch
2 Regulator valve

A : To main oil gallery
B : To oil pan

● **Engine oil pressure switch**

When pressure for delivering the engine oil to main oil gallery **A** becomes lower than standard, the built-in electric contact point of engine oil pressure switch **1** closes to light warning lamp in the meter cluster, warning the driver that the oil pressure is abnormal.

● **Regulator valve**

When the oil pressure in the main oil gallery becomes higher than standard, regulator valve **2** opens to let part of the engine oil return to oil pan **B**, thereby regulating the oil pressure.

Lubrication of Related Parts

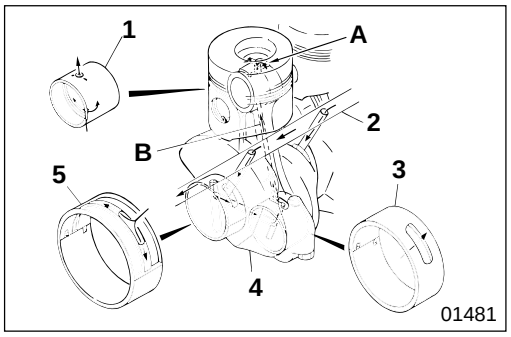

Engine oil delivered to the main oil gallery lubricates the following related parts.

● **Main bearing and connecting rod bearing**

1 Connecting rod bushing
2 Main oil gallery
3 Main bearing
4 Crankshaft
5 Connecting rod bearing

A : Oil jet
B : Connecting rod oil passage

Engine oil supplied through the oil passage drilled in crankshaft **4** flows through connecting rod oil passage **B** to lubricate the small end of the connecting rod, the engine oil then sprays out oil jet **A** at the top of the connecting rod to cool the piston.

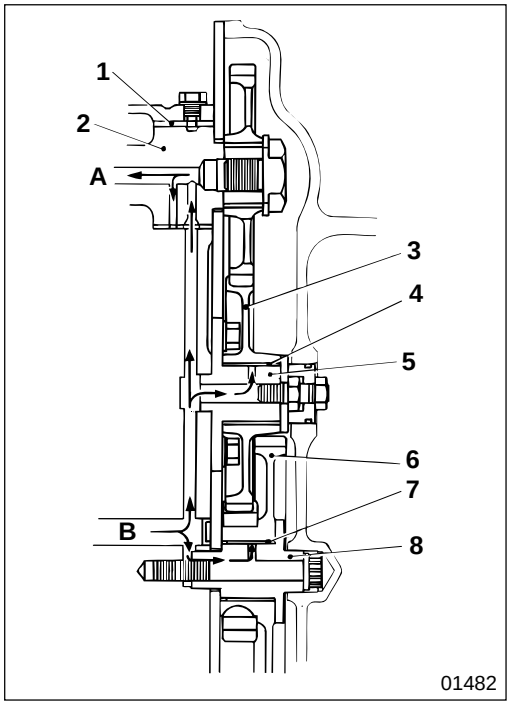

● **Timing gear and camshaft**

1 Camshaft bushing No.4
2 Camshaft
3 Idler gear No.2
4 Idler gear bushing
5 Idler gear shaft No.2
6 Idler gear No.1
7 Idler gear bushing
8 Idler gear shaft No.1

A : To rocker bushing
B : From main oil gallery

Engine oil flows through the inside of camshaft **2** and lubricates each camshaft bushing.

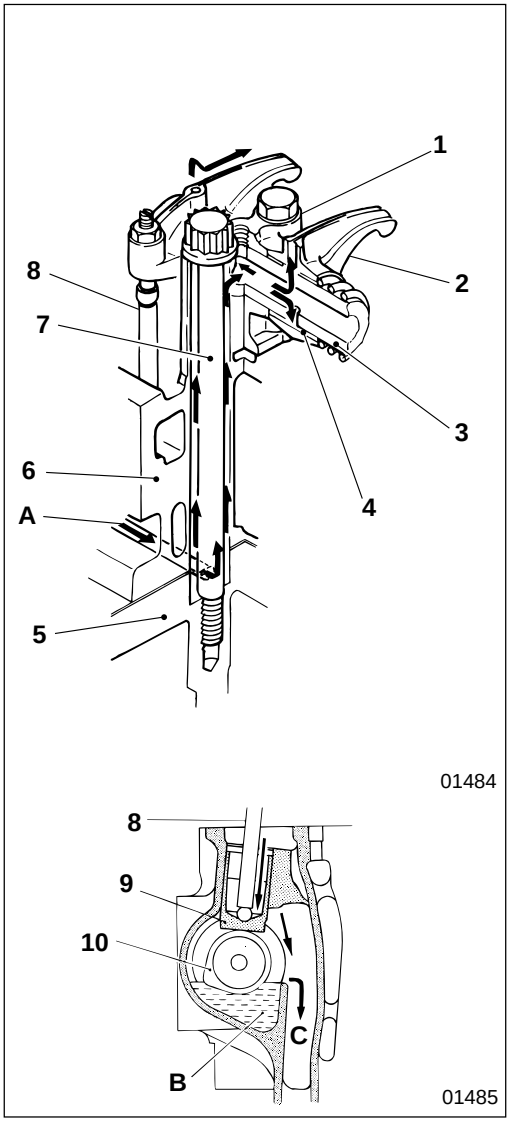

● **Valve mechanism**

1 Rocker shaft bracket
2 Rocker
3 Rocker shaft
4 Rocker bushing
5 Crankcase
6 Cylinder head
7 Cylinder head bolt
8 Push rod
9 Tappet
10 Camshaft

A : From No.4 camshaft bushing
B : Oil sump
C : To oil pan

Engine oil is lead to oil reservoir **B** to lubricate camshaft tops after lubricating rocker **2**, camshaft bushing, etc.

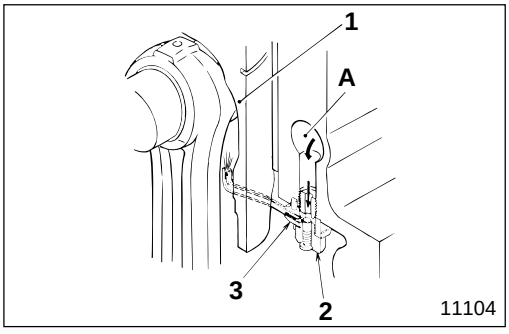

● **Oil jet**

1 Piston
2 Check valve
3 Oil jet

A : Main oil gallery

An oil jet **3** is installed, in the lower part of main oil gallery **A**, for each cylinder and cools pistons **1** by injecting engine oil toward the inside of the piston. The oil jet is fitted with check valve **2** which opens and closes at standard oil pressure levels. This prevents a decrease of oil volume at low oil pressure as well as a decrease of oil pressure itself.

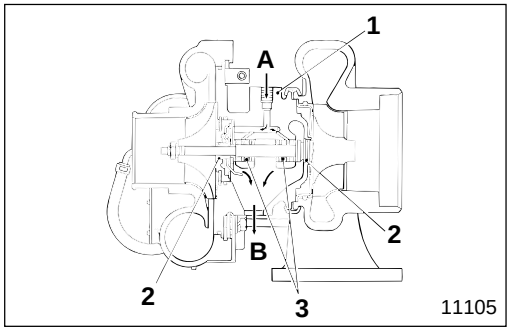

● **Turbocharger**

1 Bearing housing
2 Piston ring
3 Bearing

A : From main oil gallery
B : To oil pan

Engine oil is delivered from the main oil gallery to bearing housing **1** through the oil pipe to lubricate the inside of the bearing housing. Piston ring **2** installed at both ends of the turbine wheel shaft works as an oil seal.

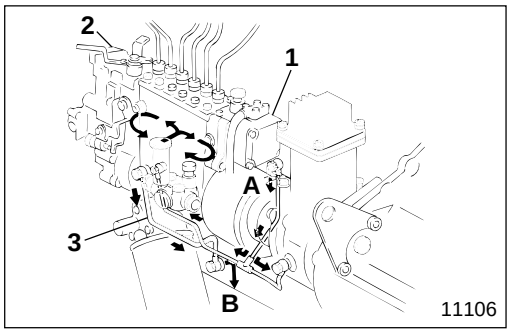

● **Injection pump**

1 Injection pump
2 Governor
3 Oil return pipe

A : From main oil gallery
B : To oil pan

Engine oil that has lubricated injection pump **1** and governor **2** returns to the oil pan through oil return pipe **3**.

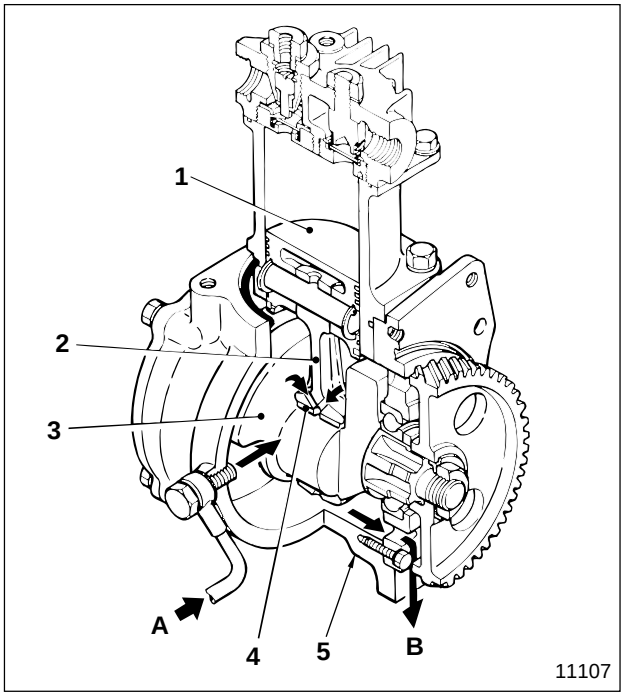

● **Air compressor**

1 Piston
2 Connecting rod
3 Crankshaft
4 Connecting rod bushing
5 Crankcase

A : From main oil gallery
B : To oil pan

Engine oil from the main oil gallery splashes connecting rod **2** and lubricates connecting rod bushing **4**. Then the rotation of crankshaft **3** splashes engine oil onto piston **1** and the small end of the connecting rod to lubricate them.

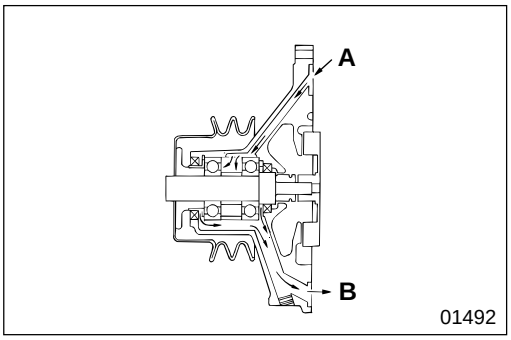

● **Water pump**

A : From oil main gallery
B : To oil pan

Warning Circuit at Lubricating System

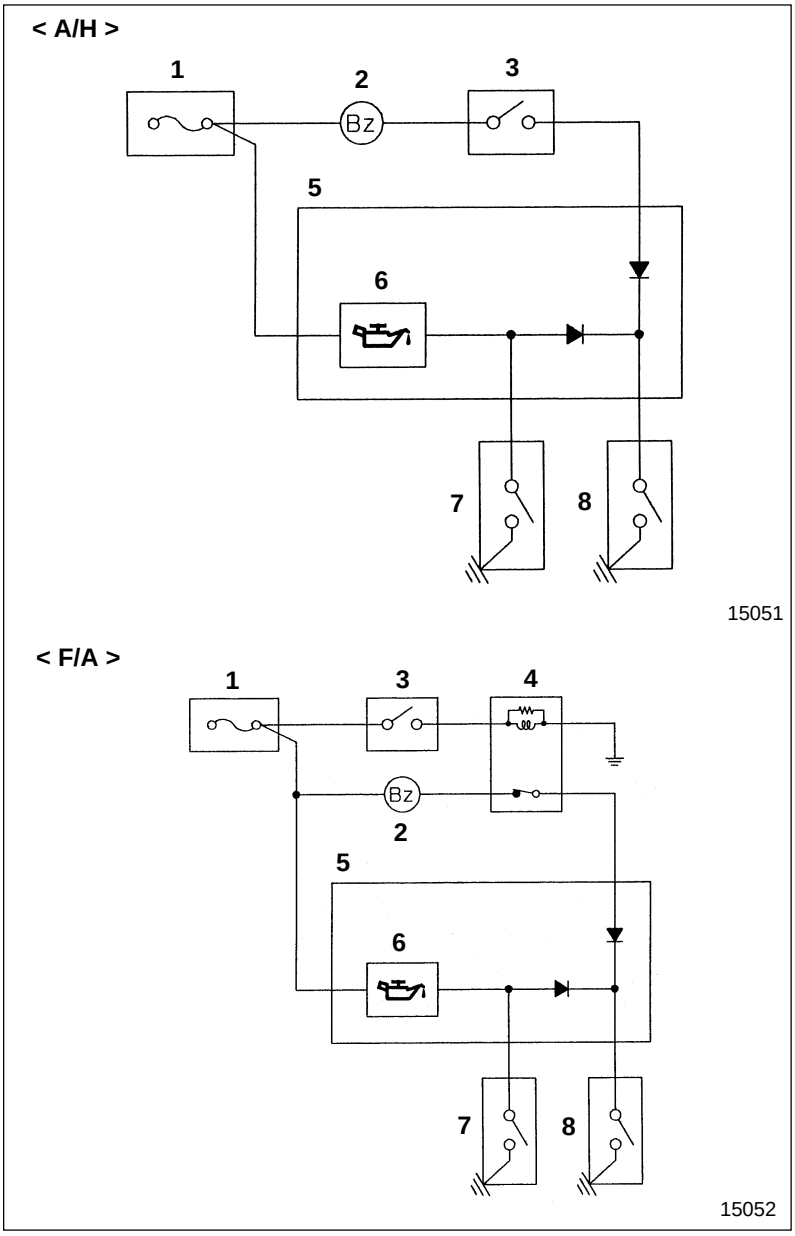

1 Relay and fuse box
2 Buzzer
(Buzzer does not work when the parking brake is engaged.)
3 Parking brake switch
4 Parking brake relay
5 Meter cluster
6 Warning lamp for oil pressure and oil filter
7 Oil bypass alarm switch
8 Oil pressure switch

A/H : Air over hydraulic brake
F/A : Full air brake

Possible causes / Symptoms		Engine hard to start	Overheating	Oil pressure low	Oil consumption excessive (Oil leakage)	Remarks
Oil cooler	Oil cooler element installation faulty		○	○	○	
	Gasket faulty		○	○	○	
	O-ring faulty		○	○	○	
	Oil cooler element clogged		○	○		
	Oil cooler element damaged		○	○	○	
	Bypass valve spring fatigued		○			
Oil pump	Malfunctioning	○		○		
	Oil pump gear interfering with oil pump case or cover		○	○		
	Installation faulty		○	○		
	Oil strainer clogged			○		
Oil filter	Installation faulty				○	
	Element clogged		○	○		
	O-ring faulty			○		
Front cover	Crankshaft front oil seal faulty				○	Gr 11
	Front cover installation faulty				○	Gr 11
Flywheel housing	Crankshaft rear oil seal faulty				○	Gr 11
	Flywheel housing installation faulty				○	Gr 11
Regulator valve spring fatigued				○		
Oil jet for piston cooling faulty			○			
Oil working its way up into combustion chamber					○	Gr 11
Oil working its way down into combustion chamber					○	Gr 11
Oil viscosity too high		○				
Oil quality unsuitable			○			
Oil deteriorated			○			
Fuel mixed with oil			○			

Replacement of Oil Filter

Tightening torque

Unit : N·m {lbf.ft, kgf·m}

Location	Parts to be tightened	Tightening torque	Remarks
1	Oil filter drain plug	7.8±2 {5.8±1.4, 0.8±0.2}	—

Special tools

Unit : mm {in.}

Location	Tool name and shape	Part No.	Application
—	Oil filter wrench 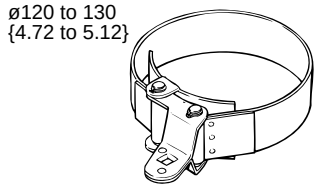 01503	MH061537	Removal of oil filter

WARNING

- **Wipe up any engine oil that has been spilled because it can cause a fire.**
- **Do not touch the engine while it is hot because it will burn you.**
- **When replacing oil filter 2, take care not to spill oil on the V-belt.**

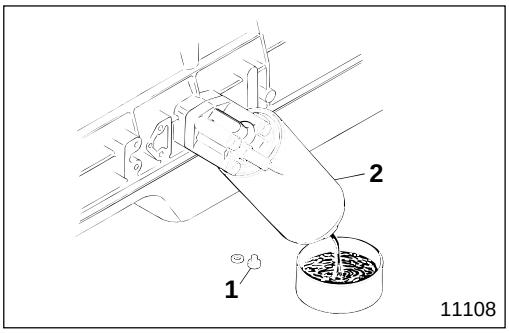

11108

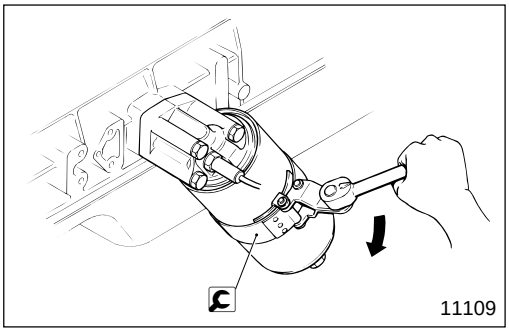
11109

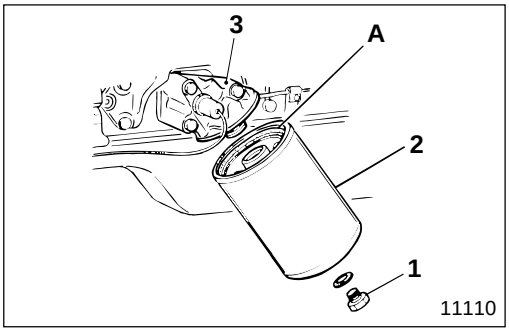

11110

[Removal]

1 Oil filter drain plug
2 Oil filter

[Installation]

- Clean the surface of oil filter head **3** that makes contact with oil filter **2**.
- Apply engine oil thinly and evenly to gasket area **A** of oil filter **2**.
- Screw in oil filter **2** to oil filter head **3** until gasket area **A** sits on the oil filter head.
- From this position, tighten further by rotating by one and one eighth to one and three eighths of a turn.
- Install oil filter drain plug **1**.
- After installation, run the engine and check that there is no oil leakage from gasket area **A**.
- Check the engine oil level and if it is low, fill to correct level.

Replacement of Engine Oil

Tightening torque

Unit : N·m {lbf.ft, kgf·m}

Location	Parts to be tightened	Tightening torque	Remarks
2	Oil pan drain plug	69 {51, 7}	—
3	Oil filter drain plug	7.8±2 {5.8±1.4, 0.8±0.2}	—

Lubricant

Location	Points of application	Kinds	Quantity
—	Oil pan	Engine oil (Grade CD or above as per API Classification)	Approximately 11 L {12 qts}
—	Oil filter	Engine oil (Grade CD or above as per API Classification)	Approximately 2.3 L {2.4 qts}

WARNING

- **Wipe up any engine oil that has been spilled because it can cause a fire.**
- **Do not touch the engine while it is hot because it will burn you.**
- **When replacing engine oil, take care not to spill oil on the V-belt.**

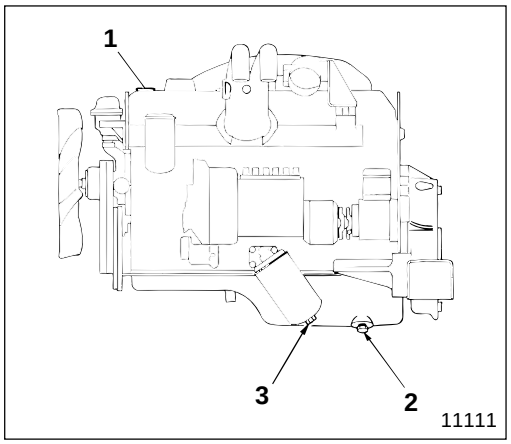

[Draining]

- After warming-up the engine, remove oil filler cap **1**.
- Remove oil pan drain plug **2** and oil filter drain plug **3** and drain the engine oil.

[Refilling]

Tighten drain plug **2** of the oil pan and oil filter drain plug **3** at specified torque and fill with the specified quantity of engine oil.

Measurement of Oil Pressure

Service standards

Location	Maintenance item		Standard value	Limit	Remedy
—	Oil pressure (Oil temperature 70 to 90°C {158 to 194°F})	At no-load minimum revolution	145 to 295 kPa {21 to 43 lbf/in², 1.5 to 3 kgf/cm²}	49 kPa {7.1 lbf/in², 0.5 kgf/cm²}	Inspect
		At no-load maximum revolution	295 to 490 kPa {43 to 71 lbf/in², 3 to 5 kgf/cm²}	195 kPa {28 lbf/in², 2 kgf/cm²}	—

Tightening torque

Unit : N·m {lbf.ft, kgf·m}

Location	Parts to be tightened	Tightening torque	Remarks
2	Engine oil pressure switch	15 to 22 {11 to 16, 1.5 to 2.2}	When engine is cold

Sealant

Location	Points of application	Kinds	Quantity
2	Thread area of engine oil pressure switch	Teflon tape	3 1/2 turns

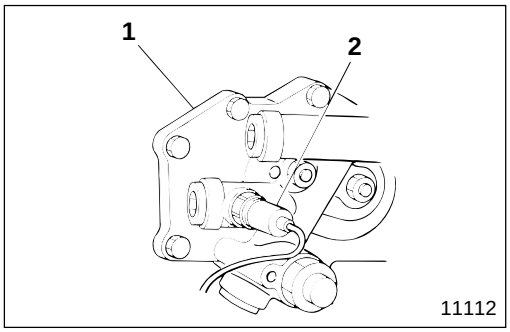

- Remove oil pressure switch **2** from oil cooler **1**.
- Mount the oil pressure gauge after installing adaptor **3** onto oil cooler **1**.
- Warm up the engine until the oil temperature reaches 70 to 90°C {158 to 194°F}.
- Measure oil pressure at no-load minimum revolution and at no-load maximum revolution. If the measured values are lower than the limit, overhaul the lubricating system.

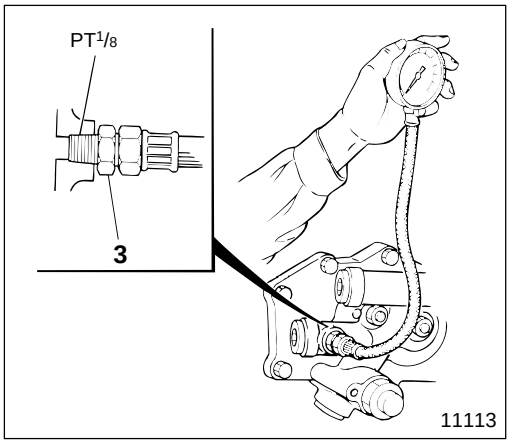

- After measurement, install engine oil pressure switch **2** and tighten at specified torque.

CAUTION

Be sure to install oil pressure switch 2 when the engine is cold.

Inspection of engine oil pressure switch

Gr 54

OIL PAN AND OIL JET

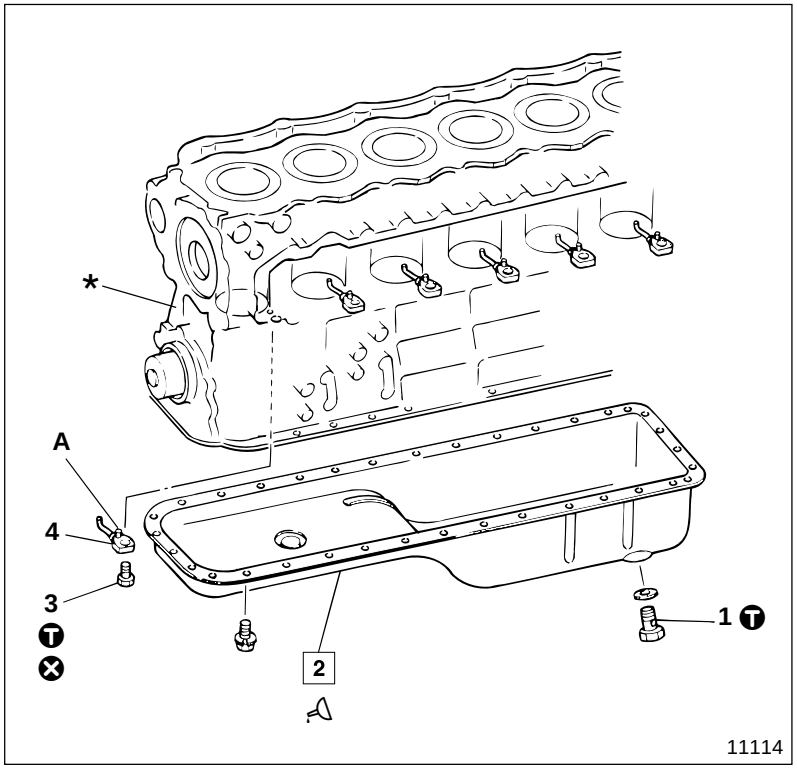

● **Disassembly sequence**

1 Drain plug
2 Oil pan
3 Check valve
4 Oil jet

***** : Crankcase Gr 11
A : Positioning pin
⊗ : Non-reusable parts

● **Assembly sequence**

Follow the disassembly sequence in reverse.

CAUTION

Make sure that you do not tighten check valve 3 higher than specified torque, because excessive tightening causes faulty operation resulting in engine burning.

T Tightening torque

Unit : N·m {lbf.ft, kgf·m}

Location	Parts to be tightened	Tightening torque	Remarks
1	Drain plug	69 {51, 7}	—
3	Check valve	34 {25, 3.5}	—

Sealant

Location	Points of application	Kinds	Quantity
2	Oil pan to crankcase connecting surface	THREEBOND 1207C	As required

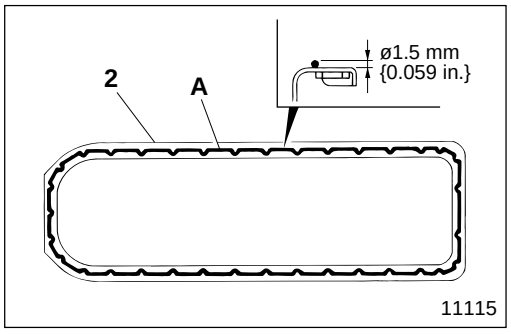

◆ Service procedure

2 **Installation of oil pan**

- Apply sealant **A** to lower connecting surface of oil pan **2** as illustrated evenly without break.
- After applying sealant **A**, within three minutes, mount oil pan **2** to crankcase *****.

CAUTION

- **Be sure to clean and wipe off oily substances from the surface where sealant A is to be applied.**
- **Make sure that sealant A is not transferred to other areas while the mounting work is being done.**
- **Do not start the engine within an hour of mounting oil pan 2.**
- **Be sure to reapply sealant A if the bolts (for mounting oil pan 2) are loosened or removed by any cause whatsoever after mounting.**

M E M O

OIL PUMP AND OIL STRAINER

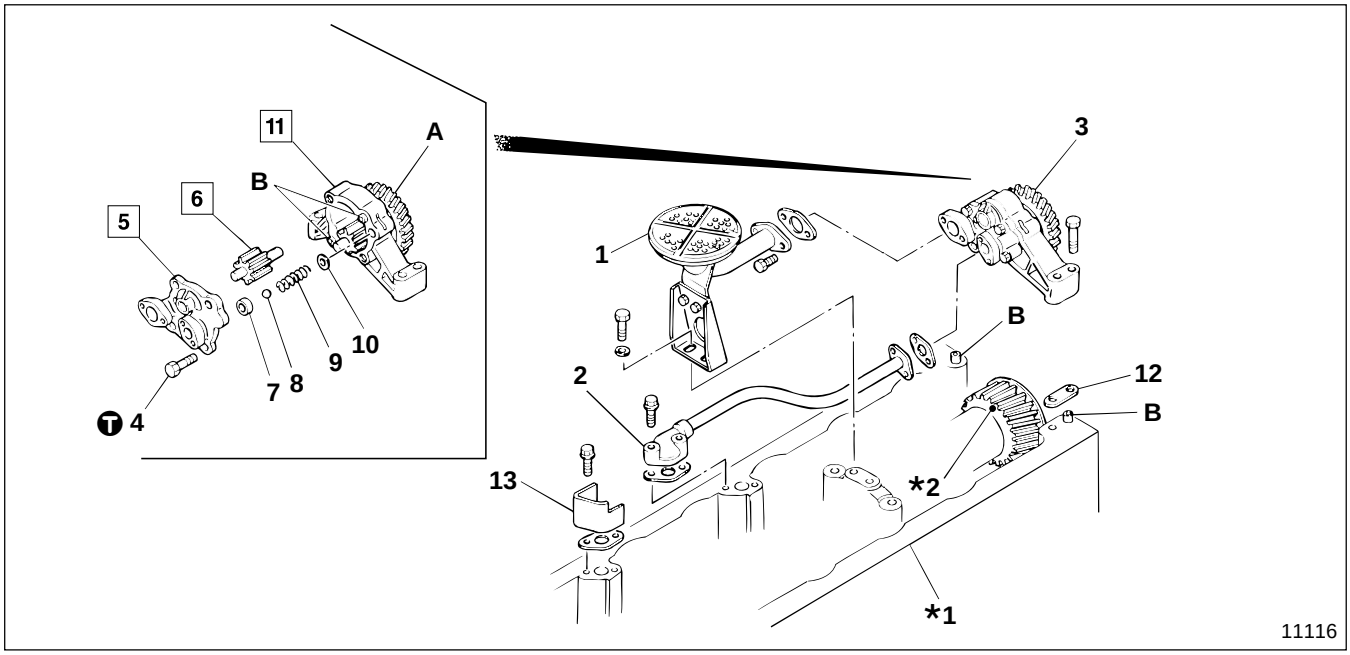

● **Inspection before disassembly**

P12-17

● **Disassembly sequence**

1 Oil strainer
2 Oil pipe
3 Oil pump assembly
4 Bolt
5 Cover
6 Driven gear assembly
7 Ring
8 Relief valve
9 Relief valve spring
10 Washer
11 Gear and case assembly
12 Shim
13 Oil deflector

***1** : Crankcase Gr 11
***2** : Crankshaft gear Gr 11
A : Oil pump gear
B : Positioning pin

NOTE

- **Do not remove oil pipe 2, oil strainer 1, and the oil pump as an assembly unless they are faulty.**
- **Gear and case assembly 11 is a unit construction, if there is a fault in it, replace it as a unit.**
- **Do not remove parts ring 7 through to washer 10 from gear and case assembly 11 unless they are faulty. If removed, replace ring 7.**

● **Assembly sequence**

Follow the disassembly sequence in reverse.

Service standards

Unit : mm {in.}

Location	Maintenance item	Standard value (Basic diameter in [ ])	Limit	Remedy
5, 11	Clearance between drive gear shaft and inner diameter of cover	[20] 0.04 to 0.07 {[0.79] 0.0016 to 0.0028}	0.15 {0.0059}	Replace
5, 6, 11	Clearance between driven gear shaft and inner diameter of case and cover	[20] 0.04 to 0.07 {[0.79] 0.0016 to 0.0028}	0.15 {0.0059}	Replace
6, 11	Clearance between case and tooth tip of each gear	0.10 to 0.19 {0.0039 to 0.0075}	0.2 {0.0079}	Replace
	Difference between height of each gear and depth of case	0.06 to 0.11 {0.0024 to 0.0043}	0.15 {0.0059}	Replace
8	Relief valve opening pressure	980 to 1180 kPa {140 to 170 lbf/in^2, 10 to 12 kgf/m^2}	—	Replace
9	Relief valve spring load (Installed length 30 {1.18})	84 N {19 lbf, 8.6 kgf}	—	Replace
***2, A**	Backlash between oil pump gear and crankshaft gear	0.08 to 0.18 {0.0031 to 0.0071}	0.35 {0.014}	Adjust with shims

Tightening torque

Unit : N·m {lbf.ft, kgf·m}

Location	Parts to be tightened	Tightening torque	Remarks
4	Bolt (Oil pump cover mounting)	25±4.9 {18±3.6, 2.5±0.5}	—

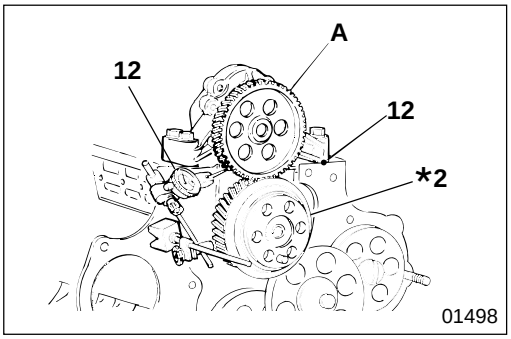

◆ Service procedure

● Inspection before disassembly

Measure backlash between oil pump gear **A** and crankshaft gear **2**, if the measured value is higher than the limit, adjust with shims **12**.

Shim thickness	Backlash graduation
0.1 mm {0.0039 in.}	0.073 mm {0.0029 in.}
0.2 mm {0.0079 in.}	0.146 mm {0.0057 in.}

CAUTION ⚠

Make sure that you use the same thickness adjustment shims 12 for left and right sides.

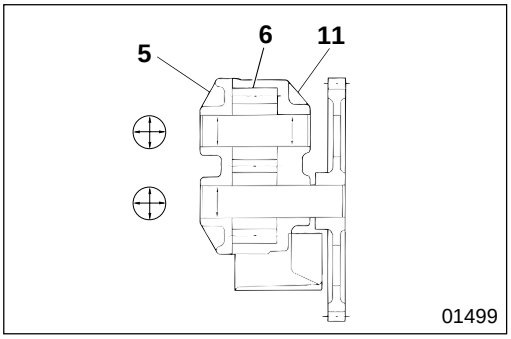

5 6 11 Inspection of cover, driven gear assembly, gear and case assembly

Measure the clearance between each gear shaft and cover **5**, and the clearance between the shaft and the shaft bore of gear and case assembly **11**. If the measured value is higher than the limit, replace the faulty parts.

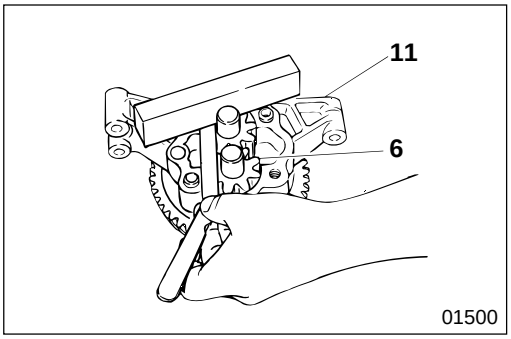

6 11 Inspection of driven gear assembly, gear and case assembly

(1) Difference between height of each gear and depth of gear and case assembly

If the measured value is higher than the limit, replace the faulty parts.

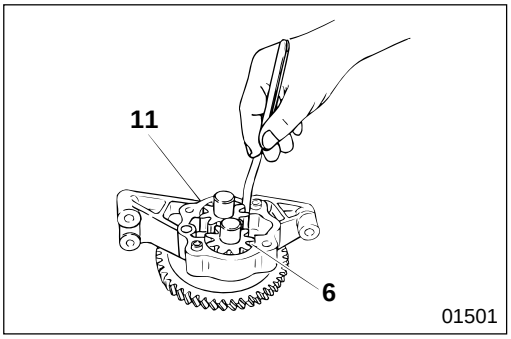

(2) Clearance between tooth tip and case

If the measured value is higher than the limit, replace the faulty parts.

OIL FILTER

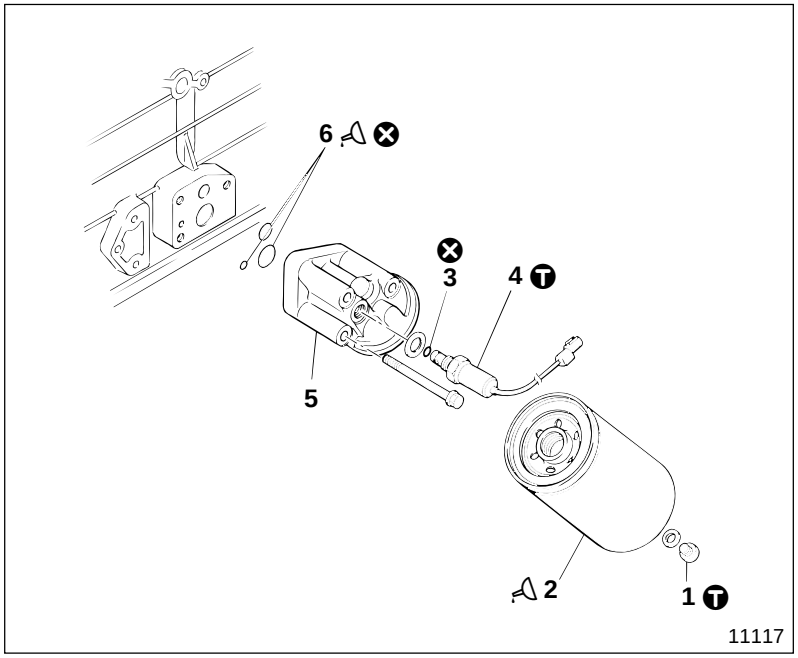

● **Disassembly sequence**

1 Oil filter drain plug
2 Oil filter P12-11
3 O-ring
4 Engine oil bypass alarm switch Gr 54
5 Oil filter head
6 O-ring

⊗ : Non-reusable parts

● **Assembly sequence**

Follow the disassembly sequence in reverse.

Service standards

Location	Maintenance item	Standard value	Limit	Remedy
4	Engine oil bypass alarm switch valve opening pressure	$0.2\ ^{+0.05}_{0}$ MPa {$27\ ^{+7.1}_{0}$ lbf/in^2, $1.9\ ^{+0.5}_{0}$ kgf/cm^2}	—	Replace

Ⓣ Tightening torque

Unit : N·m {lbf.ft, kgf·m}

Location	Parts to be tightened	Tightening torque	Remarks
1	Oil filter drain plug	7.8±2 {5.8±1.4, 0.8±0.2}	—
4	Engine oil bypass alarm switch	49±4.9 {36±3.6, 5±0.5}	—

Lubricant

Location	Points of application	Kinds	Quantity
2	Gasket area of oil filter with thin application P12-11	Engine oil	As required
6	Body of O-ring	Engine oil	As required

M E M O

OIL COOLER

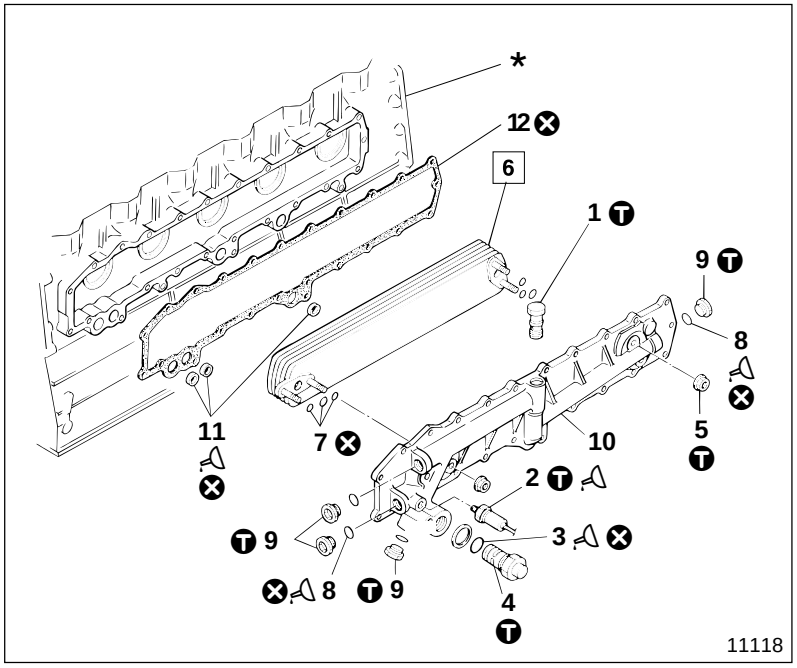

● **Disassembly sequence**

1 Bypass valve
2 Engine oil pressure switch
3 O-ring
4 Regulator valve 📖 P12-22
5 Nut
6 Oil cooler element
7 O-ring
8 O-ring
9 Plug
10 Oil cooler cover
11 O-ring
12 Gasket

*: Crankcase Gr 11
⊗: Non-reusable parts

● **Assembly sequence**

Follow the disassembly sequence in reverse.

Service standards

Location	Maintenance item	Standard value	Limit	Remedy
1	Bypass valve opening pressure	295±20 kPa {43±2.8 lbf/in², 3.0±0.2 kgf/cm²}	—	Replace
6	Oil cooler element air leakage (Air pressure 980 kPa {140 lbf/in², 10 kgf/cm²}, 15 seconds)	0 cm³ {0 cu. in.}	—	Replace

Ⓣ Tightening torque

Unit : N·m {lbf.ft, kgf·m}

Location	Parts to be tightened	Tightening torque	Remarks
1	Bypass valve	34±4.9 {25±3.6, 3.5±0.5}	—
2	Engine oil pressure switch	15 to 22 {11 to 16, 1.5 to 2.2}	—
4	Regulator valve	105±9.8 {80±7.2, 11±1}	—
5	Nut (Oil cooler element mounting)	20±4.9 {14±3.6, 2.0±0.5}	—
9	Plug (Oil cooler)	25±4.9 {18±3.6, 2.5±0.5}	—

Lubricant and sealant

Location	Points of application	Kinds	Quantity
2	Thread area of engine oil pressure switch	Teflon tape	3 1/2 turns
3, 8, 11	Oil cooler O-ring	Engine oil	As required

◆ Service procedure

● Cleaning

- Check and see if any carbon deposits or sludge have developed in the oil passage of oil cooler element **6** or its bypass. Clean any deposits off thoroughly with cleaning solvent.
- Also clean any water scale or fur found in oil cooler element **10** or oil cooler cover **10**. Gr 14.

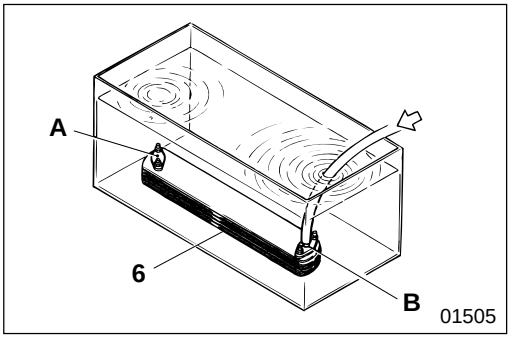

6 Inspection of oil cooler element

- Immerse oil cooler element **6** in a water tank after plugging exit port **A** and connecting the hose to engine oil entry port **B**.
- Apply air pressure of 980 kPa {140 lbf/in^2, 10 kgf/cm^2} via the hose and see if there is any air leakage from any part of oil cooler element **6**.
- If you see any leakage, replace oil cooler element **6**.

REGULATOR VALVE

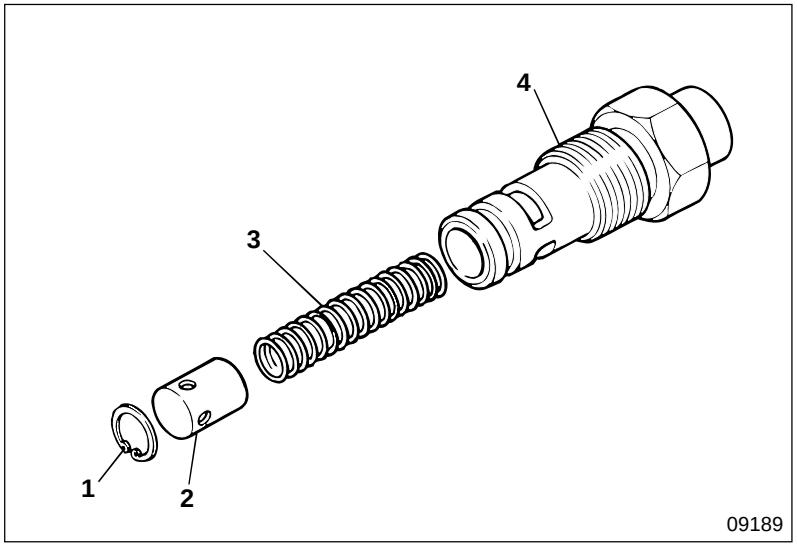

● **Disassembly sequence**

1 Snap ring
2 Valve
3 Spring
4 Body

● **Assembly sequence**

Follow the disassembly sequence in reverse.

Service standards

Location	Maintenance item	Standard value	Limit	Remedy
3	Regulator valve spring load (Installed length 48.3 {1.9})	76 to 80 N {17 to 18 lbf, 7.8 to 8.2 kgf}	—	Replace
—	Regulator valve opening pressure	390±29 kPa {57±4.3 lbf/in^2, 4±0.3 kgf/cm^2}	—	Replace

MITSUBISHI FUSO

FK.FM

Service Manual

Group 13 - Fuel and Engine Control

Group 13 - 1999 Minor Changes

BACK HOME

MITSUBISHI FUSO TRUCK OF AMERICA, Inc.

MITSUBISHI
FUSO

FK.FM
Service Manual

Group 13
Fuel and Engine Control

'99 Minor Change

Table of Contents

MITSUBISHI FUSO TRUCK OF AMERICA, Inc.

BACK HOME

Pub No. TWME9503-313

GROUP 13 FUEL AND ENGINE CONTROL

SPECIFICATIONS ..... 13 - 2

STRUCTURE AND OPERATION ..... 13 - 4

TROUBLESHOOTING ..... 13 -36

READING AND ERASING DIAGNOSIS CODES ..... 13 -40

SERVICE PROCEDURES USING MUT-II ..... 13 -46

INSPECTION BASED ON DIAGNOSIS CODE ..... 13 -48

ON-VEHICLE INSPECTION AND ADJUSTMENT
- Checking and Adjusting Injection Timing ..... 13 -52
- Bleeding Air from Fuel System ..... 13 -53
- Cleaning Gauze Filter ..... 13 -53
- Replacing Fuel Filter ..... 13 -54

ENGINE CONTROL ..... 13 -55

FUEL TANK ..... 13 -60

FUEL FILTER ..... 13 -61

WATER SEPARATOR ..... 13 -62

INJECTION PUMP ..... 13 -64

INJECTION NOZZLE ..... 13 -68

INSPECTION OF OTHER DEVICES ..... 13 -72

ELECTRIC CIRCUIT AND PART INSTALLATION LOCATIONS ..... 13 -84

SPECIFICATIONS

Injection Pump

Item	Specifications
Manufacturer	ZEXEL
Body model	MD-TICS (Pre-stroke control type)
Governor type	RED-III electronically controlled governor
Feed pump model	KD
Automatic timer model	SPG mechanical type

Injection Nozzle

Item	Specifications
Manufacturer	ZEXEL
Model and type	DLLA hole type 1-spring nozzle
Nozzle orifice quantity	5
Orifice diameter mm {in.}	ϕ 0.23 {0.0091}

Fuel Filter Type

Item	Specifications
Filter type	Spin-on type

Fuel System (Flow of Fuel)

M E M O

1 Injection nozzle
2 Fuel filter

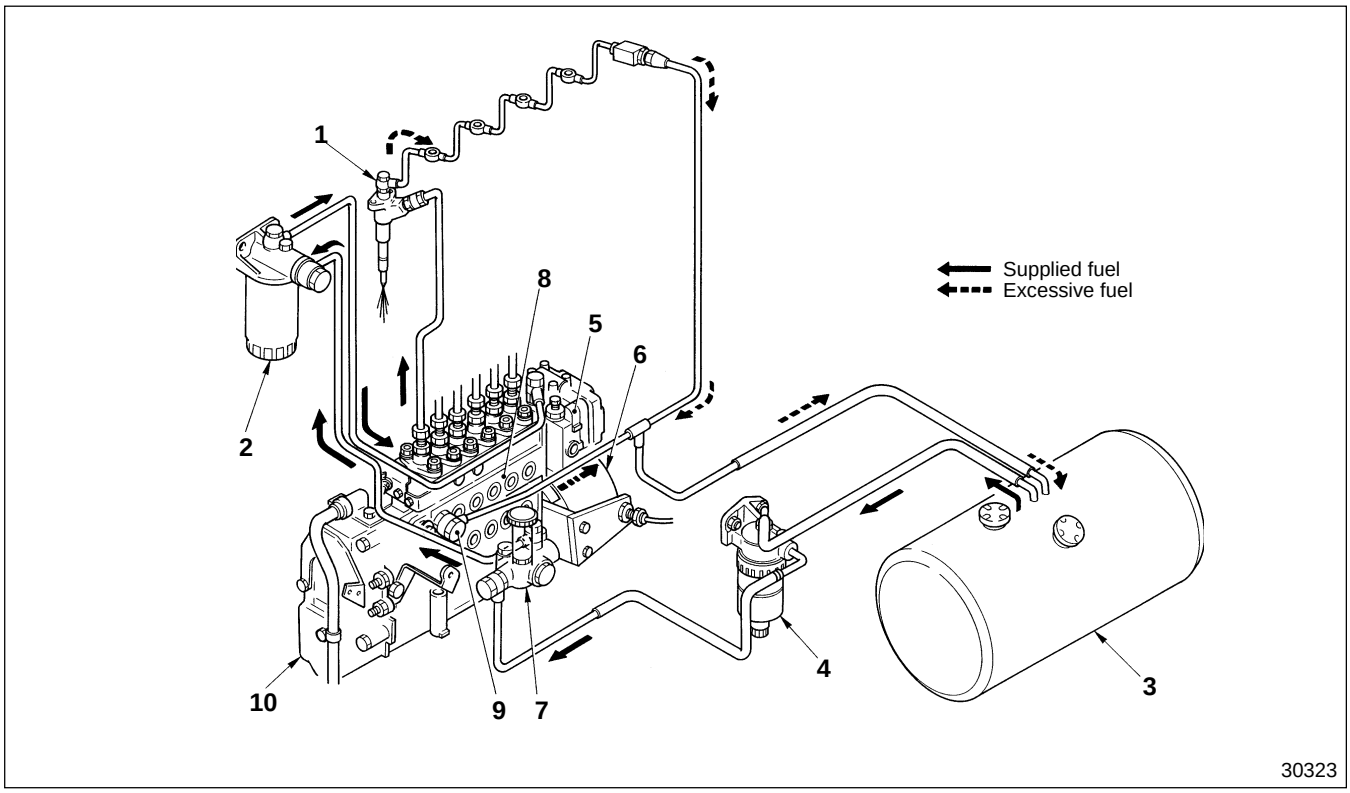

3 Fuel tank
4 Water separator
5 Pre-stroke actuator
6 Automatic timer
7 Feed pump
8 Injection pump
9 Overflow valve
10 Electronic governor

Fuel in fuel tank **3** is sucked up by feed pump **7** which is driven by the cam action of injection pump **8** and is filtered through fuel filter **2** which removes dirt and other foreign particles.
Filtered fuel is sent to the injection pump where the fuel pressure is boosted and injected through injection nozzle **1** into the combustion chamber.
When fuel pressure is higher than the specified value, overflow valve **9** opens to let the fuel return to the fuel tank **3**.

Engine Control

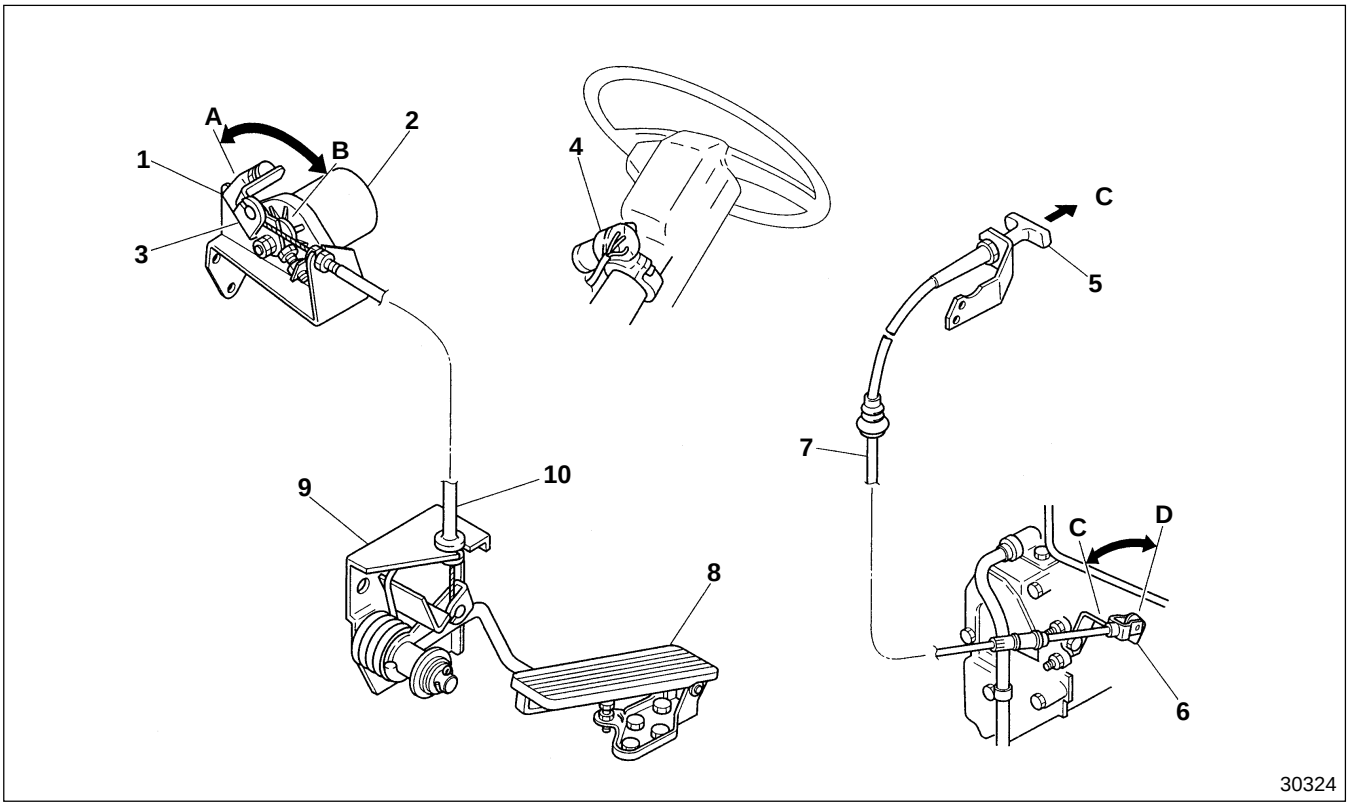

1 Accelerator pedal switch
2 Accelerator pedal position sensor
3 Lever
4 Starter switch
5 Emergency engine stop button
6 Stop lever
7 Engine stop cable
8 Accelerator pedal assembly
9 Accelerator link assembly
10 Accelerator control cable

A : Idling position
B : Full-load position
C : Engine-stop position
D : Engine start-up position

● **Accelerator pedal switch**

Accelerator pedal switch **1** detects whether the accelerator pedal assembly **8** is depressed.

● **Accelerator pedal position sensor**

Accelerator pedal position sensor **2** detects the movement of the accelerator pedal assembly **8** and sends the information to the electronic governor control unit in the form of electrical signals. Moreover, the accelerator position sensor lever **3** is continuously pulled in the idling position direction **A** by the return spring.

● **Emergency engine stop button**

The engine is generally stopped electrically by setting the starter switch **4** to the ACC position.
However, if the engine does not stop by setting the starter switch to the ACC position because of malfunctions in the electronic governor system, etc., pulling the emergency engine stop button **5** moves the electronic governor stop lever **6** to the stop position **C** and stops the engine.

CAUTION⚠

If the engine was stopped by pulling the engine stop button 5, the control unit computer must be reset by setting the starter switch 4 to the ACC or LOCK position.
If the engine is restarted without resetting the computer, the engine revolution control will be unstable.

Fuel Gauge Electric Circuit

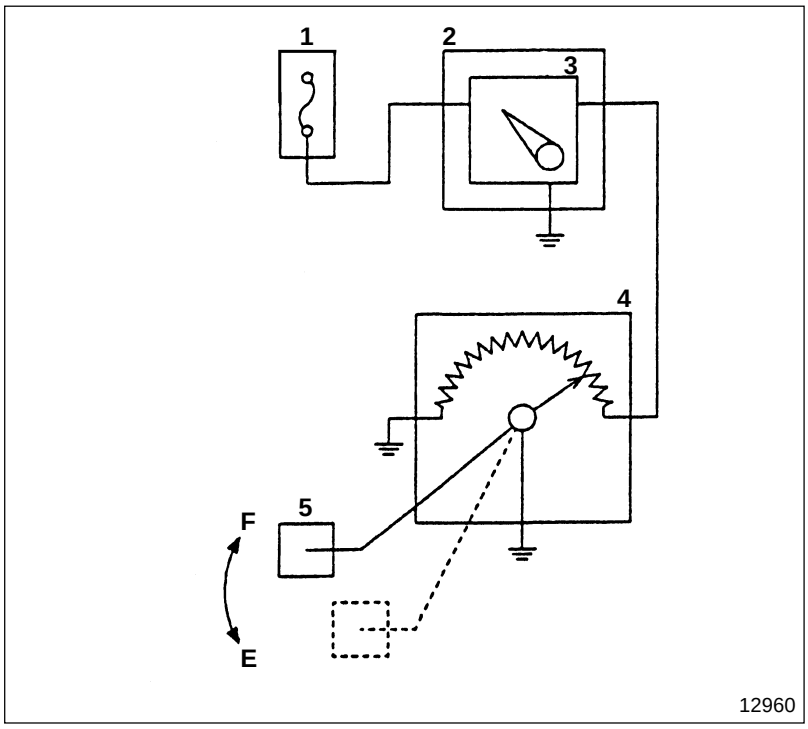

1 Relay and fuse box
2 Meter cluster
3 Fuel gauge
4 Fuel gauge sending unit
5 Float

The fuel gauge circuit indicates the amount of fuel remaining in the fuel tank by means of a gauge.

Water Separator

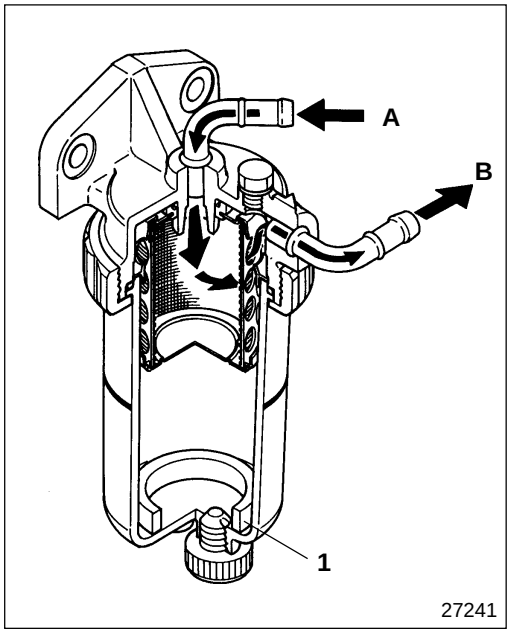

1 Water level ring

A : From fuel tank
B : To feed pump

The water separator is installed between the fuel tank and the feed pump. Any water present in the fuel is separated by the baffle plate and the screen assembly.

Fuel Filter

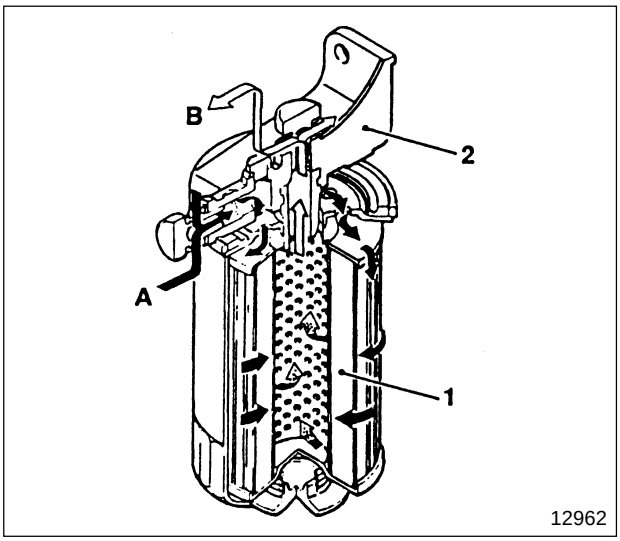

1 Fuel filter
2 Fuel filter head

A : From feed pump
B : To injection pump

Pressurized fuel is delivered from the feed pump of the injection pump to the fuel filter which separates water from the fuel and removes foreign particles from the fuel by fuel filter **1**.

Configuration of Electronic Governor and Pre-stroke Control Injection Pump System

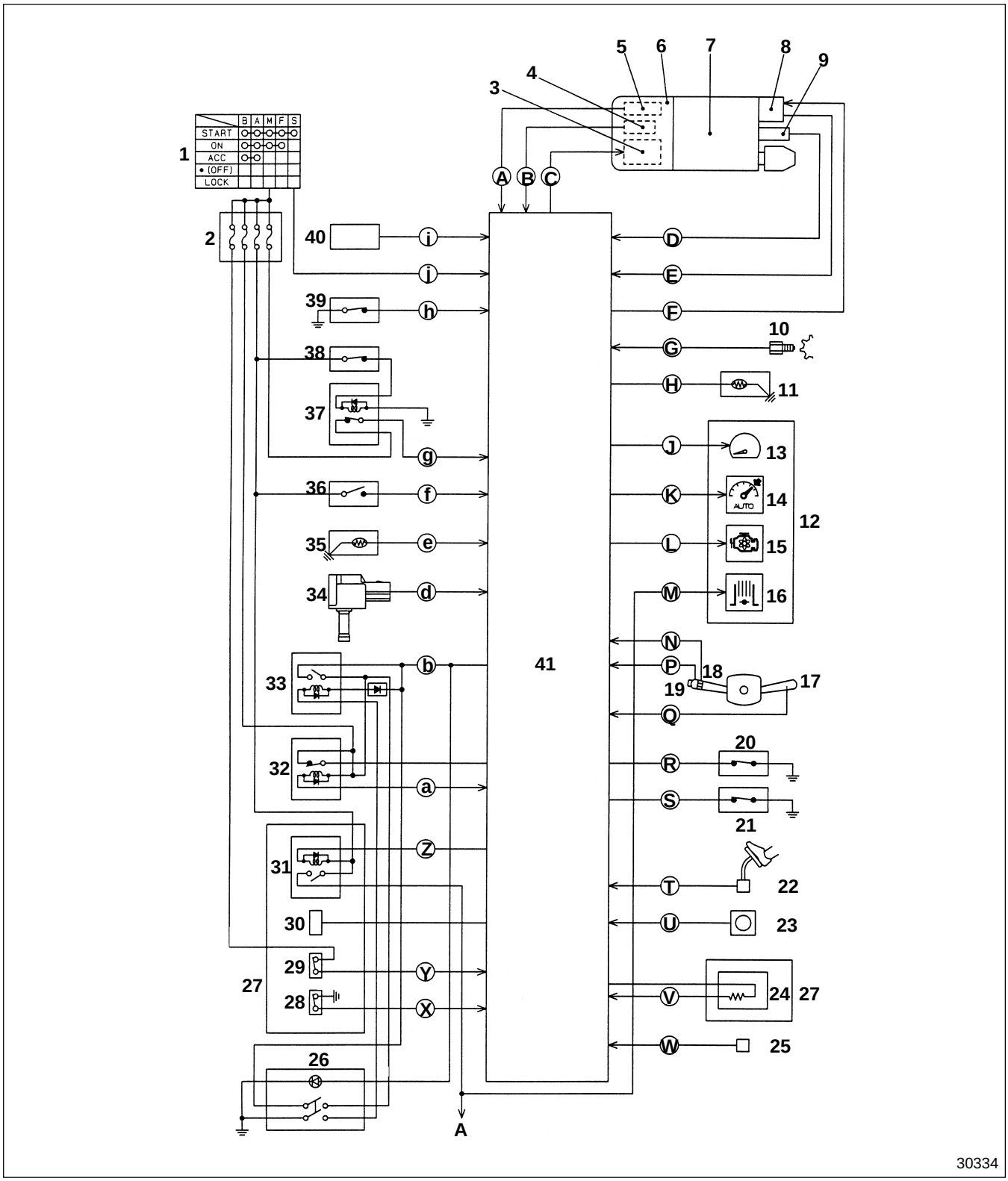

A : To exhaust brake 3-way magnetic valve Gr54

	Part	Main function/operation	Data signal
1	Starter switch	Sensing of start signal	ⓘ : Start signal
2	Fuse and relay box	—	—
3	Linear DC motor	Activation of rack	Ⓒ : Linear DC motor drive signal
4	Backup engine speed sensor	Sensing of engine speed	Ⓑ : Engine speed signal (backup)
5	Control rack position sensor	Sensing of control rack position	Ⓐ : Control rack position signal
6	Electronic governor	—	—
7	Pre-stroke control type injection pump	Alteration of pre-stroke (advancement of fuel injection timing)	—
8	Pre-stroke actuator • Pre-stroke position sensor • Drive unit	—	Ⓔ : Pre-stroke position signal Ⓕ : Actuator drive signal
9	Sub control rack position sensor	Sensing of control rack position	Ⓓ : Control rack position signal (backup)
10	Engine speed sensor	Sensing of engine speed	Ⓖ : Engine speed signal
11	Boost temperature sensor	Detection of engine intake air temperature	Ⓗ : Boost temperature signal
12	Meter cluster	—	—
13	Tachometer	—	Ⓙ : Tachometer drive signal
14	Indicator lamp*1	—	Ⓚ : Lamp illumination signal
15	Warning lamp	Indication of system faults and diagnosis codes	Ⓛ : Lamp illumination signal
16	Indicator lamp	—	Ⓜ : Lamp illumination signal
17	Auxiliary brake switch	ON/OFF switching of Exhaust brake	Ⓠ : Exhaust brake ON signal
18	Cruise control set*1 resume switch	Cruise control vehicle speed set, change and reset	Ⓝ : Set resume signal
19	Cruise control cancel switch*1	Cruise control cancel	Ⓟ : Cruise control cancel signal
20	Stop lamp switch	Detection of brake signal	Ⓡ : Brake operation signal
21	Stop lamp switch (backup)	Detection of brake signal	Ⓢ : Brake operation signal
22	Accelerator pedal position sensor	Sensing of accelerator pedal depression amount	Ⓣ : Accelerator pedal position signal
23	Idling speed adjustment potentiometer	Shortening of warmup time	Ⓤ : Warmup time shortening signal
24	Fuel injection rate adjustment resistor	Correction of fuel injection rate	Ⓥ : Injection volume correction signal
25	Vehicle speed sensor	Detection of vehicle speed	Ⓦ : Vehicle speed pulse
26	Cruise control main switch*1	Cruise control system operation	—
27	Fuse and relay box	—	—
28	Diagnosis switch	Generation of diagnosis codes	Ⓧ : Diagnosis code signal
29	Memory clear switch	Eraser of diagnosis codes	Ⓨ : Diagnosis code eraser signal
30	MUT-II connector (16-pin)	Connection of MUT-II	—
31	Exhaust brake relay*1	Closes contacts upon exhaust brake operation	Ⓩ : Exhaust brake operation signal
32	Pre-stroke cut relay	Closes contacts upon plunger pre-stroke operation	ⓐ : Pre-stroke operation signal
33	Cruise control main relay*1	The contact point is closed when the cruise control system is in operation	ⓑ : Cruise control system operation signal
34	Boost pressure sensor	Sensing of boost pressure	ⓓ : Boost pressure signal

*1 : Manual transmission

Part		Main function/operation	Data signal
35	Coolant temperature sensor	Sensing of engine coolant temperature	ⓔ : Coolant temperature signal
36	Clutch pedal switch	Turns OFF when clutch pedal is depressed	ⓕ : Clutch pedal depression signal
37	Transmission neutral relay	Contact opens when transmission is in neutral.	ⓖ : Transmission neutral signal
38	Transmission neutral switch	Turns OFF when transmission neutral is selected	—
	39 Accelerator pedal switch	Turns OFF when accelerator pedal is depressed	ⓗ : Accelerator pedal depression signal
40	Automatic transmission fluid temperature switch*2	Detection of AFT temperature	ⓙ : High oil temperature signal
41	Electronic governor control unit	Control of overall system	—

*2 : Automatic transmission

- The electronic governor and pre-stroke control injection pump system combines an electronic governor **6** with an injection pump **7** that has an electronically controlled pre-stroke adjustment feature.
- The injection pump's plunger lift speed varies in accordance with the engine speed, causing concomitant variations in the injection pipe pressure.
- Variations in the injection pipe pressure make it difficult to achieve an optimum spray from the injection nozzles and the optimum air/fuel mixture.
- To compensate for changes in the injection pipe pressure, the injection pump plunger pre-stroke is increased at low and mid- range speeds, thus ensuring that fuel injection takes place late in the cam lift, when plunger movement is relatively fast.
- At high speeds, the plunger pre-stroke is decreased, thus ensuring that fuel injection takes place in early in the cam lift, when plunger movement is relatively slow. Excessive increases in injection pipe pressure are thus prevented.
- By adjusting the plunger pre-stroke in this manner, the pre-stroke control injection pump **7** ensures that the spray and air/ fuel mixture are always optimally suited to combustion.
- The overall benefits are higher engine torque and cleaner exhaust emissions than are possible with a conventional injection pump.
- Control operations are performed by the electronic governor control unit **41**, which receives data from sensors on the engine and other vehicle components, processes them, and issues appropriate drive signals to the pre-stroke actuator **8** (located at the rear of the injection pump) and to the linear DC motor **3** (located inside the electronic governor).

The system's control functions (including auxiliary functions) are shown in the following table.

Item	Operation	Data source	
		Sensor(s)	Data signal(s)
Fuel injection rate control	The fuel injection rate is optimized to match engine operating conditions. 🕮 P13 - 12	5, 10, 22, 24, 34, 39	Ⓐ, Ⓖ, Ⓣ, Ⓥ, ⓓ, ⓗ
Pre-stroke control	The timing sleeve position is altered, thereby changing the prestroke and advancing the fuel injection timing. 🕮 P13 - 13	8, 10, 22, 35	Ⓔ, Ⓕ, Ⓖ, Ⓣ, ⓔ
* Control rack preliminary operation	In cold weather and other conditions that are unfavorable for engine startup, the control rod is caused to move slightly in the fuel increase direction, thus enhancing startability. This operation takes place when the starter switch is turned ON.	1, 22, 25, 35	ⓘ, Ⓣ, ⓦ, ⓔ
* Warmup time shortening function	In cold weather, the engine's idling speed is increased to shorten the time required for warmup. 🕮 P13 -14	22, 23, 35	Ⓣ, Ⓤ, ⓔ
* Overrun prevention function	In the event of an abnormal increase in engine speed, the control rack is pulled in the fuel decrease direction to prevent the engine from overrunning.	10	Ⓖ
* Emergency vehicle operation function (used in event of control rack position sensor fault)	In the event of a fault in the control rack position sensor **5**, the control rack position is sensed by the sub control rack position sensor **9**. If both rack position sensors develop faults, thus preventing detection of the rack position and optimization of the fuel injection rate, the fuel injection rate is controlled in accordance with engine speed signals only. 🕮 P13 -16	5, 9, 10	Ⓐ, Ⓓ, Ⓖ

Item	Operation	Data source	
		Sensor(s)	Data signal(s)
* Cruise control function < Manual transmission >	It maintains the vehicle speed set by the driver while driving.	10, 14, 17 to 22, 25, 26, 33, 36 to 39	Ⓖ,Ⓚ,Ⓝ to Ⓣ,Ⓦ, ⓑ,ⓕ, to ⓗ
* Auxiliary brake control function	The auxiliary braking devices (Exhaust brake) are controlled by the electronic governor control unit **41**. (In a conventional system, the auxiliary braking devices are controlled by switches, relays, and dedicated controllers.) P13-21	10, 16, 22, 36 to 39	Ⓖ,Ⓜ, Ⓣ,ⓕ to ⓗ
* Fault diagnosis function	The status of each system sensor is monitored continuously during engine operation. In the event of a fault, a warning lamp is illuminated to alert the driver and data related to the fault are stored in memory. P13-38	ALL	ALL
* Fail-safe function	In the event of a fault, a backup mode is selected and remedial action is taken in accordance with the type of fault. P13-42	ALL	ALL
* Reverse engine operaction prevention function	In the event of reverse engine operation, the control rack is pulled in the fuel decrease direction to stop the engine	10	Ⓖ
* Injection control function in high ATF temperature condition	In the event of high ATF temperature, the amount of fuel injection is adjusted to regulate the engine output power. P13-21	40	ⓙ

* : Auxiliary function

System Block Diagram

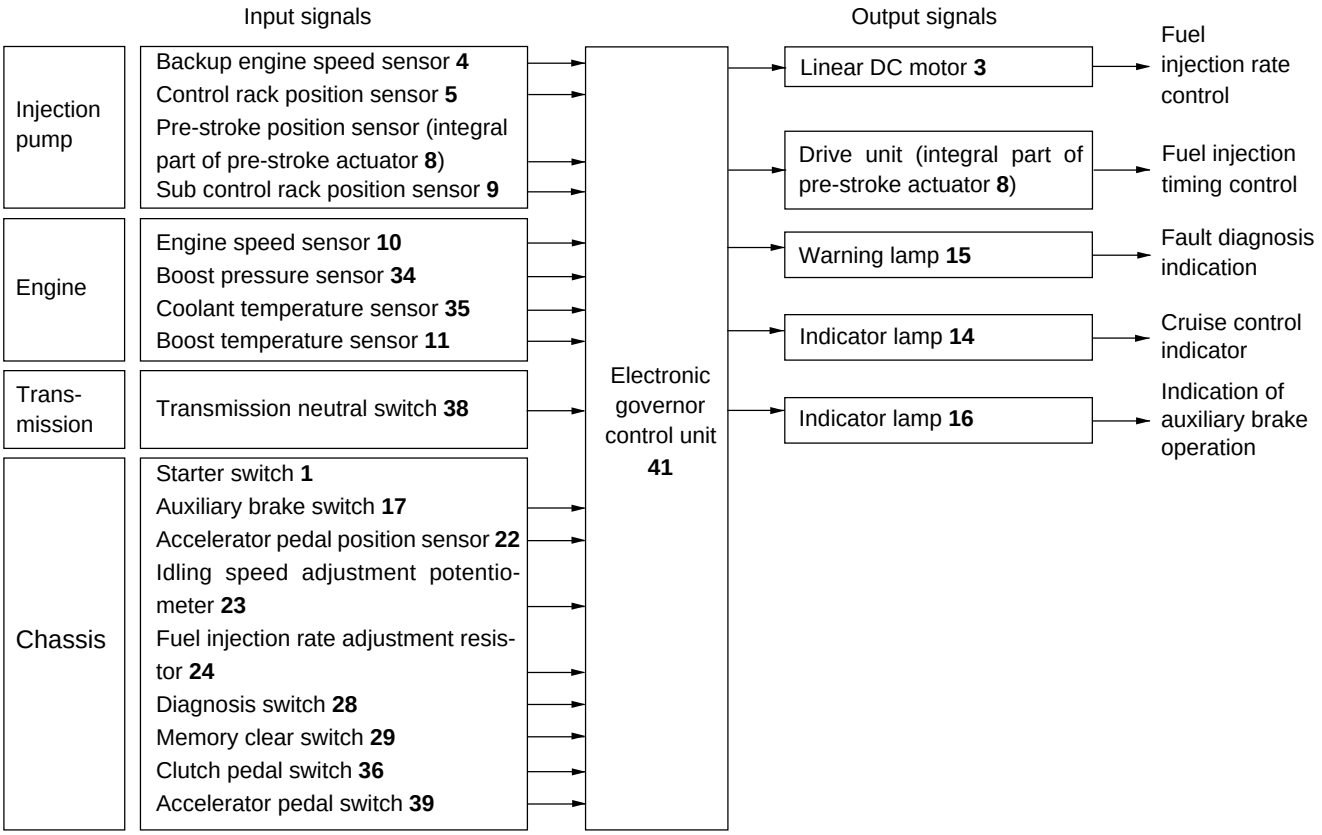

● Fuel injection rate control

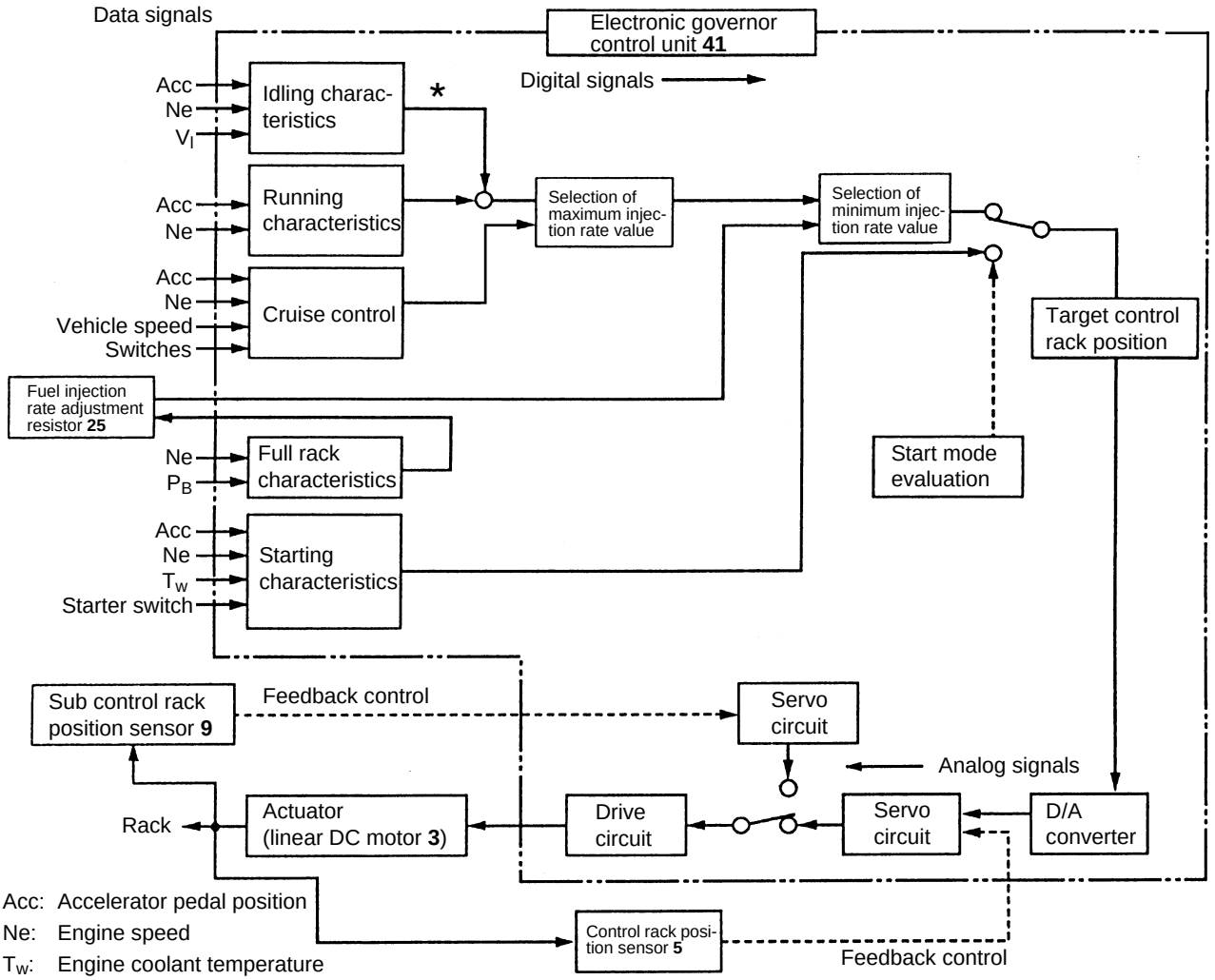

Acc: Accelerator pedal position
Ne: Engine speed
T_W: Engine coolant temperature
V_I: Idling speed adjustment potentiometer voltage
P_B: Boost pressure
D/A converter: Digital-to-analog converter
* Idling speed control limited only to low idling speed control

Operation of electronic governor control unit 41

- During engine operation control is effected in accordance with the cruise control, idling characteristics and running characteristics. The maximum fuel injection rate value is selected in accordance with the output signals.
- After this selection, the control unit calculates and determines the minimum injection rate to prevent the injection rate selected in accordance with the full rack characteristics from exceeding the maximum injection rate. The target control rack position is thus determined. (During engine startup, control is effected in accordance with the starting characteristics, with the target rack position determined directly in accordance with the data signals.)
- The determined control rack position signal is converted into a continuous analog signal. By way of the servo circuit and drive circuit, the signal is applied to the linear DC motor **3**, which moves the rack.

Operation of control rack position sensor 5

- The control rack position sensor **5** monitors the operation of the linear DC motor **3**. In accordance with the position of the control rack, the sensor determines whether the linear DC motor is operating in accordance with the target, and it transmits feedback signals to the electronic governor control unit **41**.
- In accordance with the feedback signals, the electronic governor control unit **41** calculates the actual control rack position. If the actual position differs from the target, the control unit issues a correction command.
- Through repetition of this process, the system ensures that the control rack position complies with the target at all times.

● Pre-stroke control

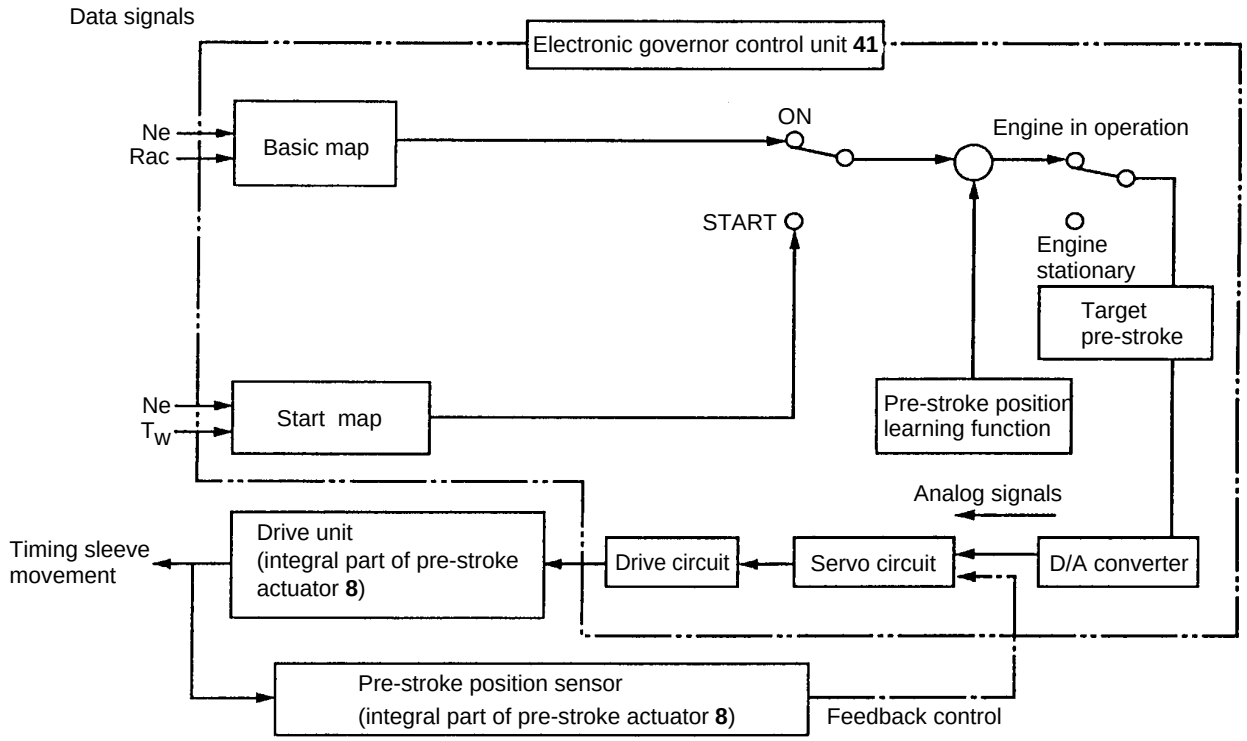

Rac: Control rack position
Ne: Engine speed
T_w: Engine coolant temperature
D/A converter: Digital-to-analog converter

Operation of electronic governor control unit 41

- During engine operation, control is effected in accordance with the basic map.
- The pre-stroke position learning function compensates for pre-stroke position sensor adjustment errors and other injection pump errors using the pre-stroke position sensor output voltage, thereby enabling determination of the target pre-stroke.
- The determined target pre-stroke value is converted into a continuous analog signal. By way of the servo circuit and drive circuit, the signal is applied to the drive unit. The drive unit moves the timing sleeve to alter the pre-stroke.
- During engine startup, control is effected in accordance with the start map.

Operation of pre-stroke position sensor (integral part of pre-stroke actuator 8)

- The pre-stroke position sensor monitors the operation of the drive unit. In accordance with the position of the timing sleeve, the sensor determines whether pre-stroke control is being performed in accordance with the target, and it transmits feedback signals to the electronic governor control unit **41**.
- In accordance with the feedback signals, the electronic governor control unit **41** calculates the actual timing sleeve position. If the actual position differs from the target, the control unit issues a correction command.
- Through repetition of this process, the system ensures that the timing sleeve position complies with the target at all times. The appropriate pre-stroke is achieved as a result.

● Warmup time shortening function

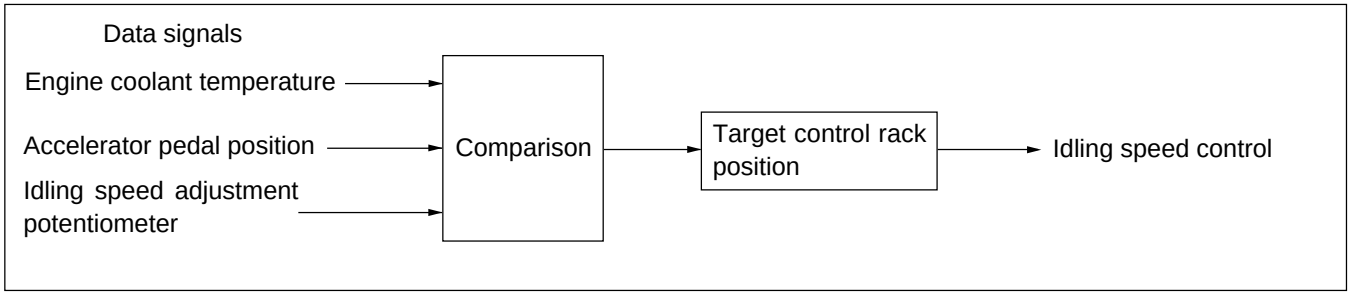

The warmup time shortening function increases the engine's idling speed in accordance with the coolant temperature, thereby shortening the time required for the engine to warm up. Control is effected automatically or manually in accordance with the position of the idling speed adjustment potentiometer **23**. Automatic control is selected by pushing the potentiometer, and manual control is selected by pulling it.

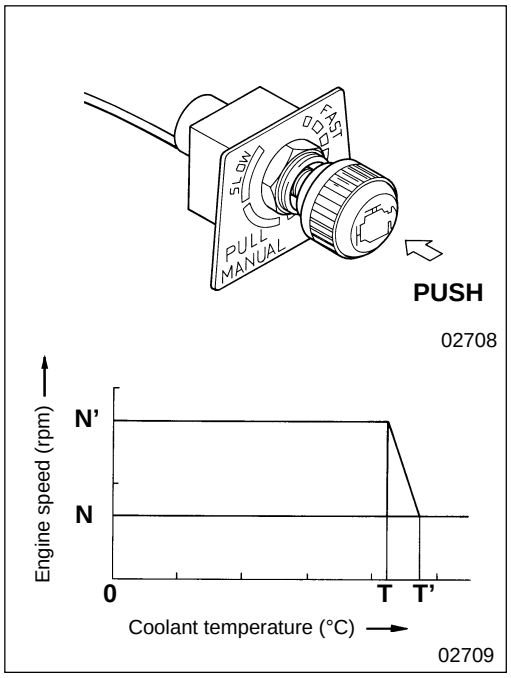

Automatic control (Potentiometer pushed)

- Automatic control is selected when the idling speed adjustment potentiometer **23** is pushed.
- When the coolant temperature is low, the engine's idling speed is automatically increased to shorten the time required for warmup.
- If the coolant temperature increases from **T** to **T'** (see the graph), the engine speed is decreased from **N'** to **N**. thus returning to its standard idling level.

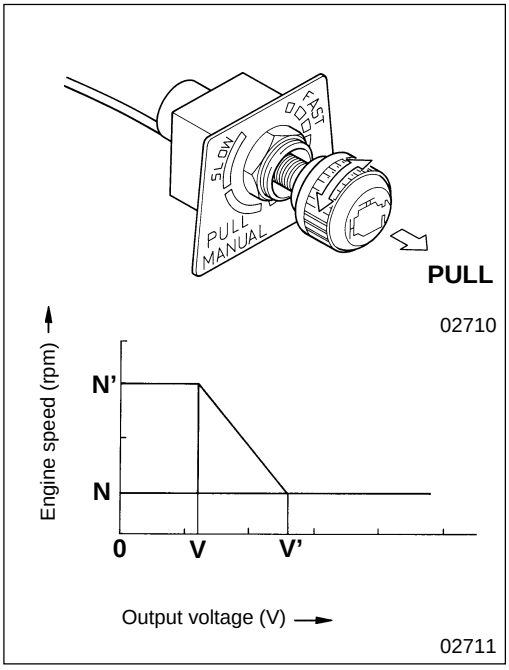

Manual control (Potentiometer pulled)

- When the idling speed adjustment potentiometer **23** is pulled, the automatic mechanism is deselected. The driver can then adjust the idling speed as desired by rotating the potentiometer. (Rotation of the potentiometer causes the potentiometer's output voltage to change accordingly.)
- With the output voltage between **0** and **V**, the engine speed stays at the **N** to **N'** level.
- If the output voltage is increased from **V** to **V'** (see the graph), the engine speed decreases from **N'** until it reaches its standard idling level **N**.

● Emergency vehicle operation function (Used in event of control rack position sensor fault)

Fault in Control rack position sensor 5

In the event of a fault in the control rack position sensor **5**, detection of the control rack position is performed using the sub control rack position sensor **9**. This enables more-or-less normal vehicle operation.

Fault in control rack position sensor 5 and sub control rack position sensor 9

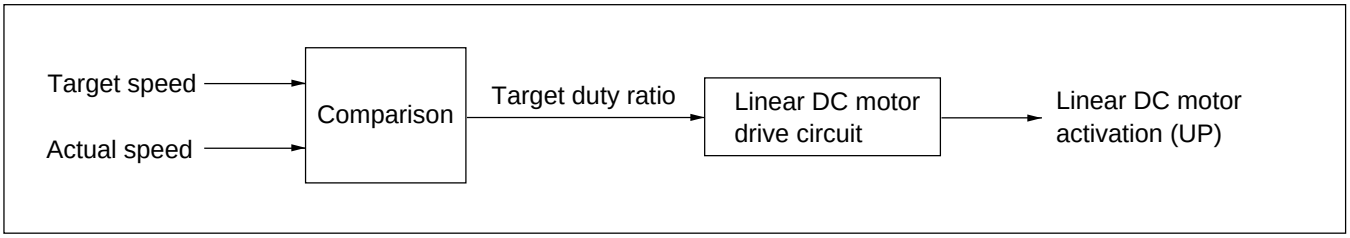

In the event of faults in both the control rack position sensor **5** and sub control rack position sensor **9**, the position of the rack, which is controlled by the linear DC motor **3**, cannot be sensed directly. The fuel injection rate cannot be controlled normally with the engine in this condition. As an emergency measure, therefore, control operations are performed in accordance with engine speed data signals only. For this function, target engine speeds for given degrees of accelerator pedal depression are pre-programmed into the electronic governor control unit **41**. Control is effected as follows:

- The target engine speed is compared with the actual engine speed (this is indicated by the engine speed sensor **10**).
- The target duty ratio is determined in accordance with the result of the comparison. In accordance with the target duty ratio, a drive signal is transmitted to the UP-side (speed increasing side) circuit to effect control over the engine speed. If the target engine speed exceeds the actual engine speed or vice versa, the UP-side circuit's ON time period is altered such that the target engine speed is maintained.

The target duty ratio is the ratio of the time periods during which the linear DC motor's UP-side and DOWN-side (speed decreasing side) circuits are energized. It is calculated as follows:

$$\text{Duty ratio} = \frac{\text{UP-side circuit ON time period}}{\text{UP-side circuit ON time period + DOWN-side circuit ON time period}} \times 100\%$$

CAUTION ⚠

When this function is activated, the warning lamp 15 flashes to indicate that the engine must be inspected immediately. 🕮 **P13-38**

M E M O

● Cruise control function <Manual transmission>

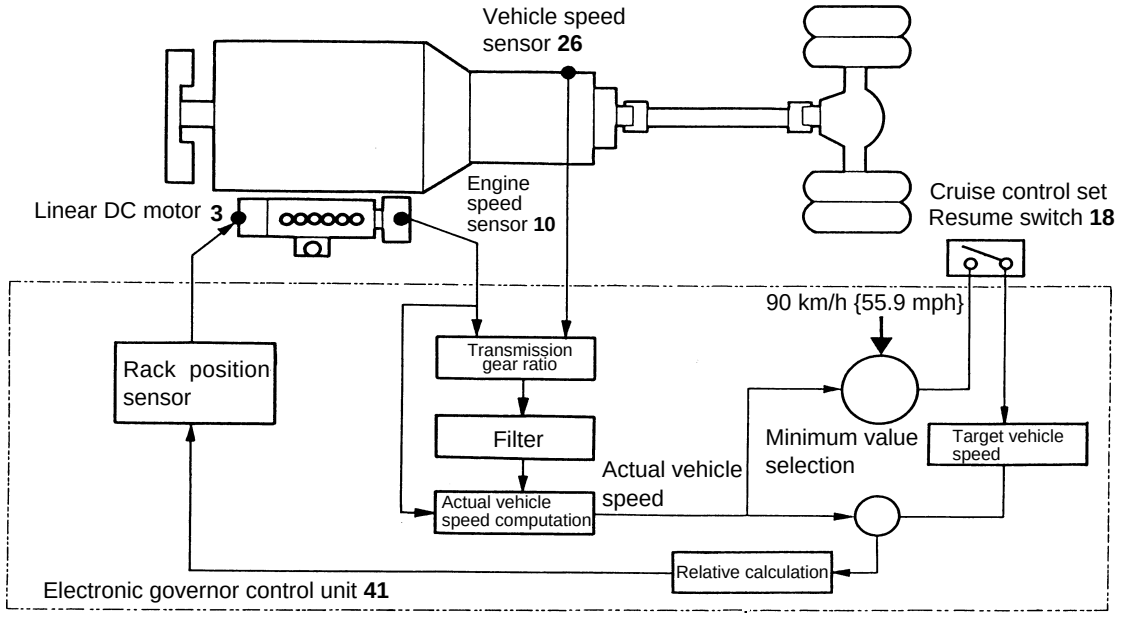

25930

- The transmission gear ratio is calculated based on the information from the vehicle sensor **26** and the engine speed sensor **10**.
- The actual vehicle speed is calculated from the gear ratio and the engine revolution speed.
- The cruise control vehicle speed is set to the minimum of the maximum possible vehicle speed (100 km/h {62 mph}) and the calculated actual vehicle speed.
- By setting the desired vehicle target speed, the difference between the set speed and the actual vehicle speed is calculated and the target rack position is determined.
- This command is sent to the linear DC motor **3** as an operational signal and thus an even vehicle speed can be maintained by controlling the rack position.

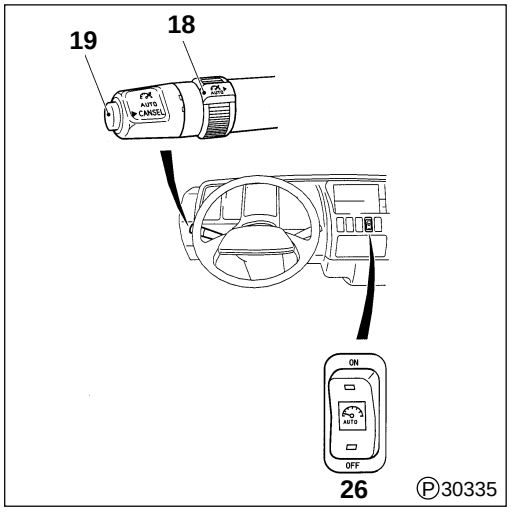

Ⓟ30335

The cruise control should be operated using the cruise control set switch **19** and the resume switch **18** as follows.

CAUTION⚠

The following conditions must be satisfied for cruise control to operate.

- **The vehicle speed must be between 40 to 90 km/h {25 to 55.9 MPH} and the gear shift lever must be in the 4th position or higher.**
- **The cruise control main switch 28 must be ON.**
- **The exhaust brake must be OFF.**
- **The clutch and the brake pedal must be in released.**

Cruise control set resume switch 18

SET side

This switch is used to set and change the cruise vehicle speed.

- Setting the cruise speed
  Set the vehicle speed at your discretion by operating the accelerator pedal.
  Turn cruise control set/resume switch **18** to SET, and the cruise speed will be set to the current vehicle speed when it is released. The indicator lamp  will light up at the same time.
- Reducing the cruise speed
  With cruise control in activation, vehicle speed decreases while cruise control set/resume switch **18** is turned to SET. Release the switch when the vehicle reaches a desired speed to set cruise control at that speed.
- Increasing the cruise speed
  Press the accelerator pedal. When the vehicle reaches a desired speed, turn cruise control set/resume switch **18** to SET and release it immediately. The vehicle continues traveling at the set speed.

RESUME side

To restore or change vehicle speed setting.

- Restoring previous vehicle speed setting when cruise control is deactivated by deceleration, turning and releasing cruise control set/resume switch **18** will restore the previous vehicle speed setting.
- Increasing the set vehicle speed setting with cruise control in activation, turning cruise control set/resume switch **18** to RESUME will increase vehicle speed. When the switch is released, vehicle speed at that time is set as cruise control speed.

Cruise control release <Manual transmission>

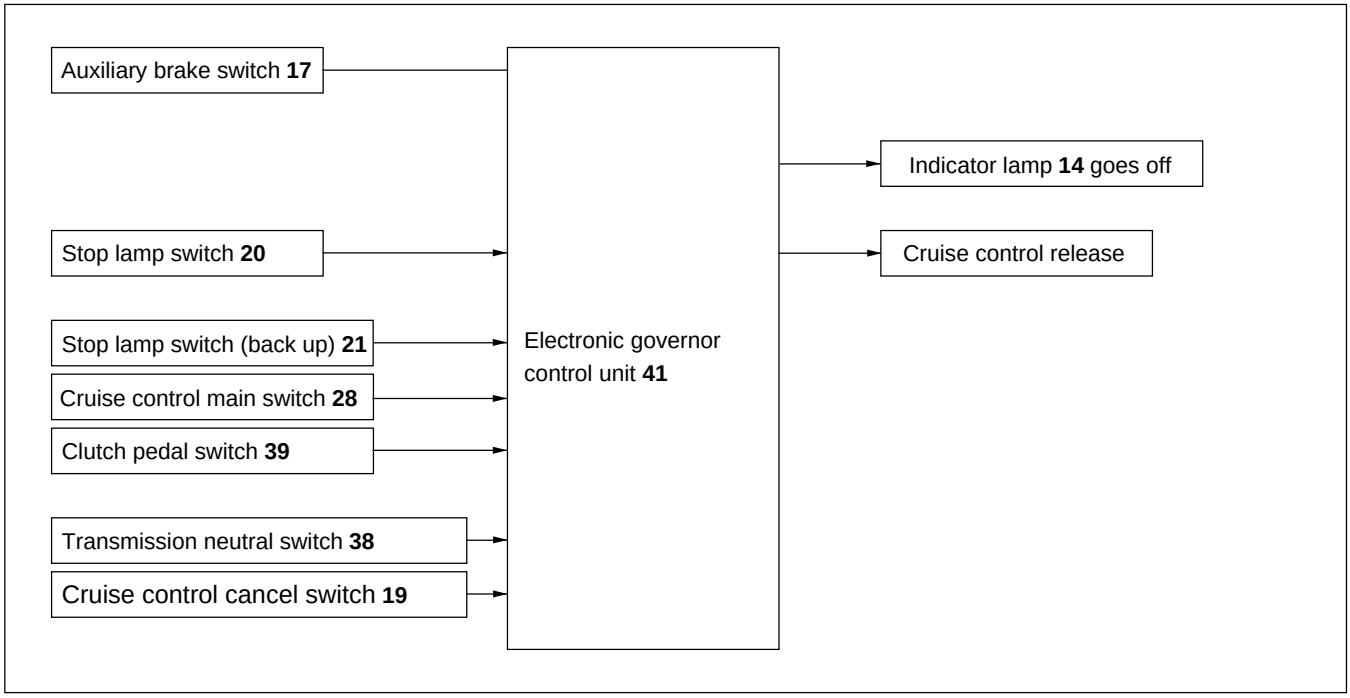

The cruise control is disengaged or temporarily disabled when the switches are in the following conditions.
<Disengaged>
Cruise control main switch **28** OFF
<Temporarily disabled>

- Auxiliary brake switch **17** ON
- Clutch pedal switch **39** ON (Depressing the clutch pedal)
- Transmission neutral switch **38** OFF (Transmission in neutral position)
- Stop lamp switch **21** ON (Depressing the brake pedal)
- Cruise control cancel switch **19** ON
- Vehicle speed goes below 18 mph

● Auxiliary brake control function

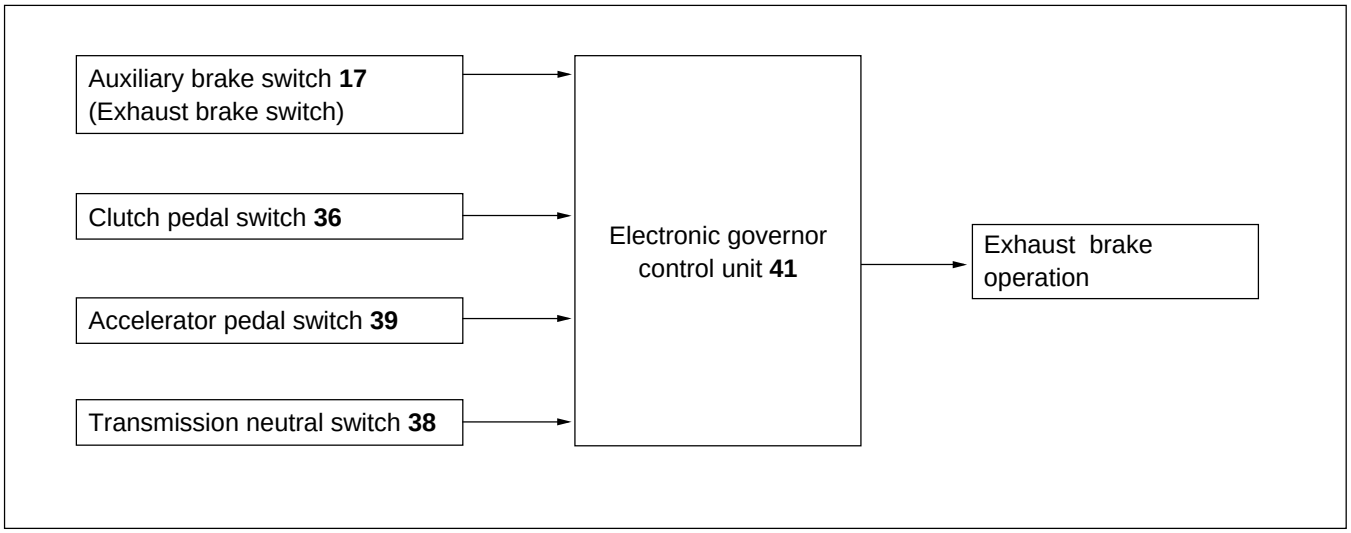

The auxiliary brake control function acts upon the auxiliary braking devices, i.e., the exhaust brake, when the following conditions are satisfied:

- Clutch pedal switch **36**: OFF (clutch pedal released)
- Accelerator pedal switch **39**: ON (accelerator pedal released)
- Transmission neutral switch **38**: ON (transmission not in neutral)

● Injection control function in high ATF temperature condition <Automatic transmission>

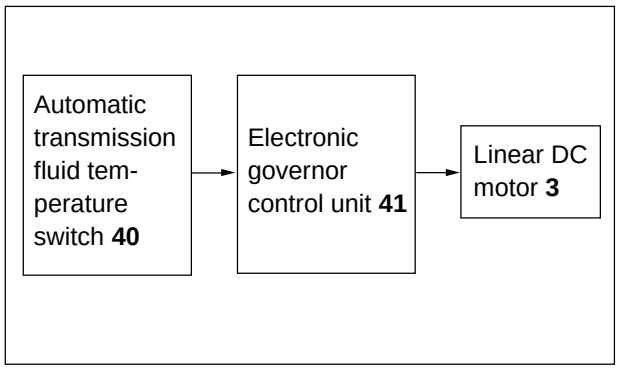

When the temperature of automatic transmission fluid exceeds the normal range, automatic transmission fluid temperature switch **40** turns ON. When electronic governor control unit **41** detects this rack limit switch operation, it controls linear DC motor **3** to reduce the engine output power.

Electronic Governor Control Unit

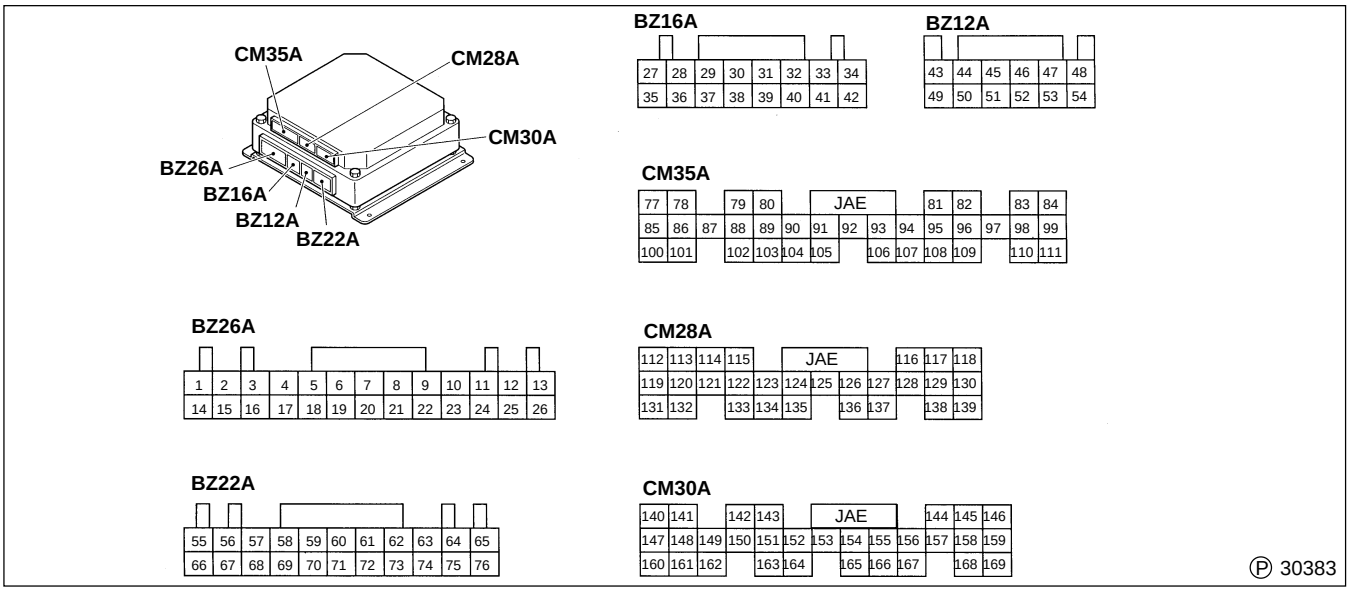

Connector	Terminal	Connected to	
BZ 26A	1	Linear DC motor	⊕
	2		⊖
	3	—	
	4		
	5	Warning lamp	(Red)
	6		(Orange)
	7	DDS-3 (CLK)	
	8	—	
	9		
	10	Memory clear switch	
	11	Diagnosis switch	
	12	Control unit power supply (starter switch terminal M)	
	13	Control unit GND (analog GND)	
	14	Linear DC motor	⊕
	15		⊖
	16	—	
	17		
	18	Indicator lamp	

Connector	Terminal	Connected to	
BZ 26A	19	Pre-stroke cut relay	
	20	DDS-3	(DATA)
	21		(STB)
	22	Accelerator pedal switch	
	23	Start signal	
	24	—	
	25	Control unit power supply (starter switch terminal M)	
	26	Control unit GND	
BZ 16A	27	—	
	28	—	
	29	—	
	30	Idling speed adjustment potentiometer (SIG)	
	31	Accelerator pedal position sensor II (SIG)	
	32	Boost temperature sensor (SIG)	
	33	—	
	34	—	
	35	Idling speed adjustment potentiometer (+5V)	
	36	—	

Connector	Terminal	Connected to	
BZ 16A	37	—	
	38	Idling speed adjustment potentiometer (GND)	
	39	Accelerator pedal position sensor II (GND)	
	40	—	
	41		
	42		
BZ 12A	43	Boost pressure sensor (SIG)	
	44	Accelerator pedal position sensor I	(SIG)
	45		(+5V)
	46	Engine speed sensor (SIG)	
	47	Backup engine speed sensor (SIG)	
	48	—	
	49	Boost pressure sensor (GND)	
	50	Accelerator pedal position sensor I (GND)	
	51	Boost pressure sensor (+5V)	
	52	Engine speed sensor (GND)	
	53	Backup engine speed sensor (GND)	
	54	—	

Connector	Terminal	Connected to		Connector	Terminal	Connected to		Connector	Terminal	Connected to	
BZ 22A	55	—		CM 35A	94	—		CM 28A	132	Tachometer out put	(SIG)
	56				95				133		(SIG)
	57	Control rack position sensor	(OSC)		96				134	Vehicle speed sensor (SIG)	
	58		(MDL)		97				135	Vehicle speed sensor (SIG)	
	59		(GND)		98	MUT-II (K-line)			136	Tachometer output	(GND)
	60		(SHIELD)		99	—			137		(GND)
	61	—			100	Control unit GND			138	—	
	62	Pre-stroke position sensor	(OSC)		101	(power GND)			139		
	63		(MDL)		102	—		CM 30A	140		
	64	Pre-stroke actuator ⊖			103	Stop lamp switch			141		
	65	Pre-stroke cut relay (+24V)			104	Stop lamp switch			142		
	66	Control unit GND			105	Sub control rack position sensor	(OSC)		143	Accelerator pedal position sensor II (+5V)	
	67	—			106		(MDL)		144	Fuel injection rate adjustment resistor (GND)	
	68	Control rack position sensor	(OSC)		107		(GND)		145	—	
	69		(MDL)		108		(SHIELD)		146		
	70		(GND)		109	Cruise control main relay			147		
	71		(SHIELD)		110	Cruise control resume switch			148		
	72	—			111	Cruise control set switch			149		
	73	Pre-stroke position sensor	(GND)	CM 28A	112	—			150		
	74		(SHIELD)		113	Exhaust brake switch			151		
	75	Pre-stroke actuator ⊕			114	—			152		
	76	Pre-stroke power supply (GND)			115				153		
CM 35A	77	—			116				154	Transmission neutral relay	
	78				117				155	—	
	79				118				156		
	80				119	Fuel injection rate adjustment resistor (SIG)			157	Clutch pedal switch	
	81				120	—			158	—	
	82				121				159		
	83				122				160		
	84				123				161		
	85	Exhaust brake relay			124				162		
	86				125	Coolant temperature sensor (SIG)			163		
	87	—			126	—			164		
	88				127				165	Cruise control cancel switch	
	89				128				166	—	
	90				129	Accelerator relay			167	Idle up prohibit switch	
	91				130	—			168	—	
	92	Rack limit switch			131				169		
	93	—									

Electronic governor control unit

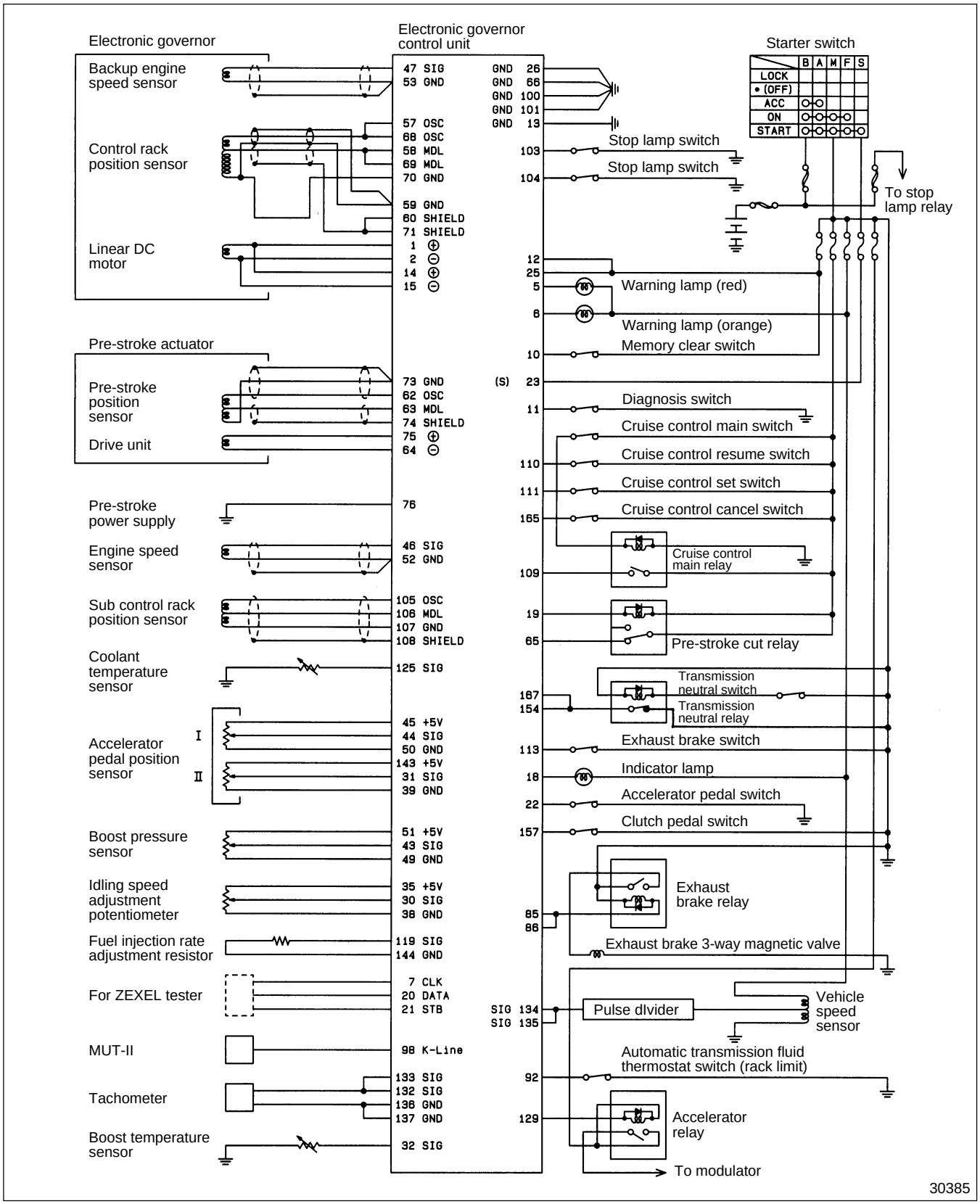

Engine speed sensor

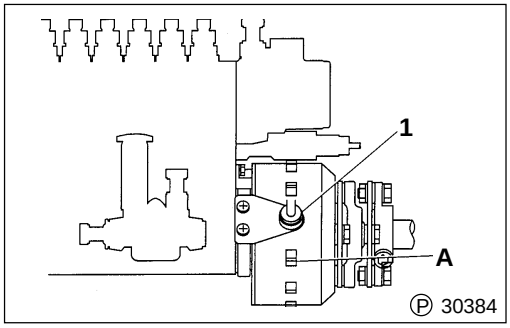

- The engine speed sensor **1** is a pickup type. It converts the rotation speed of a injection pump into electric signals.
- Signals generated by the engine speed sensor are fed to the electronic governor control unit which uses them as correction values in its calculation of the target pre-stroke position.

A : Timer housing protrusion

Coolant temperature sensor

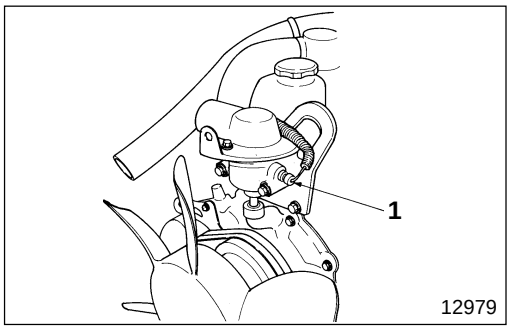

- The coolant temperature sensor **1** is a thermistor type. It converts the engine coolant temperature into electric signals.
- Signals generated by the coolant temperature sensor are fed to the electronic governor control unit which uses them as correction values in its calculation of the target rack position.

Sub control rack position sensor

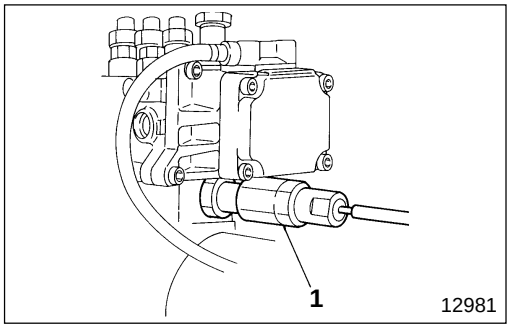

- The sub control rack position sensor **1** provides backup detection of the control rack position in the event of a fault in the control rack position sensor.
- The sub control rack position sensor **1** converts the degree of control rack movement into electric signals.
- Signals generated by the sub control rack position sensor are fed to the electronic governor control unit which uses them as correction values in its calculation of the target rack position.

Boost pressure sensor

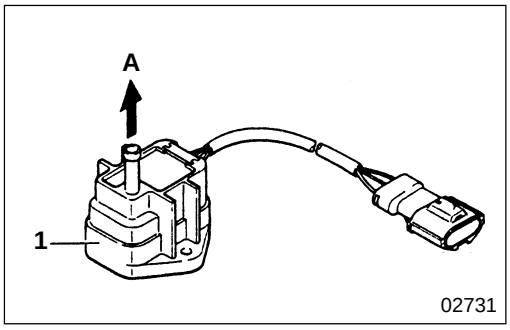

The boost pressure sensor **1** feeds boost pressure information to the electronic governor control unit. During turbocharged engine operation, it enables the full rack signal (maximum fuel injection rate value) characteristics to be selected by the control unit in accordance with the engine speed.

A : To intake manifold

Boost temperature sensor

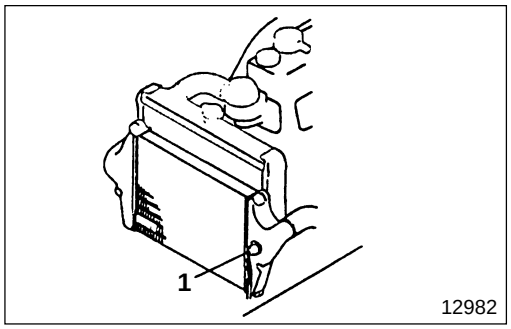

- Boost temperature sensor **1** is a thermistor type that converts the intake air temperature, immediately after its passage through the intercooler, into an electric signal.
- This electric signal is transmitted to the pre-stroke control unit as the boost temperature signal, which is used as the correction value by the electronic governor control unit to determine the desired pre-stroke position value.

Vehicle speed sensor

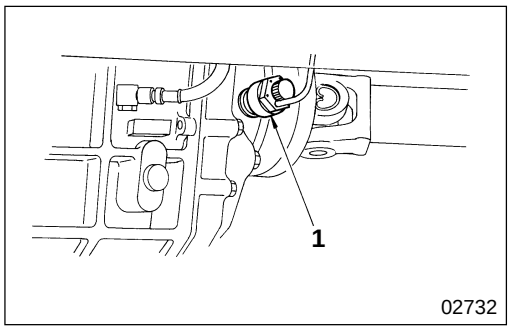

The vehicle speed sensor **1** not only detects the vehicle speed but it also sends the vehicle speed information to the electronic governor control unit for cruise control use.

Accelerator pedal position sensor and accelerator pedal switch

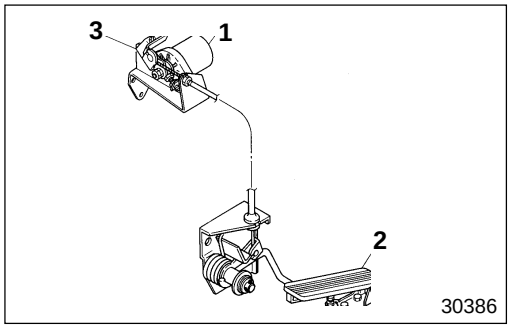

- The accelerator pedal position sensor **1** provides the electronic governor control unit with information on the degree to which the accelerator pedal **2** is depressed.
- The accelerator pedal switch **3** detects whether the accelerator pedal is currently depressed or released

Pre-stroke position sensor

P13 - 13

Idling speed adjustment potentiometer

P13 - 14

Linear DC motor

P13 - 32

Control rack position sensor

P13 - 32

Backup engine speed sensor

P13 - 33

Pre-stroke control injection pump main unit

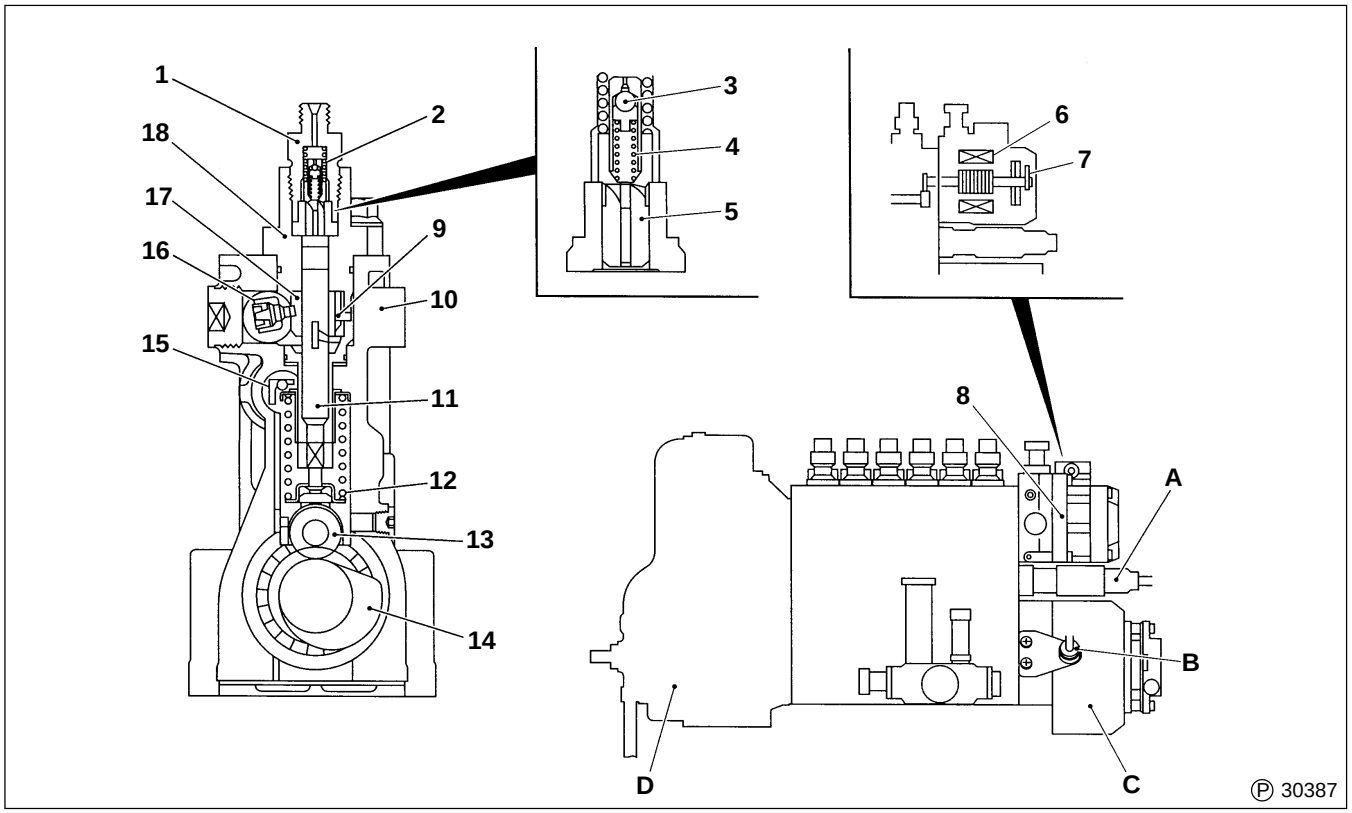

1 Delivery valve holder
2 Delivery valve spring
3 Ball
4 Spring
5 Delivery valve
6 Drive unit
7 Pre-stroke position sensor
8 Pre-stroke actuator
9 Pin
10 Pump housing
11 Plunger
12 Plunger spring
13 Tappet
14 Camshaft
15 Control rod
16 Timing rod
17 Timing sleeve
18 Plunger barrel

A : Sub-control rod position sensor
B : Engine speed sensor
C : Mechanical timer
D : Electronic governor

- The injection pump is provided with a mechanism that enables variation of the plunger pre-stroke.
- Variation of the plunger pre-stroke enables the creation of air/fuel mixture and spray conditions that are optimally suited to combustion. The overall benefits are higher engine torque and cleaner exhaust emissions than are possible with a conventional injection pump.

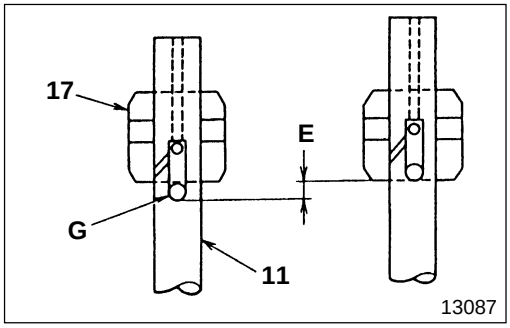

Pre-stroke

The term “pre-stroke” refers to the stroke dimension **E** of a plunger **11** from the plunger’s bottom dead center position to the point at which its fuel inlet hole **G** is closed by the timing sleeve **17** and fuel feed begins. This stroke dimension is constant in a conventional injection pump.

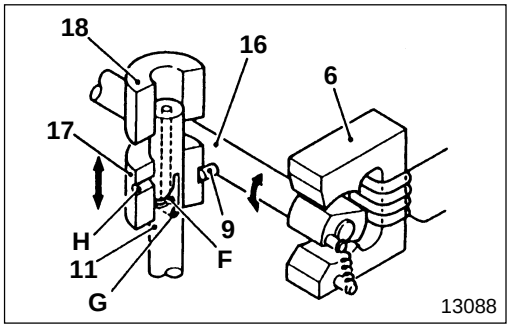

Variable pre-stroke mechanism

F : Lead
G : Inlet hole
H : Outlet hole

- In contrast to the fixed plunger barrel arrangement of a conventional injection pump, each plunger barrel **18** in the pre-stroke control type injection pump incorporates a vertically moveable timing sleeve **17**.
- Movement of the timing sleeve is effected by the timing rod **16**, pin **9**, and drive unit **6**.
- When the drive unit **6** rotates the timing rod **16**, the pin **9** moves the timing sleeve **17** up or down accordingly.
- Since the timing sleeve **17** incorporates a fuel outlet hole **H**, the pre-stroke changes in accordance with the movement of the timing sleeve.

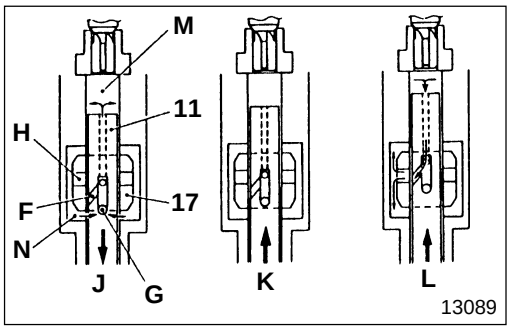

Fuel feed action

J : Fuel intake
K : Start of pressurization
L : End of pressure feed

- As the plunger **11**, moves downward from its top dead center position and its inlet hole **G** opens, fuel flows into the pressure chamber **M** owing to the vacuum pressure created by the plunger’s downward movement and the fuel pressure produced by the feed pump.
- When the plunger **11** moves upward but its lift dimension is still small, the fuel in the pressure chamber **M** escapes into the sump **N** through the inlet hole **G** in the plunger. Thus, the pressure in the pressure chamber does not increase.
- As the plunger **11** moves further upward and the inlet hole **G** is closed by the timing sleeve **17**, the fuel starts to be pressurized. The pressure increases as the plunger moves upward, and the injection pump starts to feed the pressurized fuel to each injector.
- When the lead **F** in the plunger **11** becomes aligned with the outlet hole **H** in the timing sleeve **17**, the fuel in the pressure chamber **M** returns to the sump **N**, thus completing the pressure feed cycle.
- Adjustment of the injected fuel volume is achieved by rotation of the plunger **11**, which alters the position of the outlet hole **H** in the timing sleeve **17** relative to the lead **F** in the plunger.

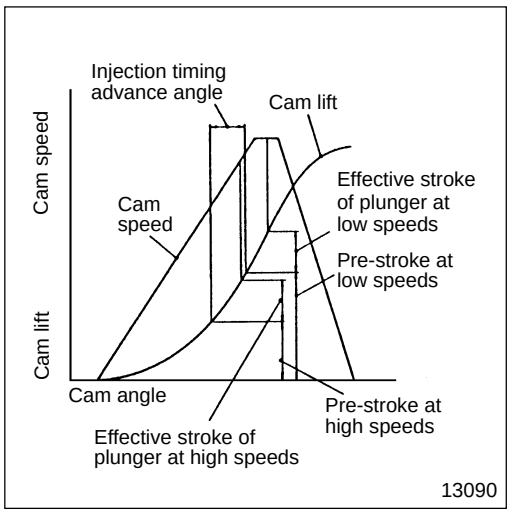

Fuel injection timing and fuel injection characteristics

- Changes in the position of the timing sleeve **17** cause concomitant changes in the pre-stroke, which in turn alter the fuel injection timing.
- A decrease in the pre-stroke causes the fuel inlet hole **G** in the plunger **11** to close earlier such that the fuel injection timing is advanced.
- This arrangement provides highly responsive control over the injection timing and thus enhances the engine's cold startability.

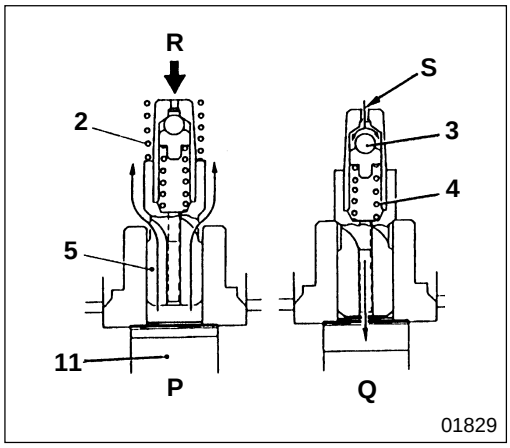

Delivery valve

P : Start of pressure feed
Q : End of pressure feed

- The delivery valve **5** keeps constant the residual pressure **R** in the injection pipe at all engine speeds. This operation prevents the generation of bubbles in the fuel (this is known as "cavitation") and thus enables fuel injection at a high pressure.
- When the plunger **11** moves upward and the pressure of the fuel pushed by the plunger overcomes the residual pressure **R** in the injection pipe and the preset force of the delivery valve spring **2**, the delivery valve is pushed upward and delivery of the pressurized fuel begins.
- As soon as fuel delivery is complete, the fuel in the injection pipe rapidly returns to the plunger side and the delivery valve closes.
- Surplus fuel slowly returns through the orifice **S**, thus reducing the pressure in the injection pipe.
- When the preset force of the spring **4** in the delivery valve **5** is exactly offset by the pressure in the injection pipe, the ball **3** closes the orifice **S**, thus ensuring that the residual pressure **R** in the injection pipe remains constant.

M E M O

Electronic Governor

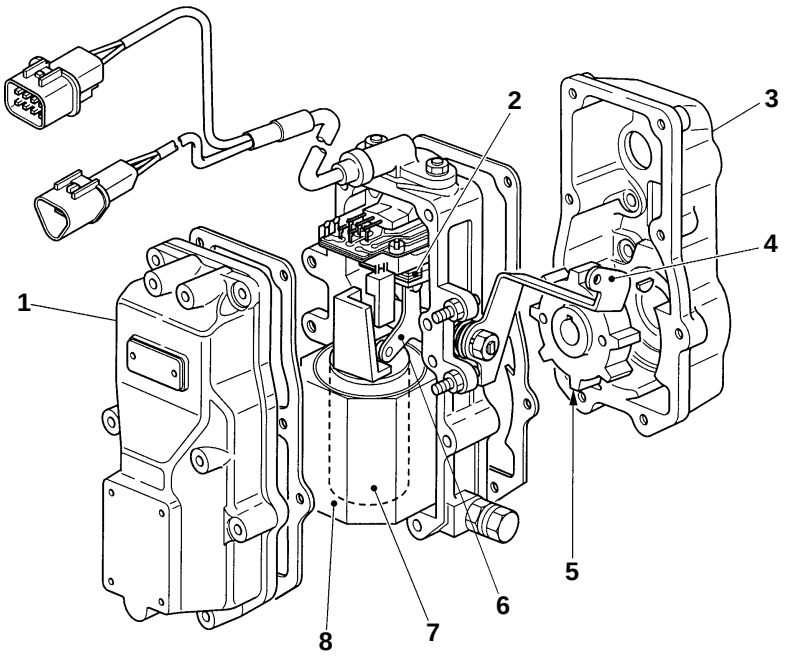

Ⓟ 30548

1 Cover
2 Control rack position sensor
3 Housing
4 Emergency engine stop lever
5 Sensing gear
6 Link
7 Linear DC motor
8 Coil assembly

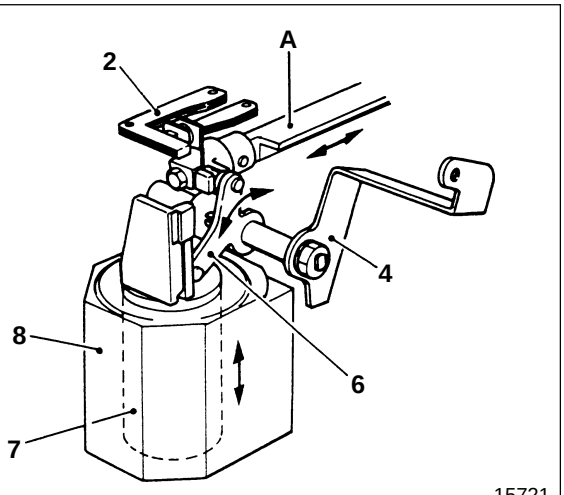

15721

● Linear DC motor

The linear DC motor **7** moves the coil assembly **8** vertically in accordance with signals from the electronic governor control unit. Via the link **6**, this movement is transmitted to the control rack **A**, which moves longitudinally to increase and decrease the fuel quantity.

● Control rack position sensor

The control rack position sensor **2** senses whether the control rack **A** is moved to the correct position by the linear DC motor **7**. In the event of a discrepancy between the actual control rack position and the target control rack position (this is determined by the electronic governor control unit), the control unit instructs the linear DC motor to perform a corrective movement.

● **Emergency engine stop lever**

The emergency engine stop lever **4** is connected to the link **6**. Via a cable, it enables the link to be moved from the driver's seat. In the event of a system fault that prevents the engine from being stopped normally, operation of the emergency engine stop lever forces the control rack **A** to move to the position at which fuel injection is terminated. This operation takes place irrespective of the position of the linear DC motor **7**.

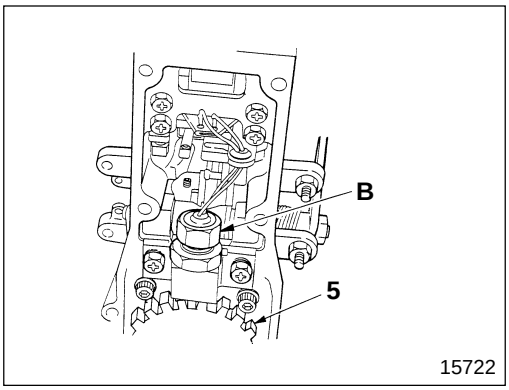

● **Backup engine speed sensor**

The backup engine speed sensor **B** is fitted inside the governor. It converts the rotation speed of the sensing gear **5** into electric signals and feeds the signals to the electronic governor control unit to provide an indication of the engine speed.

Feed Pump

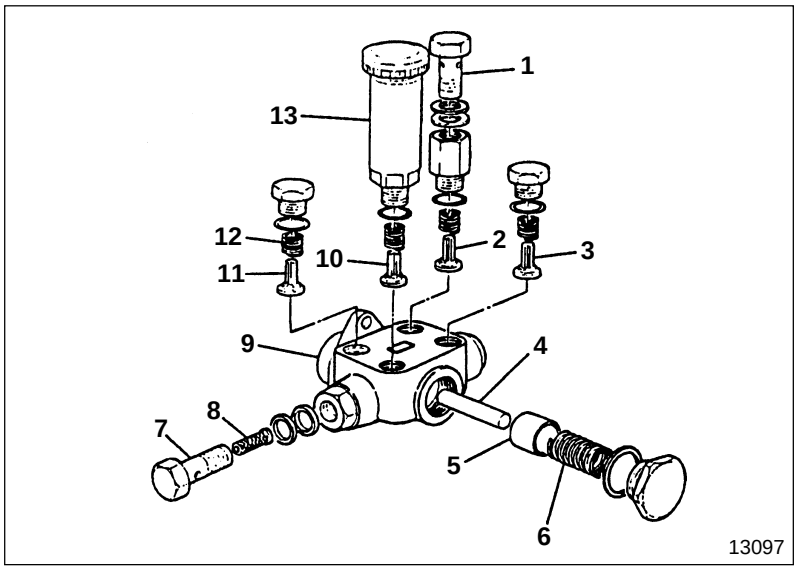

1 Eye bolt at fuel outlet
2 Check valve
3 Check valve
4 Push rod
5 Piston
6 Piston spring
7 Eye bolt at fuel inlet
8 Gauze filter
9 Feed pump housing
10 Check valve
11 Check valve
12 Check valve spring
13 Priming pump

- The feed pump is a double-action type pump which, with four check valves operating, sucks and discharges fuel during both strokes of pistons **5**.
- Push rod **4** makes contact with the injection pump camshaft directly, moving piston **5**.
- Priming pump **13** can be manually operated, when the injection pump is not operating, to suck up fuel and thus can be used for air bleeding.
- Gauze filter **8** eliminates large foreign particles from the fuel sucked up from the fuel tank to prevent clogging of the feed pump. This gauze filter must be cleaned with diesel fuel periodically.

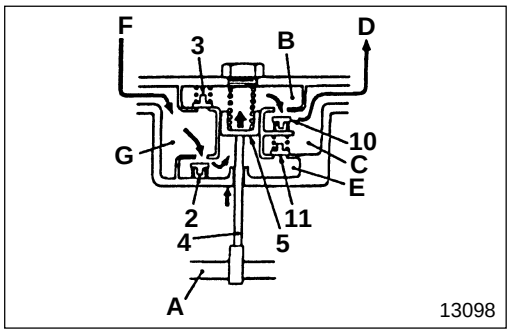

The rotation of injection pump camshaft **A**, pushes up push rod **4** and piston **5**, and the pressure in inner chamber **B** increases. This closes check valve **3**, and check valve **10** opens to let the fuel in inner chamber **B** flow through outer chamber **C** to fuel filter **D**.
When the pressure in inner chamber **E** decreases, check valve **11** closes, and check valve **2** opens to let fuel flow from fuel tank **F** through outer chamber **G** to inner chamber **E**.

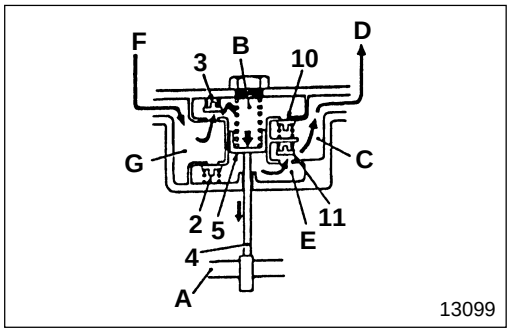

When injection pump camshaft **A** rotates further, it pushes down push rod **4** and piston **5**, and the pressure in inner chamber **E** increases. This closes check valve **2**, and check valve **11** opens to let the fuel in inner chamber **E** flow through outer chamber **C** to fuel filter **D**.
When the pressure in inner chamber **B** decreases, check valve **10** closes, and check valve **3** opens to let fuel from fuel tank **F** flow through outer chamber **G** to inner chamber **B**.

Automatic Timer

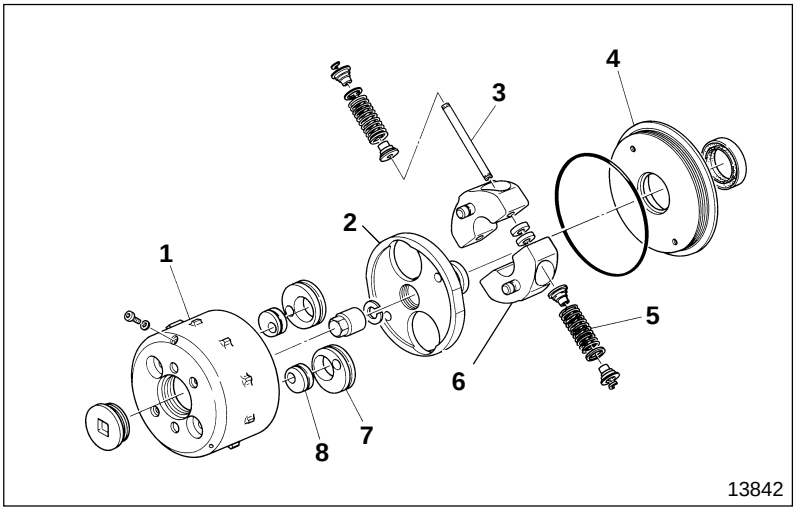

1 Timer housing
2 Timer holder
3 Pilot pin
4 Cover
5 Timer spring
6 Flyweight
7 Eccentric cam (Large)
8 Eccentric cam (Small)

- The mechanical type automatic timer changes fuel injection timing automatically when the engine revolution reaches the specified rate.
- The automatic timer controls the retard of fuel injection timing. The pre-stroke control unit controls the advance of fuel injection timing.

Injection Nozzle

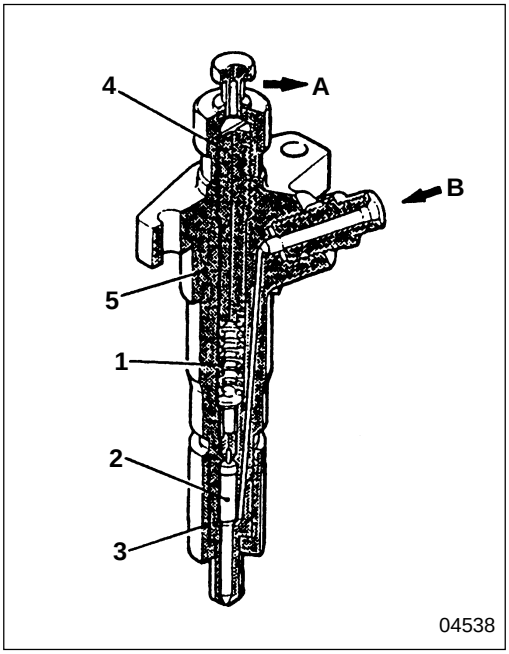

1 Nozzle spring
2 Needle valve
3 Nozzle
4 Adjusting screw
5 Nozzle holder

A : Excess fuel
B : Supply of fuel

Fuel delivered from the injection pump enters the nozzle holder and, when the specified pressure is reached, the fuel pressure overcomes the repercussive force of the nozzle spring to push out the needle valve, allowing fuel to spray out the opening at the tip of the nozzle into the cylinder.
Part of the high-pressure fuel lubricates the needle valve and returns through the fuel return pipe to the fuel tank.

Possible causes \ Symptoms		Engine will not start	Engine difficult to start	Engine knocks	Unstable engine output	Insufficient engine output	Engine maximum speed too high	Unstable engine idling	Engine stops soon after starting	Engine does not reach maximum speed	Engine will not stop	Accelerator pedal too stiff	Defective fuel supply	Warning lamp illuminates	Remarks
Defective pre-stroke injection pump system														○	
Injection pump proper	Defective injection pump proper	○	○	○	○	○	○	○	○	○	○				*
	Defective mounting (poorly adjusted injection timing)		○		○	○		○							
	Defective overflow valve operation	○	○			○		○					○		
Defective pre-stroke actuator				○	○	○		○							
Fuel feed pump	Gauze filter clogged	○	○			○		○	○				○		
	Check valve not operating	○											○		
	Sticky piston	○											○		
	Sticky push rod	○											○		
	Defective check valve operation	○	○		○			○					○		
	Piston worn		○		○			○					○		
Defective governor				○	○	○	○	○	○	○	○				*
Injection nozzles	Sticky needle valve	○													
	Valve opening pressure too low	○								○					
	Blocked injection orifice	○		○		○		○		○					
	Poor airtightness in nozzle	○		○		○		○		○					
	Valve opening pressure too high			○											
	Broken spring				○	○									
	Defective sliding action in needle valve				○										
	Defective valve opening pressure				○										
	Weakness/deterioration in spring							○							
Fuel filter	Clogged filter	○			○			○	○						
Fuel tank empty		○													
Fuel pipes blocked and/or fuel leaking from connections		○													
Air or water in fuel system		○			○			○	○						
Low-quality fuel in use			○	○		○		○							

* : Must be serviced by ZEXEL service station.

Possible causes \ Symptoms		Engine will not start	Engine difficult to start	Engine knocks	Unstable engine output	Insufficient engine output	Engine maximum speed too high	Unstable engine idling	Engine stops soon after starting	Engine does not reach maximum speed	Engine will not stop	Accelerator pedal too stiff	Defective fuel supply	Warning lamp illuminates	Remarks
Engine control	Incorrect accelerator pedal stopper bolt adjustment					○				○					
	Rusted accelerator pedal arm											○			
	Poorly installed accelerator control cable											○			
	Defective sliding motion in accelerator control cable											○			
	Defective accelerator pedal position sensor													○	
Cracked fuel pipe													○		
Leaky fuel tank													○		
Incorrect oil viscosity			○												Gr12
Incorrect valve clearance			○					○							Gr11
Defective cylinder head gasket			○					○							Gr11
Wear and/or carbon deposits on valve and valve seat			○					○							Gr11
Weakness/deterioration in valve spring			○					○							Gr11
Worn/damaged piston ring(s)			○					○							Gr11
Worn/damaged piston ring groove(s)			○					○							Gr11
Worn piston and cylinder liner			○												Gr11
Cooling system malfunctioning			○					○							Gr14
Defective starter switch			○												Gr54

Fault Diagnosis Function

- While the starter switch is in the ON position, the fault diagnosis function continuously monitors relevant sensors for faults.
  In the event that a fault is detected, the function illuminates a warning lamp (red or orange) in the meter cluster to alert the driver, memorizes the location of the fault, and switches to a backup mode.
- The memorized fault location can be read as a diagnosis code using an MUT-II or the diagnosis switch.

Warning lamp illumination

	(Orange)	(Red)
1. Safety-critical error (vehicle must not be driven)	OFF	ON
2. Non-safety-critical error (vehicle can be driven despite poor control feeling)	ON	OFF

CAUTIONS

- **The fault diagnosis function requires a battery voltage of 12 V or higher.**
- **In the event of fault detection, check the harnesses and connectors for looseness. Before undoing any connector, turn the starter switch to the LOCK position and wait for 20 seconds.**
- **After rectifying a fault, delete the fault code using the MUT-II or memory clear switch.**
- **As a general rule, inspections should be performed with the starter switch in the LOCK position. If any inspection requires that the starter switch be in the ON position, be careful to avoid short circuits between connector terminals and with the vehicle body.**
- **All component resistances shown in this manual assume a temperature range of 10 to 35°C {50 to 95°F}. In practice, component values may not comply with standard values owing to temperature effects and/or to inaccuracy in the test instrument.**
- **After the rectification of a fault, the system's ability to return to normal operation automatically depends upon the diagnosis code, i.e., the fault location. When the system returns to normal operation, the warning lamp goes out.**
- **When the system returns to normal operation after the rectification of a fault, the diagnosis code remains stored in electronic governor control unit.**

Inspection Procedure

Inspection of the electronic governor and prestroke control injection pump system can be performed most effectively using an MUT-II. Types of system inspection can, in accordance with fault systems and diagnosis codes, be broadly classified as follows:

- Inspections based on diagnosis codes stored in the control unit
- Inspections based on symptoms
- Inspections of intermittent faults

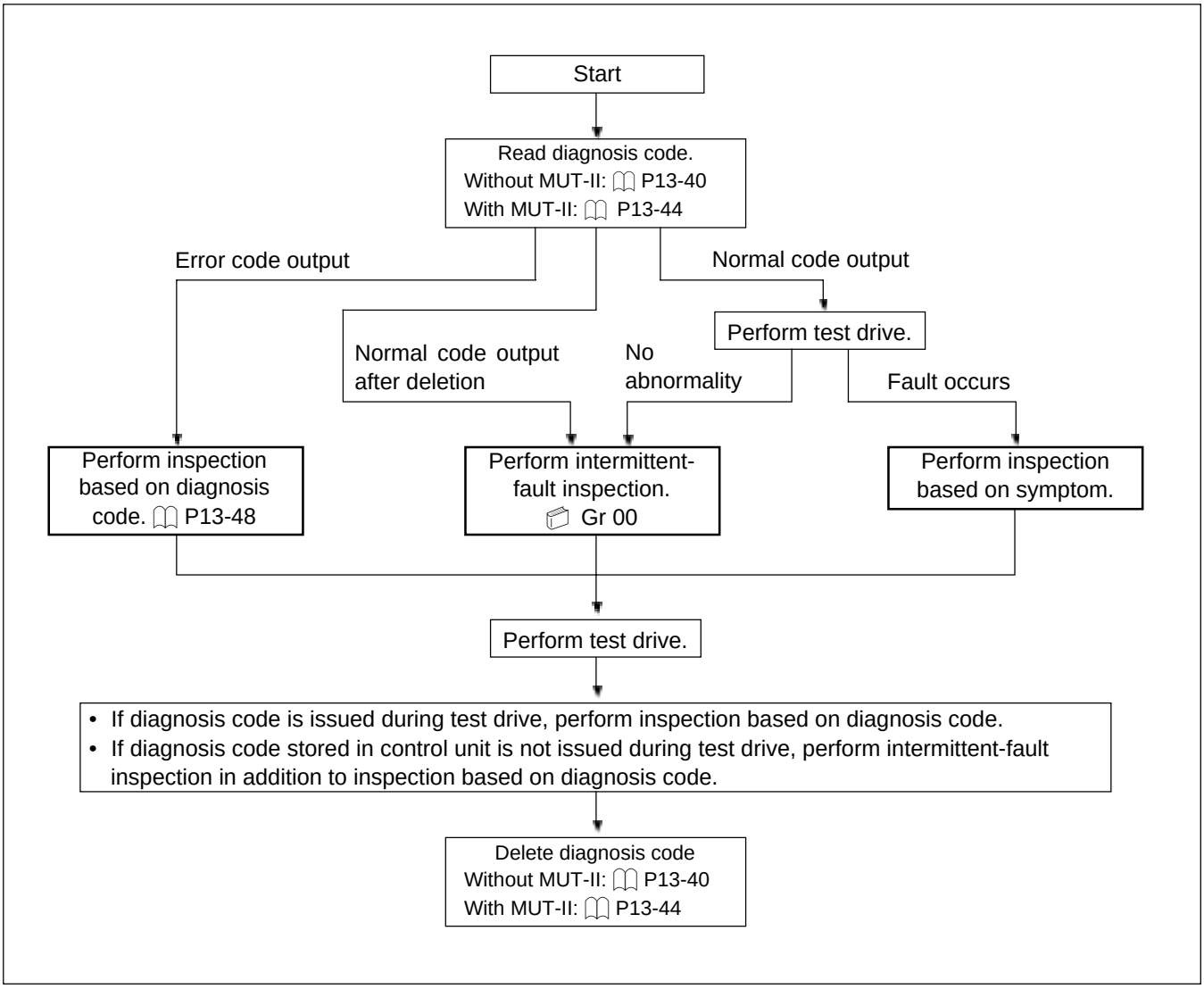

READING AND ERASING DIAGNOSIS CODES

Without MUT-II

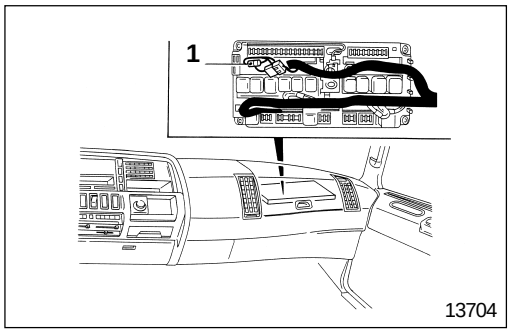

Current diagnosis code

- Turn ON the starter switch.
- Disconnect the diagnosis switch **1**.

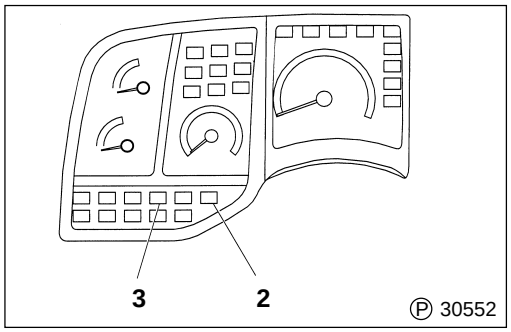

- The diagnosis code will be indicated by flashes of the warning lamp (orange) **2** or warning lamp (red) **3**.

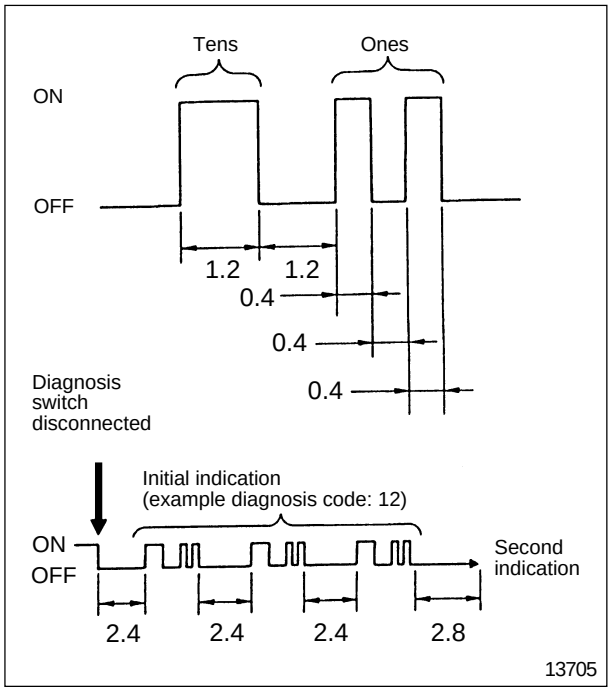

Diagnosis code indication

- Diagnosis codes are indicated by the numbers and durations of the warning lamp flashes.
  - Flashes for units of ten and units of one have different lengths, as follows:
    Units of ten: 1.2 seconds
    Units of one: 0.4 second
  - For each diagnosis code, units of ten are given first, followed by units of one. For a code that has no units of ten, only units of one are given.
- Each diagnosis code is indicated three times. If there are no new codes, the sequence is then repeated from the beginning with each code indicated three times.
- When the diagnosis switch **1** is connected, the control unit immediately stops the indication of codes.

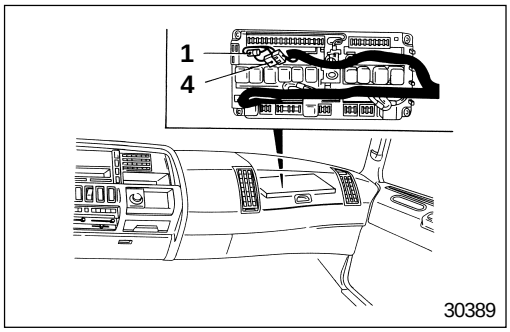

Past diagnosis codes

With the diagnosis switch **1** disconnected, disconnect the memory clear switch **4** after reading the current diagnosis code(s). The warning lamp will begin to flash again, this time to indicate any past diagnosis code(s). Verify the fault location in accordance with the code(s).

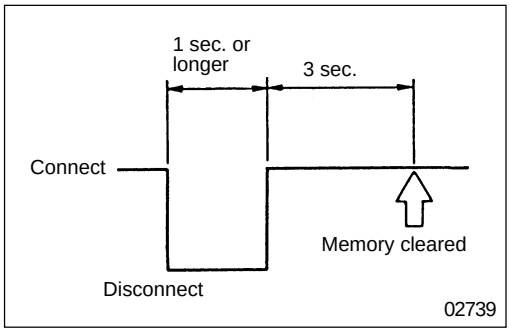

Diagnosis code eraser

To erase all stored diagnosis codes from the control unit, disconnect and reconnect the memory clear switch **4**.

CAUTION ⚠

- **Stored codes are cleared only by disconnection and reconnection of the memory clear switch 4.**
- **To prevent the memory contents from being cleared after the indication of stored codes, turn OFF the starter switch with the memory clear switch 4 disconnected then connect the memory clear switch.**

READING AND ERASING DIAGNOSIS CODES

Diagnosis codes table

Diagnosis code	Fault location	Warning lamp	Electronic control unit countermeasure(s) in the case of failure (back-up mode)	Drive ability
01	Normal	—	—	○
03	Pre-stroke actuator learning function	Orange	Provides control with “0” as correction value.	○
06	Sub-control rack position sensor	Orange	Normal control using the main control rack position sensor	○
11	Governor servo	Red	*1 Engine stopped by the pull-down function.	×
12	Pre-stroke servo	Orange	Pre-stroke control stop engine revolution speed limit (approximately 1800 rpm)	△
13	Pre-stroke sensor	Orange	Pre-stroke control stop engine revolution speed limit (approximately 1800 rpm)	△
14	Back-up engine speed sensor	Orange	Control using the main engine speed sensor	○
15	Engine speed sensor	Orange	Calculate the engine revolution speed from the pulse count of the back-up engine speed sensor.	○
14+15	Both the back-up engine sensor and the main engine speed sensors are faulty upon start-up.	Red	Do not start the engine.	×
16	Accelerator pedal position sensor II	Orange	Control using the accelerator pedal sensor I	○
21	Water temperature sensor	Orange	Set the water temperature to 80 °C {176°F}.	○
22	Control rack position sensor	Orange	Switch to the sub-control rack position sensor control.	△
24	Accelerator pedal position sensor I	Orange	Control using the accelerator pedal position sensor II.	○
24+16	Both accelerator pedal position sensor I and accelerator pedal position sensor II are faulty	Red	Set the maximum accelerator depression angle to 30 degrees even if the accelerator pedal is depressed.	△
25	Vehicle speed sensor	Orange	Cruise control disabled.	○
31	Idling adjustment volume	Orange	Set to auto idling.	○
32	Boost pressure sensor	Orange	Set the boost pressure to 0 kpa {0 mmHg, 0 in. Hg}.	△*2
33	RAM (ECU internal memory circuit)	Red	Do not start the engine.	×
41	Boost air temperature sensor	Orange	Normal control assuming the boost temperature is 80°C {176 °F}	○
42	Cruise cotrol release switch	Orange	Cruise control disabled.	○
45	Reverse engine operation	Orange	*1 Engine stopped by the pull-down function.	×*2
65	Accelerator switch	Orange	Limited accelerator depressing angle (Approximately 30%)	○

*1 : The pull-down function indicates the rack pull-back action. In the event of an engine over-run or severe accident, the rack is pulled back immediately to the no-injection direction in order to protect the engine.

*2 : Driveable if the starter switch is turned OFF once and then restarted again.

○ : Driveable
△ : Back-up mode driving possible
× : Undriveable

M E M O

READING AND ERASING DIAGNOSIS CODES

With MUT-II

Special tools

Location	Tool name and shape	Part No.	Application
—	MUT-II PLUS 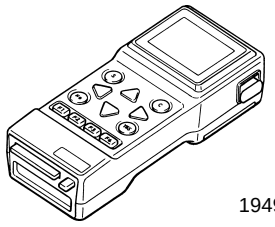 19492	MB991496-A	Inspection of electronic governor and pre-stroke control injection pump system
—	MUT Communication Harness 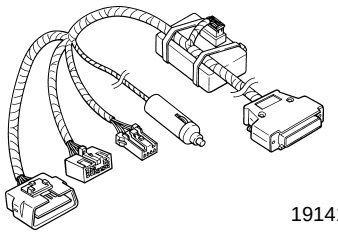 19141	MK327601	
—	ROM Pack (MRT-E4) 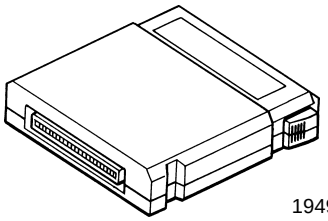 19493	MK327927	

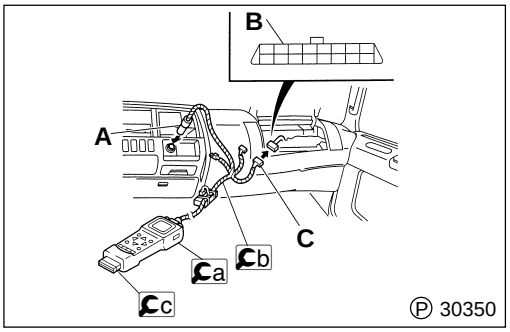

Connecting the MUT-II

- Turn the starter switch to the LOCK position.
- Connect the Cb MUT Communication Harness to the Ca MUT-II, and insert the Cc ROM Pack.
- Plug connector **A** into the cigarette lighter socket.
- Fit connector **C** onto MUT connector **B** (16-pin) in the relay box.

NOTE

Instructions for operation of the MUT-II are given in the separate MUT-II Reference Manual.

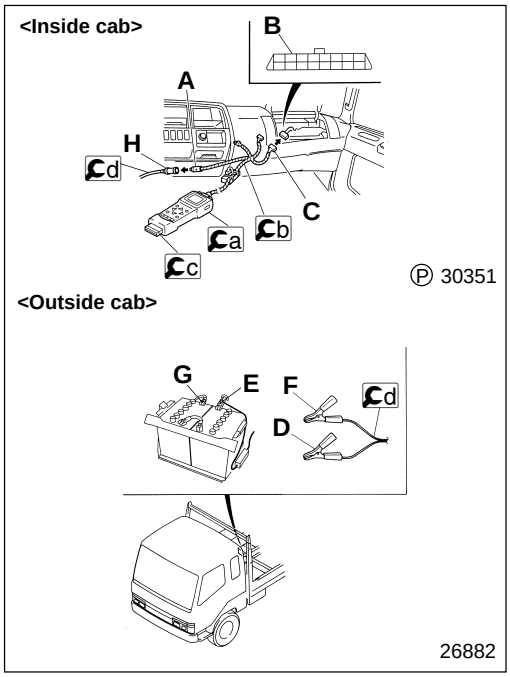

- To verify the service data “START SIG”, connect the MUT-II as follows:
- Turn the starter switch to the LOCK position.
- Connect the b MUT Communication Harness to the a MUT-II, and insert the c ROM Pack.
- Attach the (+) clamp **D** (red) of the d Battery Clamp Harness to the battery’s (+) terminal **E**. Attach the (–) clamp **F** (black) of the d Battery Clamp Harness to the battery’s (–) terminal **G**.
- Fit the connector **A** into the socket **H** of the d Battery Clamp Harness.
- Fit connector **C** onto MUT connector **B** (16-pin) in the relay box.

CAUTION ⚠

Connect the (+) clamp D (red) of the b Battery Clamp Harness before connecting the (–) clamp F (black).

Current diagnosis codes
- Turn the starter switch to the ON position.
- Determine the fault location(s) in accordance with the MUT-II diagnosis code(s).

Past diagnosis codes
- Turn the starter switch to the ON position.
- Determine the fault location(s) in accordance with the past MUT-II diagnosis code(s).

Diagnosis code eraser
- Turn the starter switch to the ON position.
- Using the MUT-II, erase all diagnosis codes stored in the control unit.

Diagnosis codes

Diagnosis codes are indicated as shown in the following table. For details of these codes, refer to the “Without MUT-II” section. 🕮 P13-42

Display item			
Diagnosis code	Fault	Diagnosis code	Fault
03	PS OFFSET	**24**	ACCEL. SNSR-1
06	SUB RACK SNSR	**25**	SPEED SNSR
11	GOV. SERVO	**31**	IDLE VOLUME
12	PS SERVO	**32**	BST PRES SNSR
13	PS SNSR	**33**	RAM
14	SUB NE SNSR	**41**	BST TEMP SNSR
15	NE SNSR	**42**	ASC REL SW
16	ACCEL. SNSR-2	**45**	ENG. REVERSE
21	WTR TEMP SNSR	**65**	ACCEL SW
22	RACK SNSR		

SERVICE PROCEDURES USING MUT-II

Service operations can be performed most effectively using the following MUT-II functions:

● **Reading of diagnosis codes**

Using the diagnosis code function, it is possible to read diagnosis codes stored in the control unit.

● **Eraser of diagnosis codes**

By selecting the diagnosis code eraser function from the special function menu, it is possible to erase diagnosis codes stored in the control unit.

● **Indication of service data**

When required for service operations, data in the control unit's random-access memory can be displayed as numeric values or graphs.

Service data

MUT-II display			Inspection procedure	
No.	Data signal	Type of data	Inspection condition	Evaluation criterion
11	ENGINE SPEED	IIII. rpm	Gradual acceleration (during engine operation)	Synchronization with tachometer
12	TARGET RACK	II.II mm	Starter switch ON	3 mm
13	REAL RACK	II.II mm	Starter switch ON	3 mm
14	ACCEL. VOLT	I.III V	Accelerator pedal gradually depressed from throttle-fully-open to throttle-fully-closed position	1 to 3 V
15	WATER TEMP	III.I °F	Engine cold Engine warming up Engine stopped after warmup	Same as ambient temperature Gradual increase Gradual decrease
16	BOOST PRESS	IIII. mmHg	Engine running at high idling speed	270 mmHg or higher
17	PS ANG. DIFF.	II.II deg	400 < Ne ≦ 2,000 Ne: Engine speed	–5.5° or greater 5.5° or smaller
18	SUPPLY VOLT	II.II V	Starter switch ON	7 to 16 Volts
19	ACCEL. STROKE	III.I %	Throttle completely closed Pedal gradually depressed Throttle completely open	0 % Gradual increase 100 %
20	BOOST TEMP	III.I °F	Engine cold Engine warming up Engine stopped after warmup	Same as ambient temperature Gradual increase Gradual decrease
21	START SIG	ON/OFF	Engine cranked using starter switch	ON
27	ASC MAIN SW	ON/OFF	Main switch ON	ON
28	ASC SET SW	ON/OFF	Set switch ON	ON
29	ASC RSM SW	ON/OFF	Resume switch ON	ON
30	ASC CANCEL SW	ON/OFF	Cancel switch ON	ON
31	ASC BRK SW-1	ON/OFF	Brake pedal depressed	ON
32	ASC BRK SW-2	ON/OFF	Brake pedal depressed	ON
33	ACCEL. SW	ON/OFF	Accelerator pedal depressed	OFF
34	DIAGNOSIS SW	ON/OFF	Diagnosis switch turned ON/OFF	ON/OFF
35	DIAG. RESET SW	ON/OFF	Memory clear switch turned ON/OFF	ON/OFF
37	CLUTCH SW	ON/OFF	Clutch pedal depressed	ON
38	NEUTRAL SW	ON/OFF	Transmission in neutral	OFF
42	EXH. BRAKE SW	ON/OFF	Switch ON	ON
51	A/C SW	ON/OFF	Air conditioner switch turned ON or OFF	ON/OFF
61	EXH. BRAKE SIG	ON/OFF	Exhaust brake operating	ON
71	RACK LIM. SW	ON/OFF	Automatic transmission oil temperature increase	ON
72	AT ACC RELAY	ON/OFF	Accelerator fully depressed	ON
81	CAR SPEED	III.I MPH	Vehicle in driving operation	Synchronized with speedometer

M E M O

INSPECTION BASED ON DIAGNOSIS CODE

Diagnosis code	Diagnosis code display condition (s)	Cause	Remedy
03	Indicates that pre-stroke learning function has not been executed.	Faulty timing rod, timing sleeve or other parts in the injection pump assembly.	Repair or replace the injection pump assembly.*
		Faulty adjustment of pre-stroke position sensor	Repair or replace the injection pump assembly.*
		Faulty electronic governor control unit	Replace the electronic governor control unit
06	Displayed if the output voltage of the control rack position sensor is less than 0.06 V or more than 3.5 V.	Open or short in harness wire or poor connector contact between the sub-control rack position sensor and the electronic governor control unit	Inspect the harness and the connector 🕮 P13-84
		Open, short, or poor connector contact in the sub-control rack position sensor	Inspect the sub-control rack position sensor 🕮 P13-78
		Faulty electronic governor control unit	Replace the electronic governor control unit
11	Displayed if the difference between the target control rackposition and the actual control rack position is ± 1mm {0.039 in.}.	Open or short in harness wire or poor connector contact between the linear DC motor and the electronic governor control unit	Inspect the harness and the connector 🕮 P13-84
		Open or shorted wire in the linear DC motor connector	Inspect the linear DC motor 🕮 P13-79
		Poor adjustment of the emergency engine stop cable (The lever is pulled in the stop direction)	Inspect the emergency engine stop button 🕮 P13-81
		Faulty injection pump assembly rack movement or poor governor actuator link	Repair or replace the injection pump assembly.*
		Faulty electronic governor control unit	Replace the electronic governor control unit
12	Displayed if the difference between the target timing rod angle and the actual timing rod angle is ± 2°.	Open or short in harness wire or poor connector contact between the pre-stroke actuator, pre-stroke cut relay, and electronic governor control unit	Inspect the harness and the connector 🕮 P13-84
		Open or shorted wire in the pre-stroke cut relay	Inspect the pre-stroke cut relay 🕮 P13-80
		Faulty pre-stroke actuator	Repair or replace the injection pump assembly.*
		Faulty timing rod, timing sleeve, etc. in the injection pump assembly	Repair or replace the injection pump assembly.*
		Faulty electronic governor control unit	Replace the electronic governor control unit

*: Contact your MFTA representative for current injection pump repair and replacement procedures.

Diagnosis code	Diagnosis code display condition (s)	Cause	Remedy
13	Displayed if the output voltage of the pre-stroke position sensor is less than 0.9 V or more than 3.4 V.	Open or short in harness wire or poor connector contact between the pre-stroke position sensor and the electronic governor control unit	Inspect the harness and the connector 🕮 P13-84
		Open or shorted pre-stroke position sensor coil	Inspect the pre-stroke actuator 🕮 P13-78
		Faulty electronic governor control unit	Replace the electronic governor control unit
14	Displayed if the pulse count of the back-up engine speed sensor is less than that of the main engine speed sensor.	Open or short in harness wire or poor connector contact between the back-up engine speed sensor and the electronic governor control unit	Inspect the harness and the connector 🕮 P13-84
		Faulty back-up engine speed sensor	Repair or replace the injection pump assembly.*
		Faulty electronic governor control unit	Replace the electronic governor control unit
15	Displayed if the pulse count of the main engine speed sensor is less than that of the back-up engine speed sensor.	Open or short in harness wire or poor connector contact between the speed sensor and the electronic governor control unit	Inspect the harness and the connector 🕮 P13-84
		Open or shorted wire or improperly assembled coil in the engine speed sensor main unit	Inspect the engine speed sensor main unit 🕮 P13-78
		Faulty electronic governor control unit	Replace the electronic governor control unit
16	Displayed if the output voltage of the accelerator pedal position sensor is less than 0.5 V or more than 4.5 V.	Open or short in harness wire or poor connector contact between the accelerator pedal position sensor II and the electronic governor control unit	Inspect the harness and the connector 🕮 P13-84
		Internal malfunction or faulty adjustment of the lever portion of the accelerator pedal position sensor II	• Inspect the accelerator pedal position sensor 🕮 P13-57 • Inspect the accelerator pedal position sensor using MUT-II 🕮 P13-46
		Faulty adjustment of the accelerator control cable or faulty movement of the link or lever	Inspect the accelerator control cable 🕮 P13-56
		Faulty electronic governor control unit	Replace the electronic governor control unit
21	—	Open or short in harness wire or poor connector contact between the coolant temperature sensor and the electronic governor control unit	Inspect the harness and the connector 🕮 P13-84
		Faulty coolant temperature sensor	• Inspect the coolant temperature sensor 🕮 P13-76 • Inspect the coolant temperature sensor using MUT-II 🕮 P13-46
		Faulty electronic governor control unit	Replace the electronic governor control unit

*: Contact your MFTA representative for current injection pump repair and replacement procedures.

INSPECTION BASED ON DIAGNOSIS CODE

Diagnosis code	Diagnosis code display condition (s)	Cause	Remedy
22	Displayed if the output voltage of the control rack position sensor I is less than 0.5 V or more than 4.5 V.	Open or short in harness wire or poor connector contact between the control rack position sensor and the electronic governor control unit	Inspect the harness and the connector 🕮 P13-84
		Open or shorted wire in the coil or poor control rack position sensor contact	• Inspect the control rack position sensor 🕮 P13-77 • Inspect the control rack position sensor using MUT-II 🕮 P13-46
		Faulty movement of the injection pump assembly control hook or poor governor actuator link	Repair or replace the injection pump assembly.*
		Faulty electronic governor control unit	Replace the electronic governor control unit
24	Displayed if the output voltage of the accelerator pedal position sensor I is less than 0.5 V or more than 4.5 V.	Open or short in harness wire or poor connector contact between the accelerator pedal position sensor and the electronic governor control unit	Inspect the harness and the connector 🕮 P13-84
		Internal malfunction or poor adjustment of the accelerator pedal position sensor I lever	• Inspect the accelerator position sensor I 🕮 P13-57 • Inspect the accelerator pedal position sensor using MUT-II 🕮 P13-46
		Faulty adjustment of the accelerator control cable or faulty movement of the link and lever	Inspect the accelerator control cable 🕮 P13-56
		Faulty electronic governor control unit	Replace the electronic governor control unit
25	—	Open or short in harness wire or poor connector between the vehicle speed sensor and the electronic governor control unit	Inspect the harness and the connector 🕮 P13-84
		Faulty vehicle speed sensor	• Inspect the vehicle speed sensor 🕮 P13-76 • Inspect the vehicle speed sensor using MUT-II 🕮 P13-46
		Faulty electronic governor control unit	Replace the electronic governor control unit
31	Displayed if the output voltage of the idling adjustment volume is less than 0.6 V or mor than 4.6 V.	Stuck idling speed adjustment potentiometer knob (between PUSH and PULL)	Reset the knob to PUSH or PULL
		Open or short in harness wire or poor connector contact between the idling speed adjustment potentiometer and the electronic governor control unit	Inspect the harness and the connector 🕮 P13-84
		Open wire in the switch portion of the idling speed adjustment potentiometer or faulty internal movement	Inspect the idling speed adjustment potentiometer 🕮 P13-80
		Faulty electronic governor control unit	Replace the electronic governor control unit
32	Displayed if the output voltage of the boost pressure sensor is less than 0.5 V or more than 4.8 V.	Open or short in harness wire or poor connector contact between the boost pressure sensor and the electronic governor control unit	Inspect the harness and the connector 🕮 P13-84
		Internal malfunction of boost pressure sensor	• Inspect the boost pressure sensor using MUT-II 🕮 P13-46 • Inspect the boost pressure sensor 🕮 P13-76
		Clogged boost hose or faulty assembly	Inspect the boost hose
		Faulty electronic governor control unit	Replace the electronic governor control unit

*: Contact your MFTA representative for current injection pump repair and replacement procedures.

Diagnosis code	Diagnosis code display condition (s)	Cause	Remedy
33	Displayed if the electronic governor control unit is faulty	Faulty electronic governor control main unit	In order to reset the electronic governor control unit, temporarily turn the starter switch OFF and erase the diagnostic codes by pressing the memory clear switch 🕮 P13-41 Replace the electronic governor control unit if the diagnostic codes persist after performing the above procedure
41	Displayed if the output voltage of the boost temperature sensor is more than 4.9 V	Open or short in harness wire and poor connector contact between the boost temperature sensor and the electronic governor control unit	Inspect the harness and the connector 🕮 P13-84
		Open or shorted wire or poor assembly of the boost temperature sensor coil	• Inspect the boost temperature sensor 🕮 P13-77 • Inspect the boost temperature sensor using MUT-II 🕮 P13-46
		Faulty electronic governor control unit	Replace the electronic governor control unit
42	—	Open or short in harness wire or poor connector contact between the cruise control release switch (stop lamp switch, transmission neutral switch, combination switch, clutch switch, accelerator switch) and the electronic governor control unit	Inspect the harness and the connector 🕮 P13-84
		Faulty cruise control release switch	• Inspect the stop lamp switch 🕮 Gr 54 • Inspect the transmission neutral switch 🕮 Gr 54 • Inspect the combination switch 🕮 P13-75 • Inspect the clutch switch 🕮 Gr 54 • Inspect the accelerator switch 🕮 P13-75 • Inspect the cruise control release switch using MUT-II 🕮 P13-46
		Faulty electronic governor control unit	• Inspect the electronic governor control unit
45	—	Faulty phase of engine speed sensor and backup engine speed sensor	• Inspect the engine speed sensor 🕮 P13-78 • Repair or replace the injection pump assembly.*
65	Faulty accelerator switch	Open or short in harness wire or poor connector contact between the accelerator switch and theelectronic governor control unit	Inspect the harness and the connector 🕮 P13-84
		Open or shorted wire in the accelerator switch	Inspect the accelerator switch 🕮 P13-57
		Faulty electronic governor control unit	Replace the electronic governor control unit

*: Contact your MFTA representative for current injection pump repair and replacement procedures.

ON-VEHICLE INSPECTION AND ADJUSTMENT

Checking and Adjusting Injection Timing

Service standards

Location	Maintenance item	Standard value	Limit	Remedy
–	Fuel injection timing (BTDC)	2˚± 0.5˚	–	Adjust

Tightening torque

Unit: N·m {lbf.ft, kgf·m}

Location	Parts to be tightened	Tightening torque	Remarks
5	Adjusting bolt	59 to 64 {43 to 47, 6 to 6.5}	–

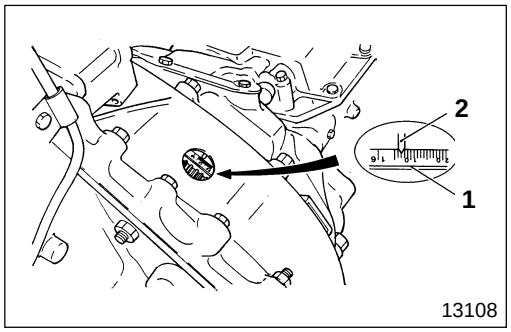

[Inspection]

- Turn the crankshaft more than 180° in the direction of engine rotation. Check if notch **1** on the flywheel and pointer **2** on the flywheel housing show the standard fuel injection timing.

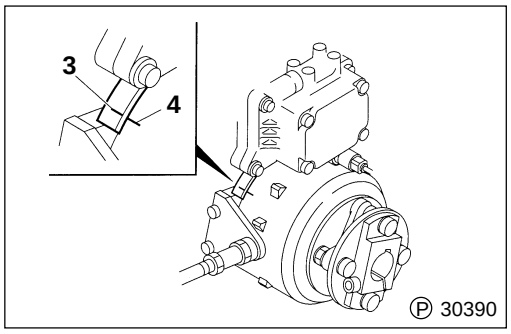

- When pointer **3** on the injection pump and notch **4** on the automatic timer align, the fuel injection timing is standard.
- If the fuel injection timing is not standard, adjust as follows.

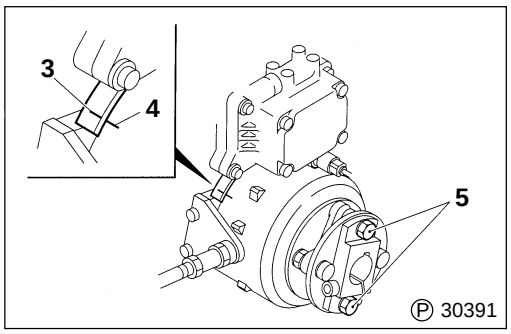

[Adjustment]

- Loosen adjusting bolts **5** and turn the automatic timer to align pointer **3** and notch **4**.
- Tighten adjusting bolts **5** at specified torque.
- Reinspect the fuel injection timing.

CAUTION ⚠

Do not loosen any bolts other than adjusting bolts 5.

Bleeding Air from Fuel System

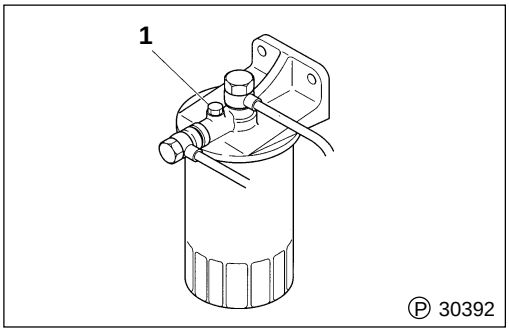

- Loosen the fuel filter air plug **1**.

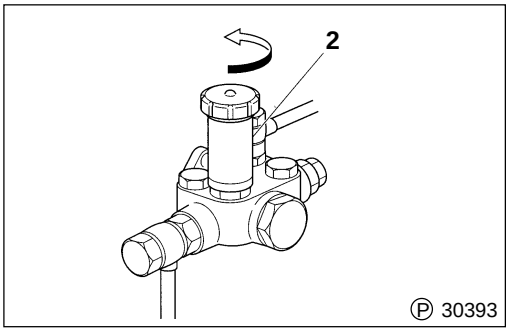

- Turn the priming pump knob **2** counterclockwise until it pops up.
- Move the priming pump knob **2** up and down to feed fuel through the fuel filter.
- When fuel emerging from the fuel filter air plug **1** no longer contains air bubbles, tighten the air plug securely.

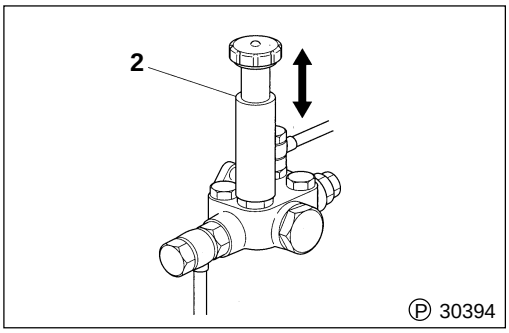

- Move the priming pump knob **2** up and down five or six more times. Then, press the knob down and screw it clockwise to lock it in position.
- Wipe up all spilled fuel, then start the engine.
- Check that no fuel leakage occurs.

WARNING⚠

- **Be sure to wipe up all spilled fuel. Unless it is wiped up, it could catch fire.**
- **Fuel is highly flammable. Keep it away from flames and sources of heat.**

Cleaning Gauze Filter

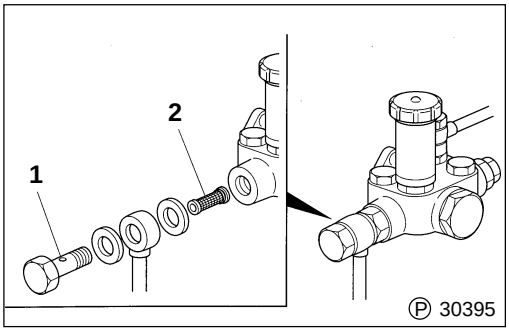

- Remove the eyebolt **1** from the suction port side **A** of the fuel feed pump.
- Remove the gauze filter **2** from the eyebolt **1**.
- Clean the gauze filter **2** in diesel fuel.
- Refit the gauze filter **2** and eyebolt **1** in the opposite order to that in which they were removed.
- Bleed all air out of the fuel system. 🕮 P13-53
- Start the engine and check that no fuel leakage occurs.

WARNING⚠

- **To minimize the risk of fire, wipe up any spilled fuel.**
- **Fuel is highly flammable. Keep it away from flames and sources of heat.**
- **After refitting the gauze filter, check that no fuel leakage occurs.**

Replacing Fuel Filter

Lubricant

Location	Points of application	Specified lubricant	Quantity
1	Gasket between fuel filter and fuel filter head	Engine oil	As required

Special tool

Unit : mm {in}

Location	Tool name and shape	Part No.	Application
1	Filter wrench 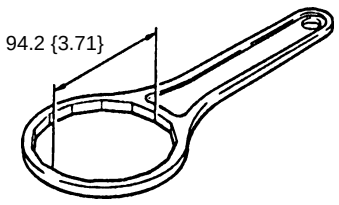	MH061572	Fuel filter removal

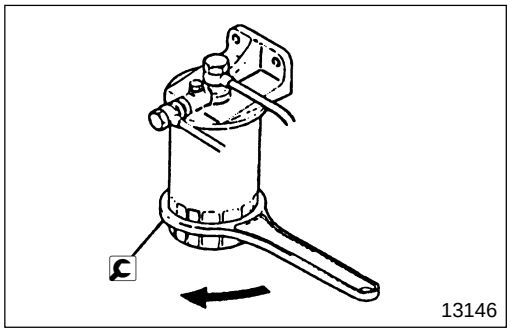

[Removal]

: Filter Wrench

WARNING

- **Fuel is highly flammable. Keep it away from flames and sources of heat.**
- **To minimize the risk of fire, wipe up any spilled fuel.**

[Installation]

WARNING

Use of an unsuitable fuel filter 1 can lead to fuel leaks and fires. Be sure to use a genuine filter.

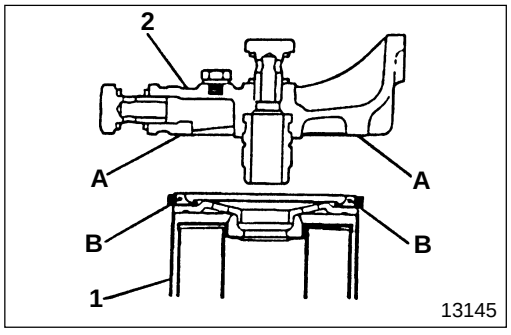

- To fit the fuel filter **1**, turn it until the gasket **B** touches surface **A** of the fuel filter head **2**. Then, tighten the filter by 1 to $1\frac{1}{8}$ turn. Be sure to turn the filter by hand.
- Bleed all air out of the fuel system. P13-53

WARNING

After fitting the fuel filter 1, start the engine and check that no fuel leakage occurs. Any leaking fuel could cause a fire.

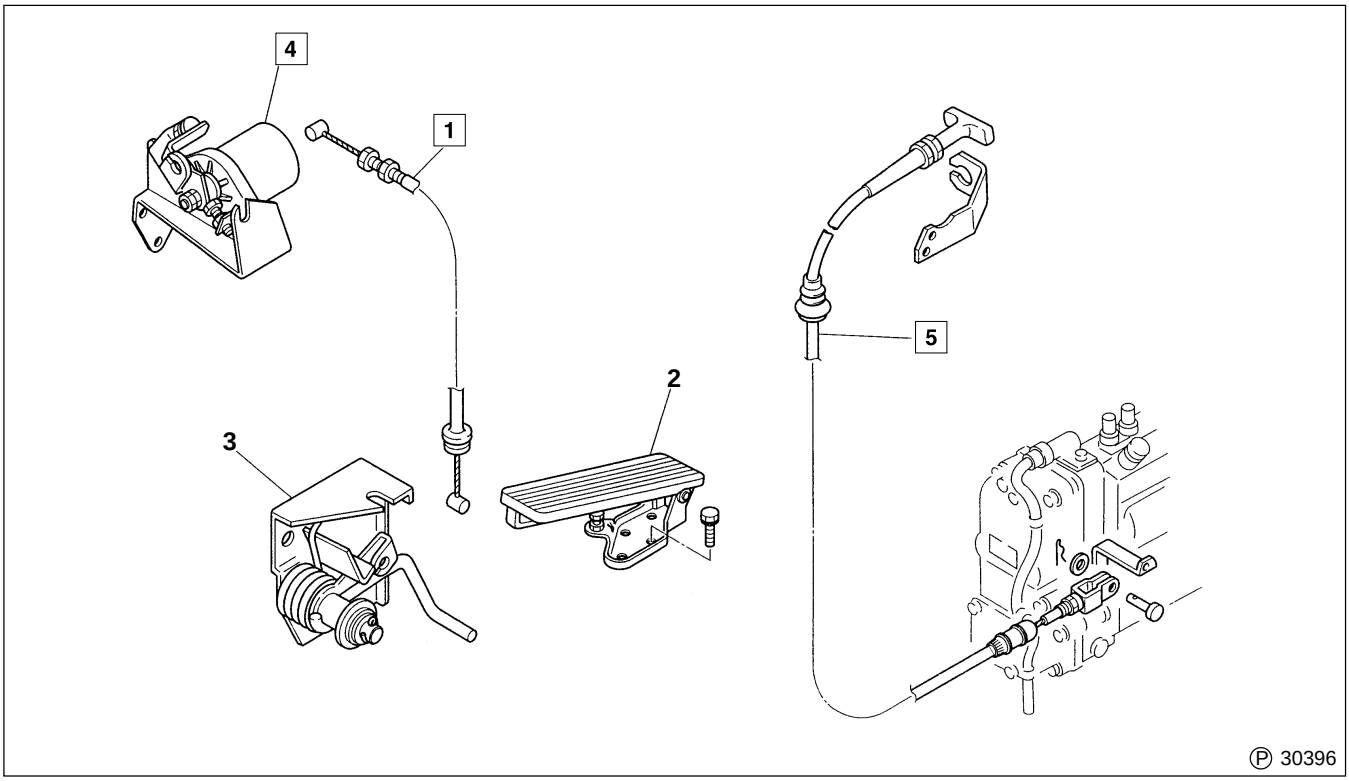

● **Disassembly sequence**

1 Accelerator control cable
2 Accelerator pedal assembly
3 Accelerator link assembly
4 Accelerator pedal position sensor
5 Emergency engine stop cable

***** : Injection pump assembly

● **Assembly sequence**

Follow the disassembly sequence in reverse.

Service standards

Location	Maintenance item			Standard value	Limit	Remedy
4	Accelerator pedal position sensor output voltage 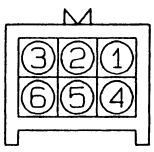 13714	Sensor II: ① – ②	Idling position	0.85 ± 0.1 V	—	Adjust or replace
			Full-load position	4.15 ± 0.1 V	—	Adjust or replace
		Sensor I: ④ – ⑤	When there is conduction between the accelerator switch terminals ① and ② 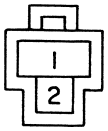 31018	1.00 ± 0.2 V	—	Adjust or replace

◆ Service procedure

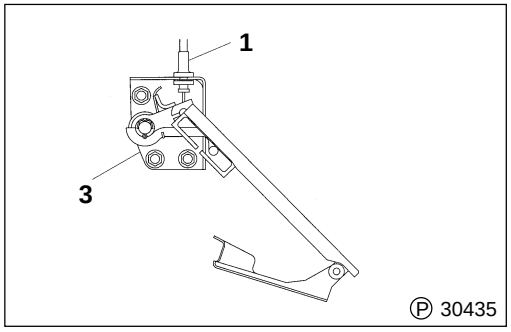

1 **Installation of the accelerator control cable**

- Install accelerator control cable **1** to accelerator link assembly **3**.

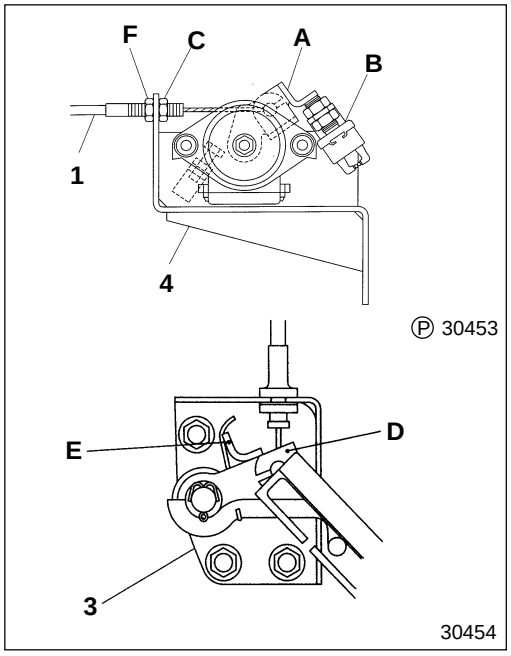

- Install the other end of accelerator control cable **1** to lever **A** of the accelerator pedal position sensor **4**.
- Check that lever **A** of the accelerator pedal position sensor **4** is completely pushed down by accelerator switch **B**.
- Stretch the cable until lever **D** of the accelerator link assembly **3** meets stopper **E** using nut **C** of the accelerator control cable **1** and secure with nut **F**.

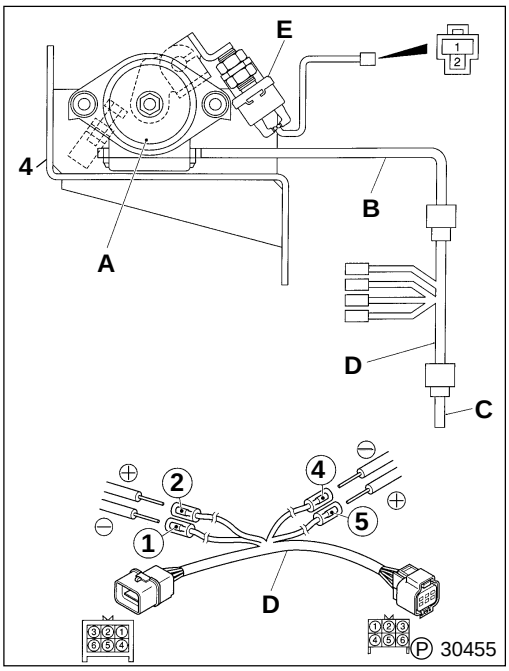

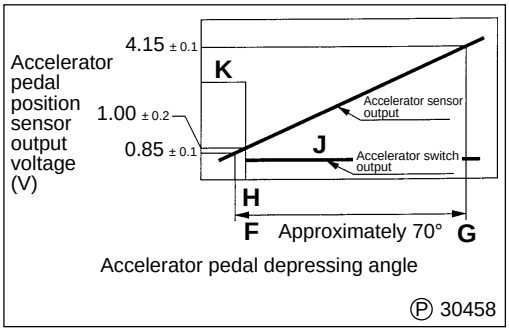

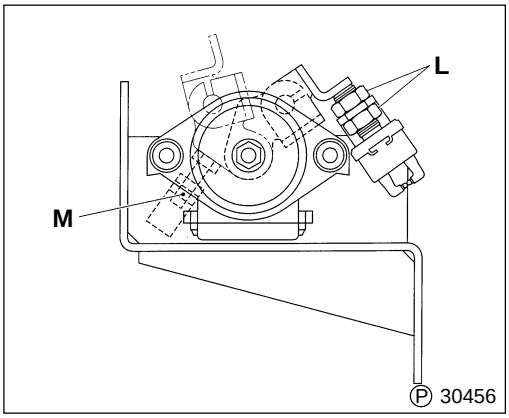

4 Inspect the accelerator pedal position sensor

- Disconnect connector **B** of accelerator pedal position sensor **A** from harness **C** on the cab side. Prepare inspection harness **D,** and connect it between the above two connectors.
- Disconnect the harness of accelerator switch **E**.
- Turn the starter switch ON.
- Inspect the output voltage of the accelerator pedal position sensor **A** and accelerator switch **E** as shown in the following chart and adjust as needed.

Item	Connector terminal					
	Inspection harness for accelerator pedal position sensor				Accelerator switch	
	Sensor II		Sensor I		①	②
	① :GND (–)	② :Output (+)	④ :GND (–)	⑤ :Output (+)		
Output voltage ***a** (Idling position)	⊖	⊕	⊖	⊕		
Output voltage ***b** (Full-load position)	⊖	⊕	⊖	⊕		
Output voltage ***c** (Accelerator switch active position)	⊖	⊕	⊖	⊕	○	○

○—○ Conduction between the terminals

***a** : Measure the voltage with the accelerator pedal in the idling position.

***b** : Measure the voltage with the accelerator pedal in the full-load position.

***c** : Gradually depress from the idling position and measure the voltage when the accelerator switch connector terminals ① and ② are no longer conducting.

F : Idling position
G : Full-load position
H : Accelerator switch change position
J : Accelerator switch - conduction
K : Accelerator switch - no conduction

- If the measured value of the idling position output voltage is outside of the standard range, replace the accelerator pedal position sensor.
- If the measured values of ***b** and ***c** are outside of the standard range, adjust using the following adjustment bolts.

Adjustment item	Adjustment bolt
***b** Full-load position output voltage	Full-load stopper bolt **M**
***c** Accelerator switch active position output voltage	Adjustment bolt **L**

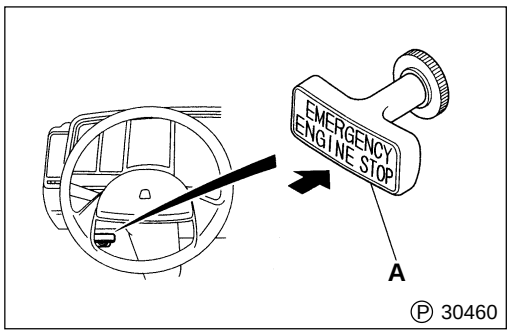

5 **Installation of the emergency engine stop cable**

- Install the push button **A** side of the emergency engine stop cable **5** and push the stop button in.

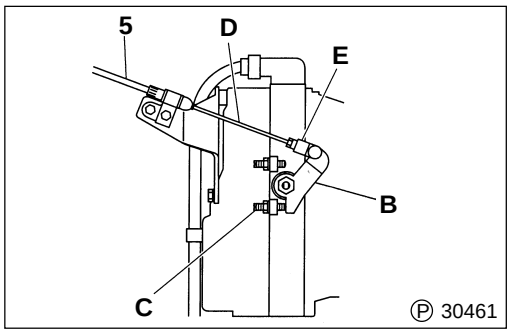

- With the stop lever **B** of the governor making contact with the stopper bolt **C**, install the cable and adjust clevis **E** such that the inner cable of the emergency engine stop cable is not loose.
- After the installation, start the engine. Check that pulling the stop button stops the engine.

Accelerator Pedal Assembly

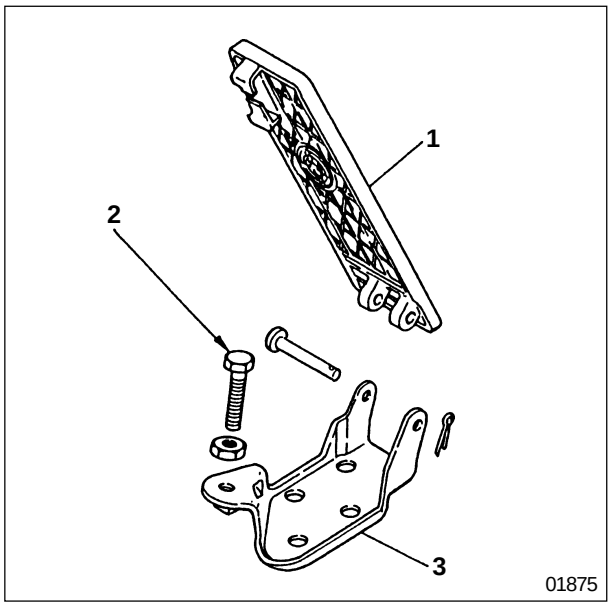

● **Disassembly sequence**

1 Accelerator pedal
2 Stopper bolt
3 Accelerator pedal bracket

● **Assembly sequence**

Follow the disassembly sequence in reverse.

Accelerator link assembly

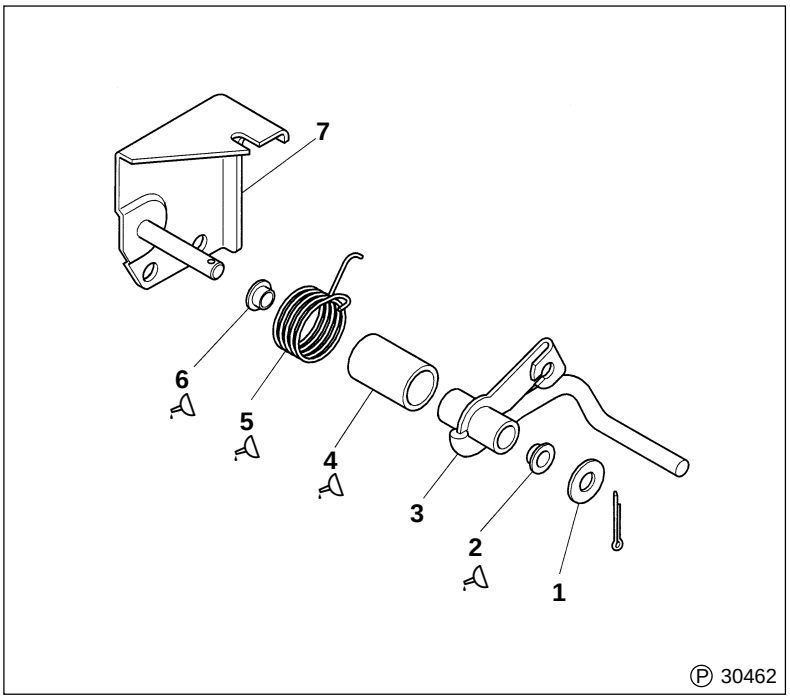

● **Disassembly sequence**

1 Washer
2 Bushing
3 Accelerator link
4 Collar
5 Return spring
6 Bushing
7 Accelerator link bracket

● **Assembly sequence**

Follow the disassembly sequence in reverse.

Lubricant

Location	Points of application	Specified Lubricant	Quantity
2, 6	Moving surfaces of the bush and the accelerator link bracket	Chassis grease [NLGI No.1 (Ca soap)]	As appropriate
4, 5	Moving surfaces of the collar and the return spring	Chassis grease [NLGI No.1 (Ca soap)]	As appropriate

FUEL TANK

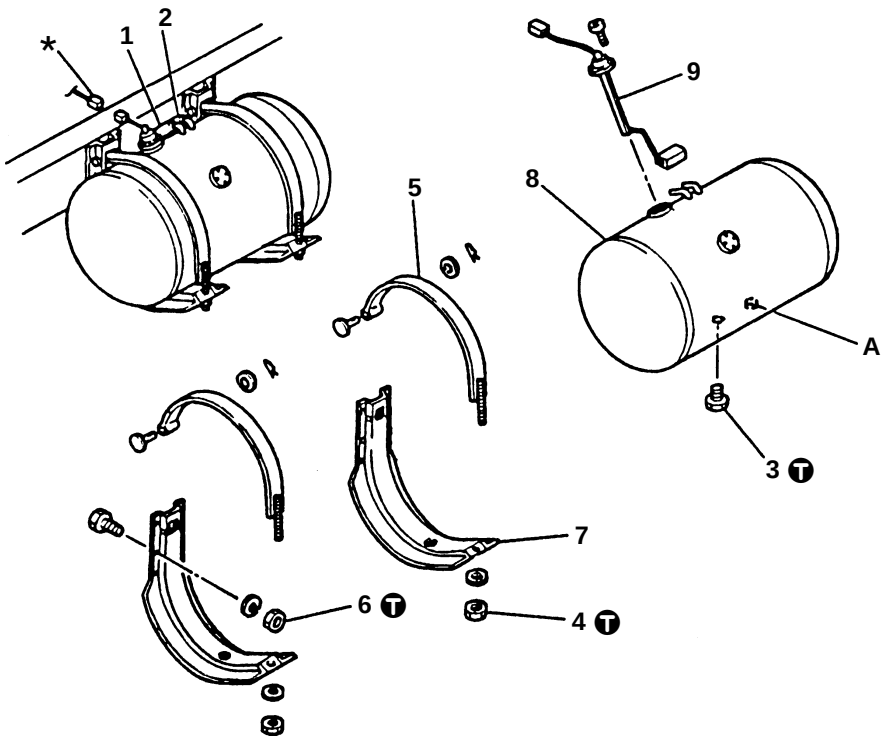

● **Work before removal**

WARNING ⚠

- **Keep drop lights away because of the risk of explosion.**
- **Wipe up any spilled fuel because it can cause a fire.**

NOTE

Drain fuel before working on the job.

● **Removal sequence**

1 Suction hose
2 Return hose
3 Drain plug
4 Nut
5 Fuel tank strap
6 Nut
7 Fuel tank bracket
8 Fuel tank
9 Fuel gauge sending unit Gr 54

***** : Chassis harness Gr 54
A : Positioning pin

● **Installation sequence**

Follow the removal sequence in reverse.

T Tightening torque

Unit : N·m {lbf.ft, kgf·m}

Location	Parts to be tightened	Tightening torque	Remarks
3	Drain plug	59 to 98 {43 to 72, 6 to 10}	—
4	Nut (Fuel tank strap mounting)	12 to 15 {8.7 to 11, 1.2 to 1.5}	—
6	Nut (Fuel tank bracket mounting)	69 to 93 {51 to 69, 7 to 9.5}	—

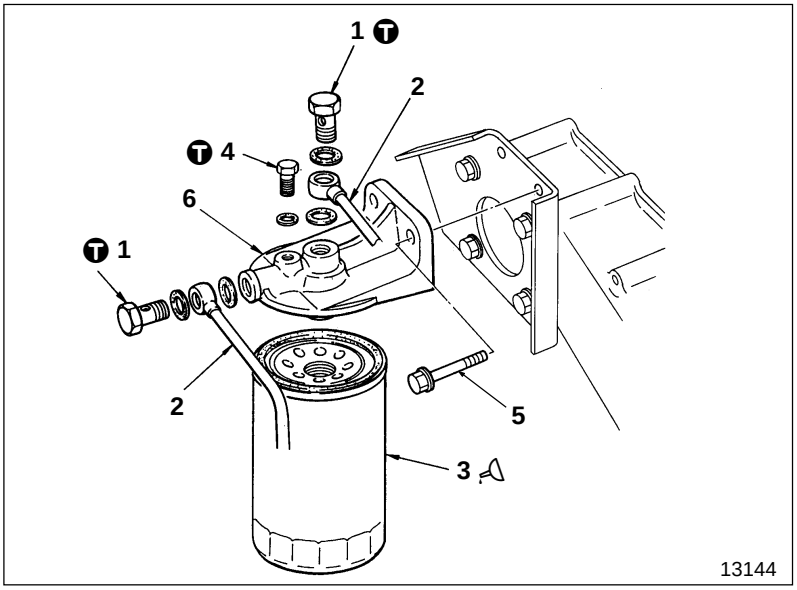

● **Disassembly sequence**

1 Eye bolt
2 Fuel feed pipe
3 Fuel filter
4 Air vent plug
5 Bolt
6 Fuel filter head

● **Assembly sequence**

Follow the disassembly sequence in reverse.

Tightening torque

Unit : N·m {lbf.ft, kgf·m}

Location	Parts to be tightened	Tightening torque	Remarks
1	Eye bolt	24 to 34 {18 to 25, 2.5 to 3.5}	—
4	Air vent plug	7.8 to 12 {5.8 to 8.7, 0.8 to 1.2}	—

Lubricant

Location	Points of application	Specified lubricant	Quantity
3	Gasket contact surfaces of fuel filter and fuel filter head	Engine oil	As required

Special tools

Unit : mm {in.}

Location	Tool name and shape	Part No.	Application
3	Filter wrench 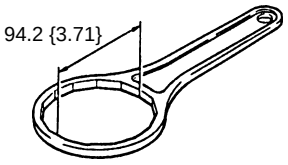 01882	MH061572	Removal of fuel filter

WATER SEPARATOR

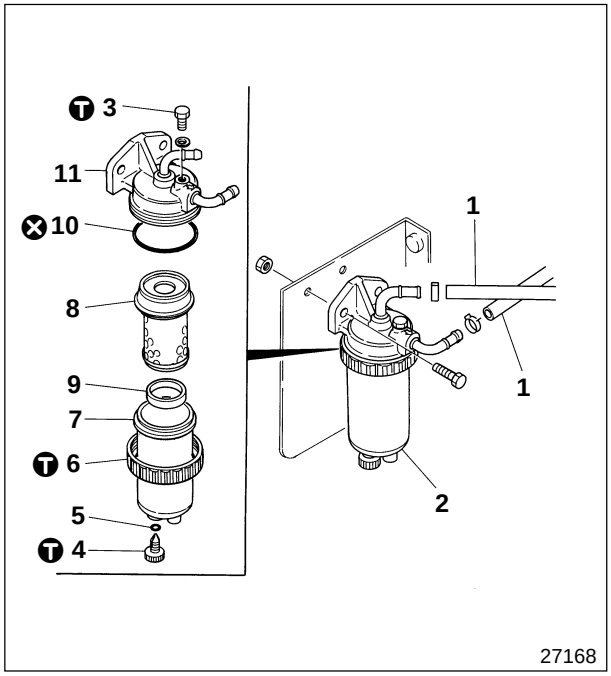

● **Disassembly sequence**

1 Fuel hose
2 Water separator assembly
3 Air vent plug
4 Drain plug
5 O-ring
6 Ring nut
7 Case
8 Screen assembly
9 Water level ring
10 O-ring
11 Head

⊗ : Non-reusable part

● **Assembly sequence**

Follow the disassembly sequence in reverse.

● **Operations after assembly**

Bleed all air out of the fuel system. P13 - 53

WARNING ⚠

- **Fuel is highly flammable. Keep it away from flames and sources of heat.**
- **After assembling the water separator, start the engine and check that no fuel leakage occurs. Any leaking fuel could cause a fire.**

Ⓣ Tightening torque

Unit : N·m {lbt.ft, kgf·m}

Location	Parts to be tightened	Tightening torque	Remarks
3	Air vent plug	10±2 {7.7±1.4, 1.0±0.2}	—
4	Drain plug	3.5±0.5 {2.5±3.6, 0.35±0.05}	—
6	Ring nut	25±2 {18.0±1.4, 2.5±0.2}	—

M E M O

INJECTION PUMP

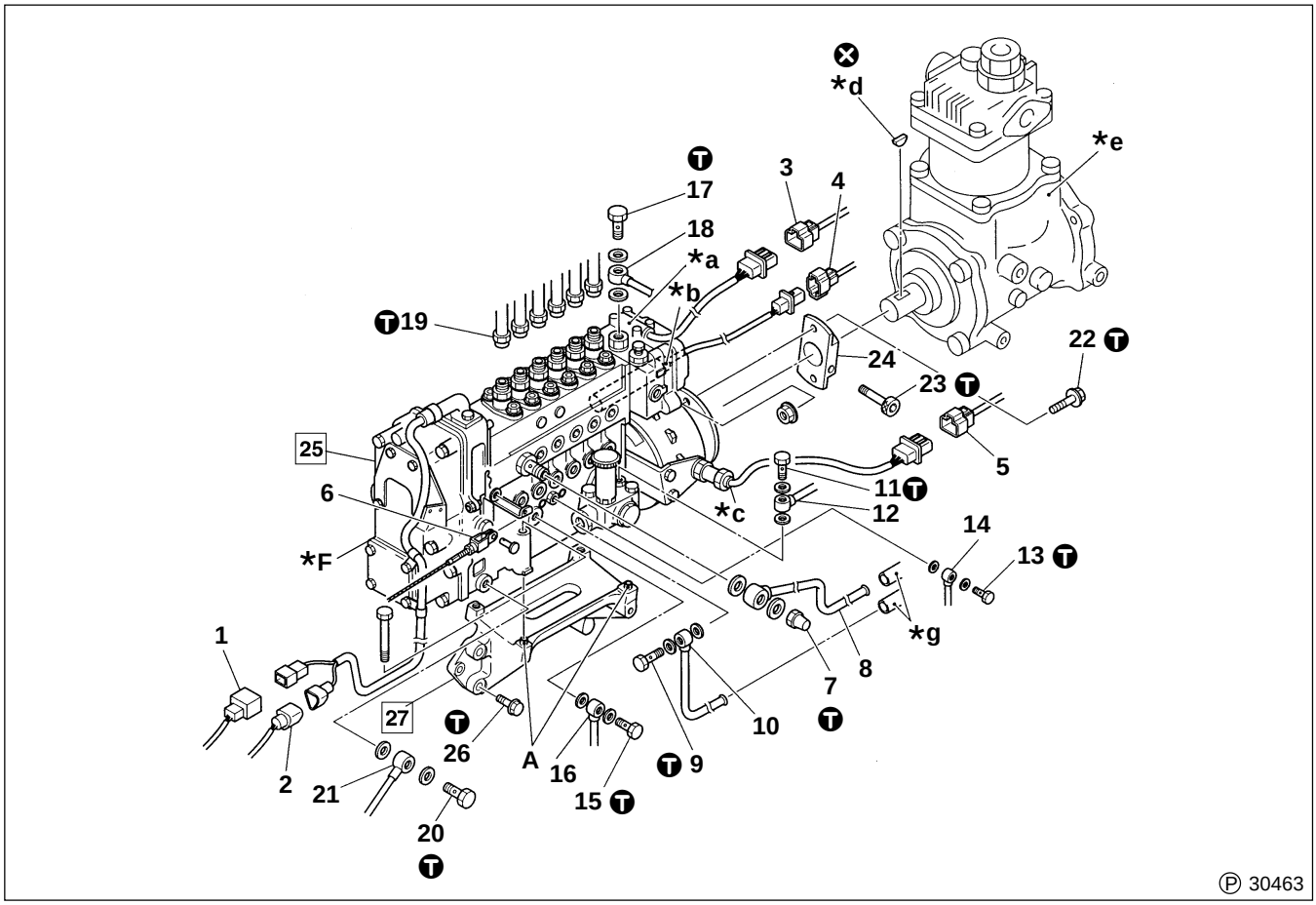

Ⓟ 30463

● **Disassembly sequence**

1 Harness (10 pins)
2 Harness (3 pins)
3 Harness (6 pins)
4 Harness (4 pins)
5 Harness (3 pins)
6 Emergency engine stop cable
7 Overflow valve
8 Fuel leak-off pipe
9 Eye bolt
10 Fuel suction pipe
11 Eye bolt
12 Fuel feed pipe
13 Eye bolt
14 Oil feed pipe
15 Eye bolt
16 Oil return pipe
17 Eye bolt
18 Fuel feed pipe
19 Injection pipe
20 Eye bolt
21 Oil pipe
22 Bolt
23 Cotter bolt
24 Driving coupling
25 Injection pump assembly
26 Bolt
27 Injection pump bracket

***a** : Pre-stroke actuator P13 - 13, 28
***b** : Sub-control rod position sensor P13 - 25
***c** : Engine speed sensor P13 - 25
***d** : Key Gr 35A
***e** : Air compressor Gr 35A
***f** : Electronic governor P13 - 32
***g** : Fuel hose
A : Positioning pin
⊗ : Non-reusable parts

● **Assembly sequence**

Follow the disassembly sequence in reverse.

WARNING ⚠

- **Fuel is highly flammable. Keep it away from flames and sources of heat.**
- **Be sure to wipe up all spilled fuel. Unless it is wiped up, it could catch fire.**

CAUTION ⚠

- **For maintenance of the injection pump assembly 25, please contact a MFTA.**
- **Dirt particles in the injection pump assembly 25 can seriously detract from engine performance. To prevent contamination, cover all pipes, hoses and other parts after removal.**
- **Do not suspend the injection pump assembly 25 from the prestroke actuator ∗a or the sub-control rod position sensor ∗b. If the injection pump assembly was suspended by either of these parts, it would be subjected to excessive force and could stop functioning normally.**
- **Do not remove the injection pump bracket 27 unless an abnormality is evident.**

Service standards

Unit : mm {in.}

Location	Maintenance item	Standard value	Limit	Remedy
—	Fuel injection timing (BTDC)	2°±0.5°	—	Adjust
27	Injection pump bracket (eccentricity between Injection pump centering tool and pump drive case drive shaft)	0.2 {0.0079} or less	—	Adjust

Tightening torque

Unit : N·m {lbf·ft, kgf·m}

Location	Parts to be tightened	Tightening torque	Remarks
7	Overflow valve (fuel leak-off pipe mounting)	20 to 29 {14 to 22, 2 to 3}	—
9, **11**, **15**, **17, 20**	Eye bolt (fuel suction pipe, fuel feed pipe and oil return pipe mounting)	20 to 29 {14 to 22, 2 to 3}	—
13	Eye bolt (oil feed pipe)	12 to 15 {8.7 to 11, 1.2 to 1.5}	—
19	Injection pipe (Union nut mounting)	29 {22, 3}	—
22	Bolt (Driving coupling mounting)	59 to 64 {43 to 47, 6 to 6.5}	—
23	Cotter bolt	83 to 93 {61 to 69, 8.5 to 9.5}	—
26	Bolt (Injection pump bracket mounting)	33 to 55 {25 to 41, 3.4 to 5.6}	—

Special tools

Location	Tool name and shape	Part No.	Application
27	Injection pump centering tool 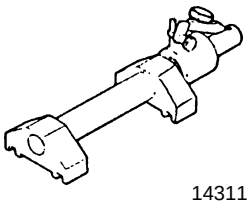 14311	MH063336	Positioning of injection pump bracket

◆ Service procedure

25 Installation of Injection pump assembly

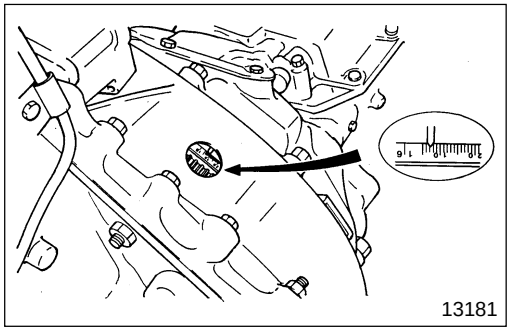

- Turn the engine and adjust No.1 cylinder piston to the specified fuel injection timing.

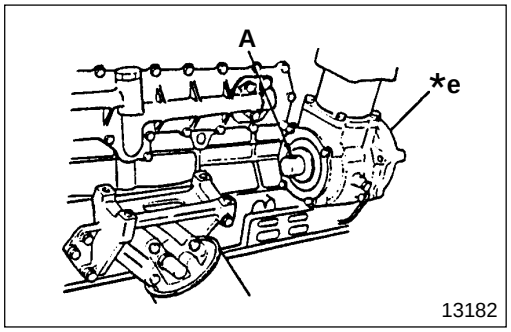

- In this state, make sure that keyway **A** in the crankshaft of air compressor ***e** faces upward.
- If keyway **A** is not facing upward, turn the engine crankshaft by one turn.

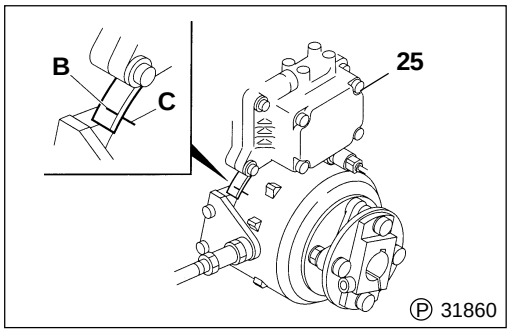

- Align pointer **B** on injection pump assembly **25** with notch **C** on the automatic timer.

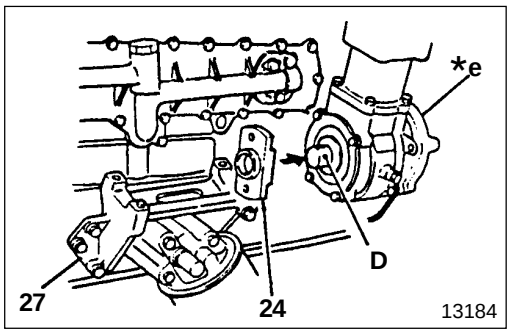

- Install driving coupling **24** to crankshaft **D** of air compressor ***e** and place the driving coupling on the air compressor side.
- Install injection pump assembly **25** on injection pump bracket **27**.

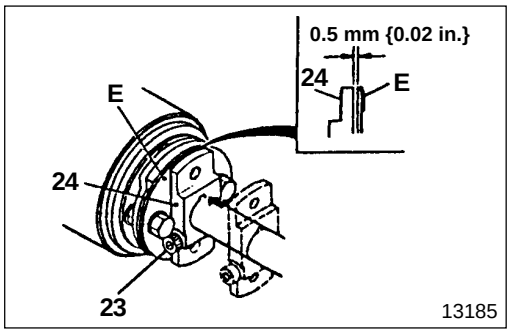

- Move driving coupling **24** to adjust the clearance between the driving coupling and coupling plate **E** as illustrated, then tighten cotter bolt **23** at specified torque.

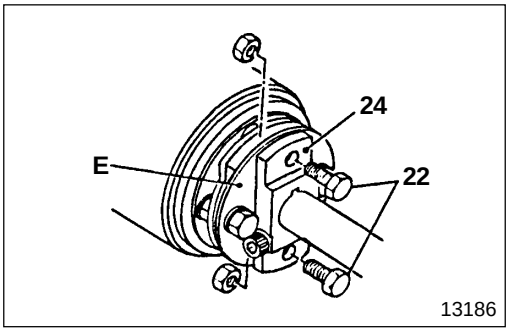

- Attach driving coupling **24** and coupling plate **E** using bolts **22** and tighten the bolts temporarily.

- In this state, adjust the fuel injection timing.
  Adjustment of fuel injection timing : P13-52
  After adjusting the fuel injection timing, tighten bolts **24** at specified torque.

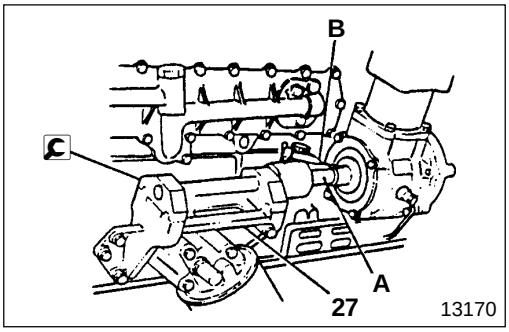

27 Injection pump bracket

[Inspection]

- Attach dial gauge **B** to arbor **A** of injection pump centering tool and adjust to gauge to zero setting.

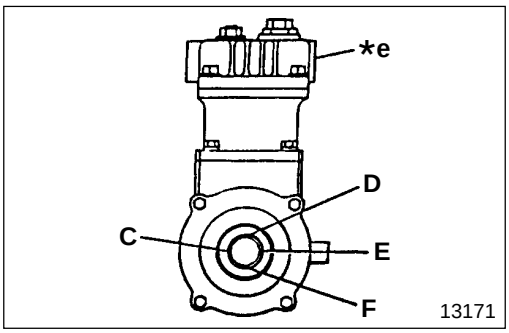

- Slide dial gauge **B** toward air compressor ***e** and measure the eccentricity of crankshaft **C** against arbor **A** at points **D**, **E** and **F**.
- If the measured value is higher than the standard value, adjust as follows.

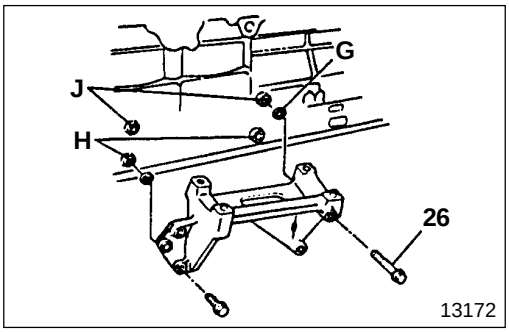

[Adjustment]

- When the measured value at point **E** is higher than the standard value: Insert shims **G** into four points equally.
- When the measured value at point **D** is higher than the standard value: Insert shims **G** into lower side **H**.
- When the measured value at point **F** is higher than the standard value: Insert shims **G** into upper side **J**.

CAUTION

Insert shims G observing the following conditions:

- **Number of shims per point is three or less.**
- **The same number of shims should be used for the front and the rear.**
- **The difference in number of shims used for bottom and top is none or one.**

- Tighten bolt **26** at specified torque, then reinspect.

INJECTION NOZZLE

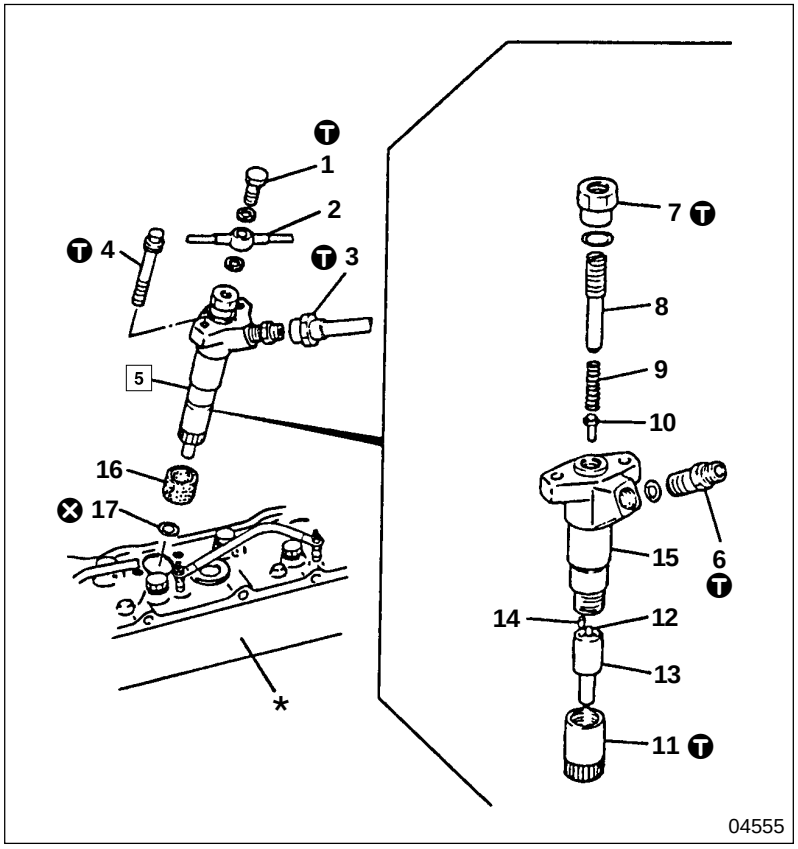

● **Inspection before disassembly**

P13-69

● **Disassembly sequence**

1 Eye bolt
2 Fuel return pipe
3 Injection pipe
4 Bolt
5 Injection nozzle assembly
6 Connector
7 Cap nut
8 Adjusting screw
9 Spring
10 Push rod
11 Retaining nut
12 Needle valve
13 Nozzle
14 Pin (ø3 mm {0.12 in.})
15 Nozzle holder
16 Dust seal
17 Gasket

* : Cylinder head Gr11
⊗ : Non-reusable parts

● **Assembly sequence**

Follow the disassembly sequence in reverse.

WARNING ⚠

Wipe up any spilled fuel because It can cause a fire

CAUTION ⚠

- **Be sure not to touch the slide-contact area of needle valve 12 because any scratches or corrosion might spoil the airtightness of nozzle 13. It must be handled with utmost care.**
- **Never change the combination of needle valve 12 and nozzle 13 for each cylinder.**
- **Be sure to protect all openings by covering them after removal of hoses and pipes because the engine performance is adversely affected if dirt and foreign particles enter injection nozzle assembly 5.**

NOTE

- **Remove carbon deposits and clean injectlon nozzle assembly 5 before working on it, then test the injection pressure and jet spray condition, and check for fuel leakage before disassembly. If no fault is found, do not disassemble.**
- **After installing injectlon nozzle assembly 5, tighten the two bolts 4 alternately.**

Service standards

Location	Maintenance item	Standard value	Limit	Remedy
5	Value opening pressure	21.6 MPa {3130 lbf/ in^2, 220 kgf/cm^2}	—	Adjust

Tightening torque

Unit : N·m {lbf.ft,kgf·m}

Location	Parts to be tightened	Tightening torque	Remarks
1	Eye bolt (Fuel leak- off pipe mounting)	10 to 15 {7.2 to 11,1 to 1.5}	—
3	Union nut of injection pipe	29 {22, 3}	—
4	Bolt (Injection nozzle mounting)	15 {11, 1.5}	—
6	Connector	69 to 79 {51 to 58, 7 to 8}	—
7	Cap nut	29 to 39 {22 to 29, 3 to 4}	—
11	Retaining nut	59 to 79 {43 to 58, 6 to 8}	—

Special tools

Location	Tool name and shape	Part No.	Application
—	Nozzle cleaning tool	★105789-0010	Cleaning of injection nozzle assembly

★ ZEXEL code number

◆ Service procedure

● Inspection before disassembly

Attach injection nozzle assembly **5** to nozzle tester **A**, and conduct the following inspection.

WARNING ⚠

Never touch the spray from the nozzle or let your hands get too close to the spray point during the test.

NOTE

Before inspection, bleed the air out in a couple of bursts by pressing nozzle tester A lever.

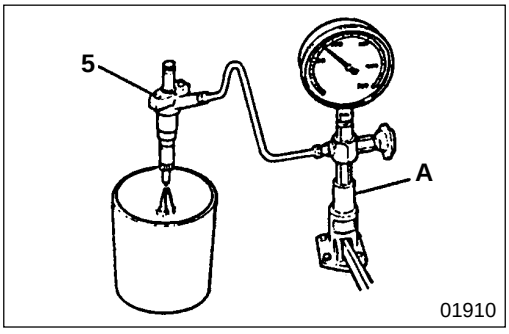

(1) Valve opening pressure

- Spray continuously with quick lever actions of nozzle tester **A**, one to two seconds per stroke, and measure the pressure that the gauge registers when the pressure is released which will be observed by the sudden movement of the gauge indicator.
- If the measured value deviates from the standard value, disassemble injection nozzle assembly **5** and clean it, then adjust using adjusting screw **8**.
- If the performance cannot reach the standard value even after adjustment, replace injection nozzle assembly **5**.

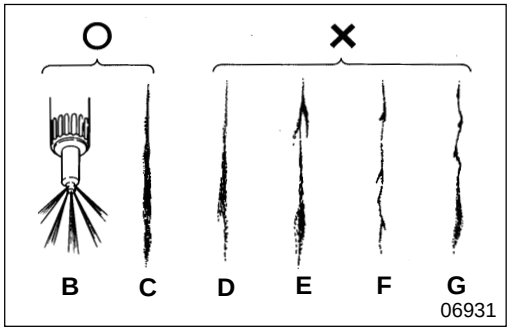

(2) Spray condition

- Spray continuously with quick lever actions of nozzle tester **A**, one to two seconds per stroke.
  - **B** : Even spray from all five orifices (Good)
  - **C** : Even and symmetrical spray (Good)
  - **D** : Asymmetrical spray (Faulty)
  - **E** : Spray direction deviates from the nozzle axis line (Faulty)
  - **F** : Thin and insufficient spray (Faulty)
  - **G** : Irregular spray (Faulty)
- If faulty spray cannot be corrected, disassemble injection nozzle assembly **5** and clean every part and repeat the test.
  If faulty spray still occurs after repeating test, replace the injection nozzle assembly.
- Make sure that there is no post-spray dripping after injection.

WARNING

Never touch the spray from the nozzle or let your hands get too close to the spray point during the test.

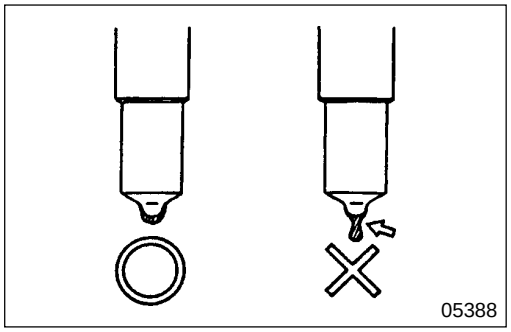

(3) Fuel air tightness and leakage at related contact points

- Raise the interior pressure of the nozzle gradually to the test pressure of 14.7 MPa {150 kgf/cm^2}. Maintaining the pressure, check and see if any fuel seeps out of the nozzle tip within 10 seconds.
- If any fault is found, disassemble injection nozzle assembly **5** and clean every part and repeat the test. If any fault is still found, replace the injection nozzle assembly.

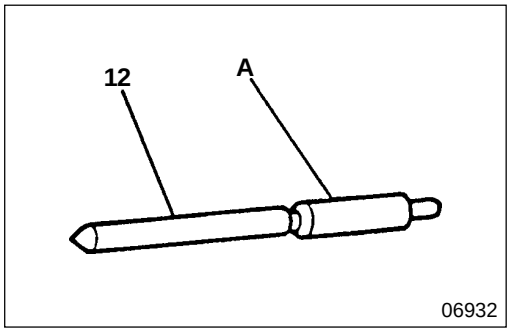

5 Injection nozzle assembly

[Disassembly]

CAUTION

- **Be sure not to touch sliding part A of needle valve 12 with your hands.**
- **Never change the combination of removed needle valve 12 and nozzle 13 for each cylinder.**

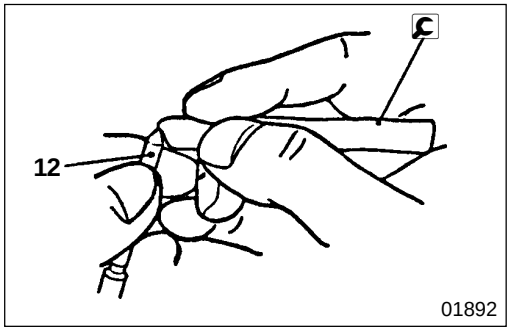

[Cleaning]

Clean needle valve **12** and nozzle **13** with diesel fuel (cleaning solvent).
Remove carbon deposits with cleaning tool in the following manner:

- Clean needle valve **12** by removing carbon deposits from its tip using the cleaning bar of cleaning tool.

CAUTION

Never use a wire brush or hard steel for cleaning.

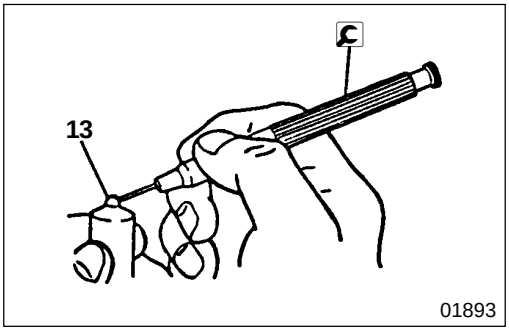

- To clean nozzle **13**, remove carbon deposits from the orifices of the nozzle using the needle cleaner of cleaning tool, by inserting it into the orifices and turning it.
  Needle cleaner diameter: ø 0.25 mm {0.0098 in.} or less

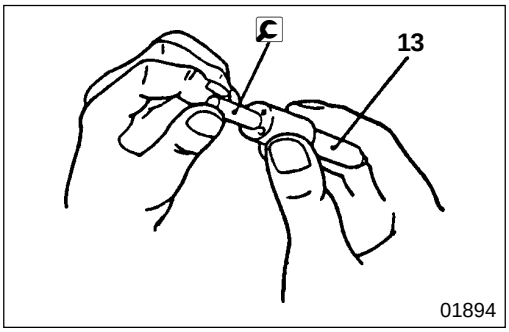

- Clean the seat of nozzle **13** using the cleaning needle of cleaning tool.
- Use FUSO carbon remover to remove hard-to-remove, burnt-on carbon deposits.

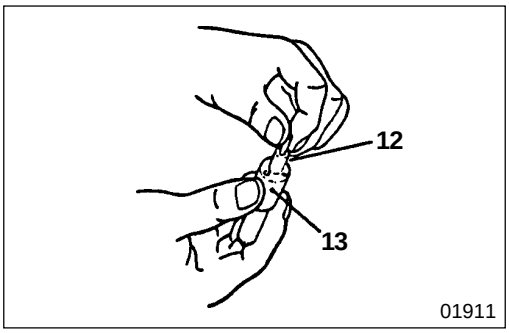

[Inspection]

- Immerse needle valve **12** and nozzle **13** in diesel fuel (cleaning solvent) and clean them thoroughly.
- Check and see if needle valve **12** drops by its own weight into the nozzle from the position where a third of its length is pulled out.
  (Repeat this several times rotating the needle valve.)
- If needle valve **12** does not drop smoothly, repeat cleaning and repeat the test. If any fault is still found, replace both the needle valve and nozzle **13** together as a set.

INSPECTION OF OTHER DEVICES

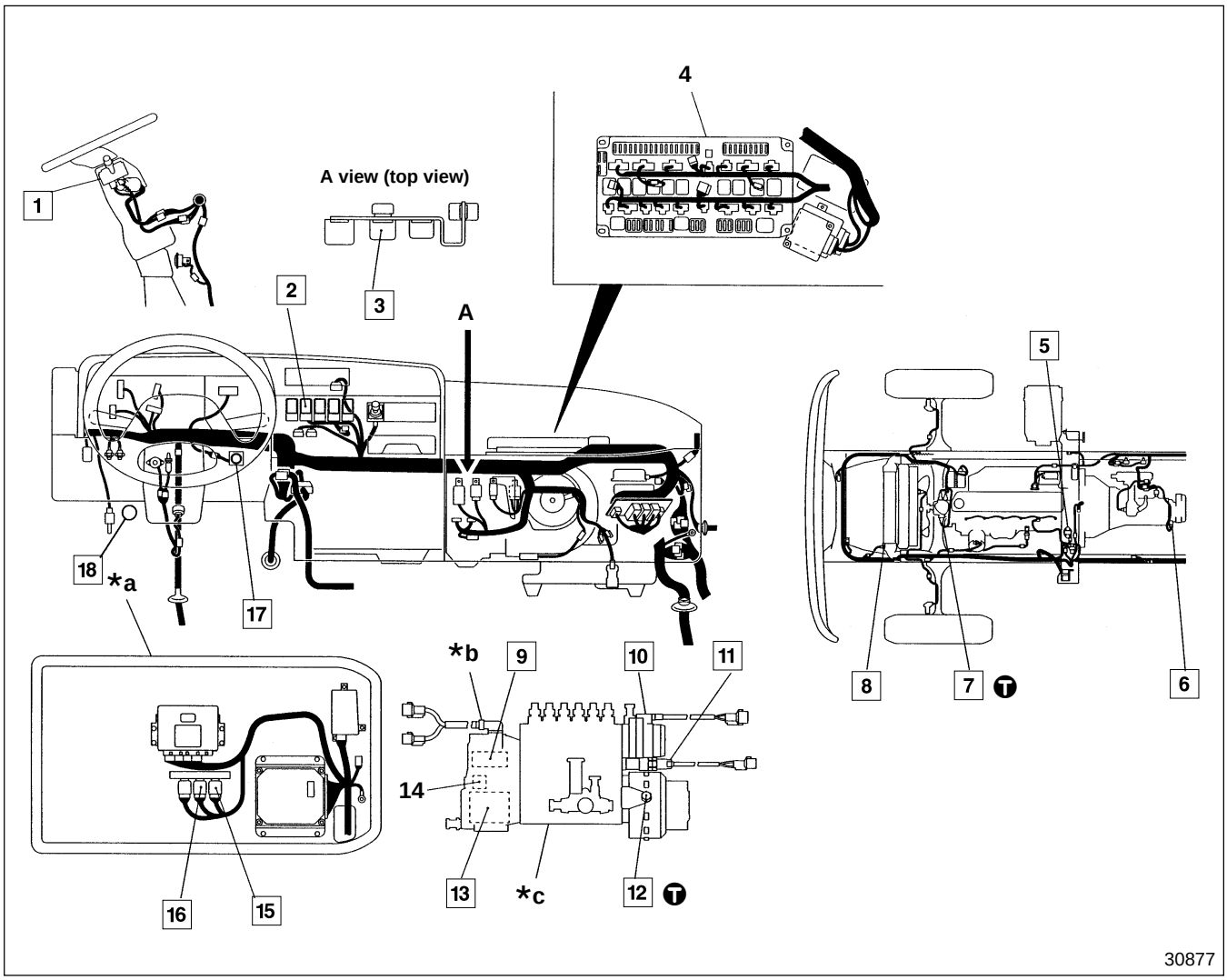

1 Combination switch
2 Cruise control main switch < M/T >
3 Exhaust brake relay < M/T >
Accelator relay < A/T >
4 Relay and fuse box
5 Boost pressure sensor
6 Vehicle speed sensor (25 - pulse)
7 Engine coolane temperature sensor
8 Boost temperature sensor
9 Control rack position sensor
10 Prestroke actuator
11 Sub control rack position sensor
12 Engine speed sensor
13 Linear DC motor
14 Backup engine speed sensor
15 Cruise control main relay < M/T >
16 Pre-stroke cut relay
17 Idling speed adjustment potentiometer
18 Emergency engine stop button

***a** : Bed under box (rear of passenger seat side)
***b** : Electronic governor
***c** : Injection pump assembly
M/T : Manual transmission
A/T : Automatic transmission

Service standards

Unit : mm {in.}

Location	Maintenance item		Standard value		Limit	Remedy
6	Vehicle speed sensor output voltage 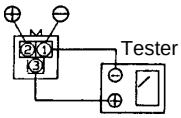 15717	① – ③	Low pulse	0.6 V or less	—	Replace
			High pulse	8 ± 1 V		
7	Coolant temperature sensor	Between terminal and body	20°C {68°F}	(3.25 kΩ)	—	Replace
			40°C {104°F}	(1.5 kΩ)	—	Replace
			60°C {140°F}	(620 ± 62 kΩ)	—	Replace
8	Resistance value of boost temperature sensor		0°C {32°F}	5880 ± 588 Ω	—	Replace
			20°C {68°F}	2455 ± 245 Ω	—	Replace
			80°C {176°F}	322 ± 32 Ω	—	Replace
9	Resistances of control rack position sensor	<Connector: 3-pin> 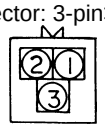 16165	③ – ④ <3-pin>	31.5 to 36.5 Ω	—	Repair or replace the injection pump assembly.*
		<Connector: 10-pin> 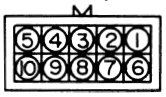 16160	③ – ⑨ <10-pin>	18.0 to 21.0 Ω	—	
			④ – ⑨	13.5 to 15.5 Ω	—	
		<Governor actuator> 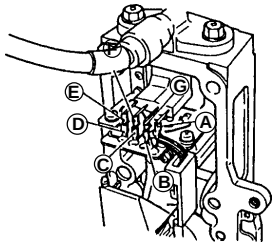 24816	Ⓖ-Ⓒ	31.5 to 36.5 Ω	—	
			Ⓖ-Ⓕ	18.0 to 21.0 Ω	—	
			Ⓒ-Ⓕ	13.5 to 15.5 Ω	—	
10	Resistances of pre-stroke actuator (measured at connector) 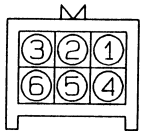 13714		② – ③	5.5 to 6.1 Ω	—	Repair or replace the injection pump assembly.*
			① – ③	11.0 to 12.2 Ω	—	
			① – ②	5.5 to 6.1Ω	—	
			④ – ⑤	2.45 to 2.95 Ω	—	

The values in ( ) are reference values.

*: Contact your MFTA representative for current injection pump repair and replacement procedures.

INSPECTION OF OTHER DEVICES

Unit : mm {in.}

Location	Maintenance item		Standard value	Limit	Remedy
11	Resistances of sub control rack position sensor  13725	① – ④	92.5 to 101.5 Ω	—	Repair or replace the injection pump assembly.*
		① – ③	92.5 to 101.5 Ω	—	
		③ – ④	185 to 203 Ω	—	
12	Engine speed sensor resistor value (at 25°C {77°F}) 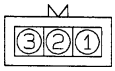 14013	① – ②	2.1 to 2.5 kΩ	—	Replace
	Gap between the engine speed sensor and timer housing protrusion		0.8 to 1 {0.031 to 0.039}	—	Adjust
13	Resistances of linear DC motor	<Connector:3-pin> 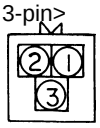 16165	① – ②	9.0 to 9.8 Ω	—	Repair or replace the injection pump assembly.*
		<Connector:10-pin> 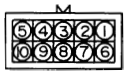 16160	① – ②		—	Repair or replace the injection pump assembly.*
		<Governor actuator> 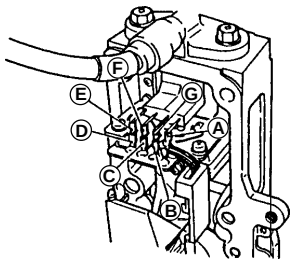 24816	Ⓐ-Ⓑ		—	Repair or replace the injection pump assembly.*
17	Output voltage of idling speed adjustment potentiometer  16184	② – ③	Knob pulled	1 to 3 V	—	Replace
			Knob pushed	3.6 to 4.3 V	—	Replace

*: Contact your MFTA representative for current injection pump repair and replacement procedures.

Tightening torque

Unit : N·m {lbf.ft,kgf·m}

Location	Part to be tightened	Tightening torque	Remarks
7	Coolant temperature sensor	34±6.9 {25±5, 3.5±0.7}	—
12	Engine speed sensor lock nut	24 to 35 {17 to 26, 2.4 to 3.6}	—

◆ Service procedure

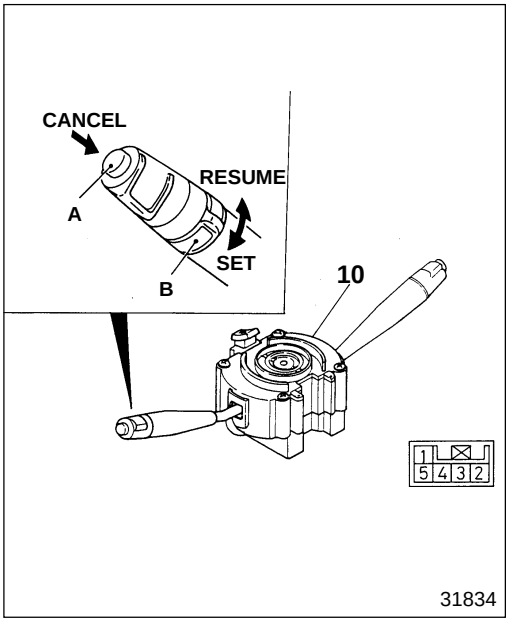

1 **Inspection of the combination switch <M/T>**

- Check for conduction as indicated in the following chart.

		①	②	③	④	⑤
Set/resume switch and cancel switch	Set		○	○		
	Cancel			○		○
	Off					
	Resume			○	○	

A : Cruise control cancel switch
B : Cruise control set/resume switch
There should be conduction between the ○——○ terminals in the chart.

- If there is a malfunction, replace the combination switch **1**.

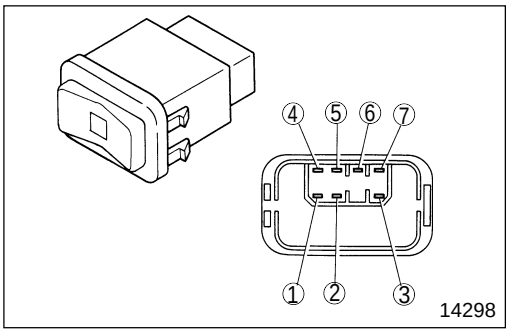

2 **Cruise control main switch <M/T>**

- Check for conduction as indicated in the following chart. There should be conduction between the ○——○ terminals in the chart.
- If there is a malfunction, replace the main cruise control switch **2**.

	①	⑥	⑤	④	⑦	LED (Operation indicator)	③
ON	○	○	○	○	○	○	○
N (Neutral)		○		○			
OFF							

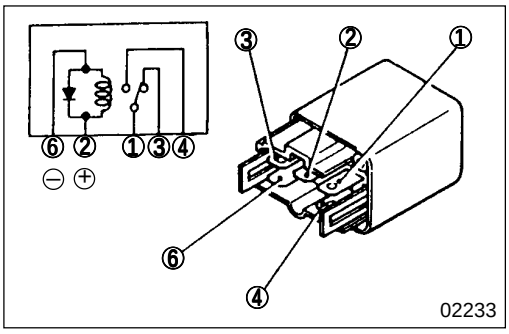

3 **15** **Inspection of the cruise control main relay <M/T>, exhaust relay, and accelerator relay**

- Check for conduction as indicated in the following chart.

	①	②	③	④	⑥
Not Energized	○		○		
		○			○
Energized	○			○	
		○			○

There should be conduction between the ○——○ terminals in the chart.
Apply 12 V DC between ⊕——⊖ terminals.

- If there is a malfunction, replace the relay.

INSPECTION OF OTHER DEVICES

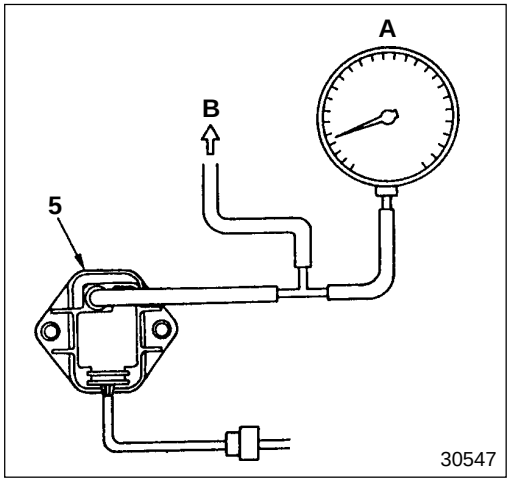

5 Inspection of the boost pressure sensor main unit

- Install pressure gauge **A** for boost pressure measurement as shown in the diagram.
- Connect MUT-II. 🕮 P13-44
- Set the MUT-II service data display to BOOST PRESS.
- Start the engine. If the MUT display value and the value indicated by the boost pressure measurement gauge **A** differ, replace the boost pressure sensor **5**.
  B : To the inlet manifold

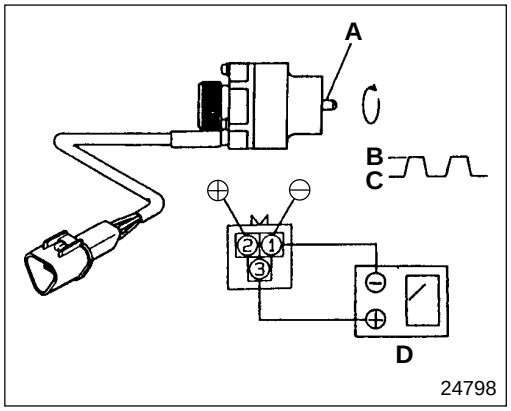

6 Inspection of the vehicle speed sensor

- Apply 12 V DC between terminals ① and ②, and slowly turn portion **A** of the vehicle speed sensor **6**.
- Measure the maximum value (high pulse voltage **B**) and the minimum value (low pulse voltage **C**) generated between terminals ① and ③under the above conditions.
  D : Tester
- If the measured value is outside of the standard range, replace vehicle speed sensor **6**.

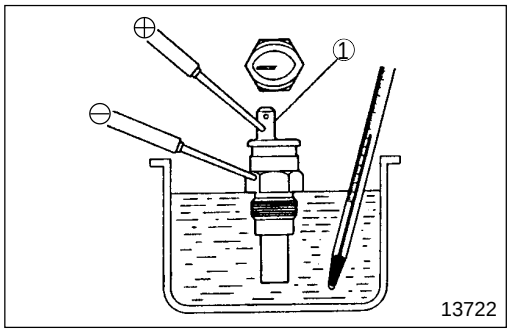

7 Inspection of engine coolant temperature sensor

- Put the engine coolant temperature sensor **7** in a container of engine oil.
- Heat the oil to each of the specified temperatures. Stir the oil to ensure that it heats up evenly.
- At each of the specified temperatures, measure the resistance between the terminal ① and body of the engine coolant temperature sensor **7**.
- If the measurements are out of specification, replace the engine coolant temperature sensor **7**.

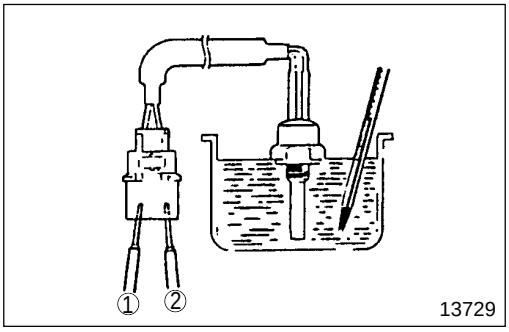

8 **Inspection of boost temperature sensor**

- Place boost temperature sensor **8** in glycerin in a container.
- Raise the glycerin temperature to the specified values and stir the glycerin.
- Measure the resistance between temminals ① and ②.
- If the measured value deviates from the standard value, replace boost temperature sensor **8**. Gr 15

9 **Inspection of control rack position sensor**

Perform the following inspections. If any abnormality is evident, have inspection and repair performed by the nearest MFTA Dealer.

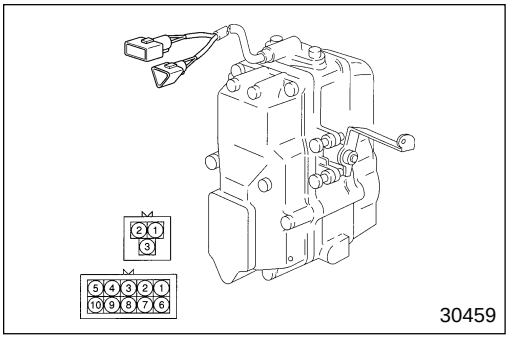

● **Measurements on conectors**

Measure the resistances between the following terminals: 3-pin connector's ③ and 10-pin connector's ④; 10-pin connector's ③ and ⑨; ④ and ⑨.

INSPECTION OF OTHER DEVICES

10 Inspection of pre-stroke actuator

Perform the following inspections. If any abnormality is evident, have inspection and repair performed by the nearest MFTA Dealer.

CAUTION ⚠

The pre-stroke actuator 10 must be inspected when the engine is cold.

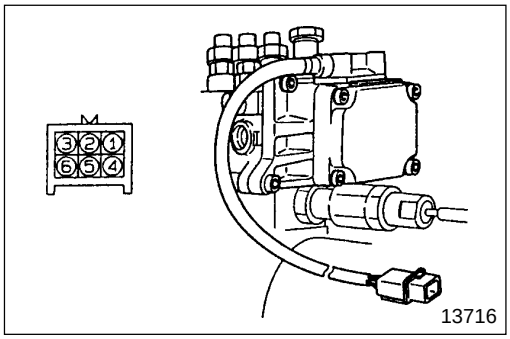

(1) Measurements on connectors

Measure the resistance between terminals ② and ③; ① and ③; ① and ②; ④ and ⑤.

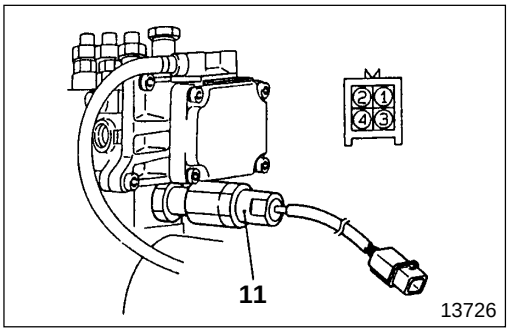

11 Inspection of sub control rack position sensor

- Measure the resistances between the following terminals: ① and ④; ① and ③; ③ and ④.
- If any resistance is out of specification, replace the sub control rack position sensor **11**.
- Have replacement performed by the nearest MFTA Dealer.

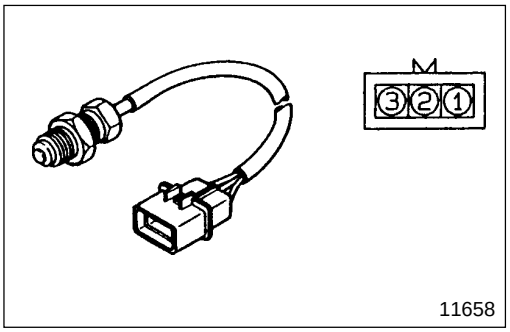

12 Engine speed sensor

[Inspection]

(1) Main Unit

- Measure the resistance value between terminals ① and ②.
- If the measured value is outside of the standard range, replace the engine speed sensor **12**.

CAUTION ⚠

If the tightening torque of engine speed sensor 12 is insufficient, the signals may not be output correctly. Therefore, check the tightening torque.

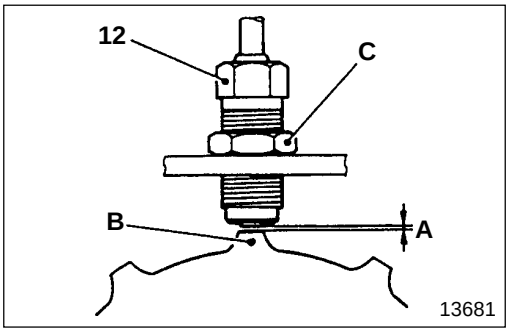

(2) Gap of protrusion

If the gap **A** between the engine speed sensor **12** and the protrusion **B** of the timer housing is outside of the standard range, adjust with the following procedure.

[Adjustment]

- Adjust by loosening lock nut **C** and turning engine speed sensor **12**.
- After adjustment is complete, tighten lock nut **C** with the specified torque.

CAUTION ⚠

If the gap C between the engine speed sensor 12 and the protrusion B of the timer housing is too large, no signals will be output, and if it is too small, the sensor might make contact with the protrusion.

13 Inspection of linear DC motor

Perform the following inspections. If any abnormality is evident, have inspection and repair performed by the nearest MFTA Dealer.

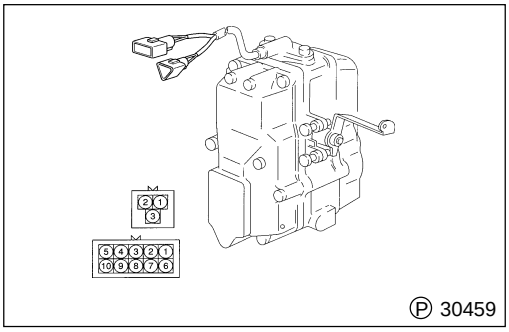

(1) Measurements on connectors

Measure the resistance between terminals ① and ② on each connector.

INSPECTION OF OTHER DEVICES

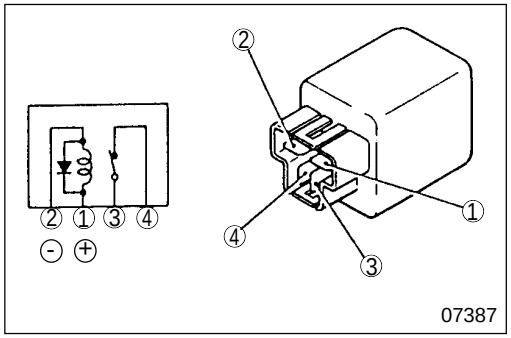

16 Inspection of pre-stroke cut relay (normally-closed type with 4-pin connector)

- Perform continuity checks in accordance with the following table.

	①	②	③	④
Not energized	○——○		○——○	
Energized	⊕——⊖		◌- - - - - -◌	

○——○ : Continuity exists between terminals.
⊕——⊖ : Terminals across which 12 V DC is applied
◌- - - -◌ : Continuity no longer exists between terminals

- Replace the relay if any abnormality is evident.

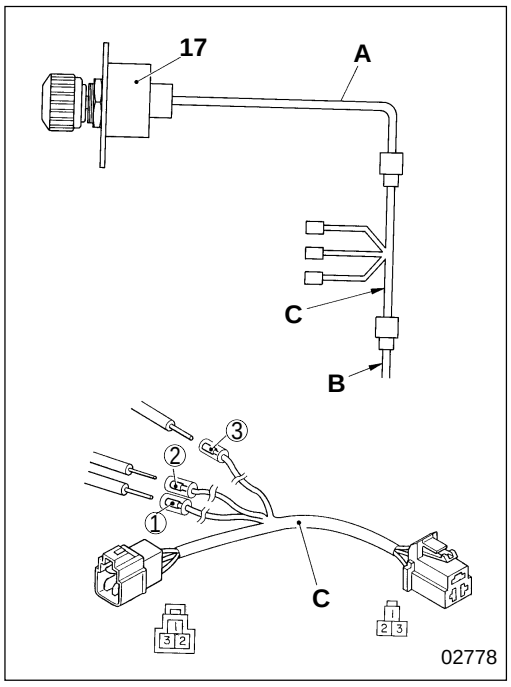

17 Inspection of idling speed adjustment potentiometer

- Disconnect the harness **A** of the idling speed adjustment potentiometer **17** from the cab-side harness **B**. Then, connect an inspection harness **C** between harnesses **A** and **B.** (The inspection harness must be made specially for this procedure.)
- Turn the starter switch to the ON position.
- Check the output voltages of the iding speed adjustment potentiometer **17** in accordance with the following table.

Item	Connector terminal		
	Accelerator pedal position sensor inspection harness		
	①: Power supply (+)	②: GND (–)	③: Output (+)
Output voltage with knob pulled		⊖——⊕	
Output voltage with knob pushed			

Output characteristics

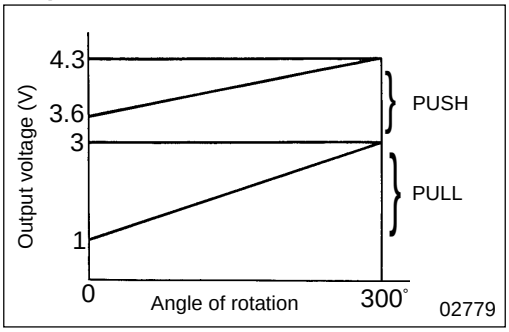

- If the output voltages are out of specification, replace the idling speed adjustment potentiometer **17**.

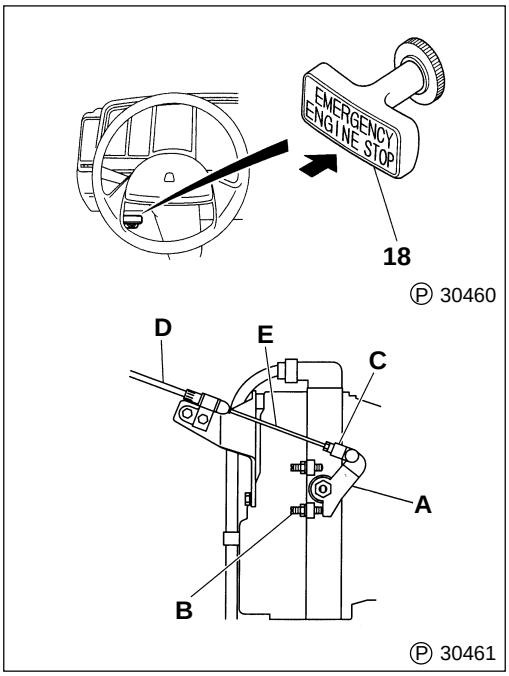

18 Inspection of the emergency engine stop button

- Fully press down the emergency engine stop button **18**.
- Check that the stop lever **A** of the governor is in contact with the stopper bolt **B** at this time.
- If it is not in contact, adjust it such that it makes contact by turning crevice **C**.
- Moreover, tighten inner wire **E** of stop cable **D** just enough to prevent it from being slack.

CAUTION ⚠

Be careful not to stretch the inner wire E too much. Doing so can cause the stop lever A not to make contact with the stopper bolt B.

ELECTRIC CIRCUIT AND PART INSTALLATION LOCATIONS

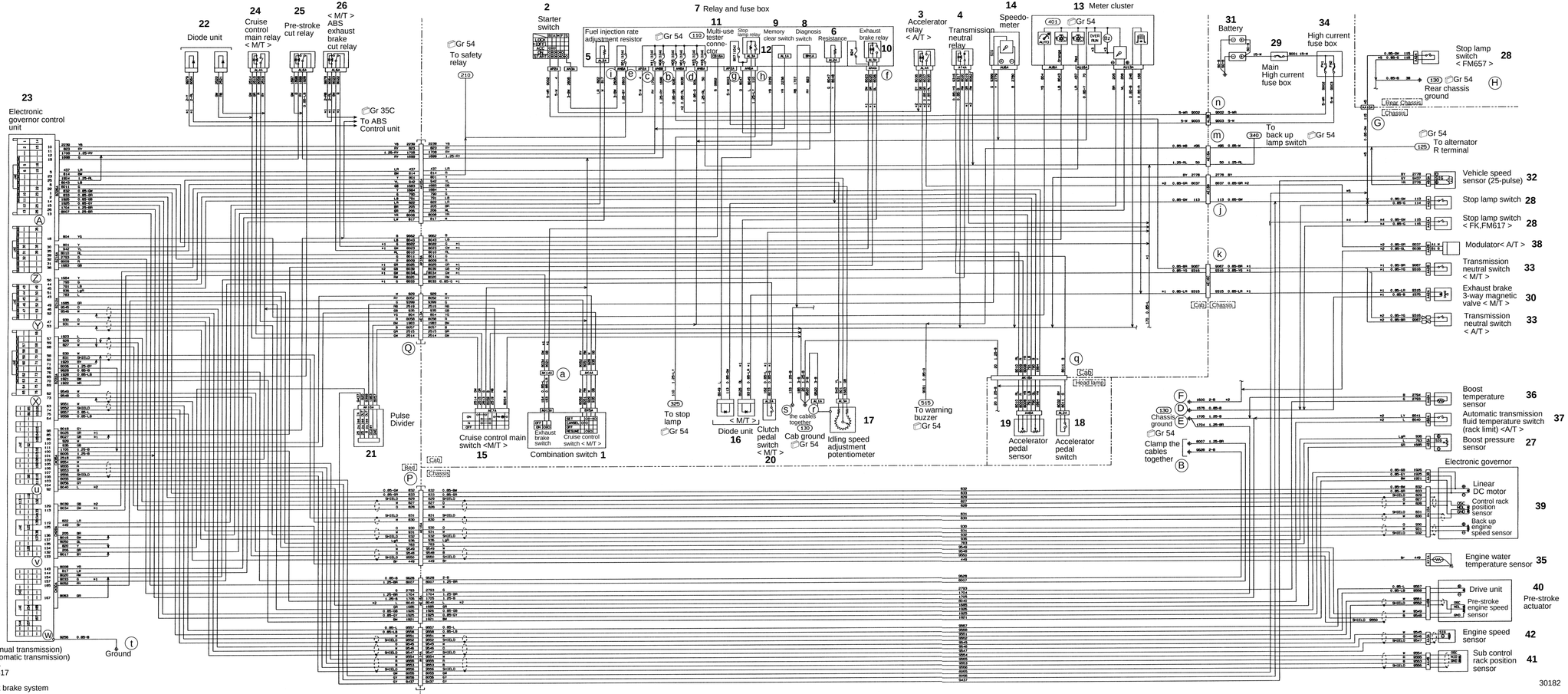

*1 : M/T (Manual transmission)
*2 : A/T (Automatic transmission)
*3 : M8S2X5
*4 : FK, FM617
*5 : FM657
ABS : Anti-lock brake system

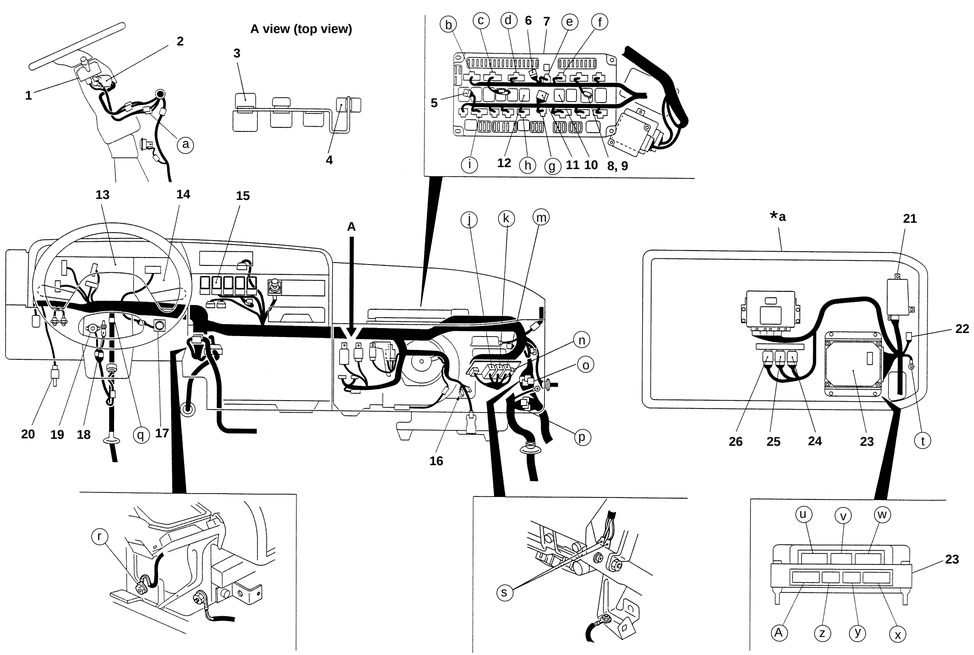

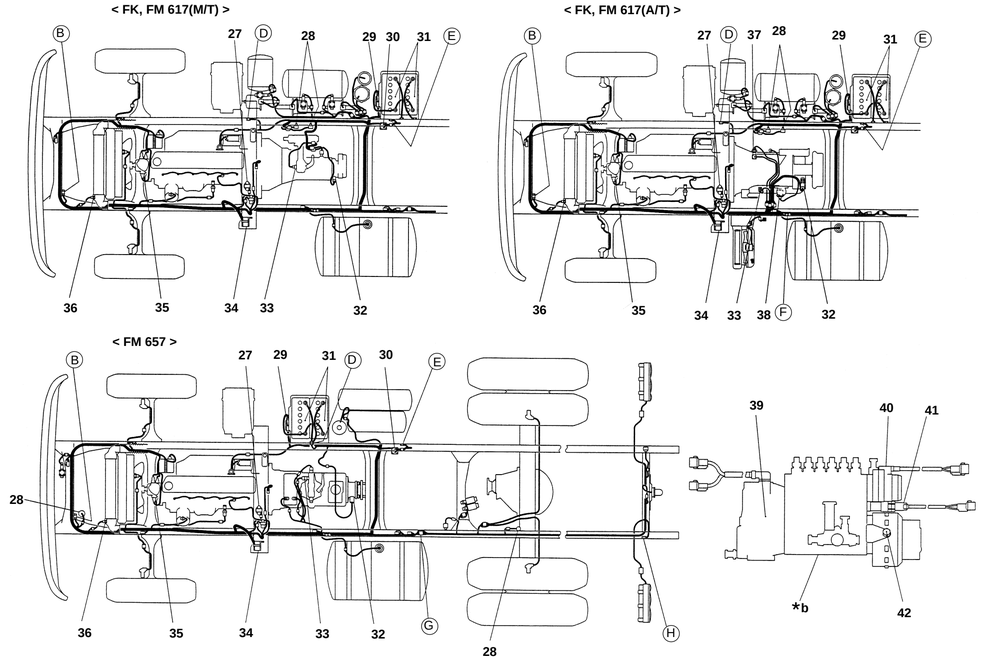

1 Combination switch
2 Starter switch
3 Accelerator relay < A/T >
4 Transmission neutral relay
5 Fuel injection rate adjustment resistor
6 Resistance
7 Relay and fuse box
8 Diagnosis switch
9 Memory clear switch
10 Exhaust brake relay < M/T >
11 Multi-use tester connector
12 Stop lamp relay
13 Meter cluster
14 Speed meter
15 Auto cruise main switch
16 Diode unit
17 Idling speed adjustment potentiometer
18 Accelerator pedal switch
19 Accelerator pedal sensor
20 Clutch pedal switch < M/T >
21 Pulse divider
22 Diode unit
23 Electronic governor control unit
24 Auto cruise main relay
25 Pre-stroke cut relay
26 Anti-lick brake exhaust brake cut relay
27 Boost pressure sensor
28 Stop lamp relay
29 Main high current fuse box
30 Exhaust brake 3-way magnetic valve < M/T >
31 Battery
32 Vehicle speed sensor (25-pulse)
33 Transmission neutral switch
34 High current fuse box
35 Engine water temperature sensor
36 Boost temperature sensor
37 Automatic transmission fluid temperature switch
38 Modulator < A/T >
39 Electronic governor
40 Pre-stroke actuator
41 Sub control rack position sensor
42 Engine speed sensor

*a : Bed under box (behind assistant driver's seat side)
*b : Injection pump assembly
M/T : Manual transmission
A/T : Automatic transmission

MITSUBISHI
FUSO

FK.FM
Service Manual

Group 13
Fuel and Engine Control

Table of Contents

BACK

HOME

MITSUBISHI FUSO TRUCK OF AMERICA, Inc.

Pub No. TWME9503-13

GROUP 13 FUEL AND ENGINE CONTROL

SPECIFICATIONS 2

STRUCTURE AND OPERATION 4

TROUBLESHOOTING 24

INSPECTION AND ADJUSTMENT MOUNTED IN VEHICLE

- Inspection and Adjustment of Fuel Injection Timing 28
- Inspection and Adjustment of No-Load Minimum and Maximum Revolution 29

PRE-STROKE CONTROL INJECTION PUMP SYSTEM

- Troubleshooting Procedure 30
- Electric Circuit and Position of Parts Installation 36
- Inspection by Individual Diagnosis Code 38
- Inspection of Temporary Faults 56

ENGINE CONTROL 58

FUEL TANK 62

WATER SEPARATOR 63

FUEL FILTER 64

INJECTION PUMP 66

INJECTION NOZZLE 70

SPECIFICATIONS

Injection Pump

Item	Specifications
Manufacturer	ZEXEL
Body model	MD–TICS (Pre-stroke control type)
Governor type	RLD – J all-speed mechanical governor with boost compensator
Feed pump model	KD
Automatic timer model	SPG mechanical type

Injection Nozzle

Item	Specifications	
Engine model	6D16T2	6D16T3, T4
Manufacturer	ZEXEL	
Model and type	DLLA hole type 1-spring nozzle	
Nozzle orifice quantity	5	
Orifice diameter mm {in.}	ø0.25 {0.0098}	ø0.23 {0.0091}

Fuel Filter Type

Item	Specifications
Filter type	Spin-on type

M E M O

Fuel System (Flow of Fuel)

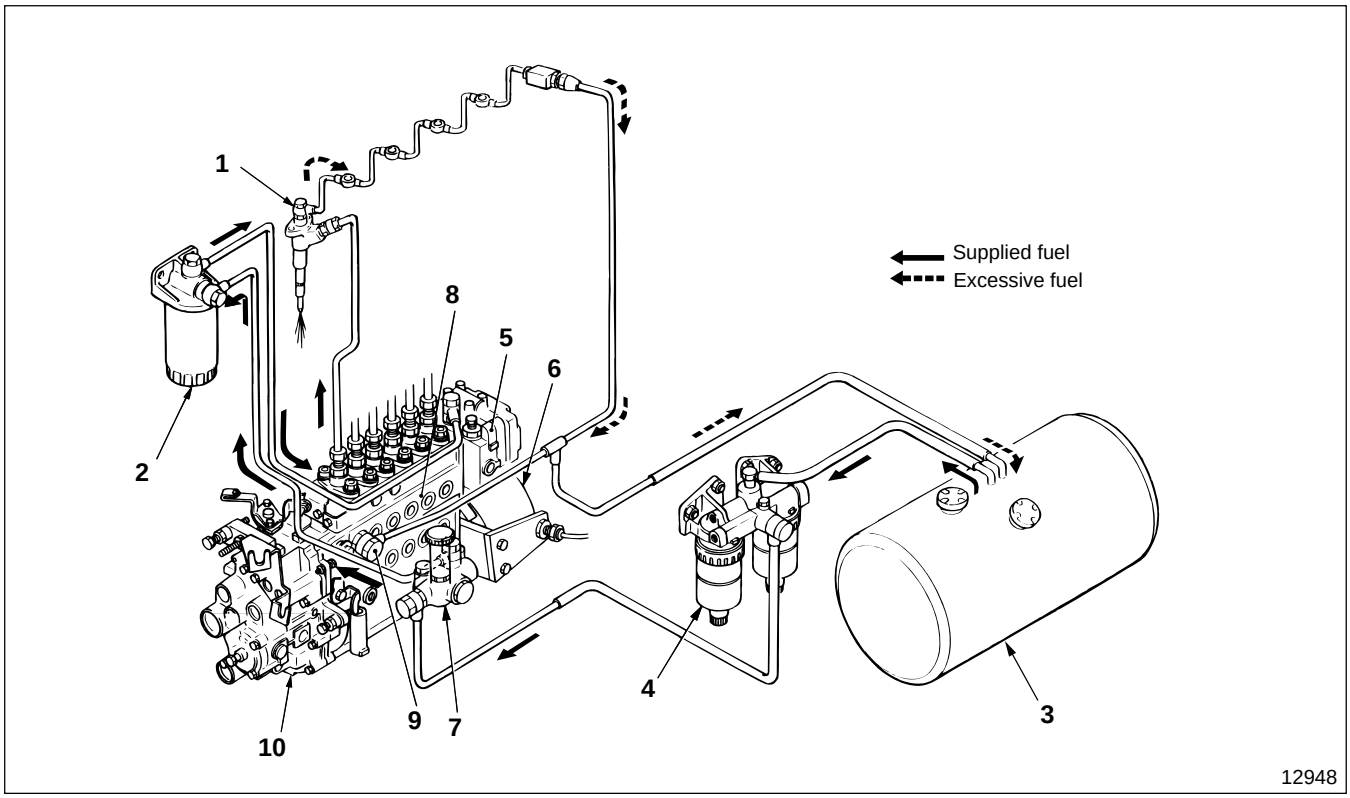

1 Injection nozzle
2 Fuel filter
3 Fuel tank
4 Water separator
5 Pre-stroke actuator
6 Automatic timer
7 Feed pump
8 Injection pump
9 Overflow valve
10 Governor

Fuel in fuel tank **3** is sucked up by feed pump **7** which is driven by the cam action of injection pump **8** and is filtered through fuel filter **2** which removes dirt and other foreign particles.
Filtered fuel is sent to the injection pump where the fuel pressure is boosted and injected through injection nozzle **1** into the combustion chamber.
When fuel pressure is higher than the specified value, overflow valve **9** opens to let the fuel return to the fuel tank.

Engine Control

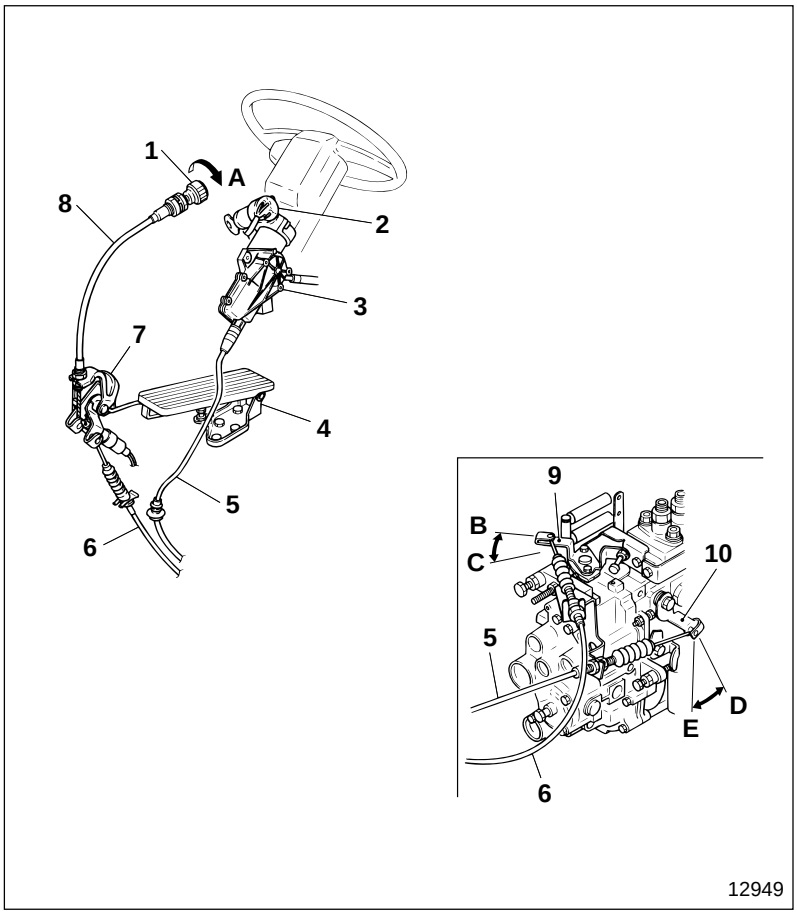

1 Idling control knob
2 Starter switch
3 Fuel-cut motor
4 Accelerator pedal assembly
5 Engine stop cable
6 Accelerator control cable
7 Accelerator and bracket assembly
8 Idling control cable
9 Idling control lever
10 Engine stop lever

A : Idling revolution rising
B : Idling position
C : Full-load position
D : Engine start-up position
E : Engine-stop position

(1) Idling control knob

Idling control knob **1** is for making fine adjustment to the idling revolution of the engine. Turning the knob clockwise raises the revolution. It works in the same way as accelerator pedal assembly **4** does when it is depressed.

(2) Fuel-cut motor

Fuel-cut motor **3** is connected to starter switch **2**, and it is activated by the starter switch being turned ON (or to S). This brings engine-stop lever **10** of the governor to engine-stop position **E** (or engine start-up position **D**), and stops (or starts) the engine. P13-6

(3) Accelerator pedal

When accelerator pedal assembly **4** is freed from foot pressure, the governor return spring forces idling control lever **9** to idling position **B**, restoring the pedal to its original position.

Engine Stopping Circuit

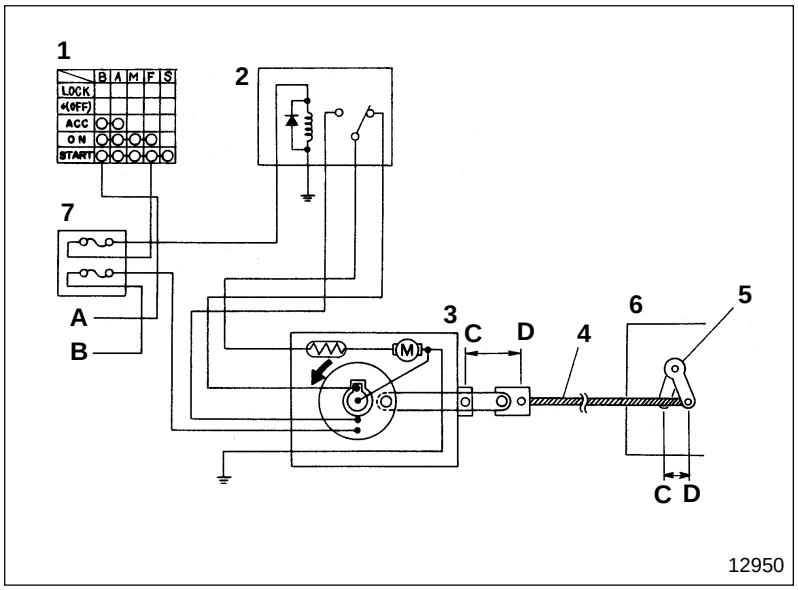

1 Starter switch
2 Fuel-cut relay
3 Fuel-cut motor
4 Engine-stop cable
5 Engine-stop lever
6 Governor
7 Relay and fuse box

A : Power source
B : Power source
C : Engine-stop position
D : Engine start-up position

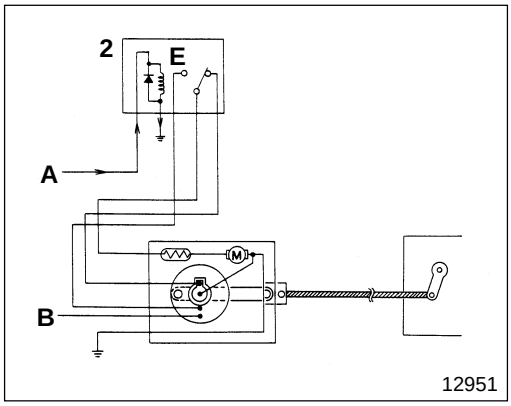

● **At engine start-up (starter switch ON)**

- Electric current flows as illustrated, and coil **E** of fuel-cut relay **2** is magnetized.

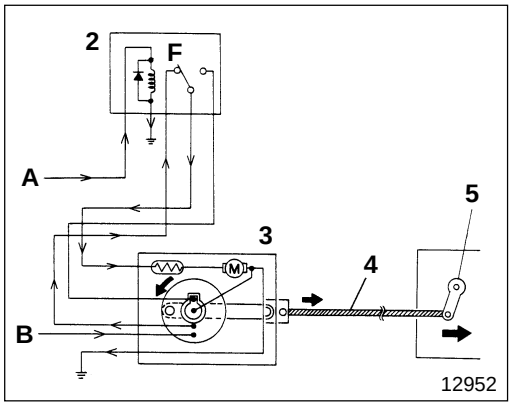

- Contact point **F** of fuel-cut relay **2** closes, and fuel-cut motor **3** is activated.
- Engine-stop cable **4** is pushed out, and engine-stop lever **5** moves to engine start-up position.

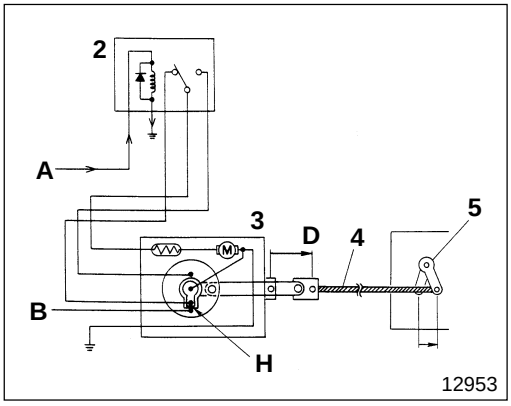

- Engine-stop lever **5** moves to engine start-up position **D**, and fuel is ready to flow. Contact point **H** of fuel-cut motor **3** opens, and the fuel-cut motor stops.

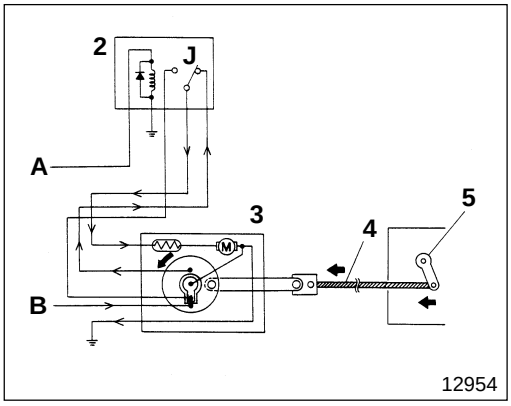

● **When engine is at standstill (starter switch OFF)**

- Electric current from the starter switch is broken, and contact point **J** of fuel-cut relay **2** closes, and fuel-cut motor **3** is activated.
- Engine-stop cable **4** is pulled to bring engine-stop lever **5** to engine-stop position.

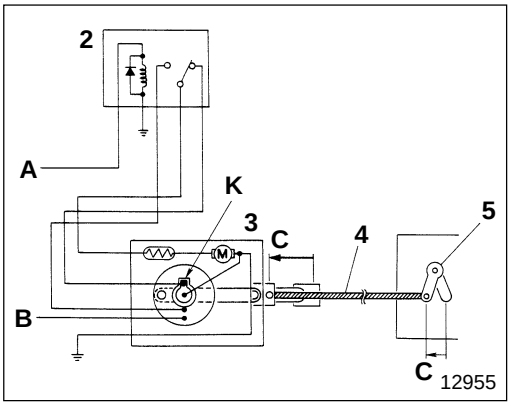

- When engine-stop lever **5** reaches engine-stop position **C**, fuel flow stops and the engine stops. Simultaneously, contact point **K** of fuel-cut motor **3** opens, and the fuel-cut motor stops.

Fuel Gauge Electric Circuit

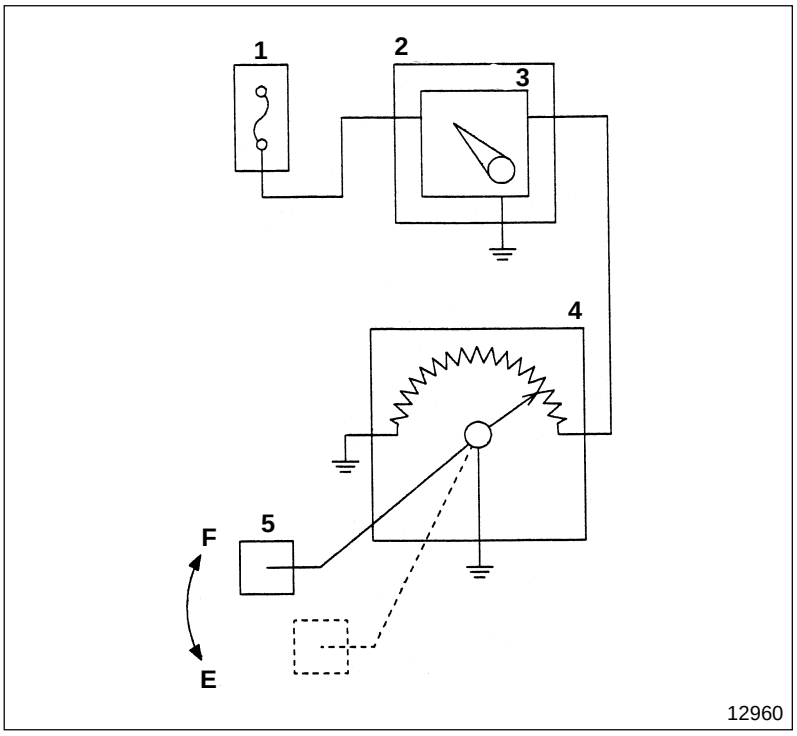

1 Relay and fuse box
2 Meter cluster
3 Fuel gauge
4 Fuel gauge unit
5 Float

The fuel gauge circuit indicates the amount of fuel remaining by means of a gauge.

Water Separator

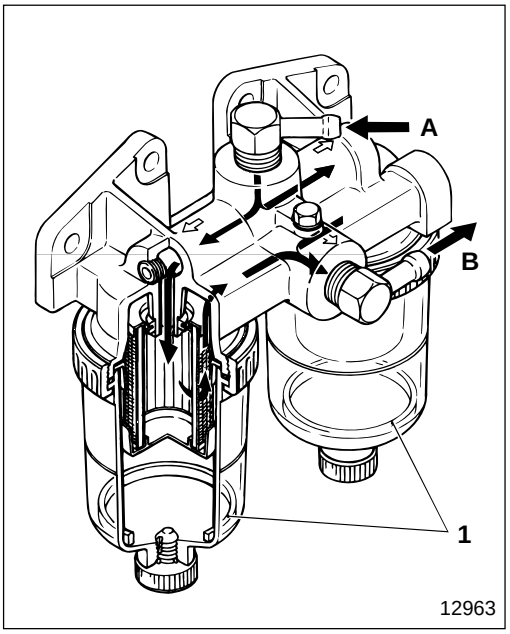

1 Water level ring

A : From fuel tank
B : To feed pump

The water separator is installed between the fuel tank and the feed pump. Any water present in the fuel is separated by the baffle plate and the screen assembly.

Fuel Filter

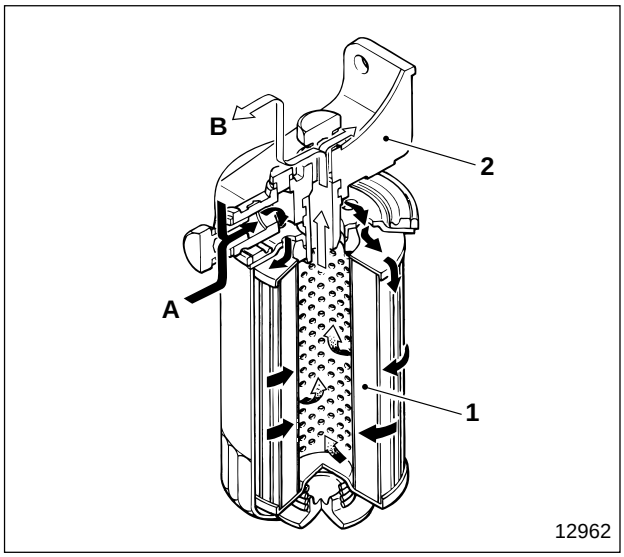

1 Fuel filter
2 Fuel filter head

A : From feed pump
B : To injection pump

Pressurized fuel is delivered from the feed pump of the injection pump to the fuel filter which separates water from the fuel and removes foreign particles are removed from the fuel by fuel filter **1**.

Structure of Pre-stroke Control Injection Pump System

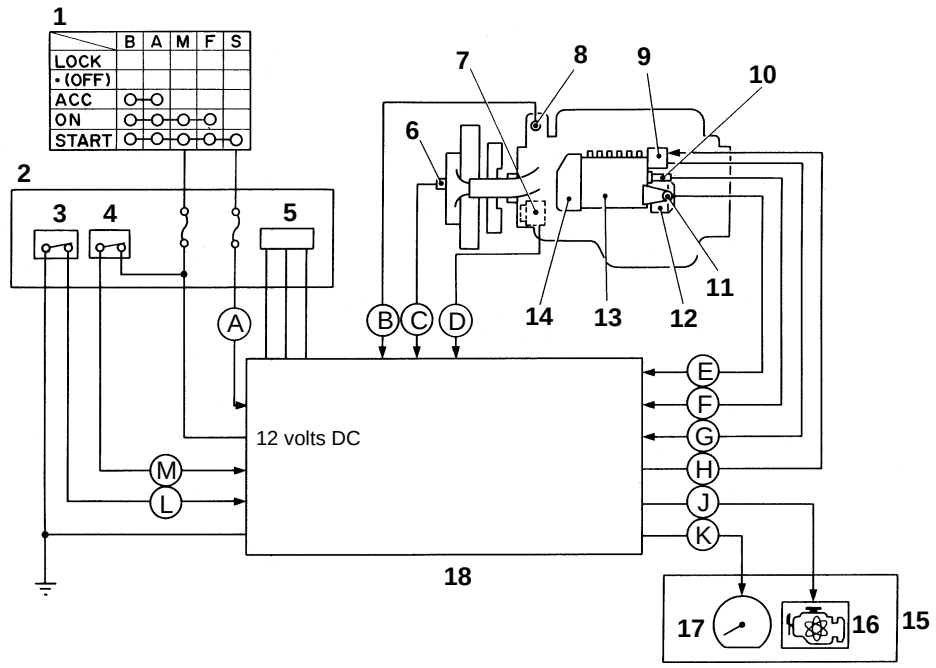

13086

Part name	Main function	Main signal
1 Starter switch	Detection of start signal	Ⓐ : Start signal
2 Relay and fuse box		
3 Diagnosis switch	Transmission of diagnosis code signal	Ⓛ : Diagnosis code signal
4 Memory clear switch	Clearing of diagnosis code	Ⓜ : Diagnosis code clearing signal
5 Multi-use tester connector	Connection of multi-use tester	
6 Boost air temperature sensor	Detection of engine intake air temperature	Ⓒ : Boost air temperature signal
7 Alternator	Detection of engine revolution	Ⓓ : Alternator L terminal signal
8 Water temperature sensor	Detection of engine coolant temperature	Ⓑ : Engine coolant temperature signal
9 Pre-stroke actuator		
• Pre-stroke position sensor		Ⓖ : Pre-stroke position signal
• Drive unit		Ⓗ : Actuator drive signal
10 Control rod position sensor	Detection of control rod position	Ⓕ : Control rod position signal
11 Engine revolution sensor	Detection of engine revolution	Ⓔ : Engine revolution signal
12 Mechanical timer	Retards fuel injection timing (Mechanical control)	
13 Pre-stroke control injection pump	Change of pre-stroke (Advance fuel injection timing)	
14 Mechanical governor	Control of fuel injection quantity (Mechanical control)	
15 Meter cluster		
16 Warning lamp	Indication of system abnormality, indication of diagnosis code	Ⓙ : Lamp lighting signal
17 Tachometer		Ⓚ : Tachometer drive signal
18 Pre-stroke control unit	Control of entire system	

- The pre-stroke control injection pump system uses, in the injection pump body, electronically controlled pre-stroke control injection pump **13**, mechanical governor **14**, and mechanical timer **12**.
- The lifting speed of the plunger in the injection pump varies with the engine revolution. Because of this, the pressure in the injection pipe also changes.
- This change of pressure in the injection pipe means the appropriate state of fuel injection and air/fuel mixture from the injection nozzle is no longer obtainable.
- In low- and medium-range engine revolution, the amount of pre-stroke is made larger so that the fuel is injected at the point the plunger lifting speed increases during the second half of cam lift. 🕮 P13-18
- On the other hand, in high-range engine revolution, the amount of pre-stroke is made smaller so that the fuel is injected while the plunger lifting speed remains low during the first half of cam lift. This prevents the pressure in the injection pipe from becoming excessively high.
- Because of this variation in the amount of pre-stroke, pre-stroke control injection pump **12** can obtain the appropriate injection state and air/fuel mixture for combustion.
- Thus, engine torque is larger than engines that use a normal injection pump. Also, the exhaust gas emission is cleaner.
- Control is achieved by making the pre-stroke adjustable in conjunction with the drive of pre-stroke actuator **9**, which is mounted on the rear of the injection pump body. This pre-stroke actuator is activated by commands received from pre-stroke control unit **18**, which processes data signals received from the various sensors installed on the engine and vehicle body.
  This system also has a trouble diagnosis function and a fail-safe function. The following table shows control items.

Control item	Control description	Information source	
		Sensor	Data signal
Pre-stroke control	Adjusts the fuel injection timing by changing the timing sleeve position to change the pre-stroke	6 to 11	Ⓐ to Ⓗ
Trouble diagnosis function	Checks and diagnoses the status of the sensors of the pre-stroke control injection pump system while the engine is running. Warns the driver, via warning lamp **16**, if any trouble occurs, and memorizes the data on the trouble 🕮 P13-13	ALL	ALL
Fail-safe function	When trouble occurs, backup mode is activated and countermeasures for the trouble are taken 🕮 P13-13	ALL	ALL
* Fuel injection quantity control	Controlled by mechanical governor **14** 🕮 P13-20	—	—
* Fuel injection timing control (retard)	Controlled by mechanical timer **12** 🕮 P13-22	—	—

* : This is not controlled by the pre-stroke control injection pump system but by ordinary mechanical control.

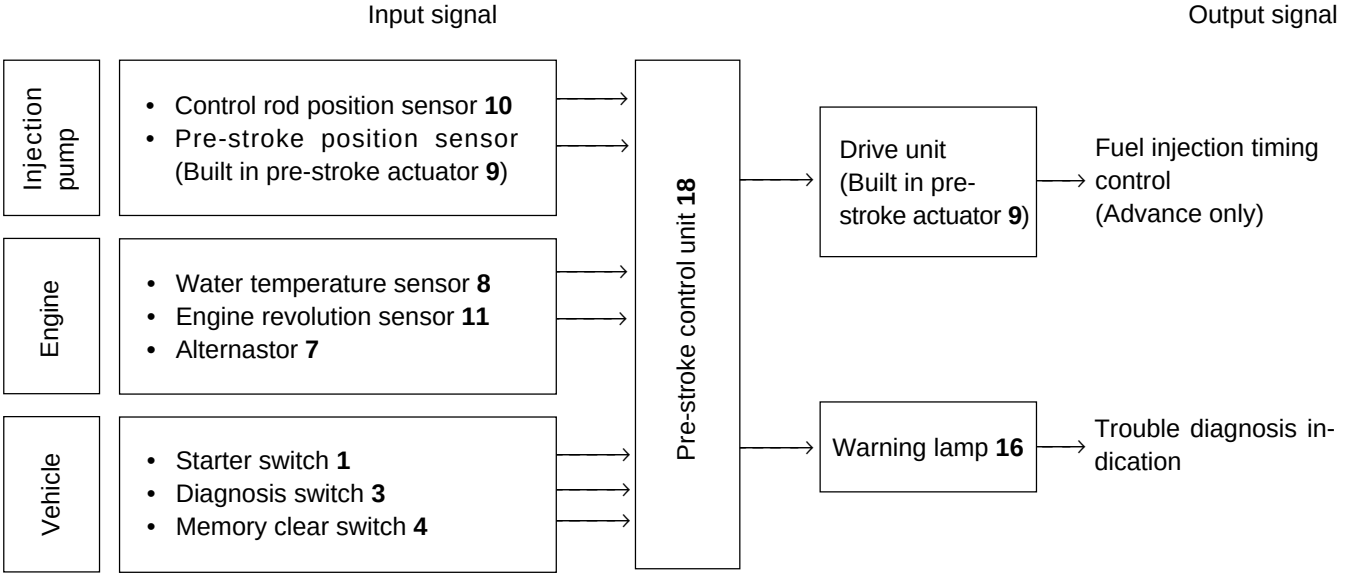

● Pre-stroke control

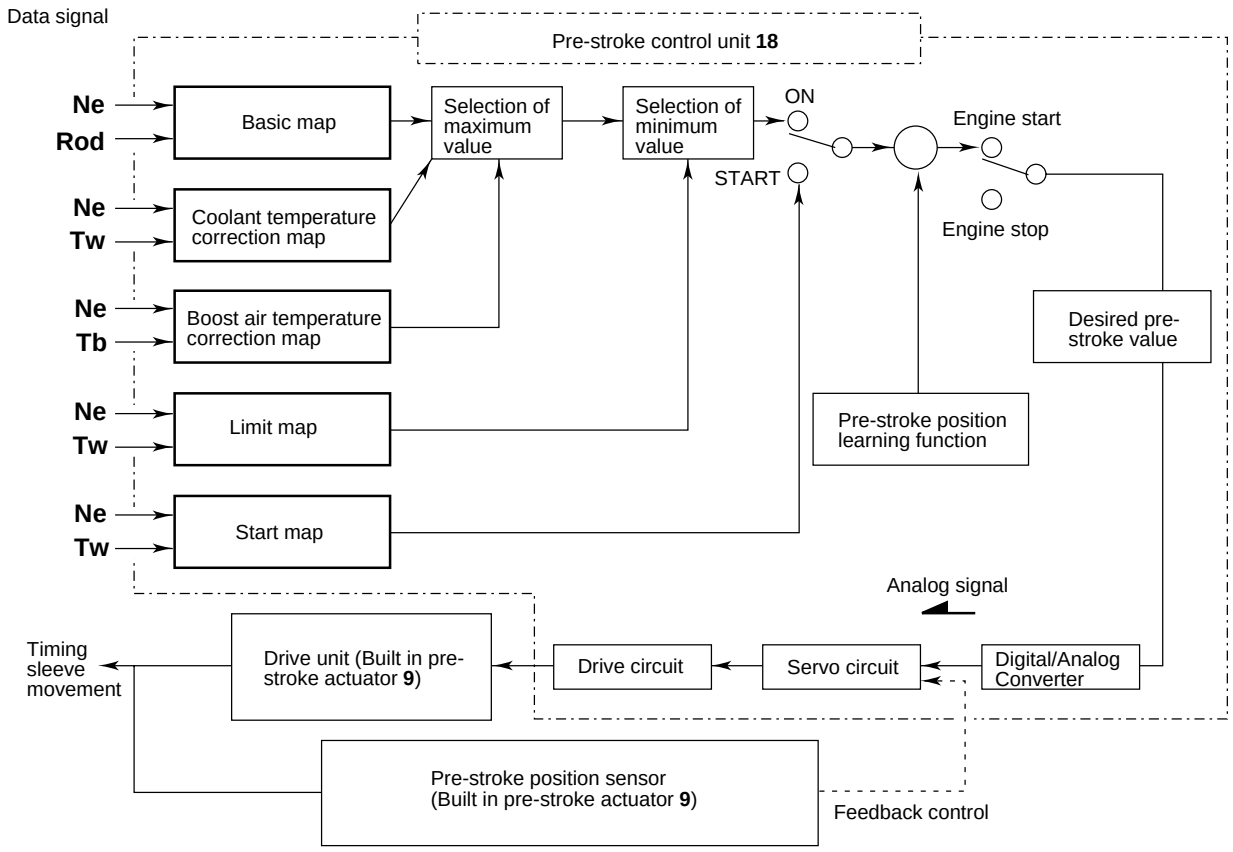

Ne : Engine revolution **Rod** : Control rod position
Tw : Engine coolant temperature **Tb** : Engine intake air temperature
Digital/Analog converter : Converts digital signals into analog signals

Control by Pre-stroke Control Unit 18

- The control unit commands the system while the engine is running, and selects the maximum value of the desired pre-stroke value based on data signals received from the basic map, coolant temperature correction map, and boost air temperature correction map.
- After the maximum value has been selected, the limit map selects and processes the minimum value so that the desired pre-stroke value does not exceed the maximum value.
- The desired pre-stroke value is further determined by the pre-stroke position learning function. This corrects any deviation in positional adjustment by the pre-stroke position sensor and any deviation by the injection pump, correcting the output voltage of the pre-stroke position sensor.
- The pre-stroke thus determined is converted into continuous analog signals by the Digital/Analog converter and transmitted through the servo circuit and drive circuit to actuate the drive unit. The drive unit moves the timing sleeve position to change the pre-stroke.
- Control at the time of engine start up is handled by the start map.

Control by Pre-stroke Position Sensor (built in pre-stroke actuator 9)

- The pre-stroke position sensor monitors the operating condition of the drive unit by feeding back signals to pre-stroke control unit **18** and judging whether the pre-stroke is controlled in accordance with the desired value by noting the timing sleeve position.
- When pre-stroke control unit **18** receives the feedback signals, it computes the actual measured value of the timing sleeve position, and if there is any difference between the desired and actual values, it issues a correction command.
- This operation is repeated to constantly maintain the timing sleeve position at the desired position, thus determining the final pre-stroke.

● Trouble diagnosis function, fail-safe function

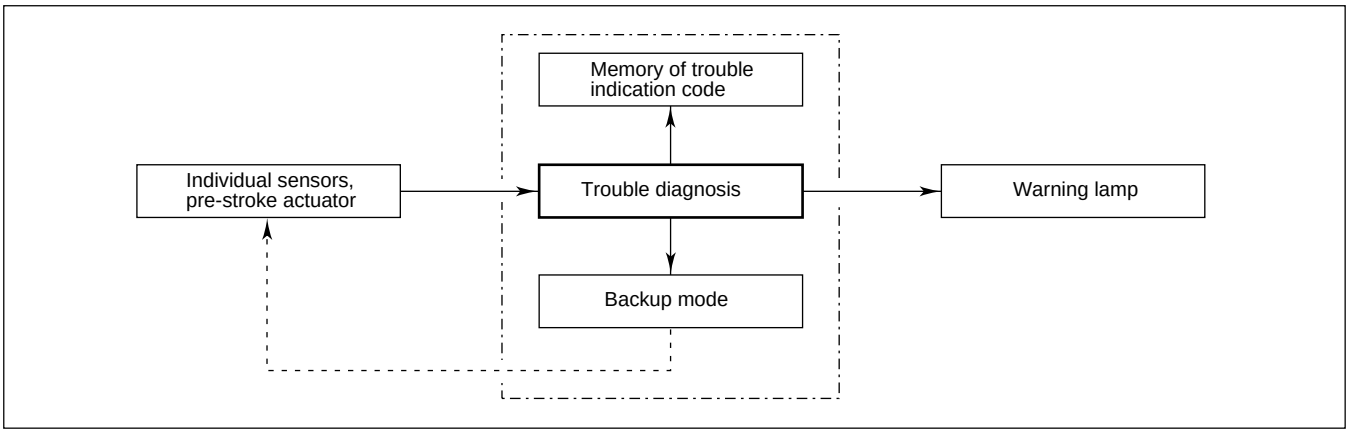

- The trouble diagnosis function detects and diagnoses troubles reported by the various sensors and the pre-stroke actuator, while the engine is running. If any trouble occurs, this function warns the driver by lighting warning lamp and at the same time stores the trouble point in memory as a diagnosis code.
- The fail-safe function is put into operation simultaneously and the trouble is treated accordingly in the backup mode.
- In the backup mode, the pre-stroke control starts when trouble occurs. If the trouble does not affect the operation of the engine, fixed data from the backup mode is used to treat the trouble. If the trouble dangerously affects the operation of the engine, the pre-stroke control stops.
- If the function goes into backup mode, the function stays in that mode until the starter switch is set to LOCK. When a normal signal is returned, control of the system returns and warning lamp goes off.
- There are two kinds of diagnosis code, current and previous.
  - Current diagnosis code : Indicates data when the engine has been running with the starter switch set to ON since the abnormality occurred.
  - Previous diagnosis code : Indicates previous data when the engine was stopped with the starter switch set to ACC or LOCK after the abnormality occurred.

Table of diagnosis codes

Diagnosis code	Abnormal item	Countermeasures taken by pre-stroke control unit (Backup mode)
01	Normal	—
03	Pre-stroke learning function	Controls with correction value assumed to be 0
04	Pre-stroke actuator power source	Stoppage of pre-stroke control
05	Engine revolution sensor (No pulse)	Controls with engine revolution assumed to be 0
12	Pre-stroke servo system	Stoppage of pre-stroke control
13	Pre-stroke position sensor	Stoppage of pre-stroke control
15	Engine revolution sensor (Wiring breakage)	Controls with engine revolution assumed to be 0
21	Water temperature sensor	Controls with water temperature assumed to be 80˚C {176˚F}
22	Control rod position sensor	Controls with control rod position assumed to be full load
41	Boost air temperature sensor	Controls with boost air temperature assumed to be 80˚C {176˚F}

It is possible to run the vehicle even if the pre-stroke control develops an abnormality. However, do not run the vehicle for a long period of time, run it only for the time necessary to obtain repairs.

Pre-stroke Control Unit

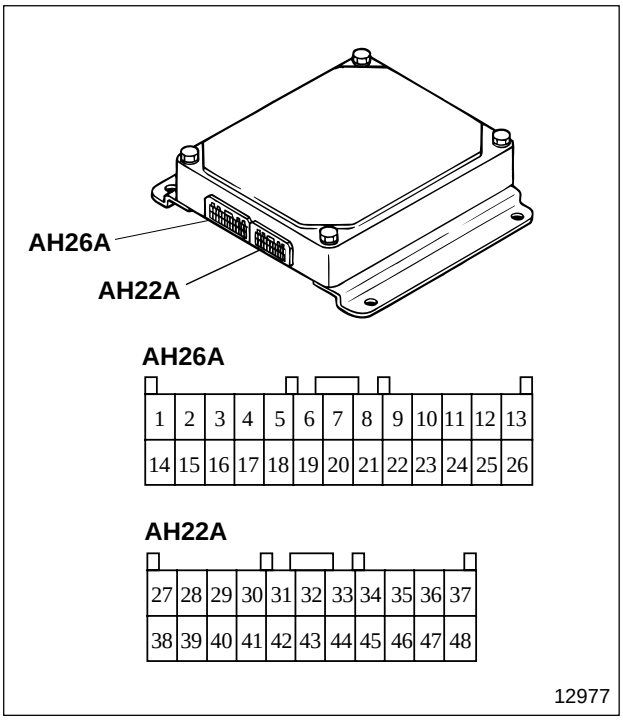

- The pre-stroke control unit monitors and computes data signals received from the various sensors and, using its internal computer, converts the computed results into control signals (pre-stroke actuator drive signals).
- These signals operate the various instruments to control the system.

Connector AH26A		Connector AH22A	
Terminal No.	Connecting destinations	Terminal No.	Connecting destinations
1	Drive unit ⊖	27	Pre-stroke cut relay (Contact point)
2	—	28	Multi-use Tester (SEL)
3	—	29	Diagnosis switch
4	Boost air temperature sensor	30	—
5	Water temperature sensor	31	Tachometer (SIG)
6	Pre-stroke position sensor (OSC)	32	Multi-use tester (SIG)
7	Pre-stroke position sensor (MDL)	33	DDS-III (DATA)
8	Control rod position sensor (OSC)	34	DDS-III (CLOCK)
9	Control rod position sensor (MDL)	35	DDS-III (STB)
10	Engine revolution sensor (SIG)	36	—
11	—	37	Control unit power source (12 volts DC)
12	—	38	Pre-stroke actuator power source ⊖
13	—	39	Alternator terminal L
14	Drive unit ⊕	40	Starter switch terminal S
15	—	41	—
16	Pre-stroke cut relay (Coil)	42	Tachometer (GND)
17	—	43	—
18	—	44	—
19	Pre-stroke position sensor (GND)	45	Warning lamp
20	Pre-stroke position sensor (SHIELD)	46	Ground
21	Control rod position sensor (GND)	47	Ground (CASE GND)
22	—	48	Ground (POWER GND)
23	Engine revolution sensor (GND)	—	—
24	—	—	—
25	—	—	—
26	Memory clear switch	—	—

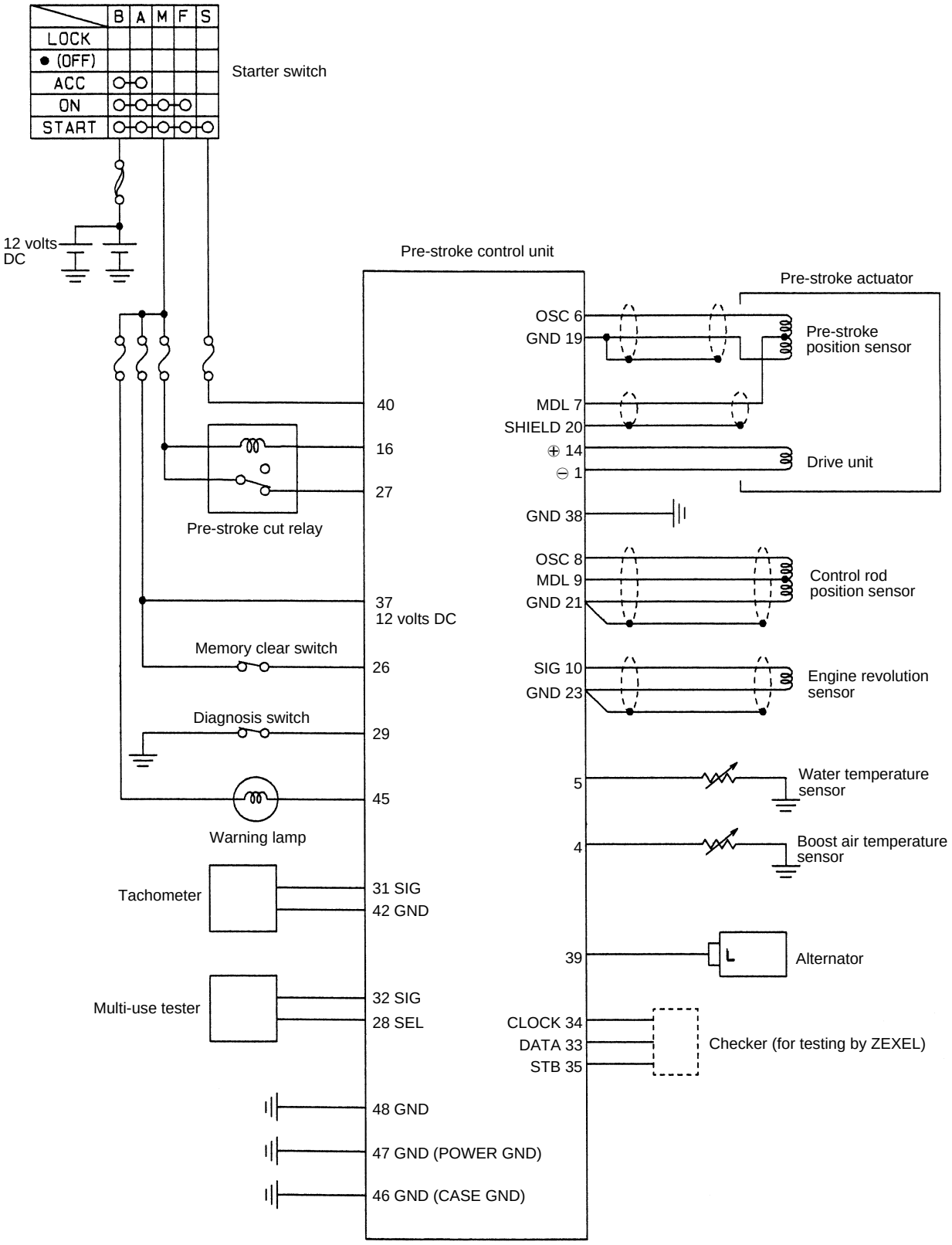
B A M F S
LOCK
● (OFF)
ACC
ON
START
Starter switch
12 volts DC
Pre-stroke control unit
Pre-stroke actuator
OSC 6
GND 19
Pre-stroke position sensor
40
MDL 7
SHIELD 20
⊕ 14
⊖ 1
Drive unit
16
27
Pre-stroke cut relay
GND 38
OSC 8
MDL 9
GND 21
Control rod position sensor
37
12 volts DC
Memory clear switch
26
SIG 10
GND 23
Engine revolution sensor
Diagnosis switch
29
5
Water temperature sensor
45
Warning lamp
4
Boost air temperature sensor
Tachometer
31 SIG
42 GND
39
L
Alternator
Multi-use tester
32 SIG
28 SEL
CLOCK 34
DATA 33
STB 35
Checker (for testing by ZEXEL)
48 GND
47 GND (POWER GND)
46 GND (CASE GND)
12978

Engine Revolution Sensor

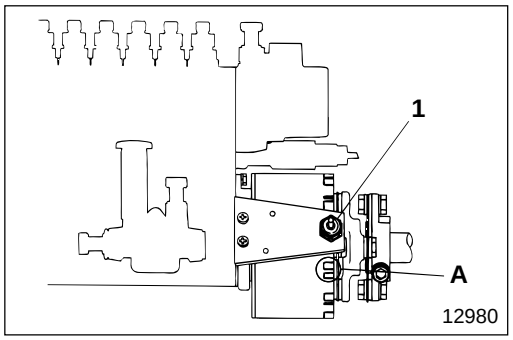

- Engine revolution sensor **1** is a pick-up type that detects the revolution of the injection pump and converts the revolution value into an electric signal.
- This electric signal is transmitted to the pre-stroke control unit as the engine revolution signal, which is used as the correction value by the control unit to determine the desired pre-stroke position value.

  A : Timer housing protrusion

Water Temperature Sensor

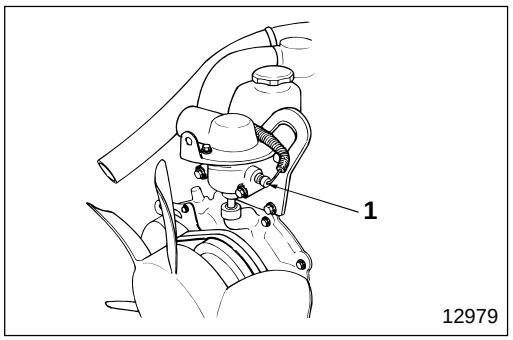

- Water temperature sensor **1** is a thermistor type that converts the coolant temperature into an electric signal.
- This electric signal is transmitted to the pre-stroke control unit as the engine coolant temperature signal, which is used as the correction value by the control unit to determine the desired pre-stroke position value.

Boost Air Temperature Sensor

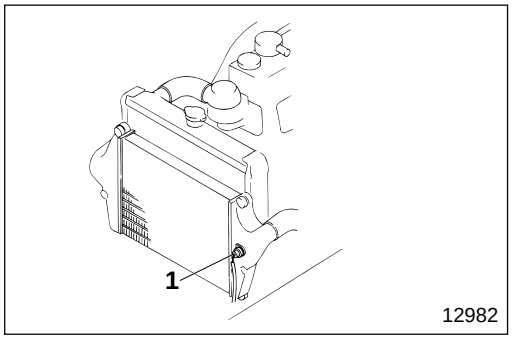

- Boost air temperature sensor **1** is a thermistor type that converts the intake air temperature, immediately after its passage through the intercooler, into an electric signal.
- This electric signal is transmitted to the pre-stroke control unit as the boost air temperature signal, which is used as the correction value by the control unit to determine the desired pre-stroke position value.

Control Rod Position Sensor

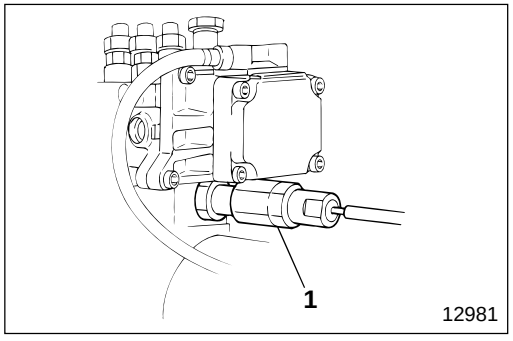

- Control rod position sensor **1** is a resistor type that converts the amount of movement of the control rod into an electric signal.
- This electric signal is transmitted to the pre-stroke control unit as the control rod position signal, which is used as the correction value by the control unit to determine the desired pre-stroke position value.

Pre-stroke Position Sensor P13-10, 12

Injection Pump Body

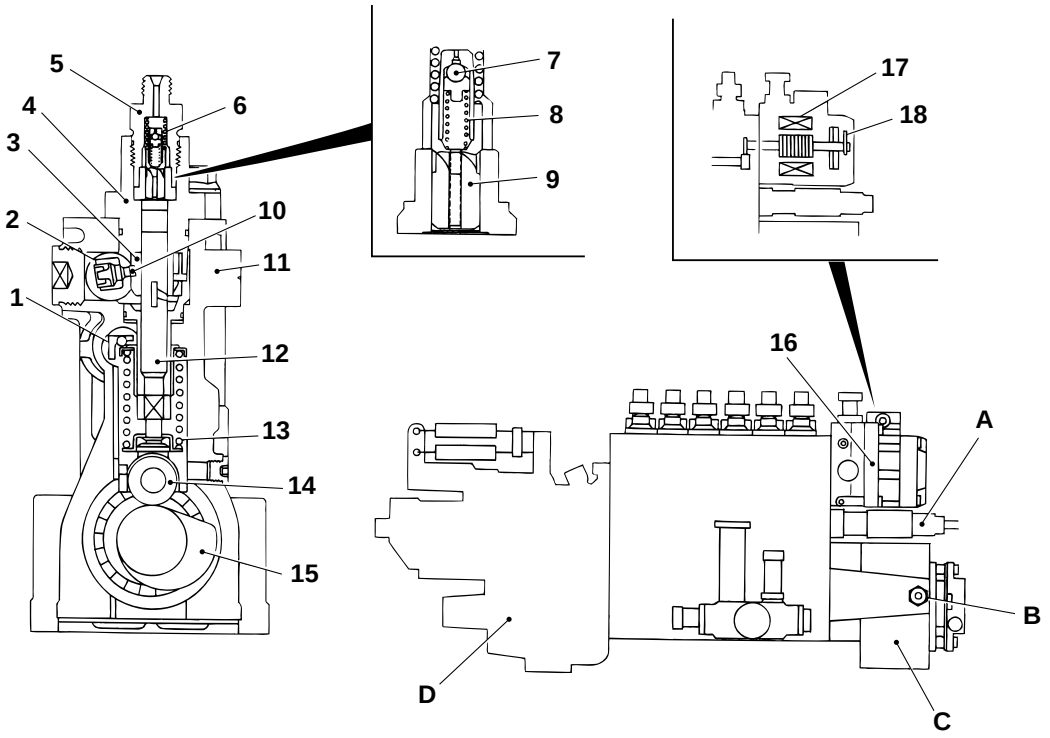

1 Control rod
2 Timing rod
3 Timing sleeve
4 Plunger barrel
5 Delivery valve holder
6 Delivery valve spring
7 Ball
8 Spring
9 Delivery valve
10 Pin
11 Pump housing
12 Plunger
13 Plunger spring
14 Tappet
15 Camshaft
16 Pre-stroke actuator
17 Drive unit
18 Pre-stroke position sensor

A : Control rod position sensor P13-16
B : Engine revolution sensor P13-16
C : Mechanical timer P13-22
D : Mechanical governor P13-20

- The injection pump has a variable pre-stroke mechanism.
- Because of the variation in the amount of pre-stroke, the appropriate injection state and air/fuel mixture for combustion can be obtained, thus the engine torque is larger than when a normal injection pump is used and the exhaust gas emission is cleaner.

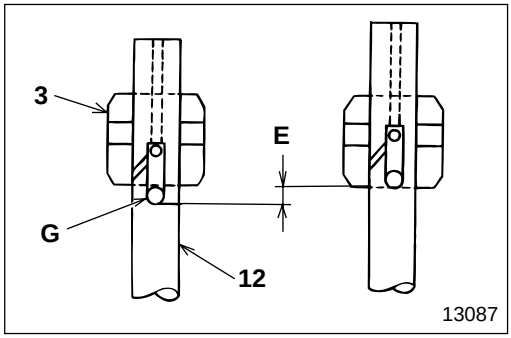

Pre-stroke

Pre-stroke is stroke **E** whose range is from the bottom dead point of plunger **12** to the starting point of pressurized delivery of fuel, at which point suction port **G** is closed by timing sleeve **3**. An ordinary injection pump has a fixed stroke length.

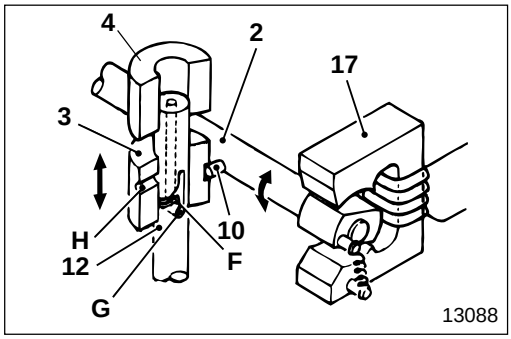

Pre-stroke variable mechanism

F : Indent
G : Suction port
H : Exhaust port

- In a conventional injection pump, plunger barrel **4** is fixed. In the pre-stroke control injection pump system, vertically movable timing sleeve **3** is fitted in the fixed plunger barrel.
- Timing rod **2**, pin **10** and drive unit **17** are installed to operate timing sleeve **3**.
- The operation of drive unit **17** rotates timing rod **2**, causing pin **10** to move timing sleeve **3** vertically.
- As timing sleeve **3** is fitted with fuel exhaust port **H**, the pre-stroke changes in accordance with the movement of the timing sleeve.

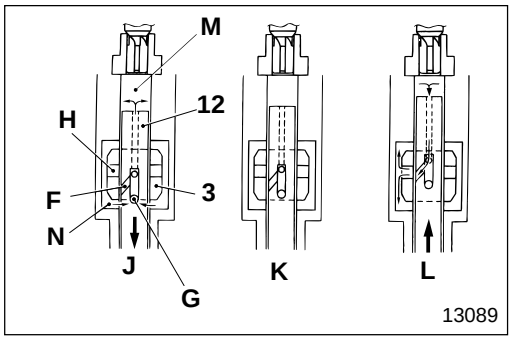

Pressurized fuel delivery

J : Ongoing suction
K : Start of pressurization
L : Delivery ends

- When suction port **G** opens as plunger **12** moves down from the top dead point, fuel is delivered into pressure chamber **M** by both the negative pressure caused by the downward movement of the plunger and the pressure of the fuel itself delivered by the feed pump.
- When the lift of plunger **12** is low enough, the pressure in pressure chamber **M** does not increase as the fuel in the pressure chamber flows via suction port **G** into fuel reservoir **N**, even if the plunger lifts.
- As plunger **12** lifts further and suction port **G** is closed by timing sleeve **3**, pressurization of the fuel starts. The pressure increases as the plunger lifts further, making the injection pump start pressurized fuel delivery.
- When indent **F** on plunger **12** meets exhaust port **H** of timing sleeve **3**, the fuel in pressure chamber **M** is pushed back to fuel reservoir **N**, stopping pressurized fuel delivery.
- Adjustment of the fuel quantity to be injected is made by changing the relative meeting position of exhaust port **H** of timing sleeve **3** and indent **F**, by the rotation of plunger **12**.

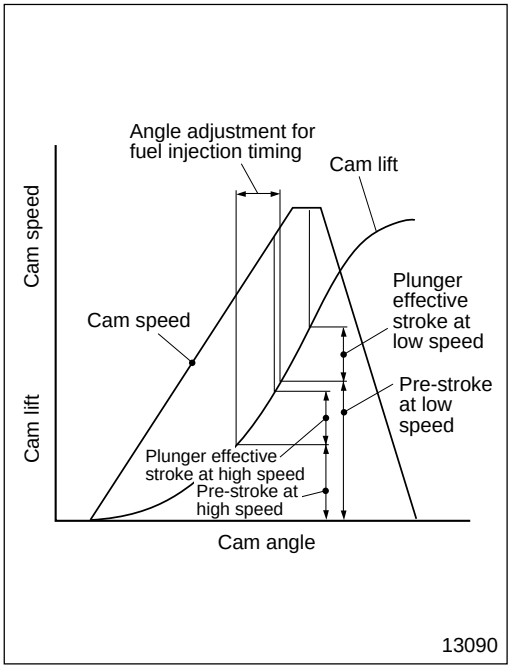

Fuel injection timing and fuel injection characteristics

- The pre-stroke changes according to changes in the position of timing sleeve **3**, whereby the fuel injection timing can be advanced or retarded.
- By making the pre-stroke smaller, suction port **G** of plunger **12** closes early, making the fuel injection timing quicker accordingly.
  Retard of fuel injection timing is not controlled by the variable pre-stroke mechanism, but by mechanical timer **D**.
- By making the pre-stroke larger, suction port **G** of plunger **12** closes late, making the fuel injection timing slower accordingly.
  The quick response of the fuel injection timing improves engine start-up performance at low temperatures.

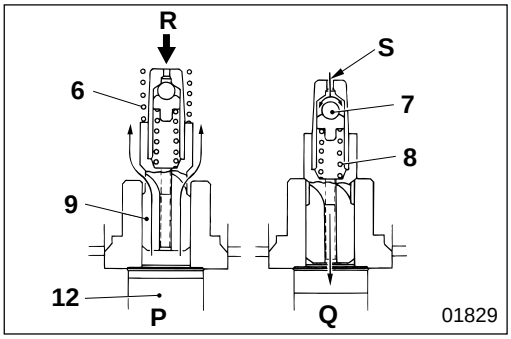

Delivery valve

P : Start of pressurized delivery
Q : End of pressurized delivery

- Delivery valve **9** keeps residual pressure **R** in the injection pipe at a certain level throughout the entire engine revolution range preventing cavitation and allowing high-pressure injection.
- When the fuel pressure on plunger **12** side, as the plunger is lifted, overcomes the combined force of residual pressure **R** in the injection pipe and the repercussive force of delivery valve spring **6** of the plunger, delivery valve **9** is pushed up and pressurized fuel delivery starts.
- Fuel in the injection pipe returns quickly to plunger **12** side the moment pressurized delivery from the plunger ends, and the delivery valve is closed.
- The excess fuel is returned slowly through orifice **S**, reducing the pressure in the injection pipe.
- When the repercussive force of spring **8** in delivery valve **9** equalizes with the pressure in the injection pipe, ball **7** closes orifice **S** and residual pressure **R** in the injection pipe is kept at a specified level.

Governor

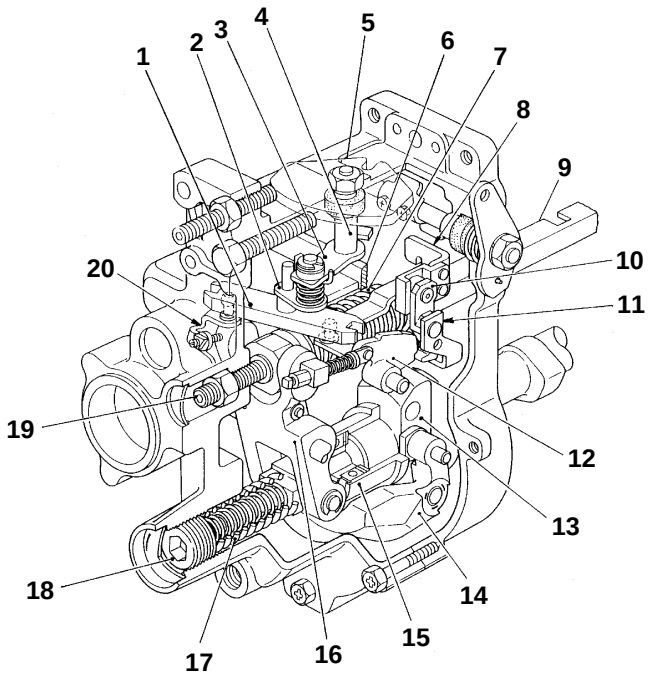

09407

1 Floating lever
2 No.2 supporting lever
3 No.1 supporting lever
4 Adjusting lever shaft
5 Control lever
6 Guide plate
7 Governor spring
8 Rack connecting
9 Control rod
10 Sensor lever
11 U-lever
12 Torque cam
13 Flyweight holder
14 Flyweight
15 Sleeve
16 Tension lever
17 Idling spring
18 Idling screw
19 Governor shaft
20 Guide lever

The governor is a mechanical type that uses centrifugal force generated by flyweights **14**, its characteristics are between those of a minimum/maximum speed governor and those of an all-speed governor. Because there is no repercussive force from governor spring **7** or control lever **5**, when the accelerator pedal is depressed, the repercussive force transmitted to the accelerator pedal, via the control lever, is quite light, making accelerator pedal operation easy.

Boost Compensator

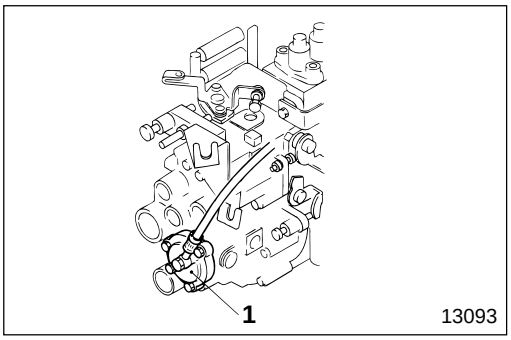

Boost compensator **1** is a device that automatically adjusts the quantity of fuel to be injected to suit the increase in the intake air mass delivered into the engine cylinders by the turbocharger.

Feed Pump

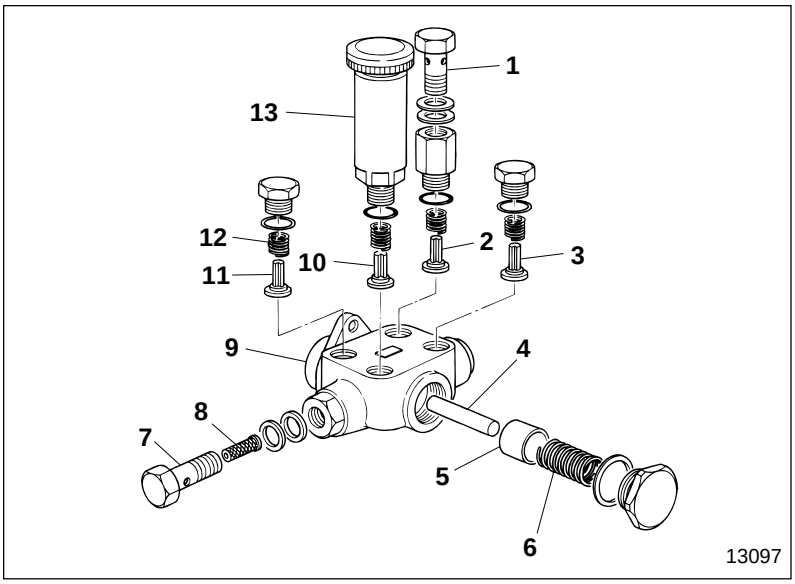

1 Eye bolt at fuel outlet
2 Check valve
3 Check valve
4 Push rod
5 Piston
6 Piston spring
7 Eye bolt at fuel inlet
8 Gauze filter
9 Feed pump housing
10 Check valve
11 Check valve
12 Check valve spring
13 Priming pump

- The feed pump is a double-action type pump which, with four check valves operating, sucks and discharges fuel during both strokes of pistons **5**.
- Push rod **4** makes contact with the injection pump camshaft directly, moving piston **5**.
- Priming pump **13** can be manually operated, when the injection pump is not operating, to suck up fuel and thus can be used for air bleeding.
- Gauze filter **8** eliminates large foreign particles from the fuel sucked up from the fuel tank to prevent clogging of the feed pump. This gauze filter must be cleaned with gas oil periodically.

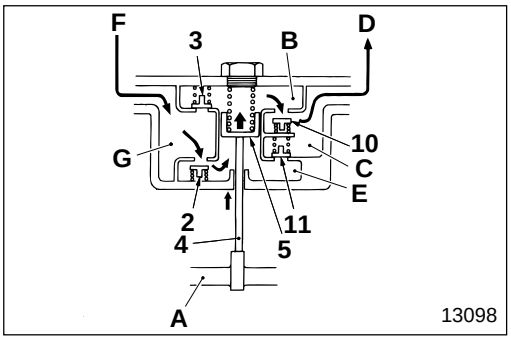

The rotation of injection pump camshaft **A**, pushes up push rod **4** and piston **5**, and the pressure in inner chamber **B** increases. This closes check valve **3**, and check valve **10** opens to let the fuel in inner chamber **B** flow through outer chamber **C** to fuel filter **D**.
When the pressure in inner chamber **E** decreases, check valve **11** closes, and check valve **2** opens to let fuel flow from fuel tank **F** through outer chamber **G** to inner chamber **E**.

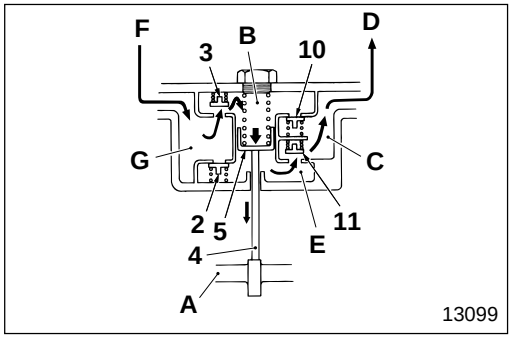

When injection pump camshaft **A** rotates further, it pushes down push rod **4** and piston **5**, and the pressure in inner chamber **E** increases. This closes check valve **2**, and check valve **11** opens to let the fuel in inner chamber **E** flow through outer chamber **C** to fuel filter **D**.
When the pressure in inner chamber **B** decreases, check valve **10** closes, and check valve **3** opens to let fuel from fuel tank **F** flow through outer chamber **G** to inner chamber **B**.

Automatic Timer

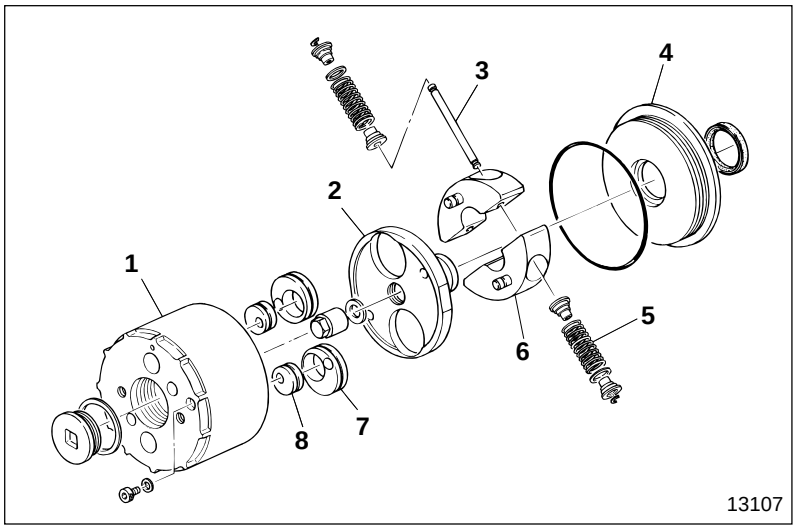

1 Timer housing
2 Timer holder
3 Pilot pin
4 Cover
5 Timer spring
6 Flyweight
7 Eccentric cam (Large)
8 Eccentric cam (Small)

- The mechanical type automatic timer changes fuel injection timing automatically when the engine revolution reaches the specified rate.
- The automatic timer controls the retard of fuel injection timing. The pre-stroke control unit controls the advance of fuel injection timing.

Injection Nozzle

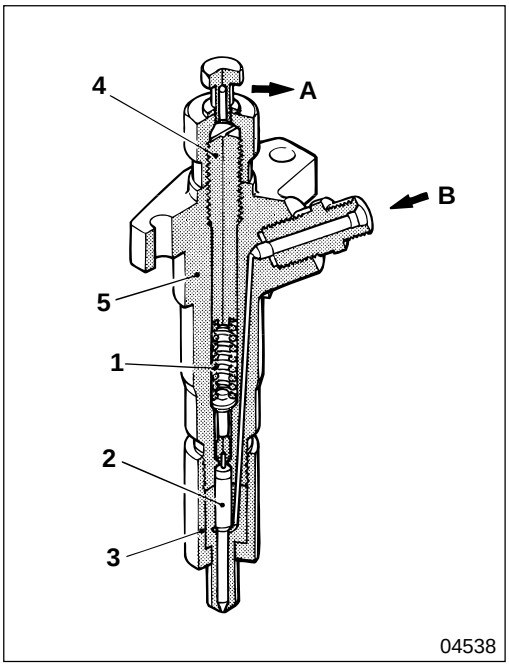

1 Nozzle spring
2 Needle valve
3 Nozzle
4 Adjusting screw
5 Nozzle holder

A : Excess fuel
B : Supply of fuel

Fuel delivered from the injection pump enters the nozzle holder and, when the specified pressure is reached, the fuel pressure overcomes the repercussive force of the nozzle spring to push out the needle valve, allowing fuel to spray out the opening at the tip of the nozzle into the cylinder.
Part of the high-pressure fuel lubricates the needle valve and returns through the fuel leak-off pipe to the fuel tank.

Possible causes \ Symptoms		Engine does not start	Engine hard to start	Engine knocks	Engine output inconsistent	Engine output does not develop full power	Engine maximum revolution too high	Engine idling unstable	Engine starts but stalls	Engine revolution does not reach specified maximum speed	Engine does not stop	Accelerator pedal hard to depress	Fuel supply insufficient
Injection pump body	Pre-stroke control faulty (Warning lamp lights) 📖 P13-30		○	○	○	○							
	Plunger stuck	○											
	Control rod stuck	○											
	Delivery valve stuck	○											
	Tappet worn	○											
	Camshaft worn	○											
	Injection timing adjusted incorrectly		○		○	○		○					
	Plunger worn					○		○					
	Delivery valve seated incorrectly					○							
	Injection timing too fast			○									
	Plunger sliding stroke short				○								
	Plunger spring damaged				○			○					
	Control rod not moving smoothly	○	○		○		○	○					
	Tappet worn, not moving smoothly				○								
	Delivery valve spring damaged				○	○							
	Airtightness incorrect due to delivery valve holder loosened				○	○							
	Delivery valve not moving smoothly				○								
	Plunger spring setting faulty							○					
	Delivery valve holder tightened excessively							○					
	Injection amount of each cylinder uneven		○					○					
	Overflow valve stuck	○	○		○								
Fuel feed pump	Gauze filter clogged	○						○	○				
	Check valve malfunctioning	○											
	Piston stuck	○											
	Push rod stuck	○											
	Push rod worn	○											
	Check valve sliding movement faulty		○		○			○					
	Piston worn		○		○			○					

Possible causes \ Symptoms		Engine does not start	Engine hard to start	Engine knocks	Engine output inconsistent	Engine output does not develop full power	Engine maximum revolution too high	Engine idling unstable	Engine starts but stalls	Engine revolution does not reach specified maximum speed	Engine does not stop	Accelerator pedal hard to depress	Fuel supply insufficient
Governor	Full-speed stopper position short of standard value					○							
	Governor spring weak					○				○			
	Control lever position adjusted incorrectly				○	○				○			
	Flyweight malfunctioning						○						
	Idling spring weak							○					
	Linkage bent							○					
	Linkage friction excessive or linkage too loose							○					
	Round nut loosened							○					
	Idling set bolt adjusted incorrectly							○					
	Control lever sliding movement faulty											○	
	Stop mechanism damaged										○		
Automatic timer	Timing advance angle faulty					○		○					
Injection nozzle	Needle valve stuck	○											
	Valve opening pressure too low	○								○			
	Injection nozzle clogged	○		○		○		○		○			
	Nozzle airtightness incorrect	○		○		○		○		○			
	Valve opening pressure too high			○									
	Spring fractured				○	○							
	Needle valve sliding movement faulty				○								
	Valve opening pressure faulty				○								
	Spring fatigued							○					
Fuel filter	Filter clogged	○			○			○	○				
No fuel in fuel tank		○											
Fuel pipe clogged or fuel leakage from connections		○											
Air or water in fuel system		○			○			○	○				
Low-quality fuel being used			○	○		○		○					

Possible causes \ Symptoms		Engine does not start	Engine hard to start	Engine knocks	Engine output inconsistent	Engine output does not develop full power	Engine maximum revolution too high	Engine idling unstable	Engine starts but stalls	Engine revolution does not reach specified maximum speed	Engine does not stop	Accelerator pedal hard to depress	Fuel supply insufficient
Engine control	Accelerator pedal stopper bolt adjusted incorrectly					○				○			
	Accelerator pedal arm rusted											○	
	Accelerator control cable connection faulty											○	
	Accelerator control cable sliding movement faulty											○	
	Engine stop cable damaged or stretched										○		
	Engine stop cable adjusted incorrectly										○		
Fuel pipe cracked													○
Fuel tank airtightness incorrect													○
Oil viscosity unsuitable	Gr 12		○										
Valve clearance incorrect	Gr 11		○					○					
Head gasket faulty	Gr 11		○					○					
Valve and valve seat worn and carbon deposits	Gr 11		○					○					
Valve spring fatigued	Gr 11		○					○					
Piston ring worn or damaged	Gr 11		○					○					
Piston ring groove worn or damaged	Gr 11		○					○					
Piston and cylinder worn	Gr 11		○										
Cooling system malfunctioning	Gr 14		○					○					
Starter switch faulty	Gr 54		○										
Glow relay faulty	Gr 54		○										
Multipurpose timing control unit faulty	Gr 54		○										
Fuel-cut motor faulty	Gr 54	○									○		
Fuel-cut relay faulty	Gr 54	○									○		

M E M O

INSPECTION AND ADJUSTMENT MOUNTED IN VEHICLE

Inspection and Adjustment of Fuel Injection Timing

Service standards

Location	Maintenance item	Standard value	Limit	Remedy
—	Fuel injection timing (BTDC)	7°±0.5°	—	Adjust

Tightening torque

Unit : N·m {lbf.ft, kgf·m}

Location	Parts to be tightened	Tightening torque	Remarks
5	Adjusting bolt	59 to 64 {43 to 47, 6 to 6.5}	—

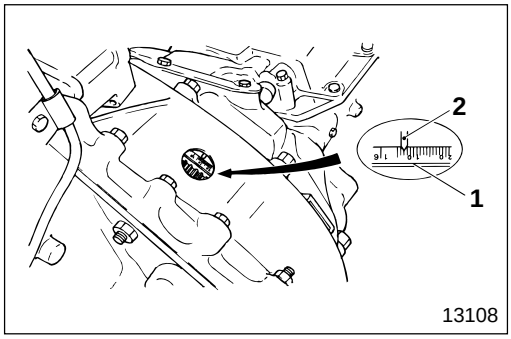

[Inspection]

- Crank the crankshaft more than 180° in the forward running direction. Check if notch **1** on the flywheel and pointer **2** on the flywheel housing show the standard fuel injection timing.

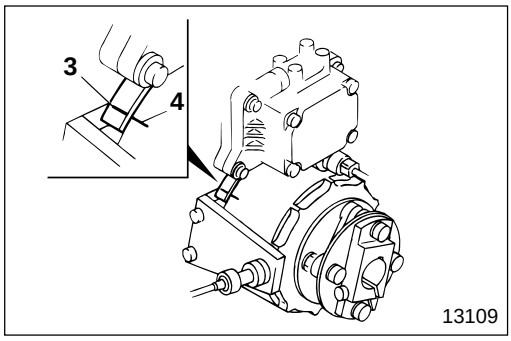

- When pointer **3** on the injection pump and notch **4** on the automatic timer align, the fuel injection timing is standard.
- If the fuel injection timing is not standard, adjust as follows.

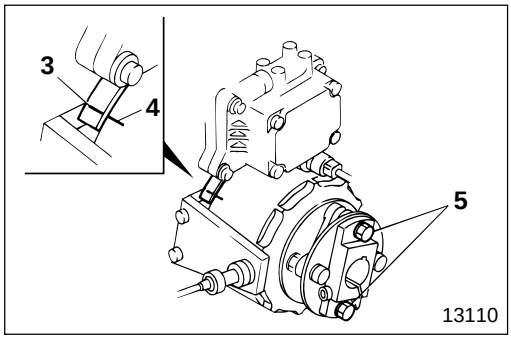

[Adjustment]

- Loosen adjusting bolts **5** and turn the automatic timer to align pointer **3** and notch **4**.
- Tighten adjusting bolts **5** at specified torque.
- Reinspect the fuel injection timing.

CAUTION ⚠

Do not loosen any bolts other than adjusting bolts 5.

Inspection and Adjustment of No-load Minimum and Maximum Revolution

Service standards

Location	Maintenance item		Standard value	Limit	Remedy
—	No-load minimum revolution (Idling revolution)	Manual transmission	650 to 700 rpm	—	Adjust
		Automatic transmission	700 to 750 rpm	—	
—	No-load maximum revolution	6D16T2	3180 to 3220 rpm	—	Adjust
		6D16T3, T4	3255 to 3295 rpm	—	

● **Before inspecting the vehicle do the following :**

- Run the engine to bring the coolant temperature up to approximately 80 to 90°C {176 to 194°F}.
- Turn all the lights and accessory equipment OFF.
- Put transmission in neutral. (For automatic transmission, put transmission in N range.)
- Set the steering wheel at center and straight position.

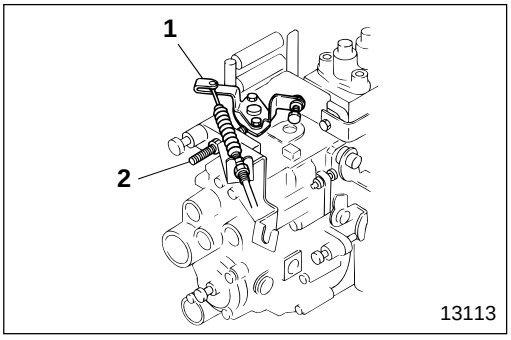

(1) No-load minimum revolution (Idling revolution)

- Make sure that control lever **1** strikes idling set bolt **2**, and in this state, check and see if the minimum revolution is within the standard value.
- If the minimum revolution deviates from the standard value, adjust using idling set bolt **2**.
- After adjustment increase the revolution from between 2800 rpm to 3400 rpm once, and check the minimum revolution.

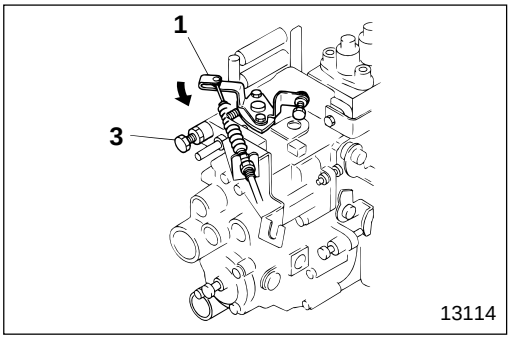

(2) No-load maximum revolution

- Make sure that control lever **1** strikes full-speed set bolt **3**, and in this condition, check and see if the maximum revolution is within the standard value.
- If the maximum revolution deviates from the standard value, adjust using full-speed set bolt **3**.

NOTE

Ensure that the engine does not stall or hunt when control lever 1 is moved from the full-speed position to the idling position quickly. If performance is faulty, adjust it to within standard values.

PRE-STROKE CONTROL INJECTION PUMP SYSTEM

Troubleshooting Procedure

The pre-stroke control type injection pump system has a trouble diagnosis function, this function is used for troubleshooting.

This means you have to read the diagnosis code memorized in the pre-stroke control unit, and carry out an inspection based on this code. There are two ways of reading the code; with a multi-use tester, and without a multi-use tester.

In the case of trouble that does not have a diagnosis code, the normal 01 code is indicated, and it is necessary to carry out a check depending on the situation. In this case, inspect the electric circuits and their relative devices.

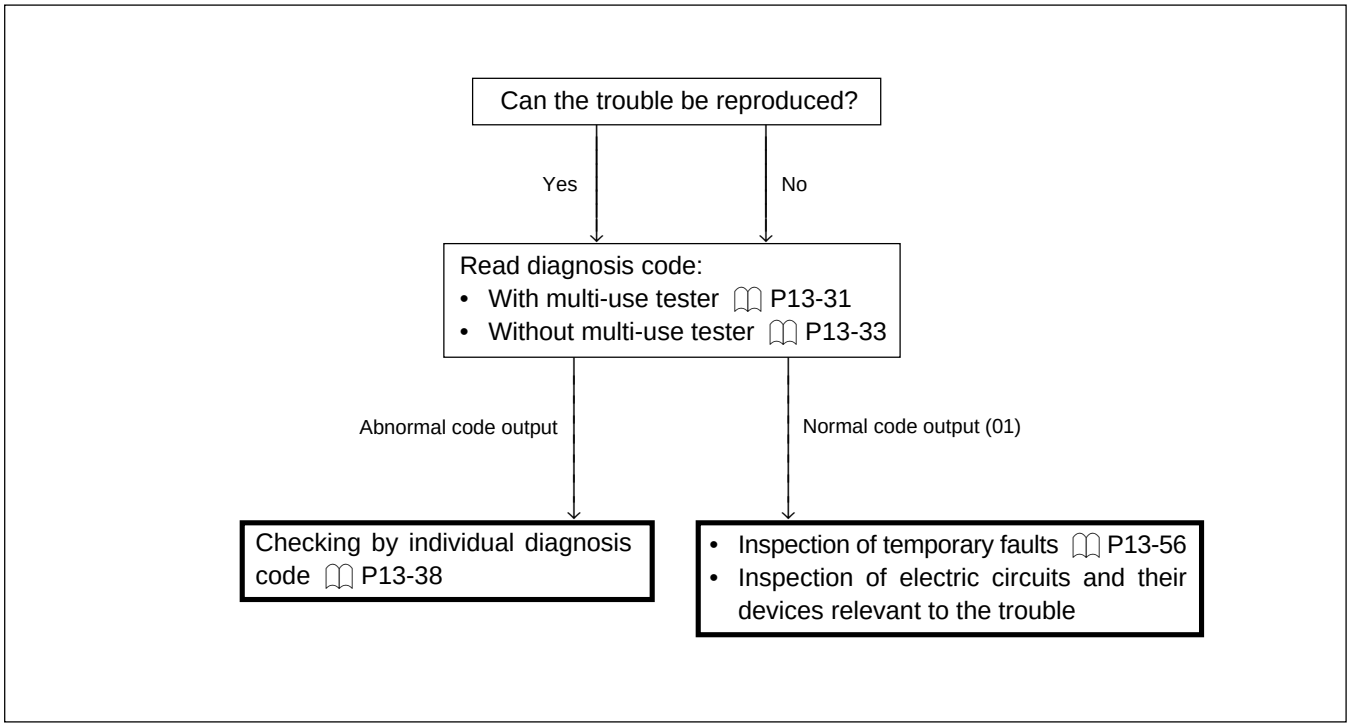

● Inspection with multi-use tester

Special tools

Tool name and shape	Part No.	Application
Multi-use tester sub-assembly 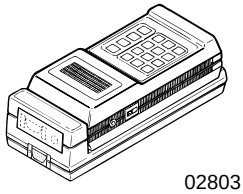 02803	MC858999	Inspection of system
Multi-use tester harness 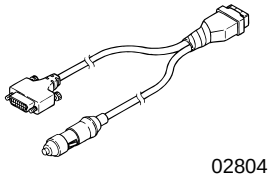 02804	MB991231	
ROM pack 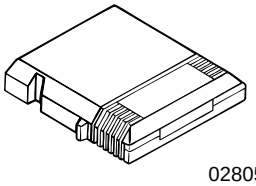 02805	MC858989	

● Inspection flow chart

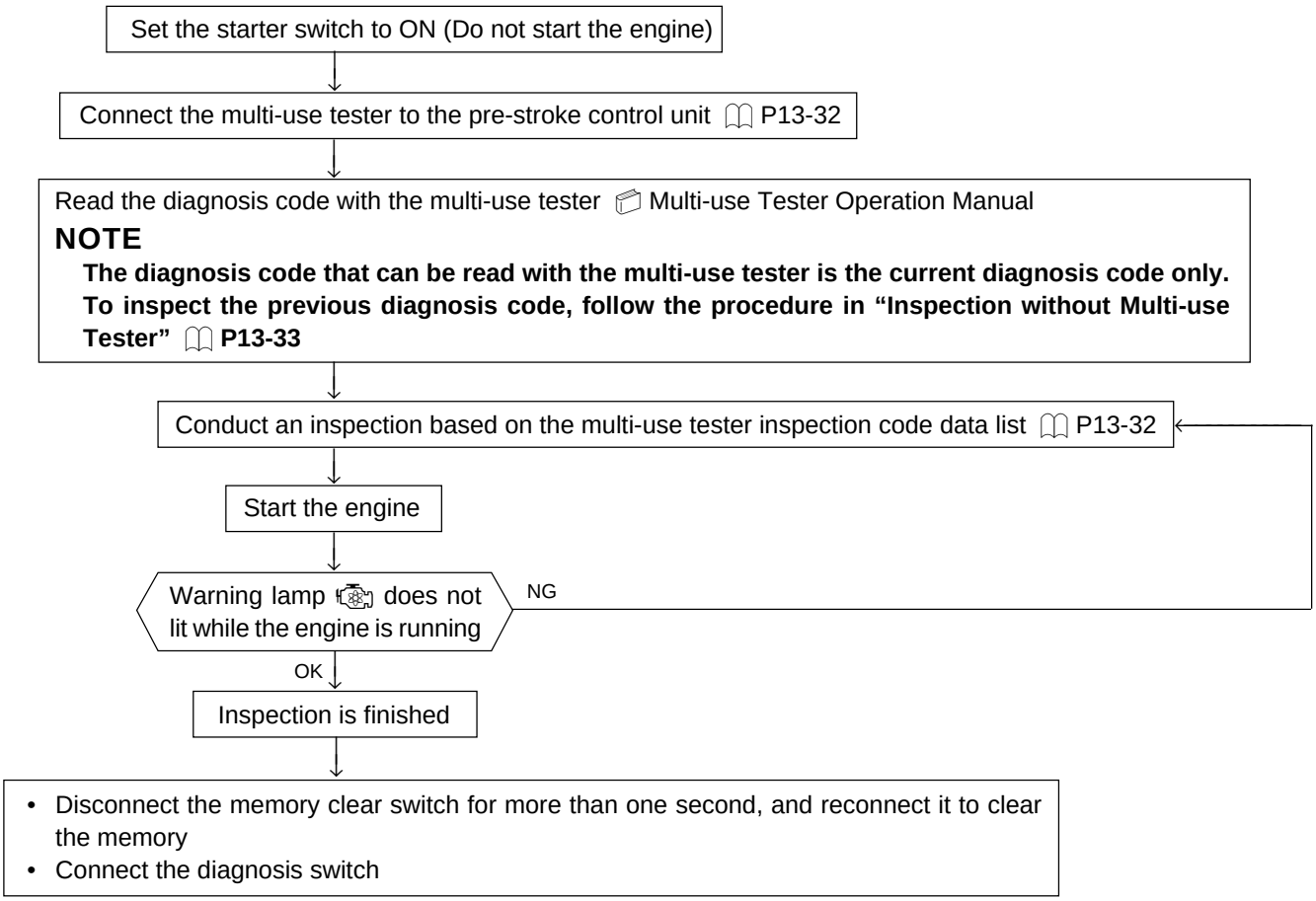

PRE-STROKE CONTROL INJECTION PUMP SYSTEM

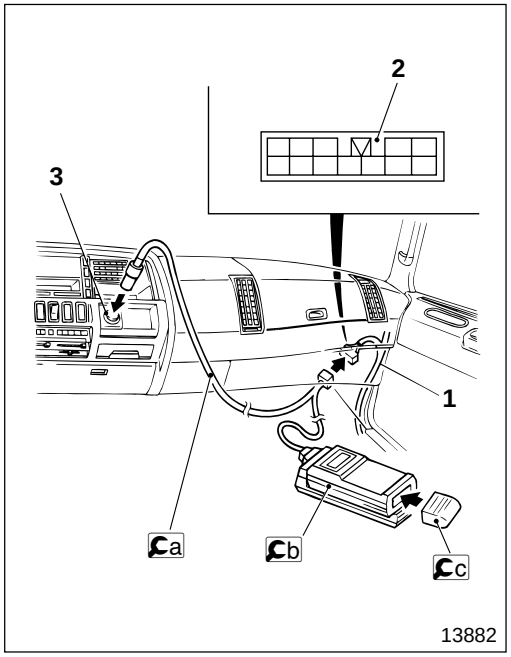

● **Connection of Multi-use Tester to Pre-Stroke Control Unit**

- Set the starter switch to LOCK.
- Connect a multi-use tester harness to multi-use tester connector **2** of cab harness **1** and to cigarette lighter socket **3**.
- Connect a multi-use tester harness to b multi-use tester sub-assembly.
- Connect c ROM pack to b multi-use tester sub-assembly.

NOTE

Refer to the Multi-use Tester Operation Manual for details regarding the operation of the multi-use tester.

● **Inspection with Multi-use Tester**

Inspection using service data is possible as well as by diagnosis code indication (self-diagnosis) using the multi-use tester. This enables you to compare the indicated figures (service data) that represent the data signals from the various sensors on the vehicle with the judgement standards, and judge whether they are good or bad. The service data code is indicated as well as the diagnosis code.

Self-diagnosis			Inspection using Service Data				
Indicated on multi-use tester			Indicated on multi-use tester			Inspection procedure	
Diagnosis code	Trouble item (Inspected instrument)	Inspection procedure	Service data code	Data signal name	Service data	Condition at inspection	Judgement standard
03	PS OFFSET	🕮 P13-38	—				
04	PS VOLTAGE		—				
05	NE NO PULS		—				
12	PS SERVO		12	PS ANG DIFF	■■.■■ deg	Engine running	Within ±5.5 deg
13	PS SNSR		—			400<Ne≦2000 Ne : Engine revolution	Within ±2°CA
15	NE SNSR		15	ENGINE SPEED	■■ rpm	Racing	Synchronization with tachometer
—			16	CTRL ROD ADJ	■■ V	Starter switch set to ON	Within ±0.04 V
21	WTR TEMP SNSR		21	WATER TEMP	■■ °F	While engine is cool While engine is warmed up Engine is stopped after warming up	Equivalent to ambient temperature Gradually rising temperature Gradual falling temperature
22	CTRL ROD SNSR		22	CTRL ROD VOLT	■■ V	Engine running	3 V or less
41	BST TEMP SNSR		41	BOOST TEMP	■■ °F	At high idling	4.9 V or less

● Inspection without multi-use tester

● Inspection flow chart

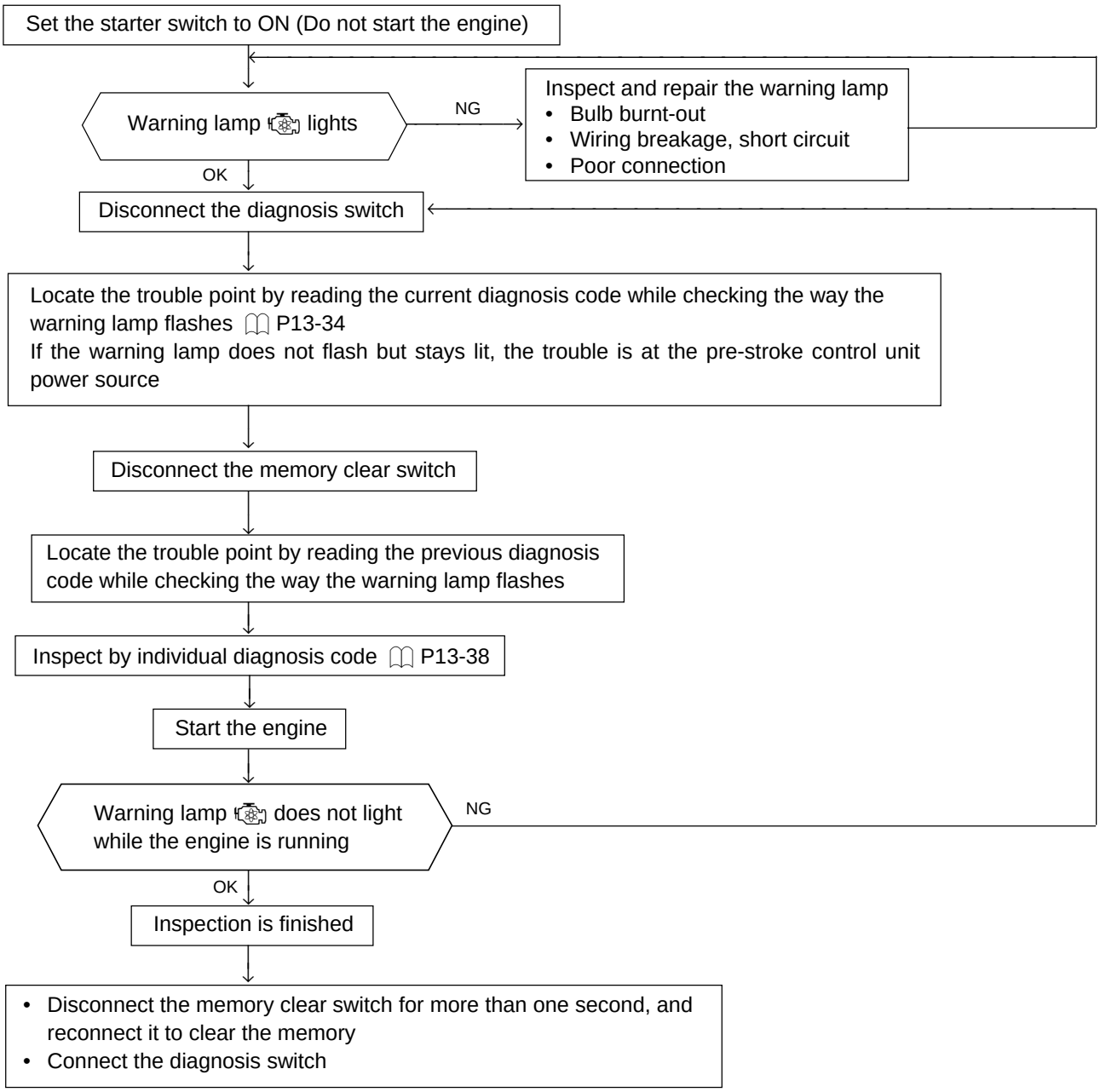

● **Reading of Diagnosis Code with Warning Lamp**

CAUTION

- **Make sure you read the current diagnosis codes first, then read the previous diagnosis codes.**
- **You must take care not to disconnect memory clear switch 2 (1-pin connector) before removing diagnosis switch 1 (1-pin connector without locking device) because this would make it impossible for the system to indicate the current diagnosis code.**
- **Note that if memory clear switch 2 is reconnected after being disconnected, it will clear all the diagnosis codes.**

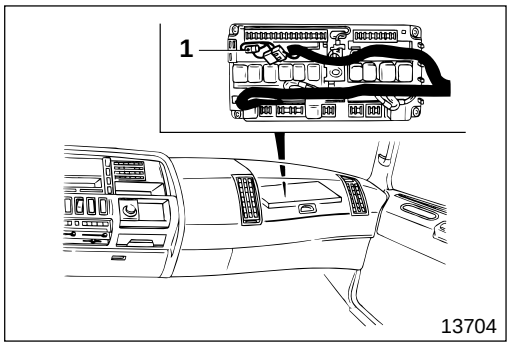

Current diagnosis code

- When diagnosis switch **1** is disconnected, the pre-stroke control unit starts diagnosis of the trouble and indicates the current diagnosis codes by flashing warning lamp within the meter cluster.

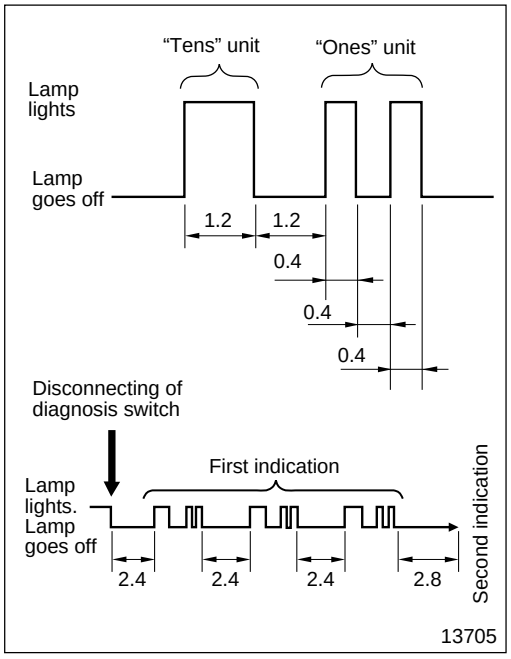

- The diagnosis codes are read by the number of flashes and the duration of flashes of warning lamp.
  - The flash duration differs for the "tens" unit and the "ones" unit.
    "Tens" unit : Every 1.2 seconds
    "Ones" unit : Every 0.4 seconds
  - The number of flashes indicates the numeral for each unit.
  - The diagnosis code indication shows the "tens" unit first, then the "ones" unit. However, when the "tens" unit begins with a zero, only the "ones" unit is shown.
- A diagnosis code is shown by the repetition of three consecutive indications. After the code indication, if another code does not exist, the indication returns to the first code and is again shown three times.
- When diagnosis switch **1** is connected, the pre-stroke control unit immediately terminates code indication.

Previous diagnosis code

After reading the current diagnosis codes (with diagnosis switch **1** disconnected), disconnect memory clear switch **2**. Warning lamp starts flashing again. This flashing indicates the previous diagnosis codes, and by interpreting these codes, the location of the trouble is determined.

Diagnosis code	Warning lamp flashing pattern
01 (Normal)	
03 (Pre-stroke learning faulty)	
04 (Pre-stroke actuator power source faulty)	
05 (Engine revolution sensor no pulse faulty)	
12 (Pre-stroke servo system faulty)	
13 (Pre-stroke position sensor faulty)	
15 (Engine revolution sensor wiring breakage faulty)	
21 (Water temperature sensor faulty)	
22 (Control rod position sensor faulty)	
41 (Boost air temperature sensor faulty)	

13970

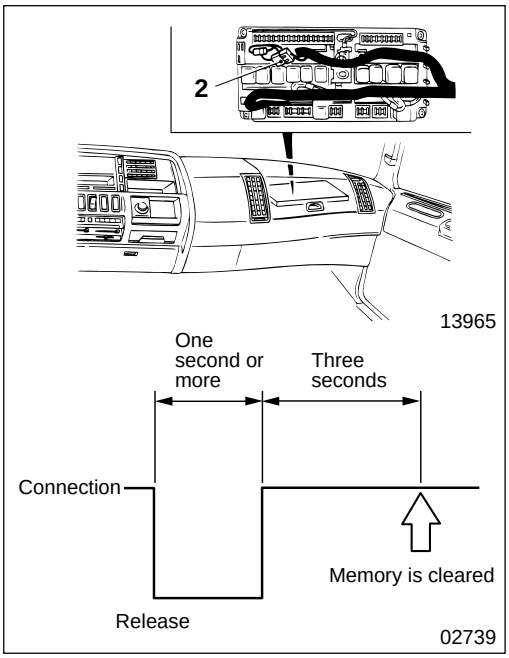

Clearing diagnosis codes

By disconnecting memory clear switch **2** once and reconnecting it, all the diagnosis codes memorized in the pre-stroke control unit are cleared.

CAUTION

Clearing of diagnosis codes must be done using memory clear switch 2.

Electric Circuit and Position of Parts Installation

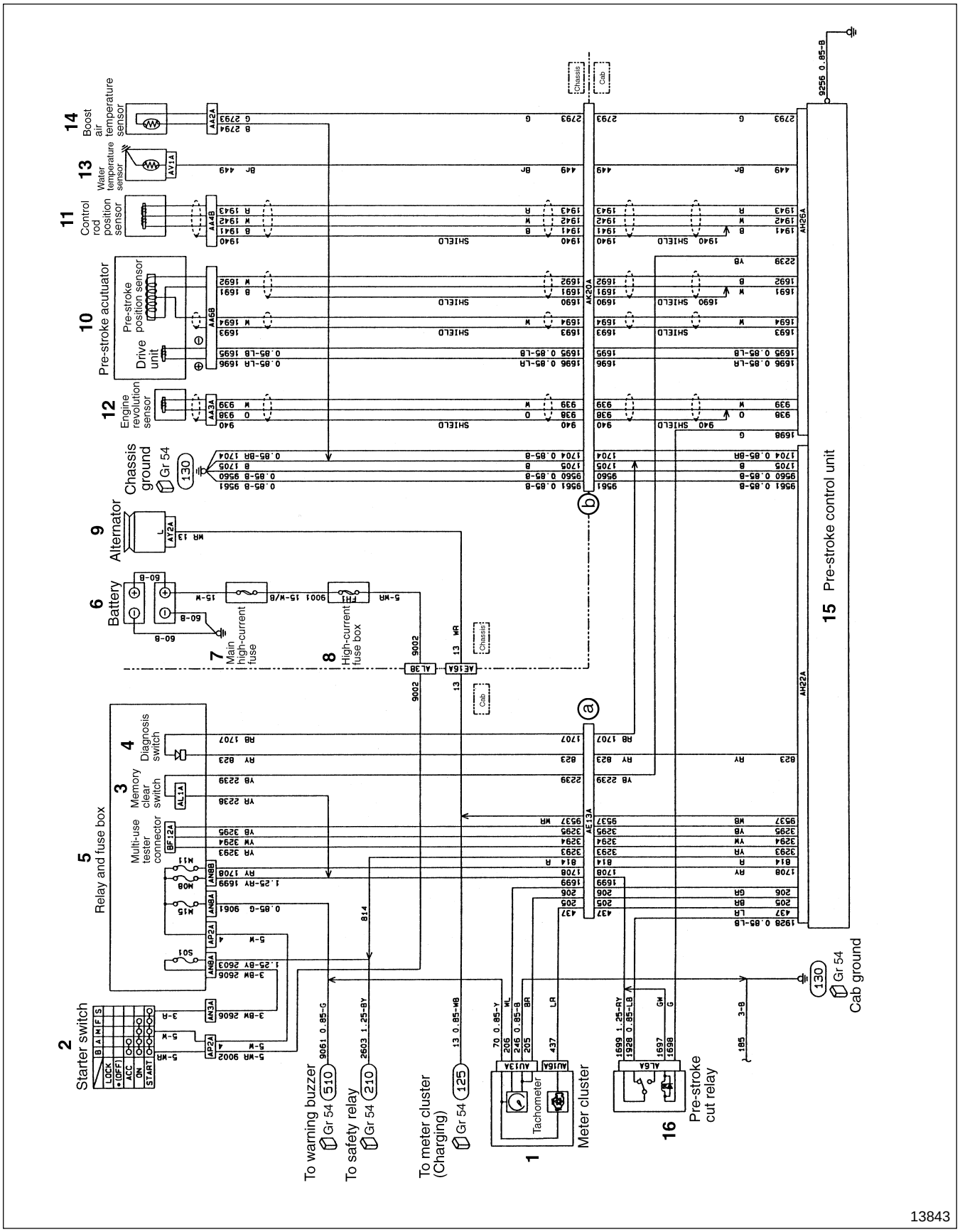

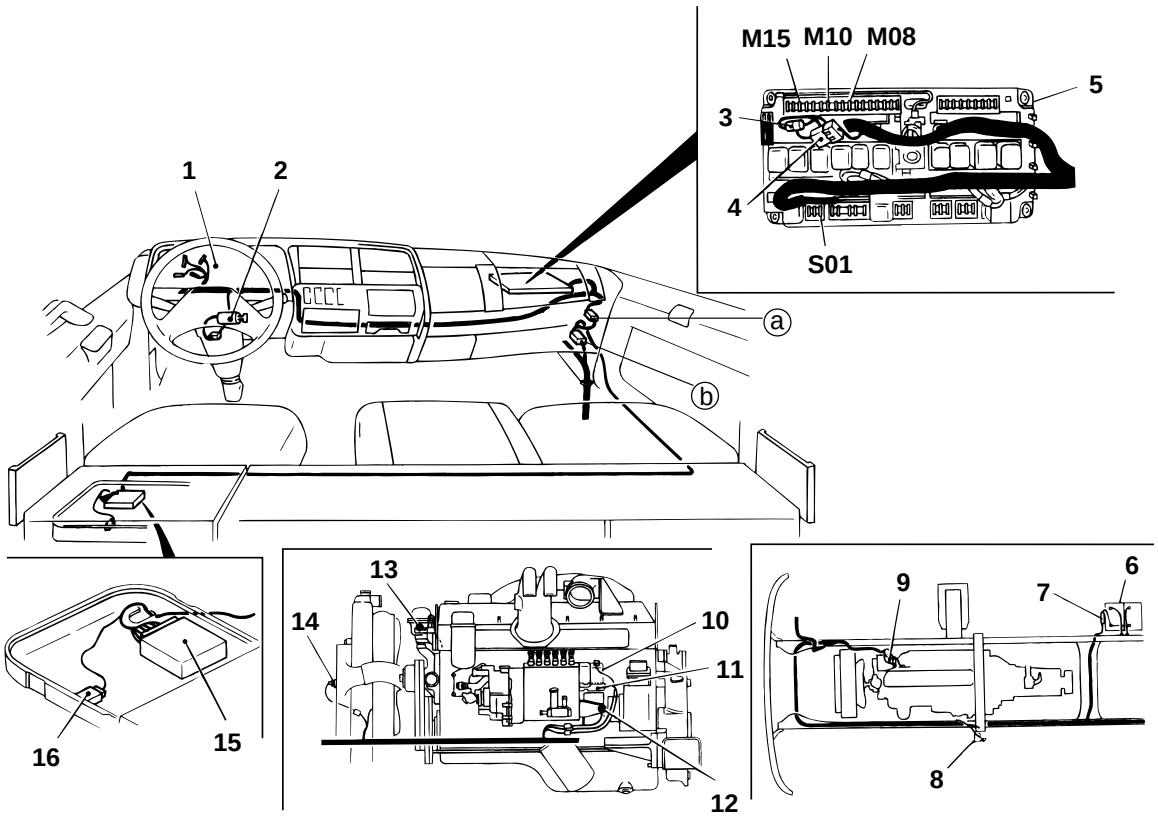

13707

1 Meter cluster
2 Starter switch
3 Memory clear switch
4 Diagnosis switch
5 Relay and fuse box
6 Battery
7 Main high-current fuse
8 High-current fuse box
9 Alternator
10 Pre-stroke actuator (pre-stroke position sensor is built in)
11 Control rod position sensor
12 Engine revolution sensor
13 Water temperature sensor
14 Boost air temperature sensor
15 Pre-stroke control unit
16 Pre-stroke cut relay

Inspection by Individual Diagnosis Code

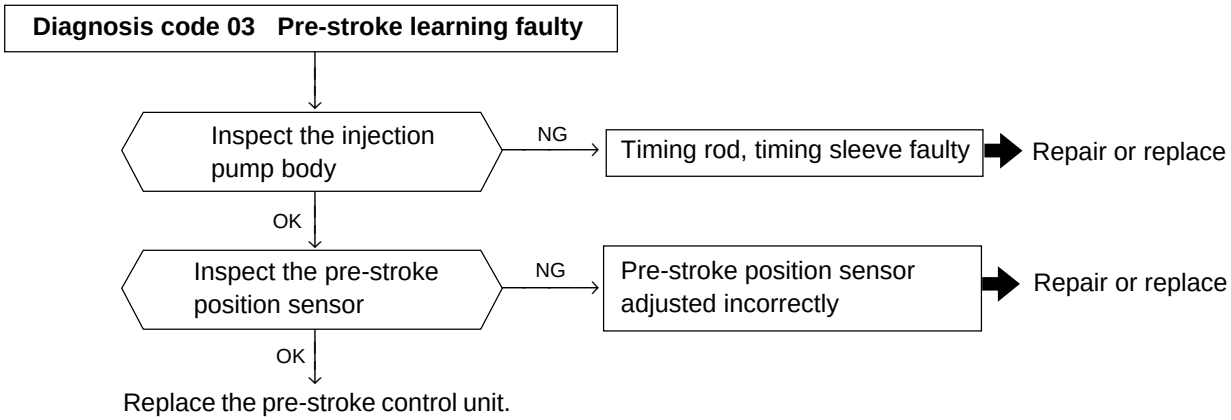

When diagnosis code 03 is indicated, inspect the injection pump body and the pre-stroke position sensor. However, special tools and equipment are necessary for this work, so it is recommended that the work be carried out by a ZEXEL service station. If the inspection result shows normal, replace the pre-stroke control unit.

M E M O

PRE-STROKE CONTROL INJECTION PUMP SYSTEM

Diagnosis code 04 Pre-stroke actuator power source faulty

Inspect the harness and connector — NG → • Wiring breakage, harness short circuit • Connector not connected properly → Repair or replace

OK

Inspect the pre-stroke cut relay 🕮 P13-41 — NG → • Wiring breakage, coil short circuit • Installation faulty → Repair, adjust or replace

OK

Replace the pre-stroke control unit.

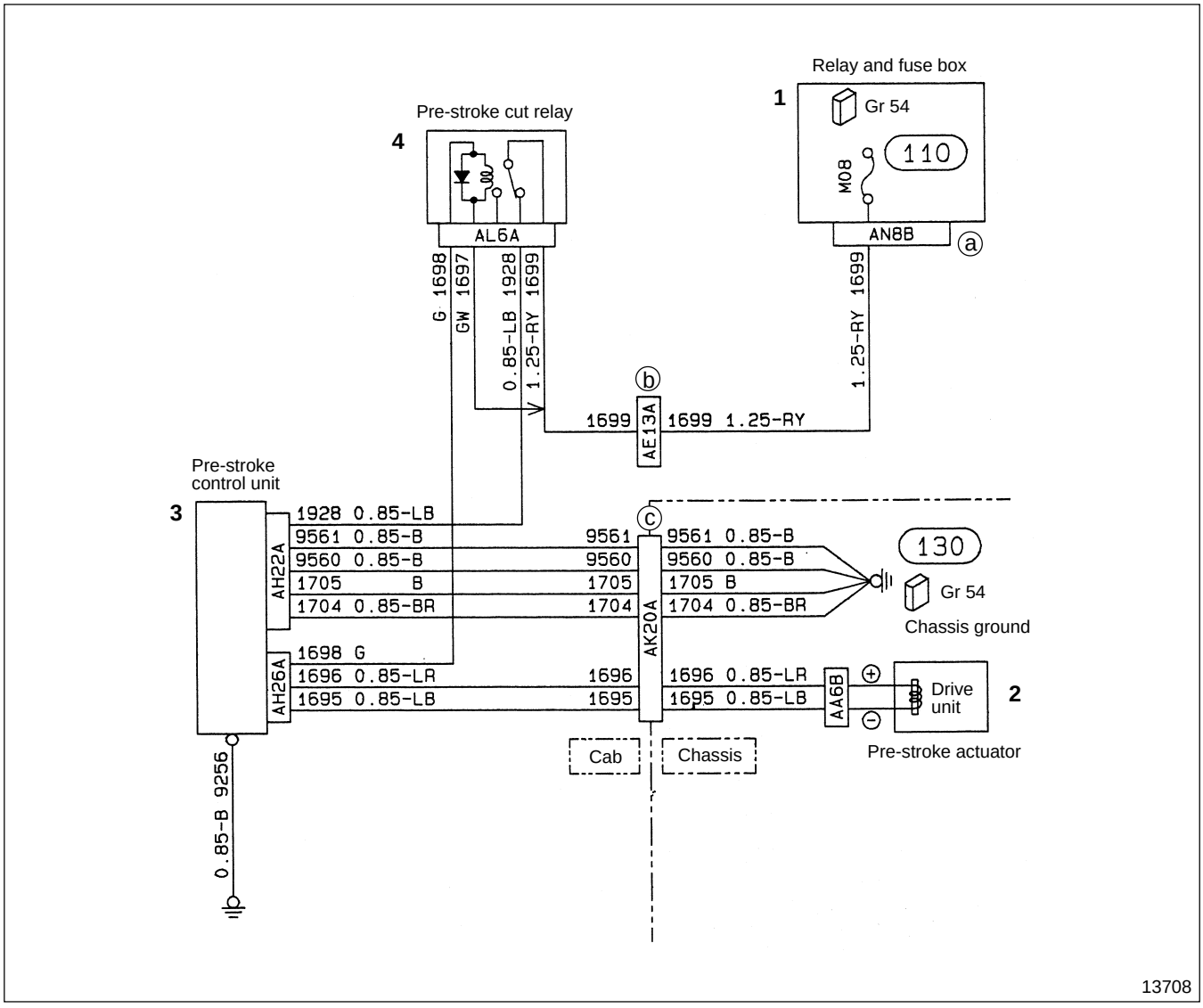

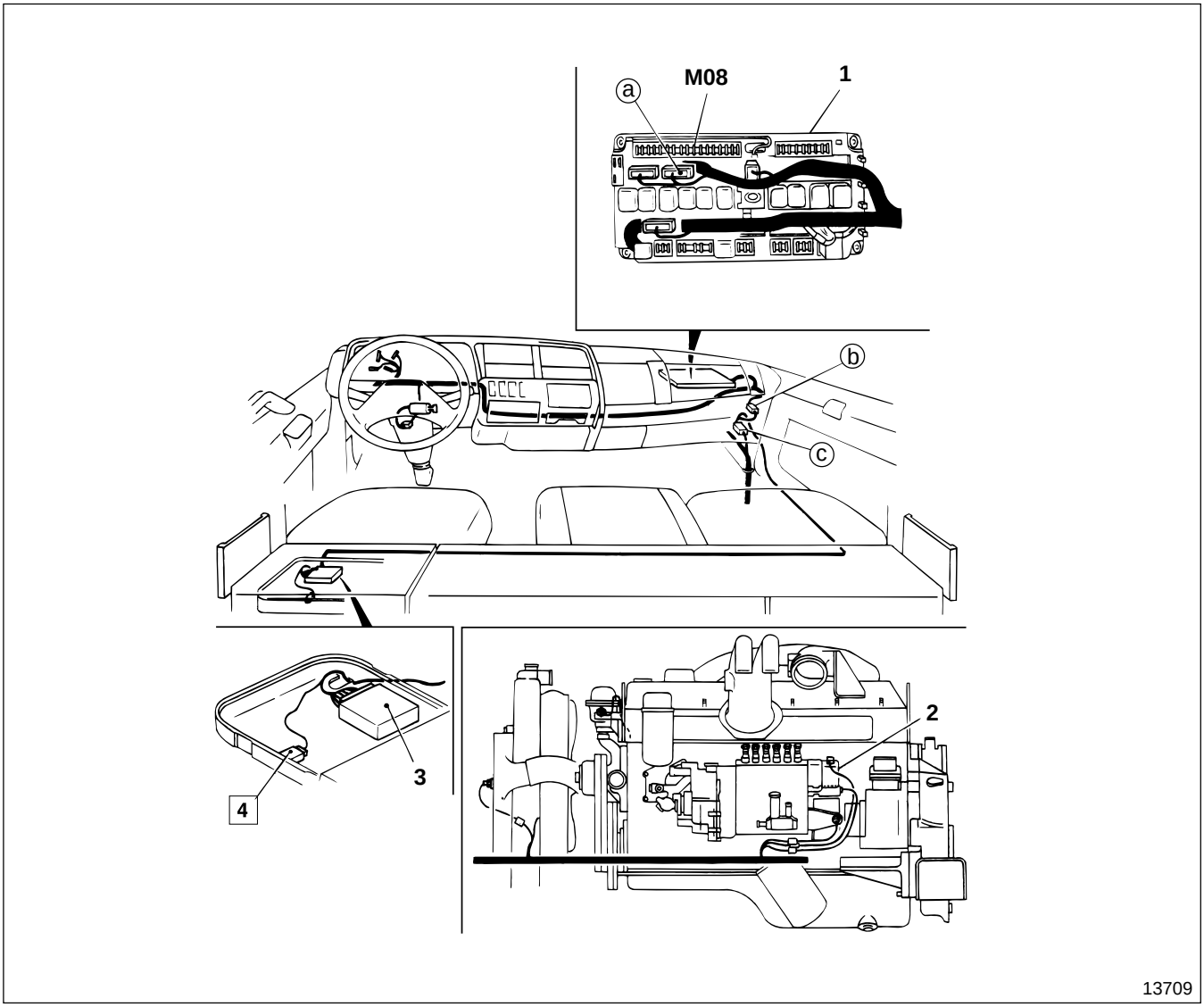

1 Relay and fuse box
2 Pre-stroke actuator
3 Pre-stroke control unit
4 Pre-stroke cut relay

◆ Service procedure

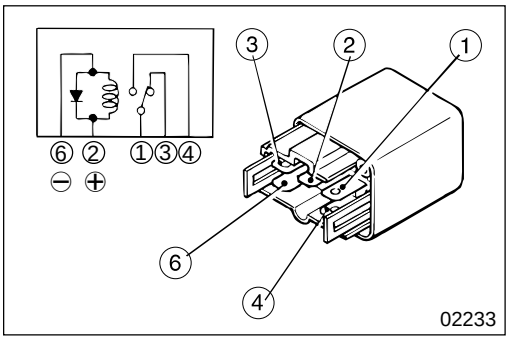

4 **Inspection of pre-stroke cut relay**

- Follow the table below to inspect continuity.

	①	②	③	④	⑥
No current	○		○		
		○			○
Current	○		○		
		⊕			⊖

○—○ : There is continuity between terminals ○ and ○.
⊕—⊖ : Indicates that 12 volts DC is applied to the line between the terminals.

- If any fault is found, replace pre-stroke cut relay **4**.

PRE-STROKE CONTROL INJECTION PUMP SYSTEM

Diagnosis code 05 Engine revolution sensor faulty
(No pulse error : Output signal from the sensor is weak or unstable)

Inspect the harness and connector
NG
- Wiring breakage, harness short circuit
- Connector not connected properly

→ Repair or replace

OK

Inspect the engine revolution sensor. P13-44
Inspect the output voltage of alternator terminal L Gr 54
NG
- Wiring breakage, coil short circuit
- Installation faulty

→ Repair, adjust or replace

OK

Replace the pre-stroke control unit.

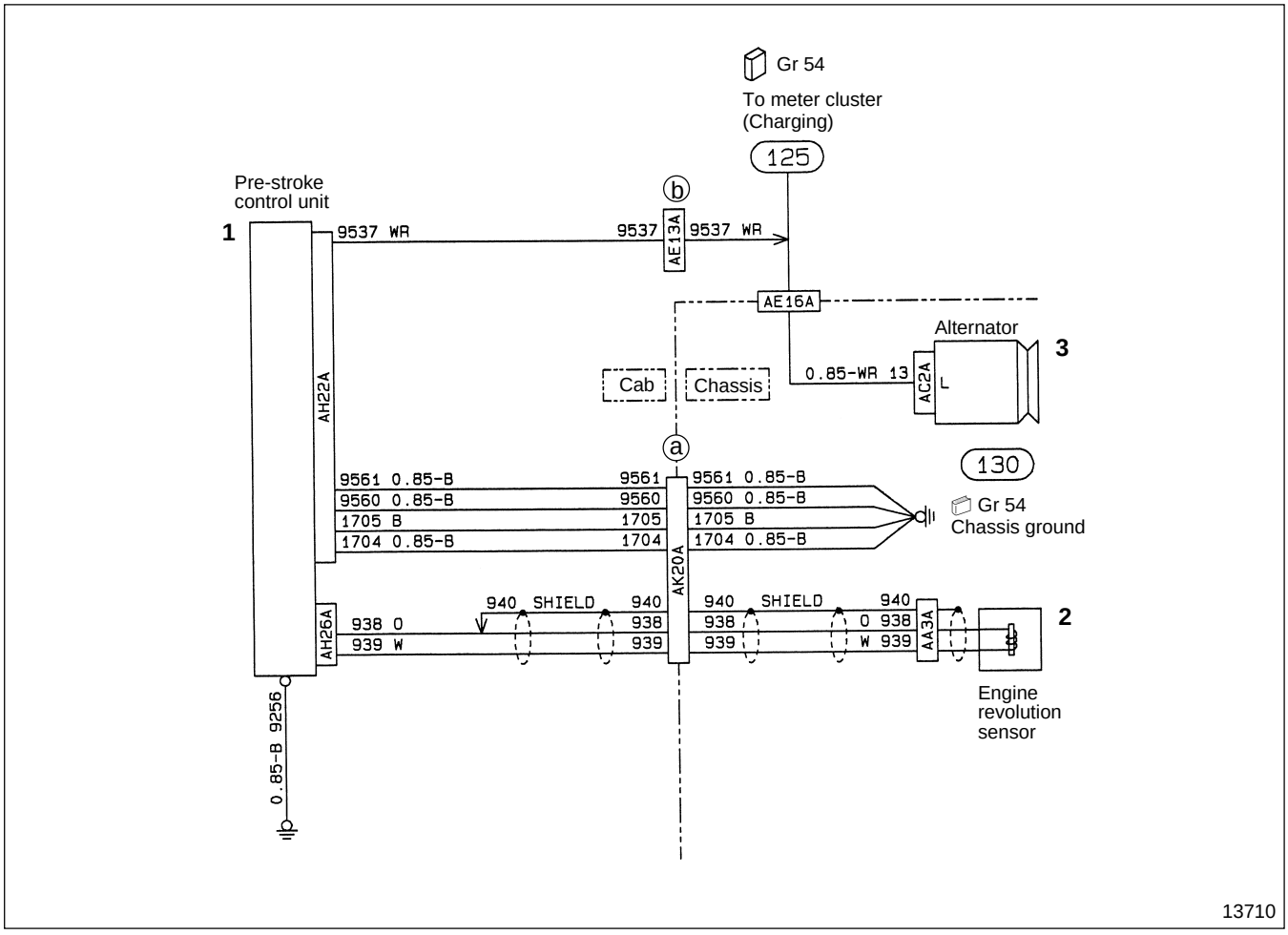

13710

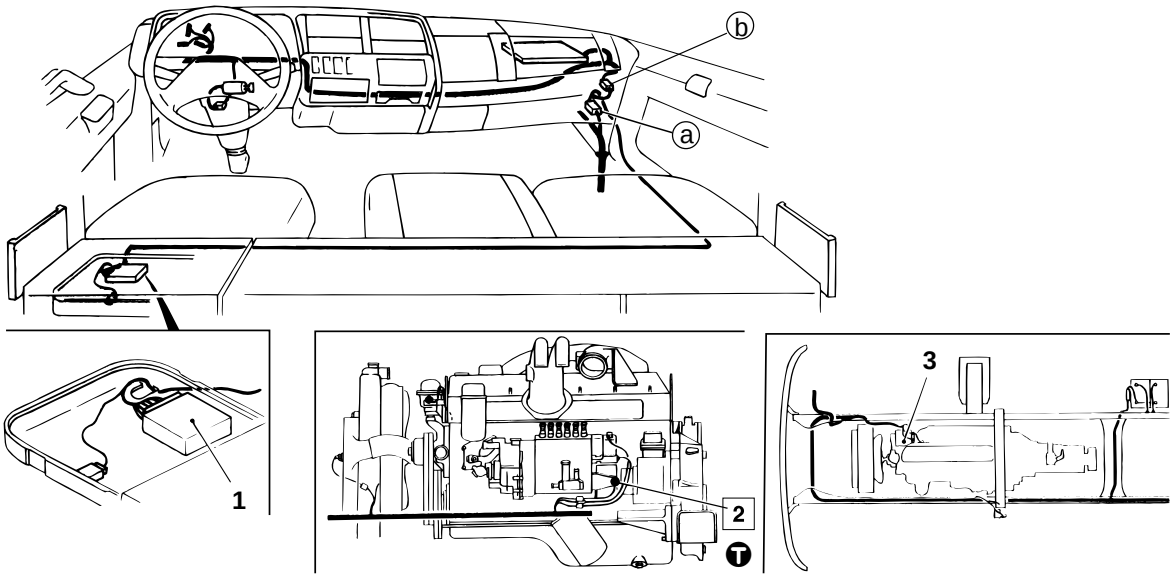

1 Pre-stroke control unit
2 Engine revolution sensor
3 Alternator

Service standards

Unit : mm {in.}

Location	Maintenance item		Standard value	Limit	Remedy
2	Resistance value of engine revolution sensor (at 25˚C {77˚F}) 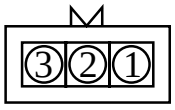 14013	① - ②	2.3±0.2 k	—	Replace
	Clearance between engine revolution sensor and timer housing protrusion		0.8 to 1 {0.031 to 0.039}	—	Adjust

Ⓣ Tightening torque

Unit : N·m {lbf.ft, kgf·m}

Location	Parts to be tightened	Tightening torque	Remarks
2	Lock nut of engine revolution sensor	24 to 35 {17 to 26, 2.4 to 3.6}	—

◆ Service procedure

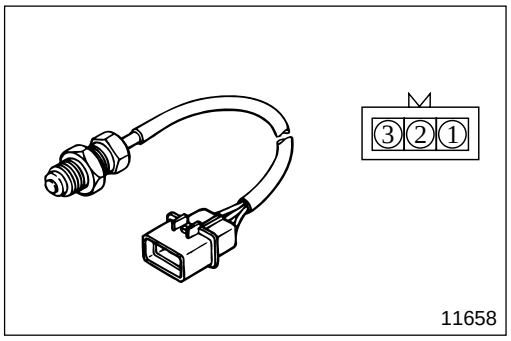

2 Engine revolution sensor

[Inspection]

(1) Sensor body

- Measure the resistance between terminals ① and ②.
- If the measured value deviates from the standard value, replace engine revolution sensor **2**.

CAUTION

Be sure to adjust the clearance between engine revolution sensor 2 and the protrusion on the timer housing after replacing the engine revolution sensor.

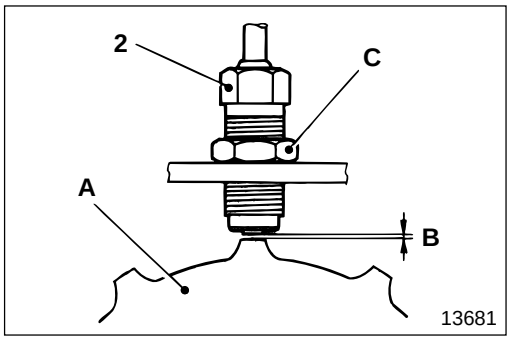

(2) Clearance to protrusion

If clearance **B** between engine revolution sensor **2** and protrusion **A** on the timer housing deviates from the standard value, adjust the clearance as follows.

[Adjustment]

- Loosen lock nut **C** and rotate engine revolution sensor **2** to adjust.
- After adjustment, fix by tightening lock nut **C** at specified torque.

NOTE

If the clearance between engine revolution sensor 2 and protrusion A on the timer housing is too large, the signal might not be output. If the clearance is too small, the engine revolution sensor might hit the protrusion.

M E M O

PRE-STROKE CONTROL INJECTION PUMP SYSTEM

Diagnosis code 12 Pre-stroke servo system faulty

Inspect the harness and connector — NG → • Wiring breakage, harness short circuit • Connector not connected properly → Repair or replace

OK

Inspect the pre-stroke actuator 🕮 P13-48 — NG → • Copper plate mounting nut loose • Wiring breakage, coil short circuit • Rotor rotation faulty • Spring faulty → ★ Repair, adjust or replace

OK

★ Inspect the injection pump body — NG → Timing rod, timing sleeve faulty → ★ Repair, adjust or replace

OK

Replace the pre-stroke control unit.

★ : To be carried out by a ZEXEL service station

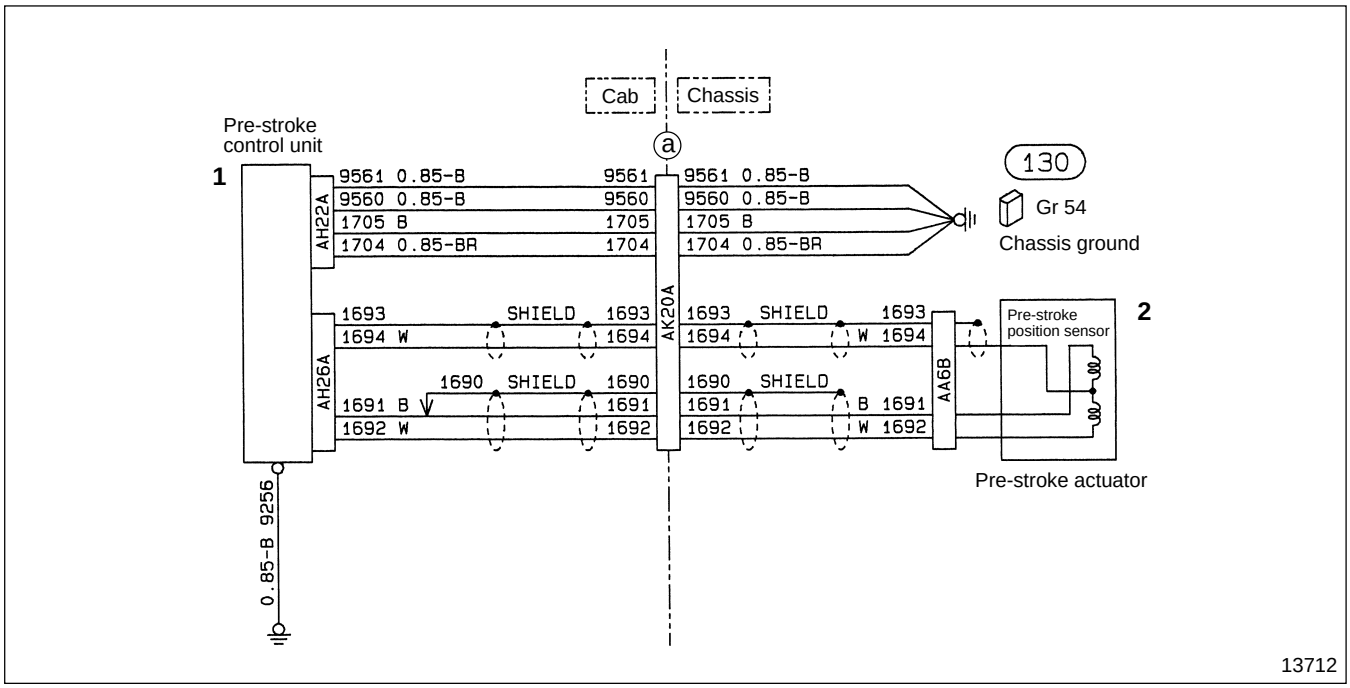

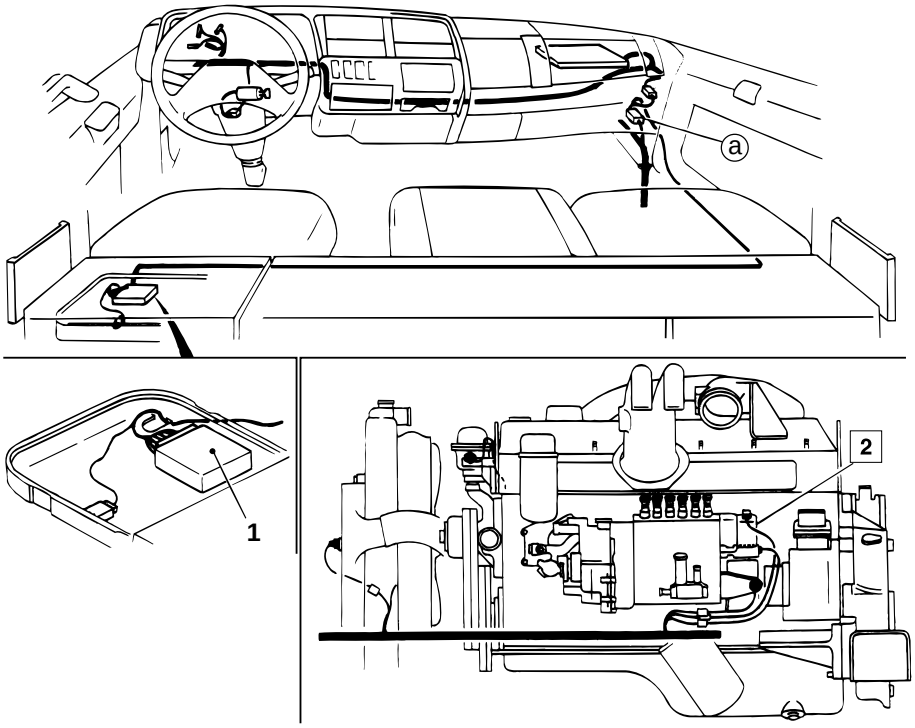

13713

1 Pre-stroke control unit
2 Pre-stroke actuator

Service standards

Location	Maintenance item		Standard value	Limit	Remedy
2	Resistance value of pre-stroke actuator (at connector point) 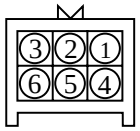 13714	②-③	5.5 to 6.1	—	Replace (to be carried out by a ZEXEL service station)
		①-③	11.0 to 12.2	—	
		①-②	5.5 to 6.1	—	
		④-⑤	0.9 to 1.3	—	
	Resistance value of pre-stroke actuator (Actuator body) 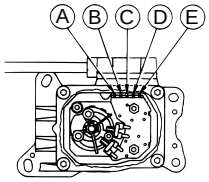 13715	Ⓐ-Ⓒ	11.0 to 12.2	—	Replace (to be carried out by a ZEXEL service station)
		Ⓑ-Ⓒ	5.5 to 6.1	—	
		Ⓐ-Ⓑ	5.5 to 6.1	—	
		Ⓓ-Ⓔ	0.9 to 1.3	—	

◆ Service procedure

2 Inspection of pre-stroke actuator

Inspect the following points and if any fault is found, have the unit inspected and repaired by a ZEXEL service station.

NOTE

Inspection of pre-stroke actuator 2 must be carried out when the engine is cold.

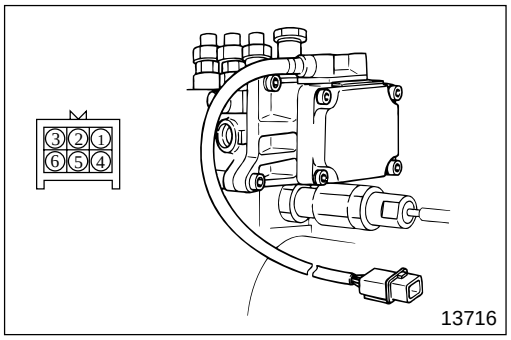

(1) Inspection at connector point

- Measure resistance between terminals ②-③, ①-③, ①-② and ④-⑤.

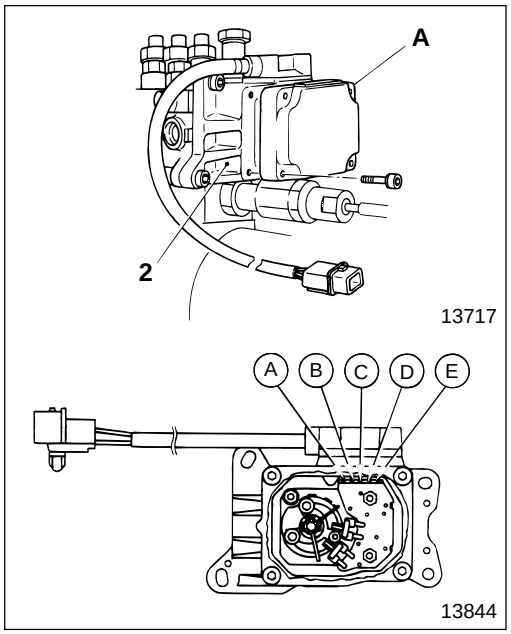

(2) Inspection of pre-stroke actuator body

- Remove cover **A** from pre-stroke actuator **2**.

CAUTION ⚠

- **Remove only cover A from pre-stroke actuator 2, never remove the actuator body itself. If the actuator is removed, it requires special tools to replace and adjust it.**
- **When removing cover A, do not exert excessive force on pre-stroke actuator 2 with your hands or by treading on it, etc.**

- Measure resistance between terminals Ⓐ-Ⓒ, Ⓑ-Ⓒ, Ⓐ-Ⓑ and Ⓓ-Ⓔ.

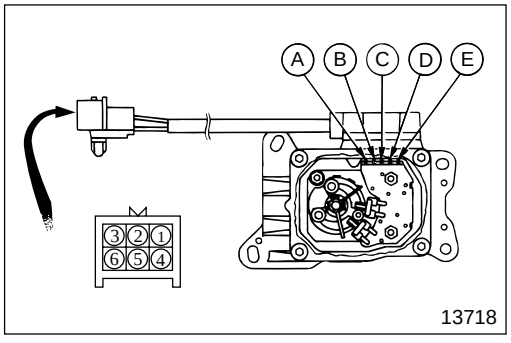

(3) Inspection of continuity between pre-stroke actuator and connector

Make sure that continuity exists between terminals as listed in the table below.

Connector terminal	Pre-stroke actuator body	Application
④	Ⓓ	Pre-stroke actuator driving power source ⊖
⑤	Ⓔ	Pre-stroke actuator driving power source ⊕
⑥	GND	Shield
①	Ⓒ	Pre-stroke position sensor (GND)
②	Ⓑ	Pre-stroke position sensor (MDL)
③	Ⓐ	Pre-stroke position sensor (OSC)

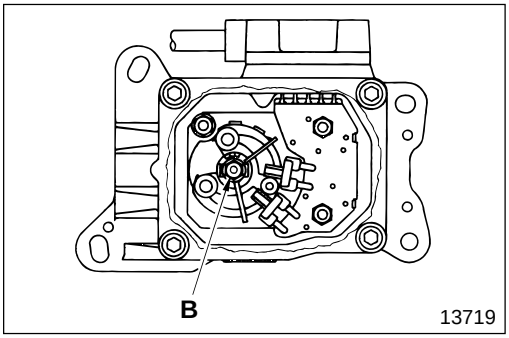

(4) Inspection of copper plate mounting nut

Check that copper plate mounting nut **B** was not loosened when the cover of pre-stroke actuator **2** was removed.
If nut **B** is loose, tighten it.

Diagnosis code 13 Pre-stroke position sensor faulty

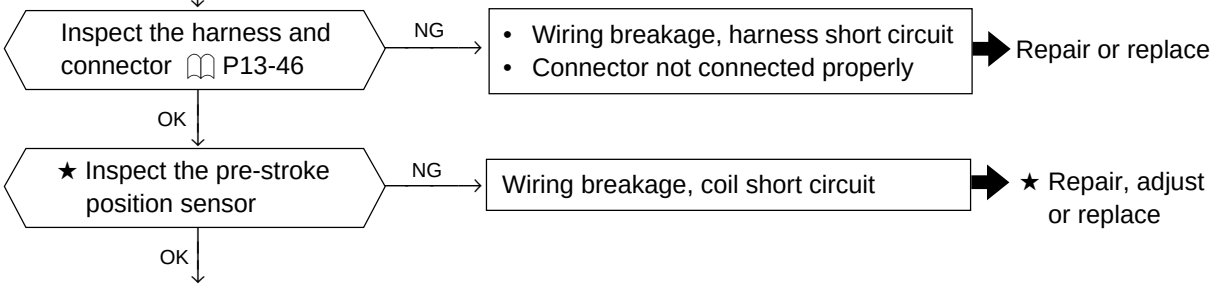

★ : To be carried out by a ZEXEL service station

Diagnosis code 15 Engine revolution sensor faulty
(Wiring breakage error : No output signal transmitted by the sensor)

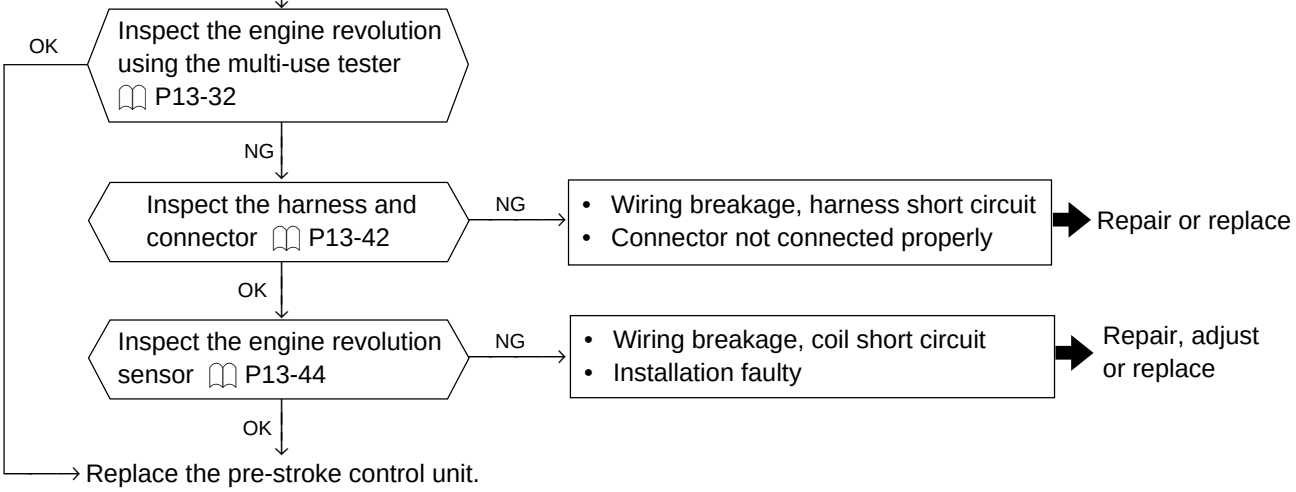

PRE-STROKE CONTROL INJECTION PUMP SYSTEM

Diagnosis code 21 Water temperature sensor faulty

OK

Inspect the engine coolant temperature using the multi-use tester 🕮 P13-32

NG

Inspect the harness and connector

NG

- Wiring breakage, harness short circuit
- Connector not connected properly

Repair or replace

OK

Inspect the water temperature sensor 🕮 P13-51

NG

- Wiring breakage, coil short circuit
- Installation faulty

Repair, adjust or replace

OK

Replace the pre-stroke control unit.

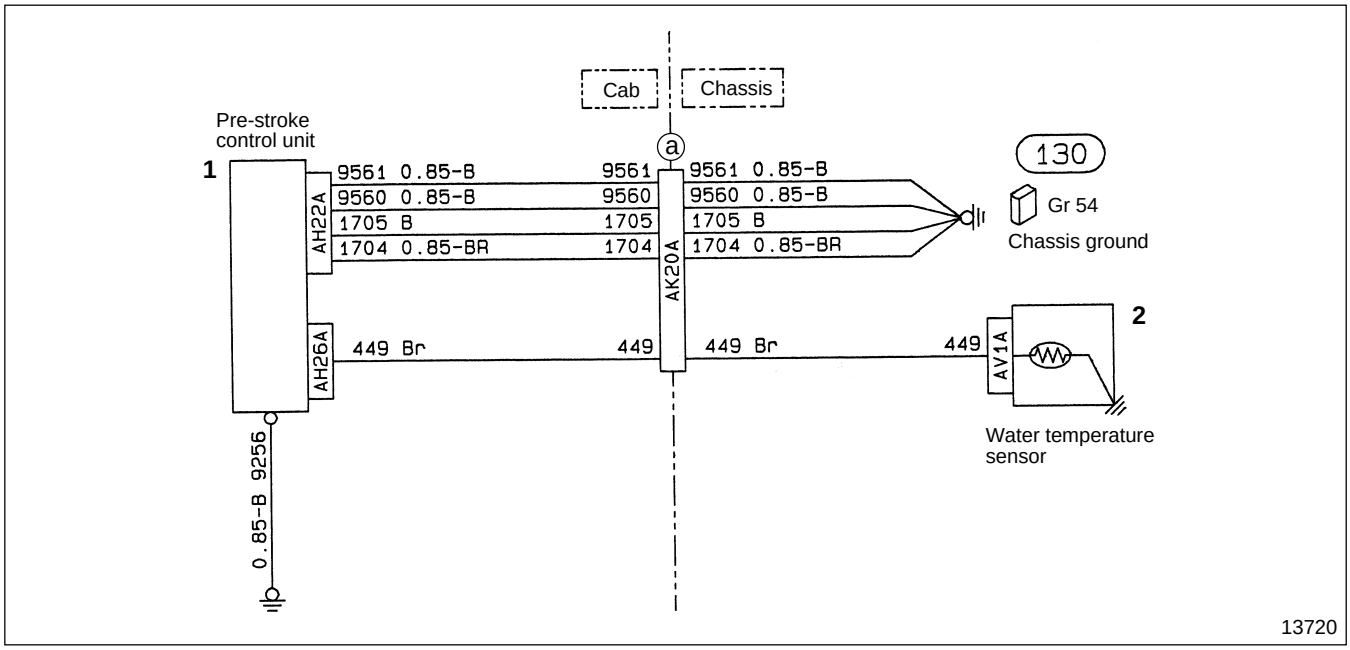

13720

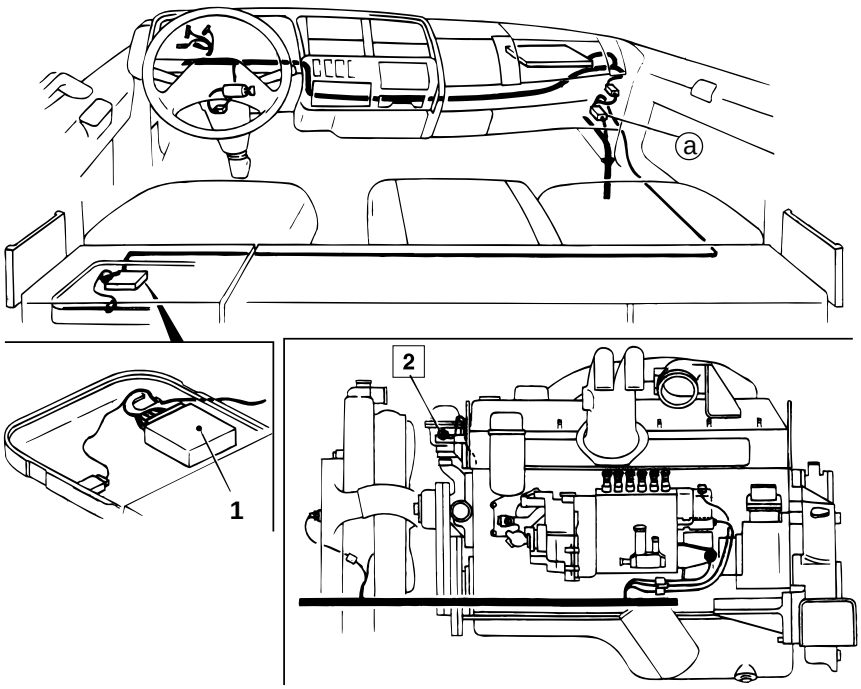

13721

1 Pre-stroke control unit
2 Water temperature sensor

Service standards

Location	Maintenance item		Standard value	Limit	Remedy
2	Resistance value of water temperature sensor	20˚C {68˚F}	3250	—	Replace
		40˚C {104˚F}	1500	—	Replace
		60˚C {140˚F}	620±62	—	Replace

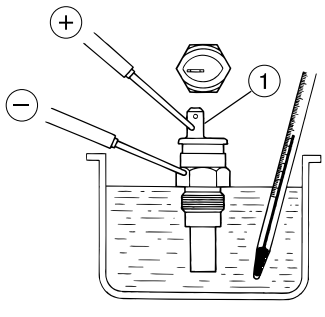

13722

◆ Service procedure

2 **Inspection of water temperature sensor**

- Place water temperature sensor **2** in engine oil in a container.
- Raise the oil temperature to the specified values and stir the oil.
- Measure the resistance between terminal ① and the body.
- If the measured value deviates from the standard value, replace water temperature sensor **2**. Gr 14

PRE-STROKE CONTROL INJECTION PUMP SYSTEM

Diagnosis code 22 Control rod position sensor faulty

- Inspect the control rod position sensor power output voltage using the multi-use tester 🕮 P13-32
  - OK → Replace the pre-stroke control unit.
  - NG → Inspect the harness and connector
    - NG → • Wiring breakage, harness short circuit • Connector not connected properly → Repair or replace
    - OK → Inspect the control rod position sensor 🕮 P13-53
      - NG → • Wiring breakage, coil short circuit • Installation faulty → ★ Repair, adjust or replace
      - OK → Replace the pre-stroke control unit.

★ : To be carried out by a ZEXEL service station

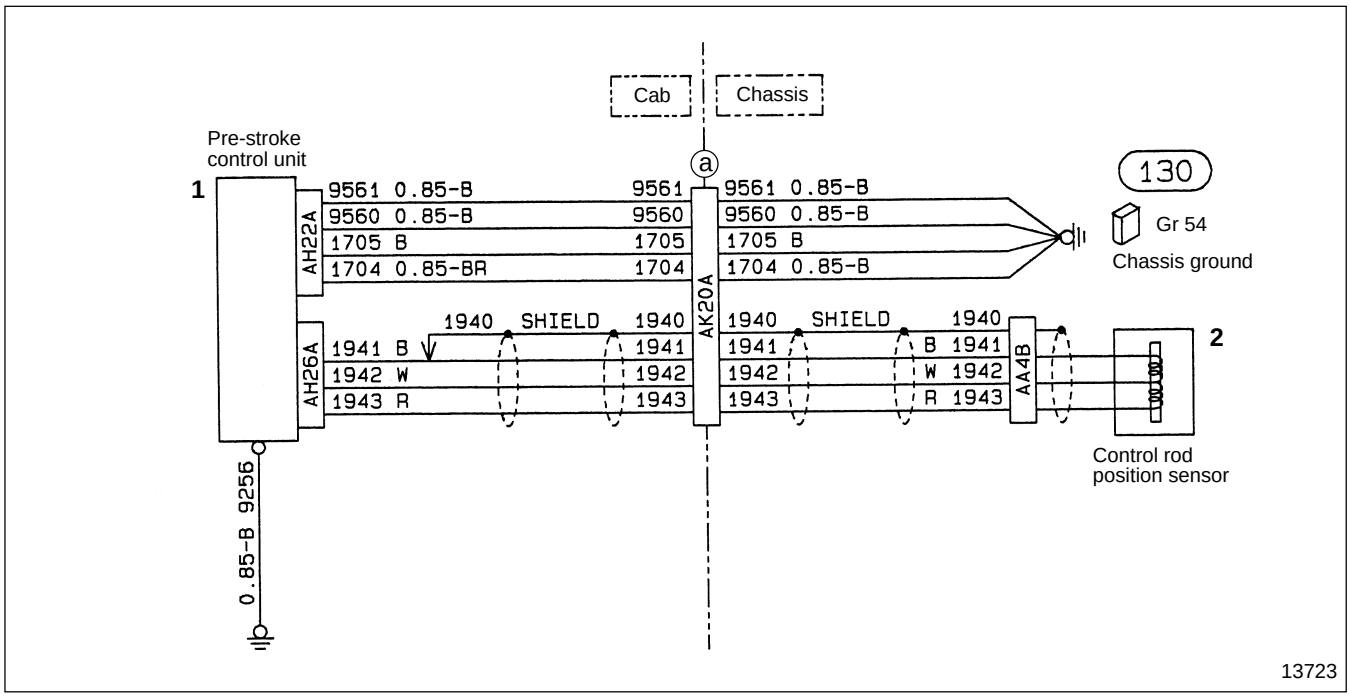

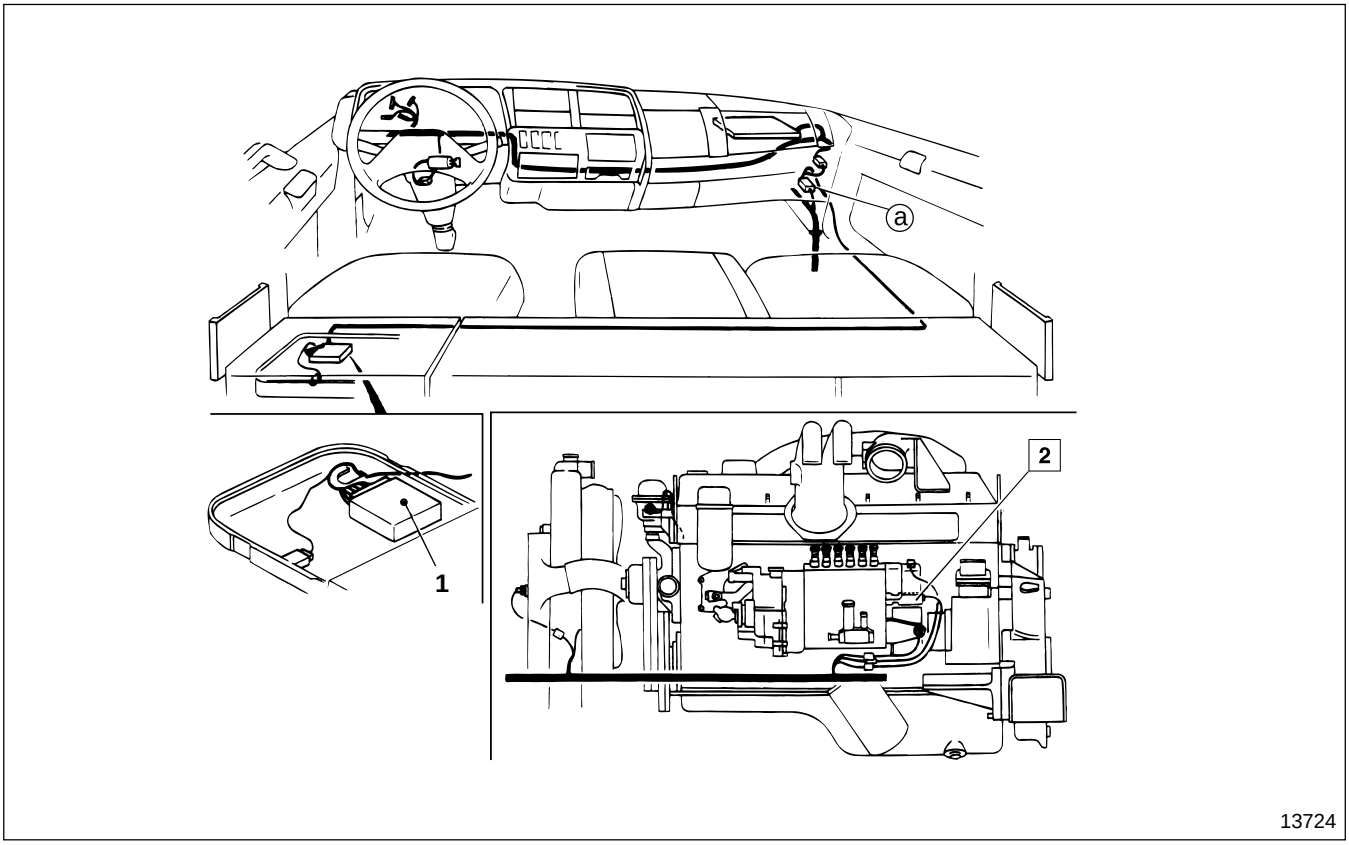

1 Pre-stroke control unit
2 Control rod position sensor

Service standards

Location	Maintenance item		Standard value	Limit	Remedy
2	Resistance value of control rod position sensor 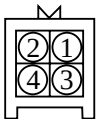 13725	①-④	92.5 to 101.5	—	Replace (To be carried out by a ZEXEL service station)
		①-③	92.5 to 101.5	—	
		③-④	185 to 203	—	

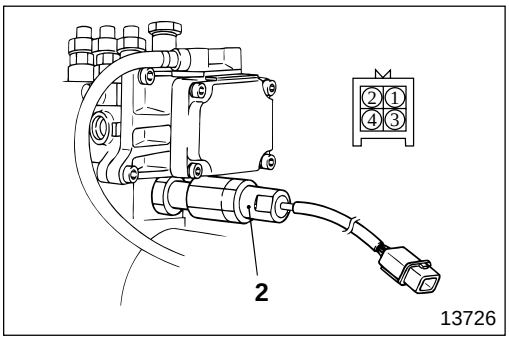

◆ Service procedure

2 **Inspection of control rod position sensor**

- Measure resistance between terminals ①-④, ①-③ and ③-④.
- If the measured value deviates from the standard value, replace control rod position sensor **2**.
- Replacement work is to be carried out by a ZEXEL service station.

PRE-STROKE CONTROL INJECTION PUMP SYSTEM

Diagnosis code 41 Boost air temperature sensor faulty

- Inspect the engine intake air temperature using the multi-use tester 🕮 P13-32
  - OK → Replace the pre-stroke control unit.
  - NG → Inspect the harness and connector
    - NG → • Wiring breakage, harness short circuit • Connector not connected properly → Repair or replace
    - OK → Inspect the boost air temperature sensor 🕮 P13-55
      - NG → • Wiring breakage, coil short circuit • Installation faulty → Repair, adjust or replace
      - OK → Replace the pre-stroke control unit.

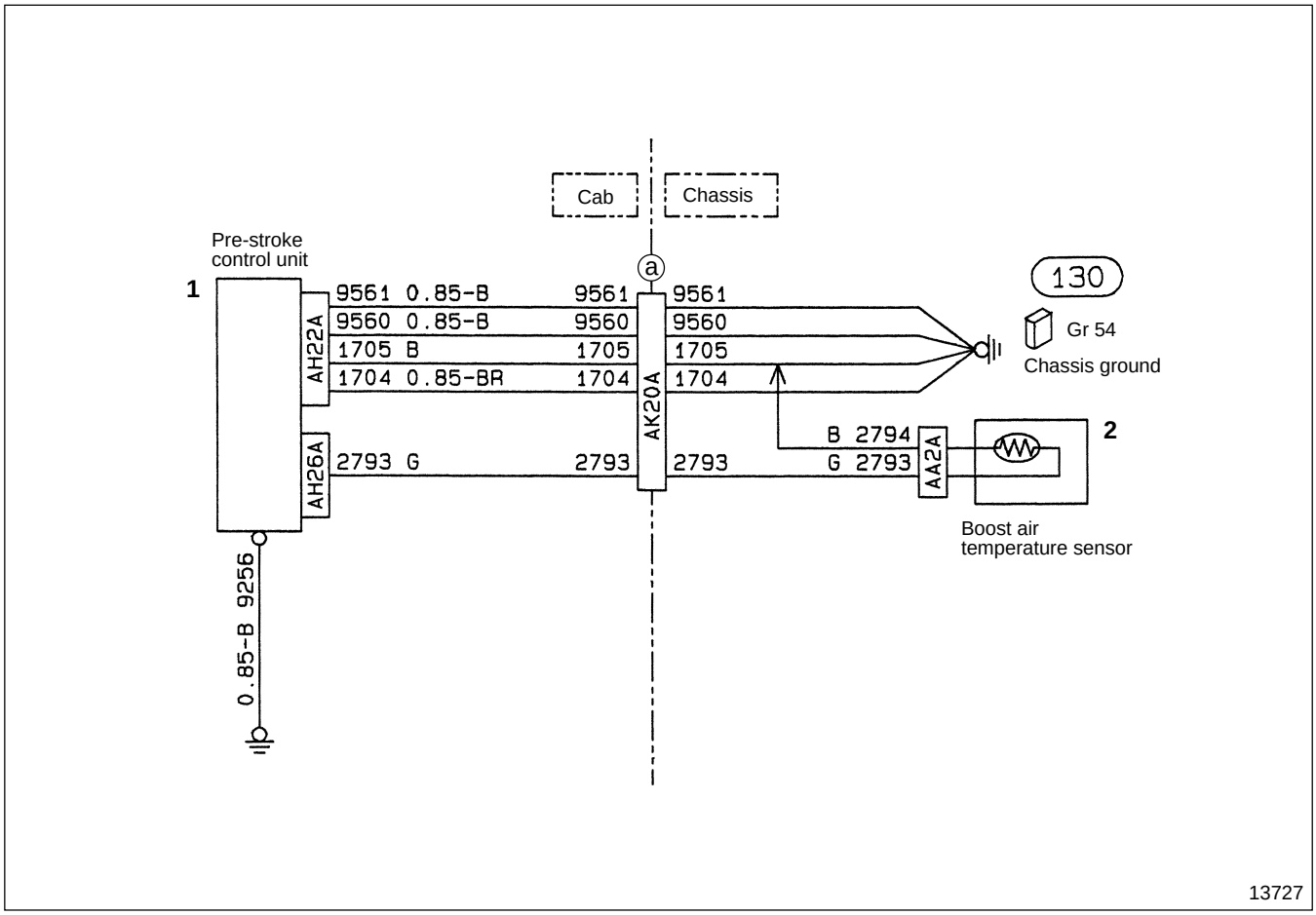

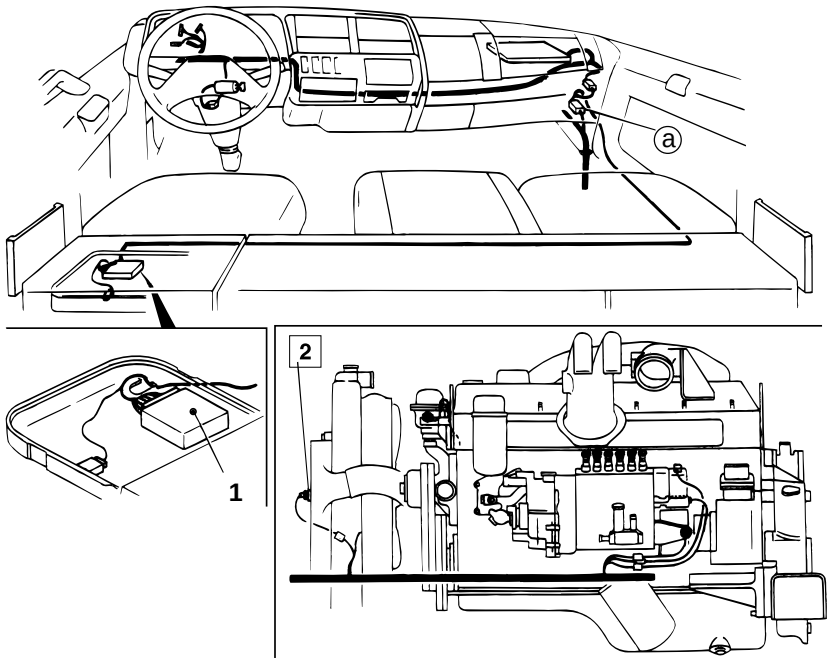

13728

1 Pre-stroke control unit
2 Boost air temperature sensor

Service standards

Location	Maintenance item		Standard value	Limit	Remedy
2	Resistance value of boost air temperature sensor	0˚C {32˚F}	5880±588	—	Replace
		20˚C {68˚F}	2455±245	—	Replace
		80˚C {176˚F}	322±32	—	Replace

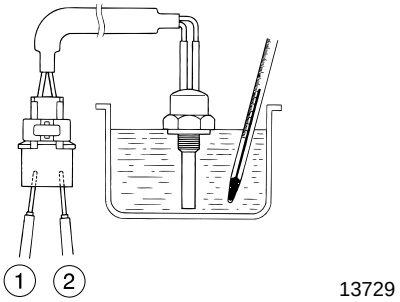

13729

◆ Service procedure

2 **Inspection of boost air temperature sensor**

- Place boost air temperature sensor **2** in rape seed oil in a container.
- Raise the oil temperature to the specified values and stir the oil.
- Measure the resistance between terminals ① and ②.
- If the measured value deviates from the standard value, replace boost air temperature sensor **2**. Gr 15

Inspection of Temporary Faults

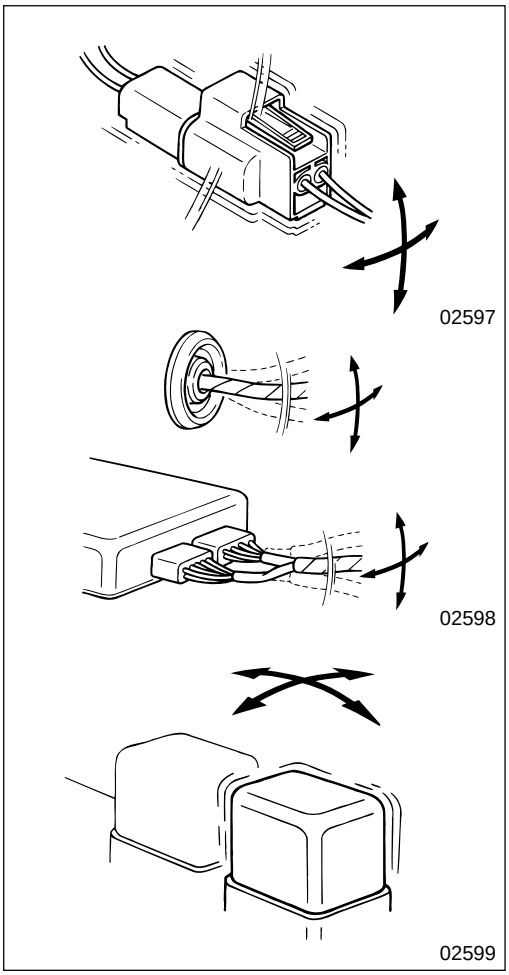

Temporary faults often occur under certain conditions. So identifying those conditions helps to find possible causes. To find the conditions under which temporary faults occurred, you need to reproduce the faults after interviewing customers in detail about actual driving conditions, weather, frequency of occurence and fault phenomena.
Then determine if the faults were caused by vibration, temperature or other possible elements depending on the actual conditions identified.
If vibration is suspected as a possible cause, inspect individual connectors as follows to check if the fault will occur:

- Shake the connector gently in all four directions of the arrows as illustrated.
- Shake the wiring harness gently in all four directions of the arrows as illustrated.
- Wiggle each sensor or piece of equipment by hand.
- Gently shake the wiring harnesses near movable parts such as suspensions.

The inspection subjects include possible causes related to the diagnosis code outputs and faults, as well as the connectors and other parts in the inspection procedure.

M E M O

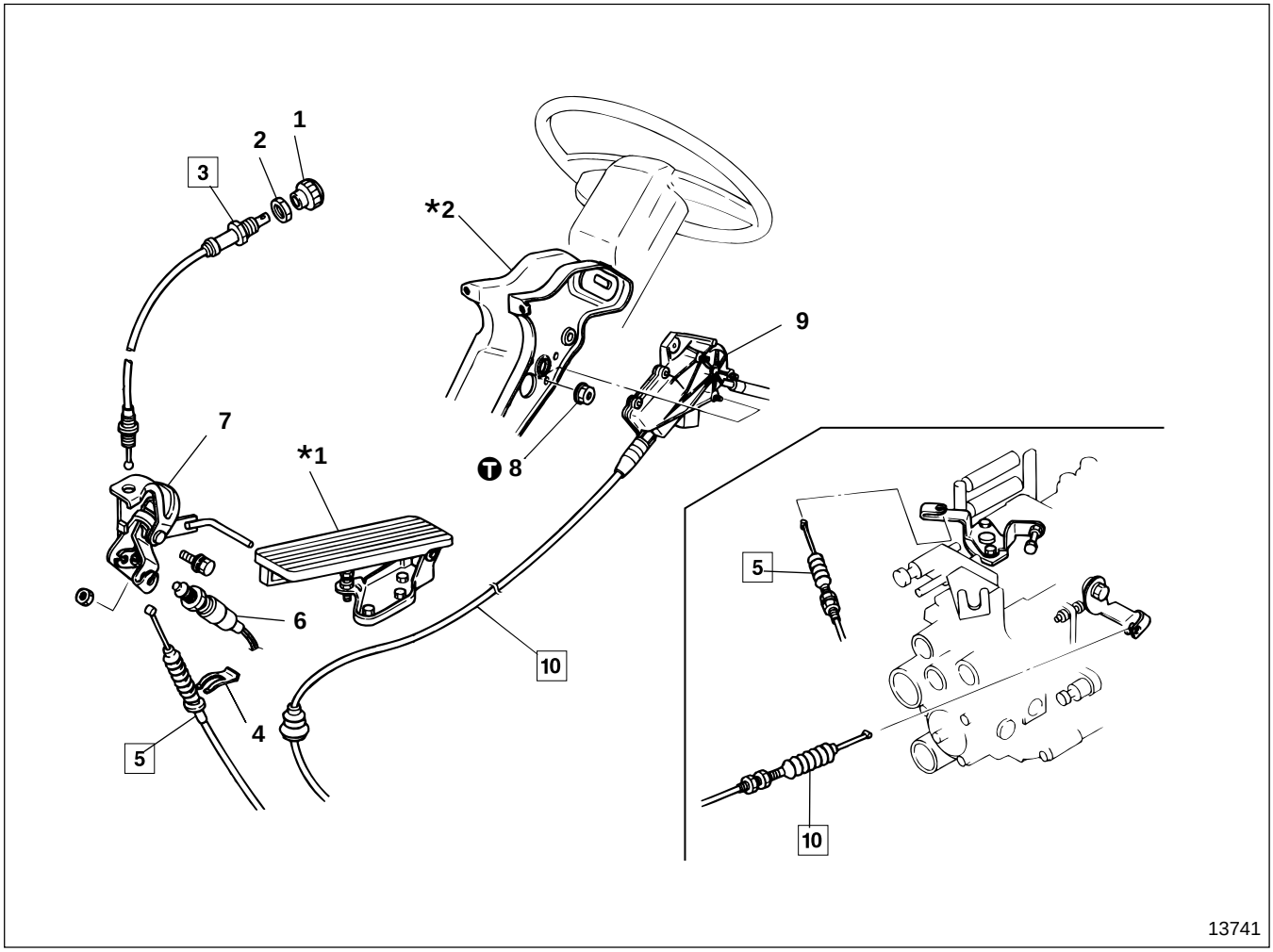

● **Disassembly sequence**

1 Idling control knob
2 Nut
3 Idling control cable
4 Cable clip
5 Accelerator control cable
6 Accelerator switch
7 Accelerator lever and bracket assembly
8 Nut
9 Fuel-cut motor Gr 54
10 Engine stop cable

***1** : Accelerator pedal assembly P13-61
***2** : Steering column bracket Gr 37

● **Assembly sequence**

Follow the disassembly sequence in reverse.

CAUTION⚠

Be sure when laying and routing cables, not to let them contact metal edges.

Ⓣ Tightening torque

Unit : N·m {lbf.ft, kgf·m}

Location	Parts to be tightened	Tightening torque	Remarks
8	Nut (Fuel-cut motor mounting)	3.9 to 4.9 {2.9 to 3.6, 0.4 to 0.5}	—

◆ Service procedure

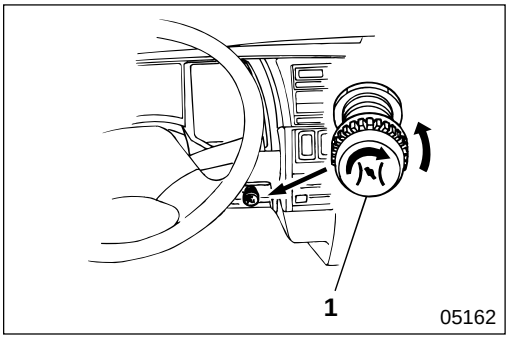

3 Installation of idling control cable

- Rotate idling control knob **1** counterclockwise until the inner cable protrudes at its maximum.

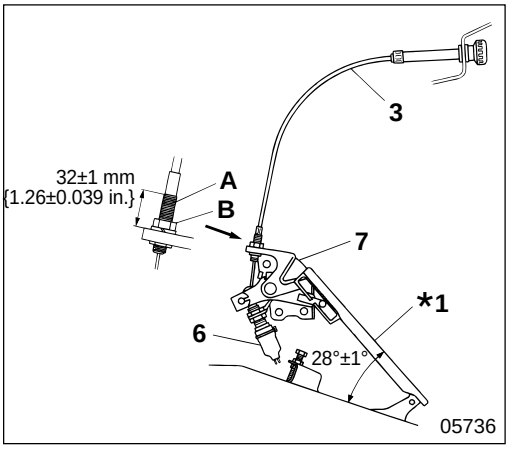

- In this state, install idling control cable **3** onto accelerator lever and bracket assembly **7**.
- Fasten idling control cable **3** using nut **B** so that the dimension of thread area **A** of the idling control cable is as illustrated.
- After installation, make sure that the pedal angle of accelerator pedal assembly ***1** conforms to the illustrated value.

NOTE

In this state, make sure that accelerator switch 6 remains pushed in.

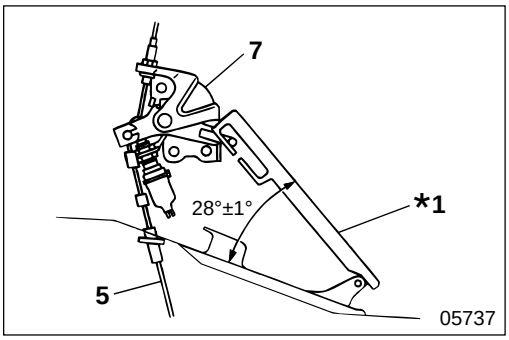

5 Accelerator control cable

[Installation]

- Adjust the pedal angle of accelerator pedal assembly ***1** to the dimension as illustrated.
- Install accelerator control cable **5** onto accelerator lever and bracket assembly **7**.

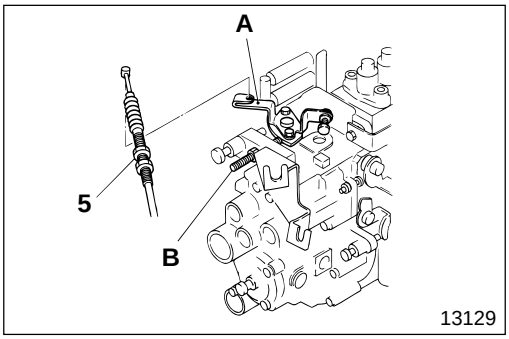

- Install accelerator control cable **5** onto control lever **A** of the governor making sure that the control lever makes contact with idling set bolt **B**.

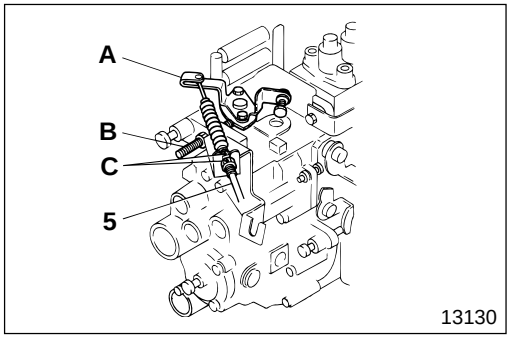

- Adjust mounting nut **C** of accelerator control cable **5** so that the accelerator control cable is stretched but control lever **A** remains in contact with idling set bolt **B**.

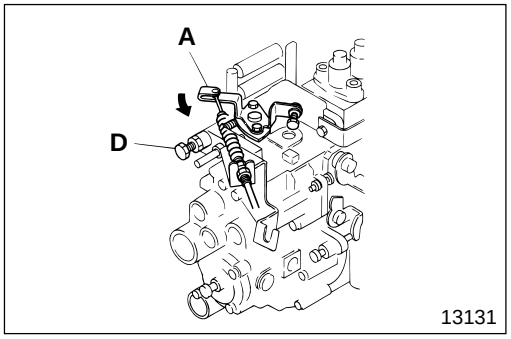

- Depress the accelerator pedal until control lever **A** makes contact with full-speed set bolt **D**.

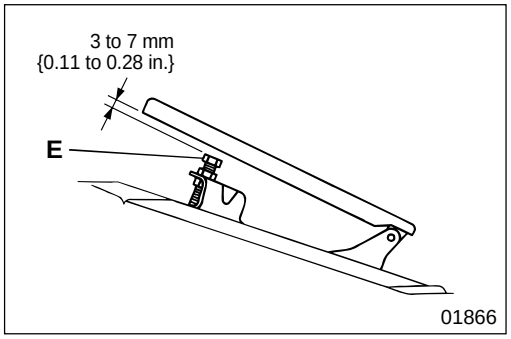

- Adjust stopper bolt **E** so that the clearance between the pedal and the stopper bolt conforms to the illustrated dimension.

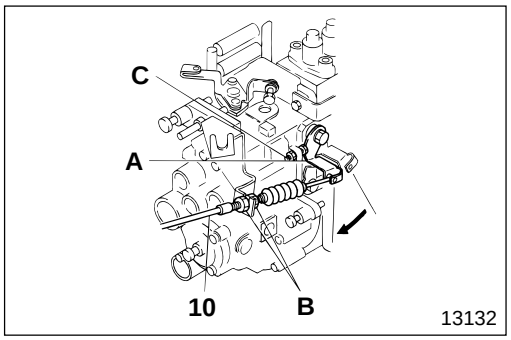

10 **Installation of engine stop cable**

- Install engine stop cable **10** onto stop lever **A**.
- Turn the starter switch to ACC or LOCK. Fasten using mounting nut **B** while keeping stop lever **A** pressed against stopper bolt **C**.
- After installation, start the engine using the starter switch, and make sure that the engine stops when the switch is turned to ACC.

Accelerator Pedal Assembly

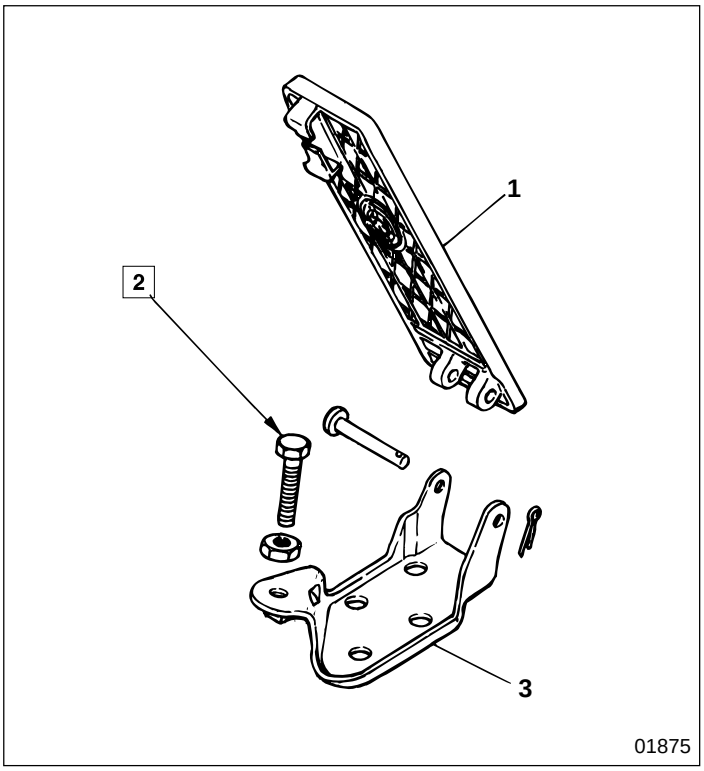

● **Disassembly sequence**

1 Accelerator pedal
2 Stopper bolt
3 Accelerator pedal bracket

● **Assembly sequence**

Follow the disassembly sequence in reverse.

◆ Service procedure

2 **Installation of stopper bolt**

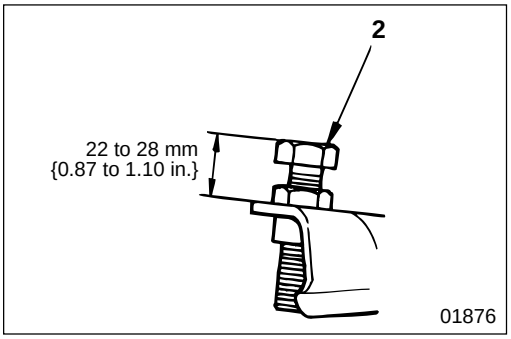

FUEL TANK

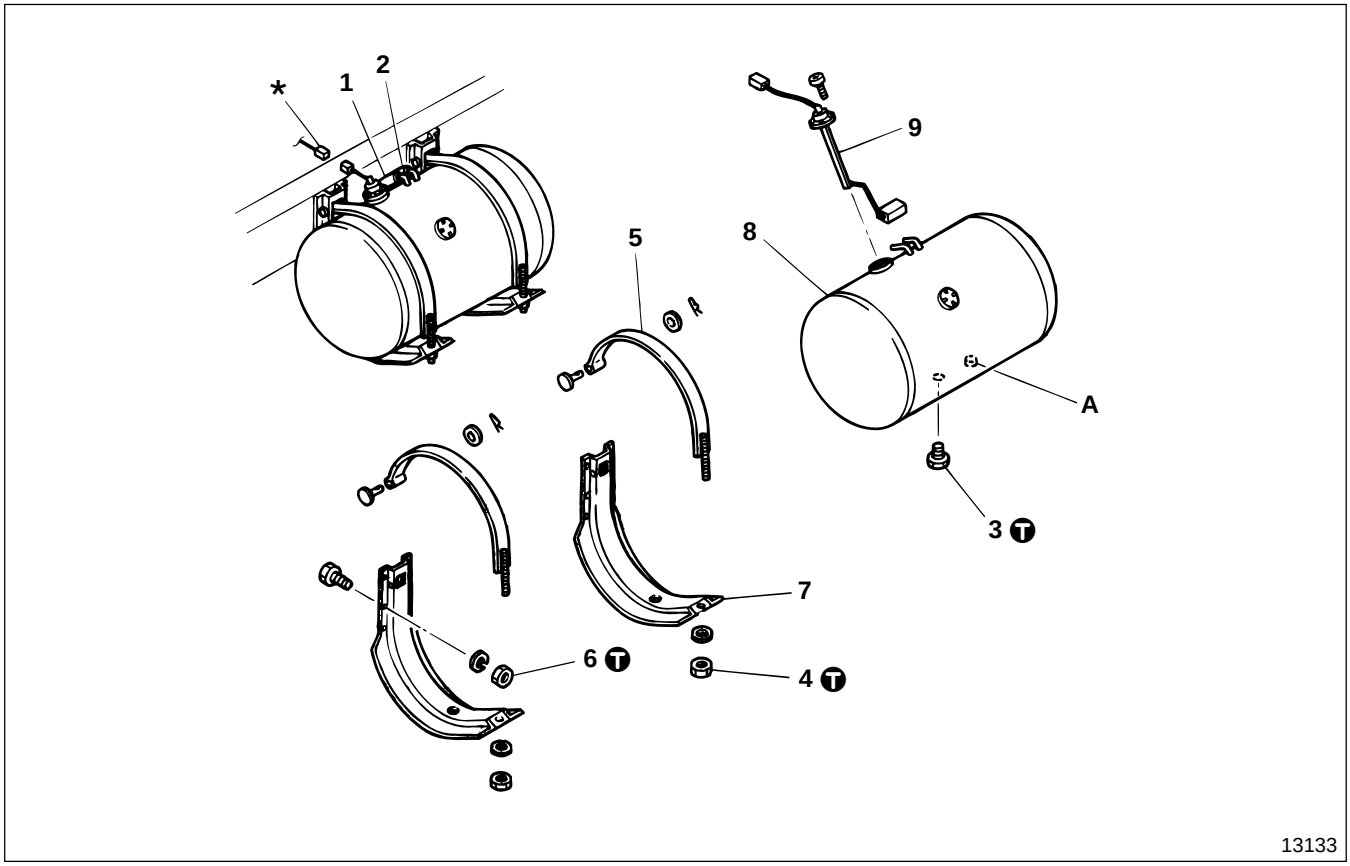

● **Work before removal**

WARNING ⚠

- **Keep naked lights away because of the risk of explosion.**
- **Wipe up any spilled fuel because it can cause a fire.**

NOTE

Drain fuel before working on the job.

● **Removal sequence**

1 Suction hose
2 Return hose
3 Drain plug
4 Nut
5 Fuel tank strap
6 Nut
7 Fuel tank bracket
8 Fuel tank
9 Fuel gauge unit Gr 54

***** : Chassis harness Gr 54
A : Positioning pin

● **Installation sequence**

Follow the removal sequence in reverse.

T Tightening torque

Unit : N·m {lbf.ft, kgf·m}

Location	Parts to be tightened	Tightening torque	Remarks
3	Drain plug	59 to 98 {43 to 72, 6 to 10}	—
4	Nut (Fuel tank strap mounting)	12 to 15 {8.7 to 11, 1.2 to 1.5}	—
6	Nut (Fuel tank bracket mounting)	69 to 93 {51 to 69, 7 to 9.5}	—

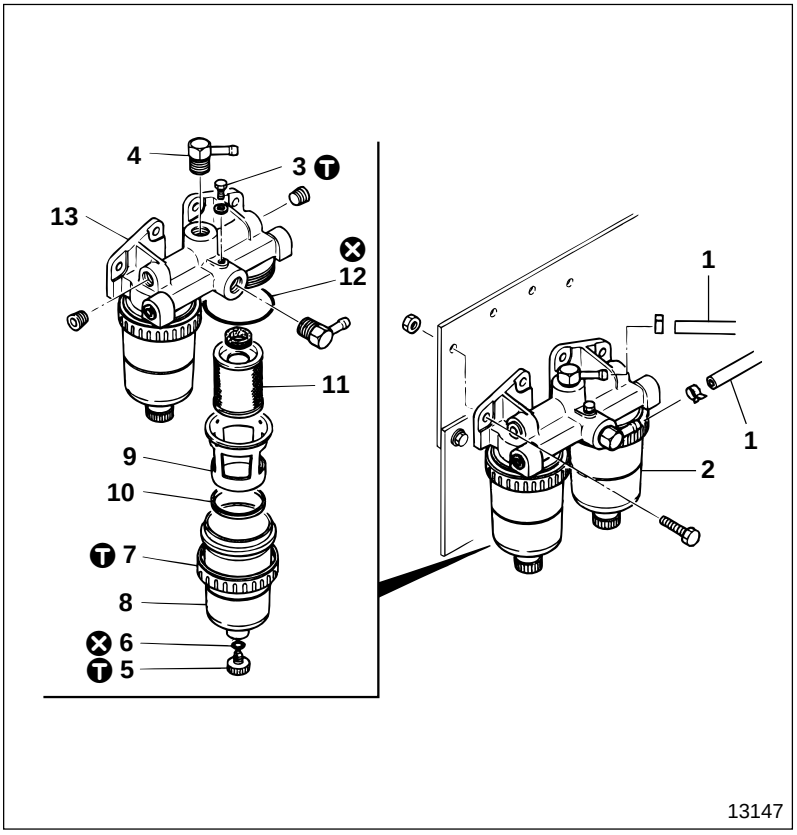

● **Disassembly sequence**

1 Fuel feed hose
2 Water separator assembly
3 Air vent plug
4 Connector
5 Drain plug
6 O-ring
7 Ring nut
8 Case
9 Baffle plate and screen assembly
10 Water level ring
11 Clean screen
12 O-ring
13 Head

⊗ : Non-reusable parts

WARNING

- **Fuel ignites easily. Do not get it near flame or heat.**
- **Wipe up any spilled gas oil because it can cause a fire.**

● **Assembly sequence**

Follow the disassembly sequence in reverse.

T Tightening torque

Unit : N·m {lbf.ft, kgf·m}

Location	Parts to be tightened	Tightening torque	Remarks
3	Air vent plug	7.8 to 12 {5.8 to 8.7, 0.8 to 1.2}	—
5	Drain plug	2.9 to 3.9 {2.2 to 3.9, 0.3 to 0.4}	—
7	Ring nut	5.9 to 7.8 {4.3 to 5.8, 0.6 to 0.8}	—

FUEL FILTER

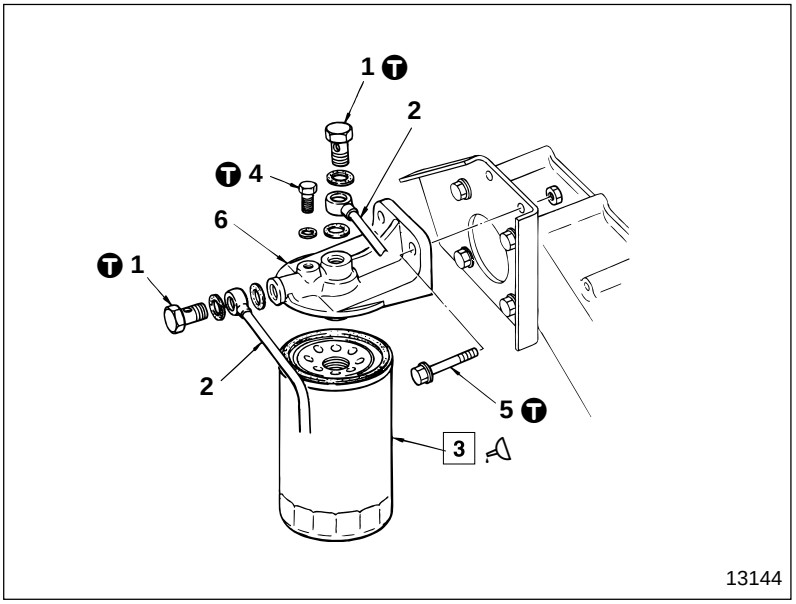

● **Disassembly sequence**

1 Eye bolt
2 Fuel feed pipe
3 Fuel filter
4 Air vent plug
5 Bolt
6 Fuel filter head

● **Assembly sequence**

Follow the disassembly sequence in reverse.

Tightening torque

Unit : N·m {lbf.ft, kgf·m}

Location	Parts to be tightened	Tightening torque	Remarks
1	Eye bolt	24 to 34 {18 to 25, 2.5 to 3.5}	—
4	Air vent plug	7.8 to 12 {5.8 to 8.7, 0.8 to 1.2}	—
5	Bolt (Fuel filter head mounting)	17.7 {13, 1.8}	—

Lubricant

Location	Points of application	Kinds	Quantity
3	Gasket contact surfaces of fuel filter and fuel filter head	Engine oil	As required

Special tools

Unit : mm {in.}

Location	Tool name and shape	Part No.	Application
3	Filter wrench 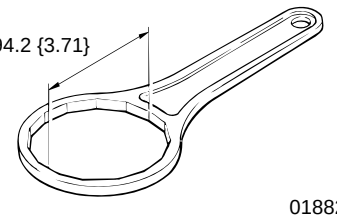 01882	MH061572	Removal of fuel filter

◆ Service procedure

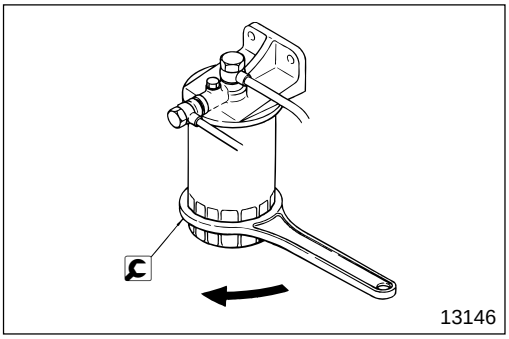

3 **Fuel filter**

WARNING⚠

- **Fuel ignites easily. Do not get it near flame or heat.**
- **Wipe up any spilled gas oil because it can cause a fire.**

[Removal]

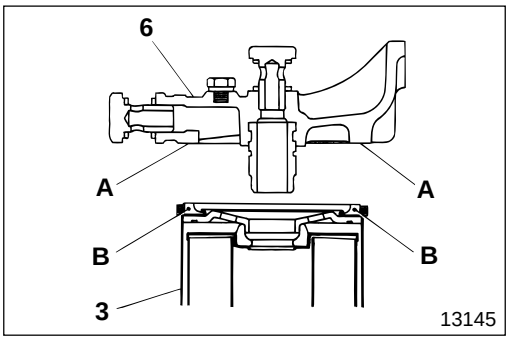

[Installation]

WARNING⚠

You must use a genuine replacement part filter because using unsuitable fuel filter 3 can cause fuel leakage and a fire.

- Install by tightening by three-quarters to one full turn after contact surface **A** of fuel filter head **6** contacts gasket **B** of fuel filter **3**. Be sure to tighten by hand.
- After installation, run the engine to check for fuel leakage.

INJECTION PUMP

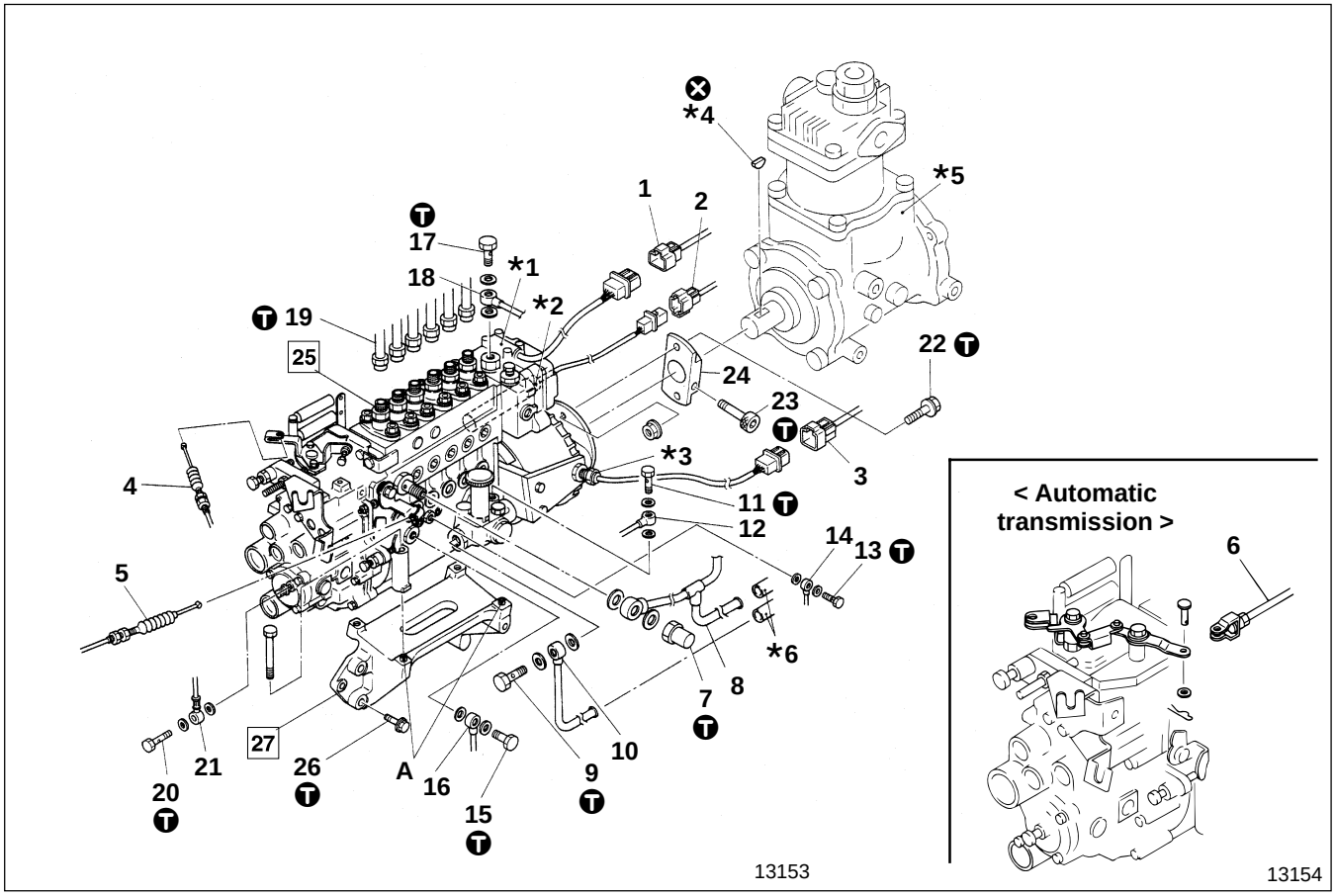

● **Removal sequence**

1 Harness (Pre-stroke actuator)
2 Harness (Control rod position sensor)
3 Harness (Engine revolution sensor)
4 Accelerator control cable 🕮 P13-58
5 Engine stop cable 🕮 P13-58
6 Modulator control rod
< Automatic transmission > 🗀 Gr 23
7 Nut
8 Fuel leak-off pipe
9 Eye bolt
10 Fuel suction pipe
11 Eye bolt
12 Fuel feed pipe
13 Eye bolt
14 Oil feed pipe
15 Eye bolt
16 Oil return pipe
17 Eye bolt
18 Fuel feed pipe
19 Injection pipe
20 Eye bolt
21 Boost hose
22 Bolt
23 Cotter bolt
24 Driving coupling
25 Injection pump assembly
26 Bolt
27 Injection pump bracket

***1** : Pre-stroke actuator 🕮 P13-10, 12
***2** : Control rod position sensor 🕮 P13-16
***3** : Engine revolution sensor 🕮 P13-16
***4** : Key 🗀 Gr 35A, B
***5** : Air compressor 🗀 Gr 35A, B
***6** : Fuel hose
A : Positioning pin
⊗ : Non-reusable parts

WARNING⚠

- **Fuel ignites easily. Do not get it near flame or heat.**
- **Wipe up any spilled fuel because it can cause a fire.**

CAUTION⚠

- **Be sure to protect all openings by covering them after removal of hoses and pipes because the engine performance is adversely affected if dirt and foreign particles enter injection pump assembly 25.**
- **Do not hold the control lever when lifting injection pump assembly 25. Also, do not remove the control lever because removal of the lever might cause poor performance of the pump.**
- **Do not remove injection pump bracket 27 unless it is faulty.**
- **Make sure you connect fuel hose *6 at a high position because fuel in the fuel tank would leak out if the end of the fuel hose were at a position lower than the tank.**

● **Installation sequence**

Follow the removal sequence in reverse.

Service standards

Unit : mm {in.}

Location	Maintenance item	Standard value	Limit	Remedy
—	Fuel injection timing (BTDC)	7°±0.5	—	Adjust
27	Injection pump bracket (Eccentricity of injection pump centering tool to air compressor crankshaft)	0.2 {0.0079} or less	—	Adjust

Tightening torque

Unit : N·m {lbf.ft, kgf·m}

Location	Parts to be tightened	Tightening torque	Remarks
7	Nut (Fuel leak-off pipe mounting)	20 to 29 {14 to 22, 2 to 3}	—
9, 11, 15, 17	Eye bolt (Fuel suction pipe, fuel feed pipe and oil return pipe mounting)	20 to 29 {14 to 22, 2 to 3}	—
13, 20	Eye bolt (Oil feed pipe and boost hose mounting)	12 to 15 {8.7 to 11, 1.2 to 1.5}	—
19	Injection pipe (Union nut mounting)	29 {22, 3}	—
22	Bolt (Driving coupling mounting)	59 to 64 {43 to 47, 6 to 6.5}	—
23	Cotter bolt	83 to 93 {61 to 69, 8.5 to 9.5}	—
26	Bolt (Injection pump bracket mounting)	33 to 55 {25 to 41, 3.4 to 5.6}	—

Special tools

Location	Tool name and shape	Part No.	Application
27	Injection pump centering tool 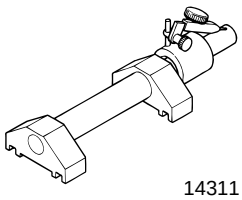 14311	MH063336	Positioning of injection pump bracket

◆ Service procedure

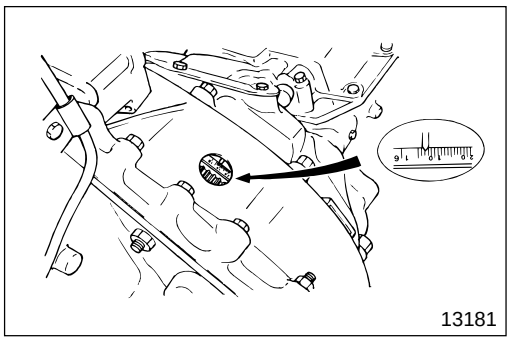

25 **Installation of injection pump assembly**

- Crank the engine and adjust No.1 cylinder piston to the specified fuel injection timing.

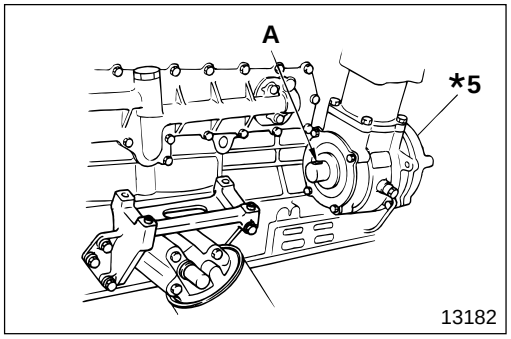

- In this state, make sure that keyway **A** in the crankshaft of air compressor ***5** faces upward.
- If keyway **A** is not facing upward, turn the engine crankshaft by one turn.

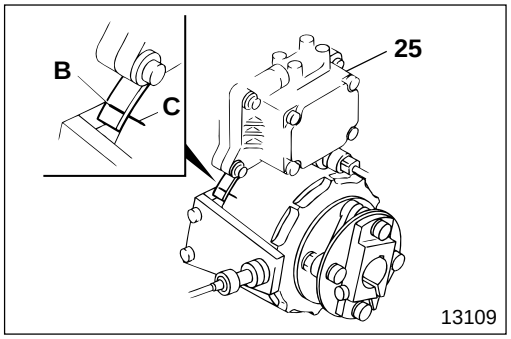

- Align pointer **B** on injection pump assembly **25** with notch **C** on the automatic timer.

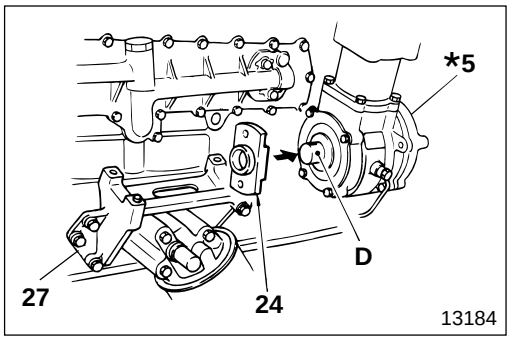

- Install driving coupling **24** to crankshaft **D** of air compressor ***5** and place the driving coupling on the air compressor side.
- Install injection pump assembly **25** on injection pump bracket **27**.

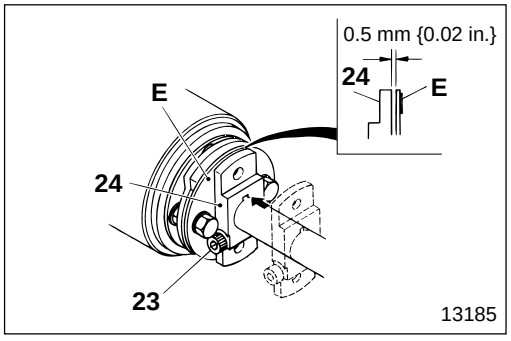

- Move driving coupling **24** to adjust the clearance between the driving coupling and coupling plate **E** as illustrated, then tighten cotter bolt **23** at specified torque.

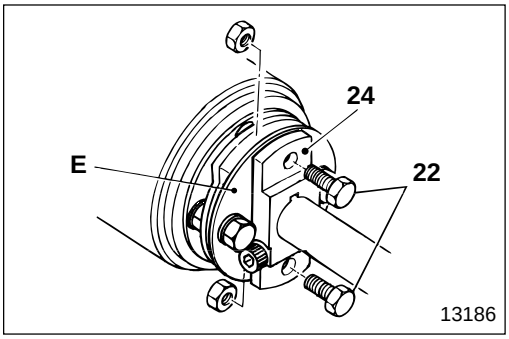

- Attach driving coupling **24** and coupling plate **E** using bolts **22** and tighten the bolts temporarily.

- In this state, adjust the fuel injection timing.
  Adjustment of fuel injection timing : P13-26
  After adjusting the fuel injection timing, tighten bolts **24** at specified torque.

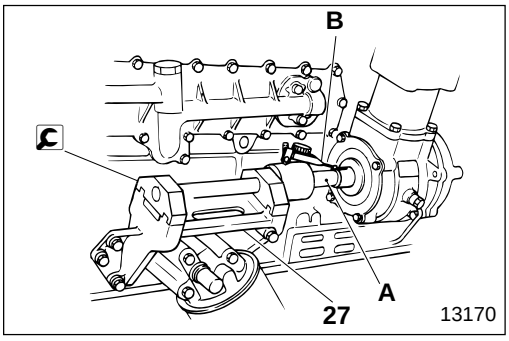

27 **Injection pump bracket**

[Inspection]

- Attach dial gauge **B** to arbor **A** of injection pump centering tool and adjust to carry out zero point adjustment.

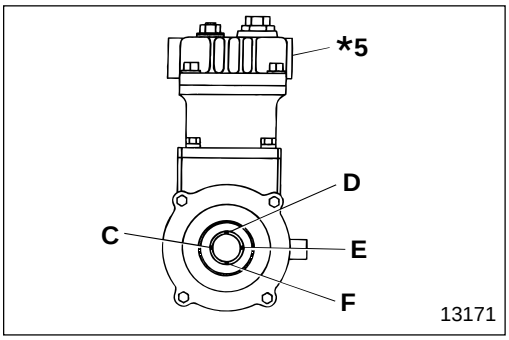

- Slide dial gauge **B** toward air compressor ***5** and measure the eccentricity of crankshaft **C** against arbor **A** at points **D**, **E** and **F**.
- If the measured value is higher than the standard value, adjust as follows.

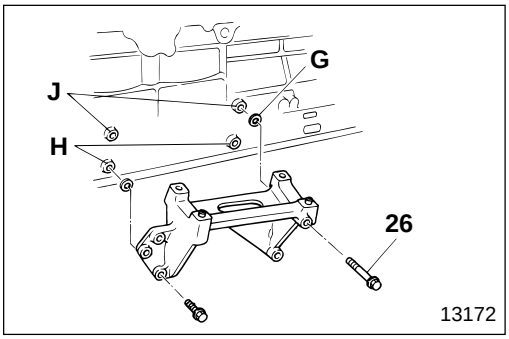

[Adjustment]

- When the measured value at point **E** is higher than the standard value:
  Insert shims **G** into four points equally.
- When the measured value at point **D** is higher than the standard value:
  Insert shims **G** into lower side **H**.
- When the measured value at point **F** is higher than the standard value:
  Insert shims **G** into upper side **J**.

CAUTION⚠

Insert shims G observing the following conditions:

- **Number of shims per point is three or less.**
- **The same number of shims should be used for the front and the rear.**
- **The difference in number of shims used for bottom and top is none or one.**

- Tighten bolt **26** at specified torque, then reinspect.

INJECTION NOZZLE

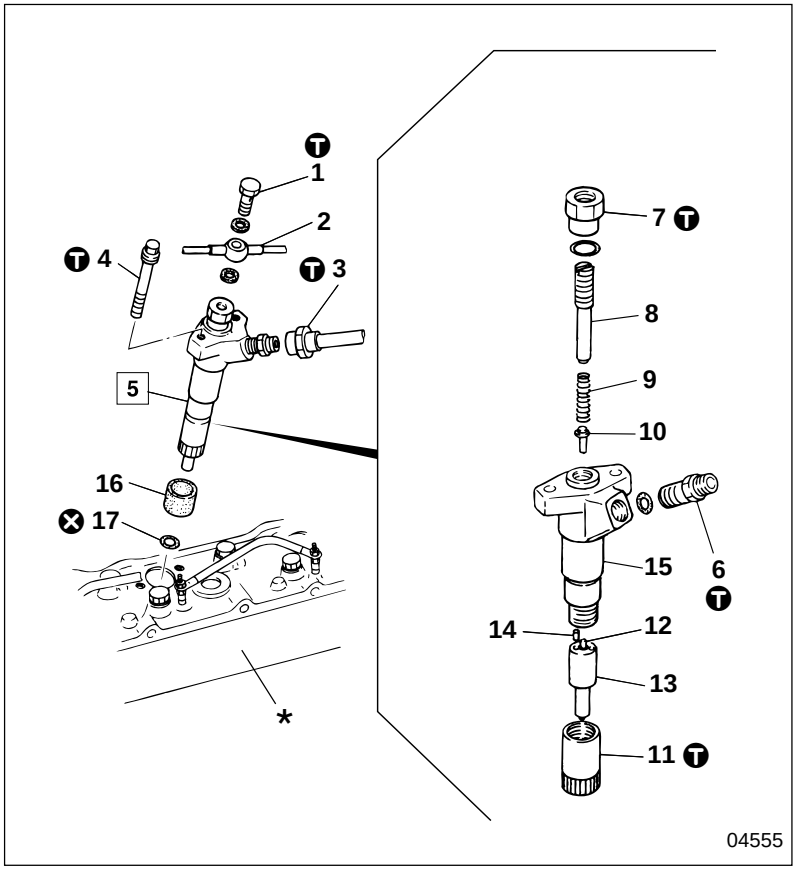

● **Inspection before disassembly**

P13-71

● **Disassembly sequence**

1 Eye bolt
2 Fuel leak-off pipe
3 Injection pipe
4 Bolt
5 Injection nozzle assembly
6 Connector
7 Cap nut
8 Adjusting screw
9 Spring
10 Push rod
11 Retaining nut
12 Needle valve
13 Nozzle
14 Pin (ø3 mm {0.12 in.})
15 Nozzle holder
16 Dust seal
17 Gasket

* : Cylinder head Gr 11
⊗ : Non-reusable parts

● **Assembly sequence**

Follow the disassembly sequence in reverse.

WARNING⚠

Wipe up any spilled fuel because it can cause a fire.

CAUTION⚠

- **Be sure not to touch the slide-contact area of needle valve 12 because any scratches or corrosion might spoil the airtightness of nozzle 13. It must be handled with utmost care.**
- **Never change the combination of needle valve 12 and nozzle 13 for each cylinder.**
- **Be sure to protect all openings by covering them after removal of hoses and pipes because the engine performance is adversely affected if dirt and foreign particles enter injection nozzle assembly 5.**

NOTE

- **Remove carbon deposits and clean injection nozzle assembly 5 before working on it, then test the injection pressure and jet spray condition, and check for fuel leakage before disassembly. If no fault is found, do not disassemble.**
- **After installing injection nozzle assembly 5, tighten the two bolts 4 alternately.**

Service standards

Location	Maintenance item	Standard value	Limit	Remedy
5	Valve opening pressure	21.6 MPa {3130 lbf/in^2, 220 kgf/cm^2}	—	Adjust

Tightening torque

Unit : N·m {lbf.ft, kgf·m}

Location	Parts to be tightened	Tightening torque	Remarks
1	Eye bolt (Fuel leak-off pipe mounting)	10 to 15 {7.2 to 11, 1 to 1.5}	—
3	Union nut of injection pipe	29 {22, 3}	—
4	Bolt (Injection nozzle mounting)	15 {11, 1.5}	—
6	Connector	69 to 79 {51 to 58, 7 to 8}	—
7	Cap nut	29 to 39 {22 to 29, 3 to 4}	—
11	Retaining nut	59 to 79 {43 to 58, 6 to 8}	—

Special tools

Location	Tool name and shape	Part No.	Application
—	Nozzle cleaning tool	★105789-0010	Cleaning of injection nozzle assembly

★ ZEXEL code number

◆ Service procedure

● Inspection before disassembly

Attach injection nozzle assembly **5** to nozzle tester **A**, and conduct the following inspection.

WARNING

Never touch the spray from the nozzle or let your hands get too close to the spray point during the test.

NOTE

Before inspection, bleed the air out in a couple of bursts by pressing nozzle tester A lever.

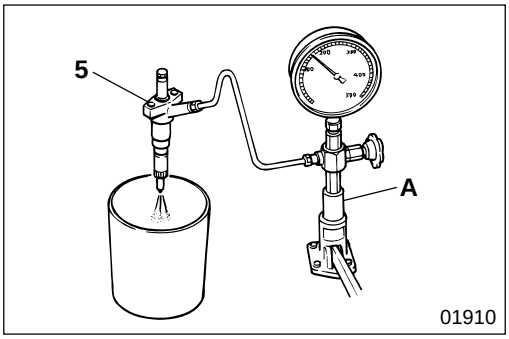

(1) Valve opening pressure

- Spray continuously with quick lever actions of nozzle tester **A**, one to two seconds per stroke, and measure the pressure that the gauge registers when the pressure is released which will be observed by the sudden movement of the gauge indicator.
- If the measured value deviates from the standard value, disassemble injection nozzle assembly **5** and clean it, then adjust using adjusting screw **8**.
- If the performance cannot reach the standard value even after adjustment, replace injection nozzle assembly **5**.

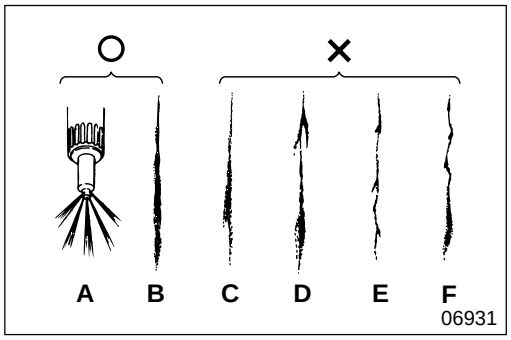

(2) Spray condition

- Spray continuously with quick lever actions of nozzle tester **A**, one to two seconds per stroke.
  - **A** : Even spray from all five orifices (Good)
  - **B** : Even and symmetrical spray (Good)
  - **C** : Asymmetrical spray (Faulty)
  - **D** : Spray direction deviates from the nozzle axis line (Faulty)
  - **E** : Thin and insufficient spray (Faulty)
  - **F** : Irregular spray (Faulty)

- If faulty spray cannot be corrected, disassemble injection nozzle assembly **5** and clean every part and repeat the test.
  If faulty spray still occurs after repeating test, replace the injection nozzle assembly.
- Make sure that there is no post-spray dripping after injection.

WARNING⚠

Never touch the spray from the nozzle or let your hands get too close to the spray point during the test.

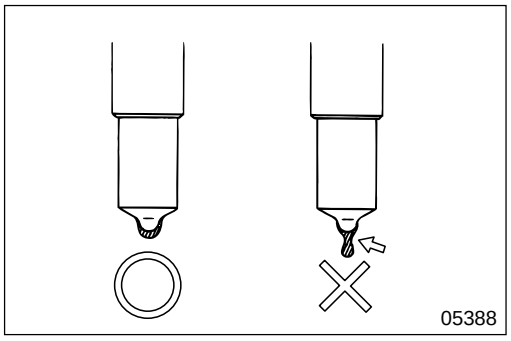

(3) Fuel air tightness and leakage at related contact points

- Raise the interior pressure of the nozzle gradually to the test pressure of 14.7 MPa {150 kgf/cm^2}. Maintaining the pressure, check and see if any fuel seeps out of the nozzle tip within 10 seconds.
- If any fault is found, disassemble injection nozzle assembly **5** and clean every part and repeat the test. If any fault is still found, replace the injection nozzle assembly.

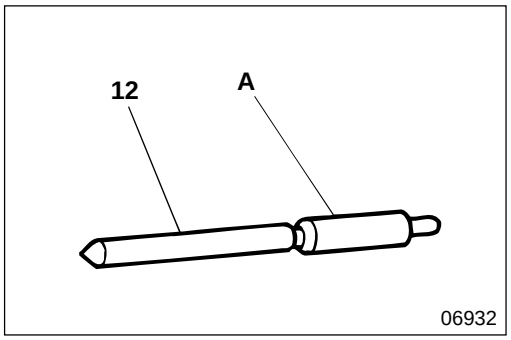

5 Injection nozzle assembly

[Disassembly]

CAUTION⚠

- **Be sure not to touch sliding part A of needle valve 12 with your hands.**
- **Never change the combination of removed needle valve 12 and nozzle 13 for each cylinder.**

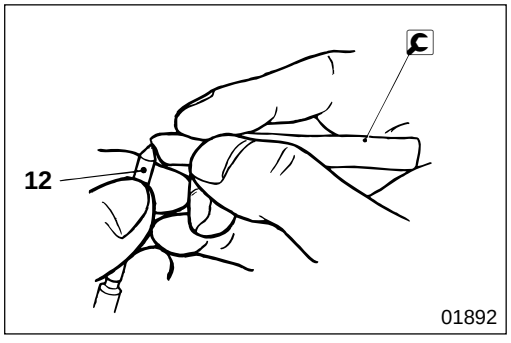

[Cleaning]

Clean needle valve **12** and nozzle **13** with gas oil (cleaning solvent).

Remove carbon deposits with 🔧 cleaning tool in the following manner:

- Clean needle valve **12** by removing carbon deposits from its tip using the cleaning bar of 🔧 cleaning tool.

CAUTION⚠

Never use a wire brush or hard steel for cleaning.

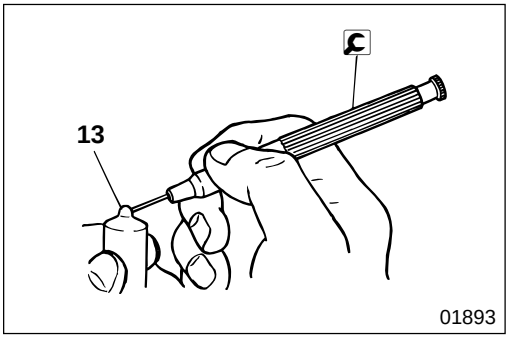

- To clean nozzle **13**, remove carbon deposits from the orifices of the nozzle using the needle cleaner of cleaning tool, by inserting it into the orifices and turning it.
  Needle cleaner diameter : ø0.25 mm {0.0098 in.} or less

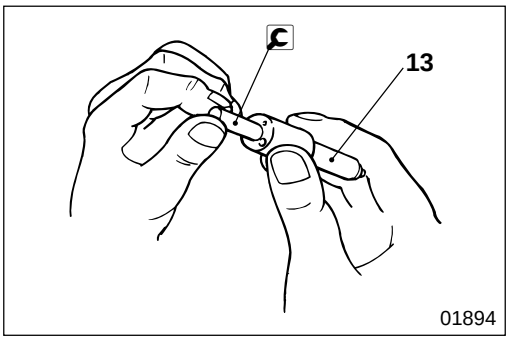

- Clean the seat of nozzle **13** using the cleaning needle of cleaning tool.
- Use FUSO carbon remover to remove hard-to-remove, burnt-on carbon deposits.

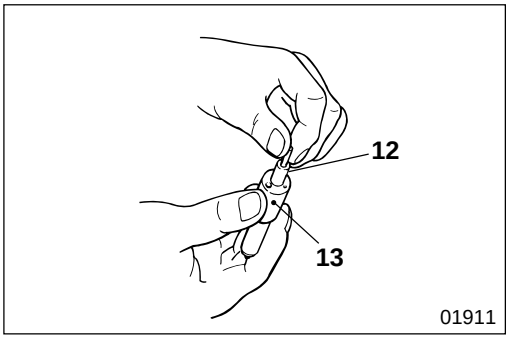

[Inspection]

- Immerse needle valve **12** and nozzle **13** in gas oil (cleaning solvent) and clean them thoroughly.
- Check and see if needle valve **12** drops by its own weight into the nozzle from the position where a third of its length is pulled out. (Repeat this several times rotating the needle valve.)
- If needle valve **12** does not drop smoothly, repeat cleaning and repeat the test. If any fault is still found, replace both the needle valve and nozzle **13** together as a set.

MITSUBISHI
FUSO

FK.FM
Service Manual

Group 14
Cooling

Table of Contents

BACK

HOME

MITSUBISHI FUSO TRUCK OF AMERICA, Inc.

Pub No. TWME9503-14

GROUP 14 COOLING

SPECIFICATIONS 2

STRUCTURE AND OPERATION 3

TROUBLESHOOTING 7

INSPECTION AND ADJUSTMENT MOUNTED IN VEHICLE

- Replacing Coolant and Cleaning Cooling System 8
- Air Bleeding of Cooling System 10
- Gas Leakage Test 10

RADIATOR AND FAN SHROUD 12

COOLING FAN AND V-BELT 16

WATER PUMP 20

THERMOSTAT 24

SPECIFICATIONS

Item	Specifications
Kind of cooling system	Forced water circulation system
Water pump type	Belt-driven involute type
Thermostat type	Single valve, bottom bypass type
Radiator type	Tube and corrugated fin type
Coolant capacity L {qts}	21 {22}

Cooling System

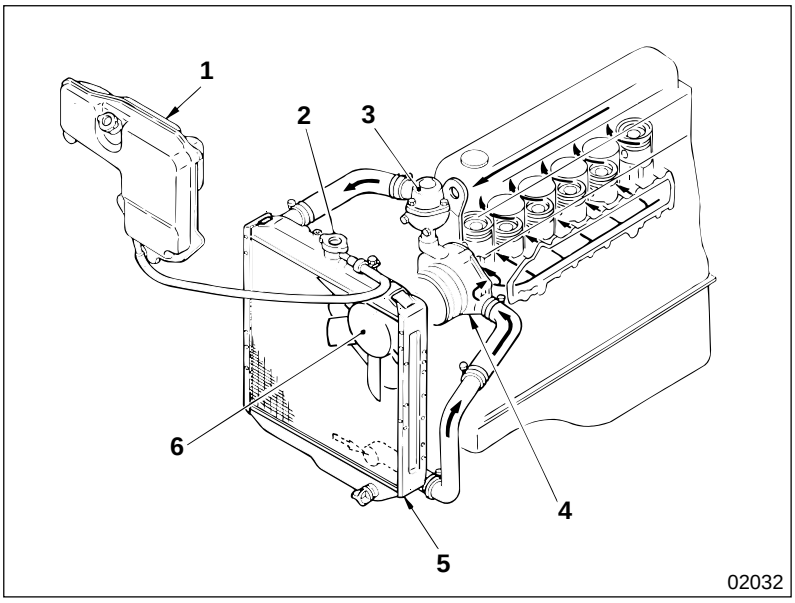

1 Reservoir tank
2 Pressure cap
3 Thermostat
4 Water pump
5 Radiator
6 Cooling fan

Water Pump

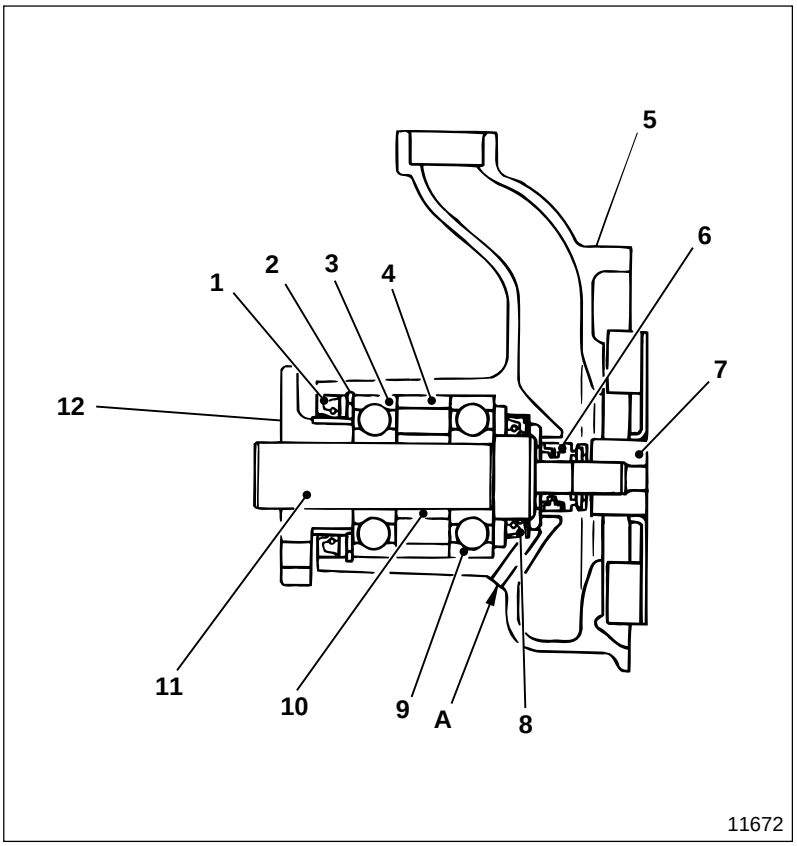

1 Front oil seal
2 Snap ring
3 Bearing
4 Outer spacer
5 Water pump case
6 Unit seal
7 Impeller
8 Rear oil seal
9 Bearing
10 Inner spacer
11 Water pump shaft
12 Flange

A : Drain hole

Thermostat

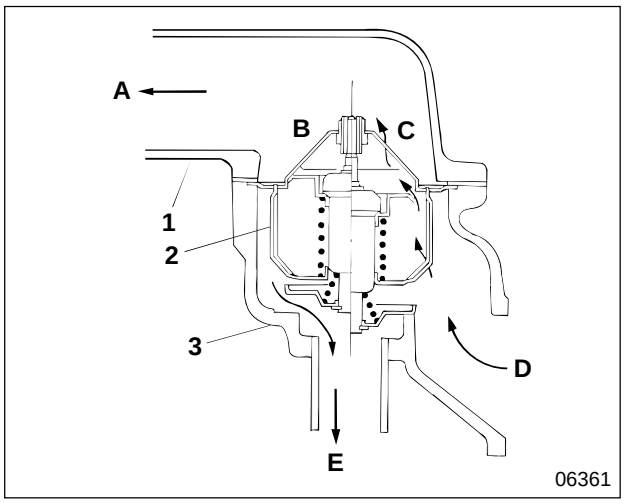

1 Thermostat cover
2 Thermostat
3 Thermostat case

A : To radiator
B : When low coolant temperature
C : When high coolant temperature
D : From cylinder head
E : To water pump

Thermostat **2** is a bottom bypass type that uses wax pellets as its regulating element. As the wax changes its form from solid to liquid according to changes in temperature, the volume of the wax changes. Therefore, the position of the valve, changed by the coolant temperature, regulates the flow of the coolant to the radiator and water pump (bypass side) and controls the coolant temperature.

Cooling System Electric Circuit

● Water temperature gauge circuit

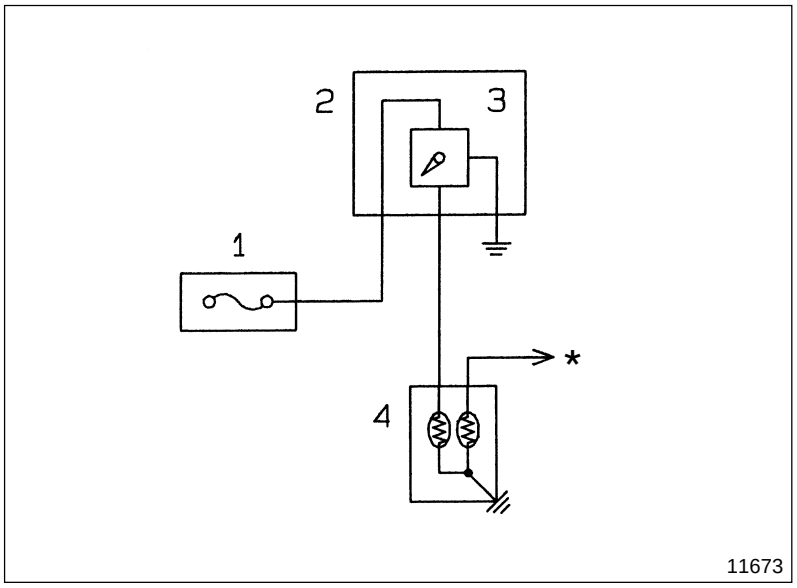

1 Fuse box
2 Meter cluster
3 Water temperature gauge
4 Water temperature sensor

***** : To cold start switch

● Water level and overheating circuit

When this circuit detects insufficient coolant or extremely high coolant temperature, it lights water level warning lamp **3** and sounds buzzer **6** to warn the driver of the abnormal conditions.

< Air over hydraulic brake >

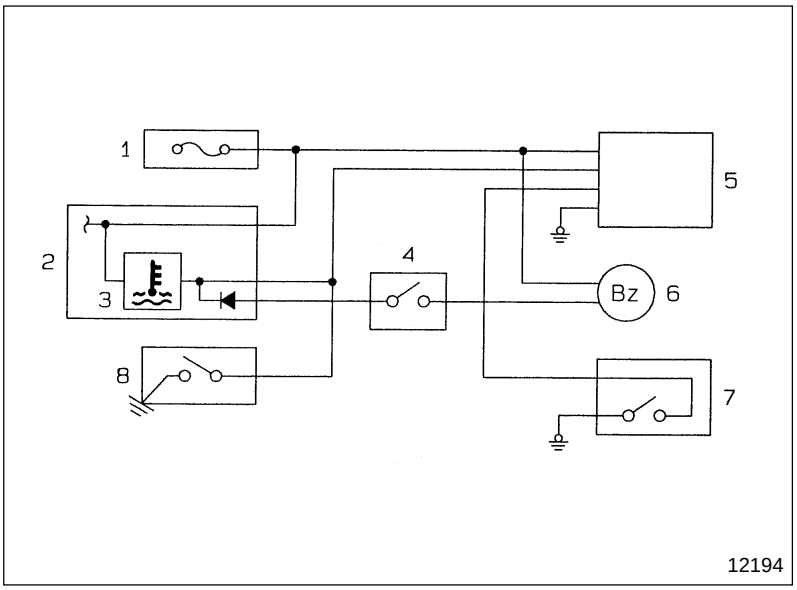

1 Fuse box
2 Meter cluster
3 Water level warning lamp
4 Parking brake switch
5 Multipurpose timing control unit
6 Buzzer (Buzzer does not work when the parking brake is engaged.)
7 Water level sensor
8 Overheating switch

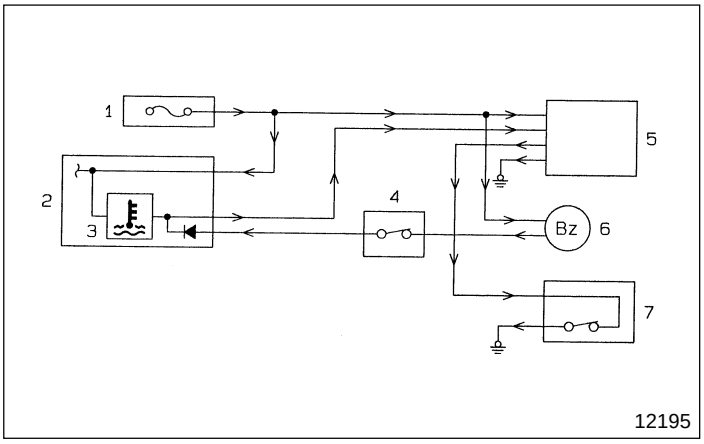

When water level sensor is activated

- 1→5→7→Ground
- Water level control unit **5** detects insufficient coolant.
- 1 → 3 → 5 → Ground; 6 → 4 → 5
- When the sensor is activated, water level warning lamp **3** lights up and buzzer **6** sounds.

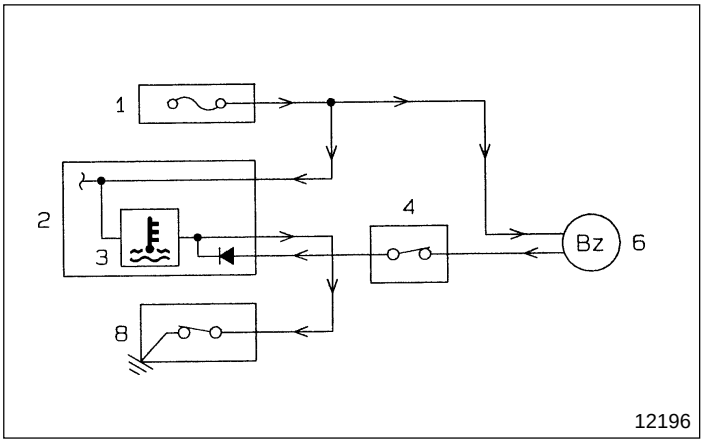

When overheating switch is activated

- 1 → 3 → 8 → Ground; 6 → 4 → 3
- When the switch is activated, water level warning lamp **3** lights up and buzzer **6** sounds.

< Full air brake >

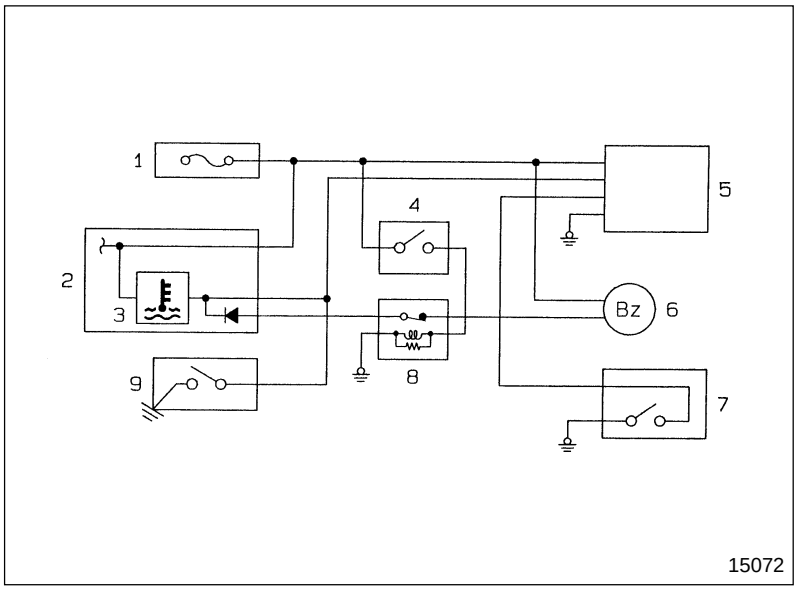

1 Fuse box
2 Meter cluster
3 Water level warning lamp
4 Parking brake switch
5 Multipurpose timing control unit
6 Buzzer (Buzzer does not work when the parking brake is engaged.)
7 Water level sensor
8 Parking brake relay
9 Overheating switch

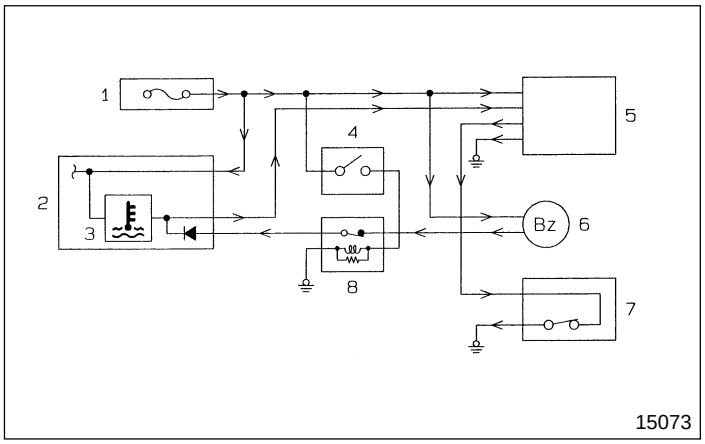

When water level sensor is activated

- 1→5→7→Ground
- Water level control unit **5** detects insufficient coolant.
- 1→3→5→Ground, 1→6→4→5
- When the sensor is activated, water level warning lamp **3** lights up and buzzer **6** sounds.

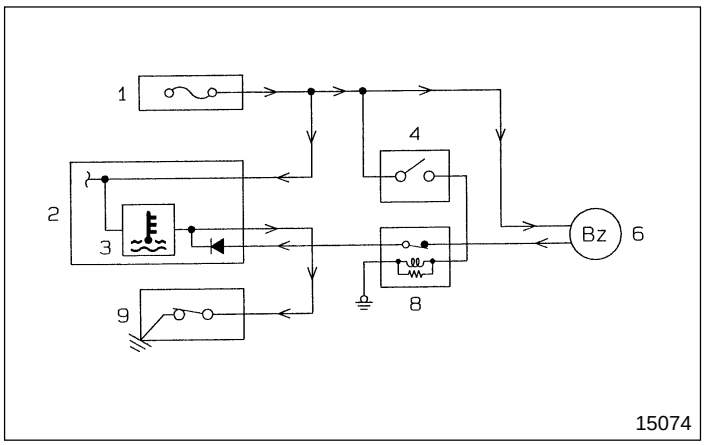

When overheating switch is activated

- 1→3→9→Ground, 1→6→4→3
- When the switch is activated, water level warning lamp **3** lights up and buzzer **6** sounds.

Possible causes \ Symptoms		Overheating (Low cooling effect)	Overcooling	Noise occurs	Coolant loss excessive	Remarks
V-belt	Loose or damaged	○		○		
	Tension excessive			○		
	Oily	○				
Water pump	Water pump installation faulty	○			○	
	Gasket faulty	○			○	
	Bearing faulty	○		○		
	Impeller faulty	○				
	Unit seal faulty	○			○	
	Shaft-to-flange and to-impeller fitting loose	○		○		
Thermostat	Case installation faulty	○			○	
	Gasket faulty	○			○	
	Valve opening temperature too high, valve remains closed	○				
	Valve opening temperature too low, valve remains open	○				
	Water level sensor leaking water	○			○	
Radiator	Space between core and fin clogged	○				
	Core cracked or soldered part separated	○			○	
	Pressure cap airtightness poor	○				
	Water level sensor leaking water	○			○	
Cooling fan	Fan shroud installation faulty	○		○		
Automatic cooling fan coupling	Bearing faulty	○		○		
	Bimetal damaged	○				
	Bimetal contaminated with foreign particles	○	○			
	Silicon oil leaking	○		○		
Oil cooler	Oil cooler installation faulty	○			○	Gr 12
	Gasket faulty	○			○	Gr 12
Cylinder head	Cylinder head installation faulty	○			○	Gr 11
	Gasket faulty	○			○	Gr 11
Coolant quantity insufficient		○				
Coolant passage furred and clogged		○				
Hose installation faulty		○			○	
Exterior temperature extremely cold			○			

Replacing Coolant and Cleaning Cooling System

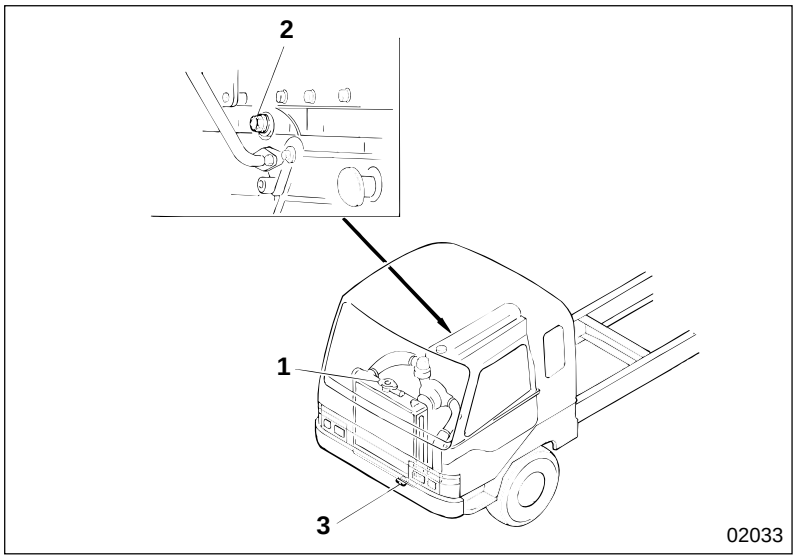

1 Pressure cap
2 Crankcase drain plug
3 Radiator drain plug

Tightening torque

Unit : N·m {lbf.ft, kgf·m}

Location	Parts to be tightened	Tightening torque	Remarks
2	Crankcase drain plug	115 {87, 12}	—

Using the radiator for a long period of time without cleaning it will cause overheating because rust and scale deposits will accumulate inside the cooling system. Periodical cleaning is recommended.

● **Draining coolant**

First loosen pressure cap **1,** to lower the pressure in the cooling system, before draining coolant.

WARNING

- **You must make sure that the engine coolant is cold before draining it so as not to scald yourself.**
- **It is dangerous to open pressure cap 1, when the coolant temperature is high, without taking due care because the hot water would spray out. Be sure to cover the pressure cap with a cloth and loosen slowly to bleed the pressure before opening fully.**

● **Cleaning procedure**

- Keep the coolant temperature at approximately 90°C {194°F} so that the thermostat valve remains open and the coolant continues to circulate in the radiator.
- For the sake of convenience you can raise the coolant temperature quickly by covering the front of the radiator with corrugated cardboard or something similar.
- Set the temperature adjusting lever of the heater controller at maximum so that the coolant can circulate freely in the heater piping area.
- In cases where a great amount of rust has accumulated it often happens that as a result of cleaning the radiator starts leaking. Conduct a thorough check for leakage after cleaning.
- Soft water to be used should have the following properties.

CAUTION

Do not use hard water as it causes scale and rust.

Required properties of soft water

Total hardness	300 ppm or less
Sulfate SO_4^-	100 ppm or less
Chloride Cl^-	100 ppm or less

Total dissolved solids	500 ppm or less
pH	6 to 8

Method of cleaning the cooling system depends on its condition.

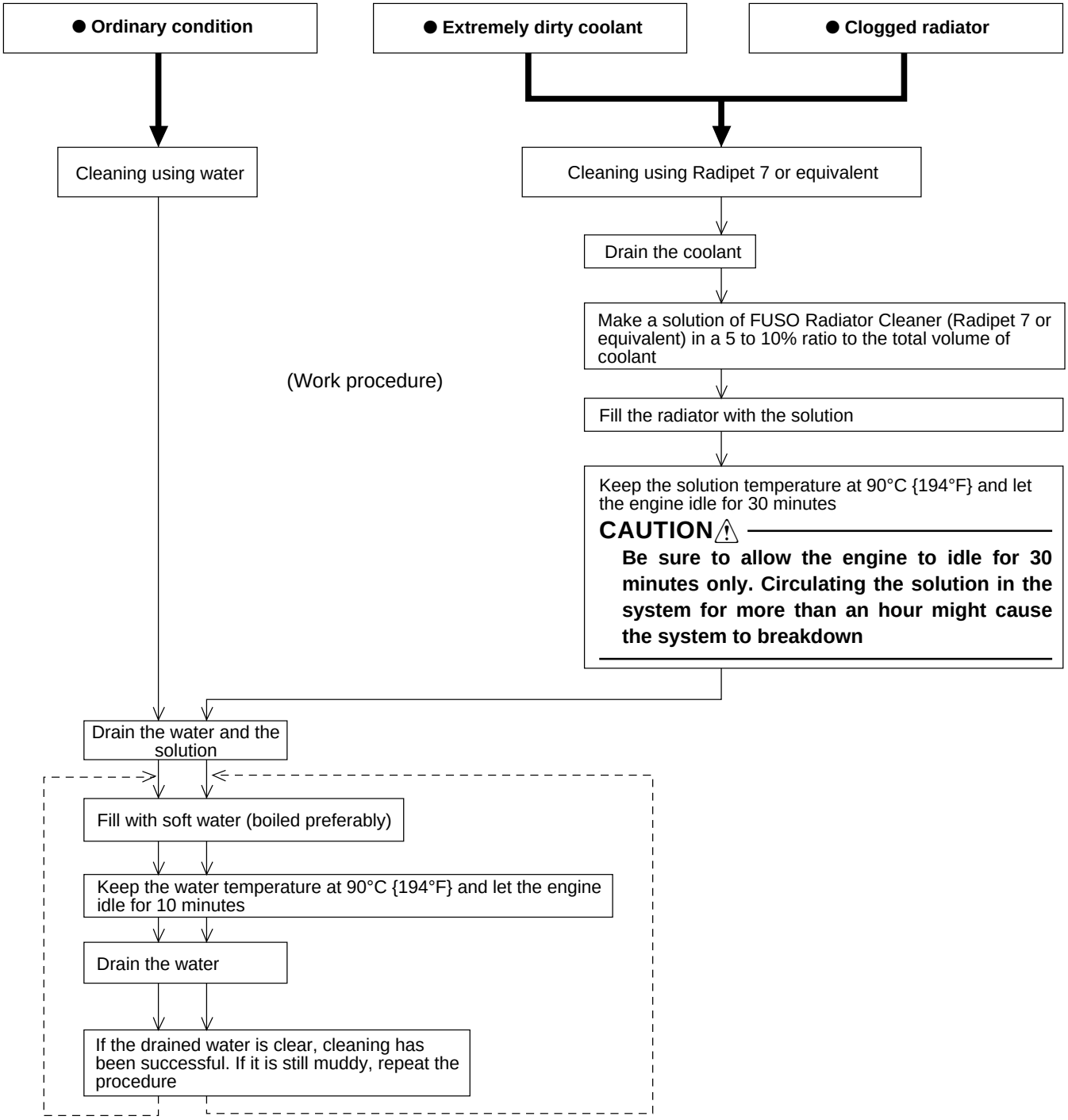

DANGER

If FUSO DIESEL LONG LIFE COOLANT solution gets in your eyes accidentally, you must immediately rinse your eyes with copious amounts of water, and be sure to consult a doctor.

WARNING

FUSO DIESEL LONG LIFE COOLANT is inflammable. Do not put it near naked lights.

NOTE

- **After cleaning with solution, fill with coolant as quickly as possible.**
- **To prevent freezing of the coolant and corrosion of the cooling system, use specified coolant solution of FUSO DIESEL LONG LIFE COOLANT. (See the Owner's Handbook for use of these materials.)**

Air Bleeding of Cooling System

- Remove the pressure cap and keep the coolant temperature at 90°C {194°F} while letting the engine idle and bleed the air out completely. Keep the temperature adjusting lever of the heater controller at maximum so that the coolant can circulate freely in the heater piping area.
- After completing adequate air bleeding of the cooling system, refill coolant sufficiently enough for the surge tank.

Gas Leakage Test

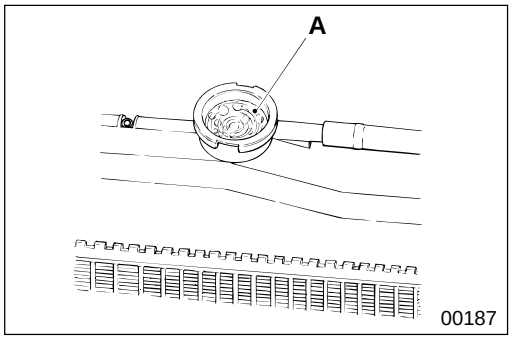

Air or exhaust gas in the coolant increases corrosion and rusting in the system. Therefore, carry out the following test:

- Remove the surge tank pressure cap and check if the coolant level comes up to the lip of the tank.
- Put the end of the overflow pipe into the water tank.

WARNING⚠

Be sure that the coolant temperature is low enough so that hot coolant does not spout out when you loosen the pressure cap.

- Run the engine to bring the coolant temperature to approximately 90°C {194°F}.
- If air bubbles **A** continuously rise in the water tank, it is an indication that air or exhaust gas has gotten into the coolant.
- If it is air, it is possible that the cylinder head bolts, the water pump mounting bolts or the hose connections are loose, or that the hose is damaged.
- If it is exhaust gas, it is possible that the cylinder head gaskets are damaged, or that the cylinder head is cracked.

M E M O

RADIATOR AND FAN SHROUD

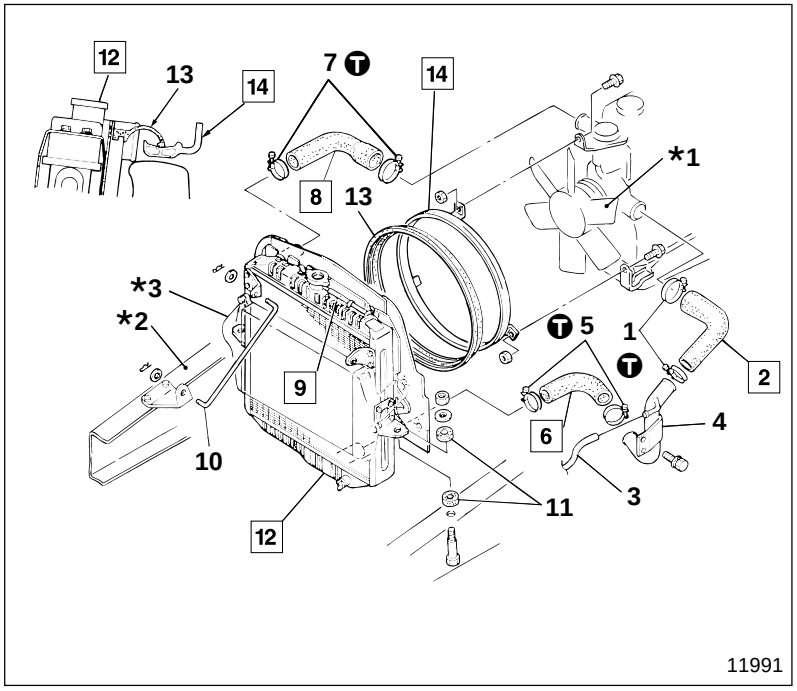

● **Disassembly sequence**

1 Hose clamp
2 Inlet hose
3 Heater hose
4 Inlet pipe
5 Hose clamp
6 Outlet hose
7 Hose clamp
8 Supply hose
9 Reservoir hose
10 Support rod
11 Rubber seat
12 Radiator assembly P14-14
13 Shroud sealing
14 Fan shroud

***1** : Cooling fan
***2** : Frame
***3** : Intercooler

● **Assembly sequence**

Follow the disassembly sequence in reverse.

Service standards

Unit : mm {in.}

Location	Maintenance item	Standard value	Limit	Remedy
14, *1	Clearance between fan shroud and cooling fan tip	4.5 to 8.3 {0.18 to 0.33}	—	Adjust

Tightening torque

Unit : N·m {lbf.ft, kgf·m}

Location	Parts to be tightened	Tightening torque	Remarks
1, 5, 7	Hose clamp	3.9 {2.9, 0.4}	—

Special tools

Unit : mm {in.}

Location	Tool name and shape	Part No.	Application
14	Tip clearance spacer 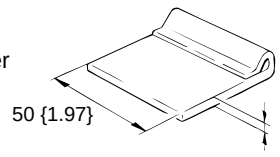	MC019470	Adjustment of clearance between fan shroud and cooling fan

◆ Service procedure

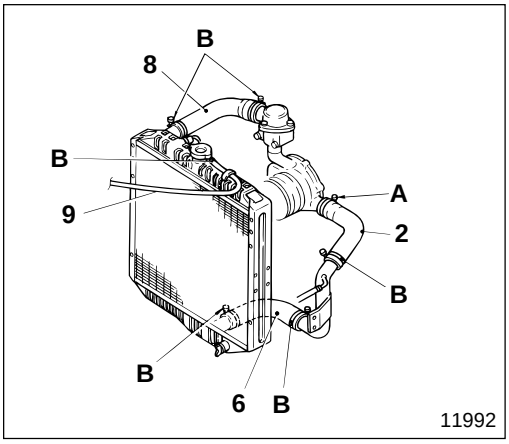

2 **6** **8** **9** **Installation of hose**

The depth of hose installation is as follows.

A : 30 mm {1.18 in.}
B : 35 mm {1.38 in.}

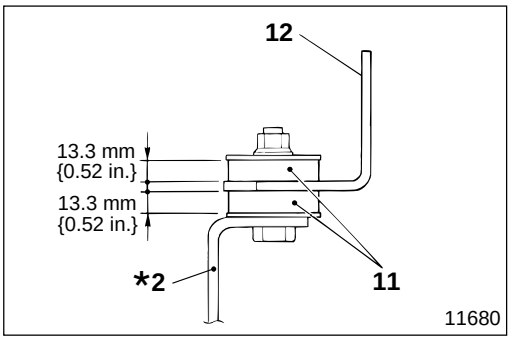

12 **Installation of radiator assembly**

Tighten nuts until thickness of rubber seat **11** conforms to the dimension as illustrated.

***2** : Frame

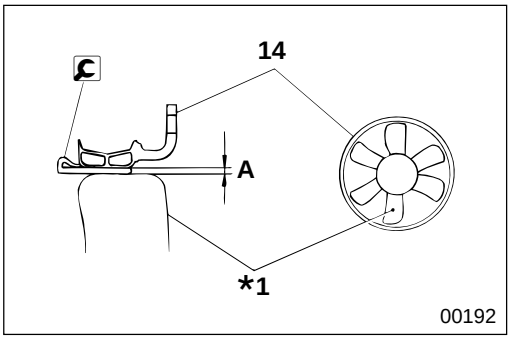

14 **Installation of fan shroud**

Adjust using tip clearance spacer so that clearance **A** conforms to the standard value all around the periphery.

***1** : Cooling fan

RADIATOR AND FAN SHROUD

Radiator Assembly

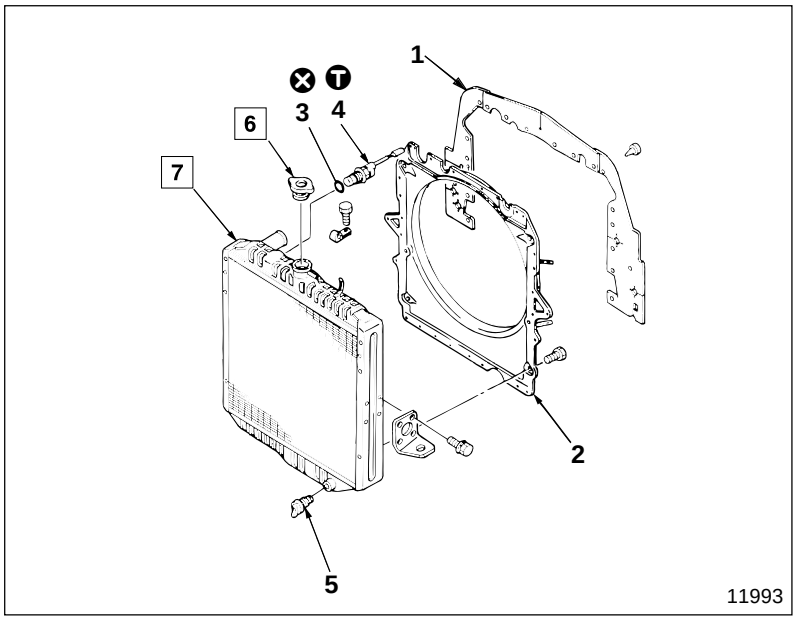

● **Disassembly sequence**

1 Baffle plate
2 Radiator shroud
3 O-ring
4 Water level sensor Gr 54
5 Drain cock
6 Pressure cap
7 Radiator

⊗ : Non-reusable parts

● **Assembly sequence**

Follow the disassembly sequence in reverse.

Service standards

Location	Maintenance item	Standard value	Limit	Remedy
6	Pressure cap valve opening pressure	69±15 kPa {10±2.1 lbf/in^2, 0.7±0.15 kgf/cm^2}	—	Replace
7	Radiator air leakage (Air pressure of 150 kPa {21 lbf/in^2, 1.5 kgf/cm^2})	0 cm^3 {0 cu. in.}	—	Correct or replace

ⓣ Tightening torque

Unit : N·m {lbf.ft, kgf·m}

Location	Parts to be tightened	Tightening torque	Remarks
4	Water level sensor	2.9 to 3.9 {2.2 to 2.9, 0.3 to 0.4}	—

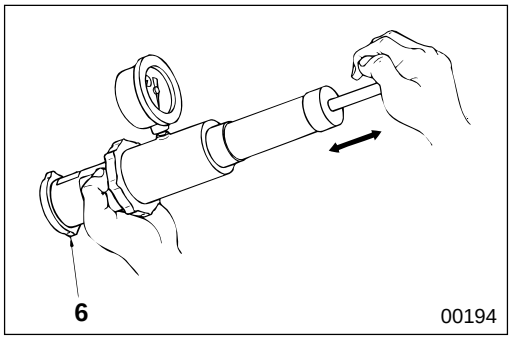

◆ Service procedure

6 Inspection of pressure cap

(1) Pressure valve opening pressure

If the measured value deviates from the standard value, replace pressure cap **6**.

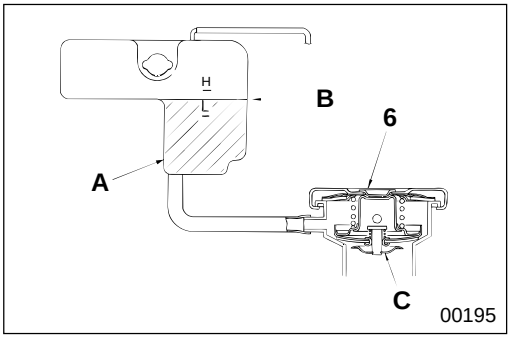

(2) Inspection of vent valve

- Take note of liquid level **B** of reservoir tank **A** beforehand.
- Run the engine at a high revolution and before the overflow reaches the capacity of tank **A** stop the engine.
- Leave things for a while. Check the time it takes for the coolant temperature to return to the ambient temperature, and check whether the coolant level in tank **A** is the same as before running the engine.
- If the coolant level has not returned to that before running engine, it means vent valve **C** is faulty, therefore replace pressure cap **6**.

NOTE

Do not remove pressure cap 6 before the coolant temperature decreases to the ambient temperature. If you do the coolant will not return to reservoir tank A because negative pressure in the radiator is lost.

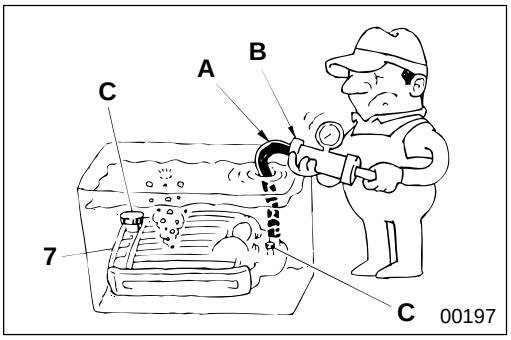

7 Inspection of radiator

- Install radiator cap tester **B** by connecting hose **A** to the radiator inlet hole.
- Plug any other openings **C** with plugs, and immerse the radiator in a water tank.
- Apply specified air pressure of 150 kPa {21 lbf/in^2, 1.5 kgf/cm^2} using cap tester **B**, and check if there is any air leakage.
- If you find air leakage, correct or replace radiator **7**.

COOLING FAN AND V-BELT

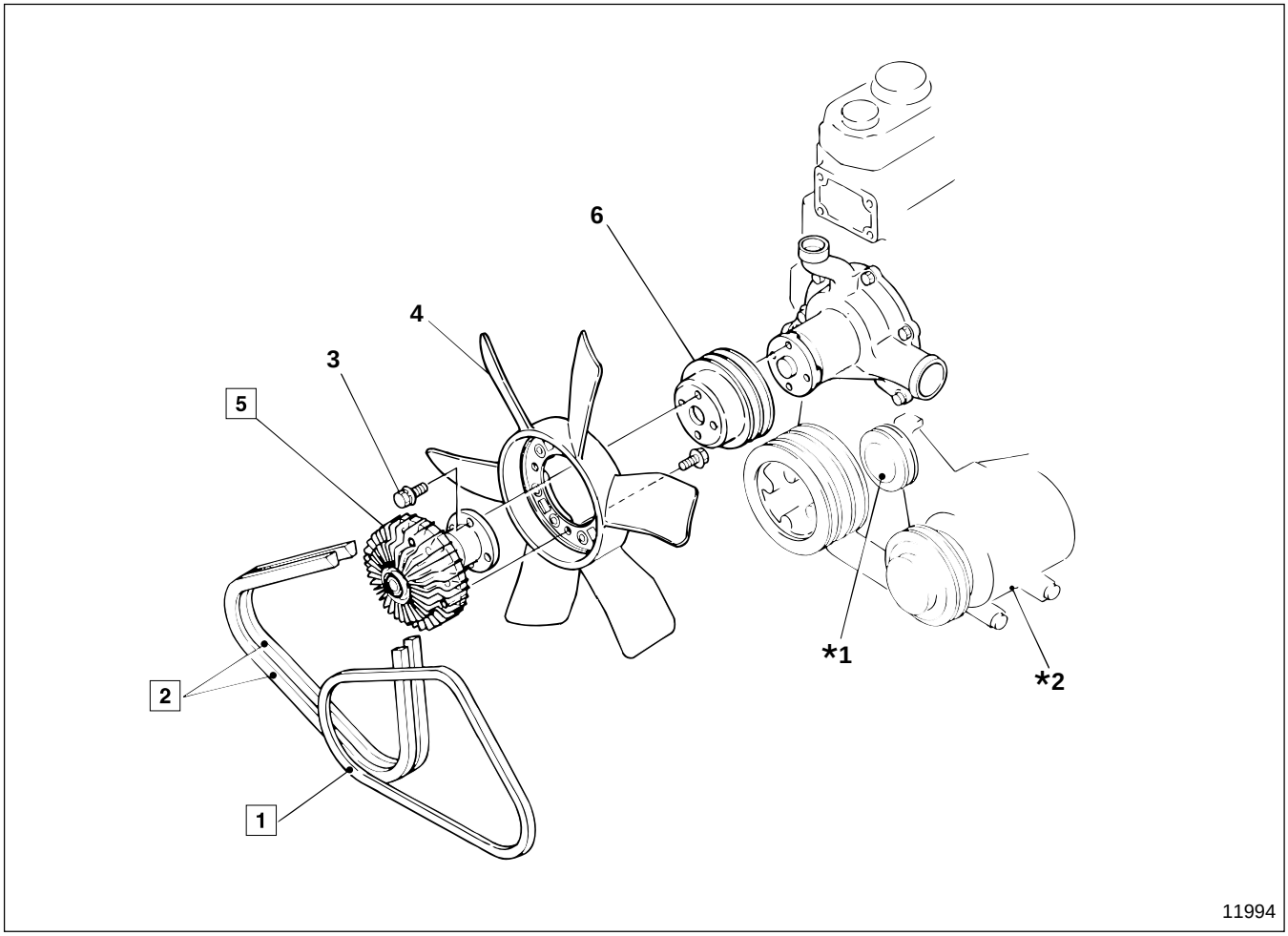

● **Disassembly sequence**

1 V-belt (Air-conditioner)
2 V-belt (Fan)
3 Bolt
4 Cooling fan
5 Automatic cooling fan coupling
6 Water pump pulley

***1** : Tension pulley
***2** : Cooler compressor

● **Assembly sequence**

Follow the disassembly sequence in reverse.

CAUTION⚠

- **Be sure to replace automatic cooling fan coupling 5 as an assembly if it is faulty because it is a unit construction.**
- **Be sure to replace V-belts 2 as a set to maintain even tension between them.**

Service standards

Unit : mm {in.}

Location	Maintenance item	Standard value	Limit	Remedy
1	V-belt tension (Air-conditioner)	7 to 10 {0.28 to 0.39}	—	Adjust
2	V-belt tension (Fan)	10 to 15 {0.39 to 0.59}	—	Adjust

Special tools

Unit : mm {in.}

Location	Tool name and shape	Part No.	Application
1, 2	Belt tension gauge  03612	MH062345	Measurement of tension of V-belt

◆ Service procedure

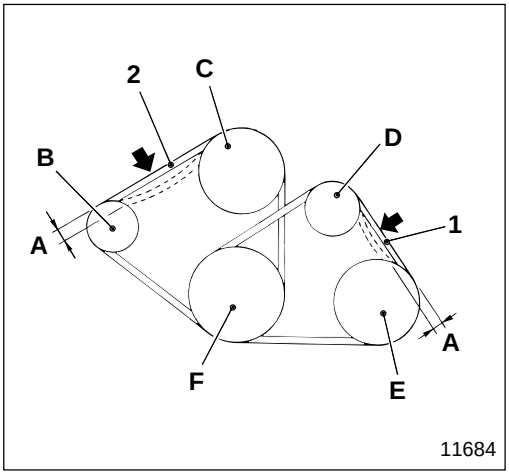

11684

1 **2** **V-belt**

[Inspection]
Measure the extent of flex **A** when the center of V-belts **1**, **2** as illustrated is depressed with a force of approximately 98 N {72 lbf, 10 kgf}.

- **B** : Alternator pulley
- **C** : Water pump pulley
- **D** : Tension pulley
- **E** : Cooler compressor pulley
- **F** : Crankshaft pulley

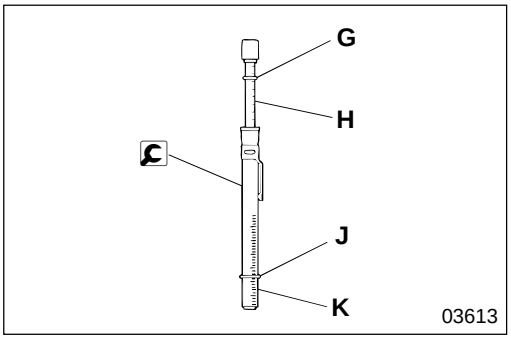

03613

● **Use of special tool belt tension gauge**

- Set upper O-ring **G** of belt tension gauge to 98 N {72 lbf, 10 kgf} (push load) on graduation **H**.
- Set lower O-ring **J** of belt tension gauge to graduation **K** (maximum flex of belt).

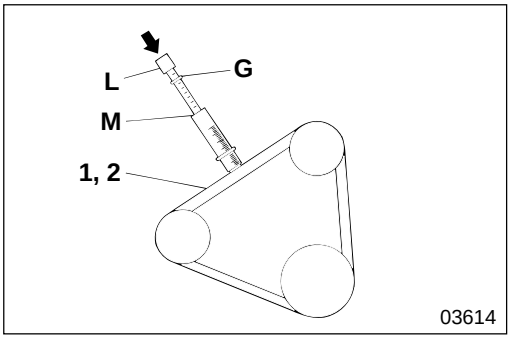

03614

- Place belt tension gauge at the center of V-belts **1**, **2** perpendicularly as illustrated and push top **L** all the way down until upper O-ring G hits upper edge **M**.

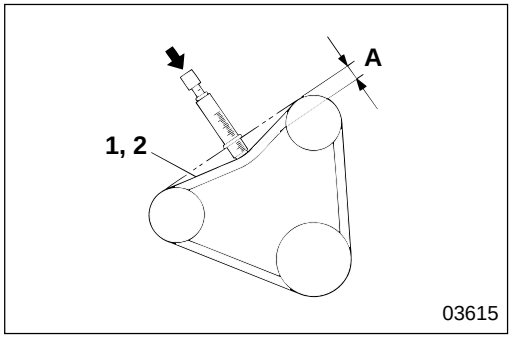

- Measure the extent of flex **A** of V-belts **1**, **2** at this point, and if the measured value deviates from the standard value, adjust as follows.

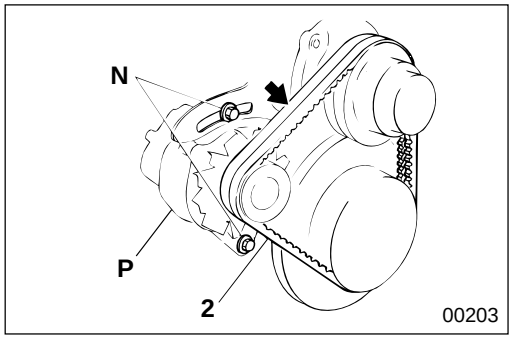

[Adjustment]

(1) Adjustment of V-belt tension for fan

- Loosen alternator mounting bolts **N** (two places), and adjust the tension of V-belts **2** by moving alternator **P** left or right.
- After adjustment, tighten the bolts and nuts securely.

CAUTION

- **Bear in mind that excessive tension of V-belts 2 might damage the belts and bearings that engage with the V-belts.**
- **Be sure to replace V-belts 2 as a set to maintain even tension between them.**
- **Be careful not to let oil stick to V-belts 2, if oil gets onto the belts, it causes slipping, resulting in overheating and insufficient battery charging.**

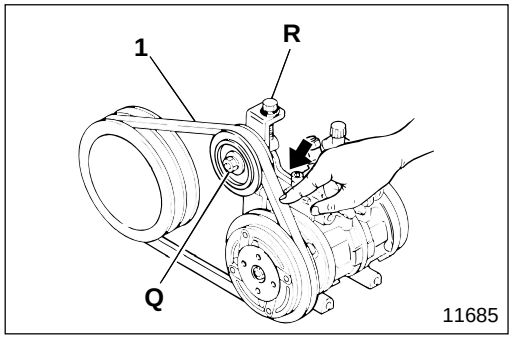

(2) Adjustment of V-belt tension for air-conditioner

- Loosen tension pulley mounting nut **Q**, and adjust the tension of V-belt **1** by adjusting bolt **R**.
- After adjustment, tighten the bolts and nuts securely.

CAUTION

- **Bear in mind that excessive tension of V-belt 1 might damage the belt and bearings that engage with the V-belt.**
- **Be careful not to let oil stick to V-belt 1, if oil gets onto the belt, it causes slipping, resulting in poor performance of the air-conditioner.**

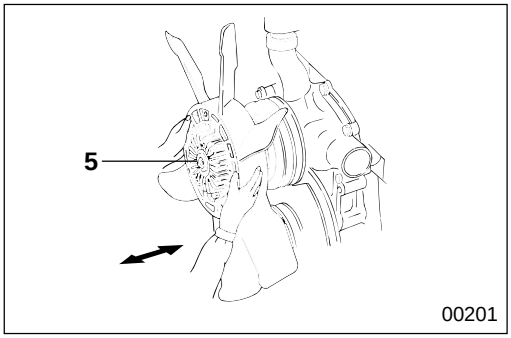

5 Automatic cooling fan coupling

[Inspection]

Carry out the following inspection of automatic cooling fan coupling **5** and if any fault is found, replace the unit.

- Check for any leakage of lubricating oil sealed in the coupling body.
- Rotate automatic cooling fan coupling **5** by hand, and check for any irregularity in rotation related to the coupling bearing or any abnormal noise.
- Check for any excessive play of automatic cooling fan coupling **5** in the axial direction when the engine is cool.

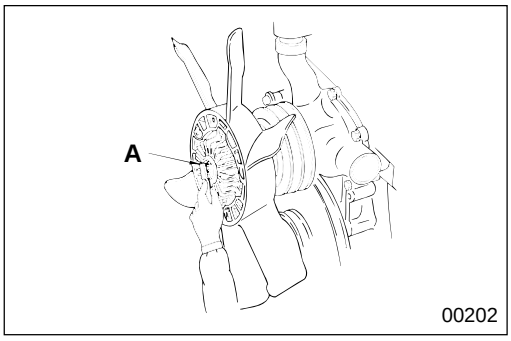

[Cleaning]

- If there are any foreign particles sticking to bimetal **A**, remove them by brushing lightly.

WATER PUMP

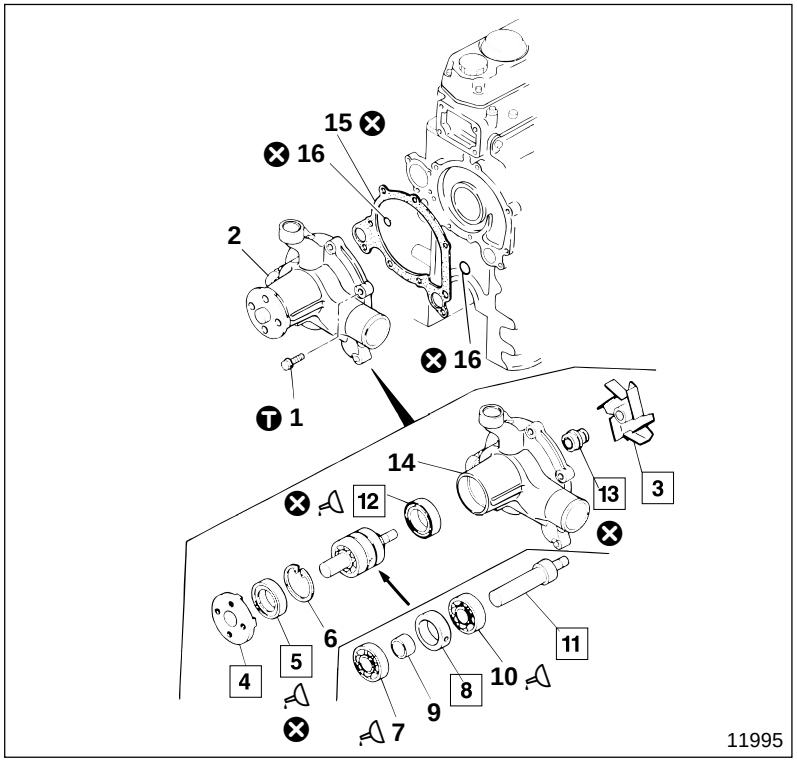

● **Disassembly sequence**

1 Bolt
2 Water pump
3 Impeller
4 Flange
5 Front oil seal
6 Snap ring
7 Bearing
8 Outer spacer
9 Inner spacer
10 Bearing
11 Water pump shaft
12 Rear oil seal
13 Unit seal
14 Water pump case
15 Gasket
16 O-ring

⊗ : Non-reusable parts

● **Assembly sequence**

16→15→2→1

2 : 14→12, 11→10 →9→8→7→6→5→4→13→3

Service standards

Unit : mm {in.}

Location	Maintenance item	Standard value (Basic diameter in [ ])	Limit	Remedy
3, 11	Impeller-to-water pump shaft interference	[11.8] 0.03 to 0.06	—	Reassembly allowed only twice
4, 11	Flange-to-water pump shaft interference	[25] 0.05 to 0.08	—	Reassembly allowed only twice

Tightening torque

Unit : N·m {lbf.ft, kgf·m}

Location	Parts to be tightened	Tightening torque	Remarks
1	Bolt (Water pump assembly mounting)	9.8 {7.2, 1.0}	—

Lubricant

Location	Points of application	Kinds	Quantity
5	Lip area of front oil seal	Engine oil	As required
7, 10	Interior and exterior peripheries on installation of bearing	Engine oil	As required
12	Lip area of rear oil seal	Engine oil	As required

Special tools

Unit : mm {in.}

Location	Tool name and shape	Part No.	Application
13	Unit seal installer 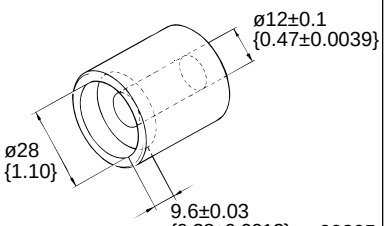	MH062195	Installation of unit seal

◆ Service procedure

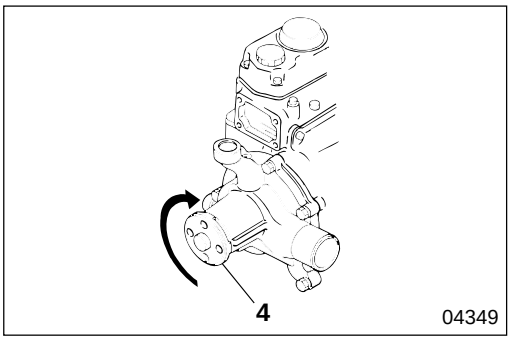

● Inspection after assembly

- Rotate flange **4** by hand after assembly, and check that it rotates freely without obstruction.
- If it does not rotate freely, disassemble and reinspect.

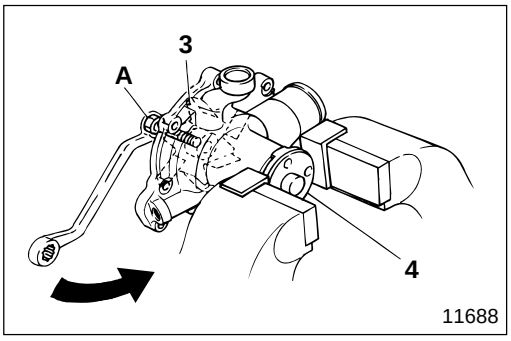

3 Impeller

[Removal]

To remove, screw bolts **A** (Screw size : M×1.5 mm, over 25 mm {0.98 in.} in length) into threads of impeller **3**.

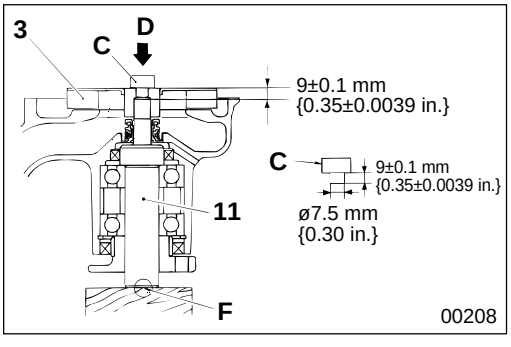

[Press-fitting]

- Press-fit impeller **3** until jig **C** makes contact with water pump shaft **11**.
  D : Press
  : 4410 N {990 lbf, 450 kgf} or more
  34320 N {7720 lbf, 3500 kgf} or less
- After press-fitting, confirm that the depth is the specified value, if it is not the specified value, check the mounting of the shaft.

NOTE

Press-fit with shaft end F, on the flange side, as the load receiving surface.

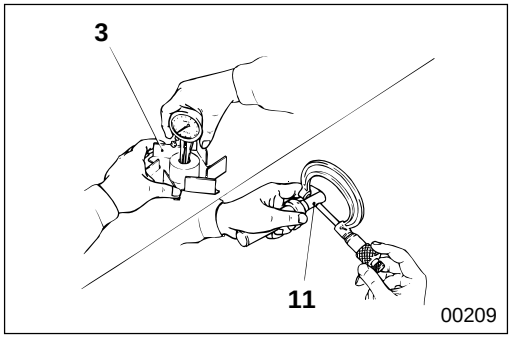

3 **11** **Interference between impeller and water pump shaft**

If the measured value deviates from the specified value, replace the faulty parts.

CAUTION

Reassembly is restricted to twice only, even if the specified value is met.

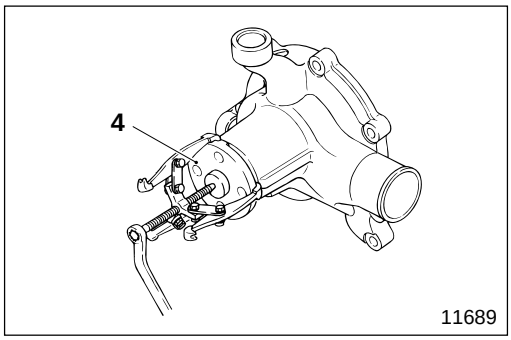

4 **Flange**

[Removal]

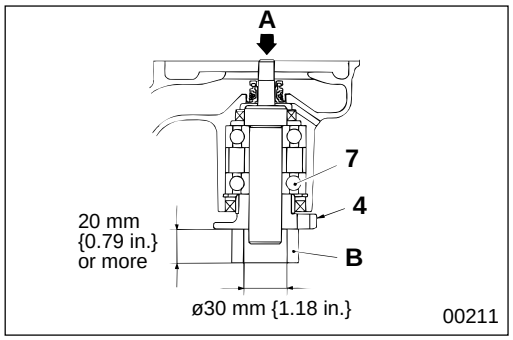

[Press-fitting]
Press-fit flange **4** until it makes contact with bearing **7** at specified press-fitting load **C**.

A : Press
B : Cylindrical jig
C : 6370 N {1430 lbf, 650 kgf} or more
19610 N {4410 lbf, 2000 kgf} or less

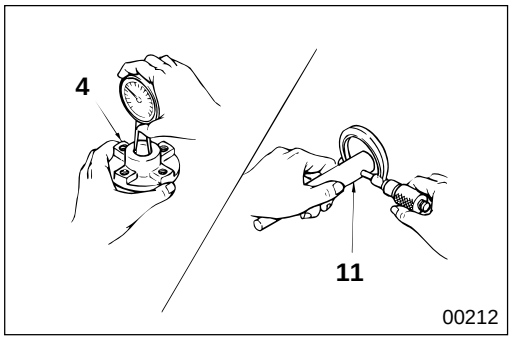

4 **11** **Interference between flange and water pump shaft**

If the measured value deviates from the specified value, replace the faulty parts.

CAUTION

Reassembly is restricted to only twice, even if the specified value is met.

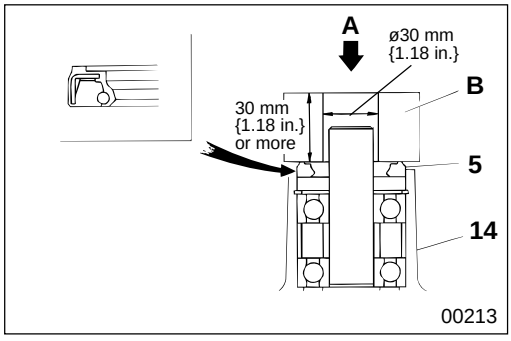

5 **Installation of front oil seal**

Position front oil seal **5** as illustrated, then press-fit until jig **B** makes contact with water pump case **14**.

A : Press

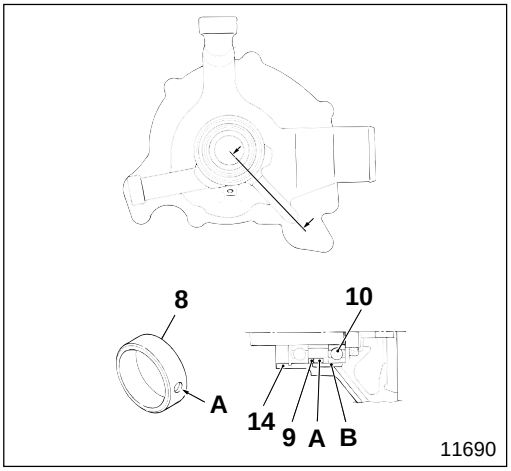

8 **Installation of outer spacer**

Align hole **A** of the outer spacer with oil groove **B** of water pump case **14** and press-fit outer spacer **8** slowly until it makes contact with bearing **10**.

CAUTION

Be sure to align hole A with oil groove B, misalignment would prevent lubricating oil from reaching the water pump, causing seizure.

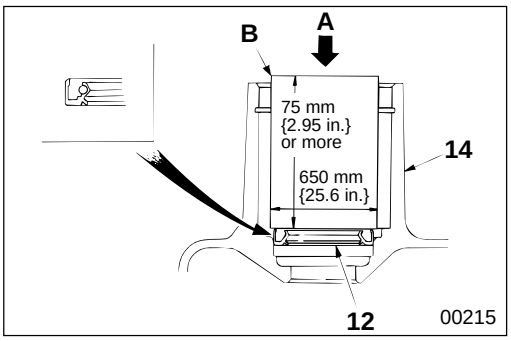

12 **Installation of rear oil seal**

Position oil seal **12** as illustrated, then press-fit until jig **B** makes contact with water pump case **14**.

A : Press

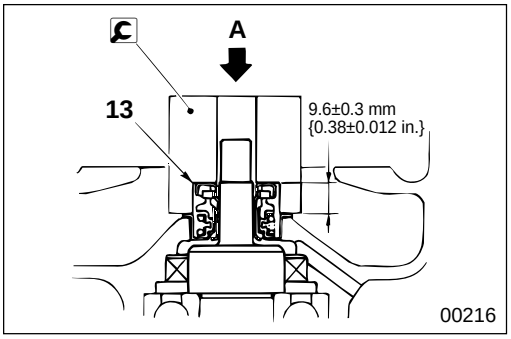

13 **Installation of unit seal**

Press-fit unit seal **13** with specified press-fitting load **B** and specified speed **C**, until the installation length conforms to the specified value.

A : Press
B : 44 N {7.05 to 9.92 lbf, 3.2 to 4.5 kgf}
C : 14 to 28 mm/sec {0.55 to 1.1 in./sec}

THERMOSTAT

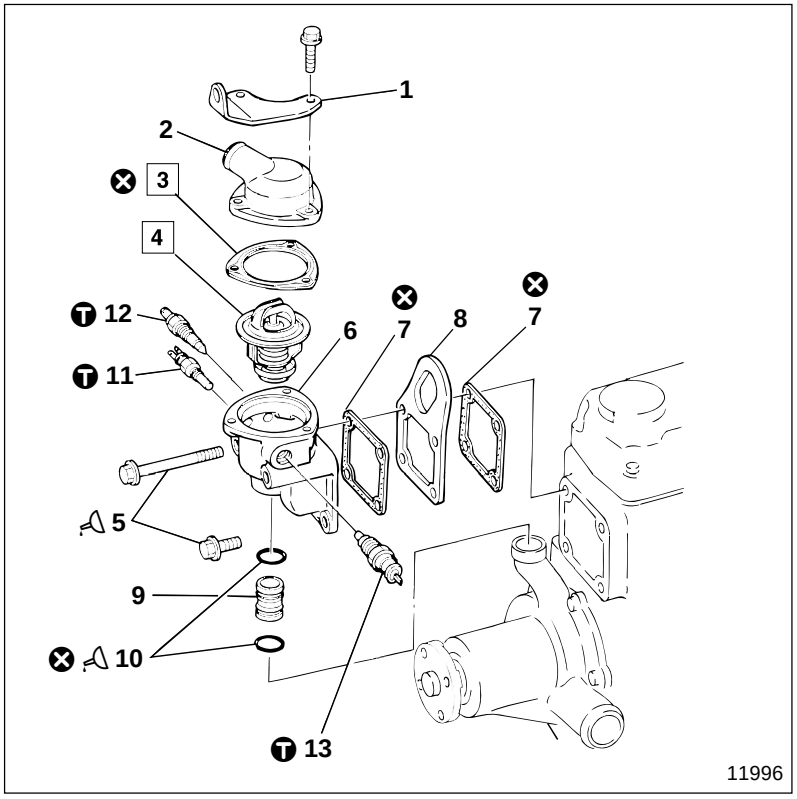

● **Disassembly sequence**

1 Fan shroud stay
2 Thermostat cover
3 Thermostat cover gasket
4 Thermostat
5 Bolt
6 Thermostat case
7 Hanger gasket
8 Front hanger
9 Joint
10 O-ring
11 Water temperature sensor (Water temperature gauge and multi-purpose timing control unit) Gr 54
12 Overheating switch Gr 54
13 Water temperature sensor (Pre-stroke control type injection pump) Gr 54

⊗ : Non-reusable parts

● **Assembly sequence**

Follow the disassembly sequence in reverse.

NOTE

Do not remove thermostat case 6 and front hanger 8 unless they are faulty, for example: leaking water.

Service standards

Unit : mm {in.}

Location	Maintenance item		Standard value	Limit	Remedy
4	Thermostat	Valve opening temperature	82±2°C {180±3.6°F}	—	Replace
		Extent of valve lift (at 95°C {203°F})	10 {0.39} or more	—	Replace

Ⓣ Tightening torque

Unit : N·m {lbf.ft, kgf·m}

Location	Parts to be tightened	Tightening torque	Remarks
11	Water temperature sensor	34±6.9 {25±5.1, 3.5±0.7}	—
12	Overheating switch	27 to 41 {20 to 30, 2.8 to 4.2}	—
13	Water temperature sensor	34±6.9 {25±5.1, 3.5±0.7}	—

Lubricant and sealant

Location	Points of application	Kinds	Quantity
5	Thread area of bolt (Thermostat mounting)	THREEBOND 2302	As required
10	Periphery of O-ring	Soapy water	As required

◆ Service procedure

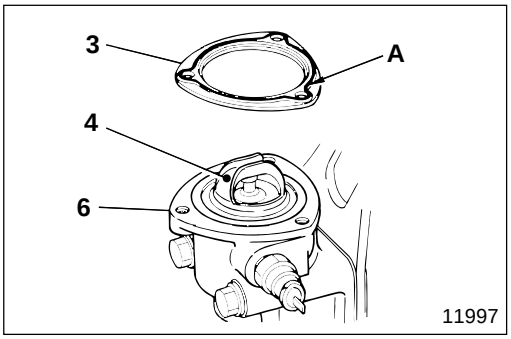

3 **Mounting of thermostat cover gasket**

Mount thermostat cover gasket **3** on thermostat case **6** in the direction as illustrated.

A : Sealant application surface

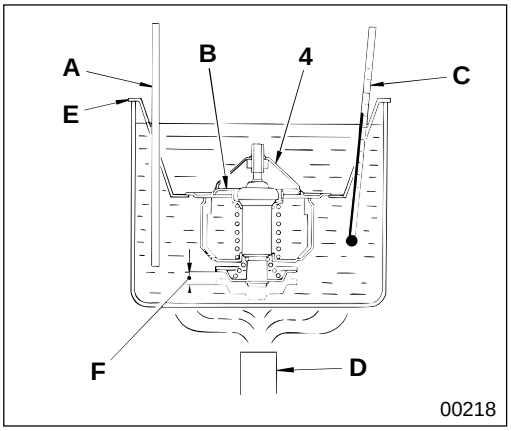

4 **Thermostat**

[Inspection]

Stir the water using stick **A** to maintain an even water temperature in the container, then carry out the following tests. If the measured value deviates from the standard value, replace thermostat **4**.

(1) Valve opening temperature

- Hold thermostat **4** with wire **E** so as not to get the thermostat too close to heat **D**.
- Heat the water gradually to raise the temperature to the valve opening temperature.
- Maintain this temperature for five minutes and make sure that valve **B** has opened.
- Make sure that valve **B** has closed when the water temperature has dropped to 65°C {149°F}.

  C : Water temperature gauge

(2) Extent of valve lift

Measure valve lift **F**, while maintaining the water temperature a little higher than the valve opening temperature, with valve **B** fully open for five minutes.

MITSUBISHI
FUSO

FK.FM
Service Manual

Group 15
Intake and Exhaust

Table of Contents

BACK

HOME

MITSUBISHI FUSO TRUCK OF AMERICA, Inc.

Pub No. TWME9503-15

GROUP 15 INTAKE AND EXHAUST

SPECIFICATIONS 2

STRUCTURE AND OPERATION 2

TROUBLESHOOTING 6

INSPECTION AND ADJUSTMENT MOUNTED IN VEHICLE

- Measurement of Turbo Boost Pressure 8

AIR DUCT AND AIR CLEANER 10

TURBOCHARGER 12

INTERCOOLER 24

INTAKE MANIFOLD 26

EXHAUST MANIFOLD 28

EXHAUST PIPE AND MUFFLER 30

SPECIFICATIONS/STRUCTURE AND OPERATION

SPECIFICATIONS

Items		Specifications
Air cleaner element		Cyclone paper filter type
Turbocharger	Model	TD07
	Manufacturer	MITSUBISHI HEAVY INDUSTRIES
Intercooler type		Air-cooled, tube and corrugated fin type

STRUCTURE AND OPERATION

Air Cleaner

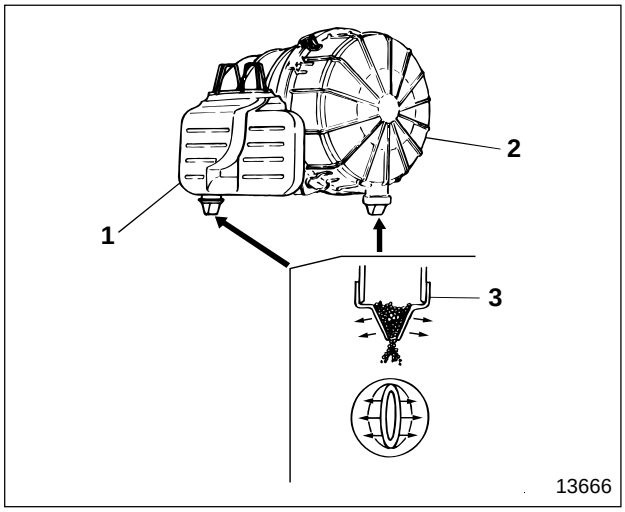

1 Air lower duct
2 Air cleaner assembly
3 Evacuator valve

- Air cleaner assembly **2** uses a single element.
- Evacuator valves **3** are fitted with air lower duct **1** and air cleaner assembly **2**.
- Evacuator valves **3** automatically vent dust and dirt by the repercussive force of the rubber of the valve that overcomes the inner negative pressure when the engine revolution falls below the specified revolution.

Turbocharger

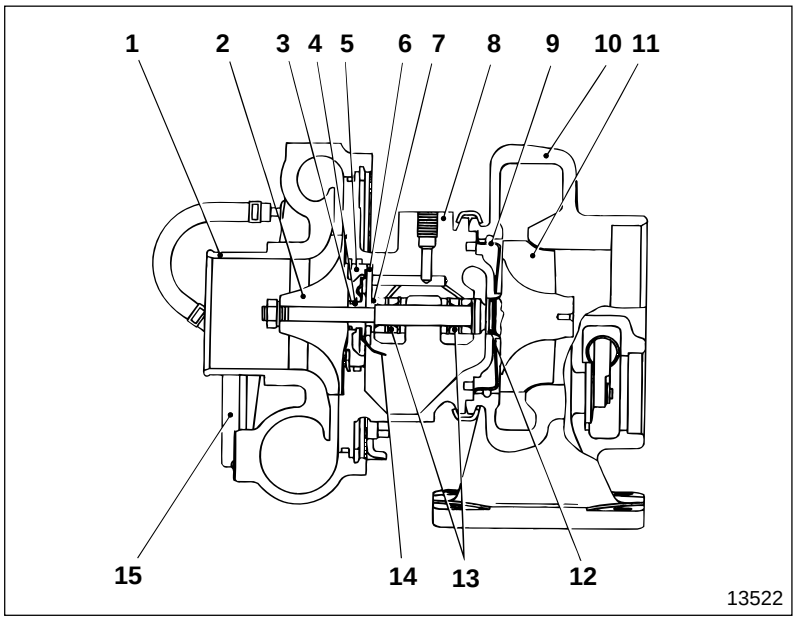

1 Compressor cover
2 Compressor wheel
3 Piston ring
4 Thrust sleeve
5 Insert
6 Thrust bearing
7 Thrust ring
8 Bearing housing
9 Turbine backplate
10 Turbine housing
11 Shaft and turbine wheel
12 Piston ring
13 Bearing
14 Oil deflector
15 Actuator

Waste gate mechanism

- The waste gate mechanism relieves the boost pressure of excess exhaust gas using actuator **15**. This controls the boost pressure appropriately and prevents the turbocharger from overrunning, and prevents excessive pressure in the intake manifold.
- The boost pressure is fed into chamber **A** of actuator **15** from compressor cover **1** via a rubber hose. When boost pressure **C**, acting on chamber **A**, is lower than the preset value, the actuator does not operate and waste gate valve **B** remains closed, therefore exhaust gas **D** is blown against shaft and turbine wheel **11**.

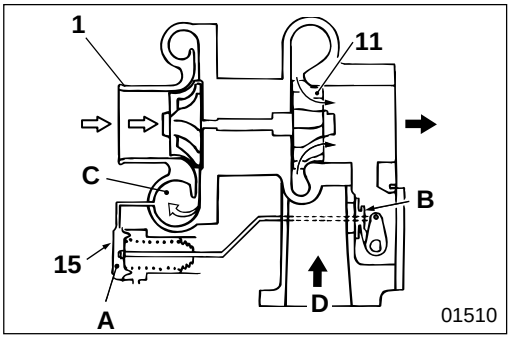

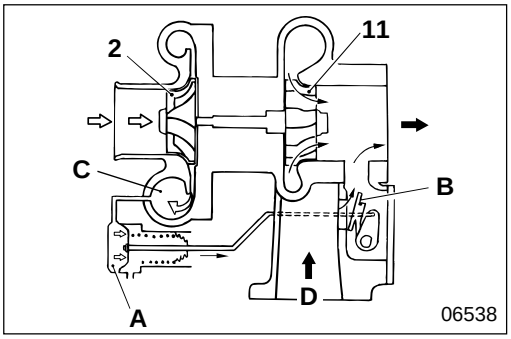

- As the boost pressure acting on chamber **A** increases to become higher than the preset value, waste gate valve **B** is opened and the exhaust gas blown against shaft and turbine wheel **11** decreases. Therefore the rotation of compressor wheel **2** decreases, causing the boost pressure to decrease.

Operation of over-boost valve

- Over-boost valve **E** operates when the boost pressure increases abnormally because of faulty operation of the waste gate mechanism.

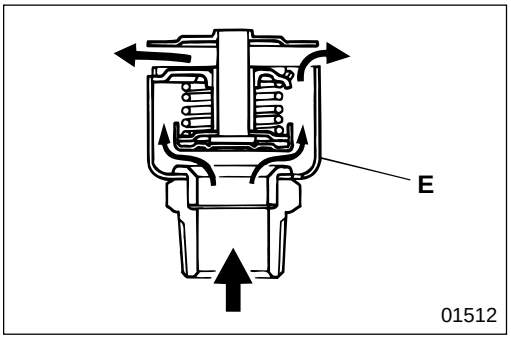

- If boost pressure **C** of over-boost valve **E** increases to become higher than the preset value, the excessive boost pressure is discharged into the atmosphere, protecting the engine from excessive boost pressure. When the valve is operating, a pipe-blowing sound is generated.

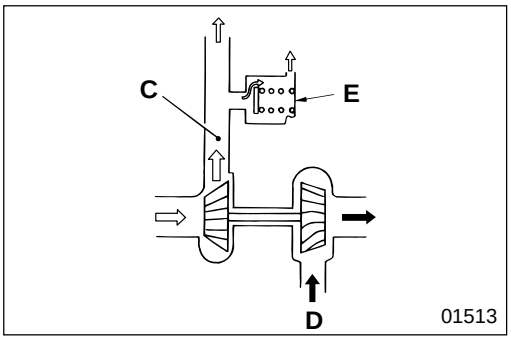

Inertia Supercharger

The inertia supercharger increases air intake by using the compressional wave of air generated by the air density in the intake manifold that is created by the inertia force of the air.
This supercharger improves engine performance in the low speed range where the air supply might be lower than necessary.

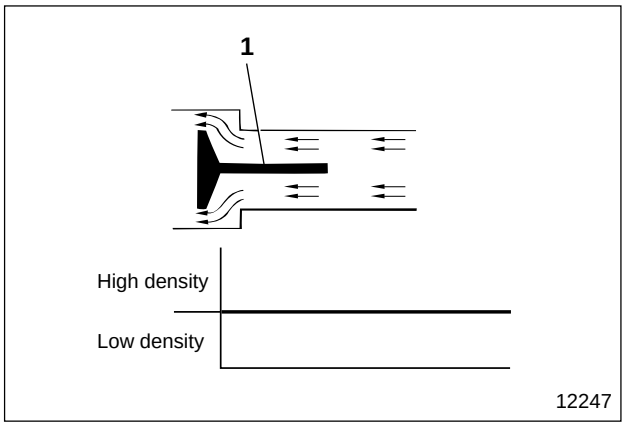

When inlet valve **1** is open, there is stable air flow in the intake manifold.

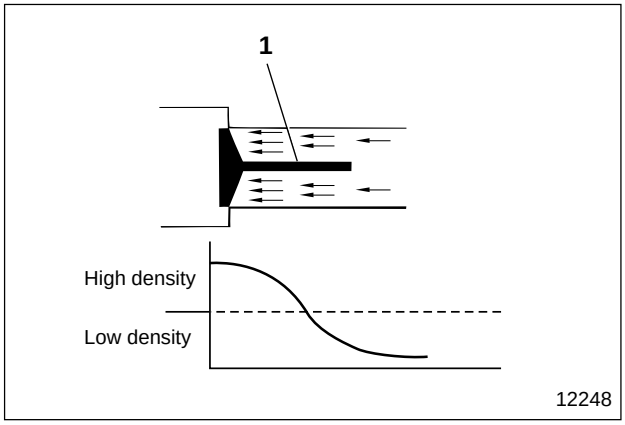

When inlet valve **1** closes and the air flow stops suddenly, the air around the inlet valve is compressed by the inertia force of the air, generating a compressional wave of air in the inlet manifold.

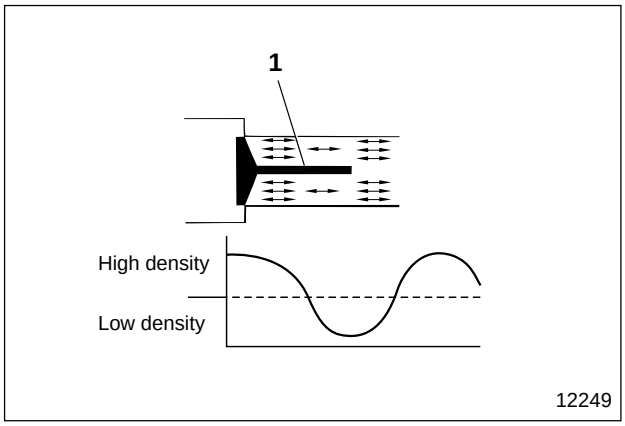

An intake coupler, which is split into two parts, resonates to amplify the compressional wave of air that is generated in each air conduit. When inlet valve **1** opens again, the air flows through an area where the air density is high, thus supplying a large mass of air to the combustion chamber.

Muffler

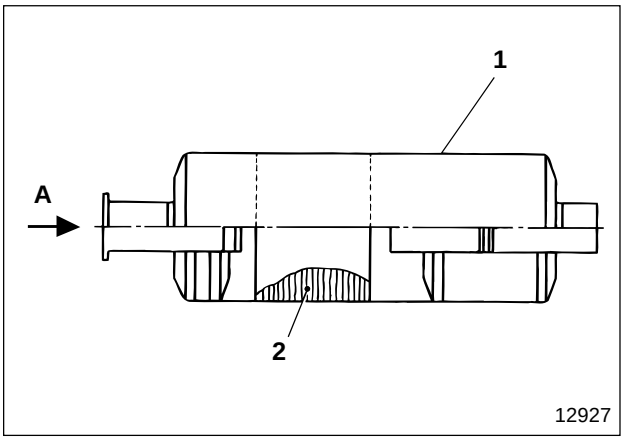

1 Muffler
2 Catalytic converter

A : Exhaust gas intake

Converter **2** is built into muffler **1** to decrease the amount of particulate matter (PM) in the exhaust gas.

TROUBLESHOOTING

Possible causes	Symptoms	Engine hard to start	Exhaust gas dark	Exhaust gas whitish	Engine output insufficient	Oil consumption excessive	Noise and vibration in intake/exhaust systems	Remarks
Air cleaner	Air cleaner element clogged	○	○		○			
Turbocharger	Bearing faulty		○		○		○	
	Carbon deposits on shaft and turbine wheel		○		○			
	Shaft and turbine wheel interfering with turbine backplate		○		○			
	Shaft and turbine wheel interfering with turbine housing		○		○			
	Shaft and turbine wheel bent		○		○		○	
	Shaft and turbine wheel broken		○		○		○	
	Compressor wheel interfering with compressor cover		○		○			
	Thrust sleeve and thrust bearing seized		○		○		○	
	Compressor wheel broken		○		○		○	
	Engine oil leaking because piston ring and inserter worn		○	○		○		
	Piston rings installation faulty					○		
	Parts not sliding smoothly because oil lubrication pipe and eye bolt clogged		○		○			
	Oil seals damaged because oil return pipe clogged			○		○		
	Compressor cover installation faulty		○		○	○	○	
	Turbine housing installation faulty				○		○	
Intercooler	Foreign particles on intercooler front core				○			
Front pipe, muffler and tail pipe deformed							○	
Front pipe, muffler and tail pipe installation faulty							○	
Valve clearance faulty			○					Gr 11
Head gasket faulty			○					Gr 11
Valve and valve seat worn and carbon deposits			○					Gr 11
Valve spring fatigued			○					Gr 11
Piston ring worn and damaged			○					Gr 11
Piston ring groove worn and damaged			○					Gr 11
Cooling system malfunctioning			○					Gr 14
Engine oil excessive			○					Gr 12
Main moving parts seized			○					Gr 11
Fuel injection quantity uneven or excessive			○					Gr 13

M E M O

Measurement of Turbo Boost Pressure

Service standards

Location	Maintenance item		Standard value	Limit	Remedy
—	Boost pressure (Air temperature 20°C {68°F}, Atmospheric pressure 100 kPa {29.9 in. Hg, 760 mmHg})	6D16T2	—	38 kPa {11 in. Hg, 280 mmHg}/ 3200 rpm	Inspect and adjust
		6D16T3, 16T4	—	40 kPa {11.8 in. Hg, 300 mm Hg} / 3275rpm	Inspect and adjust

Special tools

Location	Tool name and shape	Part No.	Application
—	Boost pressure gauge 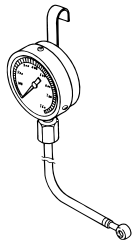 01524	MH061366	Measurement of turbo boost pressure

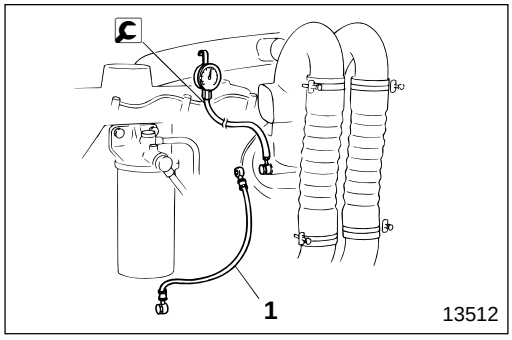

- Before measuring the turbo boost pressure, clean or replace the air cleaner element.
- Remove boost compensator hose **1** and attach boost pressure gauge.
- After warming up the engine, measure the boost pressure at the no-load maximum engine speed. Also measure the engine speed and the air temperature.

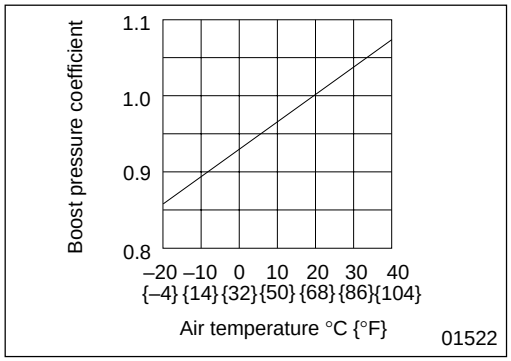

- Correct the boost pressure at standard conditions. (Since the boost pressure varies depending on the air temperature and engine speed.)
  [Correction for air temperature]
  Identify boost pressure coefficient depending on the air temperature from the graph.

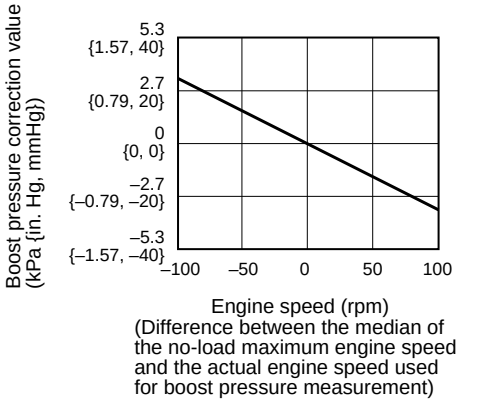

[Correction for engine speed]
Subtract the engine speed actually used for measuring the boost pressure from the median of the no-load maximum engine speed. Identify the boost pressure correction value (**Pa**) according to the graph.

Median value : 3200 rpm < 6D16T2 >
3275 rpm < 6D16T3, 16T4 >

[Calculation of corrected boost pressure]
Given the measured boost pressure to be **P**, corrected boost pressure **Pb** can be calculated from the following equation:

Pb = ktP + Pa

- **Pb** : Corrected boost pressure
- **P** : Measured boost pressure
- **kt** : Boost pressure correcting coefficient depending on air temperature
- **Pa** : Boost pressure correction value

If **Pb** is lower than the limit, the turbocharger must be inspected and adjusted.

AIR DUCT AND AIR CLEANER

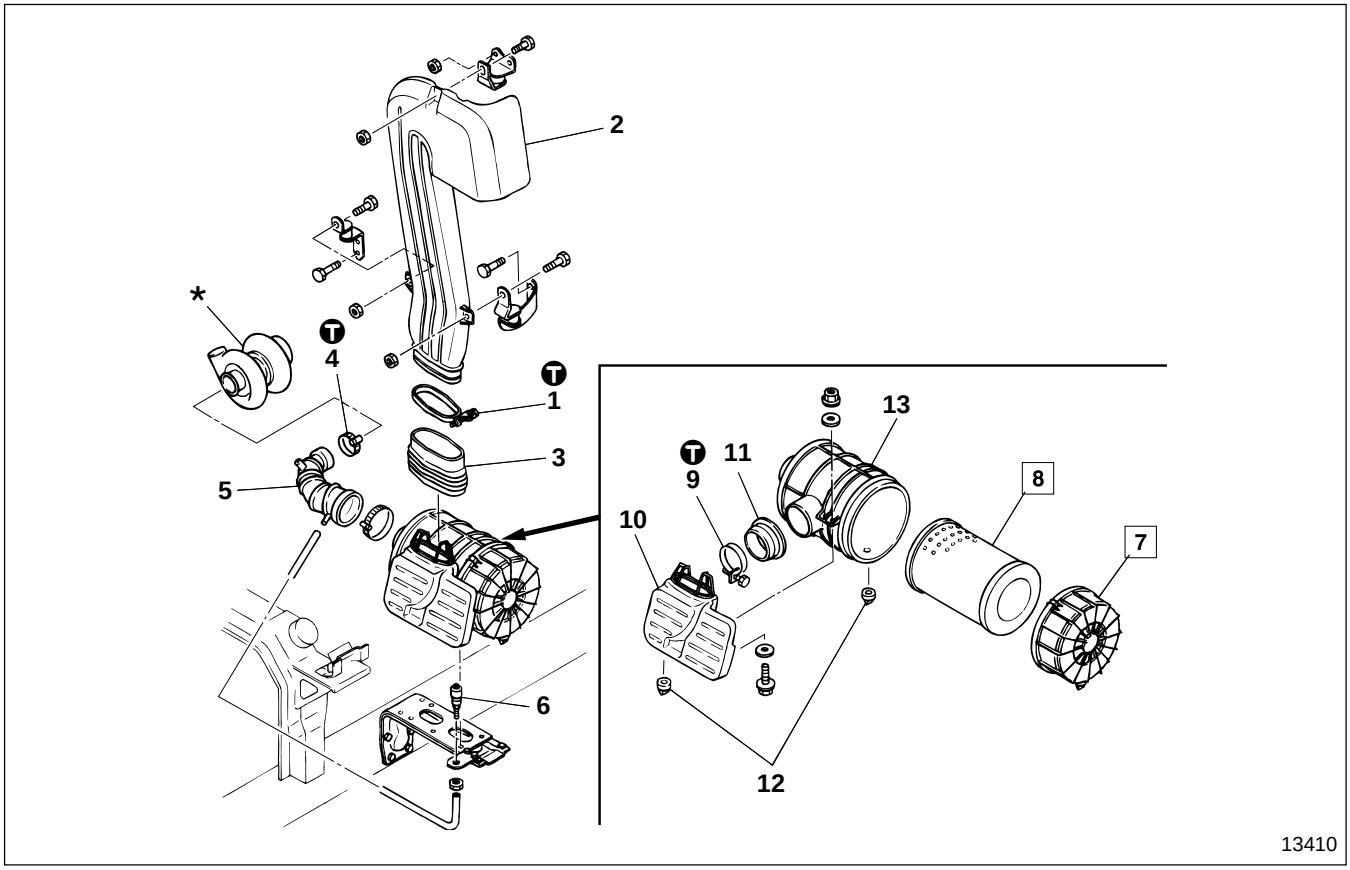

● **Disassembly sequence**

1 Clamp
2 Air upper duct
3 Rubber boot
4 Clamp
5 Air intake hose
6 Dust indicator
7 Cover
8 Element
9 Clamp
10 Air lower duct
11 Adaptor
12 Evacuator valve
13 Body

***** : Turbocharger 📖 P15-12

● **Assembly sequence**

Follow the disassembly sequence in reverse.

Ⓣ Tightening torque

Unit : N·m {lbf.ft, kgf·m}

Location	Parts to be tightened	Tightening torque	Remarks
1, 4, 9	Clamp	3.9 to 4.9 {2.9 to 3.6, 0.4 to 0.5}	—

◆ Service procedure

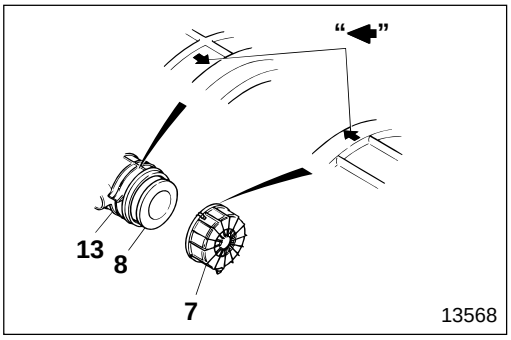

7 **Installation of cover**

➡ : Alignment mark

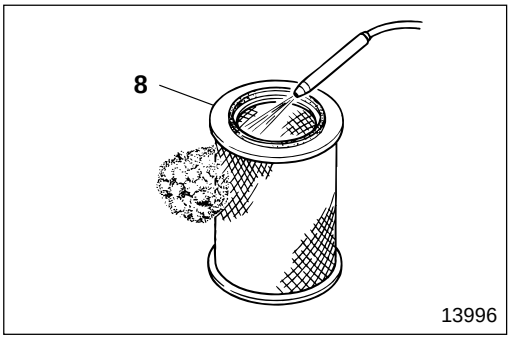

8 **Element**

[Cleaning]

- Blow compressed air of 685 kPa {100 lbf/in^2, 7 kgf/cm^2} or less through element **8** from the inside.
- When using compressed air, move the blower's nozzle up and down along the pleats of element **8** evenly.

CAUTION⚠

- **Do not tap or hit element 8 to remove dust.**
- **Do not blow compressed air through element 8 from the outside.**

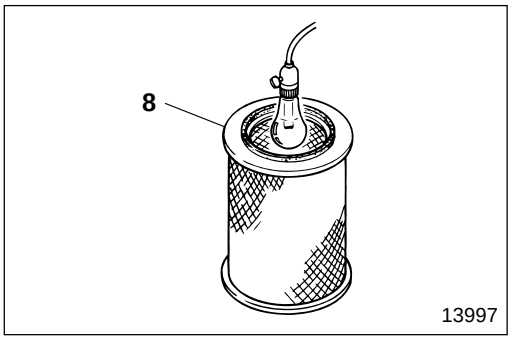

[Inspection]

- Illuminate the inside of element **8**.
- If parts of the filter paper are torn or thin, or if the packing of the upper surface of element **8** is damaged, replace the element.

NOTE

If the dust on element 8 is wet due to oil smoke or soot, replace the air cleaner regardless of the scheduled replacement interval.

TURBOCHARGER

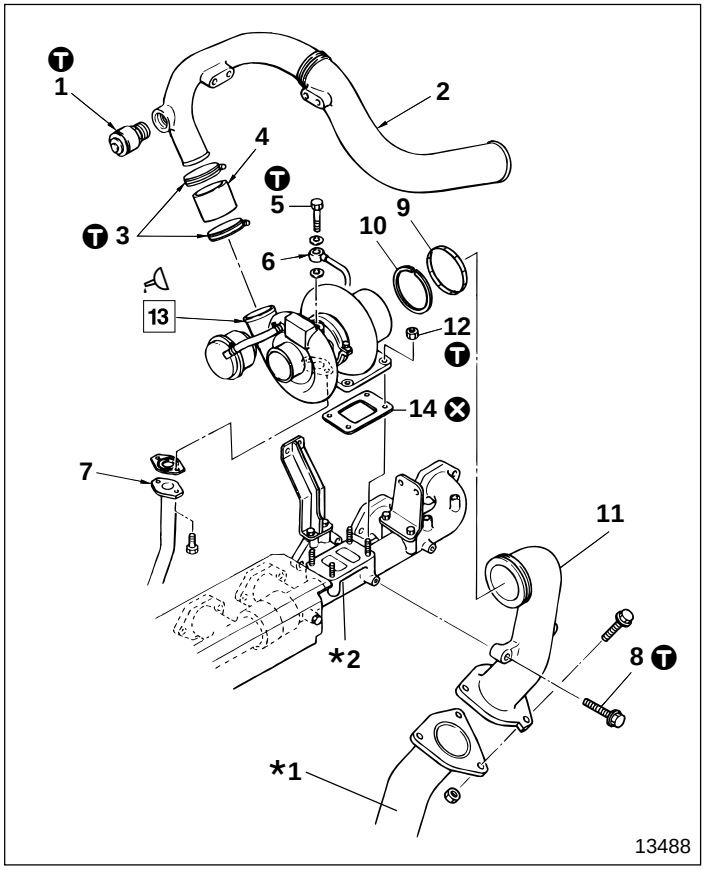

● **Disassembly sequence**

1 Over-boost valve
2 Air inlet pipe
3 Clamp
4 Rubber hose
5 Eye bolt
6 Oil pipe
7 Oil return pipe
8 Bolt
9 Expansion ring
10 Seal ring
11 Exhaust pipe
12 Nut
13 Turbocharger assembly 📖 P15-14
14 Gasket

***1** : Front pipe 📖 P15-30
***2** : Exhaust manifold 📖 P15-28
⊗ : Non-reusable parts

● **Assembly sequence**

Follow the disassembly sequence in reverse.

Ⓣ Tightening torque

Unit : N·m {lbf.ft, kgf·m}

Location	Parts to be tightened	Tightening torque	Remarks
1	Over-boost valve	49 {36, 5}	—
3	Clamp	4.9 {3.6, 0.5}	—
5	Eye bolt	21 {15, 2.1}	—
8	Bolt	53 {39, 5.4}	—
12	Nut	41 {30, 4.2}	—

Lubricant

Location	Points of application	Kinds	Quantity
13	Supply when installing turbocharger assembly	Engine oil	As required

◆ Service procedure

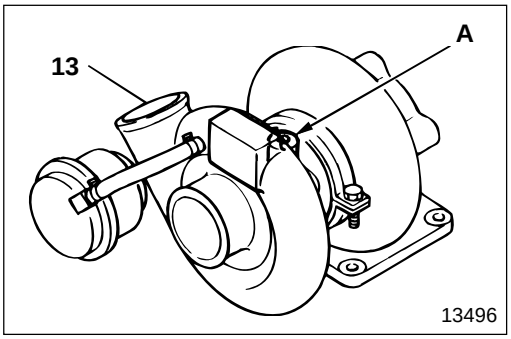

13 **Installation of turbocharger assembly**

When installing turbocharger assembly **13**, supply engine oil via oil port **A** as required to make parts move smoothly.

TURBOCHARGER

Turbocharger Assembly

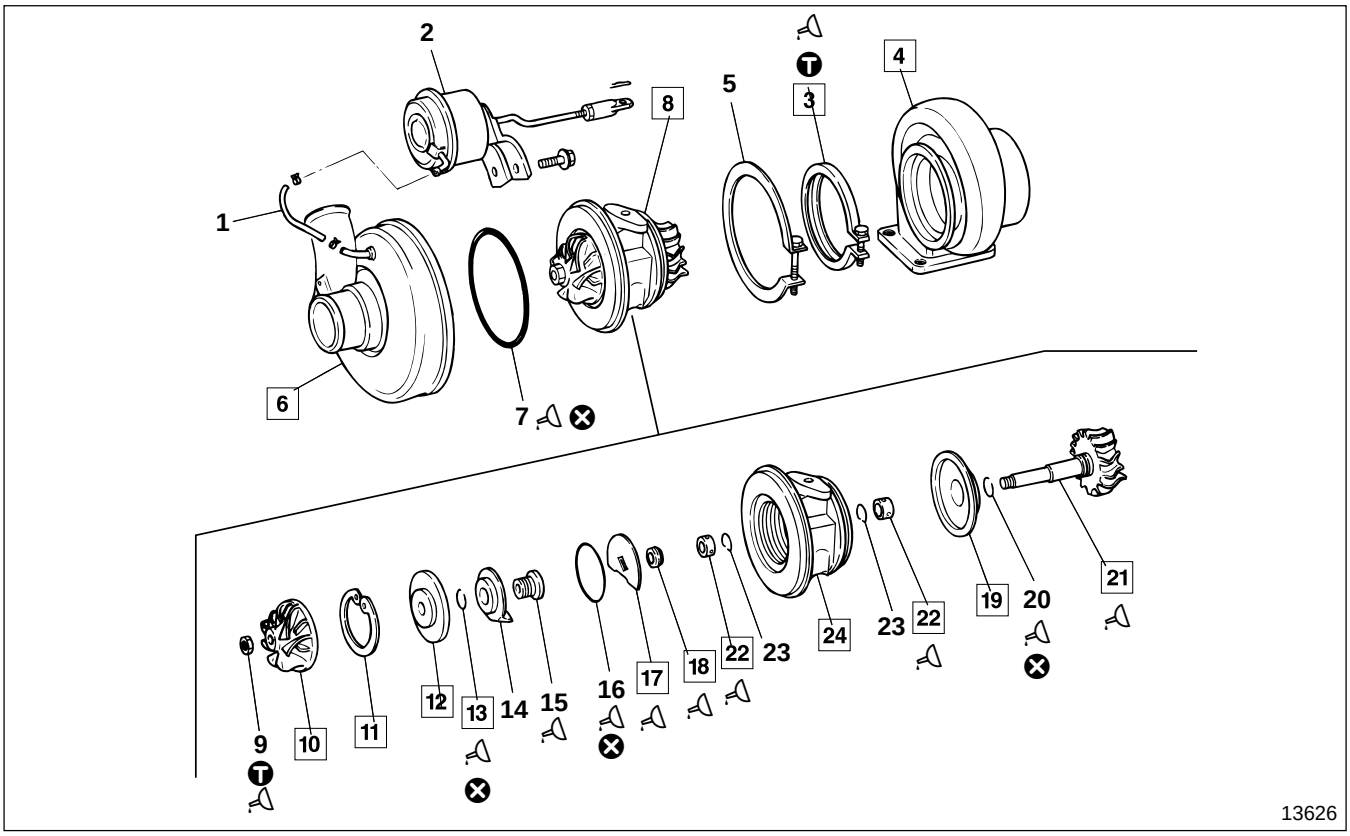

● **Work before disassembly**

Gr 15-16

● **Disassembly sequence**

1 Hose
2 Actuator
3 Coupling assembly
4 Turbine housing
5 Snap ring
6 Compressor cover
7 O-ring
8 Wheel and bearing housing assembly
9 Lock nut
10 Compressor wheel
11 Snap ring
12 Insert
13 Piston ring
14 Oil deflector
15 Thrust sleeve
16 O-ring
17 Thrust bearing
18 Thrust ring
19 Turbine backplate
20 Piston ring
21 Shaft and turbine wheel
22 Bearing
23 Snap ring
24 Bearing housing

⊗ : Non-reusable parts

● **Assembly sequence**

24→23→22
21→20→19
→16
18→17
→11→10→9→8→7→6→5→4→3→2→1
15→14→13→12

● **Inspection after assembly**

P15-17

Service standards

Unit : mm {in.}

Location	Maintenance item		Standard value	Limit	Remedy
4, 21	Clearance between turbine housing and shaft and turbine wheel		0.39 to 1.0 {0.015 to 0.039}	—	Disassemble
6, 8	Clearance between wheel and bearing housing assembly and compressor cover		0.08 to 0.28 {0.0031 to 0.011}	—	Disassemble
8	Wheel and bearing housing assembly	Play in shaft direction	0.075 to 0.155 {0.0030 to 0.0061}	—	Disassemble
		Clearance between turbine backplate and shaft and turbine wheel rear side	0.48 to 0.92 {0.019 to 0.036}	—	Disassemble
12, 13	Clearance of piston ring splits		0.05 to 0.25 {0.0020 to 0.0098}	—	Replace insert
21	Shaft and turbine wheel	Bend of shaft	0.015 {0.00059}	—	Replace
		Outer diameter of journal	—	11.996 {0.472}	Replace
22	Bearing	Outer diameter	—	20.382 {0.802}	Replace
		Inner diameter	—	12.042 {0.472}	Replace
		Length	—	11.94 {0.474}	Replace
24	Inner diameter of bearing installation area of bearing housing		—	20.506 {0.807}	Replace

Tightening torque

Unit : N·m {lbf.ft, kgf·m}

Location	Parts to be tightened	Tightening torque	Remarks
3	Coupling assembly	4.9 to 6.9 {3.6 to 5.1, 0.5 to 0.7}	—
9	Lock nut	12 to 14 {8.7 to 10, 1.2 to 1.4}	—

Lubricant

Location	Points of application	Kinds	Quantity
3	Thread area of bolt of coupling assembly	Molybdenum disulfide grease	As required
7, 13, 15, 16, 17, 18, 20, 21, 22	Respective parts	Engine oil	As required
9	Thread area of lock nut	Molybdenum disulfide grease	As required

◆ Service procedure

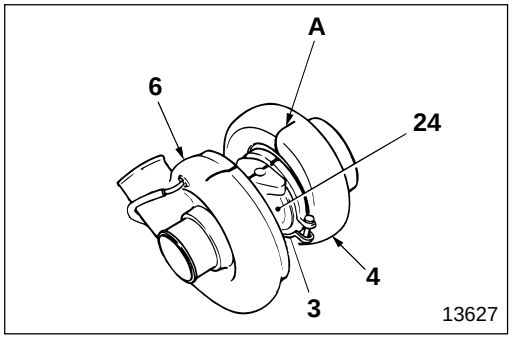

● Work before disassembly

Put alignment marks **A** on coupling assembly **3**, turbine housing **4**, compressor cover **6** and bearing housing **24**.

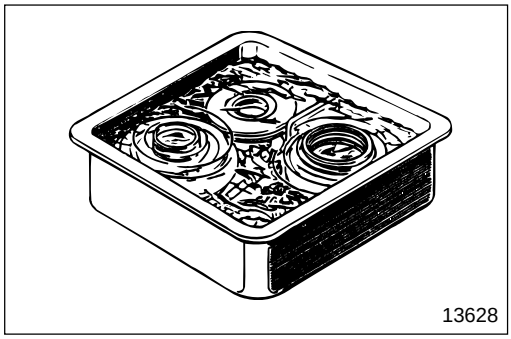

● Cleaning after disassembly

- Visually inspect related parts before cleaning to check if there are any burns or scratches as these would not be seen after cleaning. If any fault is found, replace the faulty parts.
- Immerse the disassembled parts in a nonflammable solvent (DAIDO KAGAKU KOGYO DAICLEANER T-30).

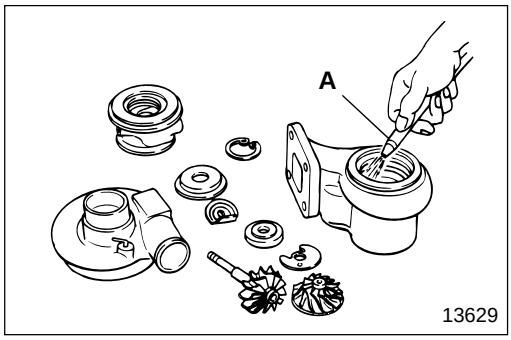

- Take the parts out and blow compressed air **A** on them.

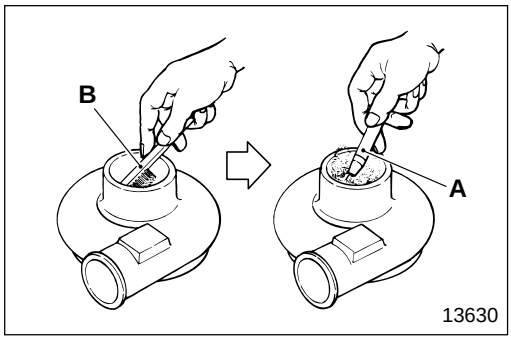

- Scrape foreign particles off.
  B : Plastic scraper or bristle-headed brush
- Immerse the parts again in the solvent.
- Blow compressed air **A** on them.

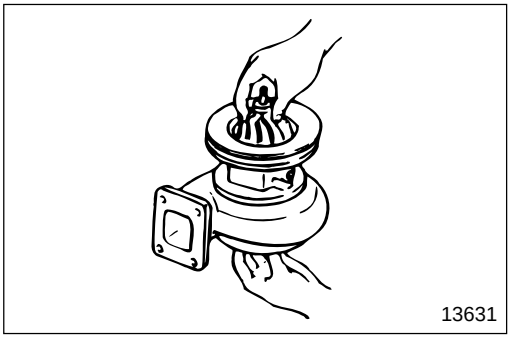
13631

● **Inspection after assembly**

Turn turbine wheel **21** and compressor wheel **10** to make sure that they turn smoothly.

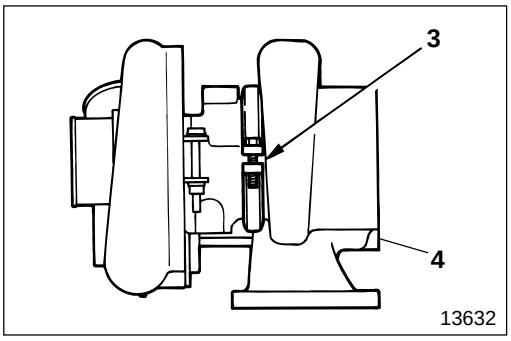

13632

3 **Installation of coupling assembly**

Install coupling assembly **3** to turbine housing **4** in the direction as illustrated.

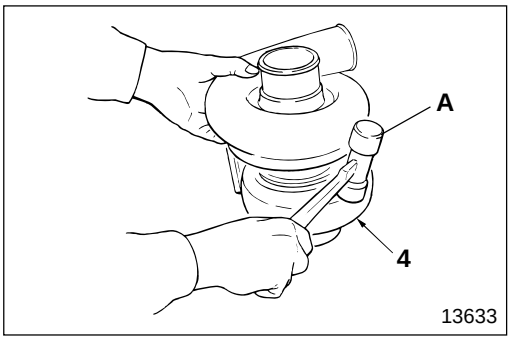

13633

4 **Removal of turbine housing**

A : Rubber-headed hammer

CAUTION⚠

- **When removing turbine housing 4, tap all around the circumference lightly using rubber-headed hammer A so as not to damage the turbine housing.**
- **Do not hit the turbine wheel near turbine housing 4, since the blade of shaft and turbine wheel 21 can be easily bent.**

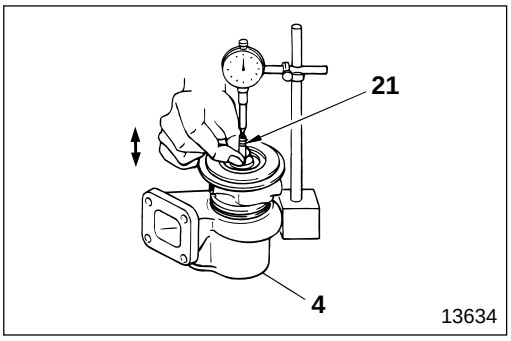

13634

4 **21** **Inspection of clearance between turbine housing and shaft and turbine wheel**

If the measured value deviates from the standard value, disassemble and determine the cause.

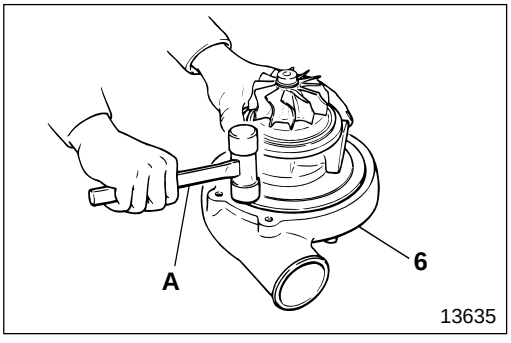

13635

6 **Removal of compressor cover**

A : Rubber-headed hammer

CAUTION⚠

- **When removing compressor cover 6, tap all around the circumference lightly so as not to damage the compressor cover.**
- **Avoid hitting compressor wheel 10 near compressor cover 6, since the blade of the compressor wheel can be easily bent.**

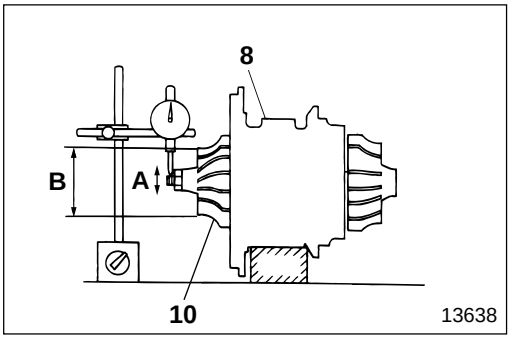

6 **8** **Inspection of clearance between wheel and bearing housing assembly and compressor cover**

- Measure deflection **A**.
- Measure outer diameter **B** of compressor wheel **10**.

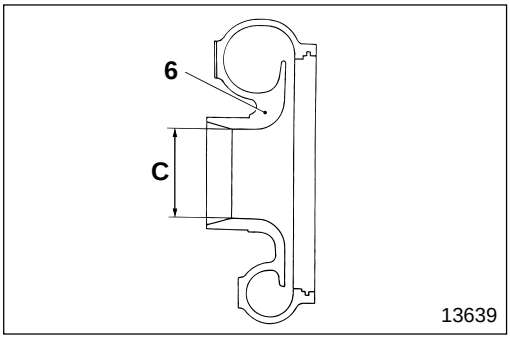

- Measure inner diameter **C** of compressor cover **6**.
- Calculate the clearance between wheel and bearing housing assembly **8** and compressor cover **6** using the following equation.

$$\text{Clearance} = \frac{\mathbf{C} - \mathbf{B} - \mathbf{A}}{2}$$

- If the calculated clearance deviates from the standard value, disassemble and determine the cause.

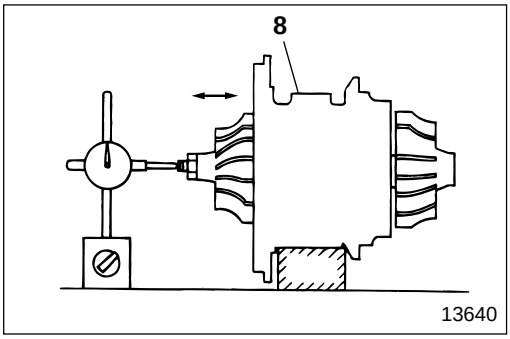

8 **Inspection of wheel and bearing housing assembly**

(1) Play in the shaft direction

If the measured value deviates from the standard value, disassemble and determine the cause.

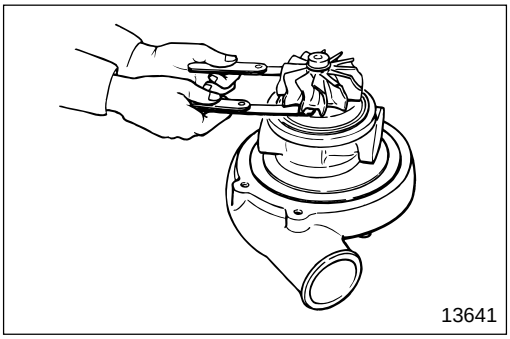

(2) Clearance between turbine backplate and shaft and turbine wheel rear side.

- Measure using the tip of two feeler gauge blades.
- If the measured value deviates from the standard value, disassemble and determine the cause.

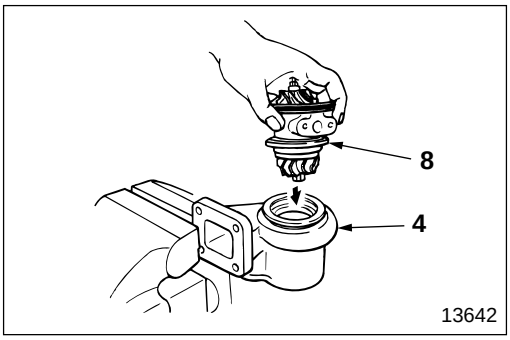

10 **Compressor wheel**

[Removal]

- Install wheel and bearing housing assembly **8** in turbine housing **4**.

CAUTION

Avoid hitting shaft and turbine wheel 21 near turbine housing 4, since the blade of the shaft and turbine wheel can be easily bent.

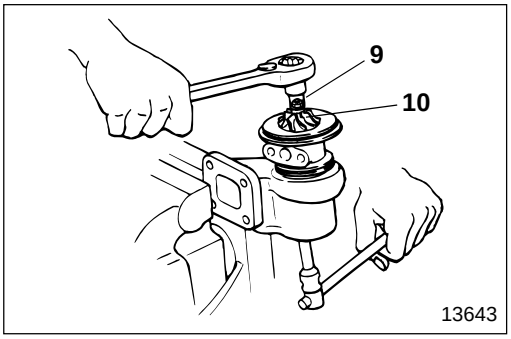

- Remove lock nut **9** while holding the boss of shaft and turbine wheel **21**.

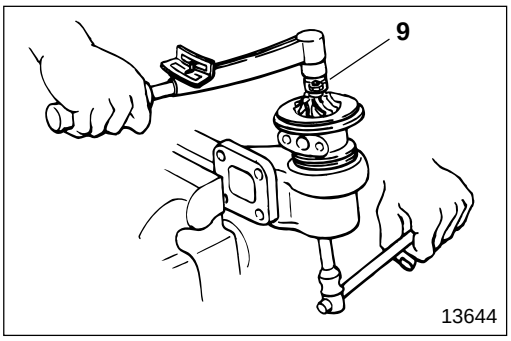

[Installation]
Tighten lock nut **9** at specified torque while holding the boss of shaft and turbine wheel **21**.

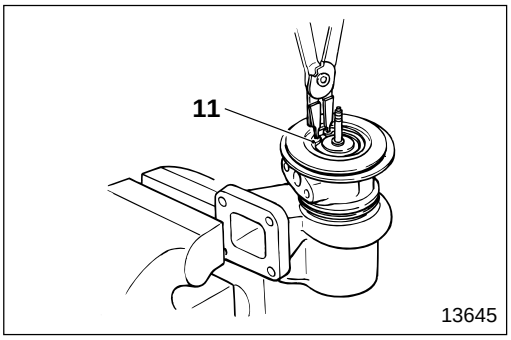

11 **Snap ring**

[Removal]

WARNING

When removing snap ring 11, hold it with your hand to prevent it from springing out.

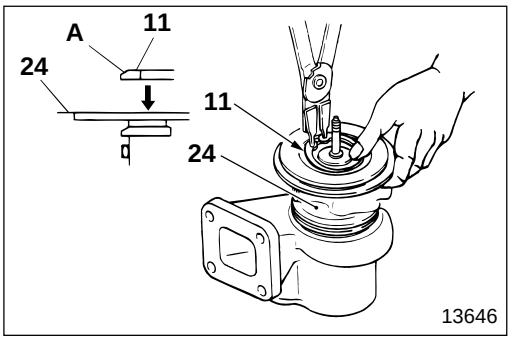

[Installation]

- Install snap ring **11** onto bearing housing **24** in the direction as illustrated.
  A : Tapered surface

WARNING

When installing snap ring 11, hold it with your hand to prevent it from springing out.

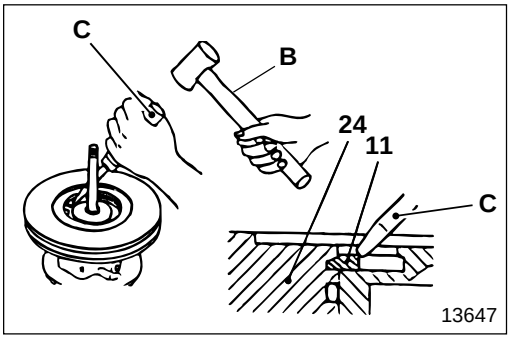

- Install so that snap ring **11** fits into the groove of bearing housing **24** fully.
  B : Mallet
  C : Screwdriver

CAUTION

Make sure you do not hit bearing housing 24 with screwdriver C.

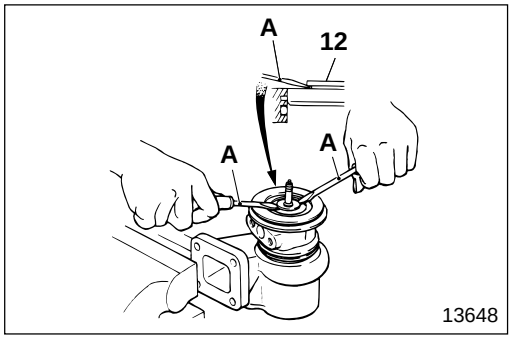

12 **Insert**

[Removal]

A : Screwdriver

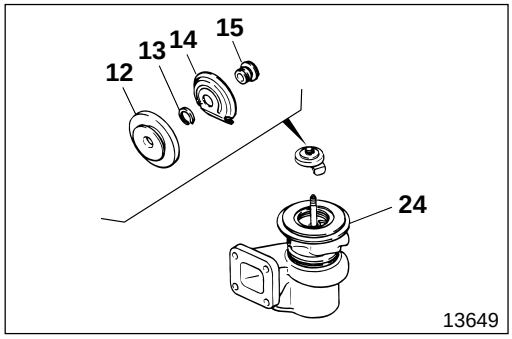

[Installation]

Install oil deflector **14** onto bearing housing **24** in the direction as illustrated.

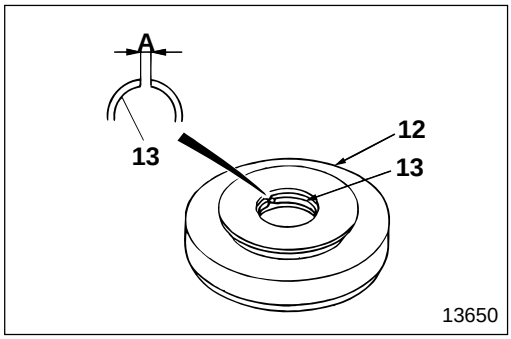

13 **Inspection of clearance of piston ring split**

- Install new piston ring **13** in insert **12**.
- Measure clearance **A** of the split of piston ring **13**.
- If the measured value deviates from the standard value, replace inserter **12**.

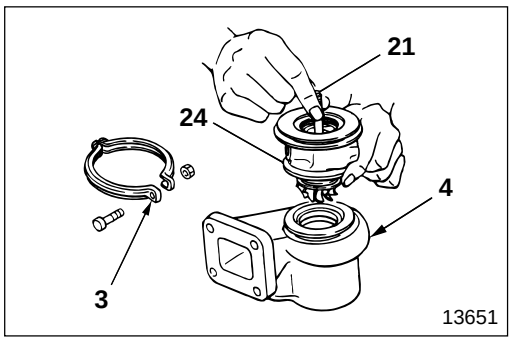

17 **18** **Installation of thrust bearing and thrust ring**

- Install parts **19** to **23** into bearing housing **24**.
- Hold shaft and turbine wheel **21** and bearing housing **24** with your hand and install them in turbine housing **4**.
- Fix temporarily using coupling assembly **3**.

CAUTION

- **Avoid hitting shaft and turbine wheel 21 near turbine housing 4, since the blade of the shaft and turbine wheel can be easily bent.**
- **Do not drop shaft and turbine housing 21.**

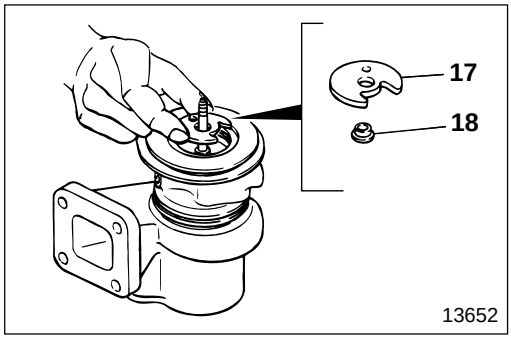

- Install thrust bearing **17** and thrust ring **18** so that the thrust bearing faces the direction as illustrated.

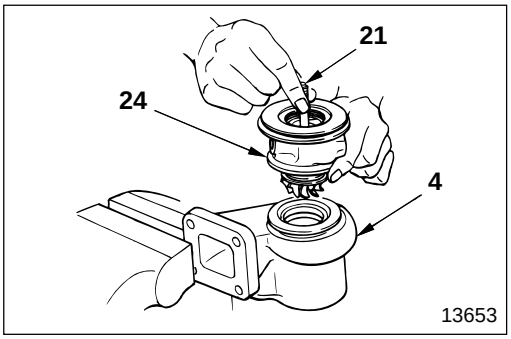

19 Removal of turbine backplate

- Hold shaft and turbine wheel **21** and bearing housing **24** with your hand and remove them from turbine housing **4**.

CAUTION

- **Avoid hitting shaft and turbine wheel 21 near turbine housing 4, since the blade of the shaft and turbine wheel can be easily bent.**
- **Do not drop shaft and turbine housing 21.**

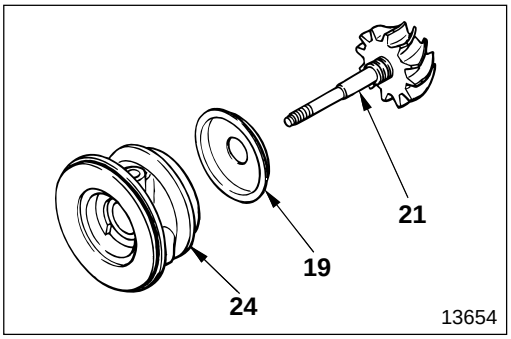

- Remove turbine backplate **19**.

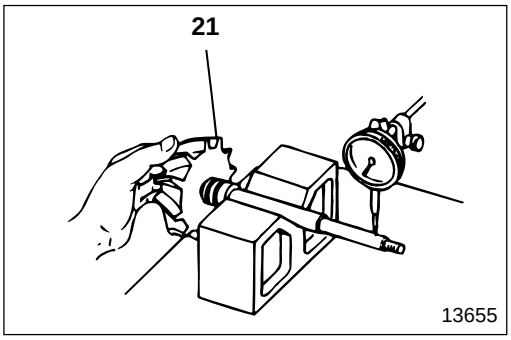

21 Shaft and turbine wheel

[Inspection]

(1) Bend of shaft

- Measure the bend at the position as illustrated.
- If the measured value is higher than the limit, replace shaft and turbine wheel **21**.

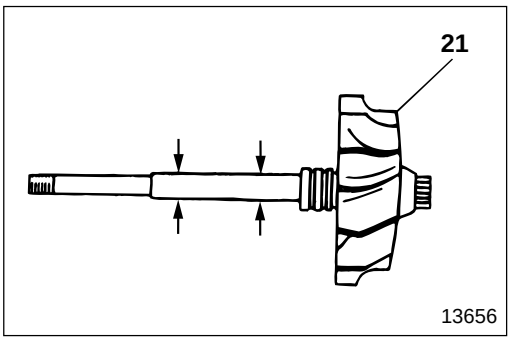

(2) Outer diameter of journal

If the measured value is lower than the limit, replace shaft and turbine wheel **21**.

(3) Smoothness of journal

If the journal is rough, correct it.

[Correction]

- Mount shaft and turbine wheel **21** between two centers on a lathe.
- Polish the journal softly with emery paper (400 grit) and engine oil.

CAUTION

Be sure to measure the outer diameter of the journal after polishing it.

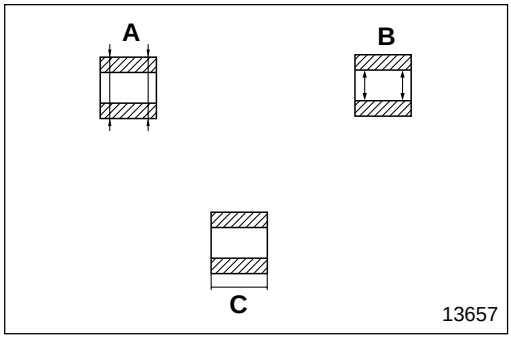

22 **Inspection of bearing**

- Measure at three points as illustrated.
  A : Outer diameter
  B : Inner diameter
  C : Length
- If the measured value of the inner diameter is higher than the limit, or if the outer diameter or the length is lower than the limit, replace bearing **22**.

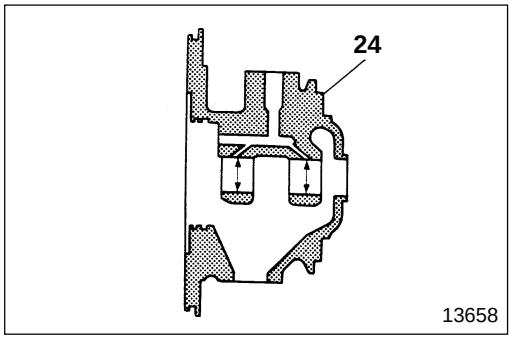

24 **Inspection of bearing housing**

- Measure the inner diameter of bearing **22** installation area.
- If the measured value is higher than the limit, replace bearing housing **24**.

M E M O

INTERCOOLER

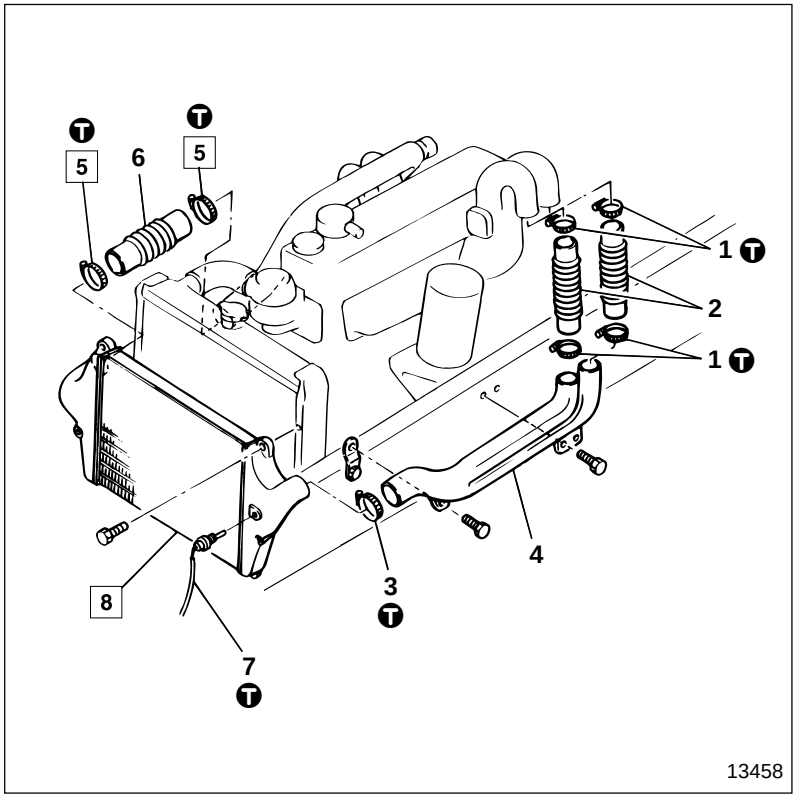

● **Disassembly sequence**

1 Clamp
2 Air inlet hose
3 Clamp
4 Air inlet pipe
5 Clamp
6 Air inlet hose
7 Boost air temperature sensor Gr 13
8 Intercooler

● **Assembly sequence**

Follow the disassembly sequence in reverse.

Service standards

Location	Maintenance item	Standard value	Limit	Remedy
8	Air leakage from intercooler (Air pressure : 195 kPa {28 lbf/in^2, 2.0 kgf/cm^2})	0 cm^3 {0 cu. in.}	—	Replace

Tightening torque

Unit : N·m {lbf.ft, kgf·m}

Location	Parts to be tightened	Tightening torque	Remarks
1, 3, 5	Clamp (Air inlet hose and inlet duct mounting)	4.9 to 9.8 {3.6 to 7.2, 0.5 to 1.0}	—
7	Boost air temperature sensor	14.7±2 {11±1.4, 1.5±0.2}	—

◆ Service procedure

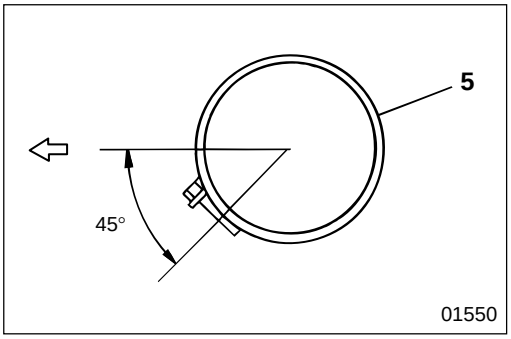

5 **Installation of clamp**

Install clamp **5** so that it faces the direction as illustrated when viewed from the front of the engine.

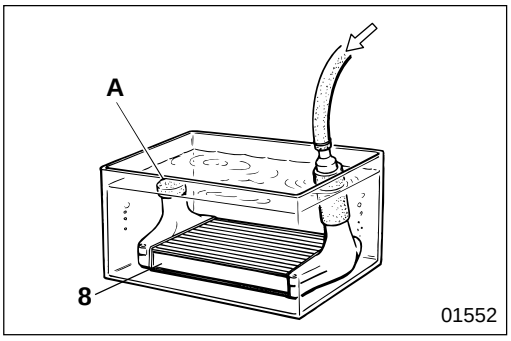

8 **Inspection of intercooler**

- Fit plug **A** on one of the air inlets of intercooler **8** and connect a hose to the other, then lower the intercooler into the water tank. Apply air at the specified pressure (195 kPa {28 lbf/in^2, 2.0 kgf/cm^2}) from the hose side and check for air leaks.
- If air leaks, replace intercooler **8**.

INTAKE MANIFOLD

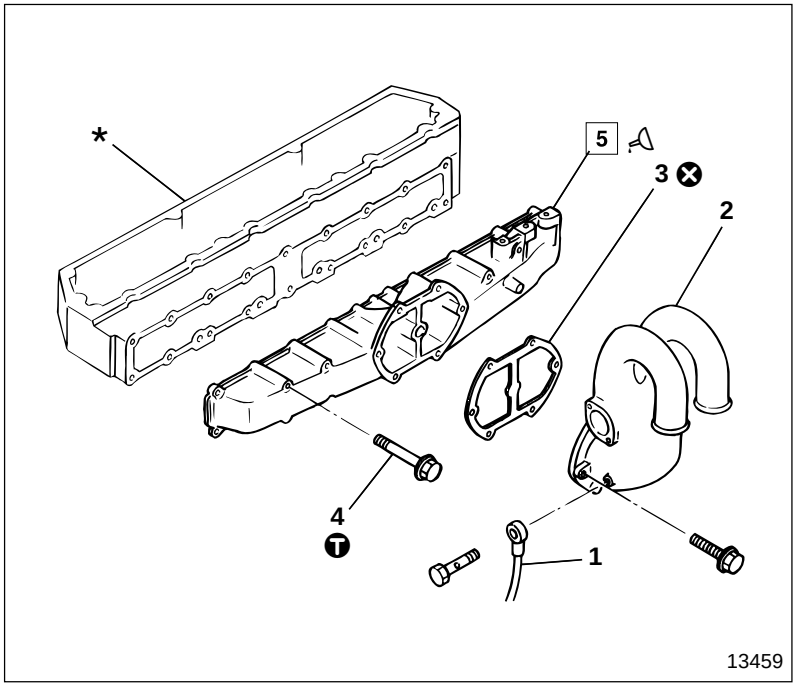

● **Disassembly sequence**

1 Boost compensator hose
2 Coupler assembly
3 Gasket
4 Bolt
5 Intake manifold

* : Cylinder head Gr 11
⊗ : Non-reusable parts

● **Assembly sequence**

Follow the disassembly sequence in reverse.

Ⓣ Tightening torque

Unit : N·m {lbf.ft, kgf·m}

Location	Parts to be tightened	Tightening torque	Remarks
4	Bolt (Intake manifold mounting)	23 {17, 2.37}	—

Sealant

Location	Points of application	Kinds	Quantity
5	Cylinder head installation area of intake manifold	THREEBOND 1207B	As required

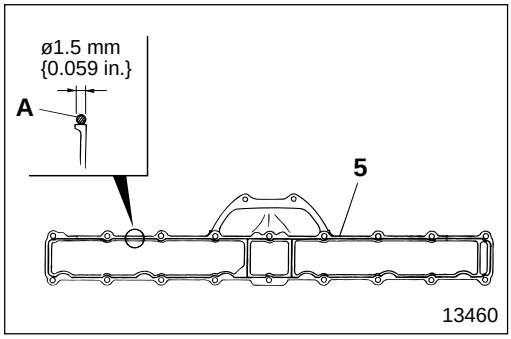

◆ Service procedure

5 Installation of intake manifold

- Apply sealant **A** evenly and without break to the installation area of the intake manifold.
- After having applied sealant, within three minutes, install onto the cylinder head.

CAUTION ⚠

- **Make sure that sealant A is not transferred to other areas while the installation work is being done.**
- **Be sure to clean and wipe off oily substances from the surface where sealant A is to be applied.**
- **Be sure to reapply sealant A whenever bolts 4 are loosened.**
- **Do not start the engine within an hour of mounting.**

M E M O

EXHAUST MANIFOLD

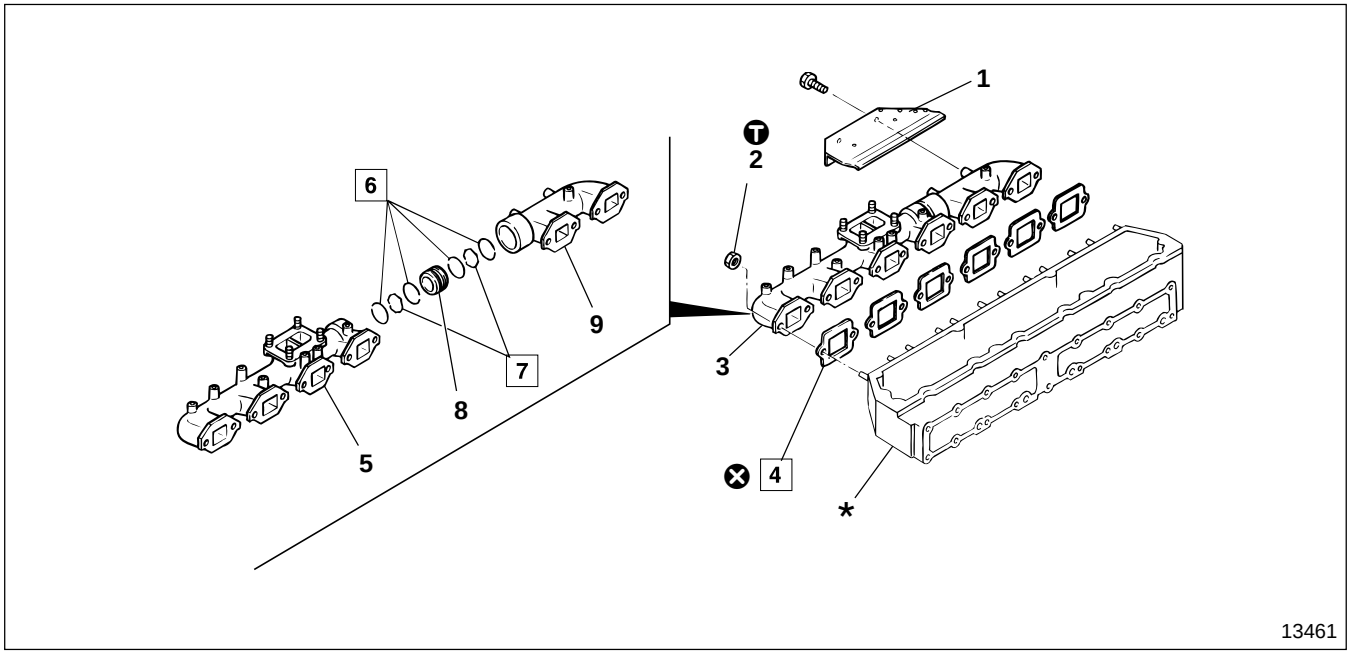

● **Disassembly sequence**

1 Insulator
2 Nut
3 Exhaust manifold assembly
4 Gasket
5 Front exhaust manifold
6 Seal ring
7 Expansion ring
8 Joint
9 Rear exhaust manifold

***** : Cylinder head Gr 11
⊗ : Non-reusable parts

● **Assembly sequence**

Follow the disassembly sequence in reverse.

Ⓣ Tightening torque

Unit : N·m {lbf.ft, kgf·m}

Location	Parts to be tightened	Tightening torque	Remarks
2	Nut (Exhaust manifold mounting)	41 {30, 4.2}	—

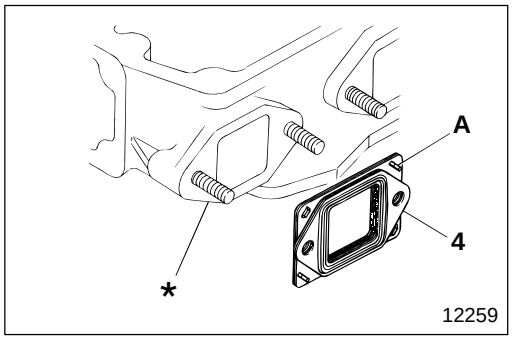

◆ Service procedure

4 **Installation of gasket**

Install gasket **4** on cylinder head ***** in the direction as illustrated.
A : Protrusion

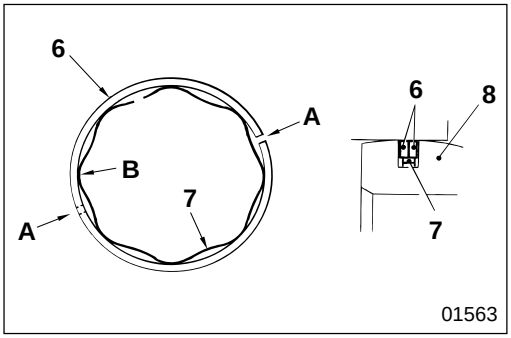

6 **7** **Installation of seal ring and expansion ring**

- Offset splits **A** of seal rings **6** at 180°.
- Align so that expansion ring **7** protrusions **B** and splits **A** of seal rings **6** do no meet.

EXHAUST PIPE AND MUFFLER

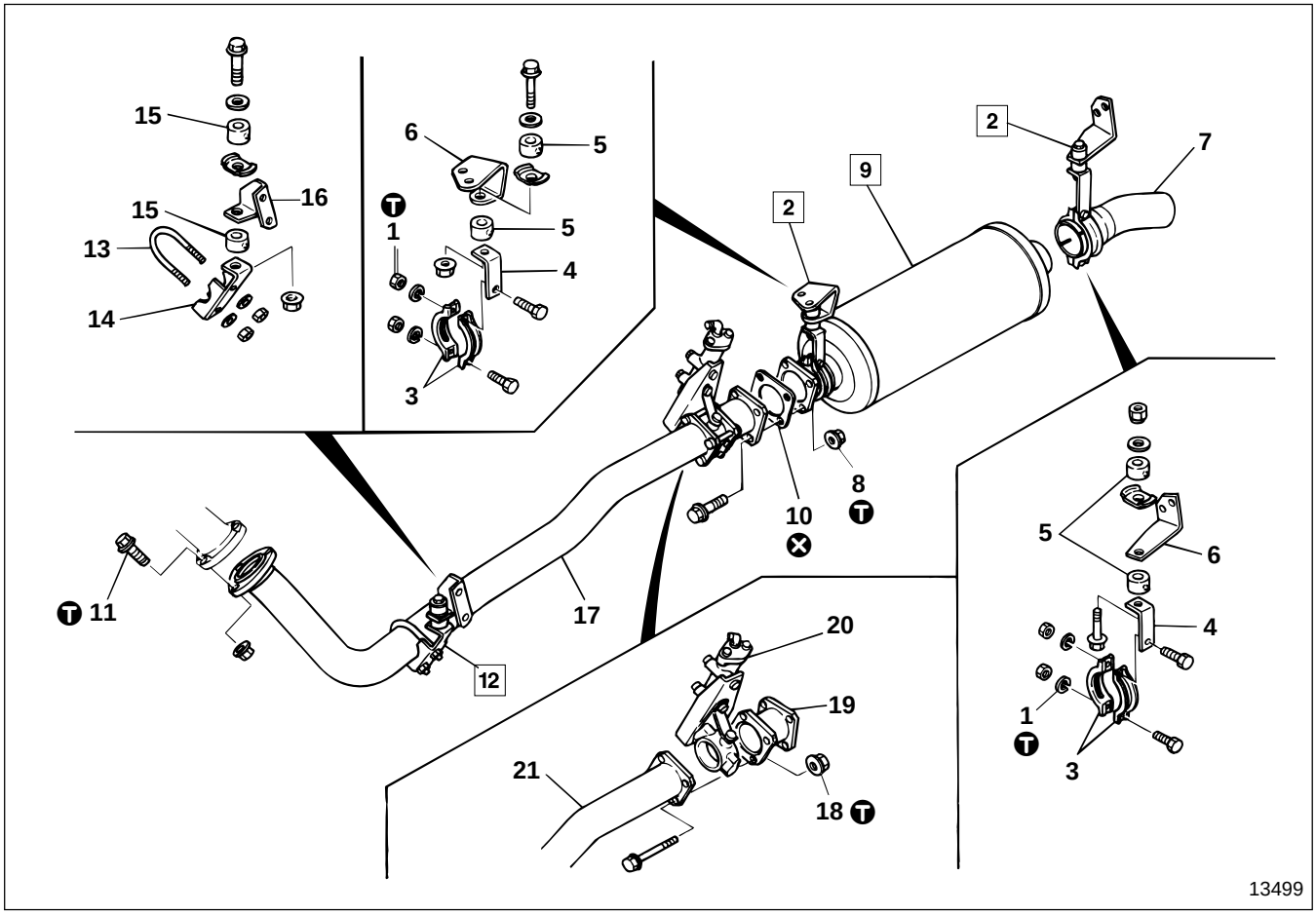

● **Disassembly sequence**

1 Nut
2 Clamp assembly
3 Clamp
4 Pipe clamp stay
5 Rubber cushion
6 Exhaust pipe hanger
7 Tail pipe
8 Nut
9 Muffler
10 Gasket
11 Bolt
12 Clamp assembly
13 U-bolt
14 Pipe clamp stay
15 Rubber cushion
16 Exhaust pipe hanger
17 Front pipe assembly
18 Nut
19 Center pipe
20 Exhaust brake unit Gr 35A, B
21 Front pipe

⊗ : Non-reusable parts

● **Assembly sequence**

Follow the disassembly sequence in reverse.

WARNING ⚠

- **Never hit or kick muffler 9, or the catalyzer in the muffler will be damaged.**
- **A small amount of water sometimes collects inside muffler 9. Never touch this water, if you do by mistake, wash it off immediately with clean water.**

Ⓣ Tightening torque

Unit : N·m {lbf.ft, kgf·m}

Location	Parts to be tightened	Tightening torque	Remarks
1	Nut (Clamp mounting)	20 {14, 2}	—
8	Nut (Muffler mounting)	43 {32, 4.4}	—
11	Bolt (Front pipe assembly mounting)	91 {67.3, 9.3}	—
18	Nut (Exhaust brake unit mounting)	57.5 {42.7, 5.9}	—

◆ Service procedure

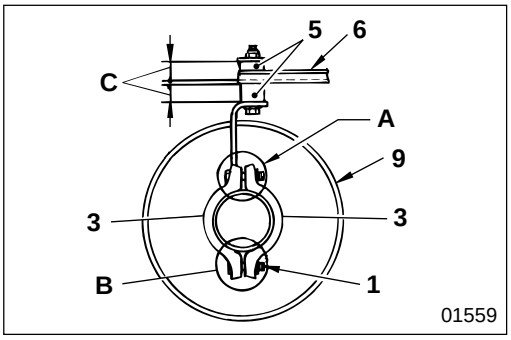

2 **Installation of clamp assembly**

- Tighten nut **1** temporally to let clamp **3** move slightly.
- Tighten nut **1** until it makes contact with area **A** of clamp **3**.
- After tightening area **A**, tighten area **B** using nut **1**.
- Tighten until dimension **C** of rubber cushion **5** is as follows:
  C : Before tightening 25 mm {0.98 in.}
  After tightening 23 mm {0.91 in.}

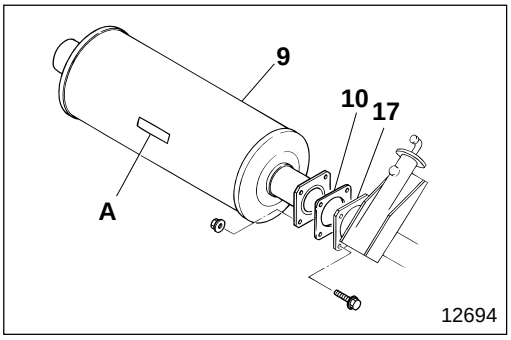

9 **Installation of muffler**

Install muffler **9** to front pipe assembly **17** in the direction as illustrated.
A : Part No. marked position

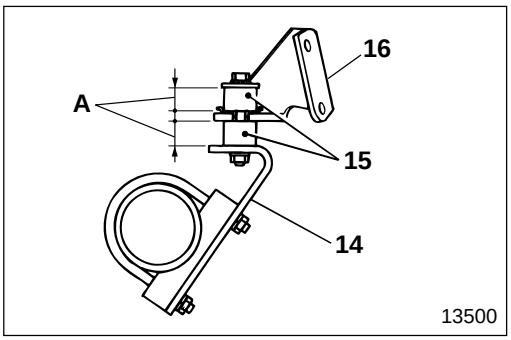

12 **Installation of clamp assembly**

Tighten until dimension **A** of rubber cushion **15** is as follows:
A : Before tightening 25 mm {0.98 in.}
After tightening 23 mm {0.91 in.}

MITSUBISHI
FUSO

FK.FM
Service Manual

Group 21
Clutch

Table of Contents

BACK

HOME

MITSUBISHI FUSO TRUCK OF AMERICA, Inc.

Pub No. TWME9503-21

GROUP 21 CLUTCH

SPECIFICATIONS 2

STRUCTURE AND OPERATION 2

TROUBLESHOOTING 7

INSPECTION AND ADJUSTMENT MOUNTED IN VEHICLE

- Clutch Fluid (Brake Fluid) Replacement and Air Bleeding < Clutch Power Cylinder > 8
- Clutch Fluid (Brake Fluid) Replacement and Air Bleeding < Clutch Booster > 10
- Inspection of Function < Clutch Booster > 12
- Clutch Pedal Free Play < Clutch Power Cylinder > 13
- Clutch Pedal Free Play < Clutch Booster > 14

CLUTCH PEDAL < C6, C7 (M070S6) > 16

CLUTCH PEDAL < C7 (M8S2×5) > 20

CLUTCH MASTER CYLINDER 24

CLUTCH POWER CYLINDER < C6, C7 (M070S6) > 26

CLUTCH BOOSTER < C7 (M8S2×5) > 28

WORK BEFORE REMOVAL AND INSTALLATION OF CLUTCH BODY 34

CLUTCH BODY < C6 > 36

CLUTCH BODY < C7 > 46

CLUTCH CONTROL 56

SPECIFICATIONS/STRUCTURE AND OPERATION

SPECIFICATIONS

Item		Specifications	
Clutch	Model	C6M35, C7M38 < M070S6 >	C7M38 < M8S2×5 >
Drive type		Strap drive	
Clutch disc	Type	Dry, single plate type	
Pressure plate	Type	Coil spring type	
Control system		Hydraulic pressure type	
Clutch master cylinder	Manufacturer	NABCO	
Clutch power cylinder	Manufacturer	NABCO	—
Clutch booster	Manufacturer	—	JIDOSHA KIKI

STRUCTURE AND OPERATION

Clutch Control

< C6M35, C7M38 (M070S6) >

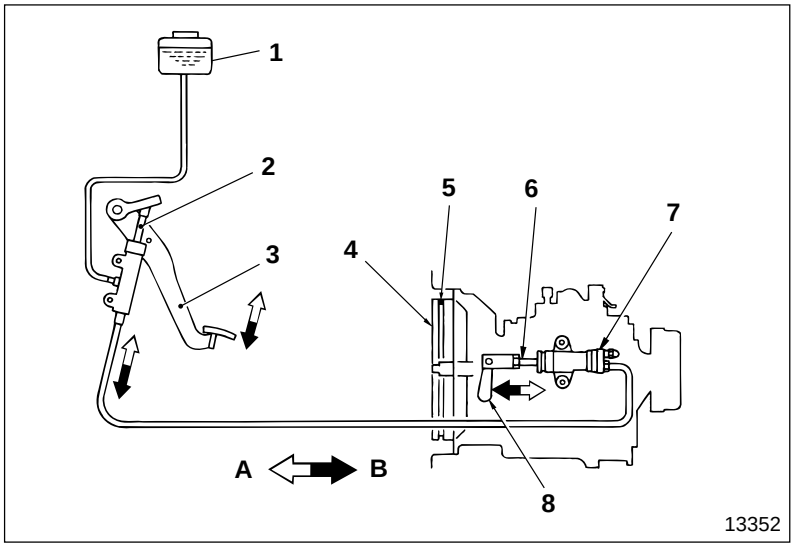

1 Fluid tank
2 Clutch master cylinder
3 Clutch pedal
4 Flywheel
5 Clutch disc
6 Push rod
7 Clutch power cylinder
8 Release fork shaft

A : Power transmission
B : Cutting off power transmission

< C7M38 (M8S2×5) >

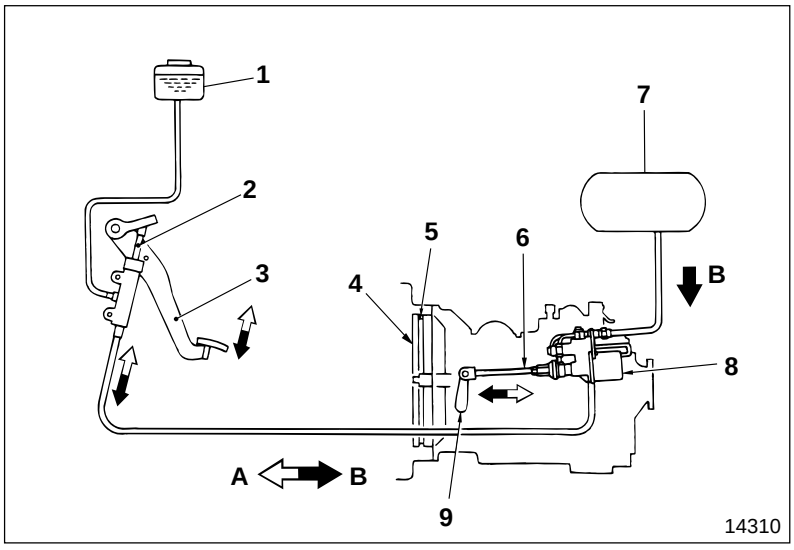

1 Fluid tank
2 Clutch master cylinder
3 Clutch pedal
4 Flywheel
5 Clutch disc
6 Push rod
7 Air tank
8 Clutch booster
9 Release fork shaft

A : Power transmission
B : Cutting off power transmission

Clutch Master Cylinder

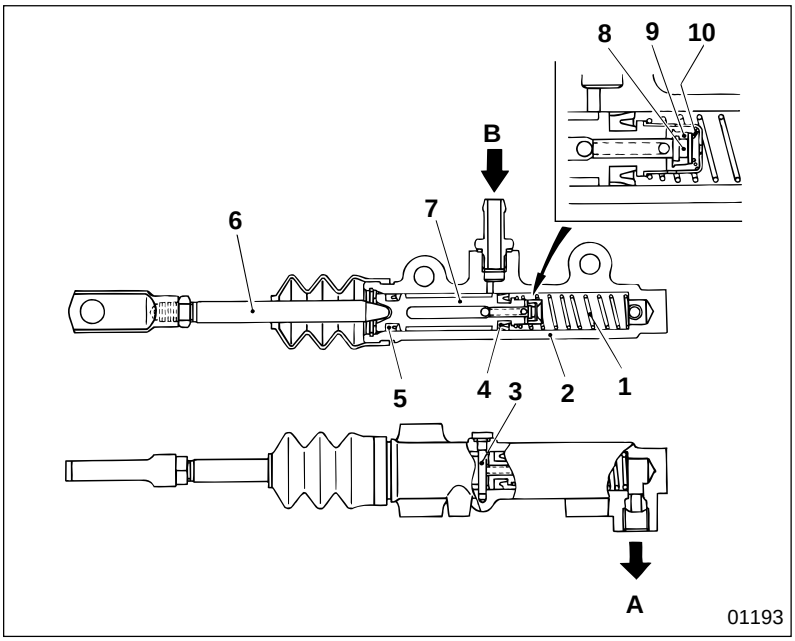

1 Return spring
2 Cylinder
3 Supply valve stopper
4 Primary cup
5 Secondary cup
6 Push rod
7 Piston
8 Supply valve rod
9 Supply valve
10 Supply valve spring

A : To clutch power cylinder
B : From fluid tank

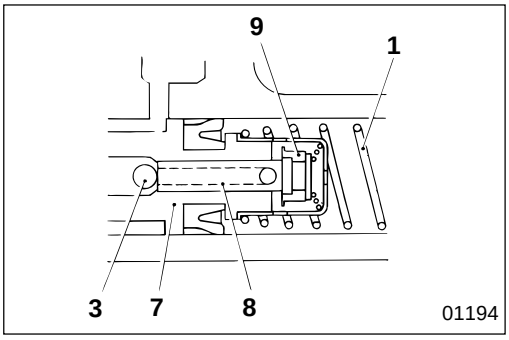

Before clutch pedal is depressed

- As piston **7** is pressed in the direction of push rod **6** by return spring **1**, supply valve rod **8** rests at supply valve stopper **3**, and supply valve **9** remains open.
- This opens the passage between the fluid tank and the clutch.

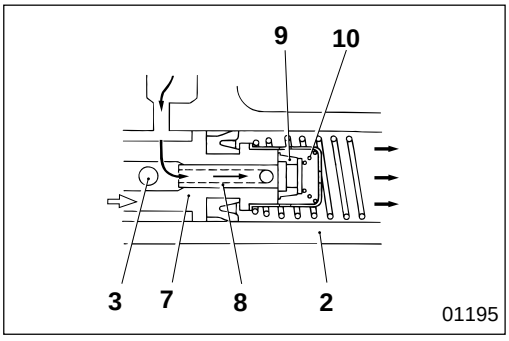

When clutch pedal is depressed

- As push rod **6** pushes piston **7**, supply valve rod **8** separates from supply valve stopper **3**. At the same time, supply valve spring **10** closes supply valve **9**.
- As piston **7** is pressed further, hydraulic pressure is generated inside cylinder **2** to actuate the clutch power cylinder.
- Fluid is supplied in proportion to the amount of movement of piston **7**.

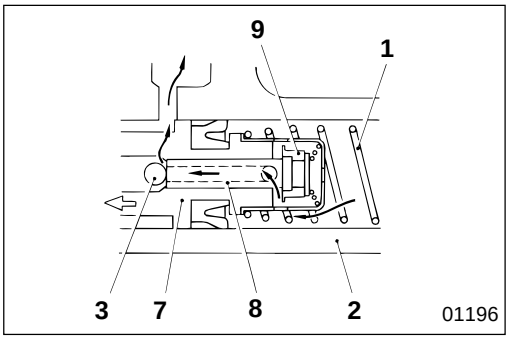

When clutch pedal is released

- The combined repercussive forces of the hydraulic pressure inside cylinder **2** and return spring **1** push piston **7** back, causing supply valve rod **8** to hit supply valve stopper **3**, opening supply valve **9**.
- Fluid from the clutch power cylinder returns to the fluid tank, and hydraulic pressure ceases to exist.

Clutch Booster < C7M38 (M8S2×5) >

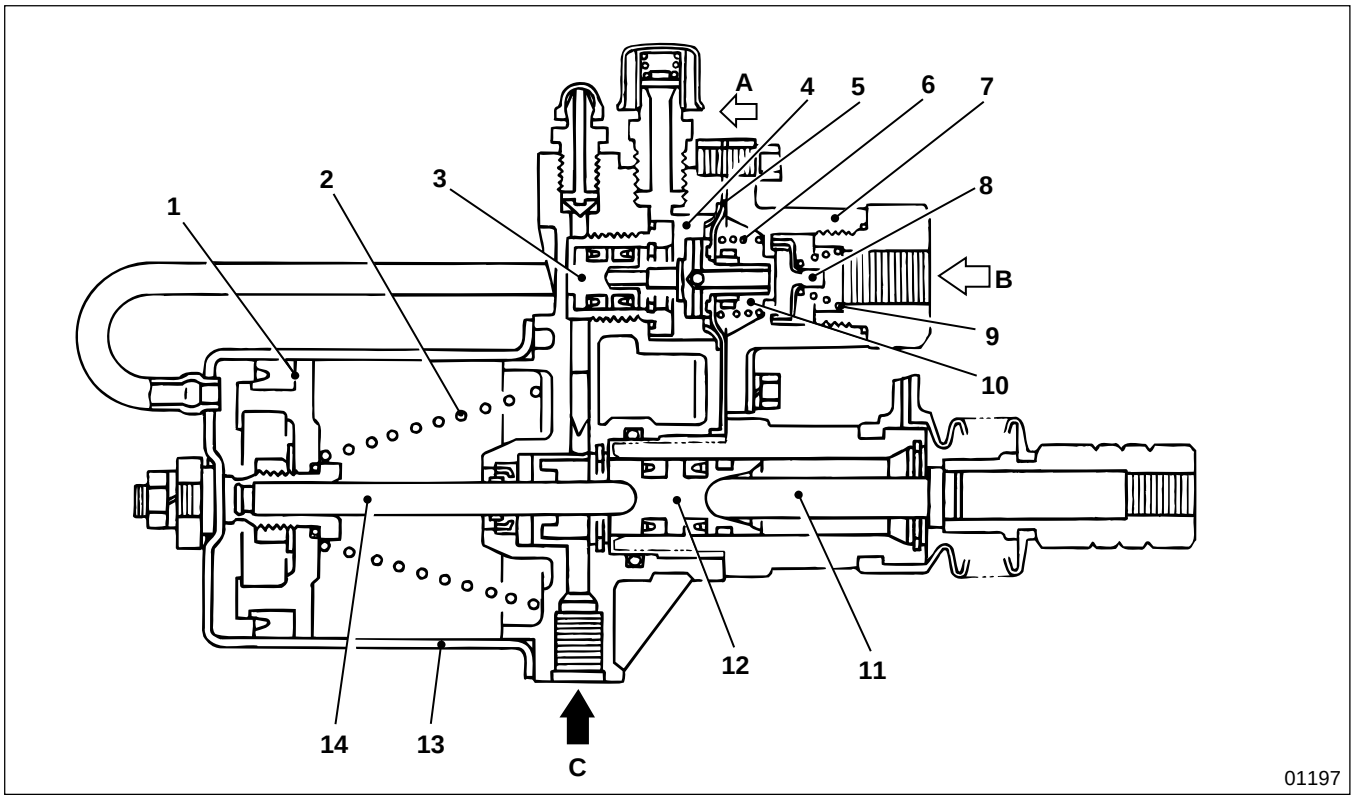

1 Power piston
2 Spring
3 Relay valve piston
4 Air chamber
5 Diaphragm
6 Spring
7 Valve body
8 Poppet valve
9 Spring
10 Control chamber
11 Rod
12 Hydraulic piston
13 Cylinder shell
14 Push rod

A : Atmospheric pressure
B : Air pressure from air tank
C : Hydraulic pressure from clutch master cylinder

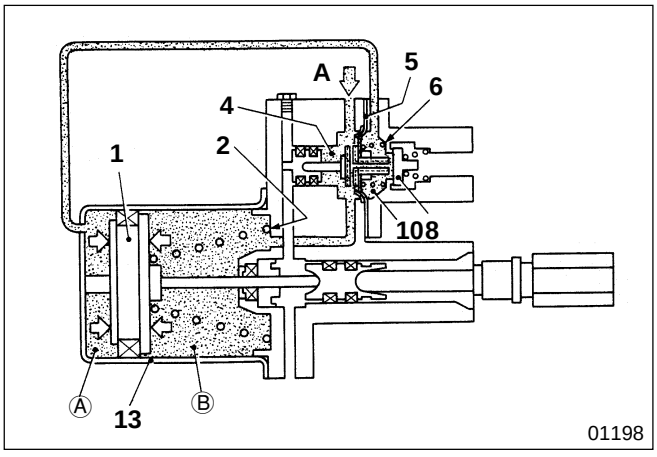

When clutch booster is not operated

- Both air chamber **4** and control chamber **10** are under atmospheric pressure **A**.
- Spring **6** pushes diaphragm **5** to the left, opening a clearance between the diaphragm and poppet valve **8**.
- This clearance connects control chamber **10** to chamber Ⓐ of cylinder shell **13**, so chamber Ⓐ is under atmospheric pressure.
- Since chamber Ⓑ of cylinder shell **13** is connected to air chamber **4**, chamber Ⓑ is under atmospheric pressure. Thus, there is no pressure difference between chambers Ⓐ and Ⓑ.
- Therefore, power piston **1** remains pushed to the left by spring **2**.

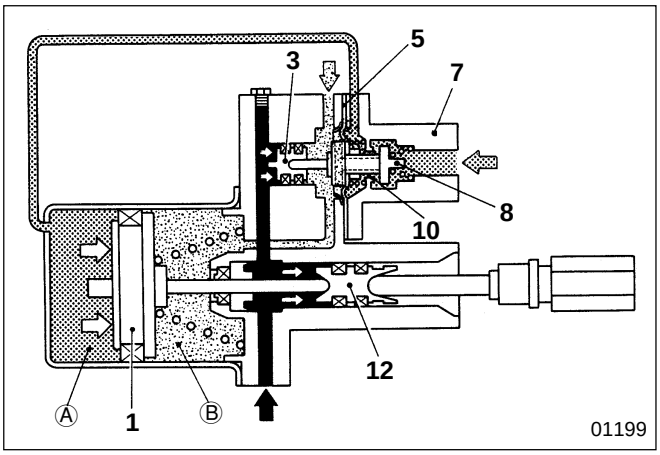

When clutch pedal is depressed

- Hydraulic pressure **C** acts on hydraulic piston **12** and relay valve piston **3**.
- Relay valve piston **3** pushes diaphragm **5** to the right and the diaphragm sticks to poppet valve **8**, closing the clearance.
- This blocks the atmospheric pressure passage between control chamber **10** and chamber Ⓐ.
- Diaphragm **5** pushes poppet valve **8** further, opening a clearance between the poppet valve and valve body **7**.
- Air pressure **B** flows into chamber Ⓐ through this clearance, creating a pressure difference between chambers Ⓐ and Ⓑ.
- This pressure difference acts on power piston **1** to push it to the right where it combines with the hydraulic pressure acting on hydraulic piston **12**, cutting off the clutch at low depression force.

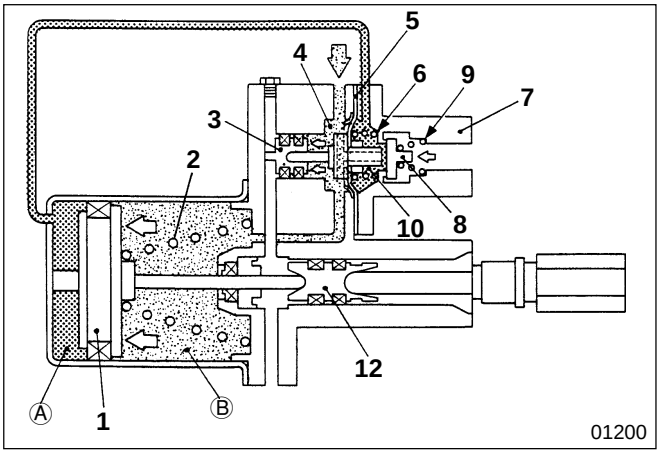

When clutch pedal is released

- The hydraulic pressure acting on hydraulic piston **12** and relay valve piston **3** ceases, freeing the pistons.
- Therefore, diaphragm **5** and poppet valve **8**, being pushed by relay valve piston **3**, are returned to the left by the repercussive force of springs **6**, **9**.
- Poppet valve **8** sticks to valve body **7** to block the air pressure passage to chamber Ⓐ, opening a clearance with diaphragm **5** instead.
- This clearance connects air chamber **4** to control chambers **10** and Ⓐ, and they are all under atmospheric pressure. Since the pressure difference between chambers Ⓐ and Ⓑ is lost, power piston **1** is returned to the left by the repercussive force of spring **2**.

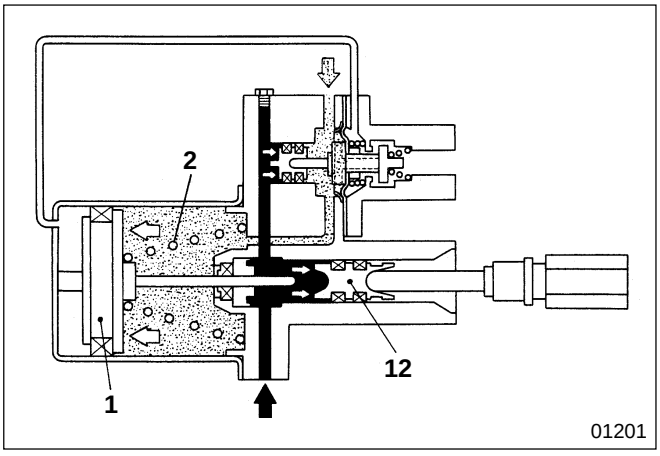

When air system is faulty

- If the air pressure fed by the air tank is lost, the air pressure in chamber Ⓐ is lost, too.
- As a result, power piston **1** is returned to the left by spring **2**.
- Therefore, the clutch is cut off solely by the hydraulic pressure applied to hydraulic piston **12**.

Clutch

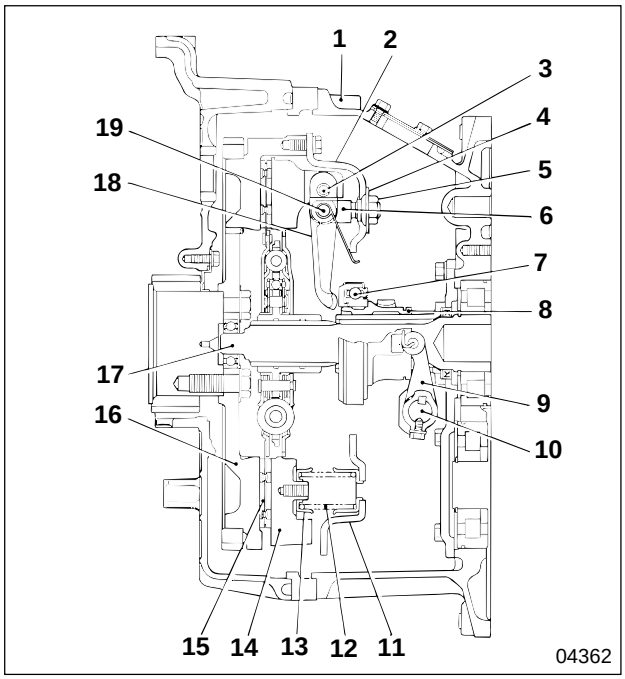

1 Clutch housing
2 Clutch cover
3 Release lever pin
4 Lock plate
5 Support nut
6 Support lever
7 Release bearing
8 Clutch shifter
9 Release fork
10 Release fork shaft
11 Pressure spring cap
12 Pressure spring
13 Pressure spring cap
14 Pressure plate
15 Clutch disc
16 Flywheel
17 Drive pinion
18 Release lever
19 Support lever pin

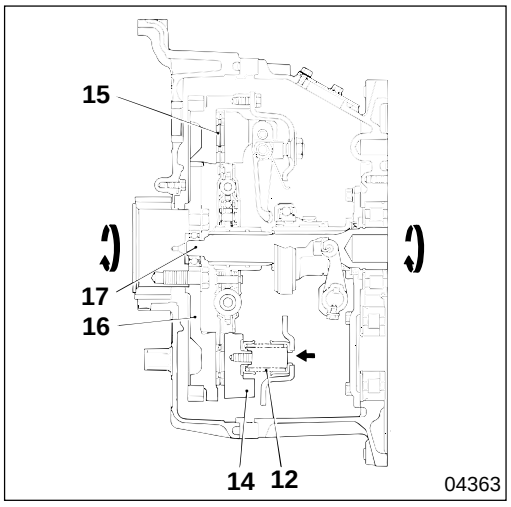

When clutch pedal is released

- Pressure plate **14**, activated by pressure spring **12**, forces clutch disc **15** against flywheel **16**.
- Clutch disc **15** forced against flywheel **16** runs together with the flywheel and transmits power from the engine to transmission drive pinion **17**.

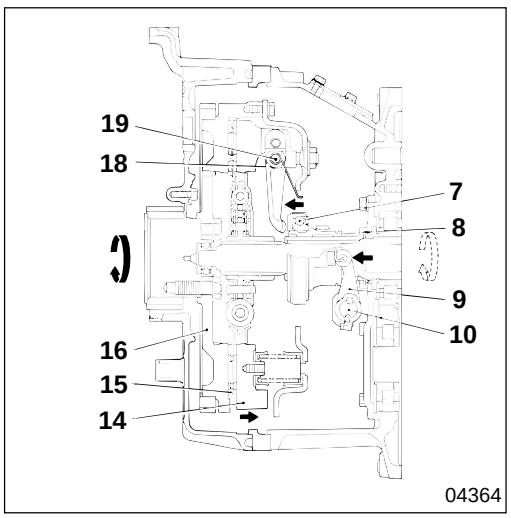

When clutch pedal is depressed

- Hydraulic pressure generated within the clutch master cylinder activates the clutch power cylinder < C6, C7 (M070S6) >, or clutch booster < C7 (M8S2×5) >. Release fork shaft **10** actuates release fork **9** and pushes release bearing **7** forward together with clutch shifter **8**, pushing release lever **18**.
- Release lever **18**, with support lever pin **19** acting as the fulcrum, retracts pressure plate **14**, which opens a clearance between clutch disc **15** and flywheel **16**, cutting off power transmission from the engine.

Possible causes / Symptoms		Clutch disengaged but drags	Clutch slips	Clutch does not engage smoothly	Clutch makes noise on disengagement	Clutch makes noise on engagement	Judder when vehicle starting	Remarks
Pressure plate and lever assembly	Release bearing faulty	○			○			
	Release lever heights uneven	○	○	○			○	
	Pressure plate warped or faulty	○	○	○			○	
	Pressure spring fatigued		○	○		○		
	Loose strap bolts						○	
	Strap plate bent				○			
Clutch disc	Disc deformed	○		○			○	
	Disc rivets loose			○			○	
	Disc torsion spring fatigued or damaged		○	○	○	○	○	
	Spline worn	○			○	○	○	
	Spline area rusted	○		○				
	Facing worn		○					
	Facing surface hardened		○	○			○	
	Facing oily or greasy		○	○			○	
Clutch pedal	Pedal free play insufficient		○					
	Pedal free play excessive	○						
	Pedal stroke insufficient	○						
	Return spring fatigued		○					
	Pedal friction surfaces faulty			○			○	
Clutch master cylinder	Piston and piston cup sliding movement faulty	○	○	○				
	Spring fatigued	○	○	○				
	Brake fluid passage port clogged	○	○	○				
Clutch power cylinder	Return spring fatigued	○	○	○				
	Piston and piston cup sliding movement faulty	○	○	○				
	Brake fluid passage port clogged	○	○	○				
Clutch booster	Piston and piston cup sliding movement faulty	○	○					
	Spring fatigued	○	○					
	Brake fluid port clogged	○	○					
Clutch control	Release bearing faulty						○	
	Clutch shifter sliding movement faulty						○	
	Clutch shifter lubrication insufficient						○	
	Clutch release fork deformed						○	
Transmission drive pinion spline worn		○				○		Gr 22A, B
Engine idling speed too slow						○		Gr 13
Engine mounting fatigued							○	Gr 10
Flywheel warped, deformed or worn forming steps		○	○	○			○	Gr 11
Flywheel pilot bearing faulty		○			○			
Air mixed in clutch hydraulic system		○						
Clutch hydraulic system leaking		○						

Clutch Fluid (Brake Fluid) Replacement and Air Bleeding < Clutch Power Cylinder >

Tightening torque

Unit : N·m {lbf.ft, kgf·m}

Location	Parts to be tightened	Tightening torque	Remarks
1	Air bleeder	25 to 34 {18 to 25, 2.5 to 3.5}	—

Fluid

Location	Points of application	Kinds	Quantity
4	Fluid tank	Brake fluid (SAE J1703f or FMVSS No.116 DOT3)	As required

CAUTION

- **Be careful not to splash brake fluid on related parts as this could damage the paintwork.**
- **Be sure to wipe off brake fluid immediately if you splash it on the paintwork.**
- **You must use new brake fluid (SAE J1703f or FMVSS No. 116 DOT3). Do not add different quality fluid or mineral oil (gas oil, engine oil, gear oil, automatic transmission fluid, etc.) to the clutch system, because this will cause the rubber parts of the clutch system to swell, resulting in faulty clutch operation.**
- **Do not allow foreign particles or water to become mixed into the brake fluid when refilling, because this will cause faulty clutch operation.**
- **If you use a mug for adding brake fluid, keep it solely for that purpose to prevent contamination from different quality fluids or mineral oils.**

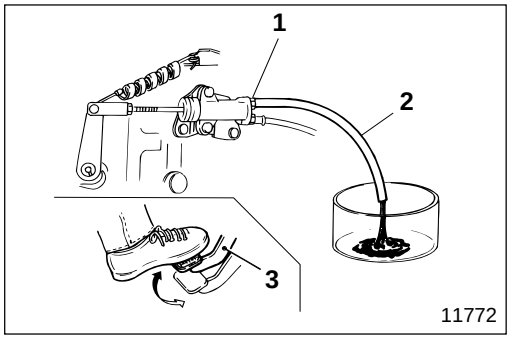

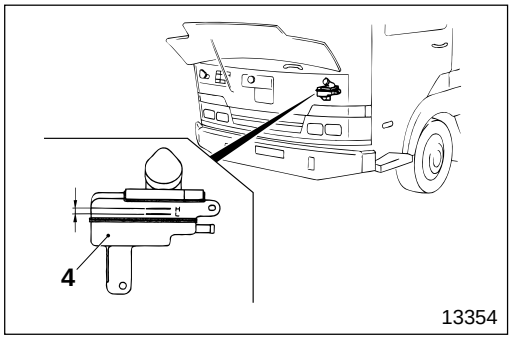

(1) Replacement of brake fluid

- Attach vinyl pipe **2** to air bleeder **1** of the clutch power cylinder.
- Loosen air bleeder **1** and depress clutch pedal **3** several times to drain brake fluid completely.
- Supply new brake fluid to the "**H**" level of fluid tank **4**. Depress clutch pedal **3** repeatedly until the old brake fluid discharged from vinyl pipe **2** is replaced by the new brake fluid.

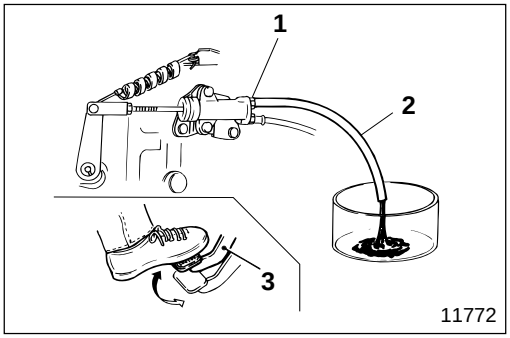

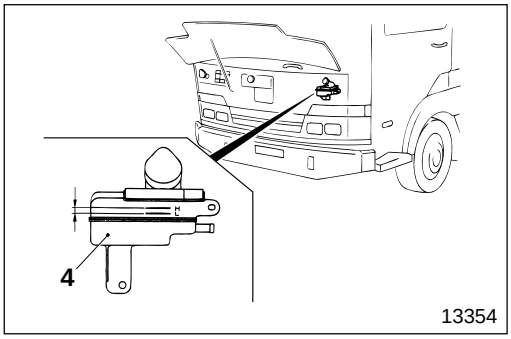

(2) Air bleeding of clutch system

NOTE

Carry out this operation maintaining the brake fluid level in fluid tank 4 between "H" and "L".

- Attach vinyl pipe **2** to air bleeder **1** of the clutch power cylinder as in the replacement procedure.
- Fill fluid tank **4** with brake fluid, and loosen air bleeder **1** of the clutch power cylinder, then depress clutch pedal **3** continuously.
- Keep depressing clutch pedal **3**, and tighten air bleeder **1** when air is bled completely.
- Depress clutch pedal **3** several times again, then keep it depressed at its fullest extent.
- With clutch pedal **3** depressed, loosen air bleeder **1** to drain brake fluid containing air. Release the pedal after tightening the air bleeder.
- Repeat this operation until air is no longer present in the fluid being drained.
- When this operation is completed, tighten air bleeder **1** at specified torque.
- Check that brake fluid is at the "**H**" level of fluid tank **4**, and supply new brake fluid if necessary.
- Check for brake fluid leakage from each of the parts with clutch pedal **3** depressed.

Clutch Fluid (Brake Fluid) Replacement and Air Bleeding < Clutch Booster >

Tightening torque

Unit : N·m {lbf.ft, kgf·m}

Location	Parts to be tightened	Tightening torque	Remarks
1	Air bleeder	6.9 to 13 {5.1 to 9.4, 0.7 to 1.3}	—

Fluid

Location	Points of application	Kinds	Quantity
4	Fluid tank	Brake fluid (SAE J1703f or FMVSS No.116 DOT3)	As required

CAUTION

- **Be careful not to splash brake fluid on related parts as this could damage the paintwork.**
- **Be sure to wipe off brake fluid immediately if you splash it on the paintwork.**
- **You must use new brake fluid (SAE J1703f or FMVSS No. 116 DOT3). Do not add different quality fluid or mineral oil (gas oil, engine oil, gear oil, automatic transmission fluid, etc.) to the clutch system, because this will cause the rubber parts of the clutch system to swell, resulting in faulty clutch operation.**
- **Do not allow foreign particles or water to become mixed into the brake fluid when refilling, because this will cause faulty clutch operation.**
- **If you use a mug for adding brake fluid, keep it solely for that purpose to prevent contamination from different quality fluids or mineral oils.**

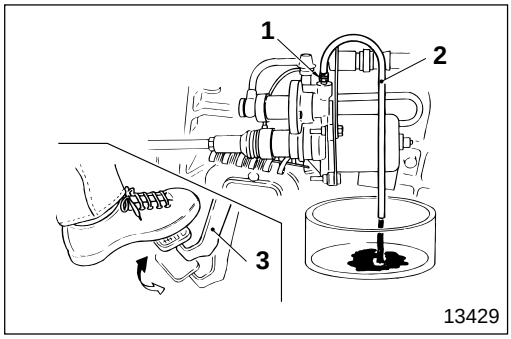

(1) Replacement of brake fluid

- Attach vinyl pipe **2** to air bleeder **1** of the clutch booster.
- Loosen air bleeder **1** and depress clutch pedal **3** several times to drain brake fluid completely.
- Supply new brake fluid to the "**H**" level of fluid tank **4**. Depress clutch pedal **3** repeatedly until the old brake fluid discharged from vinyl pipe **2** is replaced by the new brake fluid.

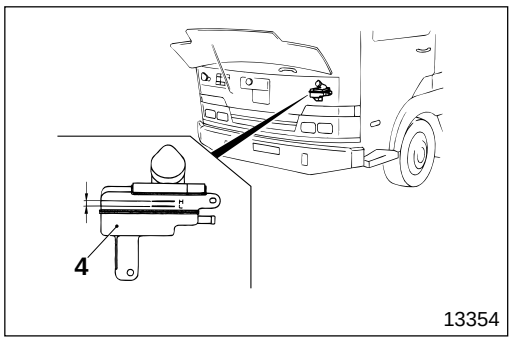

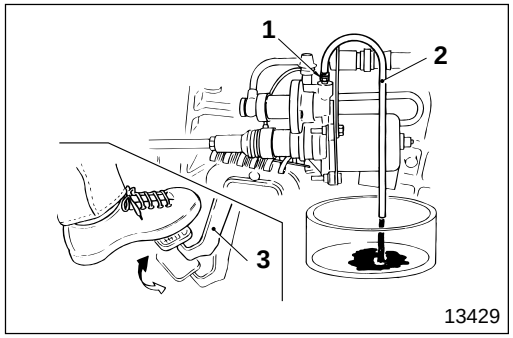

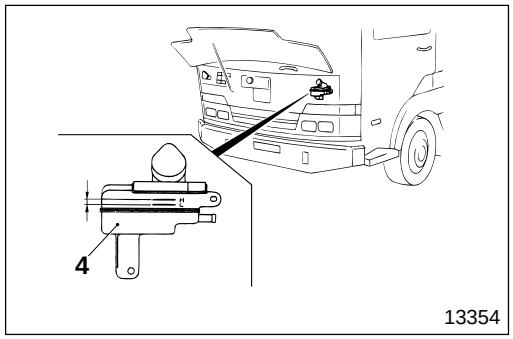

(2) Air bleeding of clutch system

NOTE

Carry out this operation maintaining the brake fluid level in fluid tank 4 between "H" and "L".

- Attach vinyl pipe **2** to air bleeder **1** of the clutch booster as in the replacement procedure.
- Fill fluid tank **4** with brake fluid, and loosen air bleeder **1** of the clutch booster, then depress clutch pedal **3** continuously.
- Keep depressing clutch pedal **3**, and tighten air bleeder **1** when air is bled completely.
- Depress clutch pedal **3** several times again, then keep it depressed at its fullest extent.
- With clutch pedal **3** depressed, loosen air bleeder **1** to drain brake fluid containing air. Release the pedal after tightening the air bleeder.
- Repeat this operation until air is no longer present in the fluid being drained.
- When this operation is completed, tighten air bleeder **1** at specified torque.
- Check that brake fluid is at the "**H**" level of fluid tank **4**, and supply new brake fluid if necessary.
- Check for brake fluid leakage from each of the parts with clutch pedal **3** depressed.

Inspection of Function < Clutch Booster >

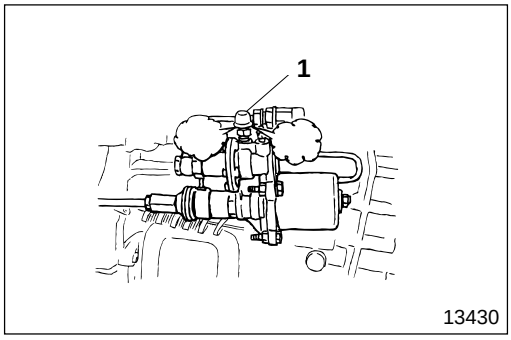

- Make sure that the depression force required to depress the clutch pedal when the air pressure is 0 kPa {0 lbf/in^2, 0 kgf/cm^2} is notably different from that when the air pressure is 590 to 785 kPa {85 to 115 lbf/in^2, 6 to 8 kgf/cm^2}.
- Make sure that air is instantly bled from exhaust cover **1** when you release the clutch pedal.

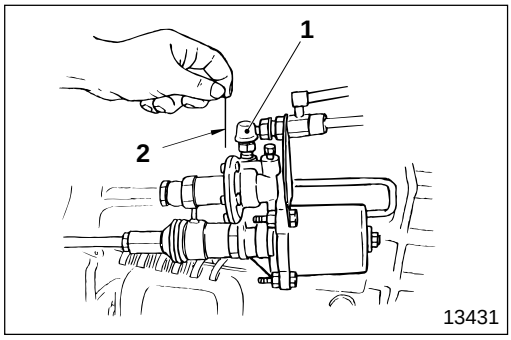

- Apply air pressure of 590 to 785 kPa {85 to 115 lbf/in^2, 6 to 8 kgf/cm^2} and hang thread **2** in front of exhaust cover **1**. Make sure that the thread is not blown upward when depressing and releasing the clutch pedal.
  If the thread is blown upward, it indicates that air is leaking from the poppet valve.

Clutch Pedal Free Play < Clutch Power Cylinder >

Service standards

Unit : mm {in.}

Location	Maintenance item	Standard value	Limit	Remedy
2	Push rod stroke	3.8 {0.15}	—	Adjust or replace
4	Clutch pedal free play	32 to 44 {1.25 to 1.73}	—	Adjust or replace

Inspect and adjust the free play of the clutch pedal, by noting the stroke of the clutch power cylinder push rod, after the clutch pedal has been correctly adjusted.

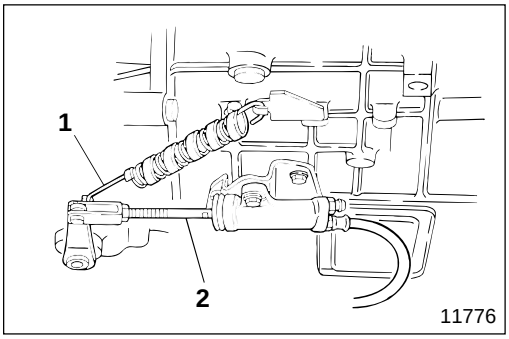

[Inspection]

- Bleed air from the clutch system. P21-9
- Adjust the clutch pedal. P21-18
- Remove return spring **1** and measure the free travel of push rod **2** by moving it with your hand. If the measured value deviates from the standard value, adjust as follows:

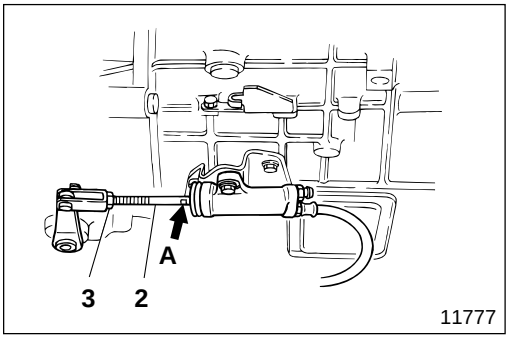

[Adjustment]

- Loosen nut **3** and turn head **A** of push rod **2** to extend the push rod until it stops.
- Then, slacken off head **A** of push rod **2** by the following value and retighten nut **3**.

  Amount of slackening off: Approximately three turns

- If push rod **2** does not return by the above amount, replace the clutch disc because it is worn beyond the limit.

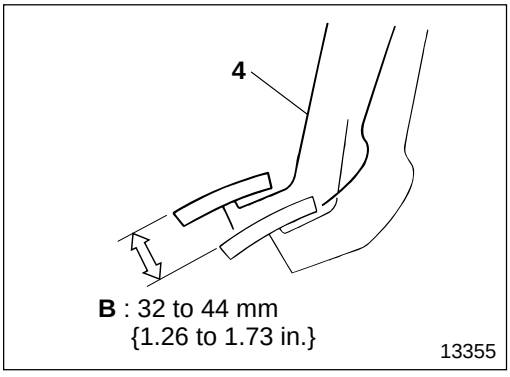

[Confirmation]

Push clutch pedal **4** with your hand until you feel a resistance and measure free play **B**.

If the measured value deviates from the standard value, readjust or replace the clutch disc.

Clutch Pedal Free Play < Clutch Booster >

Service standards

Unit : mm {in.}

Location	Maintenance item	Standard value	Limit	Remedy
2	Push rod stroke	3.2 {0.13}	—	Adjust or replace
5	Clutch pedal free play	25 to 37 {0.98 to 1.46}	—	Adjust or replace

Inspect and adjust the free play of the clutch pedal, by noting the stroke of the clutch booster push rod, after the clutch pedal has been correctly adjusted.

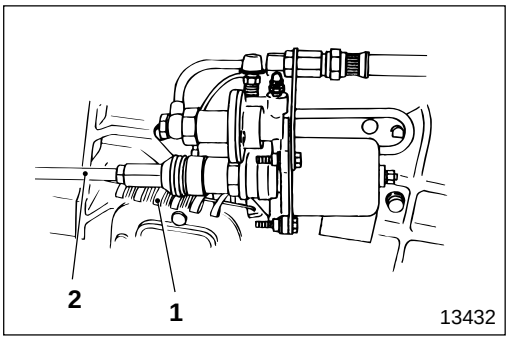

[Inspection]

- Bleed air from the clutch system. P21-11
- Adjust the clutch pedal. P21-22
- Remove return spring **1** and measure the free travel of push rod **2** by moving it with your hand. If the measured value deviates from the standard value, adjust as follows:

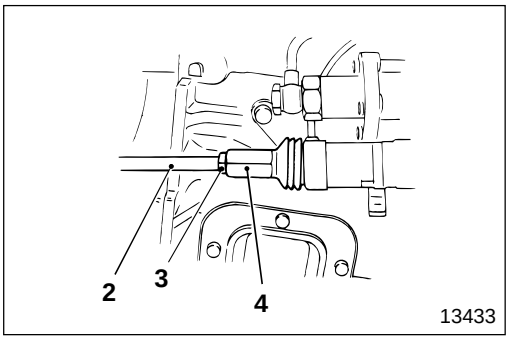

[Adjustment]

- Loosen nut **3** and turn head **4** of push rod **2** to extend the push rod until it stops.
- Then, slacken off head **4** of push rod **2** by the following value and retighten nut **3**.
  Amount of slackening off: Approximately two and three-fifth turns
- If push rod **2** does not return by the above amount, replace the clutch disc because it is worn beyond the limit.

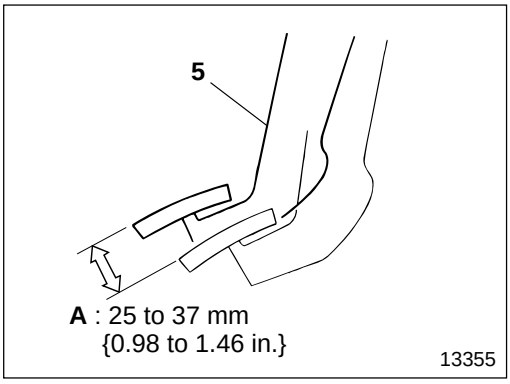

[Confirmation]

Push clutch pedal **5** with your hand until you feel a resistance and measure free play **A**.
If the measured value deviates from the standard value, readjust or replace the clutch disc.

M E M O

CLUTCH PEDAL < C6, C7 (M070S6) >

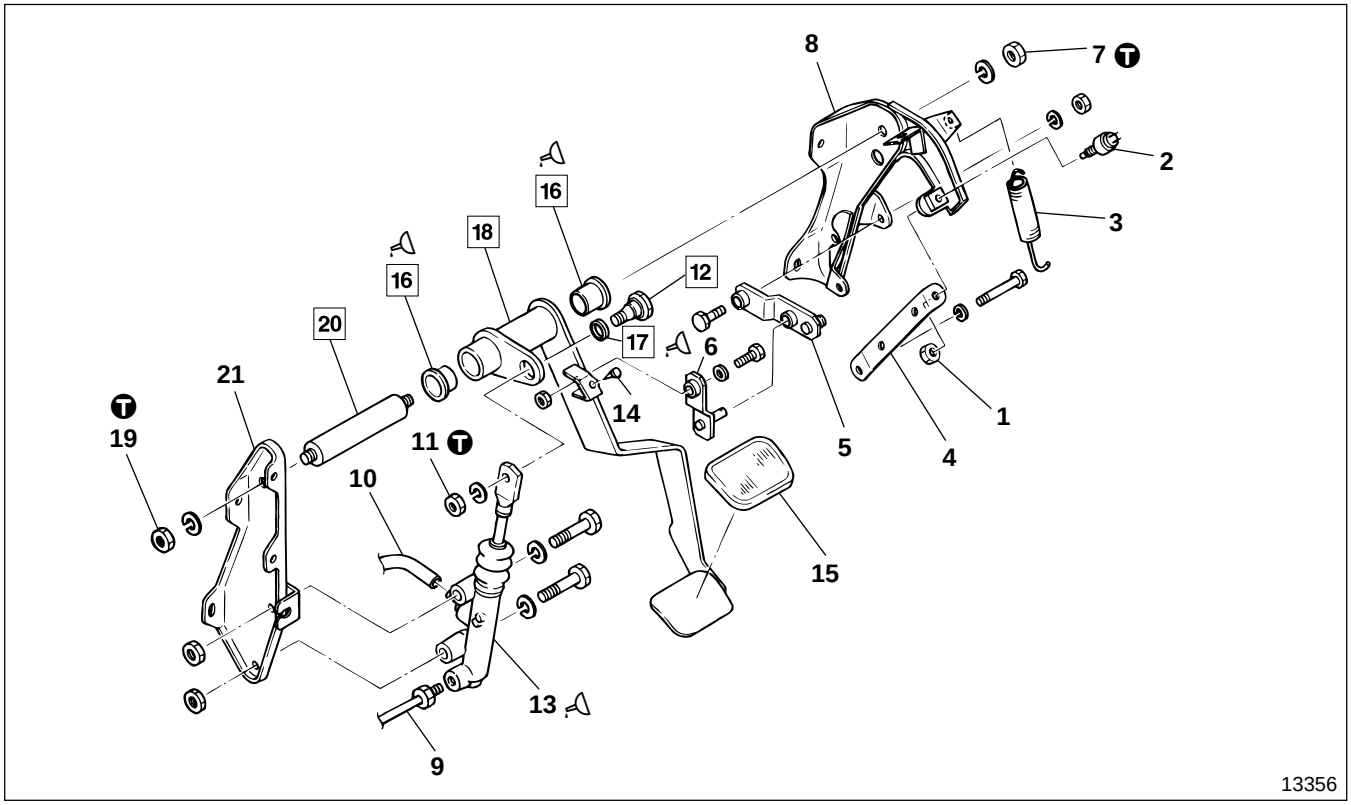

● **Disassembly sequence**

1 Nut
2 Clutch switch Gr 54
3 Return spring
4 Clutch switch stay
5 Lever assembly B
6 Lever assembly A
7 Nut
8 Clutch pedal bracket, RH
9 Clutch pipe
10 Clutch hose
11 Nut
12 Offset bolt
13 Clutch master cylinder P21-24
14 Clutch switch stopper
15 Pedal pad
16 Bushing
17 Bushing
18 Clutch pedal arm
19 Nut
20 Pedal arm shaft
21 Clutch pedal bracket, LH

● **Assembly sequence**

Follow the disassembly sequence in reverse.

Service standards

Unit : mm {in.}

Location	Maintenance item	Standard value	Limit	Remedy
3	Installed load of return spring	91 N {21 lbf, 9.3 kgf}	—	—
12, 17	Clearance between offset bolt and bushing	0.06 to 0.36 {0.0024 to 0.014}	—	Replace
16, 20	Clearance between bushing and pedal arm shaft	0.16 to 0.24 {0.0063 to 0.0094}	—	Replace

T Tightening torque

Unit : N·m {lbf.ft, kgf·m}

Location	Parts to be tightened	Tightening torque	Remarks
7, 19	Nut (Pedal arm shaft mounting)	48.1±9.8 {35±7.2, 4.9±1}	—
11	Nut (Offset bolt mounting)	48.1±9.8 {35±7.2, 4.9±1}	—

Lubricant

Location	Points of application	Kinds	Quantity
13	Offset bolt installation area	Chassis grease [NLGI No.1 (Ca soap)]	As required
16	Interior of bushing	Chassis grease [NLGI No.1 (Ca soap)]	As required
17	Interior of bushing	Chassis grease [NLGI No.1 (Ca soap)]	As required

◆ Service procedure

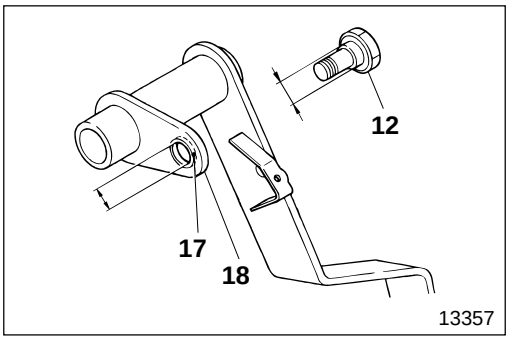

12 **17** **Offset bolt and bushing**

[Inspection]
Replace faulty parts if clearance is higher than the standard value.

NOTE

Inspect bushing 17 when it is press-fitted in clutch pedal arm 18.

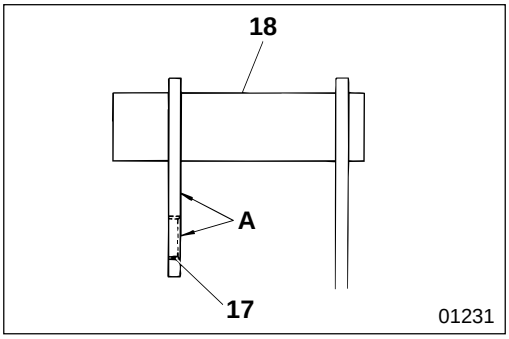

[Press-fitting]
Make ends **A** of bushing **17** and clutch pedal arm **18** flush.

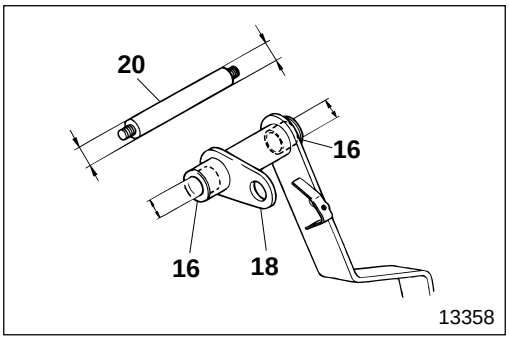

16 **20** **Clearance between bushing and pedal arm shaft**

If clearance is higher than the standard value, replace the faulty parts.

NOTE

Inspect bushing 16 when it is press-fitted in clutch pedal arm 18.

CLUTCH PEDAL < C6, C7 (M070S6) >

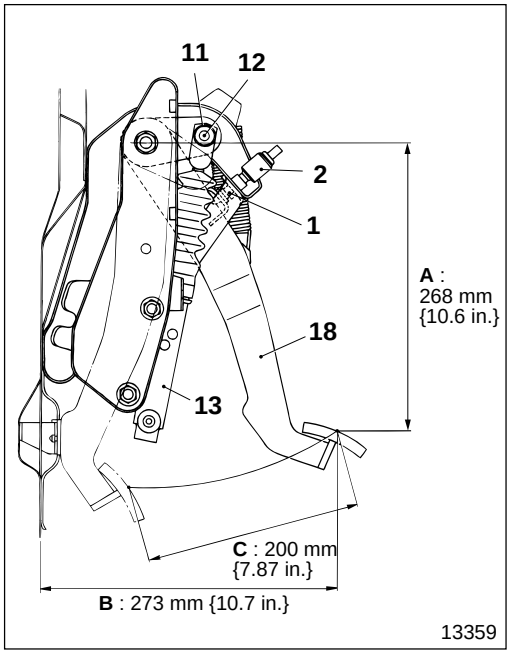

18 **Adjustment of clutch pedal**

- Loosen offset bolt **12** and nut **11** of clutch master cylinder **13**.
- Turn clutch switch **2** so that clutch pedal arm **18** is installed keeping dimensions **A**, **B**, **C** as illustrated, then tighten nut **1**.

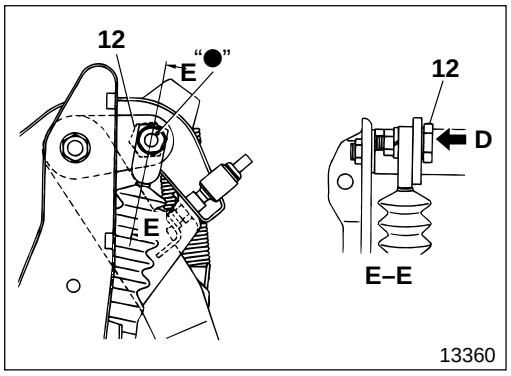

- At this time, temporarily tighten offset bolt **12** in the direction as illustrated.
  D : "●" mark side

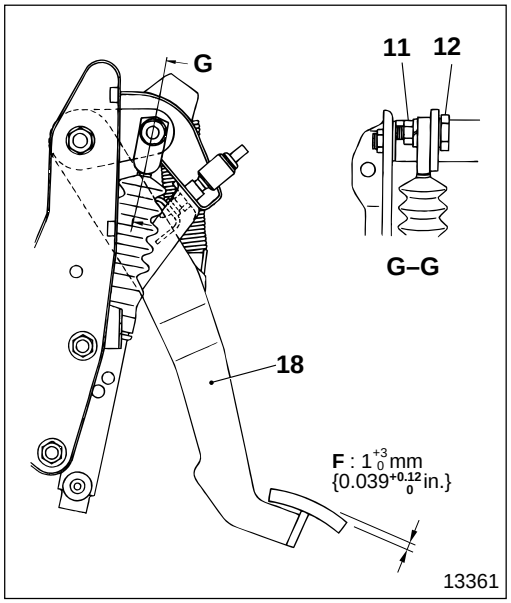

- Then, turn offset bolt **12** to adjust free play **F** at the top of clutch pedal arm **18** to the dimensions as illustrated, then tighten nut **11**.

M E M O

CLUTCH PEDAL < C7 (M8S2×5) >

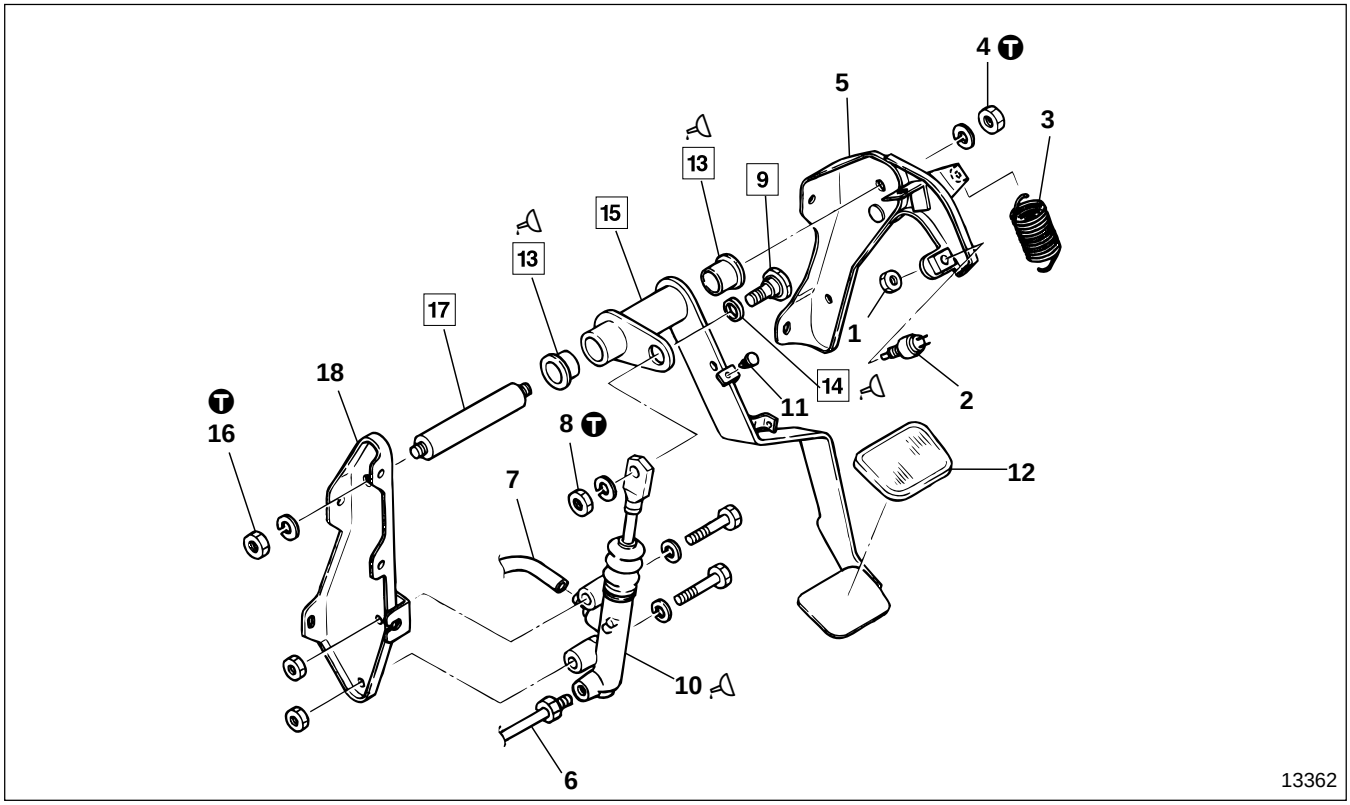

● **Disassembly sequence**

1 Nut
2 Clutch switch Gr 54
3 Return spring
4 Nut
5 Clutch pedal bracket, RH
6 Clutch pipe
7 Clutch hose
8 Nut
9 Offset bolt
10 Clutch master cylinder P21-24
11 Clutch switch stopper
12 Pedal pad
13 Bushing
14 Bushing
15 Clutch pedal arm
16 Nut
17 Pedal arm shaft
18 Clutch pedal bracket, LH

● **Assembly sequence**

Follow the disassembly sequence in reverse.

Service standards

Unit : mm {in.}

Location	Maintenance item	Standard value	Limit	Remedy
3	Installed load of return spring	91 N {21 lbf, 9.3 kgf}	—	—
9, 14	Clearance between offset bolt and bushing	0.06 to 0.36 {0.0024 to 0.014}	—	Replace
13, 17	Clearance between bushing and pedal arm shaft	0.16 to 0.24 {0.0063 to 0.0094}	—	Replace

Ⓣ Tightening torque

Unit : N·m {lbf.ft, kgf·m}

Location	Parts to be tightened	Tightening torque	Remarks
4, 16	Nut (Pedal arm shaft mounting)	48.1±9.8 {35±7.2, 4.9±1}	—
8	Nut (Offset bolt mounting)	48.1±9.8 {35±7.2, 4.9±1}	—

Lubricant

Location	Points of application	Kinds	Quantity
10	Offset bolt installation area	Chassis grease [NLGI No.1 (Ca soap)]	As required
13	Interior of bushing	Chassis grease [NLGI No.1 (Ca soap)]	As required
14	Interior of bushing	Chassis grease [NLGI No.1 (Ca soap)]	As required

◆ Service procedure

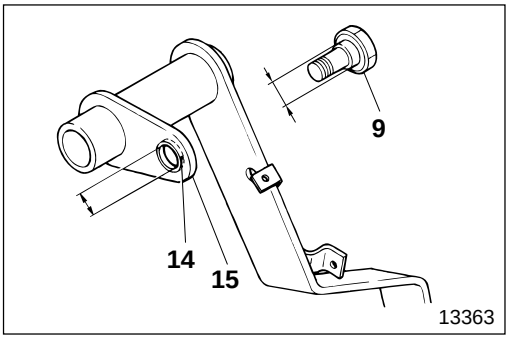

9 **14** **Offset bolt and bushing**

[Inspection]
Replace faulty parts if clearance is higher than the standard value.

NOTE

Inspect bushing 14 when it is press-fitted in clutch pedal arm 15.

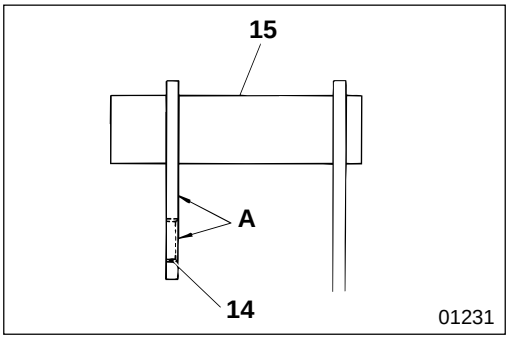

[Press-fitting]
Make ends **A** of bushing **14** and clutch pedal arm **15** flush.

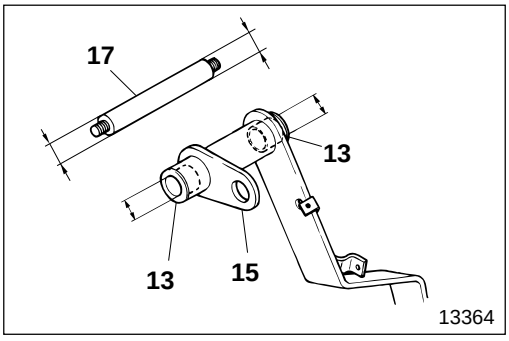

13 **17** **Clearance between bushing and pedal arm shaft**

If clearance is higher than the standard value, replace the faulty parts.

NOTE

Inspect bushing 13 when it is press-fitted in clutch pedal arm 15.

CLUTCH PEDAL < C7 (M8S2×5) >

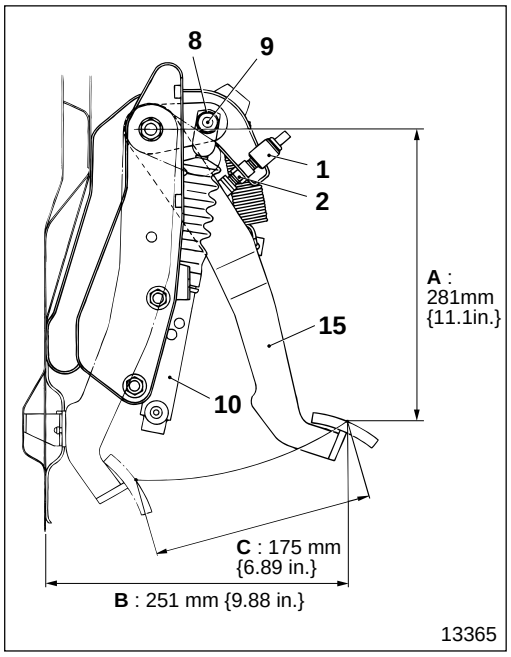

15 **Adjustment of clutch pedal**

- Loosen offset bolt **9** and nut **8** of clutch master cylinder **10**.
- Turn clutch switch **2** so that clutch pedal arm **15** is installed keeping dimensions **A**, **B**, **C** as illustrated, then tighten nut **1**.

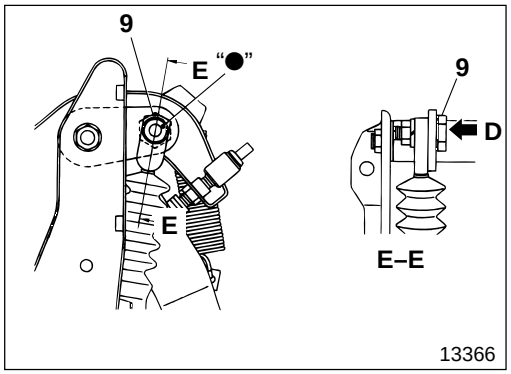

- At this time, temporarily tighten offset bolt **9** in the direction as illustrated.
  D : "●" mark side

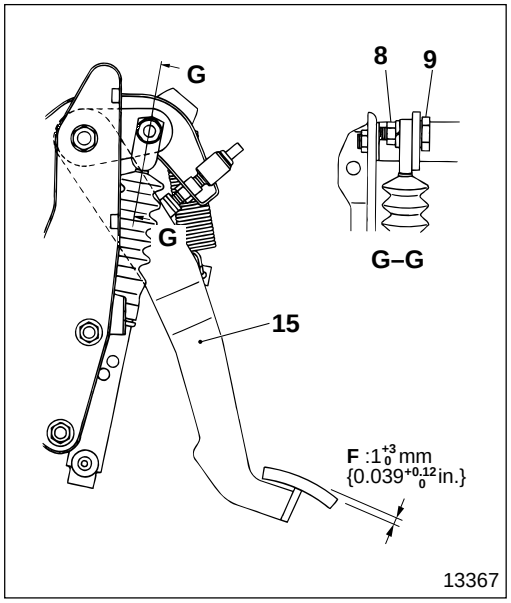

- Then, turn offset bolt **9** to adjust free play **F** at the top of clutch pedal arm **15** to the dimensions as illustrated, then tighten nut **8**.

M E M O

CLUTCH MASTER CYLINDER

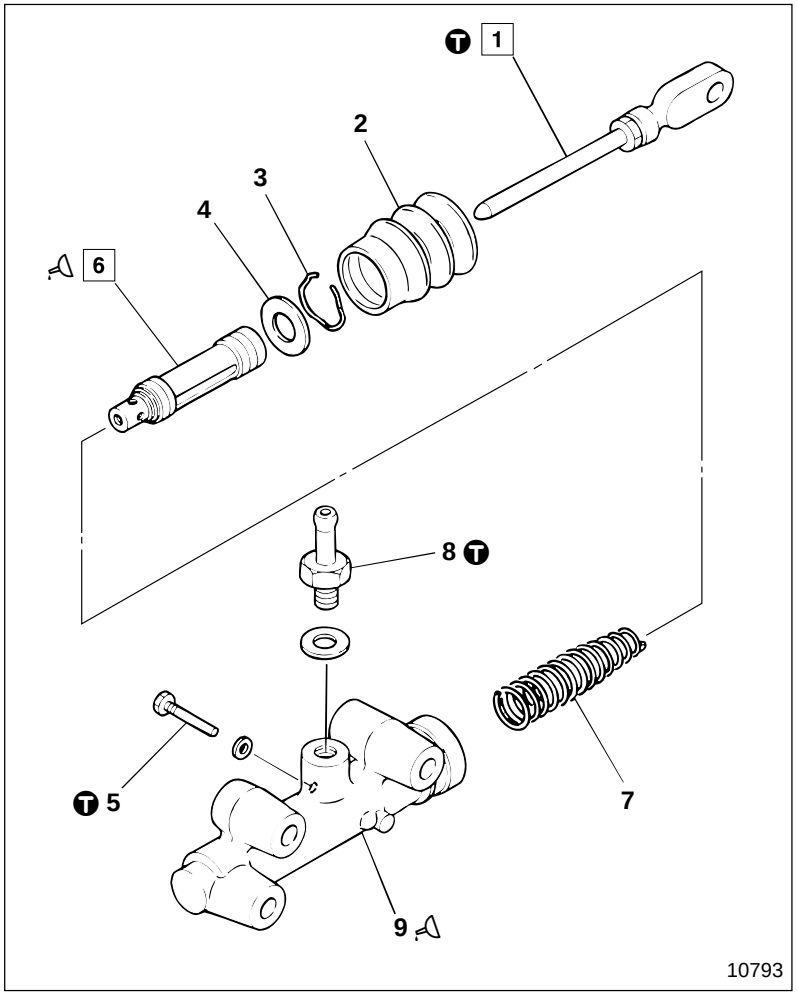

● **Disassembly sequence**

1 Push rod
2 Boot
3 Piston stop ring
4 Piston stop plate
5 Supply valve stopper
6 Piston assembly
7 Return spring
8 Nipple
9 Cylinder

● **Assembly sequence**

Follow the disassembly sequence in reverse.
Repair kit: Piston and boot kit

Service standards

Unit : mm {in.}

Location	Maintenance item	Standard value (Basic diameter in [ ])	Limit	Remedy
6, 9	Clearance between piston assembly and cylinder	[19.05] 0.020 to 0.105 {[0.75] 0.00079 to 0.0041}	0.2 {0.0079}	Replace
7	Free length of return spring	97 {3.82}	92 {3.62}	Replace

Ⓣ Tightening torque

Unit : N·m {lbf.ft, kgf·m}

Location	Parts to be tightened	Tightening torque	Remarks
1	Push rod (Lock nut mounting)	9.8 to 14.7 {7.2 to 11, 1.0 to 1.5}	—
5	Supply valve stopper	1.47 to 2.94 {1.1 to 2.2, 0.15 to 0.3}	—
8	Nipple	24.5 to 34.3 {18 to 25, 2.5 to 3.5}	—

Lubricant

Location	Points of application	Kinds	Quantity
6, 9	Friction surfaces between piston assembly and cylinder	Rubber grease	As required

◆ Service procedure

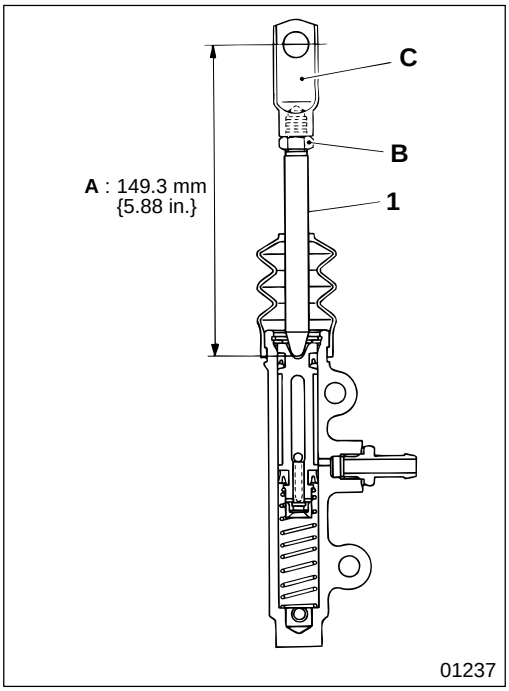

1 Adjustment of push rod length

If illustrated dimension **A** does not conform to the standard value, loosen lock nut **B** of push rod **1** and turn head **C** to adjust.
After adjustment, tighten lock nut at specified torque.

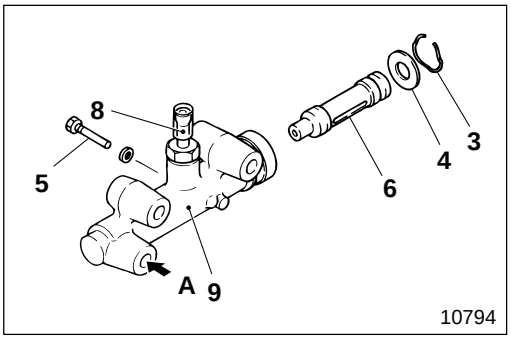

6 Piston assembly

[Removal]

- Remove piston stop ring **3**, piston stop plate **4** and supply valve stopper **5**.
- Block nipple **8** of cylinder **9**, and apply compressed air from **A** as illustrated to remove piston assembly **6**.

WARNING⚠

You must apply compressed air gradually when you remove piston assembly 6. If you applied compressed air strongly at one time, the piston assembly would be violently ejected.

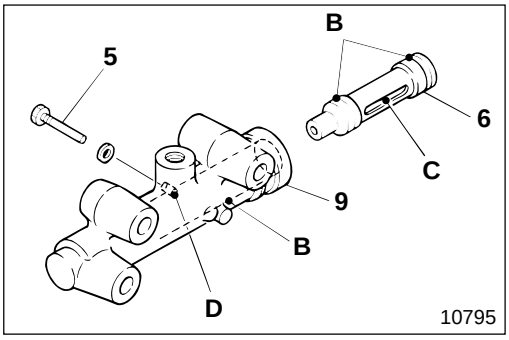

[Installation]

- Apply grease to friction surfaces **B** of piston assembly **6** and cylinder **9**.
- Fit piston by aligning piston assembly **6** groove **C** to cylinder **9** hole **D**, then insert valve stopper **5** to hold the piston in place.

CLUTCH POWER CYLINDER < C6, C7 (M070S6) >

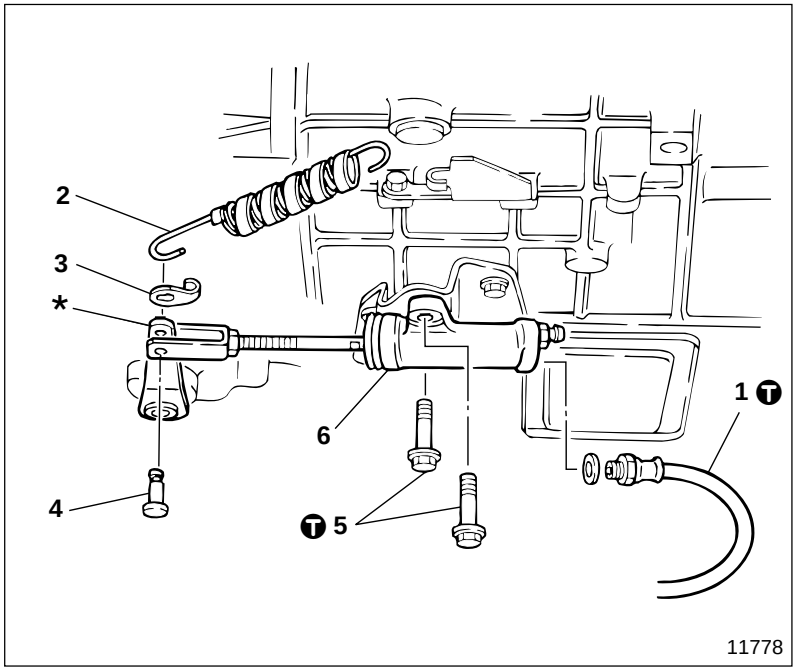

● **Removal sequence**

1 Fluid hose
2 Return spring
3 Return spring claw
4 Clevis pin
5 Bolt
6 Clutch power cylinder assembly
📖 P21-27

***** : Clutch release fork shaft

CAUTION⚠

After removing fluid hose 1, fit blanking plugs into its openings to prevent fluid from flowing out.

● **Installation sequence**

Follow the removal sequence in reverse.

T Tightening torque

Unit : N·m {lbf.ft, kgf·m}

Location	Parts to be tightened	Tightening torque	Remarks
1	Fluid hose connection	21 to 31 {15 to 23, 2.1 to 3.2}	—
5	Bolt (Clutch power cylinder assembly mounting)	47 {35, 4.8}	—

Clutch Power Cylinder Assembly

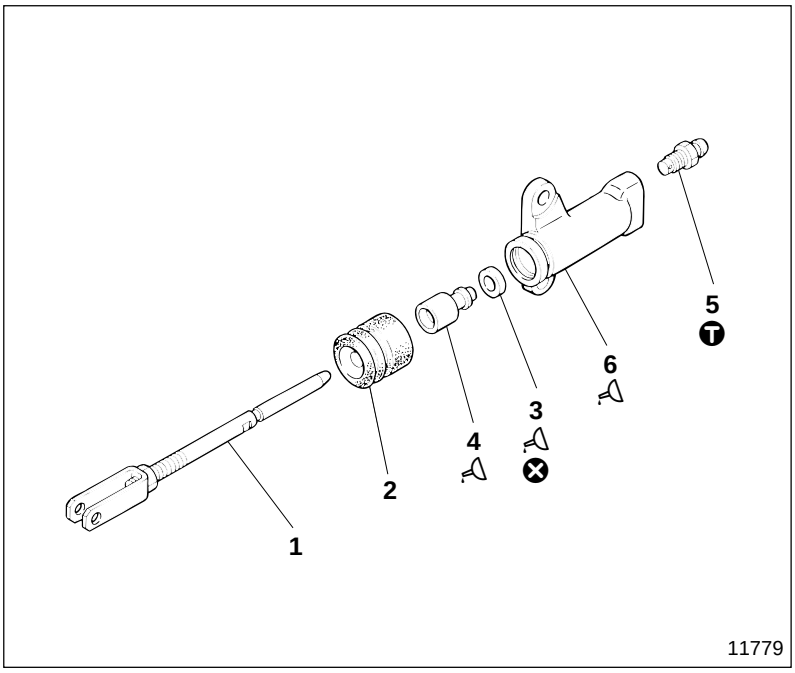

● **Disassembly sequence**

1 Push rod
2 Boot
3 Piston cup
4 Piston
5 Air bleeder plug
6 Cylinder

⊗ : Non-reusable parts

● **Assembly sequence**

4→3→6→5→2→1

Service standards

Unit : mm {in.}

Location	Maintenance item	Standard value (Basic diameter in [ ])	Limit	Remedy
4, 6	Clearance between cylinder and piston	[20.64] 0.04 to 0.125 {[0.81] 0.0016 to 0.0049}	0.24 {0.0094}	Replace

Ⓣ Tightening torque

Unit : N·m {lbf.ft, kgf·m}

Location	Parts to be tightened	Tightening torque	Remarks
5	Air bleeder	25 to 34 {18 to 25, 2.5 to 3.5}	—

Lubricant

Location	Points of application	Kinds	Quantity
3	Piston cup circumference	Rubber grease	As required
4	Friction surface of piston	Rubber grease	As required
6	Cylinder bore	Rubber grease	As required

CLUTCH BOOSTER < C7 (M8S2×5) >

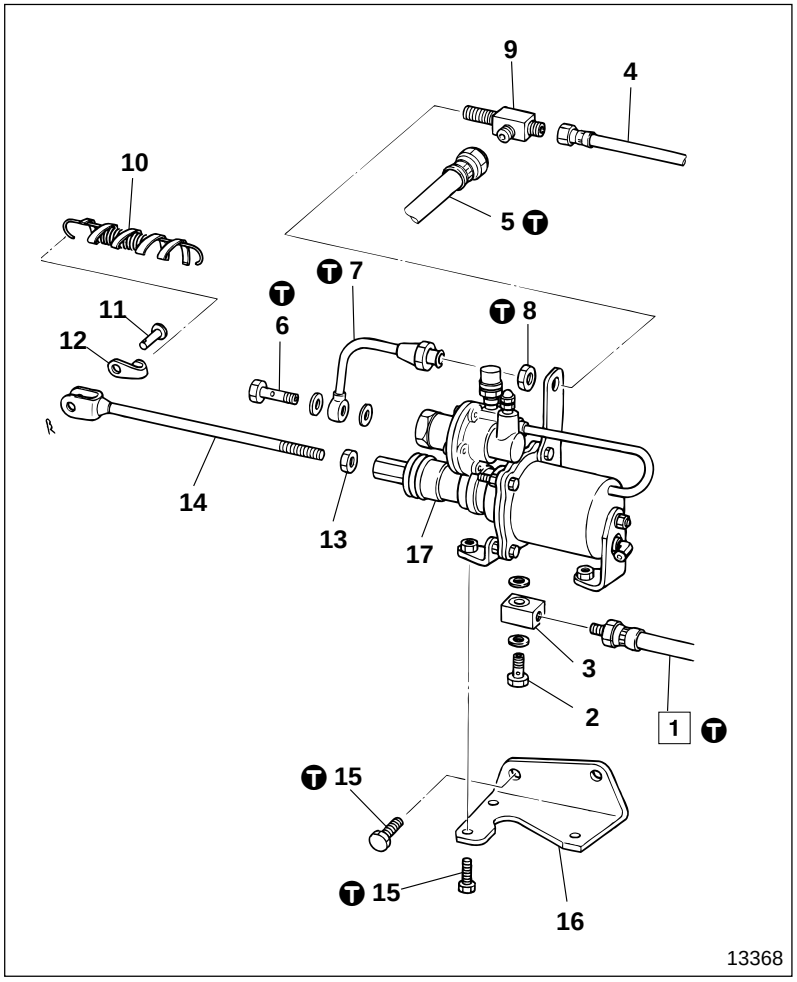

● **Removal sequence**

1 Fluid hose
2 Eye bolt
3 Connector
4 Air hose
5 Air hose
6 Eye bolt
7 Air pipe
8 Nut
9 Connector
10 Return spring
11 Clevis pin
12 Spring claw
13 Nut
14 Push rod
15 Bolt
16 Bracket
17 Clutch booster assembly 📖 P21-29

● **Installation sequence**

Follow the removal sequence in reverse.

T Tightening torque

Unit : N·m {lbf.ft, kgf·m}

Location	Parts to be tightened	Tightening torque	Remarks
1	Fluid hose	34±7.8 {25±5.8, 3.5±0.8}	—
5	Air hose	39 to 44 {29 to 33, 4.0 to 4.5}	—
6	Eye bolt (Air pipe mounting)	35 {26, 3.6}	—
7	Flare nut of air pipe	38 to 50 {28 to 37, 3.9 to 5.1}	—
8	Nut (Connector mounting)	93 to 125 {69 to 94, 9.5 to 13}	—
15	Bolt (Bracket mounting)	32 to 49 {24 to 36, 3.3 to 5.0}	—

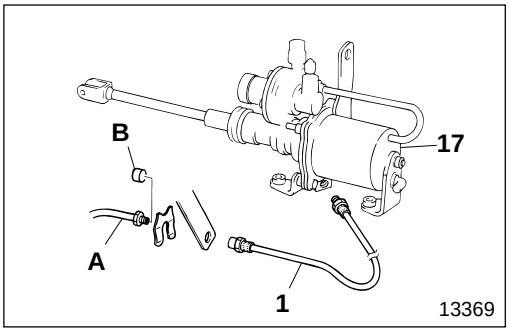

◆ Service procedure

1 **Removal and installation of fluid hose**

- When removing fluid hose **1**, first disconnect from pipe **A** on the frame side, then disconnect from clutch booster assembly **17**.
- For installation, follow the removal sequence in reverse.
- After installing fluid hose **1**, bleed the system.

CAUTION⚠

After removing fluid hose 1, fit blanking plug B into pipe A to prevent fluid from flowing out.

Clutch Booster Assembly

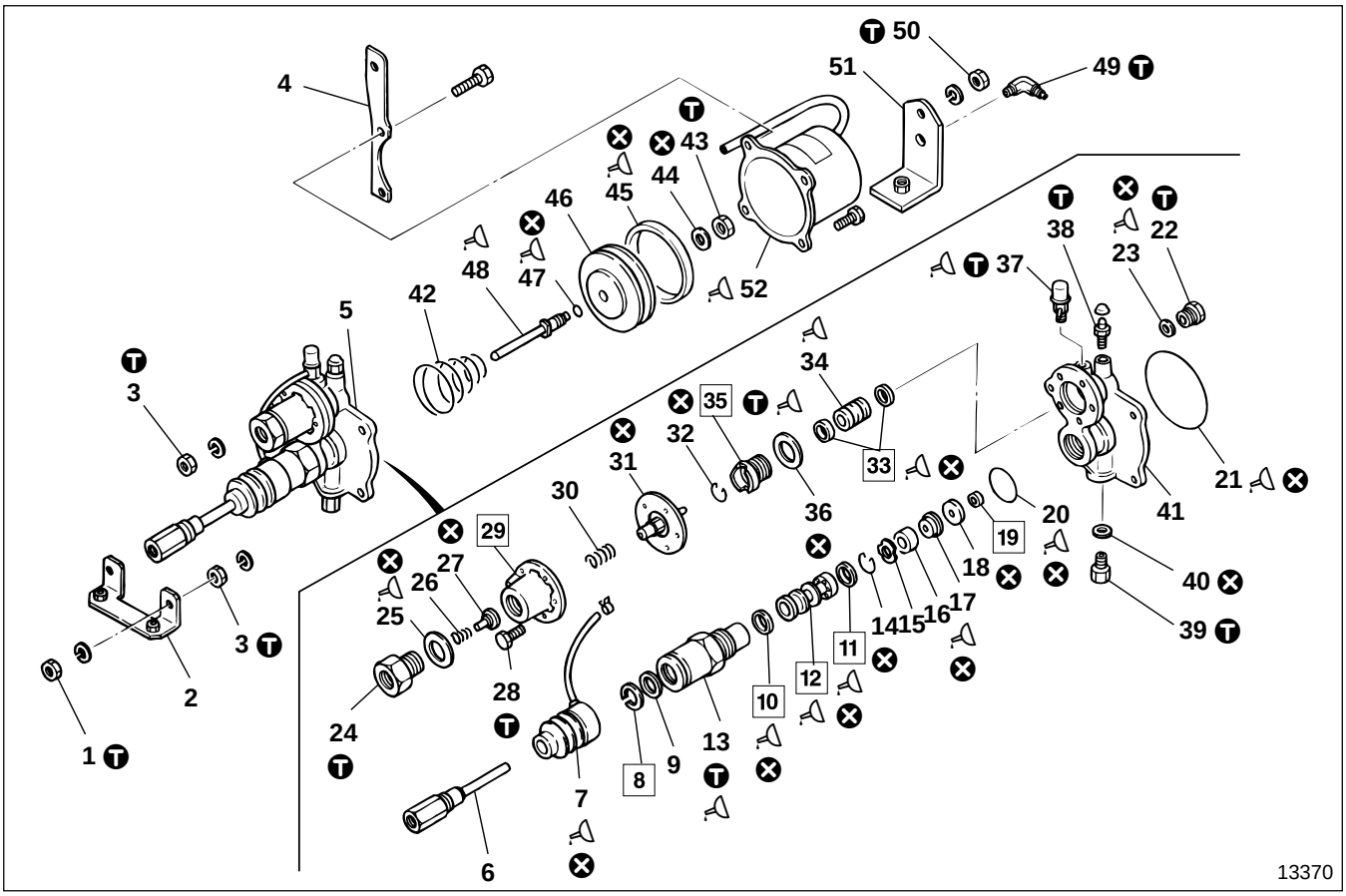

● **Work before disassembly**

P21-31

● **Disassembly sequence**

1 Nut
2 Bracket
3 Nut
4 Bracket
5 End plate assembly
6 Rod
7 Guard
8 Retaining ring
9 Washer
10 Cup packing (Atmosphere side)
11 Cup packing (Hydraulic pressure side)
12 Hydraulic piston
13 Hydraulic cylinder
14 Retaining ring
15 Washer
16 Retainer
17 Cup packing
18 Washer
19 Oil seal
20 O-ring
21 O-ring
22 Bushing
23 Gasket
24 Connector
25 Gasket
26 Spring
27 Poppet valve
28 Bolt
29 Upper valve body
30 Spring
31 Diaphragm assembly
32 Retaining ring
33 Cup packing
34 Relay valve piston
35 Fitting
36 Gasket
37 Exhaust cover assembly
38 Air bleeder
39 Connector
40 Gasket
41 End plate
42 Spring
43 Nut
44 Spring
45 Cup packing
46 Power piston plate
47 O-ring
48 Push rod
49 Elbow connector
50 Nut
51 Bracket
52 Cylinder shell

⊗ : Non-reusable parts

NOTE

Do not disassemble diaphragm assembly 31.

CLUTCH BOOSTER < C7 (M8S2×5) >

● **Assembly sequence**

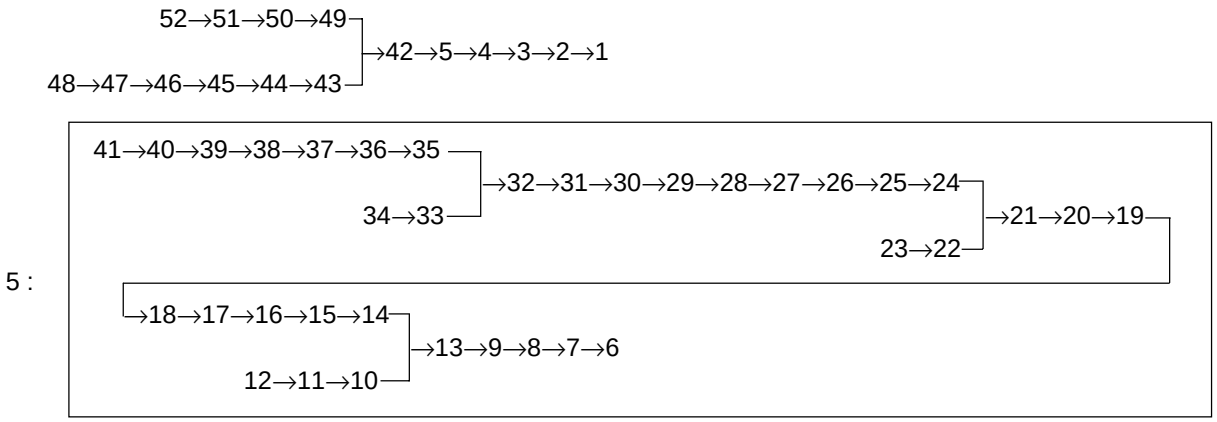

Repair kit: Clutch booster kit

CAUTION ⚠

- **Be careful not to damage the periphery of hydraulic piston 12 and relay valve piston 34.**
- **If there is rust on fitting 35, the inside of hydraulic cylinder 13 or on hydraulic piston 12, rub off the rust gently using emery paper. Excessive rubbing or the use of coarse emery paper might cause air or fluid leakage.**

NOTE

- **Wash metal parts using metal cleaning agent.**
- **Wipe and clean rubber parts using alcohol.**

Service standards

Unit : mm {in.}

Location	Maintenance item	Standard value (Basic diameter in [ ])	Limit	Remedy
12, 13	Clearance between hydraulic piston and hydraulic cylinder	[19.05] 0.01 to 0.06 {[0.75] 0.00039 to 0.0024}	0.08 {0.0031}	Replace
26	Spring load (Installed length 13 {0.51})	2.6 N {0.60 lbf, 0.27 kgf}	2.3 N {0.51 lbf, 0.23 kgf}	Replace
30	Spring load (Installed length 10 {0.39})	12 N {2.76 lbf, 1.25 kgf}	10 N {2.34 lbf, 1.06 kgf}	Replace
34, 35	Clearance between relay valve piston and fitting	[14.3] 0.04 to 0.10 {[0.56] 0.0016 to 0.0039}	0.11 {0.0043}	Replace
42	Spring load (Installed length 55 {2.17})	69 N {15 lbf, 7 kgf}	58 N {13 lbf, 5.9 kgf}	Replace
46, 52	Clearance between power piston plate and cylinder shell	[70] 0.20 to 0.75 {[2.76] 0.0079 to 0.030}	—	Replace
48	Bend of push rod	—	0.1 {0.0039}	Replace

Ⓣ Tightening torque

Unit : N·m {lbf.ft, kgf·m}

Location	Parts to be tightened	Tightening torque	Remarks
1, 3, 50	Nut (Mounting of end plate, cylinder shell and bracket)	14.7 to 19.6 {11 to 14, 1.5 to 2.0}	—
13	Hydraulic cylinder	29.4 to 39.2 {22 to 29, 3 to 4}	—
22	Bushing	7.8 to 9.8 {5.8 to 7.2, 0.8 to 1.0}	—
24	Connector	19.6 to 29.4 {14 to 22, 2 to 3}	—
28	Bolt (Upper valve body mounting)	3.9 to 5.9 {2.9 to 4.3, 0.4 to 0.6}	—
35	Fitting	14.7 to 24.5. {11 to 18, 1.5 to 2.5}	—
37	Exhaust cover assembly	9.8 to 49.0 {7.2 to 36, 1 to 5}	—
38	Air bleeder	6.9 to 12.7 {5.1 to 9.4, 0.7 to 1.3}	—
39	Connector	44.1 to 58.8 {33 to 43, 4.5 to 6.0}	—
43	Nut (Push rod mounting)	19.6 to 29.4 {14 to 22, 2 to 3}	—
49	Elbow connector	9.8 {7.2, 1} or more	—

Lubricant

Location	Points of application	Kinds	Quantity
7	Friction surface of rod and guard	Rubber grease	As required
10, 11, 33	Surface of cup packing	Rubber grease	As required
12	Periphery of hydraulic piston and pack to grease groove	Rubber grease	As required
13	Inside of hydraulic cylinder	Rubber grease	As required
17	Periphery of cup packing	Rubber grease	As required
20	Periphery of O-ring	Rubber grease	As required
21, 47	Periphery of O-ring	Air master paste	As required
23, 25	Both sides of gasket	Silicon oil	As required
34	Periphery of relay valve piston	Rubber grease	As required
35	Inside of fitting	Rubber grease	As required
37	Thread area of exhaust cover assembly	THREEBOND 1105	As required
45	Surface of cup packing (especially friction surface with cylinder shell)	Air master paste	As required
48	Tip of push rod	Rubber grease	As required
52	Internal surface of cylinder shell	Air master paste	As required

Special tools

Location	Tool name and shape	Part No.	Application
—	Stand plate	*910-10691	Fixation of clutch booster
10	Cup insert guide	*910-23285	Installation of cup packing
11	Cup insert guide	*910-23284	Installation of cup packing
19	Push out tool	*910-23100	Removal of oil seal
19	Insert tool	*910-23090	Installation of oil seal
31	Push guide	*910-23270	Centering of diaphragm assembly
35	L-spanner	*910-23260	Removal and installation of fitting

* : JIDOSHA KIKI part No.

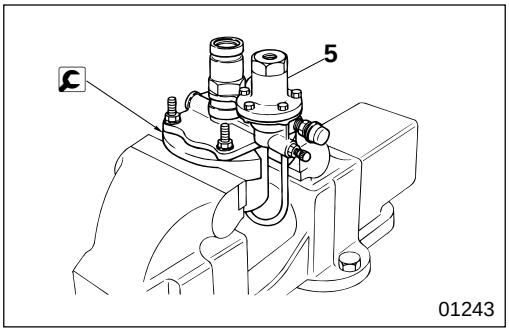

◆ Service procedure

● Work before disassembly

- Put alignment marks on the connecting areas of all parts before disassembly.
- Mount the flange of end plate assembly **5** of the clutch booster on stand plate and place the clutch booster in a vise.

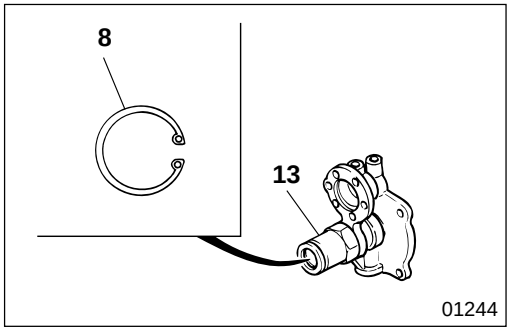

8 **Installation of retaining ring**

Install retaining ring **8** on hydraulic cylinder **13** in the direction as illustrated, so that opening area **A** of the retaining ring is horizontal.

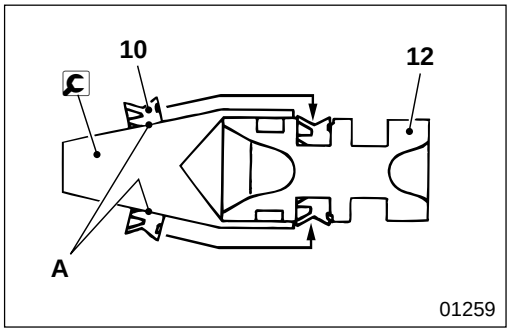

10 **Installation of cup packing**

Apply grease to inner periphery **A** of cup packing **10** and install the cup packing on hydraulic piston **12** in the direction as illustrated.

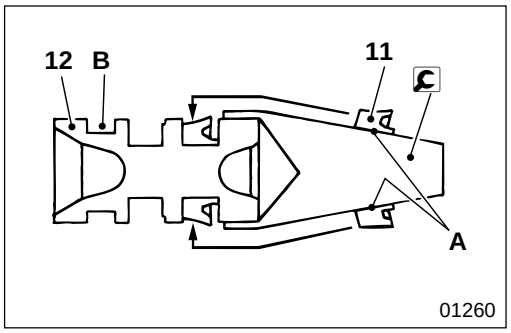

11 **12** **Installation of cup packing and grease packing of hydraulic piston**

- Apply grease to inner periphery **A** of cup packing **11** and install the cup packing on hydraulic piston **12** in the direction as illustrated.
- Pack grease into grease groove **B** of hydraulic piston **12**.

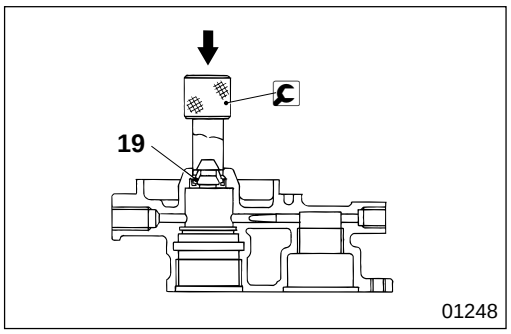

19 **Oil seal**

[Removal]

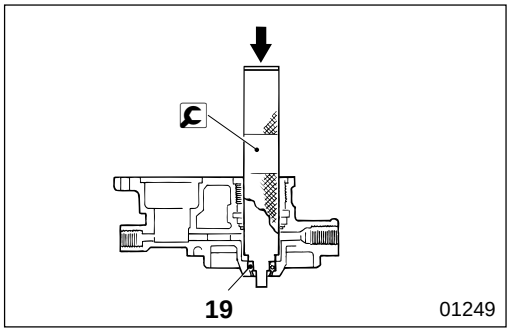

[Installation]

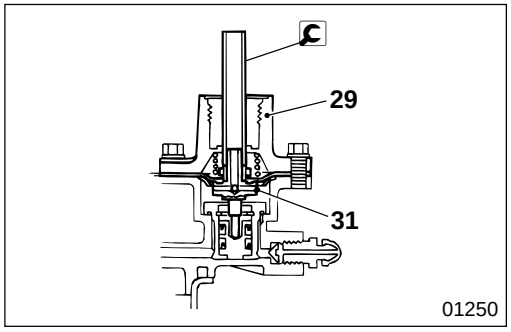

29 **Installation of upper valve body**

After centering diaphragm assembly **31** using push guide, install upper valve body **29**.

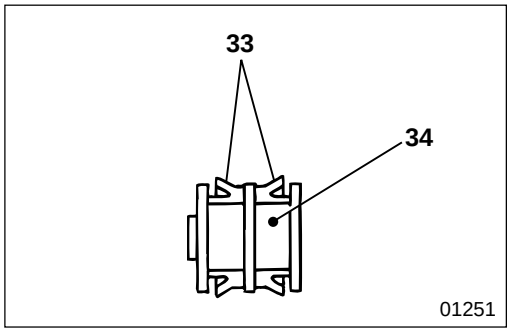

33 **Installation of cup packing**

Install cup packing **33** on relay valve piston **34** in the direction as illustrated.

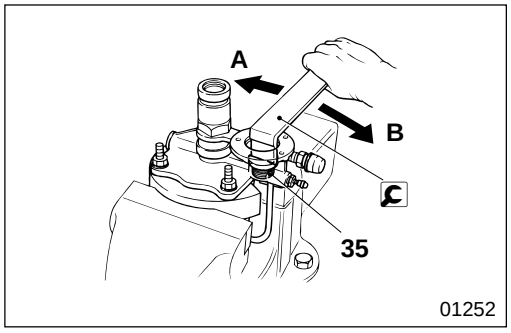

35 **Removal and installation of fitting**

A : Removal
B : Installation

WORK BEFORE REMOVAL AND INSTALLATION OF CLUTCH BODY

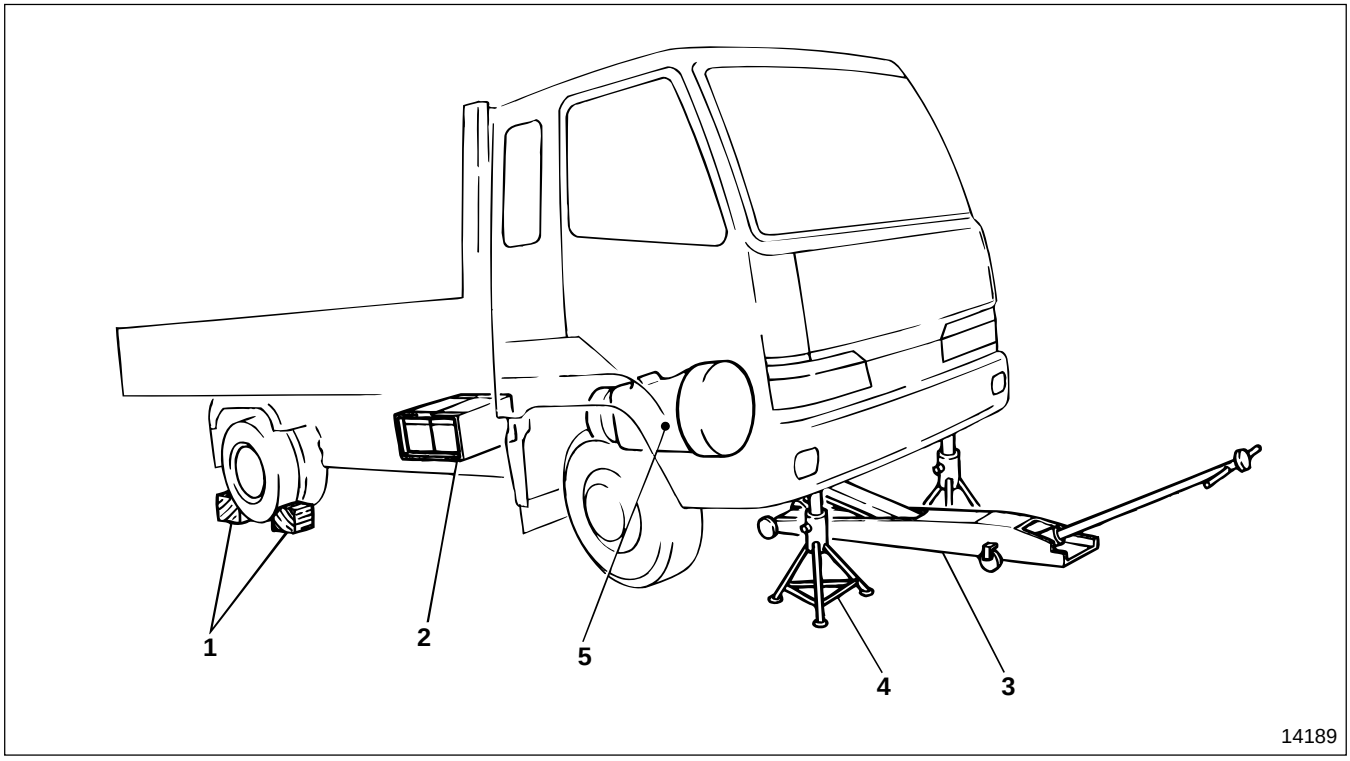

● **Work sequence before removal**

1 Place wheel chocks.
2 Disconnect the negative battery cable. Gr 54
3 Jack up the front axle using a garage jack.
4 Support the front frame on rigid racks.
5 Remove the transmission. Gr 22A, B

WARNING⚠

- **Since the parking brake (center parking) will be removed, naturally it cannot be used. Therefore, you must chock the wheels securely so the vehicle does not move.**
- **Do not remove the chocks until the entire operation is completed.**
- **Supporting a vehicle on a garage jack only is extremely dangerous, so always support the frame on rigid racks.**
- **Leave the garage jack and rigid racks in place until the entire operation is completed. Never remove them during the operation.**

CAUTION⚠

Keep the transmission in neutral throughout the operation.

● **Work sequence after installation**

Follow the work sequence before removal in reverse.

M E M O

Clutch Disc

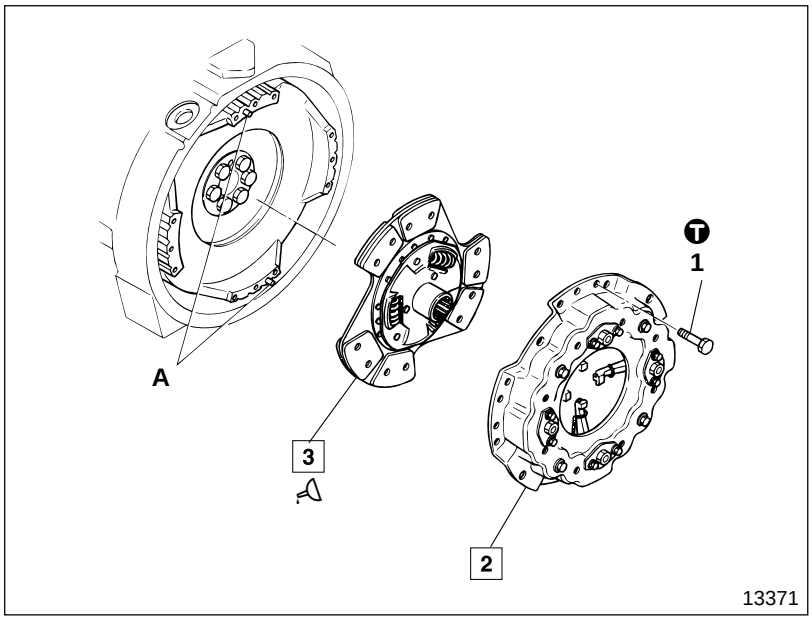

● **Removal sequence**

1 Bolt
2 Pressure plate and lever assembly. P21-40
3 Clutch disc

A : Positioning pins (two points)

WARNING

Be careful when you handle pressure plate and lever assembly 2 because it is rather heavy.

● **Installation sequence**

Follow the removal sequence in reverse.

CAUTION

Be careful not to get oily substances on clutch disc 3 surfaces because this will cause the clutch to slip.

Service standards

Unit : mm {in.}

Location	Maintenance item		Standard value	Limit	Remedy
3	Clutch disc	Lateral runout	1.2 {0.047}or less	—	Replace
		Vertical runout	1.2 {0.047} or less	1.8 {0.071}	Replace
		Play to revolving direction at spline	0.07 to 0.23 {0.0028 to 0.0091}	0.5 {0.020}	Replace
		Depth from facing surface to cup	1.21 to 1.91 {0.048 to 0.075}	0.2 {0.0079}	Replace

Tightening torque

Unit : N·m {lbf.ft, kgf·m}

Location	Parts to be tightened	Tightening torque	Remarks
1	Bolt (Pressure plate and lever assembly mounting)	33 to 49 {24 to 36, 3.3 to 5.0}	—

Lubricant

Location	Points of application	Kinds	Quantity
3	Spline of clutch disc	Molybdenum disulfide grease [NLGI No.2 (Li soap)]	4.2 to 5.9 g {0.15 to 0.21 oz}

Special tools

Unit : mm {in.}

Location	Tool name and shape	Part No.	Application
2	Stopper bolt Washer 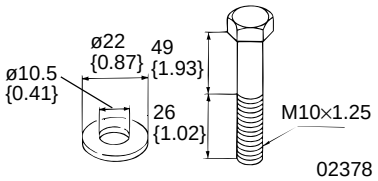	43402-09200 < Stopper bolt > MH005024 < Washer >	Removal and installation of pressure plate and lever assembly
2, 3	Clutch alignment arbor 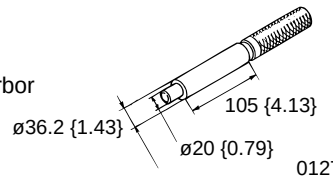	MH061987	Holds clutch disc

◆ Service procedure

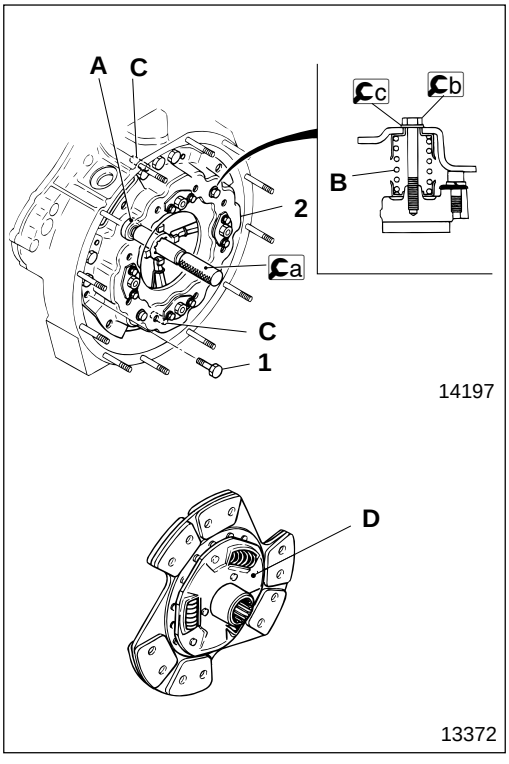

2 Removal and installation of pressure plate and lever assembly

- Insert Ca clutch alignment arbor in flywheel pilot bearing **A** to hold clutch disc **3**.
- Compress springs **B** using Cb stopper bolt and Cc washer, then remove bolt **1**.
- For installation, follow the removal sequence in reverse.
- Install clutch disc **3** so that part No. **D** is visible.
- Tighten bolts **1** gradually, in diagonal order, to specified torque.

CAUTION

- **Beware, if you do not use Cb stopper bolts and Cc washers (four points) to remove bolt 1, the force of springs B might push out pressure plate and lever assembly 2, damaging the strap plate. It might even come apart from knock pin C and drop off.**
- **Remember to remove stopper bolts and washers after installation (four points). If the stopper bolts and washers are left on, the clutch will not engage.**

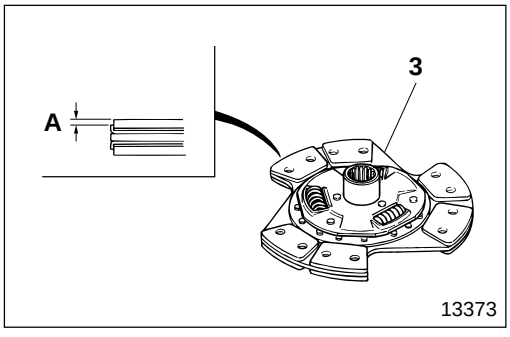

3 Clutch disc

(1) Height of facing

Measure dimension **A** as illustrated.
If the measured value does not conform to the standard value, replace clutch disc **3**.

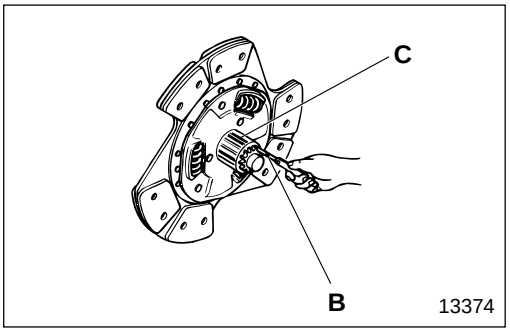

(2) Play in direction of revolution

- Reshape feeler gauge **B** for insertion into drive pinion spline **C**, and measure play.
- If the measured value is higher than the limit, replace clutch disc **3** or the drive pinion.
- Carry out the same measurement on new clutch disc **3**. If the measured value is higher than the limit, replace the drive pinion.

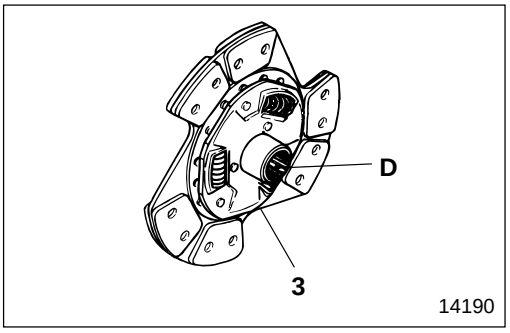

(3) Applying grease

Apply grease evenly to spline **D** and the entire tooth surface of clutch disc **3**. Apply grease to the grease groove of the spline up to its large diameter.

CAUTION

Be careful not to apply too much grease because excessive grease causes grease leakage from spline D and makes the clutch slippery.

M E M O

Pressure Plate and Lever Assembly

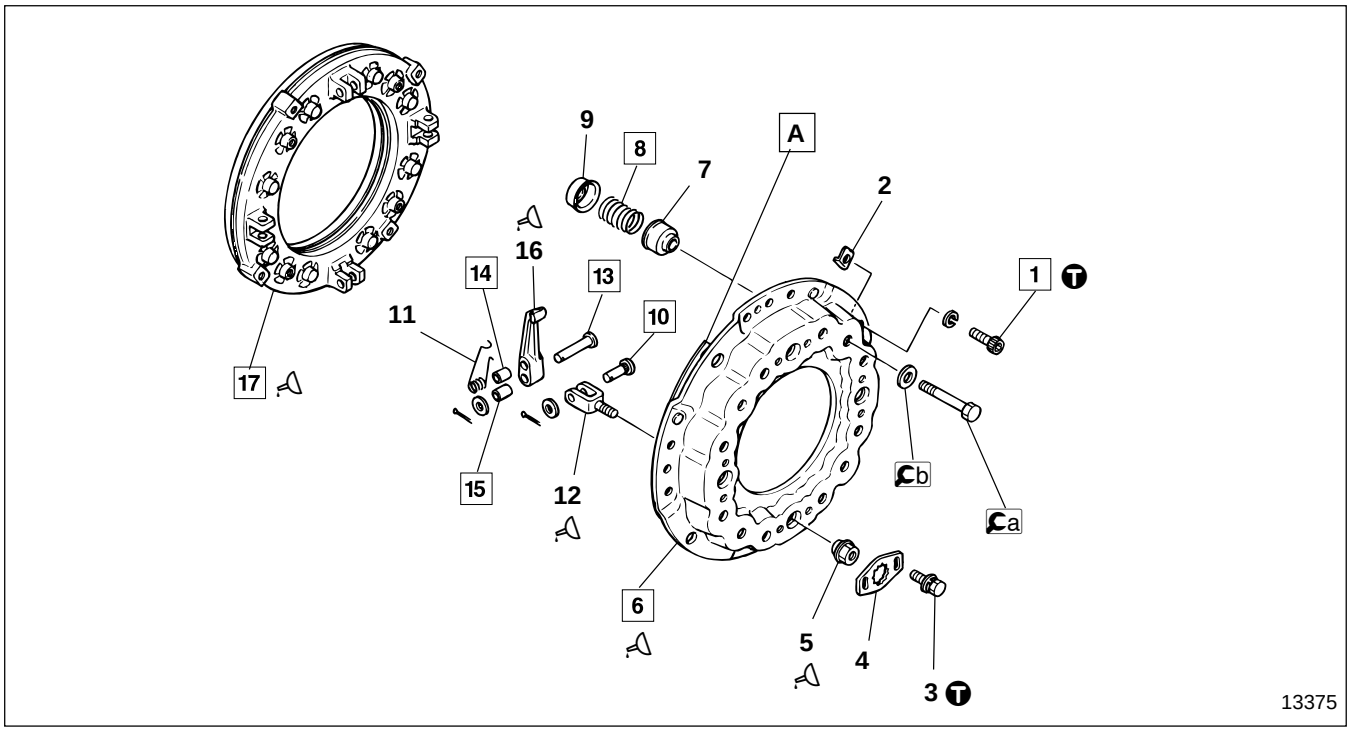

● **Work before disassembly**

P21-42

● **Disassembly sequence**

1 Strap bolt
2 Washer
3 Lock bolt
4 Lock plate
5 Support nut
6 Clutch cover
7 Spring seat
8 Pressure spring
9 Spring seat
10 Support lever pin
11 Return spring
12 Support lever
13 Release lever pin
14 Bushing
15 Bushing
16 Release lever
17 Pressure plate

A : Strap plate
a : Stopper bolt
b : Washer

NOTE

Do not remove bushings 14, 15 unless they are faulty.

● **Assembly sequence**

Follow the disassembly sequence in reverse.

Repair kit : Clutch release lever kit

● **Inspection and adjustment after assembly**

P21-42

Service standards

Unit : mm {in.}

Location	Maintenance item		Standard value (Basic diameter in [ ])	Limit	Remedy
1, A	Clearance between strap plate and bolt		0 to 0.15 {0 to 0.0059}	0.3 {0.012}	Replace
8	Pressure spring	Load (Installed length 54.8 {2.16})	955 N {215 lbf, 97.5 kgf}	810 N {180 lbf, 82.9 kgf}	Replace
		Tilt	3.6 {0.14} or less	5.0 {0.20}	
10, 14	Clearance between support lever pin and bushing		[10] 0.017 to 0.126 {[0.39] 0.00067 to 0.0050}	0.4 {0.016}	Replace
14 to 16	Clearance between release lever and bushing		[10] 0.016 to 0.118 {[0.39] 0.00063 to 0.0046}	0.4 {0.016}	Replace
16	Height of release lever		61.8±0.5 {2.43±0.020}	Difference between any two: 0.5 {0.020} or less	Adjust
17	Pressure plate	Thickness	30.8±0.1 {1.21±0.0039}	28 {1.10}	Replace
		Flatness	0.05 {0.0020}or less	0.2 {0.0079}	Correct or replace
		Inner diameter of strap bolt fitting hole	10.2 to 10.25 {0.402 to 0.404}	10.5 {0.41}	Replace

Tightening torque

Unit : N·m {lbf.ft, kgf·m}

Location	Parts to be tightened	Tightening torque	Remarks
1	Strap bolt (Strap plate mounting)	39 to 49 {29 to 36, 4.0 to 5.0}	—
3	Lock bolt (Lock plate mounting)	9.8 to 15 {7.2 to 11, 1.0 to 1.5}	—

Lubricant

Location	Points of application	Kinds	Quantity
5	Threads of support nut and spherical surfaces	Anti-seizure compound	As required
5, 6	Contact areas of support nut and clutch cover	Molybdenum disulfide grease [NLGI No.2 (Li soap)]	As required
12, 16	Friction surfaces between release lever and support lever	Molybdenum disulfide grease [NLGI No.2 (Li soap)]	As required
16, 17	Release lever and pressure plate sliding section	Molybdenum disulfide grease [NLGI No.2 (Li soap)]	As required

Special tools

Unit : mm {in.}

Location	Tool name and shape	Part No.	Application
—	Stopper bolt Washer 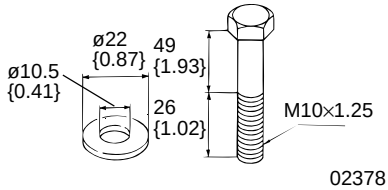	43402-09200 < Stopper bolt > MH005024 < Washer >	Disassembly and assembly of pressure plate and lever assembly
6	Clutch installer 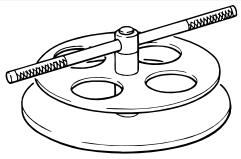	MH061331	Removal and installation of clutch cover

Unit : mm {in.}

Location	Tool name and shape	Part No.	Application
16	Clutch master plate 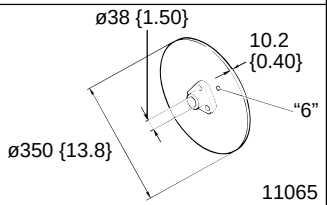	MH062292	Adjustment of release lever heights
	Clutch alignment arbor 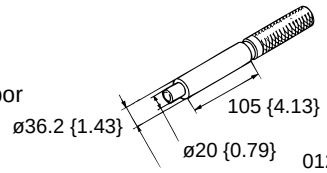	MH061987	

◆ Service procedure

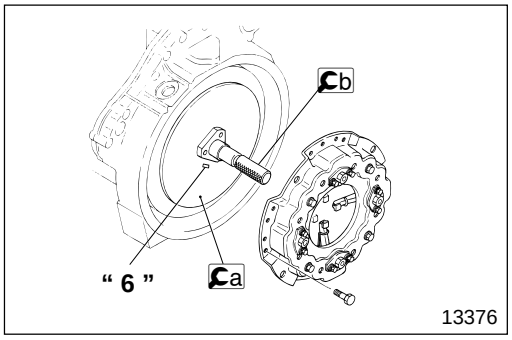

● Work before disassembly

Put alignment marks on all parts before disassembly.

● Inspection and adjustment after assembling

(1) Measurement of release lever height

- Install the pressure plate and lever assembly using Ca clutch master plate and Cb clutch alignment arbor instead of clutch disc.
- Install Ca clutch master plate so that identification mark "**6**" can be seen.

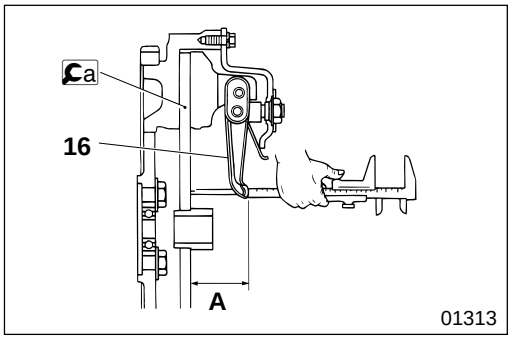

- Measure dimension **A** between Ca clutch master plate and each upper surface of release levers **16** (four points).
- If the measured values deviate from the standard value, adjust as follows. Even if the measured values are within the standard value, if the relative difference among each measured value is 0.5 mm {0.020 in.} or more, adjust the heights, too.

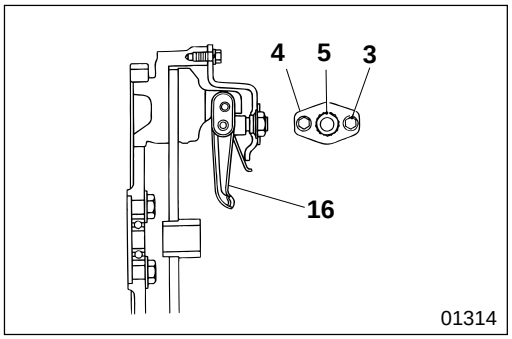

(2) Adjustment of release lever height

- Remove bolt **3** and lock plate **4**, and adjust the height by turning support nut **5**.
- After adjustment, install lock plate **4**, fasten support nut **5** and check the height of release lever **16**.

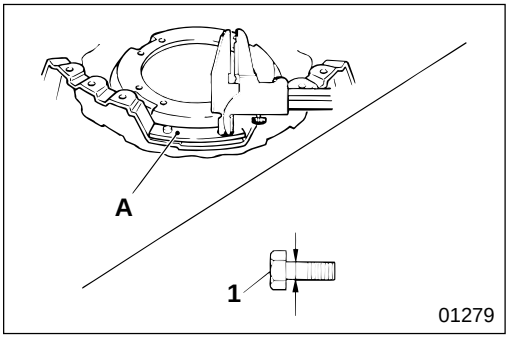

1 **A** **Clearance between strap bolt and strap plate**

If the measured value is higher than the limit, replace the faulty parts.

A : Strap plate

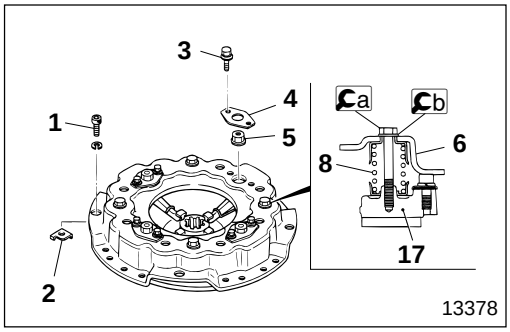

6 **Removal and installation of clutch cover**

- After fixing clutch cover **6** and pressure plate **17** using a stopper bolt and b washer, remove strap bolt **1**, washer **2**, lock bolt **3**, lock plate **4** and support nut **5**.

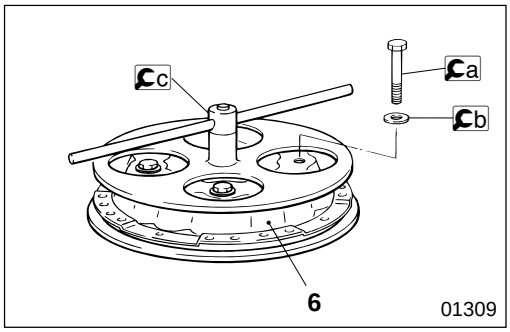

- Compress pressure spring **8** using c clutch installer, and remove a stopper bolt and b washer.
- Gradually loosen c clutch installer until pressure spring **8** is released, and remove clutch cover **6**.
- For installation, follow the removal sequence in reverse.

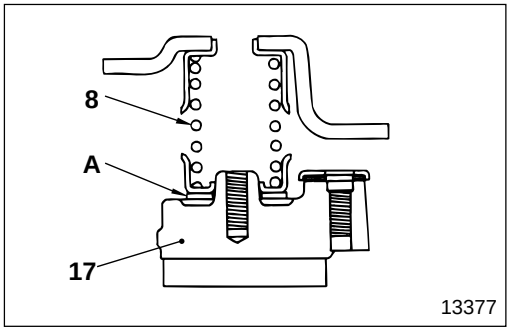

8 **Installation of pressure spring**

When grinding pressure plate **17** to correct it, insert adjusting washer **A**, equivalent to the amount of correction made by grinding, between the pressure plate and pressure spring **8**.

Amount of correction made by grinding	Thickness of adjusting washer
Less than 1mm {0.039 in.}	Not required
1 to 2mm {0.039 to 0.079 in.}	1.2 mm {0.047 in.}×1
2 to 3mm {0.079 to 0.12 in.}	1.2 mm {0.047 in.}×2 or, 2.3 mm {0.091 in.}×1

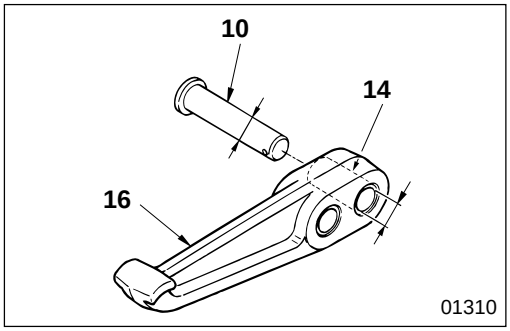

10 **14** **Clearance between support lever pin and bushing**

If the measured value is higher than the limit, replace the faulty parts.

NOTE

This inspection must be made with bushing 14 press-fitted in release lever 16.

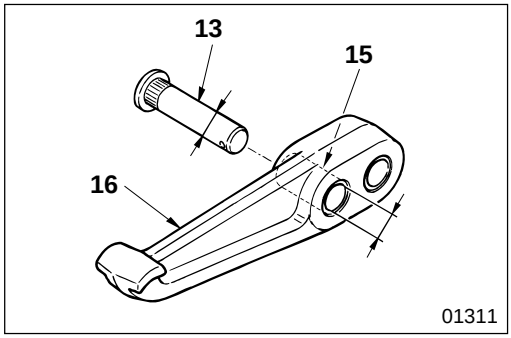

13 **15** **Clearance between release lever pin and bushing**

If the measured value is higher than the limit, replace the faulty parts.

NOTE

This inspection must be made with bushing 15 press-fitted in release lever 16.

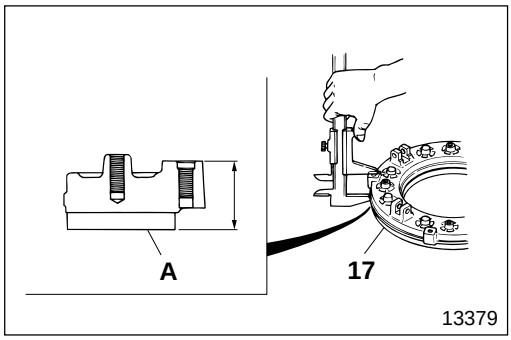

17 **Inspection of pressure plate**

(1) Thickness

- Measure friction surface **A** of pressure plate **17** (measuring position must be within the maximum and minimum diameters), and if the measured value is lower than the limit, replace the pressure plate.

Maximum diameter	340 mm {13.4 in.}
Minimum diameter	250 mm {9.84 in.}

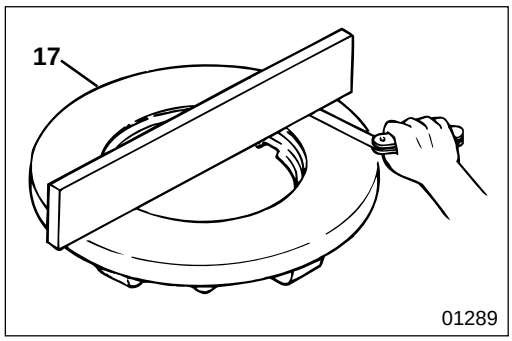

(2) Levelness

If the measured value is lower than the limit, replace pressure plate **17**.

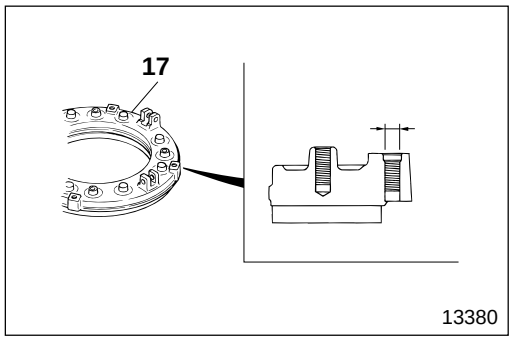

(3) Inner diameter of fitting hole of strap bolt

If the measured value is higher than the limit, replace pressure plate **17**.

M E M O

Clutch Disc

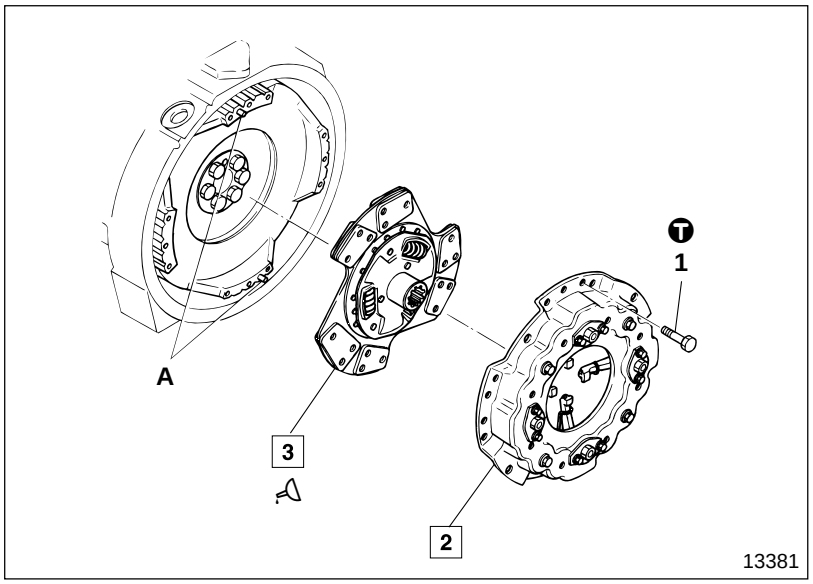

● **Removal sequence**

1 Bolt
2 Pressure plate and lever assembly
P21-50
3 Clutch disc

A : Positioning pins (two points)

WARNING

Be careful when you handle pressure plate and lever assembly 2 because it is rather heavy.

● **Installation sequence**

Follow the removal sequence in reverse.

CAUTION

Be careful not to get oily substances on clutch disc 3 surfaces because this will cause the clutch to slip.

Service standards

Unit : mm {in.}

Location	Maintenance item		Standard value	Limit	Remedy
3	Clutch disc	Lateral runout	1.2 {0.047} or less	—	Replace
		Vertical runout	1.2 {0.047} or less	1.5 {0.059}	Replace
		Play to revolving direction at spline	0.07 to 0.23 {0.0028 to 0.0091}	0.5 {0.020}	Replace
		Depth from facing surface to cup	1.88 to 2.62 {0.074 to 0.103}	0.2 {0.0079}	Replace

Tightening torque

Unit : N·m {lbf.ft, kgf·m}

Location	Parts to be tightened	Tightening torque	Remarks
1	Bolt (Pressure plate and lever assembly mounting)	33 to 49 { 24 to 36, 3.3 to 5.0}	—

Lubricant

Location	Points of application	Kinds	Quantity
3	Spline of clutch disc	Molybdenum disulfide grease [NLGI No.2 (Li soap)]	4.2 to 5.9 g {0.15 to 0.21 oz}

Special tools

Unit : mm {in.}

Location	Tool name and shape	Part No.	Application
2	Stopper bolt Washer 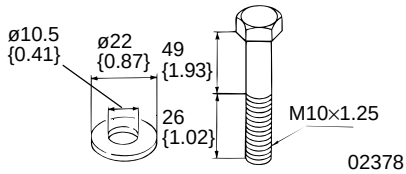	43402-09200 < Stopper bolt > MH005024 < Washer >	Removal and installation of pressure plate and lever assembly
2, 3	Clutch alignment arbor 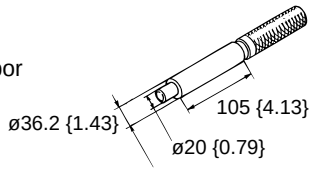	MH061987	Holds clutch disc

◆ Service procedure

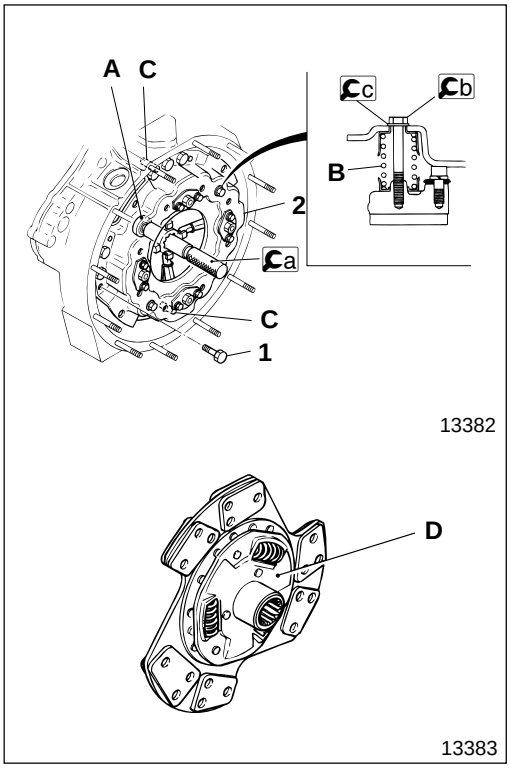

2 Removal and installation of pressure plate and lever assembly

- Insert a clutch alignment arbor in flywheel pilot bearing **A** to hold clutch disc **3**.
- Compress springs **B** using b stopper bolt and c washer, then remove bolt **1**.
- For installation, follow the removal sequence in reverse.
- Install clutch disc **3** so that part No. **D** is visible.
- Tighten bolts **1** gradually, in diagonal order, to specified torque.

CAUTION

- **Beware, if you do not use b stopper bolts and c washers (four points) to remove bolt 1, the force of springs B might push out pressure plate and lever assembly 2, damaging the strap plate. It might even come apart from knock pin C and drop off.**
- **Remember to remove stopper bolts and washers after installation (four points). If the stopper bolts and washers are left on, the clutch will not engage.**

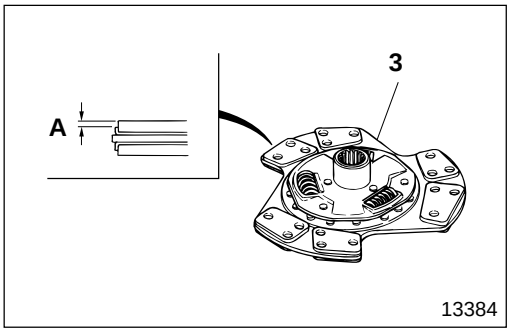

3 Clutch disc

(1) Height of facing

Measure dimension **A** as illustrated.

If the measured value does not conform to the standard value, replace clutch disc **3**.

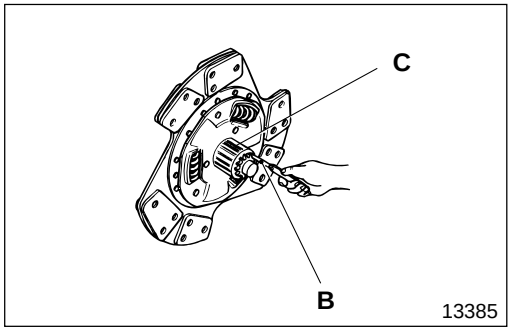

(2) Play in direction of revolution

- Reshape feeler gauge **B** for insertion into drive pinion spline **C**, and measure play there.
- If the measured value is higher than the limit, replace clutch disc **3** or the drive pinion.
- Carry out the same measurement on new clutch disc **3**. If the measured value is higher than the limit, replace the drive pinion.

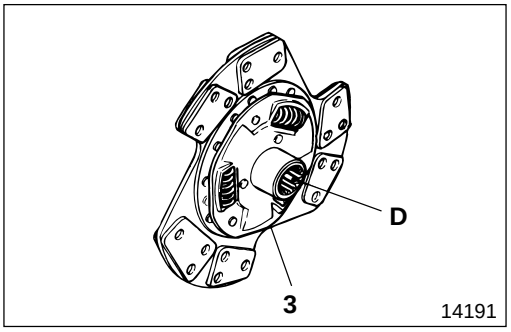

(3) Applying grease

Apply grease evenly to spline **D** entire tooth surface of clutch disc **3**. Apply grease to the grease groove of the spline up to its large diameter.

CAUTION

Be careful not to apply too much grease because excessive grease causes grease leakage from spline D and makes the clutch slippery.

M E M O

Pressure Plate and Lever Assembly

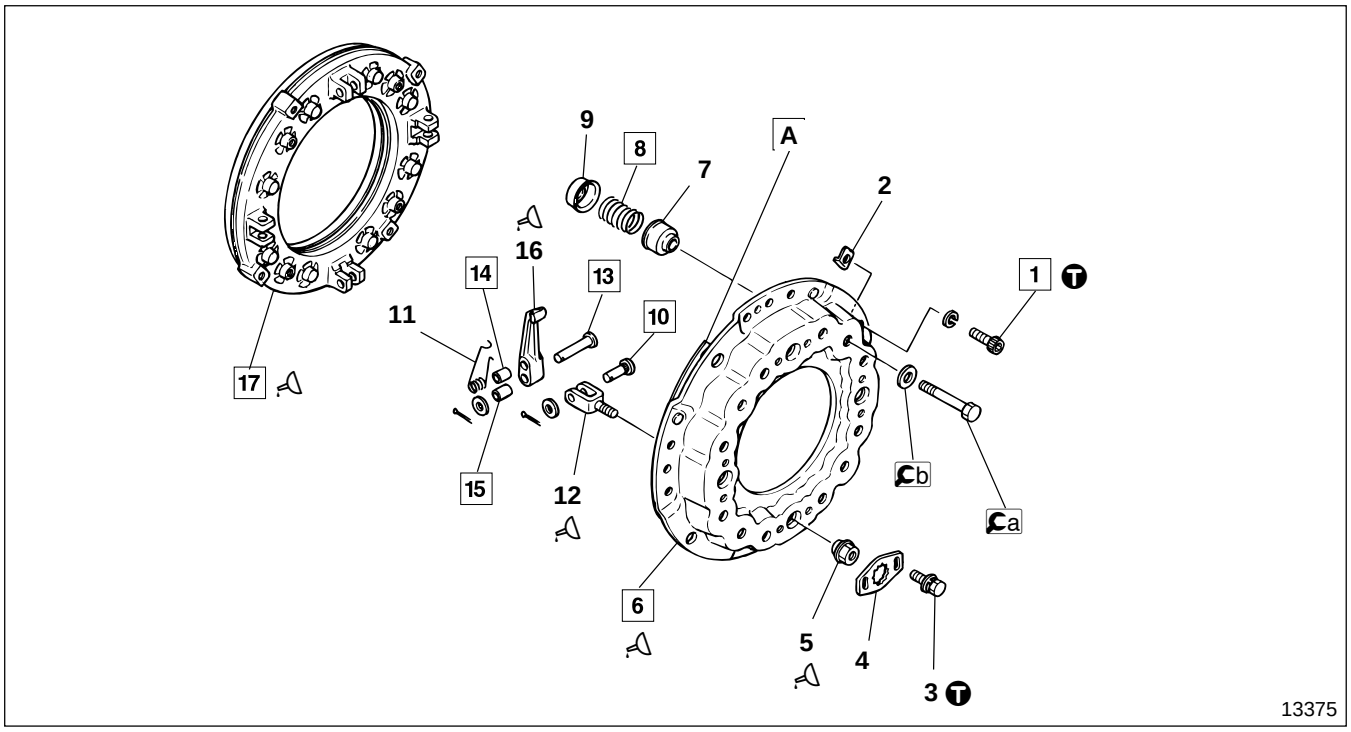

● **Work before disassembly**

P21-52

● **Disassembly sequence**

1 Strap bolt
2 Washer
3 Lock bolt
4 Lock plate
5 Support nut
6 Clutch cover
7 Spring seat
8 Pressure spring
9 Spring seat
10 Support lever pin
11 Return spring
12 Support lever
13 Release lever pin
14 Bushing
15 Bushing
16 Release lever
17 Pressure plate

A : Strap plate
a : Stopper bolt
b : Washer

NOTE

Do not remove bushings 14, 15 unless they are faulty.

● **Assembly sequence**

Follow the disassembly sequence in reverse.

Repair kit : Clutch release lever kit

● **Inspection and adjustment after assembly**

P21-52

Service standards

Unit : mm {in.}

Location	Maintenance item		Standard value (Basic diameter in [ ])	Limit	Remedy
1, A	Clearance between strap plate and bolt		0.01 to 0.16 {0.00039 to 0.0063}	0.3 {0.012}	Replace
8	Pressure spring	Load (Installed length 56.05 {2.21})	1020 N {230 lbf, 104.4 kgf}	870 N {195 lbf, 88.8 kgf}	Replace
		Tilt	3.6 {0.14} or less	5.0 {0.20}	
10, 14	Clearance between support lever pin and bushing		[10] 0.017 to 0.126 {[0.39] 0.00067 to 0.0050}	0.4 {0.016}	Replace
14 to 16	Clearance between release lever and bushing		[10] 0.016 to 0.118 {[0.39] 0.00063 to 0.0046}	0.4 {0.016}	Replace
16	Height of release lever		62.1±0.5 {2.44±0.020}	Difference between any two: 0.5 {0.020} or less	Adjust
17	Pressure plate	Thickness	30.8±0.1 {1.21±0.0039}	28 {1.10}	Replace
		Flatness	0.05 {0.0020} or less	0.2 {0.0079}	Correct or replace
		Inner diameter of strap bolt fitting hole	10.2 to 10.25 {0.402 to 0.404}	10.5 {0.41}	Replace

Tightening torque

Unit : N·m {lbf.ft, kgf·m}

Location	Parts to be tightened	Tightening torque	Remarks
1	Strap bolt (Strap plate mounting)	32.9 to 49 {29 to 36, 4.0 to 5.0}	—
3	Lock bolt (Lock plate mounting)	9.8 to 14.7 {7.2 to 11, 1.0 to 1.5}	—

Lubricant

Location	Points of application	Kinds	Quantity
5	Threads of support nut and spherical surfaces	Anti-seize compound	As required
5, 6	Contact areas of support nut and clutch cover	Molybdenum disulfide grease [NLGI No.2 (Li soap)]	As required
12, 16	Release lever to support lever friction surfaces	Molybdenum disulfide grease [NLGI No.2 (Li soap)]	As required
16, 17	Release lever and pressure plate sliding section	Molybdenum disulfide grease [NLGI No.2 (Li soap)]	As required

Special tools

Unit : mm {in.}

Location	Tool name and shape	Part No.	Application
—	Stopper bolt Washer 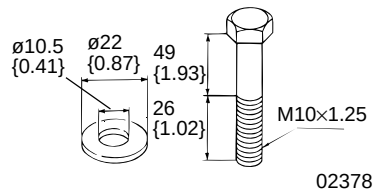 02378	43402-09200 < Stopper bolt > MH005024 < Washer >	Disassembly and assembly of pressure plate and lever assembly
6	Clutch installer 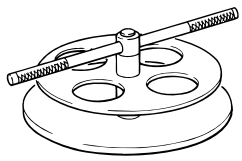 01306	MH061331	Removal and installation of clutch cover

Unit : mm {in.}

Location	Tool name and shape	Part No.	Application
16	Clutch master plate 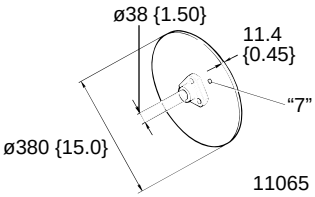	MH062353	Adjusts release lever heights
	Clutch alignment arbor 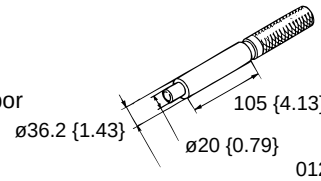	MH061987	

◆ Service procedure

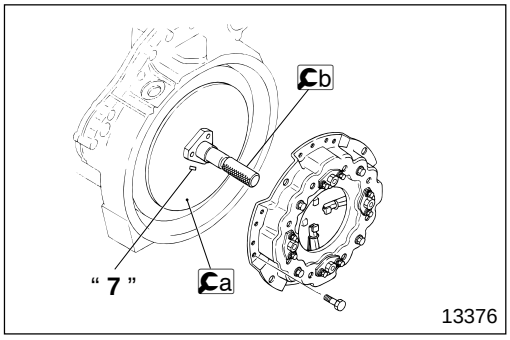

● **Work before disassembly**

Put alignment marks on all parts before disassembly.

● **Inspection and adjustment after assembling**

(1) Measurement of release lever height

- Install the pressure plate and lever assembly using a clutch master plate and b clutch alignment arbor instead of clutch disc.
- Install a clutch master plate so that identification mark "**7**" can be seen.

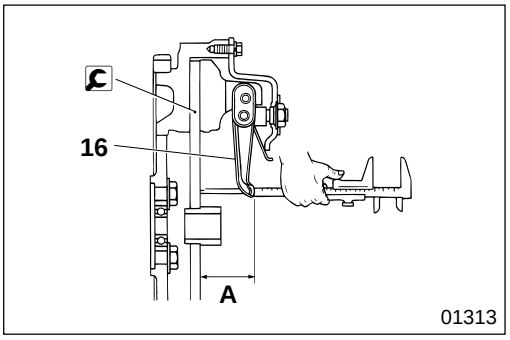

- Measure dimension **A** between clutch master plate and each upper surface of release levers **16** (four points).
- If the measured values deviate from the standard value, adjust as follows. Even if the measured values are within the standard value, if the relative difference among each measured value is 0.5 mm {0.020 in.} or more, adjust the heights, too.

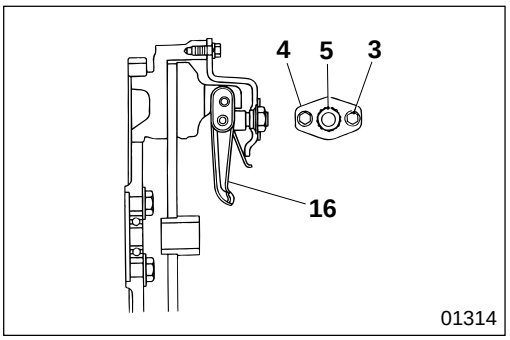

(2) Adjustment of release lever height

- Remove bolt **3** and lock plate **4**, and adjust the height by turning support nut **5**.
- After adjustment, install lock plate **4**, fasten support nut **5** and check the height of release lever **16**.

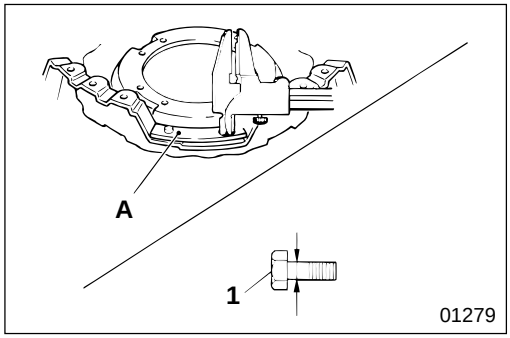

1 **A** **Clearance between strap bolt and strap plate**

If the measured value is higher than the limit, replace the faulty parts.

A : Strap plate

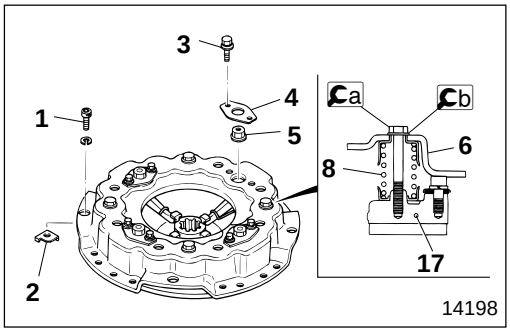

6 **Removal and installation of clutch cover**

- After fixing clutch cover **6** and pressure plate **17** using a stopper bolt and b washer, remove strap bolt **1**, washer **2**, lock bolt **3**, lock plate **4** and support nut **5**.

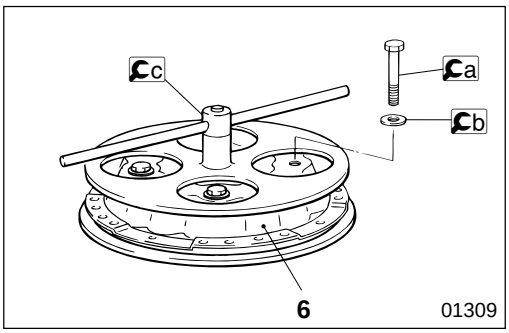

- Compress pressure spring **8** using c clutch installer, and remove a stopper bolt and b washer.
- Gradually loosen c clutch installer until pressure spring **8** is released, and remove clutch cover **6**.
- For installation, follow the removal sequence in reverse.

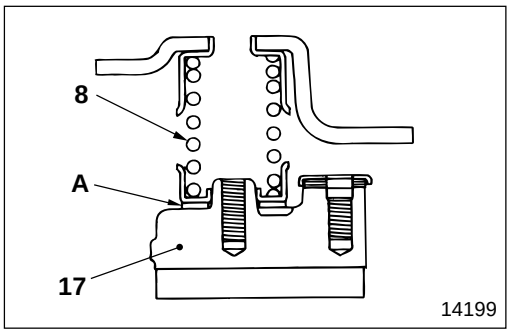

8 **Installation of pressure spring**

When grinding pressure plate **17** to correct it, insert adjusting washer **A**, equivalent to the amount of correction made by grinding, between the pressure plate and pressure spring **8**.

Amount of correction made by grinding	Thickness of adjusting washer
Less than 1mm {0.039 in.}	Not required
1 to 2mm {0.039 to 0.079 in.}	1.2 mm {0.047 in.}×1
2 to 3mm {0.079 to 0.12 in.}	1.2 mm {0.047 in.}×2 or, 2.3 mm {0.091 in.}×1

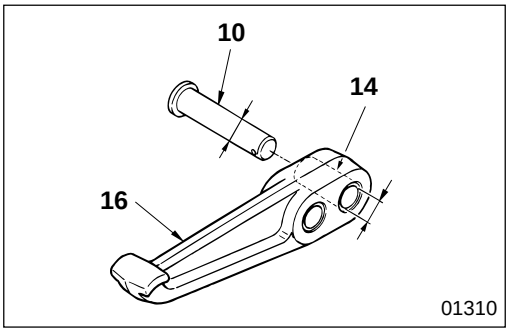

10 **14** **Clearance between support lever pin and bushing**

If the measured value is higher than the limit, replace the faulty parts.

NOTE

This inspection must be made with bushing 14 press-fitted in release lever 16.

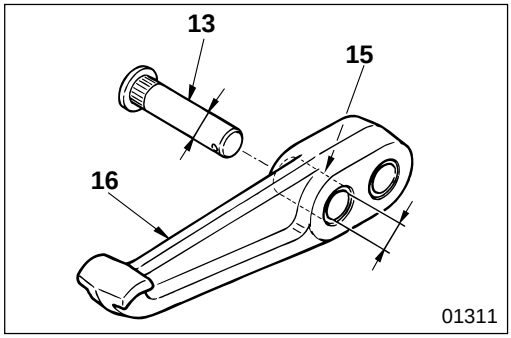

13 **15** **Clearance between release lever pin and bushing**

If the measured value is higher than the limit, replace the faulty parts.

NOTE

This inspection must be made with bushing 15 press-fitted in release lever 16.

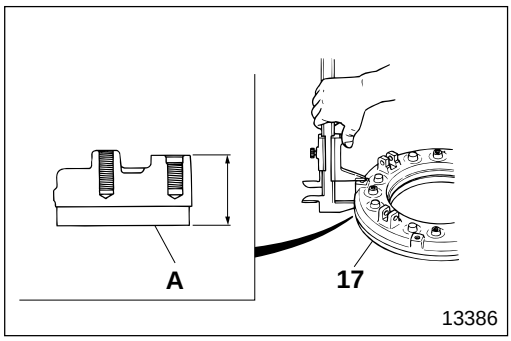

17 **Inspection of pressure plate**

(1) Thickness

- Measure friction surface **A** of pressure plate **17** (measuring position must be within the maximum and minimum diameters), and if the measured value is lower than the limit, replace the pressure plate.

Maximum diameter	370 mm {14.6 in.}
Minimum diameter	240 mm {9.45 in.}

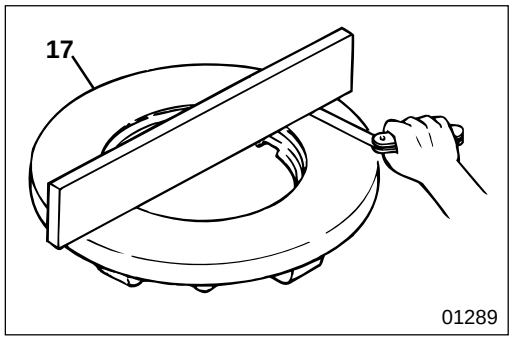

(2) Levelness

If the measured value is lower than the limit, replace pressure plate **17**.

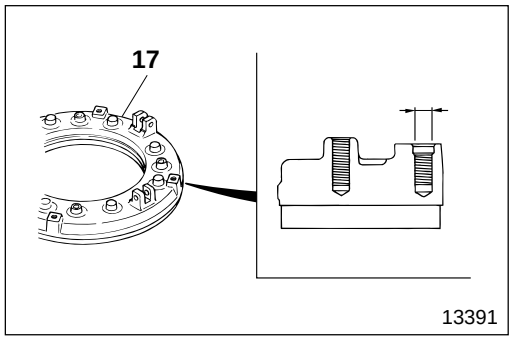

(3) Inner diameter of fitting hole of strap bolt

If the measured value is higher then the limit, replace pressure plate **17**.

M E M O

< C6 >

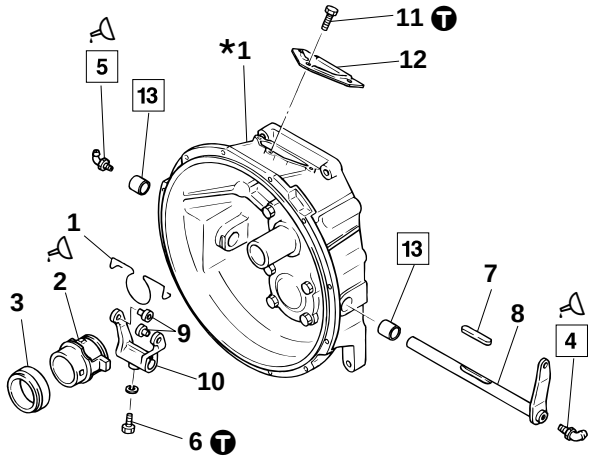

13452

< C7 (M070S6) >

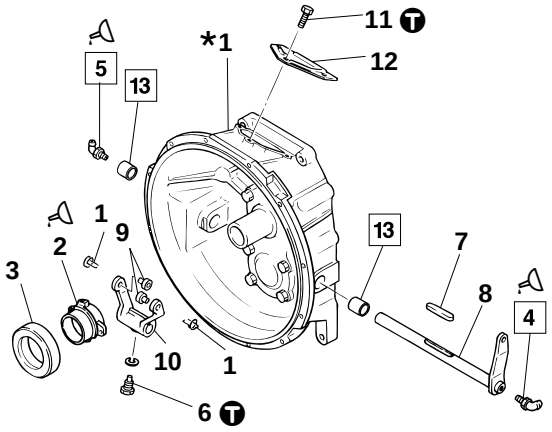

13453

< C7 (M8S2×5) >

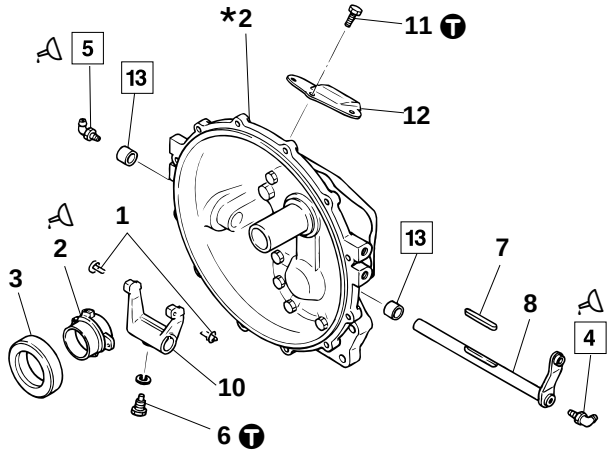

13454

● **Disassembly sequence**

1 Return spring
2 Clutch shifter
3 Release bearing
4 Grease nipple
5 Grease nipple
6 Set screw
7 Key
8 Release fork shaft
9 Cam follower < C6, C7 (M070S6) >
10 Release fork
11 Bolt
12 Cover
13 Needle roller bearing

***1** : Clutch housing Gr 22A
***2** : Clutch housing Gr 22B

NOTE

Do not remove release bearing 3 and needle roller bearing 13 unless they are faulty.

● **Assembly sequence**

Follow the disassembly sequence in reverse.

T Tightening torque

Unit : N·m {lbf.ft, kgf·m}

Location	Parts to be tightened	Tightening torque	Remarks
6	Set screw	21 {15, 2.1}	—
11	Bolt (Clutch housing cover mounting)	9.8 to 15 {7.2 to 11, 1.0 to 1.5}	—

Lubricant

Location	Points of application	Kinds	Quantity
2	Pack into clutch shifter	Wheel bearing grease [NLGI No.2 (Li soap)]	As required
4, 5	Supply via grease nipple	Wheel bearing grease [NLGI No.2 (Li soap)]	As required

Special tools

Unit : mm {in.}

Location	Tool name and shape	Part No.	Application
13	Needle roller bearing installer 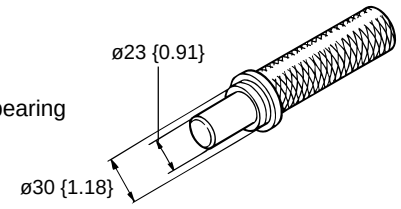	03726-83000	Press-fitting of needle roller bearing

◆ Service procedure

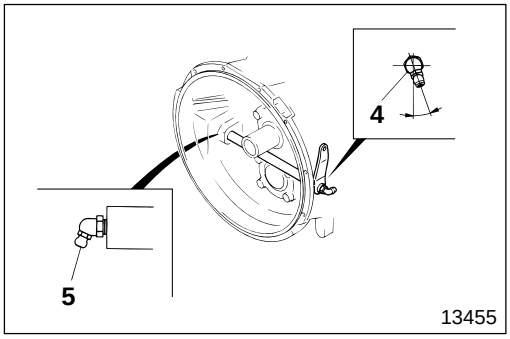

4 **5** **Installation of grease nipple**

NOTE

Install grease nipple 4, 5 so that it faces the direction as illustrated.

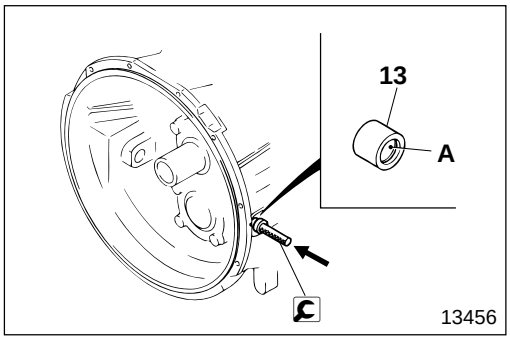

13 **Installation of needle roller bearing**

CAUTION⚠

Do not damage the bearing by hitting it directly with a hammer during installation.

NOTE

Install needle roller bearing 13 so that the side with yellow sticker A faces outside.

BACK HOME

MITSUBISHI FUSO

FK.FM

Service Manual

Group 22A - Manual Transmission <M060S5, S6, M070S6> TWME9503-22A

Group 22A - Manual Transmission <M060S5, S6, M070S6> TWME9620

Group 22B - Manual Transmission <M8S2x5>

MITSUBISHI FUSO TRUCK OF AMERICA, Inc.

MITSUBISHI
FUSO

FK.FM
Service Manual

Group 22A
Manual Transmission
< M060S5, S6, M070S6 >

Table of Contents

MITSUBISHI FUSO TRUCK OF AMERICA, Inc.

BACK HOME

Pub No. TWME9620

GROUP 22A MANUAL TRANSMISSION < M060S5, S6, M070S6 >

SPECIFICATIONS 2

STRUCTURE AND OPERATION 2

TROUBLESHOOTING 11

WORK BEFORE REMOVAL AND INSTALLATION OF TRANSMISSION ASSEMBLY 12

REMOVAL AND INSTALLATION OF TRANSMISSION ASSEMBLY .. 14

GEAR SHIFTER UPPER AND INTERLOCK PLATE 18

POWER SHIFT ASSEMBLY 24

EXTENSION HOUSING, REAR COVER AND PARKING BRAKE ASSEMBLY 30

6TH GEAR < S6 OVERDRIVE (O/D) > AND REVERSE IDLER GEAR < S5, S6 OVERDRIVE (O/D) > 34

REVERSE GEAR AND REVERSE IDLER GEAR < S6 DIRECT DRIVE (D/D) > 42

TRANSMISSION BODY 48

DRIVE PINION ASSEMBLY 64

MAINSHAFT ASSEMBLY < S5, S6 OVERDRIVE (O/D) > 66

MAINSHAFT ASSEMBLY < S6 DIRECT DRIVE (D/D) > 74

COUNTERSHAFT ASSEMBLY 84

TRANSMISSION CONTROL 88

PULLER AND INSTALLER KIT 92

SPECIFICATIONS/STRUCTURE AND OPERATION

SPECIFICATIONS

Item		Specifications			
Mode of control		Floor shift remote control			
Transmission model		M060S5	M060S6	M060S6	M070S6
Gear ratio	1st	6.875	6.875	8.064	8.064
	2nd	4.189	4.189	5.443	5.443
	3rd	2.460	2.460	3.064	3.064
	4th	1.542	1.542	1.824	1.824
	5th	1.000	1.000	1.321	1.321
	6th	—	0.786	1.000	1.000
	Reverse	6.875	6.875	7.354	7.354
Oil capacity	L {qts}	6.1 {6.4} : '96 model 5.6 {5.9} : '97 model	6.7 {7.1}	7.3 {7.7}	8.1 {8.6}
Mass	kg {lb}	134 {295}	151 {339}	168 {370}	176 {388}
Power shift Manufacturer		JIDOSHA KIKI			

STRUCTURE AND OPERATION

Transmission

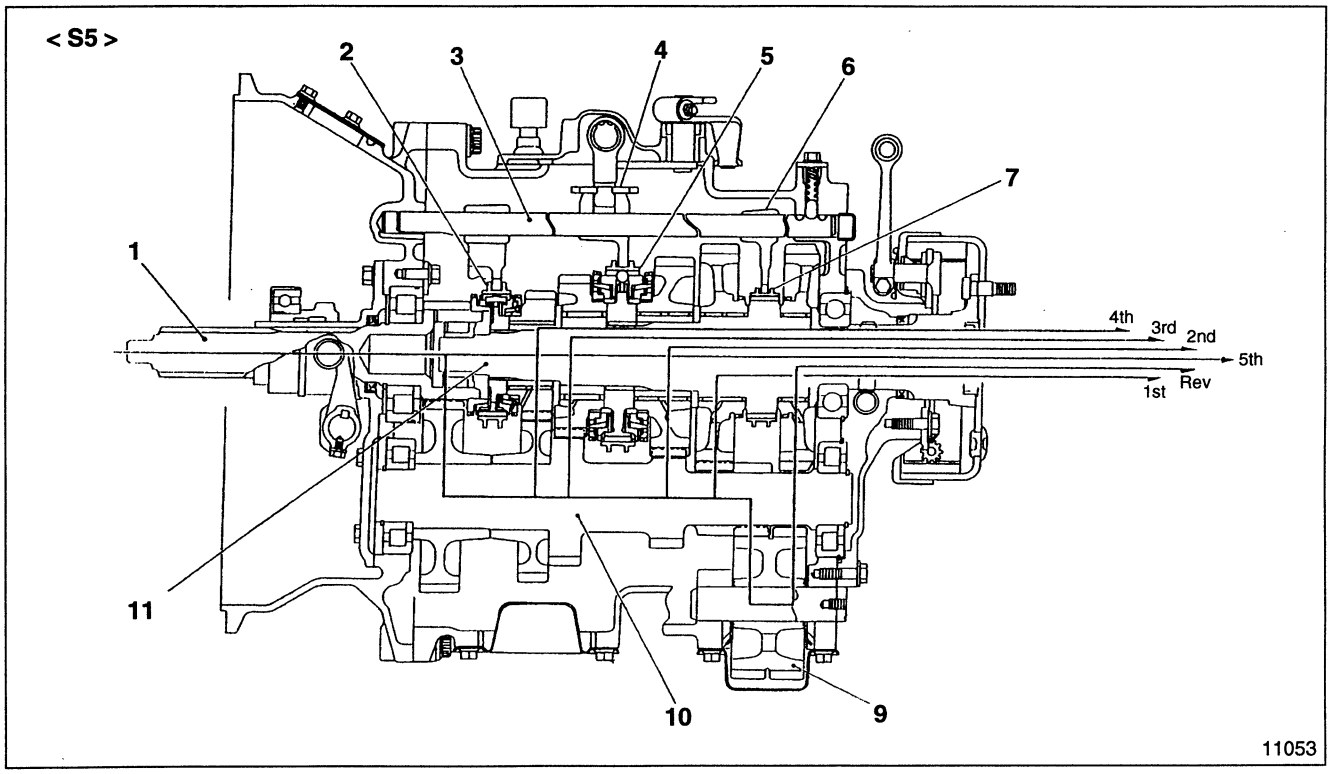

< S6 O/D >

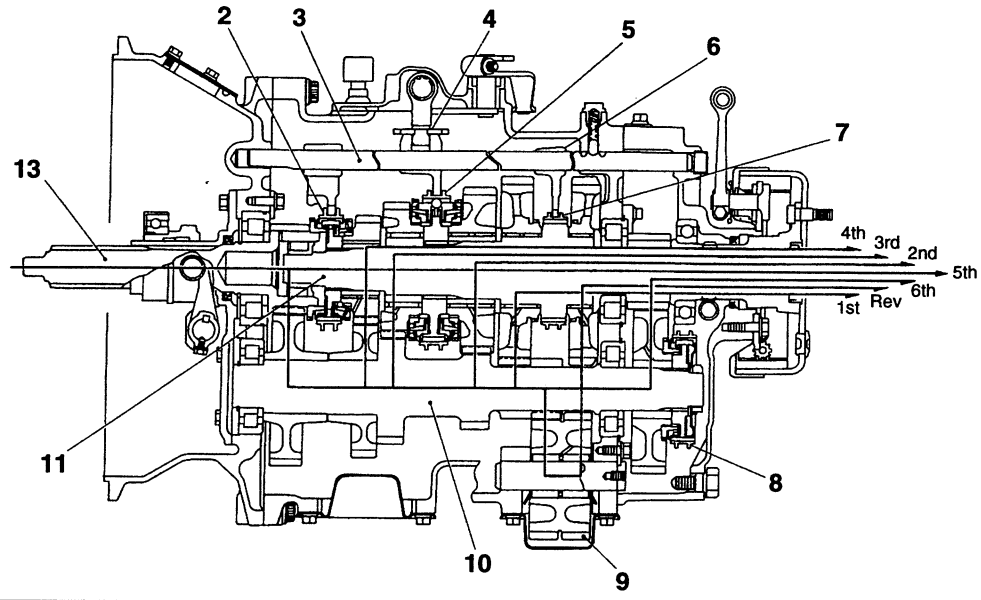

20707

< S6 D/D >

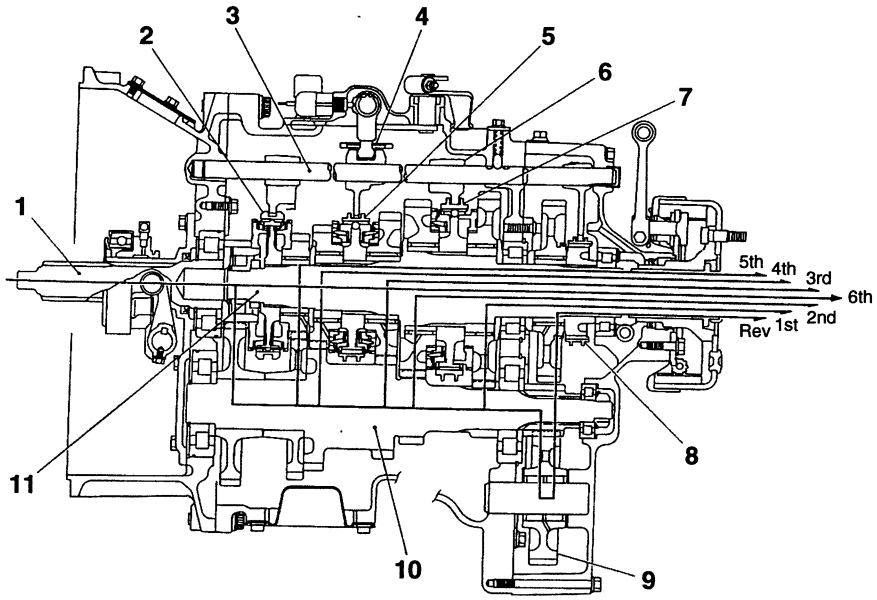

12065

1 Drive pinion
2 4th and 5th synchronizer assembly < S5, S6 O/D >
5th and 6th synchronizer assembly < S6 D/D >
3 Shift rail
4 Interlock mechanism
5 2nd and 3rd synchronizer assembly < S5, S6 O/D >
3rd and 4th synchronizer assembly < S6 D/D >
6 Shift fork
7 1st and reverse constant mesh assembly < S5, S6 O/D >
1st constant mesh and 2nd synchronizer assembly < S6 D/D >
8 6th synchronizer assembly < S6 O/D >
Reverse constant mesh < S6 D/D >
9 Reverse idler gear
10 Countershaft
11 Mainshaft

The transmission changes revolution and torque generated by the engine into those that match the vehicle's power requirement (driving force). Revolution and torque are increased or decreased by making a selection from several sets of engaged gears. The transmission uses an interlock mechanism to avoid double engagement.

Synchromesh Mechanism

This vehicle has two synchromesh mechanisms, a single cone type, and a double cone type, and uses the key system. The single or double cone type is used depending on the gear positions as shown below:

Transmission model / Synchromesh type	S5 S6 O/D	S6 D/D
Single cone type	5th, 6th	5th, 6th
Double cone type	2nd and 3rd, 4th	2nd, 3rd and 4th

Single Cone Type

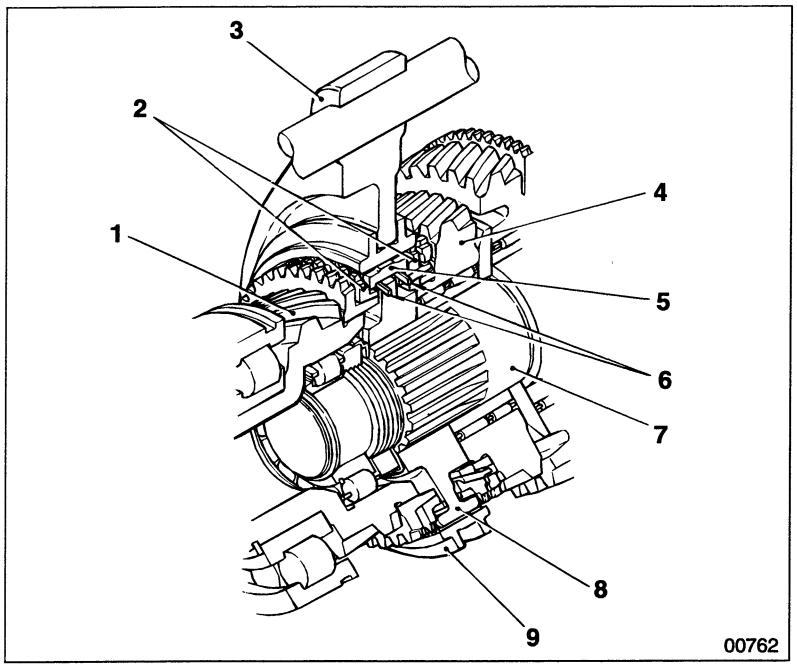

1 Drive pinion (Single cone type)
2 Synchronizer ring
3 4th and 5th shift fork
4 4th gear (Double cone type)
5 Shifting key
6 Shifting key spring
7 Mainshaft
8 Synchronizer hub
9 Synchronizer sleeve

- The following descriptions are for 4th and 5th gear < S5, S6 O/D >
  The inside of synchronizer hub **8** engages the spline of mainshaft **7** and rotates with it. The outside of the synchronizer hub has a spline that engages synchronizer sleeve **9** and three keyways.
- Shifting keys **5** are inserted into these keyways. When the gear shift is in neutral, a protrusion in the center of each shifting key engages a groove inside the synchronizer sleeve and the shifting keys are pressed against the inside of the synchronizer sleeve by shifting key springs **6**.
- Synchronizer rings **2** are inserted into drive pinions **1** in the front and rear of synchronizer hub **8**, and the taper cone of 4th gear **4**.
- The internal tapers of synchronizer rings **2** have fine threads, and the outer splines engage synchronizer sleeve **9**. On the hub side of the synchronizer rings are three keyways in which the ends of shifting keys **5** are inserted. These keyways are wider than the width of the shifting keys.
- Synchronizer rings **2** rotate relative to synchronizer sleeve **9** by the amount of play of the keyways.

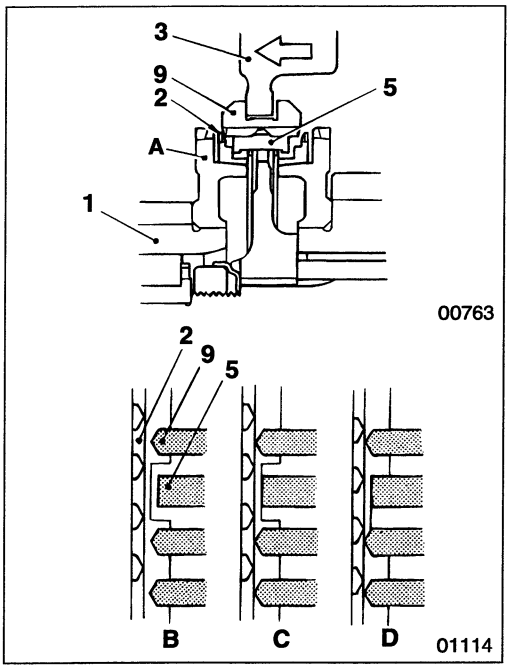

- When the gear shift is in neutral (Figure **B**), moving shift fork **3** in the direction of the arrow as illustrated, moves synchronizer sleeve **9** slightly to the left. At the same time, shifting key **5**, the central protrusion of which engages the synchronizer sleeve, moves to the left and presses synchronizer rings **2** against taper cone **A** of drive pinion **1**. (Figure **C**)
- When the taper surfaces of synchronizer rings **2** make contact with the taper cone of the drive pinion, the taper surfaces of the synchronizer rings act as cone clutches. This frictional torque rotates the synchronizer rings in the rotating direction of the drive pinion by the amount of play between shifting key **5** and the synchronizer rings. The spline chamfers of the synchronizer rings and the spline chamfer of synchronizer sleeve **9** are offset from each other. (Figure **D**)
- The disengagement direction of synchronizer rings **2** is defined by the speed of rotation of the synchronizer—sleeve **9**, and the synchronized—drive pinion **1**. When increasing the vehicle speed by shifting up, disengagement is made in the opposite direction to rotation, and when decreasing the vehicle speed by shifting down, disengagement is made in the rotating direction.

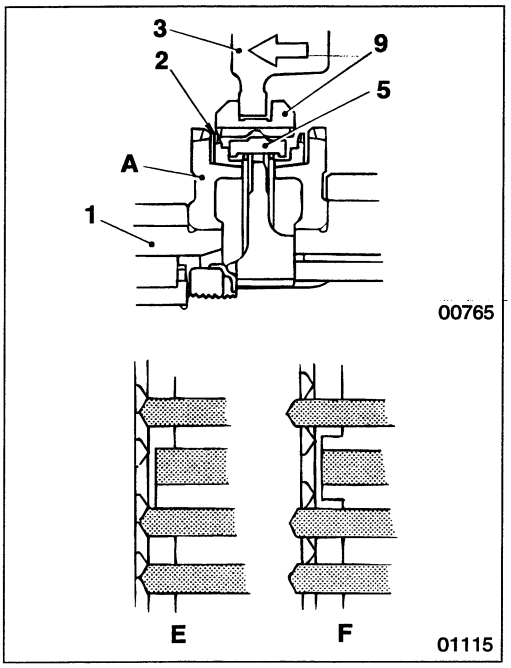

- When synchronizer sleeve **9** moves further to the left, synchronizer rings **2** prevent shifting key **5** from moving, and the synchronizer sleeve disengages from the protrusion of the shifting key.
- Since synchronizer rings **2** remain disengaged, the spline chamfer of synchronizer sleeve **9** presses the spline chamfers of the synchronizer rings, which in turn press the synchronizer rings against taper cone **A** of drive pinion **1**.
- As the frictional torque increases on the taper surfaces, the relative speed of the synchronizer and the synchronized gradually decreases.
  E : In synchronization
  F : After synchronization

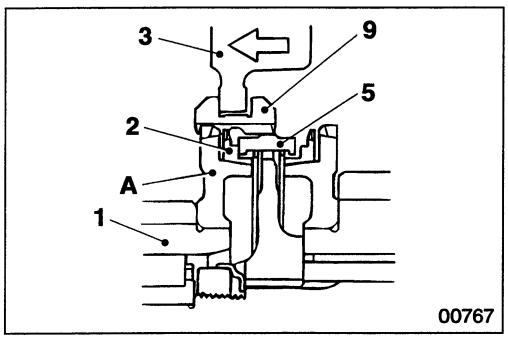

- When synchronizer sleeve **9** and drive pinion **1** rotate at the same speed, synchronizer rings **2** no longer prevent the synchronizer sleeve from moving, and the synchronizer sleeve moves further to the left and smoothly engages the spline of taper cone **A** of drive pinion **1**, transmitting the driving force.

Double Cone Type

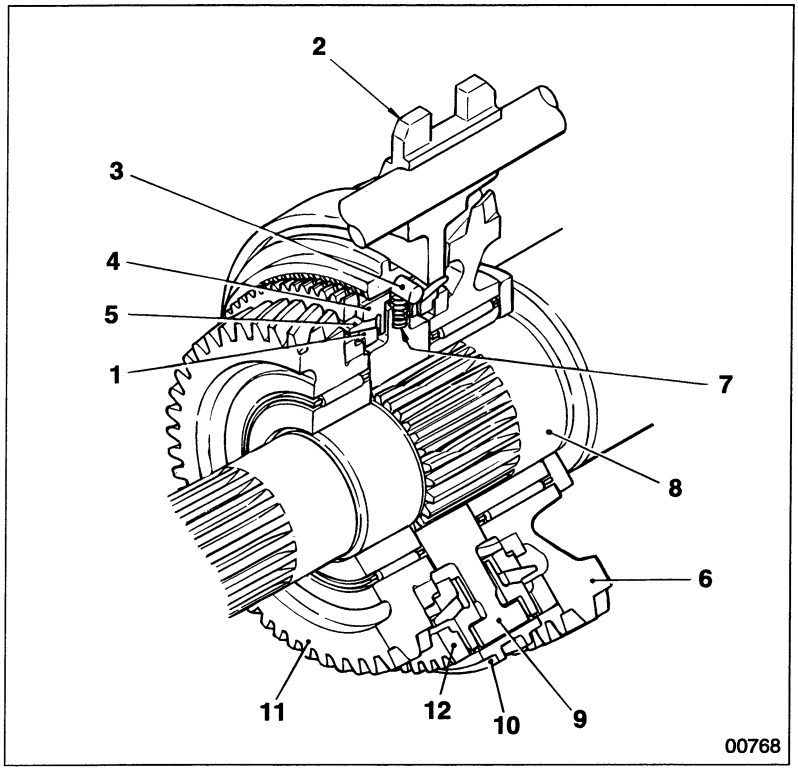

1 Synchronizer inner ring
2 2nd and 3rd shift fork
3 Shifting key
4 Synchronizer outer ring
5 Synchronizer center cone
6 2nd gear
7 Shifting key spring
8 Mainshaft
9 Synchronizer hub
10 Synchronizer sleeve
11 3rd gear
12 Dog clutch

- The following descriptions are for 2nd and 3rd gear < S5, S6 O/D >
  The synchromesh structure and operation of the double cone type are basically the same as for the single cone type.
- Synchronizer center cone **5** is a taper cone independent of 2nd gear **6** and 3rd gear **11**, (both the inside and outside surfaces are tapered). The synchronizer center cone is between synchronizer inner ring **1** and synchronizer outer ring **4** to increase the synchronization capacity.
- Six protrusions on the outside of center cone **5** fit into corresponding gear holes, in the same manner as the taper cone of the single cone type. The center cone and the gear are installed as if integrated.
  Shifting key **3** is a cylinder installed so that the lengthwise direction of the cylinder is at right angles to the diameter direction of synchronizer hub **9**. Shifting key spring **7** is a coil spring inserted in a hole in the synchronizer hub, this spring presses the shifting key against the inside of synchronizer sleeve **10**.
- The 4th gear of the < S5, S6 O/D > model uses the double cone type; however, the structure of shifting key **3** and shifting key spring **7** is the same as for the single cone type.

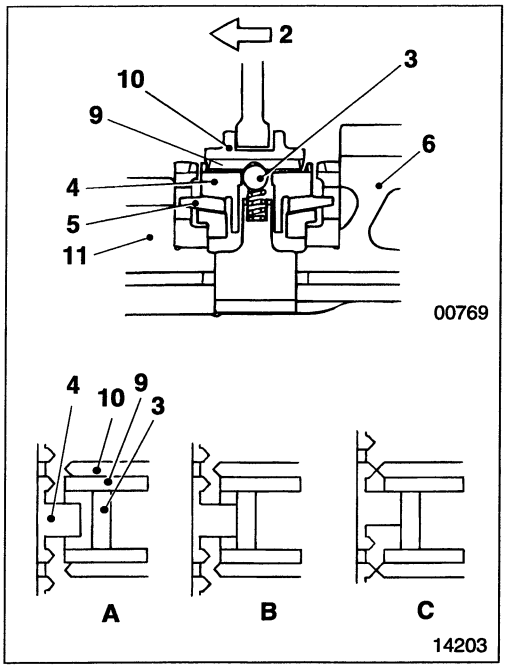

- When the gear shift is in neutral (Figure **A**), moving shift fork **2** in the direction of the arrow as illustrated, moves synchronizer sleeve **10** slightly to the left. At the same time, shifting key **3**, the central protrusion of which engages the synchronizer sleeve, moves to the left and presses synchronizer outer ring **4** against synchronizer center cone **5**. (Figure **B**)
- When the taper surface of synchronizer outer ring **4** makes contact with the taper cone of synchronizer center cone **5**, the taper surface of the synchronizer outer ring acts as a cone clutch. This frictional torque rotates the synchronizer outer ring in the rotating direction of 3rd gear **11** by the amount of play between the synchronizer outer ring and synchronizer hub **9**. The spline chamfer of the synchronizer outer ring and the spline chamfer of synchronizer sleeve **10** are offset from each other. (Figure **C**)
- The disengagement direction of synchronizer outer ring **4** is defined by the speed of rotation of the synchronizer—the sleeve, and the synchronized—3rd gear **11**. When increasing the vehicle speed by shifting up, disengagement is made in the opposite direction to rotation, and when decreasing the vehicle speed by shifting down, disengagement is made in the rotating direction.

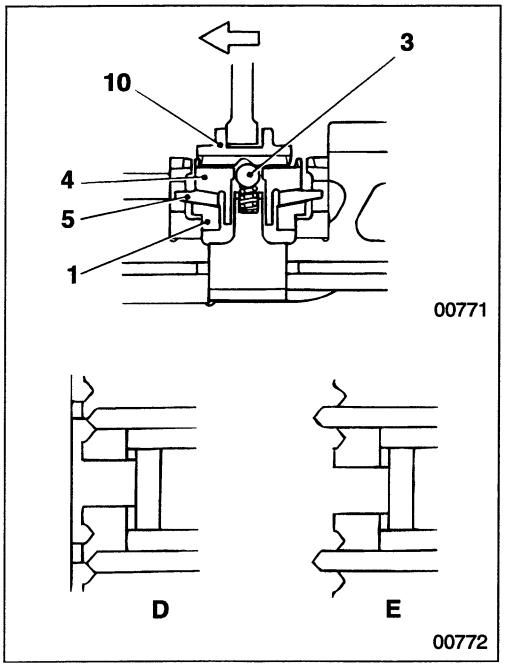

- When synchronizer sleeve **10** moves further to the left, synchronizer outer ring **4** prevents shifting key **3** from moving, and the synchronizer sleeve disengages from the protrusion of the shifting key.
- Since synchronizer outer ring **4** remains disengaged, the spline chamfer of synchronizer sleeve **10** presses the spline chamfer of the synchronizer outer ring, which in turn presses the synchronizer outer ring against the taper cone of synchronizer center cone **5**, and the frictional torque acts on the taper surface.
- As the frictional torque increases on the taper surface of synchronizer inner ring **1**, the relative speed of the synchronizer and the synchronized gradually decreases. The frictional torque acts on both sides of the synchronizer center cone. The double cone type has greater capacity for synchronization than the single cone type.
  D : In synchronization
  E : After synchronization

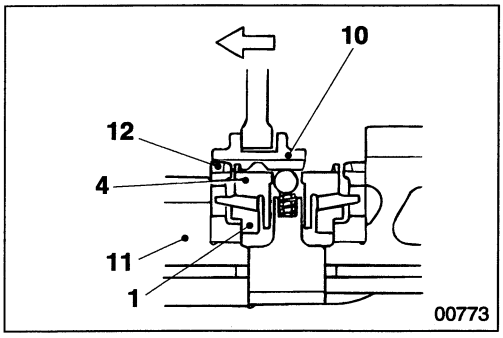

- When synchronizer sleeve **10** and 3rd gear **11** rotate at the same speed, synchronizer outer ring **4** no longer prevents the synchronizer sleeve from moving and the synchronizer sleeve moves further to the left and smoothly engages the spline of dog clutch **12** of the 3rd gear, transmitting the driving force.

Power Shift

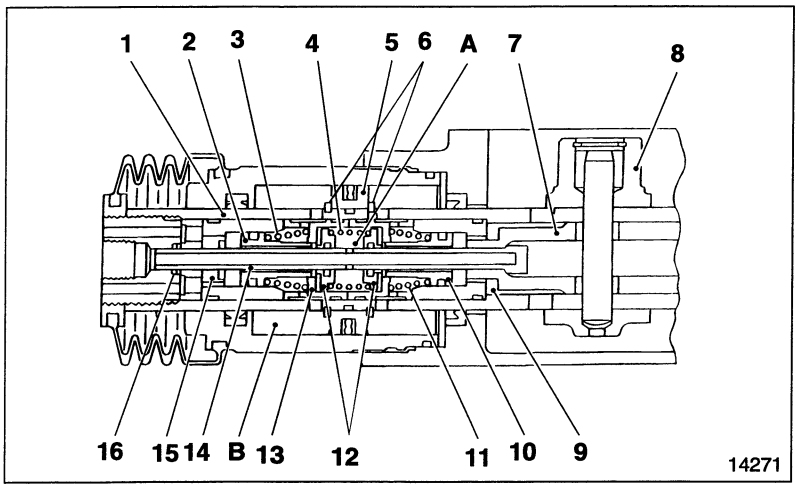

1 Shifter rod
2 Valve lifter
3 No.3 spring
4 No.2 spring
5 Piston
6 Retaining ring
7 Actuating rod
8 Striker
9 Cap
10 Valve lifter
11 No.1 spring
12 Valve seal
13 Valve seat
14 Pipe
15 Retainer
16 Retaining ring

A : Primary side chamber
B : Secondary side chamber

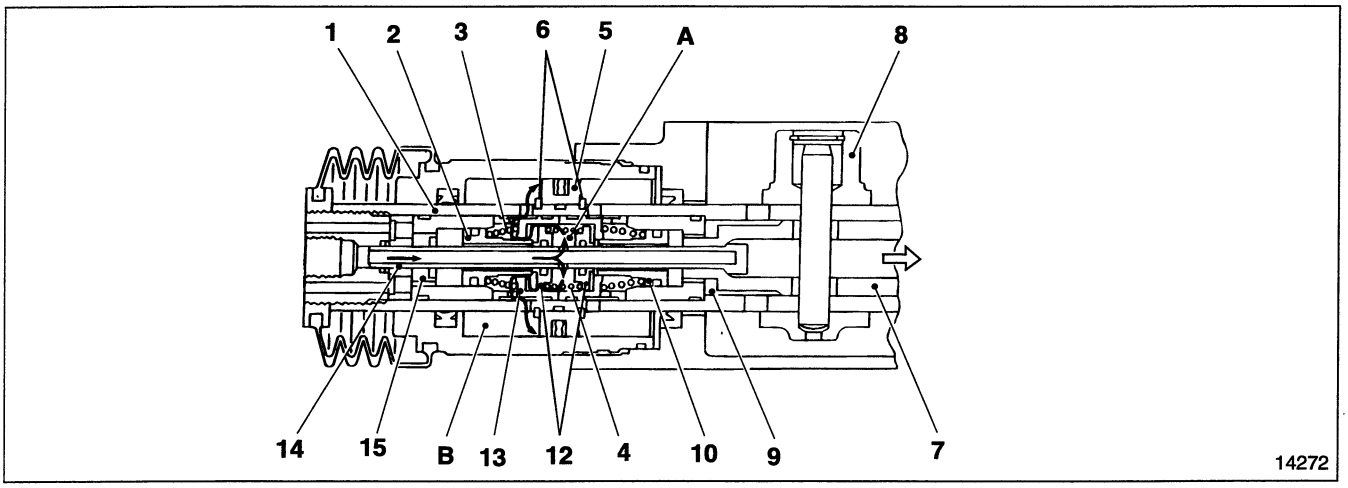

When activated

- When actuating rod **7** is moved in the direction of the arrow as illustrated, shifter rod **1** and the actuating rod move relative to this movement.
  Valve lifter **2** presses No.3 spring **3** against valve seal **12** to overcome the combined repercussive forces of the compressed air acting on the valve seal and No.2 spring **4**. The valve seal separates from valve seat **13**, and the compressed air supplied to primary side chamber **A** is let into secondary side chamber **B** via the opening between the valve seat and the valve seal. The compressed air flows into the cylinder through the hole and groove of the valve seal and the vent hole of shifter rod **1** to put pressure on piston **5**, generating output.
- The output given to piston **5** is transmitted to shifter rod **1** via retaining ring **6** to assist striker **8** which is fixed on the shifter rod. This operates the shift fork on the transmission side, shifting the gears. Thus, gear shifting is completed.
- When the power shift operates in the direction of the arrow as illustrated, the input from the gear shift lever is transmitted by actuating rod **7** via cap **9**, pipe **14**, and retainer **15** fixed on retaining ring **16**. For operation in the opposite direction, all operations are the same in principle as in the direction of the arrow as illustrated, except that the end of the cap, fixed on the end of the actuating rod, presses valve lifter **10** directly.

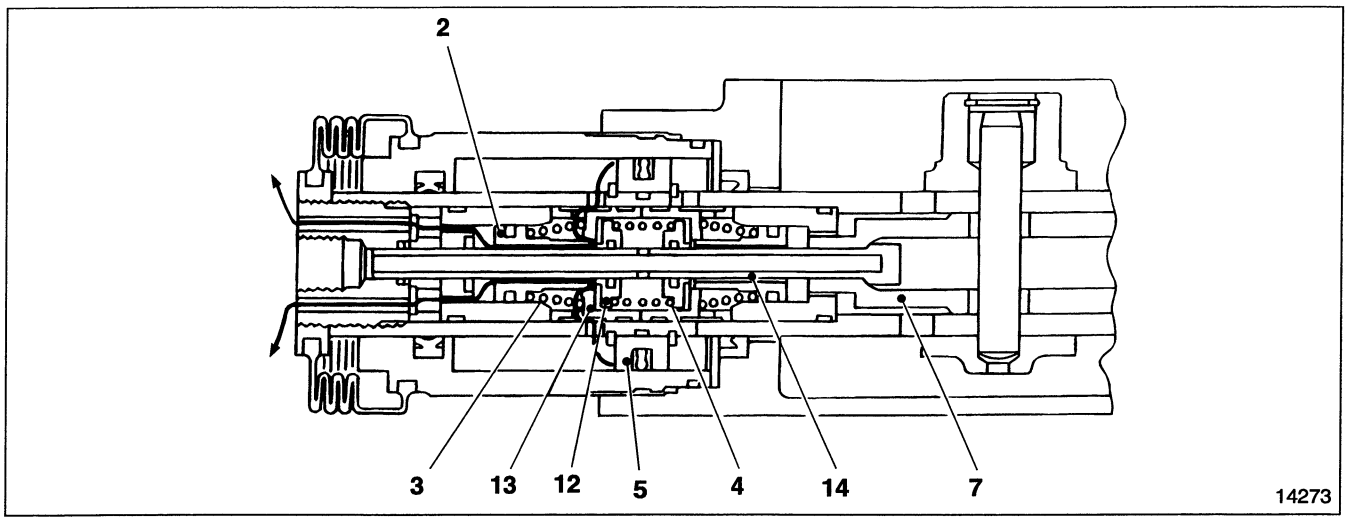

When releasing

- When gear shifting is completed and the input is released, actuating rod **7** is returned to the valve center position (the condition before operation) by the combined repercussive forces of the compressed air of valve lifter **2**, the steel ball, and valve springs **3**, **4**.
  As the valve lifter returns, valve seal **12** seats against valve seat **13**, cutting off the flow of compressed air from primary side chamber **A** to secondary side chamber **B**. As the input rod returns, clearance is generated between the valve lifter and the valve seal.
- The compressed air in the cylinder of secondary side chamber **B** is discharged into the atmosphere through the clearance between valve lifter **2** and pipe **14**. This eliminates the pressure difference between the chambers on both sides of piston **5**, so output is lost.

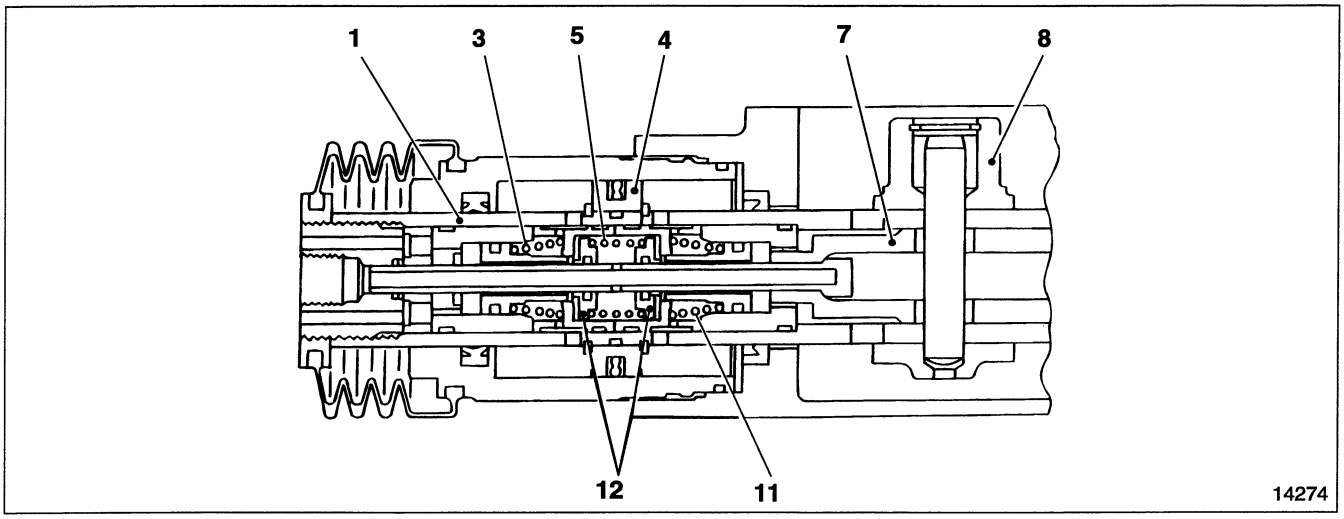

When not operating (non-boosting)

- To operate the power shift, that is, to open the valve and let the compressed air into the output chamber, actuating rod **7** on the input side and shifter rod **1** on the output side must generate relative disengagement.
- When the operating force is transmitted from the gear shift lever to actuating rod **7**, and the resistance on the transmission side is less than the combined repercussive forces working on the relative disengagement of the input side and output side (repercussive forces of No.1 to 3 springs, **3**, **4**, **11**; pressure on valve seal **12**; and sliding resistance on various parts), the mechanism, from the actuating rod to striker **8**, is integrated and does not generate relative disengagement. Therefore, the valve does not open, and without boosting operation, piston **5** moves in the cylinder to shift gears.

Interlock Mechanism

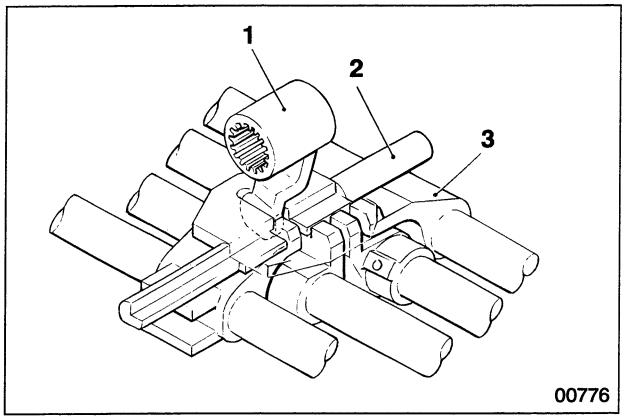

In the interlock mechanism, the rail beneath interlock plate **2** locks jaws **3**, (apart from the jaws shifted by gear shift slide lever **1**), preventing double engagement of gears.

Possible causes	Symptoms	Gears slip out of engagement	Gears hard to engage	Noise when engine is idling	Noise while cruising	Noise when changing gear
Transmission body faulty	Mainshaft rear lock nut loose	○	○			
	Mainshaft thrust washer worn	○	○			
	Mainshaft bearing worn or damaged	○	○			
	Synchronizer ring and synchronizer sleeve spline worn	○				
	Synchronizer ring and gears taper cone area worn		○			
	Mainshaft pilot bearing worn or damaged			○	○	
	Drive pinion bearing worn or damaged			○		
	Countershaft bearing worn or damaged			○		
	Needle bearings of gears worn or damaged			○	○	
	Mainshaft and countershaft bearings worn or damaged				○	
	Mainshaft and countershaft gears backlash excessive				○	
	Spline of gears worn					○
	Gears damaged				○	
	Gear oil insufficient				○	
Control mechanisms faulty	Control cable joint play	○	○			
	Set board assembly bushings worn	○				
	Shift rail steel ball and groove worn	○				
	Shift rail poppet spring fatigued or damaged	○				
	Shift rail sliding movement faulty		○			
	Shift fork jaws worn		○			
	Shift fork bent		○			
Power shift malfunctioning	Air compressor faulty — Gr 35A, B		○			
	Air leakage — Gr 35A, B		○			
	Power shift assembly faulty		○			
Clutch faulty	Clutch disengagement faulty — Gr 21		○			○
	Clutch pedal play faulty — Gr 21		○			
Synchronizer faulty	Contacting surfaces of synchronizer ring and gear taper cone worn					○
	Shifting key worn					○
	Shifting key spring deteriorated or damaged					○
	Synchronizer sleeve worn or damaged				○	○

WORK BEFORE REMOVAL AND INSTALLATION OF TRANSMISSION ASSEMBLY

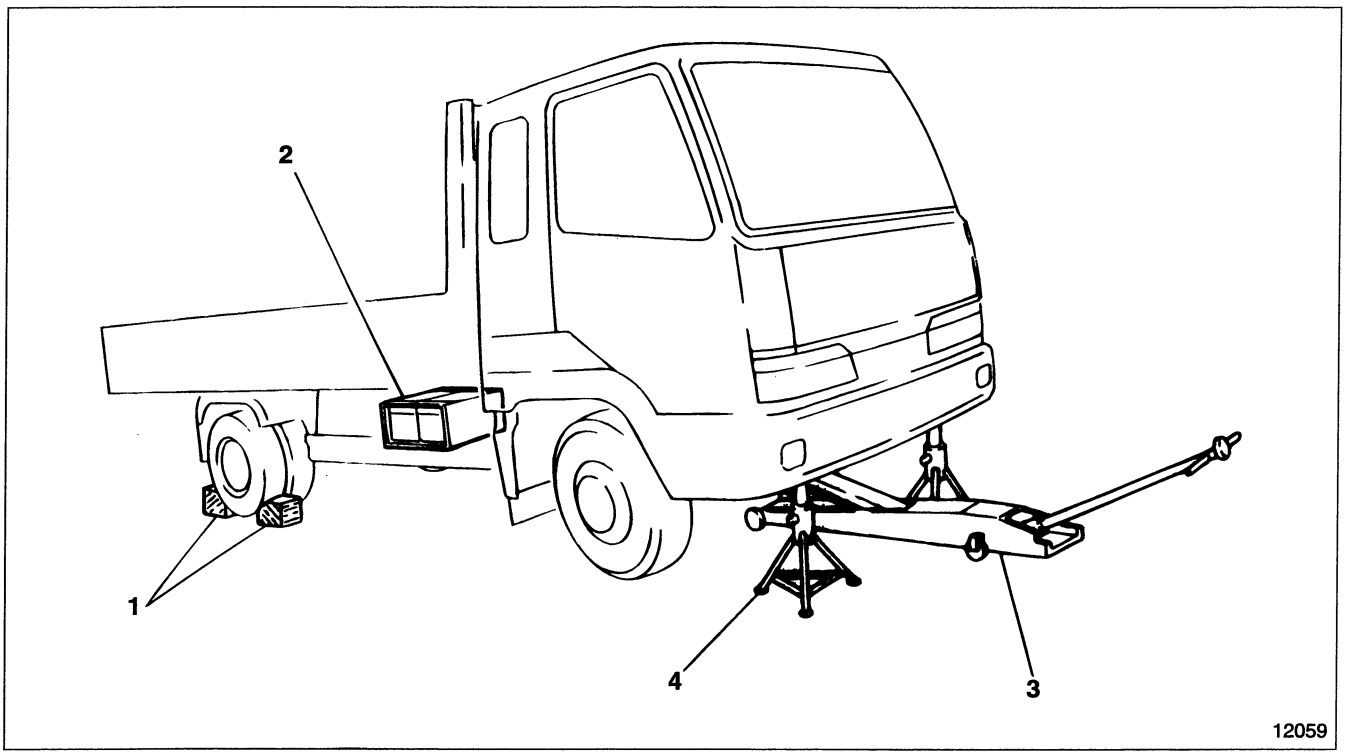

● **Work sequence before removal**

1 Place wheel chocks.
2 Disconnect negative battery cable. Gr 54
3 Jack up the front axle on a garage jack.
4 Support the front frame on rigid racks.

WARNING⚠

- **Since the parking brake will be removed, naturally it cannot be used. Therefore, you must chock the wheels securely so the vehicle does not move.**
- **Do not remove the chocks until the entire operation is completed.**
- **Supporting a vehicle on a garage jack only is extremely dangerous, so always support the frame on rigid racks.**
- **Leave the garage jack and rigid racks in place until the entire operation is completed. Never remove them during the operation.**

CAUTION⚠

Keep the transmission in neutral throughout the operation.

● **Work sequence after installation**

Follow the work sequence before removal in reverse.

MEMO

REMOVAL AND INSTALLATION OF TRANSMISSION ASSEMBLY

Removal and Installation

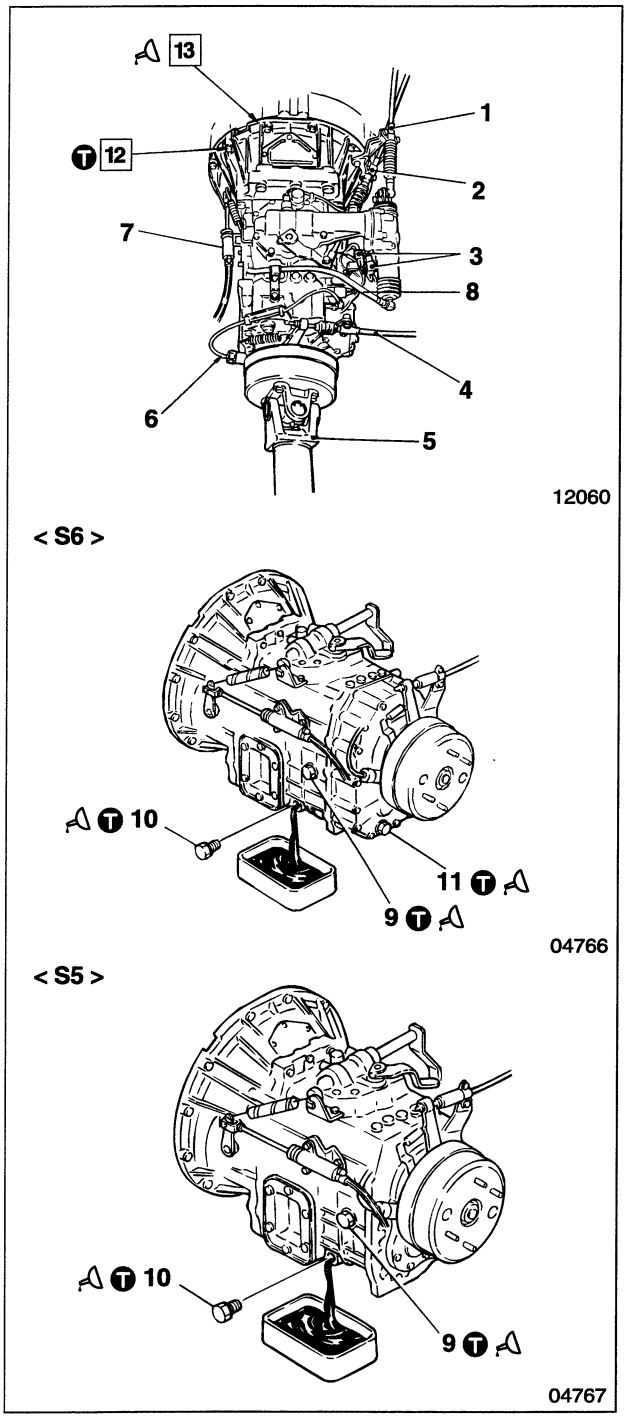

● **Disassembly sequence**

1 Shift cable 🕮 P22A-88
2 Selector cable 🕮 P22A-88
3 Harness connector
4 Parking brake cable < FK, FM617 > Gr 36A
5 Propeller shaft Gr 25
6 Speed sensor Gr 54
7 Clutch power cylinder Gr 21
8 Power shift hose
9 Inspection plug
10 Drain plug (on transmission case)
11 Drain plug (on extension housing)
12 Nut or bolt
13 Transmission assembly

● **Assembly sequence**

Follow the disassembly sequence in reverse.

Ⓣ Tightening torque

Unit : N·m {lbf.ft, kgf·m}

Location	Parts to be tightened	Tightening torque	Remarks
8	Power shift hose connector	20 {14.8, 2}	—
9	Inspection plug	69±15 {51±11, 7±1.5}	—
10, 11	Drain plug	69±15 {51±11, 7±1.5}	—
12	Nut or bolt (Transmission mounting)	40 {30, 4.1}	—

Lubricant and sealant

Location	Points of application	Kinds	Quantity
9	Thread area of inspection plug	THREEBOND 1105D	As required
10, 11	Thread area of drain plug	THREEBOND 1105D	As required
13	Spline of drive pinion	Molybdenum disulfide grease [NLGI No.2 (Li soap)]	As required

◆ Service procedure

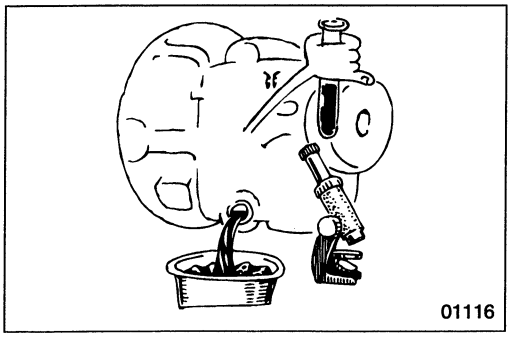

● Oil change

[Draining]

- When draining oil, check the quantity and quality of oil, especially for small pieces of metal and metal dust.
- Clean drain plug **9** before reinstalling it because it is magnetic.

[Filling]

- Check that drain plugs **10, 11** are tightened at specified torque.
- Pour in gear oil until the oil overflows from the inspection hole. (For oil quantity, see specifications.)

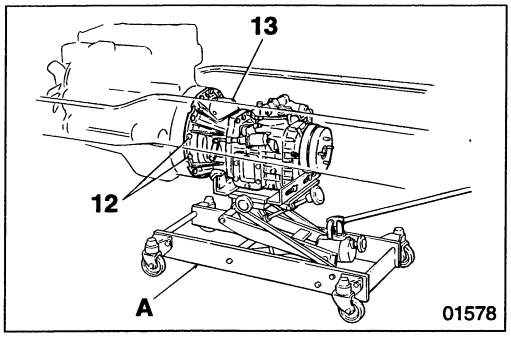

12 Removal of transmission mounting nut or bolt

- Support transmission assembly **13** on transmission jack **A**.
- Tighten transmission mounting nuts or bolts **12**.

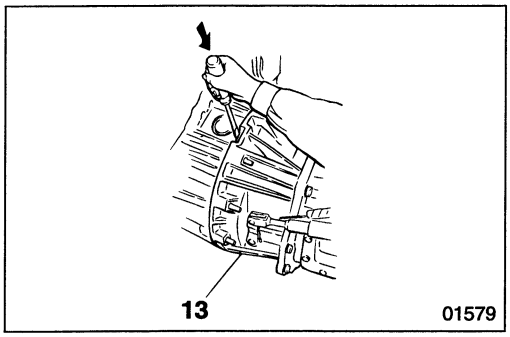

13 Transmission assembly

[Removal]

- Insert a screwdriver into the three removal grooves and pry transmission assembly **13** from the engine.

CAUTION⚠

Make sure that you remove hoses and cables before starting service operations.

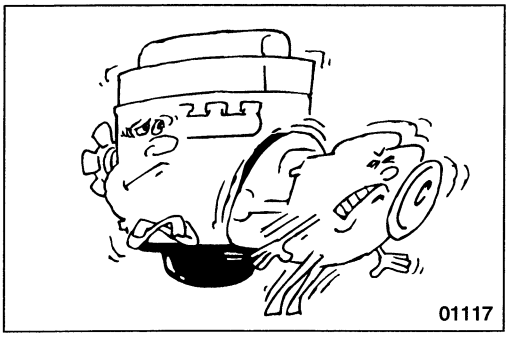

- Move transmission assembly **13** backward until the spline of the drive pinion is detached from the clutch.

CAUTION⚠

Make sure that you pull transmission assembly 13 out in a straight line. If you seesaw the transmission assembly violently, you will damage the spline that connects the drive pinion and the clutch.

REMOVAL AND INSTALLATION OF TRANSMISSION ASSEMBLY

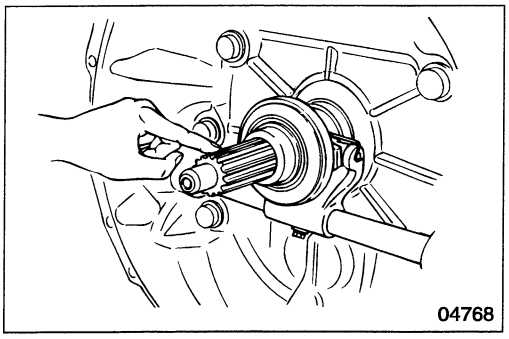

[Installation]

- Check the spline of the drive pinion for rust.
- If rust is found, remove it using a wire brush.
- Rub grease onto the clutch disc sliding surfaces of the drive pinion using your hand.

CAUTION⚠

Make sure that you apply only the necessary amount of grease because too much grease would drip and cause clutch slip.

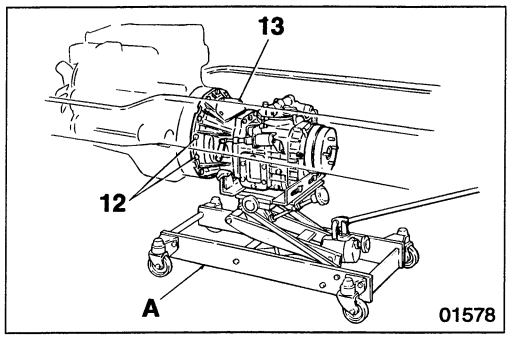

- Support transmission assembly **13** on transmission jack **A**, and insert the transmission assembly into the pilot bearing of the flywheel paying attention to the drive pinion spline.
- Tighten transmission mounting nuts or bolts **12** at specified torque.

MEMO

GEAR SHIFTER UPPER AND INTERLOCK PLATE

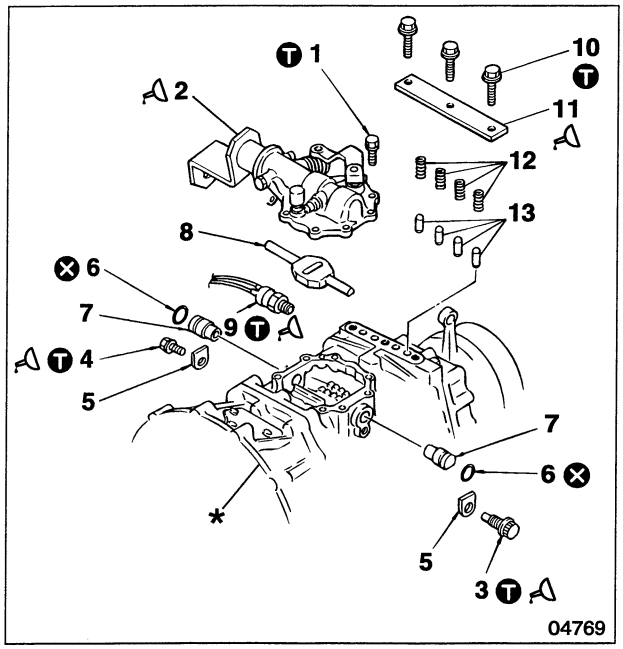

● **Disassembly sequence**

1 Bolt
2 Gear shifter upper assembly P 22A-19
3 Jaw set bolt
4 Bolt
5 Lock plate
6 O-ring
7 Bushing
8 Interlock plate
9 Backup lamp switch Gr 54
10 Bolt
11 Poppet spring plate
12 Poppet spring
13 Interlock pin

* : Transmission body
⊗ : Non-reusable parts

● **Assembly sequence**

6→7
8
→5→4→3→9→2→1→13→12→11→10

Service standards

Unit : mm {in.}

Location	Maintenance item	Standard value (Basic diameter in [ ])	Limit	Remedy
7, 8	Clearance between interlock plate axis and bushing	[12 {0.47}] 0.14 to 0.19 {0.0055 to 0.0075}	0.4 {0.016}	Replace
12	Poppet spring load (Installed length 29 {1.14})	78 N {18 lbf, 8 kgf}	67 N {15 lbf, 68 kgf}	Replace

Ⓣ Tightening torque

Unit : N·m {lbf.ft, kgf·m}

Location	Parts to be tightened	Tightening torque	Remarks
1	Bolt (Gear shifter upper mounting)	23 {17, 2.3}	—
3	Jaw set bolt	135 {98, 13.6}	—
4	Bolt (Lock plate mounting)	40 {30, 4.1}	—
9	Backup lamp switch	49 {36, 5.0}	—
10	Bolt (Poppet spring plate mounting)	49 {36, 5.0}	—

Sealant

Location	Points of application	Kinds	Quantity
2	Contact surface with transmission case	THREEBOND 1215	As required
3	Thread area of jaw set bolt	THREEBOND 1104J	As required
4	Thread area of bolt	THREEBOND 1104J	As required
9	Thread area of backup lamp switch	THREEBOND 1105D	As required
11	Contact surface with transmission case	THREEBOND 1215	As required

Gear Shifter Upper Assembly
< Without Power Shift >

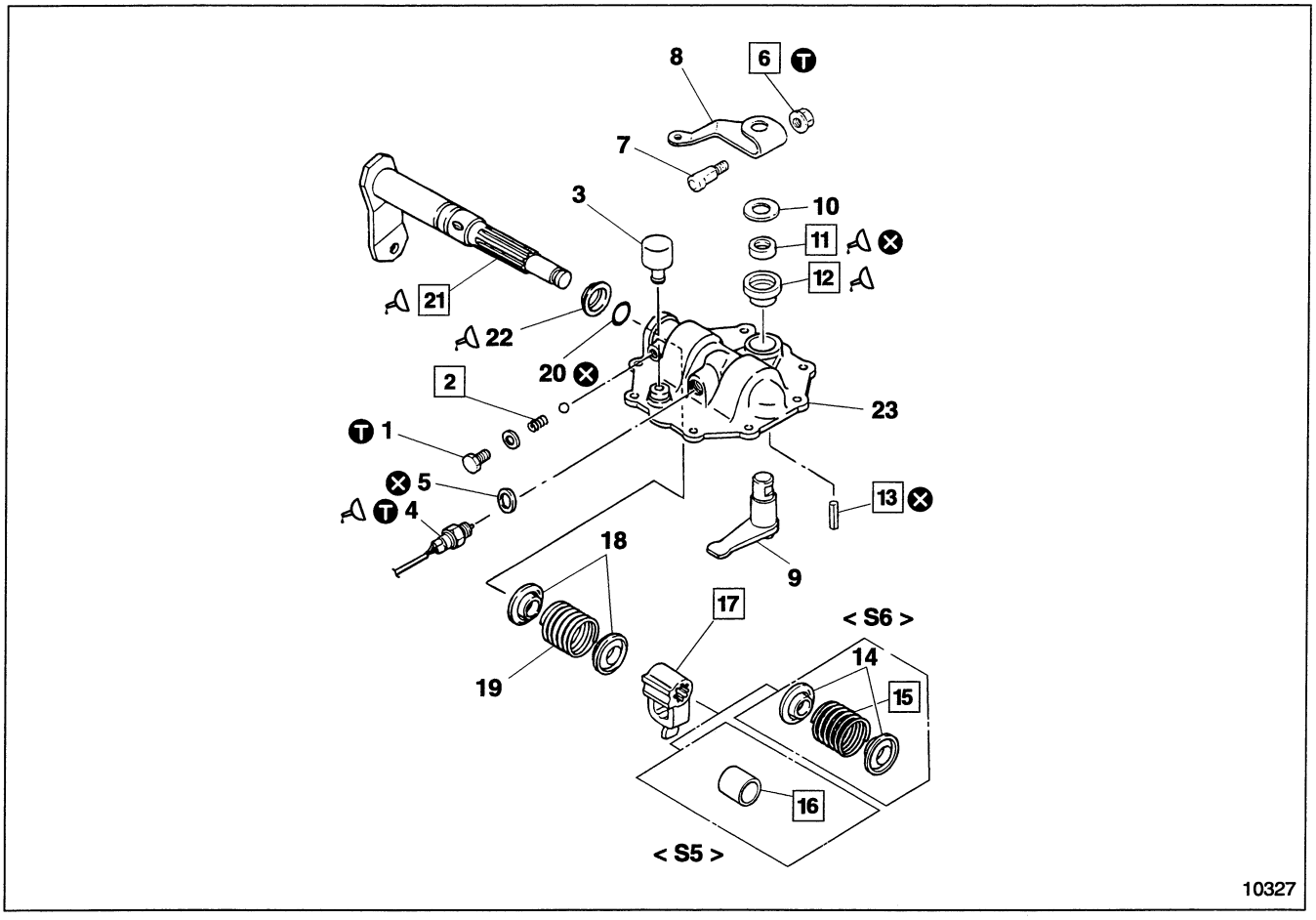

● **Disassembly sequence**

1 Plug
2 Torsion shaft spring
3 Air breather
4 Neutral switch
5 Gasket
6 Nut
7 Lock pin
8 Gear selector lever B
9 Gear selector lever A
10 Washer
11 Oil seal
12 Bushing
13 Spring pin
14 Return spring B retainer < S6 >
15 Return spring B < S6 >
16 Gear selector stopper < S5 >
17 Gear shift slide lever
18 Return spring A retainer
19 Return spring A
20 O-ring
21 Gear shift lever
22 Dust seal
23 Selector lever case

⊗ : Non-reusable parts

NOTE
Do not remove bushing 12 except for replacement.

● **Assembly sequence**

23→12→11
21→22→20
→18→19→18→17→14→15→16→14→13→9→10→8→7→6
5→4
→3→2→1

CAUTION ⚠
Be sure when assembling gear selector lever A 9, that you turn the lever so you do not damage the lip area of oil seal 11.

GEAR SHIFTER UPPER AND INTERLOCK PLATE

< With Power Shift >

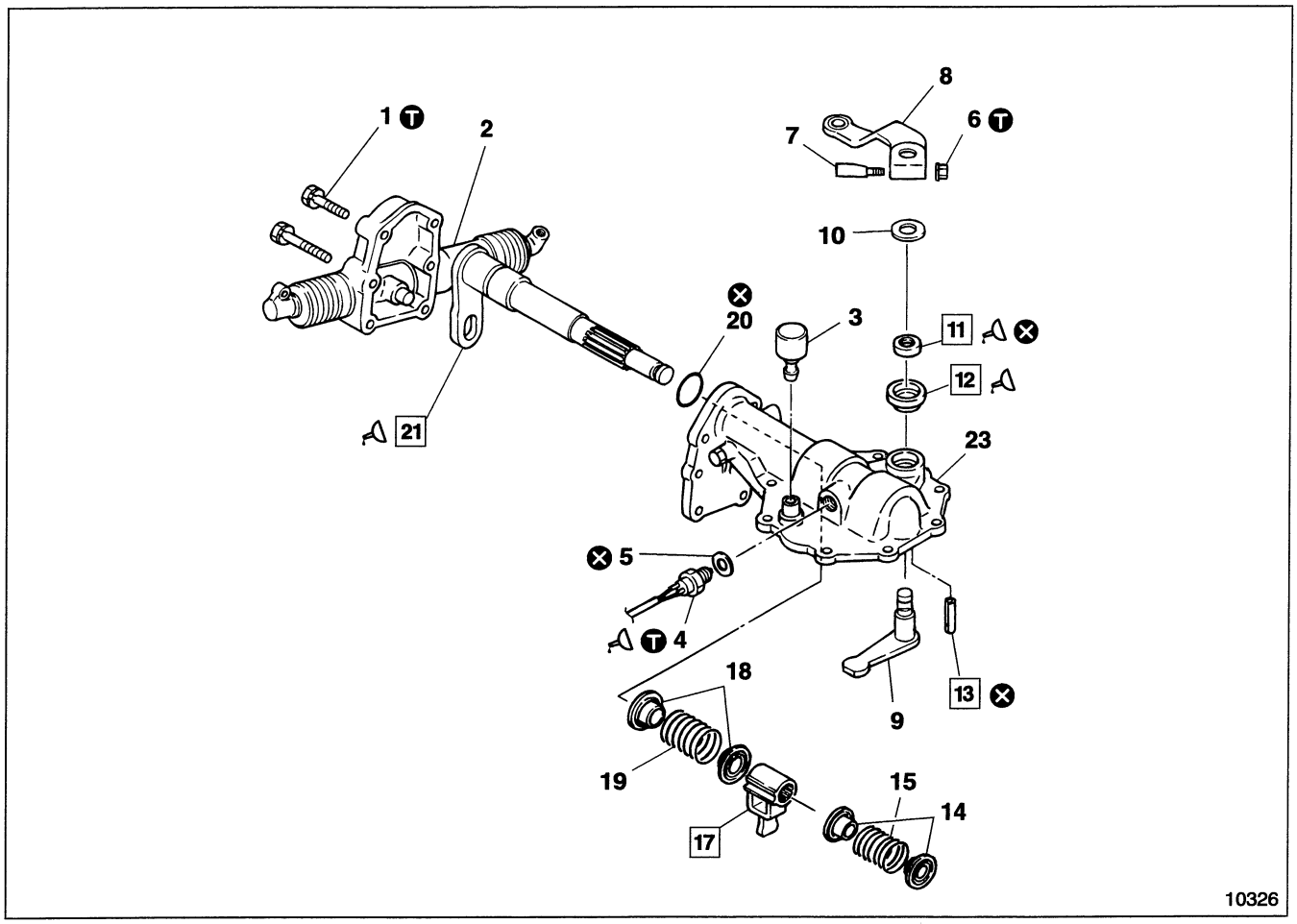

● **Disassembly sequence**

1 Bolt
2 Power shift assembly
📖 P 22A-24
3 Air breather
4 Neutral switch 📁 Gr 54
5 Gasket
6 Nut
7 Lock pin
8 Gear selector lever B
9 Gear selector lever A
10 Washer
11 Oil seal
12 Bushing
13 Spring pin
14 Return spring B retainer
15 Return spring B
17 Gear shift slide lever
18 Return spring A retainer
19 Return spring A
20 O-ring
21 Gear shift lever
23 Selector lever case

⊗ : Non-reusable parts

NOTE

Do not remove bushing 12 except for replacement.

● **Assembly sequence**

23→12→11→18→19→18→17→14→15→14→13→9→10→8→7→6→3→2→1
20→21→
5→4→

CAUTION ⚠

Be sure when assembling gear selector lever A 9, that you turn the lever so you do not damage the lip area of oil seal 11.

Service standards

Unit : mm {in.}

Location	Maintenance item	Standard value	Limit	Remedy
2	Torsion shaft spring load (Installed length 16.2 {0.64}) < Without power shift >	50 N {11 lbf, 5.1 kgf}	42 N {9.48 lbf, 4.3 kgf}	Replace
9	Play in axial direction of gear selector lever A	0.3 to 0.6 {0.012 to 0.024}	—	Replace
15	Return spring B load (Installed length 23.6 {0.93})	92 N {21 lbf, 9.4 kgf}	78 N {18 lbf, 8.0 kgf}	Replace
19	Return spring A load (Installed length 27.6 {1.09})	94 N {21 lbf, 9.6 kgf}	80 N {18 lbf, 8.2 kgf}	Replace

Tightening torque

Unit : N·m {lbf.ft, kgf·m}

Location	Parts to be tightened	Tightening torque	Remarks
1	Bolt (Power shift assembly mounting) < With power shift >	40 {30, 4.1}	—
	Plug < Without power shift >	23 {17, 2.3}	—
4	Neutral switch	34 to 39 {25 to 29, 3.5 to 4.0}	—
6	Nut (Lock pin mounting)	17 {12, 1.7}	—

Lubricant and sealant

Location	Points of application	Kinds	Quantity
4	Thread area of neutral switch	THREEBOND 1104J	As required
11	Lip area of oil seal	Wheel bearing grease [NLGI No.2 (Li soap)]	As required
12	Inner surface of gear selector lever A axis bushing and its friction surface	Wheel bearing grease [NLGI No.2 (Li soap)]	As required
	Contact surfaces between bushing outer surface and case	THREEBOND 1215	As required
21	Gear shift lever O-ring groove	Wheel bearing grease [NLGI No.2 (Li soap)]	As required
22	Pack dust seal < Without power shift >	Wheel bearing grease [NLGI No.2 (Li soap)]	As required

Special tools

Unit : mm {in.}

Location	Tool name and shape	Part No.	Application
13	Spring pin puller 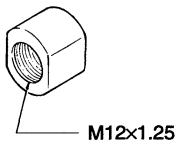 02399	MH062445	Removal of spring pin
	Reverse shaft puller 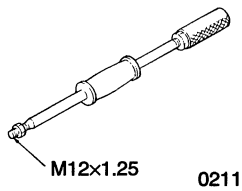 02118	03726-82000	

GEAR SHIFTER UPPER AND INTERLOCK PLATE

◆ Service procedure

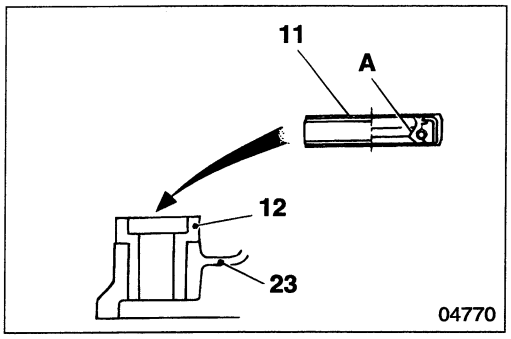

11 Installation of oil seal

- Apply grease to lip area **A** of oil seal **11**.
- Press-fit oil seal **11** into bushing **12** in the direction as illustrated.

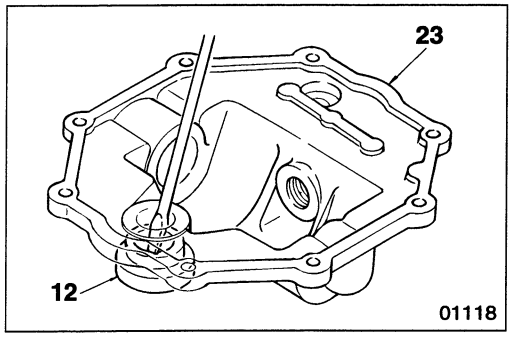

12 Bushing

[Removal]

Remove bushing **12** from selector lever case **23** using a screwdriver.

CAUTION⚠

Be careful not to damage selector lever case 23.

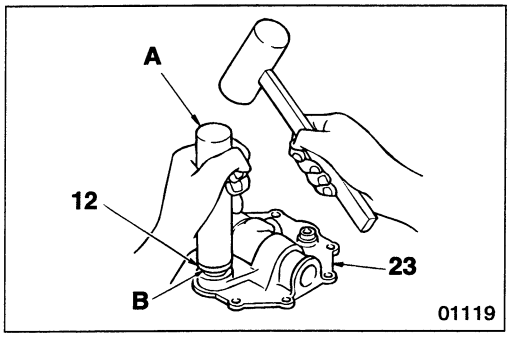

[Installation]

- Clean the inner surface of selector lever case **23**.
- Press-fit bushing **12** into selector lever case **23** using bar **A** (approximately ø40 mm {1.57 in.}).
- When press-fitting bushing **12**, take care not to damage selector lever case **23**.
- After press-fitting, apply sealant to press-fitted side **B** of bushing **12**.

CAUTION⚠

Prevent sealant from sticking to the inner surface of bushing 12.

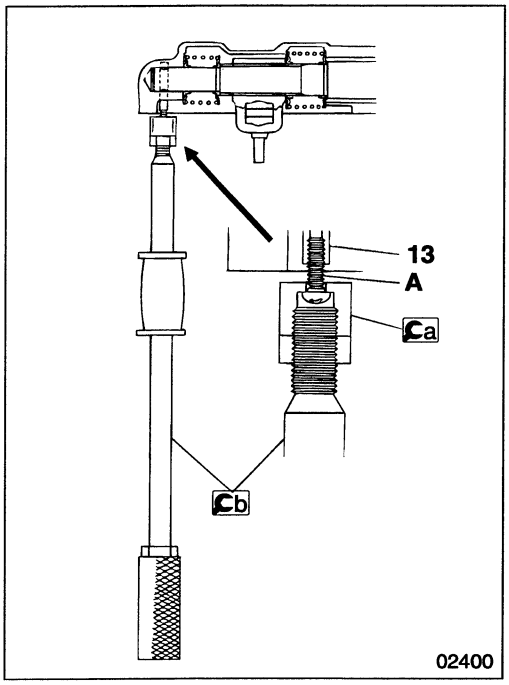

13 Removal of spring pin

- Tap spring pin **13** using an M4 tap.
- Insert Ca spring pin puller with an M4 thread **A** of appropriate length into spring pin **13**.
- Position Cb reverse shaft puller on Ca spring pin puller.
- Remove spring pin **13** from selector lever case **23** using Ca spring pin puller and Cb reverse shaft puller.

< Without Power Shift >

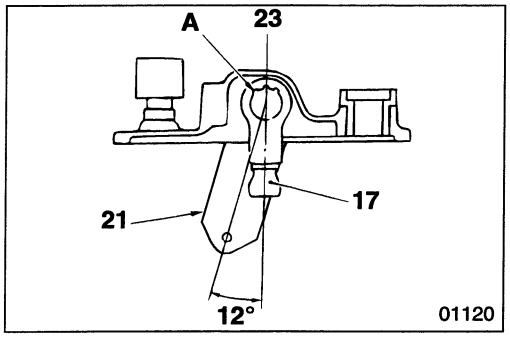

17 **21** **Installation of gear shift slide lever and gear shift lever**

When you install gear shift slide lever **17** in gear shift lever **21**, position spline **A** so that the angle between the slide lever and the shift lever is as illustrated.

< With Power Shift >

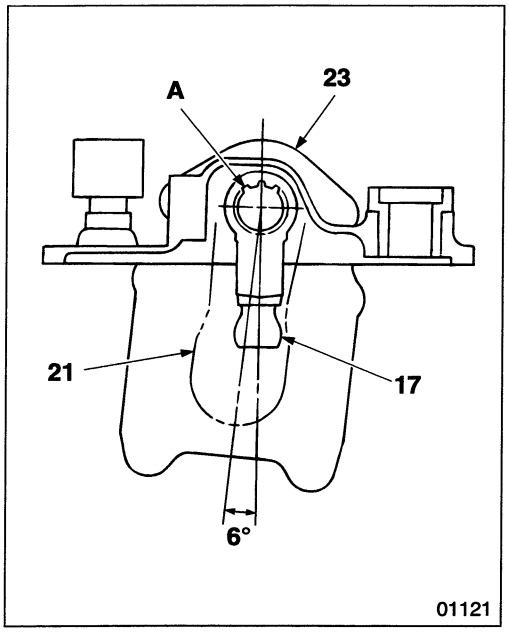

POWER SHIFT ASSEMBLY

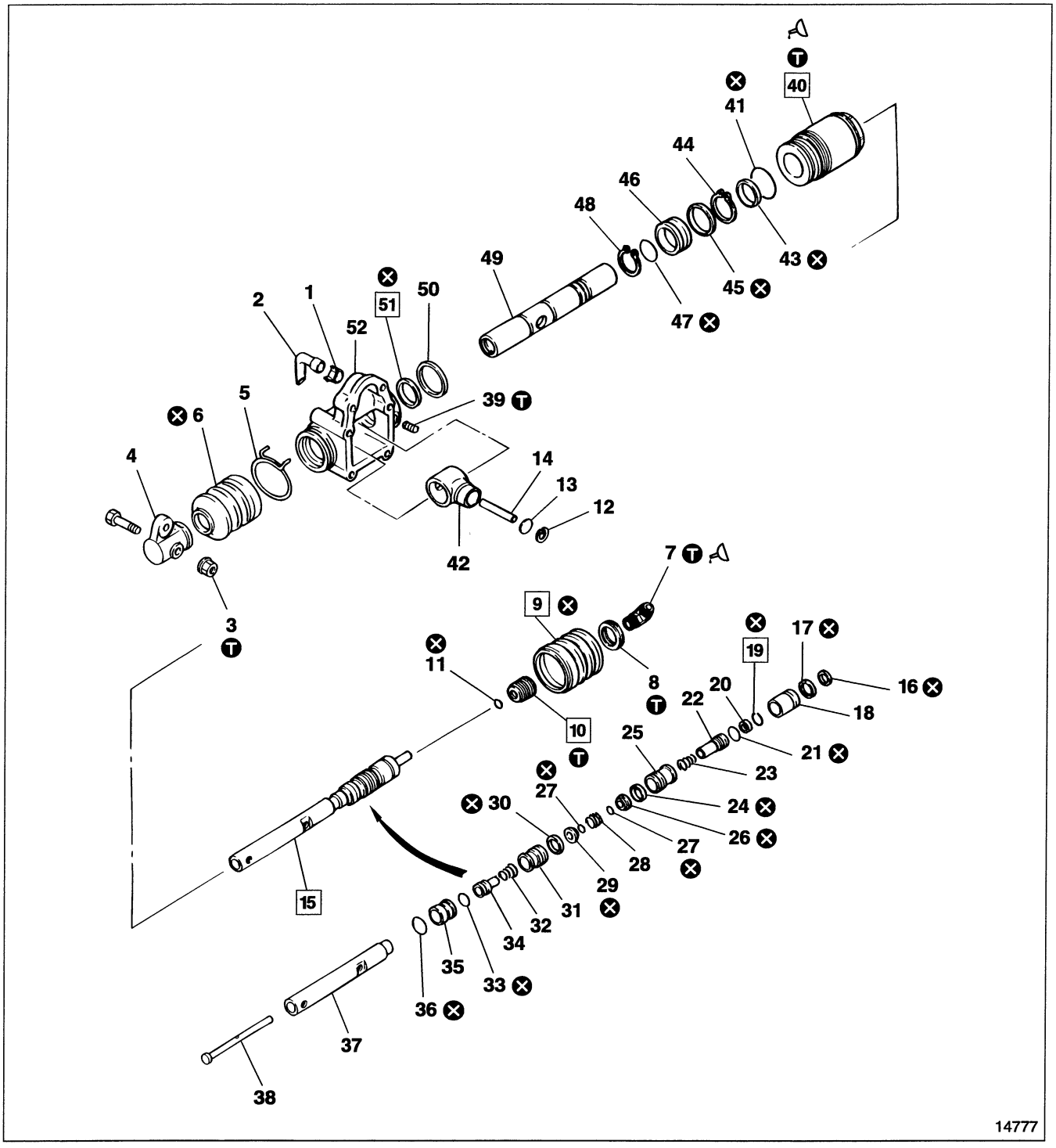

● **Inspection before disassembly**

P22A-26

● **Disassembly sequence**

1 Clamp
2 Hose
3 Nut
4 Lever
5 Clamp
6 Boot
7 Connector
8 Nut
9 Boot
10 Connector
11 O-ring
12 Retaining ring
13 Plate
14 Straight pin
15 Valve assembly
16 Filter
17 Square ring
18 Tube
19 Retaining ring
20 Retainer
21 O-ring
22 Lifter
23 Spring
24 Square ring
25 Seat
26 Seal assembly
27 O-ring
28 Spring
29 Seal assembly
30 Square ring
31 Seat
32 Spring
33 O-ring
34 Lifter
35 Bushing
36 O-ring
37 Rod
38 Pipe
39 Set screw
40 Cylinder
41 O-ring
42 Striker
43 Packing
44 Retaining ring
45 Piston packing
46 Piston
47 O-ring
48 Retaining ring
49 Shifter rod
50 Plate
51 Cup packing
52 Housing

⊗ : Non-reusable parts

● **Assembly sequence**

Follow the disassembly sequence in reverse.

Service standards

Location	Maintenance item	Standard value	Limit	Remedy
23	Spring load (Installed length 12.35 {0.49})	82 N {19 lbf, 8.4 kgf}	67 N {15 lbf, 6.8 kgf}	Replace
28	Spring load (Installed length 10 {0.39})	13 N {2.9 lbf, 1.3 kgf}	9.8 N {2.2 lbf, 1.0 kgf}	Replace
32	Spring load (Installed length 12.2 {0.48})	50 N {11 lbf, 5.06 kgf}	40 N {9.0 lbf, 4.1 kgf}	Replace

Ⓣ Tightening torque

Unit : N·m {lbf.ft, kgf·m}

Location	Parts to be tightened	Tightening torque	Remarks
3	Nut	24 to 26 {17 to 20, 2.4 to 2.7}	—
7	Connecter (Air hose side)	14 to 49 {10 to 36, 1.4 to 5.0}	—
8	Nut (Cylinder side connecter)	59 to 69 {43 to 51, 6 to 7}	—
10	Connecter (Cylinder side)	7.8 to 12 {5.8 to 8.7, 0.8 to 1.2}	—
39	Set screw	2 to 3.4 {1.4 to 2.5, 0.2 to 0.35}	—
40	Cylinder	78 to 98 {58 to 72, 8 to 10}	—

POWER SHIFT ASSEMBLY

Lubricant and sealant

Location	Points of application	Kinds	Quantity
—	All friction surfaces	Multipurpose grease [NLGI No.2 (Li soap)]	As required
7	Thread area of connecter	THREEBOND 1110B	As required
40	Thread area of cylinder	LOCTITE 242 or THREEBOND 1401B	As required

Special tools

Location	Tool name and shape	Part No.	Application
10	Connector	*910-25790	Removal and installation of connector
15	Guide	*910-24800	Inserting valve assembly
19	Insert tool	*910-22011	Inserting retaining valve
		*910-26500	
40	Socket	*910-21982	Removal and installation of cylinder

* JIDOSHA KIKI part No.

◆ Service Procedure

● Inspection before disassembly

(1) Apply 735 kPa {105 lbf/in², 7.5 kgf/cm²} of pressure to the power shift assembly from the connector, check the airtightness when not operating (valve in neutral), and when operating valve is pressed and pulled. If the measured value deviates from the standard value, replace the faulty parts.

Maintenance item	Standard value	
Airtightness when not operating	Decrease of pressure after 15 seconds	9.8 kPa {1.4 lbf/in², 0.1 kgf/cm²}
Airtightness when operating		49 kPa {7.1 lbf/in², 0.5 kgf/cm²}

(2) Measure the sliding resistance in the disengagement direction. If the measured value deviates from the standard value, replace the faulty parts, or grease them.

Maintenance item	Standard value
Resistance in shifting direction	39 N {8.8 lbf, 4 kgf}

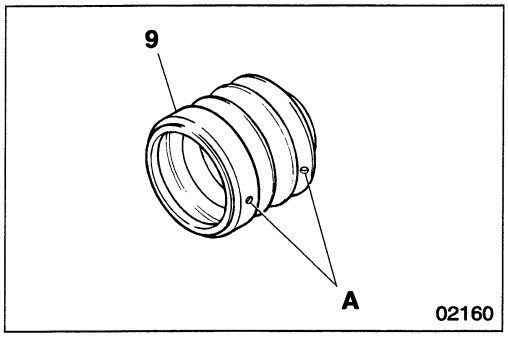

9 **Installation of boot**

When you install boot **9** on housing **52**, point drain holes **A** downward.

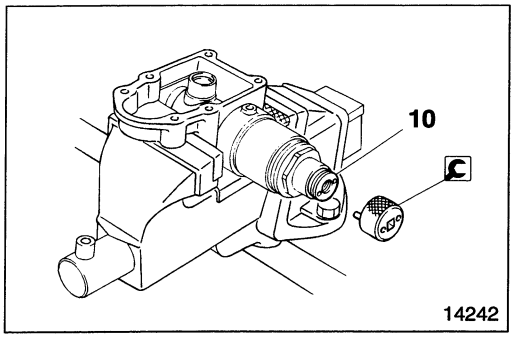

10 **Removal and installation of connector**

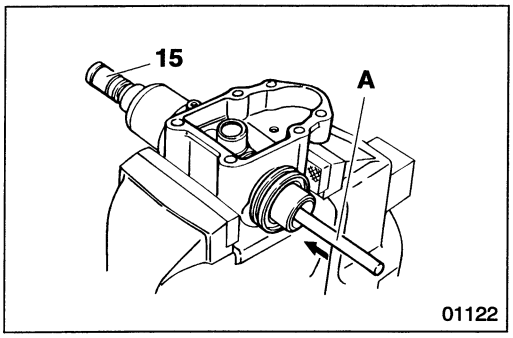

15 **Valve assembly**

[Removal]

Gently drive valve assembly **15** out from the shifter rod from the lever side using bar **A**.

CAUTION

Do not drive valve assembly 15 too hard or you will damage the valve parts.

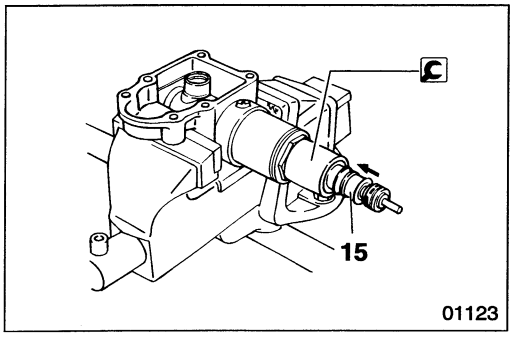

[Installation]

- Apply grease to valve assembly **15**.
- Install valve assembly **15** into the shifter rod using guide, taking care not to damage the seals.

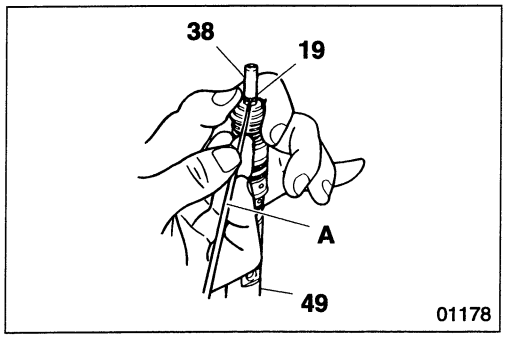

19 **Retaining ring**

[Removal]

- Hold shifter rod **49** in a vise, taking care not to damage the shifter rod.
- Remove retaining ring **19** from pipe **38** using bar **A** as illustrated.

CAUTION

- **After removing retaining ring 19, you can remove all the valve parts.**
- **Keep the valve parts in order to avoid mix ups when installing.**

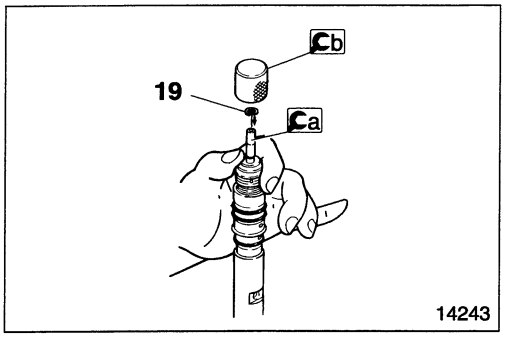

[Installation]

- Install the valve parts on pipe **38**.
- Install Ca insert tool on pipe **38** end.
- Insert retaining ring **19** into pipe **38** groove using Cb insert tool.

CAUTION

Be careful not to apply excessive force to retaining ring 19 when you insert it.

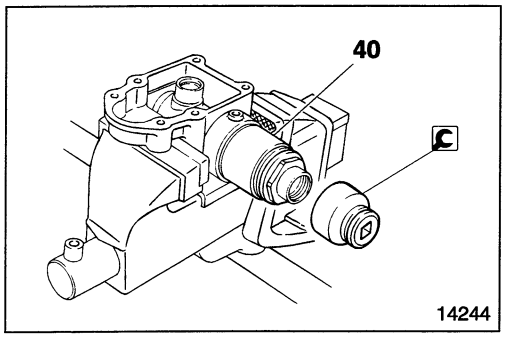

40 **Removal and installation of cylinder**

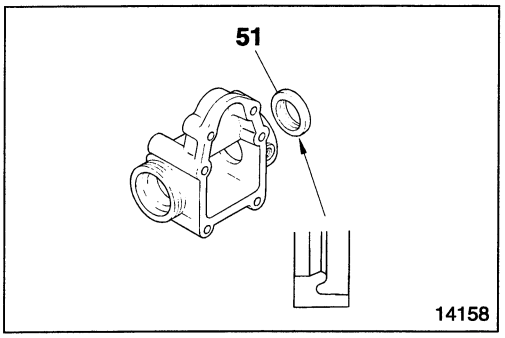

51 **Installation of cup packing and retainer**

MEMO

EXTENSION HOUSING, REAR COVER AND PARKING BRAKE ASSEMBLY

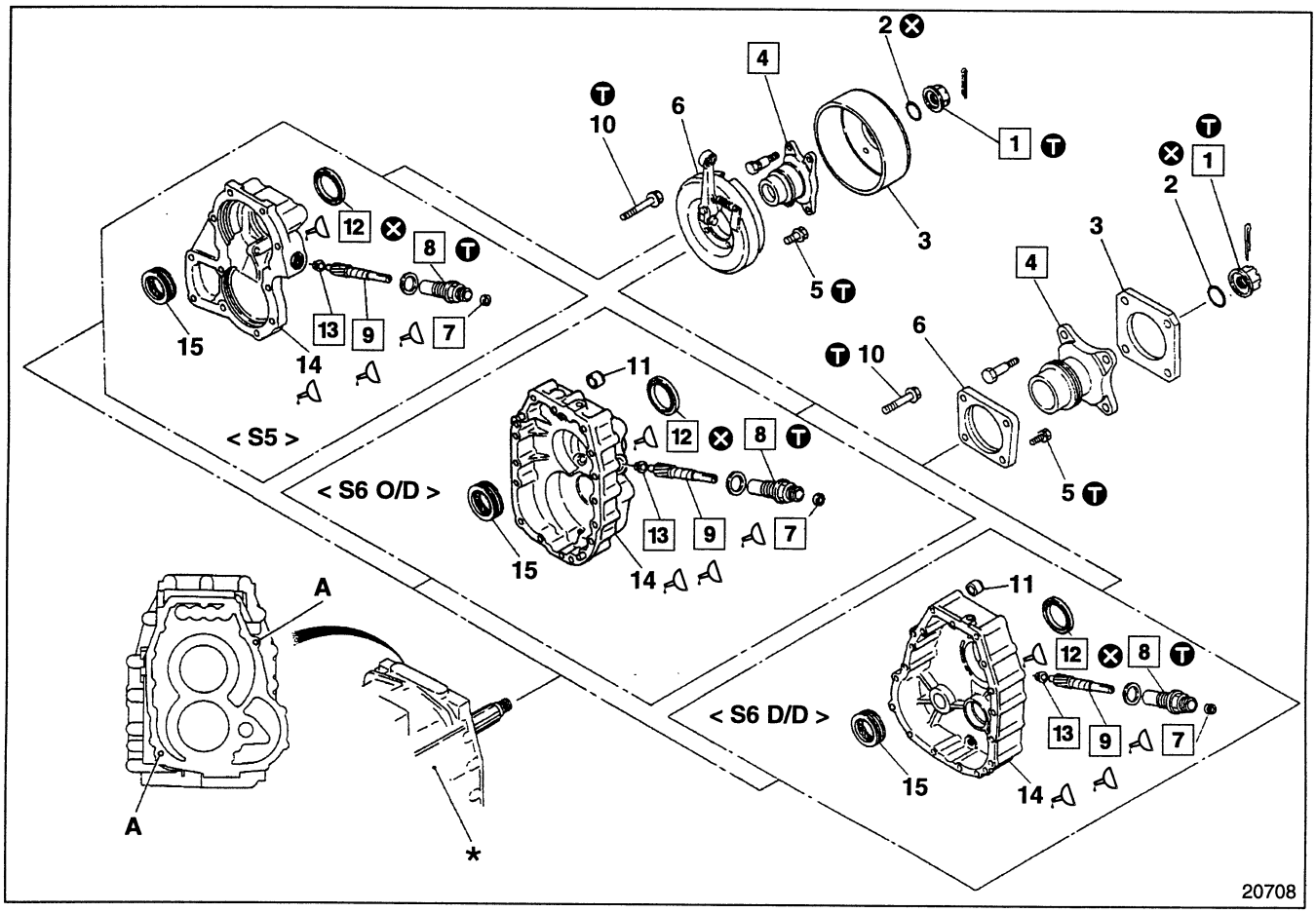

● **Disassembly sequence**

1 Lock nut
2 O-ring
3 Parking brake drum < FK, FM617 >
Flange spacer < FM657 >
4 Companion flange
5 Bolt
6 Support plate and shoe assembly < S5 >
Dust cover < S6 >
7 Oil seal
8 Speedometer gear bushing
9 Speedometer gear
10 Bolt
11 Dust plug < S6 >
12 Oil seal
13 Speedometer gear bushing A
14 Rear cover < S5 >
Extension housing < S6 >
15 Speedometer worm

* : Transmission body
A : Positioning pins (two points)
⊗ : Non-reusable parts

● **Assembly sequence**

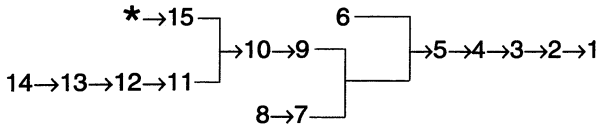

NOTE

Inspect play of speedometer gear 9 before disassembly.

Service standards

Unit : mm {in.}

Location	Maintenance item	Standard value (Basic diameter in [ ])	Limit	Remedy
8, 9	Clearance between speedometer gear bushing and speedometer gear	[12] 0.02 to 0.07 {[0.47] 0.00079 to 0.0028}	0.15 {0.0059}	Replace
9, 15	Play between speedometer gear and speedometer worm	0.13 to 0.29 {0.0051 to 0.011}	0.36 {0.014}	Replace

Tightening torque

Unit : N·m {lbf.ft, kgf·m}

Location	Parts to be tightened		Tightening torque	Remarks
1	Lock nut	S5, S6 O/D	245 to 345 {180 to 255, 25 to 35}	—
		S6 D/D	590 to 1080 {435 to 795, 60 to 110}	—
5	Bolt (Support plate and shoe assembly or dust cover mounting)		74 {54, 7.5}	—
8	Speedometer gear bushing		145 {110, 15}	—
10	Bolt (Extension housing or rear cover mounting)		40 {30, 4.1}	—

Lubricant and sealant

Location	Points of application	Kinds	Quantity
7, 12	Interior and lip area of oil seal	Wheel bearing grease [NLGI No.2 (Li soap)]	As required
9	Friction surface with speedometer gear bushing	Molybdenum disulfide grease [NLGI No.2 (Li soap)]	As required
14	Contact surfaces between rear cover or extension housing and transmission case	THREEBOND 1215	As required

Special tools

Unit : mm {in.}

Location	Tool name and shape	Part No.	Application
1	Socket wrench 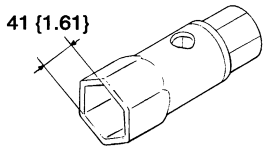 00069	< S5, S6 O/D > MH061532	Removal and installation of mainshaft rear lock nut
	Socket wrench 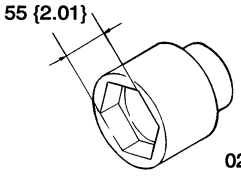 02030	< S6 D/D > MH061519	
4	Flange puller 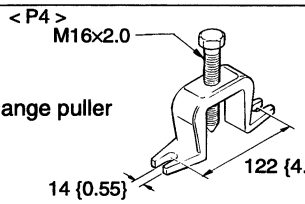 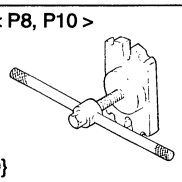 02153	< P4 > MC881524	Removal of flange at rear of mainshaft
		< P8, P10 > MH061393	
12	Oil seal installer 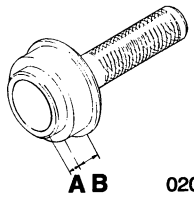 02031	< S5, S6 O/D > ME624242	Installation of oil seal in rear cover or extension housing
		< S6 D/D > MH062640	

ME624242	A : 11 {0.43} B : 19.5 {0.77}
MH062640	A : 11 {0.43} B : 20.5 {0.81}

◆ Service procedure

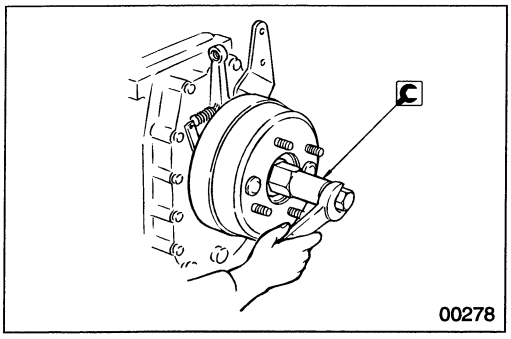

1 **Removal and installation of lock nut**

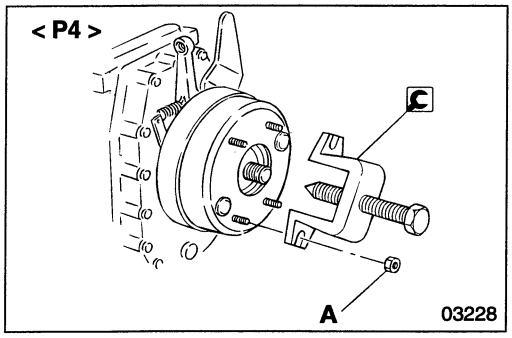

4 **Removal of companion flange**

A : Propeller shaft mounting nut

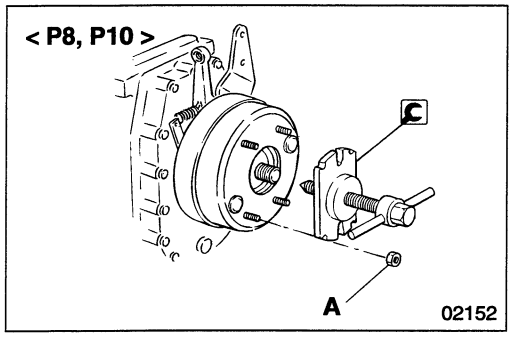

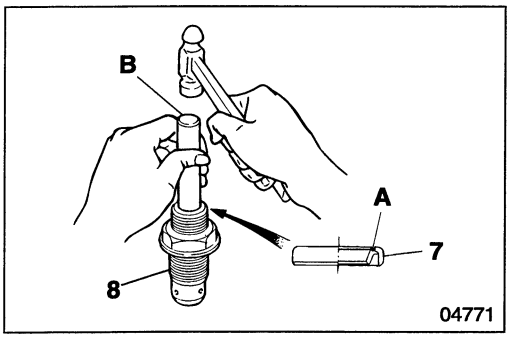

7 **Press-fitting of oil seal**

- Apply grease to inside of oil seal **7** packing **A**.
- Press-fit oil seal **7** into speedometer gear bushing **8** in the direction as illustrated using bar **B** (approximately ø15 mm {0.59 in.}).

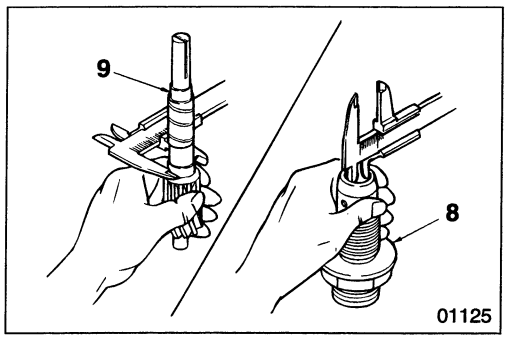

8 **9** **Clearance between speedometer gear bushing and speedometer gear**

If the clearance is higher than the limit, replace the faulty parts.

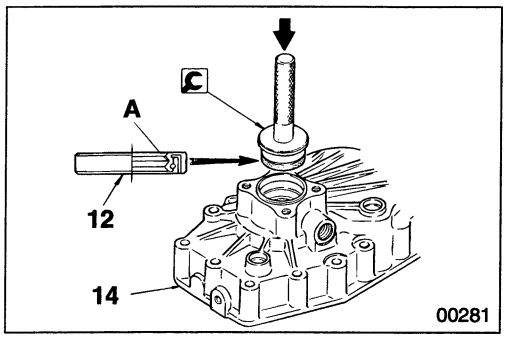

12 **Installation of oil seal**

- Apply grease to lip area **A** of oil seal **12**.
- Press-fit oil seal **12** into extension housing or rear cover **14** in the direction as illustrated using [C] oil seal installer.

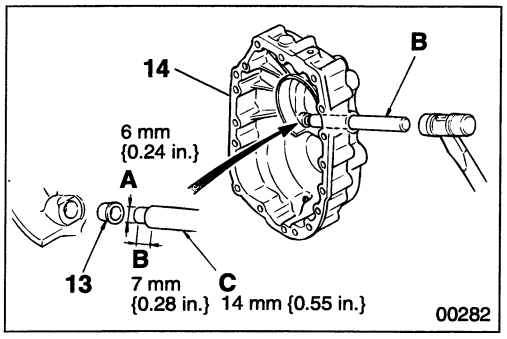

13 **Installation of speedometer gear bushing A**

Press-fit speedometer gear bushing A **13** into extension housing or rear cover **14** using bar **B**, turned to the dimensions as illustrated.

6TH GEAR < S6 OVER-DRIVE (O/D) > AND REVERSE IDLER GEAR < S5, S6 OVER-DRIVE (O/D) >

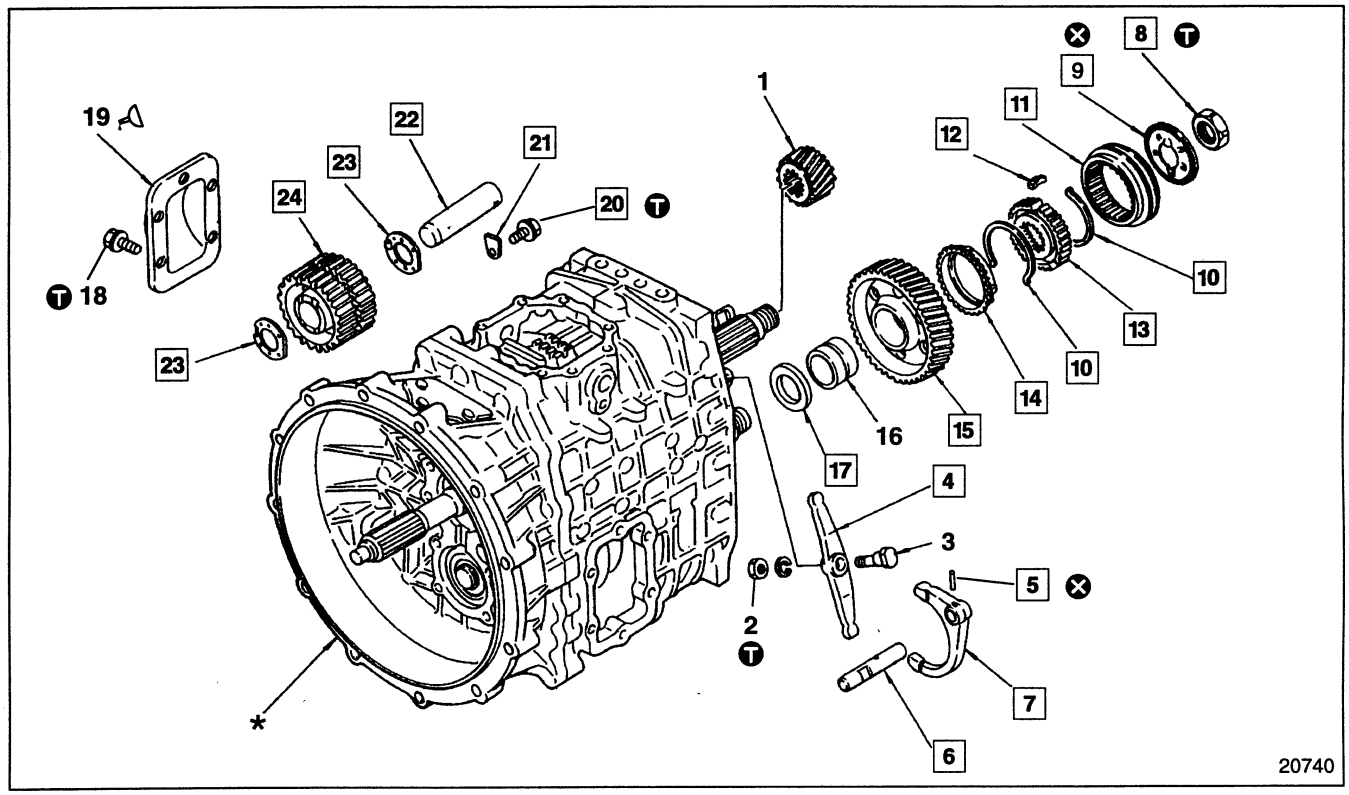

● **Inspection before disassembly**

P22A-36

● **Disassembly sequence**

1 Mainshaft O/D gear
2 Nut
3 O/D shift shaft
4 O/D shift lever
5 Spring pin
6 O/D shift rail C
7 O/D gear shift fork
8 Countershaft rear lock nut
9 Shifting Key retainer
10 Shifting key spring
11 Synchronizer sleeve
12 Shifting key
13 Synchronizer hub
14 Synchronizer ring
15 Countershaft O/D gear assembly
16 O/D gear sleeve
17 Thrust washer
18 Bolt
19 Reverse idler gear cover
20 Bolt
21 Reverse shaft lock piece
22 Reverse idler shaft
23 Reverse shaft gear side washer
24 Reverse idler gear

*: Transmission body
1 to 17 is applicable only to S6 O/D.
⊗: Non-reusable parts

● **Assembly sequence**

Follow the disassembly sequence in reverse.

Service standards

Unit : mm {in.}

Location	Maintenance item	Standard value	Limit	Remedy
3, 4	Clearance between O/D shift and O/D shift lever	[16 {0.63}] 0.02 to 0.07 {0.00079 to 0.0028}	0.15 {0.0059}	Replace
4	Bend of O/D shift lever	0.05 {0.0020} or less	0.1 {0.0039}	Replace
6	Bend of O/D shift rail C	0.02 {0.00079} or less	0.04 {0.0016}	Replace
7	Tilt of O/D gear shift fork claw	0.1 {0.0039} or less	0.2 {0.0079}	Replace
7, 11	Clearance between gear shift fork and synchronizer sleeve	0.3 to 0.5 {0.012 to 0.020}	1.0 {0.039}	Replace
11, 13	Play to rotating direction of synchronizer sleeve and synchronizer hub	0.052 to 0.148 {0.0020 to 0.0058}	0.3 {0.012}	Replace
12, 13	Clearance between shifting key and synchronizer hub	0.05 to 0.20 {0.0020 to 0.0079}	0.5 {0.020}	Replace
12, 14	Clearance between shifting key and synchronizer ring	4.75 to 4.95 {0.187 to 0.195}	5.8 {0.228}	Replace
13, *	Fitness to revolving direction of synchronizer hub and countershaft	–0.006 to 0.088 {–0.00024 to 0.0035}	0.2 {0.0079}	Replace
14, 15	Clearance between synchronizer ring and countershaft O/D gear assembly	1.45 to 1.85 {0.057 to 0.073}	0.2 {0.0079}	Replace
15	End play of countershaft O/D gear	0.25 to 0.40 {0.0098 to 0.016}	0.5 {0.020}	Replace
15, 16	Diameter direction after assembling countershaft O/D gear	0.105 to 0.150 {0.0041 to 0.0059}	0.3 {0.012}	Replace
22,24	Diameter direction after assembling reverse idler gear	—	0.12 {0.0047}	Replace
24	End play of reverse idler gear	0.2 to 0.9 {0.0079 to 0.0035}	1.2 {0.047}	Replace side washer

Tightening torque

Unit : N·m {lbf.ft, kgf·m}

Location	Parts to be tightened	Tightening torque	Remarks
2	Nut (O/D shift shaft and O/D shift lever mounting)	42 {31, 4.3}	—
8	Countershaft rear lock nut	345±49 {253±36, 35±5}	—
18	Bolt (Reverse idler gear cover mounting)	40 {30, 4.1}	—
20	Bolt (Reverse shaft lock piece mounting)	40 {30, 4.1}	—

Sealant

Location	Points of application	Kinds	Quantity
19	Reverse idler gear cover installation surface	THREEBOND 1215	As required

Special tools

Location	Tool name and shape	Part No.	Application
8	Single spanner 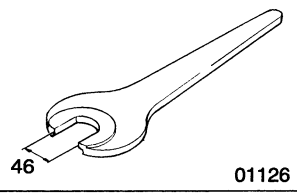 01126	MH061555 < S6 O/D >	Removal and istallation of countershaft rear lock nut
22	Drive pinion and reverse shaft puller 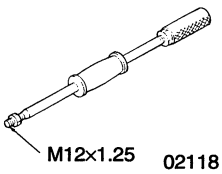 02118	03726-82000	Removal of reverse ilder shaft

◆ Service procedure

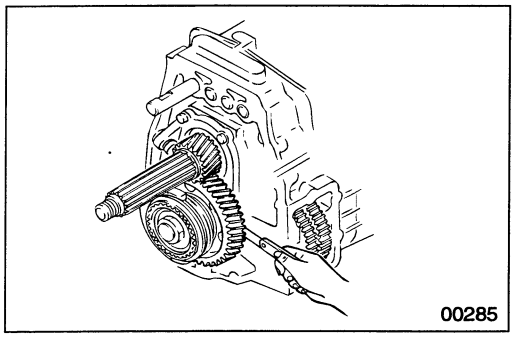

● Inspection before disassembly

(1) End play of various gears < S6 O/D >

- If the measured value is higher than the limit, replace the faulty parts.
- Reinspect play after assembly to check that the measured value is within the limit.

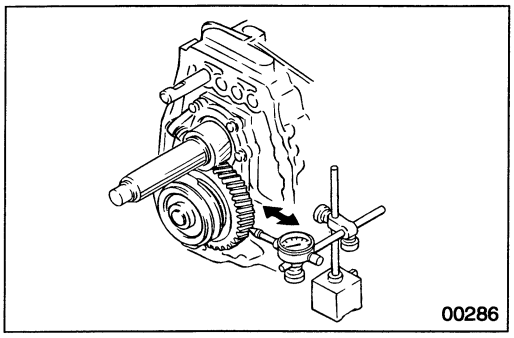

(2) Play of countershaft O/D gear in the diameter direction < S6 O/D >

- If the measured value is higher than the limit, replace the faulty parts.
- Reinspect play after assembly to check that the measured value is within the limit.

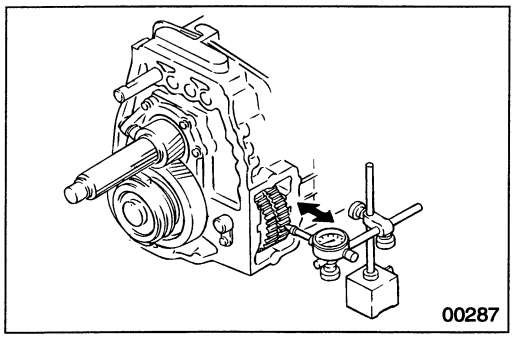

(3) Play of reverse ilder gear in the diameter direction

- If the measured value is higher than the limit, replace the faulty parts.
- Reinspect play after assembly to check that the measured value is within the limit.

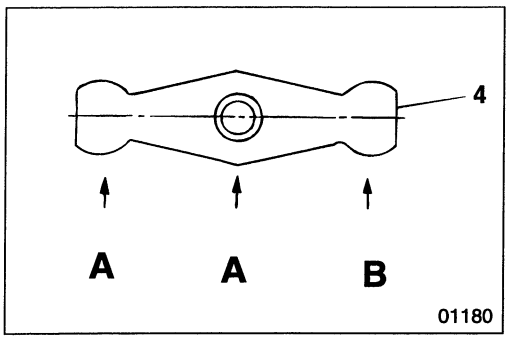

4 **Bend of O/D shift lever**

If bend **B** exeeds the limit on the basis of illustrated **A - A**, replace O/D shift lever **4**.

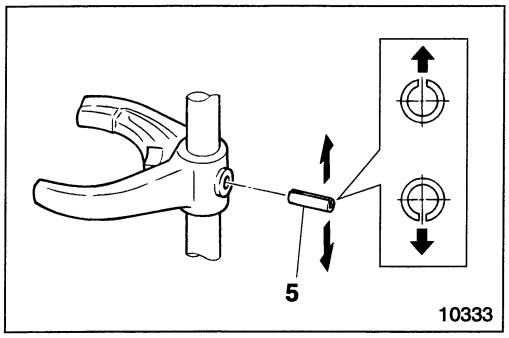

5 **Installation of spring pin**

Install spring pin **5** in O/D gear shift fork **7** in the direction as illustrated.

CAUTION⚠

Make sure you do not drive in spring pin 5 fully, leave 0 to 0.5 mm {0 to 0.020 in.} outside to prevent them from slipping out.

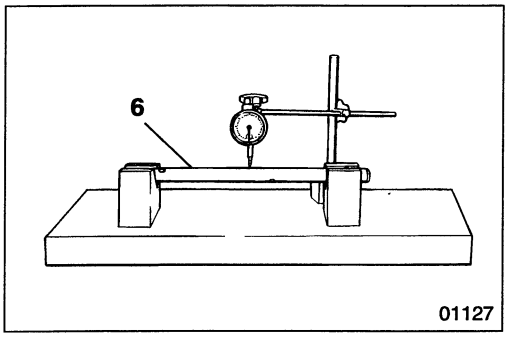

6 **Bend of O/D shift rail C**

If the measured value is higher than the limit, correct or replace O/D shift rail **C6**.

NOTE

Read the dial gauge after turning O/D shift rail C6 one full revolution. The bend is one half of the indicated value.

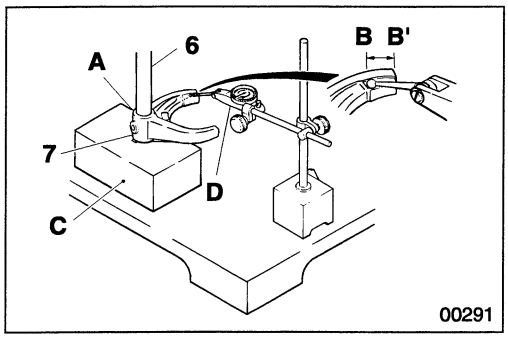

7 **Tilt of O/D gear shift fork claw**

- Measure the tilt (difference between **B** and **B'**) of claw **B-B'** against hole **A** of O/D shift rail **C6** of O/D gear shift fork **7** with the shift rail upright.
- If the measured value is higher than the limit, replace gear shift fork **7**.
  C: V-block
  D: Dial gauge

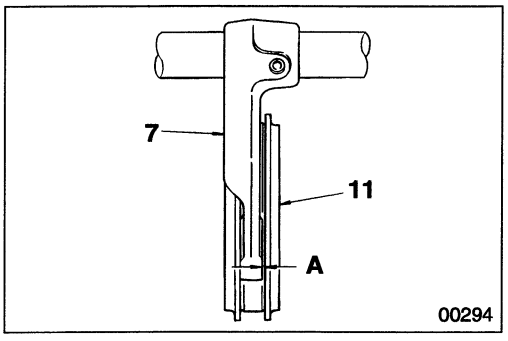

7 **11** **Clearance between O/D gear shift fork and synchronizer sleeve**

- Measure clearance **A** between O/D gear shift fork **7** and synchronizer sleeve **11**.
- If the measured value is higher than the limit, replace the faulty parts.

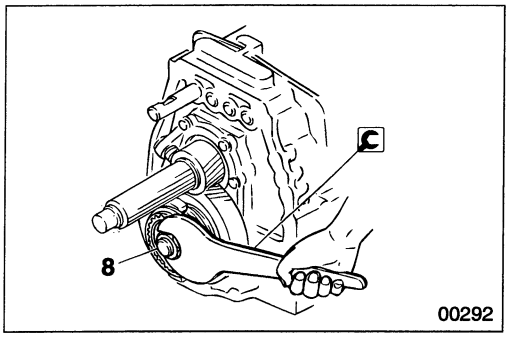

8 **Removal and installation of countershaft rear lock nut**

Have transmissions engaged in double to lock countershaft for this work.

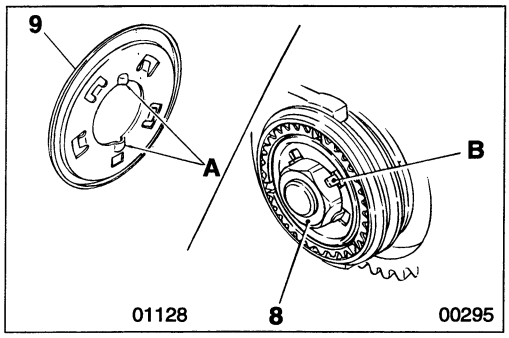

9 **Installation of shifting key retainer**

- Install so that shifting key retainer **9** protrusions **A** (at 2 places) rest in recessions provided on synchronizer hub.
- After tightening of lock nut, caulk the areas with slits **B** at 4 places of shifting retainer, toward lock nut **8**.

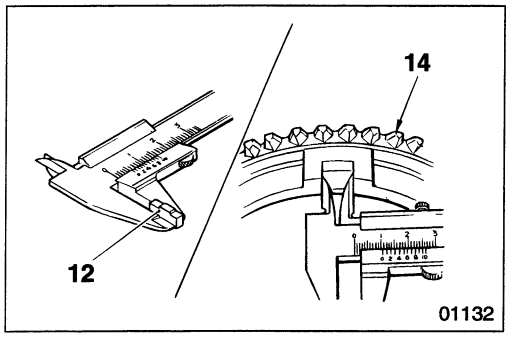

10 to **15** **Synchromesh mechanism and countershaft O/D gear assembly**

[Inspection]

(1) Clearance between synchronizer ring 14 and shifting key 12.

If the measured value is higher than the limit, replace the faulty parts.

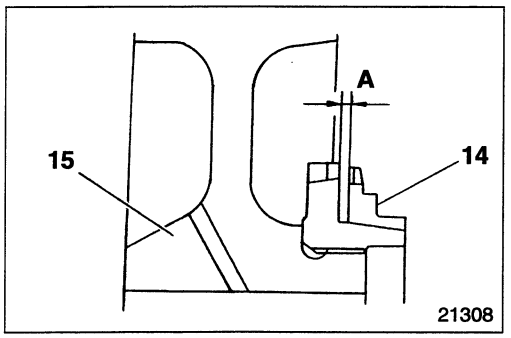

(2) Clearance between synchronizer ring 14 and countershaft O/D gear assembly 15

- Measure clearance **A** between synchronizer ring **14** and the gear cone of countershaft O/D gear assembly **15**.
- When measuring this value, press synchronizer ring **14** evenly, and measure all around the circumference.
- If the measured value is lower than the limit, replace the faulty parts.

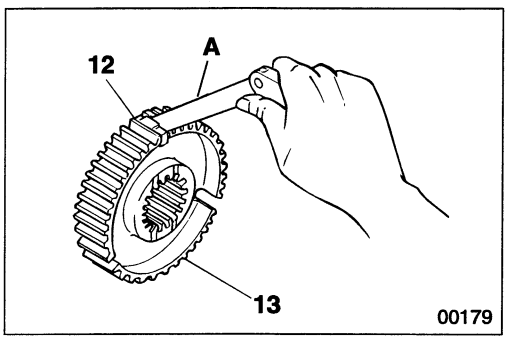

(3) Clearance between shifting key 12 and synchronizer hub 13

If the measured value is higher than the limit, replace the faulty parts.

A : Feeler gauge

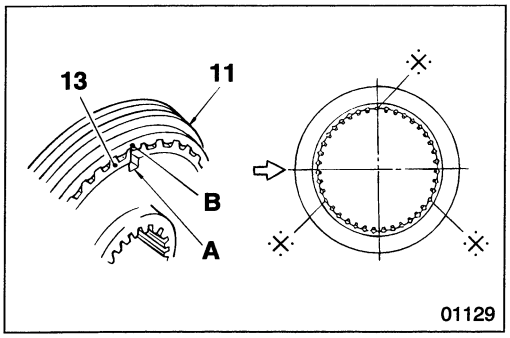

[Installation]

- Align the three keyways **A** of synchronizer hub **13** with the three stub teeth **B** (illustrated by ·⁘· mark) of synchronizer sleeve **11** to install the synchronizer hub.
- To reassemble synchronizer hub **13** and synchronizer sleeve **11**, align the alignment marks made during disassembly.

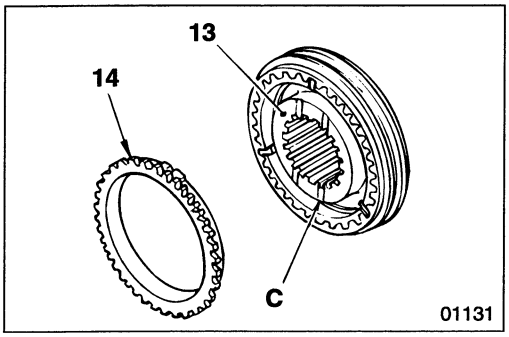

- Assemble synchronizer ring **14** on synchronizer hub **13** with the keyway aligned to the side where oil groove **C** is located.

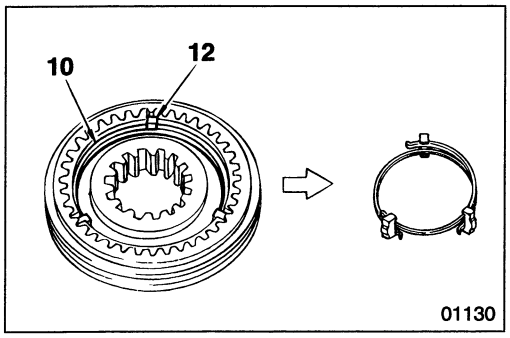

- Insert shifting **12** into the keyway.
- Install shifting key spring **10** so that its opening is offset from the one of the shifting key.
- Make sure that the openings of shifting key springs do not align with each other.

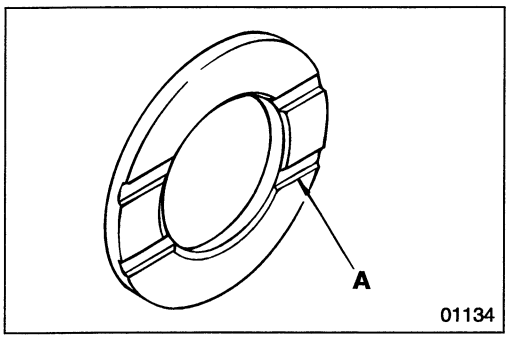

17 Installation of thrust washer

Install with the side having oil grooves **A** facing the side of gear.

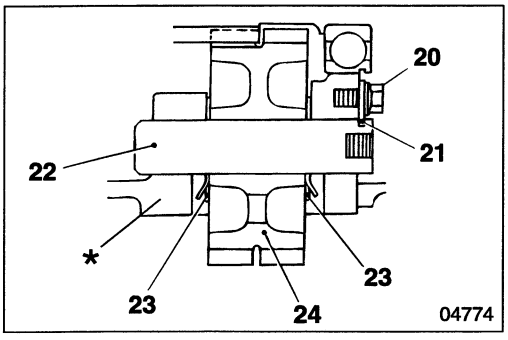

20 to 24 Assembly of reverse idler gear

- Install reverse shaft gear side washer **23** and reverse idler gear **24** in trasmission body *.
- Install reverse ilder shaft **22** in transmission body * using a plastic-headed mallet.
- Install reverse shaft lock piece **21** in transmission body * with mounting bolt **20**.

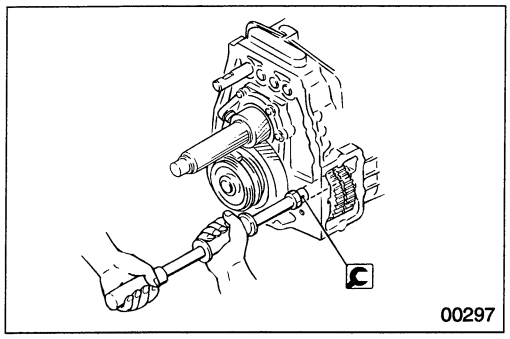

22 **Removal of reverse ilder shaft.**

MEMO

REVERSE GEAR AND REVERSE IDLER GEAR < S6 DIRECT-DRIVE (D/D) >

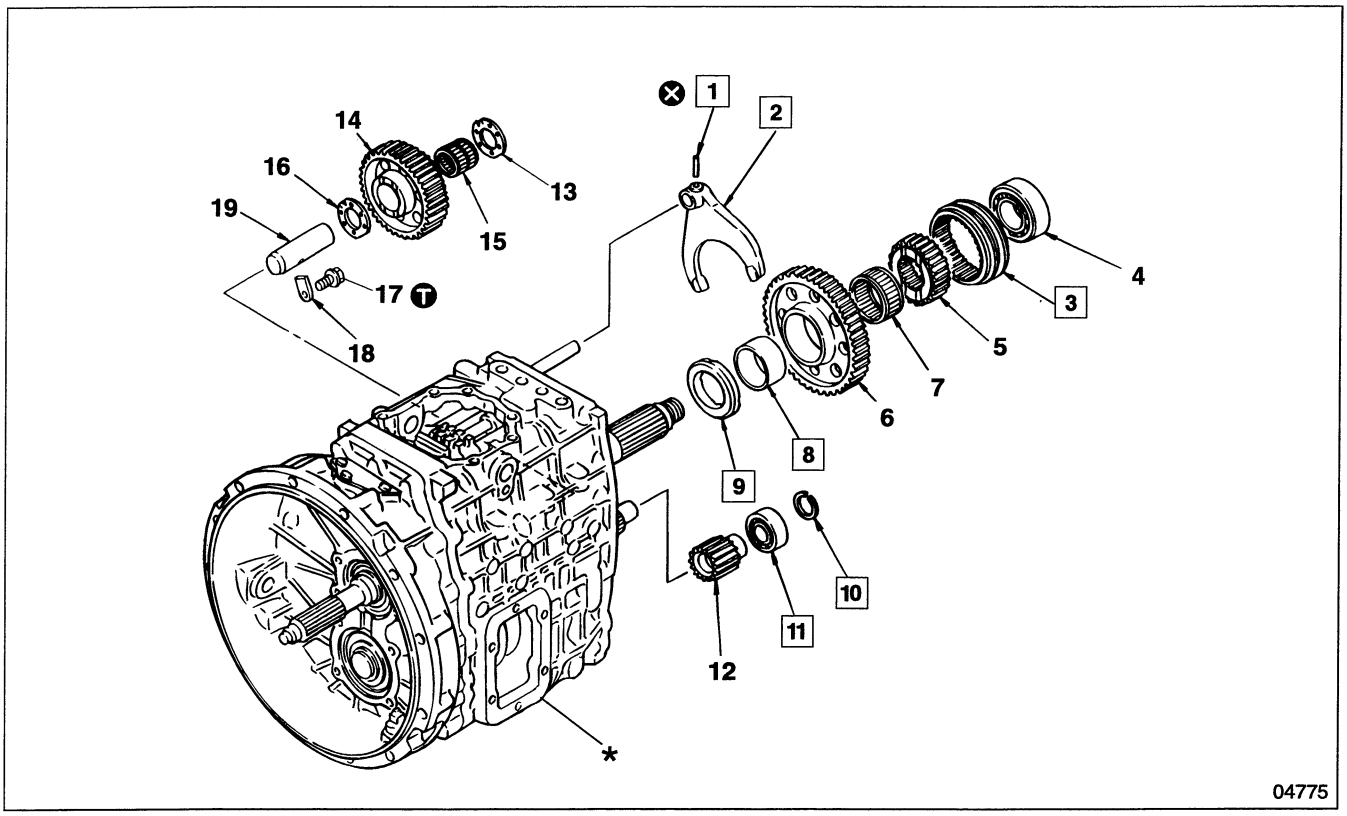

● **Inspection before disassembly**

P22A-44

● **Disassembly sequence**

1 Spring pin
2 Reverse gear shift fork
3 Reverse gear shift sleeve
4 Mainshaft rear bearing
5 Hub
6 Mainshaft reverse gear
7 Needle bearing
8 Mainshaft reverse gear bearing sleeve
9 Thrust washer
10 Snap ring
11 Countershaft rear bearing
12 Countershaft reverse gear
13 Reverse idler gear side washer
14 Reverse idler gear
15 Needle bearing < M060 >
16 Reverse idler gear side washer
17 Bolt
18 Reverse idler shaft lock piece
19 Reverse idler shaft

* : Transmission body
⊗ : Non-reusable parts

● **Assembly sequence**

Follow the disassembly sequence in reverse.

Service standards

Unit : mm {in.}

Location	Maintenance item	Standard value (Basic diameter in [ ])	Limit	Remedy
2	Tilt of reverse gear shift fork claw	0.1 {0.0039} or less	0.2 {0.079}	Replace
2, 3	Clearance between reverse gear shift fork and reverse gear shift sleeve	0.3 to 0.5 {0.012 to 0.020}	—	Replace
3, 5	Play in the rotating direction of reverse gear shift sleeve and hub	0.052 to 0.148 {0.0020 to 0.0058}	0.3 {0.012}	Replace
5, *	Engagement in the rotating direction of hub and mainshaft	–0.006 to 0.094 {–0.00024 to –0.0037}	0.2 {0.0079}	Replace
6	End play of mainshaft reverse gear	0.15 to 0.35 {0.0059 to 0.014}	0.5 {0.020}	Replace side washer
6, 7, 8, *	Play in the diameter direction after assembling mainshaft reverse gear	—	0.1 {0.0039}	Replace
8	Outer diameter of reverse gear bearing sleeve	$[71]^{-0.030}_{-0.040}$ {$[2.80]^{-0.0012}_{-0.0016}$}	– 0.1 {– 0.0039}	Replace
14	End play of reverse idler gear	0.2 to 0.9 {0.0079 to 0.035}	1.2 {0.047}	Correct
14, 15, 19	Play in the diameter direction after assembling reverse idler gear	—	0.15 {0.0059}	Replace

Tightening torque

Unit : N·m {lbf.ft, kgf·m}

Location	Parts to be tightened	Tightening torque	Remarks
17	Bolt (Reverse idler shaft lock piece mounting)	40 {30, 4.1}	—

Special tools

Location	Tool name and shape	Part No.	Application
8	Mainshaft bearing installer 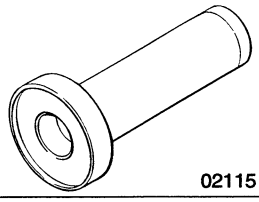 02115	*MH062634	Installation of mainshaft reverse gear bearing sleeve
10	Snap ring expander 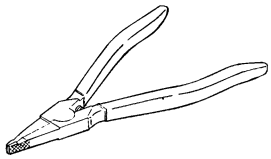 01137	MH061268	Removal of countershaft rear bearing snap ring
11	Countershaft bearing installer 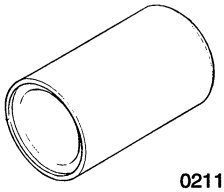 02117	*MH062642	Installation of countershaft rear bearing

* components of puller and installer kit P22A-92

◆ Service procedure

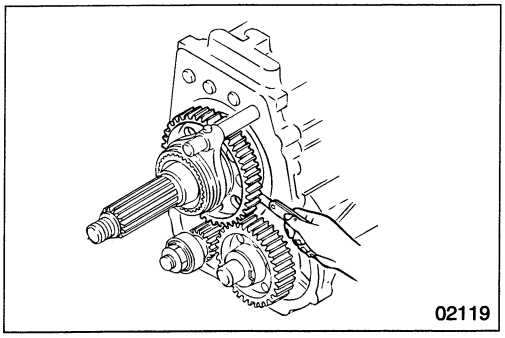

● Inspection before disassembly

(1) End play of mainshaft reverse gear

- If the measured value is higher than the limit, replace the faulty parts.
- Reinspect play after assembly to check that the measured value is within the limit.

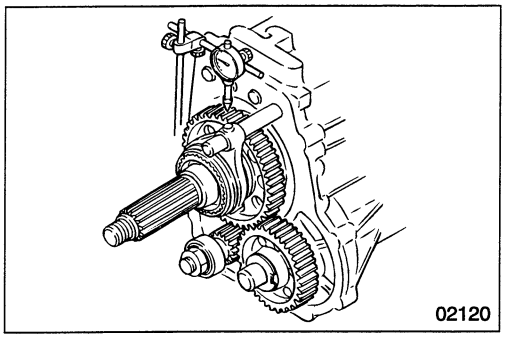

(2) Play of mainshaft reverse gear in diameter direction

- If the measured value is higher than the limit, replace the faulty parts.
- Reinspect play after assembly to check that the measured value is within the limit.

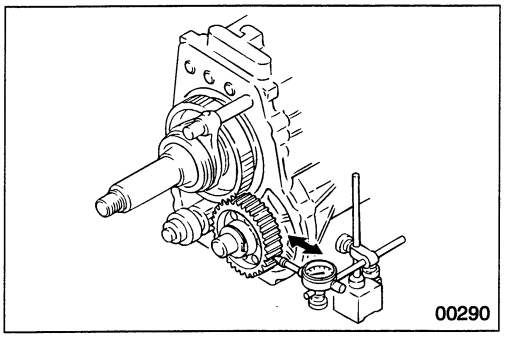

(3) Play of reverse idler gear in diameter direction

- If the measured value is higher than the limit, replace the faulty parts.
- Reinspect play after assembly to check that the measured value is within the limit.

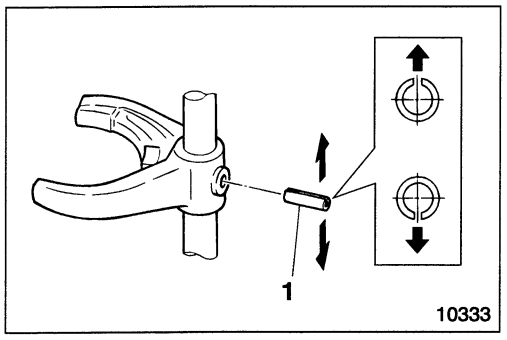

1 Installation of spring pin

Install spring pin **1** in reverse gear shift fork **2** in the direction as illustrated.

CAUTION⚠

Make sure you do not drive in spring pin 1 fully, leave 0 to 0.5 mm {0 to 0.020 in.} outside to prevent them from slipping out.

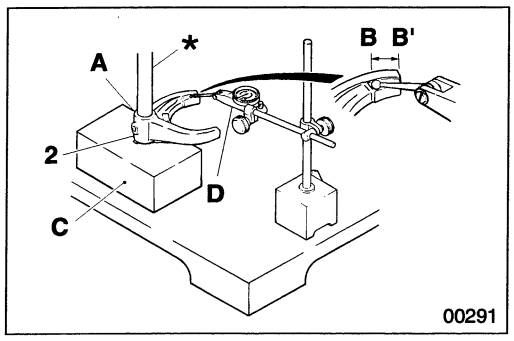

2 Tilt of reverse gear shift fork claw

- Measure the tilt (difference between **B** and **B'**) of claw **B–B'** against hole **A** of shift rail * of shift fork **2** with the shift rail upright.
- If the measured value is higher than the limit, replace reverse gear shift fork **2**.

C : V-block
D : Dial gauge

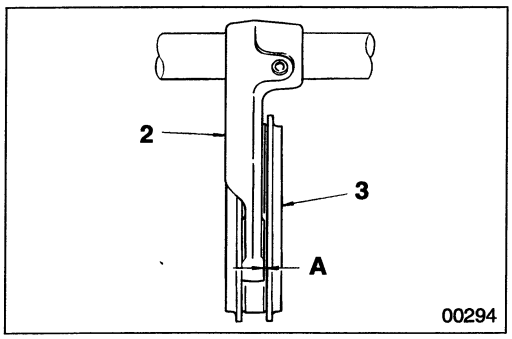

2 3 Clearance between reverse gear shift fork and reverse gear shift sleeve

- Measure clearance **A** between reverse gear shift fork **2** and reverse gear shift sleeve **3**.
- If the measured value is higher than the limit, replace the faulty parts.

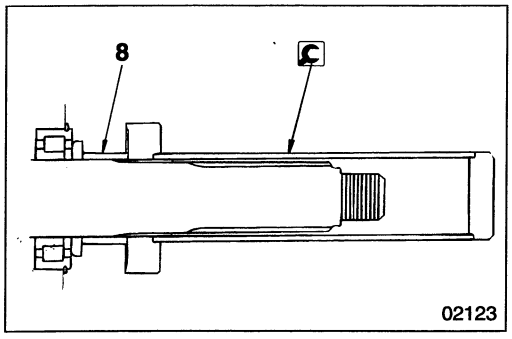

8 Installation of mainshaft reverse gear bearing sleeve

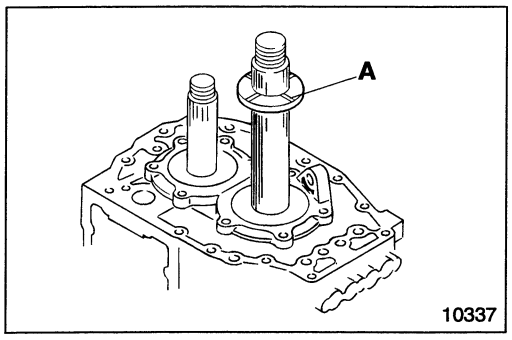

9 Installation of thrust washer

A : Oil groove

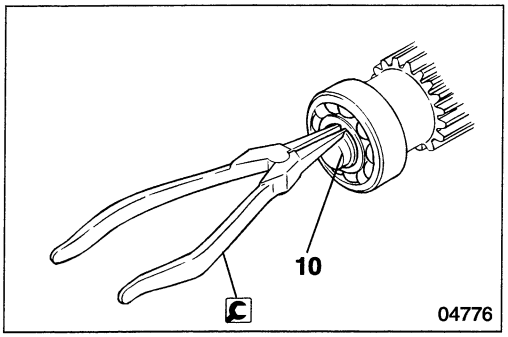

10 **Removal and installation of snap ring**

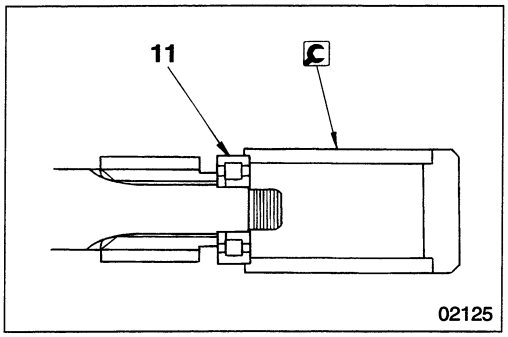

11 **Installation of countershaft rear bearing**

MEMO

TRANSMISSION BODY

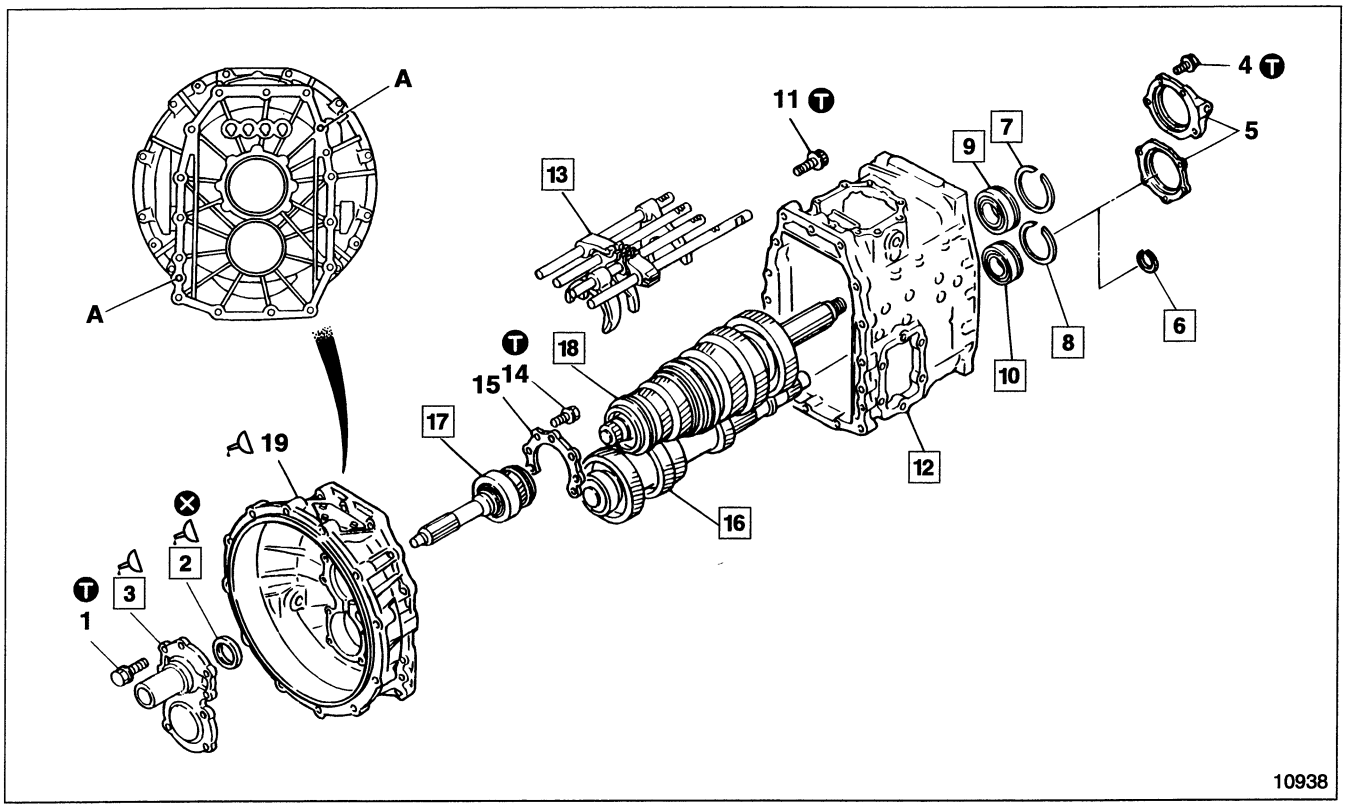

● **Disassembly sequence**

1 Bolt
2 Oil seal
3 Front bearing retainer
4 Bolt < S6 >
5 Rear bearing retainer < S6 >
6 Snap ring < S5 >
7 Snap ring
8 Snap ring
9 Mainshaft rear bearing
10 Countershaft rear bearing
11 Bolt
12 Transmission case
13 Shift rail and shift fork 🕮 P22A-58 or P22A-62
14 Bolt
15 Drive pinion bearing retainer
16 Countershaft assembly 🕮 P22A-84
17 Drive pinion assembly 🕮 P22A-64
18 Mainshaft assembly 🕮 P22A-66 or P22A-74
19 Clutch housing assembly

A : Positioning pin
⊗ : Non-reusable parts

● **Assembly sequence**

Follow the disassembly sequence in reverse.

NOTE

- **After removing parts 1 to 3, disassemble the transmission assembly with the body laid vertically on its clutch housing side.**
- **Remove parts 13, and 16 to 18 as a group. However, shift rail and shift fork 13 can be disassembled on its own if you are not going to disassemble parts 16 to 18. 🕮 P22A-58 or P22A-62**

Tightening torque

Unit : N·m {lbf.ft, kgf·m}

Location	Parts to be tightened	Tightening torque	Remarks
1	Bolt (Front bearing retainer mounting)	40 {30, 4.1}	—
4	Bolt (Rear bearing retainer mounting)	40 {30, 4.1}	—
11	Bolt (Transmission case mounting)	120 {90, 12.4}	—
14	Bolt (Drive pinion retainer mounting)	40 {30, 4.1}	—

Lubricant and sealant

Location	Points of application	Kinds	Quantity
2	Lip area of oil seal	Wheel bearing grease [NLGI No.2 (Li soap)]	As required
3	Contact surface between front bearing retainer and clutch housing assembly	THREEBOND 1215	As required
19	Contact surface between clutch housing assembly and transmission case	THREEBOND 1215	As required

Special tools

Unit : mm {in.}

Location	Tool name and shape	Part No.	Application
2	Oil seal installer < C6 (AR350) > / < C6 > X: 62 {2.44} / 72 {2.83} Y: 40 {1.57} / 50 {1.97} Z: 30 {1.18} / 40 {1.57} a: 10 {0.39} / 10 {0.39} b: 10 {0.39} / 10 {0.39} 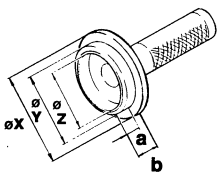 01135	< C6 (AR350) > ME624241 < C6 > MH061992	Installation of front bearing retainer oil seal
3	Oil seal front guide d: <C6(AR350)> 37.6 {1.48}; < C6 > 44 {1.73} D: 39.5 {1.56}; 46 {1.81} L: 177 {6.97}; 217 {8.54} 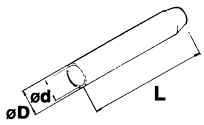 01136	< C6 (AR350) > MH061990 < C6 > MH061991	Installation of front bearing retainer
6, 7, 8	Snap ring expander 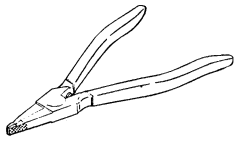 01137	MH061268	Removal of snap rings from mainshaft rear bearing and countershaft front and rear bearings
9	Mainshaft bearing puller 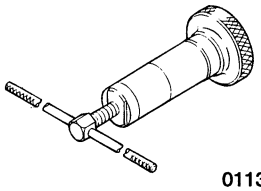 01138	< S5, S6 O/D > *MH061732 < S6 D/D > *MH062433	Removal of mainshaft rear bearing

* components of puller and installer kit P22A-92

TRANSMISSION BODY

Unit : mm {in.}

<table>
<tr><th>Location</th><th>Tool name and shape</th><th>Part No.</th><th>Application</th></tr>
<tr><td>9</td><td>Mainshaft bearing installer
 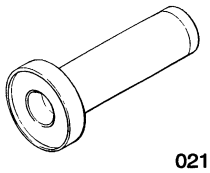
02115</td><td>< S5, S6 O/D >
*MH624234
< S6 D/D >
*MH062634</td><td>Installation of mainshaft rear bearing</td></tr>
<tr><td rowspan="2">10</td><td>Countershaft bearing puller
 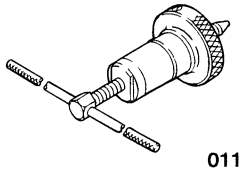
01139</td><td>< S5, S6 O/D >
*ME061731
< S6 D/D >
*MH062432</td><td>Removal of countershaft rear bearing</td></tr>
<tr><td>Countershaft bearing installer
 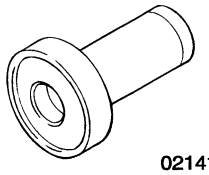
02141</td><td>< S5, S6 O/D >
*ME624233
< S6 D/D >
*MH062630</td><td>Installation of countershaft bearing</td></tr>
<tr><td rowspan="2">12</td><td>Eye bolt
 

01140</td><td>MH062340</td><td>Lifting of transmission case</td></tr>
<tr><td>Gear puller
 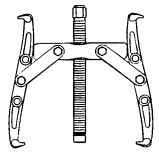
01148</td><td>MH062308 or
MH062250</td><td>Removal of transmission case</td></tr>
<tr><td rowspan="2">16 to 18</td><td>Steel lifting band
<table><tr><td>S5
S6 O/D</td><td>X=87 {3.43}
Y=175 {6.89}
a=80 {3.15}
b=336 {13.2}</td></tr><tr><td>S6 D/D</td><td>X=116{4.57}
Y=173 {6.81}
a=100 {3.94}
b=360 {14.1}</td></tr></table> 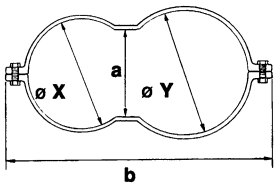

01141</td><td>< S5, S6 O/D >
MH062343
< S6 D/D >
MH062344</td><td rowspan="2">Removal and installation of mainshaft assembly, countershaft assembly and drive pinion assembly</td></tr>
<tr><td>Eye nut
<table><tr><td></td><td>A</td></tr><tr><td>S5, S6 O/D</td><td>M27x1.5</td></tr><tr><td>S6 D/D</td><td>M36x1.5</td></tr></table> 

01142</td><td>< S5, S6 O/D >
MH062341
< S6 D/D >
MH062342</td></tr>
</table>

* components of puller and installer kit. P22A-92

Location	Tool name and shape	Part No.	Application
16	Countershaft bearing puller 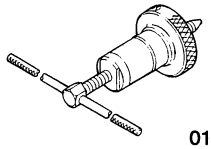 01139	< S5, S6 O/D > *MH062426 < S6 D/D > *MH062429	Removal of countershaft front bearing
	Countershaft bearing installer 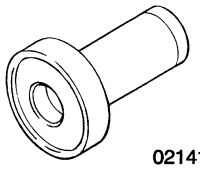 02141	< S5, S6 O/D > *ME624233 < S6 D/D > *MH062630	Installation of countershaft front bearing

* components of puller and installer kit. P22A-92

◆ Service procedure

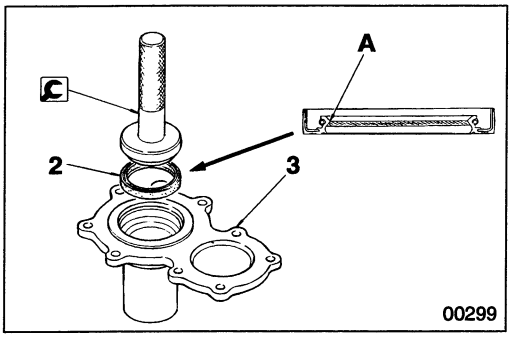

2 Installation of oil seal

- Apply grease to lip area **A** of oil seal **2**.
- Press-fit oil seal **2** into front bearing retainer **3** in the direction as illustrated using oil seal installer.

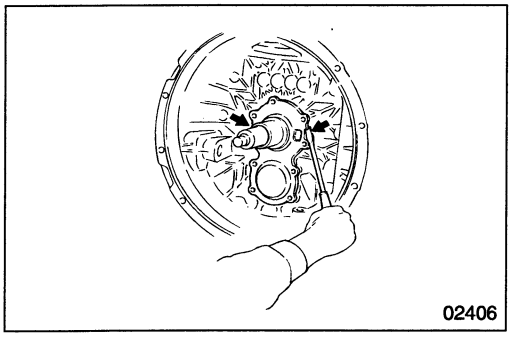

3 Front bearing retainer

[Removal]

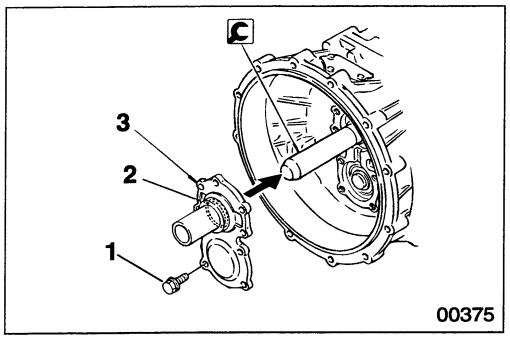

[Installation]
Press-fit front bearing retainer **3** into clutch housing assembly **19** using [C] oil seal front guide.

CAUTION

Be careful when installing front bearing retainer 3, that you do not damage oil seal 2 installed on the front bearing retainer.

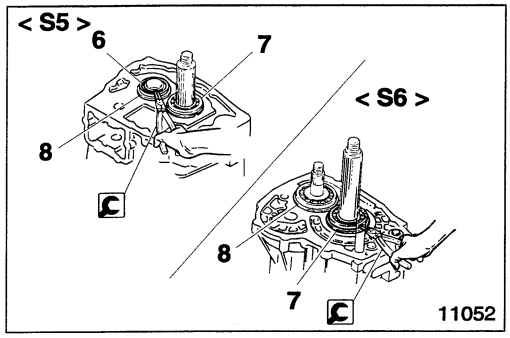

[6] to [8] Removal and installation of snap ring

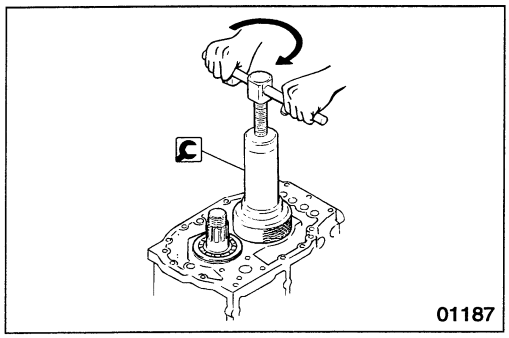

[9] Mainshaft rear bearing

[Removal]

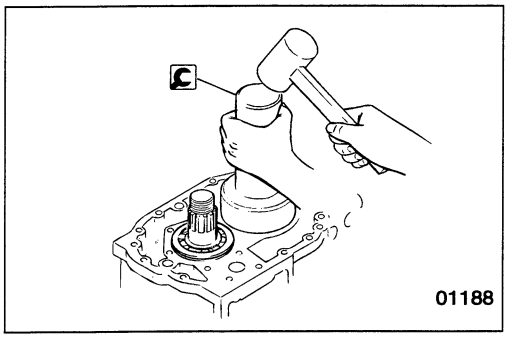

[Installation]

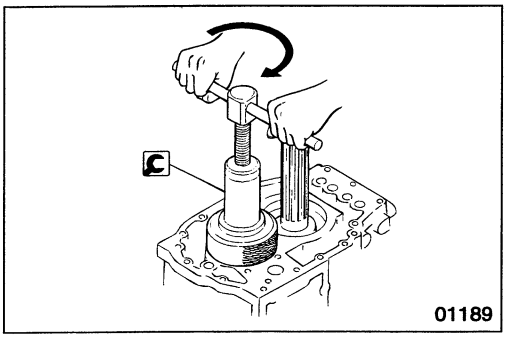

[10] Countershaft rear bearing

[Removal]

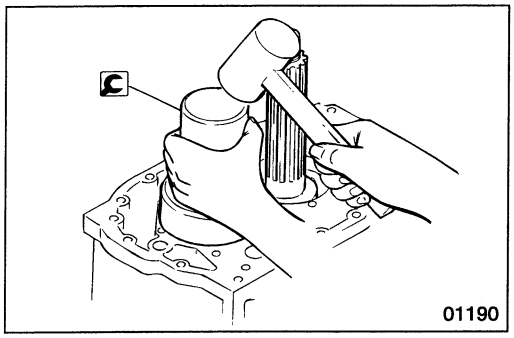

[Installation]

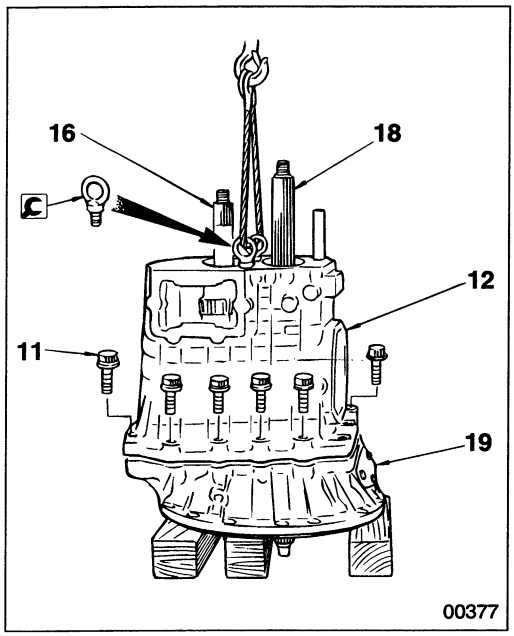

12 Removal and installation of transmission case

[Removal]

● Remove transmission case 12.

Method 1

- When lifting up with a crane, install ⓒ eye bolts on transmission case **12** and pass a steel sling through them.
- After removing bolts **11**, lift transmission case **12** up with a crane and keep hitting the rear ends of clutch housing assembly **19**, mainshaft assembly **18** and countershaft assembly **16**. Use a plastic-headed or copper-headed mallet to remove the transmission case.

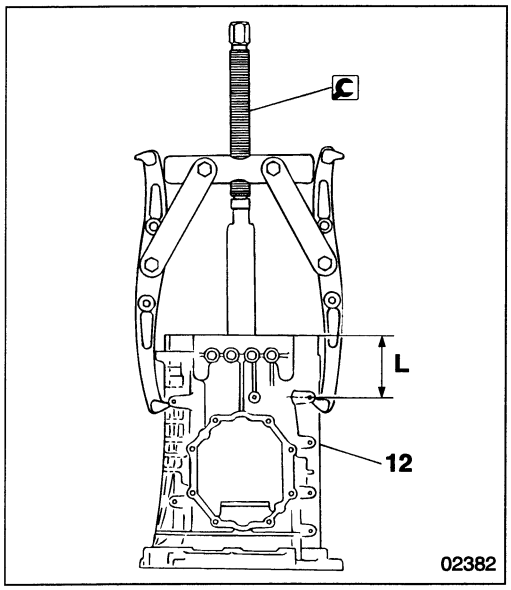

Method 2

- A ⓒ gear puller can be used instead of a crane.
  Puller installation position

Model	Dimension of L mm {in.}
M060S5, S6 O/D	146 {5.75}
M060S6 D/D	36 {1.42}
M070S6	93 {3.66}

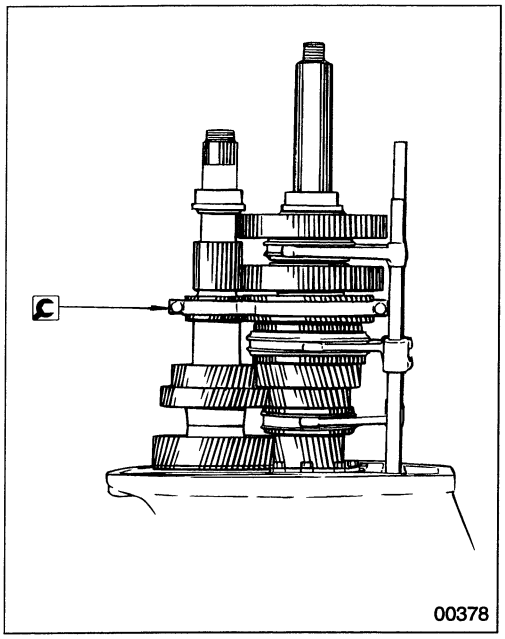

- After removing transmission case **12**, fit the 2nd gear unit < S5, S6 O/D > or 3rd gear unit < S6 D/D > using [C] steel lifting band to ensure safety.

CAUTION⚠

Be sure to tighten [C] steel lifting band adequately enough to prevent it from coming undone, but not excessively, because excessive tightening would damage the gears, etc.

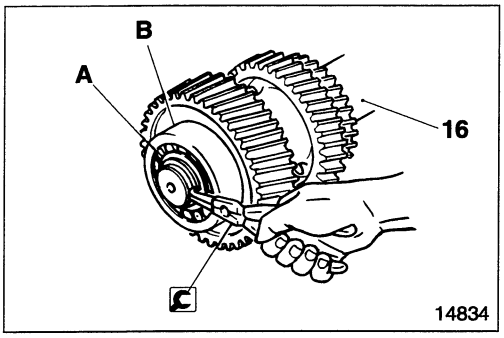

- Remove snap ring **A** from countershaft assembly **16**.
  B : Countershaft front bearing

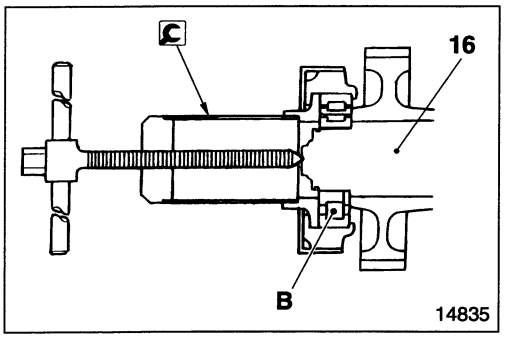

- Remove countershaft bearing **B** from countershaft assembly **16**.

[Installation]
Follow the removal sequence in reverse.

CAUTION⚠

Be careful not to damage mainshaft assembly 18, or rear bearings 9, 10 of countershaft assembly 16 during installation.

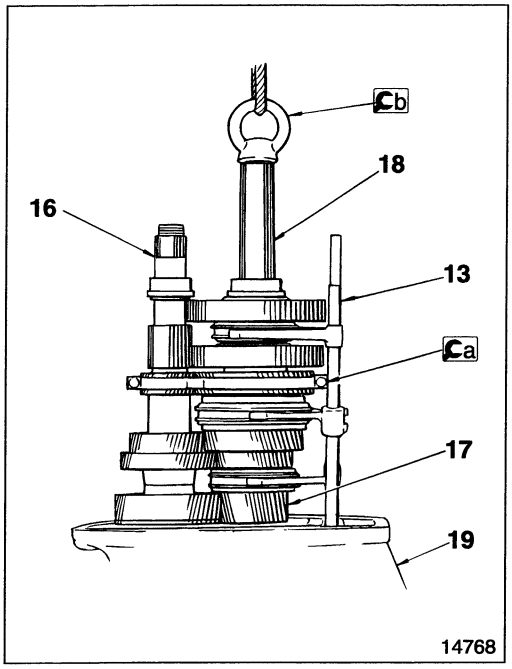

13 16 to 18 Shift rail and shift fork, countershaft assembly, drive pinion assembly, and mainshaft assembly

[Removal]
Remove or install shift rail and shift fork **13**, countershaft assembly **16**, drive pinion assembly **17**, and mainshaft assembly **18** as a group.

- Before lifting, after removing the case, install Cb eye nut at the end of mainshaft **18**, fitted with Ca steel lifting band.
- Fix shift rail and shift fork **13** to mainshaft assembly **18** with a rubber band.
- Fix a piece of wood to clutch housing assembly **19**, and use a crane to lift the clutch housing together with drive pinion assembly **17** up, at the same time hitting them with a plastic-headed mallet to remove them.

CAUTION

- **Be sure to tighten Ca steel lifting band adequately enough to prevent it from coming undone, but not excessively, because excessive tightening would damage the gears, etc.**
- **Make sure, when lifting mainshaft assembly 18 or other parts, that you support drive pinion assembly 17 with your hand in order to prevent it from falling when the mainshaft assembly and countershaft assembly 16 come apart.**

[Installation]
Method 1

- Follow the removal sequence in reverse.

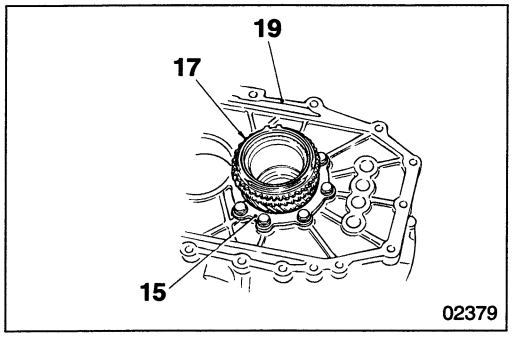

Method 2

- After installing drive pinion assembly **17** in clutch housing assembly **19**, install drive pinion bearing retainer **15**.

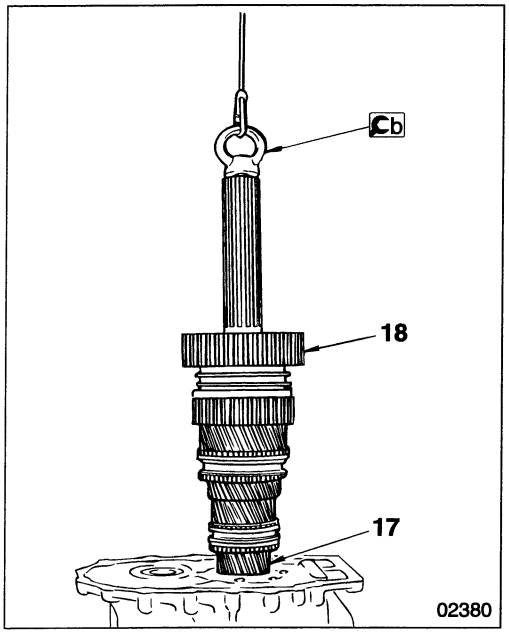

- Install Cb eye nut at the end of mainshaft assembly **18**.
- Lift mainshaft assembly **18** up using a crane and install the mainshaft assembly on drive pinion assembly **17**.

CAUTION⚠

To prevent mainshaft assembly 18 from falling, support it using a crane.

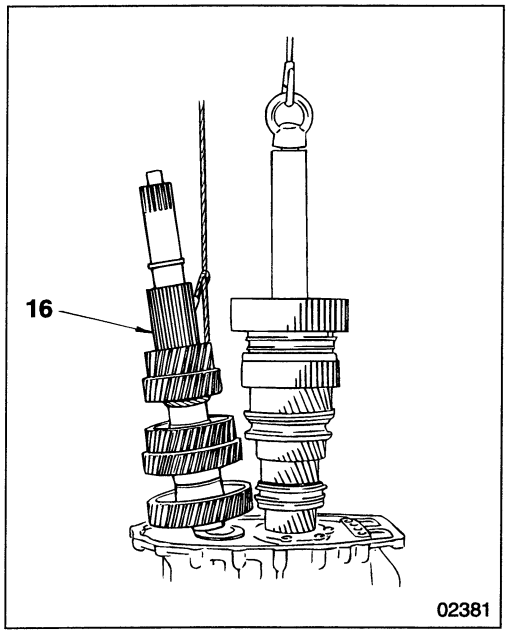

- Install countershaft assembly **16** in clutch housing assembly **19**.

CAUTION⚠

If you use this method of installation, first remove the countershaft front bearing. 🕮 P22A-84

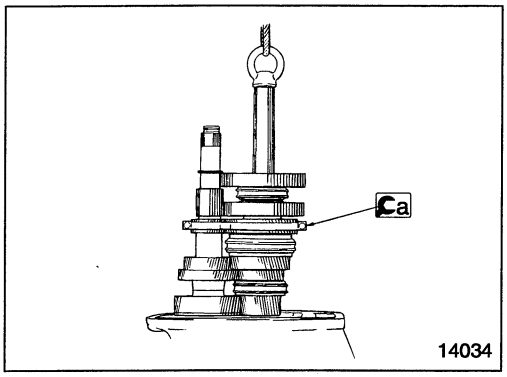

- Fit the 2nd gear unit using Ca steel lifting band to ensure safety.

CAUTION⚠

Be sure to tighten Ca steel lifting band adequately enough to prevent it from coming undone, but not excessively, because excessive tightening would damage the gears, etc.

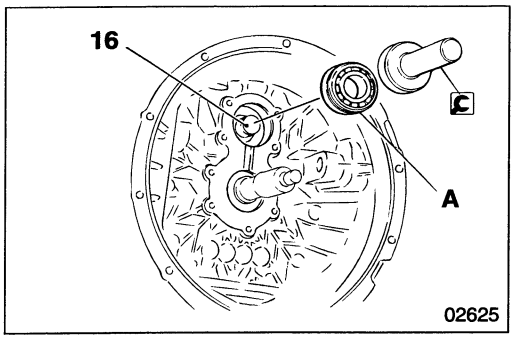

- Install shift rail and shift fork **13** and transmission case **12** in clutch housing assembly **19**.
- Place cluch housing assembly **19** horizontally so that countershaft assembly **16** is uppermost.
- Install the countershaft front bearing **A** into clutch housing assembly **19** using [C] countershaft bearing installer.

CAUTION⚠

Be sure to install the snap ring of the countershaft front bearing.

Shift Rail and Shift Fork < S5, S6 O/D >

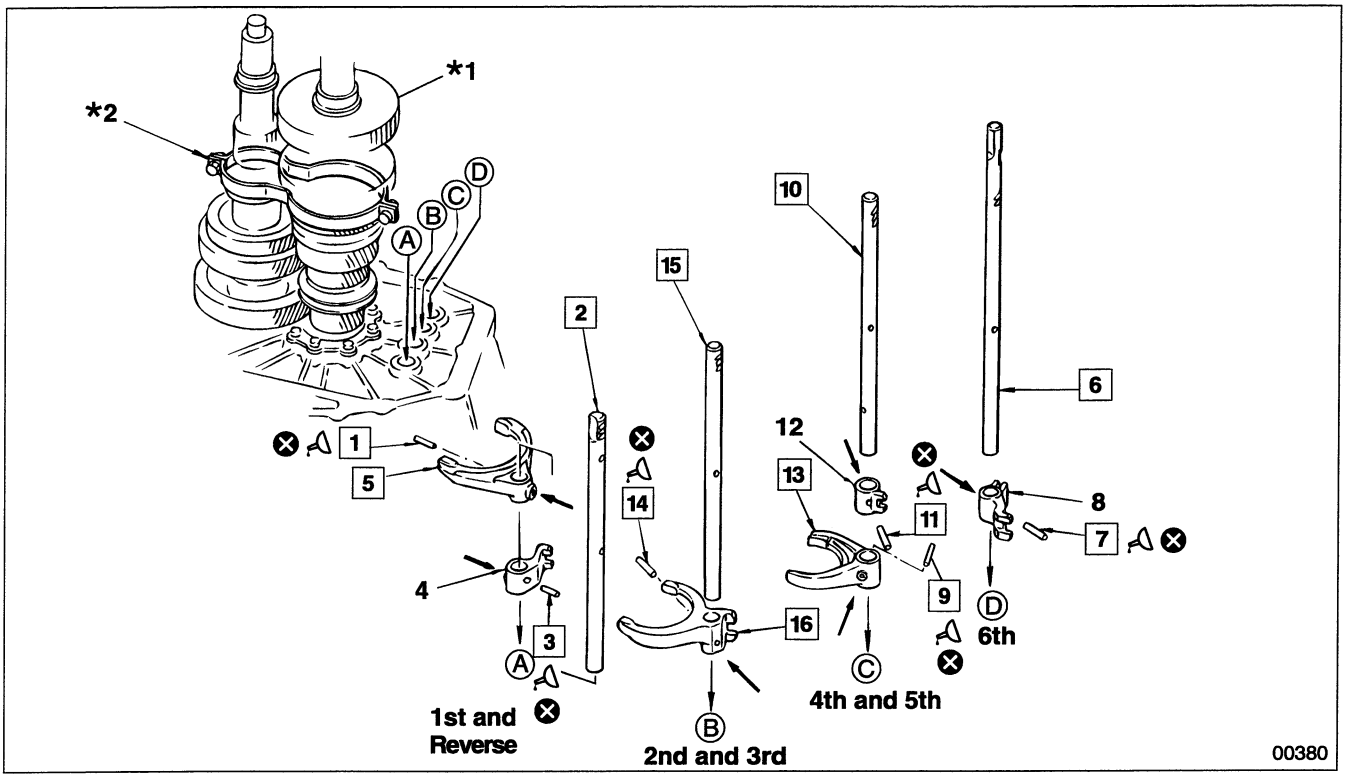

Arrow mark : Removal and installation direction for spring pin

● **Disassembly sequence** (When the mainshaft assembly is not removed or installed and only the shift rail and shift fork is disassembled)

1 Spring pin
2 1st and reverse shift rail
3 Spring pin
4 1st and reverse shift rail jaw
5 1st and reverse shift fork
6 6th shift rail < S6 O/D >
7 Spring pin < S6 O/D >
8 6th shift rail jaw < S6 O/D >
9 Spring pin
10 4th and 5th shift rail
11 Spring pin
12 4th and 5th shift rail jaw
13 4th and 5th shift fork
14 Spring pin
15 2nd and 3rd shift rail
16 2nd and 3rd shift fork

*1 : Mainshaft assembly
*2 : ◻ steel lifting band
⊗ : Non-reusable parts

● **Assembly sequence**

Follow the disassembly sequence in reverse. Remove ◻ steel lifting band after installing the shift rail and shift fork.

Service standards

Unit : mm {in.}

Location	Maintenance item	Standard value	Limit	Remedy
2, 10, 15	Bend of shift rail	0.039 {0.0015} or less	0.08 {0.0031}	Correct or replace
5, 13, 16	Tilt of shift fork claw	0.1 {0.0039} or less	0.2 {0.0079}	Replace
5, *1	Clearance between 1st and reverse shift fork and synchronizer sleeve	0.3 to 0.5 {0.012 to 0.020}	1.0 {0.039}	Replace
6	Bend of 6th shift rail	0.047 {0.0019} or less	0.09 {0.0035}	Correct or replace
13, *1	Clearance between 4th and 5th shift fork and synchronizer sleeve	0.3 to 0.6 {0.012 to 0.024}	1.0 {0.039}	Replace
16, *1	Clearance between 2nd and 3rd shift fork and synchronizer sleeve	0.2 to 0.4 {0.0079 to 0.016}	1.0 {0.039}	Replace

Sealant

Location	Points of application	Kinds	Quantity
1, 3, 7, 9, 11, 14	Spring pin	LOCTITE 601	As required

◆ Service procedure

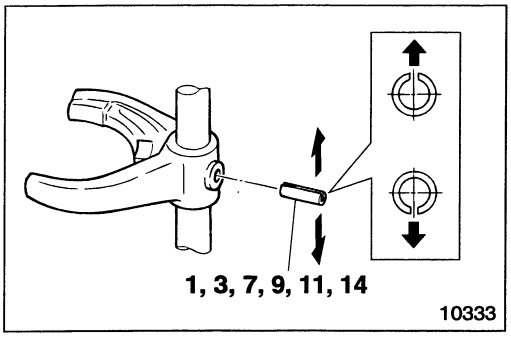

1 3 7 9 11 14 Installation of spring pin

Install spring pins **1, 3, 7, 9, 11, 14** in the direction as illustrated.

CAUTION

- **Make sure you do not drive in spring pins 1, 3, 7, 9, 11, 14 fully, leave 0 to 0.5 mm {0 to 0.020 in.} outside to prevent them from slipping out.**
- **Do not remove spring pin 9 for 4th and 5th shift fork 13 (made of aluminum), except when replacing shift fork 13 or shift rail 10.**
- **Note that the length of spring pin 9 differs from that of spring pins 1, 3, 7, 11, 14.**
- **Be careful when driving in spring pins 1, 3, 7, 9, 11, 14 that you do not subject shift rails 2, 6, 10, 15 to excessive strain, because this would cause faults such as bent shift rails.**

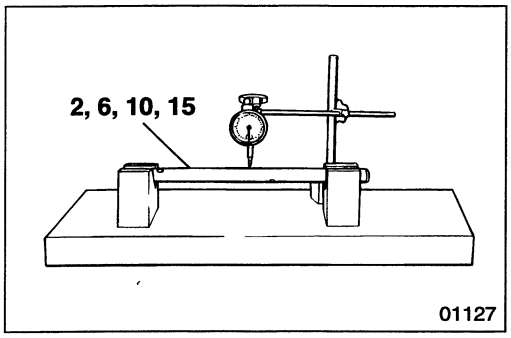

2 6 10 15 Bend of shift rail

If the measured value is higher than the limit, correct or replace shift rail **2, 6, 10** or **15**.

NOTE

Read the dial gauge after turning shift rails 2, 6, 10, 15 one full revolution. The bend is one half of the indicated value.

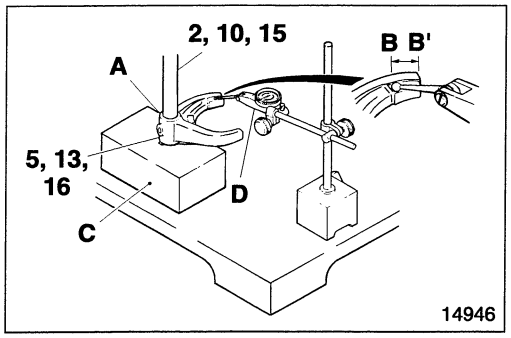

5 13 16 **Tilt of shift fork claws**

- Measure the tilt (difference between **B** and **B'**) of claw **B–B'** against hole **A** of shift rails **2, 10, 15** of shift forks **5, 13, 16** with the shift rails upright.
- If the measured value is higher than the limit, replace shift fork **5**, **13**, or **16**.

C : V-block
D : Dial gauge

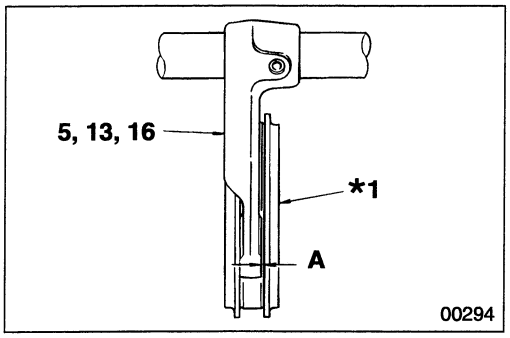

5 13 16 *1 **Clearance between gear shift fork and synchronizer sleeve of mainshaft**

If clearance **A** is higher than the limit, replace the faulty parts.
***1** : Synchronizer ring of mainshaft assembly

MEMO

TRANSMISSION BODY

Shift Rail and Shift Fork < S6 D/D >

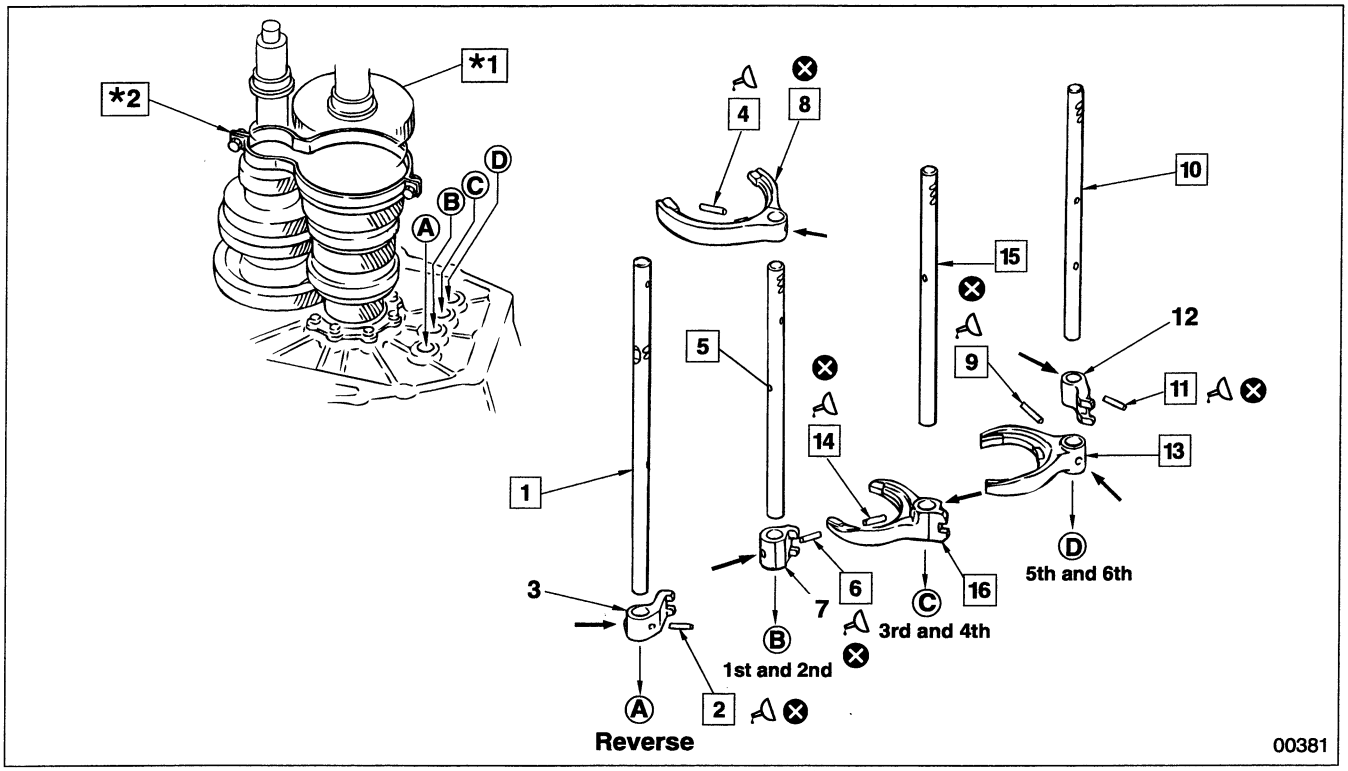

Arrow mark: Removal and installation direction for spring pin

● **Disassembly sequence** (Where the mainshaft assembly is not removed or installed and only the shift rail and shift fork is disassembled)

1 Reverse shift rail
2 Spring pin
3 Reverse shift rail jaw
4 Spring pin
5 1st and 2nd shift rail
6 Spring pin
7 1st and 2nd shift rail jaw
8 1st and 2nd shift fork
9 Spring pin
10 5th and 6th shift rail
11 Spring pin
12 5th and 6th shift rail jaw
13 5th and 6th shift fork
14 Spring pin
15 3rd and 4th shift rail
16 3rd and 4th shift fork

*1 : Mainshaft assembly
*2 : ◩ steel lifting band
⊗ : Non-reusable parts

● **Assembly sequence**

Follow the disassembly sequence in reverse. Remove ◩ steel lifting band after installing the shift rail and shift fork.

Service standards

Unit : mm {in.}

Location	Maintenance item	Standard value	Limit	Remedy
1	Bend of reverse shift rail	0.047 {0.0019} or less	0.09 {0.0035}	Correct or replace
5, 10, 15	Bend of shift rails	0.037 {0.0015} or less	0.07 {0.0028}	Correct or replace
8, 13, 16	Tilt of shift fork claw	0.1 {0.0039} or less	0.2{0.0079}	Replace shift fork
8, *1	Clearance between 1st and 2nd shift fork and synchronizer sleeve	0.3 to 0.5 {0.012 to 0.002}	1.0 {0.039}	Replace
13, *1	Clearance between 5th and 6th shift fork and synchronizer sleeve	0.3 to 0.6 {0.012 to 0.024}	1.0 {0.039}	Replace
16, *1	Clearance between 3rd and 4th shift fork and synchronizer sleeve	0.2 to 0.4 {0.0079 to 0.016}	1.0 {0.039}	Replace

Sealant

Location	Points of application	Kinds	Quantity
2, 4, 6, 9, 11, 14	Spring pin	LOCTITE 601	As required

◆ Service procedure

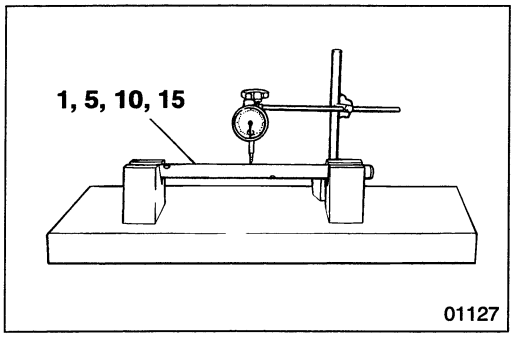

1 5 10 15 Bend of shift rail

If the measured value is higher than the limit, correct or replace shift rail **1**, **5**, **10**, or **15**.

NOTE

Read the dial gauge after turning shift rails 1, 5, 10, 15 one full revolution. The bend is one half of the indicated value.

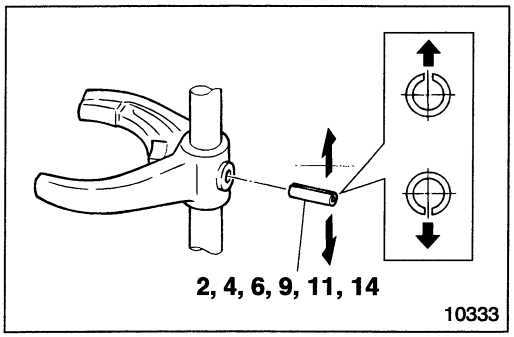

2 4 6 9 11 14 Installation of spring pin

Install spring pins **2**, **4**, **6**, **9**, **11**, **14** in the direction as illustrated.

CAUTION⚠

- **Make sure you do not drive in spring pins 2, 4, 6, 9, 11, 14 fully, leave 0 to 0.5 mm {0 to 0.02 in.} outside to prevent them from slipping out.**
- **Do not remove spring pin 6 for 4th and 5th shift fork 10 (made of aluminum), except when replacing shift forks 8, 13 or shift rails 5, 10.**
- **The lengths of spring pins 4, 9 differ from those of other spring pins 2, 6, 11, 14.**
- **Be careful when driving in spring pins 2, 4, 6, 9, 11, 14 that you do not subject shift rails 1, 5, 10, 15 to excessive strain, because this would cause faults such as bent shift rails.**

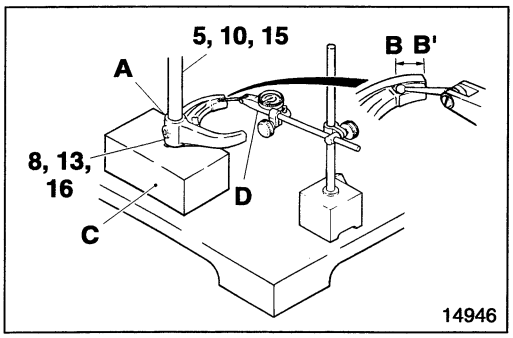

8 13 16 Tilt of shift fork claw

- Measure the tilt (difference between **B** and **B'**) of claw **B–B'** against hole **A** of shift rails **5**, **10**, **15** of shift forks **8**, **13**, **16** with the shift rails upright.
- If the measured value is higher than the limit, replace shift fork **8**, **13**, or **16**.

  C : V-block

  D : Dial gauge

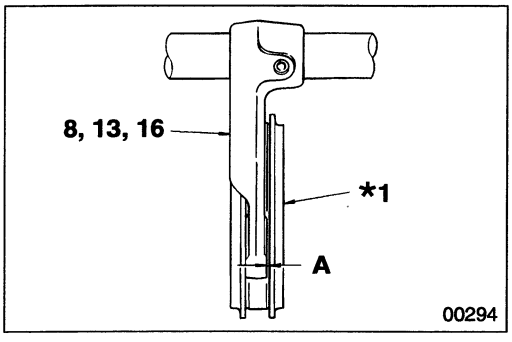

8 13 16 *1 Clearance between shift fork and synchronizer sleeve of mainshaft

If clearance **A** is higher than the limit, replace the faulty parts.

***1** : Synchronizer ring of mainshaft assembly

DRIVE PINION ASSEMBLY

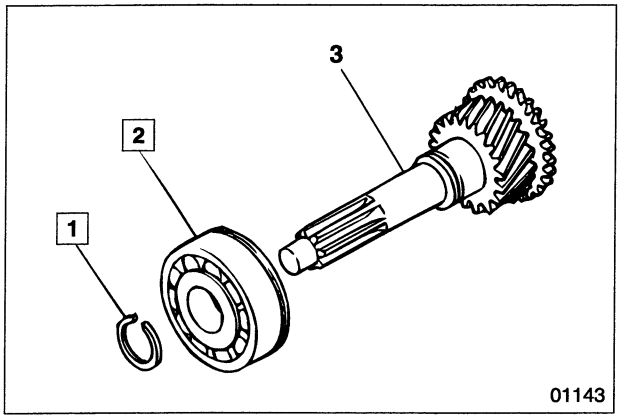

● **Disassembly sequence**

1 Snap ring
2 Drive pinion bearing
3 Drive pinion

● **Assembly sequence**

Follow the disassembly sequence in reverse.

Special tools

Location	Tool name and shape	Part No.	Application
1	Snap ring expander 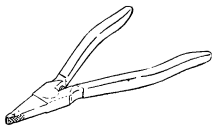 01137	MH061268	Removal and installation of snap ring of drive pinion bearing
2	Drive pinion bearing puller 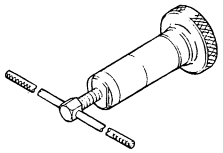 01138	*MH062440	Removal of drive pinion bearing
	Drive pinion bearing installer 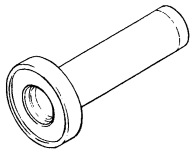 02142	*ME624235	Installation of drive pinon bearing

* components of puller and installer kit 📖 P22A-92

◆ Service procedure

1 Removal and installation of snap ring

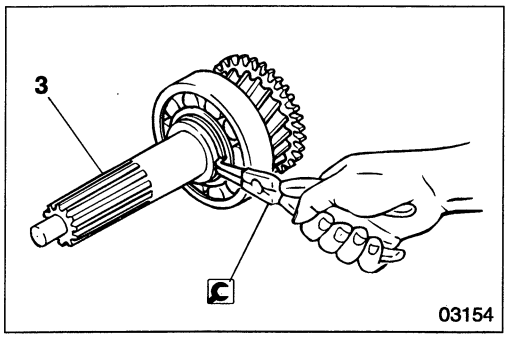

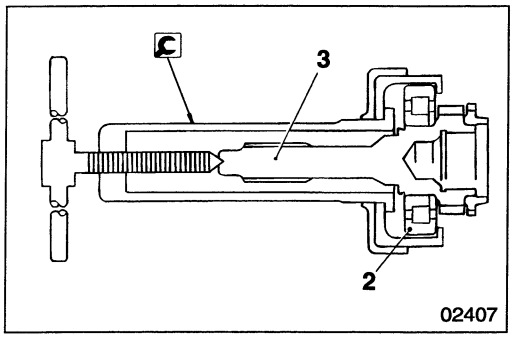

2 Drive pinion bearing

[Removal]

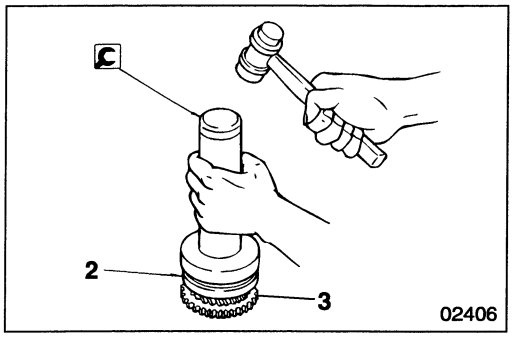

[Installation]

MAINSHAFT ASSEMBLY < S5, S6 OVER-DRIVE (O/D) >

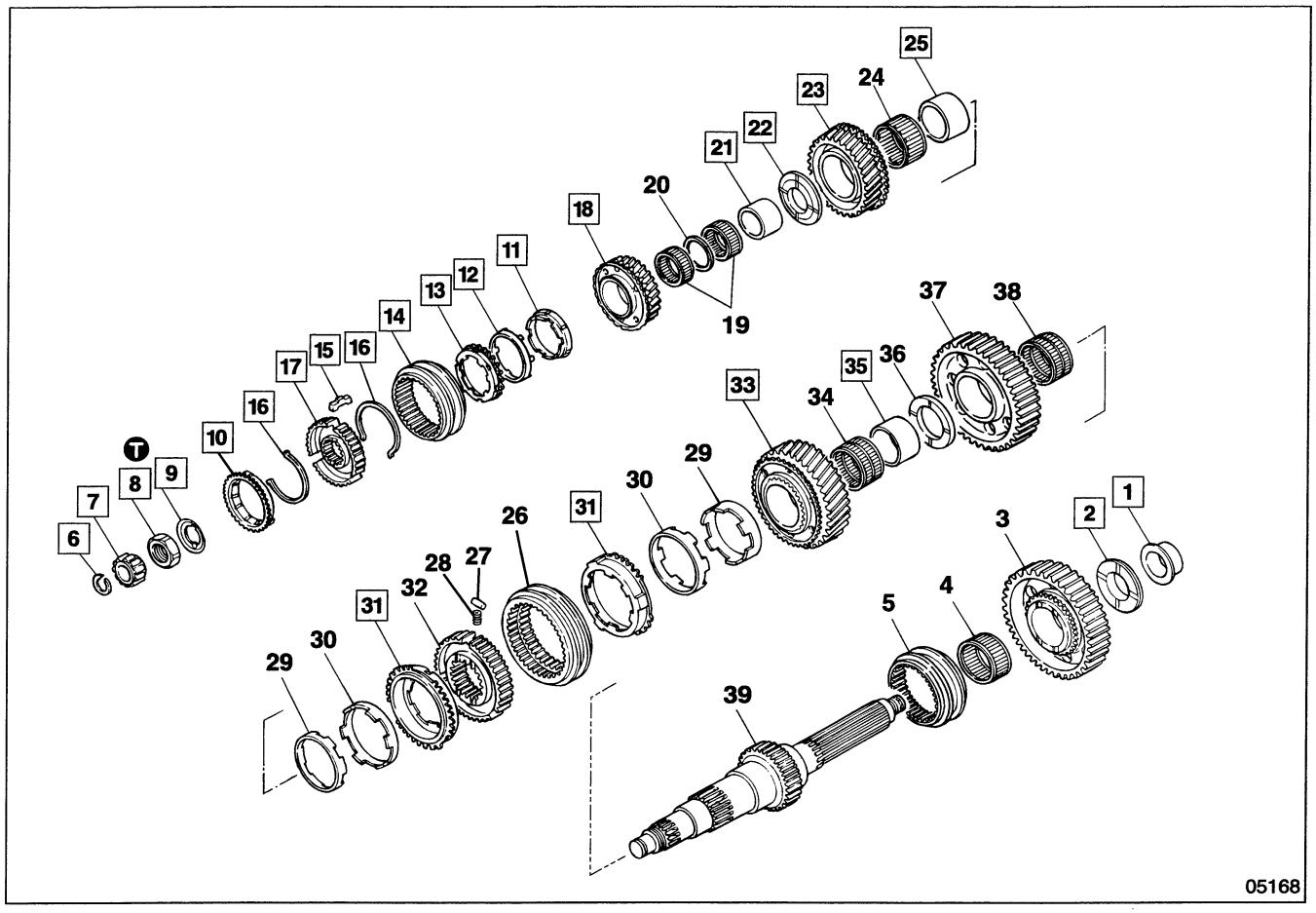

● **Work before disassembly**

P22A-69

● **Disassembly sequence**

1 Mainshaft rear bearing inner race
2 Reverse gear thrust washer
3 Reverse gear
4 Needle bearing
5 Sleeve
6 Snap ring
7 Pilot bearing
8 Lock nut
9 Lock washer
10 Synchronizer ring
11 Synchronizer inner ring
12 Synchronizer center cone
13 Synchronizer outer ring
14 Synchronizer sleeve
15 Shifting key
16 Shifting key spring
17 Synchronizer hub
18 4th gear assembly
19 Needle bearing
20 Bearing spacer
21 4th gear bearing sleeve
22 3rd and 4th gear thrust washer
23 3rd gear assembly
24 Needle bearing
25 3rd gear bearing sleeve
26 Synchronizer sleeve
27 Shifting key
28 Synchronizer spring
29 Synchronizer inner ring
30 Synchronizer center cone
31 Synchronizer outer ring
32 Synchronizer hub
33 2nd gear assembly
34 Needle bearing
35 2nd gear bearing sleeve
36 1st and 2nd gear thrust washer
37 1st gear
38 Needle bearing
39 Mainshaft

● **Assembly sequence**

39→38→37→36→35→34→33 ┐
→25→24→23→22→21→20→19→18 ┐
32→31→30→29→26→28→27 ┘ →9→8→7→6→5→4→3→2→1
17→16→15→13→14→15→12→11→10 ┘

Service standards

Unit : mm {in.}

Location	Maintenance item	Standard value (Basic diameter in [ ])	Limit	Remedy
3	End play of reverse gear	0.15 to 0.35 {0.0059 to 0.014}	0.5 {0.020}	Replace gear or thrust washer
3, 4, 39	Play in the diameter direction after assembling reverse gear	—	0.12 {0.0047}	Replace
5, 39	Play in the rotating direction of sleeve and spline of mainshaft	0.052 to 0.148 {0.0020 to 0.0058}	0.3 {0.012}	Replace
7, 39	Play in the diameter direction after assembling pilot bearing	—	0.12 {0.0047}	Replace
10	Clearance between synchronizer ring and cone of drive pinion assembly	1.48 to 1.77 {0.058 to 0.070}	0.2 {0.0079}	Replace
10, 15	Clearance between synchronizer ring keyway and shifting key	4.75 to 4.95 {0.187 to 0.195}	5.8 {0.23}	Replace
13, 15	Clearance between synchronizer outer ring keyway and shifting key	4.75 to 4.95 {0.187 to 0.195}	5.8 {0.23}	Replace
13, 18	Clearance between synchronizer outer ring and cone area of 4th gear	1.5 to 2.0 {0.059 to 0.079}	0.2 {0.0079}	Replace
14, 17	Play in the rotating direction of synchronizer sleeve and synchronizer hub	0.052 to 0.148 {0.0020 to 0.0058}	0.3 {0.012}	Replace
15, 17	Clearance between shifting key and synchronizer hub keyway	0.05 to 0.2 {0.0020 to 0.0079}	0.5 {0.020}	Replace
19	End play of 4th gear	0.25 to 0.4 {0.0098 to 0.016}	0.5 {0.020}	Replace gear or thrust washer
18, 19, 21, 39	Play in the diameter direction after assembling 4th gear	—	0.12 {0.0047}	Replace
21	Outer diameter of 4th gear bearing sleeve	$[54]^{-0.030}_{-0.043}$ {$[2.12]^{-0.0012}_{-0.0017}$}	−0.1 {−0.0039}	Replace
23	End play of 3rd gear	0.15 to 0.35 {0.0059 to 0.014}	0.5 {0.020}	Replace gear or thrust washer
23, 31	Clearance between cone area of 3rd gear and synchronizer outer ring	1.21 to 1.79 {0.048 to 0.070}	0.2 {0.0079}	Replace
23, 24, 25, 39	Play in the diameter direction after assembling 3rd gear	—	0.12 {0.0047}	Replace
25	Outer diameter of 3rd gear bearing sleeve	$[68]^{-0.030}_{-0.043}$ {$[2.68]^{-0.0012}_{-0.0017}$}	−0.1 {−0.0039}	Replace
31, 33	Clearance between synchronizer outer ring and cone area of 2nd gear	1.21 to 1.79 {0.048 to 0.070}	0.5 {0.020}	Replace
33	End play of 2nd gear	0.15 to 0.35 {0.0059 to 0.014}	0.5 {0.020}	Replace gear or thrust washer
33, 34, 35, 39	Play in the diameter direction after assembling 2nd gear	—	0.12 {0.0047}	Replace
35	Outer diameter of 2nd gear bearing sleeve	$[71]^{-0.030}_{-0.043}$ {$[2.8]^{-0.0012}_{-0.0017}$}	−0.1 {−0.0039}	Replace
37	End play of 1st gear	0.15 to 0.35 {0.0059 to 0.014}	0.5 {0.020}	Replace gear or thrust washer
37, 38, 39	Play in the diameter direction after assembling 1st gear	—	0.12 {0.0047}	Replace

MAINSHAFT ASSEMBLY < S5, S6 OVER-DRIVE (O/D) >

Tightening torque

Unit : N·m {lbf.ft, kgf·m}

Location	Parts to be tightened	Tightening torque	Remarks
8	Lock nut	245 {180, 25}	—

Special tools

Unit : mm {in.}

Location	Tool name and shape	Part No.	Application
1, 21, 25, 35	Gear puller 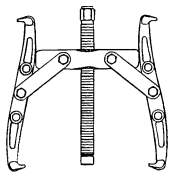 01148	MH062308	Removal of bearing sleeve
6	Snap ring expander 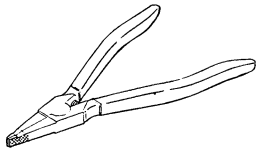 01137	MH061268	Removal and installation of snap ring
7	Pilot bearing puller 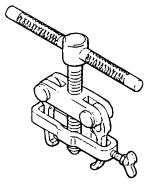 01146	MH061043	Removal of pilot bearing
	Pilot bearing installer 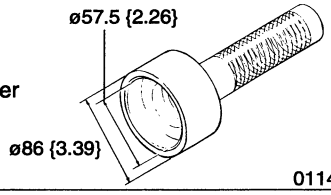 01147	*ME624236	Installation of pilot bearing
8	Single spanner 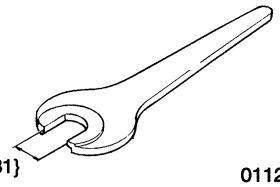 01126	MH061555	Removal and installation of lock nut

* components of puller and installer kit P22A-92

◆ Service procedure

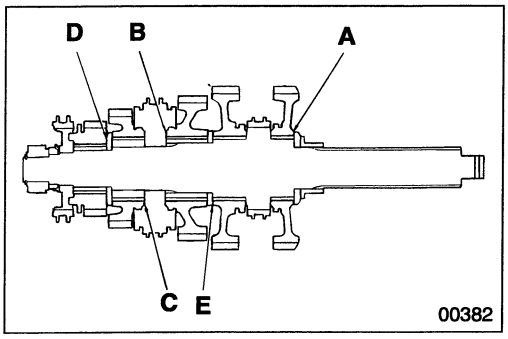

● Work before disassembly

[Inspection]

(1) End play of gears

A : Reverse gear
B : 2nd gear
C : 3rd gear
D : 4th gear
E : 1st gear

If the measured value is higher than the limit, replace the faulty parts.
Also inspect this item after assembly and make sure that the measured value is within the limit.

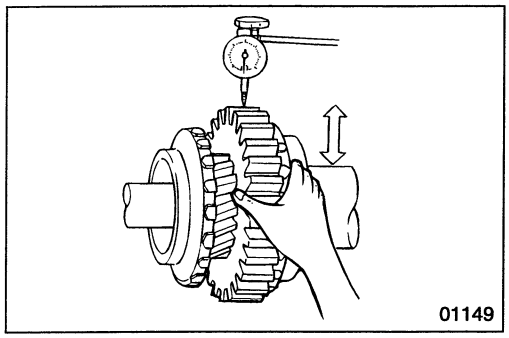

(2) Play of gears in diameter direction

If the measured value is higher than the limit, replace the faulty parts.
Also inspect this item after assembly and make sure that the measured value is within the limit.

CAUTION⚠

Be sure when you replace the two needle bearings of a gear, that both needle bearings are from the same color package.

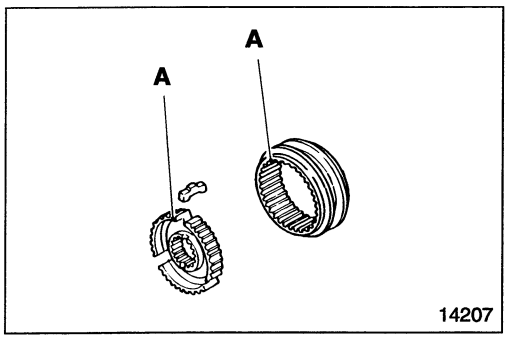

[Alignment marks]

(1) Synchronizer sleeve and synchronizer hub

Before disassembling the synchronizer sleeve and the synchronizer hub, put alignment marks **A** on the places where the shifting keys are installed. When reusing parts, align the alignment marks to assemble.

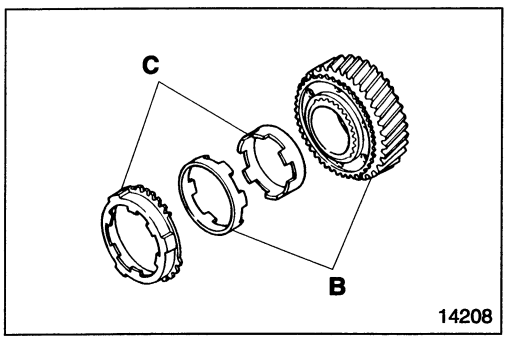

(2) Ring, cone and gear assembly of double cone synchronizer

Before disassembling synchronizer center cone and gear assembly (**B**), and synchronizer center ring and synchronizer outer ring (**C**), put alignment marks on them. When reusing parts, align the alignment marks to assemble.

MAINSHAFT ASSEMBLY < S5, S6 OVER-DRIVE (O/D) >

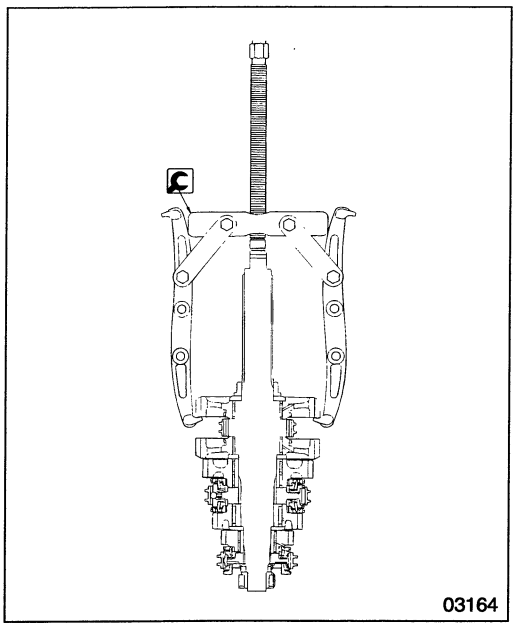

1 **Removal of mainshaft rear bearing inner race**

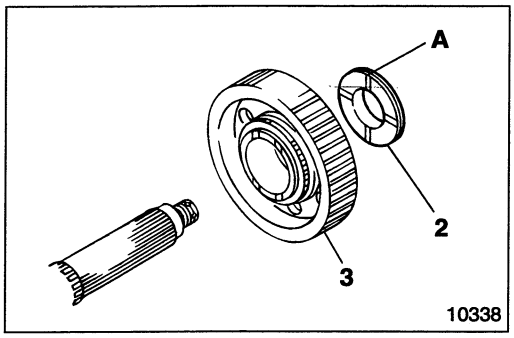

2 **Installation of reverse gear thrust washer**

A : Oil groove

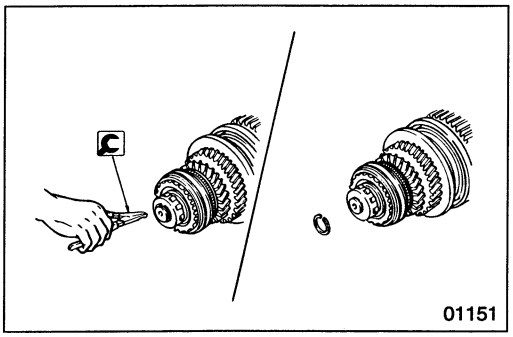

6 **Removal and installation of snap ring**

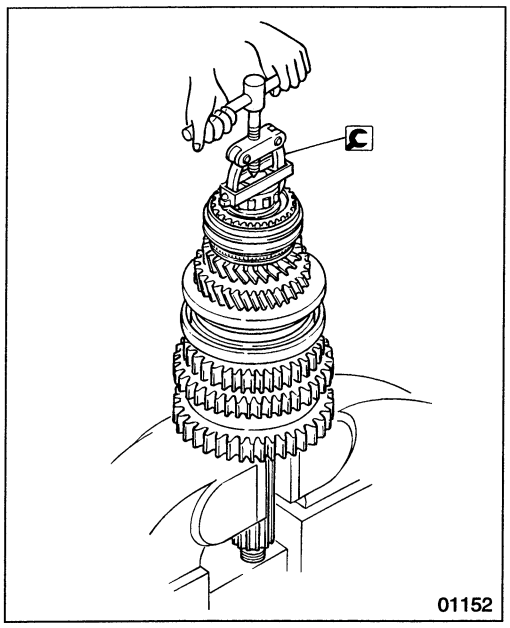

7 Pilot bearing

[Removal]

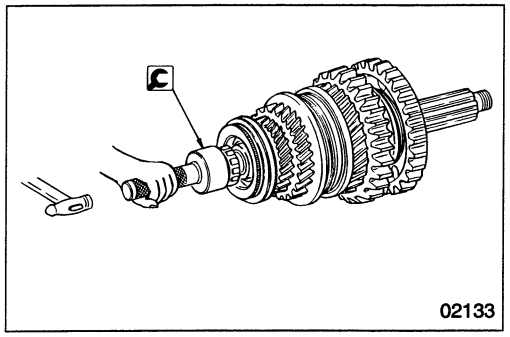

[Installation]

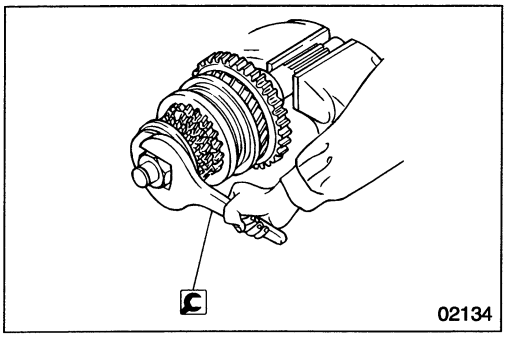

8 Removal and installation of lock nut

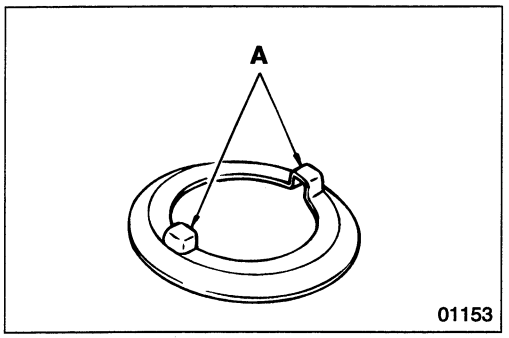

9 Installation of lock washer

Install so that protrusions **A** (two points as illustrated) fit into the grooves of synchronizer hub **17**.

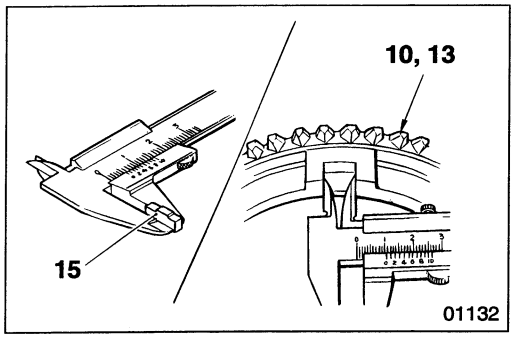

10 to 18 Synchromesh mechanism and 4th gear

[Inspection]

(1) Clearance between synchronizer ring 10 or outer ring 13 and shifting key 15

If the measured value is higher than the limit, replace the faulty parts.

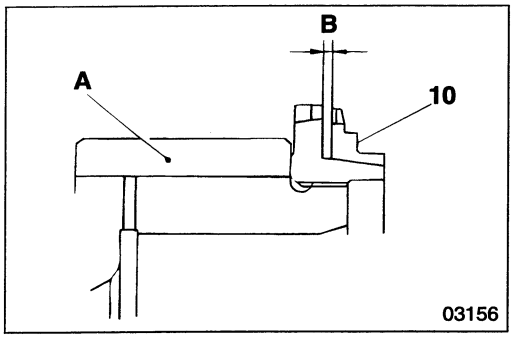

(2) Clearance between synchronizer ring 10 and drive pinion

- Measure clearance **B** between synchronizer ring **10** and the gear cone of drive pinon **A**.
- When measuring this value, press synchronizer ring **10** evenly, and measure all around the circumference.
- If the measured value is lower than the limit, replace the faulty parts.

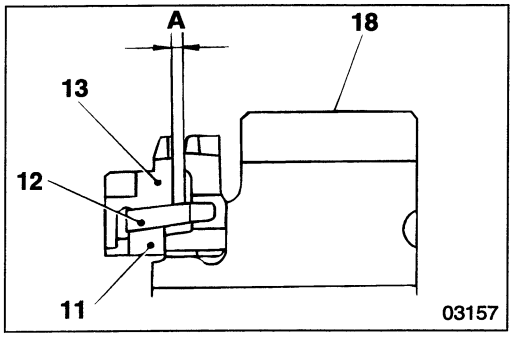

(3) Clearance between synchronizer outer ring and 4th gear

- Measure clearance **A** between synchronizer outer ring **13** and the gear cone of 4th gear **18**.
- When measuring this value, press synchronizer inner ring **11**, center cone **12**, and the outer ring evenly and measure all around the circumference.
- If the measured value is lower than the limit, replace the faulty parts.

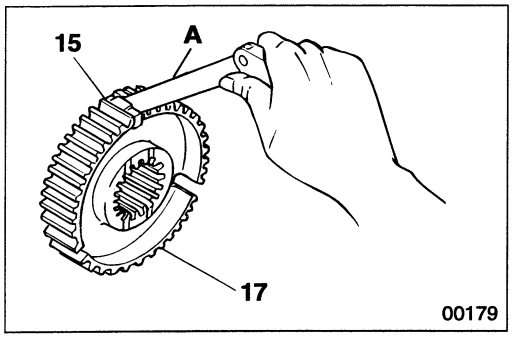

(4) Clearance between shifting key 15 and synchronizer hub 17

If the measured value is higher than the limit, replace the faulty parts.

A : Feeler gauge

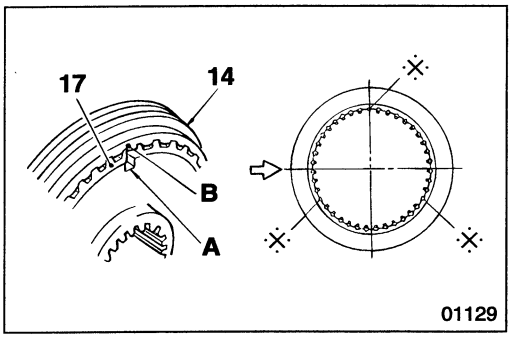

[Installation]

- Align the three keyways **A** of synchronizer hub **17** with the three stub teeth **B** (illustrated by ·⁜· mark) of synchronizer sleeve **14** to install the synchronizer hub.
- To reassemble synchronizer hub **17** and synchronizer sleeve **14**, align the alignment marks made during diassembly.

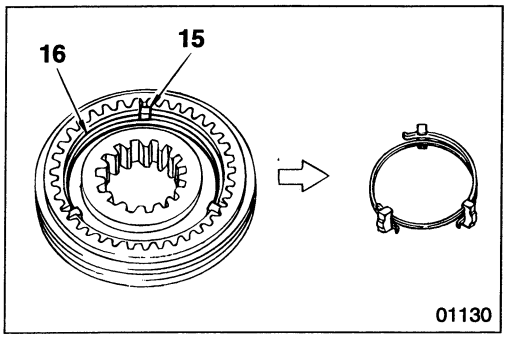

- Insert shifting key **15** into the keyway.
- Install shifting key spring **16** so that its opening is offset from the one of the shifting key.
- Make sure that the openings of shifting key springs do not align with each other.

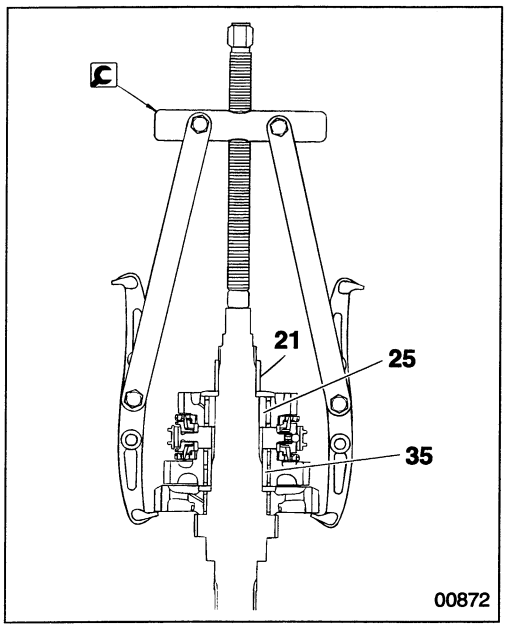

21 25 35 Removal of 4th, 3rd, 2nd gear bearing sleeves

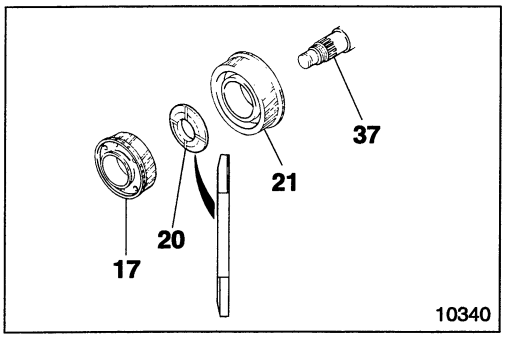

21 Installation of 3rd and 4th gear thrust washer

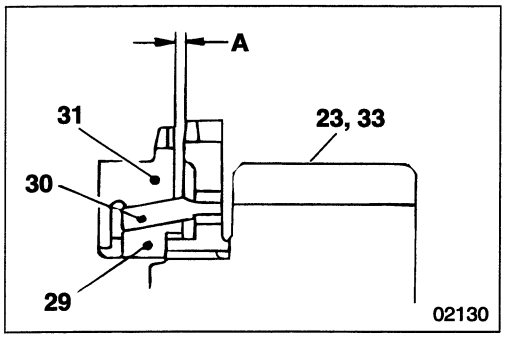

23 31 33 Clearance between synchronizer outer ring and 3rd gear assembly or 2nd gear assembly

- Measure clearance **A** between synchronizer outer ring **31** and the cone of 3rd gear assembly **23** or 2nd gear assembly **33**.
- When measuring this value, press synchronizer inner ring **29**, synchronizer outer ring **31** and synchronizer center ring **30** evenly and measure all around the circumference.
- If the measured value is higher than the limit, replace the faulty parts.

MAINSHAFT ASSEMBLY < S6 DIRECT-DRIVE (D/D) >

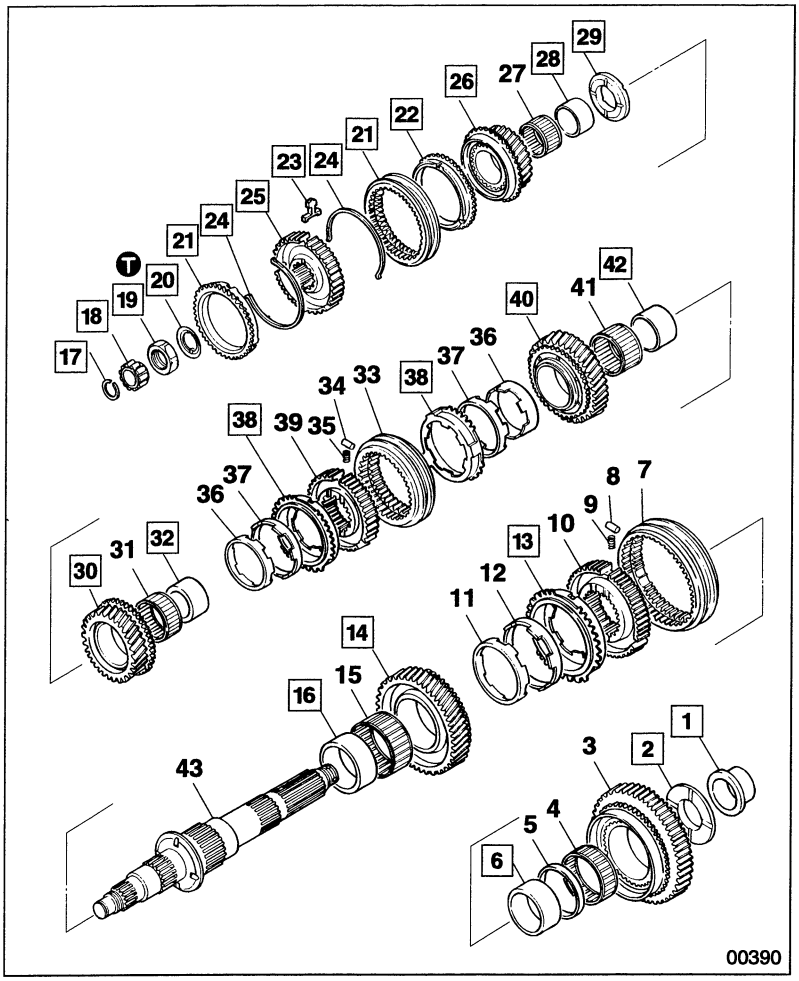

● **Assembly sequence**

39→38→37→36→35→33→34
38→37→36
→32→31→30→29→28→27→26
43→42→41→40
25→22→23→24→21→24→21
→20→19→18→17→16→15→14
→6→5→4→3→2→1
10→13→12→11→9→7→8

● **Work before disassembly**

P22A-77

● **Disassembly sequence**

1 Mainshaft rear bearing inner race
2 1st gear thrust washer
3 1st gear
4 Needle bearing
5 Bearing spacer
6 1st gear bearing sleeve
7 Synchronizer sleeve
8 Shifting key
9 Shifting key spring
10 Synchronizer hub
11 Synchronizer inner ring
12 Synchronizer center cone
13 Synchronizer outer ring
14 2nd gear
15 Needle bearing
16 2nd gear bearing sleeve
17 Snap ring
18 Pilot bearing
19 Lock nut
20 Lock washer
21 Synchronizer ring
22 Synchronizer sleeve
23 Shifting key
24 Shifting key spring
25 Synchronizer hub
26 5th gear assembly
27 Needle bearing
28 5th gear bearing sleeve
29 4th and 5th gear thrust washer
30 4th gear assembly
31 Needle bearing
32 4th gear bearing sleeve
33 Synchronizer sleeve
34 Shifting key
35 Shifting key spring
36 Synchronizer inner ring
37 Synchronizer center cone
38 Synchronizer outer ring
39 Synchronizer hub
40 3rd gear assembly
41 Needle bearing
42 3rd gear bearing sleeve
43 Mainshaft

Service standards

Unit : mm {in.}

Location	Maintenance item	Standard value (Basic diameter in [ ])	Limit	Remedy
3	End play of 1st gear	0.35 to 0.55 {0.014 to 0.022}	0.75 {0.030}	Replace gear or thrust washer
3, 4, 5, 6, 43	Play in the diameter direction after assembling 1st gear	—	0.1 {0.0039}	Replace
6	Outer diameter of 1st gear bearing sleeve	$[96]^{-0.030}_{-0.043}$ {$[3.78]^{-0.0012}_{-0.0017}$}	– 0.1 {– 0.0039}	Replace
7, 10	Play in the rotating direction of synchronizer sleeve and synchronizer hub	0.052 to 0.148 {0.0020 to 0.0058}	0.3 {0.012}	Replace
10, 43	Engagement in the rotating direction of synchronizer hub and mainshaft	–0.005 to 0.114 {–0.0002 to 0.0045}	0.2 {0.0079}	Replace
13, 14	Clearance between cone area of 2nd gear and synchronizer outer ring	1.21 to 1.79 {0.048 to 0.070}	0.2 {0.0079}	Replace
14	End play of 2nd gear	0.35 to 0.55 {0.014 to 0.022}	0.75 {0.030}	Replace gear or thrust washer
14, 15, 16, 43	Play in the diameter direction after assembling 2nd gear	—	0.1 {0.0039}	Replace
16	Outer diameter of 2nd gear bearing sleeve	$[95]^{-0.030}_{-0.043}$ {$[3.74]^{-0.012}_{-0.017}$}	– 0.1 {– 0.0039}	Replace
18, 43	Play in the diameter direction after assembling pilot bearing	—	0.12 {0.0047}	Replace
21	Clearance between synchronizer ring and cone area of drive pinion	1.49 to 1.86 {0.059 to 0.073}	0.2 {0.0079}	Replace
21, 25	Clearance between synchronizer ring and synchronizer hub groove	4.7 to 5.3 {0.19 to 0.21}	6.5 {0.26}	Replace
21, 26	Clearance between cone area of 5th gear and synchronizer ring	1.49 to 1.86 {0.059 to 0.073}	0.2 {0.0079}	Replace
22, 25	Play in the rotating direction of synchronizer sleeve and synchronizer hub	0.052 to 0.148 {0.0020 to 0.0058}	0.3 {0.012}	Replace
23, 25	Engagement in the rotating direction of synchronizer hub and mainshaft	0.05 to 0.20 {0.0020 to 0.0079}	0.5 {0.020}	Replace
25, 43	Mating part in rotating direction on synchronizer hub and mainshaft	–0.006 to –0.094 {–0.00024 to –0.0037}	0.2 {0.0079}	Replace
26	End play of 5th gear	0.25 to 0.40 {0.0098 to 0.016}	0.6 {0.024}	Replace gear or thrust washer
26, 27, 28, 43	Play in the diameter direction after assembling 5th gear	—	0.1 {0.0039}	Replace
28	Outer diameter of 5th gear bearing sleeve	$[60]^{-0.030}_{-0.043}$ {$[2.36]^{-0.0012}_{-0.0017}$}	– 0.1 {– 0.0039}	Replace
30	End play of 4th gear	0.15 to 0.35 {0.0059 to 0.014}	0.55 {0.022}	Replace gear or thrust washer
30, 31, 32, 43	Play in the diameter direction after assembling 4th gear	—	0.1 {0.0039}	Replace

MAINSHAFT ASSEMBLY < S6 DIRECT-DRIVE (D/D) >

Unit : mm {in.}

Location	Maintenance item	Standard value (Basic diameter in [ ])	Limit	Remedy
30, 38	Clearance between cone area of 4th gear and synchronizer outer ring	1.21 to 1.79 {0.048 to 0.070}	0.2 {0.0079}	Replace
32	Outer diameter of 4th gear bearing sleeve	$[71]^{-0.030}_{-0.043}$ {$[2.80]^{-0.0012}_{-0.0017}$}	–0.1 {–0.0039}	Replace
33, 39	Play in the rotating direction of synchronizer sleeve and synchronizer hub	0.052 to 0.148 {0.002 to 0.0058}	0.3 {0.012}	Replace
38, 40	Clearance between cone area of 3rd gear and synchronizer outer ring	1.21 to 1.79 {0.048 to 0.070}	0.2 {0.0079}	Replace
39, 43	Engagement in the rotating direction of synchronizer hub and mainshaft	-0.005 to 0.114 {-0.0002 to 0.0045}	0.2 {0.0079}	Replace
40	End play of 3rd gear	0.15 to 0.35 {0.0059 to 0.014}	0.55 {0.22}	Replace gear or thrust washer
40, 41, 42, 43	Play in the diameter direction after assembling 3rd gear	—	0.1 {0.0039}	Replace

Tightening torque

Unit : N·m {lbf.ft, kgf·m}

Location	Parts to be tightened	Tightening torque	Remarks
19	Lock nut	315 {230, 32}	—

Special tools

Location	Tool name and shape	Part No.	Application
1, 6, 28, 32	Gear puller 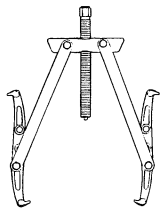 03160	MH062250	Removal of mainshaft rear bearing inner race and bearing sleeves
17	Snap ring expander 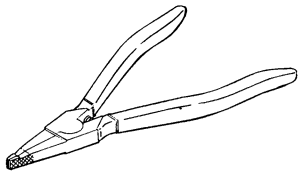 01137	MH061268	Removal and installation of snap ring
18	Pilot bearing puller 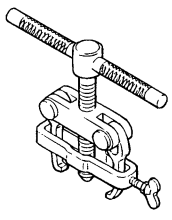 01146	MH061043	Removal of pilot bearing

Unit : mm {in.}

Location	Tool name and shape	Part No.	Application
18	Pilot bearing installer 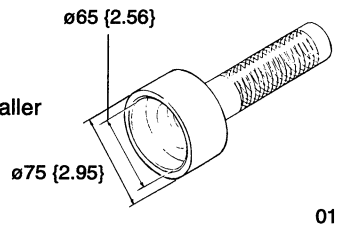	*MH062628	Installation of pilot bearing
19	Single spanner 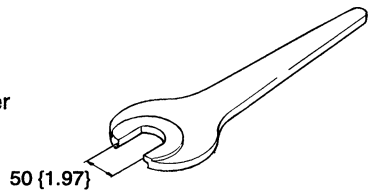	MH063101	Removal and installation of lock nut

* components of puller and installer kit P22A-92

◆ Service procedure

● Work before disassembly

[Inspection]

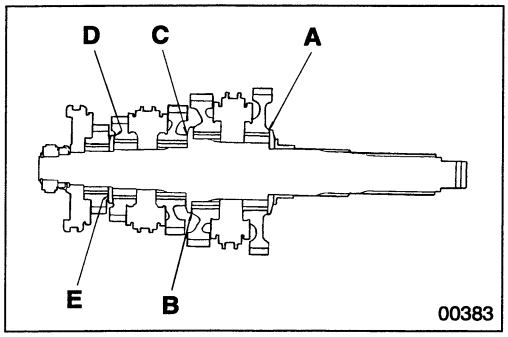

(1) End play of gears

A : 1st gear
B : 2nd gear
C : 3rd gear
D : 4th gear
E : 5th gear

If the measured value is higher than the limit, replace the faulty parts.

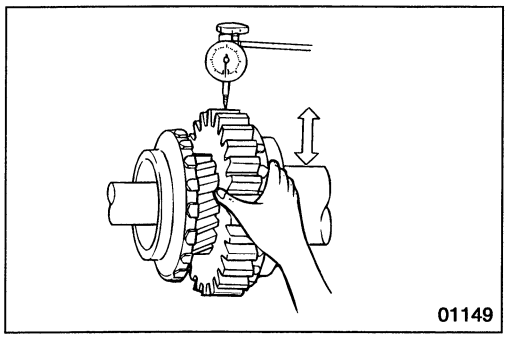

(2) Play of gears in diameter direction

If the measured value is higher than the limit, replace the faulty parts.

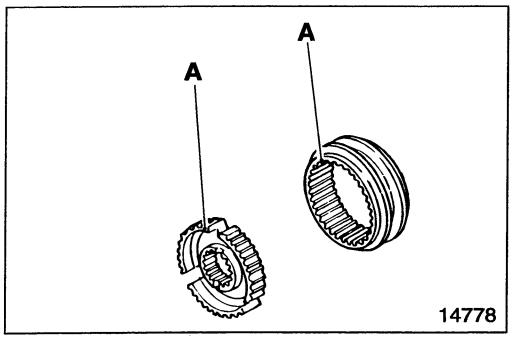

[Alignment marks]

(1) Synchronizer sleeve and synchronizer hub

Before disassembling the synchronizer sleeve and the synchronizer hub, put alignment marks **A** on the places where the shifting keys are installed. When reusing parts, align the alignment marks to assemble.

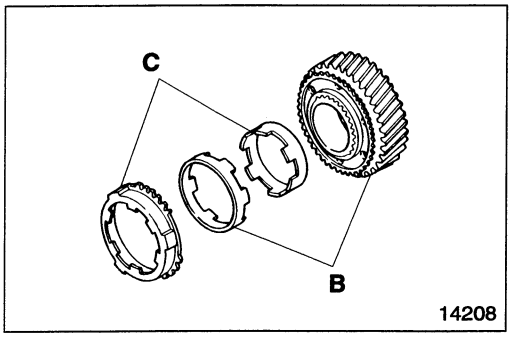

(2) Ring, cone and gear assembly of double cone synchronizer

Before disassembling synchronizer center cone and gear assembly (**B**), and synchronizer center ring and synchronizer outer ring (**C**), put alignment marks on them. When reusing parts, align the alignment marks to assemble.

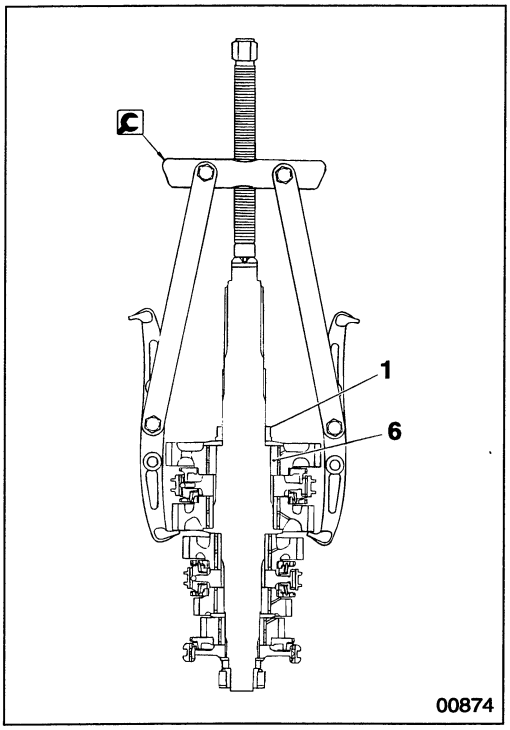

1 6 **Removal of mainshaft rear bearing inner race and 1st gear bearing sleeve**

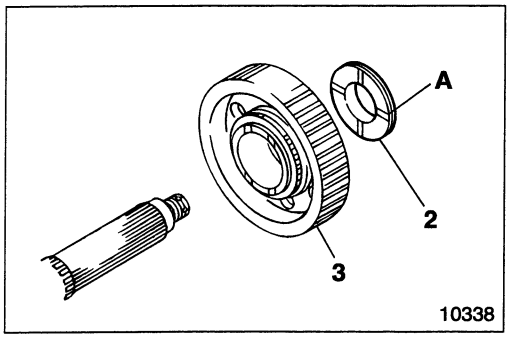

2 **Installation of 1st gear thrust washer**

A : Oil groove

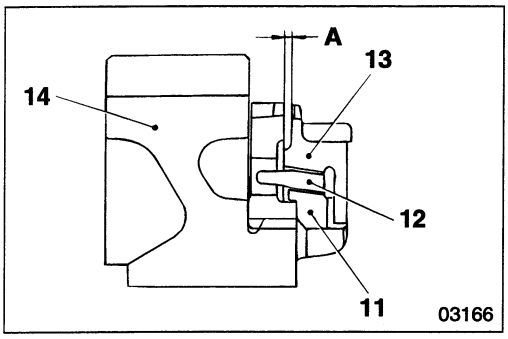

13 **14** **Clearance between synchronizer outer ring and 2nd gear assembly**

- Measure clearance **A** between synchronizer outer ring **13** and the cone of 2nd gear assembly **14**.
- When measuring this value, press synchronizer inner ring **11**, center cone **12** and outer ring **13** evenly and measure all around the circumference.
- If the measured value is lower than the limit, replace the faulty parts.

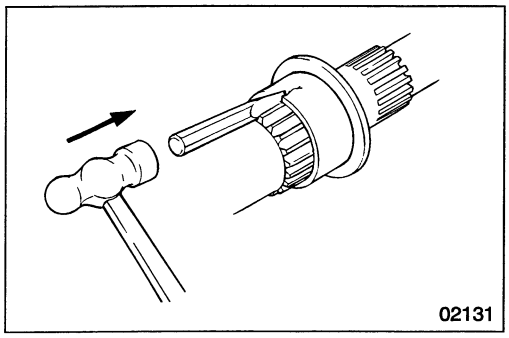

16 **Removal of 2nd gear bearing sleeve**

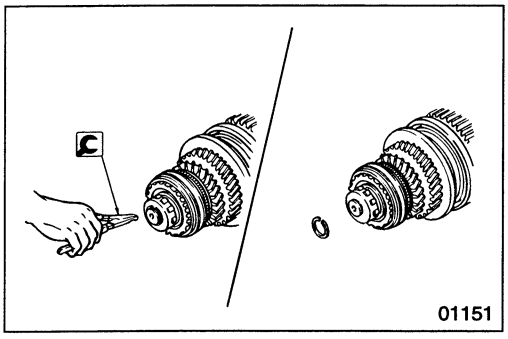

17 **Removal and installation of snap ring**

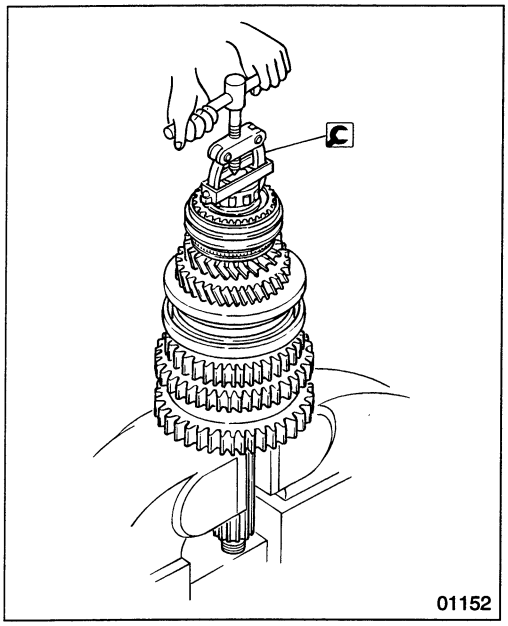

18 **Pilot bearing**

[Removal]

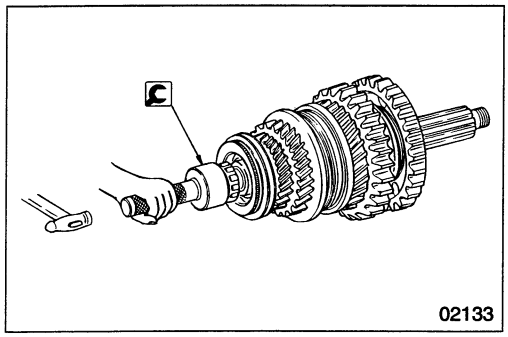

[Installation]

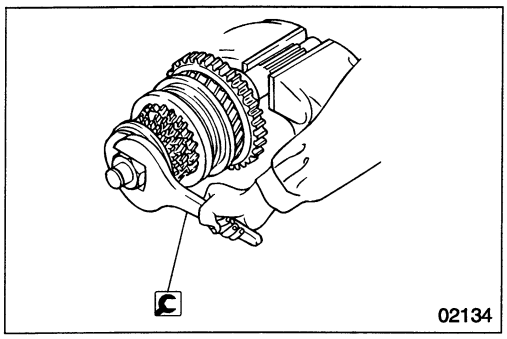

19 **Removal and installation of lock nut**

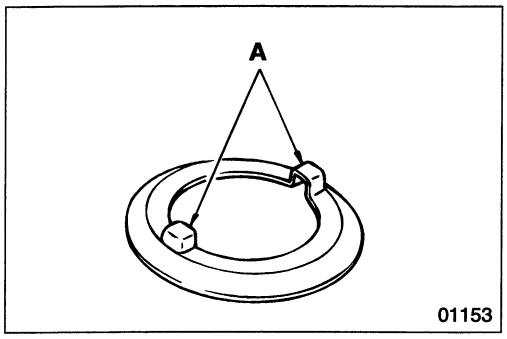

20 **Installation of lock washer**

Install so that protrusions **A** (two points as illustrated) fit into the grooves of synchronizer hub **25**.

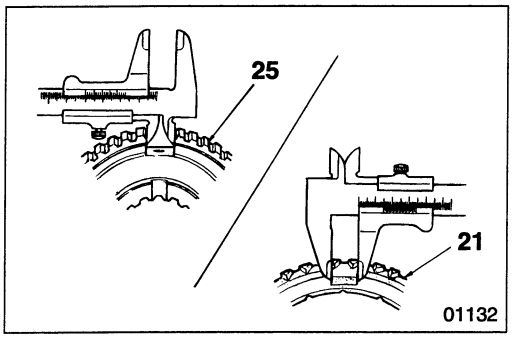

21 to 26 Synchromesh mechanism and 5th gear

[Inspection]

(1) Clearance between the protrusion of synchronizer ring 21 and the groove of synchronizer hub 25

If the measured value is higher than the limit, replace the faulty parts.

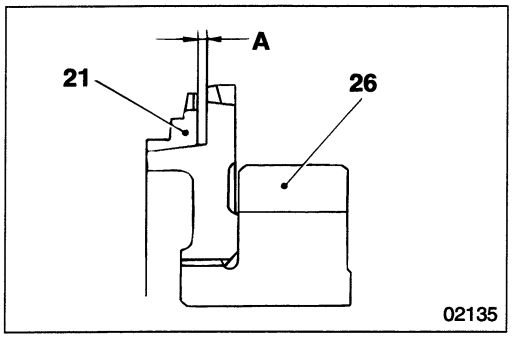

(2) Clearance between synchronizer ring 21 and 5th gear assembly 26 or drive pinion

- Measure the clearance between synchronizer ring **21** and the gear cone of 5th gear assembly **26** or drive pinion
- When measuring this value, press synchronizer ring **21** evenly **1** and measure all around the circumference.
- If the measured value is lower than the limit, replace the faulty parts.

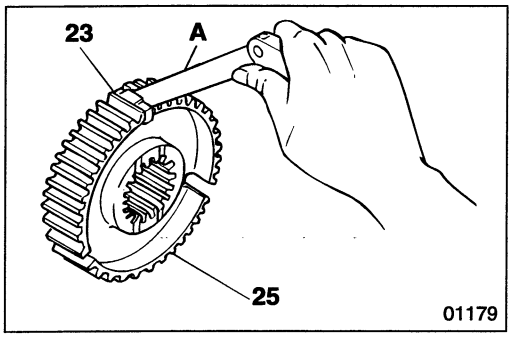

(3) Clearance between shifting key 23 and synchronizer hub 25.

if the measured value is higher than the limit, replace the faulty parts.

A : Feeler gauge

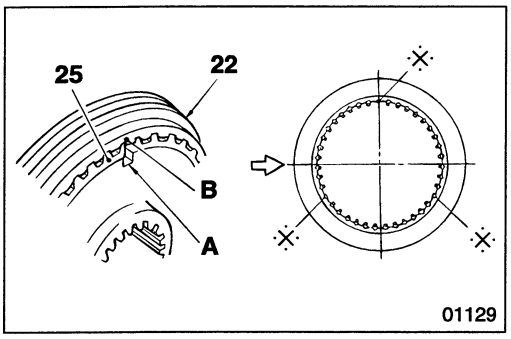

[Installation]

- Align the three keyways **A** of synchronizer hub **25** with the three stub teeth **B** (illustrated by ·⁜· mark) of synchronizer sleeve **22** to install the synchronizer hub.
- To reassemble synchronizer hub **25** and synchronizer sleeve **22**, align the alignment marks made during disassembly.

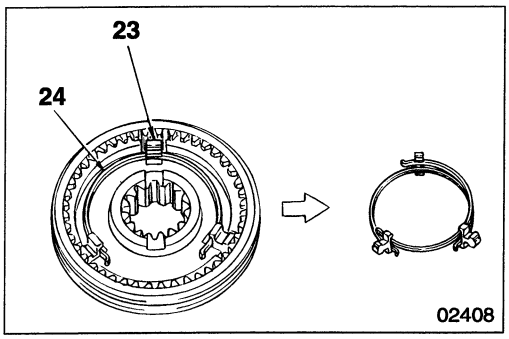

- Insert shifting key **23** into the keyway.
- Install shifting key spring **24** so that its opening is offset from the one on the shifting key.
- Make sure that the openings of shifting key springs do not align with each other.

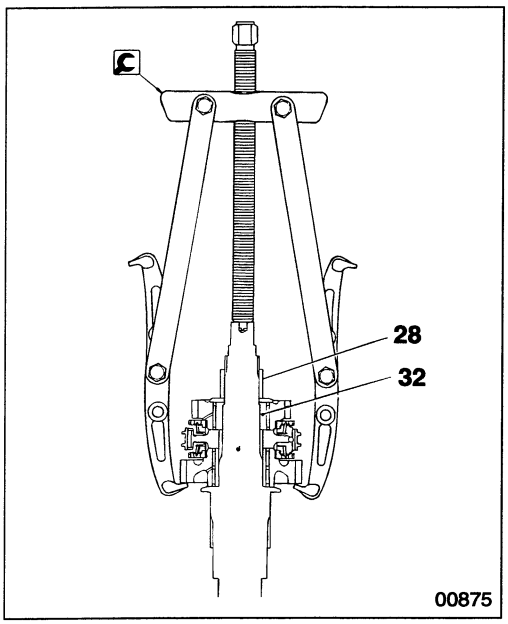

28 **32** **Removal of 5th gear bearing 4 th sleeves**

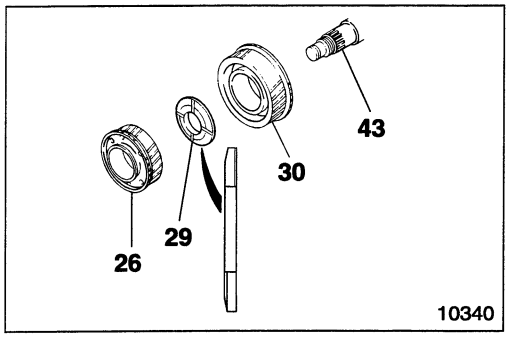

29 **Installation of 4th and 5th gear thrust washer**

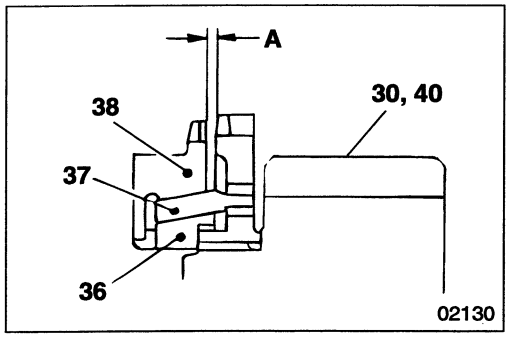

30 **38** **40** **Clearance between synchronizer outer ring and 3rd gear assembly or 4th gear assembly**

- Measure clearance **A** between synchronizer outer ring **38** and the cone of 3rd gear assembly **40** or 4th gear assembly **30**.
- When measuring this value, press synchronizer inner ring **36**, synchronizer center cone **37** and synchronizer outer ring **38** evenly and measure all around the circumference.
- If the measured value is lower than the limit, replace the faulty parts.

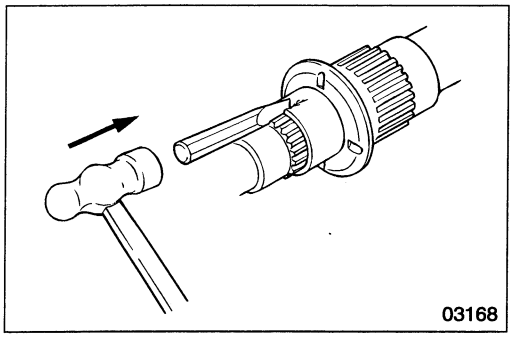

42 **Removal of 3rd gear bearing sleeve**

COUNTERSHAFT ASSEMBLY

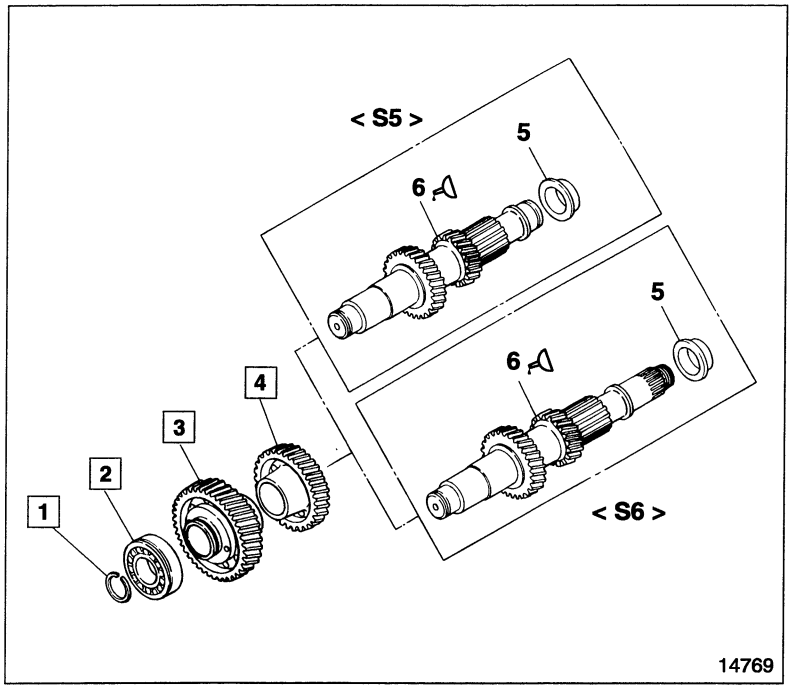

● **Disassembly sequence**

1 Snap ring
2 Countershaft front bearing
3 Countershaft constant mesh gear
4 Countershaft 4th gear < S5, S6 O/D >
Countershaft 5th gear < S6 D/D >
5 Countershaft rear bearing inner race
6 Countershaft

● **Assembly sequence**

Follow the disassembly sequence in reverse.

Sealant

Location	Points of application	Kinds	Quantity
6	Gear installation area of countershaft	THREEBOND 1375B	As required

Special tools

Location	Tool name and shape	Part No.	Application
1	Snap ring expander 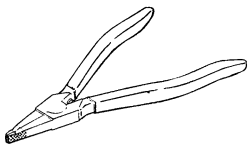 01137	MH061268	Removal and installation of snap rings of countershaft bearing
2	Countershaft bearing puller 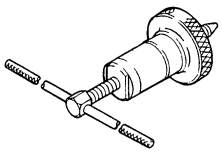 01139	< S5, S6 O/D > *MH062426 < S6 D/D > *MH062429	Removal of countershaft front bearing
	Countershaft bearing installer 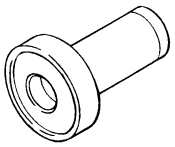 02141	< S5, S6 O/D > *ME624233 < S6 D/D > *MH062630	Installation of countershaft front bearing

Unit : mm {in.}

Location	Tool name and shape	Part No.	Application
3, 4	Countershaft gear puller 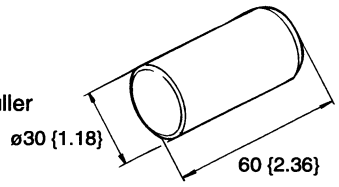	ME624243	Removal of countershaft gear
	Countershaft gear installer 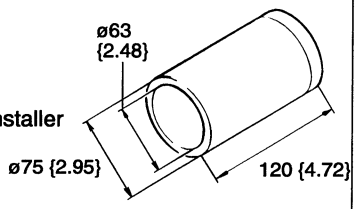	MH061740	Press-fitting of countershaft gear

* components of puller and installer kit P22A-92

◆ Service procedure

1 Removal and installation of snap ring

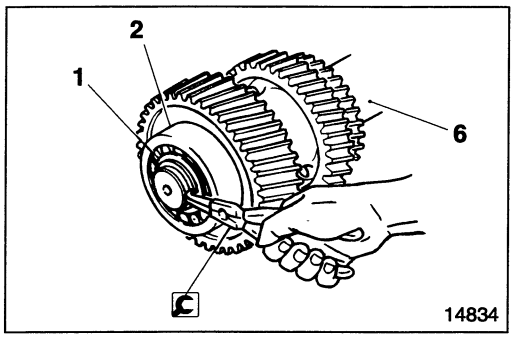

COUNTERSHAFT ASSEMBLY

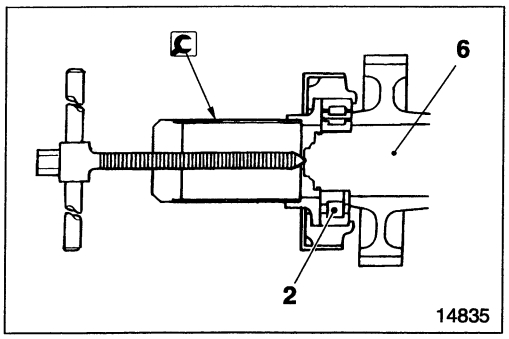

2 Countershaft front bearing

[Removal]

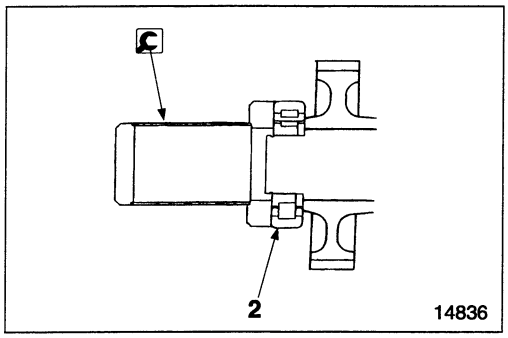

[Installation]

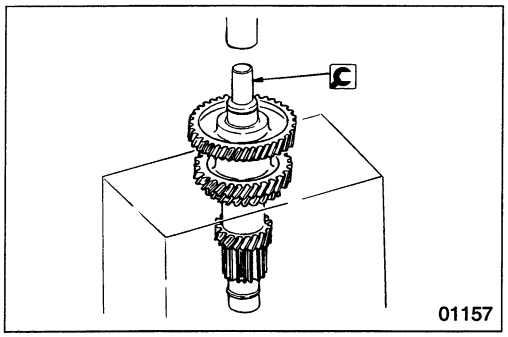

3 4 Countershaft constant mesh gear and countershaft 4th gear

[Removal]
Use a press.

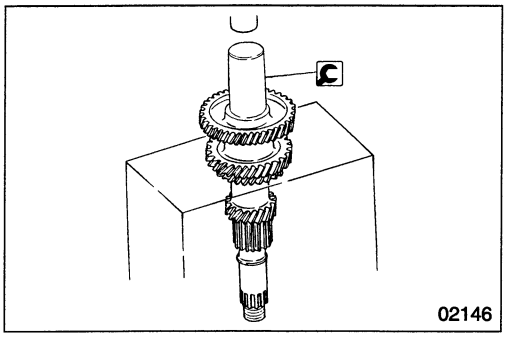

[Installation]
Use a press.

MEMO

TRANSMISSION CONTROL

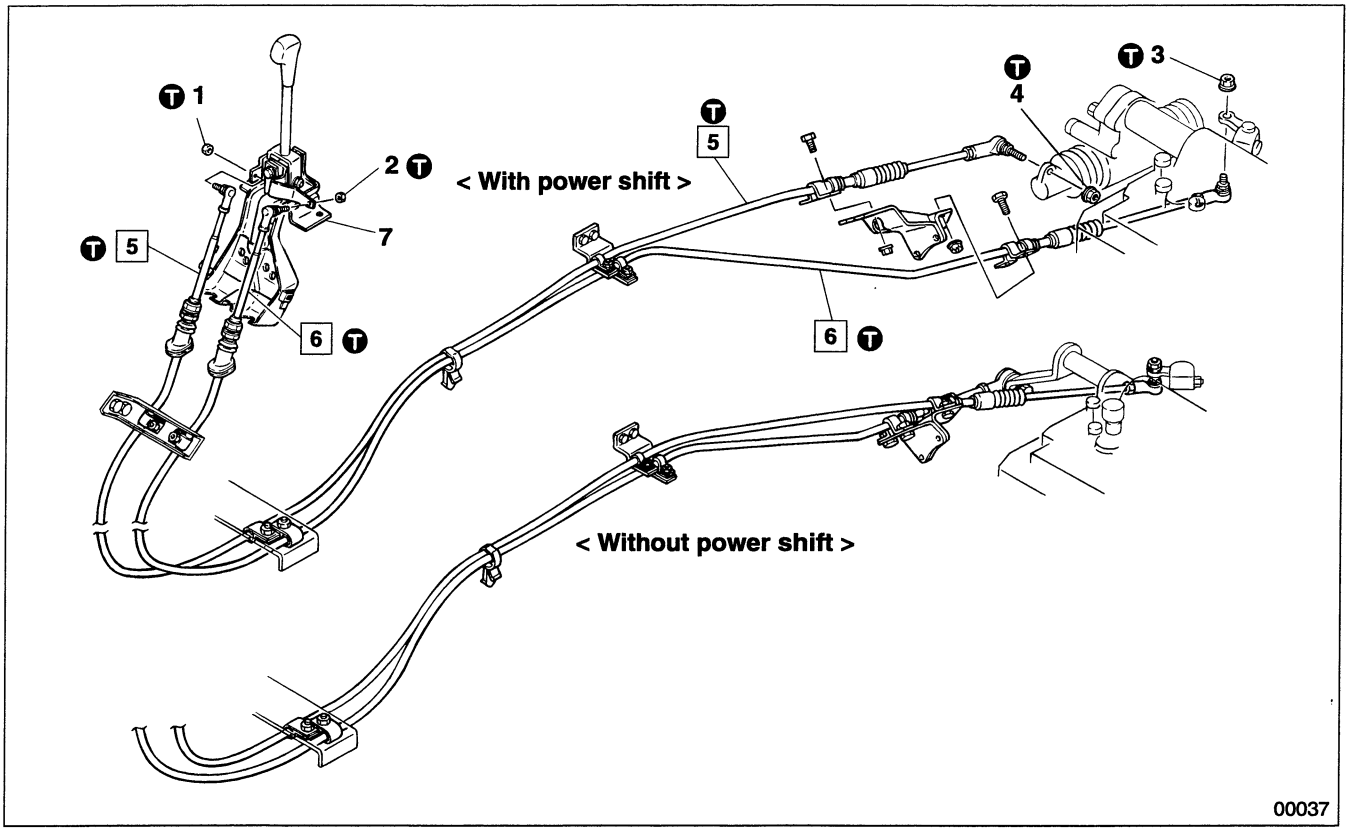

For removal and installation of the shift lever console or floor console, refer to Gr 42.

CAUTION

When mounting shift cable 5 and selector cable 6 to the frame, do not mistake the vertical relationship between the shift cable and the selector cable. This relationship is opposite in vehicles with power shift and those without.

● **Disassembly sequence**

1 Nut
2 Nut
3 Nut
4 Nut
5 Shift cable
6 Selector cable
7 Transmission control lever assembly P22A-91

● **Assembly sequence**

Follow the disassembly sequence in reverse.

Tightening torque

Unit : N·m {lbf.ft, kgf·m}

Location	Parts to be tightened	Tightening torque	Remarks
1 to 4	Nut (Ball joint or rubber damper mounting)	19 to 24 {14 to 17, 1.9 to 2.4}	—
5, 6	Cable lock nut tightening	59 to 83 {43 to 61, 6 to 8.5}	—

◆ Service procedure

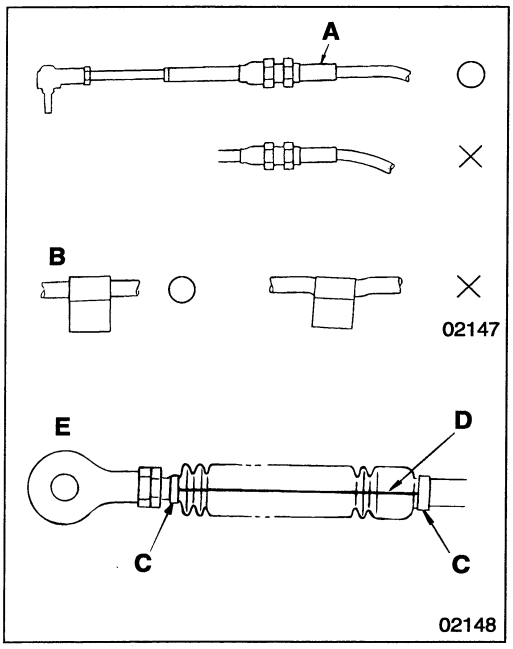

5 6 **Installation of shift cable and selector cable**

CAUTION⚠

- **Make sure the identification marks on the cable, ball joint L, and rubber damper M point in the right direction when you install the cables. Installing the cables with the identification marks in the wrong direction can remarkably reduce the durability of the cables.**
- **Install casing cap A lengthwise.**
- **Make sure the radius of the bend is 200 mm {7.87 in.} or more.**
- **Make sure the cable operates smoothly.**
- **Install the clamp vertically against the cable. (Figure B)**
- **Do not twist clamps C at both ends of the boot. Make sure that white line D on the boot is straight. (Figure E)**

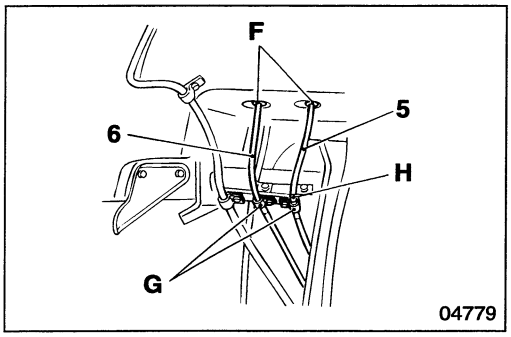

- Insert shift cable **5** and selector cable **6** under the cab floor and clamp them in the correct place by identifying identification mark **H** on the shift cable. (The selector cable has no identification mark.)
  F : Grommet
  G : Clip

< With Power Shift >

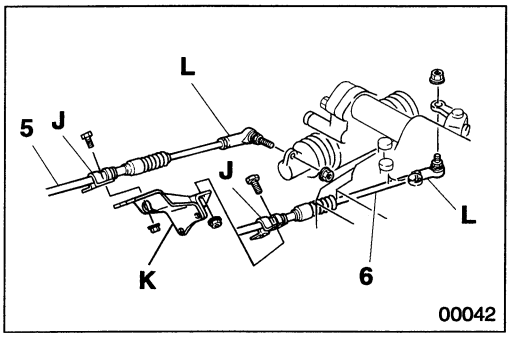

- Install cable clip **J** to bracket **K** temporarily and connect ball joint **L** or rubber damper **M** to the shift lever or selector lever.
- Arrange the cable so that it not twisted, then tighten clip **J** permanently.

CAUTION⚠

Make sure that ball joint L and rubber dumper M face the correct direction.

TRANSMISSION CONTROL

< Without Power Shift >

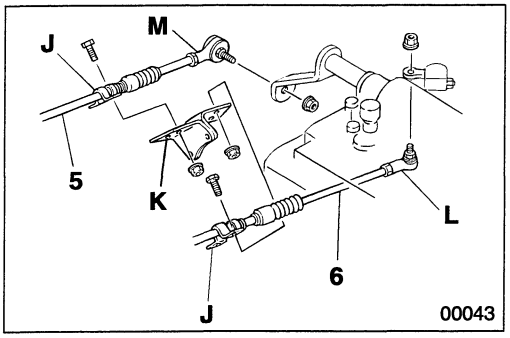

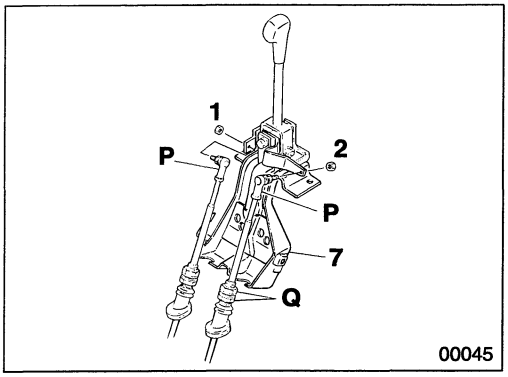

- Tilt the cab down.
- Install the cable on set board assembly **7** temporarily and connect ball joint **P** to shift lever **A** and selector lever **B**.
- Arrange the cable so that it is not twisted, then tighten lock nuts **Q** permanently.

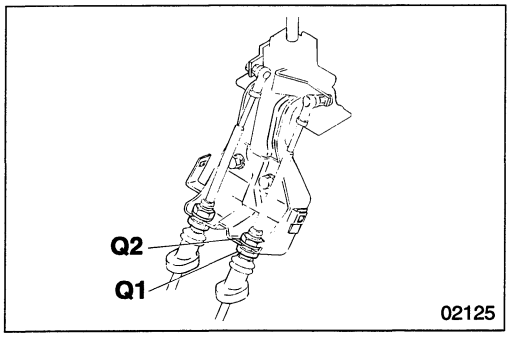

CAUTION⚠

- **Make sure that ball joint L faces the correct direction.**
- **When installing the lock nut, tighten lower nut Q1. Do not move nut Q2.**

- Make sure when you operate the gear shift lever that it shifts smoothly and selects each position.

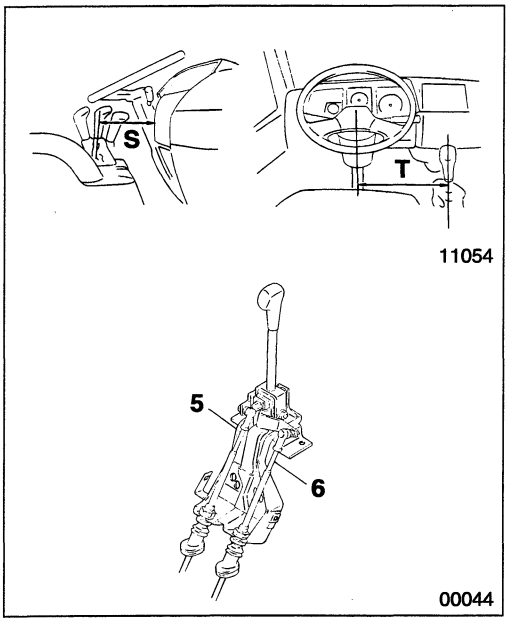

- If the gear shift lever leans to the front or rear, or to the left or right, excessively, adjust the length of the cable.
- When positioning the gear shift lever, use the distance from the center of the steering wheel or from the instrument panel as the reference distance.

Unit : mm {in.}

Front and rear direction S (Distance from the instrument panel)	Left and right direction T (Distance from the steering wheel center)
214 {8.43}	409 {16.1} (< S5, S6 O/D > 4th and 5th gear position) (< S6 D/D > 3rd and 4th gear position)

	Shift cable **5**	Selector cable **6**
To front	Shorten	—
To rear	Lengthen	—
To left	—	Shorten
To right	—	Lengthen

Transmission Control Lever Assembly

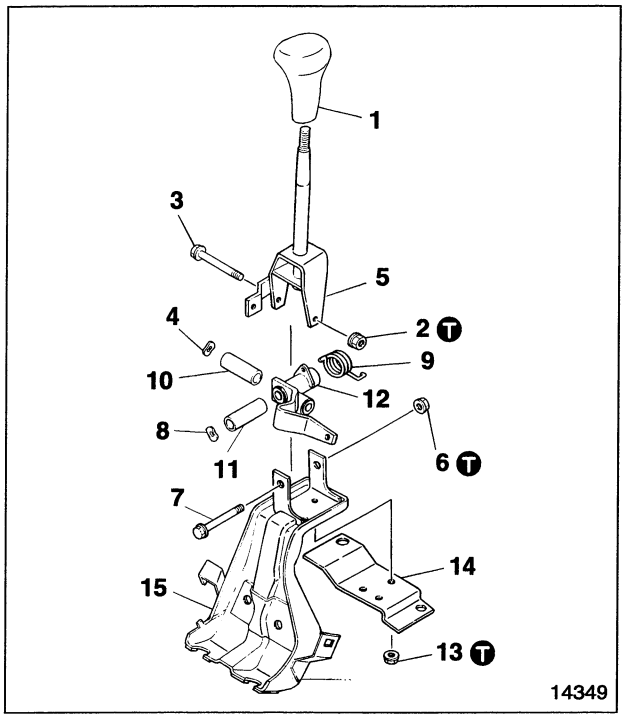

● **Disassembly sequence**

1 Shift knob
2 Nut
3 Bolt
4 Washer
5 Shift lever
6 Nut
7 Bolt
8 Washer
9 Return spring < S6 >
10 Collar
11 Collar
12 Select lever
13 Nut
14 Bracket
15 Set board

● **Assembly sequence**

15→14→13→8→7→6→5→4→3→2→1
12→11→10→9→8→7→6→5→4→3→2→1

T Tightening torque

Unit : N·m {lbf.ft, kgf·m}

Location	Parts to be tightened	Tightening torque	Remarks
2	Nut (Shift lever mounting)	19 to 28 {14 to 21, 1.9 to 2.9}	—
6	Nut (Selector lever mounting)	19 to 28 {14 to 21, 1.9 to 2.9}	—
13	Nut (Bracket mounting)	3.9 to 5.9 {2.9 to 4.3, 0.4 to 0.6}	—

Lubricant

Location	Points of application	Kinds	Quantity
—	All sliding areas	Chassis grease [NLGI No.1 (Ca soap)]	As required

PULLER AND INSTALLER KIT

Component	Name / Part No.	Puller and installer kit		Bearing puller for S5			Bearing puller for S6			
		< S5, S6 O/D >	< S6 D/D >							
		MH062425	MH062444	MH061731	MH061732	MH062426	MH062440	MH062429	MH062432	MH062433
MH062428	Protector	○	○			○	○	○		
MH062427	Claw	○				○				
ME624235	Installer	○	○							
ME624234	Installer	○								
ME624233	Installer	○								
ME624236	Installer	○								
MH061162	Handle	○	○	○	○	○	○	○	○	○
ME624232	Bolt	○	○	○	○	○	○	○	○	○
MH061735	Body	○	○		○		○			
MH061734	Body	○	○	○		○		○	○	
ME624229	Protector	○	○	○	○				○	
MH062430	Claw	○	○				○	○		
ME624227	Claw	○			○					
ME624226	Claw	○		○						
MH062436	Body		○							○
MH062435	Protector		○							○
MH062642	Installer		○							
MH062634	Installer		○							
MH062630	Installer		○							
MH062628	Installer		○							
MH062434	Claw		○							○
ME624228	Claw		○						○	

The puller and installer kit consists of principal bearing pullers and installers selected from the special tools used in this work group. For an installer use a component of this kit independently, and for a puller use the components of this kit in combination.

MITSUBISHI
FUSO

FK.FM
Service Manual

Group 22A
Manual Transmission
< M060S5, S6, M070S6 >

Table of Contents

MITSUBISHI FUSO TRUCK OF AMERICA, Inc.

BACK HOME

Pub No. TWME9503-22A

GROUP 22A MANUAL TRANSMISSION < M060S5, S6, M070S6 >

SPECIFICATIONS 2

STRUCTURE AND OPERATION 2

TROUBLESHOOTING 11

WORK BEFORE REMOVAL AND INSTALLATION OF TRANSMISSION ASSEMBLY 12

REMOVAL AND INSTALLATION OF TRANSMISSION ASSEMBLY .. 14

GEAR SHIFTER UPPER AND INTERLOCK PLATE 18

POWER SHIFT ASSEMBLY 24

EXTENSION HOUSING, REAR COVER AND PARKING BRAKE ASSEMBLY 30

REVERSE IDLER GEAR < S5 > 34

REVERSE GEAR AND REVERSE IDLER GEAR < S6 > 36

TRANSMISSION BODY 42

DRIVE PINION ASSEMBLY 56

MAINSHAFT ASSEMBLY

< S5 > 58

< S6 > 66

COUNTERSHAFT ASSEMBLY 76

TRANSMISSION CONTROL 80

PULLER AND INSTALLER KIT 84

SPECIFICATIONS/STRUCTURE AND OPERATION

SPECIFICATIONS

Item		Specifications		
Mode of control		Floor shift remote control		
Transmission model		M060S5	M060S6	M070S6
Gear ratio	1st	6.875	8.064	8.064
	2nd	4.189	5.443	5.443
	3rd	2.460	3.064	3.064
	4th	1.542	1.824	1.824
	5th	1.000	1.321	1.321
	6th	—	1.000	1.000
	Reverse	6.875	7.354	7.354
Oil capacity	L {qts}	6.9 {7.3}	7.3 {7.7}	8.1 {8.6}
Mass	kg {lb}	161 {355}	168 {370}	192 {425}
Power shift Manufacturer		JIDOSHA KIKI		

STRUCTURE AND OPERATION

Transmission

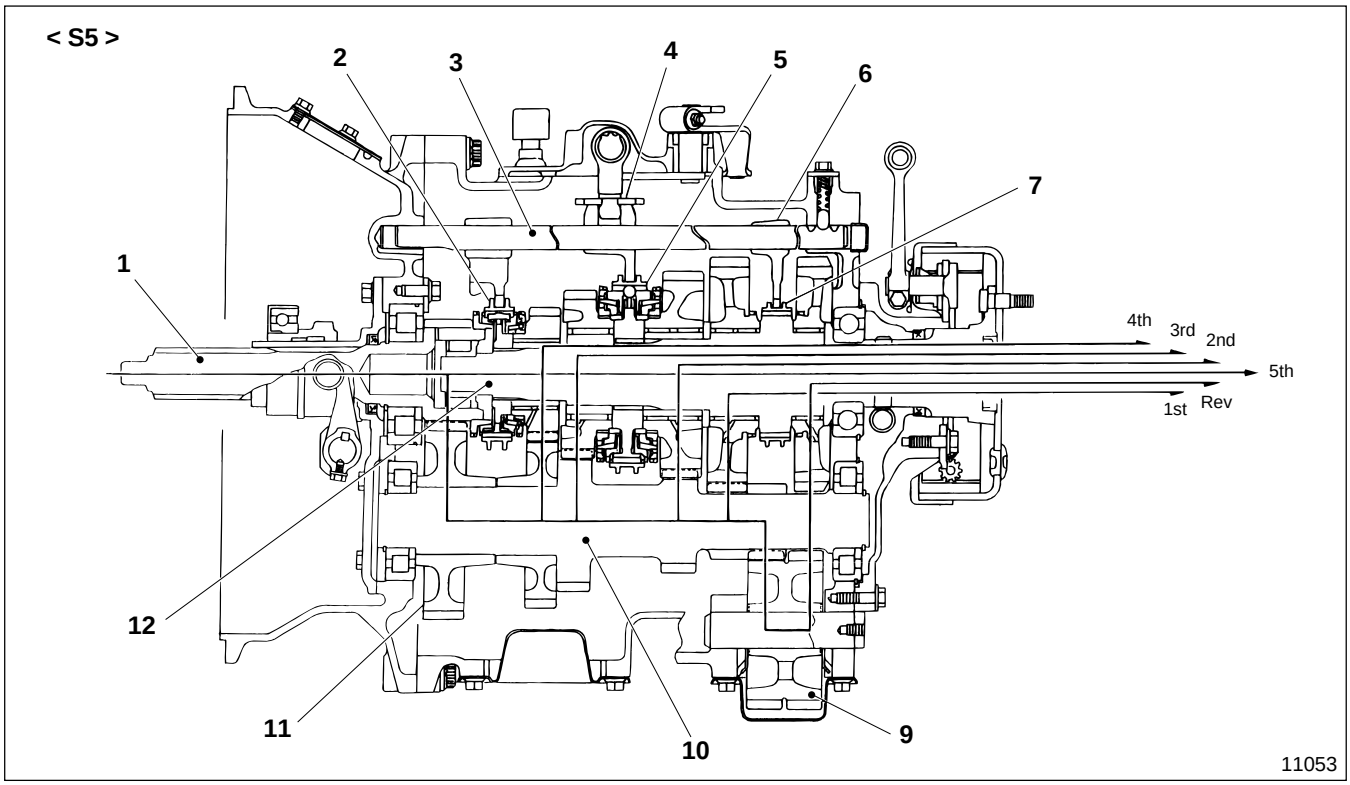

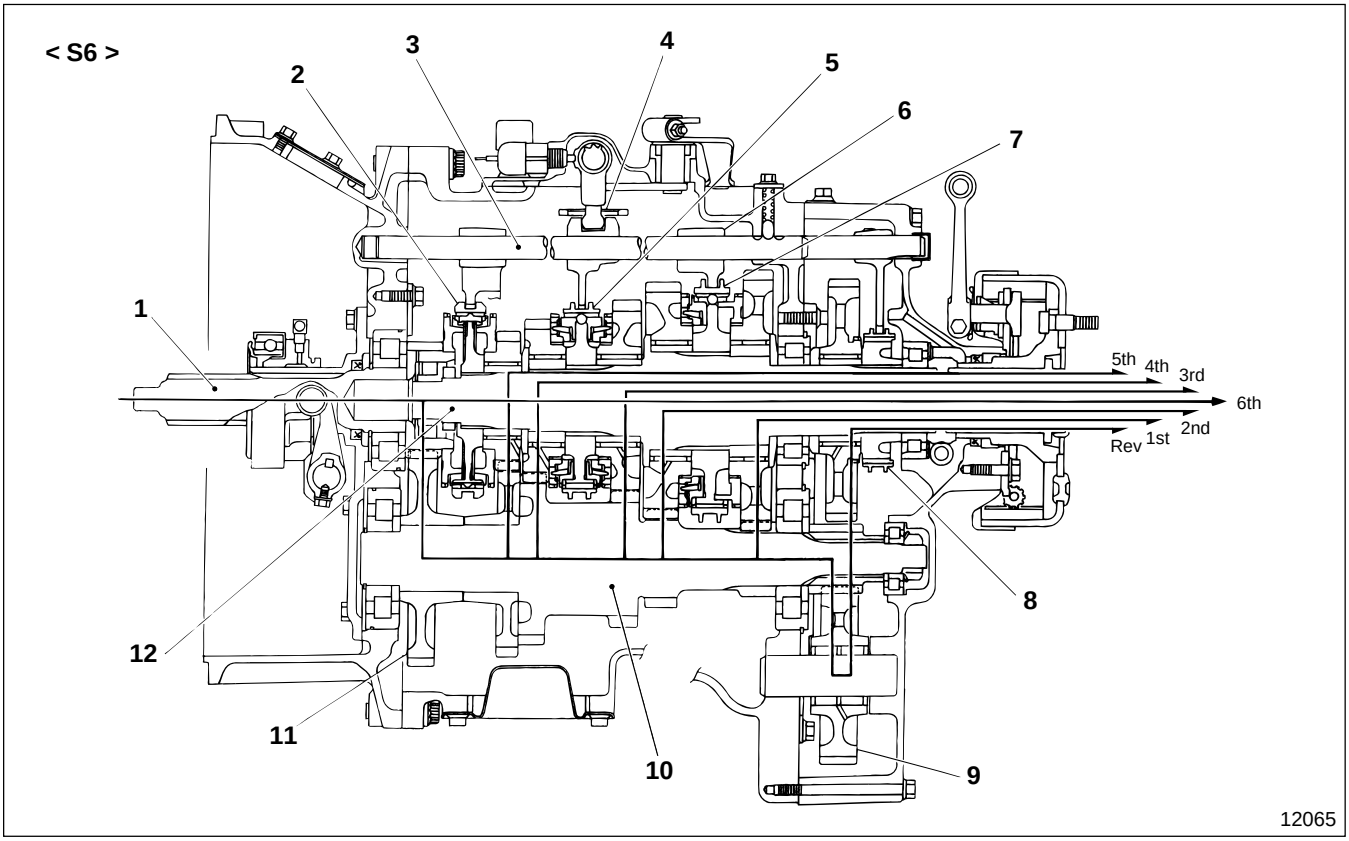

1 Drive pinion
2 4th and 5th synchronizer assembly < S5 >
5th and 6th synchronizer assembly < S6 >
3 Shift rail
4 Interlock mechanism
5 2nd and 3rd synchronizer assembly < S5 >
3rd and 4th synchronizer assembly < S6 >
6 Shift fork
7 1st and reverse constant mesh assembly < S5 >
1st constant mesh and 2nd synchronizer assembly < S6 >
8 Reverse constant mesh < S6 >
9 Reverse idler gear
10 Countershaft
11 Non-play mechanism
12 Mainshaft

The transmission changes revolution and torque generated by the engine into those that match the vehicle's power requirement (driving force). Revolution and torque are increased or decreased by making a selection from several sets of engaged gears. The transmission uses an interlock mechanism to avoid double engagement and the non-backlash mechanism reduces the idling noise of the transmission when the engine is idling.

Synchromesh Mechanism

This vehicle has two synchromesh mechanisms, a single cone type, and a double cone type, and uses the key system. The single or double cone type is used depending on the gear positions as shown below:

Transmission model / Synchromesh type	S5	S6
Single cone type	5th	5th, 6th
Double cone type	2nd and 3rd, 4th	2nd, 3rd and 4th

Single Cone Type

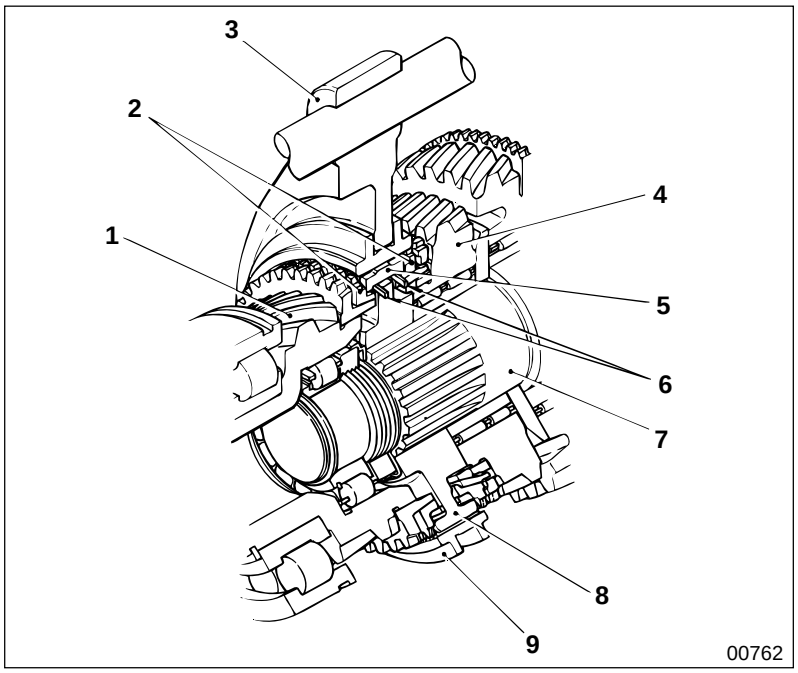

1 Drive pinion (Single cone type)
2 Synchronizer ring
3 4th and 5th shift fork
4 4th gear (Double cone type)
5 Shifting key
6 Shifting key spring
7 Mainshaft
8 Synchronizer hub
9 Synchronizer sleeve

- The following descriptions are for 4th and 5th gear < S5 >
  The inside of synchronizer hub **8** engages the spline of mainshaft **7** and rotates with it. The outside of the synchronizer hub has a spline that engages synchronizer sleeve **9** and three keyways.
- Shifting keys **5** are inserted into these keyways. When the gear shift is in neutral, a protrusion in the center of each shifting key engages a groove inside the synchronizer sleeve and the shifting keys are pressed against the inside of the synchronizer sleeve by shifting key springs **6**.
- Synchronizer rings **2** are inserted into drive pinions **1** in the front and rear of synchronizer hub **8**, and the taper cone of 4th gear **4**.
- The internal tapers of synchronizer rings **2** have fine threads, and the outer splines engage synchronizer sleeve **9**. On the hub side of the synchronizer rings are three keyways in which the ends of shifting keys **5** are inserted. These keyways are wider than the width of the shifting keys.
- Synchronizer rings **2** rotate relative to synchronizer sleeve **9** by the amount of play of the keyways.

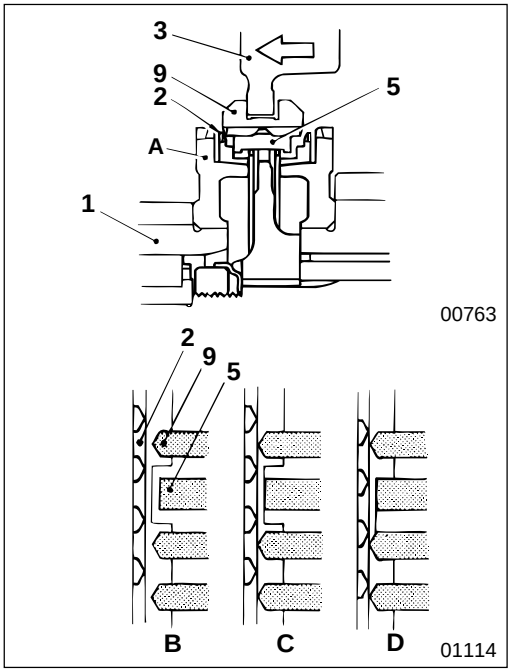

- When the gear shift is in neutral (Figure **B**), moving shift fork **3** in the direction of the arrow as illustrated, moves synchronizer sleeve **9** slightly to the left. At the same time, shifting key **5**, the central protrusion of which engages the synchronizer sleeve, moves to the left and presses synchronizer rings **2** against taper cone **A** of drive pinion **1**. (Figure **C**)
- When the taper surfaces of synchronizer rings **2** make contact with the taper cone of the drive pinion, the taper surfaces of the synchronizer rings act as cone clutches. This frictional torque rotates the synchronizer rings in the rotating direction of the drive pinion by the amount of play between shifting key **5** and the synchronizer rings. The spline chamfers of the synchronizer rings and the spline chamfer of synchronizer sleeve **9** are offset from each other. (Figure **D**)
- The disengagement direction of synchronizer rings **2** is defined by the speed of rotation of the synchronizer—sleeve **9**, and the synchronized—drive pinion **1**. When increasing the vehicle speed by shifting up, disengagement is made in the opposite direction to rotation, and when decreasing the vehicle speed by shifting down, disengagement is made in the rotating direction.

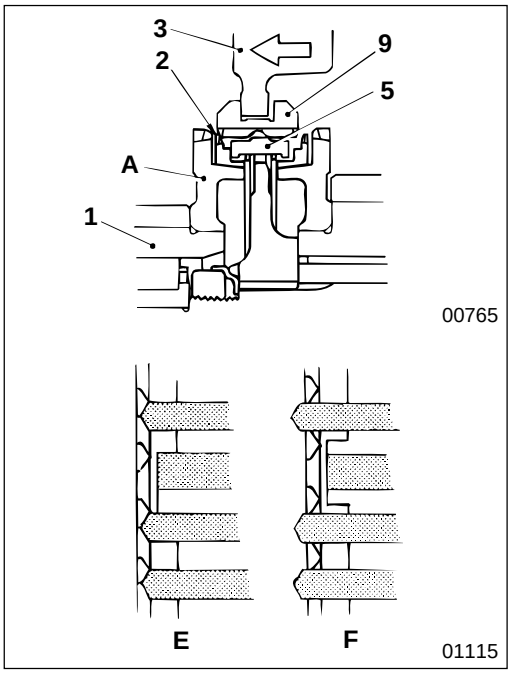

- When synchronizer sleeve **9** moves further to the left, synchronizer rings **2** prevent shifting key **5** from moving, and the synchronizer sleeve disengages from the protrusion of the shifting key.
- Since synchronizer rings **2** remain disengaged, the spline chamfer of synchronizer sleeve **9** presses the spline chamfers of the synchronizer rings, which in turn press the synchronizer rings against taper cone **A** of drive pinion **1**.
- As the frictional torque increases on the taper surfaces, the relative speed of the synchronizer and the synchronized gradually decreases.
  E : In synchronization
  F : After synchronization

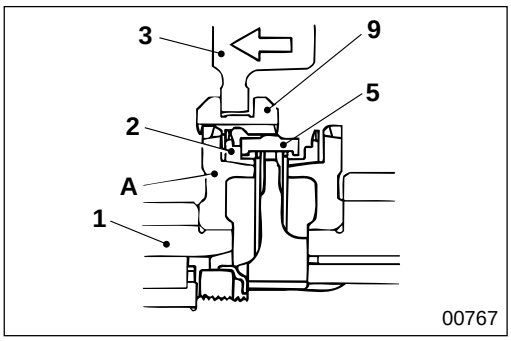

- When synchronizer sleeve **9** and drive pinion **1** rotate at the same speed, synchronizer rings **2** no longer prevent the synchronizer sleeve from moving, and the synchronizer sleeve moves further to the left and smoothly engages the spline of taper cone **A** of drive pinion **1**, transmitting the driving force.

Double Cone Type

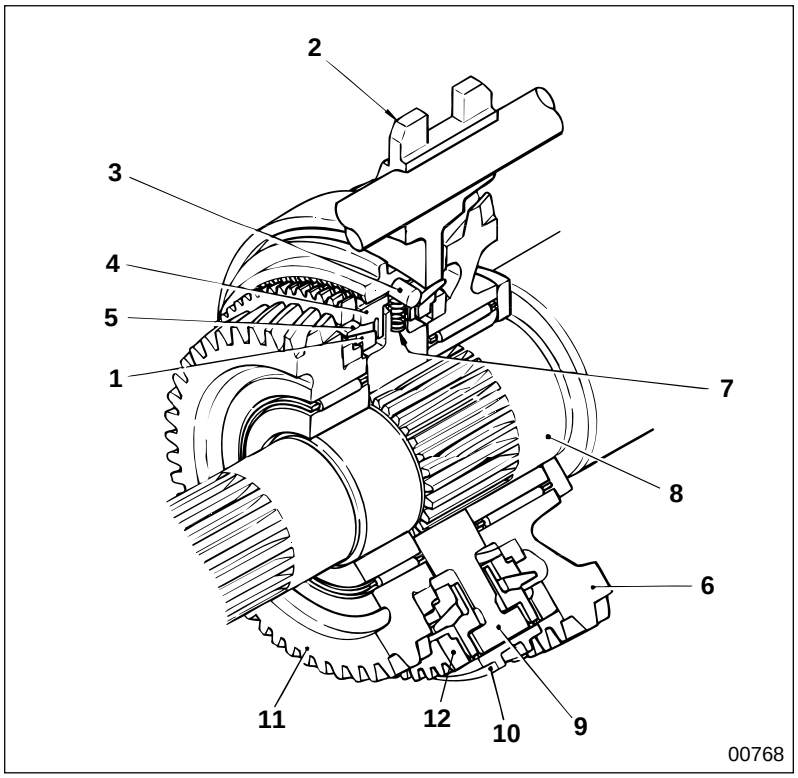

1 Synchronizer inner ring
2 2nd and 3rd shift fork
3 Shifting key
4 Synchronizer outer ring
5 Synchronizer center cone
6 2nd gear
7 Shifting key spring
8 Mainshaft
9 Synchronizer hub
10 Synchronizer sleeve
11 3rd gear
12 Dog clutch

- The following descriptions are for 2nd and 3rd gear < S5 >
  The synchromesh structure and operation of the double cone type are basically the same as for the single cone type.
- Synchronizer center cone **5** is a taper cone independent of 2nd gear **6** and 3rd gear **11**, (both the inside and outside surfaces are tapered). The synchronizer center cone is between synchronizer inner ring **1** and synchronizer outer ring **4** to increase the synchronization capacity.
- Six protrusions on the outside of center cone **5** fit into corresponding gear holes, in the same manner as the taper cone of the single cone type. The center cone and the gear are installed as if integrated.
  Shifting key **3** is a cylinder installed so that the lengthwise direction of the cylinder is at right angles to the diameter direction of synchronizer hub **9**. Shifting key spring **7** is a coil spring inserted in a hole in the synchronizer hub, this spring presses the shifting key against the inside of synchronizer sleeve **10**.
- The 4th gear of the < S5 > model uses the double cone type; however, the structure of shifting key **3** and shifting key spring **7** is the same as for the single cone type.

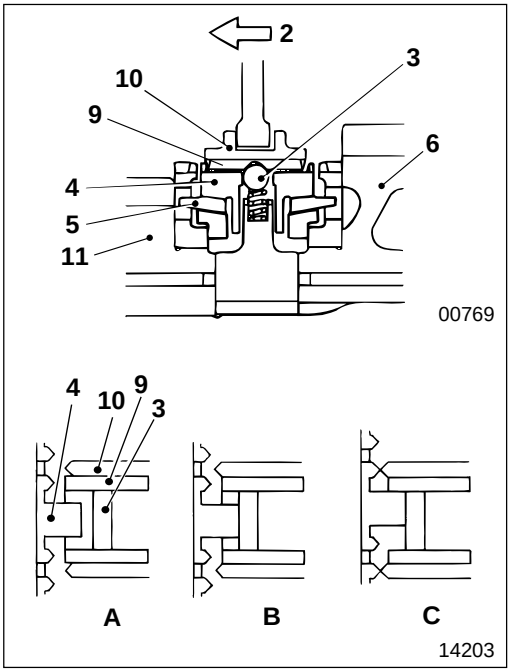

- When the gear shift is in neutral (Figure **A**), moving shift fork **2** in the direction of the arrow as illustrated, moves synchronizer sleeve **10** slightly to the left. At the same time, shifting key **3**, the central protrusion of which engages the synchronizer sleeve, moves to the left and presses synchronizer outer ring **4** against synchronizer center cone **5**. (Figure **B**)
- When the taper surface of synchronizer outer ring **4** makes contact with the taper cone of synchronizer center cone **5**, the taper surface of the synchronizer outer ring acts as a cone clutch. This frictional torque rotates the synchronizer outer ring in the rotating direction of 3rd gear **11** by the amount of play between the synchronizer outer ring and synchronizer hub **9**. The spline chamfer of the synchronizer outer ring and the spline chamfer of synchronizer sleeve **10** are offset from each other. (Figure **C**)
- The disengagement direction of synchronizer outer ring **4** is defined by the speed of rotation of the synchronizer—the sleeve, and the synchronized—3rd gear **11**. When increasing the vehicle speed by shifting up, disengagement is made in the opposite direction to rotation, and when decreasing the vehicle speed by shifting down, disengagement is made in the rotating direction.

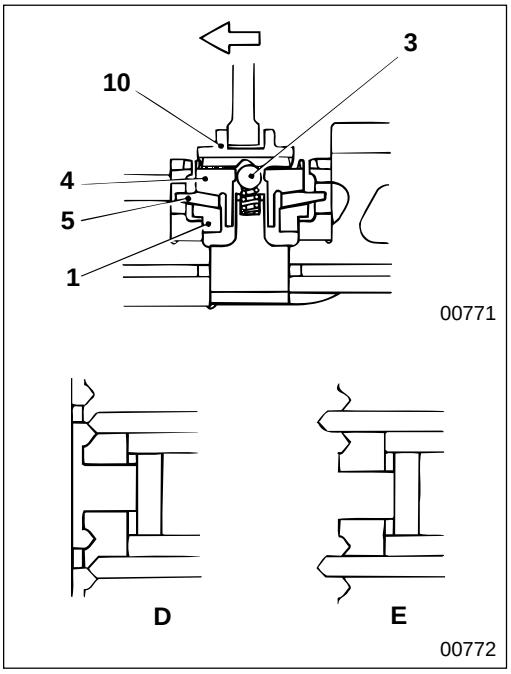

- When synchronizer sleeve **10** moves further to the left, synchronizer outer ring **4** prevents shifting key **3** from moving, and the synchronizer sleeve disengages from the protrusion of the shifting key.
- Since synchronizer outer ring **4** remains disengaged, the spline chamfer of synchronizer sleeve **10** presses the spline chamfer of the synchronizer outer ring, which in turn presses the synchronizer outer ring against the taper cone of synchronizer center cone **5**, and the frictional torque acts on the taper surface.
- As the frictional torque increases on the taper surface of synchronizer inner ring **1**, the relative speed of the synchronizer and the synchronized gradually decreases. The frictional torque acts on both sides of the synchronizer center cone. The double cone type has greater capacity for synchronization than the single cone type.
  D : In synchronization
  E : After synchronization

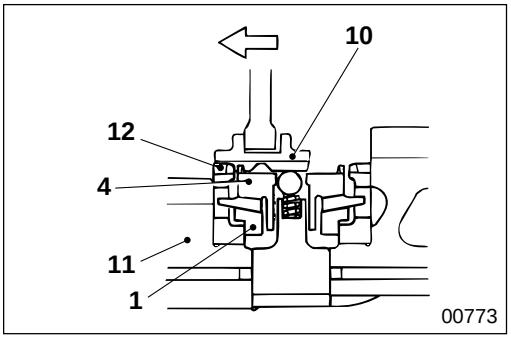

- When synchronizer sleeve **10** and 3rd gear **11** rotate at the same speed, synchronizer outer ring **4** no longer prevents the synchronizer sleeve from moving and the synchronizer sleeve moves further to the left and smoothly engages the spline of dog clutch **12** of the 3rd gear, transmitting the driving force.

Power Shift

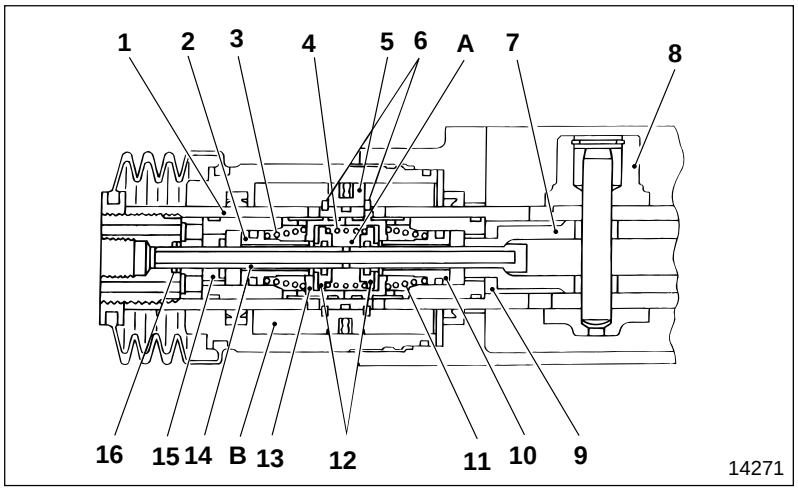

1 Shifter rod
2 Valve lifter
3 No.3 spring
4 No.2 spring
5 Piston
6 Retaining ring
7 Actuating rod
8 Striker
9 Cap
10 Valve lifter
11 No.1 spring
12 Valve seal
13 Valve seat
14 Pipe
15 Retainer
16 Retaining ring

A : Primary side chamber
B : Secondary side chamber

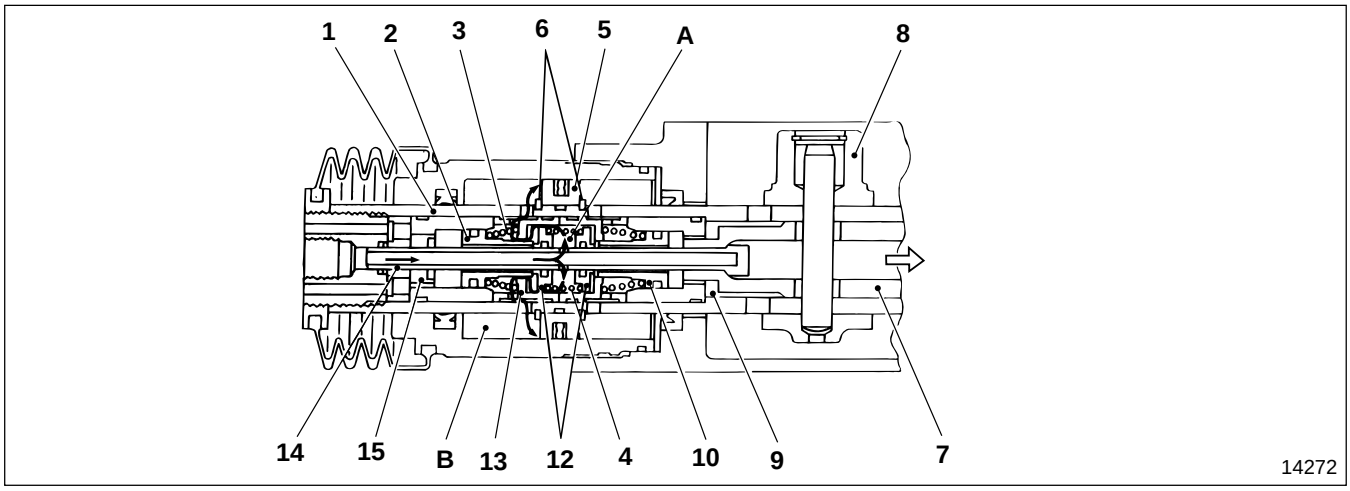

When activated

- When actuating rod **7** is moved in the direction of the arrow as illustrated, shifter rod **1** and the actuating rod move relative to this movement.
  Valve lifter **2** presses No.3 spring **3** against valve seal **12** to overcome the combined repercussive forces of the compressed air acting on the valve seal and No.2 spring **4**. The valve seal separates from valve seat **13**, and the compressed air supplied to primary side chamber **A** is let into secondary side chamber **B** via the opening between the valve seat and the valve seal. The compressed air flows into the cylinder through the hole and groove of the valve seal and the vent hole of shifter rod **1** to put pressure on piston **5**, generating output.
- The output given to piston **5** is transmitted to shifter rod **1** via retaining ring **6** to assist striker **8** which is fixed on the shifter rod. This operates the shift fork on the transmission side, shifting the gears. Thus, gear shifting is completed.
- When the power shift operates in the direction of the arrow as illustrated, the input from the gear shift lever is transmitted by actuating rod **7** via cap **9**, pipe **14**, and retainer **15** fixed on retaining ring **16**. For operation in the opposite direction, all operations are the same in principle as in the direction of the arrow as illustrated, except that the end of the cap, fixed on the end of the actuating rod, presses valve lifter **10** directly.

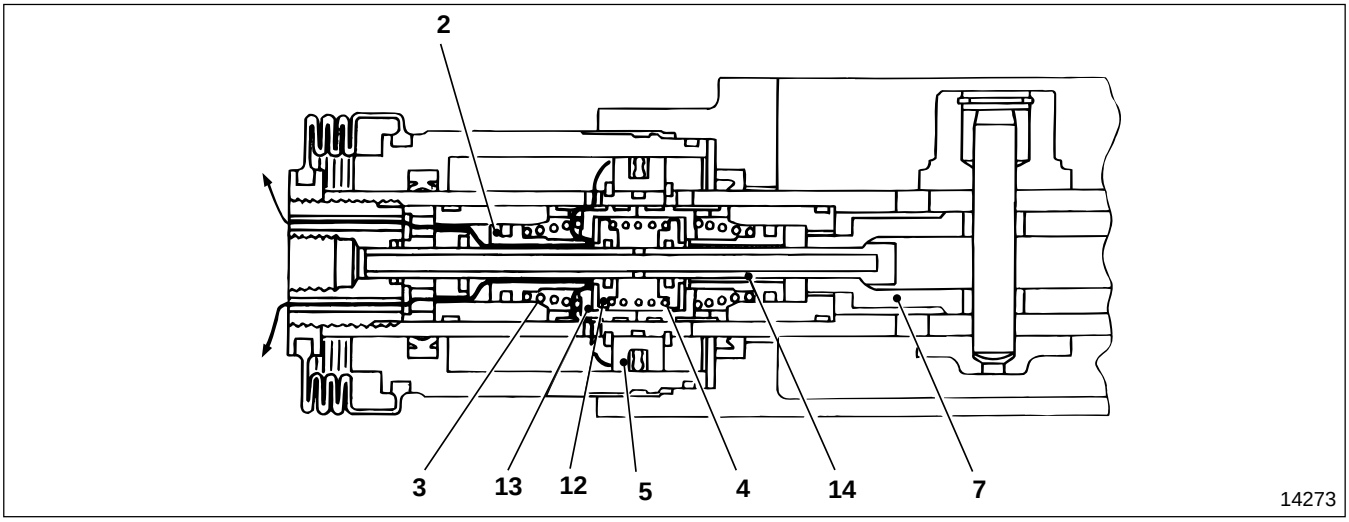

When releasing

- When gear shifting is completed and the input is released, actuating rod **7** is returned to the valve center position (the condition before operation) by the combined repercussive forces of the compressed air of valve lifter **2**, the steel ball, and valve springs **3**, **4**.
  As the valve lifter returns, valve seal **12** seats against valve seat **13**, cutting off the flow of compressed air from primary side chamber **A** to secondary side chamber **B**. As the input rod returns, clearance is generated between the valve lifter and the valve seal.
- The compressed air in the cylinder of secondary side chamber **B** is discharged into the atmosphere through the clearance between valve lifter **2** and pipe **14**. This eliminates the pressure difference between the chambers on both sides of piston **5**, so output is lost.

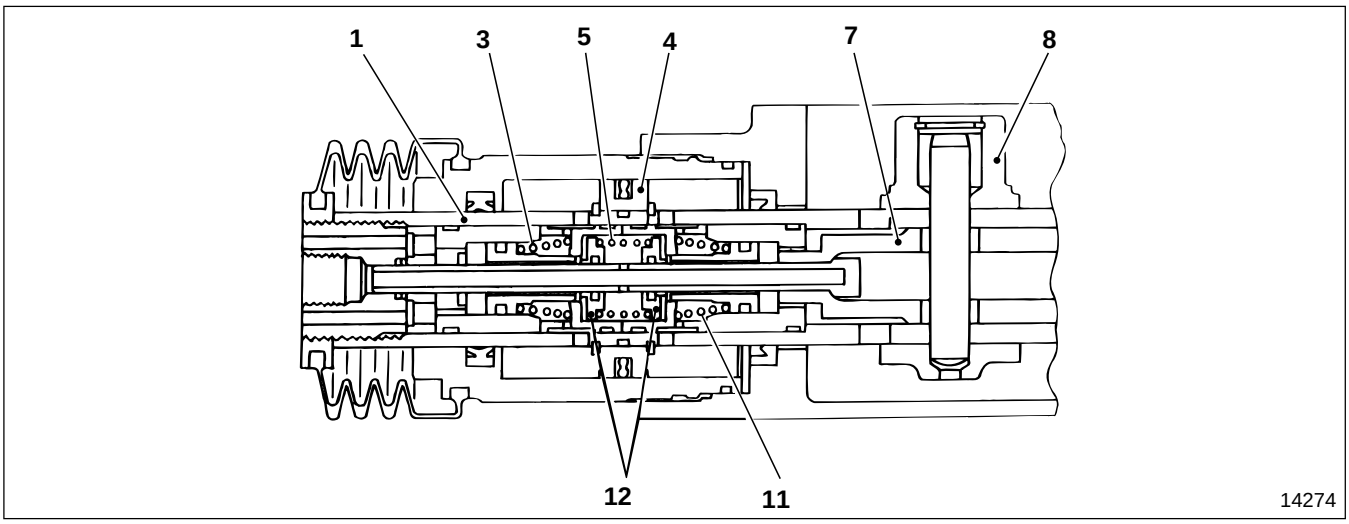

When not operating (non-boosting)

- To operate the power shift, that is, to open the valve and let the compressed air into the output chamber, actuating rod **7** on the input side and shifter rod **1** on the output side must generate relative disengagement.
- When the operating force is transmitted from the gear shift lever to actuating rod **7**, and the resistance on the transmission side is less than the combined repercussive forces working on the relative disengagement of the input side and output side (repercussive forces of No.1 to 3 springs, **3**, **4**, **11**; pressure on valve seal **12**; and sliding resistance on various parts), the mechanism, from the actuating rod to striker **8**, is integrated and does not generate relative disengagement. Therefore, the valve does not open, and without boosting operation, piston **5** moves in the cylinder to shift gears.

Interlock Mechanism

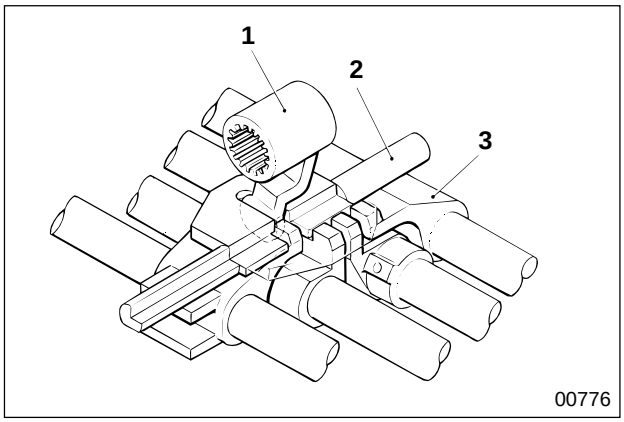

In the interlock mechanism, the rail beneath interlock plate **2** locks jaws **3**, (apart from the jaws shifted by gear shift slide lever **1**), preventing double engagement of gears.

Possible causes / Symptoms		Gears slip out of engagement	Gears hard to engage	Noise when engine is idling	Noise while cruising	Noise when changing gear
Transmission body faulty	Mainshaft rear lock nut loose	○	○			
	Mainshaft thrust washer worn	○	○			
	Mainshaft bearing worn or damaged	○	○			
	Synchronizer ring and synchronizer sleeve spline worn	○				
	Synchronizer ring and gears taper cone area worn		○			
	Mainshaft pilot bearing worn or damaged			○	○	
	Drive pinion bearing worn or damaged			○		
	Countershaft bearing worn or damaged			○		
	Needle bearings of gears worn or damaged			○	○	
	Mainshaft and countershaft bearings worn or damaged				○	
	Mainshaft and countershaft gears backlash excessive				○	
	Spline of gears worn					○
	Gears damaged				○	
	Gear oil insufficient				○	
Control mechanisms faulty	Control cable joint play	○	○			
	Set board assembly bushings worn	○				
	Shift rail steel ball and groove worn	○				
	Shift rail poppet spring fatigued or damaged	○				
	Shift rail sliding movement faulty		○			
	Shift fork jaws worn		○			
	Shift fork bent		○			
Power shift malfunctioning	Air compressor faulty (Gr 35A, B)		○			
	Air leakage (Gr 35A, B)		○			
	Power shift assembly faulty		○			
Clutch faulty	Clutch disengagement faulty (Gr 21)		○			○
	Clutch pedal play faulty (Gr 21)		○			
Synchronizer faulty	Contacting surfaces of synchronizer ring and gear taper cone worn					○
	Shifting key worn					○
	Shifting key spring deteriorated or damaged					○
	Synchronizer sleeve worn or damaged				○	○

WORK BEFORE REMOVAL AND INSTALLATION OF TRANSMISSION ASSEMBLY

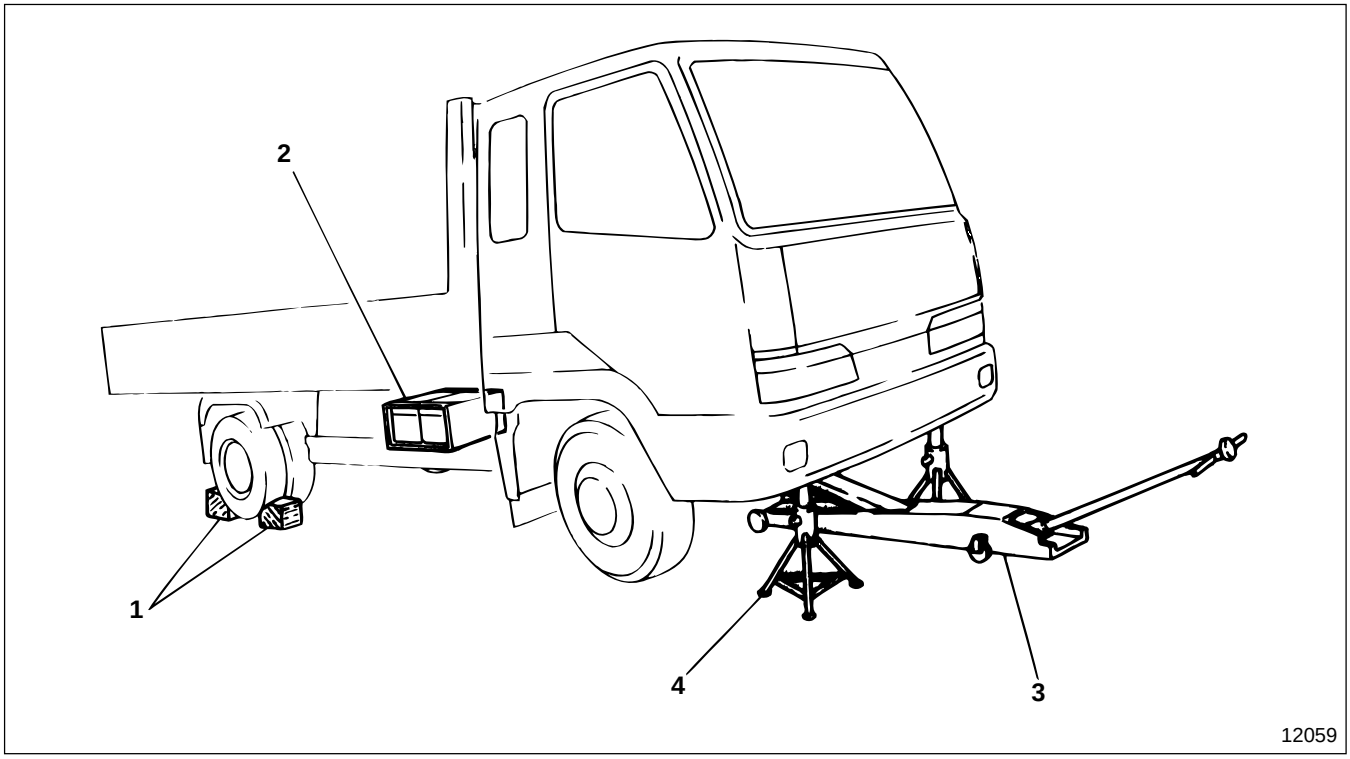

● **Work sequence before removal**

1 Place wheel chocks.
2 Disconnect negative battery cable. Gr 54
3 Jack up the front axle on a garage jack.
4 Support the front frame on rigid racks.

WARNING⚠

- **Since the parking brake will be removed, naturally it cannot be used. Therefore, you must chock the wheels securely so the vehicle does not move.**
- **Do not remove the chocks until the entire operation is completed.**
- **Supporting a vehicle on a garage jack only is extremely dangerous, so always support the frame on rigid racks.**
- **Leave the garage jack and rigid racks in place until the entire operation is completed. Never remove them during the operation.**

CAUTION⚠

Keep the transmission in neutral throughout the operation.

● **Work sequence after installation**

Follow the work sequence before removal in reverse.

M E M O

REMOVAL AND INSTALLATION OF TRANSMISSION ASSEMBLY

Removal and Installation

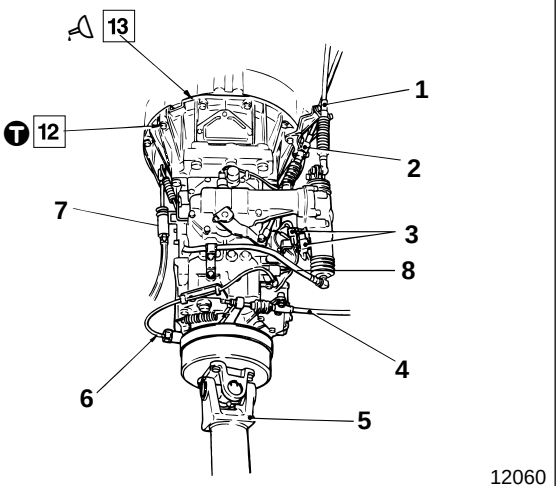

12060

< S6 >

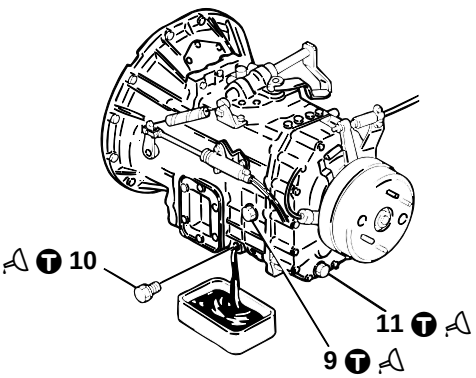

04766

< S5 >

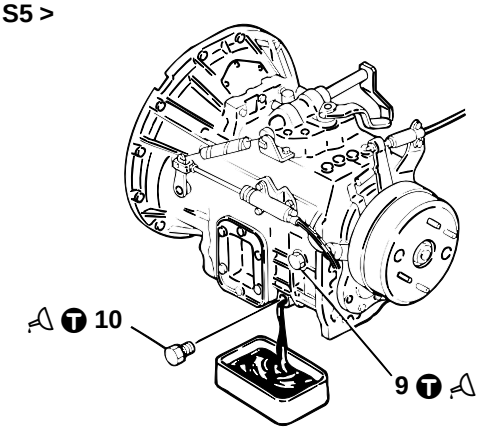

04767

● **Disassembly sequence**

1 Shift cable 🕮 P22A-80
2 Selector cable 🕮 P22A-80
3 Harness connector
4 Parking brake cable < FK, FM617 > Gr 36A
5 Propeller shaft Gr 25
6 Speed sensor Gr 54
7 Clutch power cylinder Gr 21
8 Power shift hose
9 Inspection plug
10 Drain plug (on transmission case)
11 Drain plug (on extension housing)
12 Nut or bolt
13 Transmission assembly

● **Assembly sequence**

Follow the disassembly sequence in reverse.

Ⓣ Tightening torque

Unit : N·m {lbf.ft, kgf·m}

Location	Parts to be tightened	Tightening torque	Remarks
8	Power shift hose connector	20 {14.8, 2}	—
9	Inspection plug	69±15 {51±11, 7±1.5}	—
10, 11	Drain plug	69±15 {51±11, 7±1.5}	—
12	Nut or bolt (Transmission mounting)	40 {30, 4.1}	—

Lubricant and sealant

Location	Points of application	Kinds	Quantity
9	Thread area of inspection plug	THREEBOND 1105D	As required
10, 11	Thread area of drain plug	THREEBOND 1105D	As required
13	Spline of drive pinion	Molybdenum disulfide grease [NLGI No.2 (Li soap)]	As required

◆ Service procedure

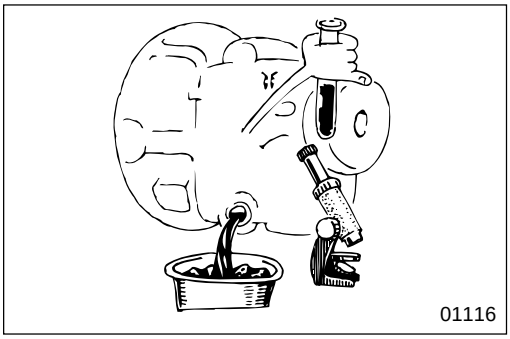

● Oil change

[Draining]
- When draining oil, check the quantity and quality of oil, especially for small pieces of metal and metal dust.
- Clean drain plug **9** before reinstalling it because it is magnetic.

[Filling]
- Check that drain plugs **10**, **11** are tightened at specified torque.
- Pour in gear oil until the oil overflows from the inspection hole. (For oil quantity, see specifications.)

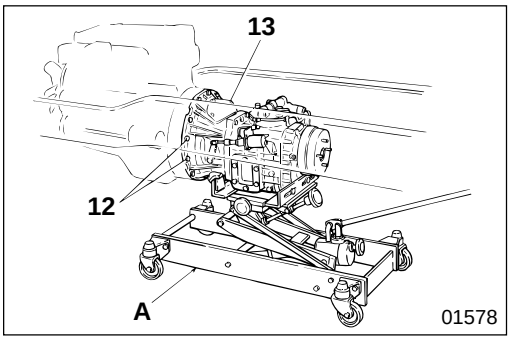

12 Removal of transmission mounting nut or bolt

- Support transmission assembly **13** on transmission jack **A**.
- Tighten transmission mounting nuts or bolts **12**.

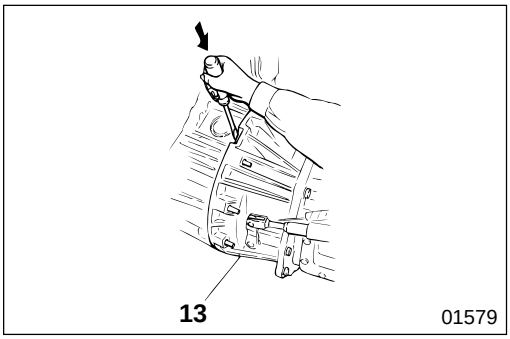

13 Transmission assembly

[Removal]
- Insert a screwdriver into the three removal grooves and pry transmission assembly **13** from the engine.

CAUTION⚠

Make sure that you remove hoses and cables before starting service operations.

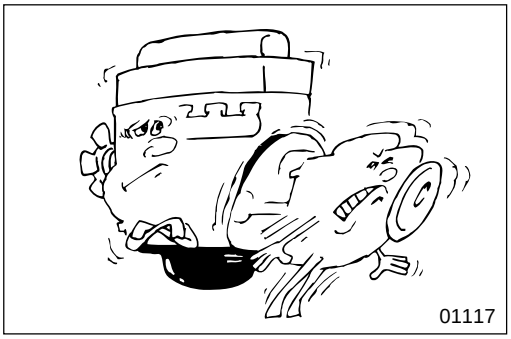

- Move transmission assembly **13** backward until the spline of the drive pinion is detached from the clutch.

CAUTION⚠

Make sure that you pull transmission assembly 13 out in a straight line. If you seesaw the transmission assembly violently, you will damage the spline that connects the drive pinion and the clutch.

REMOVAL AND INSTALLATION OF TRANSMISSION ASSEMBLY

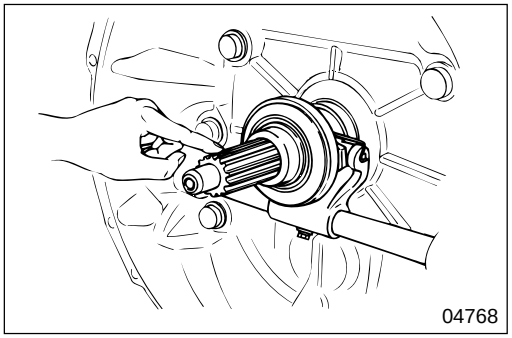

[Installation]
- Check the spline of the drive pinion for rust.
- If rust is found, remove it using a wire brush.
- Rub grease onto the clutch disc sliding surfaces of the drive pinion using your hand.

CAUTION

Make sure that you apply only the necessary amount of grease because too much grease would drip and cause clutch slip.

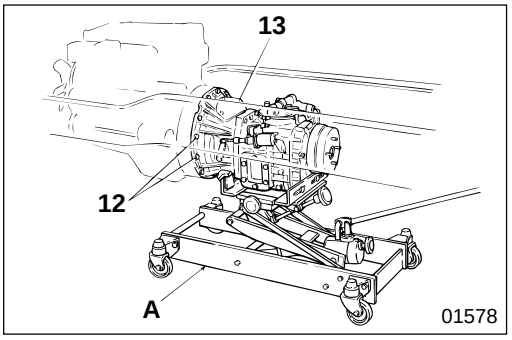

- Support transmission assembly **13** on transmission jack **A**, and insert the transmission assembly into the pilot bearing of the flywheel paying attention to the drive pinion spline.
- Tighten transmission mounting nuts or bolts **12** at specified torque.

M E M O

GEAR SHIFTER UPPER AND INTERLOCK PLATE

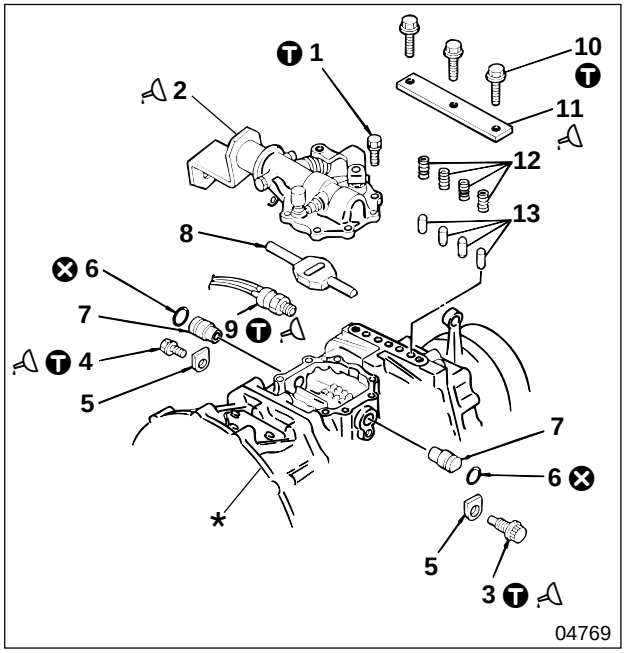

● **Disassembly sequence**

1 Bolt
2 Gear shifter upper assembly P 22A-19
3 Jaw set bolt
4 Bolt
5 Lock plate
6 O-ring
7 Bushing
8 Interlock plate
9 Backup lamp switch Gr 54
10 Bolt
11 Poppet spring plate
12 Poppet spring
13 Interlock pin

* : Transmission body
⊗ : Non-reusable parts

● **Assembly sequence**

6→7
8
→5→4→3→9→2→1→13→12→11→10

Service standards

Unit : mm {in.}

Location	Maintenance item	Standard value (Basic diameter in [ ])	Limit	Remedy
6, 8	Clearance between interlock plate axis and bushing	[12 {0.47}] 0.14 to 0.19 {0.0055 to 0.0075}	0.4 {0.016}	Replace
12	Poppet spring load (Installed length 29 {1.14})	78 N {18 lbf, 8 kgf}	67 N {15 lbf, 68 kgf}	Replace

Ⓣ Tightening torque

Unit : N·m {lbf.ft, kgf·m}

Location	Parts to be tightened	Tightening torque	Remarks
1	Bolt (Gear shifter upper mounting)	23 {17, 2.3}	—
3	Jaw set bolt	135 {98, 13.6}	—
4	Bolt (Lock plate mounting)	40 {30, 4.1}	—
9	Backup lamp switch	49 {36, 5.0}	—
10	Bolt (Poppet spring plate mounting)	49 {36, 5.0}	—

Sealant

Location	Points of application	Kinds	Quantity
2	Contact surface with transmission case	THREEBOND 1215	As required
3	Thread area of jaw set bolt	THREEBOND 1104J	As required
4	Thread area of bolt	THREEBOND 1104J	As required
9	Thread area of backup lamp switch	THREEBOND 1105D	As required
11	Contact surface with transmission case	THREEBOND 1215	As required

Gear Shifter Upper Assembly
< Without Power Shift >

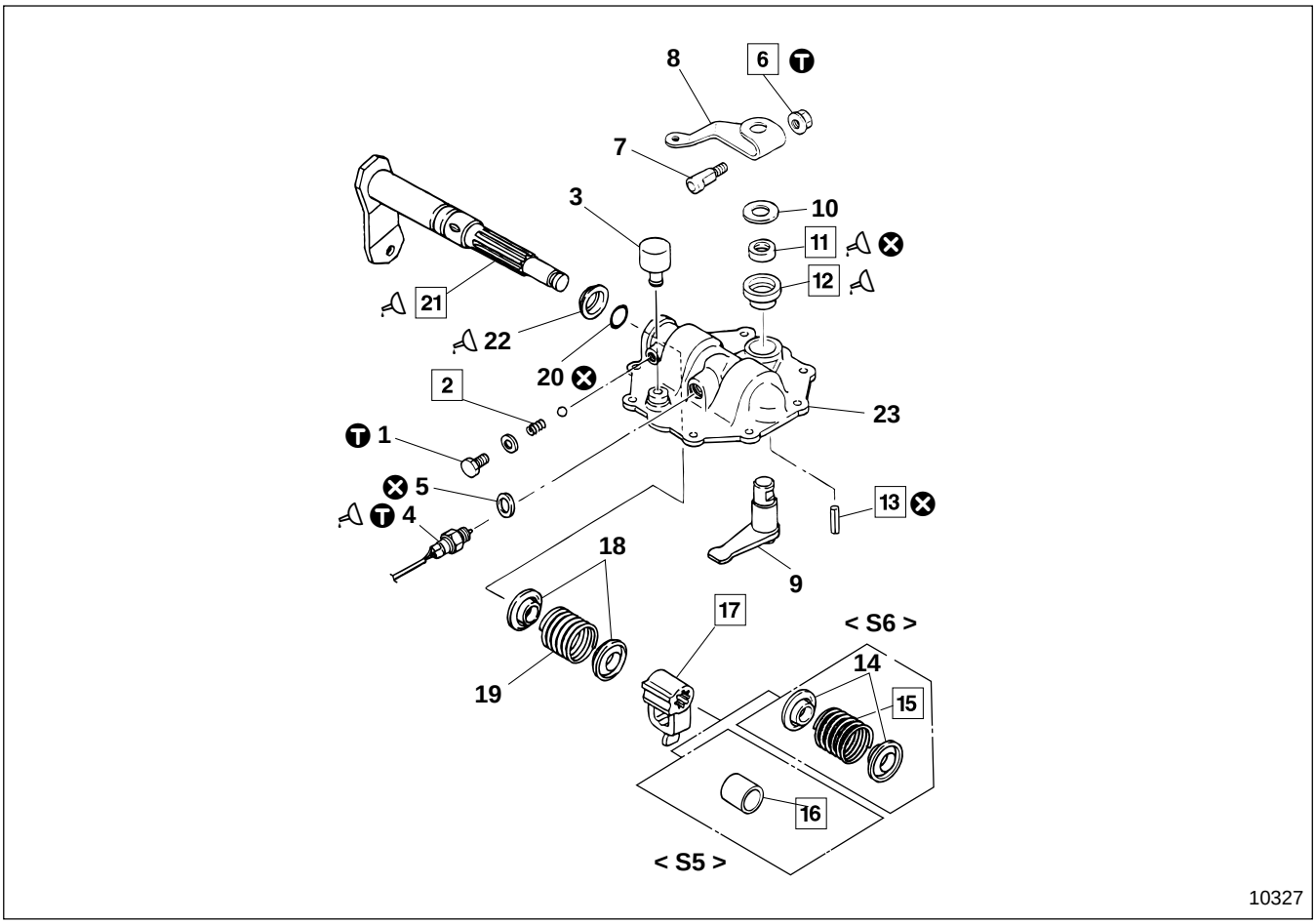

● **Disassembly sequence**

1 Plug
2 Torsion shaft spring
3 Air breather
4 Neutral switch
5 Gasket
6 Nut
7 Lock pin
8 Gear selector lever B
9 Gear selector lever A
10 Washer
11 Oil seal
12 Bushing
13 Spring pin
14 Return spring B retainer < S6 >
15 Return spring B < S6 >
16 Gear selector stopper < S5 >
17 Gear shift slide lever
18 Return spring A retainer
19 Return spring A
20 O-ring
21 Gear shift lever
22 Dust seal
23 Selector lever case

⊗ : Non-reusable parts

NOTE
Do not remove bushing 12 except for replacement.

● **Assembly sequence**

23→12→11
21→22→20
→18→19→18→17→14→15→16→14→13→9→10→8→7→6
5→4
→3→2→1

CAUTION⚠
Be sure when assembling gear selector lever A 9, that you turn the lever so you do not damage the lip area of oil seal 11.

GEAR SHIFTER UPPER AND INTERLOCK PLATE

< With Power Shift >

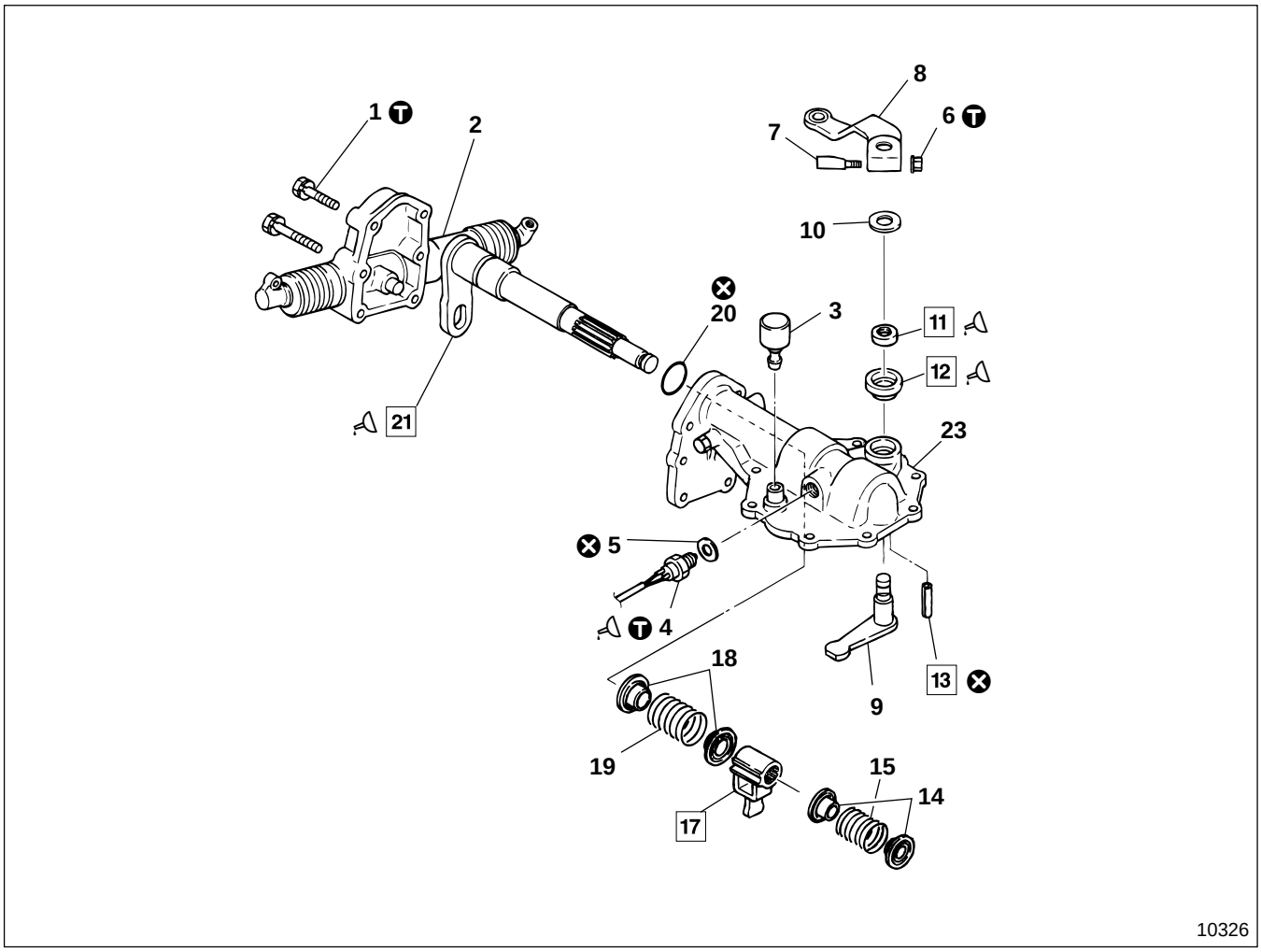

● **Disassembly sequence**

1 Bolt
2 Power shift assembly P 22A-24
3 Air breather
4 Neutral switch Gr 54
5 Gasket
6 Nut
7 Lock pin
8 Gear selector lever B
9 Gear selector lever A
10 Washer
11 Oil seal
12 Bushing
13 Spring pin
14 Return spring B retainer
15 Return spring B
17 Gear shift slide lever
18 Return spring A retainer
19 Return spring A
20 O-ring
21 Gear shift lever
23 Selector lever case

⊗ : Non-reusable parts

NOTE

Do not remove bushing 12 except for replacement.

● **Assembly sequence**

23→12→11
20→21
→18→19→18→17→14→15→14→13→9→10→8→7→6
5→4
→3→2→1

CAUTION ⚠

Be sure when assembling gear selector lever A 9, that you turn the lever so you do not damage the lip area of oil seal 11.

Service standards

Unit : mm {in.}

Location	Maintenance item	Standard value	Limit	Remedy
2	Torsion shaft spring load (Installed length 16.2 {0.64}) < Without power shift >	50 N {11 lbf, 5.1 kgf}	42 N {9.48 lbf, 4.3 kgf}	Replace
9	Play in axial direction of gear selector lever A	0.3 to 0.6 {0.012 to 0.024}	—	Replace
15	Return spring B load (Installed length 23.6 {0.93})	92 N {21 lbf, 9.4 kgf}	78 N {18 lbf, 8.0 kgf}	Replace
19	Return spring A load (Installed length 27.6 {1.09})	94 N {21 lbf, 9.6 kgf}	80 N {18 lbf, 8.2 kgf}	Replace

Tightening torque

Unit : N·m {lbf.ft, kgf·m}

Location	Parts to be tightened	Tightening torque	Remarks
1	Bolt (Power shift assembly mounting) < With power shift >	40 {30, 4.1}	—
	Plug < Without power shift >	23 {17, 2.3}	—
4	Neutral switch	34 to 39 {25 to 29, 3.5 to 4.0}	—
6	Nut (Lock pin mounting)	17 {12, 1.7}	—

Lubricant and sealant

Location	Points of application	Kinds	Quantity
4	Thread area of neutral switch	THREEBOND 1104J	As required
11	Lip area of oil seal	Wheel bearing grease [NLGI No.2 (Li soap)]	As required
12	Inner surface of gear selector lever A axis bushing and its friction surface	Wheel bearing grease [NLGI No.2 (Li soap)]	As required
	Contact surfaces between bushing outer surface and case	THREEBOND 1215	As required
21	Gear shift lever O-ring groove	Wheel bearing grease [NLGI No.2 (Li soap)]	As required
22	Pack dust seal < Without power shift >	Wheel bearing grease [NLGI No.2 (Li soap)]	As required

Special tools

Unit : mm {in.}

Location	Tool name and shape	Part No.	Application
13	Spring pin puller 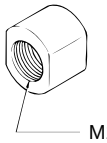 02399	MH062445	Removal of spring pin
	Reverse shaft puller 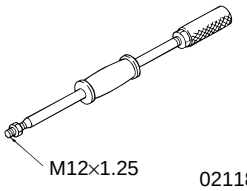 02118	03726-82000	

◆ Service procedure

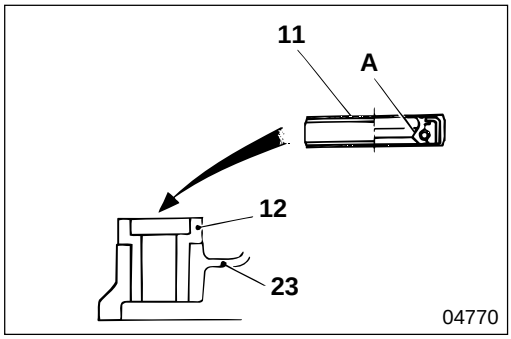

11 Installation of oil seal

- Apply grease to lip area **A** of oil seal **11**.
- Press-fit oil seal **11** into bushing **12** in the direction as illustrated.

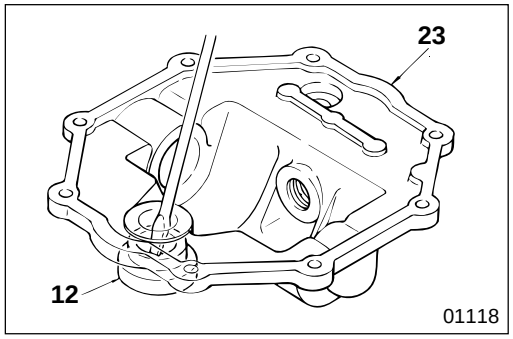

12 Bushing

[Removal]

Remove bushing **12** from selector lever case **23** using a screwdriver.

CAUTION

Be careful not to damage selector lever case 23.

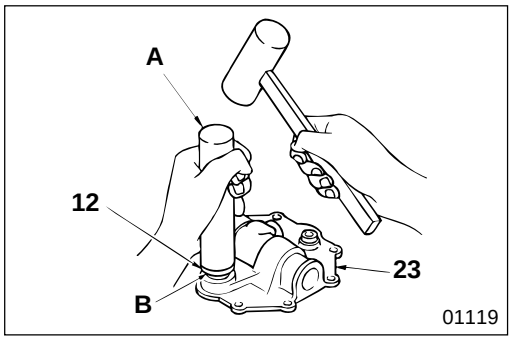

[Installation]

- Clean the inner surface of selector lever case **23**.
- Press-fit bushing **12** into selector lever case **23** using bar **A** (approximately ø40 mm {1.57 in.}).
- When press-fitting bushing **12**, take care not to damage selector lever case **23**.
- After press-fitting, apply sealant to press-fitted side **B** of bushing **12**.

CAUTION

Prevent sealant from sticking to the inner surface of bushing 12.

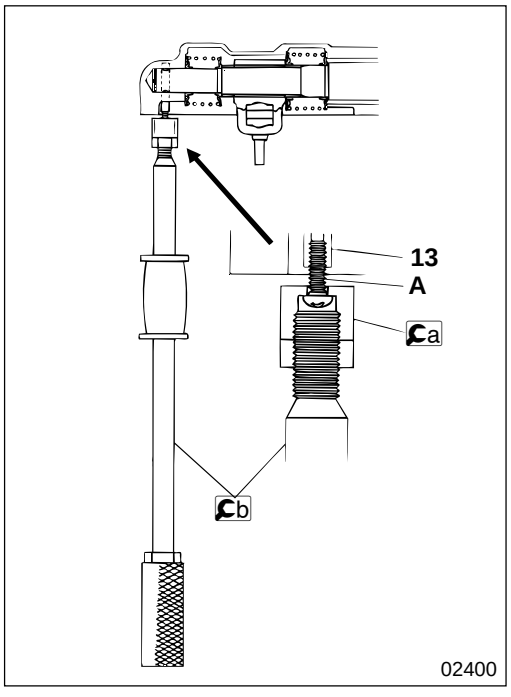

13 Removal of spring pin

- Tap spring pin **13** using an M4 tap.
- Insert Ca spring pin puller with an M4 thread **A** of appropriate length into spring pin **13**.
- Position Cb reverse shaft puller on Ca spring pin puller.
- Remove spring pin **13** from selector lever case **23** using Ca spring pin puller and Cb reverse shaft puller.

< Without Power Shift >

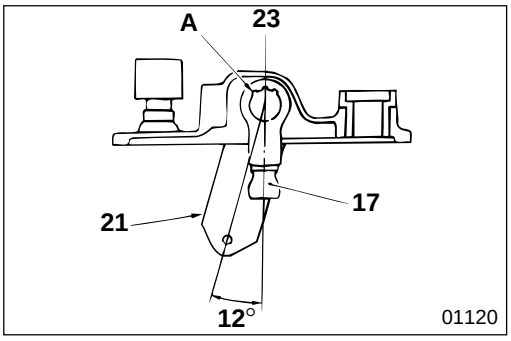

17 **21** **Installation of gear shift slide lever and gear shift lever**

When you install gear shift slide lever **17** in gear shift lever **21**, position spline **A** so that the angle between the slide lever and the shift lever is as illustrated.

< With Power Shift >

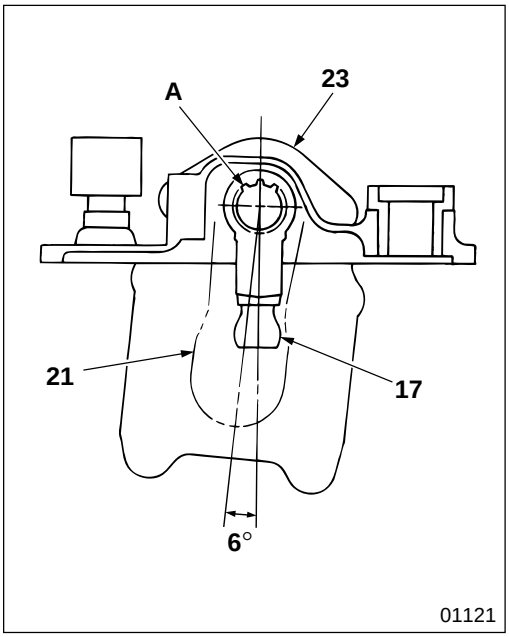

POWER SHIFT ASSEMBLY

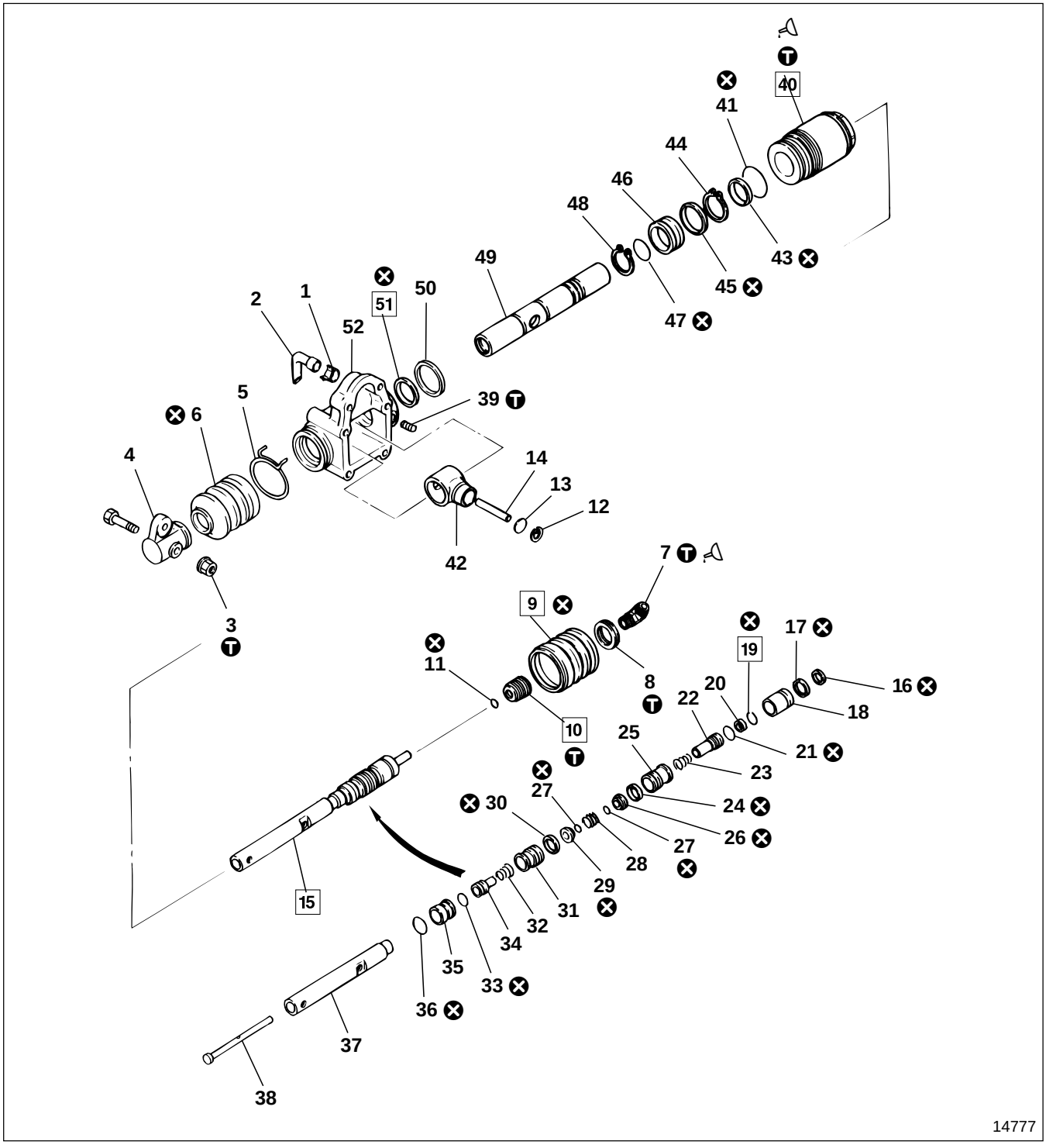

● **Inspection before disassembly**

P22A-26

● **Disassembly sequence**

1 Clamp
2 Hose
3 Nut
4 Lever
5 Clamp
6 Boot
7 Connector
8 Nut
9 Boot
10 Connector
11 O-ring
12 Retaining ring
13 Plate
14 Straight pin
15 Valve assembly
16 Filter
17 Square ring
18 Tube
19 Retaining ring
20 Retainer
21 O-ring
22 Lifter
23 Spring
24 Square ring
25 Seat
26 Seal assembly
27 O-ring
28 Spring
29 Seal assembly
30 Square ring
31 Seat
32 Spring
33 O-ring
34 Lifter
35 Bushing
36 O-ring
37 Rod
38 Pipe
39 Set screw
40 Cylinder
41 O-ring
42 Striker
43 Packing
44 Retaining ring
45 Piston packing
46 Piston
47 O-ring
48 Retaining ring
49 Shifter rod
50 Plate
51 Cup packing
52 Housing

⊗ : Non-reusable parts

● **Assembly sequence**

Follow the disassembly sequence in reverse.

Service standards

Location	Maintenance item	Standard value	Limit	Remedy
23	Spring load (Installed length 12.35 {0.49})	82 N {19 lbf, 8.4 kgf}	67 N {15 lbf, 6.8 kgf}	Replace
28	Spring load (Installed length 10 {0.39})	13 N {2.9 lbf, 1.3 kgf}	9.8 N {2.2 lbf, 1.0 kgf}	Replace
32	Spring load (Installed length 12.2 {0.48})	50 N {11 lbf, 5.06 kgf}	40 N {9.0 lbf, 4.1 kgf}	Replace

Ⓣ Tightening torque

Unit : N·m {lbf.ft, kgf·m}

Location	Parts to be tightened	Tightening torque	Remarks
3	Nut	24 to 26 {17 to 20, 2.4 to 2.7}	—
7	Connecter (Air hose side)	14 to 49 {10 to 36, 1.4 to 5.0}	—
8	Nut (Cylinder side connecter)	59 to 69 {43 to 51, 6 to 7}	—
10	Connecter (Cylinder side)	7.8 to 12 {5.8 to 8.7, 0.8 to 1.2}	—
39	Set screw	2 to 3.4 {1.4 to 2.5, 0.2 to 0.35}	—
40	Cylinder	78 to 98 {58 to 72, 8 to 10}	—

POWER SHIFT ASSEMBLY

Lubricant and sealant

Location	Points of application	Kinds	Quantity
—	All friction surfaces	Multipurpose grease [NLGI No.2 (Li soap)]	As required
7	Thread area of connecter	THREEBOND 1110B	As required
40	Thread area of cylinder	LOCTITE 242 or THREEBOND 1401B	As required

Special tools

Location	Tool name and shape	Part No.	Application
10	Connector	*910-25790	Removal and installation of connector
15	Guide	*910-24800	Inserting valve assembly
19	Insert tool	*910-22011	Inserting retaining valve
		*910-26500	
40	Socket	*910-21982	Removal and installation of cylinder

* JIDOSHA KIKI part No.

◆ Service Procedure

● Inspection before disassembly

(1) Apply 735 kPa {105 lbf/in^2, 7.5 kgf/cm^2} of pressure to the power shift assembly from the connector, check the airtightness when not operating (valve in neutral), and when operating valve is pressed and pulled. If the measured value deviates from the standard value, replace the faulty parts.

Maintenance item	Standard value	
Airtightness when not operating	Decrease of pressure after 15 seconds	9.8 kPa {1.4 lbf/in^2, 0.1 kgf/cm^2}
Airtightness when operating		49 kPa {7.1 lbf/in^2, 0.5 kgf/cm^2}

(2) Measure the sliding resistance in the disengagement direction. If the measured value deviates from the standard value, replace the faulty parts, or grease them.

Maintenance item	Standard value
Resistance in shifting direction	39 N {8.8 lbf, 4 kgf}

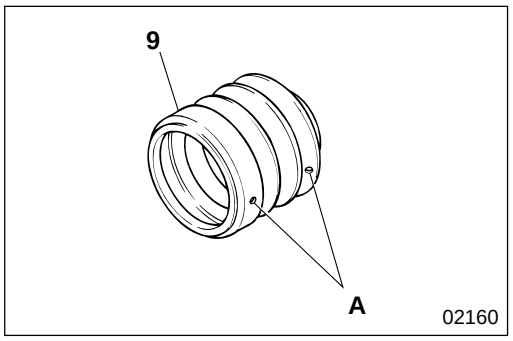

9 **Installation of boot**

When you install boot **9** on housing **52**, point drain holes **A** downward.

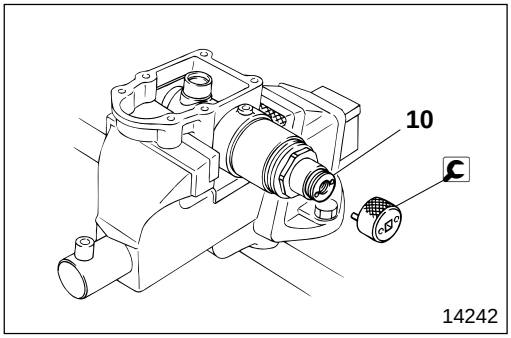

10 Removal and installation of connector

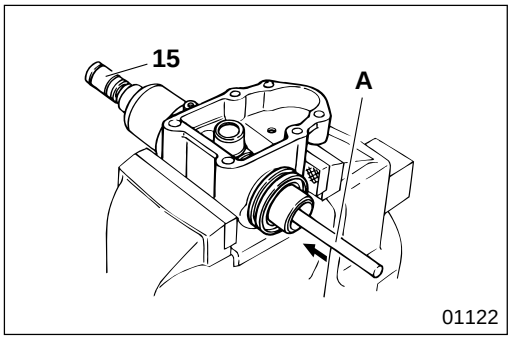

15 Valve assembly

[Removal]
Gently drive valve assembly **15** out from the shifter rod from the lever side using bar **A**.

CAUTION
Do not drive valve assembly 15 too hard or you will damage the valve parts.

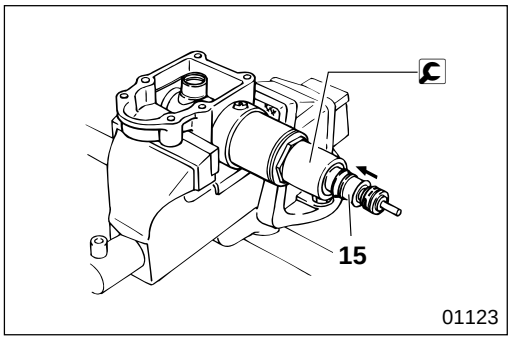

[Installation]
- Apply grease to valve assembly **15**.
- Install valve assembly **15** into the shifter rod using guide, taking care not to damage the seals.

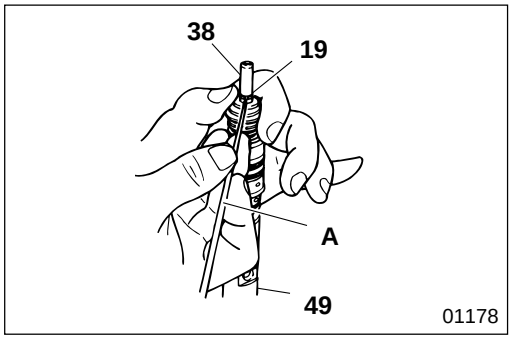

19 **Retaining ring**

[Removal]
- Hold shifter rod **49** in a vise, taking care not to damage the shifter rod.
- Remove retaining ring **19** from pipe **38** using bar **A** as illustrated.

CAUTION
- **After removing retaining ring 19, you can remove all the valve parts.**
- **Keep the valve parts in order to avoid mix ups when installing.**

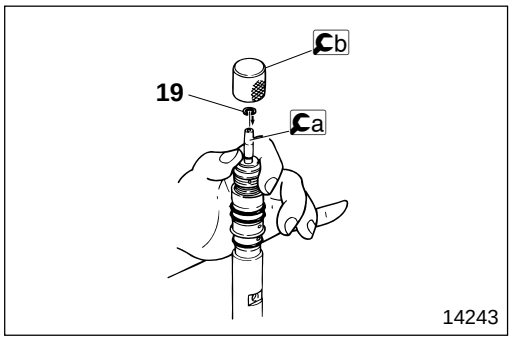

[Installation]
- Install the valve parts on pipe **38**.
- Install a insert tool on pipe **38** end.
- Insert retaining ring **19** into pipe **38** groove using b insert tool.

CAUTION

Be careful not to apply excessive force to retaining ring 19 when you insert it.

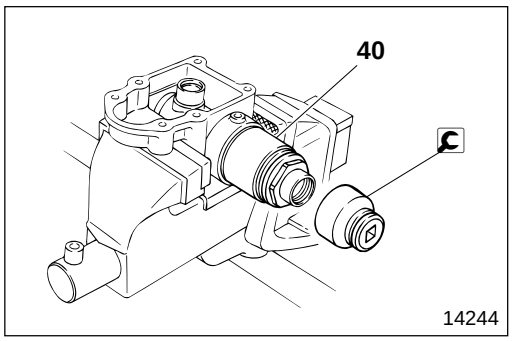

40 **Removal and installation of cylinder**

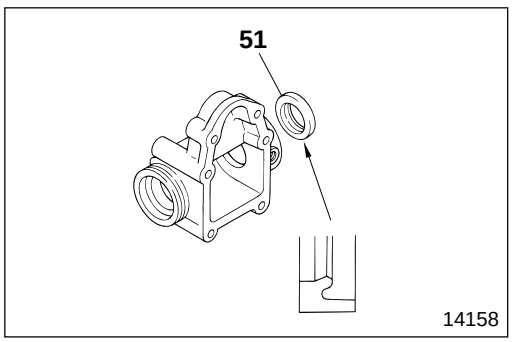

51 **Installation of cup packing and retainer**

M E M O

EXTENSION HOUSING, REAR COVER AND PARKING BRAKE ASSEMBLY

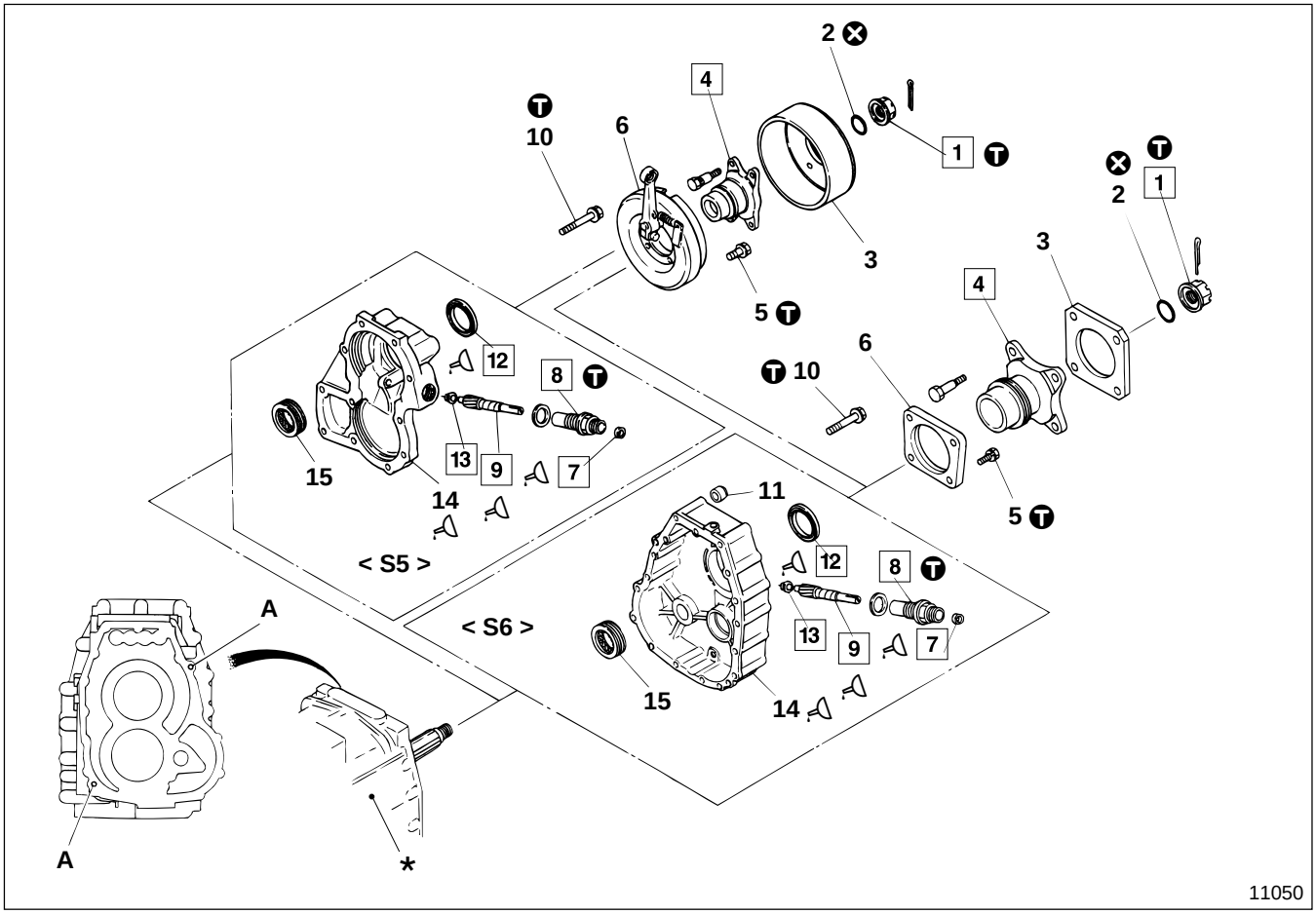

● **Disassembly sequence**

1 Lock nut
2 O-ring
3 Parking brake drum < S5 >
Flange spacer < S6 >
4 Companion flange
5 Bolt
6 Support plate and shoe assembly < S5 >
Dust cover < S6 >
7 Oil seal
8 Speedometer gear bushing
9 Speedometer gear
10 Bolt
11 Dust plug < S6 >
12 Oil seal
13 Speedometer gear bushing A
14 Rear cover < S5 >
Extension housing < S6 >
15 Speedometer worm

***** : Transmission body
A : Positioning pin
⊗ : Non-reusable parts

● **Assembly sequence**

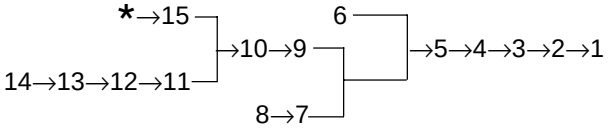

NOTE

Inspect play of speedometer gear 9 before disassembly.

Service standards

Unit : mm {in.}

Location	Maintenance item	Standard value (Basic diameter in [ ])	Limit	Remedy
8, 9	Clearance between speedometer gear bushing and speedometer gear	[12] 0.02 to 0.07 {[0.47] 0.00079 to 0.0028}	0.15 {0.0059}	Replace
9, 15	Play between speedometer gear and speedometer worm	0.13 to 0.29 {0.0051 to 0.011}	0.36 {0.014}	Replace

Tightening torque

Unit : N·m {lbf.ft, kgf·m}

Location	Parts to be tightened		Tightening torque	Remarks
1	Lock nut	S5	245 to 345 {180 to 255, 25 to 35}	—
		S6	590 to 1080 {435 to 795, 60 to 110}	—
5	Bolt (Support plate and shoe assembly or dust cover mounting)		74 {54, 7.5}	—
8	Speedometer gear bushing		145 {110, 15}	—
10	Bolt (Extension housing or rear cover mounting)		40 {30, 4.1}	—

Lubricant and sealant

Location	Points of application	Kinds	Quantity
7, 12	Interior and lip area of oil seal	Wheel bearing grease [NLGI No.2 (Li soap)]	As required
9	Friction surface with speedometer gear bushing	Molybdenum disulfide grease [NLGI No.2 (Li soap)]	As required
14	Contact surfaces between rear cover or extension housing and transmission case	THREEBOND 1215	As required

Special tools

Unit : mm {in.}

Location	Tool name and shape	Part No.	Application
1	Socket wrench 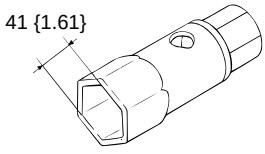	< S5 > MH061532	Removal and installation of mainshaft rear lock nut
	Socket wrench 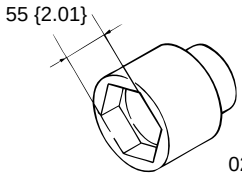	< S6 > MH061519	
4	Flange puller 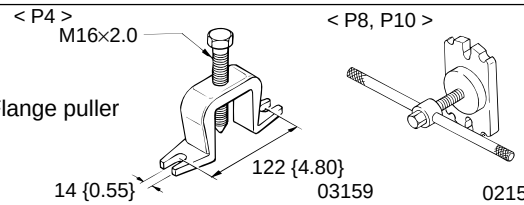	< P4 > MC881524 < P8, P10 > MH061393	Removal of flange at rear of mainshaft
12	Oil seal installer 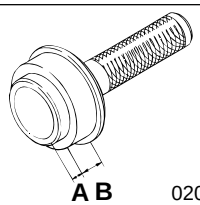	< S5 > ME624242 < S6 > MH062640	Installation of oil seal in rear cover or extension housing

ME624242	**A** : 11 {0.43} **B** : 19.5 {0.77}
MH062640	**A** : 11 {0.43} **B** : 20.5 {0.81}

◆ Service procedure

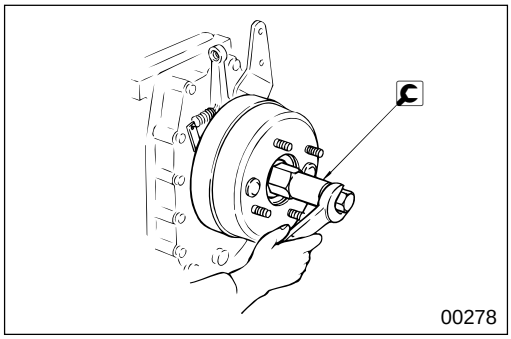

1 **Removal and installation of lock nut**

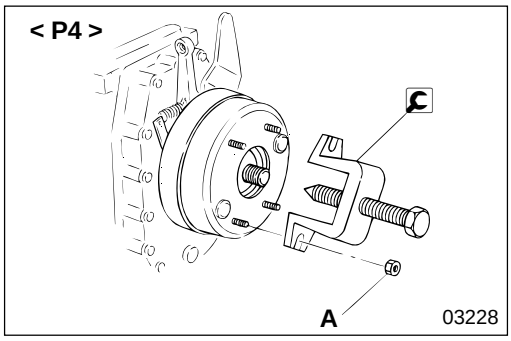

4 **Removal of companion flange**

A : Propeller shaft mounting nut

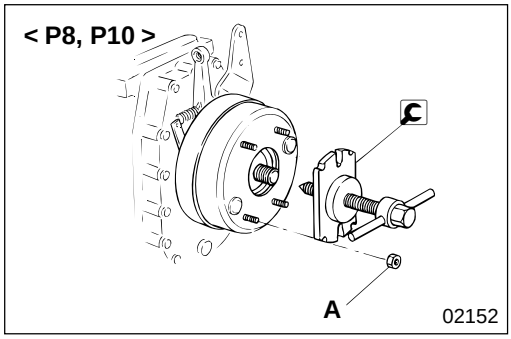

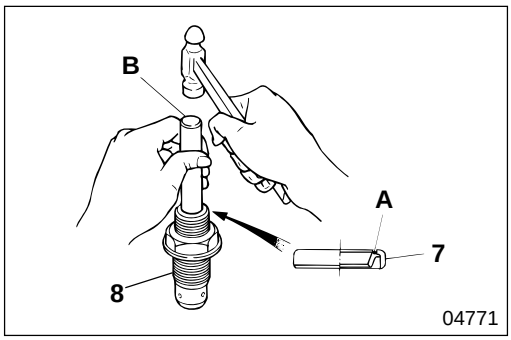

7 **Press-fitting of oil seal**

- Apply grease to inside of oil seal **7** packing **A**.
- Press-fit oil seal **7** into speedometer gear bushing **8** in the direction as illustrated using bar **B** (approximately ø15 mm {0.59 in.}).

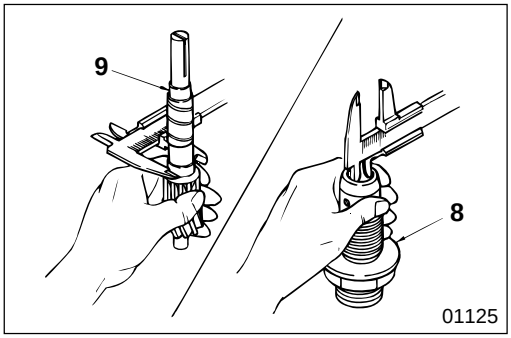

8 **9** **Clearance between speedometer gear bushing and speedometer gear**

If the clearance is higher than the limit, replace the faulty parts.

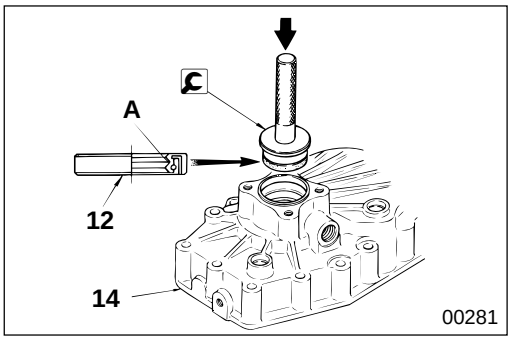

12 **Installation of oil seal**

- Apply grease to lip area **A** of oil seal **12**.
- Press-fit oil seal **12** into extension housing or rear cover **14** in the direction as illustrated using oil seal installer.

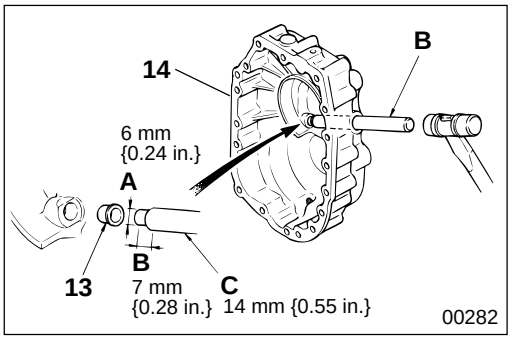

13 **Installation of speedometer gear bushing A**

Press-fit speedometer gear bushing A **13** into extension housing or rear cover **14** using bar **B**, turned to the dimensions as illustrated.

REVERSE IDLER GEAR < S5 >

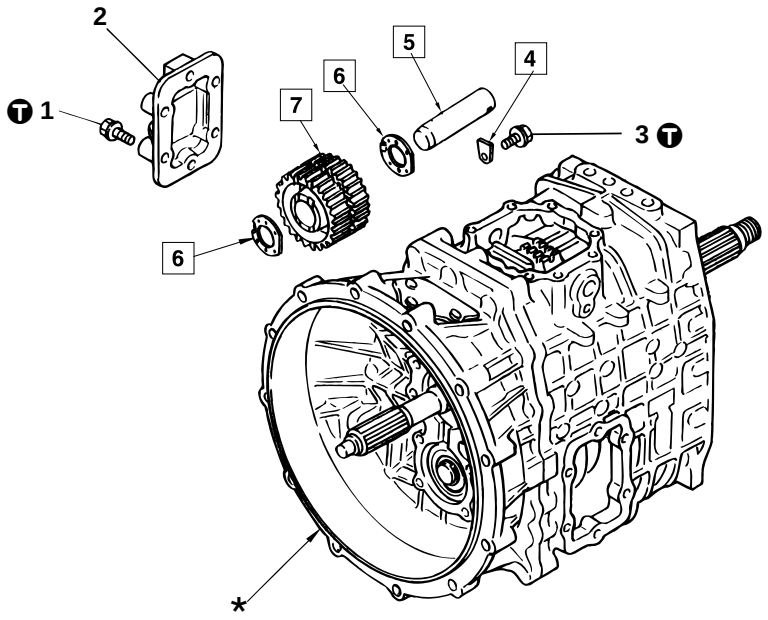

● **Inspection before disassembly**

P22A-35

● **Disassembly sequence**

1 Bolt
2 Reverse idler gear cover
3 Bolt
4 Reverse shaft lock piece
5 Reverse idler shaft
6 Reverse shaft gear side washer
7 Reverse idler gear

***** : Transmission body

● **Assembly sequence**

Follow the disassembly sequence in reverse.

Service standards

Unit : mm {in.}

Location	Maintenance item	Standard value	Limit	Remedy
5, 7	Diameter direction after assembling reverse idler gear	—	0.12 {0.0047}	Replace
7	End play of reverse idler gear	0.2 to 0.9 {0.0079 to 0.035}	1.2 {0.047}	Replace side washer

Tightening torque

Unit : N·m {lbf.ft, kgf·m}

Location	Parts to be tightened	Tightening torque	Remarks
1	Bolt (Reverse idler gear cover mounting)	40 {30, 4.1}	—
3	Bolt (Reverse shaft lock piece mounting)	40 {30, 4.1}	—

Sealant

Location	Points of application	Kinds	Quantity
2	Reverse idler gear cover installation surface	THREEBOND 1215	As required

Special tools

Unit : mm {in.}

Location	Tool name and shape	Part No.	Application
5	Drive pinion and reverse shaft puller 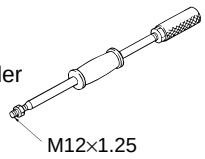 02118	03726-82000	Removal of reverse idler shaft

◆ Service procedure

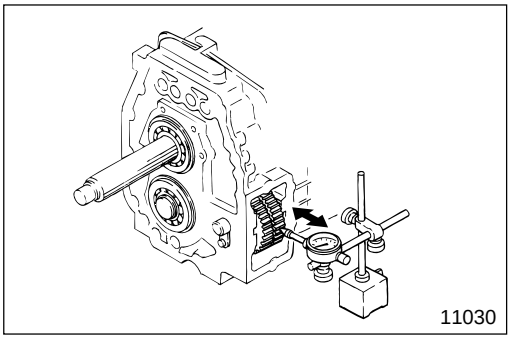

● **Inspection before disassembly**

Play of reverse idler gear in the diameter direction

- If the measured value is higher than the limit, replace the faulty parts.
- Reinspect play after assembly to check that the measured value is within the limit.

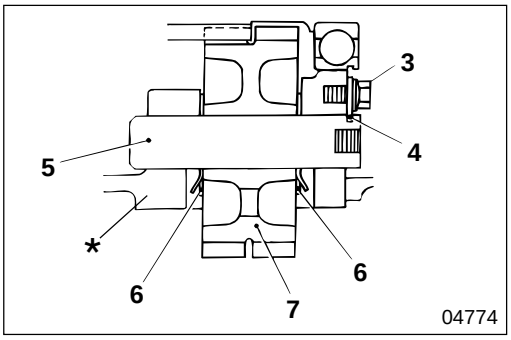

3 to **7** **Assembly of reverse idler gear**

- Install reverse shaft gear side washer **6** and reverse idler gear **7** in transmission body *****.
- Install reverse idler shaft **5** in transmission body ***** using a plastic-headed mallet.
- Install reverse shaft lock piece **4** in transmission body ***** with mounting bolt **3**.

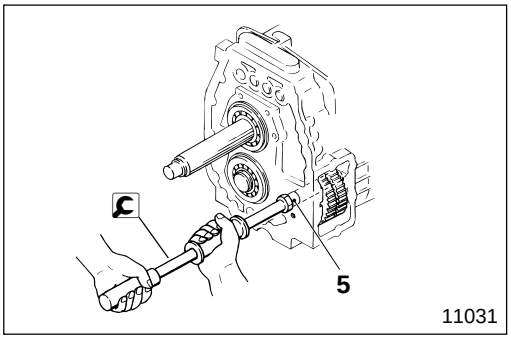

5 **Removal of reverse idler shaft**

REVERSE GEAR AND REVERSE IDLER GEAR < S6 >

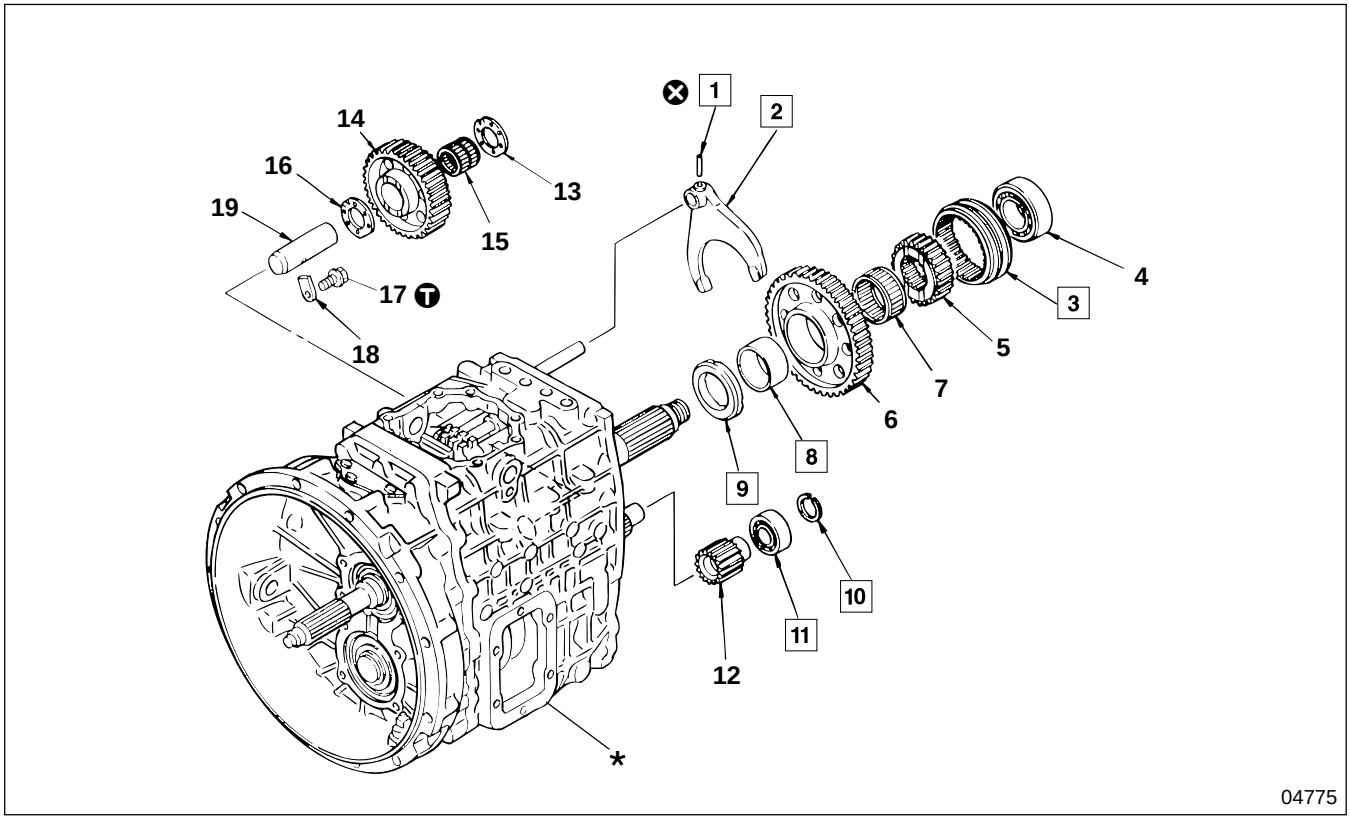

● **Inspection before disassembly**

P22A-38

● **Disassembly sequence**

1 Spring pin
2 Reverse gear shift fork
3 Reverse gear shift sleeve
4 Mainshaft rear bearing
5 Hub
6 Mainshaft reverse gear
7 Needle bearing
8 Mainshaft reverse gear bearing sleeve
9 Thrust washer
10 Snap ring
11 Countershaft rear bearing
12 Countershaft reverse gear
13 Reverse idler gear side washer
14 Reverse idler gear
15 Needle bearing < M060 >
16 Reverse idler gear side washer
17 Bolt
18 Reverse idler shaft lock piece
19 Reverse idler shaft

*: Transmission body
⊗: Non-reusable parts

● **Assembly sequence**

Follow the disassembly sequence in reverse.

Service standards

Unit : mm {in.}

Location	Maintenance item	Standard value (Basic diameter in [ ])	Limit	Remedy
2	Tilt of reverse gear shift fork claw	0.1 {0.0039} or less	0.2 {0.079}	Replace
2, 3	Clearance between reverse gear shift fork and reverse gear shift sleeve	0.3 to 0.5 {0.012 to 0.020}	—	Replace
3, 5	Play in the rotating direction of reverse gear shift sleeve and hub	0.052 to 0.148 {0.0020 to 0.0058}	0.3 {0.012}	Replace
5, *	Engagement in the rotating direction of hub and mainshaft	–0.006 to 0.094 {–0.00024 to –0.0037}	0.2 {0.0079}	Replace
6	End play of mainshaft reverse gear	0.15 to 0.35 {0.0059 to 0.014}	0.5 {0.020}	Replace side washer
6, 7, 8, *	Play in the diameter direction after assembling mainshaft reverse gear	—	0.1 {0.0039}	Replace
8	Outer diameter of reverse gear bearing sleeve	$[71]^{-0.030}_{-0.040}$ {$[2.80]^{-0.0012}_{-0.0016}$}	– 0.1 {– 0.0039}	Replace
14	End play of reverse idler gear	0.2 to 0.9 {0.0079 to 0.035}	1.2 {0.047}	Correct
14, 15, 19	Play in the diameter direction after assembling reverse idler gear	—	0.15 {0.0059}	Replace

Tightening torque

Unit : N·m {lbf.ft, kgf·m}

Location	Parts to be tightened	Tightening torque	Remarks
17	Bolt (Reverse idler shaft lock piece mounting)	40 {30, 4.1}	—

Special tools

Location	Tool name and shape	Part No.	Application
8	Mainshaft bearing installer 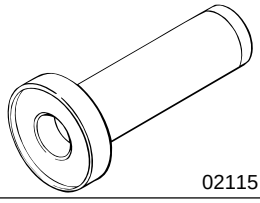 02115	*MH062634	Installation of mainshaft reverse gear bearing sleeve
10	Snap ring expander 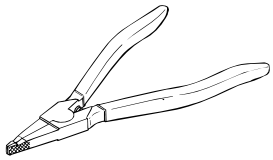 01137	MH061268	Removal of countershaft rear bearing snap ring
11	Countershaft bearing installer 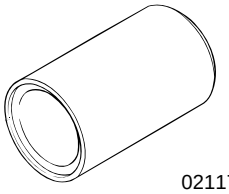 02117	*MH062642	Installation of countershaft rear bearing

* components of puller and installer kit P22A-84

◆ Service procedure

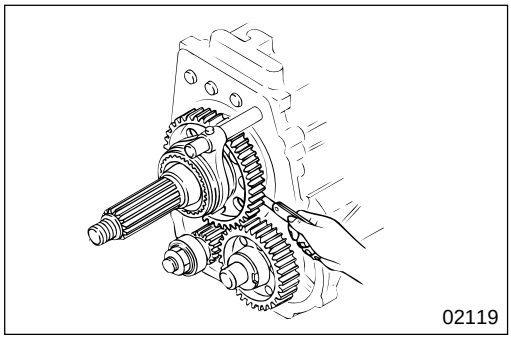

● Inspection before disassembly

(1) End play of mainshaft reverse gear

- If the measured value is higher than the limit, replace the faulty parts.
- Reinspect play after assembly to check that the measured value is within the limit.

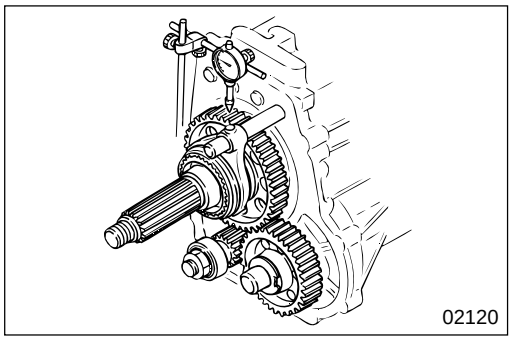

(2) Play of mainshaft reverse gear in diameter direction

- If the measured value is higher than the limit, replace the faulty parts.
- Reinspect play after assembly to check that the measured value is within the limit.

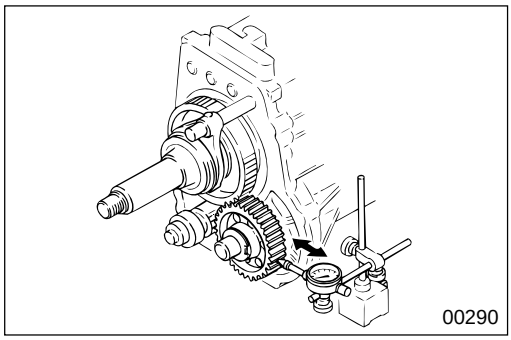

(3) Play of reverse idler gear in diameter direction

- If the measured value is higher than the limit, replace the faulty parts.
- Reinspect play after assembly to check that the measured value is within the limit.

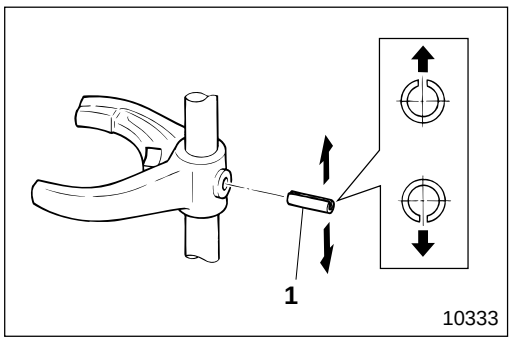

1 Installation of spring pin

Install spring pin **1** in reverse gear shift fork **2** in the direction as illustrated.

CAUTION⚠

Make sure you do not drive in spring pin 1 fully, leave 0 to 0.5 mm {0 to 0.020 in.} outside to prevent them from slipping out.

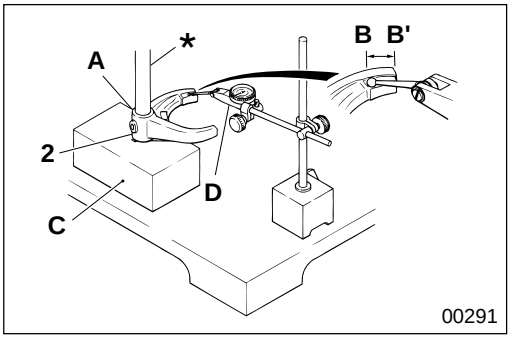

2 **Tilt of reverse gear shift fork claw**

- Measure the tilt (difference between **B** and **B'**) of claw **B**–**B'** against hole **A** of shift rail * of shift fork **2** with the shift rail upright.
- If the measured value is higher than the limit, replace reverse gear shift fork **2**.
  C : V-block
  D : Dial gauge

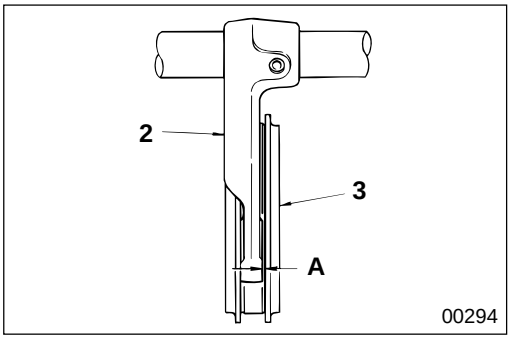

2 **3** **Clearance between reverse gear shift fork and reverse gear shift sleeve**

- Measure clearance **A** between reverse gear shift fork **2** and reverse gear shift sleeve **3**.
- If the measured value is higher than the limit, replace the faulty parts.

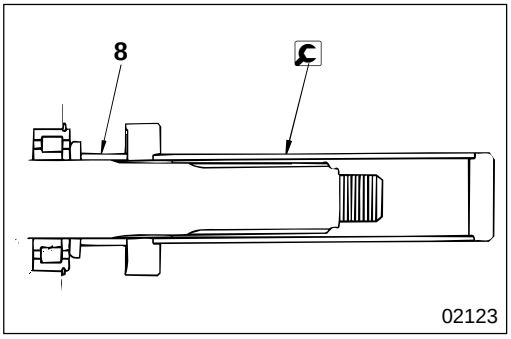

8 **Installation of mainshaft reverse gear bearing sleeve**

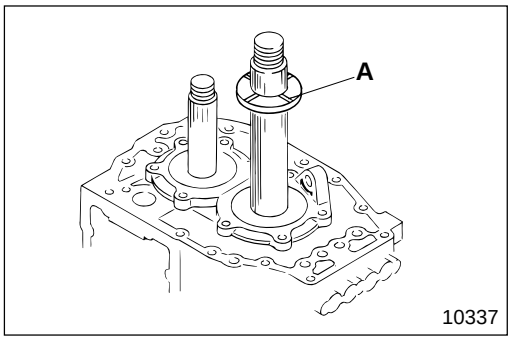

9 **Installation of thrust washer**

A : Oil groove

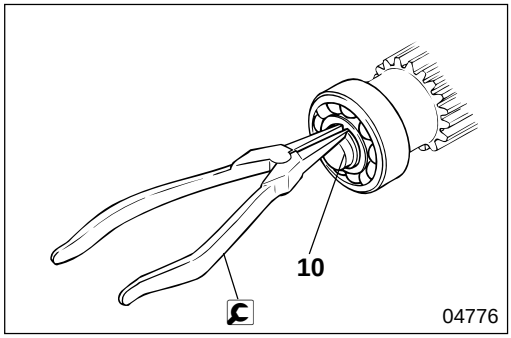

10 **Removal and installation of snap ring**

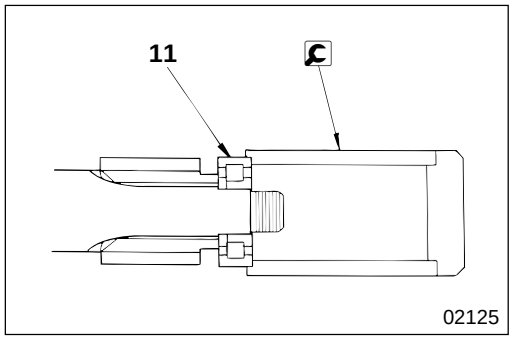

11 **Installation of countershaft rear bearing**

M E M O

TRANSMISSION BODY

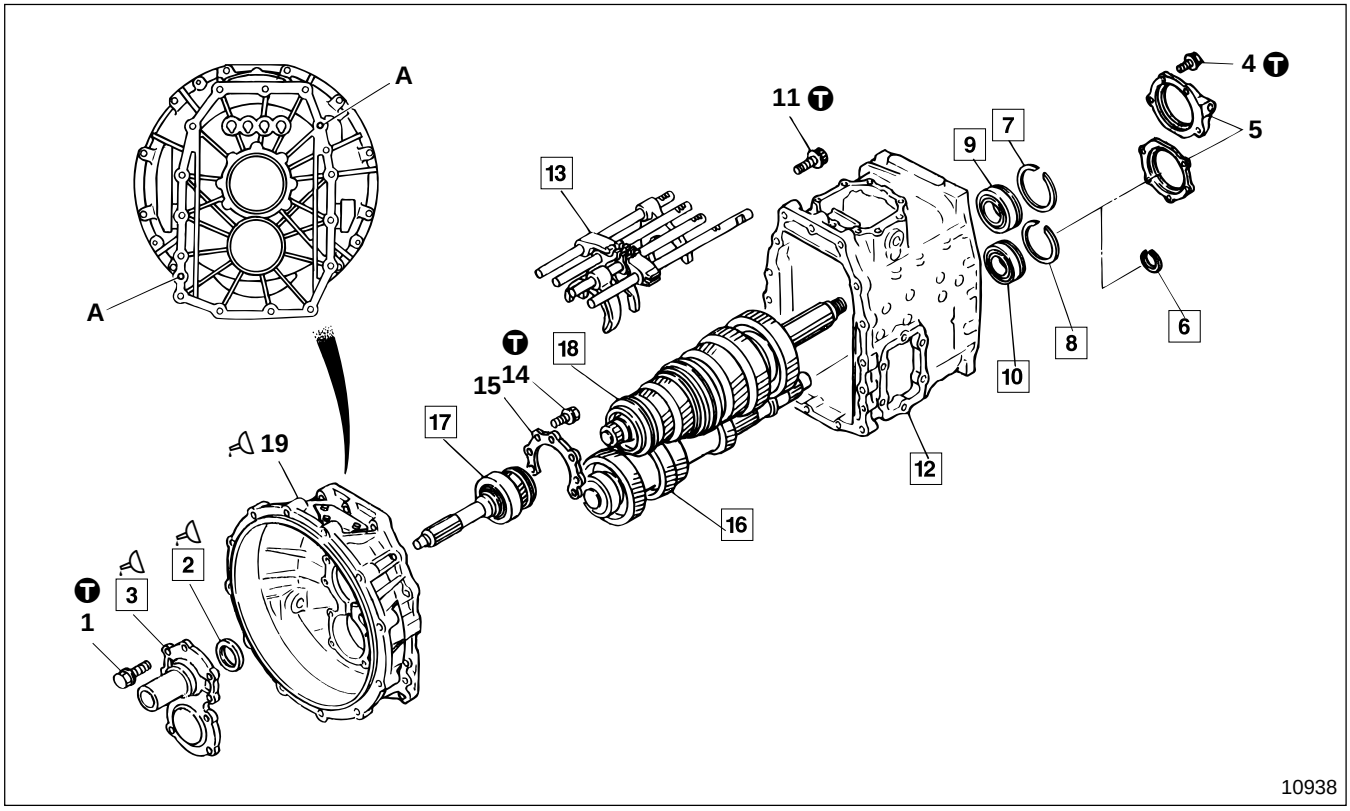

● **Disassembly sequence**

1 Bolt
2 Oil seal
3 Front bearing retainer
4 Bolt < S6 >
5 Rear bearing retainer < S6 >
6 Snap ring < S5 >
7 Snap ring
8 Snap ring
9 Mainshaft rear bearing
10 Countershaft rear bearing
11 Bolt
12 Transmission case
13 Shift rail and shift fork 🕮 P22A-52
14 Bolt
15 Drive pinion bearing retainer
16 Countershaft assembly 🕮 P22A-76
17 Drive pinion assembly 🕮 P22A-56
18 Mainshaft assembly 🕮 P22A-58
19 Clutch housing assembly

A : Positioning pin

● **Assembly sequence**

Follow the disassembly sequence in reverse.

NOTE

- **After removing parts 1 to 3, disassemble the transmission assembly with the body laid vertically on its clutch housing side.**
- **Remove parts 13, and 16 to 18 as a group. However, shift rail and shift fork 13 can be disassembled on its own if you are not going to disassemble parts 16 to 18. 🕮 P22A-52**

Tightening torque

Unit : N·m {lbf.ft, kgf·m}

Location	Parts to be tightened	Tightening torque	Remarks
1	Bolt (Front bearing retainer mounting)	40 {30, 4.1}	—
4	Bolt (Rear bearing retainer mounting)	40 {30, 4.1}	—
11	Bolt (Transmission case mounting)	120 {90, 12.4}	—
14	Bolt (Drive pinion retainer mounting)	40 {30, 4.1}	—

Lubricant and sealant

Location	Points of application	Kinds	Quantity
2	Lip area of oil seal	Wheel bearing grease [NLGI No.2 (Li soap)]	As required
3	Contact surface between front bearing retainer and clutch housing assembly	THREEBOND 1215	As required
19	Contact surface between clutch housing assembly and transmission case	THREEBOND 1215	As required

Special tools

Unit : mm {in.}

Location	Tool name and shape	Part No.	Application
2	Oil seal installer **X** 72 {2.83} **Y** 50 {1.97} **Z** 40 {1.57} **a** 10 {0.39} **b** 10 {0.39} 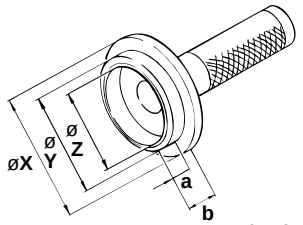 01135	MH061992	Installation of front bearing retainer oil seal
3	Oil seal front guide **d** 44 {1.73}, **D** 46 {1.81}, **L** 217 {8.54} 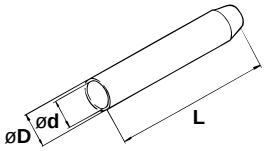 01136	MH061991	Installation of front bearing retainer
6, 7, 8	Snap ring expander 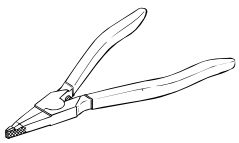 01137	MH061268	Removal of snap rings from mainshaft rear bearing and countershaft front and rear bearings
9	Mainshaft bearing puller 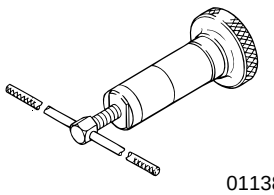 01138	< S5 > *MH061732 < S6 > *MH062433	Removal of mainshaft rear bearing

* components of puller and installer kit P22A-84

TRANSMISSION BODY

Unit : mm {in.}

<table>
<tr><th>Location</th><th>Tool name and shape</th><th>Part No.</th><th>Application</th></tr>
<tr><td>9</td><td>Mainshaft bearing installer
 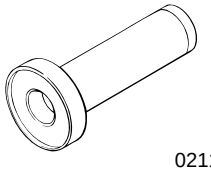
02115</td><td>< S5 >
*MH624234
< S6 >
*MH062634</td><td>Installation of mainshaft rear bearing</td></tr>
<tr><td rowspan="2">10</td><td>Countershaft bearing puller
 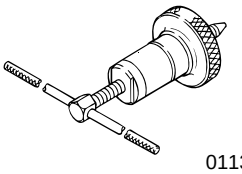
01139</td><td>< S5 >
*ME061731
< S6 >
*MH062432</td><td>Removal of countershaft rear bearing</td></tr>
<tr><td>Countershaft bearing installer
 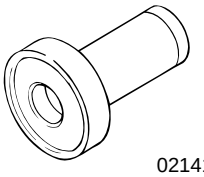
02141</td><td>< S5 >
*ME624233
< S6 >
*MH062630</td><td>Installation of countershaft bearing</td></tr>
<tr><td rowspan="2">12</td><td>Eye bolt
 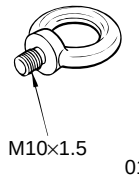

01140</td><td>MH062340</td><td>Lifting of transmission case</td></tr>
<tr><td>Gear puller
 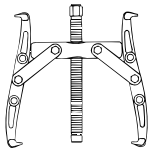
01148</td><td>MH062308
MH062250</td><td>Removal of transmission case</td></tr>
<tr><td rowspan="2">16 to 18</td><td>Steel lifting band
<table><tr><td>S5</td><td>X=87 {3.43}
Y=175 {6.89}
a=80 {3.15}
b=336 {13.2}</td></tr><tr><td>S6 Direct drive</td><td>X=116{4.57}
Y=173 {6.81}
a=100 {3.94}
b=360 {14.1}</td></tr></table> 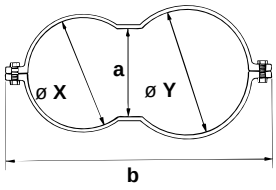

01141</td><td>< S5 >
MH062343
< S6 >
MH062344</td><td rowspan="2">Removal and installation of mainshaft assembly, countershaft assembly and drive pinion assembly</td></tr>
<tr><td>Eye nut
<table><tr><td></td><td>A</td></tr><tr><td>S5</td><td>M27×1.5</td></tr><tr><td>S6</td><td>M36×1.5</td></tr></table> 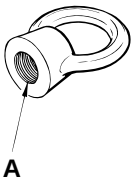

01142</td><td>< S5 >
MH062341
< S6 >
MH062342</td></tr>
</table>

* components of puller and installer kit. P22A-84

Location	Tool name and shape	Part No.	Application
16	Countershaft bearing puller 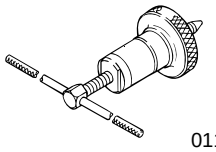 01139	< S5 > *MH062426 < S6 > *MH062429	Removal of countershaft front bearing
	Countershaft bearing installer 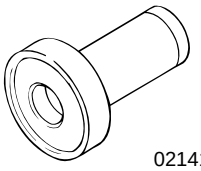 02141	< S5 > *ME624233 < S6 > *MH062630	Installation of countershaft front bearing

* components of puller and installer kit. P22A-84

◆ Service procedure

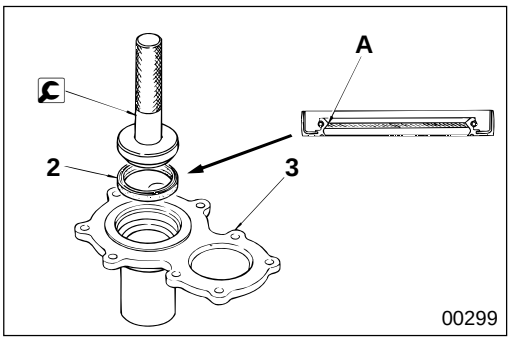

00299

2 Installation of oil seal

- Apply grease to lip area **A** of oil seal **2**.
- Press-fit oil seal **2** into front bearing retainer **3** in the direction as illustrated using oil seal installer.

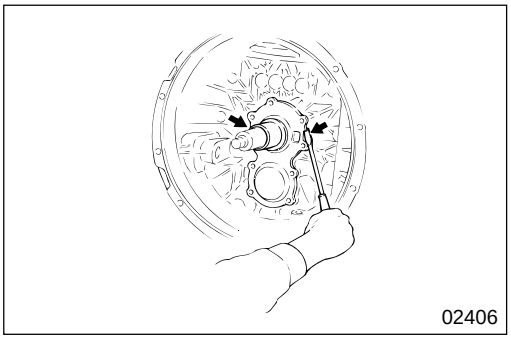
02406

3 Front bearing retainer

[Removal]

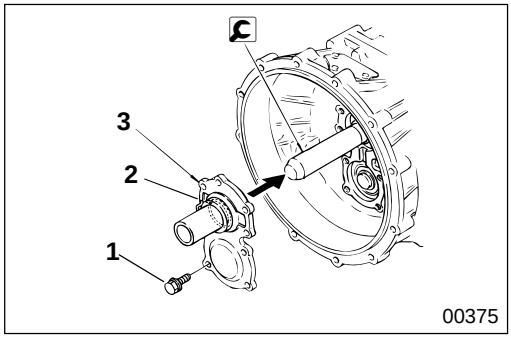

[Installation]
Press-fit front bearing retainer **3** into clutch housing assembly **19** using oil seal front guide.

CAUTION

Be careful when installing front bearing retainer 3, that you do not damage oil seal 2 installed on the front bearing retainer.

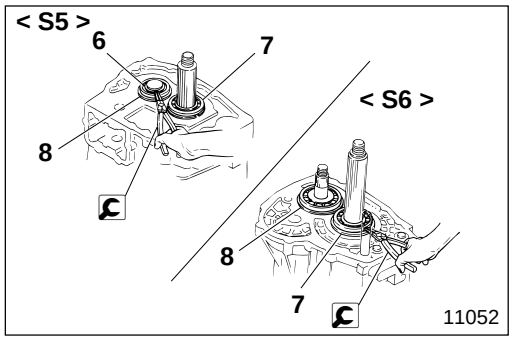

6 to 8 Removal and installation of snap ring

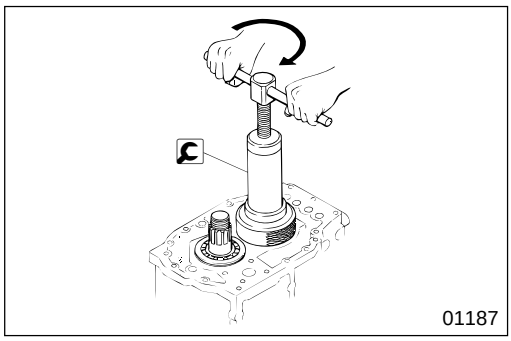

9 Mainshaft rear bearing

[Removal]

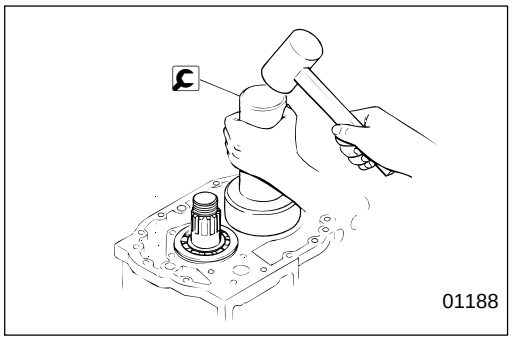

[Installation]

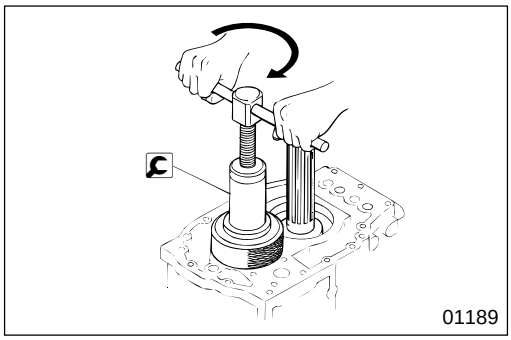

10 Countershaft rear bearing

[Removal]

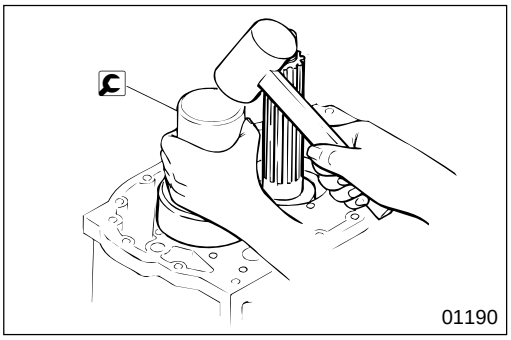

[Installation]

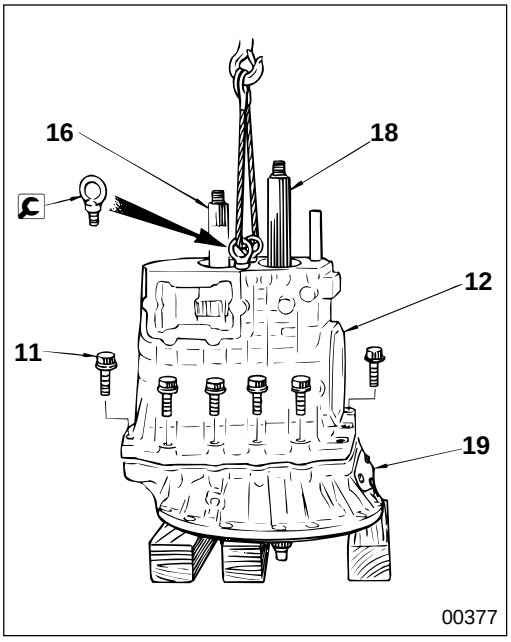

12 Removal and installation of transmission case

[Removal]

● **Remove transmission case 12.**

Method 1

- When lifting up with a crane, install eye bolts on transmission case **12** and pass a steel sling through them.
- After removing bolts **11**, lift transmission case **12** up with a crane and keep hitting the rear ends of clutch housing assembly **19**, mainshaft assembly **18** and countershaft assembly **16**. Use a plastic-headed or copper-headed mallet to remove the transmission case.

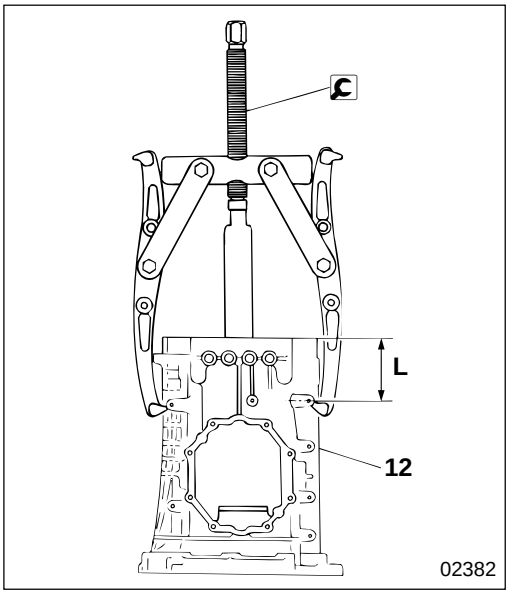

Method 2

- A gear puller can be used instead of a crane.
  Puller installation position

Model	Dimension of L mm {in.}
M060S5	146 {5.75}
M060S6	36 {1.42}
M070S6	93 {3.66}

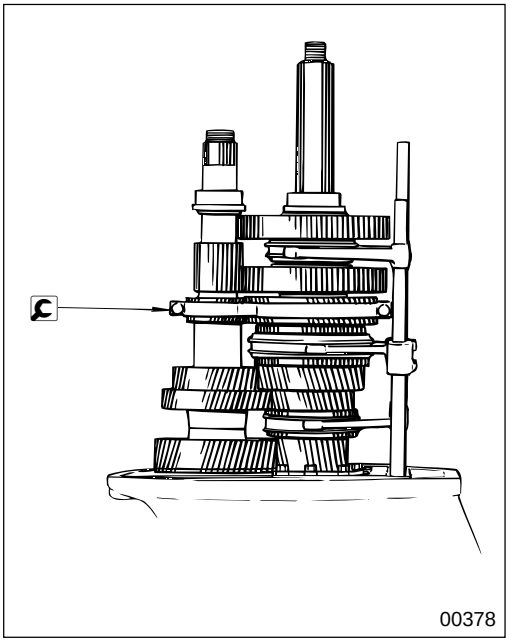

- After removing transmission case **12**, fit the 2nd gear unit < S5 > or 3rd gear unit < S6 > using steel lifting band to ensure safety.

CAUTION

Be sure to tighten steel lifting band adequately enough to prevent it from coming undone, but not excessively, because excessive tightening would damage the gears, etc.

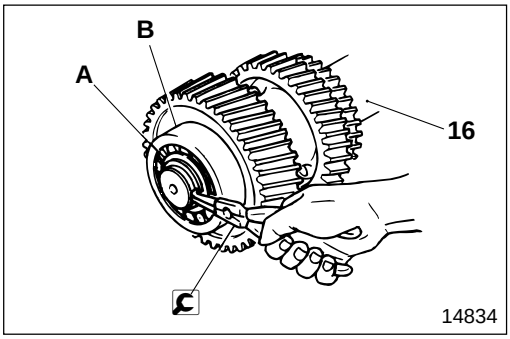

- Remove snap ring **A** from countershaft assembly **16**.
  B : Countershaft front bearing

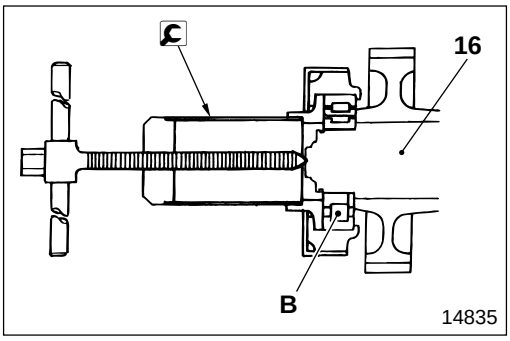

- Remove countershaft bearing **B** from countershaft assembly **16**.

[Installation]
Follow the removal sequence in reverse.

CAUTION

Be careful not to damage mainshaft assembly 18, or rear bearings 9, 10 of countershaft assembly 16 during installation.

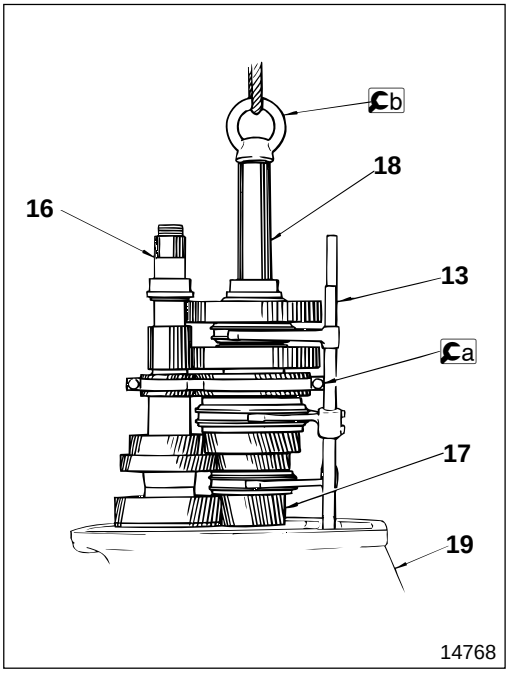

13 **16** **to** **18** **Shift rail and shift fork, countershaft assembly, drive pinion assembly, and mainshaft assembly**

[Removal]
Remove or install shift rail and shift fork **13**, countershaft assembly **16**, drive pinion assembly **17**, and mainshaft assembly **18** as a group.

- Before lifting, after removing the case, install b eye nut at the end of mainshaft **18**, fitted with a steel lifting band.
- Fix shift rail and shift fork **13** to mainshaft assembly **18** with a rubber band.
- Fix a piece of wood to clutch housing assembly **19**, and use a crane to lift the clutch housing together with drive pinion assembly **17** up, at the same time hitting them with a plastic-headed mallet to remove them.

CAUTION

- **Be sure to tighten a steel lifting band adequately enough to prevent it from coming undone, but not excessively, because excessive tightening would damage the gears, etc.**
- **Make sure, when lifting mainshaft assembly 18 or other parts, that you support drive pinion assembly 17 with your hand in order to prevent it from falling when the mainshaft assembly and countershaft assembly 16 come apart.**

[Installation]
Method 1

- Follow the removal sequence in reverse.

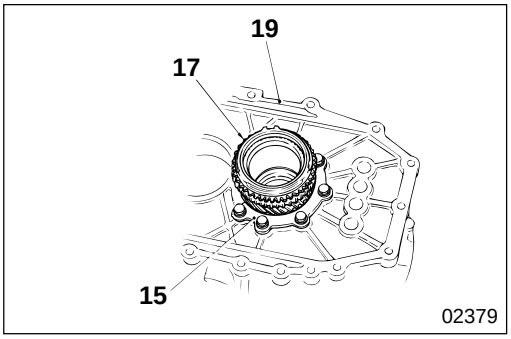

Method 2

- After installing drive pinion assembly **17** in clutch housing assembly **19**, install drive pinion bearing retainer **15**.

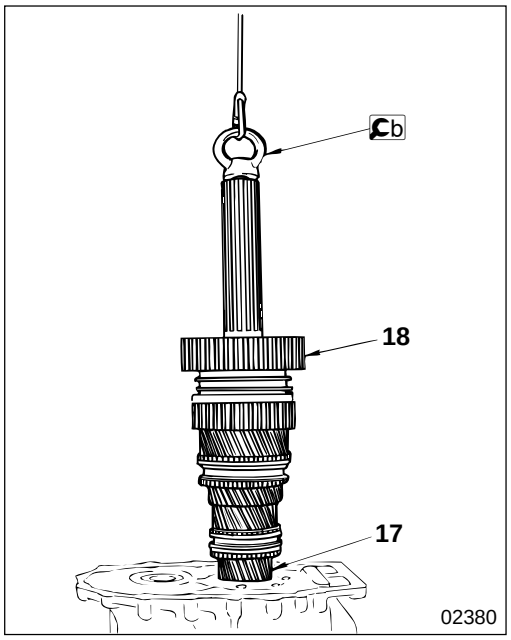

- Install b eye nut at the end of mainshaft assembly **18**.
- Lift mainshaft assembly **18** up using a crane and install the mainshaft assembly on drive pinion assembly **17**.

CAUTION

To prevent mainshaft assembly 18 from falling, support it using a crane.

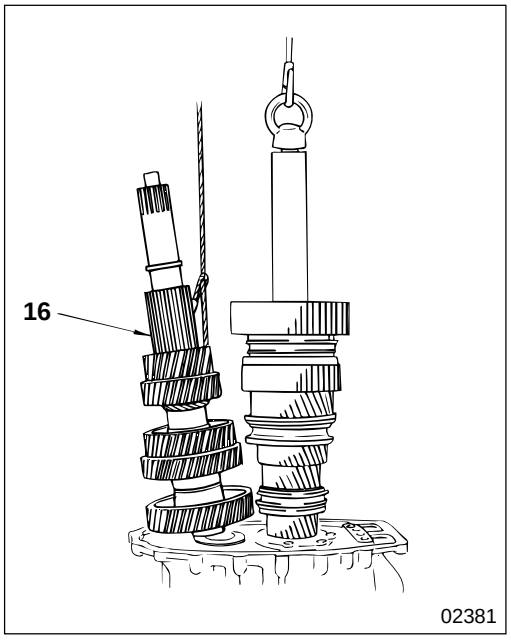

- Install countershaft assembly **16** in clutch housing assembly **19**.

CAUTION

If you use this method of installation, first remove the countershaft front bearing. 🕮 P22A-76

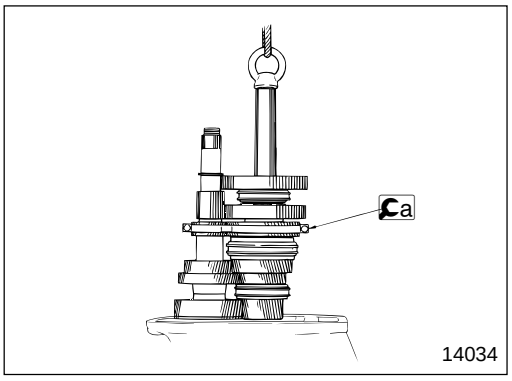

- Fit the 2nd gear unit using a steel lifting band to ensure safety.

CAUTION

Be sure to tighten a steel lifting band adequately enough to prevent it from coming undone, but not excessively, because excessive tightening would damage the gears, etc.

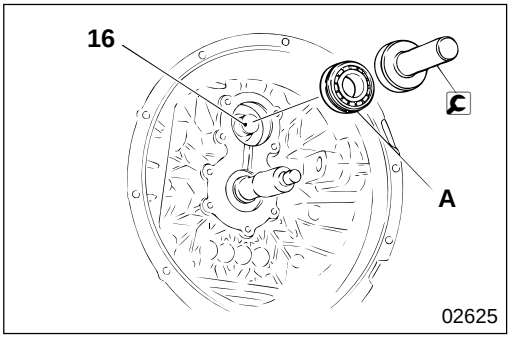

- Install shift rail and shift fork **13** and transmission case **12** in clutch housing assembly **19**.
- Place cluch housing assembly **19** horizontally so that countershaft assembly **16** is uppermost.
- Install the countershaft front bearing **A** into clutch housing assembly **19** using countershaft bearing installer.

CAUTION

Be sure to install the snap ring of the countershaft front bearing.

TRANSMISSION BODY

Shift Rail and Shift Fork < S5 >

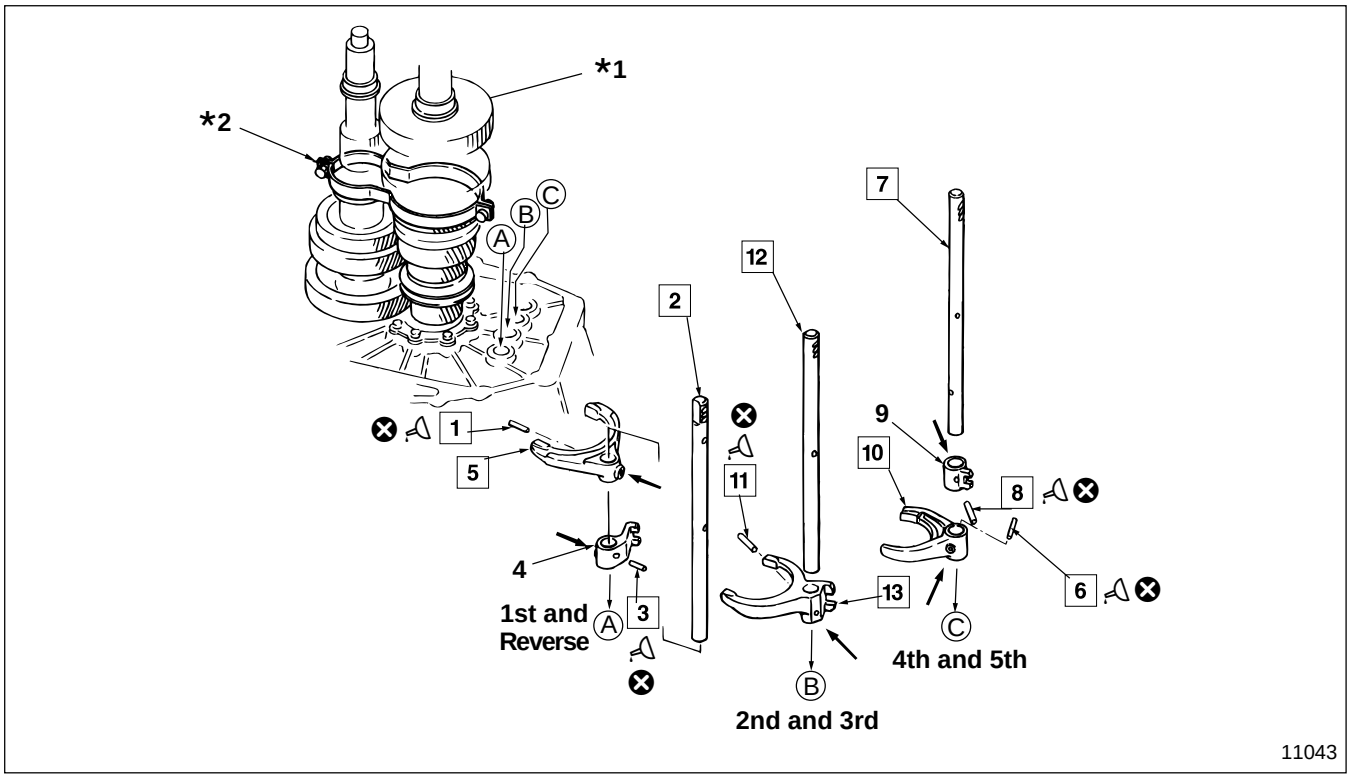

Arrow mark : Removal and installation direction for spring pin

● **Disassembly sequence** (When the mainshaft assembly is not removed or installed and only the shift rail and shift fork is disassembled)

1 Spring pin
2 1st and reverse shift rail
3 Spring pin
4 1st and reverse shift rail jaw
5 1st and reverse shift fork
6 Spring pin
7 4th and 5th shift rail
8 Spring pin
9 4th and 5th shift rail jaw
10 4th and 5th shift fork
11 Spring pin
12 2nd and 3rd shift rail
13 2nd and 3rd shift fork

***1** : Mainshaft assembly
***2** : steel lifting band
⊗ : Non-reusable parts

● **Assembly sequence**

Follow the disassembly sequence in reverse. Remove steel lifting band after installing the shift rail and shift fork.

Service standards

Unit : mm {in.}

Location	Maintenance item	Standard value	Limit	Remedy
2, 7, 12	Bend of shift rail	0.039 {0.0015} or less	0.08 {0.0031}	Correct or replace
5, 10, 13	Tilt of shift fork claw	0.1 {0.0039} or less	0.2 {0.0079}	Replace
5, *1	Clearance between 1st and reverse shift fork and synchronizer sleeve	0.3 to 0.5 {0.012 to 0.020}	1.0 {0.039}	Replace
10, *1	Clearance between 4th and 5th shift fork and synchronizer sleeve	0.3 to 0.6 {0.012 to 0.024}	1.0 {0.039}	replace
13, *1	Clearance between 2nd and 3rd shift fork and synchronizer sleeve	0.2 to 0.4 {0.0079 to 0.016}	1.0 {0.039}	Replace

Sealant

Location	Points of application	Kinds	Quantity
1, 3, 6, 8, 11	Spring pin	LOCTITE 601	As required

◆ Service procedure

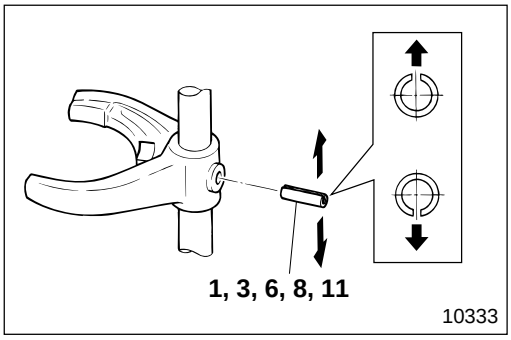

1 3 6 8 11 Installation of spring pin

Install spring pins **1**, **3**, **6**, **8**, **11** in the direction as illustrated.

CAUTION

- **Make sure you do not drive in spring pins 1, 3, 8, 11 fully, leave 0 to 0.5 mm {0 to 0.020 in.} outside to prevent them from slipping out.**
- **Do not remove spring pin 6 for 4th and 5th shift fork 10 (made of aluminum), except when replacing shift fork 10 or shift rail 7.**
- **Note that the length of spring pin 6 differs from that of spring pins 1, 3, 8, 11.**
- **Be careful when driving in spring pins 1, 3, 6, 8, 11, that you do not subject shift rails 2, 7, 12 to excessive strain, because this would cause faults such as bent shift rails.**

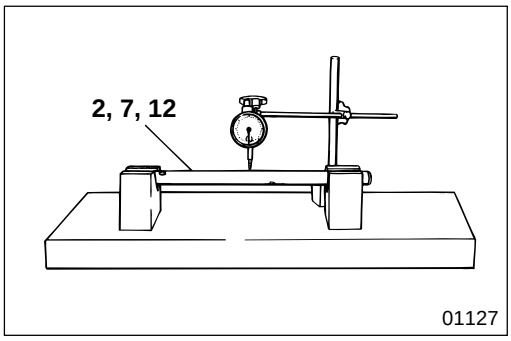

2 7 12 Bend of shift rail

If the measured value is higher than the limit, correct or replace shift rail **2**, **7**, or **12**.

NOTE

Read the dial gauge after turning shift rails 2, 7, 12 one full revolution. The bend is one half of the indicated value.

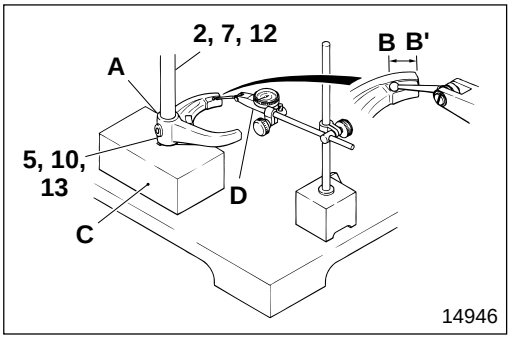

5 10 13 Tilt of shift fork claws

- Measure the tilt (difference between **B** and **B'**) of claw **B**–**B'** against hole **A** of shift rails **2, 7, 12** of shift forks **5, 10, 13** with the shift rails upright.
- If the measured value is higher than the limit, replace shift fork **5**, **10**, or **13**.
  C : V-block
  D : Dial gauge

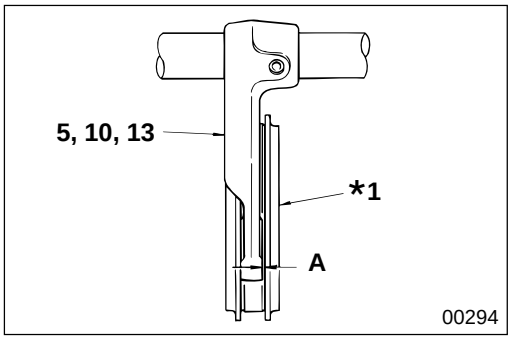

5 10 13 *1 Clearance between gear shift fork and synchronizer sleeve of mainshaft

If clearance **A** is higher than the limit, replace the faulty parts.
***1** : Synchronizer ring of mainshaft assembly

TRANSMISSION BODY

Shift Rail and Shift Fork < S6 >

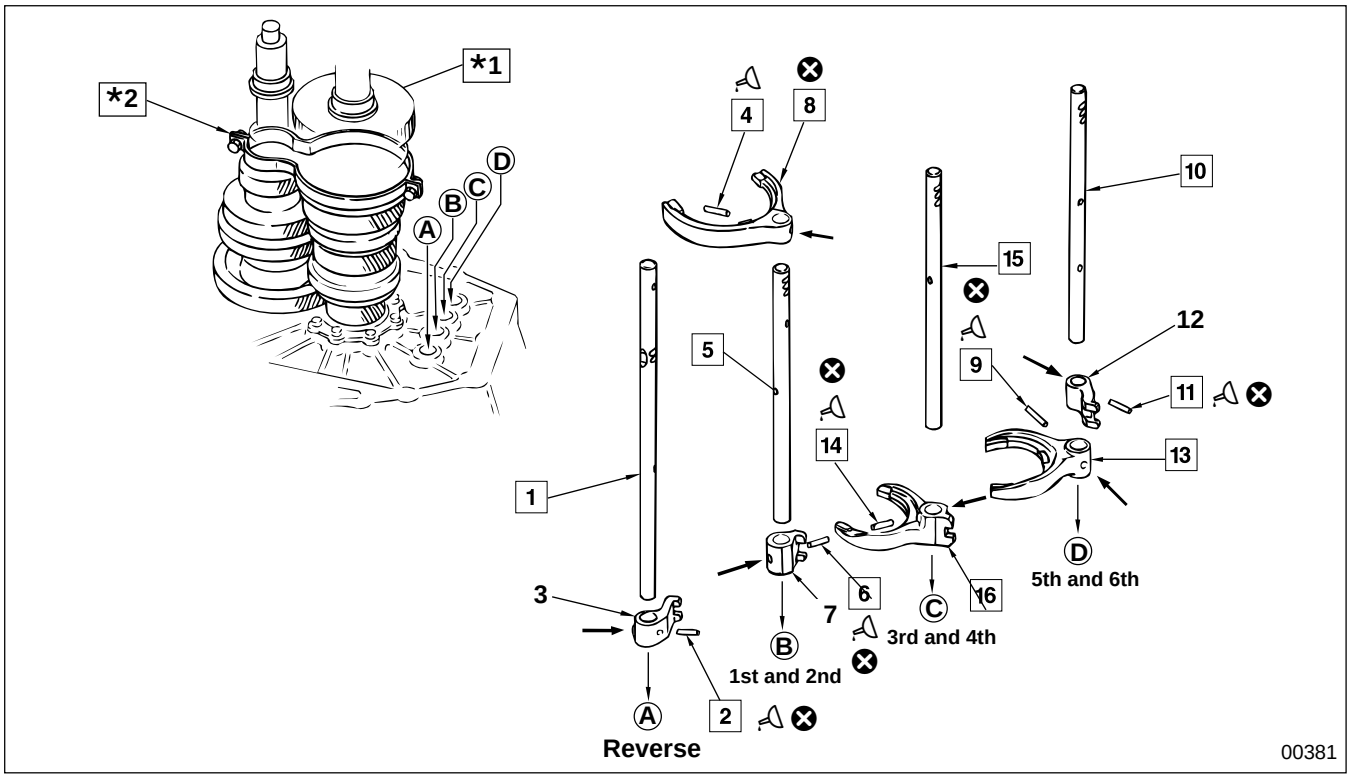

Arrow mark: Removal and installation direction for spring pin

● **Disassembly sequence** (Where the mainshaft assembly is not removed or installed and only the shift rail and shift fork is disassembled)

1 Reverse shift rail
2 Spring pin
3 Reverse shift rail jaw
4 Spring pin
5 1st and 2nd shift rail
6 Spring pin
7 1st and 2nd shift rail jaw
8 1st and 2nd shift fork
9 Spring pin
10 5th and 6th shift rail
11 Spring pin
12 5th and 6th shift rail jaw
13 5th and 6th shift fork
14 Spring pin
15 3rd and 4th shift rail
16 3rd and 4th shift fork

***1** : Mainshaft assembly
***2** : steel lifting band
⊗ : Non-reusable parts

● **Assembly sequence**

Follow the disassembly sequence in reverse. Remove steel lifting band after installing the shift rail and shift fork.

Service standards

Unit : mm {in.}

Location	Maintenance item	Standard value	Limit	Remedy
1	Bend of reverse shift rail	0.047 {0.0019} or less	0.09 {0.0035}	Correct or replace
5, 10, 15	Bend of shift rails	0.037 {0.0015} or less	0.07 {0.0028}	Correct or replace
8, 13, 16	Tilt of shift fork claw	0.1 {0.0039} or less	0.2{0.0079}	Replace shift fork
8, *1	Clearance between 1st and 2nd shift fork and synchronizer sleeve	0.3 to 0.5 {0.012 to 0.002}	1.0 {0.039}	Replace
13, *1	Clearance between 5th and 6th shift fork and synchronizer sleeve	0.3 to 0.6 {0.012 to 0.024}	1.0 {0.039}	Replace
16, *1	Clearance between 3rd and 4th shift fork and synchronizer sleeve	0.2 to 0.4 {0.0079 to 0.016}	1.0 {0.039}	Replace

Sealant

Location	Points of application	Kinds	Quantity
2, 4, 6, 9, 11, 14	Spring pin	LOCTITE 601	As required

◆ Service procedure

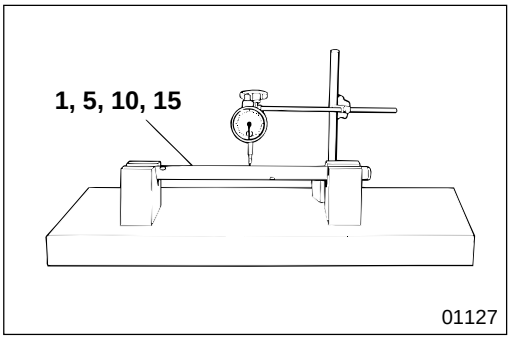

1 **5** **10** **15** **Bend of shift rail**

If the measured value is higher than the limit, correct or replace shift rail **1**, **5**, **10**, or **15**.

NOTE

Read the dial gauge after turning shift rails 1, 5, 10, 15 one full revolution. The bend is one half of the indicated value.

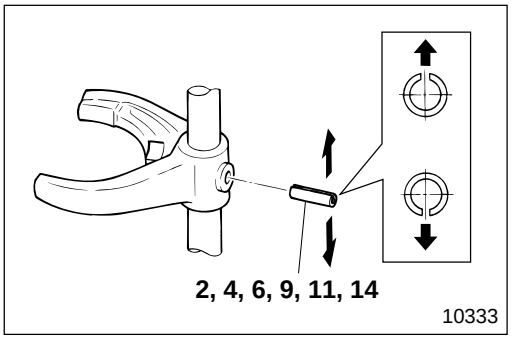

2 **4** **6** **9** **11** **14** **Installation of spring pin**

Install spring pins **2**, **4**, **6**, **9**, **11**, **14** in the direction as illustrated.

CAUTION

- **Make sure you do not drive in spring pins 2, 4, 6, 9, 11, 14 fully, leave 0 to 0.5 mm {0 to 0.02 in.} outside to prevent them from slipping out.**
- **Do not remove spring pin 6 for 4th and 5th shift fork 10 (made of aluminum), except when replacing shift forks 8, 13 or shift rails 5, 10.**
- **The lengths of spring pins 4, 9 differ from those of other spring pins 2, 6, 11, 14.**
- **Be careful when driving in spring pins 2, 4, 6, 9, 11, 14 that you do not subject shift rails 1, 5, 10, 15 to excessive strain, because this would cause faults such as bent shift rails.**

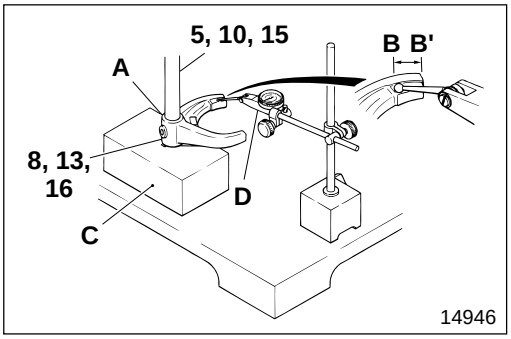

8 **13** **16** **Tilt of shift fork claw**

- Measure the tilt (difference between **B** and **B'**) of claw **B**–**B'** against hole **A** of shift rails **5**, **10**, **15** of shift forks **8**, **13**, **16** with the shift rails upright.
- If the measured value is higher than the limit, replace shift fork **8**, **13**, or **16**.
  C : V-block
  D : Dial gauge

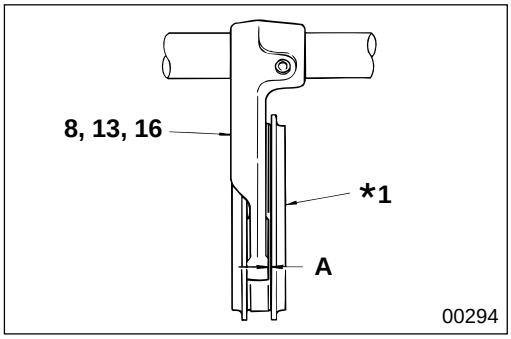

8 **13** **16** ***1** **Clearance between shift fork and synchronizer sleeve of mainshaft**

If clearance **A** is higher than the limit, replace the faulty parts.
***1** : Synchronizer ring of mainshaft assembly

DRIVE PINION ASSEMBLY

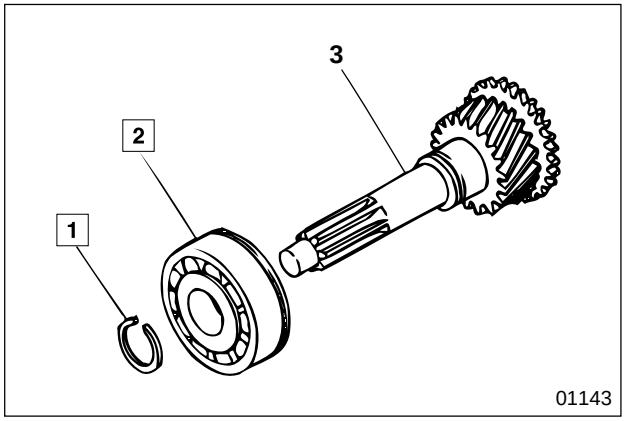

● **Disassembly sequence**

1 Snap ring
2 Drive pinion bearing
3 Drive pinion

● **Assembly sequence**

Follow the disassembly sequence in reverse.

Special tools

Location	Tool name and shape	Part No.	Application
1	Snap ring expander 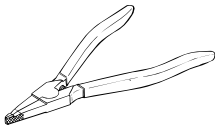 01137	MH061268	Removal and installation of snap ring of drive pinion bearing
2	Drive pinion bearing puller 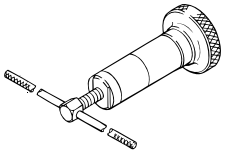 01138	*MH062440	Removal of drive pinion bearing
	Drive pinion bearing installer 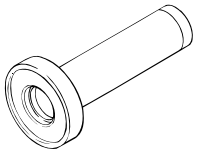 02142	*ME624235	Installation of drive pinon bearing

* components of puller and installer kit P22A-84

◆ Service procedure

1 **Removal and installation of snap ring**

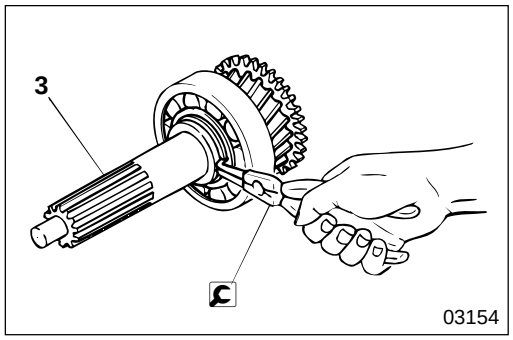

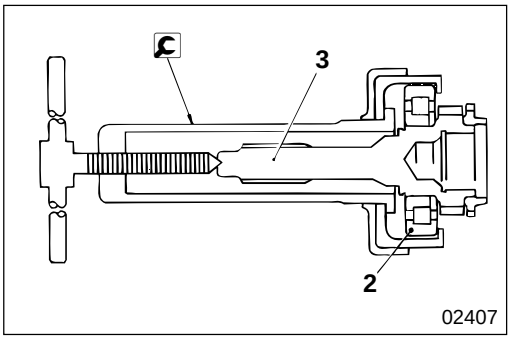

2 Drive pinion bearing

[Removal]

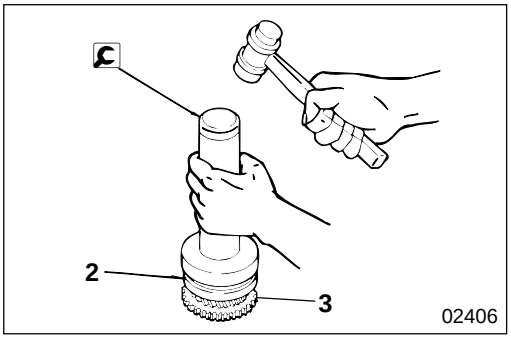

[Installation]

MAINSHAFT ASSEMBLY < S5 >

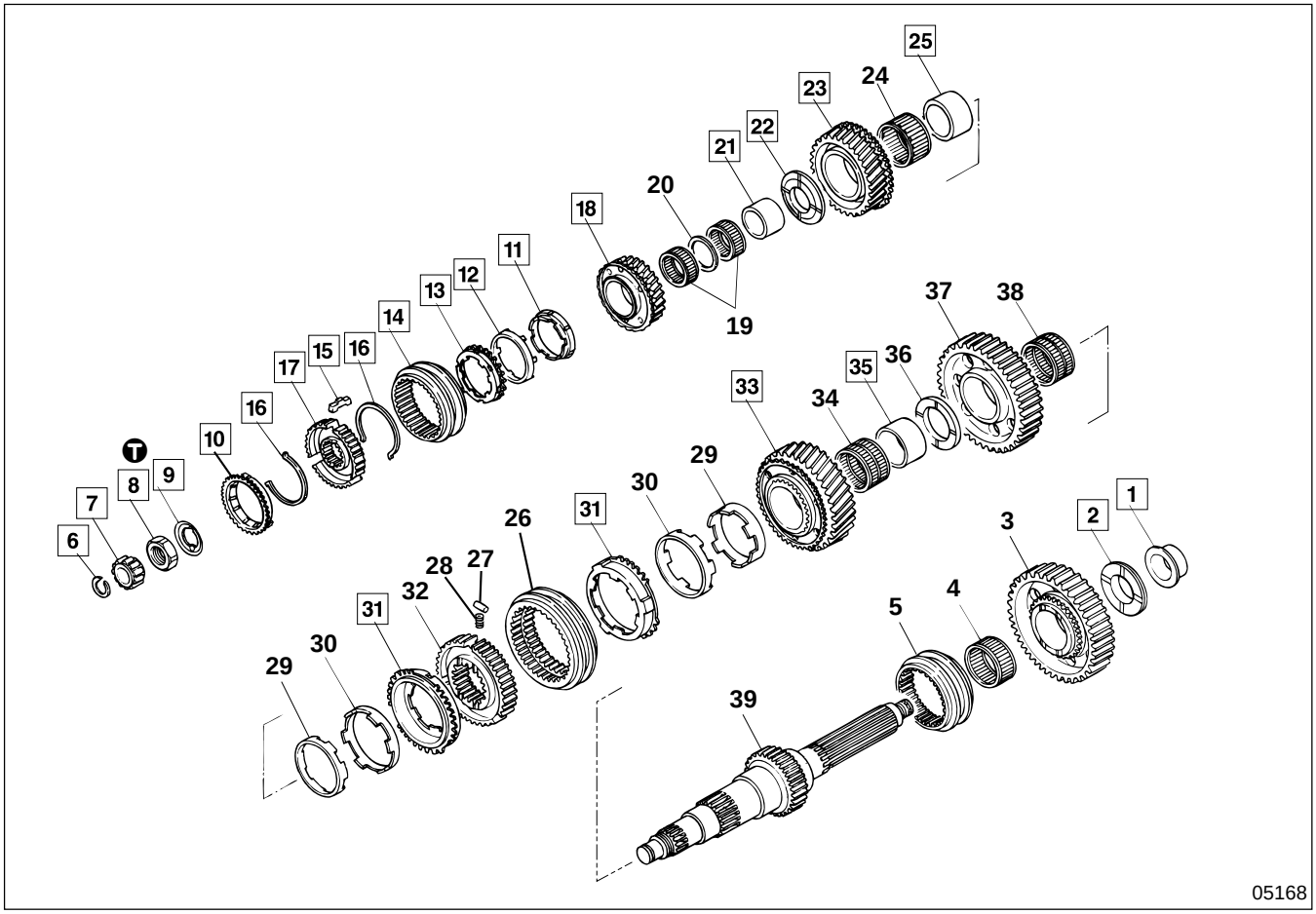

● **Work before disassembly**

P22A-61

● **Disassembly sequence**

1 Mainshaft rear bearing inner race
2 Reverse gear thrust washer
3 Reverse gear
4 Needle bearing
5 Sleeve
6 Snap ring
7 Pilot bearing
8 Lock nut
9 Lock washer
10 Synchronizer ring
11 Synchronizer inner ring
12 Synchronizer center cone
13 Synchronizer outer ring
14 Synchronizer sleeve
15 Shifting key
16 Shifting key spring
17 Synchronizer hub
18 4th gear assembly
19 Needle bearing
20 Bearing spacer
21 4th gear bearing sleeve
22 3rd and 4th gear thrust washer
23 3rd gear assembly
24 Needle bearing
25 3rd gear bearing sleeve
26 Synchronizer sleeve
27 Shifting key
28 Synchronizer spring
29 Synchronizer inner ring
30 Synchronizer center cone
31 Synchronizer outer ring
32 Synchronizer hub
33 2nd gear assembly
34 Needle bearing
35 2nd gear bearing sleeve
36 1st and 2nd gear thrust washer
37 1st gear
38 Needle bearing
39 Mainshaft

● **Assembly sequence**

39→38→37→36→35→34→33 ┐
32→31→30→29→26→28→27 ┘ →25→24→23→22→21→20→19→18 ┐
17→16→15→13→14→15→12→11→10 ┘ →9→8→7→6→5→4→3→2→1

Service standards

Unit : mm {in.}

Location	Maintenance item	Standard value (Basic diameter in [ ])	Limit	Remedy
3	End play of reverse gear	0.15 to 0.35 {0.0059 to 0.014}	0.5 {0.020}	Replace gear or thrust washer
3, 4, 39	Play in the diameter direction after assembling reverse gear	—	0.12 {0.0047}	Replace
5, 39	Play in the rotating direction of sleeve and spline of mainshaft	0.052 to 0.148 {0.0020 to 0.0058}	0.3 {0.012}	Replace
7, 39	Play in the diameter direction after assembling pilot bearing	—	0.12 {0.0047}	Replace
10	Clearance between synchronizer ring and cone of drive pinion assembly	1.48 to 1.77 {0.058 to 0.070}	0.2 {0.0079}	Replace
10, 15	Clearance between synchronizer ring keyway and shifting key	4.75 to 4.95 {0.187 to 0.195}	5.8 {0.23}	Replace
13, 15	Clearance between synchronizer outer ring keyway and shifting key	4.75 to 4.95 {0.187 to 0.195}	5.8 {0.23}	Replace
13, 18	Clearance between synchronizer outer ring and cone area of 4th gear	1.5 to 2.0 {0.059 to 0.079}	0.2 {0.0079}	Replace
14, 17	Play in the rotating direction of synchronizer sleeve and synchronizer hub	0.052 to 0.148 {0.0020 to 0.0058}	0.3 {0.012}	Replace
15, 17	Clearance between shifting key and synchronizer hub keyway	0.05 to 0.2 {0.0020 to 0.0079}	0.5 {0.020}	Replace
19	End play of 4th gear	0.25 to 0.4 {0.0098 to 0.016}	0.5 {0.020}	Replace gear or thrust washer
18, 19, 21, 39	Play in the diameter direction after assembling 4th gear	—	0.12 {0.0047}	Replace
21	Outer diameter of 4th gear bearing sleeve	$[54]^{-0.030}_{-0.043}$ {$[2.12]^{-0.0012}_{-0.0017}$}	– 0.1 {– 0.0039}	Replace
23	End play of 3rd gear	0.15 to 0.35 {0.0059 to 0.014}	0.5 {0.020}	Replace gear or thrust washer
23, 31	Clearance between cone area of 3rd gear and synchronizer outer ring	1.21 to 1.79 {0.048 to 0.070}	0.2 {0.0079}	Replace
23, 24, 25, 39	Play in the diameter direction after assembling 3rd gear	—	0.12 {0.0047}	Replace
25	Outer diameter of 3rd gear bearing sleeve	$[68]^{-0.030}_{-0.043}$ {$[2.68]^{-0.0012}_{-0.0017}$}	– 0.1 {– 0.0039}	Replace
31, 33	Clearance between synchronizer outer ring and cone area of 2nd gear	1.21 to 1.79 {0.048 to 0.070}	0.5 {0.020}	Replace
33	End play of 2nd gear	0.15 to 0.35 {0.0059 to 0.014}	0.5 {0.020}	Replace gear or thrust washer
33, 34, 35, 39	Play in the diameter direction after assembling 2nd gear	—	0.12 {0.0047}	Replace
35	Outer diameter of 2nd gear bearing sleeve	$[71]^{-0.030}_{-0.043}$ {$[2.8]^{-0.0012}_{-0.0017}$}	– 0.1 {– 0.0039}	Replace
37	End play of 1st gear	0.15 to 0.35 {0.0059 to 0.014}	0.5 {0.020}	Replace gear or thrust washer
37, 38, 39	Play in the diameter direction after assembling 1st gear	—	0.12 {0.0047}	Replace

MAINSHAFT ASSEMBLY < S5 >

Tightening torque

Unit : N·m {lbf.ft, kgf·m}

Location	Parts to be tightened	Tightening torque	Remarks
8	Lock nut	245 {180, 25}	—

Special tools

Unit : mm {in.}

Location	Tool name and shape	Part No.	Application
1, 21, 25, 35	Gear puller 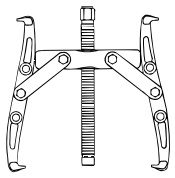 01148	MH062308	Removal of bearing sleeve
6	Snap ring expander 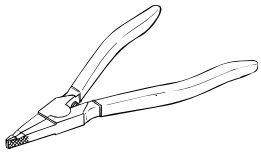 01137	MH061268	Removal and installation of snap ring
7	Pilot bearing puller 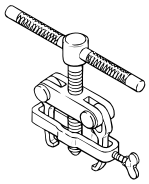 01146	MH061043	Removal of pilot bearing
	Pilot bearing installer 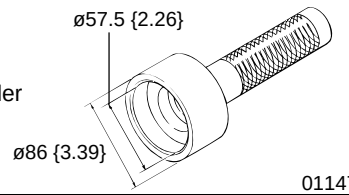 01147	*ME624236	Installation of pilot bearing
8	Single spanner 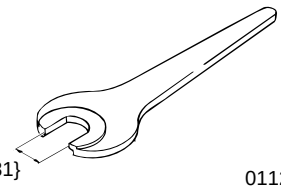 01126	MH061555	Removal and installation of lock nut

* components of puller and installer kit P22A-84

◆ Service procedure

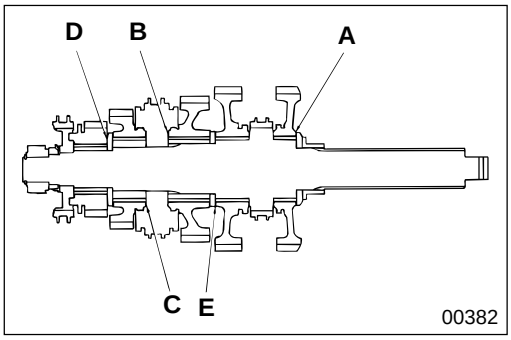

● Work before disassembly

[Inspection]

(1) End play of gears

A : Reverse gear
B : 2nd gear
C : 3rd gear
D : 4th gear
E : 1st gear

If the measured value is higher than the limit, replace the faulty parts.

Also inspect this item after assembly and make sure that the measured value is within the limit.

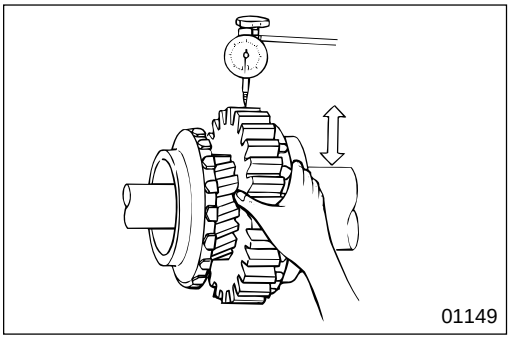

(2) Play of gears in diameter direction

If the measured value is higher than the limit, replace the faulty parts. Also inspect this item after assembly and make sure that the measured value is within the limit.

CAUTION⚠

Be sure when you replace the two needle bearings of a gear, that both needle bearings are from the same color package.

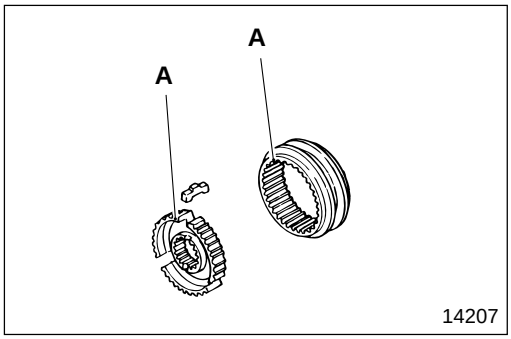

[Alignment marks]

(1) Synchronizer sleeve and synchronizer hub

Before disassembling the synchronizer sleeve and the synchronizer hub, put alignment marks **A** on the places where the shifting keys are installed. When reusing parts, align the alignment marks to assemble.

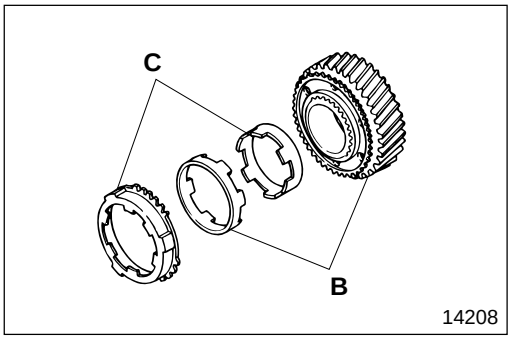

(2) Ring, cone and gear assembly of double cone synchronizer

Before disassembling synchronizer center cone and gear assembly (**B**), and synchronizer center ring and synchronizer outer ring (**C**), put alignment marks on them. When reusing parts, align the alignment marks to assemble.

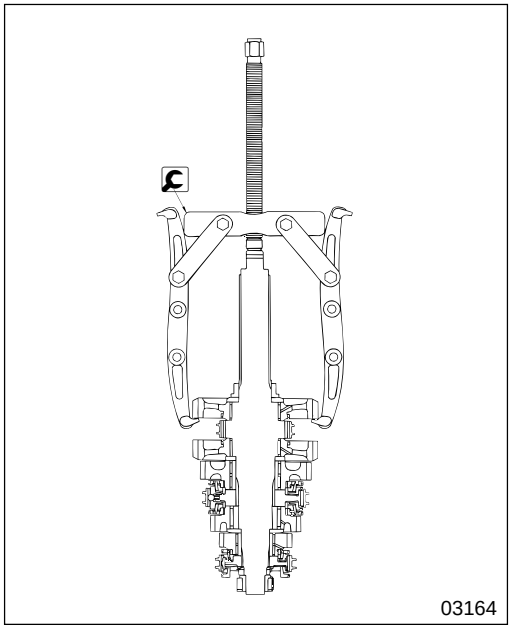

1 **Removal of mainshaft rear bearing inner race**

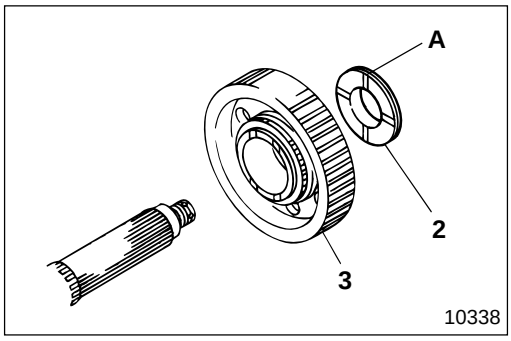

2 **Installation of reverse gear thrust washer**

A : Oil groove

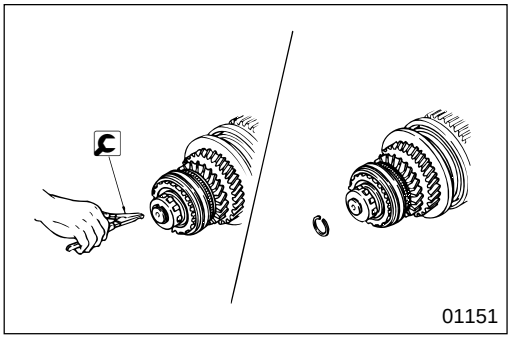

6 **Removal and installation of snap ring**

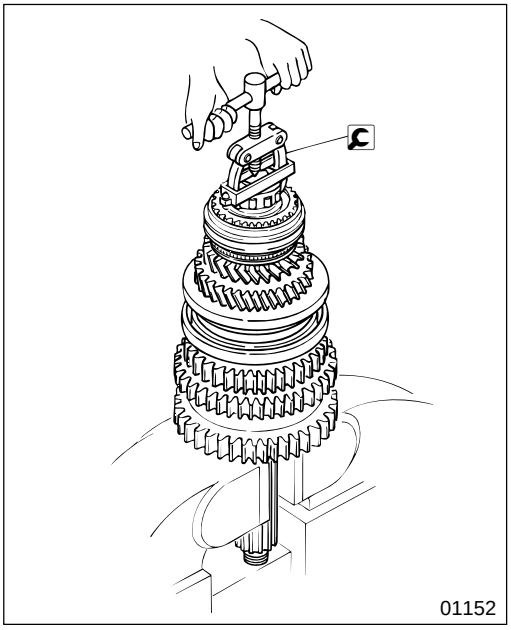

7 **Pilot bearing**

[Removal]

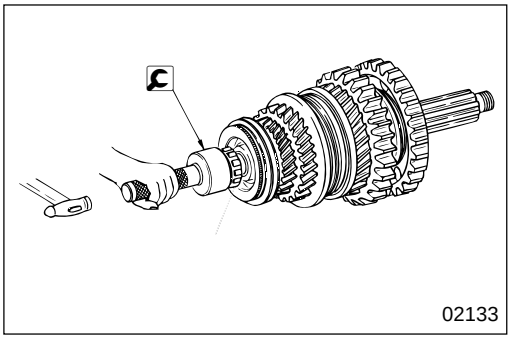

[Installation]

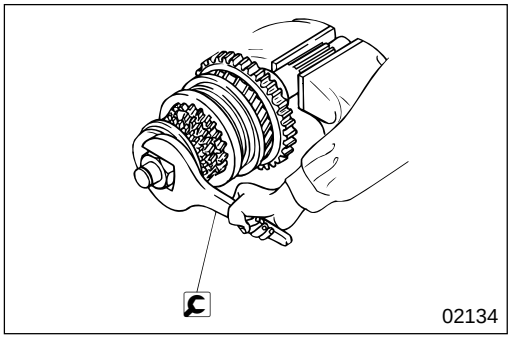

8 **Removal and installation of lock nut**

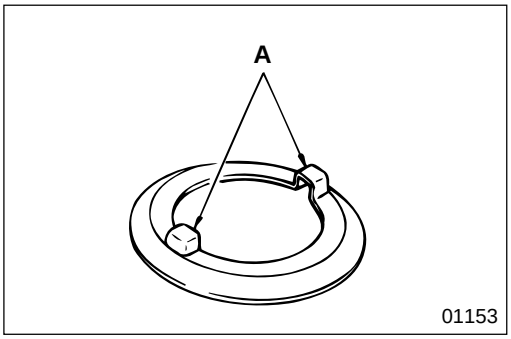

9 **Installation of lock washer**

Install so that protrusions **A** (two points as illustrated) fit into the grooves of synchronizer hub **17**.

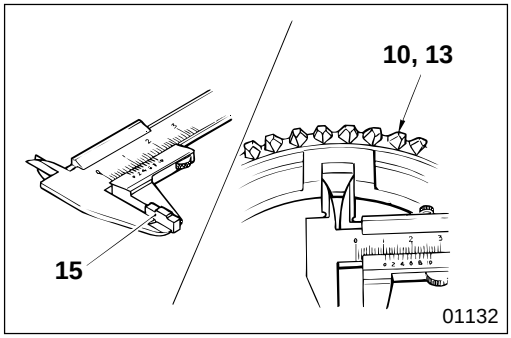

10 to 18 Synchromesh mechanism and 4th gear

[Inspection]

(1) Clearance between synchronizer ring 10 or outer ring 13 and shifting key 15

If the measured value is higher than the limit, replace the faulty parts.

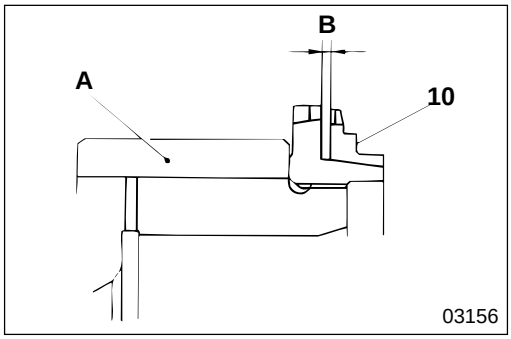

(2) Clearance between synchronizer ring 10 and drive pinion

- Measure clearance **B** between synchronizer ring **10** and the gear cone of drive pinon **A**.
- When measuring this value, press synchronizer ring **10** evenly, and measure all around the circumference.
- If the measured value is lower than the limit, replace the faulty parts.

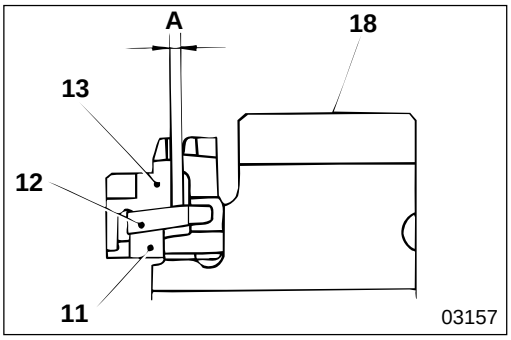

(3) Clearance between synchronizer outer ring and 4th gear

- Measure clearance **A** between synchronizer outer ring **13** and the gear cone of 4th gear **18**.
- When measuring this value, press synchronizer inner ring **11**, center cone **12**, and the outer ring evenly and measure all around the circumference.
- If the measured value is lower than the limit, replace the faulty parts.

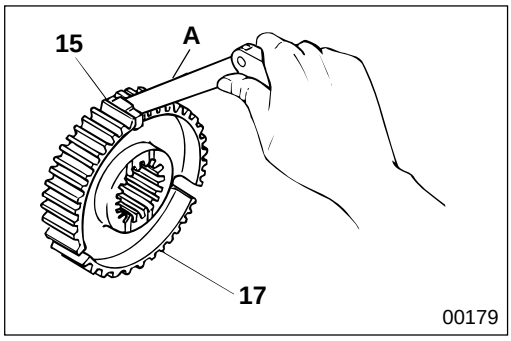

(4) Clearance between shifting key 15 and synchronizer hub 17

If the measured value is higher than the limit, replace the faulty parts.

A : Feeler gauge

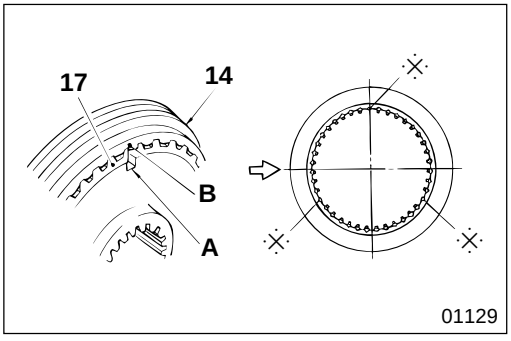

[Installation]

- Align the three keyways **A** of synchronizer hub **17** with the three stub teeth **B** (illustrated by ·⁜· mark) of synchronizer sleeve **14** to install the synchronizer hub.
- To reassemble synchronizer hub **17** and synchronizer sleeve **14**, align the alignment marks made during diassembly.

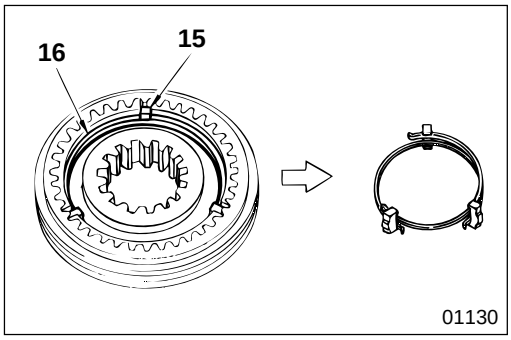

- Insert shifting key **15** into the keyway.
- Install shifting key spring **16** so that its opening is offset from the one of the shifting key.
- Make sure that the openings of shifting key springs do not align with each other.

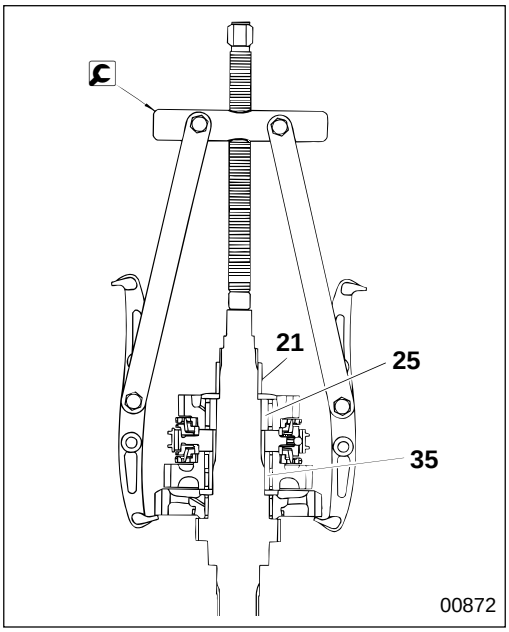

21 **25** **35** **Removal of 4th, 3rd, 2nd gear bearing sleeves**

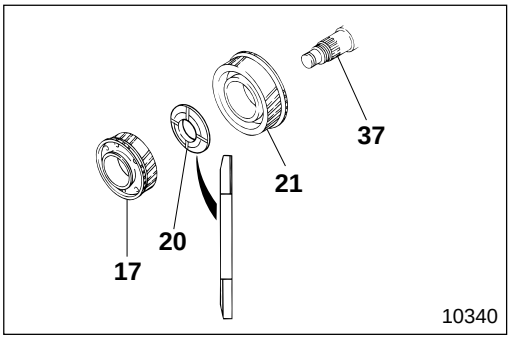

21 **Installation of 3rd and 4th gear thrust washer**

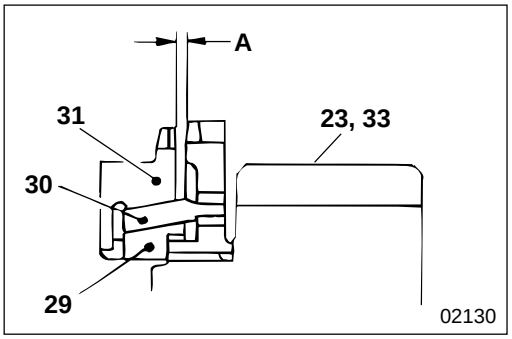

23 **31** **33** **Clearance between synchronizer outer ring and 3rd gear assembly or 2nd gear assembly**

- Measure clearance **A** between synchronizer outer ring **31** and the cone of 3rd gear assembly **23** or 2nd gear assembly **33**.
- When measuring this value, press synchronizer inner ring **29**, synchronizer outer ring **31** and synchronizer center ring **30** evenly and measure all around the circumference.
- If the measured value is higher than the limit, replace the faulty parts.

MAINSHAFT ASSEMBLY < S6 >

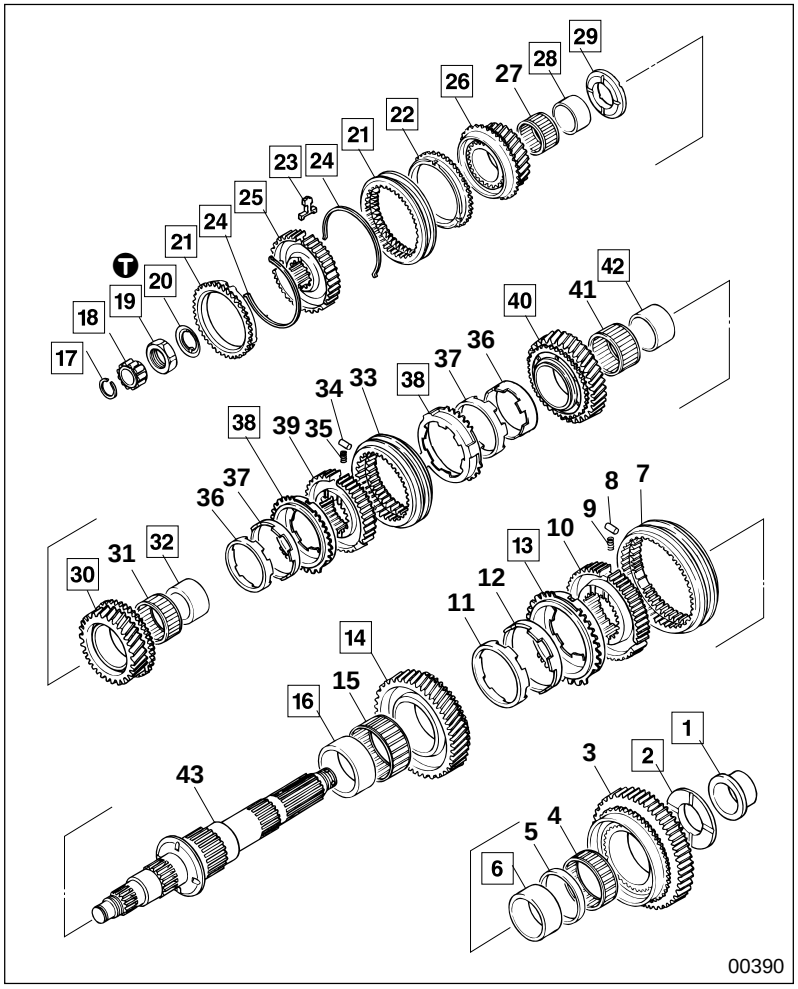

● **Assembly sequence**

39→38→37→36→35→33→34
38→37→36
→32→31→30→29→28→27→26
43→42→41→40
25→22→23→24→21→24→21
→20→19→18→17→16→15→14
→6→5→4→3→2→1
10→13→12→11→9→7→8

● **Work before disassembly**

P22A-69

● **Disassembly sequence**

1 Mainshaft rear bearing inner race
2 1st gear thrust washer
3 1st gear
4 Needle bearing
5 Bearing spacer
6 1st gear bearing sleeve
7 Synchronizer sleeve
8 Shifting key
9 Shifting key spring
10 Synchronizer hub
11 Synchronizer inner ring
12 Synchronizer center cone
13 Synchronizer outer ring
14 2nd gear
15 Needle bearing
16 2nd gear bearing sleeve
17 Snap ring
18 Pilot bearing
19 Lock nut
20 Lock washer
21 Synchronizer ring
22 Synchronizer sleeve
23 Shifting key
24 Shifting key spring
25 Synchronizer hub
26 5th gear assembly
27 Needle bearing
28 5th gear bearing sleeve
29 4th and 5th gear thrust washer
30 4th gear assembly
31 Needle bearing
32 4th gear bearing sleeve
33 Synchronizer sleeve
34 Shifting key
35 Shifting key spring
36 Synchronizer inner ring
37 Synchronizer center cone
38 Synchronizer outer ring
39 Synchronizer hub
40 3rd gear assembly
41 Needle bearing
42 3rd gear bearing sleeve
43 Mainshaft

Service standards

Unit : mm {in.}

Location	Maintenance item	Standard value (Basic diameter in [ ])	Limit	Remedy
3	End play of 1st gear	0.35 to 0.55 {0.014 to 0.022}	0.75 {0.030}	Replace gear or thrust washer
3, 4, 5, 6, 43	Play in the diameter direction after assembling 1st gear	—	0.1 {0.0039}	Replace
6	Outer diameter of 1st gear bearing sleeve	$[96]^{-0.030}_{-0.043}$ {$[3.78]^{-0.0012}_{-0.0017}$}	– 0.1 {– 0.0039}	Replace
7, 10	Play in the rotating direction of synchronizer sleeve and synchronizer hub	0.052 to 0.148 {0.0020 to 0.0058}	0.3 {0.012}	Replace
10, 43	Engagement in the rotating direction of synchronizer hub and mainshaft	–0.005 to 0.114 {–0.0002 to 0.0045}	0.2 {0.0079}	Replace
13, 14	Clearance between cone area of 2nd gear and synchronizer outer ring	1.21 to 1.79 {0.048 to 0.070}	0.2 {0.0079}	Replace
14	End play of 2nd gear	0.35 to 0.55 {0.014 to 0.022}	0.75 {0.030}	Replace gear or thrust washer
14, 15, 16, 43	Play in the diameter direction after assembling 2nd gear	—	0.1 {0.0039}	Replace
16	Outer diameter of 2nd gear bearing sleeve	$[95]^{-0.030}_{-0.043}$ {$[3.74]^{-0.012}_{-0.017}$}	– 0.1 {– 0.0039}	Replace
18, 43	Play in the diameter direction after assembling pilot bearing	—	0.12 {0.0047}	Replace
21	Clearance between synchronizer ring and cone area of drive pinion	1.49 to 1.86 {0.059 to 0.073}	0.2 {0.0079}	Replace
21, 25	Clearance between synchronizer ring and synchronizer hub groove	4.7 to 5.3 {0.19 to 0.21}	6.5 {0.26}	Replace
21, 26	Clearance between cone area of 5th gear and synchronizer ring	1.49 to 1.86 {0.059 to 0.073}	0.2 {0.0079}	Replace
22, 25	Play in the rotating direction of synchronizer sleeve and synchronizer hub	0.052 to 0.148 {0.0020 to 0.0058}	0.3 {0.012}	Replace
23, 25	Engagement in the rotating direction of synchronizer hub and mainshaft	0.05 to 0.20 {0.0020 to 0.0079}	0.5 {0.020}	Replace
25, 43	Mating part in rotating direction on synchronizer hub and mainshaft	–0.006 to –0.094 {–0.00024 to –0.0037}	0.2 {0.0079}	Replace
26	End play of 5th gear	0.25 to 0.40 {0.0098 to 0.016}	0.6 {0.024}	Replace gear or thrust washer
26, 27, 28, 43	Play in the diameter direction after assembling 5th gear	—	0.1 {0.0039}	Replace
28	Outer diameter of 5th gear bearing sleeve	$[60]^{-0.030}_{-0.043}$ {$[2.36]^{-0.0012}_{-0.0017}$}	– 0.1 {– 0.0039}	Replace
30	End play of 4th gear	0.15 to 0.35 {0.0059 to 0.014}	0.55 {0.022}	Replace gear or thrust washer
30, 31, 32, 43	Play in the diameter direction after assembling 4th gear	—	0.1 {0.0039}	Replace

MAINSHAFT ASSEMBLY < S6 >

Unit : mm {in.}

Location	Maintenance item	Standard value (Basic diameter in [ ])	Limit	Remedy
30, 38	Clearance between cone area of 4th gear and synchronizer outer ring	1.21 to 1.79 {0.048 to 0.070}	0.2 {0.0079}	Replace
32	Outer diameter of 4th gear bearing sleeve	$[71]^{-0.030}_{-0.043}$ {$[2.80]^{-0.0012}_{-0.0017}$}	–0.1 {–0.0039}	Replace
33, 39	Play in the rotating direction of synchronizer sleeve and synchronizer hub	0.052 to 0.148 {0.002 to 0.0058}	0.3 {0.012}	Replace
38, 40	Clearance between cone area of 3rd gear and synchronizer outer ring	1.21 to 1.79 {0.048 to 0.070}	0.2 {0.0079}	Replace
39, 43	Engagement in the rotating direction of synchronizer hub and mainshaft	-0.005 to 0.114 {-0.0002 to 0.0045}	0.2 {0.0079}	Replace
40	End play of 3rd gear	0.15 to 0.35 {0.0059 to 0.014}	0.55 {0.22}	Replace gear or thrust washer
40, 41, 42, 43	Play in the diameter direction after assembling 3rd gear	—	0.1 {0.0039}	Replace

Tightening torque

Unit : N·m {lbf.ft, kgf·m}

Location	Parts to be tightened	Tightening torque	Remarks
19	Lock nut	315 {230, 32}	—

Special tools

Location	Tool name and shape	Part No.	Application
1, 6, 28, 32	Gear puller 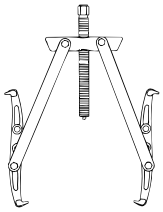 03160	MH062250	Removal of mainshaft rear bearing inner race and bearing sleeves
17	Snap ring expander 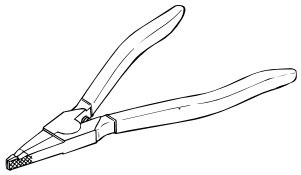 01137	MH061268	Removal and installation of snap ring
18	Pilot bearing puller 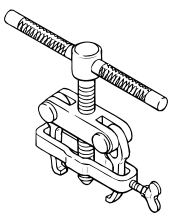 01146	MH061043	Removal of pilot bearing

Unit : mm {in.}

Location	Tool name and shape	Part No.	Application
18	Pilot bearing installer 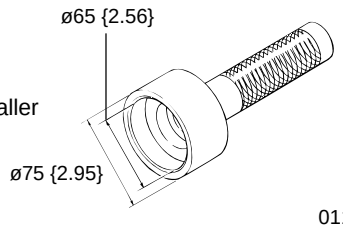	*MH062628	Installation of pilot bearing
19	Single spanner 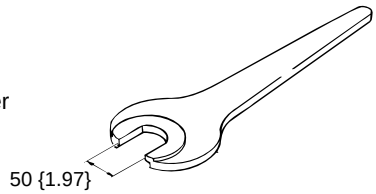	MH063101	Removal and installation of lock nut

* components of puller and installer kit P22A-84

◆ Service procedure

● Work before disassembly

[Inspection]

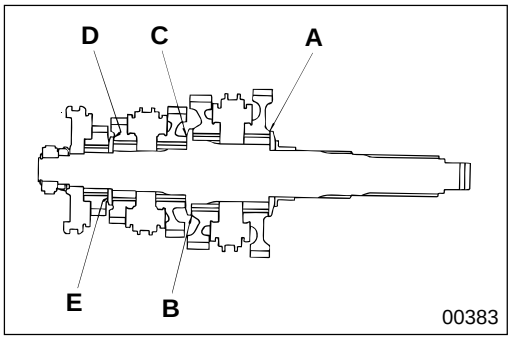

(1) End play of gears

A : 1st gear
B : 2nd gear
C : 3rd gear
D : 4th gear
E : 5th gear

If the measured value is higher than the limit, replace the faulty parts.

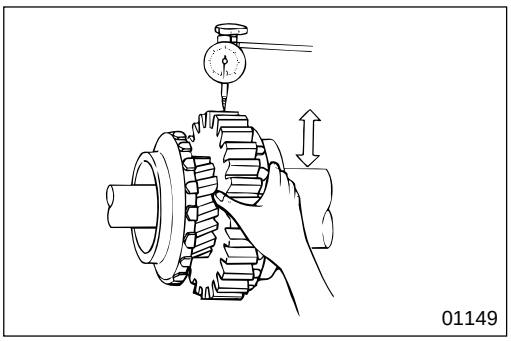

(2) Play of gears in diameter direction

If the measured value is higher than the limit, replace the faulty parts.

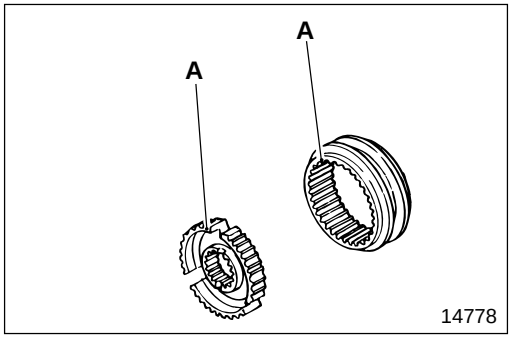

[Alignment marks]

(1) Synchronizer sleeve and synchronizer hub

Before disassembling the synchronizer sleeve and the synchronizer hub, put alignment marks **A** on the places where the shifting keys are installed. When reusing parts, align the alignment marks to assemble.

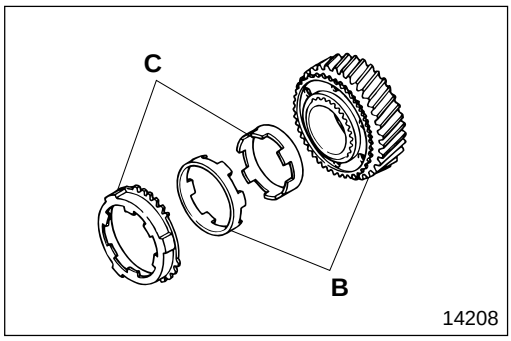

(2) Ring, cone and gear assembly of double cone synchronizer

Before disassembling synchronizer center cone and gear assembly (**B**), and synchronizer center ring and synchronizer outer ring (**C**), put alignment marks on them. When reusing parts, align the alignment marks to assemble.

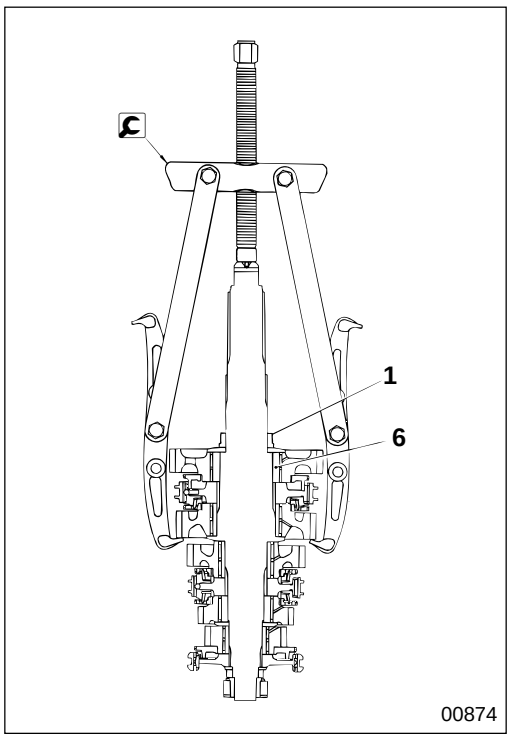

1 6 Removal of mainshaft rear bearing inner race and 1st gear bearing sleeve

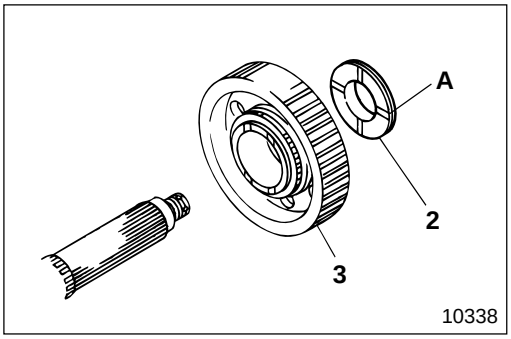

2 **Installation of 1st gear thrust washer**

A : Oil groove

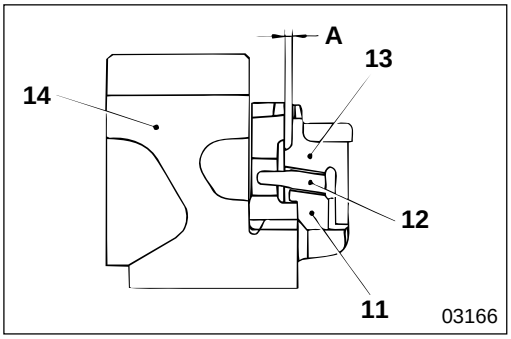

13 **14** **Clearance between synchronizer outer ring and 2nd gear assembly**

- Measure clearance **A** between synchronizer outer ring **13** and the cone of 2nd gear assembly **14**.
- When measuring this value, press synchronizer inner ring **11**, center cone **12** and outer ring **13** evenly and measure all around the circumference.
- If the measured value is lower than the limit, replace the faulty parts.

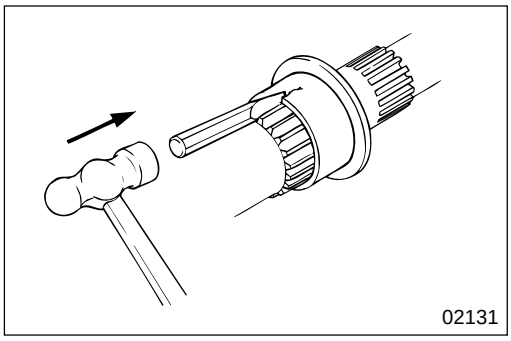

16 **Removal of 2nd gear bearing sleeve**

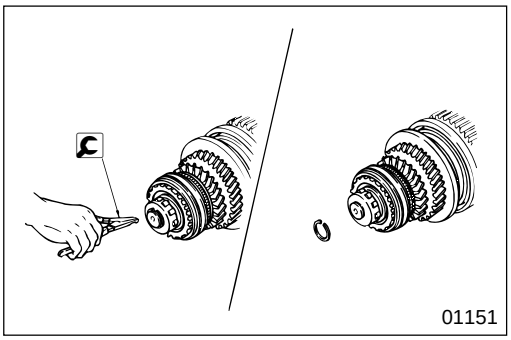

17 **Removal and installation of snap ring**

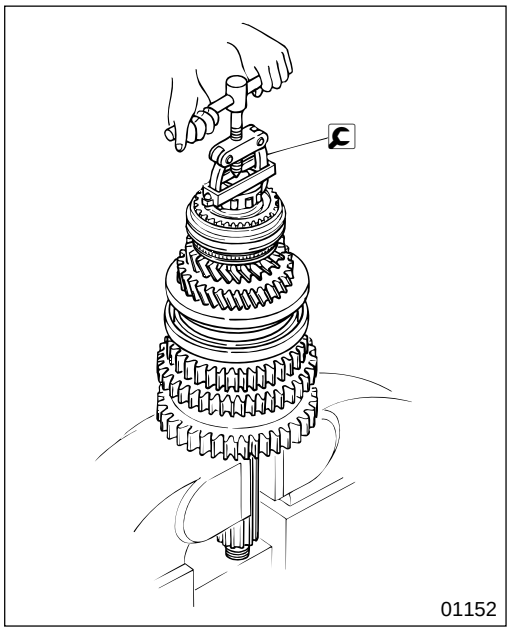

18 **Pilot bearing**

[Removal]

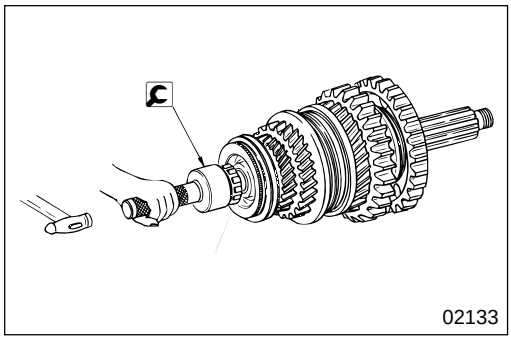

[Installation]

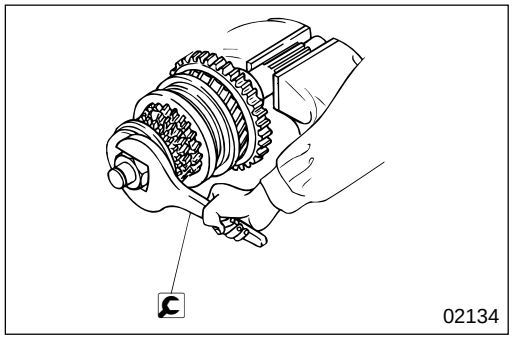

19 **Removal and installation of lock nut**

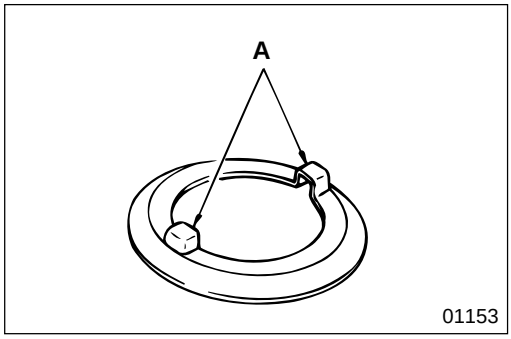

20 **Installation of lock washer**

Install so that protrusions **A** (two points as illustrated) fit into the grooves of synchronizer hub **25**.

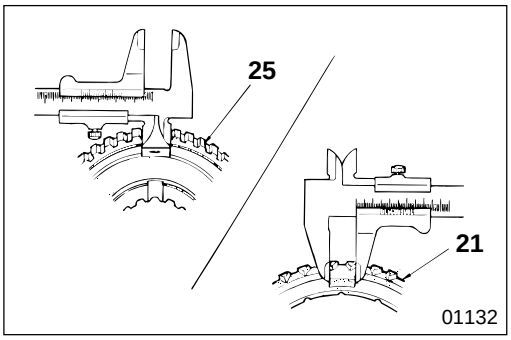

21 to 26 Synchromesh mechanism and 5th gear

[Inspection]

(1) Clearance between the protrusion of synchronizer ring 21 and the groove of synchronizer hub 25

If the measured value is higher than the limit, replace the faulty parts.

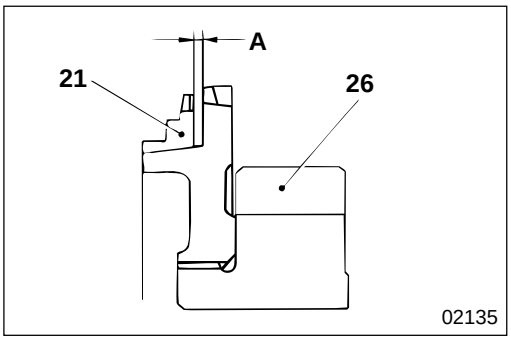

(2) Clearance between synchronizer ring 21 and 5th gear assembly 26 or drive pinion

- Measure the clearance between synchronizer ring **21** and the gear cone of 5th gear assembly **26** or drive pinion
- When measuring this value, press synchronizer ring **21** evenly **1** and measure all around the circumference.
- If the measured value is lower than the limit, replace the faulty parts.

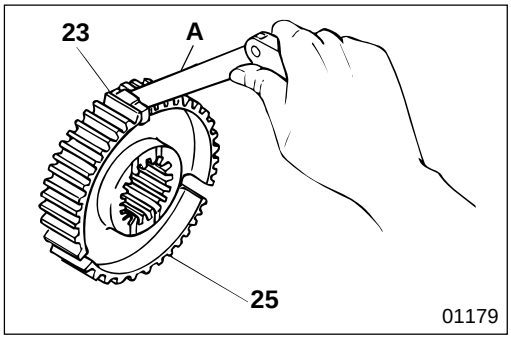

(3) Clearance between shifting key 23 and synchronizer hub 25.

if the measured value is higher than the limit, replace the faulty parts.

A : Feeler gauge

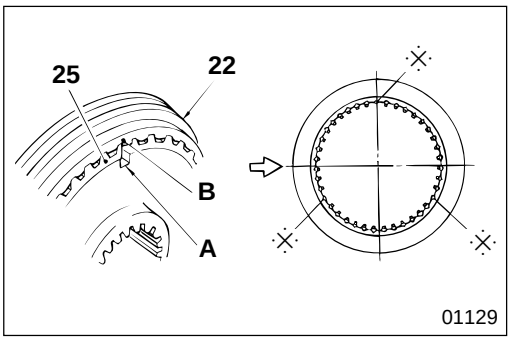

[Installation]

- Align the three keyways **A** of synchronizer hub **25** with the three stub teeth **B** (illustrated by ·⁜· mark) of synchronizer sleeve **22** to install the synchronizer hub.
- To reassemble synchronizer hub **25** and synchronizer sleeve **22**, align the alignment marks made during disassembly.

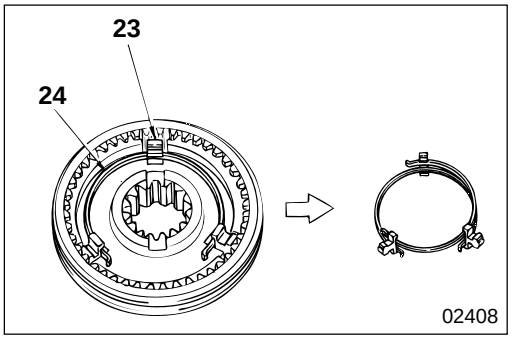

- Insert shifting key **23** into the keyway.
- Install shifting key spring **24** so that its opening is offset from the one on the shifting key.
- Make sure that the openings of shifting key springs do not align with each other.

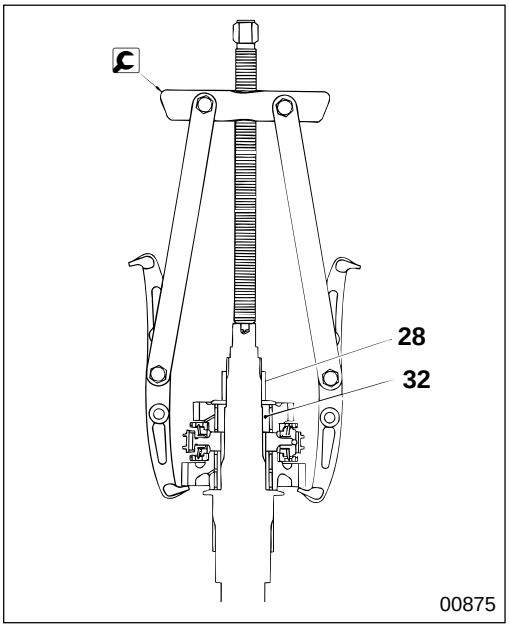

28 **32** **Removal of 5th gear bearing 4 th sleeves**

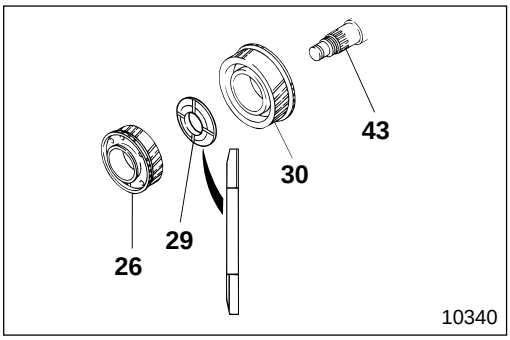

29 **Installation of 4th and 5th gear thrust washer**

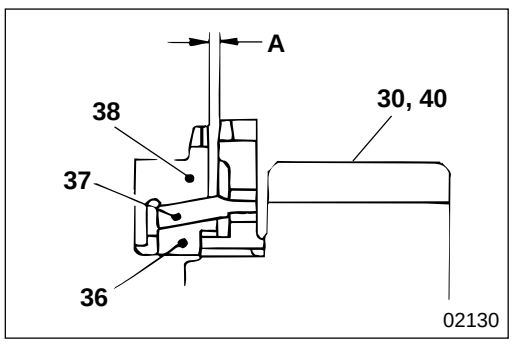

30 **38** **40** **Clearance between synchronizer outer ring and 3rd gear assembly or 4th gear assembly**

- Measure clearance **A** between synchronizer outer ring **38** and the cone of 3rd gear assembly **40** or 4th gear assembly **30**.
- When measuring this value, press synchronizer inner ring **36**, synchronizer center cone **37** and synchronizer outer ring **38** evenly and measure all around the circumference.
- If the measured value is lower than the limit, replace the faulty parts.

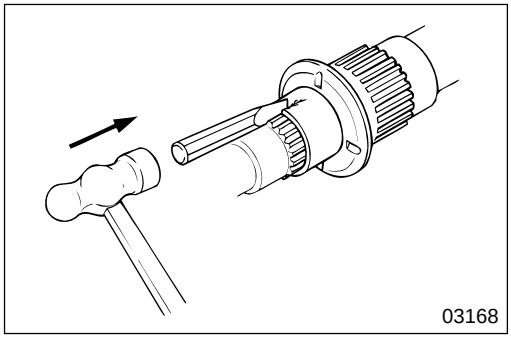

42 **Removal of 3rd gear bearing sleeve**

COUNTERSHAFT ASSEMBLY

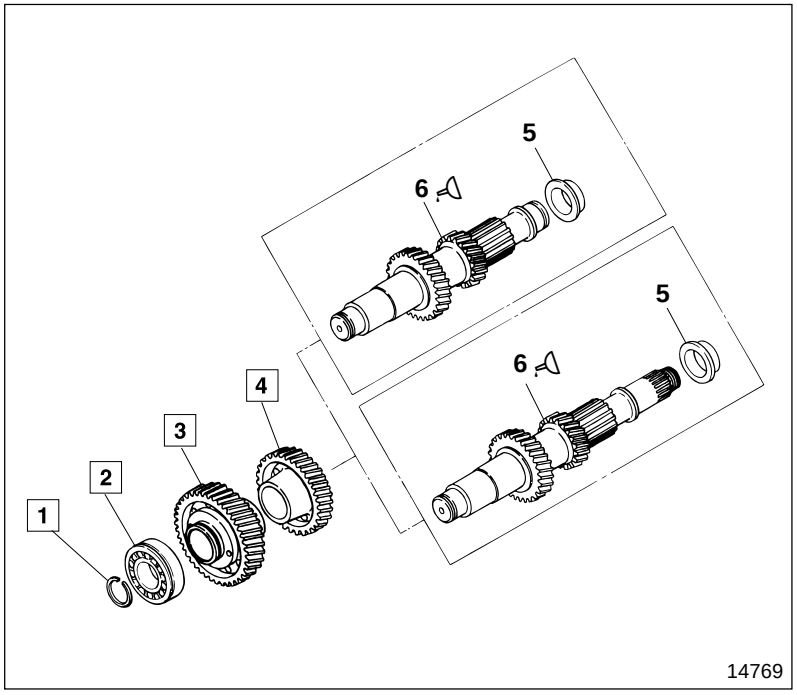

● **Disassembly sequence**

1 Snap ring
2 Countershaft front bearing
3 Countershaft constant mesh gear
4 Countershaft 4th gear < S5 >
Countershaft 5th gear < S6 >
5 Countershaft rear bearing inner race
6 Countershaft

● **Assembly sequence**

Follow the disassembly sequence in reverse.

Sealant

Location	Points of application	Kinds	Quantity
6	Gear installation area of countershaft	THREEBOND 1375B	As required

Special tools

Location	Tool name and shape	Part No.	Application
1	Snap ring expander 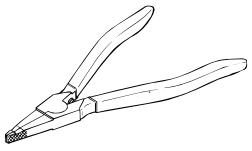 01137	MH061268	Removal and installation of snap rings of countershaft bearing
2	Countershaft bearing puller 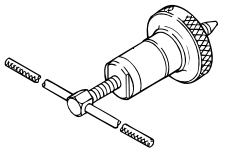 01139	< S5 > *MH062426 < S6 > *MH062429	Removal of countershaft front bearing
	Countershaft bearing installer 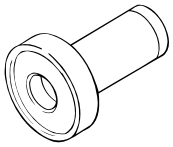 02141	< S5 > *ME624233 < S6 > *MH062630	Installation of countershaft front bearing

Unit : mm {in.}

Location	Tool name and shape	Part No.	Application
3, 4	Countershaft gear puller 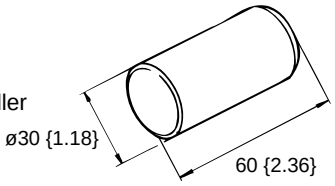	ME624243	Removal of countershaft gear
	Countershaft gear installer 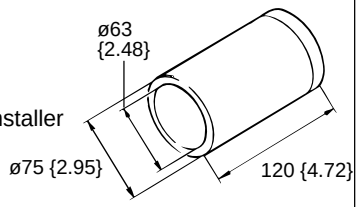	MH061740	Press-fitting of countershaft gear

* components of puller and installer kit 🕮 P22A-84

◆ Service procedure

1 Removal and installation of snap ring

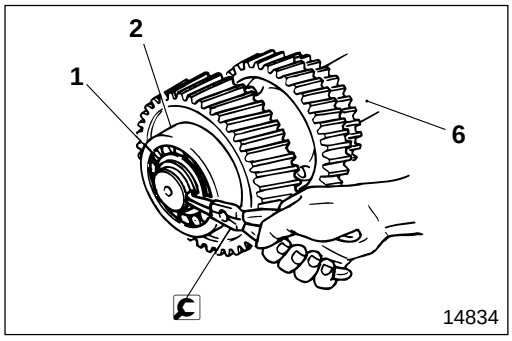

COUNTERSHAFT ASSEMBLY

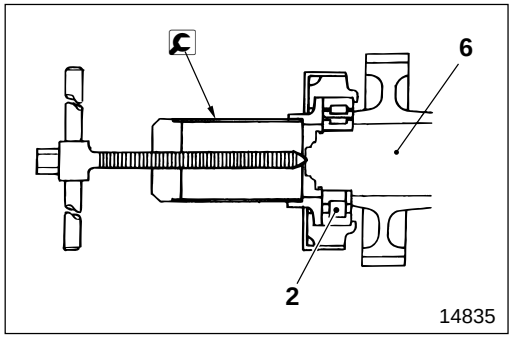

2 **Countershaft front bearing**

[Removal]

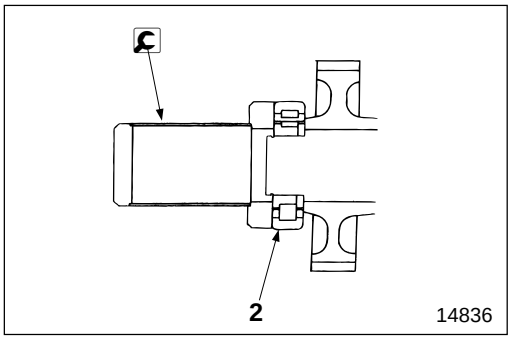

[Installation]

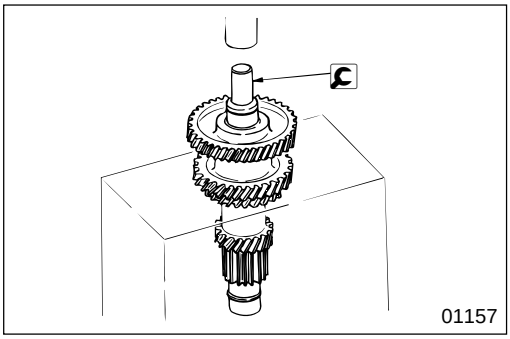

3 **4** **Countershaft constant mesh gear and countershaft 4th gear**

[Removal]
Use a press.

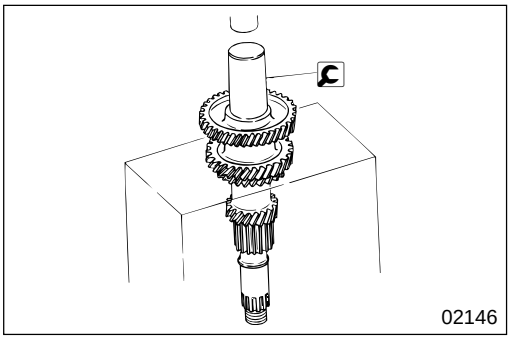

[Installation]
Use a press.

M E M O

TRANSMISSION CONTROL

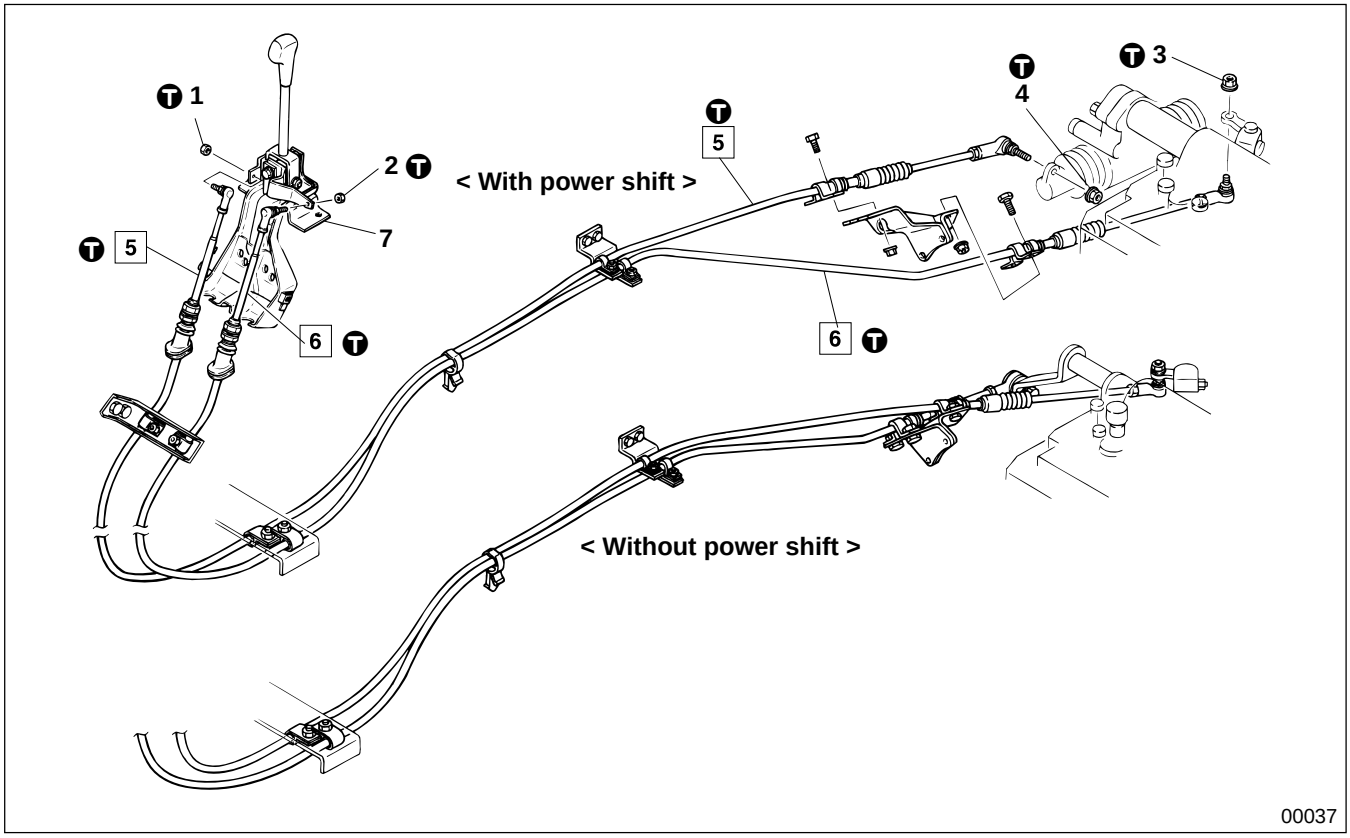

For removal and installation of the shift lever console or floor console, refer to Gr 42.

CAUTION

When mounting shift cable 5 and selector cable 6 to the frame, do not mistake the vertical relationship between the shift cable and the selector cable. This relationship is opposite in vehicles with power shift and those without.

● **Disassembly sequence**

1 Nut
2 Nut
3 Nut
4 Nut
5 Shift cable
6 Selector cable
7 Transmission control lever assembly P22A-83

● **Assembly sequence**

Follow the disassembly sequence in reverse.

Tightening torque

Unit : N·m {lbf.ft, kgf·m}

Location	Parts to be tightened	Tightening torque	Remarks
1 to 4	Nut (Ball joint or rubber damper mounting)	19 to 24 {14 to 17, 1.9 to 2.4}	—
5, 6	Cable lock nut tightening	59 to 83 {43 to 61, 6 to 8.5}	—

◆ Service procedure

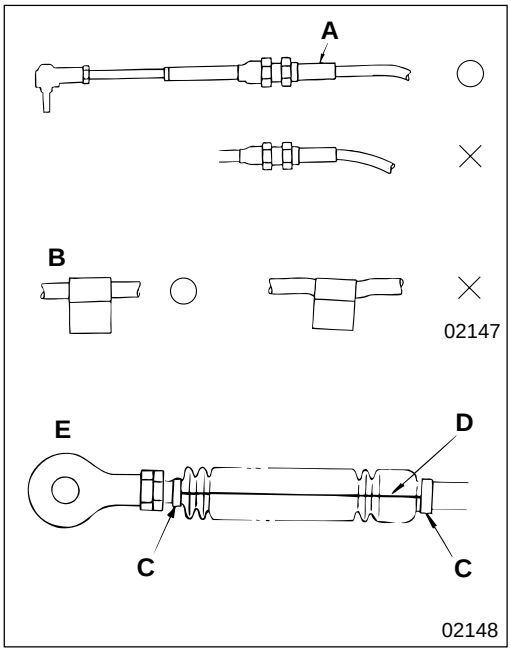

5 **6** **Installation of shift cable and selector cable**

CAUTION⚠

- **Make sure the identification marks on the cable, ball joint L, and rubber damper M point in the right direction when you install the cables. Installing the cables with the identification marks in the wrong direction can remarkably reduce the durability of the cables.**
- **Install casing cap A lengthwise.**
- **Make sure the radius of the bend is 200 mm {7.87 in.} or more.**
- **Make sure the cable operates smoothly.**
- **Install the clamp vertically against the cable. (Figure B)**
- **Do not twist clamps C at both ends of the boot. Make sure that white line D on the boot is straight. (Figure E)**

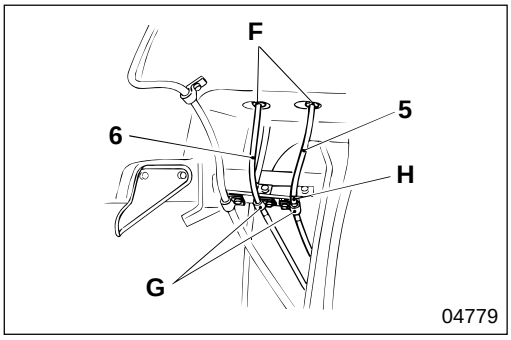

- Insert shift cable **5** and selector cable **6** under the cab floor and clamp them in the correct place by identifying identification mark **H** on the shift cable. (The selector cable has no identification mark.)
  F : Grommet
  G : Clip

< With Power Shift >

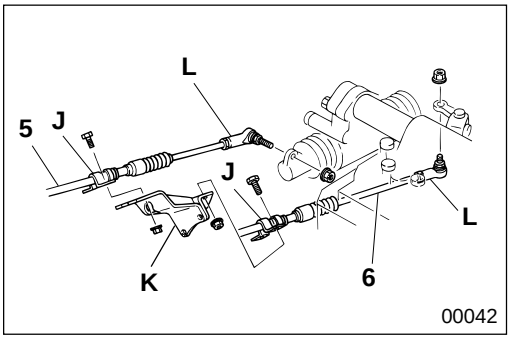

- Install cable clip **J** to bracket **K** temporarily and connect ball joint **L** or rubber damper **M** to the shift lever or selector lever.
- Arrange the cable so that it not twisted, then tighten clip **J** permanently.

CAUTION⚠

Make sure that ball joint L and rubber dumper M face the correct direction.

< Without Power Shift >

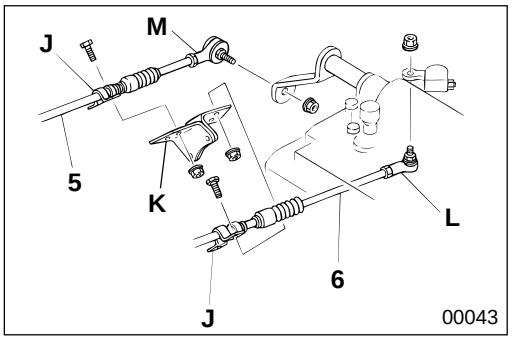

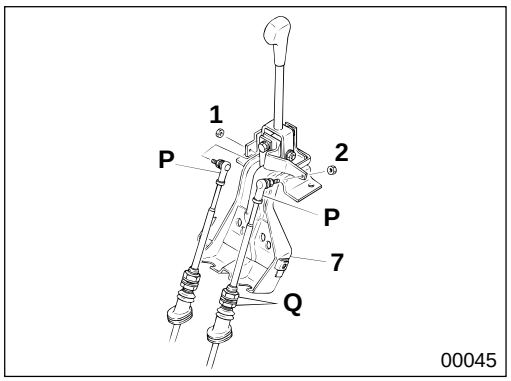

- Tilt the cab down.
- Install the cable on set board assembly **7** temporarily and connect ball joint **P** to shift lever **A** and selector lever **B**.
- Arrange the cable so that it is not twisted, then tighten lock nuts **Q** permanently.

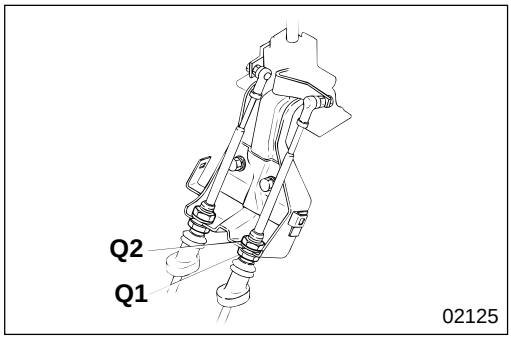

CAUTION ⚠

- **Make sure that ball joint L faces the correct direction.**
- **When installing the lock nut, tighten lower nut Q1. Do not move nut Q2.**

- Make sure when you operate the gear shift lever that it shifts smoothly and selects each position.

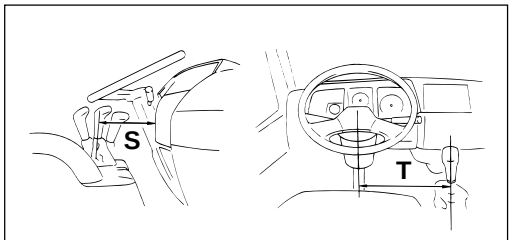

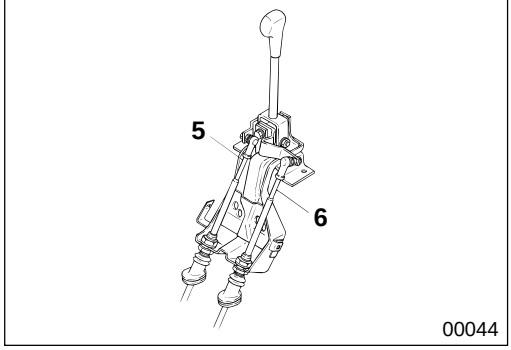

- If the gear shift lever leans to the front or rear, or to the left or right, excessively, adjust the length of the cable.
- When positioning the gear shift lever, use the distance from the center of the steering wheel or from the instrument panel as the reference distance.

Unit : mm {in.}

Front and rear direction S (Distance from the instrument panel)	Left and right direction T (Distance from the steering wheel center)
214 {8.43}	409 {16.1} (< S5 > 4th and 5th gear position) (< S6 > 3rd and 4th gear position)

	Shift cable **5**	Selector cable **6**
To front	Shorten	—
To rear	Lengthen	—
To left	—	Shorten
To right	—	Lengthen

Transmission Control Lever Assembly

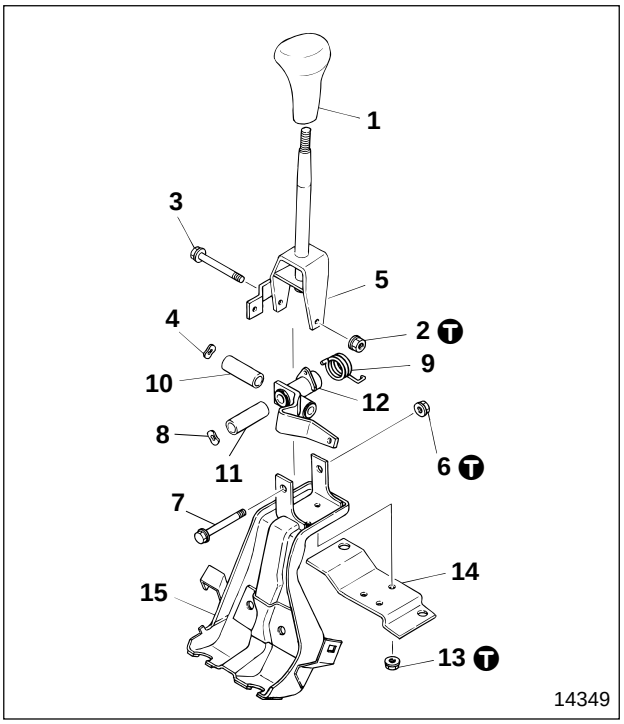

● **Disassembly sequence**

1 Shift knob
2 Nut
3 Bolt
4 Washer
5 Shift lever
6 Nut
7 Bolt
8 Washer
9 Return spring < S6 >
10 Collar
11 Collar
12 Select lever
13 Nut
14 Bracket
15 Set board

● **Assembly sequence**

15→14→13 →8→7→6→5→4→3→2→1
12→11→10→9

T Tightening torque

Unit : N·m {lbf.ft, kgf·m}

Location	Parts to be tightened	Tightening torque	Remarks
2	Nut (Shift lever mounting)	19 to 28 {14 to 21, 1.9 to 2.9}	—
6	Nut (Selector lever mounting)	19 to 28 {14 to 21, 1.9 to 2.9}	—
13	Nut (Bracket mounting)	3.9 to 5.9 {2.9 to 4.3, 0.4 to 0.6}	—

Lubricant

Location	Points of application	Kinds	Quantity
—	All sliding areas	Chassis grease [NLGI No.1 (Ca soap)]	As required

PULLER AND INSTALLER KIT

Component	Name / Part No.	Puller and installer kit		Bearing puller for S5			Bearing puller for S6			
		< S5 >	< S6 >							
		MH062425	MH062444	MH061731	MH061732	MH062426	MH062440	MH062429	MH062432	MH062433
MH062428	Protector	○	○			○	○	○		
MH062427	Claw	○				○				
ME624235	Installer	○	○							
ME624234	Installer	○								
ME624233	Installer	○								
ME624236	Installer	○								
MH061162	Handle	○	○	○	○	○	○	○	○	○
ME624232	Bolt	○	○	○	○	○	○	○	○	○
MH061735	Body	○	○		○		○			
MH061734	Body	○	○	○		○		○	○	
ME624229	Protector	○	○	○	○				○	
MH062430	Claw	○	○				○	○		
ME624227	Claw	○			○					
ME624226	Claw	○		○						
MH062436	Body		○							○
MH062435	Protector		○							○
MH062642	Installer		○							
MH062634	Installer		○							
MH062630	Installer		○							
MH062628	Installer		○							
MH062434	Claw		○							○
ME624228	Claw		○						○	

The puller and installer kit consists of principal bearing pullers and installers selected from the special tools used in this work group. For an installer use a component of this kit independently, and for a puller use the components of this kit in combination.

MITSUBISHI
FUSO

FK.FM
Service Manual

Group 22B
Manual Transmission
< M8S2x5 >

Table of Contents

MITSUBISHI FUSO TRUCK OF AMERICA, Inc.

BACK HOME

Pub No. TWME9503-22B

GROUP 22B MANUAL TRANSMISSION < M8S2×5 >

SPECIFICATIONS 2

STRUCTURE AND OPERATION 3

TROUBLESHOOTING 12

WORK BEFORE REMOVAL AND INSTALLATION OF TRANSMISSION ASSEMBLY 14

REMOVAL AND INSTALLATION OF TRANSMISSION ASSEMBLY .. 16

GEAR SHIFTER UPPER 20

POWER SHIFT ASSEMBLY 24

GEAR SHIFTER LOWER 30

REAR COVER 34

SPLITTER 38

SPLITTER UPPER ASSEMBLY 44

POWER CYLINDER 45

TRANSMISSION BODY 46

MAINSHAFT ASSEMBLY 54

COUNTERSHAFT ASSEMBLY 62

TRANSMISSION CONTROL 64

SPLITTER CONTROL 68

SPECIFICATIONS

Item		Specifications	
Mode of control		Floor shift remote control	
Transmission model		M8S2×5 splitter-changeover, direct-drive, 10-speed type	
Gear ratio	Splitter	LOW	HIGH
	1st	10.060	7.767
	2nd	5.894	4.551
	3rd	3.466	2.676
	4th	2.055	1.587
	5th	1.295	1.000
	Reverse	10.002	7.722
Oil capacity	L {qts}	17 {18.0}	
Mass	kg {lb}	277 {610}	
Power shift	Manufacturer	JIDOSHA KIKI	

Transmission

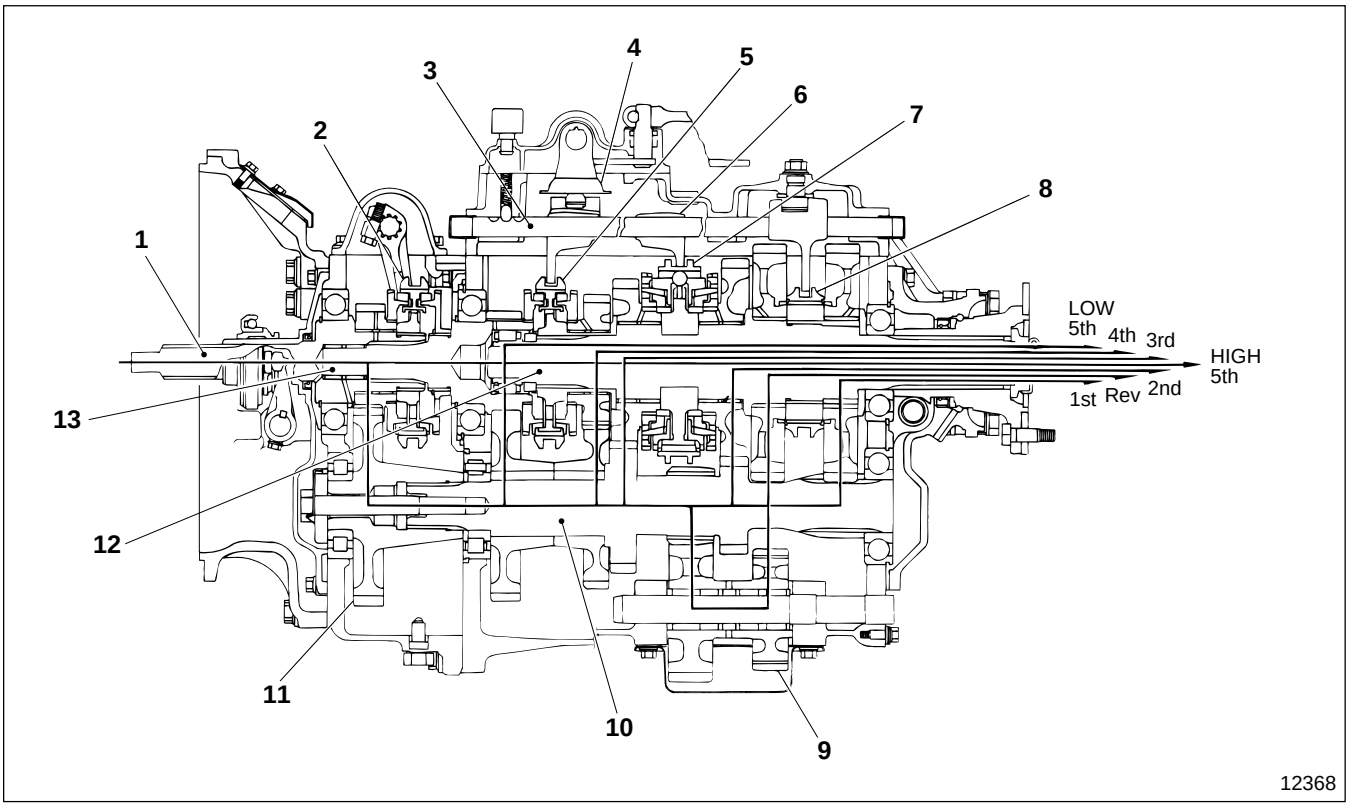

1 Input shaft
2 Splitter synchronizer assembly
3 Shift rail
4 Interlocking mechanism
5 4th and 5th synchronizer assembly
6 Shift fork
7 2nd and 3rd synchronizer assembly
8 1st and reverse constant mesh
9 Reverse idler gear
10 Countershaft
11 Splitter gear
12 Mainshaft
13 Drive pinion

The transmission changes revolution and torque produced by the engine into those that match the vehicle's power requirement (driving force). Revolution and torque are increased or decreased by making a selection from several sets of engaged gears.
The transmission can also change the direction of rotation of the engine output. As the engine always turns in one direction, this allows the vehicle to be reversed. The rotation of the drive pinion is transmitted to the countershaft by the constant mesh gear, and a change in speed is made as the gears, or gear sections, on this countershaft engage those on the mainshaft. In 5th speed the drive pinion rotation is transmitted directly. This M8S2×5 transmission is a HIGH and LOW splitter type. The selector switch on the gearshift lever permits selection of ten forward speeds and two reverse gears by combining 2-speed splitter gears and 5-speed transmission gears.
The power shift lightens the shift operating force of the transmission.

Synchromesh Mechanism

This vehicle has two synchromesh mechanisms, a single cone type, and a double cone type, and uses the key system. The single or double cone type is used depending on the gear positions as shown below:

Synchronizer type	Parts used
Single cone type	4th and 5th
Double cone type	2nd and 3rd

Single Cone Type

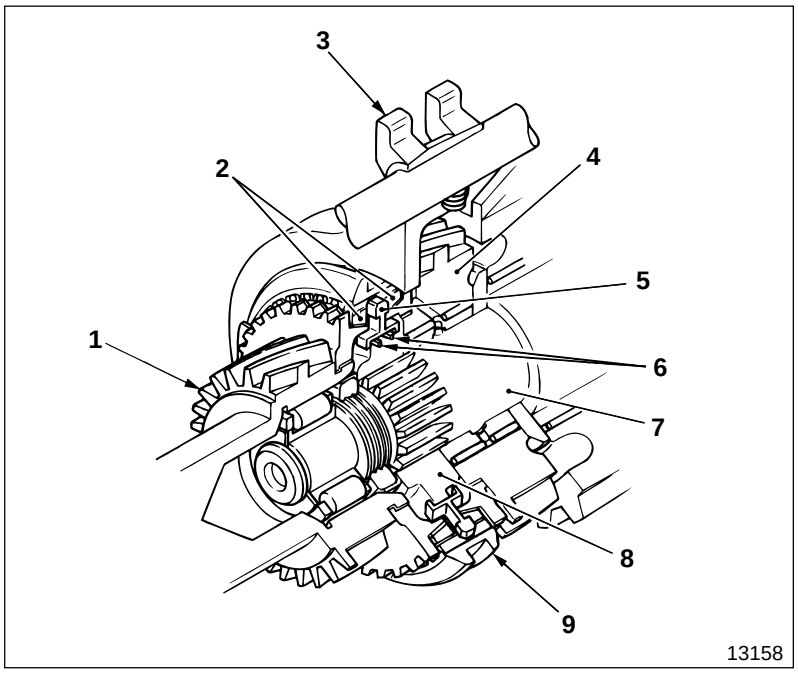

1 Drive pinion
2 Synchronizer ring
3 4th and 5th shift fork
4 4th gear
5 Shifting key
6 Shifting key spring
7 Mainshaft
8 Synchronizer hub
9 Synchronizer sleeve

- The inside of synchronizer hub **8** engages the spline of mainshaft **7** and rotates with it. The outside of the synchronizer hub has a spline that engages synchronizer sleeve **9** and three keyways.
- Shifting keys **5** are inserted into these keyways. When the gear shift is in neutral, a protrusion in the center of each shifting key engages a groove inside the synchronizer sleeve and the shifting keys are pressed against the inside of the synchronizer sleeve by shifting key springs **6**.
- Synchronizer rings **2** are inserted into drive pinions **1** in the front and rear of synchronizer hub **8**, and the taper cone of 4th gear **4**.
- Synchronizer rings **2** rotate relative to synchronizer sleeve **9** by the amount of play of the keyways.

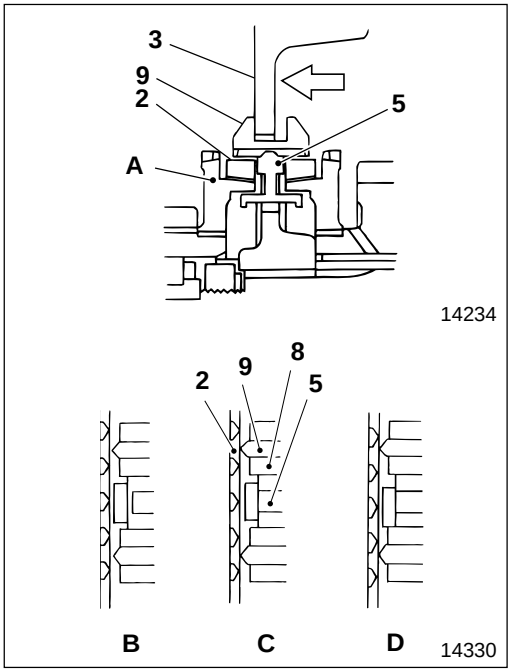

- When the gear shift is in neutral (Figure **B**), moving shift fork **3** in the direction of the arrow as illustrated, moves synchronizer sleeve **9** slightly to the left. At the same time, shifting key **5**, the central protrusion of which engages the synchronizer sleeve, moves to the left and presses synchronizer rings **2** against taper cone **A** of drive pinion **1**. (Figure **C**)
- When the taper surfaces of synchronizer rings **2** make contact with the taper cone of the drive pinion, the taper surfaces of the synchronizer rings act as cone clutches. This frictional torque rotates the synchronizer rings in the rotating direction of the drive pinion by the amount of play between synchronizer hub **8** and the synchronizer rings. The spline chamfers of the synchronizer rings and the spline chamfer of synchronizer sleeve **9** are offset from each other. (Figure **D**)
- The disengagement direction of synchronizer rings **2** is defined by the speed of rotation of the synchronizer—sleeve **9**, and the synchronized—drive pinion **1**. When increasing the vehicle speed by shifting up, disengagement is made in the opposite direction to rotation, and when decreasing the vehicle speed by shifting down, disengagement is made in the rotating direction.

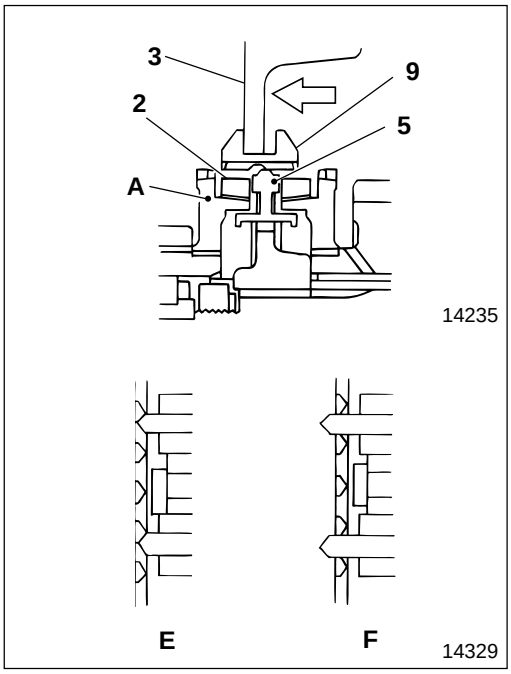

- When synchronizer sleeve **9** moves further to the left, synchronizer rings **2** prevent shifting key **5** from moving, and the synchronizer sleeve disengages from the protrusion of the shifting key.
- Since synchronizer rings **2** remain disengaged, the spline chamfer of synchronizer sleeve **9** presses the spline chamfers of the synchronizer rings, which in turn press the synchronizer rings against taper cone **A** of drive pinion **1**.
- As the frictional torque increases on the taper surfaces, the relative speed of the synchronizer and the synchronized gradually decreases.
  E : In synchronization
  F : After synchronization

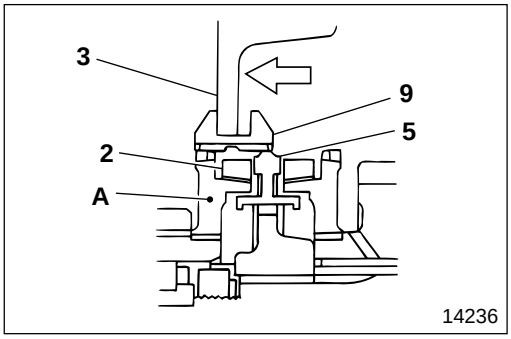

- When synchronizer sleeve **9** and drive pinion **1** rotate at the same speed, synchronizer rings **2** no longer prevent the synchronizer sleeve from moving, and the synchronizer sleeve moves further to the left and smoothly engages the spline of taper cone **A** of drive pinion **1**, transmitting the driving force.

Double Cone Type

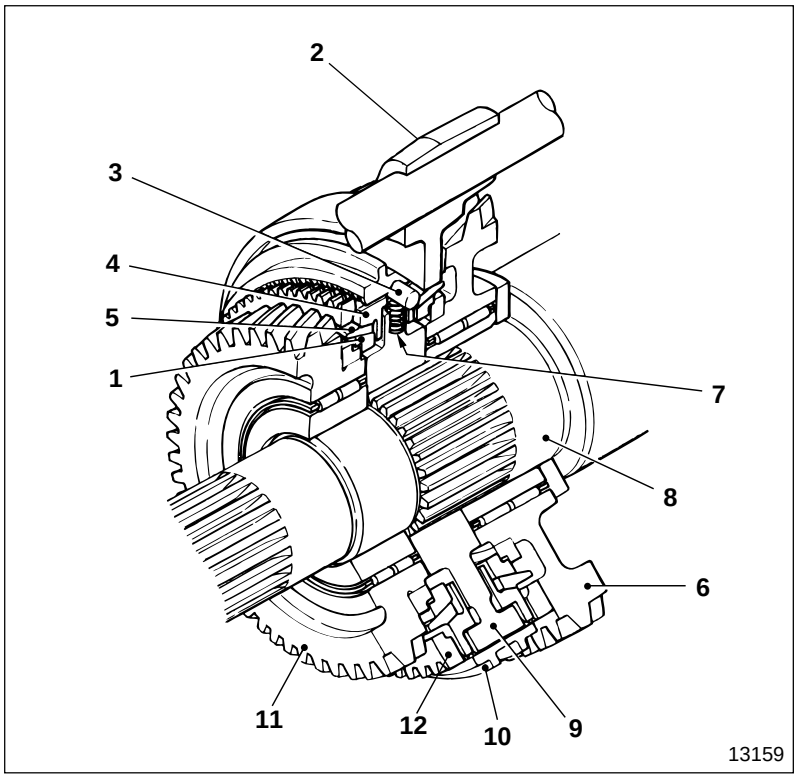

1 Synchronizer inner ring
2 2nd and 3rd shift fork
3 Shifting key
4 Synchronizer outer ring
5 Synchronizer center cone
6 2nd gear
7 Shifting key spring
8 Mainshaft
9 Synchronizer hub
10 Synchronizer sleeve
11 3rd gear
12 Dog clutch

The synchromesh structure and operation of the double cone type are basically the same as for the single cone type.

- Synchronizer center cone **5** is a taper cone independent of 2nd gear **6** and 3rd gear **11**, (both the inside and outside surfaces are tapered). The synchronizer center cone is between synchronizer inner ring **1** and synchronizer outer ring **4** to increase the synchronization capacity.
- Six protrusions on the outside of center cone **5** fit into corresponding gear holes, in the same manner as the taper cone of the single cone type. The center cone and the gear are installed as if integrated.
  Shifting key **3** is a cylinder installed so that the lengthwise direction of the cylinder is at right angles to the diameter direction of synchronizer hub **9**. Shifting key spring **7** is a coil spring inserted in a hole in the synchronizer hub, this spring presses the shifting key against the inside of synchronizer sleeve **10**.

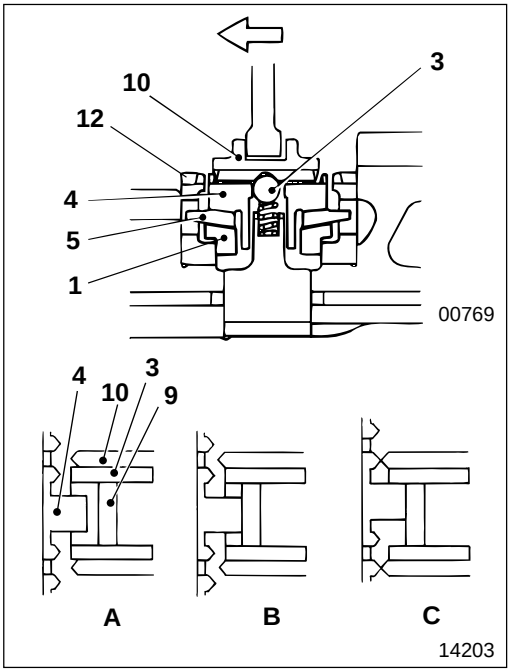

- When the gear shift is in neutral (Figure **A**), moving shift fork **2** in the direction of the arrow as illustrated, moves synchronizer sleeve **10** slightly to the left. At the same time, shifting key **3**, the central protrusion of which engages the synchronizer sleeve, moves to the left and presses synchronizer outer ring **4** against synchronizer center cone **5**. (Figure **B**)
- When the taper surface of synchronizer outer ring **4** makes contact with the taper cone of synchronizer center cone **5**, the taper surface of the synchronizer outer ring acts as a cone clutch. This frictional torque rotates the synchronizer outer ring in the rotating direction of 3rd gear **11** by the amount of play between the synchronizer outer ring and synchronizer hub **9**. The spline chamfer of the synchronizer outer ring and the spline chamfer of synchronizer sleeve **10** are offset from each other. (Figure **C**)
- The disengagement direction of synchronizer outer ring **4** is defined by the speed of rotation of the synchronizer—the sleeve, and the synchronized—3rd gear **11**. When increasing the vehicle speed by shifting up, disengagement is made in the opposite direction to rotation, and when decreasing the vehicle speed by shifting down, disengagement is made in the rotating direction.

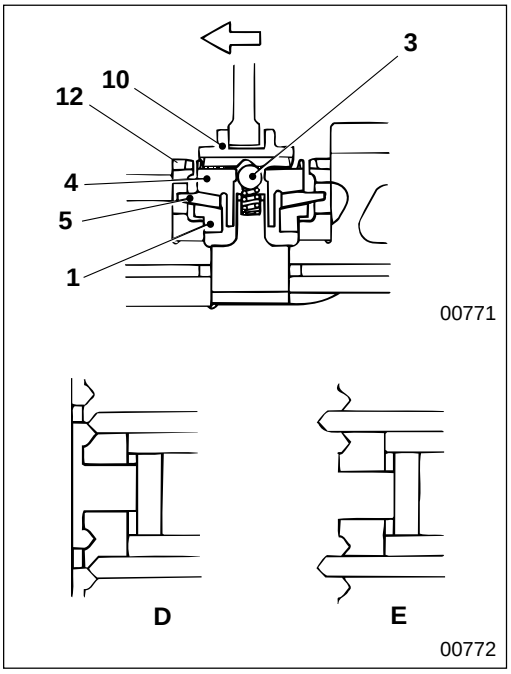

- When synchronizer sleeve **10** moves further to the left, synchronizer outer ring **4** prevents shifting key **3** from moving, and the synchronizer sleeve disengages from the protrusion of the shifting key.
- Since synchronizer outer ring **4** remains disengaged, the spline chamfer of synchronizer sleeve **10** presses the spline chamfer of the synchronizer outer ring, which in turn presses the synchronizer outer ring against the taper cone of synchronizer center cone **5**, and the frictional torque acts on the taper surface.
- As the frictional torque increases on the taper surface of synchronizer inner ring **1**, the relative speed of the synchronizer and the synchronized gradually decreases. The frictional torque acts on both sides of the synchronizer center cone. The double cone type has greater capacity for synchronization than the single cone type.
  D : In synchronization
  E : After synchronization

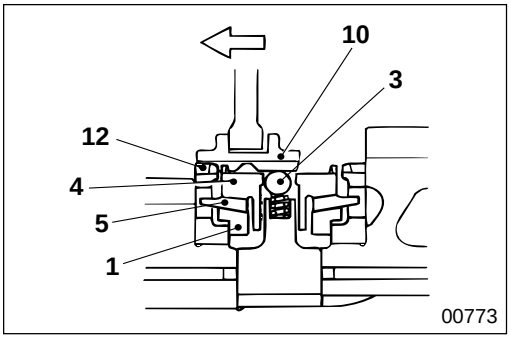

- When synchronizer sleeve **10** and 3rd gear **11** rotate at the same speed, synchronizer outer ring **4** no longer prevents the synchronizer sleeve from moving and the synchronizer sleeve moves further to the left and smoothly engages the spline of dog clutch **12** of the 3rd gear, transmitting the driving force.

Power Shift

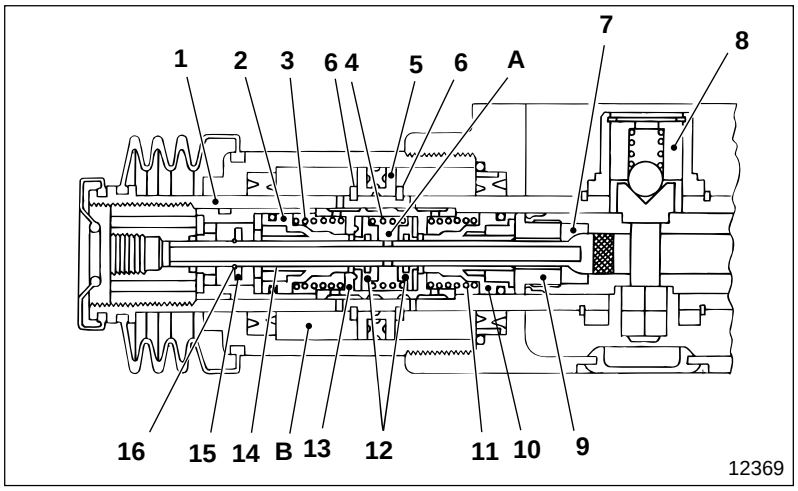

1 Shifter rod
2 Valve lifter
3 No.3 spring
4 No.2 spring
5 Piston
6 Retaining ring
7 Actuating rod
8 Striker
9 Cap
10 Valve lifter
11 No.1 spring
12 Valve seal
13 Valve seat
14 Pipe
15 Retainer
16 Retaining ring

A : Primary side chamber
B : Secondary side chamber

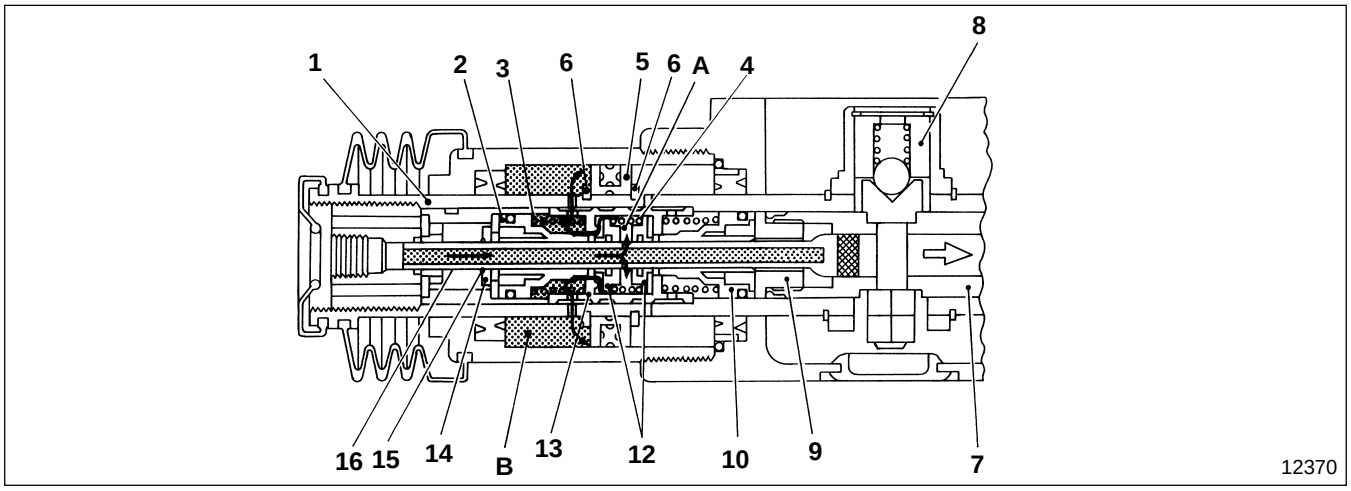

When activated

- When actuating rod **7** is moved in the direction of the arrow as illustrated, shifter rod **1** and the actuating rod move relative to this movement.
  Valve lifter **2** presses No.3 spring **3** against valve seal **12** to overcome the combined repercussive forces of the compressed air acting on the valve seal and No.2 spring **4**. The valve seal separates from valve seat **13**, and the compressed air supplied to primary side chamber **A** is let into secondary side chamber **B** via the opening between the valve seat and the valve seal. The compressed air flows into the cylinder through the hole and groove of the valve seal and the vent hole of shifter rod **1**, to put pressure on piston **5**, generating output.
- The output given to piston **5** is transmitted to shifter rod **1** via retaining ring **6** to assist striker **8** which is fixed on the shifter rod. This operates the shift fork on the transmission side, shifting the gears. Thus, gear shifting is completed.
- When the power shift operates in the direction of the arrow as illustrated, the input from the gear shift lever is transmitted by actuating rod **7** via cap **9**, pipe **14**, and retainer **15** fixed on retaining ring **16**. For operation in the opposite direction, all operations are the same in principle as in the direction of the arrow as illustrated, except that the end of the cap, fixed on the end of the actuating rod, presses valve lifter **10** directly.

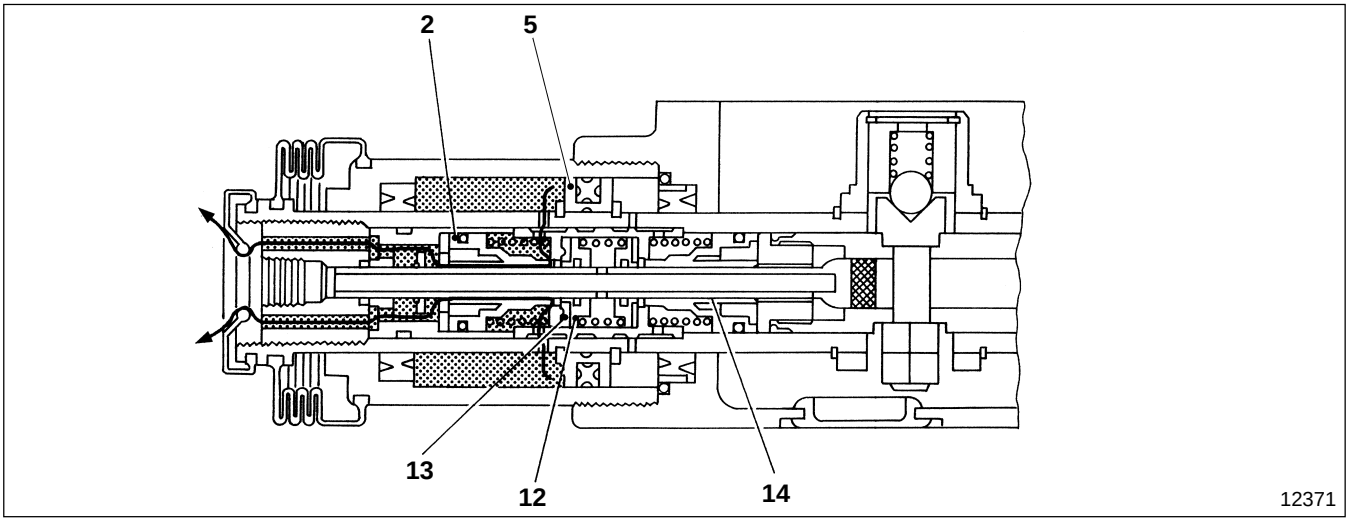

When releasing

- When gear shifting is completed and the input is released, actuating rod **7** is returned to the valve center position (the condition before operation) by the combined repercussive forces of the compressed air of valve lifter **2**, the steel ball, and valve springs **3**, **4**.
  As the valve lifter returns, valve seal **12** seats against valve seat **13**, cutting off the flow of compressed air from primary side chamber **A** to secondary side chamber **B**. As the input rod returns, clearance is generated between the valve lifter and the valve seal.
- The compressed air in the cylinder of secondary side chamber **B** is discharged into the atmosphere through the clearance between valve lifter **2** and pipe **14**. This eliminates the pressure difference between the chambers on both sides of piston **5**, so output is lost.

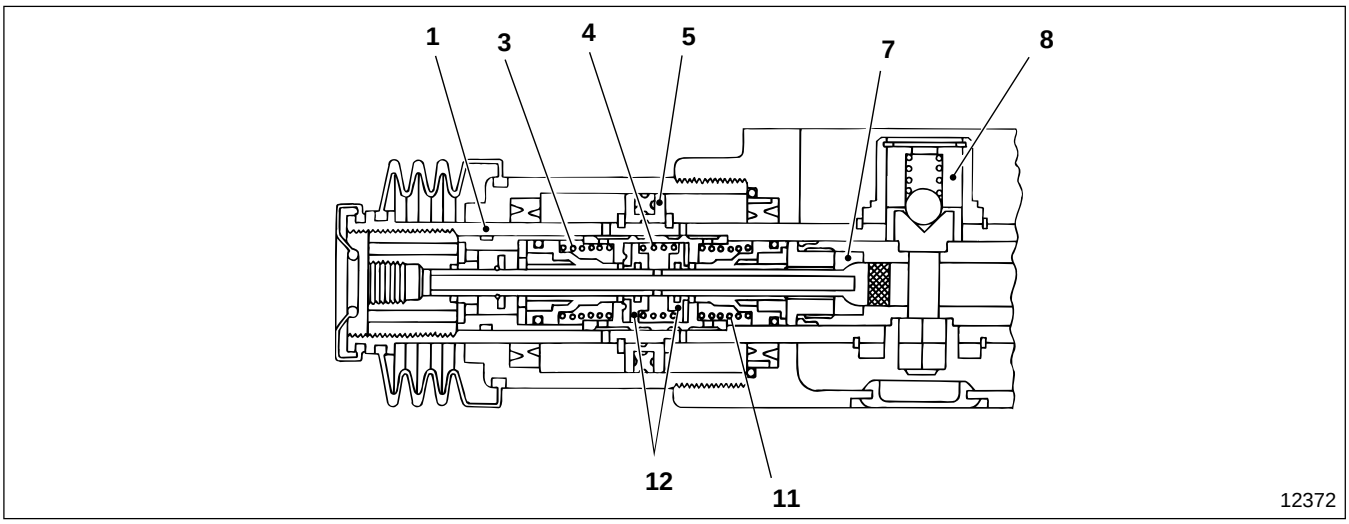

When not operating (non-boosting)

- To operate the power shift, that is, to open the valve and let the compressed air into the output chamber, actuating rod **7** on the input side and shifter rod **1** on the output side must generate relative disengagement.
- When the operating force is transmitted from the gear shift lever to actuating rod **7**, and the resistance on the transmission side is less than the combined repercussive forces working on the relative disengagement of the input side and output side (repercussive forces of No.1 to 3 springs, **3**, **4**, **11**; pressure on valve seal **12**; and sliding resistance on various parts), the mechanism, from the actuating rod to striker **8**, is integrated and does not generate relative disengagement. Therefore, the valve does not open, and without boosting operation, piston **5** moves in the cylinder to shift gears.

Splitter Control

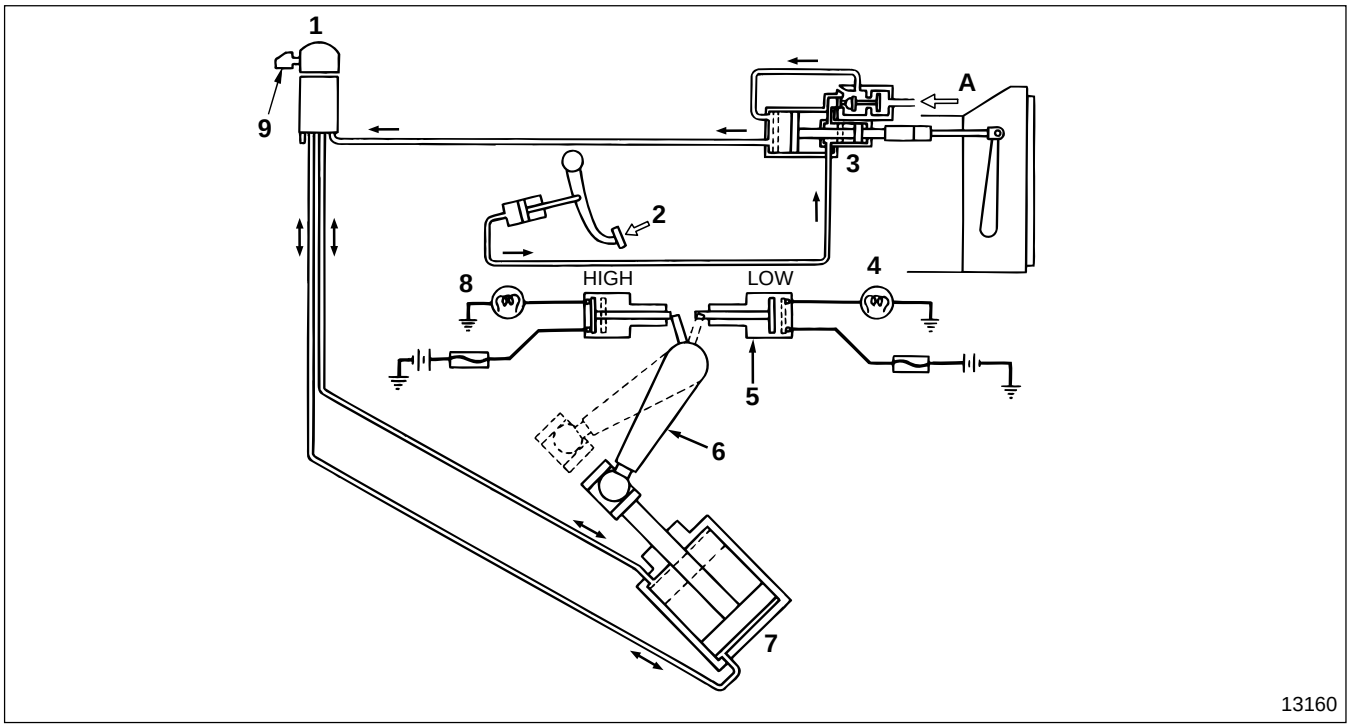

1 Air control valve
2 Clutch pedal
3 Clutch booster
4 LOW indicator lamp
5 Interlock switch
6 Splitter shift lever
7 Power cylinder
8 HIGH indicator lamp
9 Knob

A : From air tank

- The splitter control allows change over between HIGH and LOW by the operation of power cylinder **7** installed on the splitter, using air pressure taken from the clutch booster.
- Depressing clutch pedal **2** operates clutch booster **3**, supplying air to air control valve **1** installed on the gear shift lever by the driver's seat.
- To change over the supplied air from HIGH to LOW, move the knob of air control valve **1** to H or L respectively.
- This supplied air operates power cylinder **7** changing over the splitter between HIGH and LOW.
- Due to the restriction of the above mechanism, change over of the splitter is possible only when depressing clutch pedal **2**.
- Interlock switch **5** of the splitter upper assembly detects whether splitter shift lever **6** is in HIGH or LOW, and accordingly lights up HIGH indicator lamp **8** or LOW indicator lamp **4** within the meter cluster, to notify the driver.

M E M O

Possible causes	Symptoms	Gears slip out of engagement	Gears hard to engage	Noise when engine is idling	Noise while cruising	Noise when changing gear
Transmission body faulty	Mainshaft rear lock nut loose	○	○			
	Mainshaft thrust washer worn	○	○			
	Mainshaft bearing worn or damaged	○	○			
	Synchronizer ring and synchronizer sleeve spline worn	○				
	Synchronizer ring and gears taper cone area worn		○			
	Mainshaft pilot bearing worn or damaged			○	○	
	Drive pinion bearing worn or damaged			○		
	Drive pinion and countershaft constant mesh gear, or input shaft and splitter gears backlash excessive			○		
	Countershaft bearing worn or damaged			○		
	Needle bearings of gears worn or damaged			○	○	
	Mainshaft and countershaft bearings worn or damaged				○	
	Mainshaft and countershaft gears backlash excessive				○	
	Spline of gears worn					○
	Gears damaged				○	
	Gear oil insufficient				○	
Control mechanisms faulty	Control cable joint play	○	○			
	Set board assembly bushings worn	○				
	Shift rail steel ball and groove worn	○				
	Shift rail poppet spring fatigued or damaged	○				
	Shift rail sliding movement faulty		○			
	Shift fork jaws worn		○			
	Shift fork bent		○			

Possible causes / Symptoms			Gears slip out of engagement	Gears hard to engage	Noise when engine is idling	Noise while cruising	Noise when changing gear
Power shift malfunctioning	Air compressor faulty	Gr 35A, B		○			
	Air leakage			○			
	Power shift assembly faulty			○			
Clutch faulty	Clutch disengagement faulty	Gr 21		○			○
	Clutch pedal play faulty			○			
Synchronizer faulty	Contacting surfaces of synchronizer ring and gear taper cone worn						○
	Shifting key worn						○
	Shifting key spring deteriorated or damaged						○
	Synchronizer sleeve worn or damaged					○	○
Splitter control faulty	Power cylinder faulty			○			
	Air leaking from tubes			○			

WORK BEFORE REMOVAL AND INSTALLATION OF TRANSMISSION ASSEMBLY

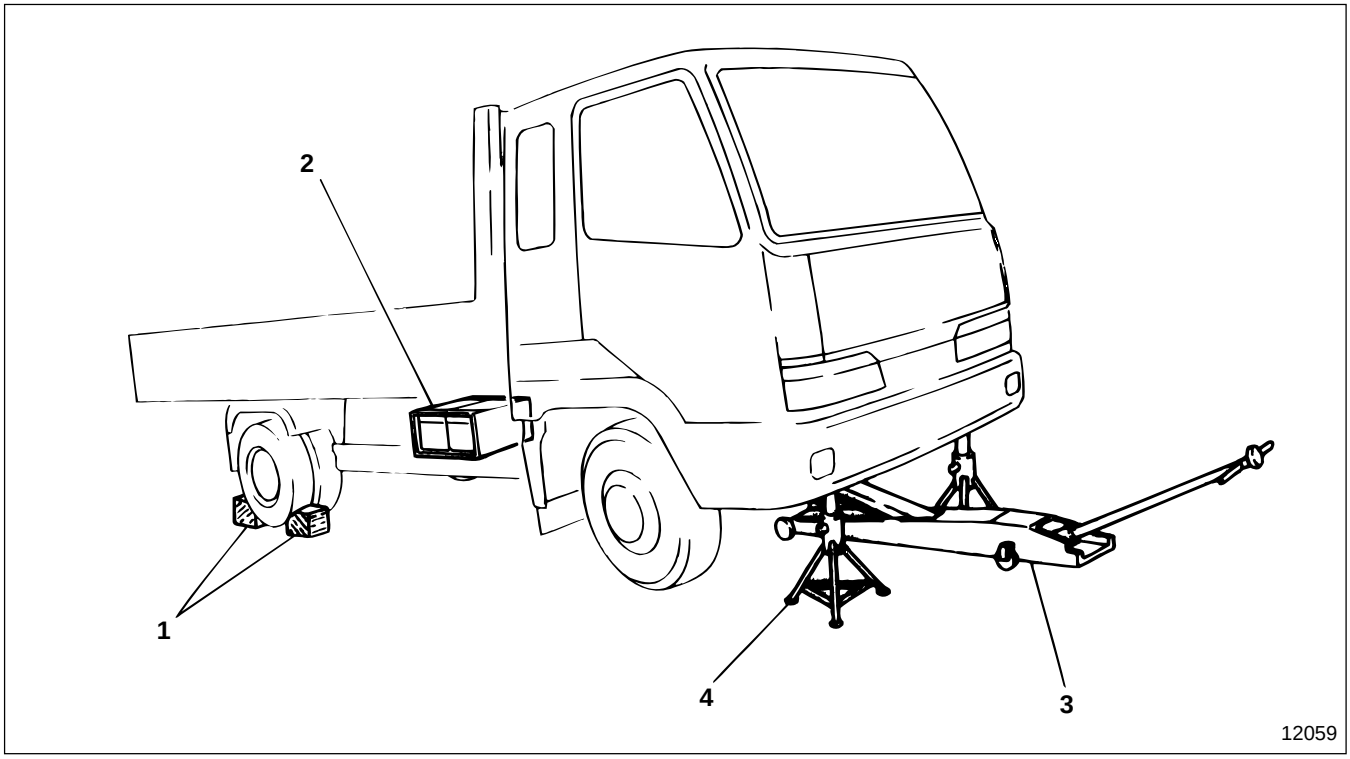

● **Work sequence before removal**

1 Place wheel chocks.
2 Disconnect negative battery cable. Gr 54
3 Jack up the front axle on a garage jack.
4 Support the front frame on rigid racks.

WARNING

- **You must chock the wheels securely so the vehicle does not move.**
- **Do not remove the chocks until the entire operation is completed.**
- **Supporting a vehicle on a garage jack only is extremely dangerous, so always support the frame on rigid racks.**
- **Leave the garage jack and rigid racks in place until the entire operation is completed. Never remove them during the operation.**

CAUTION

Keep the transmission in neutral throughout the operation.

● **Work sequence after installation**

Follow the work sequence before removal in reverse.

M E M O

REMOVAL AND INSTALLATION OF TRANSMISSION ASSEMBLY

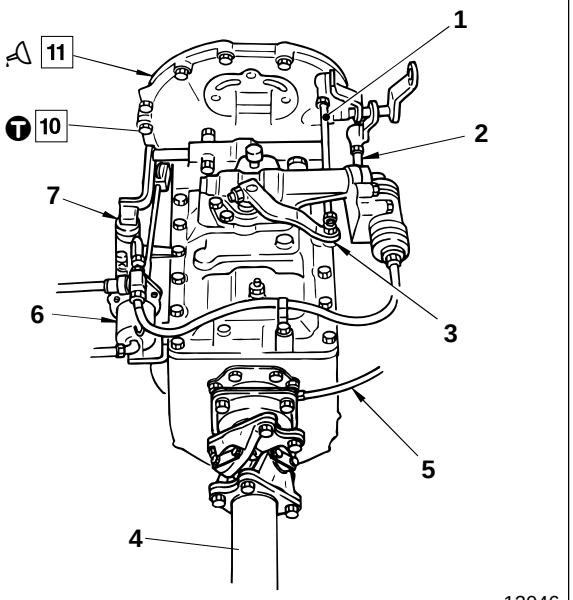

12046

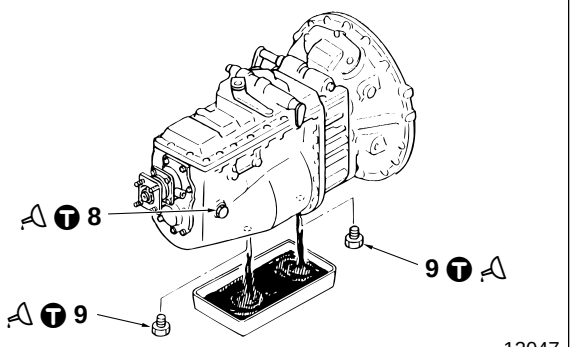

12047

● **Removal sequence**

1 Selector cable
2 Shift cable
3 Harness connector Gr 54
4 Propeller shaft Gr 25
5 Speed sensor Gr 54
6 Clutch booster Gr 21
7 Splitter control air piping
8 Inspection plug
9 Drain plug
10 Nut or bolt
11 Transmission assembly

NOTE

After removing propeller shaft 4, tie it to the frame temporarily at the height of installation assembly using a piece of rope.

● **Installation sequence**

Follow the removal sequence in reverse.

Tightening torque

Unit : N·m {lbf.ft, kgf·m}

Location	Parts to be tightened	Tightening torque	Remarks
8	Inspection plug	69±15 {51±11, 7±1.5}	—
9	Drain plug	69±15 {51±11, 7±1.5}	—
10	Nut or bolt (Transmission assembly mounting)	40 {30, 4.1}	—

Lubricant and sealant

Location	Points of application	Kinds	Quantity
8	Thread area of inspection plug	THREEBOND 1105D	As required
9	Thread area of drain plug	THREEBOND 1105D	As required
11	Input shaft spline	Molybdenum disulfide grease [NLGI No.2 (Li soap)]	As required

◆ Service procedure

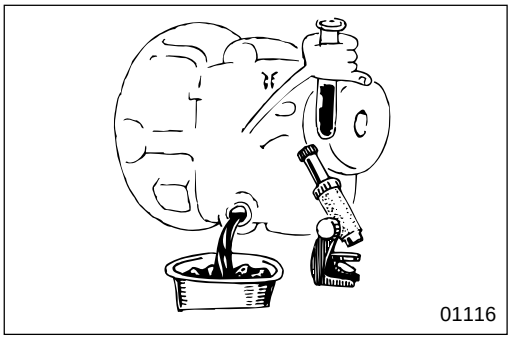

● Oil change

[Draining]

- When draining oil, check the quantity and quality of oil, especially for small pieces of metal and metal dust.
- Clean drain plug **9** before reinstalling it because it is magnetic.

[Filling]

- Check that drain plug **9** is tightened at specified torque.
- Pour in gear oil until the oil overflows from the inspection hole.

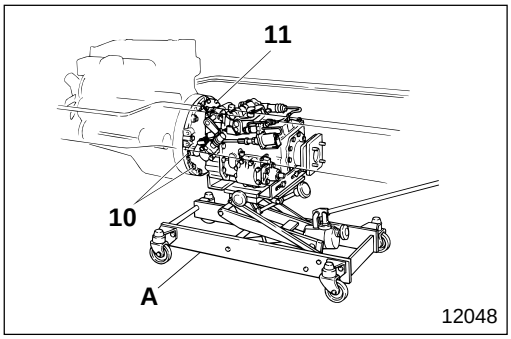

10 Removal of transmission assembly mounting nut or bolt

- Support transmission assembly **11** on transmission jack **A**.
- Remove transmission assembly mounting nuts or bolts **10**.

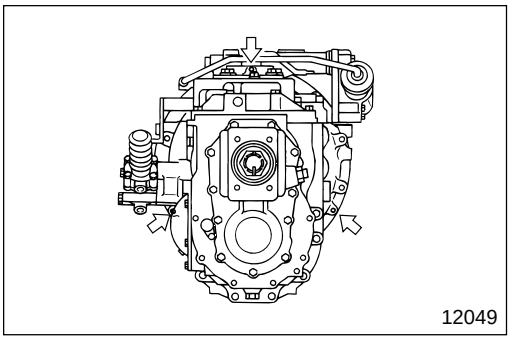

11 Transmission assembly

[Removal]

- Remove transmission assembly **11** from the engine using the screw holes (screw size : M10×1.5 mm) provided for disassembly.

CAUTION⚠

Make sure that you remove hoses and cables before starting service operations.

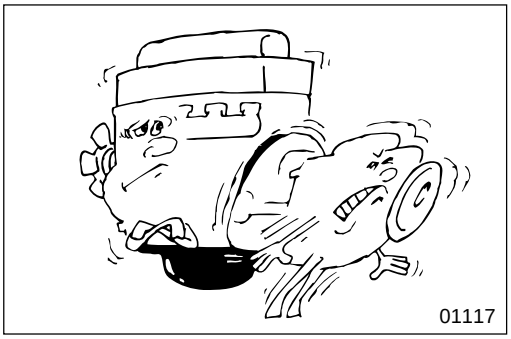

- Move transmission assembly **11** backward until the spline of the input shaft is detached from the clutch.

CAUTION⚠

Make sure that you pull transmission assembly 11 out in a straight line. If you seesaw the transmission assembly violently, you will damage the spline that connects the drive pinion and the clutch.

REMOVAL AND INSTALLATION OF TRANSMISSION ASSEMBLY

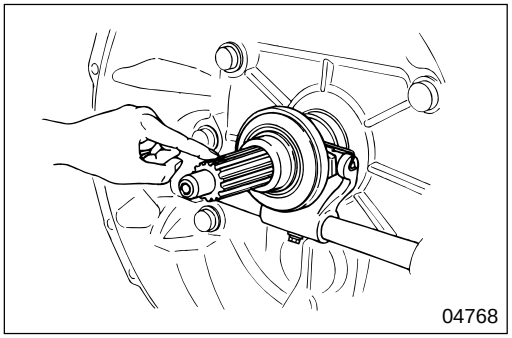

[Installation]
- Check the spline of the input shaft for rust.
- If rust is found, remove it using a wire brush.
- Rub grease onto the clutch sliding surfaces of the input shaft using your hand.

CAUTION

Make sure that you apply only the necessary amount of grease because too much grease would drip and cause clutch slip.

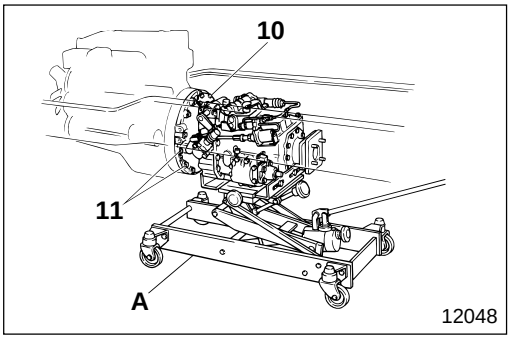

- Support transmission assembly **11** on transmission jack **A**.
- Insert transmission assembly **11** into the pilot bearing of the flywheel paying attention to the input shaft spline.
- Tighten transmission mounting nuts or bolts **10** at specified torque.

M E M O

GEAR SHIFTER UPPER

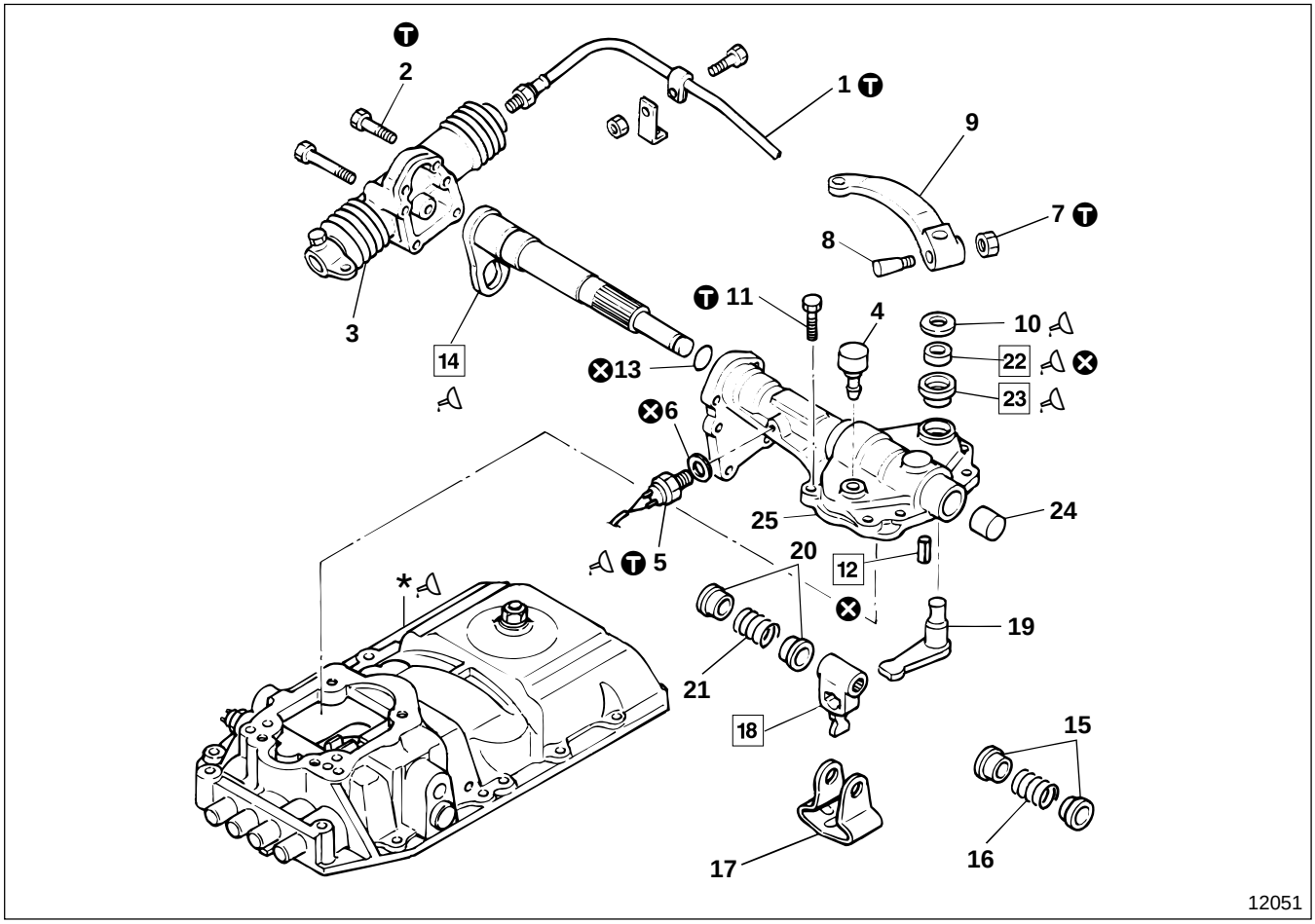

● **Disassembly sequence**

1 Air hose
2 Bolt
3 Power shift assembly
4 Air breather
5 Neutral switch Gr 54
6 Gasket
7 Nut
8 Lock pin
9 Gear selector lever B
10 Washer
11 Bolt
12 Spring pin
13 O-ring
14 Gear shift lever
15 4th and 5th return spring retainer
16 4th and 5th return spring
17 Interlock plate
18 Gear shift slide lever
19 Gear selector lever A
20 1st and reverse return spring retainer
21 1st and reverse return spring
22 Oil seal
23 Bushing
24 Dust plug
25 Selector lever case

*: Gear shifter lower
⊗: Non-reusable parts

NOTE

Do not remove bushing 23 except for replacement.

● **Assembly sequence**

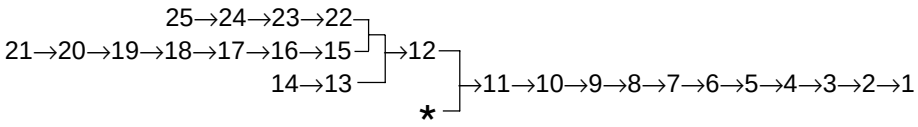

CAUTION⚠

Be sure when assembling gear selector lever A 19, that you turn the lever so you do not damage the lip area of oil seal 22.

Service standards

Location	Maintenance item	Standard value	Limit	Remedy
16	4th and 5th return spring load (Installed length 37.6 {1.48})	19 N {4.2 lbf, 1.89 kgf}	15 N {3.3 lbf, 1.51 kgf}	Replace
21	1st and reverse return spring load (Installed length 27.6 {1.09})	100 N {22 lbf, 10.2 kgf}	80 N {18 lbf, 1.09 kgf}	Replace

Ⓣ Tightening torque

Unit : N·m {lbf.ft, kgf·m}

Location	Parts to be tightened	Tightening torque	Remarks
1	Air hose connector	39 to 44 {29 to 33, 4.0 to 4.5}	—
2	Bolt (Power shift assembly mounting)	40 {30, 4.1}	—
5	Neutral switch	46 to 52 {34 to 38, 4.7 to 5.3}	—
7	Nut (Gear selector lever B mounting)	17 {12, 1.7}	—
11	Bolt (Selector lever case mounting)	40 {30, 4.1}	—

Lubricant and sealant

Location	Points of application	Kinds	Quantity
5	Plunger tip of neutral switch	Chassis grease [NLGI No.1 (Ca soap)]	As required
	Thread area of neutral switch	THREEBOND 1104J	As required
10	Friction surface of washer	Chassis grease [NLGI No.1 (Ca soap)]	As required
14	Friction surface of gear shift lever	Chassis grease [NLGI No.1 (Ca soap)]	As required
22	Lip area of oil seal	Chassis grease [NLGI No.1 (Ca soap)]	As required
23	Selector lever case mounting surface of bushing	THREEBOND 1215	As required
23	Friction surfaces of bushing and axle and gear selector lever A	Chassis grease [NLGI No.1 (Ca soap)]	As required
*****	Selector lever case mounting surface of gear shifter lower	THREEBOND 1104J	As required

GEAR SHIFTER UPPER

Special tools

Unit : mm {in.}

Location	Tool name and shape	Part No.	Application
14	Spring pin puller 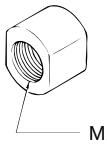 02399	MH062445	Removal of spring pin
	Reverse shaft puller 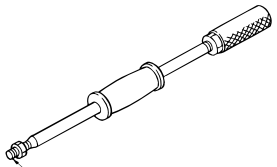 02118	03726-82000	

◆ Service procedure

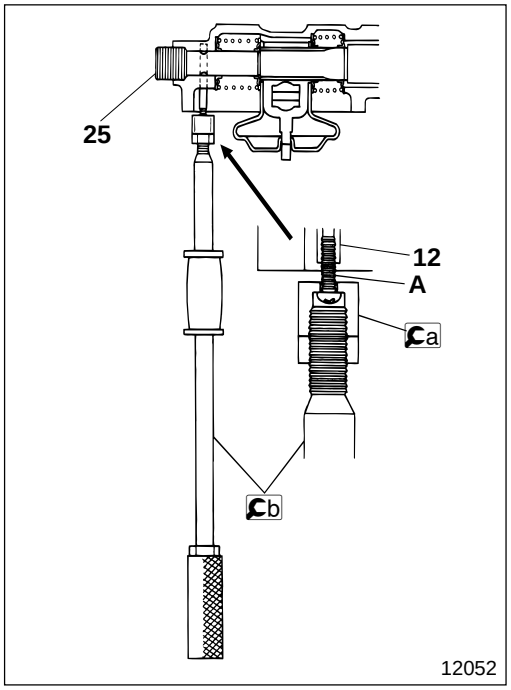

12052

12 Removal of spring pin

- Tap spring pin **12** using an M4 tap.
- Insert a spring pin puller with an M4 thread **A** of appropriate length into spring pin **12**.
- Position b reverse shaft puller on a spring pin puller.
- Remove spring pin **12** from selector lever case **25** using a spring pin puller and b reverse shaft puller.

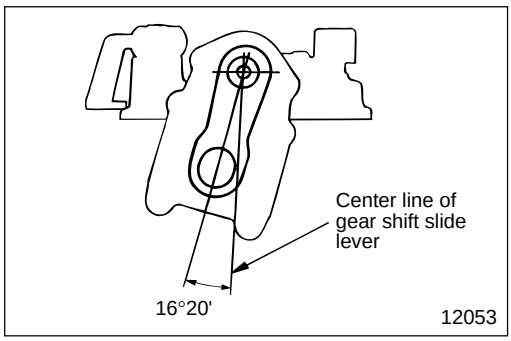

12053

14 18 Installation of gear shift lever and gear shift slide lever

Install gear shift lever **14** and gear shift slide lever **18** as illustrated.

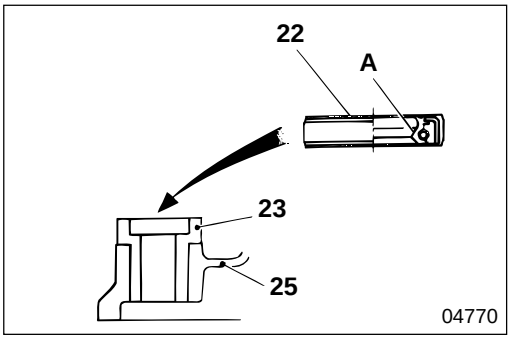

22 **Installation of oil seal**

Apply grease to lip area **A** of oil seal **22** and press-fit into bushing **23** in the direction as illustrated.

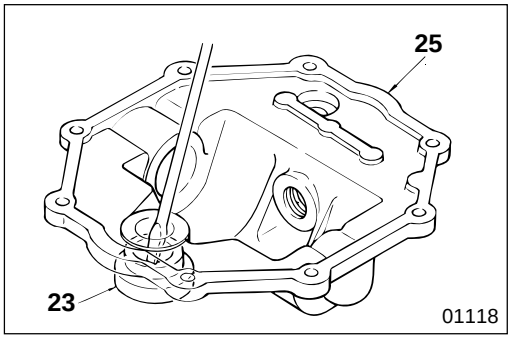

23 **Bushing**

[Removal]

Remove bushing **23** from selector lever case **25** using a screwdriver.

CAUTION⚠

Be careful not to damage selector lever case 25 .

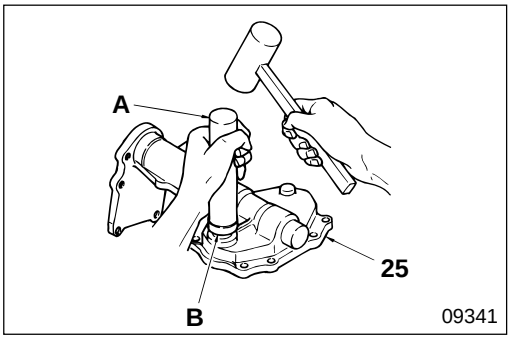

[Installation]

- Clean the inner surface of selector lever case **25** .
- Press-fit bushing **23** into selector lever case **25** using bar **A** (approximately ø40 mm {1.57 in.}).
- When press-fitting bushing **23** , take care not to damage selector lever case **25**.
- After press-fitting, apply sealant to press-fitted side **B** of bushing **23**.

CAUTION⚠

Prevent sealant from sticking to the inner surface of bushing 23.

POWER SHIFT ASSEMBLY

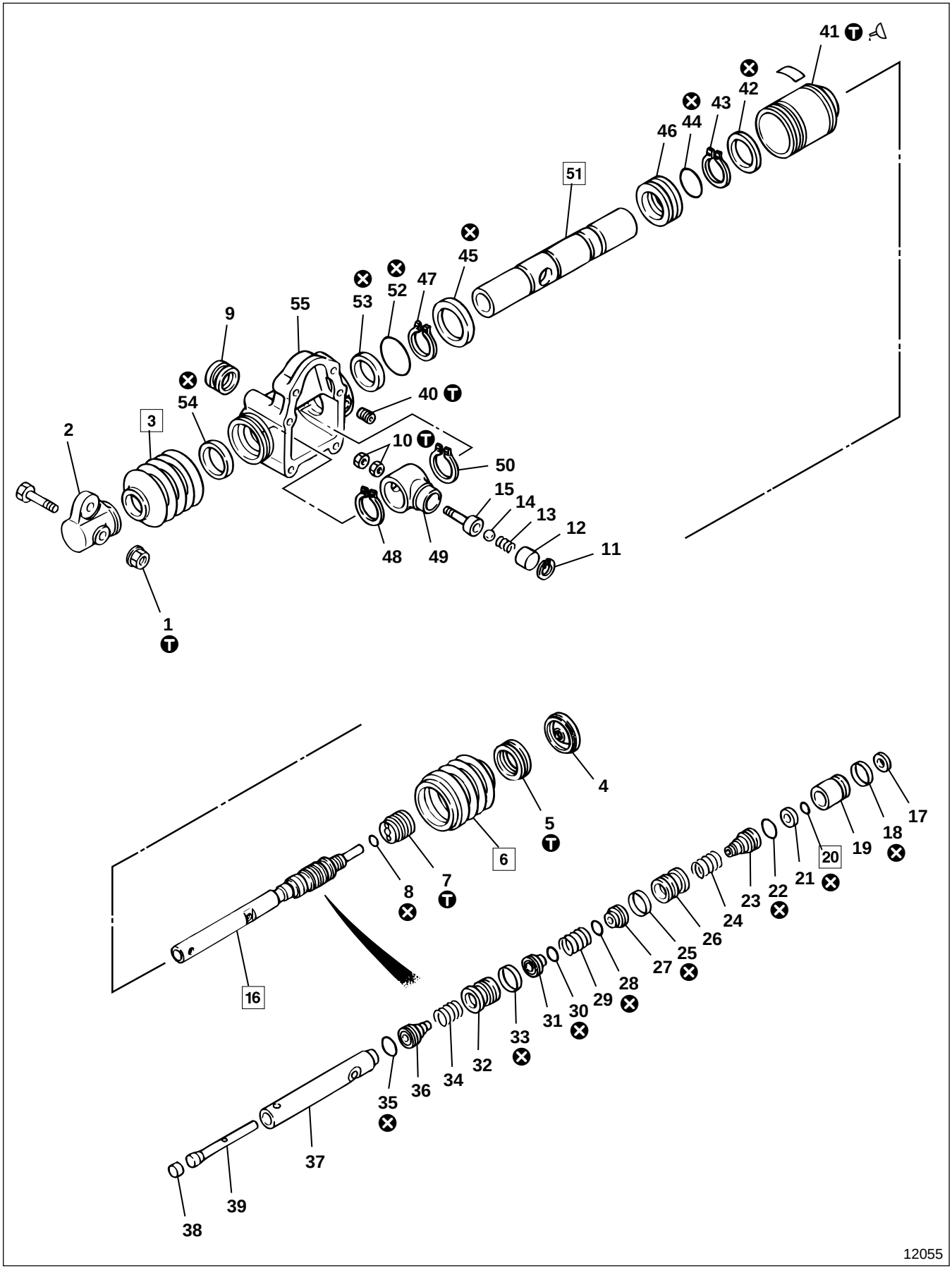

● **Disassembly sequence**

1 Nut
2 Lever
3 Boot
4 Cover
5 Nut
6 Boot
7 Connector
8 O-ring
9 Cover
10 Nut
11 Retaining ring
12 Plug
13 Spring
14 Steel ball
15 Bolt
16 Valve assembly
17 Filter
18 Square ring
19 Tube
20 Retaining ring
21 Plate
22 O-ring
23 Lifter
24 Spring
25 Square ring
26 Seat
27 Seal assembly
28 O-ring
29 Spring
30 O-ring
31 Seal assembly
32 Seat
33 Square ring
34 Spring
35 O-ring
36 Lifter
37 Rod
38 Filter
39 Pipe
40 Set screw
41 Cylinder
42 Oil seal
43 Retaining ring
44 O-ring
45 X-ring
46 Piston
47 Retaining ring
48 Retaining ring
49 Striker
50 Retaining ring
51 Shifter rod
52 O-ring
53 Oil seal
54 Oil seal
55 Housing

● **Assembly sequence**

Follow the disassembly sequence in reverse.

Service standards

Location	Maintenance item	Standard value	Limit	Remedy
13	Spring load (Installed length 12 {0.47})	20 N {4.4 lbf, 2 kgf}	16 N {3.5 lbf, 1.6 kgf}	Replace
24	Spring load (Installed length 14.5 {0.57})	49 N {11 lbf, 5 kgf}	41 N {9.3 lbf, 4.2 kgf}	Replace
29	Spring load (Installed length 14.5 {0.57})	15 N {3.3 lbf, 1.5 kgf}	12 N {2.8 lbf, 1.25 kgf}	Replace
34	Spring load (Installed length 10 {0.39})	13 N {2.9 lbf, 1.3 kgf}	9.8 N {2.2 lbf, 1.0 kgf}	Replace

Tightening torque

Unit : N·m {lbf.ft, kgf·m}

Location	Parts to be tightened	Tightening torque	Remarks
1	Nut (Lever mounting)	12 to 18 {8.7 to 13, 1.2 to 1.8}	—
5	Nut	59 to 69 {43 to 51, 6 to 7}	—
7	Connector	7.8 to 12 {5.8 to 8.7, 0.8 to 1.2}	—
10	Nut (Bolt mounting to striker)	29 to 39 {22 to 29, 3 to 4}	—
40	Set screw	2.0 to 3.4 {1.4 to 2.5, 0.2 to 3.5}	—
41	Cylinder	78 to 98 {58 to 72, 8 to 10}	—

Lubricant and sealant

Location	Points of application	Kinds	Quantity
—	All friction surfaces	Multipurpose grease [NLGI No.2 (Li soap)]	As required
41	Thread area of cylinder	LOCTITE 242 or THREEBOND 1401B	As required

Special tools

Location	Tool name and shape	Part No.	Application
18	Guide	*910-24800	Installation of valve assembly
22	Retaining ring insert tool	*910-26500	Installation of retaining ring

* JIDOSHA KIKI part No.

◆ Service procedure

● Inspection before disassembly

(1) Apply 735 kPa {105 lbf/in^2, 7.5 kgf/cm^2} of pressure to the power shift assembly from the connector, check the airtightness when not operating (valve in neutral), and when operating valve is pressed and pulled. If the measured value deviates from the standard value, replace the faulty parts.

Maintenance item	Standard value	
Airtightness when not operating	Decrease of pressure after 15 seconds	9.8 kPa {1.4 lbf/in^2, 0.1 kgf/cm^2}
Airtightness when operating		49 kPa {7.1 lbf/in^2, 0.5 kgf/cm^2}

(2) Measure the sliding resistance in the disengagement direction. If the measured value deviates from the standard value, replace the faulty parts, or grease them.

Maintenance item	Standard value
Resistance in shifting direction	59 N {13 lbf, 6 kgf}

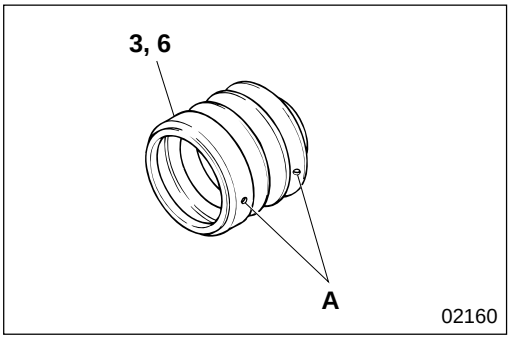

3 **6** **Installation of boot**

When you install boots **3**, **6** on housing **55**, point drain holes **A** downward.

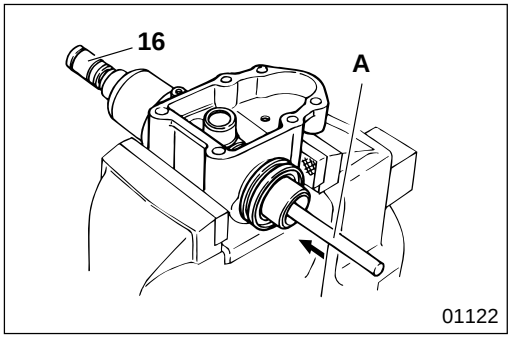

16 **Valve assembly**

[Removal]
Gently drive valve assembly **16** out from the shifter rod from the lever side using bar **A**.

CAUTION
Do not drive valve assembly 16 too hard or you will damage the valve parts.

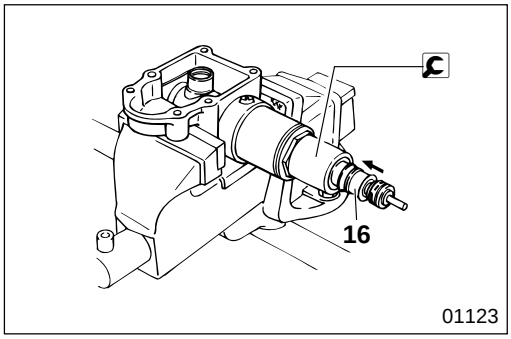

[Installation]
- Apply grease to valve assembly **16**.
- Install valve assembly **16** into the housing using 🔧 guide, taking care not to damage the seals.

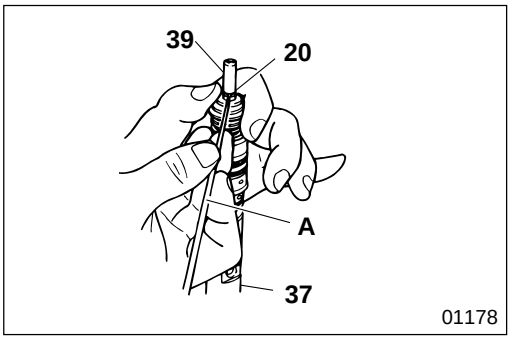

20 **Retaining ring**

[Removal]
- Hold rod **37** in a vise, taking care not to damage the rod.
- Remove retaining ring **20** from pipe **39** using bar **A** as illustrated.

CAUTION
Keep the valve parts in order to avoid mix ups when installing.

NOTE
After removing retaining ring 20, you can remove all the valve parts.

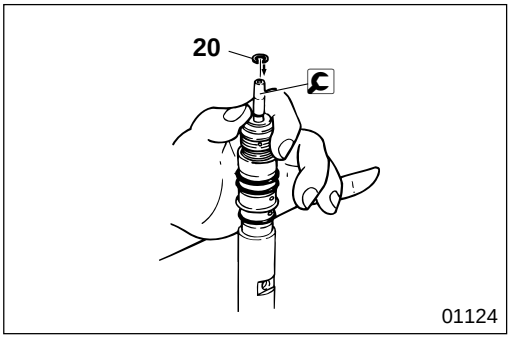

[Installation]
After installing the valve parts on pipe **39**, insert retaining ring **20** into pipe groove using 🔧 retaining ring insert tool.

CAUTION
Be careful not to apply excessive force to retaining ring 20 when you insert it.

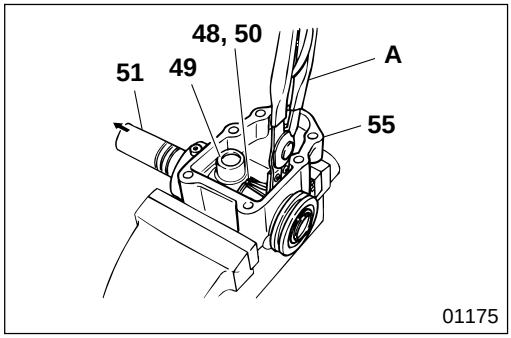

51 **Removal and installation of shifter rod**

[Removal]

- Remove retaining rings **48**, **50** from the groove of shifter rod **51** using snap ring expander **A**.
- Driving out shifter rod **51** gradually, remove it from housing **55**.
- When you remove shifter rod **51**, remove striker **49** from housing **55**.

[Installation]

CAUTION

Make sure that retaining rings 48, 50 are securely placed in the groove of shifter rod 51.

M E M O

GEAR SHIFTER LOWER

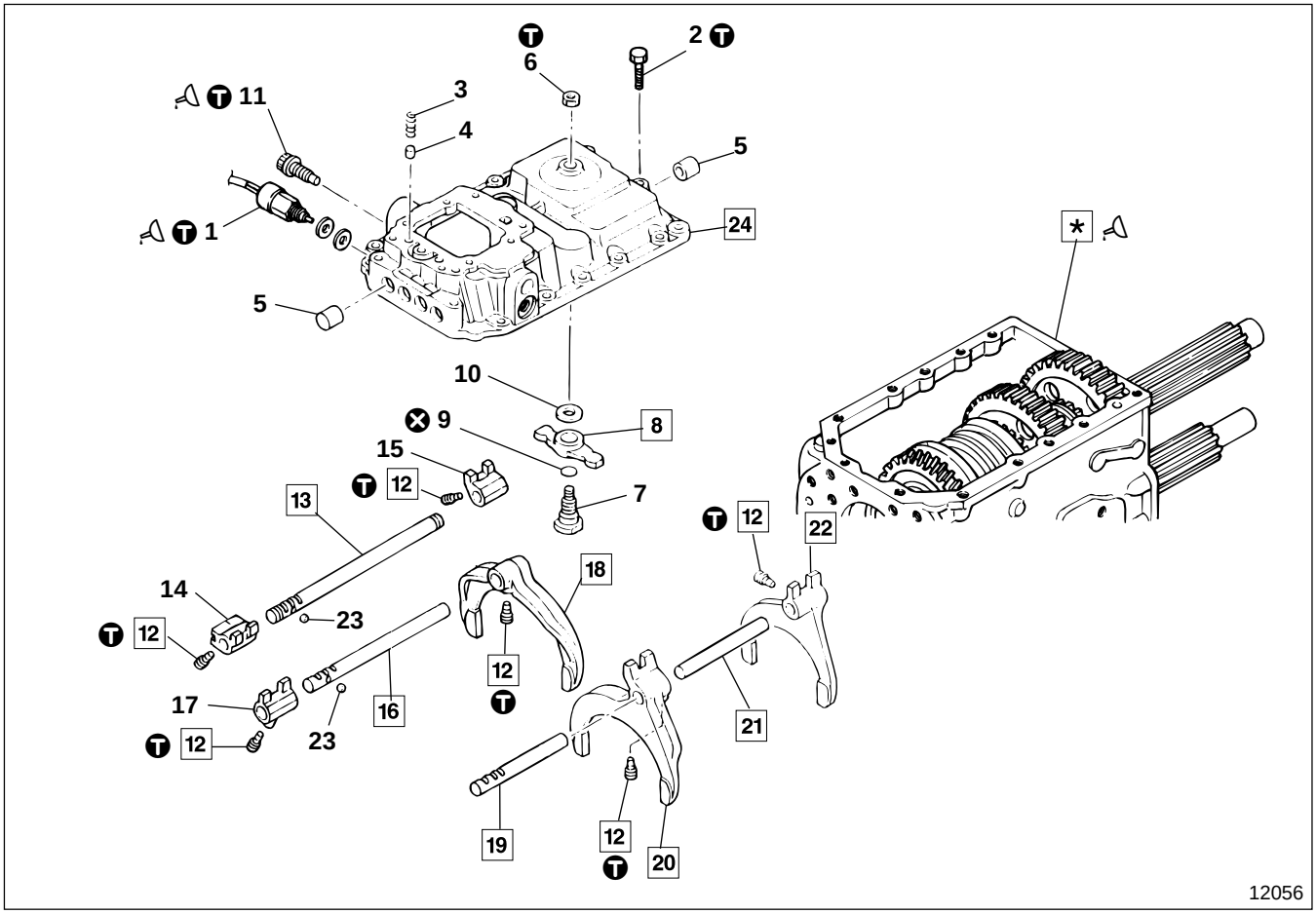

● **Disassembly sequence**

1 Backup lamp switch Gr 54
2 Bolt
3 Poppet spring
4 Interlock pin
5 Dust plug
6 Nut
7 1st and reverse shift lever shaft
8 1st and reverse shift lever
9 O-ring
10 Thrust washer
11 Jaw set bolt
12 Set bolt
13 1st and reverse shift rail A
14 1st and reverse shift rail jaw A
15 1st and reverse shift rail jaw B
16 2nd and 3rd shift rail
17 2nd and 3rd shift rail jaw
18 2nd and 3rd shift fork
19 4th and 5th shift rail
20 4th and 5th shift fork
21 1st and reverse shift rail B
22 1st and reverse shift fork
23 Steel ball
24 Gear shift lever lower case

* : Transmission assembly
⊗ : Non-reusable parts

CAUTION ⚠

- **Do not disassemble the lower gear shifter except to replace shift forks 18, 20, 22, shift rails 13, 16, 19, 21 and shift rail jaws 14, 15, 17.**
- **When you disassemble the lower gear shifter, put the lever in neutral.**
- **When you remove shift rails 13, 16, 19, 21, be careful not to lose interlock pin 4, steel balls 23 or poppet spring 3.**

● **Assembly sequence**

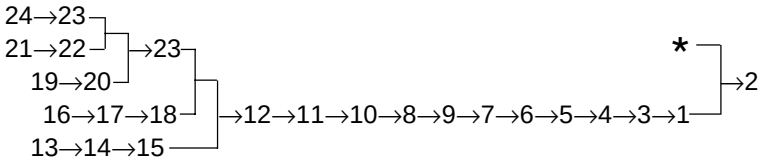

Service standards

Unit : mm {in.}

Location	Maintenance item	Standard value (Basic diameter in [ ])	Limit	Remedy
7, 8	Clearance between 1st and reverse shift lever shaft and 1st and reverse shift lever	[23] 0.02 to 0.09 {[0.91] 0.00079 to 0.0035}	0.15 {0.0059}	Replace
8	Bend of 1st and reverse shift lever	0.05 {0.0020} or less	0.1 {0.0039}	Replace
13	Bend of 1st and reverse shift rail A	0.03 {0.0012} or less	0.06 {0.0024}	Correct or replace
13, 16, 19, 21, 24	Clearance between shift rails and gear shift lever lower case	[20] 0.06 to 0.09 {[0.79] 0.0024 to 0.0043}	0.2 {0.0079}	Replace
16	Bend of 2nd and 3rd shift rail	0.03 {0.0012} or less	0.06 {0.0024}	Correct or replace
18, 20, 22	Tilt of claws of shift forks	0.1 {0.0039} or less	0.2 {0.0079}	Replace
18, 20, 22, *	Clearance between shift forks and synchronizer sleeves	0.25 to 0.45 {0.0098 to 0.018}	1 {0.039}	Replace
19	Bend of 4th and 5th shift rail	0.02 {0.00079} or less	0.04 {0.0016}	Correct or replace
21	Bend of 1st and reverse shift rail B	0.02 {0.00079} or less	0.04 {0.0016}	Correct or replace

Tightening torque

Unit : N·m {lbf.ft, kgf·m}

Location	Parts to be tightened	Tightening torque	Remarks
1	Backup lamp switch	46 to 52 {34 to 38, 4.7 to 5.3}	—
2	Bolt (Lower gear shifter assembly mounting to transmission assembly)	40 {30, 4.1}	—
6	Nut (1st and reverse shift lever shaft mounting)	135 {98, 13.6}	—
11	Jaw set bolt	135 {98, 13.6}	—
12	Set bolt (Shift fork and jaw mounting)	49 to 67 {36 to 49, 5.0 to 6.8}	—

Sealant

Location	Points of application	Kinds	Quantity
1	Thread area of backup lamp switch	THREEBOND 1104J	As required
11	Thread area of jaw set bolt	THREEBOND 1104J	As required
*****	Gear shift lever lower case mounting surface of transmission assembly	THREEBOND 1215	As required

GEAR SHIFTER LOWER

Special tools

Unit : mm {in.}

Location	Tool name and shape	Part No.	Application
12	Hexagon bit 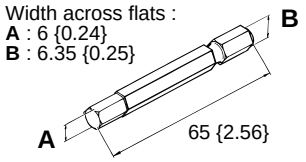	MH061533	Removal and installation of set bolt

◆ Service procedure

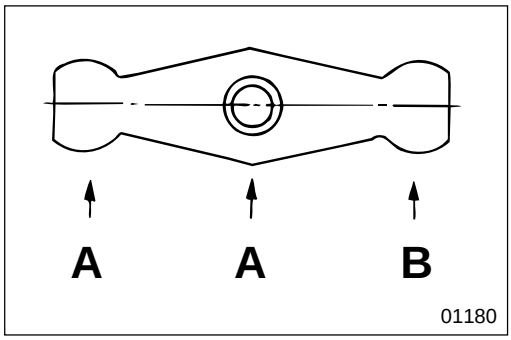

8 **Bend of 1st and reverse shift lever**

If bend **B** (in reference to **A-A** as illustrated) is higher than the limit, replace 1st and reverse shift lever **8**.

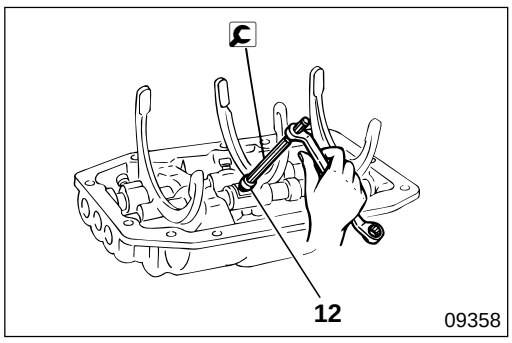

12 **Removal and installation of set bolt**

- Use hexagon bit to remove and install set bolt **12**.
- Caulk the thread area of set bolt **8** at three points or more after tightening.

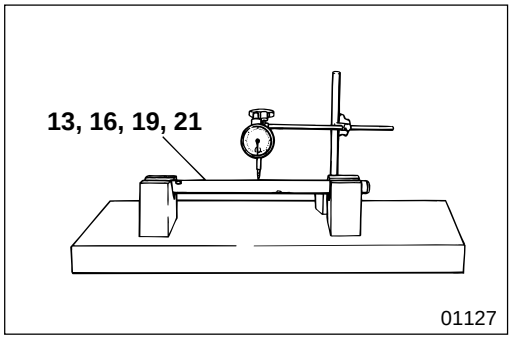

13 **16** **19** **21** **Bend of shift rail**

- If the measured value is higher than the limit, correct or replace the shift rail.

NOTE

Read the dial gauge after turning shift rails 13, 16, 19, 21 one full revolution. The bend is one half of the indicated value.

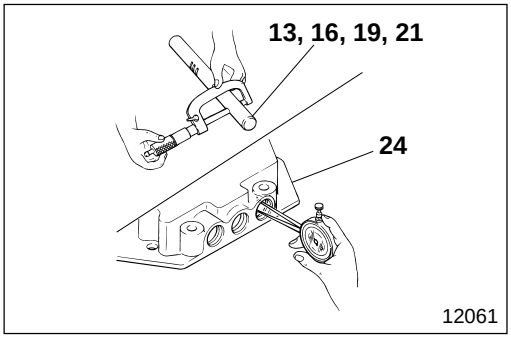

13 **16** **19** **21** **24** **Clearance between shift rail and gear shift lever lower case**

- Measure the outer diameter of the shift rail and the inner diameter of the gear shift lever lower case shift rail hole.
- If the clearance is higher than the limit, replace the faulty parts.

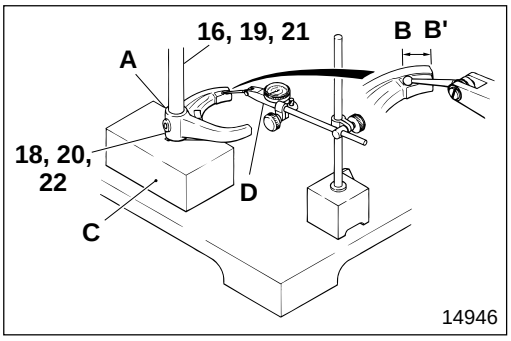

18 **20** **22** **Tilt of shift fork claw**

- Measure the tilt (difference between **B** and **B´**) of claw **B–B´**against hole **A** of shift rails **16**, **19**, **21** of shift forks **18**, **20**, **22** with the shift rails upright.
- If the tilt is higher than the limit, replace shift forks **18**, **20**, or **22**.
  C : V-block
  D : Dial gauge

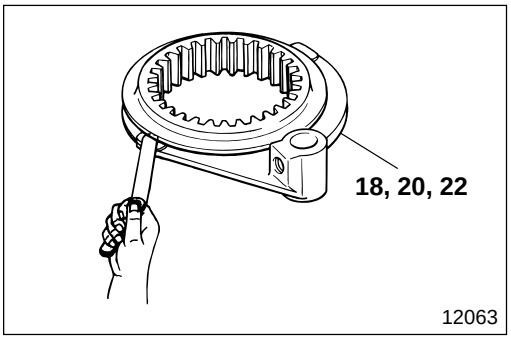

18 **20** **22** ***** **Clearance between shift fork and synchronizer sleeve**

If the clearance is higher than the limit, replace the faulty parts.

REAR COVER

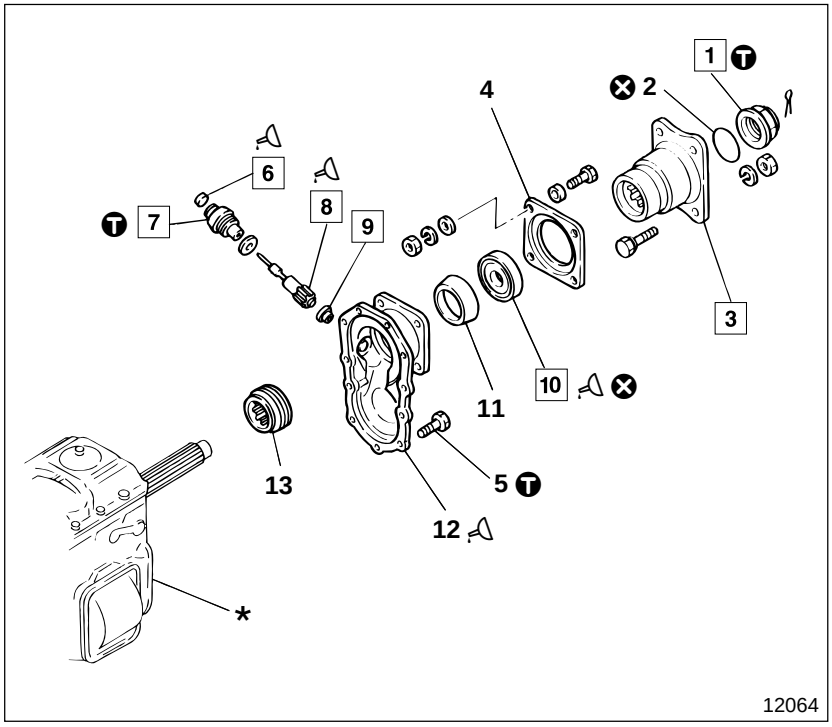

● **Disassembly sequence**

1 Nut
2 O-ring
3 Companion flange
4 Dust cover
5 Bolt
6 Oil seal
7 Speedometer gear bushing
8 Speedometer gear
9 Speedometer gear bushing A
10 Oil seal
11 Oil separator plate
12 Rear cover
13 Speedometer worm

* : Transmission assembly
⊗ : Non-reusable parts

● **Assembly sequence**

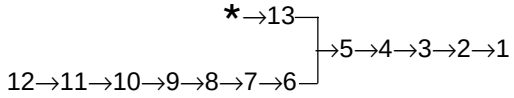

NOTE

Inspect the play of speedometer gear 8 before disassembly.

Service standards

Unit : mm {in.}

Location	Maintenance item	Standard value (Basic diameter in [ ])	Limit	Remedy
7, 8	Clearance between speedometer gear bushing and speedometer gear	[12] 0.02 to 0.07 {[0.47] 0.00079 to 0.0028}	0.15 {0.0059}	Replace
8, 9	Clearance between speedometer gear and speedometer gear bushing A	[8] 0.35 {[0.31] 0.014} or less	0.4 {0.016}	Replace
8, 13	Backlash between speedometer gear and speedometer worm	0.13 to 0.29 {0.0051 to 0.011}	0.36 {0.014}	Replace

Ⓣ Tightening torque

Unit : N·m {lbf.ft, kgf·m}

Location	Parts to be tightened	Tightening torque	Remarks
1	Nut	590 to 1080 {435 to 795, 60 to 110}	—
5	Bolt (Rear cover mounting)	74 {54, 7.5}	—
7	Speedometer gear bushing	195 {145, 20}	—

Lubricant and sealant

Location	Points of application	Kinds	Quantity
6	Lip area of oil seal	Multipurpose grease [NLGI No.2 (Li soap)]	As required
8	Friction surfaces between speedometer gear and speedometer gear bushing	Molybdenum disulfide grease [NLGI No.2 (Li soap)]	As required
10	Lip area of oil seal	Multipurpose grease [NLGI No.2 (Li soap)]	As required
12	Transmission assembly mounting surface of rear cover	THREEBOND 1215	As required

Special tools

Unit : mm {in.}

Location	Tool name and shape	Part No.	Application
1	Socket wrench 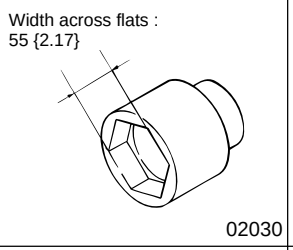 02030	MH061519	Removal and installation of nut
3	Flange puller 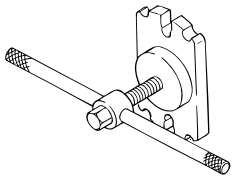 02153	MH061393 or MH062207	Removal of companion flange
10	Oil seal installer 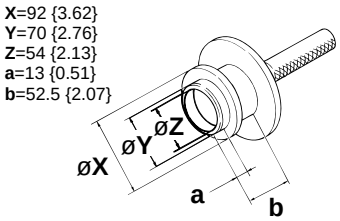 09241	MH062065	Installation of oil seal of rear cover

◆ Service procedure

1 **Removal and installation of lock nut**

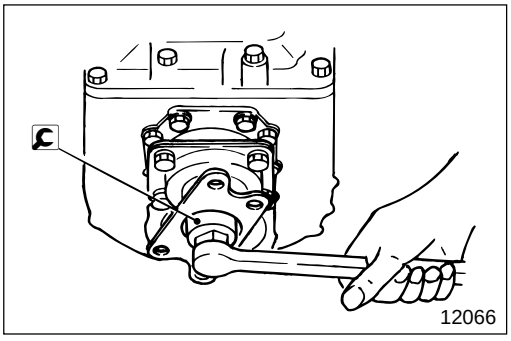
12066

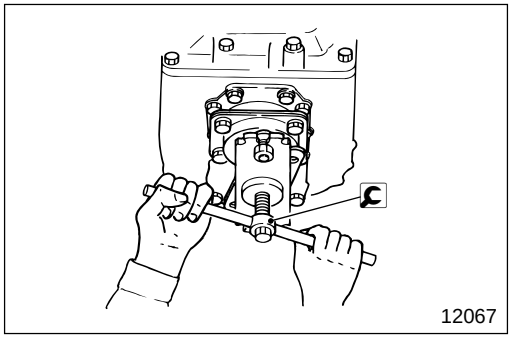

3 **Removal of companion flange**

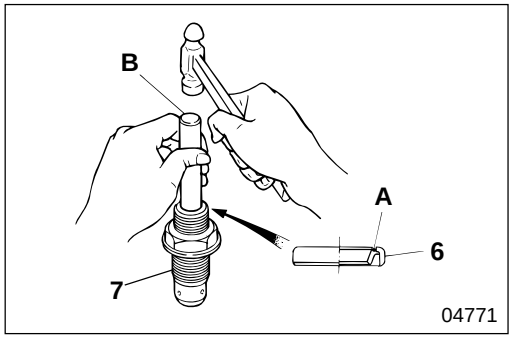

6 **Press-fitting of oil seal**

- Apply grease to inside of oil seal **6** packing **A**.
- Press-fit oil seal **6** into speedometer gear bushing **7** in the direction as illustrated using bar **B** (approximately ø15 mm {0.59 in.}).

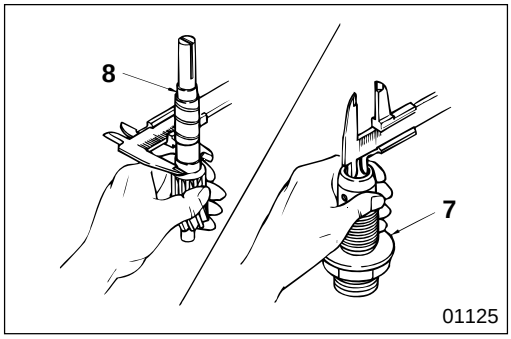

7 **8** **Clearance between speedometer gear bushing and speedometer gear**

If the clearance is higher than the limit, replace the bushings.

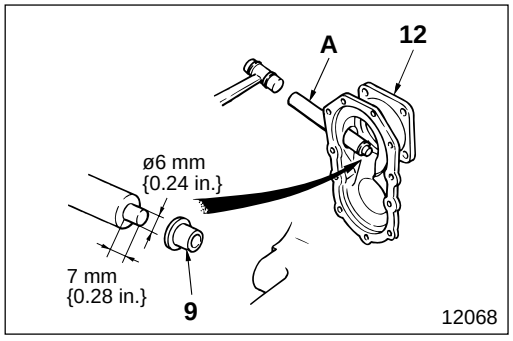

9 **Installation of speedometer gear bushing A**

Press-fit speedometer gear bushing **A** **9** into rear cover **12** using round bar **B** (ø14 mm {0.55 in.}), turned to the dimensions as illustrated.

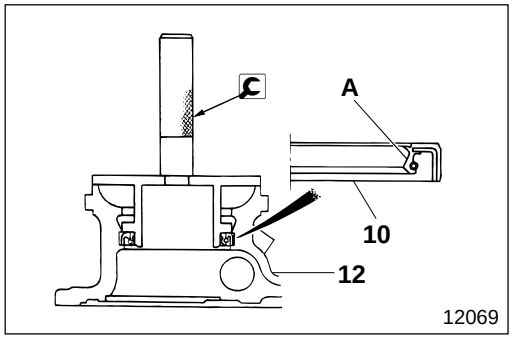

10 **Press-fitting of oil seal**

- Apply grease to lip area **A** of oil seal **10**.
- Press-fit oil seal **10** into rear cover **12** in the direction as illustrated using oil seal installer.

M E M O

SPLITTER

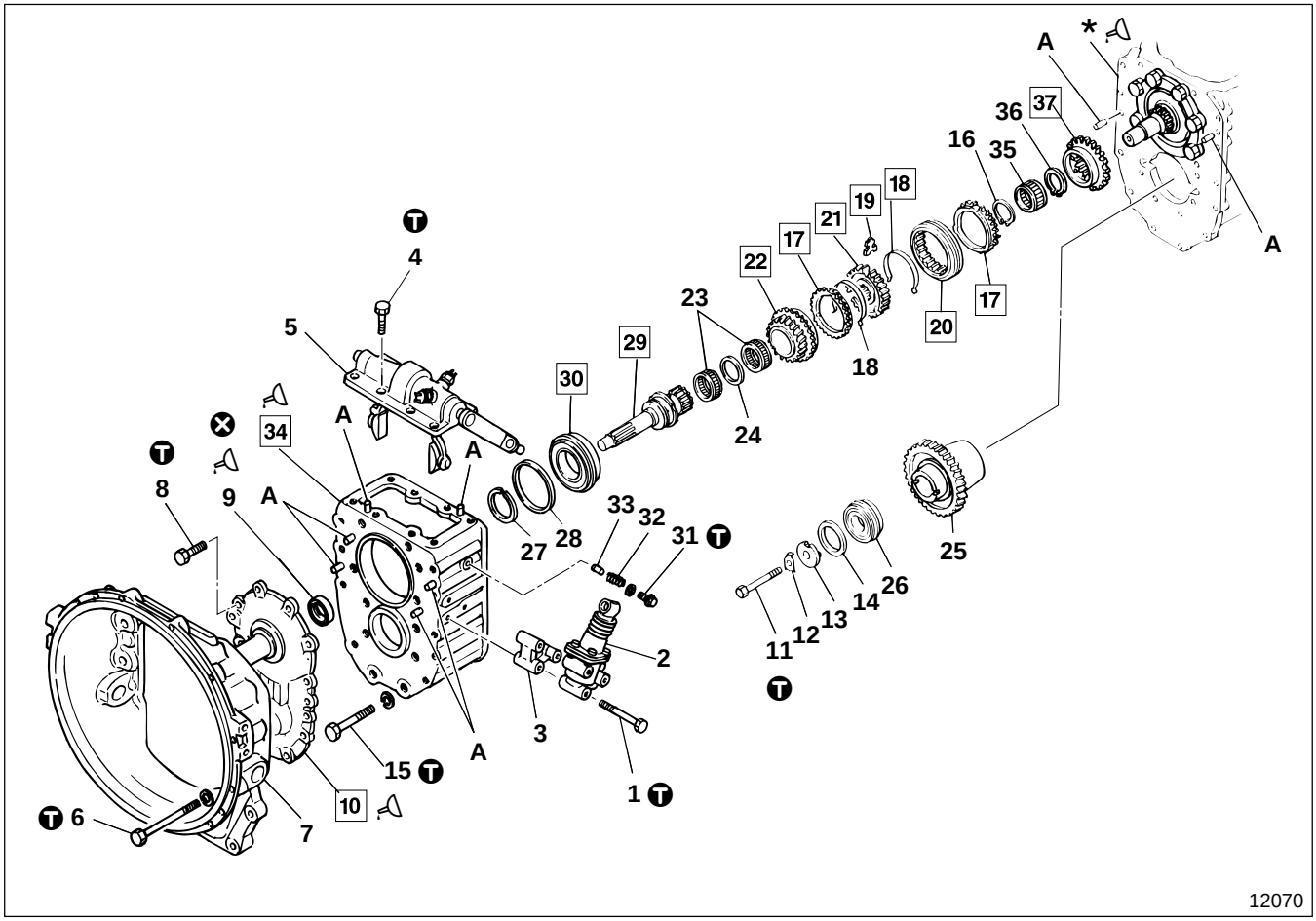

● **Work before disassembly**

📖 P22B-40

● **Disassembly sequence**

1 Bolt
2 Power cylinder 📖 P22B-45
3 Spacer
4 Bolt
5 Splitter upper assembly 📖 P22B-44
6 Bolt
7 Clutch housing
8 Bolt
9 Oil seal
10 Bearing retainer
11 Bolt
12 Lock washer
13 Lock plate
14 Bearing shim
15 Bolt
16 Snap ring
17 Synchronizer ring
18 Shifting key spring
19 Shifting key
20 Synchronizer sleeve
21 Synchronizer hub
22 Splitter pinion assembly
23 Needle bearing
24 Spacer
25 Splitter high gear
26 Roller bearing
27 Snap ring
28 Bearing shim
29 Input shaft
30 Ball bearing
31 Plug
32 Poppet spring
33 Pin
34 Splitter case
35 Needle bearing
36 Snap ring
37 Splitter synchronizer cone

***** : Transmission assembly
A : Positioning pin (Eight points)
⊗ : Non-reusable parts

● **Assembly sequence**

29→30→28→27 / 34 →26→25→23→24→23→22 / 21→20→19→18→17 →16 *→37→36→35 →15→14→13→12→11 / 10→9 →8 7 →6 / 5 →4→33→32→31 3→2 →1

Service standards

Unit : mm {in.}

Location	Maintenance item	Standard value	Limit	Remedy
17, 21	Clearance between synchronizer ring and synchronizer hub	4.8 to 5.4 {0.19 to 0.21}	6.5 {0.26}	Replace
17, 22, 37	Clearance between synchronizer ring, splitter pinion and splitter synchronizer cone	2.5 {0.0098}	0 {0}	Replace
19, 21	Clearance between shifting key and synchronizer hub	0.05 to 0.35 {0.0020 to 0.014}	0.5 {0.020}	Replace
20, 21	Clearance in diameter direction between synchronizer sleeve and synchronizer hub	0.06 to 0.14 {0.0024 to 0.0055}	0.3 {0.012}	Replace
22, 25	Backlash between splitter pinion assembly and splitter high gear	0.114 to 0.294 {0.0045 to 0.012}	0.5 {0.020}	Replace
22, 23, 29	Clearance in diameter direction after assembling splitter pinion assembly and needle bearing to input shaft	—	0.12 {0.0050}	Replace

Tightening torque

Unit : N·m {lbf.ft, kgf·m}

Location	Parts to be tightened	Tightening torque	Remarks
1	Bolt (Power cylinder mounting)	40 {30, 4.1}	—
4	Bolt (Splitter upper mounting)	40 {30, 4.1}	—
6	Bolt (Clutch housing mounting)	190 {140, 19.2}	—
8	Bolt (Bearing retainer mounting)	40 {30, 4.1}	—
11	Bolt (Splitter high gear mounting)	290 {215, 29.7}	—
15	Bolt (Splitter case mounting)	190 {140, 19.2}	—
31	Plug	34 {25, 3.5}	—

Lubricant and sealant

Location	Points of application	Kinds	Quantity
9	Lip area of oil seal	Wheel bearing grease [NLGI No.2 (Li soap)]	As required
10	Splitter case mounting surface of bearing retainer	THREEBOND 1215	As required
34	Splitter upper mounting surface of splitter case	THREEBOND 1215	As required
*****	Splitter case mounting surface of transmission assembly	THREEBOND 1215	As required

Special tools

Unit : mm {in.}

Location	Tool name and shape	Part No.	Application
10	Oil seal front guide 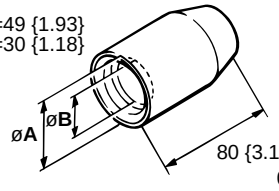	MH061392	Installation of front bearing retainer
29	Drive pinion and reverse shaft puller 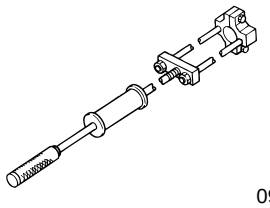	MH061614	Removal of input shaft

SPLITTER

Special tools

Unit : mm {in.}

Location	Tool name and shape	Part No.	Application
29, 30	Drive pinion bearing puller 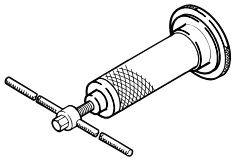 09253	MH061635	Removal of ball bearing of input shaft
	X=148 {5.83} **Y**=87 {3.43} **Z**=285 {11.2} Drive pinion bearing installer 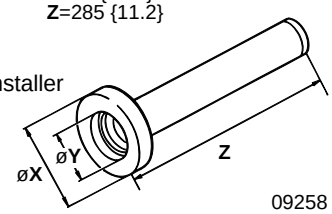 09258	ME650584	Installation of ball bearing into input shaft, installation of input shaft into splitter case

◆ Service procedure

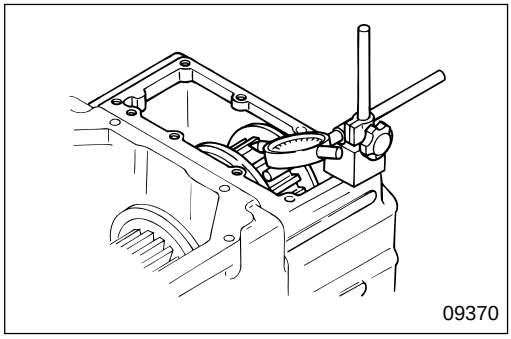
09370

● **Work before disassembly**

[Inspection]

(1) Backlash between splitter pinion assembly and splitter high gear

If the measured value is higher than the limit, replace the faulty parts. Also inspect this item after assembly and make sure that the measured value is within the limit.

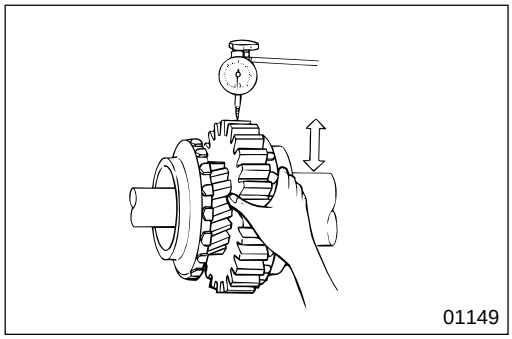
01149

(2) Clearance in the diameter direction between input shaft, and splitter pinion assembly or needle bearing after assembling them on the shaft

If the measured values are higher than the limit, replace the faulty parts.

Also inspect this item after assembly and make sure that the measured value is within the limit.

CAUTION⚠

Be sure when you replace two needle bearings of a gear, that both needle bearings are from the same color package.

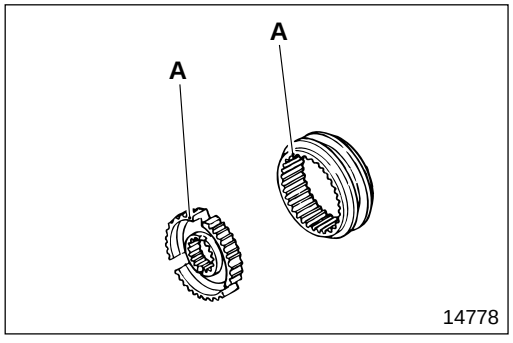

14778

[Alignment marks]

Synchronizer sleeve and synchronizer hub

Before disassembling the synchronizer sleeve and the synchronizer hub, put alignment marks **A** on the places where the shifting keys are installed. When reusing parts, align the alignment marks to assemble.

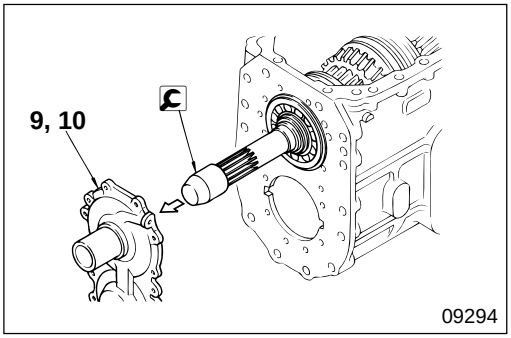

10 **Installation of bearing retainer**

When installing bearing retainer **10**, use oil seal front guide to avoid damage to oil seal **9**, which is installed on the bearing retainer.

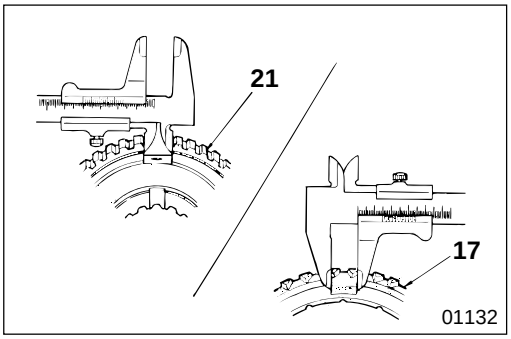

17 **21** **Clearance between synchronizer ring and synchronizer hub**

If the measured value is higher than the limit, replace the faulty parts.

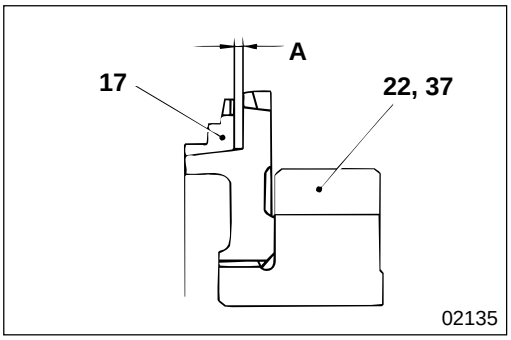

17 **22** **37** **Clearance between synchronizer ring, and splitter pinion or splitter synchronizer cone**

- Measure clearance **A** between synchronizer ring **17** and splitter pinion **22** or splitter synchronizer cone **37**.
- When measuring this value, press synchronizer ring **17** evenly and measure all around the circumference.
- If the measured value is lower than the limit, replace the faulty parts.

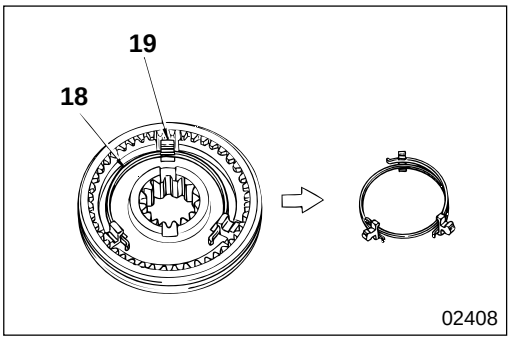

18 **Installation of shifting key spring**

- Insert shifting key **19** into the keyway.
- Install shifting key spring **18** so that its opening is offset from the one on the shifting key.
- Make sure that the opening of shifting key springs **18** do not align with each other.

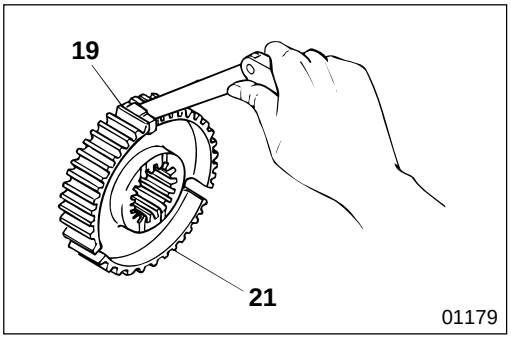

19 **21** **Clearance between shifting key and synchronizer hub**

If the measured value is higher than the limit, replace the faulty parts.

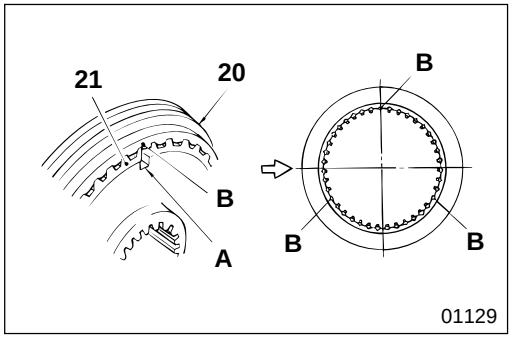

20 **Installation of synchronizer sleeve**

- Align the three keyways **A** of synchronizer hub **21** with the three stub teeth **B** of synchronizer sleeve **20** to install the synchronizer hub.
- To reassemble synchronizer hub **21** and synchronizer sleeve **20**, align the alignment marks made during disassembly.

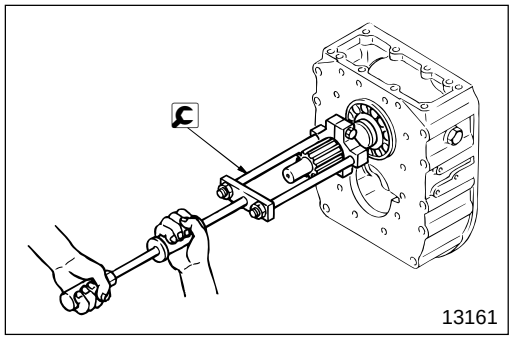

29 **Input shaft**

[Removal]

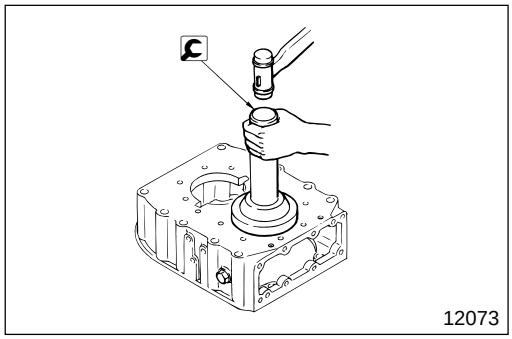

[Installation]

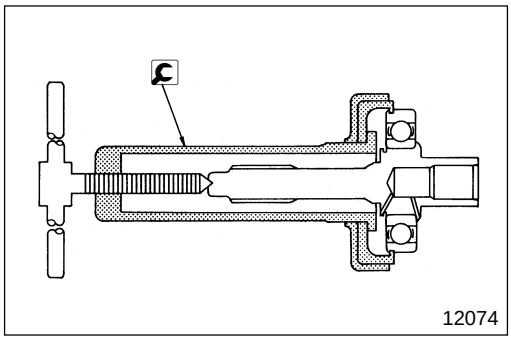

30 **Ball bearing**

[Removal]

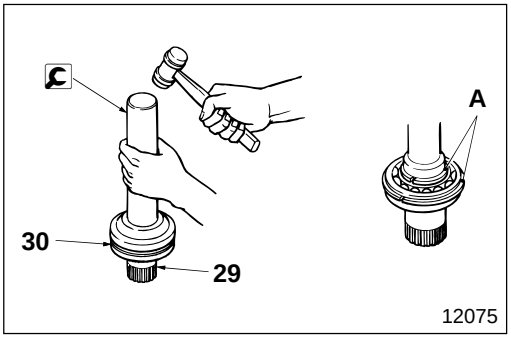

[Installation]
- Install ball bearings **30** on input shaft **29**.
- Install snap ring **A** on ball bearings **30**.

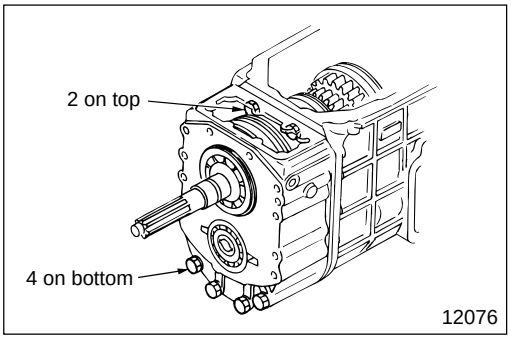

34 Removal and installation of splitter case

When you install splitter case **34**, note that there are two bolts on its top, and four bolts on its bottom.

SPLITTER UPPER ASSEMBLY

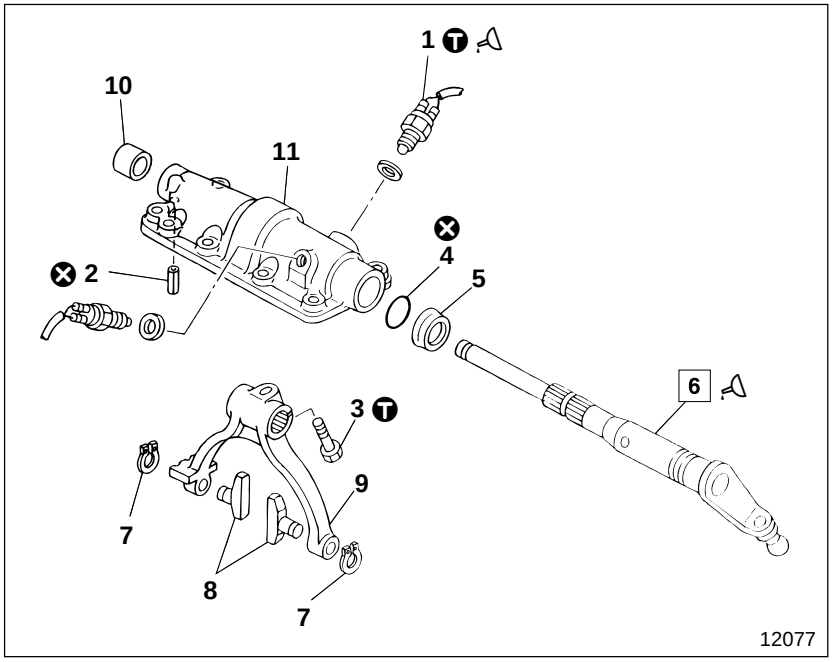

● **Disassembly sequence**

1 Interlock switch Gr 54
2 Spring pin
3 Bolt
4 O-ring
5 Dust seal
6 Splitter shift lever
7 Snap ring
8 Splitter shift fork piece
9 Splitter shift fork
10 Dust plug
11 Splitter upper case

⊗ : Non-reusable parts

● **Assembly sequence**

9→8→7
11 →3→2→10→1
6→5→4

Ⓣ Tightening torque

Unit : N·m {lbf.ft, kgf·m}

Location	Parts to be tightened	Tightening torque	Remarks
1	Interlock switch	49 {36, 5}	—
3	Bolt (Splitter shift fork mounting)	33 {25, 3.4}	—

Lubricant and sealant

Location	Points of application	Kinds	Quantity
1	Thread area of interlock switch	THREEBOND 1104J	As required
6	Pack O-ring groove of splitter shift lever	Wheel bearing grease [NLGI No.2 (Li soap)]	As required

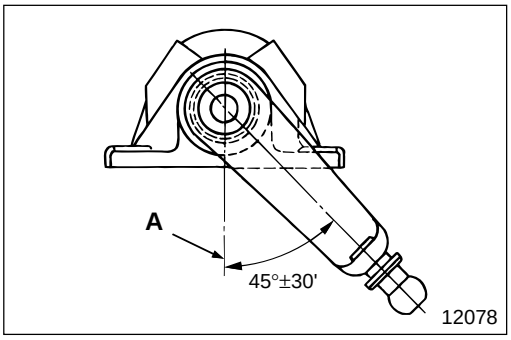

◆ Service procedure

6 **Installation of splitter shift lever**

Install splitter shift lever **6** to form the relation with splitter shift fork **9** as illustrated.

A : Splitter shift fork center

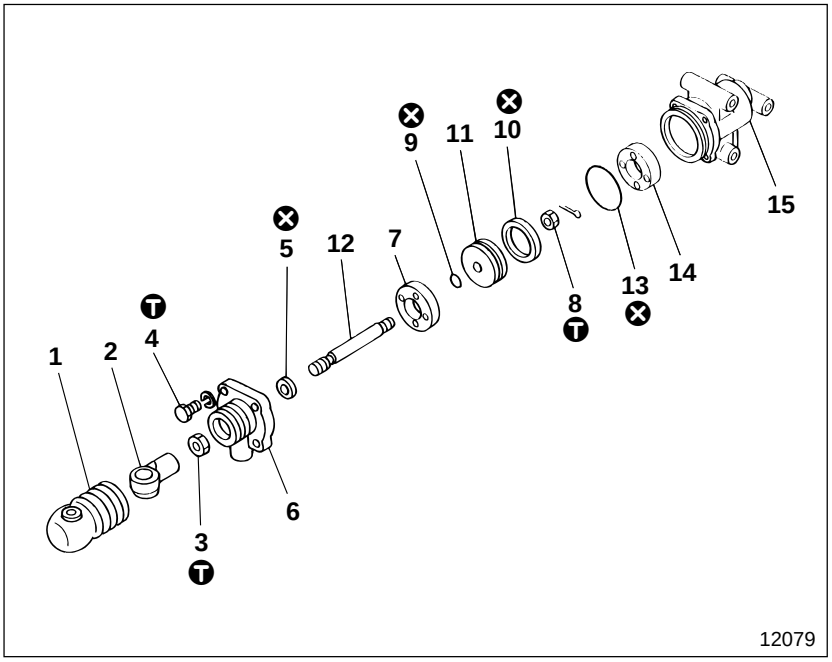

● **Disassembly sequence**

1 Boot
2 Shifter clevis
3 Nut
4 Bolt
5 X-ring
6 Body and seat assembly
7 Stopper
8 Nut
9 O-ring
10 X-ring
11 Piston plate
12 Piston rod
13 O-ring
14 Stopper
15 Cylinder assembly

⊗ : Non-reusable parts

● **Assembly sequence**

15→14→13
12 →7
→8 →4→3→2→1
11→10→9 6→5

Ⓣ Tightening torque

Unit : N·m {lbf.ft, kgf·m}

Location	Parts to be tightened	Tightening torque	Remarks
3	Nut (Shifter clevis fixing)	78 to 98 {58 to 72, 8 to 10}	—
4	Bolt (Body and seat assembly mounting)	3.9 to 5.9 {2.9 to 4.3, 0.4 to 0.6}	—
8	Nut (Piston plate and piston rod mounting)	9.8 to 15.0 {7.2 to 11.0, 1.0 to 1.5}	—

Lubricant

Location	Points of application	Kinds	Quantity
—	Friction surfaces	Multipurpose grease [NLGI No.2 (Li soap)]	As required

TRANSMISSION BODY

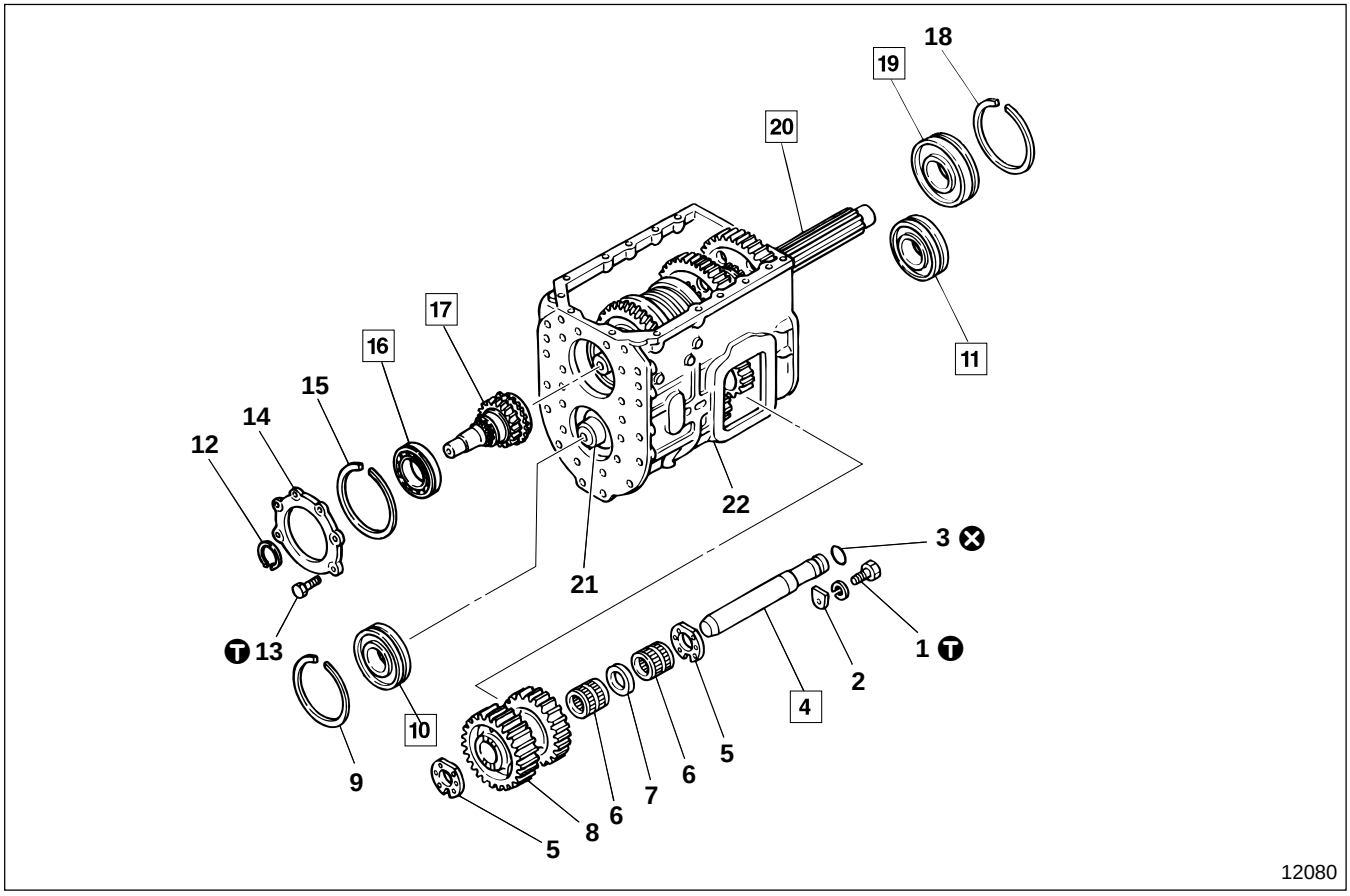

● **Inspection before disassembly**

📖 P22B-49

● **Disassembly sequence**

1 Bolt
2 Reverse shaft lock piece
3 O-ring
4 Reverse gear shaft
5 Reverse gear side washer
6 Needle bearing
7 Bearing spacer
8 Reverse gear
9 Snap ring
10 Countershaft front bearing
11 Countershaft rear bearing
12 Snap ring
13 Bolt
14 Bearing retainer
15 Snap ring
16 Drive pinion bearing
17 Drive pinion
18 Snap ring
19 Mainshaft rear bearing
20 Mainshaft assembly 📖 P22B-54
21 Countershaft assembly 📖 P22B-62
22 Transmission case

⊗ : Non-reusable parts

NOTE

Before removing mainshaft assembly 20, remove countershaft front and rear bearings 10, 11 so you can leave countershaft assembly 21 in transmission case 22.

● **Assembly sequence**

22→21→20
17→16→15→12
→14→13
19→18
10→9
→11
8→7→6→5
4→3
→2→1

Service standards

Unit : mm {in.}

Location	Maintenance item			Standard value	Limit	Remedy
4, 6, 7, 8	Clearance in diameter direction between reverse gear shaft, and needle bearing, bearing spacer and reverse gear after assembly			—	0.12 {0.0047}	Replace
8, 20, 21	Backlash	Drive pinion gear		0.08 to 0.26 {0.0031 to 0.01}	0.5 {0.020}	Replace gear 🕮 P22B-54
		4th gear		0.09 to 0.27 {0.0035 to 0.011}	0.5 {0.020}	
		3rd gear		0.09 to 0.27 {0.0035 to 0.011}	0.5 {0.020}	
		2nd gear		0.08 to 0.25 {0.0031 to 0.0098}	0.5 {0.020}	
		1st gear		0.09 to 0.27 {0.0035 to 0.011}	0.5 {0.020}	
		Reverse gear	Mainshaft side	0.09 to 0.28 {0.0035 to 0.011}	0.5 {0.020}	
			Countershaft side	0.08 to 0.25 {0.0031 to 0.0098}	0.5 {0.020}	
20	End play	4th gear		0.25 to 0.40 {0.0098 to 0.016}	0.6 {0.024}	Replace gear or thrust washer 🕮 P22B-54
		3rd gear		0.25 to 0.55 {0.0098 to 0.022}	0.75 {0.030}	
		2nd gear		0.15 to 0.60 {0.0059 to 0.024}	0.8 {0.031}	
		Reverse gear		0.15 to 0.65 {0.0059 to 0.026}	0.85 {0.033}	
		1st gear		0.15 to 0.55 {0.0059 to 0.022}	0.75 {0.030}	

Tightening torque

Unit : N·m {lbf.ft, kgf·m}

Location	Parts to be tightened	Tightening torque	Remarks
1	Bolt (Reverse shaft lock piece mounting)	40 {30, 4.1}	—
13	Bolt (Bearing retainer mounting)	40 {30, 4.1}	—

Special tools

Unit : mm {in.}

Location	Tool name and shape	Part No.	Application
4	Reverse gear shaft puller 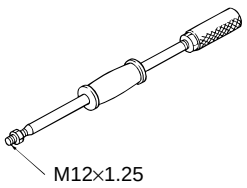 02118	03726-82000	Removal of reverse gear shaft
9, 12, 15, 18	Snap ring expander 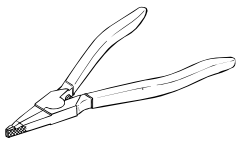 01137	MH061268	Removal and installation of snap ring
10, 11, 19	Mainshaft rear and countershaft bearing installer 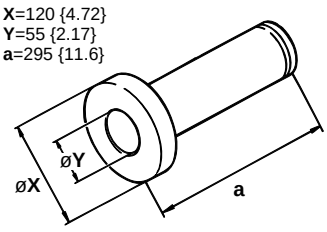 09260	MH062076	Installation of mainshaft rear bearing and countershaft bearing

Unit : mm {in.}

Location	Tool name and shape	Part No.	Application
11	Countershaft rear bearing puller 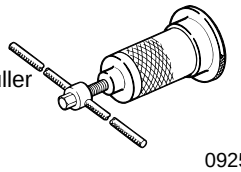 09256	MH062098	Removal of countershaft rear bearing
	Dummy bearing 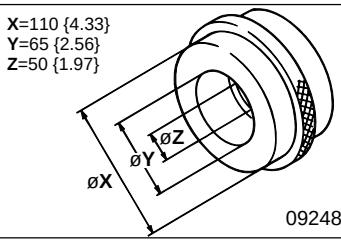 09248	MH061612	Installation of countershaft rear bearing
16	Drive pinion bearing puller 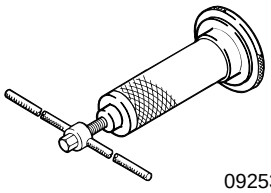 09253	MH061635	Removal of drive pinion bearing
16, 17	Drive pinion bearing installer 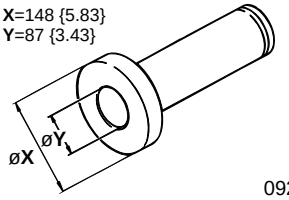 09260	ME650584	Installation of drive pinion bearing, installation of drive pinion in transmission case
	Synchronizer ring holder 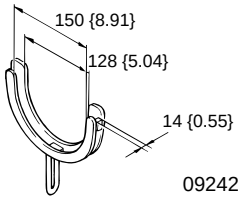 09242	ME650566	Supporting of 4th and 5th synchronizer ring
19	Mainshaft bearing puller 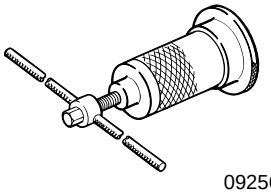 09256	MH062099	Removal of mainshaft rear bearing
	Dummy bearing retainer 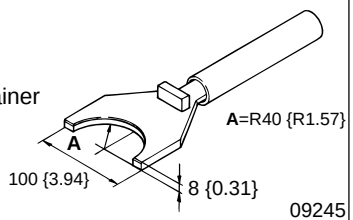 09245	MH061627	Blocking of movement of mainshaft when installing mainshaft rear bearing
	Dummy bearing 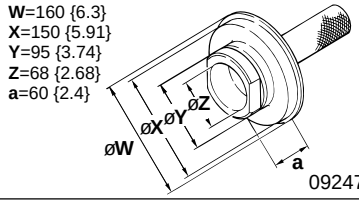 09247	MH061620	Installation of mainshaft rear bearing

◆ Service procedure

● Inspection before disassembly

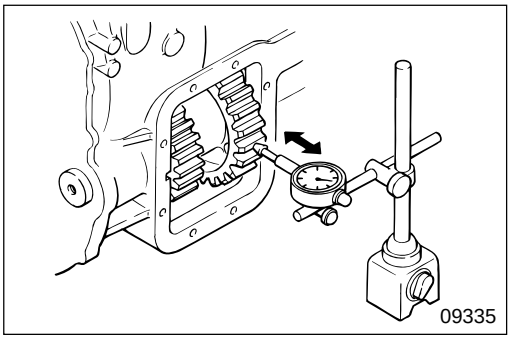

(1) Clearance in the diameter direction after assembling reverse gear

If the measured value is higher than the limit, replace the faulty parts. Also inspect this item after assembly and make sure that the measured value is within the limit.

CAUTION

Be sure when you replace two needle bearings of a gear, that both needle bearings are from the same color package.

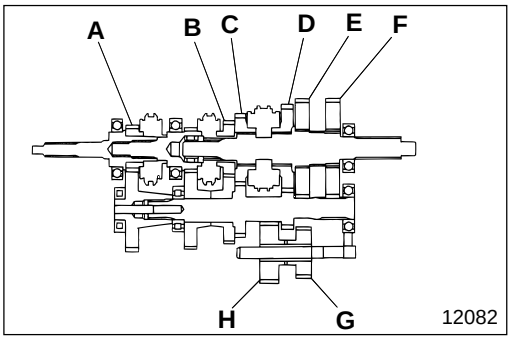

(2) Backlash and end play of gears

A : Drive pinion gear
B : 4th gear
C : 3rd gear
D : 2nd gear
E : Mainshaft reverse gear
F : 1st gear
G : Reverse gear (Mainshaft side)
H : Reverse gear (Countershaft side)

If the measured value is higher than the limit, replace the faulty parts. Also inspect this item after assembly and make sure that the measured value is within the limit.

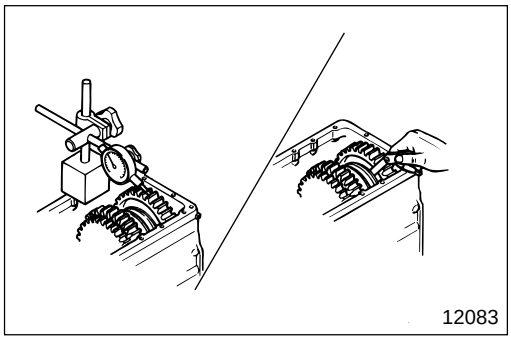

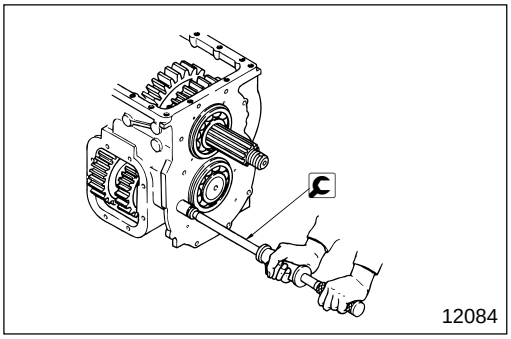

4 Removal of reverse gear shaft

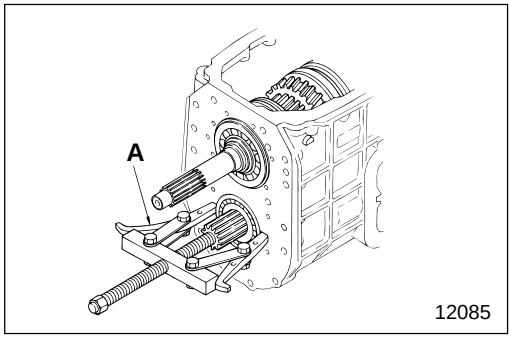

10 **Countershaft front bearing**

[Removal]
Remove countershaft front bearing **10** from transmission case **22** using a commercial gear puller of appropriate size.

A : Gear puller

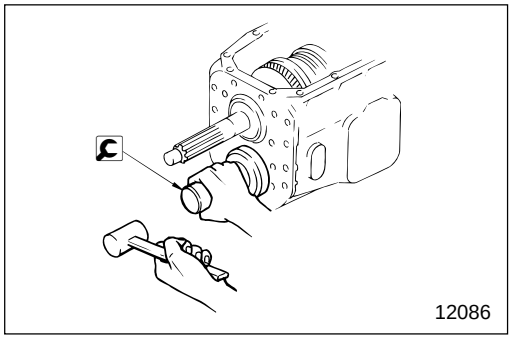

[Installation]

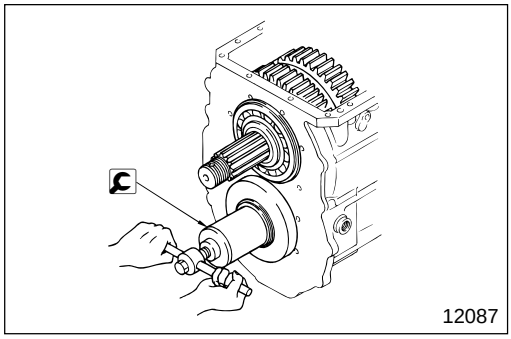

11 **Countershaft rear bearing**

[Removal]

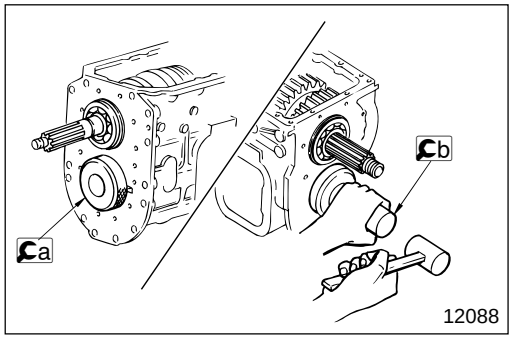

[Installation]

- Support the front end of countershaft **21** using a dummy bearing.
- Install countershaft rear bearing **11** in transmission case **22** using b mainshaft rear and countershaft bearing installer.

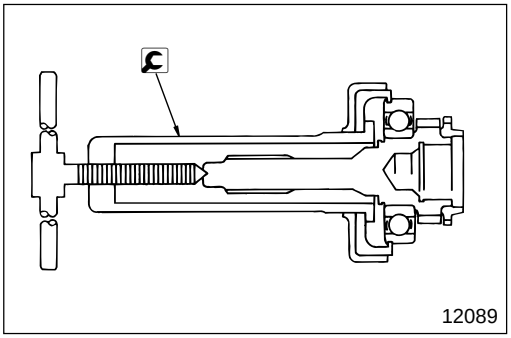

16 Drive pinion bearing

[Removal]

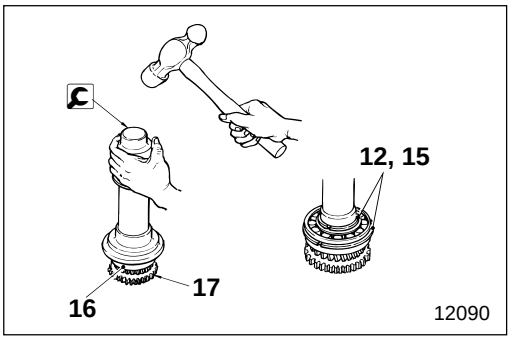

[Installation]

- Install drive pinon bearing **16** on drive pinion **17**.
- Install snap rings **12**, **15** on drive pinion bearing **16** and drive pinion **17** respectively.

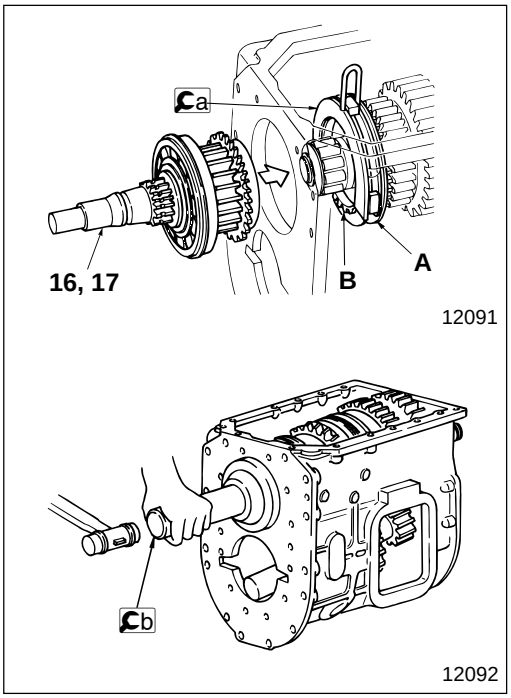

17 Installation of drive pinion

- When installing drive pinion **17** install a synchronizer ring holder to support synchronizer ring **A** and synchronizer sleeve **B**.
- Install drive pinon **17** in transmission case **22** using b drive pinion bearing installer.

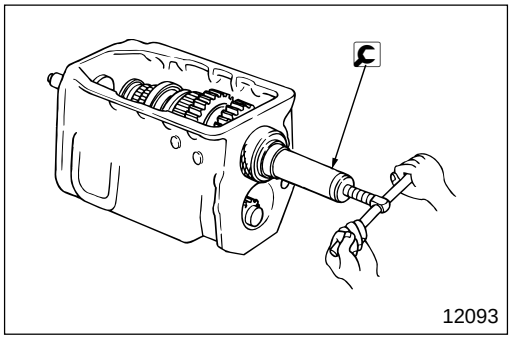

19 **Mainshaft rear bearing**

[Removal]

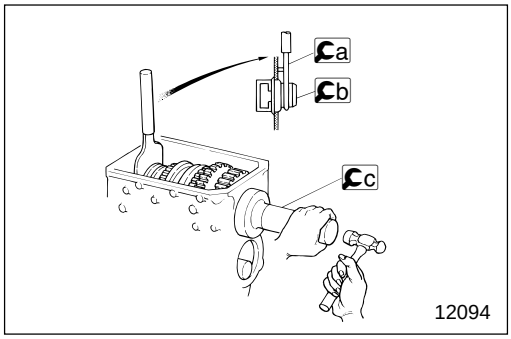

[Installation]

- Support the front end of mainshaft **20** using a dummy bearing retainer and b dummy bearing.
- Install mainshaft rear bearing **19**, on which snap ring **18** was installed, in transmission case **22** using c mainshaft rear and countershaft bearing installer.

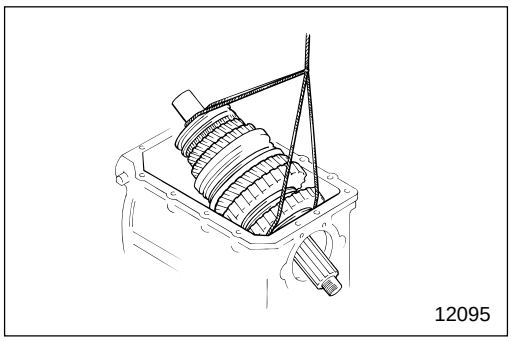

20 **Removal and installation of mainshaft**

M E M O

MAINSHAFT ASSEMBLY

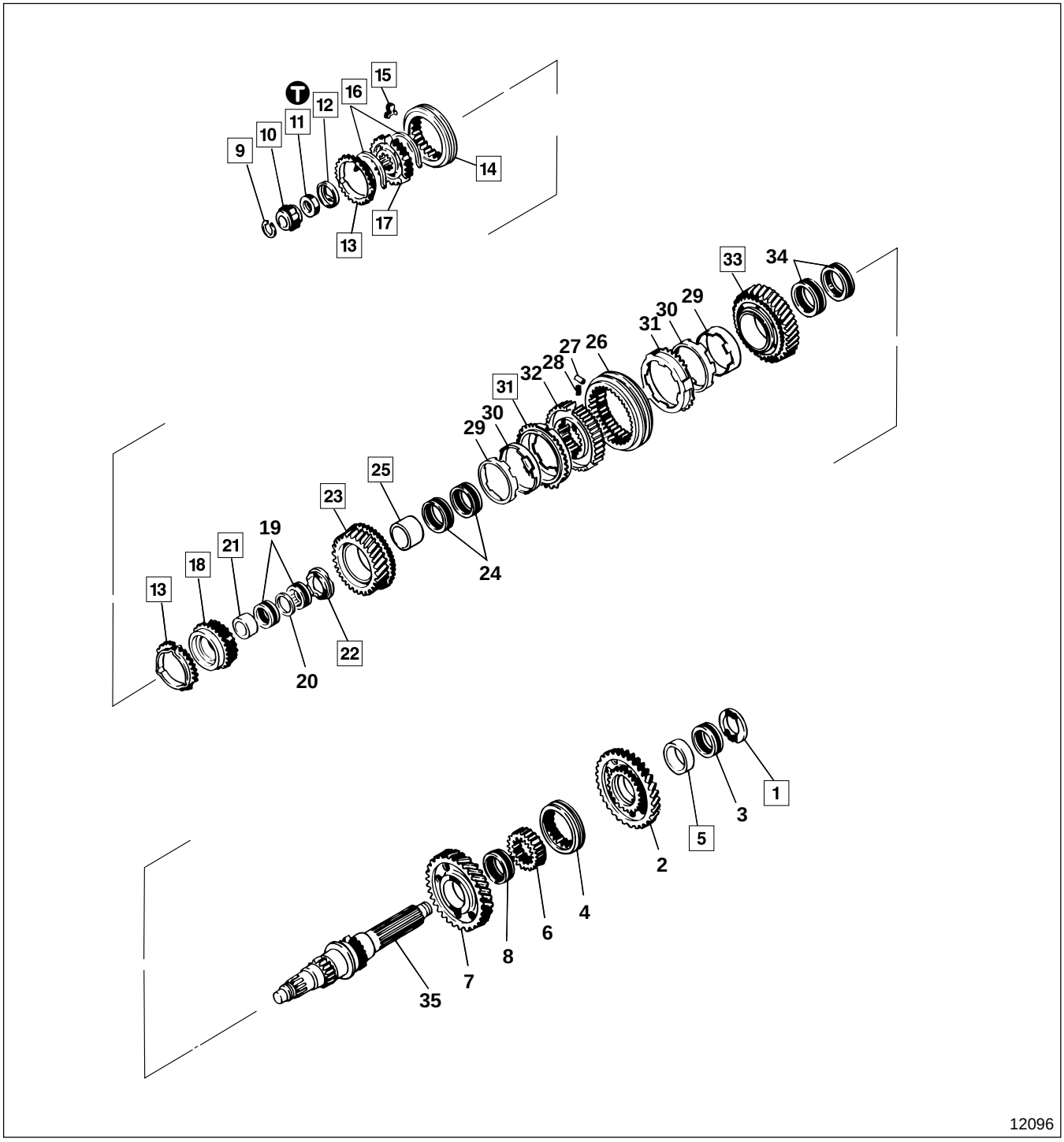

● **Work before disassembly**

P22B-57

● **Disassembly sequence**

1 1st gear thrust washer
2 Mainshaft 1st gear
3 Needle bearing
4 1st and reverse constant mesh sleeve
5 1st gear bearing sleeve
6 1st and reverse constant mesh hub
7 Mainshaft reverse gear
8 Needle bearing
9 Snap ring
10 Pilot bearing
11 Lock nut
12 Lock washer
13 Synchronizer ring
14 Synchronizer sleeve
15 Shifting key
16 Shifting key spring
17 Synchronizer hub
18 4th gear assembly
19 Needle bearing
20 Bearing spacer
21 4th gear bearing sleeve
22 Thrust washer
23 3rd gear assembly
24 Needle bearing
25 3rd gear bearing sleeve
26 Synchronizer sleeve
27 Shifting key
28 Shifting key spring
29 Synchronizer inner ring
30 Synchronizer center cone
31 Synchronizer outer ring
32 Synchronizer hub
33 2nd gear assembly
34 Needle bearing
35 Mainshaft

● **Assembly sequence**

35→34→33
32→31→30→29→28→26→27
→25→24→23→22→21→19→20→18
17→14→15→16→13
→12→11→10→9→8→7→6→5→4→3→2→1

MAINSHAFT ASSEMBLY

Service standards

Unit : mm {in.}

Location	Maintenance item	Standard value (Basic diameter in [ ])	Limit	Remedy
2, 3, 5, 35	Play in the diameter direction after assembling 1st gear	—	0.12 {0.0047}	Replace
5	Outer diameter of 1st gear bearing sleeve	[85] –0.030 to –0.043 {[3.35] –0.0012 to –0.0017}	-0.10 {-0.0039}	Replace
8, 7, 35	Play in the diameter direction after assembling reverse gear	—	0.12 {0.0047}	Replace
10, 35	Play in the diameter direction after assembling pilot bearing	—	0.12 {0.0047}	Replace
13, 17	Clearance between synchronizer ring and synchronizer hub	4.8 to 5.4 {0.19 to 0.21}	6.5 {0.26}	Replace
13, 18	Clearance between synchronizer ring and 4th gear assembly cone	2.5 {0.0098}	0 {0}	Replace
14, 17	Play in the diameter direction between synchronizer sleeve and synchronizer hub	0.06 to 0.14 {0.0024 to 0.0055}	0.3 {0.012}	Replace
15, 17	Clearance between shifting key and synchronizer hub	0.05 to 0.35 {0.0020 to 0.14}	0.5 {0.020}	Replace
18, 19, 20, 35	Play in the diameter direction after assembling 4th gear assembly	—	0.12 {0.047}	Replace
21	Outer diameter of 4th gear bearing sleeve	[61] –0.030 to –0.043 {[2.4] –0.0012 to –0.0017}	-0.10 {-0.0039}	Replace
23, 31	Clearance between 3rd gear assembly cone and synchronizer outer ring	2 {0.079}	0 {0}	Replace
23, 24, 25, 35	Play in the diameter direction after assembling 3rd gear assembly	—	0.12 {0.047}	Replace
25	Outer diameter of 3rd gear bearing sleeve	[76] –0.030 to –0.043 {[2.99] –0.0012 to –0.0017}	-0.10 {0.0039}	Replace
26, 32	Play in the rotating direction between synchronizer sleeve and synchronizer hub	0.062 to 0.174 {0.0024 to 0.0069}	0.3 {0.012}	Replace
31, 32	Clearance between synchronizer outer ring and synchronizer hub	4.8 to 5.4 {0.19 to 0.21}	6.5 {0.26}	Replace
31, 33	Clearance between synchronizer outer ring and 2nd gear assembly cone	2 {0.079}	0 {0}	Replace
33, 34, 35	Play in the diameter direction after assembling 2nd gear assembly	—	0.12 {0.047}	Replace

Ⓣ Tightening torque

Unit : N·m {lbf.ft, kgf·m}

Location	Parts to be tightened	Tightening torque	Remarks
11	Lock nut	430 to 590 {97 to 130, 44 to 60}	—

Special tools

Unit : mm {in.}

Location	Tool name and shape	Part No.	Application
5	Bearing sleeve installer **X**=85 {3.35} {1.97} **Y**=75 {2.95} {12.1} **Z**=54 {2.13} **a** = 5 0 **b** = 3 0 7 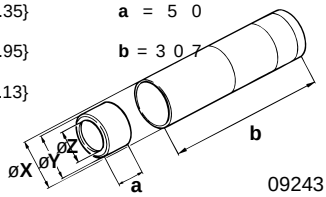 09243	ME650586	Installation of 1st gear bearing sleeve
9	Snap ring expander 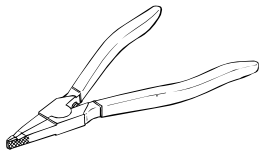 01137	MH061268	Removal and installation of snap ring
10	Pilot bearing puller 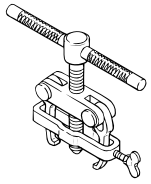 01146	MH061043	Removal of pilot bearing
	Pilot bearing installer 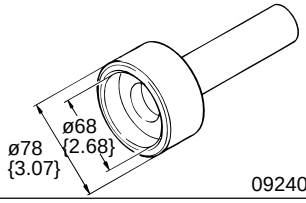 09240	44490-51400	Installation of pilot bearing
11	Single spanner 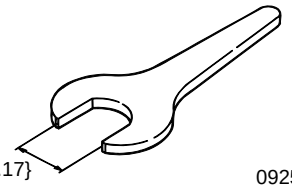 09250	MH061551	Removal and installation of lock nut
21, 25	Bearing sleeve installer **X**=80 {3.15} {1.38} **Y**=54.5 {2.15} {6.50} **Z**=32 {1.26} **a** = 3 5 **b** = 1 6 5 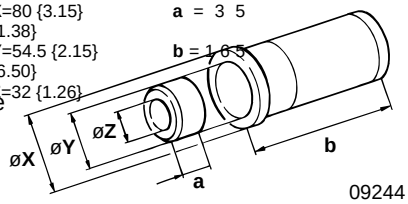 09244	44490-53400	Installation of 4th gear and 3rd gear bearing

◆ Service procedure

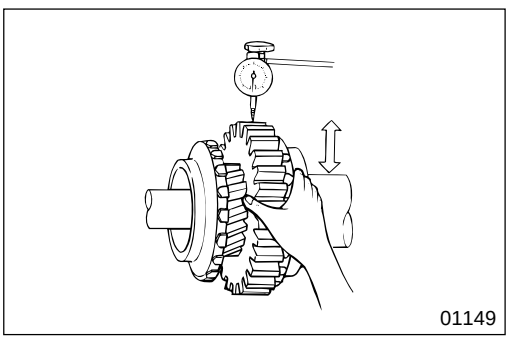
01149

● Work before disassembly

[Inspection]
Play of gears in diameter direction
If the measured value is higher than the limit, replace the faulty parts. Also inspect this item after assembly and make sure that the measured value is within the limit.

CAUTION⚠

Be sure when you replace two needle bearings of a gear, that both needle bearings are from the same color package.

MAINSHAFT ASSEMBLY

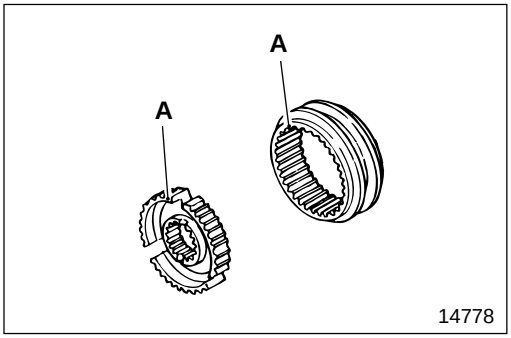

[Alignment marks]

(1) Synchronizer sleeve and synchronizer hub

Before disassembling the synchronizer sleeve and the synchronizer hub, put alignment marks **A** on the places where the shifting keys are installed. When reusing parts, align the alignment marks to assemble.

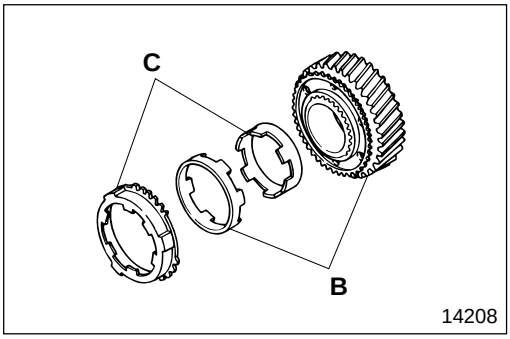

(2) Ring, cone and gear assembly of double cone synchronizer

Before disassembling synchronizer center cone and gear assembly (**B**), and synchronizer center ring and synchronizer outer ring (**C**), put alignment marks on them. When reusing parts, align the alignment marks to assemble.

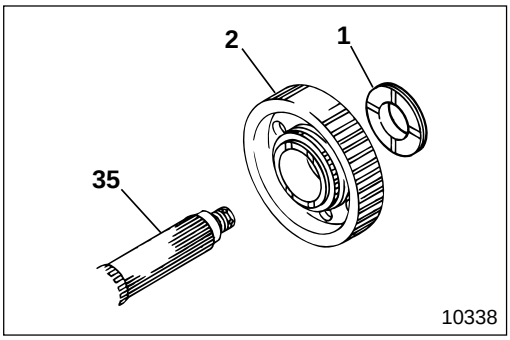

1 Installation of 1st gear thrust washer

Install 1st gear thrust washer **1** onto mainshaft **35** in the direction as illustrated.

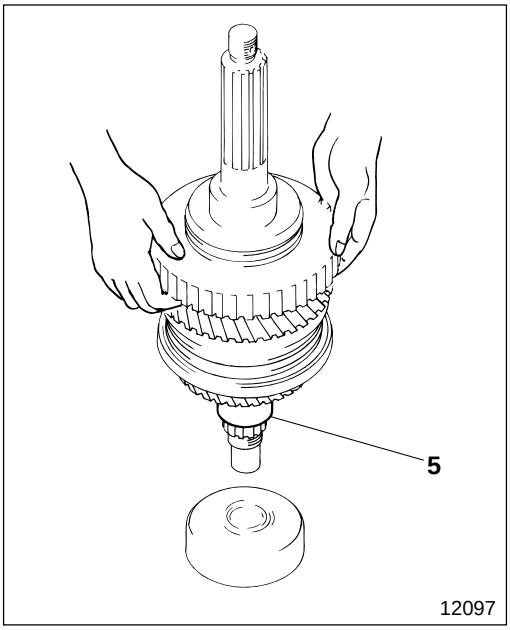

5 21 25 1st, 4th and 3rd gear bearing

[Removal]

Drop mainshaft **35** on a lead block to remove bearing sleeves **5, 21, 25,** making use of the weight of the gears.

CAUTION

Make sure you use a lead block and be careful you do not damage the end of mainshaft 35.

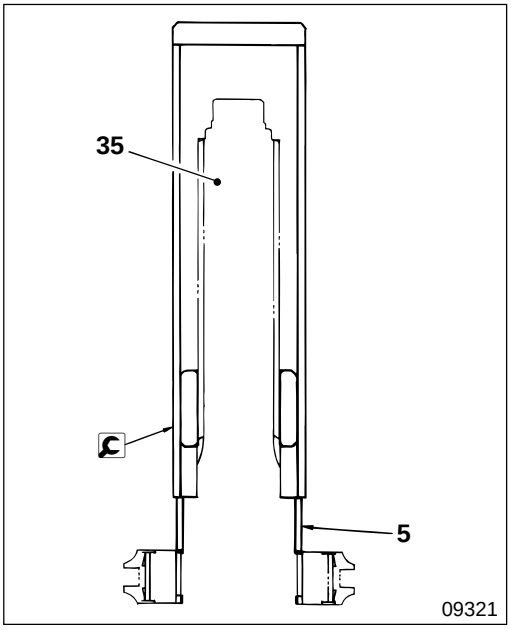

[Installation]

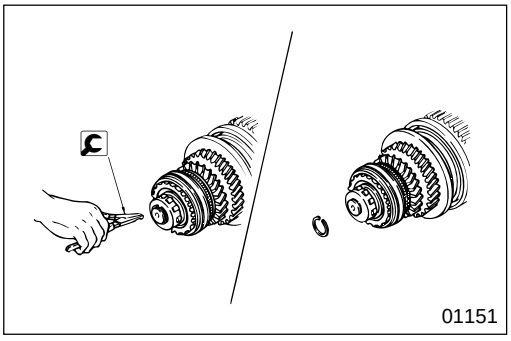

9 Removal and installation of snap ring

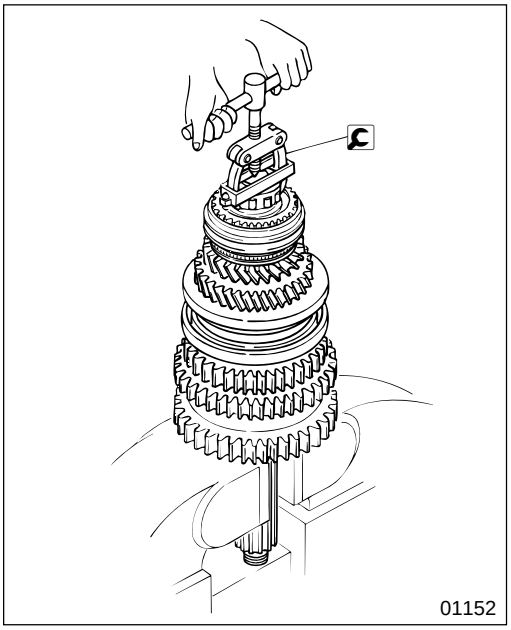

10 Pilot bearing

[Removal]

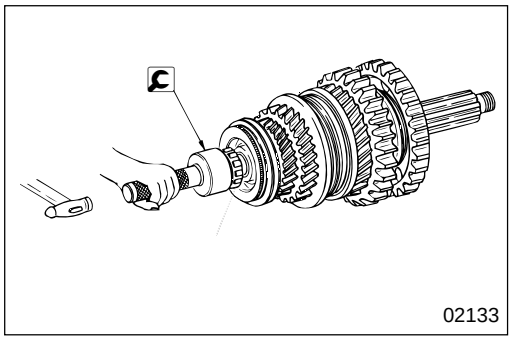

[Installation]

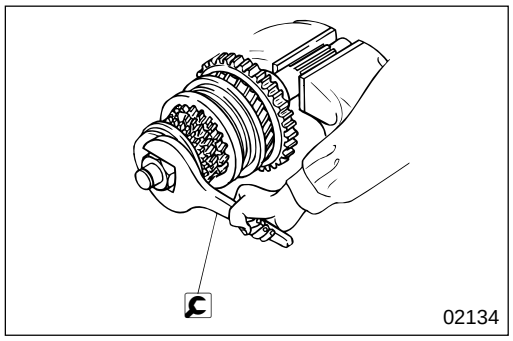

11 Removal and installation of lock nut

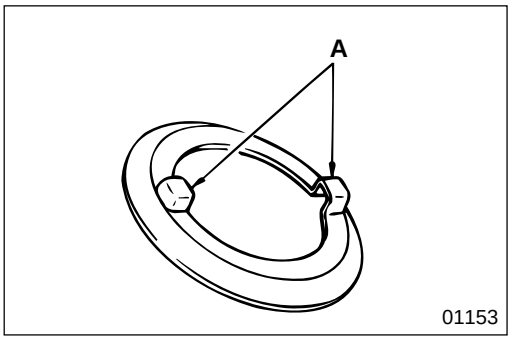

12 Installation of lock washer

Align protrusions **A** (two points as illustrated) with the grooves of synchronizer hub **17**.

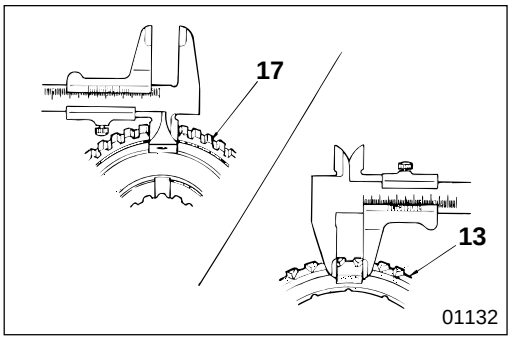

13 to 18 Synchromesh mechanism and 4th gear

[Inspection]

(1) Clearance between the protrusion of synchronizer ring 13 and the groove of synchronizer hub 17

If the measured value is higher than the limit, replace the faulty parts.

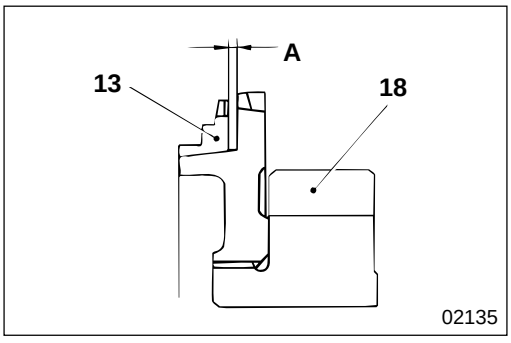

(2) Clearance between synchronizer ring 13 and 4th gear assembly 18 or drive pinion

- Measure clearance **A** between synchronizer ring **13** and the gear cone of 4th gear assembly **18** or drive pinion.
- When measuring this value, press synchronizer ring **13** evenly **1** and measure all around the circumference.
- If the measured value is lower than the limit, replace the faulty parts.

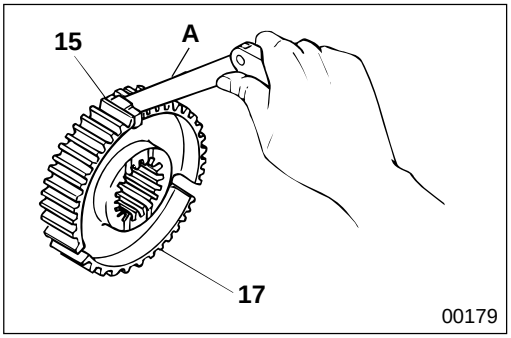

(3) Clearance between shifting key 15 and synchronizer hub 17

If the measured value is higher than the limit, replace the faulty parts.

A : Feeler gauge

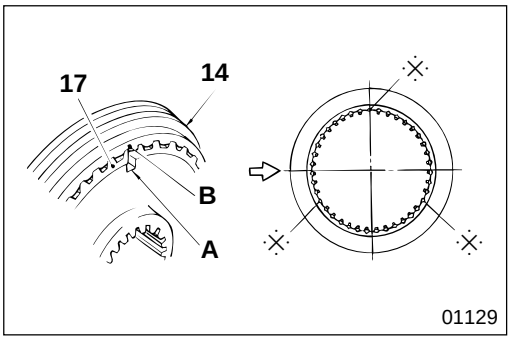

[Installation]

- Align the three keyways **A** of synchronizer hub **17** with the three stub teeth **B** (illustrated by ·⁜· mark) of synchronizer sleeve **14** to install the synchronizer hub.
- To reassemble synchronizer hub **17** and synchronizer sleeve **14**, align the alignment marks made during disassembly.

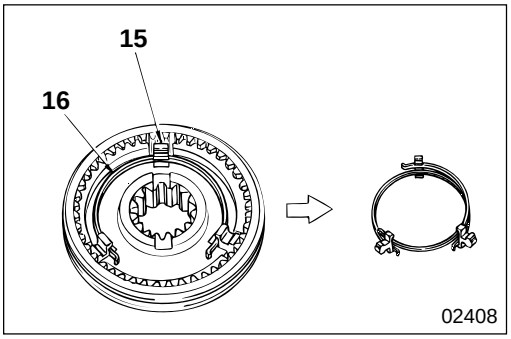

- Insert shifting key **15** into the keyway.
- Install shifting key spring **16** so that its opening is offset from the one on the shifting key.
- Make sure that the openings of shifting key springs **16** do not align with each other.

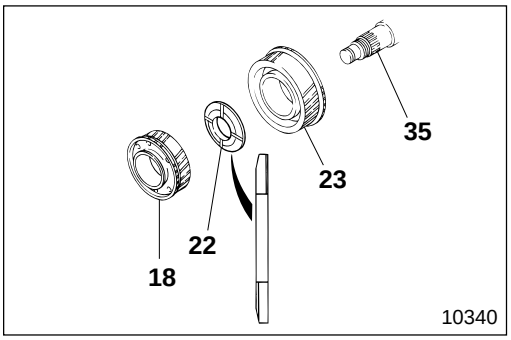

22 Installation of thrust washer

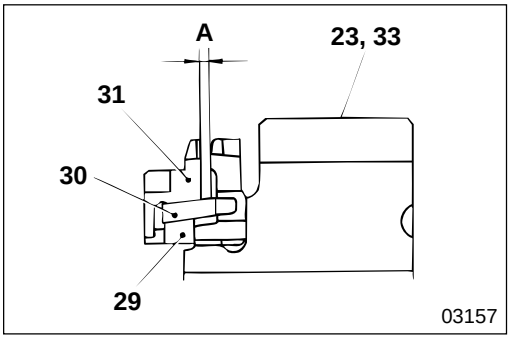

23 31 33 Clearance between synchronizer outer ring and 3rd gear assembly or 2nd gear assembly

- Measure clearance **A** between synchronizer outer ring **31** and 3rd gear assembly **23** or 2nd gear assembly cone **33**.
- When measuring this value, press synchronizer inner ring **29**, synchronizer center cone **30** and synchronizer outer ring **31** evenly and measure all around the circumference.
- If the measured value is lower than the limit, replace the faulty parts.

COUNTER SHAFT ASSEMBLY

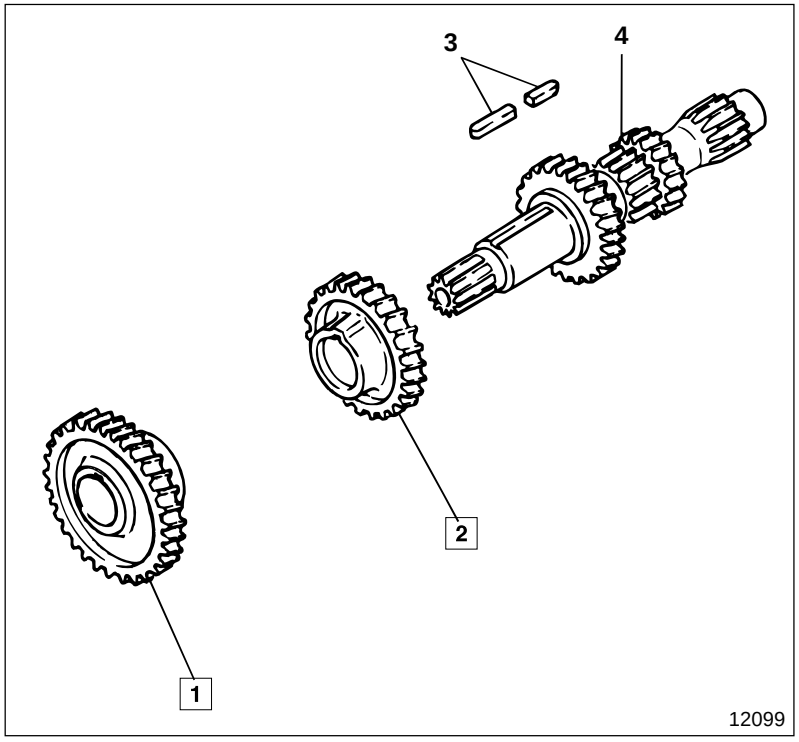

● **Disassembly sequence**

1 Countershaft constant mesh gear
2 Countershaft 4th gear
3 Sunk key
4 Countershaft

● **Assembly sequence**

Follow the disassembly sequence in reverse.

Special tools

Unit : mm {in.}

Location	Tool name and shape	Part No.	Application
1, 2	Countershaft gear puller 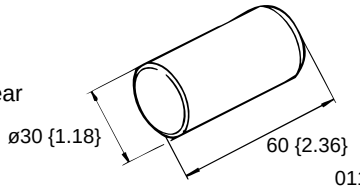	ME624243	Removal of countershaft gear
	Countershaft gear installer 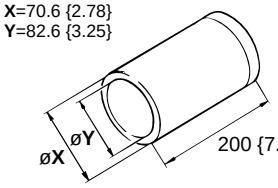	44590-56100	Installation of countershaft gear

◆ Service procedure

1 **2** **Countershaft constant mesh gear and countershaft 4th gear**

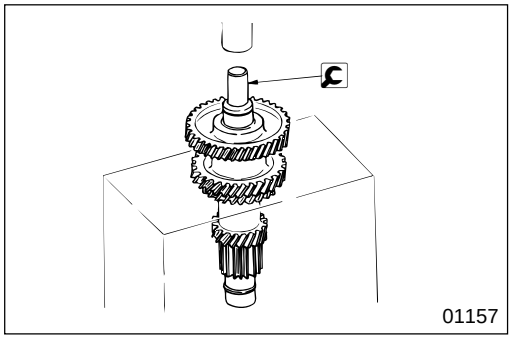

[Removal]
Use a press.

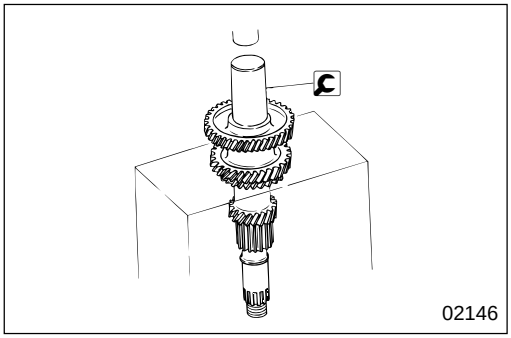

[Installation]
Use a press.

TRANSMISSION CONTROL

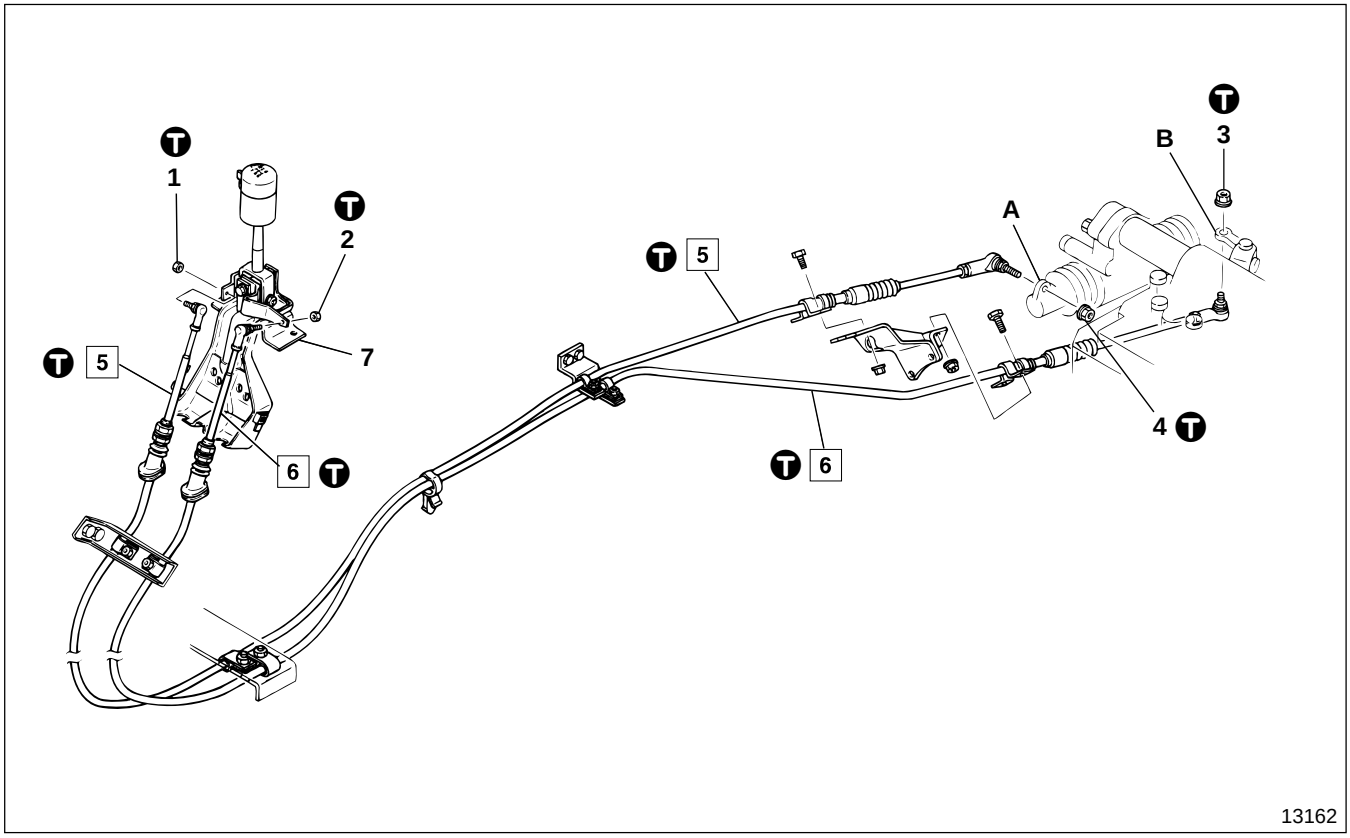

For removal and installation of the shift lever console and the floor console, refer to Gr 42

● **Disassembly sequence**

1 Nut
2 Nut
3 Nut
4 Nut
5 Shift cable
6 Select cable
7 Transmission control lever assembly
P22B-67
A : Shift lever
B : Select lever

● **Assembly sequence**

Follow the disassembly sequence in reverse.

Tightening torque

Unit : N·m {lbf.ft, kgf·m}

Location	Parts to be tightened	Tightening torque	Remarks
1 to 4	Nut (Ball joint or rubber damper mounting)	19 to 24 {14 to 17, 1.9 to 2.4}	—
5, 6	Tightening of cable lock nut	59 to 83 {43 to 61, 6 to 8.5}	—

◆ Service procedure

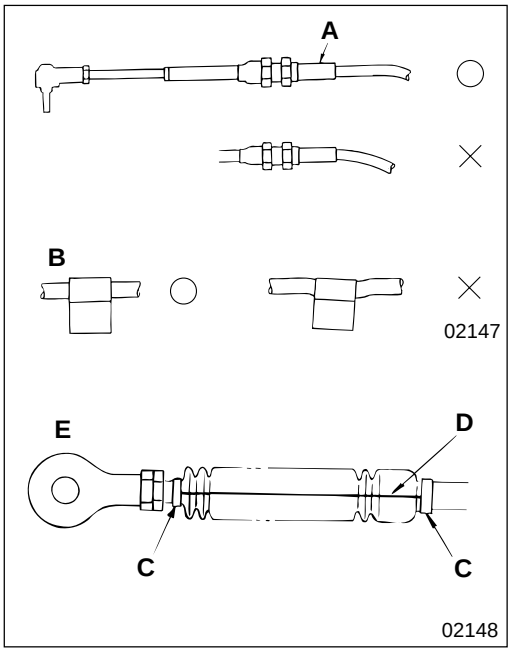

5 **6** **Installation of shift cable and selector cable**

CAUTION⚠

- **Install casing cap A lengthwise.**
- **Make sure the radius of the bend is 200 mm {7.87 in.} or more.**
- **Make sure the cable operates smoothly.**
- **Install the clamp vertically against the cable. (Figure B)**
- **Do not twist clamps C at both ends of the boot. Make sure that white line D on the boot is straight. (Figure E)**

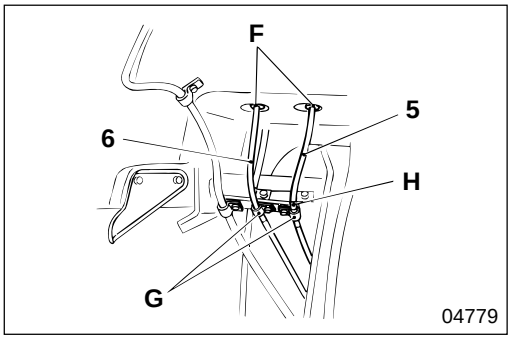

- Insert shift cable **5** and selector cable **6** under the cab floor and clamp them in the correct place by identifying identification mark **H** on the shift cable. (The selector cable has no identification mark.)
  F : Grommet
  G : Clip

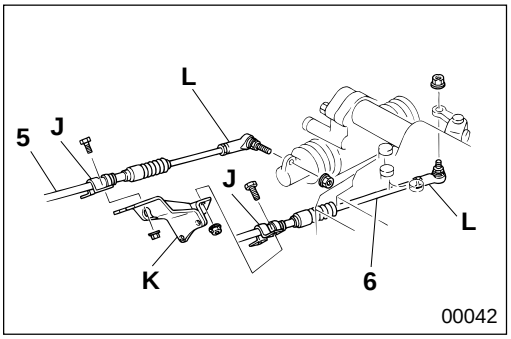

- Install cable clip **J** to bracket **K** temporarily and connect ball joint **L** to the shift lever or selector lever.
- Arrange the cable so that it not twisted, then tighten clip **J** permanently.

CAUTION⚠

Make sure the identification marks on the cable, ball joint L point in the right direction when you install the cables. Installing the cables with the identification marks in the wrong direction can remarkably reduce the durability of the cables.

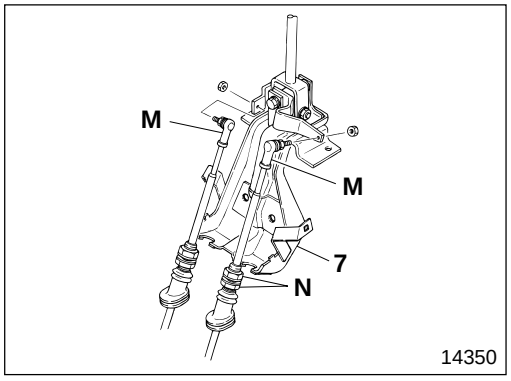

- Tilt the cab down.
- Install the cable on transmission control lever assembly **7** temporarily and connect ball joint **M** to shift lever and selector lever.
- Arrange the cable so that it is not twisted, then tighten lock nuts **N** permanently.

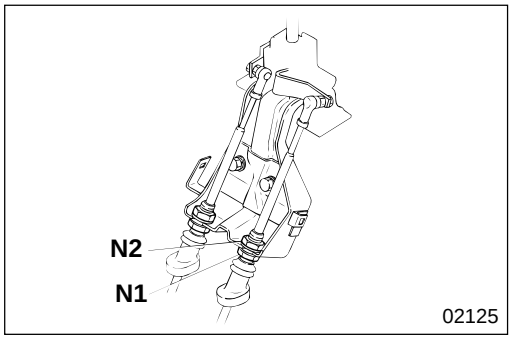

CAUTION⚠

- **Make sure that ball joint P faces the correct direction.**
- **When installing the lock nut, tighten lower nut N1. Do not move nut N2.**

- Make sure when you operate the gear shift lever that it shifts smoothly and selects each position.

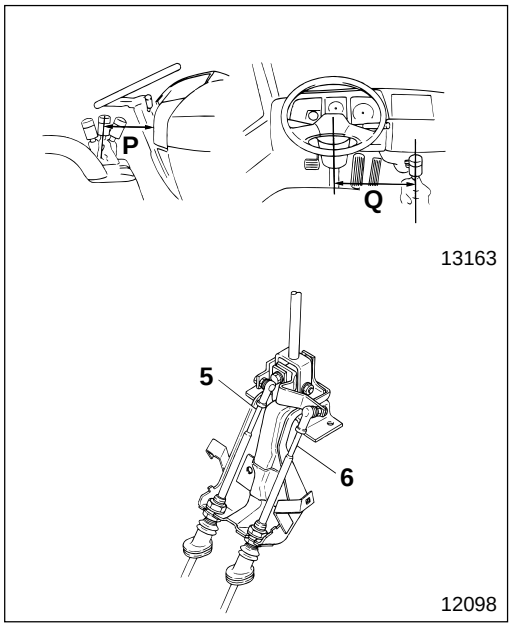

- If the gear shift lever leans to the front or rear, or to the left or right, excessively, adjust the length of the cable.
- When positioning the gear shift lever, use the distance from the center of the steering wheel or from the instrument panel as the reference distance.

Unit : mm {in.}

Front and rear direction **P** (Distance from the instrument panel)	Left and right direction **Q** (Distance from the steering wheel center)
214 {8.43}	409 {16.1} (4th and 5th gear position)

	Shift cable **5**	Selector cable **6**
To front	Shorten	—
To rear	Lengthen	—
To left	—	Shorten
To right	—	Lengthen

Transmission Control Lever Assembly

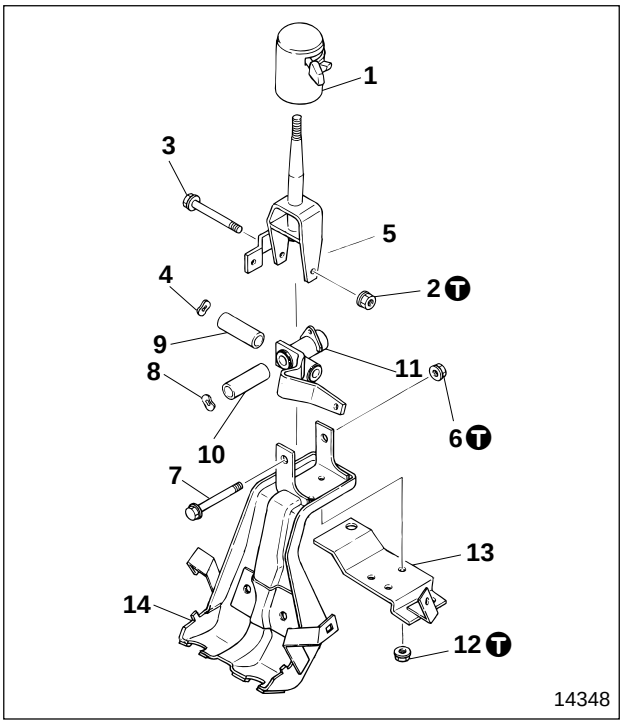

● **Disassembly sequence**

1 Air control valve 📖 P22B-69
2 Nut
3 Bolt
4 Washer
5 Shift lever
6 Nut
7 Bolt
8 Washer
9 Collar
10 Collar
11 Select lever
12 Nut
13 Bracket
14 Set board

● **Assembly sequence**

14→13→12 →8→7→6→5→4→3→2→1
11→10→9

T Tightening torque

Unit : N·m {lbf.ft, kgf·m}

Location	Parts to be tightened	Tightening torque	Remarks
2	Nut (Shift lever mounting)	19 to 28 {14 to 21, 1.9 to 2.9}	—
6	Nut (Selector lever mounting)	19 to 28 {14 to 21, 1.9 to 2.9}	—
12	Nut (Bracket mounting)	3.9 to 5.9 {2.9 to 4.3, 0.4 to 0.6}	—

Lubricant

Location	Points of application	Kinds	Quantity
—	All sliding areas	Chassis grease [NLGI No.1 (Ca soap)]	As required

SPLITTER CONTROL

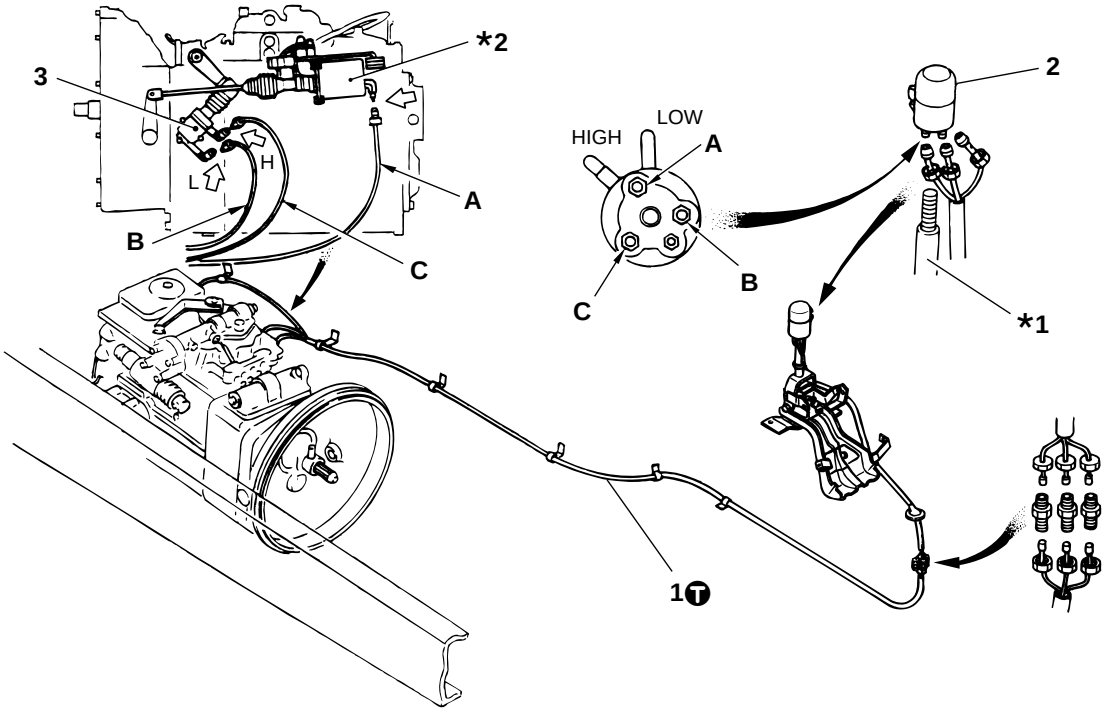

● **Removal sequence**

1 Air tube
2 Air control valve 📖 P22B-69
3 Power cylinder 📖 P22B-45

***1** : Gear shift lever
***2** : Clutch booster
A : Blue tube
B : Black tube
C : Yellow tube

CAUTION⚠

Protect tubes from dust by fitting blanking plugs after removal.

● **Installation sequence**

Follow the removal sequence in reverse.

T Tightening torque

Unit : N·m {lbf.ft, kgf·m}

Location	Parts to be tightened	Tightening torque	Remarks
1	Air tube connector	4.9 to 6.9 {3.6 to 5.1, 0.5 to 0.7}	—

Air Control Valve

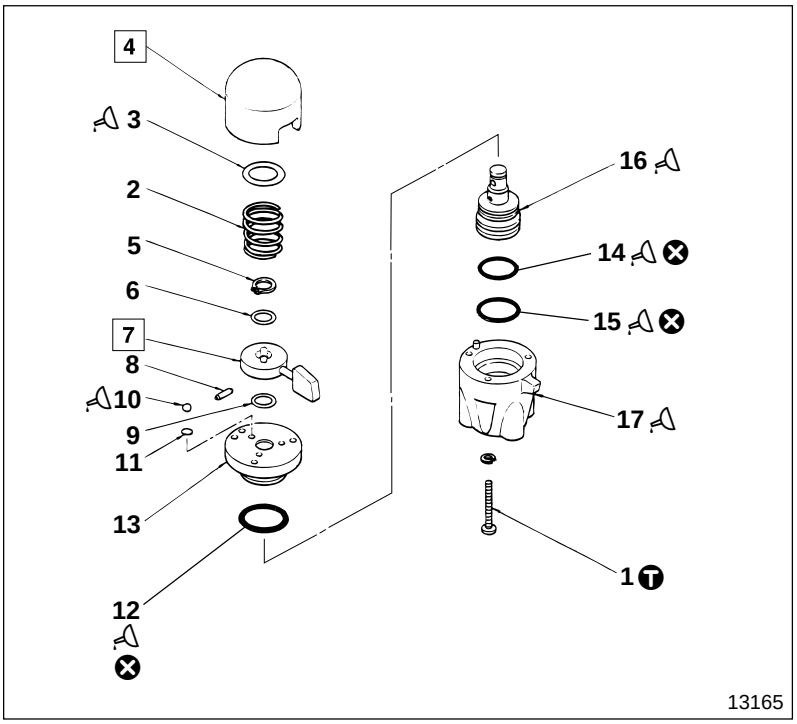

● **Disassembly sequence**

1 Screw
2 Detent spring
3 Spring seat
4 Cover
5 Snap ring
6 Shim
7 Lever
8 Pin
9 Shim
10 Steel ball
11 Detent seat
12 O-ring
13 Valve cover
14 O-ring
15 O-ring
16 Valve piston
17 Valve body

⊗ : Non-reusable parts

● **Assembly sequence**

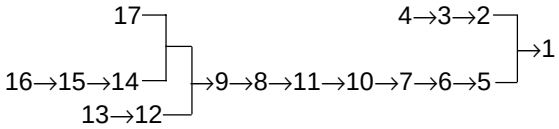

Service standards

Unit : mm {in.}

Location	Maintenance item	Standard value	Limit	Remedy
4, 7	Clearance between cover and lever	$0.6\ ^{+0.3}_{0}$ {$0.024\ ^{+0.012}_{0}$}	—	Adjust with shim

Ⓣ Tightening torque

Unit : N·m {lbf.ft, kgf·m}

Location	Parts to be tightened	Tightening torque	Remarks
1	Screw (Cover mounting)	1.0 to 1.5 {0.7 to 1.1, 0.1 to 0.15}	—

SPLITTER CONTROL

Lubricant

Location	Points of application	Kinds	Quantity
3	Spring seat	Multipurpose grease [NLGI No.3 (Li soap)]	As required
10	Steel ball	Multipurpose grease [NLGI No.3 (Li soap)]	As required
12, 14, 15	O-ring	Silicon grease	As required
16	Friction surfaces between valve piston and valve cover	Multipurpose grease [NLGI No.3 (Li soap)]	As required
17	Valve seat surface of valve body	Silicon grease	As required

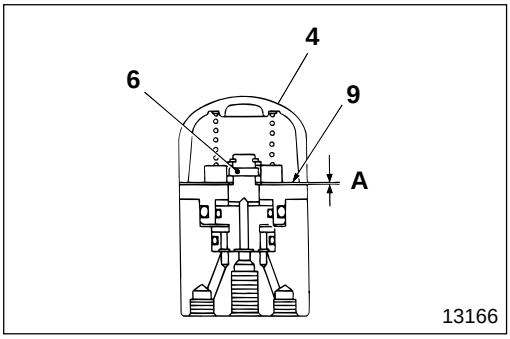

◆ Service procedure

4 **7** **Adjustment of clearance between cover and lever**

After assembling air control valve assembly, measure clearance **A** between cover **4** and lever **7**.
If the measured value deviates from the standard value, adjust with shims **6, 9**.

MITSUBISHI FUSO

FK.FM Service Manual

Group 23 - Automatic Transmission

Group 23 - 2001 Minor Changes

BACK HOME

MITSUBISHI FUSO TRUCK OF AMERICA, Inc.

MITSUBISHI
FUSO

FM

Service Manual

Group 23
AUTOMATIC TRANSMISSION

2001 Model Year Change

Table of Contents

MITSUBISHI FUSO TRUCK OF AMERICA, Inc.

BACK HOME

Pub No. TWME9503-623

FM

SERVICE MANUAL

FOREWORD

This Service Manual contains maintenance and repair methods for personnel involved in the maintenance and repair of 2001 model Mitsubishi Fuso Truck FM series.
Read this manual carefully as an aid to providing correct, efficient and fast maintenance.
Please note, however, that due to continuous improvements on the specifications, numbers and description for maintenance might be changed without prior notice.
If you have any questions, or encounter a problem, please do not hesitate to contact your nearest Mitsubishi Fuso dealer or distributor.

© Mitsubishi Motors Corporation, July 2000

MITSUBISHI FUSO TRUCK OF AMERICA, Inc.

GROUP INDEX

MODEL CHANGES

GENERAL 00

AUTOMATIC TRANSMISSION 23

BRAKE 35B

ELECTRICAL 54

MODEL CHANGES

(For FM657 with Automatic Transmission)

- This book is the Service Manual for FM657 equipped with an automatic transmission.
- The points of difference compared with FM657 equipped with manual transmission are described.
- For the maintenance, other than services described in this manual, refer to FK/FM 2001 Service Manual (Pub.No.TWME9503-5).

Item	Contents of difference point
Gr 11 Engine • Except for the flywheel and the flex plate which have been changed, refer to specifications for the automatic transmission in Gr11 Engine of FK/FM Shop Manual (Pub. No. TWME9503-11).	

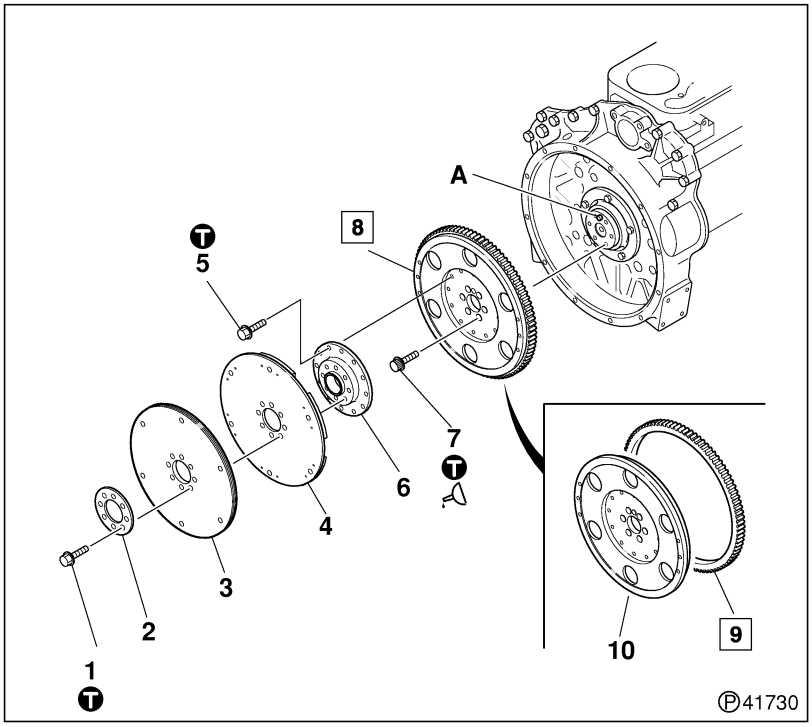

● Disassembly sequence

1 Bolt
2 Washer plate
3 Flex plate
4 Flex plate assembly
5 Bolt
6 Flywheel adapter
7 Bolt
8 Flywheel assembly
9 Ring gear
10 Flywheel

A: Positioning pin

● Reassembly sequence

Follow the disassembly sequence in reverse.

Ⓣ Tightening torque Unit : N·m {ft.lbs, kgf·m}

Location	Parts to be tightened	Tightening torque	Remarks
1	Bolt (Flex plate mounting)	147 {110, 15}	—
2	Bolt (Flywheel adapter mounting)	74.5 {55, 7.6}	—
3	Bolt (Flywheel mounting)	250 {190, 26}	—

Item	Contents of difference point
Gr 23 Automatic transmission Addition of maintenance procedures	**Gr 23 Automatic transmission** Pub. No. TWME 9503-623
GR 35B Brake <Full Air> The wheel brake differs	**Gr 35B**
Gr 54 Electrical **4 METER** The circuit of the speedometer differs due to the usage of the pulse converter.	(410) SPEEDOMETER CIRCUIT P54-4
6 CAB SIDE ELECTRICS This section is different in the location and servicing points of the relay and control unit.	(604) RELAY AND CONTROL UNIT P54-6
7 CHASSIS ELECTRICS The exhaust brake circuit is added to the vehicle equipped with an automatic transmission.	(710) SPEEDOMETER CIRCUIT P54-10
8 ENGINE AND TRANSMISSIOIN ELECTRICAL The location of parts vary due to the different automatic transmissions.	(802) TRANSMISSION ELECTRICAL P54-13

GROUP 00 GENERAL

POWER TRAIN TABLE 00-2

POWER TRAIN TABLE

Model	Engine model	Clutch model	Transmission model	Propeller shaft	Rear axle model	Final reduction and gear ratio
FM657J, L, M, P G.V.W. 14920 kg {32900 lb}	6D16T2 230HP/2600rpm 521ft.lbs/1600rpm (SAE, Gross)	Torque converter (TC415-2.35)	M100A6 (Allison MD3060) 3.487/0.652	P10	R060T	D8H 6.666

GROUP 23 AUTOMATIC TRANSMISSION

SPECIFICATIONS 23-2

STRUCTURE AND OPERATION
1. Automatic Transmission Assembly 23-4
2. Automatic Transmission Control System 23-5
3. Oil Cooler System 23-6

TROUBLESHOOTING 23-7

ON-VEHICLE INSPECTION AND ADJUSTMENT
1. Stall Test 23-12
2. Line Pressure Test 23-13
3. Inspection of Automatic Transmission Fluid 23-15
4. Replacement of Automatic Transmission Fluid 23-16
5. Level Check of Automatic Transmission Fluid 23-18
6. Replacement of Oil Filter 23-19

OIL COOLER 23-20

ELECTRICAL WIRING DIAGRAM 23-23

SPECIFICATIONS

AUTOMATIC TRANSMISSION MAJOR SPECIFICATIONS

Item			M100A6
Torque converter	Type		3-element, 1-stage, 2-phase
	Stall torque ratio		2.35
Transmission	Type		Planetary gear type 6 forward speeds and 1 reverse speed
	Gear ratio	1st	3.487
		2nd	1.846
		3rd	1.409
		4th	1.000
		5th	0.750
		6th	0.652
		Rev	5.027
Range selector pattern			R – "N" – D – 5 – 4 – 3 – 2 – 1 Engine can be started in N position only.
Automatic transmission fluid	Specified fluid		DEXRON III
	Fluid quantity	Afterdrain dm^3{L} (qts)	18 {18} (19)
		Main unit dm^3 {L} (qts)	27 {27} (28.5)
		Overall system dm^3 {L}(qts)	31 {31} (32.7)
Weight of automatic transmission assembly kg(qts)			310 (683.4)

VEHICLE SPEED AT GEAR SHIFT (D RANGE)

Unit: km/h {mph} (rpm)

Accelerator position	Mode switch position / Gearshift	Normal	Power
100%	1 → 2	15 {10} (540)	17 {11} (600)
	2 → 3	37 {23} (1270)	41 {26} (1440)
	3 → 4	49 {30} (1700)	55 {34} (1920)
	4 → 5	70 {43} (2430)	78 {49} (2730)
	5 → 6	94 {58} (3270)	105 {65} (3670)
50%	1 → 2	15 {10} (540)	17 {11} (600)
	2 → 3	29 {18} (990)	32 {20} (1120)
	3 → 4	37 {23} (1300)	43 {26} (1480)
	4 → 5	50 {31} (1730)	57 {35} (1970)
	5 → 6	71 {44} (2460)	79 {49} (2760)
0%	1 → 2	9 {5} (300)	9 {5} (300)
	2 → 3	21 {13} (750)	22 {14} (770)
	3 → 4	30 {19} (1050)	31{19} (1090)
	4 → 5	40 {25} (1400)	42 {26} (1450)
	5 → 6	68 {42} (2380)	77 {48} (2680)

LOCK-UP POINT

Unit: km/h {mph} (rpm)

Accelerator position	Mode switch position / Gearshift	Normal	Power
100%	2C – L	26 {16} (900)	29 {18} (1010)
50%	2C – L	22 {13} (750)	24 {15} (850)
0%	L → 2C	15 {10} (540)	15 {10} (540)

Note: Lock-up point is always set for the gear exceeding the 3rd.

- Revolutions shown in brackets indicates revolutions of transmission.
- The numerical value indicated in Table is calculated for vehicles set with the diff ratio of 6.666 and fitted with 11R22.5 tires. When the diff ratio or the tire size for vehicles is different, the speed of the vehicles varies based on such deviation. So, convert the numerical value in Table based on the applied specifications.

REPLACEMET INTERVALS OF AUTOMATIC TRANSMISSION FLUID AND OIL FILTER ELEMENT

Location	Replacement intervals	Specified fluid
Automatic transmission fluid	8000km (5000 miles) for new vehicle, then every 40000km (25000 miles) or 18 months	DEXRON III
Oil filter element	8000km (5000 miles) for new vehicle, then every 40000km (25000 miles) or 18 months	—

1. Automatic transmission assembly

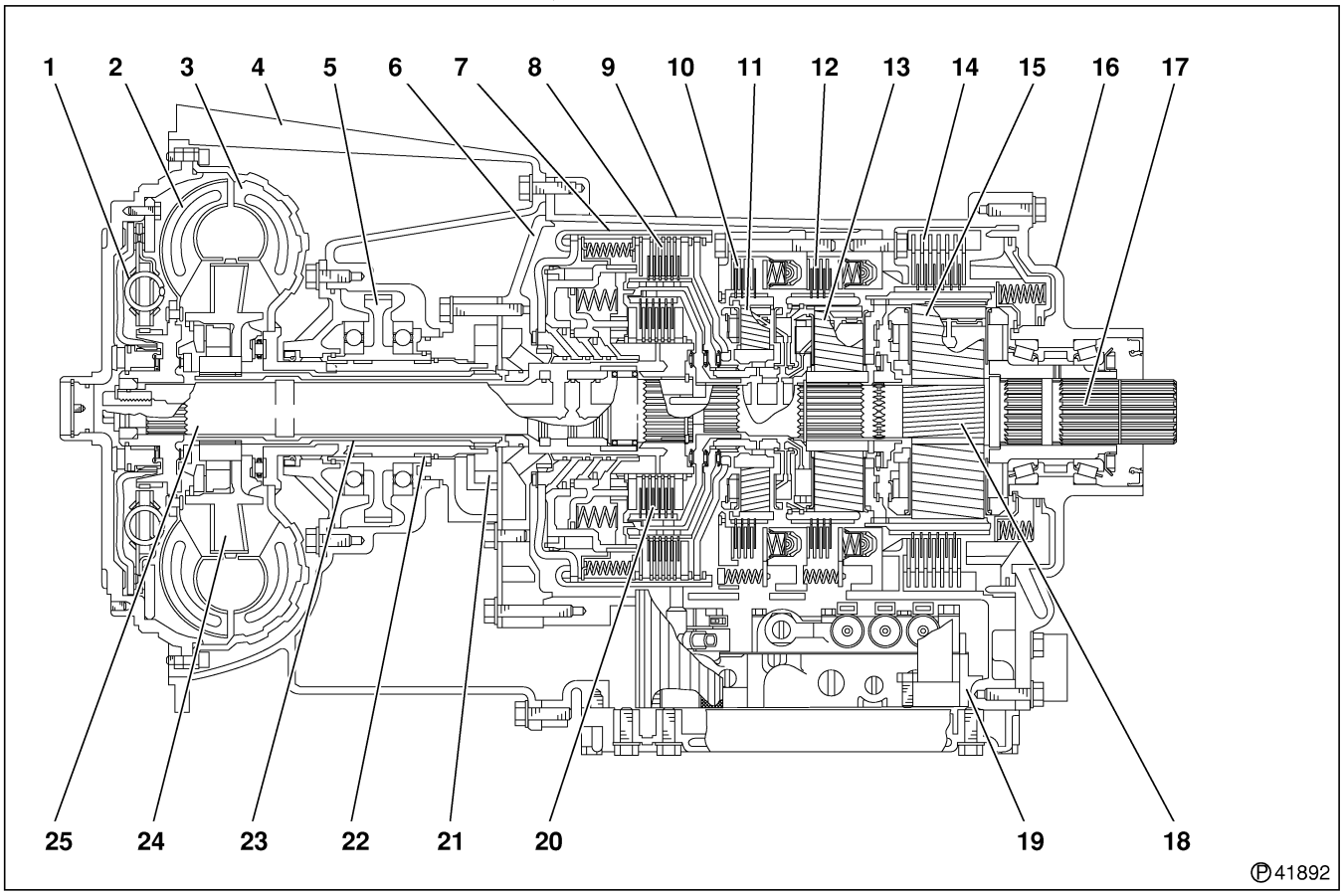

1 Lock-up clutch/damper
2 Torque converter turbine
3 Torque converter pump
4 Torque converter housing
5 Power take-off (PTO) gear assembly
6 Front support
7 Rotation clutch module
8 C2 clutch
9 Main housing
10 C3 clutch
11 P1 planetary module
12 C4 clutch
13 P2 planetary module
14 C5 clutch
15 P3 planetary module
16 Rear cover module
17 Output shaft
18 Main shaft
19 Control valve module
20 C1 clutch
21 Hydraulic fluid charging pump
22 Charging pump drive hub
23 Ground sleeve
24 Torque converter stator
25 Turbine shaft

2. Automatic transmission control system

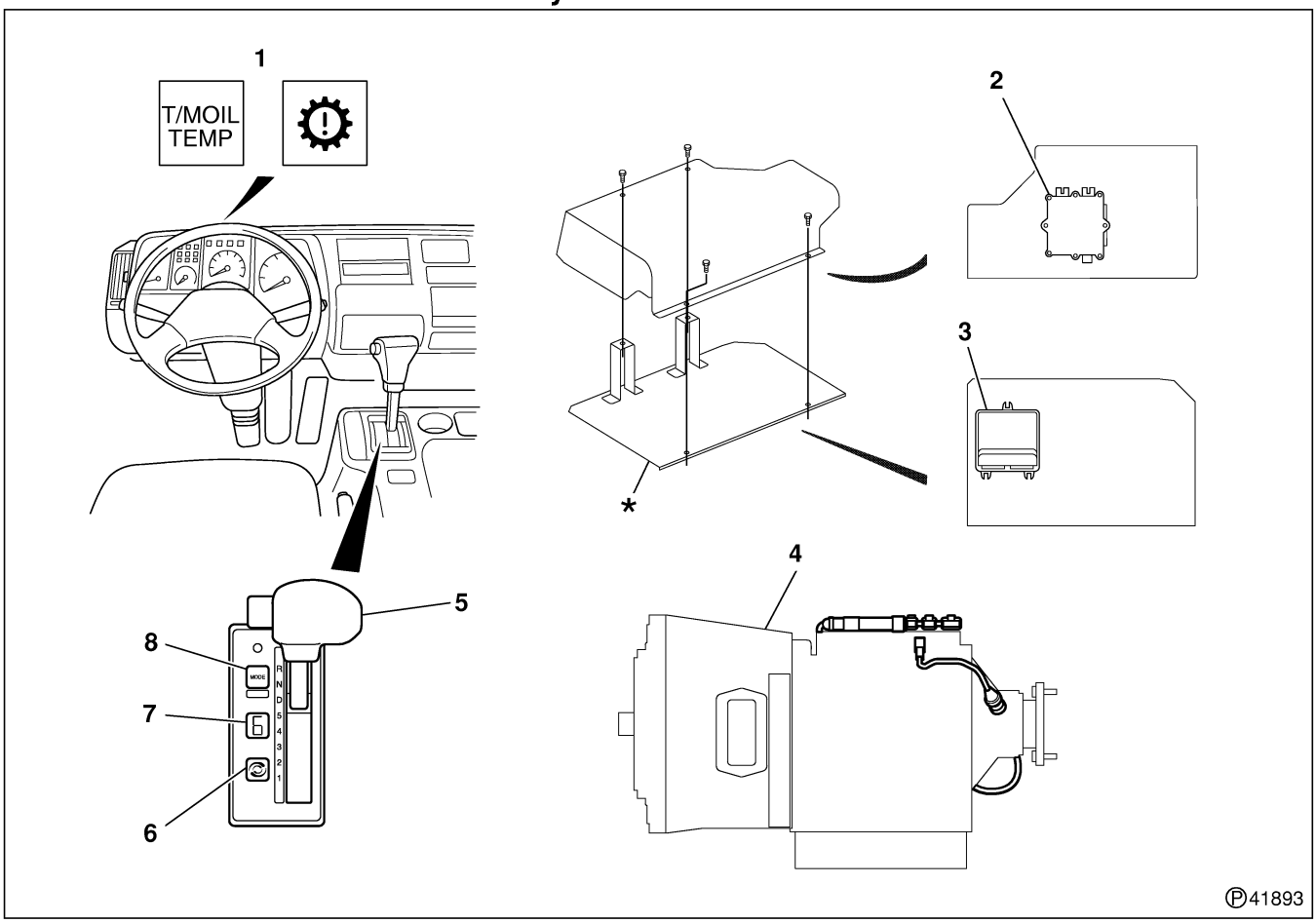

1 Warning lamp
2 Vehicle interface module
3 Automatic transmission control unit
4 Automatic transmission assembly
5 Range selector
6 Display switch button
7 Selector position display
8 Mode button

***** Back of driver's seat

Electronic control (ATEC: Allison Transmission Electronic Control) system is composed of vehicle interface module **2**, automatic transmission control unit **3**, range selector **5**, throttle position sensor, electronic hydraulic valve body, and harnesses connecting these units. The automatic transmission control unit receives electric signals, which are sent by each sensor and shift selector, processes them, transmits the signals to an appropriate solenoid, and thereby controls the transmission.

3. Oil cooler system

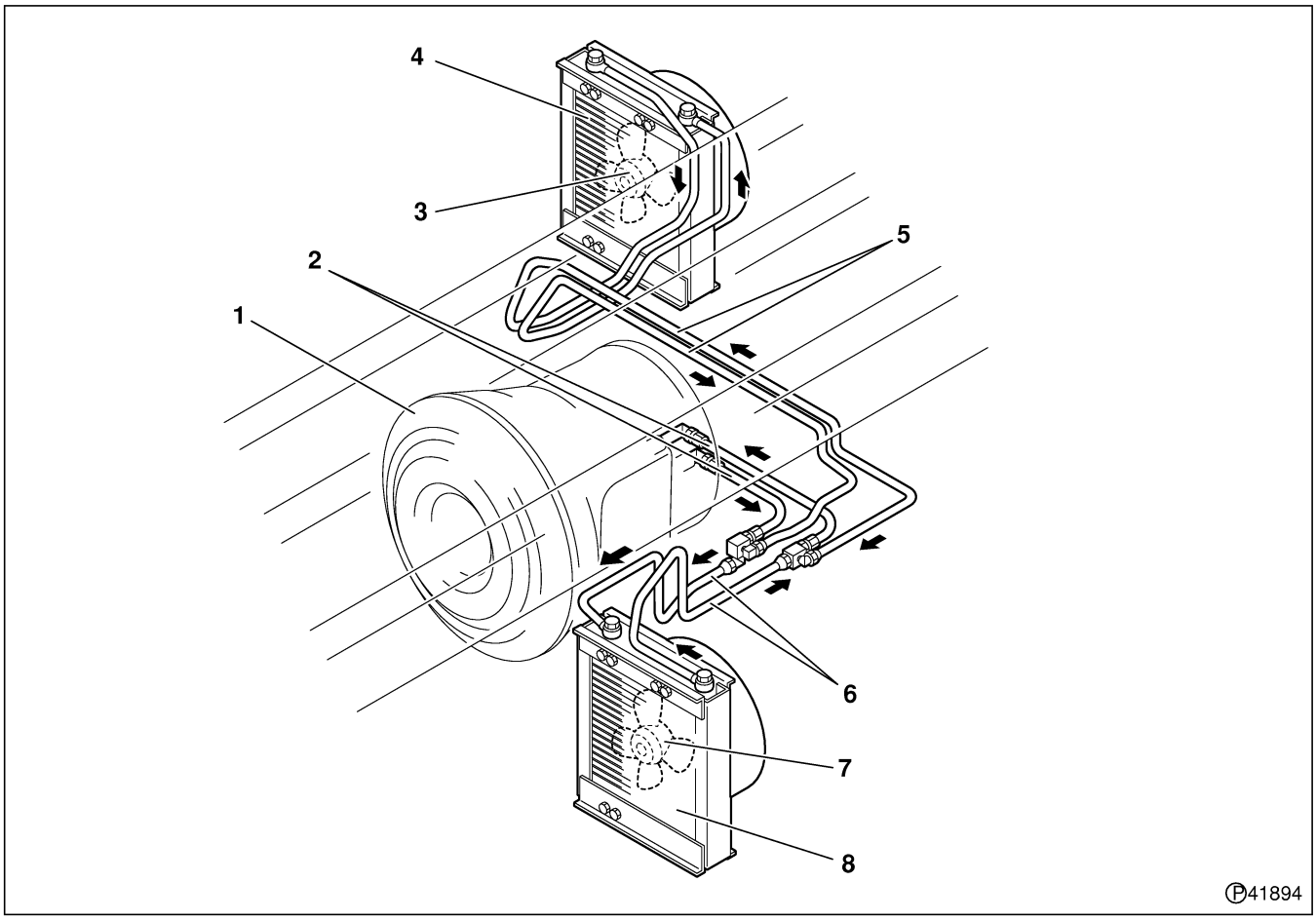

1 Automatic transmission assembly
2 Oil hose
3 Cooling fan assembly (RH)
4 Oil cooler (RH)
5 Oil pipe
6 Oil pipe
7 Cooling fan assembly (LH)
8 Oil cooler (LH)

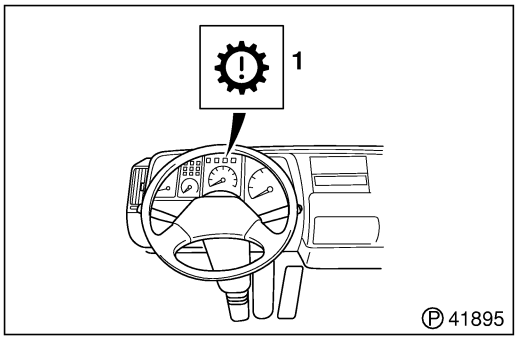

This automatic transmission is equipped with trouble self-diagnosis function. When detecting abnormality, the warning lamp **1**, illuminates and the trouble code is memorized. A maximum of five (5) trouble codes are memorized.

Start of trouble mode (reading trouble codes)

- Push display switch button **2** of range selector twice.
- Trouble code No. is indicated in select position display **3**. If "OL" is indicated, push the display switch button **2** again.
- Record the trouble code No. that is indicated.
  For instance, if indicated in order of "d1", "25", and "11", it shows that main code No. 25 and sub code No. 11 are memorized in the 1st memory. When nothing is recorded, "--" "--" is repeatedly displayed in sequence.
- There are five (5) memories that memorize the code No. When pushing mode button **4**, the 2nd memory code is displayed following "d2".
- Whenever pushing mode button **4**, "d3", "d4", and "d5" are displayed in sequence, and finally "d1" is indicated back.

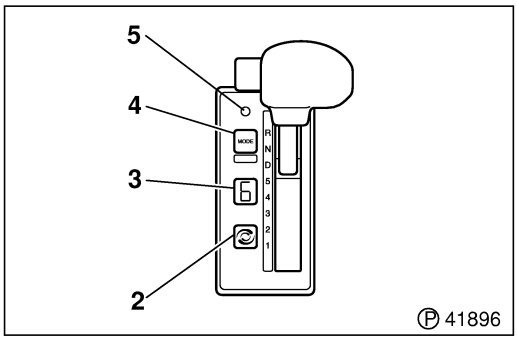

Clearing of diagnosis trouble codes

After the repair is completed, push the mode button **4** for about 10 seconds, mode lamp **5** will flash for the first 5 seconds and the current malfunction code is cleared. After waiting another 5 seconds, the mode lamp will flash again and the past malfunction codes are cleared.

NOTE:

The code is cleared only after the trouble is repaired.

Release of diagnosis mode (returning to normal operation mode)

There are three (3) methods to return it to normal operation mode.

- Push the display switch button **2** of range selector.
- Switch it to either range of either range, "Reverse", "Neutral", or "Drive".
- Leave things as they are without doing anything (it will automatically release after approximately ten (10) minutes).

TROUBLESHOOTING

Trouble self-diagnosis Table

CAUTION⚠

If a code No. is not listed in the table below, contact GM Allison.

Code No.		Symptoms	Inspection and adjustment
Main	Sub		
13	12 13 23	Automatic transmission control unit voltage: too low Automatic transmission control unit voltage: low Automatic transmission control unit voltage: high	1. Check: a. Battery direct ground and power connections are tight and clean. b. Vehicle batteries are charged. c. Vehicle charging system is not over- or under-charging. d. VIM fuse is good. e. VIM connections are tight, clean, and undamaged. f. Vehicle manufacturer supplied wiring is correct. g. ECU connectors are tight, clean, and undamaged. h. Contact authorized Allison Dealer.
14	12, 13	Oil level sensor	1. Check: a. Engine speed sensor, output speed sensor, temperature sensor, and oil level sensor are working correctly. b. Wiring harness has no opens, shorts to ground, or shorts to battery. c. Contact authorized Allison Dealer.
21	12, 13	Throttle position sensor	1. Check: a. TPS connector is properly connected. b. End of TPS cable is pulled out properly. c. Engine fuel lever is in idle position. d. Engine fuel lever provides proper amount of stroke on TPS cable. e. Wiring harness to TPS has no opens, shorts between wires, or shorts to ground. f. TPS for proper operation and resistance readings. g. Contact authorized Allison Dealer.
22	14, 15, 16	Speed sensor	1. Check: a. Speed sensors and connectors are tight, clean, and undamaged. b. Wiring harness to sensors has no opens, shorts between wires, or shorts to ground. c. Contact authorized Allison Dealer.
23	12, 13, 14, 15	Range selector	1. Check: a. ECU connectors are tight, clean, and undamaged. b. Shift selector connector is tight, clean, and undamaged. c. Wiring harness to sensors has no opens, shorts between wires, or shorts to ground. 2. Shift selector(s) for proper operation. 3. Contact authorized Allison Dealer.
24	12	Temperature of automatic transmission fluid: too low	1. Check: a. Air temperature is below -32°C (-25°F) 1) If yes, this is a correct response for temperature. 2) If no, check that main transmission connector is tight, clean, and undamaged. b. ECU connectors are tight, clean, and undamaged. c. Contact authorized Allison Dealer.

Code No.		Symptoms	Inspection and adjustment
Main	Sub		
13	23	Temperature of automatic transmission fluid: too high	1. Verify the overheat situation. Check: a. Correct dipstick is installed. b. Fluid level is correct. 1) If fluid level is incorrect — correct fluid level. 2) If fluid level is correct — check for cause of overheating. 2. Check if ECU and transmission connectors are tight, clean, and undamaged. 3. Contact Authorized Allison Dealer.
25	00, 11, 22, 33, 44, 55, 66, 77	Output speed sensor	1. Check: a. Speed sensor connector is tight, clean, and undamaged. b. ECU connectors are tight, clean, and undamaged. c. Fluid level is correct. d. Wiring harness to sensor has no opens, shorts between wires, or shorts to ground. e. Contact authorized Allison Dealer.
32	00, 33, 55, 77	Disconnection of C3 pressure switch	1. Let vehicle idle with parking brake applied, wheels chocked, and vehicle level. Check a. Correct dipstick is installed. b. Fluid level is correct. 2. Check: a. Main transmission connector is tight, clean, and undamaged. b. ECU connectors are tight, clean, and undamaged. c. Wiring harness has no opens, shorts between wires, or shorts to ground. d. Contact authorized Allison Dealer
33	12, 13	Faulty automatic transmission fluid temperature sensor	1. Check: a. Main transmission connector is tight, clean, and undamaged. b. ECU connectors are tight, clean, and undamaged. c. Wiring harness has no opens, shorts between wires, or shorts to ground. d. Contact authorized Allison Dealer.
34	12, 13, 14, 15, 16	Faulty EEPROM (memory chip)	1. If able, recalibrate ECU, if not, replace ECU. 2. Contact authorized Allison Dealer.
35	00, 16	Temporary interruption of power supply EEPROM writing error	1. Check: a. ECU connectors are tight, clean, and undamaged. b. VIM connectors are tight, clean, and undamaged. c. Vehicle manufacturer supplied wiring has correct power and ground connections. d. Power connections are battery direct. e. Ground connections are battery direct. f. Ignition switch connections are correct. g. Contact authorized Allison Dealer.
36	00	Unmatched hardware/software	1. If able, recalibrate ECU, if not, replace ECU. 2. Contact authorized Allison Dealer.
41	12, 13, 14, 15, 16, 21, 22, 23, 24, 25, 26	Disconnection or short-circuit of solenoid line	1. Connections of automatic transmission connector. 2. Connections of automatic transmission control unit connector. 3. Damaged or broken harnesses. 4. Disconnection or short-circuit of harnesses. 5. Replace wiring harnesses. 6. Contact authorized Allison Dealer.
42	12, 13, 14, 15, 16, 21, 22, 23, 24, 25, 26	Short-circuit of solenoid-circuit battery	1. Check: a. Main transmission connector is tight, clean, and undamaged. b. ECU connectors are tight, clean, and undamaged. c. Wiring harness is not pulled too tight, and there is no damage, chafing, or screws through harness. d. Wiring harness has no opens, shorts between wires, or shorts to ground. e. Unauthorized repairs have not been made. 2. Change harness (optional). 3. Contact authorized Allison Dealer.

Code No.		Symptoms	Inspection and adjustment
Main	Sub		
43	21, 25, 26	Solenoid Lo side circuit Disconnection or short-circuit	1. Connections of automatic transmission connector 2. Connections of ECU connector 3. Disconnection or short-circuit of harnesses 4. Replace ECU 5. Contact authorized Allison Dealer.
42	12, 13, 14, 15, 16, 21, 22, 23, 24, 25, 26	Sort-circuit of solenoid circuit ground	1. Check: a. Main transmission connector is tight, clean, and undamaged. b. ECU connectors are tight, clean, and undamaged. c. Wiring harness is not pulled too tight, and there is no damage, chafing, or screws through harness. d. Wiring harness has no opens, shorts between wires, or shorts to ground. e. Unauthorized repairs have not been made. 2. Change harness (optional). 3. Contact authorized Allison Dealer.
42	12, 13, 14, 15, 16, 21, 22, 23, 24, 25, 26	Disconnection of solenoid circuit	1. Check: a. Main transmission connector is tight, clean, and undamaged. b. ECU connectors are tight, clean, and undamaged. c. Wiring harness is not pulled too tight, and there is no damage, chafing, or screws through harness. d. Wiring harness has no opens, shorts between wires, or shorts to ground. e. Unauthorized repairs have not been made. 2. Change harness (optional). 3. Contact authorized Allison Dealer.
51	01, 10, 12, 21, 23, 24, 35, 42, 43, 45, 46, 53, 64, 65	Off going ratio test	1. Check: a. Output and turbine speed sensor connectors are tight, clean, and undamaged. b. Speed sensor wiring harness has no opens, shorts between wires, or shorts to ground. 2. Let vehicle idle with parking brake applied, wheels chocked, and vehicle level. Check: a. Correct dipstick is installed. b. Fluid level is correct. c. Contact authorized Allison Dealer.
52	01, 08, 32, 34, 54, 56, 71, 72, 78, 79, 99	C3 switch off test	1. Check: a. Output and turbine speed sensor connectors are tight, clean, and undamaged. b. Speed sensor wiring harness has no opens, shorts between wires, or shorts to ground. c. Main wiring harness to transmission has no shorts between wires, or shorts to ground. 2. Let vehicle idle with parking brake applied, wheels chocked, and vehicle level. Check: a. Correct dipstick is installed. b. Fluid level is correct. c. Contact authorized Allison Dealer.
53	08, 18, 28, 29, 38, 39, 48, 49, 58, 59, 68, 69, 78, 99	Off going speed test	1. Check: a. Tubine and engine speed sensor connectors are tight, clean, and undamaged. b. Speed sensor wiring harness has no opens, shorts between wires, or shorts to ground. 2. Let vehicle idle with parking brake applied, wheels chocked, and vehicle level. Check: a. Correct dipstick is installed. b. Fluid level is correct. c. Contact authorized Allison Dealer.
54	01, 07, 10, 12, 17, 21, 23, 24, 27, 32, 34, 35, 42, 43, 45, 46, 53, 54, 56, 64, 65, 70, 71, 72, 80, 81, 82, 83, 85, 86, 92, 93, 95, 96, 97	On comming ratio test (after shift)	1. Check: a. Tubine and engine speed sensor connectors are tight, clean, and undamaged. b. Speed sensor wiring harness has no opens, shorts between wires, or shorts to ground. 2. Let vehicle idle with parking brake applied, wheels chocked, and vehicle level. Check: a. Correct dipstick is installed. b. Fluid level is correct. c. Contact authorized Allison Dealer.

Code No.		Symptoms	Inspection and adjustment
Main	Sub		
55	17, 27, 87, 97	C3 switch on test	1. Let vehicle idle with parking brake applied, wheels chocked, and vehicle level. Check: a. Correct dipstick is installed. b. Fluid level is correct. 2. Check: a. Output and turbine speed sensor connectors are tight, clean, and undamaged. b. Speed sensor wiring harness has no opens, shorts between wires, or shorts to ground. 3. Check: a. Transmission connector is tight, clean, and undamaged. b. ECU connectors are tight, clean, and undamaged. c. C3 pressure switch wiring has no opens, shorts between wires, or shorts to ground. d. Contact authorized Allison Dealer.
56	00, 11, 22, 33, 44, 55, 66, 77	Range check test	1. Check: a. Turbine and output speed sensor connectors are tight, clean, and undamaged. b. Speed sensor wiring harness has no opens, shorts between wires, or shorts to ground. c. Transmission connector is tight, clean, and undamaged. d. ECU connectors are tight, clean, and undamaged. 2. Let vehicle idle with parking brake applied, wheels chocked, and vehicle level. Check: a. Correct dipstick is installed. b. Fluid level is correct. c. Contact authorized Allison Dealer.
57	11, 22, 44, 66, 88, 99	Range check test: C3 switch	1. Let vehicle idle with parking brake applied, wheels chocked, and vehicle level. Check: a. Correct dipstick is installed. b. Fluid level is correct. 2. Check: a. Output and turbine speed sensor connectors are tight, clean, and undamaged. b. Speed sensor wiring harness has no opens, shorts between wires, or shorts to ground. 3. Check: a. Transmission connector is tight, clean, and undamaged. b. ECU connectors are tight, clean, and undamaged. c. C3 pressure switch wiring has no opens, shorts between wires, or shorts to ground. d. Contact authorized Allison Dealer.
63	00, 26, 40	Faulty input function	1. Check input wiring, switches, and connectors to determine why input states fare different. 2. Contact authorized Allison Dealer.
65	00	Engine rating: too high	1. Exceeding the engine rating or maximum speed. 2. Contact authorized Allison Dealer.
66	00	Faulty Serial Communications Interface (SCI)	1. Check: a. Serial connection to engine computer is tight, clean, and undamaged. b. SCI wiring harness has no opens, shorts, or shorts to ground. c. If DDR is not available, also be sure that transmission ECU connections are tight, clean, and undamaged. e. Contact authorized Allison Dealer.
69	12, 13, 14, 15, 16, 21, 22, 23, 24, 25, 26, 32, 33, 34, 35, 36, 41	Trouble of automatic transmission control unit	1. Clear diagnostic code and retry vehicle start. 2. If code recurs, reprogram or replace ECU. 3. Contact authorized Allison Dealer

ON-VEHICLE INSPECTION AND ADJUSTMENT

1. Stall test

● **Purpose**

"Stall test" checks the clutches in transmission, operation of one-way clutch in torque converter, operation of torque converter, or overall performance of the engine; thereby investigating the cause when the vehicle is malfunctioning due to insufficient power, performance, or others.

● **Measurement procedure**

Before starting the test, check the cooling water and oil of the engine, and automatic transmission fluid level of automatic transmission. Also, conduct sufficient warm-up operation of the engine and transmission.

- Fit the chocks securely at the front (rear) of the front (rear) wheels and engage the parking brake to prevent the vehicle from moving. In addition, when pushing the accelerator pedal down, depress the foot brake strongly.
- Start the engine and engage the range selector lever into D range.
- Push the accelerator pedal down slowly to the full acceleration; when the engine comes into a stable speed at a constant speed, read the revolutions (the stall revolutions) quickly, and then take off the foot from the accelerator pedal.

CAUTION⚠

- **Be sure to set a full stall acceleration time as less than 5 seconds, and complete the measurement during that time.**
- **Be careful for overheating of the engine and transmission.**

- Put the range selector lever in "N" range, and conduct the cooling for two (2) minutes or more per 1000 rpm.
  Stall revolutions
  1750±150 rpm

● **Result of diagnosis**

1. If the stall revolution is too low; if the result of measurement is lower by 150 rpm or more than the standard value, the engine will be malfunctioned.
2. If the stall revolution is abnormally low (approximately 1/3 of the specified value) even though the engine has no any trouble like emitting black smoke; there may be some abnormality inside the torque converter (one-way clutch failure).
3. If the stall revolution is too high; if the result of measurement is higher by 150 rpm or more than the standard value, the cause may be due to the slide inside the transmission, cavitations, the bubbling of automatic transmission fluid, or damage of the torque converter.

Tightening torque

Unit : N·m {ft.lbs, kgf·m}

Location	Parts to be tightened	Tightening torque	Remarks
—	Plug	10 to 13 {7.2 to 9.4, 1.0 to 1.3}	—

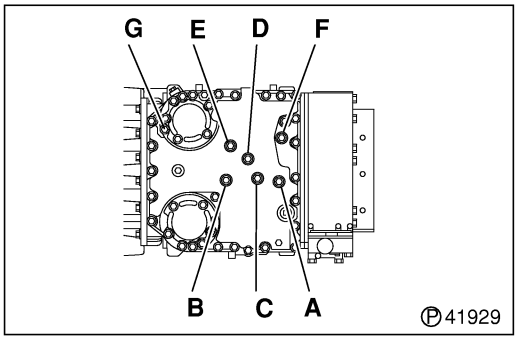

● Purpose

"Line pressure test" checks the performance of oil pump, function of control valve, and the internal oil leakage of each component.

● Measurement procedure

Decide which pressure item to check according to the content of troubles, and measure the line pressure based on the following procedure.

- Remove the plug from the pressure detecting port of the gearbox casing, and install the pressure gauge.
  - **A**: Main oil pressure
  - **B**: C1 clutch oil pressure
  - **C**: C2 clutch oil pressure
  - **D**: C3 clutch oil pressure
  - **E**: C4 clutch oil pressure
  - **F**: C5 clutch oil pressure
  - **G**: Lock-up oil pressure
- Conduct a sufficient warm-up operation, and raise oil temperature to 60 to 80°C {140 to176°F}.
- During the idling, measure the oil pressure in each condition when running, and make sure whether the result is within the standard value.
- When confirming the lock-up pressure, remove the propeller shaft, and conduct it in a dummy running condition.
- After finishing the measurement, tighten the plug to the specified torque.

CAUTION⚠

- **Be sure to prevent foreign particles from entering the pressure detecting port.**
- **Remove foreign particles in the pressure detection port before installing the plug.**

	Engine speed RPM	Range	Pressure clutch	Main oil pressure KPa {psi, kgf/cm^2}	Clutch oil pressure KPa {psi, kgf/cm^2}	Lock-up clutch oil pressure KPa {psi, kgf/cm^2}
Oil pressure when idling the engine	580-620	Neutral	C5	1400 to 2000 {203 to 290, 14.3 to 20.4}	—	—
		Reverse	C3, C5	1400 to 2000 {203 to 290, 14.3 to 20.4}	—	—
		1C	C1, C5	1300 to 1970 {189 to 286, 13.3 to 20.1}	—	—
		2C	C1, C4	1300 to 1970 {189 to 286, 13.3 to 20.1}	—	—
Oil pressure when operating	1980-2020	Neutral	C5	1900 to 2300 {275 to 334, 19.4 to 23.5}	1860 to 2300 {270 to 334, 19.0 to 23.5}	—
		Reverse	C3, C5	1790 to 2300 {261 to 334, 18.3 to 23.5}	1760 to 2300 {255 to 334, 18.0 to 23.5}	—
		1C	C1, C5	1550 to 1970 {225 to 286, 15.8 to 20.1}	1480 to 1970 {215 to 286, 15.1 to 20.1}	—
		2C	C1, C4	1550 to 1970 {225 to 286, 15.8 to 20.1}	1480 to 1970 {215 to 286, 15.1 to 20.1}	—
		2L	C1, C4	1050 to 1400 {152 to 203, 10.7 to 14.3}	980 to 1400 {142 to 203, 10.0 to 14.3}	1000 to 1400 {145 to 203, 10.2 to 14.3}
		3L	C1, C3	1050 to 1400 {152 to 203, 10.7 to 14.3}	980 to 1,400 {142 to 203, 10.0 to 14.3}	1000 to 1400 {145 to 203, 10.2 to 14.3}
		4L	C1, C2	1050 to 1400 {152 to 203, 10.7 to 14.3}	980 to 1400 {142 to 203, 10.0 to 14.3}	1000 to 1400 {145 to 203, 10.2 to 14.3}
		5L	C2, C3	1000 to 1350 {145 to 196, 10.2 to 13.8}	930 to 1350 {135 to 196, 9.5 to 13.8}	950 to 1350 {138 to 196, 9.7 to 13.8}
		6L	C2, C4	1000 to 1350 {145 to 196, 10.2 to 13.8}	930 to 1350 {135 to 196, 9.5 to 13.8}	950 to 1350 {138 to 196, 9.7 to 13.8}

LU: Lock-up
C: In torque converter
L: In lock-up

Result of diagnosis

1. The main oil pressure is low in all ranges:
   - ATF level; too low
   - Filter Element; clogged
   - Suction filter; clogged
   - Main oil pressure regulator valve; adhered, and the spring; weakening or broken
   - Inside of control module; leaked
   - Oil pump; worn or broken
2. The oil pressure is low in the specific ranges (each clutch oil pressure):
   - If C1 clutch pressure is low; may cause slippage or shudder at 1st, 2nd, 3rd, or 4th gear.
   - If C2 clutch pressure is low; may cause slippage or shudder at 4th, 5th, or 6th gear.
   - If C3 clutch pressure is low; may cause slippage or shudder at 3rd, 5th, or Rev. gear.

- If C4 clutch pressure is low; may cause slippage or shudder at 2nd, or 6th gear.
- If C5 clutch pressure is low; may cause slippage or shudder at 1st or Rev. gear.
- If the lock-up clutch pressure is low; the maximum speed of vehicle at 2nd or more gear (in lock-up) may be decreased. Or, the shift will not be performed as it is a shift map.

3. Inspection of automatic transmission fluid

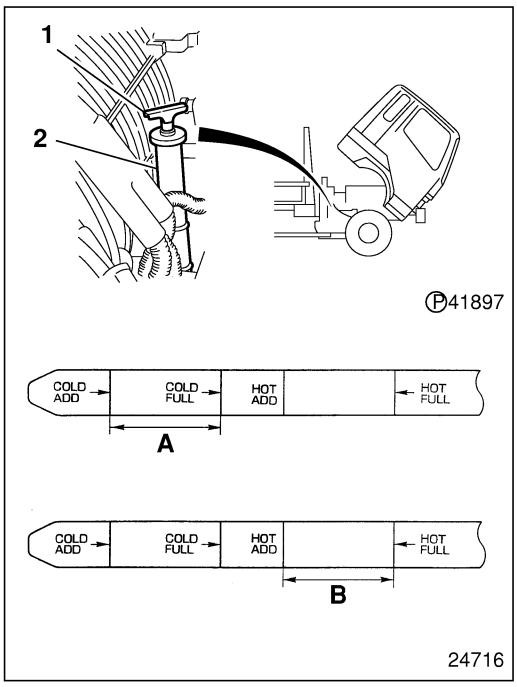

(1) Inspection of properties

If the ATF smells burnt, or if particles of metal or friction material are present, it is necessary to overhaul the transmission completely. Check automatic transmission fluid on the dipstick **1** carefully. If there are some doubts in a state of automatic transmission fluid, check the automatic transmission fluid again by extracting another sample.

(2) Inspection of quantity of automatic transmission fluid

- Put the vehicle on a flat surface, engage the parking brake securely, and fit the chocks securely at the front (rear) of the front (rear) wheels
- To fill automatic transmission fluid in a hydraulic circuit with idling the engine, return the range selector lever to N range after putting it repeatedly in each range approximately five (5) times in sequence.
- Extract the dipstick **1** with idling the engine; insert it again after wiping off automatic transmission fluid; and after pulling it out, check quantity of the automatic transmission fluid.
- When the oil temperature is low (15 to 50°C {59 to 122°F}) after starting the engine; if automatic transmission fluid is within a "COLD" range **A** of the dipstick **1**, it shows that the quantity of automatic transmission fluid is as specified.
- When the oil temperature is high (79 to 95°C, {158 to 203°F}) after running the vehicle ; if automatic transmission fluid is within a "HOT" range **B** of the dipstick **1**, it shows the quantity of automatic transmission fluid is as specified.

WARNING

Since the inspection is conducted while running the engine, be careful of being caught in components, burn hazard, or the safety.

NOTE:

- **Make sure to inspect the quantity of automatic transmission fluid at the horizontal level.**
- **Make sure to inspect the quantity of automatic transmission fluid while idling the engine at N range since the apparent quantity of automatic transmission fluid increases when the engine is stopped.**
- **Remove any dirt from the protection cap and the upper part of filler tube 2 completely before pulling the dipstick 1 out.**
- **Do not raise the engine speed from an idle until the adjustment of quantity of automatic transmission fluid is completed.**
  - Reconfirm the automatic transmission fluid level after the vehicle is driven. If the automatic transmission fluid level is low, add DEXRON III to the specified level of dipstick 1 using filler tube 2.

4. Replacement of automatic transmission fluid

Tightening torque

Unit : N·m {ft.lbs, kgf·m}

Location	Parts to be tightened	Tightening torque	Remarks
—	Drain plug	25 to 32 {18 to 24, 2.6 to 3.3}	—

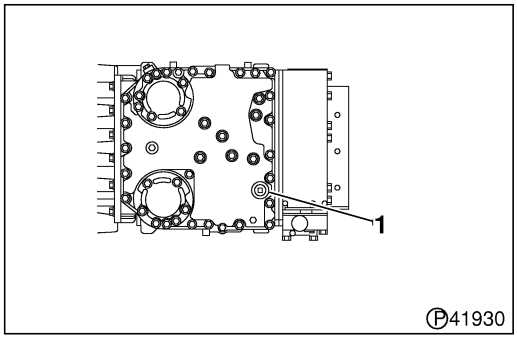

(1) Draining

- Put the automatic transmission fluid drain pan under the transmission oil pan; then remove drain plug 1 behind the oil pan to drain automatic transmission fluid.

WARNING

Do not start any work for engine immediately after the engine is shut down. Wait until the engine cools to a safe temperature since a hot engine can cause burns.

NOTE:

- **The draining can be performed more quickly by warming automatic transmission fluid to the operating temperature.**
- **It is impossible to drain automatic transmission fluid from the internal hydraulic circuit, the torque converter, or the oil cooler without disassembling the unit competely.**
- **Check for dirt in the drained automatic transmission fluid, and for existence of metallic powder or metal pieces.**

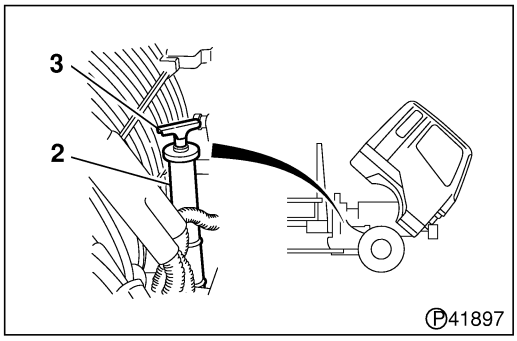

(2) Filling

- Prepare DEXRON III of 18 dm^3 {18 L} (19 qts).
- Install oil pan drain plug **1** and tighten to specs.
- Fill with automatic transmission fluid through the filler tube **2**.

CAUTION

Be careful during filling so that dust or foreign particles do not enter.

- After starting the engine, run at idle RPM for approximately one (1) minute with the range selector to “N” position.
- After moving the range selector to each range, place it to “N” position again.

CAUTION

In this process, run engine at idle speed only — avoid running the engine at higher speeds.

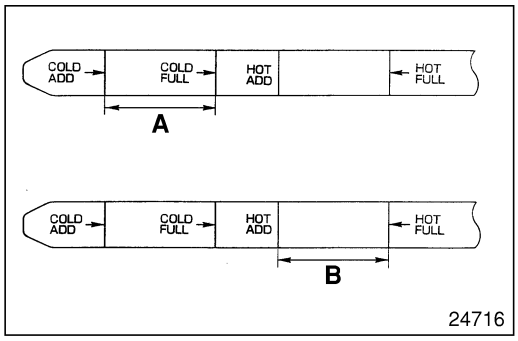

- Add automatic transmission fluid until it reaches the low position of the specified range of dipstick **3**. Then, check the level of automatic transmission fluid. The level of automatic transmission fluid must be within the specified range of the dipstick.
  A: When temperature is low; 15 to 50°C {59 to 122°F}
  B: When temperature is high; 70 to 95°C {158 to 203°F}

NOTE:

- **After filling the automatic transmission fluid, it may be difficult to see the level of automatic transmission fluid easily due to the automatic transmission fluid adhering to the inner wall of filler tube 2; therefore, recheck it after a short time.**
- **If the automatic transmission fluid is overfull, the automatic transmission fluid will overflow from the air breather. This might be misunderstood to be an automatic transmission fluid leak.**
- **Fill automatic transmission fluid gradually with letting the engine idle while paying a careful attention to the level of automatic transmission fluid.**

5. Function checking automatic transmission fluid level

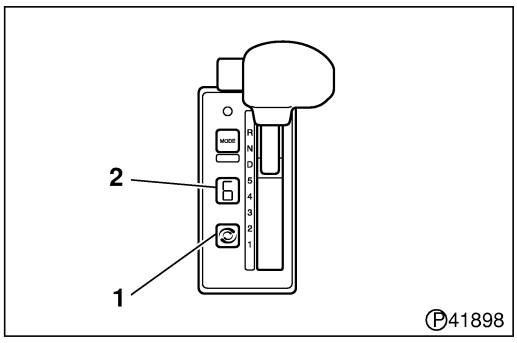

The automatic transmission fluid level can be checked from inside the cab by operating the range selector display.

Conditions required on check

- Stop the vehicle on a flat surface, and put the range selector in “N” position.
  (Neutral must be put in.)
- Automatic transmission fluid must be warm.
  (oil temperature 60 to 104°C {140 to 219°F})
- Stabilize oil level for two (2) minutes or more after stopping the vehicle.
- Run the engine at idle speed.

Check operation

- Push display switch button 1 of the range selector
- Various code No. are displayed in the position display 2 of the selector following “O” and “L” (indicating check mode of automatic transmission fluid level) after approximately two (2) minutes.

Judgment of check result

The code No. indicated means as follows:

- “OL”, “OK”, and “--” ; automatic transmission fluid level is appropriate.
- “OL”, “LO”, and “XX”; automatic transmission fluid must be added by approximately XX liter.
- “OL”, “HI”, and “XX”; automatic transmission fluid must be extracted by approximately XX liter.
- “OL”, “--”, and “XX” ; check the level again based on the following table since the level could not be checked.

Display code No. XX	Contents
“50”	The engine speed is too low.
“59”	The engine speed is too high.
“65”	The neutral has not be put in.
“70”	Oil temperature is too low.
“79”	Oil temperature is too high.
“89”	The output shaft rotates.
“95”	Trouble of oil temperature sensor

Operation after the check has ended.

After the check has ended, put the range selector in either of position, “Reverse”, “Neutral”, or “Drive”.

6. Replacement of oil filter

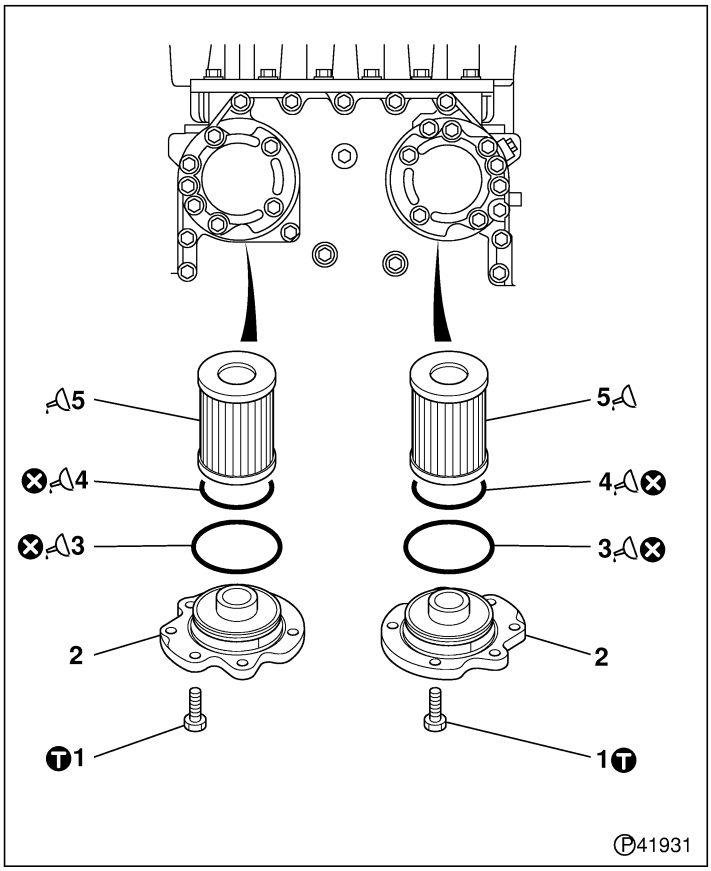

● **Disassembly sequence**

1 Bolt
2 Filter cover
3 Seal
4 O-ring
5 Filter

* : Automatic transmission assembly
⊗ : Non-reusable parts

● **Assembly sequence**

Follow the disassembly sequence in reverse.

Ⓣ Tightening torque

Unit : N·m {ft.lbs, kgf·m}

Location	Parts to be tightened	Tightening torque	Remarks
1	Bolt (installing filter cover)	51 to 61 {38 to 45, 5.2 to 6.2}	—

Lubricant

Location	Points of application	Specified fluid	Quantity
2	Seal	DEXRON III	As required
4	O-ring	DEXRON III	As required
5	Engagement part of filter	DEXRON III	As required

OIL COOLER

<RH>

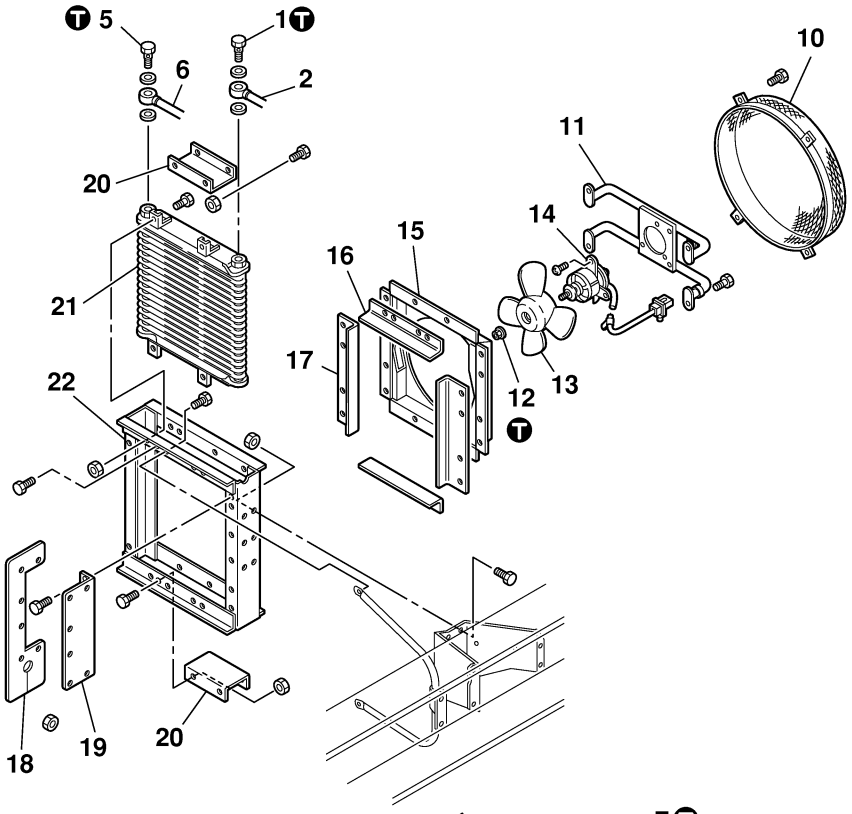

P41899

<LH>

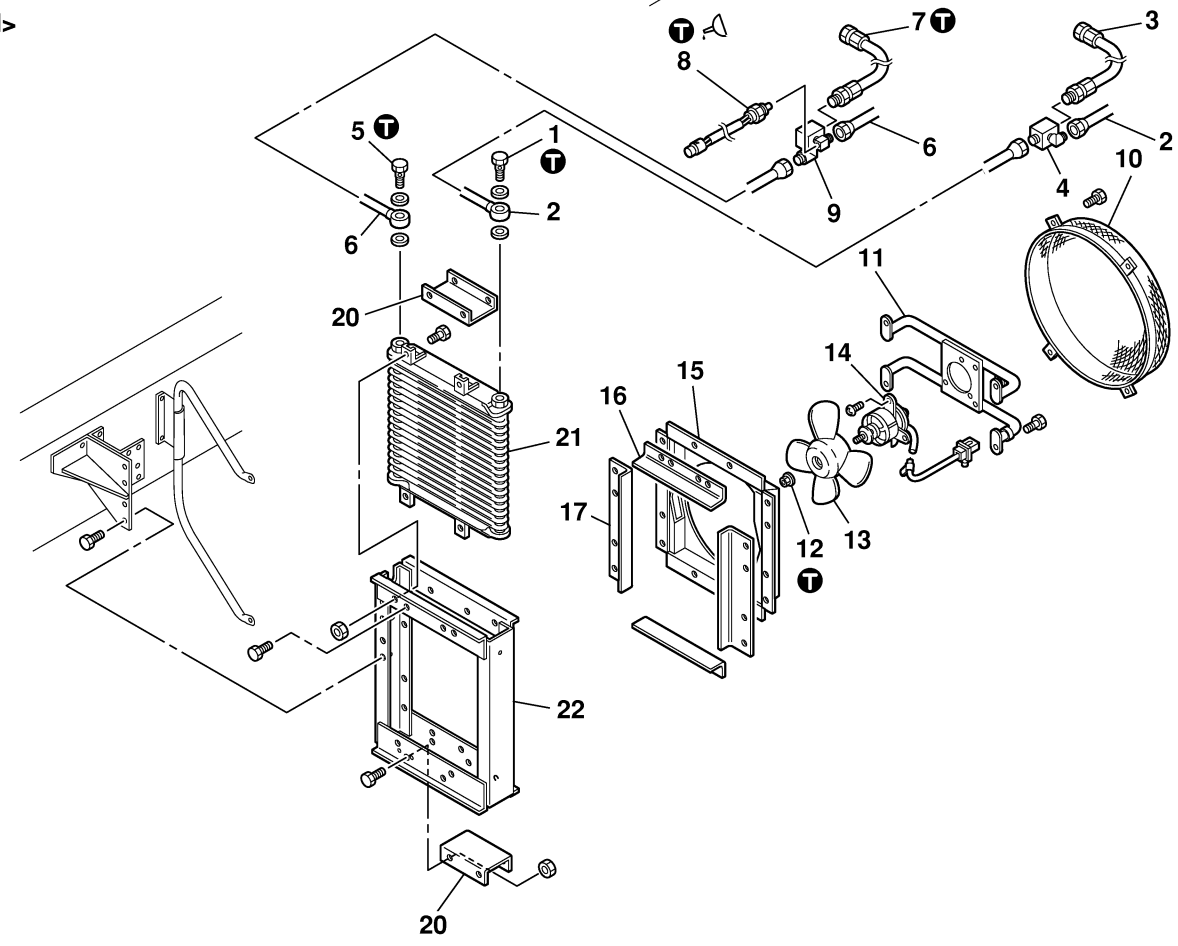

P41900

● **Disassembly sequence**

1 Eye bolt
2 Oil pipe
3 Oil hose
4 Connector
5 Eye bolt
6 Oil pipe
7 Oil hose
8 Oil temperature sensor
9 Connector
10 Fan cover
11 Fan Motor bracket
12 Nut
13 Fan assembly
14 Motor assembly Gr54
15 Fan shroud
16 Fan shroud A
17 Fan shroud B
18 Baffle plate < RH >
19 Baffle plate bracket < RH >
20 Stay
21 Oil cooler
22 Oil cooler bracke

● **Assembly sequence**

Follow the disassembly sequence in reverse.

Tightening torque

Unit : N·m {ft.lbs, kgf·m}

Location	Parts to be tightened	Tightening torque	Remarks
1, 5	Eye bolt	59 to 88 {43 to 65, 6 to 9}	—
8	Oil temperature sensor	29 to 39 {22 to 29, 3 to 4}	—
12	Nut (Fan assembly mounting)	4.9 to 7.5 {3.6 to 5.5, 0.50 to 0.76}	—

Sealant

Location	Points of application	Specified fluid	Quantity
8	Apply the sealant on the screw of oil temperature sensor.	THREEBOND 1110B	As required

ELECTRICAL WIRING DIAGRAM

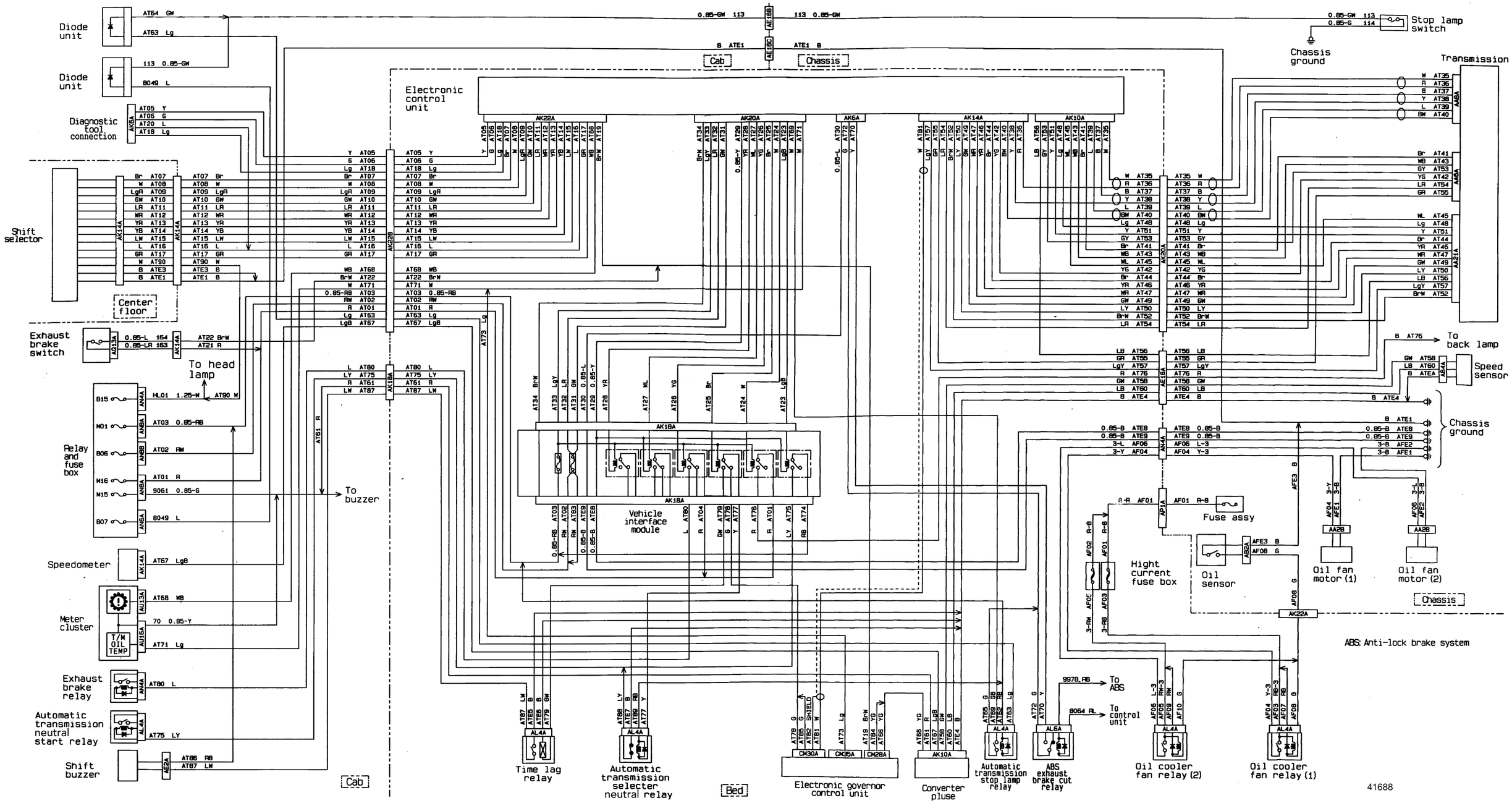

GROUP 35B BRAKE
(FULL AIR - WEDGE TYPE - BRAKE)

SPECIFICATIONS 35B-2

STRUCTURE AND OPERATION 35B-4

TROUBLESHOOTING 35B-9

INSPECTION AND ADJUSTMENT MOUNTED IN VEHICLE

- Thickness Inspection and Replacement of Brake Lining 35B-10

FRONT WHEEL BRAKE 35B-12

REAR WHEEL BRAKE 35B-22

EXPANDER ASSEMBLY 35B-32

SPECIFICATIONS

WHEEL BRAKE

Item \ Model			FM657
Brake type			Leading-trailing type
Brake drum	Inside diameter	mm {in.}	ø410 {16.1}
Brake lining	Width x thickness mm {in.}	Front	150 x 16 {5.9 x 0.63}
		Rear	200 x 16 {7.87 x 0.63}
Brake shoe clearance adjustment method			Auto adjustment type

M E M O

● Wheel brake

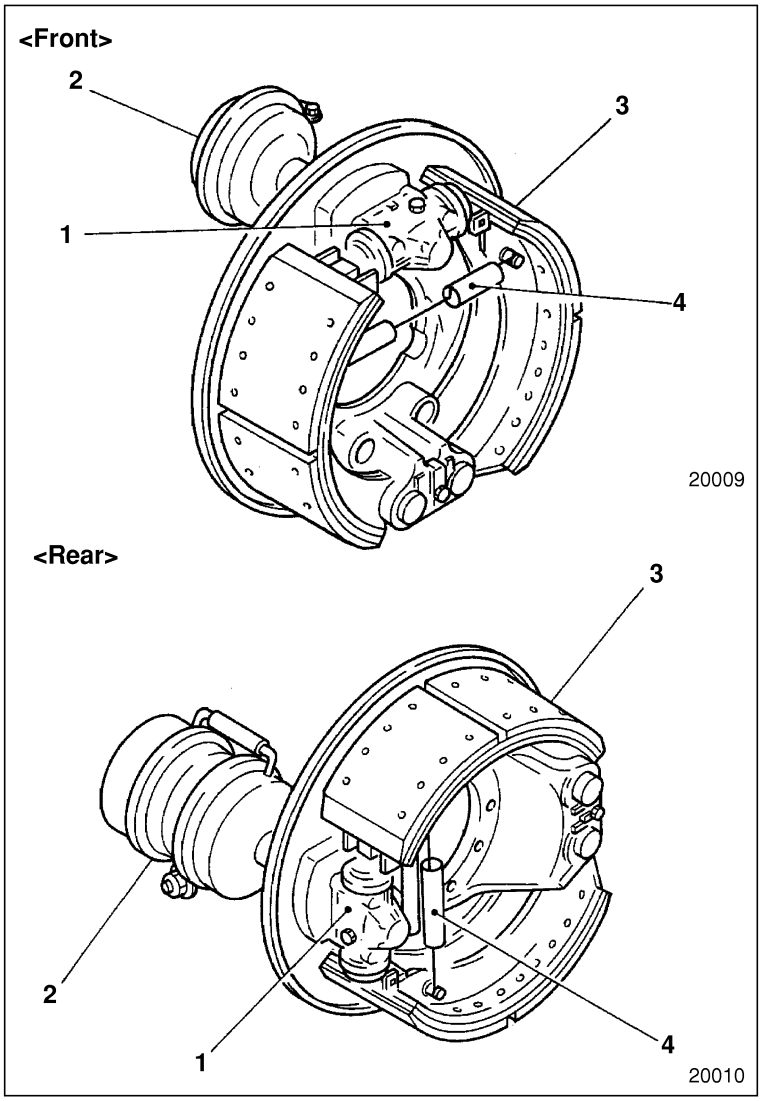

1 Expander
2 Brake chamber
3 Brake shoe
4 Return spring

- Drum brake expands brake shoe **3** by a wedge mechanism.
- Expander **1** incorporates an auto adjustment mechanism that automatically adjusts the brake shoe clearance.

● Wedge mechanism

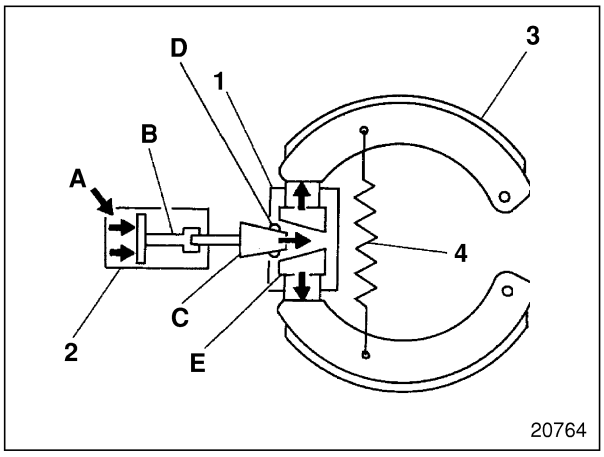

- When applying air pressure **A** on brake chamber **2**, the push rod **B** pushes wedge **C**.
- The wedge **C** pushes the sleeve **E** of expander **1** through roller **D** to expand brake shoe **3**.

● **Brake chamber <front>**

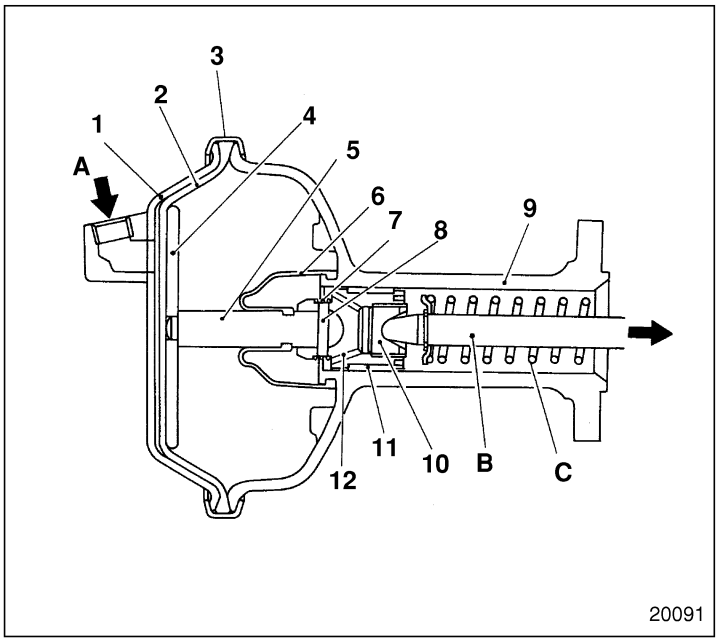

1 Pressure plate
2 Diaphragm
3 Clamp ring
4 Push plate
5 Push rod
6 Dust cover
7 Ring
8 Pin
9 Base
10 Guide head
11 Bushing
12 Push rod guide

A: Air pressure
B: Wedge (expander)
C: Spring (expander)

- When applying air pressure **A** on the brake chamber (front), the push rod **5** and wedge **B** are pushed through diaphragm **2**.
- When releasing air pressure **A**, wedge **B** and push rod **5** are returned by spring force of spring **C**.

● **Brake chamber <rear>**

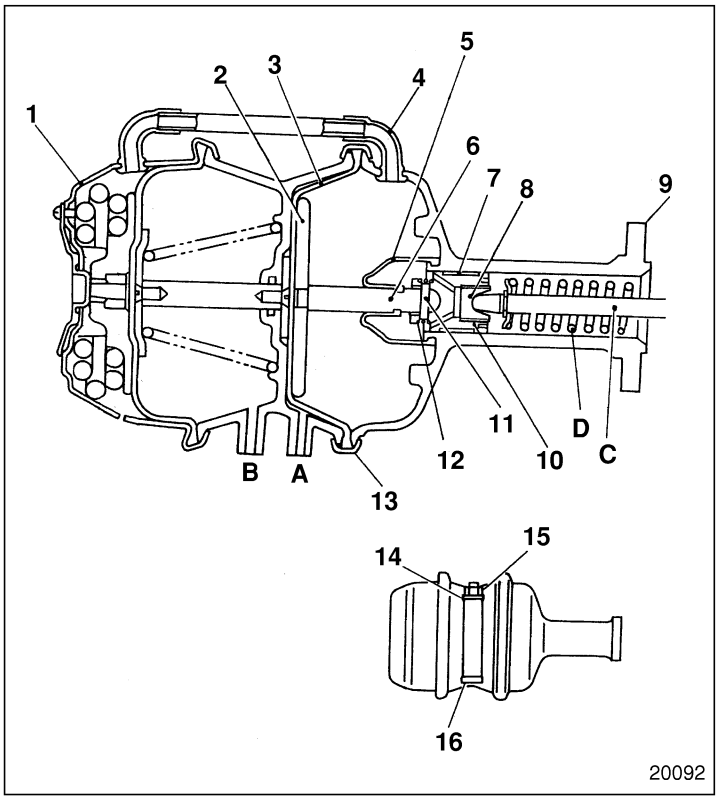

1 Emergency brake chamber
2 Push plate
3 Diaphragm
4 Elbow
5 Dust cover
6 Push rod
7 Bushing
8 Guide head
9 Base
10 Push rod guide
11 Pin
12 Ring
13 Clamp ring
14 Washer
15 Release nut
16 Release bolt

A: Service brake port
B: Spring brake port
C: Wedge (expander)
D: Spring (expander)

- The brake chamber <rear> has a spring brake mechanism other than the service brake.
- The washer **14**, release nut **15**, and release bolt **16** are used when releasing the spring brake by a mechanical release.

● Service brake

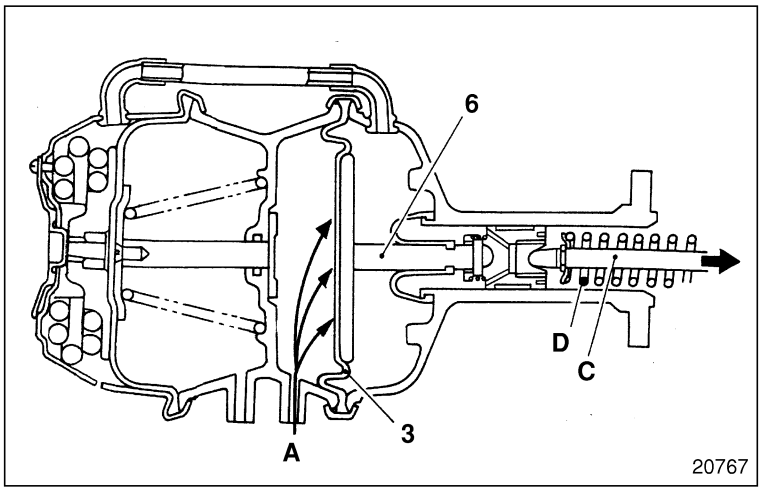

Operation

When applying air pressure on service brake port **A**, the push rod **6** and wedge **C** are pushed through diaphragm **3**.

Release

When releasing the air pressure of the service brake port **A**, wedge **C** and push rod **6** are returned by spring force of spring **D**.

● Spring brake

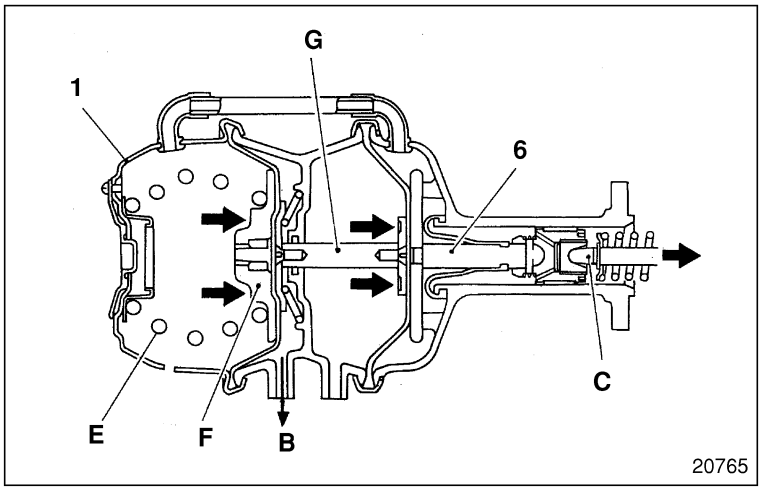

Operation

When releasing the air pressure of spring brake port **B**, piston **F**, push rod **G**, **6**, and wedge **C** are pushed by spring force of spring **E** of emergency brake chamber **1**.

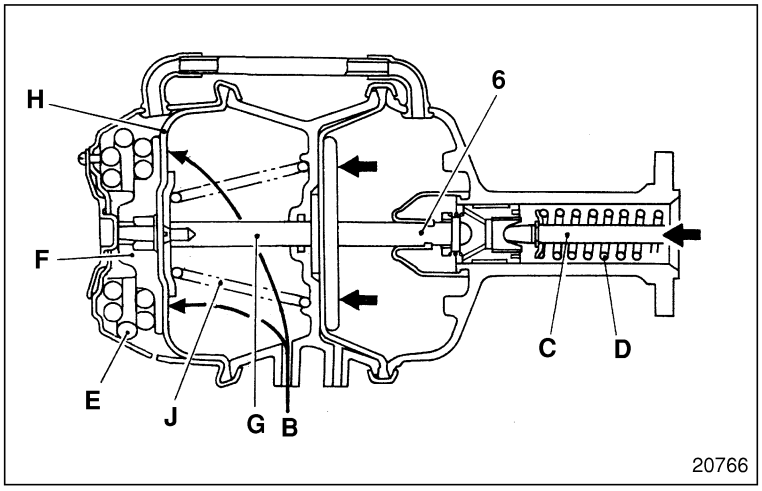

Release

- When applying air pressure on spring brake port **B**, piston **F** is pushed back through diaphragm **H**, and thereby spring **E** is compressed.
- Push rod **G** is returned by spring force of spring **J**.
- Wedge **C** and push rod **6** are returned by spring force of spring **D**.

● Expander

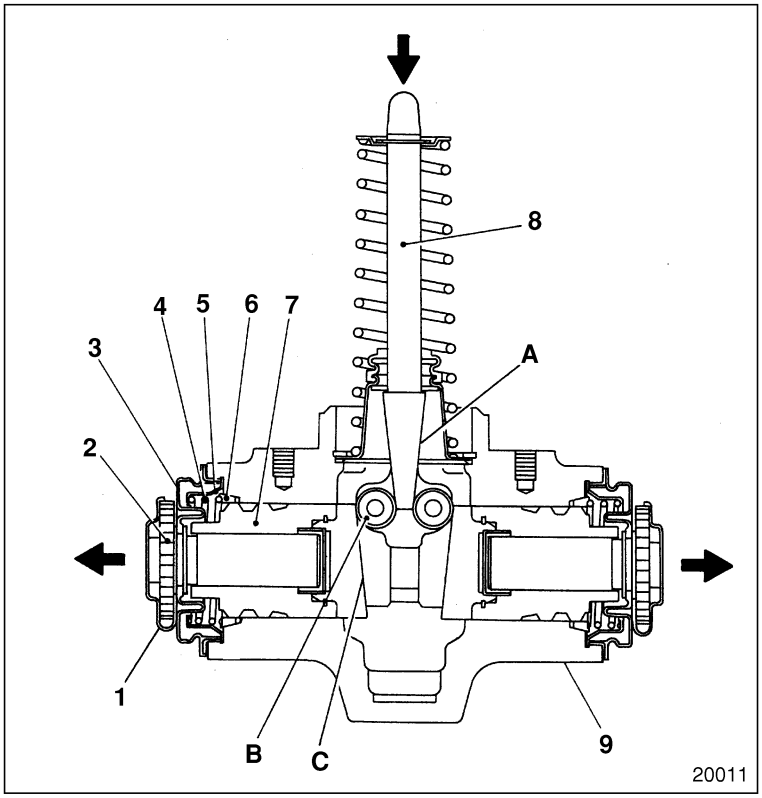

1 Clip
2 Adjusting screw
3 Boot
4 Spring
5 Cage
6 Drive ring
7 Sleeve assembly
8 Wedge
9 Body

A: Inclination part (wedge)
B: Roller
C: Inclination part (sleeve assembly)

- When wedge **8** being pushed, roller **B** is spread out along inclination part **A** of the wedge.
- Roller **B** pushes out sleeve assembly **7** and adjusting screw **2** along inclination part **C** of sleeve assembly **7**.
- Body **9** of the expander incorporates an auto adjustment mechanism.

● Auto adjustment mechanism

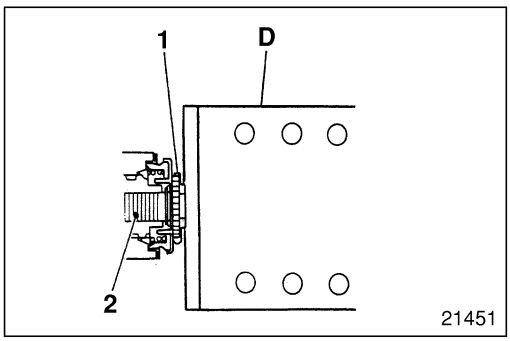

- The rotation direction of adjusting screw **2** is fixed by clip **1**.
- The rotation direction of clip **1** is fixed by brake shoe **D**.

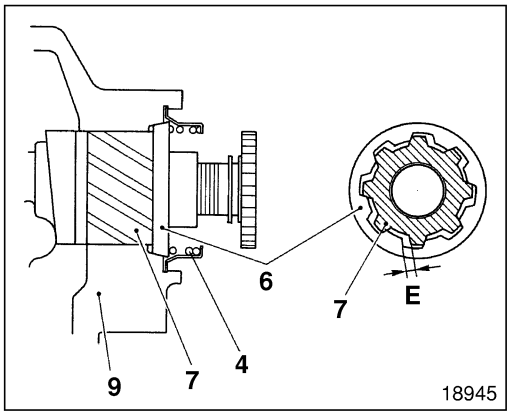

When brake shoe clearance is the standard value

- Before applying the brake, a low part of sleeve assembly **7** strikes body **9**.
- Drive ring **6** is pushed by spring **4**, strikes body **9**, and fixed.
  E: Backlash

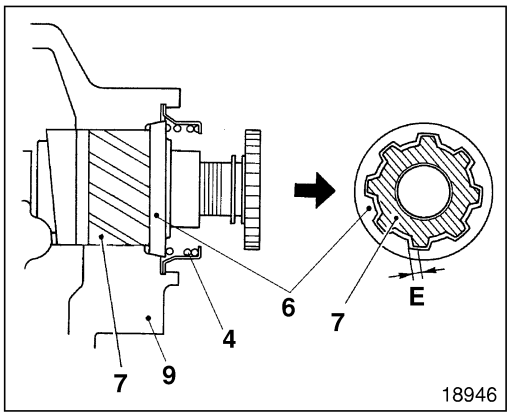

- If applying the brake, sleeve assembly **7** moves within a range of backlash **E**.

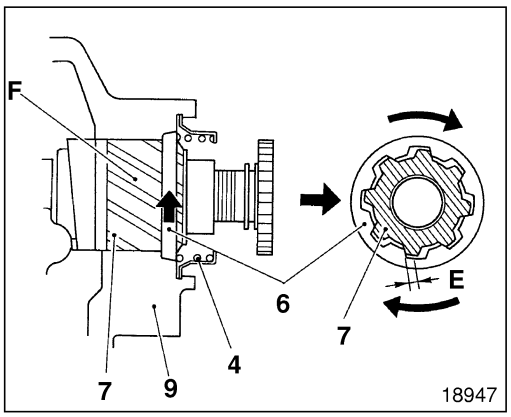

When brake shoe clearance exceeds the standard value

- If applying the brake, sleeve assembly **7** moves over backlash **E**, and rotates along screw lead face **F** of the sleeve assembly since drive ring **6** is pushed by spring **4**.
- Drive ring **6** remains to strike body **9** with being pushed to spring **4**.

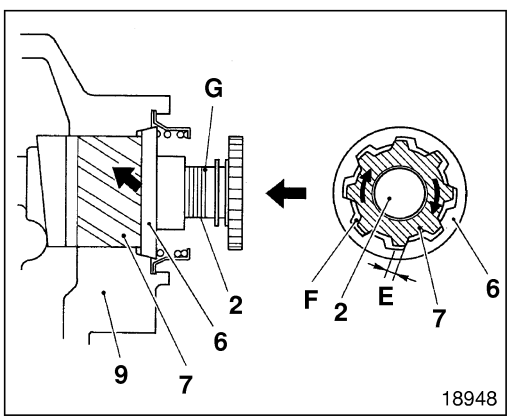

- If releasing the brake, a low part of sleeve assembly **7** moves until it strikes body **9**.
  Thereby the sleeve assembly moves just to the extent of backlash **E** without any rotation; after that, it rotates along the screw lead face **F** of drive ring **6**; it pushes out the adjusting screw **2** by the action of screw **G**; and it adjusts the brake shoe clearance to the standard value.

Wheel brake

Possible causes	Symptoms	Brakes do not apply completely although there is no air leakage in air line.	Overheated brake drum: Brake shoe returns improperly when brake pedal is released. (Dragging brake drums)	Unusual noise is emitted when brake pedal is depressed.	Wheel brake is applied only on one side.	Wheel brake is applied sharply.	Brake air warning lamp is illuminated.
Wheel brake	Excessive brake shoe clearance	○			○		○
	Oil/grease and fat on surface of brake linings	○					
	Hardened surface of brake linings	○		○			
	Worn brake linings						○
	Exposed rivets due to worn brake linings			○			
	Uneven wear on inner surface of brake drum			○			
	Improper contact of brake shoe and linings			○			
	Loose installation of brake drum			○	○		
	Uneven material of brake linings				○		
	Improper contact of brake linings				○		
	Run-out of brake drum				○		
	Wheel parking brake activated		○				
	Insufficient brake shoe clearance		○		○	○	
	Fatigued or cracked brake shoe return spring		○		○		
	Faulty return of sleeve assembly of expander		○		○		
	Rusting of wedge or anchor pin		○		○		
	Loose anchor pin			○			
	Air pressure in brake chamber not released		○				
	Uneven air pressure in each brake chamber				○		

● Thickness Inspection and Replacement of Brake Lining

Service standards

Unit : mm {in.}

Location	Maintenance item	Standard value	Limit	Remedy
2	Thickness of lining	16 {0.63}	6 {0.24}	Replace

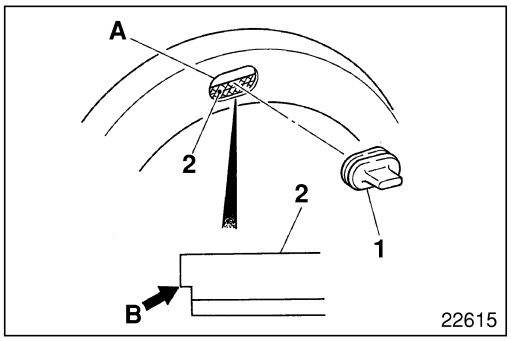

[Inspection]

NOTE:

Inspect two points on each wheel.

- Remove inspection hole plug **1** of the dust cover.
- Inspect brake linings for wear through the inspection hole **A.**
- When the brake linings are worn to the extent of the off set **B**, they have already reached the replacement limit. Replace brake lining **2** on the entire axle (both sides).
- After inspection is completed, be sure to install inspection hole plug **1**.

[Replace]

P35B-12 , 22

M E M O

FRONT WHEEL BRAKE

Front drum brake assembly

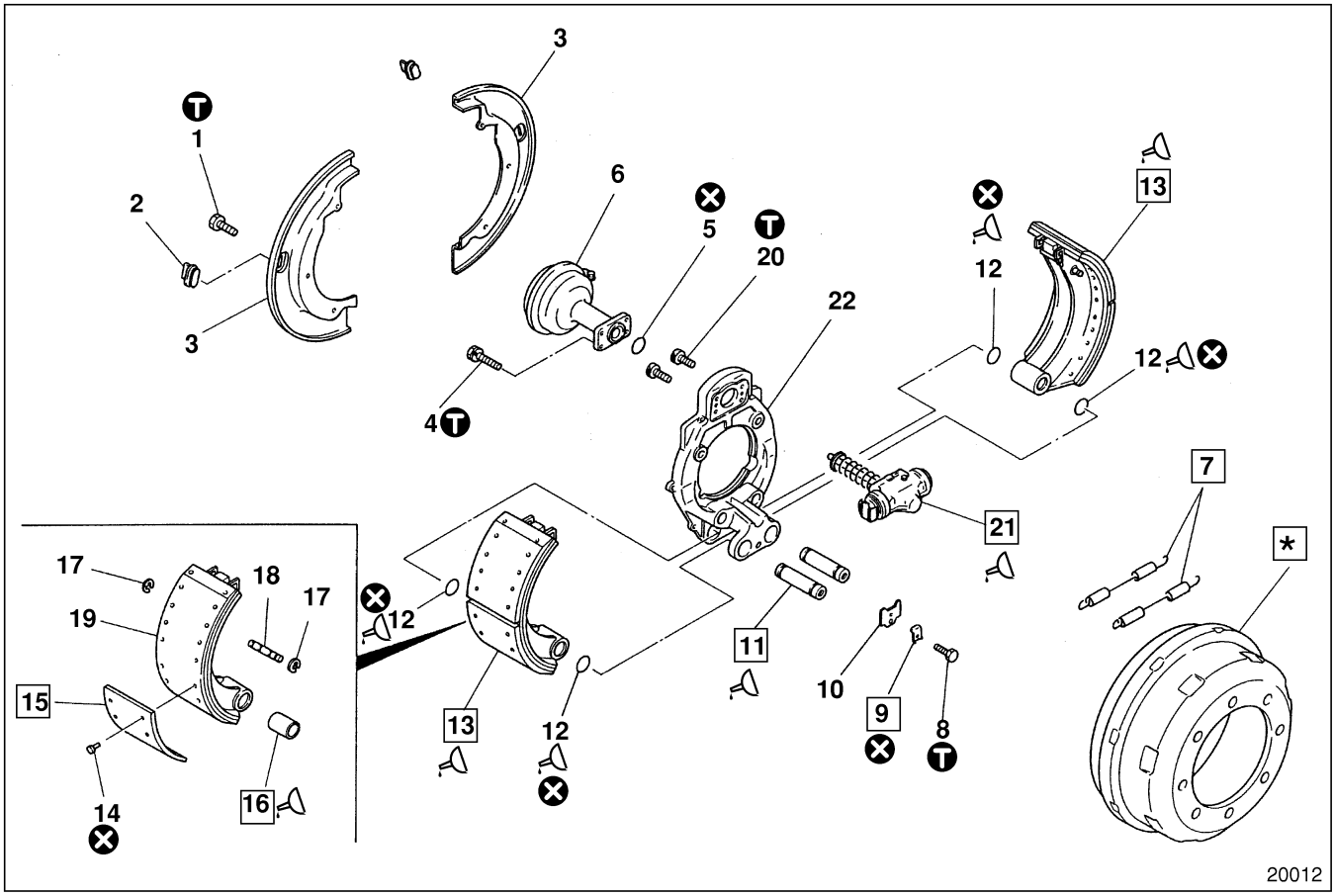

● Disassembly sequence

1 Bolt
2 Inspection hole plug
3 Dust cover
4 Bolt
5 0-ring
6 Brake chamber assembly
📖 P35B-20
7 Return spring
8 Bolt
9 Lock washer
10 Lock plate
11 Anchor Pin
12 O-ring
13 Brake shoe assembly
14 Rivet
15 Brake lining
16 Bushing
17 Snap ring
18 Pin
19 Brake shoe
20 Screw
21 Expander assembly
📖 P35B-32
22 Anchor bracket

*: Brake drum
Gr 26
⊗: Non-reusable parts

WARNING⚠

Do not apply oil or grease to the surface of brake lining 15 of brake shoe assembly 13 or the inside surface * of the brake drum, which may cause a malfunction of the brake system.

● Assembly sequence

Follow the disassembly sequence in reverse.

Repair kit: brake lining kit

● Work after assembly

📖 P35B-14

Service standards

Unit : mm {in.}

Location	Maintenance item		Standard value (Basic diameter in [ ])		Limit	Remedy
7	Load of return spring (installation length: 258{10})		292 N {66 lbf, 29.8 kgf}		Space must exist between coils, and between coils and cover.	Replace
11, **16**	Space between anchor pin and bush		[35] 0.05 to 0.14 {[1.38] 0.0020 to 0.0055}		0.3 {0.012)	Replace bushing
15	Thickness of brake lining		16 {0.63}		6 {0.24} (off set is wear limit).	Replace brake lining
*	Brake drum	Inside diameter	410 {16.1}	(*1) 412 {16.2}	414 {16.3}	Replace
		Taper	0.05 {0.0020}		0.2 {0.0079}	Correct

(*1) Indicating the resurface limit value

Tightening torque

Unit : N·m {ft.lbs, kgf·m}

Location	Parts to be tightened	Tightening torque	Remarks
1	Bolt (installation of dust cover)	19.6±3.9 {14±2.9, 2±0.4}	—
4	Bolt (installation of brake chamber assembly)	50±7.5 {37±5.1, 5.1±0.7}	—
6	Release bolt for brake chamber assembly, Release nut used when being stored	14.7 to 15.7 {10 to 12, 1.4 to 1.6}	—
8	Bolt (installation of lock plate)	19.6±3.9 {14±2.9, 2±0.4}	—
20	Screw (installation of expander assembly)	18.6±4.9 {14±3.6, 1.9±0.5}	—

Lubricant

Location	Points of application	Specified fluid	Quantity
11	Grease groove of anchor pin	Shell Darina Grease 2 [NLGI No.2 (Non soap)]	As required
12	O-ring	Shell Darina Grease 2 [NLGI No.2 (Non soap)]	As required
13, 21	Contact surface of brake shoe assembly and expander assembly	Shell Darina Grease 2 [NLGI No.2 (Non soap)]	As required
16	Inside surface of bush	Shell Darina Grease 2 [NLGI No.2 (Non soap)]	As required
21	Wedge tip of expander assembly	Shell Darina Grease 2 [NLGI No.2 (Non soap)]	As required
	Wedge insertion part of expander assembly	Shell Darina Grease 2 [NLGI No.2 (Non soap)]	10 g {22 lb}

Special tools

Unit : mm {in.}

Location	Tool name and shape	Part No.	Application
7	Return spring setter 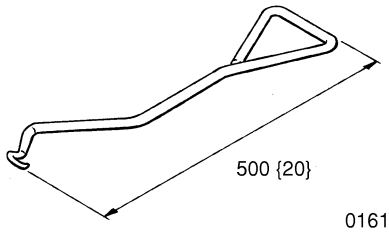	Obtain Locally	Remove return spring
11	Anchor pin puller 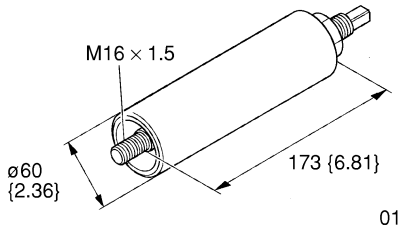	03727-60000	Remove anchor

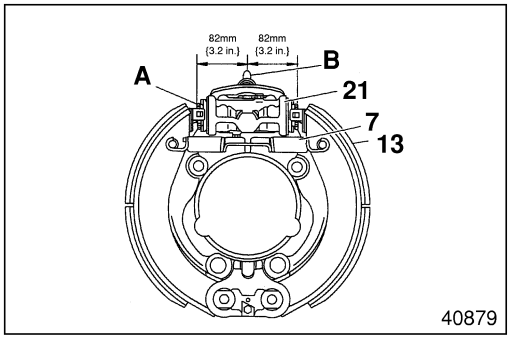

♦ Maintenance point ♦

● Work after assembly

(1) Check for operation

- Confirm whether the installation dimension of expander assembly **21** is 82 mm {3.2 in.}.
  If it is incorrect, adjust it according to the following procedure.
- Set the dimension indicated in Figure to 82 mm {3.2 in.} by rotating the adjusting screw **A**.
- P35B-17
- Expand brake shoe assembly **13** under a full stroke by pushing bush rod **B**.
- Confirm whether expander assembly **21** returns to 82 mm {3.2 in.} when returning push rod **B**.
- If it is incorrect, inspect the spring force of return spring **7**, tightening of brake shoe assembly **13**, and expander assembly **21**.

WARNING ⚠

The auto adjustment mechanism may not operate normally unless the mechanism is properly operated after having assembled it.

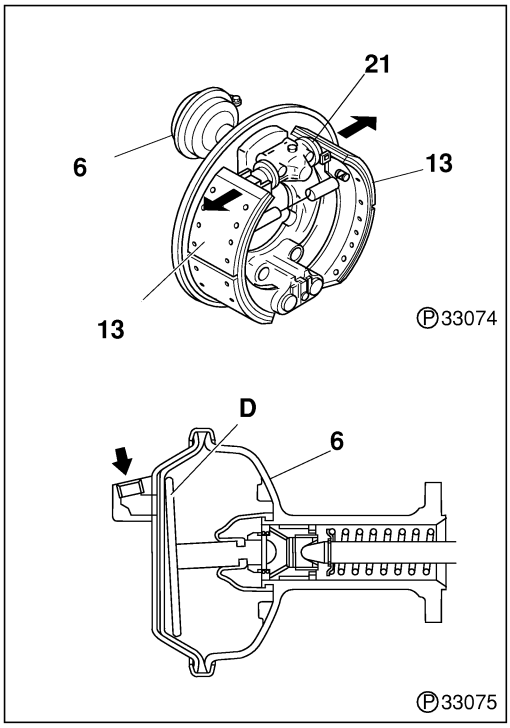

- When disassembling brake chamber assembly **6**, inspect the following.

<When disassembling brake chamber assembly 6>

- Pull the brake shoe assembly **13** with a force of 20 to 30N {4.4 to 6.6 lbf, 2 to 3 kgf}. Inspect for movement of the expander assembly **21** (there should be **no** movement).
- If brake shoe assembly **13** moves, push rod and pressure plate **D** of brake chamber assembly **6** are not returning properly. Correct the push rod and the pressure plate to a regular position by depressing brake pedal 2 to 3 times with brake drum removed.

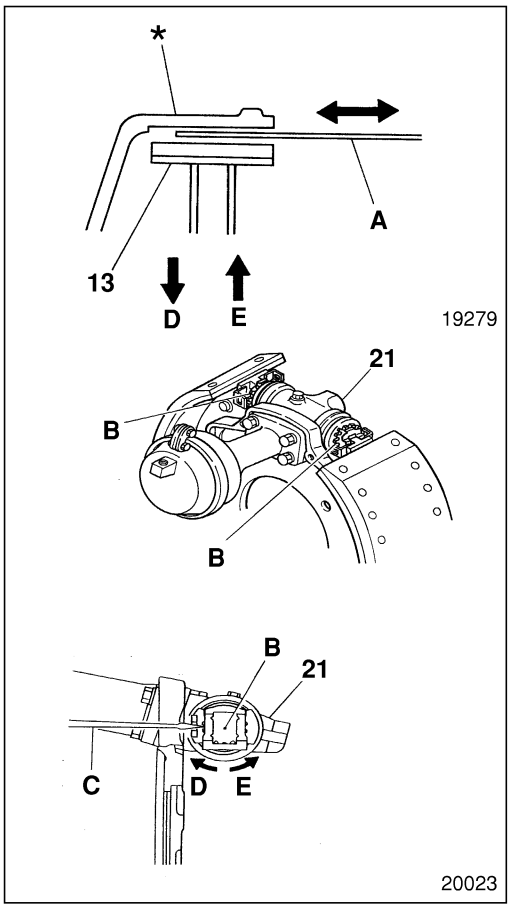

(2) Initial adjustment of brake shoe clearance after assembly

<When not replacing brake lining 15 with the new one>

- Remove dust cover **3**.
- Turn adjusting screw **B** of expander assembly **21** until a feeler gauge **A** of 0.3 to 0.5mm {0.012 to 0.02 in.} can be easily pulled in and out at the inspection hole of each shoe.
  - **C**: Screw driver
  - **D**: Increasing brake shoe clearance
  - **E**: Decreasing brake shoe clearance

- Install dust cover **3**

CAUTION

Do not damage the boot of expander assembly 21 when inserting screw driver C.

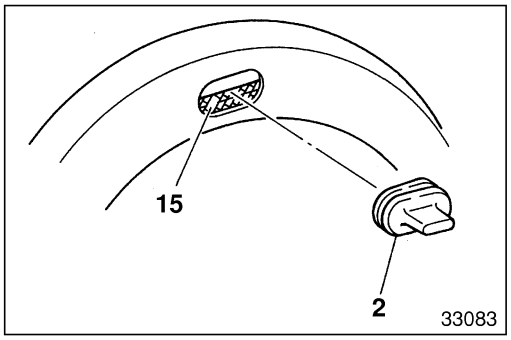

<When replacing brake lining 15 with the new one>

- Adjust expander assembly **21**.
  P35B-17
- Start the engine after having assembled brake drum *, and confirm whether brake air pressure is sufficient.
- Operate auto adjuster by fully depressing brake pedal ten times.
- Remove inspection hole plug **2**.

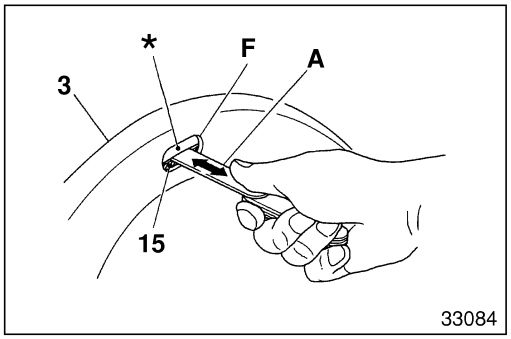

- Insert feeler gauge **A** into the inspection hole **F** of dust cover **3**, and confirm whether brake shoe clearance is 0.4 to 1.0 mm {0.016 to 0.039 in.}, as well as 0.3mm {0.012 in.} or less in the right and left difference.
- If the clearance is not 0.4 to 1.0 mm {0.016 to 0.039 in.}, adjust it as required.

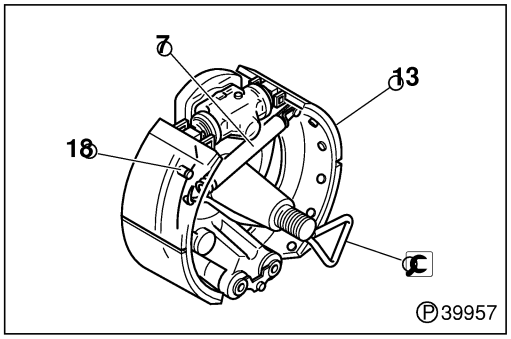

7 Return spring

[Removal]

Remove the return spring with the return spring setter as shown.

WARNING

Do not allow return spring setter to contact the mating surface of oil seal.

[Installation]

- Attach one hook of return spring **7** on the pin **18** of brake shoe assembly **13**.
- Attach the other hook on return spring setter, and install it while pressing against pin **18**.

WARNING

Do not allow return spring setter to contact the mating surface of oil seal.

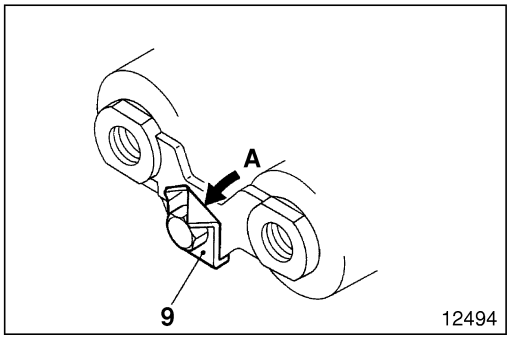

9 Installation of lock washer

A: Bend

- After installing the lock washer, bend the tab over the bolt head as shown in the figure on the left.

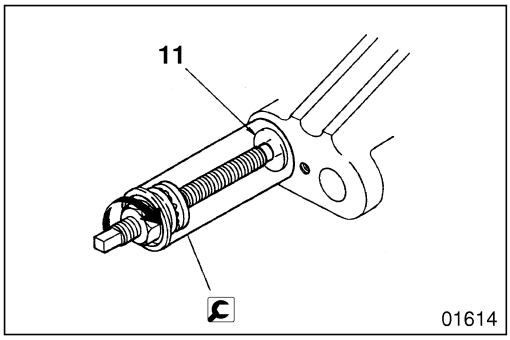

11 Anchor pin

[Removal]
: Anchor pin puller

- Remove the anchor pin using an anchor pin puller as shown in the figure on the left.

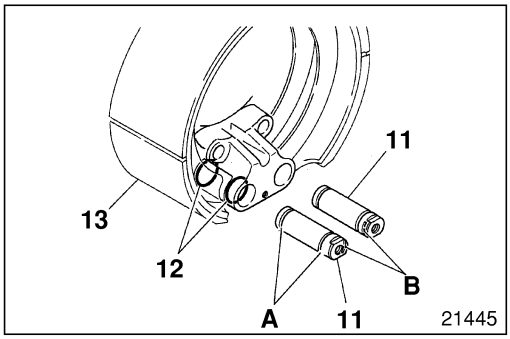

[Installation]
- Apply grease in the grease grooves **A** of anchor pin **11**.
- Install anchor pin **11** in the direction shown in Figure.
  B: Groove installing lock plate

CAUTION
If anchor pin 11 is installed in the wrong direction of the anchor pin, O-ring 12 will be damaged; therefore, be sure to mount it as required.

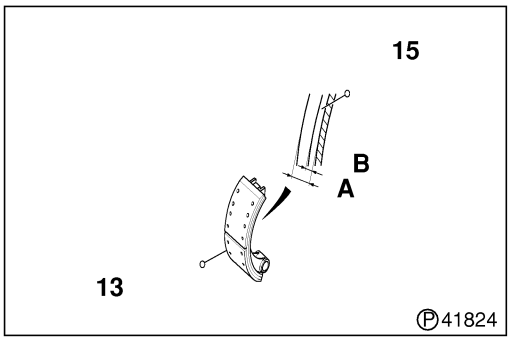

13 Brake shoe assembly

[Inspection]
If the thickness **A** of brake lining **15** reaches below the limit **B**, replace the brake linings on the entire axle.

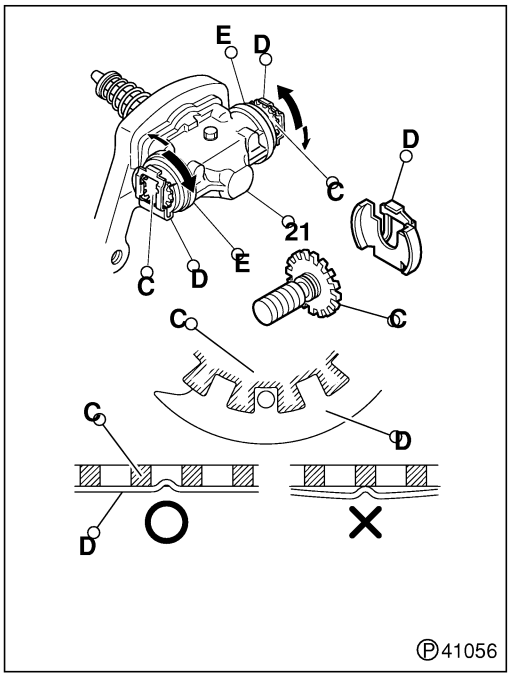

[Installation]
- Turn adjusting screw **C** of expander assembly **21** fully clockwise by hand.
  (Return of a screwing portion of adjusting screw)
- Install clip **D** with the open side facing the drum. Turn adjusting screw **C** further clockwise to match the position if alignment is incorrect.

WARNING
- **Be sure to apply grease appropriately on the contact part of adjusting screw C in boot E; otherwise, the auto adjuster may malfunction due to breakage of boot.**

CAUTION
- **Turn it slowly so that boot E is not jammed.**
- **Be sure to keep the convex part of clip D between teeth of adjusting screw C (2 points).**

- If clip **D** is misaligned, rotate adjusting screw **C** counterclockwise two revolutions to align clip.

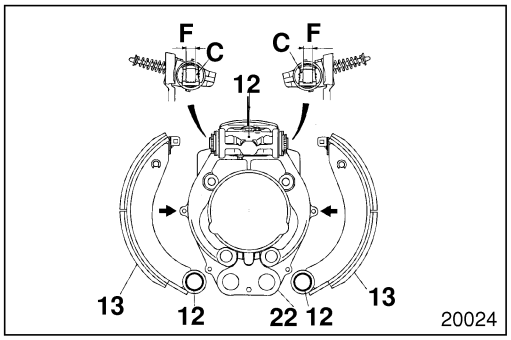

- Install brake shoe assembly **13** so that it securely enters into the two-sided width **F** of clip **C**.

CAUTION

When installing brake shoe assembly 13, do not damage clip C or O-ring 12.

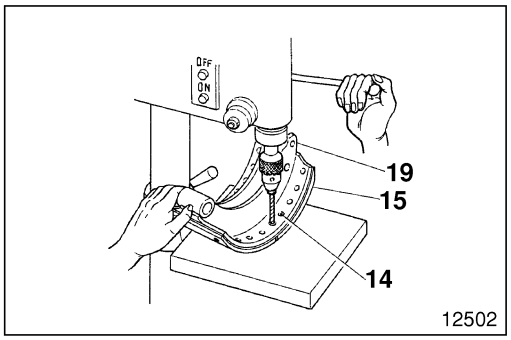

15 Brake lining

[Removal]

- Remove the rivets **14** by drilling, taking care not to damage the brake shoe **19**. Then, remove the brake lining **15**.

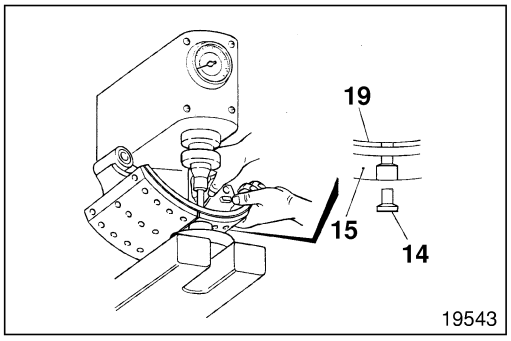

[Installation]

- Clean the surface of the brake lining **15** and brake shoe **19**.
- Insert rivet **14** through brake lining **15**, and stake the rivet in sequence from the center to both ends.
- Stake the rivet **14** with a load of 19.61±0.98 kN {4410±2200 lbf, 2000±1000 kgf}.
- Inspect brake drum * to brake lining **15** contact: correct any faulty points if they are found. Such correction must be performed in a state that the brake has been assembled.

WARNING

- **Be sure to replace brake lining 15 on the entire axle to prevent uneven braking.**
- **Do not apply oil or grease to the brake lining 15, which may cause the malfunction of the brake system.**

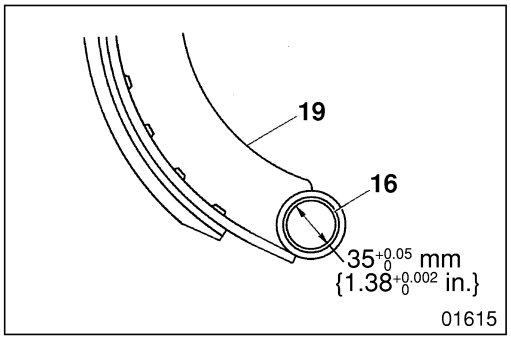

16 Installation of bushing

- Install bushing **16** on brake shoe **19**.
- Measure the inside diameter of bushing 1**6**.
- If the inside diameter is not $35^{+0.05}_{0}$ mm {$1.38^{+0.002}_{0}$ in.}; correct by reaming to specification.

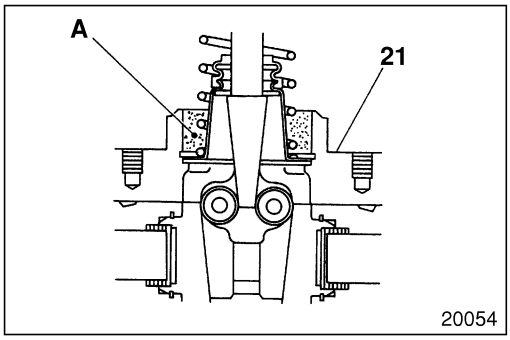

21 Installation of expander assembly

- Fill the grease of the specified amount in **A** part of expander assembly **21**.

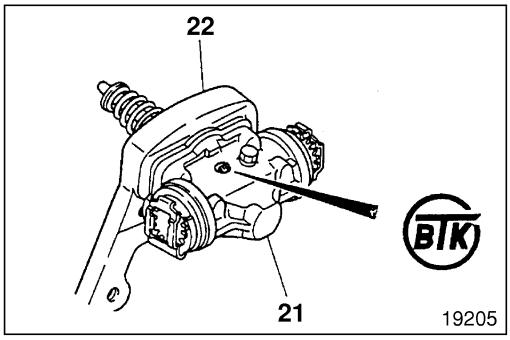

- Install expander assembly **21** on anchor bracket **22** in the direction shown in Figure.

*** Correction of brake drum**

If the taper of brake drum * exceeds the limit, or has deep grooves; cut them to the specified limit.

Brake chamber assembly

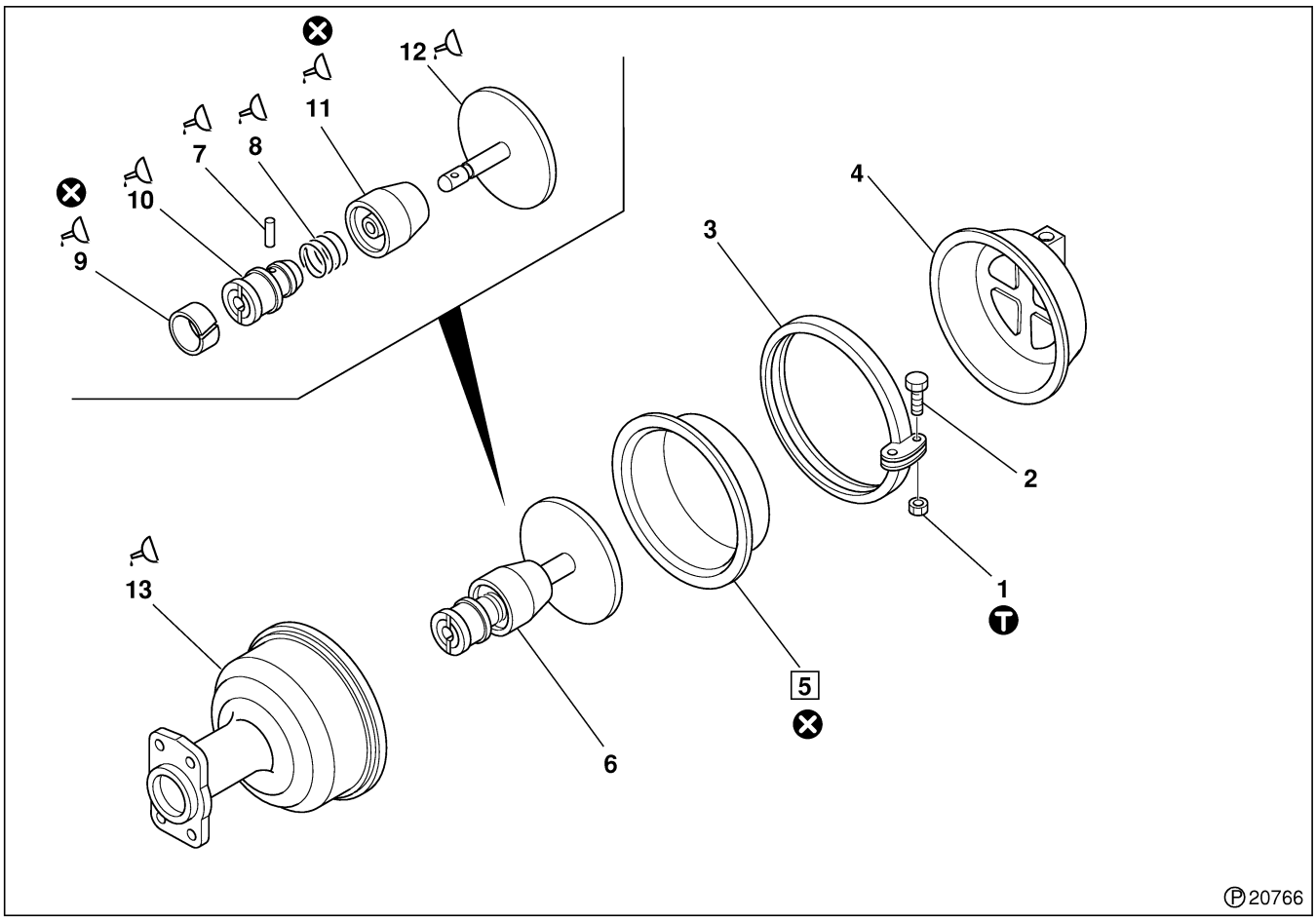

● Work before disassembly

P35B-21

● Disassembly sequence

1 Nut
2 Bolt
3 Clamp ring
4 Pressure plate
5 Diaphragm
6 Push rod assembly
7 Pin
8 Ring
9 Bushing
10 Push rod guide
11 Dust cover
12 Push rod complete
13 Base
⊗: Non-reusable parts

CAUTION

Do not damage the seat surface of diaphragm 5 of pressure plate 4 and base 13 when removing clamp ring 3, which may cause air leakage.

● Assembly sequence

Follow the disassembly sequence in reverse.

Repair kit: chamber kit

WARNING

Do not apply oil or grease to diaphragm 5 so that the diaphragm may not come off.

Tightening torque

Unit : N·m {ft.lbs, kgf·m}

Location	Parts to be tightened	Tightening torque	Remarks
1	Nut	14.7 to 20.0 {11 to 14, 1.5 to 2.0}	—

Lubricant

Location	Points of application	Specified fluid	Quantity
7 to 12	Each contact surface	Multi purpose grease [NLGI No.2 (Li soap)]	As required
13	Internal circumference of the base	Multi purpose grease [NLGI No.2 (Li soap)]	As required

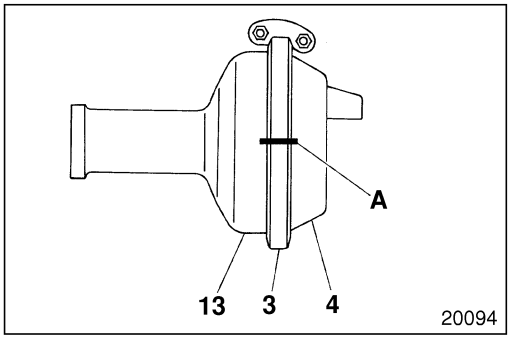

♦ Maintenance point ♦

● Work before assembly

A: Counter mark

CAUTION

Be sure to match counter mark A when assembling, and installing clamp ring 3, pressure plate 4, and base 13.

REAR WHEEL BRAKE

Rear drum brake assembly

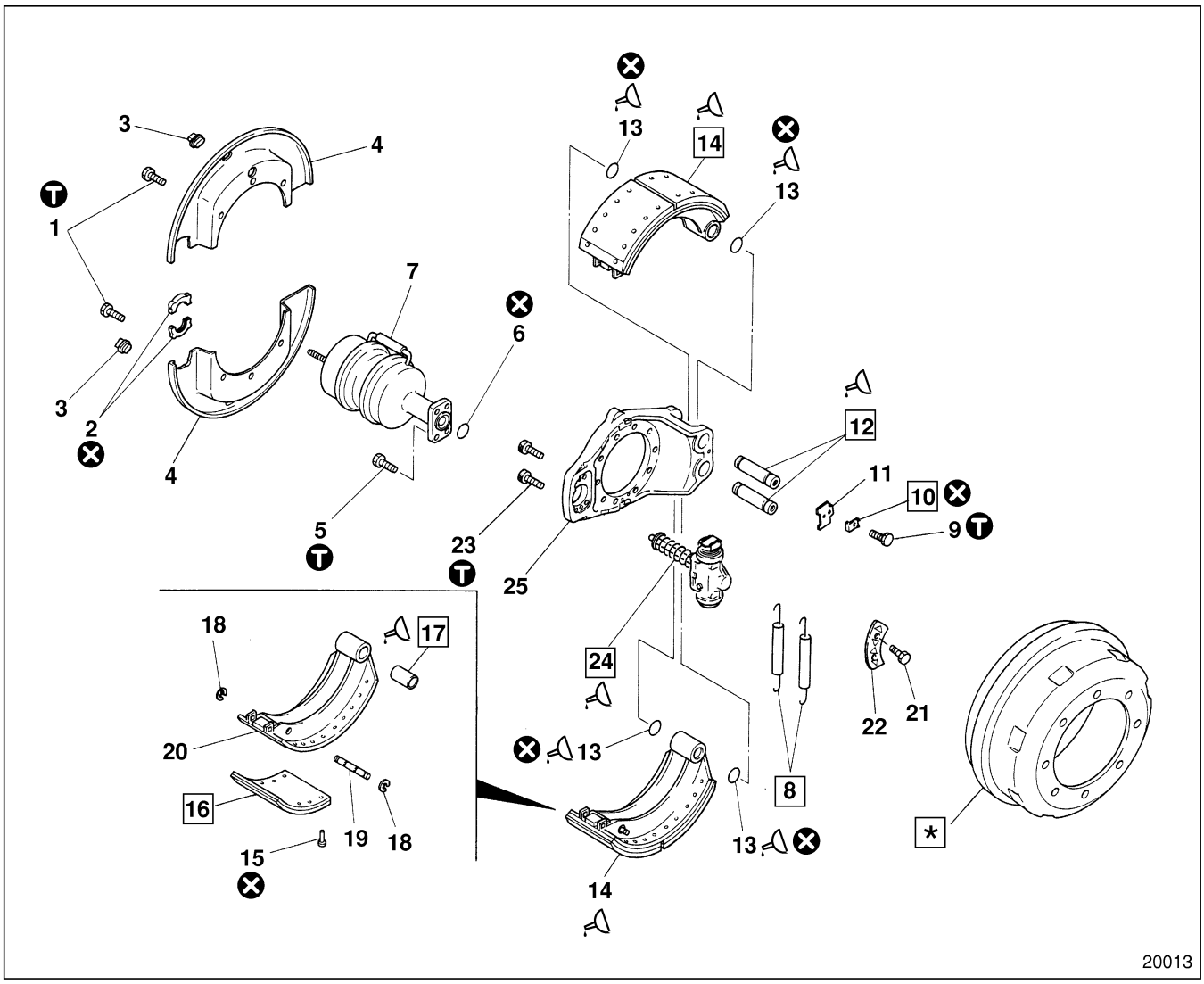

● Work before disassembly

P35B-24

● Disassembly sequence

1 Bolt
2 Seal
3 Inspection hole plug
4 Dust cover
5 Bolt
6 O-ring
7 Brake chamber assembly
P35B-30
8 Return spring
9 Bolt
10 Lock washer
11 Lock plate
12 Anchor pin
13 O-ring
14 Brake shoe assembly
15 Rivet
16 Brake lining
17 Bushing
18 Snap ring
19 Pin
20 Brake shoe
21 Bolt
22 Stopper Plate
23 Screw
24 Expander assembly
P35B-32
25 Anchor bracket

*: Brake drum
Gr27
⊗: Non-reusable parts

WARNING⚠

Do not apply oil or grease to the surface of brake lining 16 of brake shoe assembly 14 and the inside surface of brake drum *, which may cause a malfunction of the braking system.

● Assembly sequence

Follow the disassembly sequence in reverse.

Repair kit: brake lining kit

● Work after assembly

P35B-25

Service standards

Unit : mm {in.}

Location	Maintenance item		Standard value (Basic diameter in [ ])		Limit	Remedy
8	Load of return spring (installation length: 258{10})		292 N {66 lbf, 29.8 kgf}		Space must exist between coils, and between coils and cover.	Replace
12, **17**	Space between anchor pin and bushing		[35] 0.05 to 0.14 {[1.38] 0.0020 to 0.0055}		0.3 {0.012}	Replace bushing
16	Thickness of brake lining		16 {0.63}		6 {0.24} (side stagger is wear limit).	Replace brake lining
*	Brake drum	Inside diameter	410 {16.1}	(*1) 412 {16.2}	414 {16.3}	Replace
		Cylindrical degree	0.05 {0.0020}		0.2 {0.0079}	Correct

(*1) Indicating the resurface limit value

Ⓣ Tightening torque

Unit : N·m {ft.lbs, kgf·m}

Location	Parts to be tightened	Tightening torque	Remarks
1	Bolt (installation of dust cover)	19.6±3.9 {14±2.9, 2±0.4}	—
5	Bolt (installation of brake chamber assembly)	44.1±7.8 {33±5.8, 4.5±0.8}	—
7	Release bolt for brake chamber assembly, Release nut used when being stored	14.7 to 15.7 {10 to 12, 1.4 to 1.6}	—
9	Bolt (installation of lock plate)	19.6±3.9 {14±2.9, 2±0.4}	—
23	Screw (installation of expander assembly)	18.6±4.9 {14±3.6, 1.9±0.5}	—

Lubricant

Location	Points of application	Specified fluid	Quantity
12	Grease groove of anchor pin	Shell Darina Grease 2 [NLGI No.2 (Non soap)]	As required
13	O-ring	Shell Darina Grease 2 [NLGI No.2 (Non soap)]	As required
14, 24	Contact surface of brake shoe assembly and expander assembly	Shell Darina Grease 2 [NLGI No.2 (Non soap)]	As required
17	Inside surface of bush	Shell Darina Grease 2 [NLGI No.2 (Non soap)]	As required
24	Wedge tip of expander assembly	Shell Darina Grease 2 [NLGI No.2 (Non soap)]	As required
	Wedge insertion part of expander assembly	Shell Darina Grease 2 [NLGI No.2 (Non soap)]	10 g {22 lb}

Special tools

Unit : mm {in.}

Location	Tool name and shape	Part No.	Application
8	Return spring setter 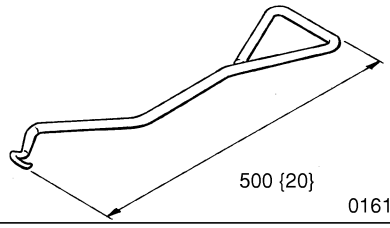	Obtain Locally	Remove return spring
12	Anchor pin puller 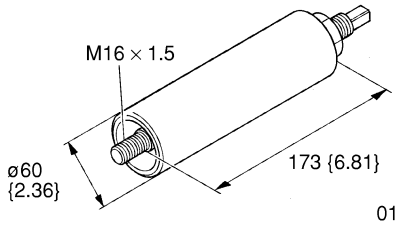	03727-60000	Remove anchor pin

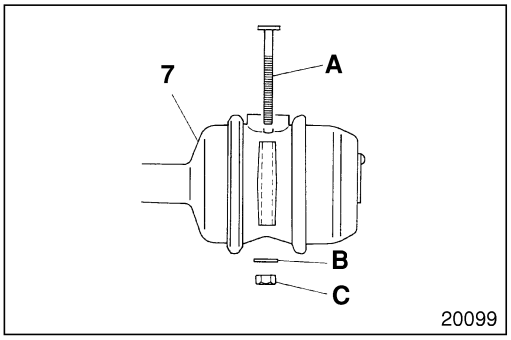

♦ Maintenance point ♦

● Work before disassembly

Release of spring brake

Release the spring brake by mechanical release.

- Remove the release bolt **A**, the washer **B**, and the release nut **C** from brake chamber assembly **7**.

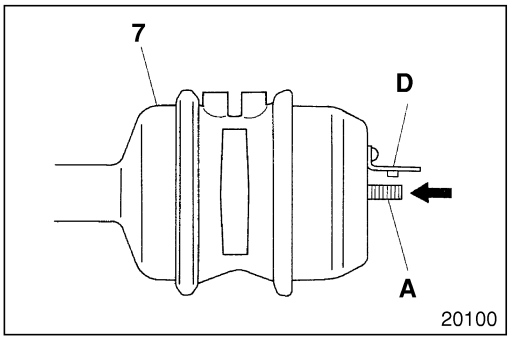

- Remove end cap **D**.
- Insert the release bolt **A** into the inner part, and turn it one quarter (1/4) turn.
- Pull up the release bolt **A**, and confirm that the release bolt does not come off.
- If the release bolt **A** comes off, insert the release bolt again into the inner part, and turn it one quarter (1/4) turn.

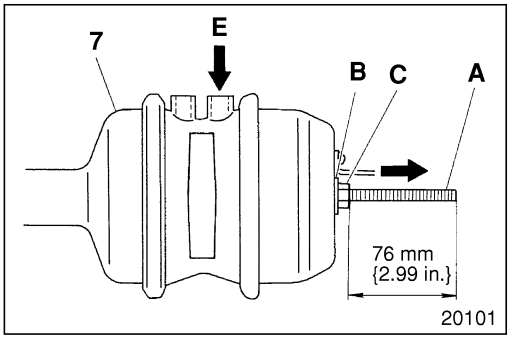

- Install the washer **B** and the release Nut **C**.
- Turn the release nut **C**, and draw out the screw of release bolt **A** by 76 mm {2.99 in.}, while applying air pressure of 640 kPa {92 lbf/in^2, 6.5 kgf/cm^2} to spring brake port **E**, while setting the hand control valve to the release position.

CAUTION

- **Do not turn the release nut C by a strong torque; (68.6 N·m {51 ft.lbs, 7 kgf·m} or more): because brake chamber assembly 6 may be damaged if turning it by such a strong torque.**
- **Use air pressure E so that the release nut C may be easily turned.**

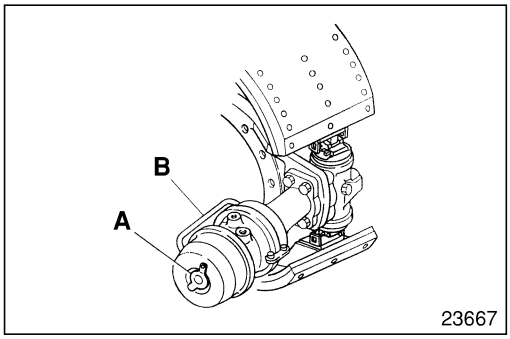

● Work after assembly

(1) Release of spring brake

Follow the work sequence before disassembly in reverse to release the mechanical release of spring brake. P35B-24

NOTE:

- **Confirm that end cap A is surely installed.**
- **Confirm that there is no damage in bleeder pipe B. Also, confirm that the bleeder pipe is surely installed.**

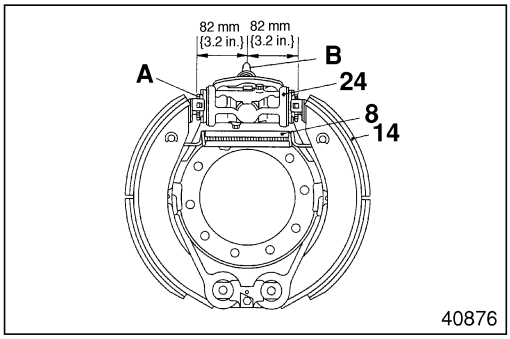

(2) Confirmation of operation

- Confirm that the installation dimension of expander assembly **24** is 82 mm {3.2 in.}.
  If it is incorrect, reconfirm it according to the following procedure.
- Set the part indicated in Figure to 82 mm {3.2 in.} by adjusting the adjusting screw **A**. P35B-28
- Expand the brake shoe assembly **14** under a full stroke by pushing push rod **B**.
- Confirm that expander assembly **24** returns to 82 mm {3.2 in.} when returning the push rod **B**.
- If it operates incorrectly, inspect the spring force of return spring **8**, inactivation of brake shoe assembly **14**, and expander assembly **24** again.

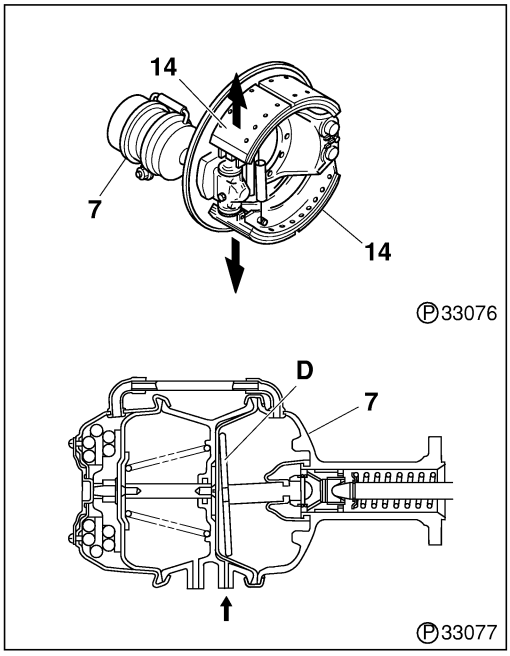

WARNING

The auto adjustment mechanism might not operate normally if the assembly work is not surely executed.

- When disassembling brake chamber assembly **7**, inspect the following.

<When disassembling brake chamber assembly 7>

- Confirm that brake shoe assembly **14** does not move with the adjusting screw **C** of expander assembly **24** when pulling the brake shoe assembly with a force of 20 to 30N {4.4 to 6.6 lbf, 2 to 3kgf}.
- If brake shoe assembly **14** moves, push rod and pressure plate **D** of brake chamber assembly **7** are diagonally installed; therefore, correct the push rod and the pressure plate to a regular position by depressing brake pedal 2 to 3 times with not installing brake drum *.

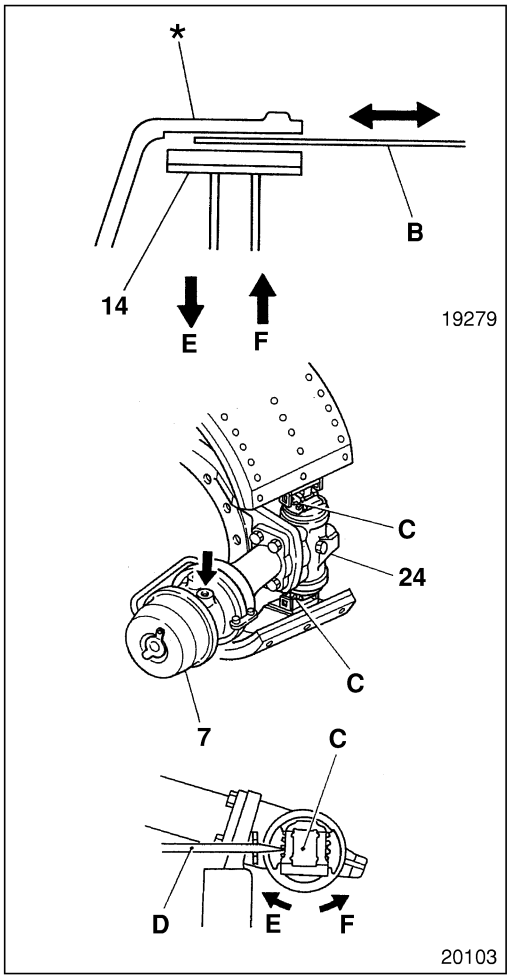

(2) Initial adjustment of brake shoe clearance

<When not replacing brake lining 16 with the new one>

- Remove dust cover **4**.
- Apply air pressure of 640 kPa {92 psi, 6.5kgf/cm^2}) on the spring brake air supply port **A** of brake chamber assembly **7** (thereby putting the hand control valve to the release position), and then release the spring brake.
- Turn adjusting screw **C** of expander assembly **24** until a feeler gauge **B** of 0.4 mm {0.016 in.} can be easily pulled in and out at the inspection hole of each shoe.
  D: Screw driver
  E: Increasing brake shoe clearance
  F: Decreasing brake shoe clearance
- Install dust cover **4**.

CAUTION

Do not damage the boot of expander assembly 24 when inserting screw driver D.

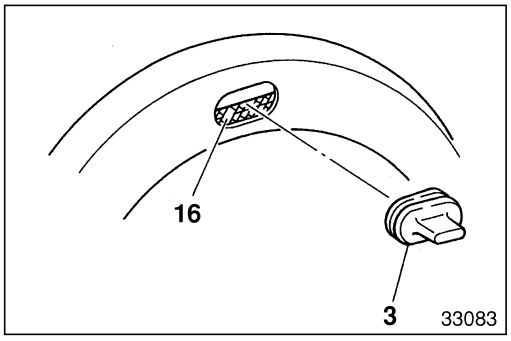

<When replacing brake lining 16 with the new one>

- Adjust expander assembly **24**. P35B-28
- Start the engine after having assembled brake drum *, and confirm whether brake air pressure is sufficient.
- Operate auto adjuster by fully depressing brake pedal ten times.
- Remove inspection hole plug **3**.

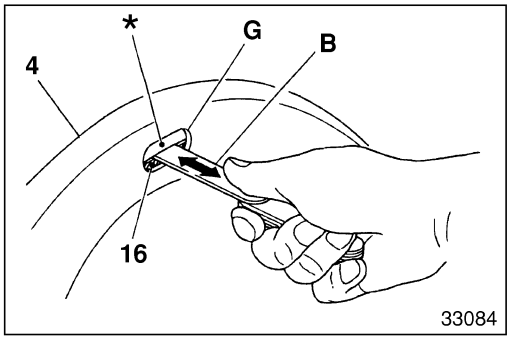

- Insert feeler gauge **B** into inspection hole G of dust cover **4**, and confirm whether brake shoe clearance is 0.4 to 1.0 mm {0.016 to 0.039 in.}, as well as 0.3 mm {0.012 in.} or less in the right and left difference.
- If the clearance is not 0.4 to 1.0 mm {0.016 to 0.039 in.}, adjust it again.

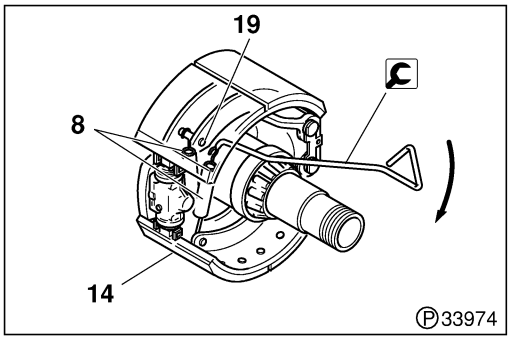

8 Return spring

[Removal]

Remove the return spring with the return spring setter as shown.

WARNING

Do not allow the return spring setter to contact the mating surface of oil seal.

[Installation]

- Attach one hook of return spring **8** on the pin **19** of brake shoe assembly **14**.
- Attach the other hook on the return spring setter, and install it while pressing against pin **19**.

WARNING

Do not hang the return spring setter on the sliding area of oil seal.

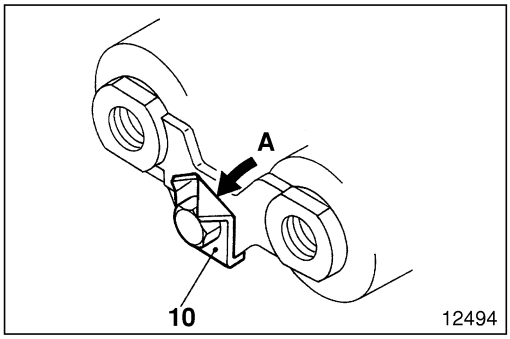

10 Installation of lock washer

A: Bend

- After installing the lock washer, bend the tab over the bolt head as shown in the figure on the left.

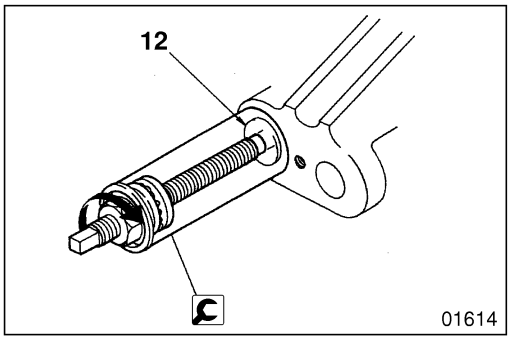

12 Anchor pin

[Removal]

: Anchor pin puller

- Remove the anchor pin using anchor pin puller as shown in the figure on the left.

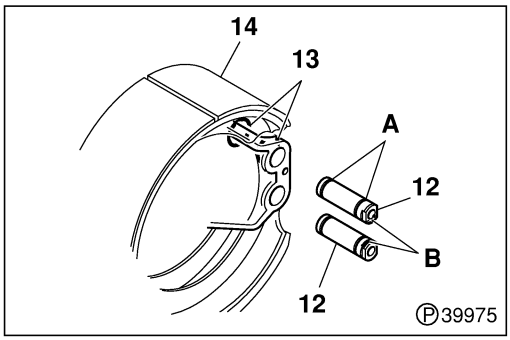

[Installation]

- Apply grease in the grease grooves **A** of anchor pin **12**.
- Install anchor pin **12** in the direction shown in Figure.

B: Groove installing lock plate

CAUTION

If anchor pin 12 is installed in the wrong direction of the anchor pin, O-ring 13 will be damaged; therefore, be sure to install it as required.

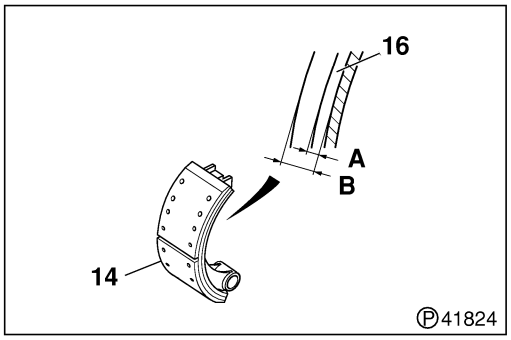

14 Brake shoe assembly

[Inspection]
If the thickness **A** of brake lining **16** reaches below the limit **B**, replace the brake lining on the entire axle.

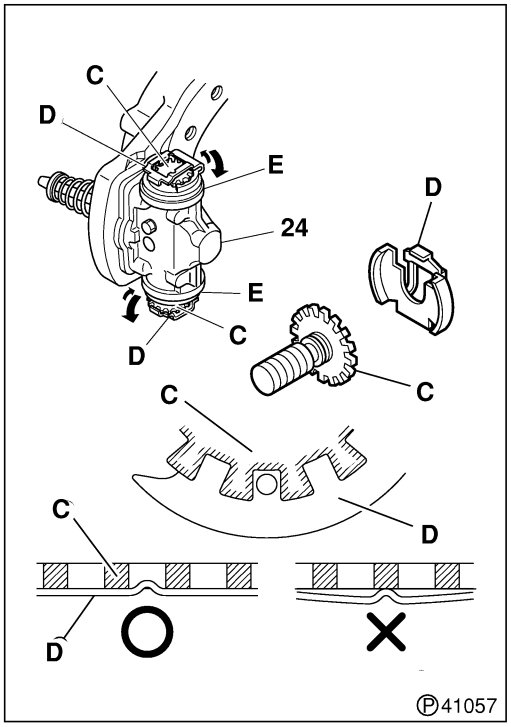

[Installation]

- Turn adjusting screw **C** of expander assembly **24** fully clockwise by hand.
- Install clip **D** with the open side facing the drum. Turn adjusting screw **C** further clockwise to match the position if alignment is incorrect.

WARNING

Be sure to apply grease as required on the contact part of adjusting screw C in boot E; otherwise the auto adjuster may malfunction due to breakage of boot.

CAUTION

- **Turn it slowly so that boot E is not jammed.**
- **Be sure to keep the convex part of clip D between teeth of adjusting screw C (2 points).**

- If clip **D** is misaligned, rotate adjusting screw **C** counterclockwise by two revolutions to center of clip.

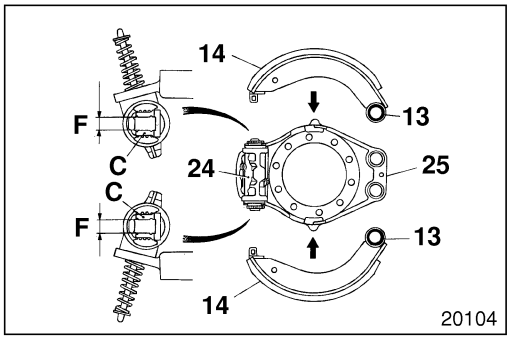

- Install brake shoe assembly **14** so that it may securely enters into the two-sided width **F** of clip **C**.

CAUTION

When installing brake shoe assembly 14, do not damage clip C and O-ring 13.

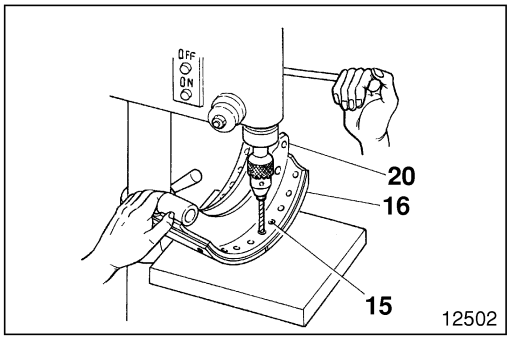

16 Brake lining

[Removal]

- Remove the rivets **15** by drilling, taking care not to damage the brake shoe **20**. Then, remove the brake lining **16**.

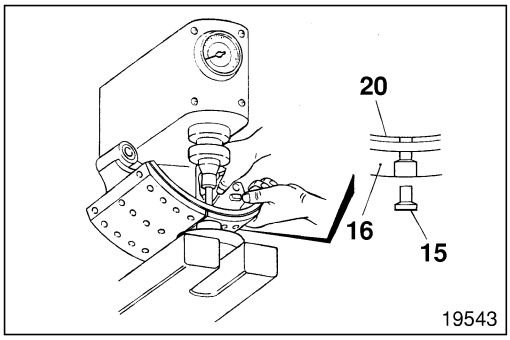

[Installation]

- Clean the surface of the brake lining **16** and brake shoe **20.**
- Insert rivet **15** through brake lining **16**, and stake the rivet in sequence from the center to both ends.
- Stake the rivet **15** with a load of 19.61±0.98 kN {4410±220 lbf, 2000±100 kgf}.
- Inspect brake drum * to brake lining **16** contact: correct any faulty points if they are found. Such correction must be performed in a state that the brake has been assembled.

WARNING

- **Be sure to replace brake lining 16 to prevent uneven braking.**
- **Do not apply oil or grease to the brake lining 16, which may cause the malfunctioning of the braking system.**

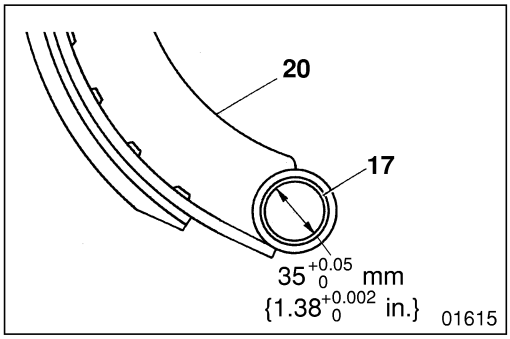

17 Installation of bushing

- Install bushing **17** on brake shoe **20**.
- Measure the inside diameter of bushing **17**.
- If the inside diameter is not $35^{+0.05}_{0}$ mm {$1.38^{+0.002}_{0}$ in.}; correct by reaming to specification.

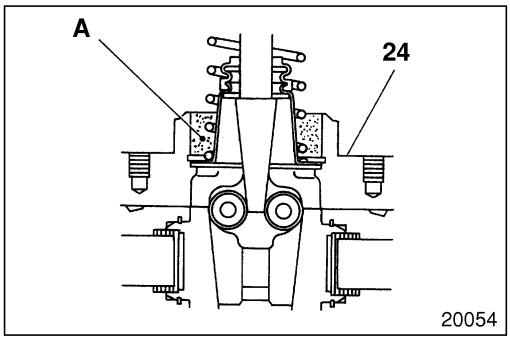

24 Installation of expander assembly

- Fill the grease of the specified amount in **A** part of expander assembly **24**.

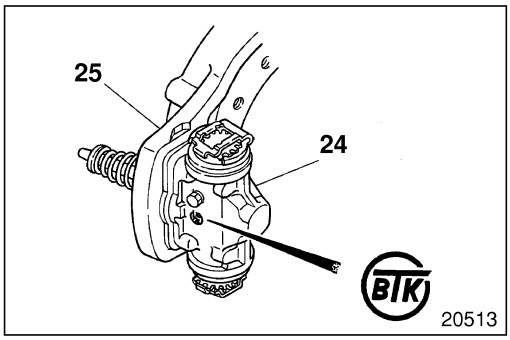

- Install expander assembly **24** on anchor bracket **25** in the direction shown in Figure.

*** Correction of brake drum**

If the taper of brake drum * exceeds the limit, or has deep grooves, cut them to the specified limit.

Brake chamber assembly

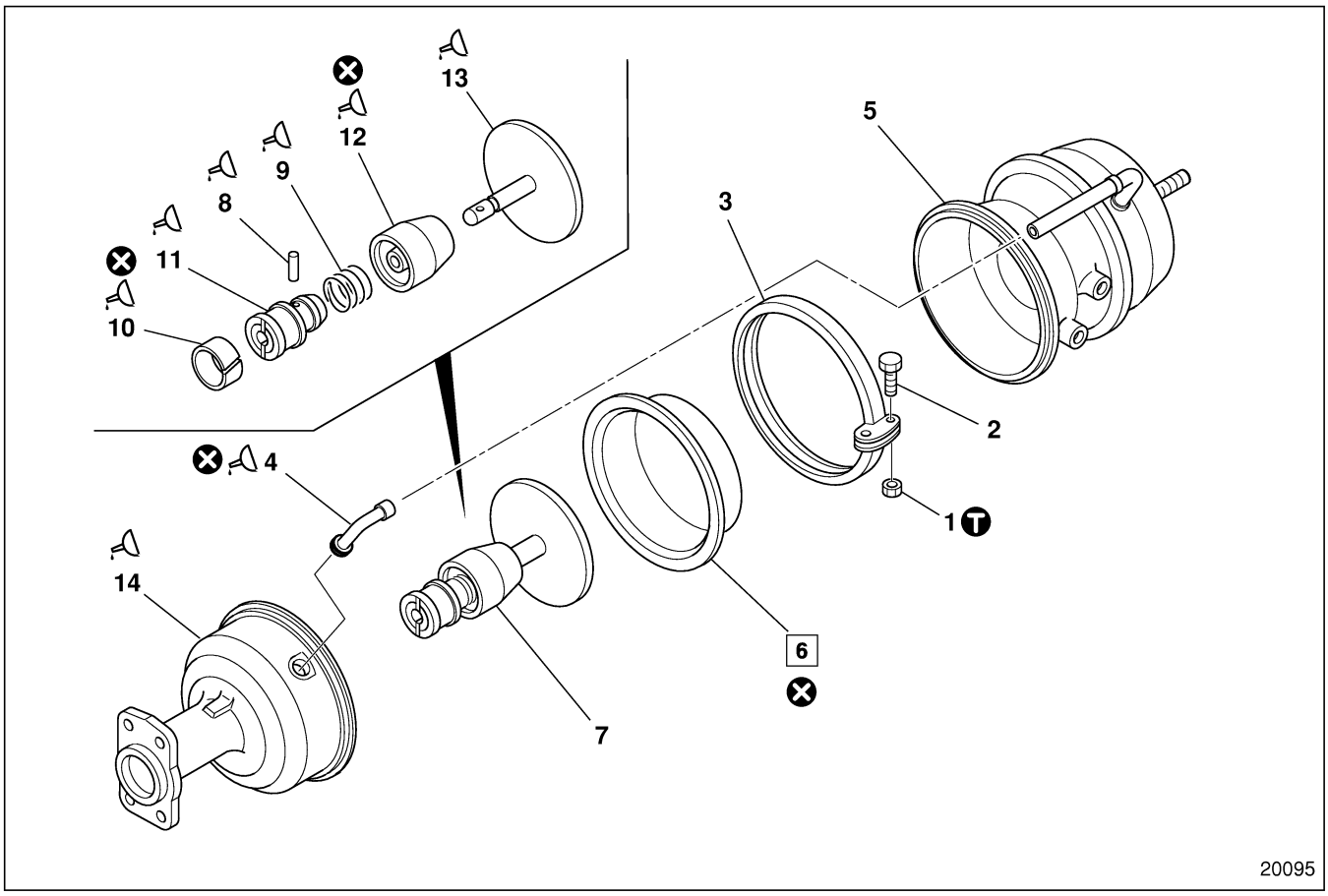

● Work before disassembly

P35B-31

● Disassembly sequence

1 Nut
2 Bolt
3 Clamp ring
4 Elbow
5 Emergency brake chamber
6 Diaphragm
7 Push rod assembly
8 Pin
9 Ring
10 Bushing
11 Push rod guide
12 Dust cover
13 Push rod complete
14 Base

⊗: Non-reusable parts

WARNING

Make sure not to disassemble emergency brake chamber 5 since its built-in spring with a very strong spring force may cause a very dangerous result.

CAUTION

When removing clamp ring 3, Do not damage emergency brake chamber 5 and the seat surface of diaphragm 6 of base 14, which may cause air leakage.

● Assembly sequence

Follow the disassembly sequence in reverse.

Repair kit: chamber kit

WARNING

Do not apply oil and grease to diaphragm 6 so that the diaphragm may not come off.

Tightening torque

Unit : N·m {ft.lbs, kgf·m}

Location	Parts to be tightened	Tightening torque	Remarks
1	Nut	14.7 to 20.0 {11 to 14, 1.5 to 2.0}	—

Lubricant

Location	Points of application	Specified fluid	Quantity
4	Installation surface of elbow tube	LOCKTITE 414	As required
8 to 13	Each contact surface	Multi purpose grease [NLGI No.2 (Li soap)]	As required
14	Internal circumference of the base	Multi purpose grease [NLGI No.2 (Li soap)]	As required

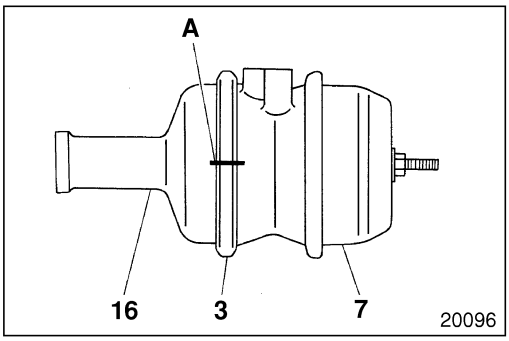

♦ Maintenance point ♦

● Work before assembly

A: Counter mark

CAUTION ⚠

Be sure to match counter mark A when assembling, and install clamp ring 3, emergency brake chamber 5 and base 14.

EXPANDER ASSEMBLY

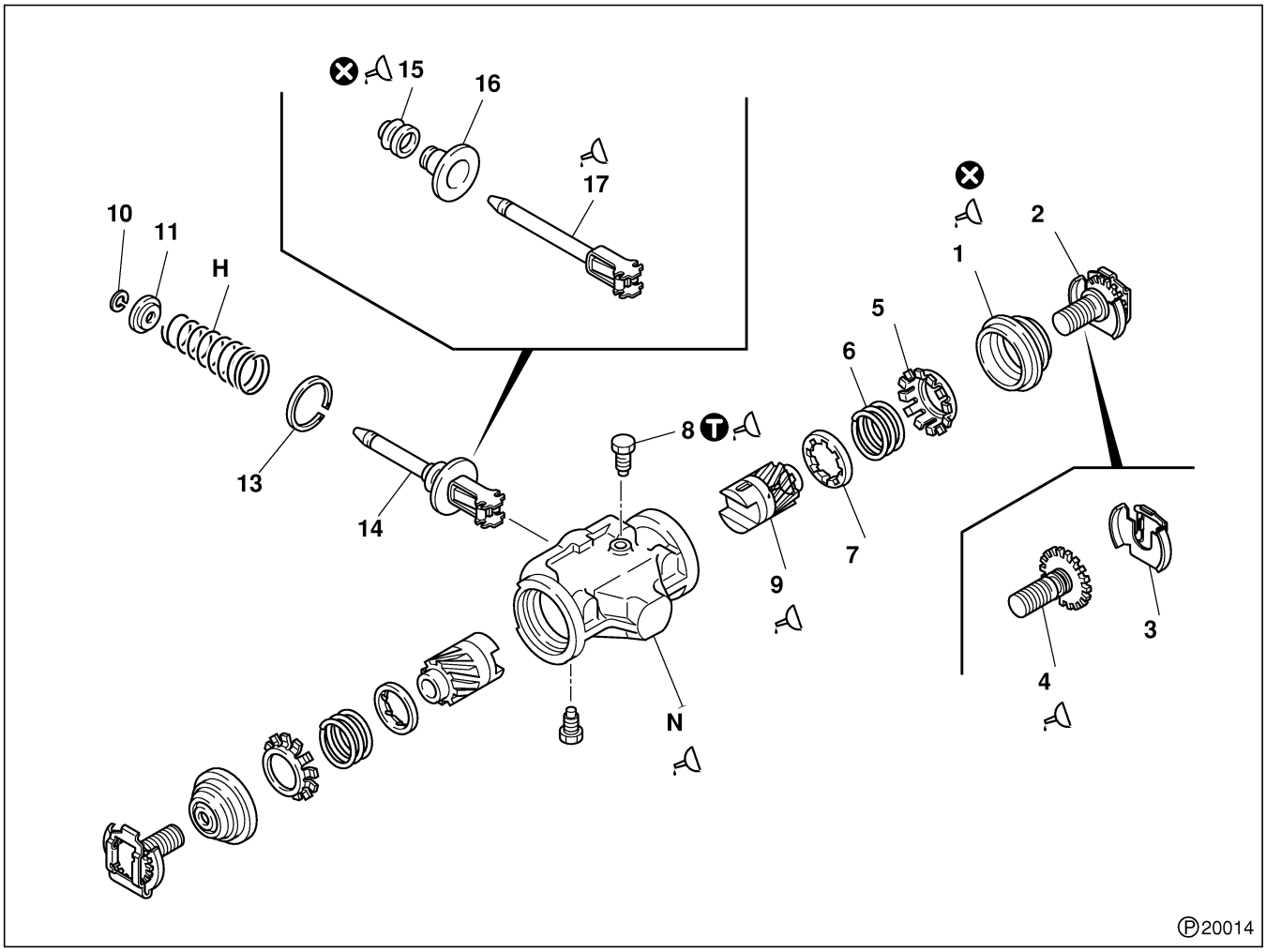

● Disassembly sequence

1 Boot
2 Adjusting screw assembly
3 Clip
4 Adjusting screw
5 Spring cage
6 Spring
7 Drive ring
8 Screw
9 Sleeve assembly
10 Snap ring
11 Retainer
12 Spring
13 Snap ring
14 Wedge assembly
15 Boot
16 Cap assembly
17 Wedge and roller
18 Body

⊗: Non-reusable parts

● Assembly sequence

(18→14→13→12→11→10→9→8→7→6→5)→(4→1)→3

2: The number is missing in the assembly sequence since the adjusting screw is not used for the assembly.

14 : **16→15→17**

Service standards

Unit : mm {in.}

Location	Maintenance item		Standard value	Limit	Remedy
2	Clip holding torque		1.5 to 5.0 N·m {1.1 to 3.6 ft.lbs, 0.15 to 0.5 khf·m}	—	Replace
6	Load of spring (installation length 11.3 {0.44})		83.4 N {19 lbf, 8.5 kgf}	73.6 N {17 lbf,7.5 kgf} or less	Replace
12	Load of spring (installation length 105.8 {4.17})		147 N {33 lbf, 15 kgf}	132.3 N {30 lbf,13.5kgf} or less	Replace
4, **9**	Rotation between adjusting screw and sleeve assembly		To be rotated smoothly	—	Replace
7, **9**	Backlash between drive ring and sleeve assembly		2.9 to 3.4 {0.11 to 0.13}	—	Replace
9	Rotating torque of sleeve assembly	Clockwise	0.6 N·m {0.4 ft.lbs, 0.06 kgf·m} or less	—	Replace
		Counterclockwise	2.0 N·m {1.4 ft.lbs, 0.20 kgf·m} or less	—	Replace
9, **17**	Dent on roller-rotation-moving surface of sleeve assembly and wedge & roller		—	0.010 {0.0004} or less	Replace
17	Roller appearance of wedge & roller		No damage allowed	—	Replace
18	Wear of inside bore of body		ø38.1 to 38.2 {1.5}	Wear to be 0.030 {0.0012} or less	Replace
—	Application force of auto adjustment mechanism of expander assembly (pushing-back force of sleeve assembly)		147 N {33 lbf, 15 kgf} or less	—	Replace

Tightening torque

Unit : N·m {ft.lbs, kgf·m}

Location	Parts to be tightened	Tightening torque	Remarks
8	Screw	15±3 {11±2.2, 1.5±0.3}	—

Lubricant

Location	Points of application	Specified fluid	Quantity
1	Contact part of the adjusting screw of boot	Wheel bearing grease [NLGI No.2 (Li soap)]	As required
4	Screw of the adjusting screw.	Wheel bearing grease [NLGI No.2 (Li soap)]	As required
8	Screw of screw	LOCTITE 202 or THREEBOND 2415	As required
9	Outer of screw assembly, screw, and contact part of roller	Wheel bearing grease [NLGI No.2 (Li soap)]	As required
15	Boot, and contact surface of wedge & roller	Wheel bearing grease [NLGI No.2 (Li soap)]	As required
17	Inside surface of bushing	Wheel bearing grease [NLGI No.2 (Li soap)]	2 g {0.07 oz}
18	Inside surface of body	Wheel bearing grease [NLGI No.2 (Li soap)]	As required
	Inside surface of body	Wheel bearing grease [NLGI No.2 (Li soap)]	8 g {0.282 lb}

EXPANDER ASSEMBLY

Special tools

Unit : mm {in.}

Location	Tool name and shape	Part No.	Application
1	Boot installer 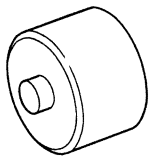 19000	Use a locally obtained equivalent	Install boot
2, 9	Clip adaptor 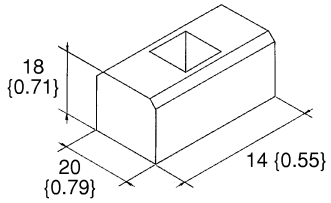 19111	Use a locally obtained equivalent	Measure holding torque of clip and rotating torque of sleeve assembly
12	Spring holder 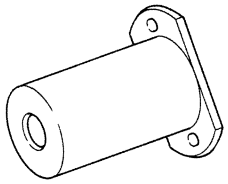 18999	Use a locally obtained equivalent	Remove spring

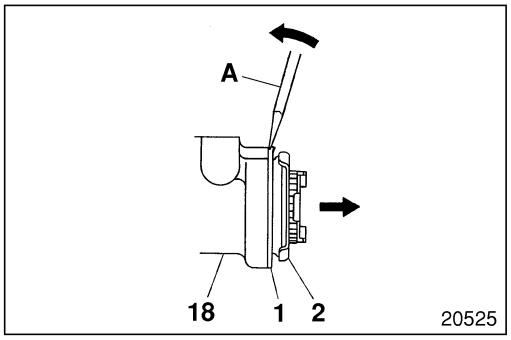

20525

♦ Maintenance point ♦

1 2 Removal of boot and adjusting screw assembly

- Remove the boot **1** from the body **18** with screw driver **A**.
- Remove adjusting screw assembly **2** and boot **1** by turning the adjusting screw assembly counterclockwise.

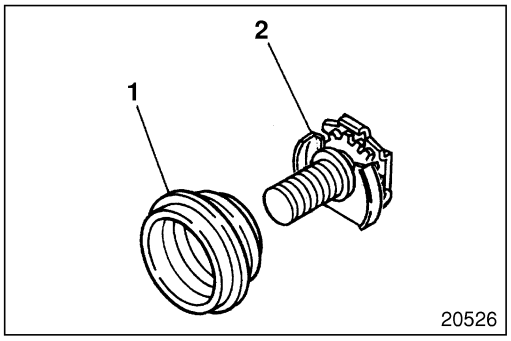

20526

- Remove boot **1** from adjusting screw assembly **2**.

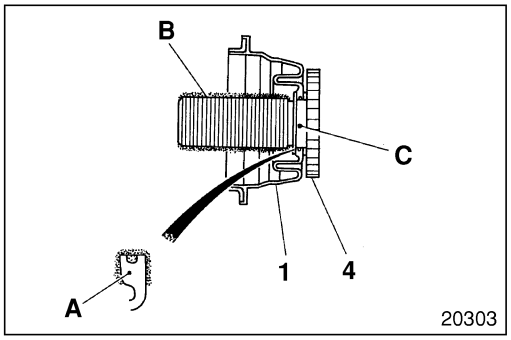

20303

1 4 Installation of boot and adjusting screw

- Apply grease on the contact part **A** of adjusting screw **4** of boot **1** and the threads **B** of the adjusting screw.
- Install boot **1** into groove **C** of adjusting screw **4**.

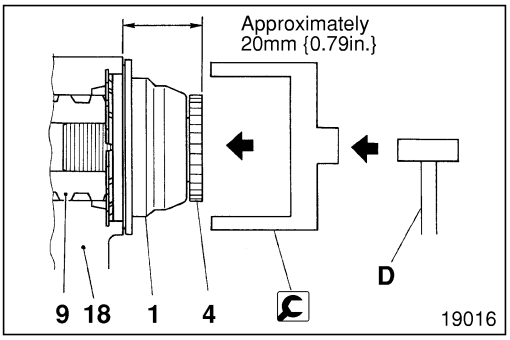

- Thread adjusting screw **4** into the sleeve assembly **9** until the adjusting screw reaches a distance of approximately 20 mm {0.79 in.} from the body **18**.
- Confirm that sleeve assembly **9** slides by pulling adjusting screw **4** lightly.
- Press boot **1** fit with 🔧 boot installer.
  D: Plastic hammer

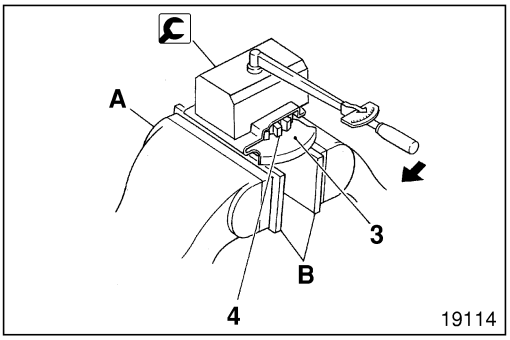

2 Inspection of clip-holding torque of adjusting screw assembly

- Fix adjusting screw **4** with vise **A**.
  B: Buffer (jaw protectors)

CAUTION
Use buffer B such as jaw protectors so as not to give damage to adjusting screw 4.
Also, the auto adjustment mechanism will not operate when the threaded part of the adjusting screw is damaged.

- Install 🔧 clip adaptor
- The holding torque is a value indicated when clip **3** has began to turn.
- Replace clip **3** if the measurement value comes off from the standard value.

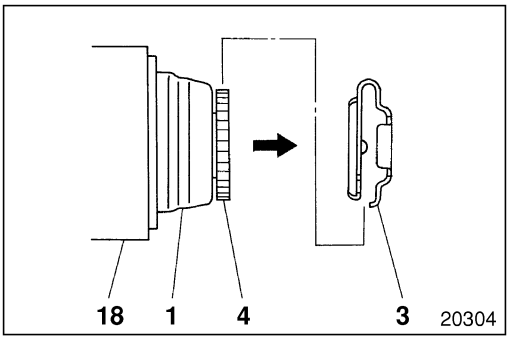

3 Installation of clip

- To install the clip **3** on adjusting screw **4**, extend the adjusting screw out to the extent that it does not come in contact with boot **1**.
- Install clip **3**.

CAUTION
Do not damage boot 1 when installing clip 3.

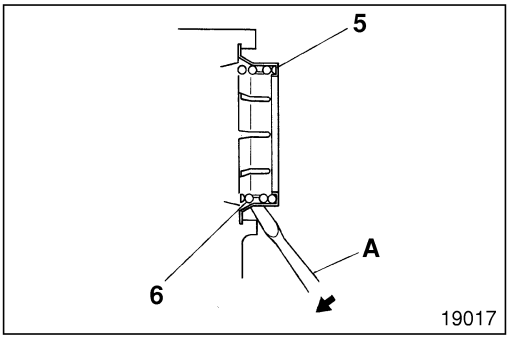

5 Spring cage

[Removal]
Remove spring cage **5** with holding it by hand so that spring **6** may not pop out.
A: Screw driver

WARNING
Take care that spring 6 may pop out.

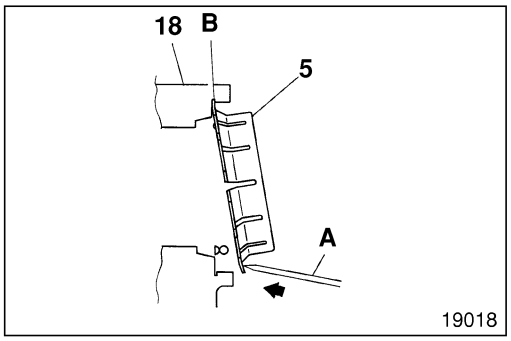

[Installation]
- Fit the one side of spring cage **5** into groove **B** of body **18**.
- Push the other side of spring cage **5** with screw driver **A**.

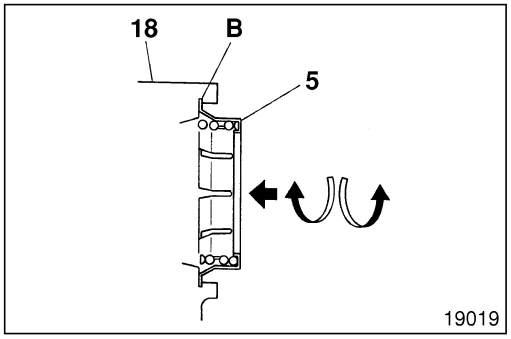

- To check the spring cage **5** for proper installation into the groove of body **18**, push in on the spring cage while rotating the cage. It should rotate smoothly.

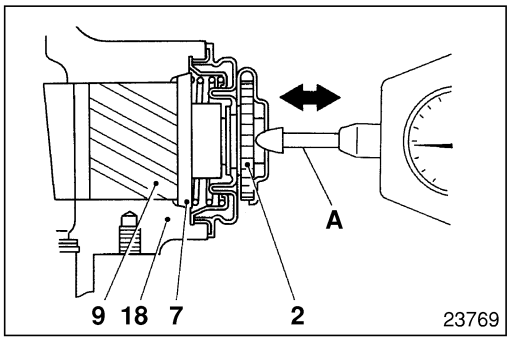

7 **9** **Inspection of backlash between drive ring and sleeve assembly**

- Measure the backlash between drive ring **7** and sleeve assembly **9** with a dial indicator **A** while moving the adjusting screw assembly **2** in the direction of the arrow.
- If the measured value is out of specification, replace drive ring **7** and sleeve assembly **9**.

CAUTION

Measure the backlash with care so that drive ring 7 may not separate from body 18 with being pushed by sleeve assembly 9.

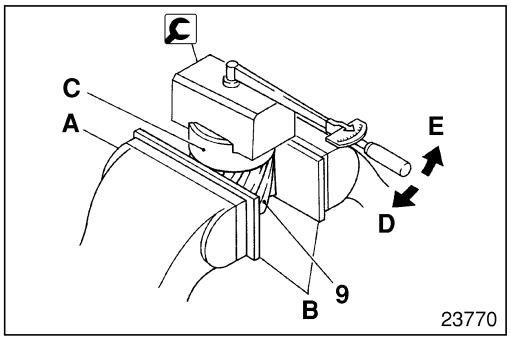

[Inspection]
- Fix sleeve assembly **9** with vise **A**.
  B: Buffer (jaw protectors)
- Install clip adaptor.
- Measure the torque at the time when tappet **C** begins to rotate.
  D: Clockwise
  E: Counterclockwise
- If the measured value is out of specification, replace sleeve assembly **9**.

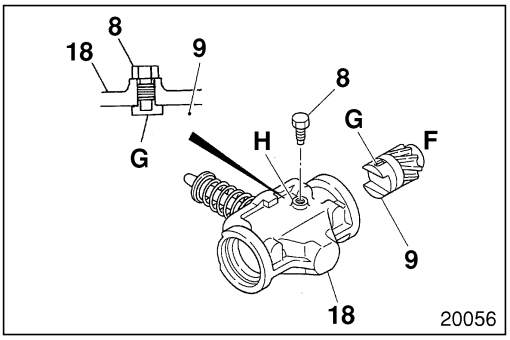

9 Sleeve assembly

[Installation]

- Install sleeve assembly **9** by aligning the identification groove **F** in the tip of the sleeve assembly with the threaded hole **H** of the body **18**.
- Apply grease on the outer, the screw part and the roller contact part of sleeve assembly **9**.
- Install screw **8** after groove **G** is aligned.
- Tighten the sleeve assembly with the specified torque after applying the sealing compound on the screw of screw **8**.
- Confirm whether sleeve assembly **9** does not come off.

NOTE:

- Recheck that the sleeve assembly **9** does not pull out of the housing.

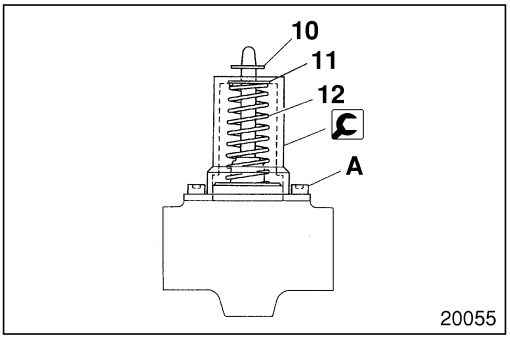

12 Spring

[Removal]

- spring holder with bolt **A**, and compress spring **12**.
- Remove snap ring **10**.
- Remove bolt **A** and spring holder.

CAUTION

When removing bolt A, use caution as the spring 12 may pop out.

- Remove retainer **11** and spring **12**.

[Installation]

- Follow the removal sequence in reverse.

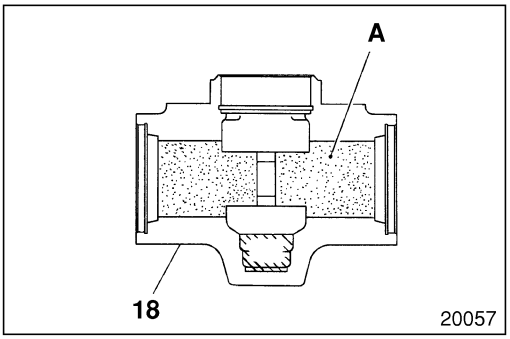

18 Applying and filling grease on body

- Apply grease on the inside surface **A** of body **18**.
- Fill grease in the **B** part.

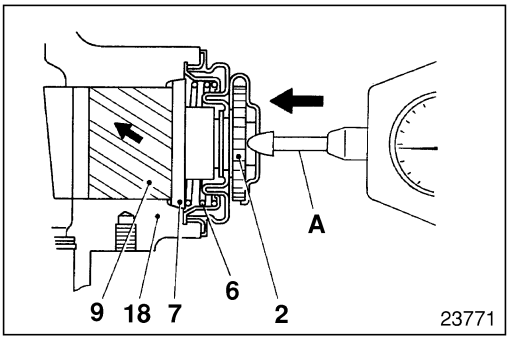

— Inspection of auto adjustment mechanism operation of expander assembly

- Pull the adjusting screw assembly **2** as far out as possible by hand.
- Push the adjusting screw assembly **2** back slightly until you feel the resistance change.
- Place the push-pull gauge **A** on the adjusting screw assemlby **2**, then push the gauge **A** in the direction of the arrow as shown in the figure on the left, and measure the maximum moving resistance of the adjusting screw assemlby **2**.
- If the measured value is out of specification, replace the sleeve assembly **9**.

GROUP 54 ELECTRICAL

1 POWER, CHARGING AND GROUND

SPECIFICATIONS 5
STRUCTURE AND OPERATION 5
TROUBLESHOOTING 1
100 INSPECTION AND ADJUSTMENT MOUNTED IN VEHICLE
• Inspection of Alternator 1
• Inspection of Regulator 1
101 BATTERY 6
104 FUSE 6
106 ALTERNATOR 5
110 POWER CIRCUIT 1
115 RESERVE POWER CIRCUIT 5
125 BATTERY CHARGING CIRCUIT 1
130 GROUND 1

2 STARTING, PREHEATING, AND STOPPING ENGINE

SPECIFICATIONS 1
STRUCTURE AND OPERATION 1
TROUBLESHOOTING 1
200 INSPECTION AND ADJUSTMENT MOUNTED IN VEHICLE
Inspection of Engine Preheating System 1
201 STARTER 3
210 ENGINE STARTING CIRCUIT 4
212 SUB-STARTER CIRCUIT 1
220 ENGINE PREHEATING AND COLD START CIRCUIT
< Manual Transmission > 2
< Automatic Transmission > 2

3 LIGHTING

SPECIFICATIONS 1
STRUCTURE AND OPERATION 1
TROUBLESHOOTING 1
300 INSPECTION AND ADJUSTMENT MOUNTED IN VEHICLE
Headlamp Aiming 1
310 HEADLAMP CIRCUIT 1
313 DAYTIME RUNNING LIGHT CIRCUIT 5
320 TAIL LAMP, CLEARANCE LAMP AND LICENSE PLATE LAMP CIRCUITS 1
325 STOP LAMP CIRCUIT 1
330 TURN SIGNAL LAMP AND HAZARD LAMP CIRCUITS 1
340 BACKUP LAMP CIRCUIT 1
345 CAB LAMP CIRCUIT 1
348 ILLUMINATION LAMP CIRCUIT 1
349 MARKER LAMP AND IDENTIFICATION LAMP CIRCUITS 1
352 VAN BODY DOME LIGHT CIRCUIT 1

4 METER

SPECIFICATIONS 1
TROUBLESHOOTING 1
400 METER CLUSTER 5
410 SPEEDOMETER AND TACHOMETER CIRCUITS 54-4
420 FUEL GAUGE CIRCUIT 1
425 WATER TEMPERATURE GAUGE CIRCUIT 1

5 INDICATOR AND WARNING

TROUBLESHOOTING 1

500 INSPECTION AND ADJUSTMENT MOUNTED IN VEHICLE
- Inspection of Brake Fluid Level Switch
  < Air over hydraulic brake > 1

510 PARKING BRAKE INDICATOR CIRCUIT [PARK BRAKE]
< Center Parking Brake > 1
< Wheel Parking Brake > 1

515 BRAKE WARNING CIRCUIT [BRAKE FLUID] [BRAKE AIR] .. 4

530 WATER LEVEL WARNING CIRCUIT 1

536 ENGINE OIL PRESSURE WARNING CIRCUIT 1

537 OVERHEATING WARNING CIRCUIT 1

547 AUTOMATIC TRANSMISSION FLUID TEMPERATURE WARNING CIRCUIT [T/M OIL TEMP] 1

548 TRANSMISSION HIGH/LOW INDICATOR CIRCUIT
< 10-speed Transmission > .. 1

550 CAB TILT WARNING CIRCUIT 1

6 CAB SIDE ELECTRICAL

SPECIFICATIONS 1

TROUBLESHOOTING 1

601 SWITCH 1

604 RELAY AND CONTROL UNIT 54-6

606 WARNING BUZZER 1

610 CIGARETTE LIGHTER CIRCUIT 1

612 AUDIO CIRCUIT 1

614 WIPER AND WASHER CIRCUIT 1

616 HORN CIRCUIT 1

618 HEATER CIRCUIT 1

622 POWER WINDOW AND AUTO DOOR LOCK CIRCUIT 5

629 MIRROR HEATER CIRCUIT 6

7 CHASSIS ELECTRICAL

701 MAGNETIC VALVE 1

710 EXHAUST BRAKE CIRCUIT 54-10

718 AIR DRYER CIRCUIT 1

8 ENGINE AND TRANSMISSION ELECTRICAL

801 ENGINE 1

802 TRANSMISSION 54-13

850 TRANSMISSION POWER TAKE-OFF CIRCUIT
< Option > 6

9 OTHERS

STRUCTURE AND OPERATION 1

910 MULTIPURPOSE TIMING CONTROL UNIT CIRCUIT 1

1: '96 Model Gr 54 (Pub No. TWME 9503-54)
2: '97 Model Gr 54 (Pub No. TWME 9503-1)
3: '98 Model Gr 54 (Pub No. TWME 9503-2)
4: '99 Model Gr 54 (Pub No. TWME 9503-3)
5: '00 Model Gr 54 (Pub No. TWME 9503-4)
6: '01 Model Gr 54 (Pub No. TWME 9503-5)

M E M O

(410) SPPEDOMETER CIRCUIT

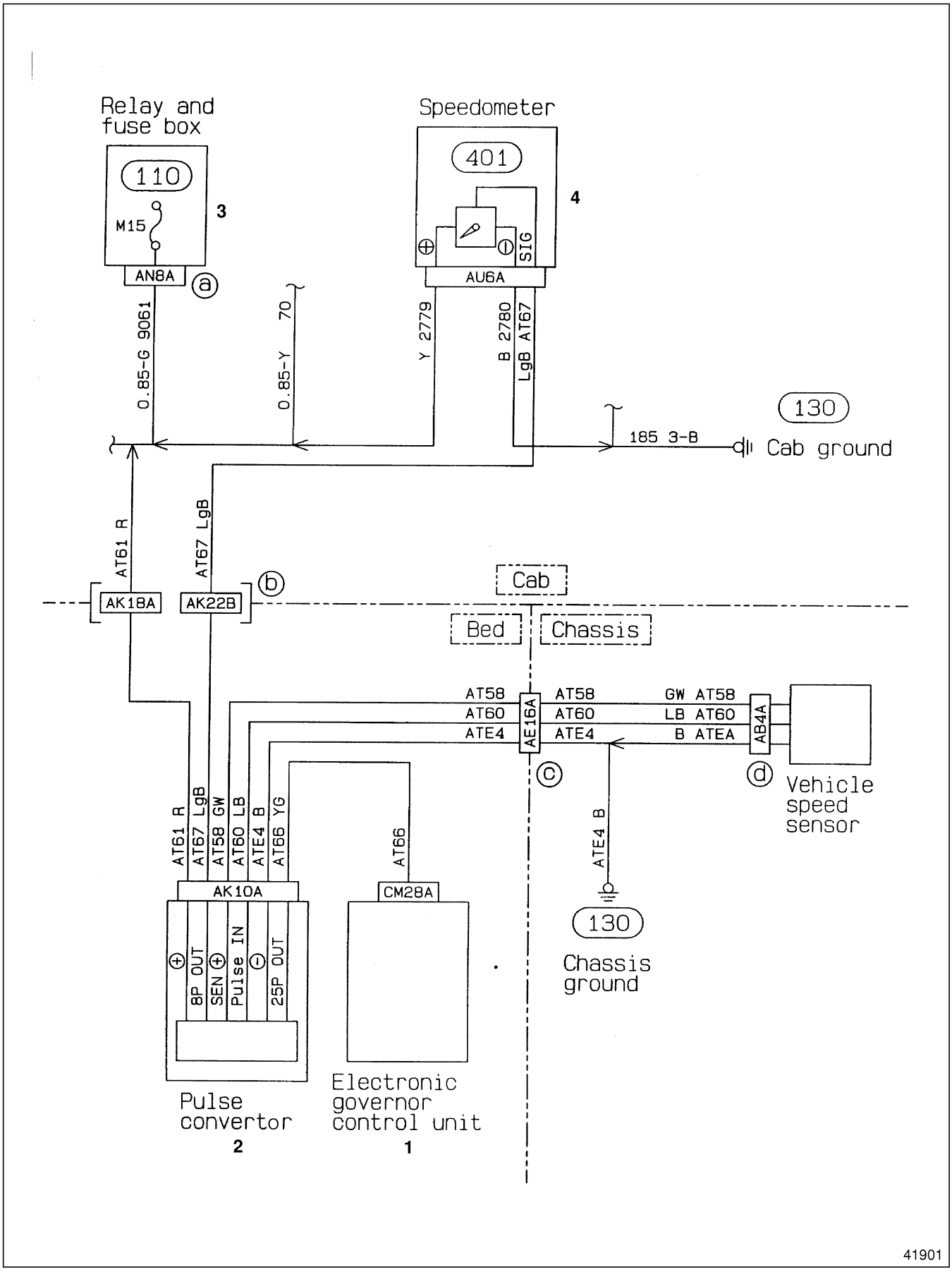

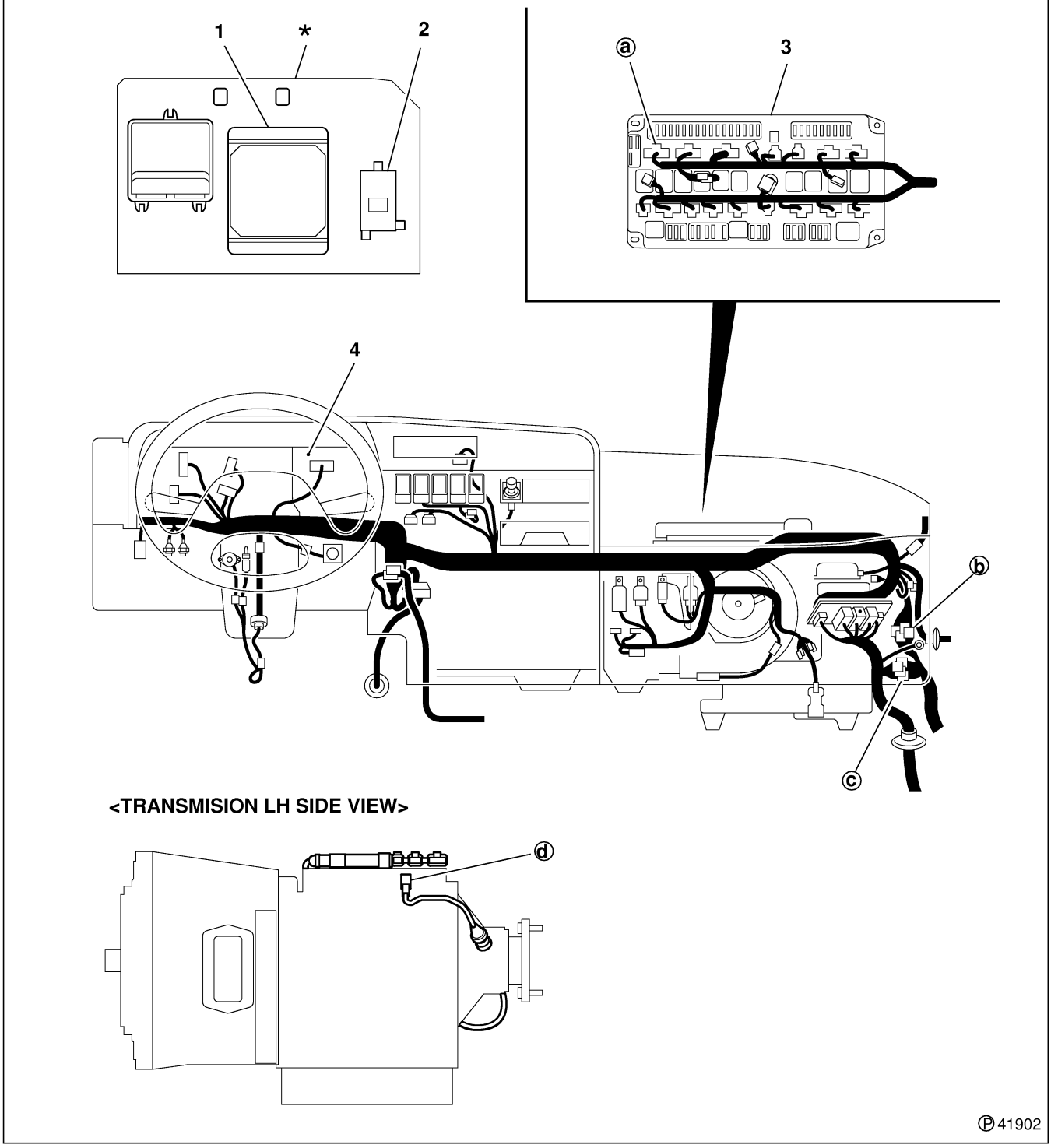

1 Electronic governor control unit Gr13
2 Pulse convetor 604
3 Relay and fuse box 1 104
4 Speedometer 1 401

*: Behind driver's seat

1: '96 Model Gr 54 (Pub No. TWME 9503-54)

604 RELAY AND CONTROL UNIT

Installation Position

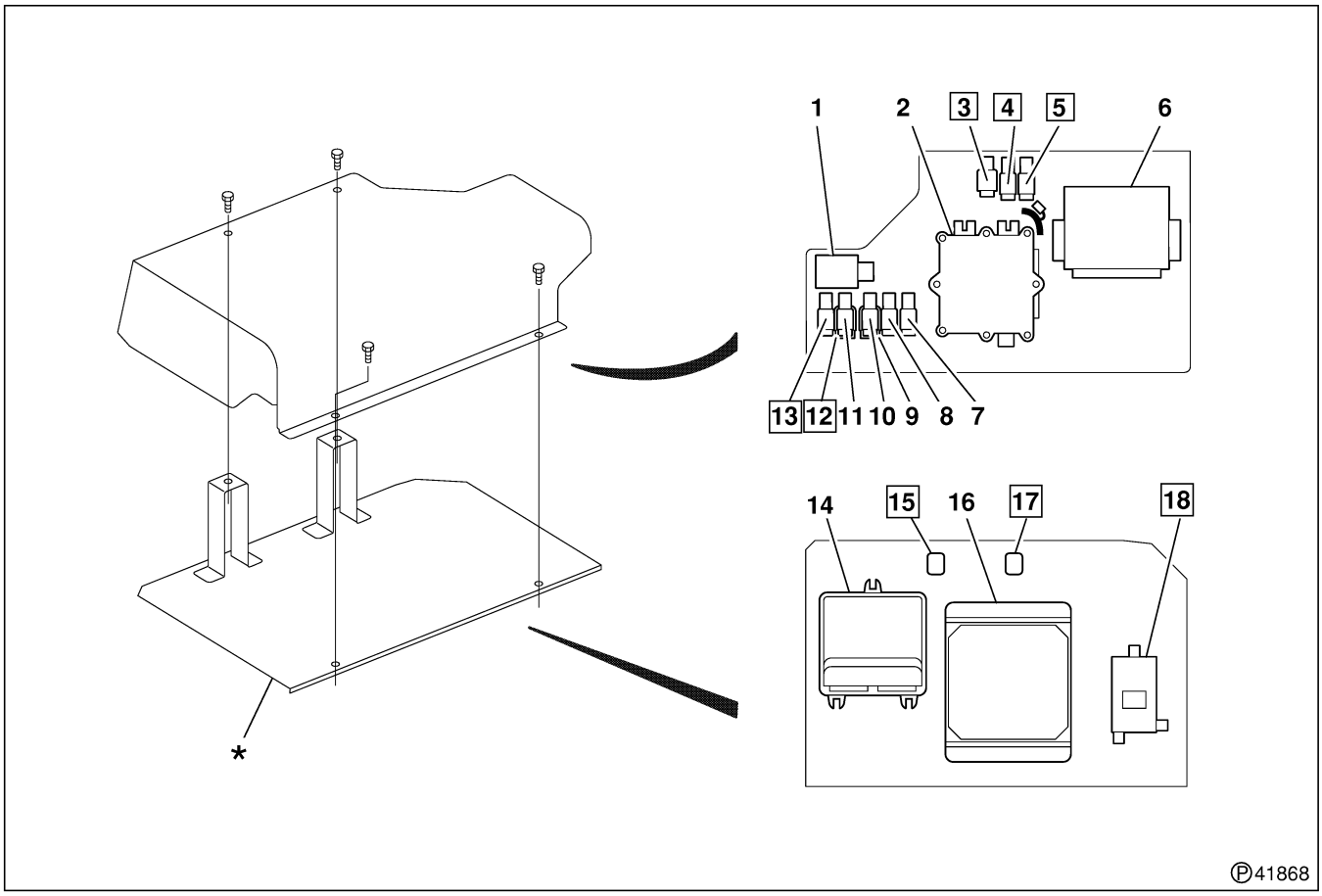

1 Daytime running light control unit
2 Vehicle interface module Gr23 <Automatic transmission>
3 Selector neutral relay <Automatic transmission>
4 Stop lamp relay <Automatic transmission>
5 Time lag relay <Automatic transmission>
6 ABS control unit Gr35C
7 Head lamp relay (LOW) 1 604
8 Head lamp relay (HIGH) 1 604
9 Pre-stroke cut relay 1 604
10 Fan motor relay 2 (ATF) 1 604
11 Fan motor relay 1 (ATF) 1 604
12 Exhaust brake cut relay <ABS>
13 Cruise main relay
14 Automatic transmission electronic control unit Gr23
15 High beam relay <Daytime running light>
16 Electronic governor control unit Gr13
17 Parking brake relay <Daytime running light>
18 Pulse convertor

*: Behind driver's seat
ABS: Anti-lock brake system
ATF: Automatic transmission fluid

1: '96 Model Gr 54 (Pub No.TWME9503-54)

Service standards

Location	Maintenance item		Standard value	Limit	Remedy
18	Output voltage of pulse convertor	Low pulse	0.5V or less	—	Replace
		High pulse	8±1V		

◆ Service procedure

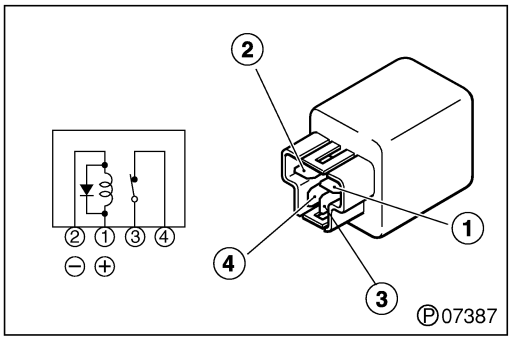

3 **Inspection of relay (Close type 4-pin)**

- Follow the table below to inspect continuity:

	①	②	③	④
No current	○—○		○—○	
Current	⊕—⊖		○----○	

○—○: There is continuity between terminals ○ and ○.
⊕—⊖: Indicates that 12 volts DC is applied to the line between the terminals.
○----○: Indicates that the continuity between the terminal is lost.

- If any fault is found, replace the relay.

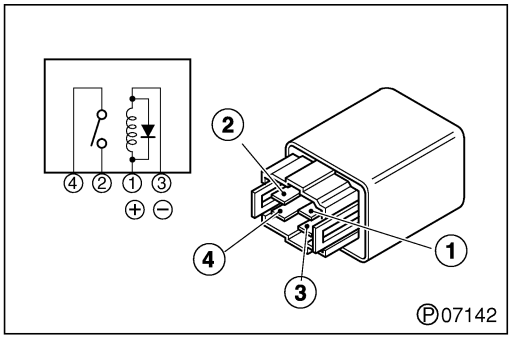

4 **5** **13** **15** **17** **Inspection of relay (Open type 4-pin)**

- Follow the table below to inspect continuity:

	①	②	③	④
No current	○—○			
Current	⊕—⊖	○		○

○—○: There is continuity between terminals ○ and ○.
⊕—⊖: Indicates that 12 volts DC is applied to the line between the terminals.

- If any fault is found, replace the relay.

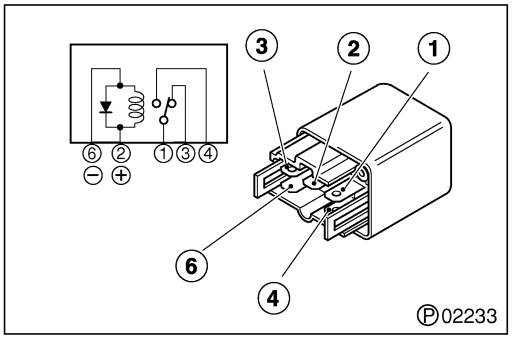

12 **Inspection of relay (Open type 6-pin)**

- Follow the table below to inspect continuity:

	①	②	③	④	⑥
No current	○—○	○—○			
Current	○	⊕		○	⊖

○—○: There is continuity between terminals ○ and ○.
⊕—⊖: Indicates that 12 volts DC is applied to the line between the terminals.

- If any fault is found, replace the relay.

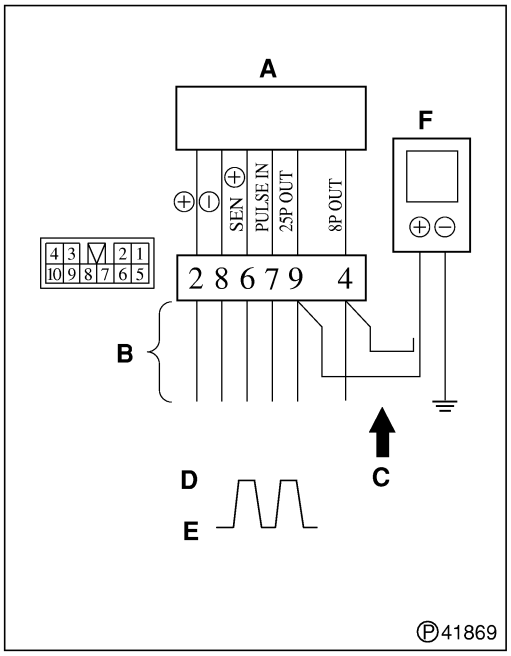

18 Inspecting the pulse convertor

- Inspect with the engine speed sensor installed in the engine.
- Install the harness for inspection on the connector between pulse convertor **A** and body harness **B**.
- Start the engine and measure the maximum (high-pulse voltage **D**) and minimum (low-pulse voltage **E**) values generated at inspection harness **C**.
  F: Tester
- Measure the terminals of **4** and **9** separately.
- If the measured values are out of specification, replace pulse convertor **A**.

M E M O

710 EXHAUST BRAKE CIRCUIT

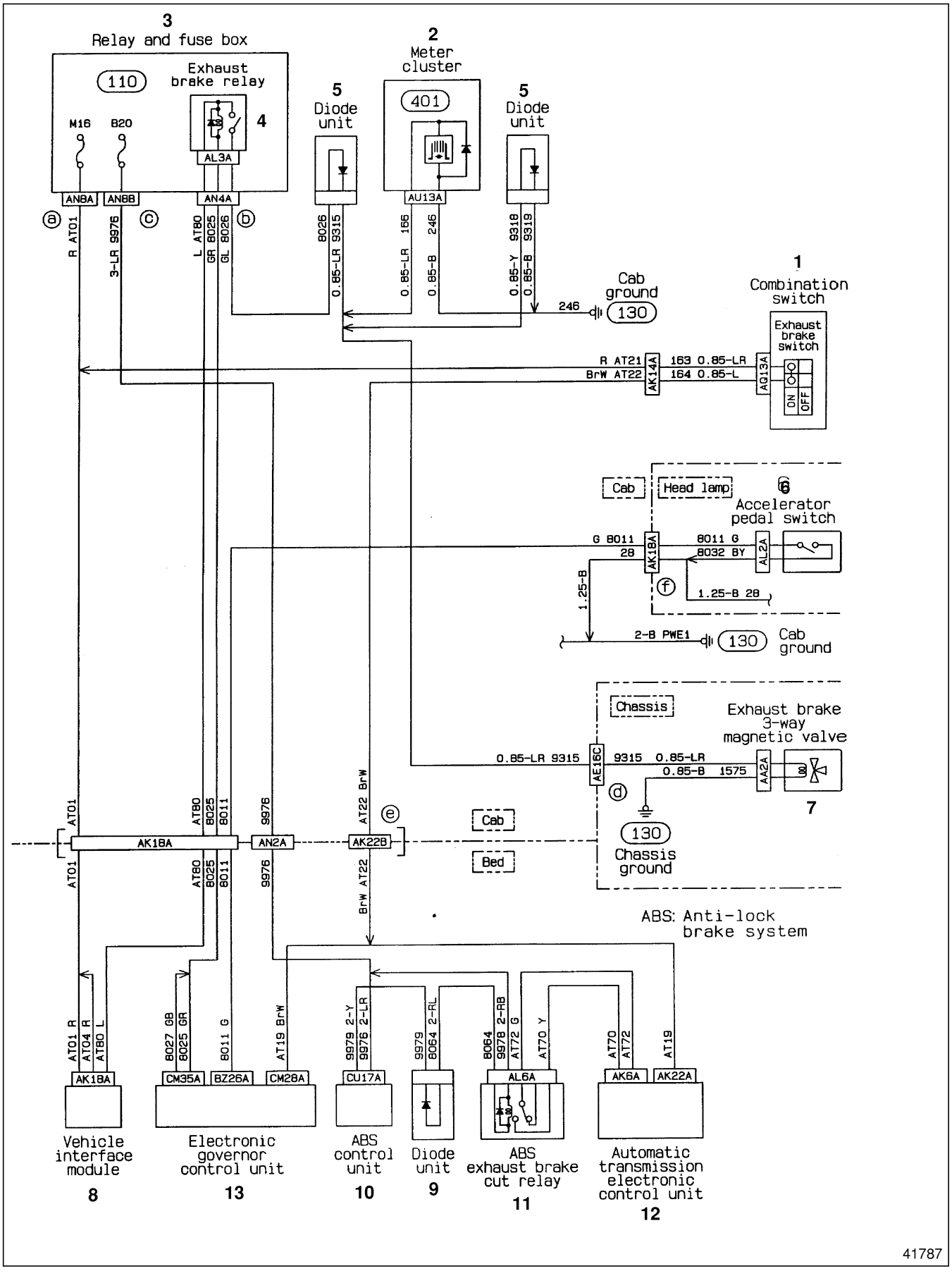

41787

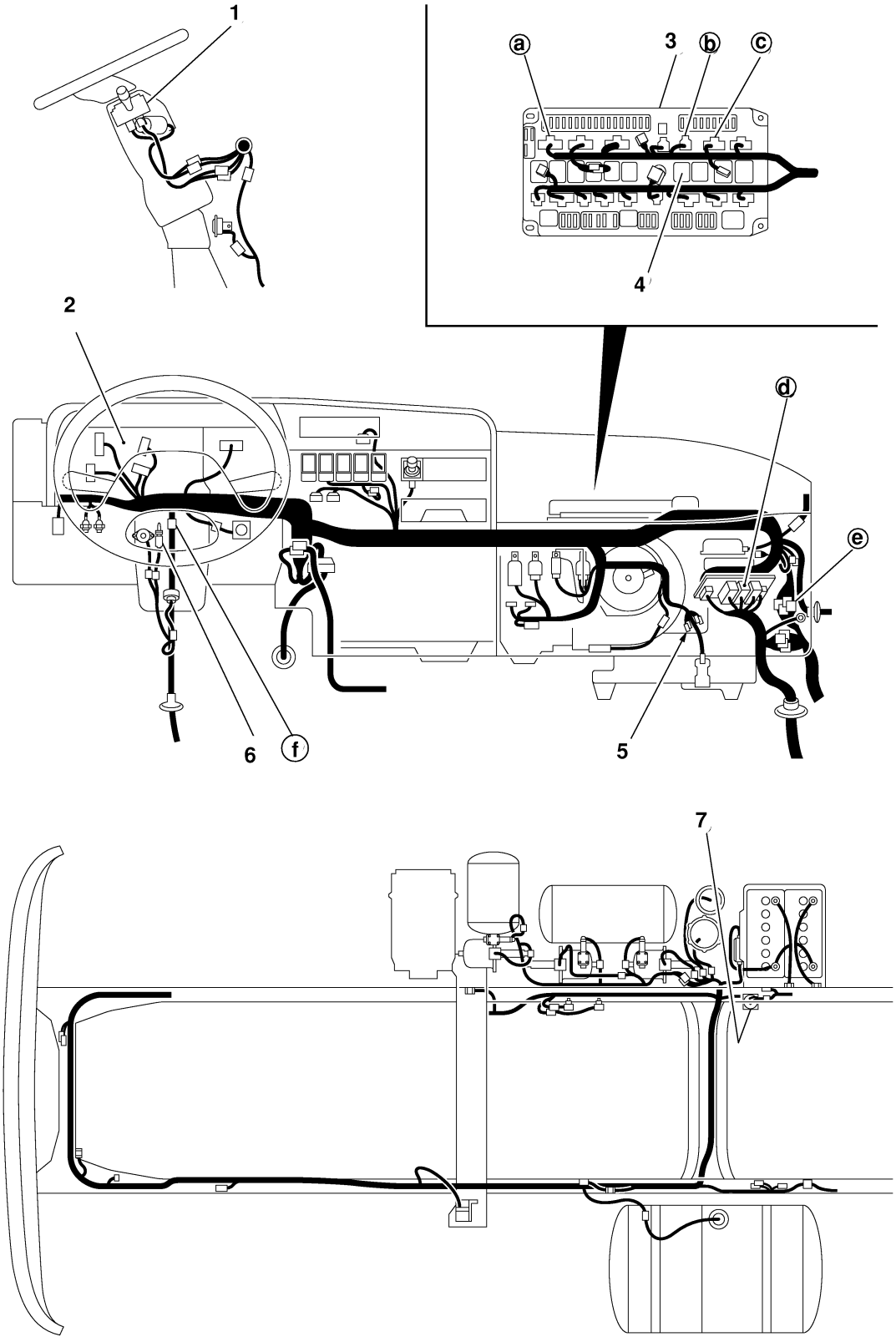

Ⓟ41788

710 EXHAUST BRAKE CIRCUIT

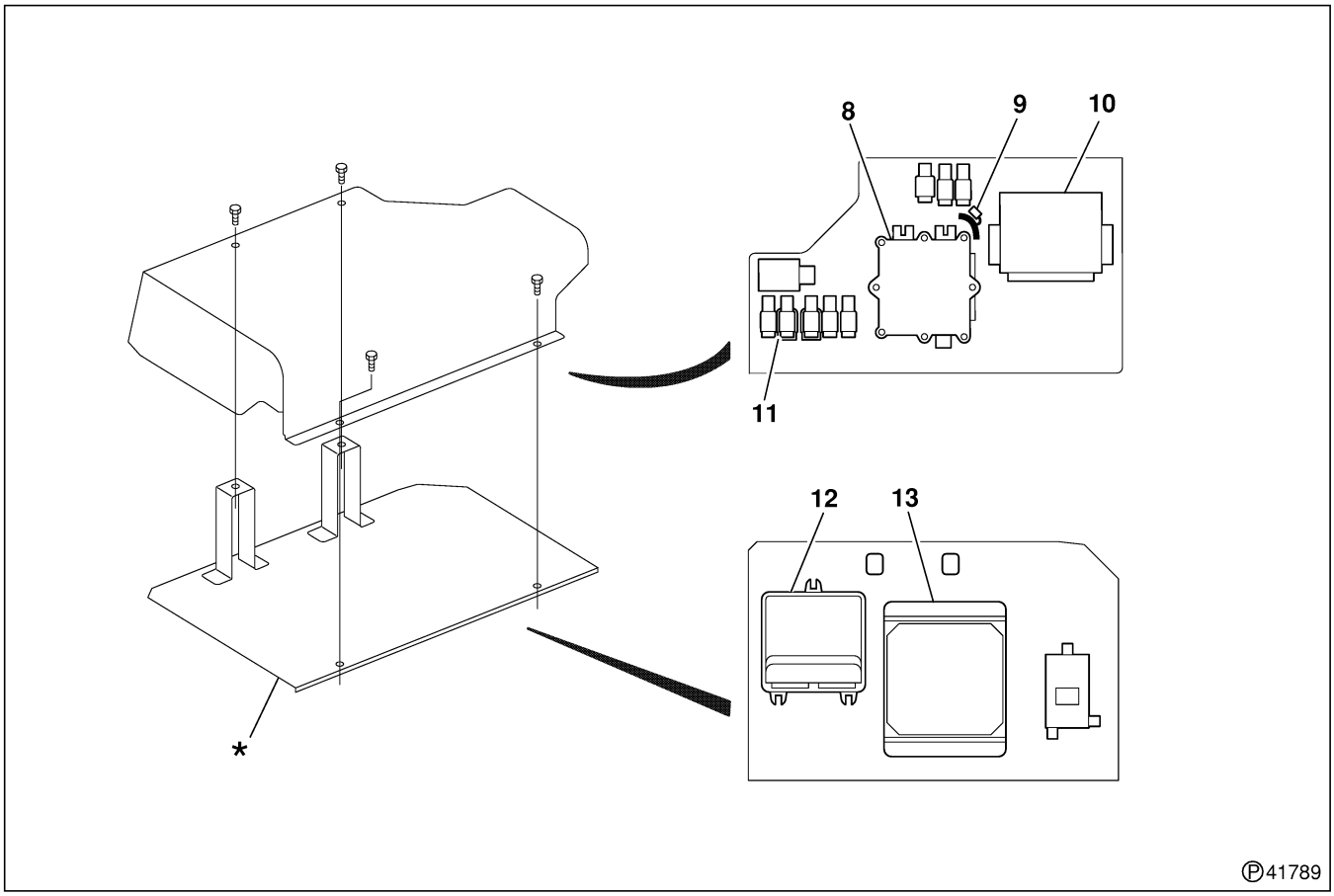

1 Combination switch 1 601
2 Meter cluster 1 401
3 Relay and fuse box 1 104
4 Exhaust brake relay 4 710
5 Diode unit
6 Accelerator pedal switch 4 710
7 Exhaust brake 3-way magnetic valve 1 701
8 Vehicle interface module Gr23
9 Diode unit
10 ABS control unit Gr35C
11 ABS exhaust brake cut relay 4 710
12 Automatic transmission electronic control unit Gr23
13 Electronic governor control unit Gr13

*: Behind driver's seat
ABS: Anti-lock brake system

1: '96 Model Gr 54 (Pub No.TWME9503-54)
4: '99 Model Gr 54 (Pub No. TWME9503-3)

Installation Position

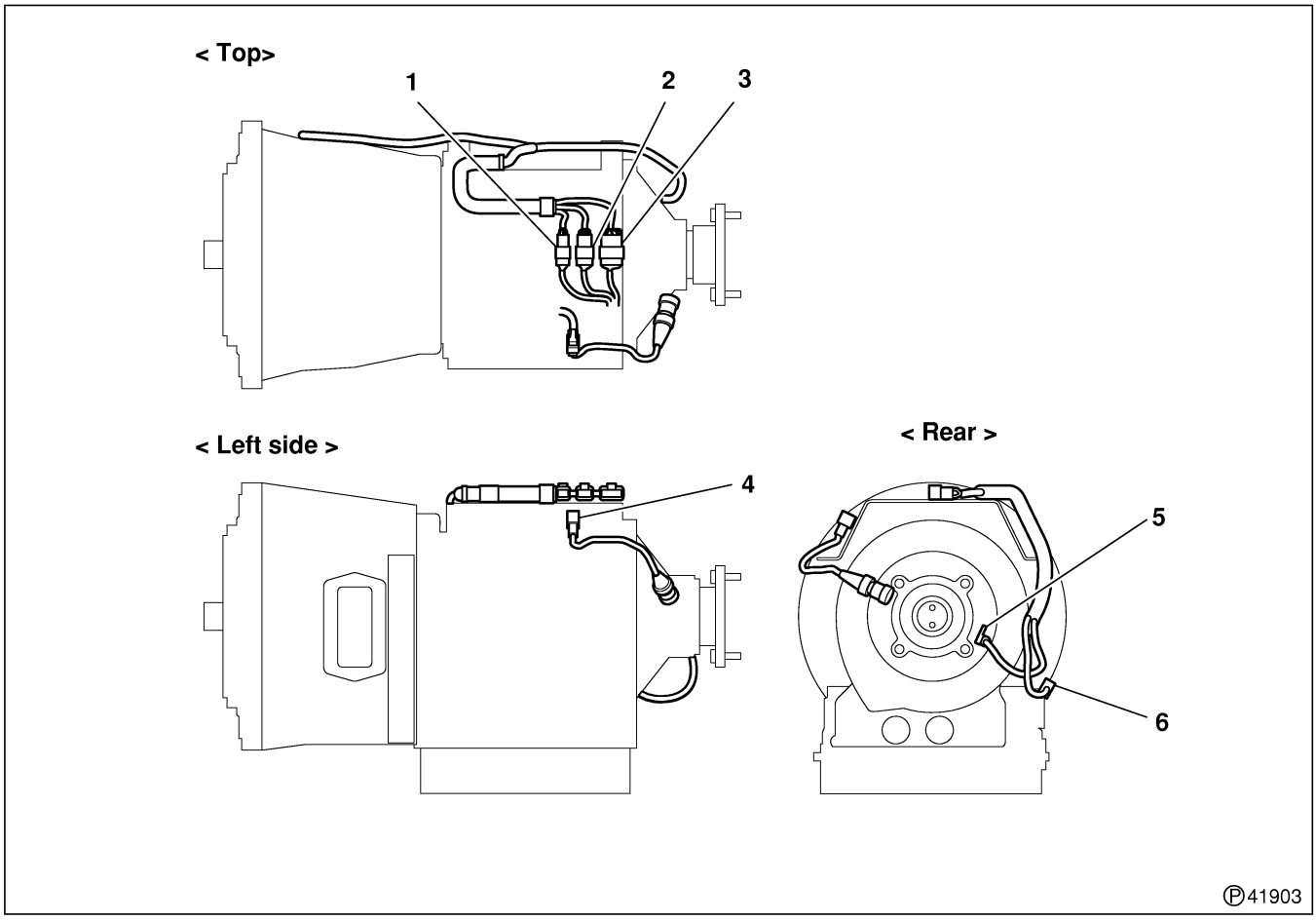

1 Connector (for fluid temperature sensor and fluid level sensor)
2 Connector (for engine speed sensor and vehicle speed sensor)
3 Connector (for transmission solenoid)
4 Connector (for speedometer)
5 Connector (for transmission output speed sensor)
6 Connector (for input speed sensor: engine speed)

MITSUBISHI
FUSO

FK.FM
Service Manual

Group 23
Automatic Transmission

Table of Contents

BACK

HOME

MITSUBISHI FUSO TRUCK OF AMERICA, Inc.

Pub No. TWME9503-23

GROUP 23 AUTOMATIC TRANSMISSION

SPECIFICATIONS 2

STRUCTURE AND OPERATION 3

TROUBLESHOOTING 6

INSPECTION AND ADJUSTMENT MOUNTED IN VEHICLE 8

WORK BEFORE REMOVAL AND INSTALLATION OF AUTOMATIC TRANSMISSION ASSEMBLY 11

REMOVAL AND INSTALLATION OF AUTOMATIC TRANSMISSION ASSEMBLY 12

OIL SEAL AND SPEEDOMETER WORM 16

OIL PAN AND OIL FILTER 19

AUTOMATIC TRANSMISSION CONTROL 20

OIL COOLER 28

OIL FILTER 30

SPECIFICATIONS

Item			Specifications	
Vehicle model			FK617	FM617
Type			M4A4 (Allison AT542)	M4A4 (Allison AT545)
Torque converter	Type Stall torque ratio		3-element, 1-stage, 2-phase 1.72	←
Transmission	Type		Planetary gear type 4 forward speeds, 1 reverse speed	←
	Gear ratio	1st	3.454	←
		2nd	2.253	←
		3rd	1.407	←
		4th	1.000	←
		Reverse	5.024	←
Range selector pattern			R—Ⓝ—D—3—2—1 (Engine can be started in N position only)	←
Recommended fluid	Fluid quantity (except oil cooler piping) L {qts}		Automatic transmission fluid (DEXRON or DEXRON II type) 14 {15} When oil is replaced: 8.5 {9.0}	Automatic transmission fluid (DEXRON or DEXRON II type) 20.8 {22} When oil is replaced: 15 {16}
Mass < Wet > Kg {lb}			167 {368}	173 {381}
Transmission control			Floor shift remote control, cable type	←

Automatic Transmission Assembly

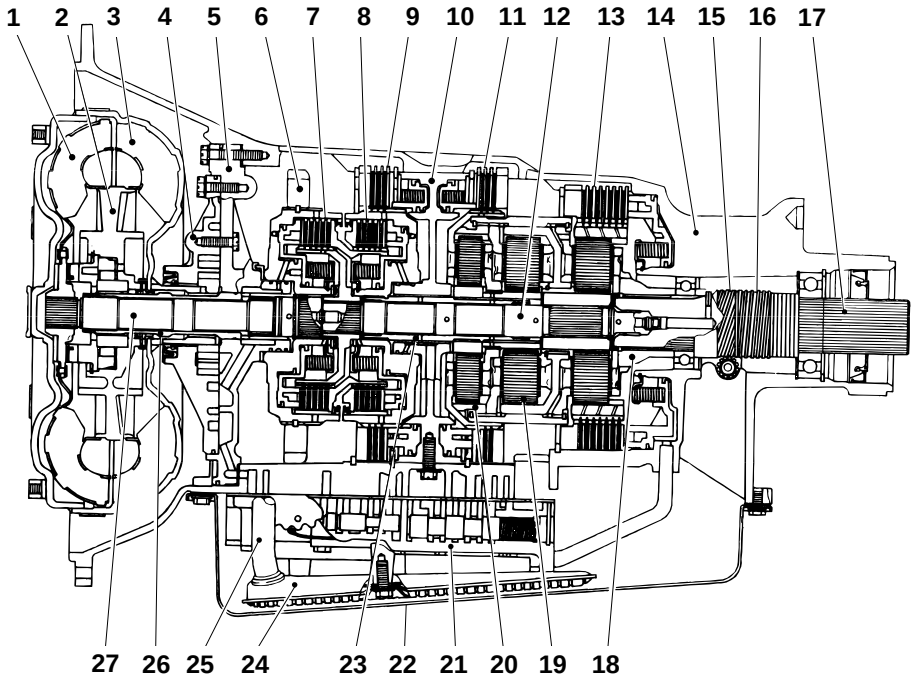

1 Turbine
2 Stator
3 Impeller
4 Oil pump assembly
5 Front support
6 Power take-off drive gear
7 Forward clutch
8 4th clutch
9 3rd clutch
10 Center support
11 2nd clutch
12 Mainshaft
13 1st and reverse clutch
14 Transmission case
15 Governor drive gear
16 Speedometer sensor drive gear
17 Output shaft
18 Rear planetary gear set
19 Center planetary gear set
20 Front planetary gear set
21 Control valve assembly
22 Oil pan
23 Sun gear shaft
24 Oil filter
25 Intake pipe
26 Stator shaft
27 Turbine shaft

The automatic transmission consists of a torque converter and a fully automatic 4-speed gear system.

● **Torque converter**

The torque converter is driven by the engine crankshaft, and functions as the input device for the transmission. The torque converter also acts as the fluid coupling, absorbing shock during engine start up and gear shifting.

● **Transmission (4 forward speeds, 1 reverse speed)**

The transmission is accomplished by three sets of planetary gears **18**, **19**, **20** and five sets of oil pressure-operated, wet-type multiple disc clutches **7**, **8**, **9**, **11**, **13**. These oil-cooled clutch discs are self-adjusting to compensate for wear.

● **Oil pressure control area**

This oil pressure control area consists of oil pump **4**, control valve assembly **21** that controls the changeover between clutches **7**, **8**, **9**, **11**, and **13**, the modulator that monitors the amount the accelerator pedal is depressed, and the governor that monitors the vehicle speed. Gear shift is made automatically and depends on how much the accelerator pedal is depressed and how fast the vehicle is travelling.

Automatic Transmission Control

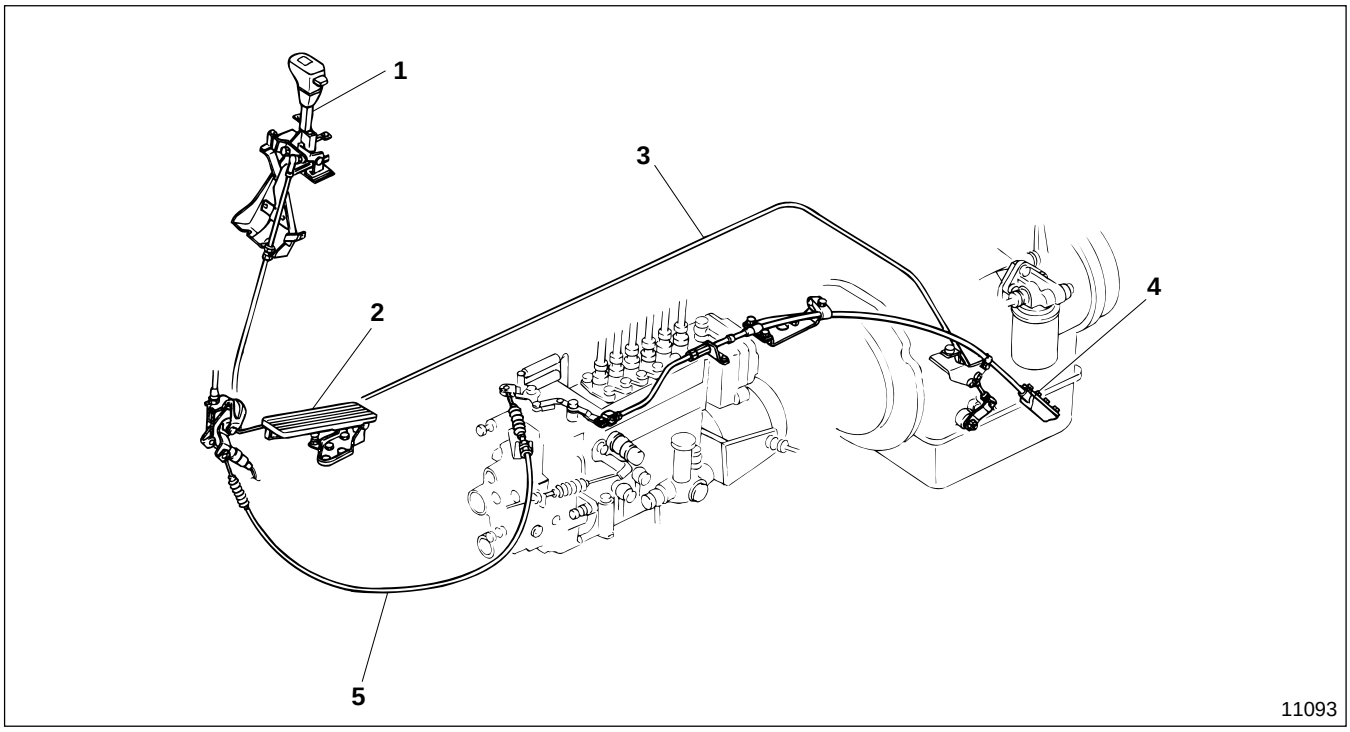

1 Range selector lever
2 Accelerator pedal
3 Selector cable
4 Modulator
5 Accelerator control cable

Range Selector Lever

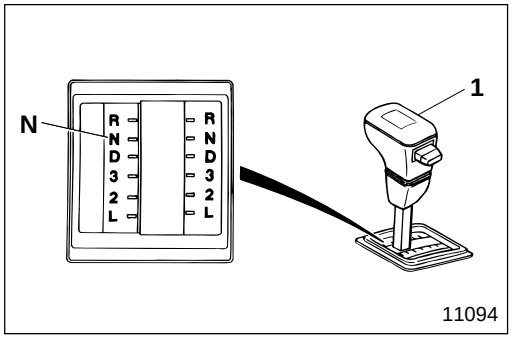

Range selector lever **1** selects the most suitable range for the operating conditions, ensuring optimum service from the automatic transmission. Safety features are incorporated that make sure that the engine cannot be started when the range selector lever is in any position other than neutral (N).

N : Neutral

Modulator

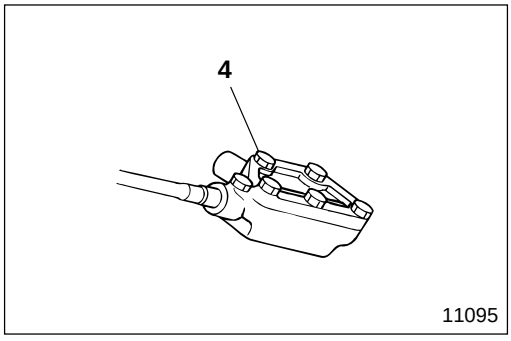

Modulator **4** converts the amount the accelerator pedal is depressed into hydraulic pressure.

Oil Cooler

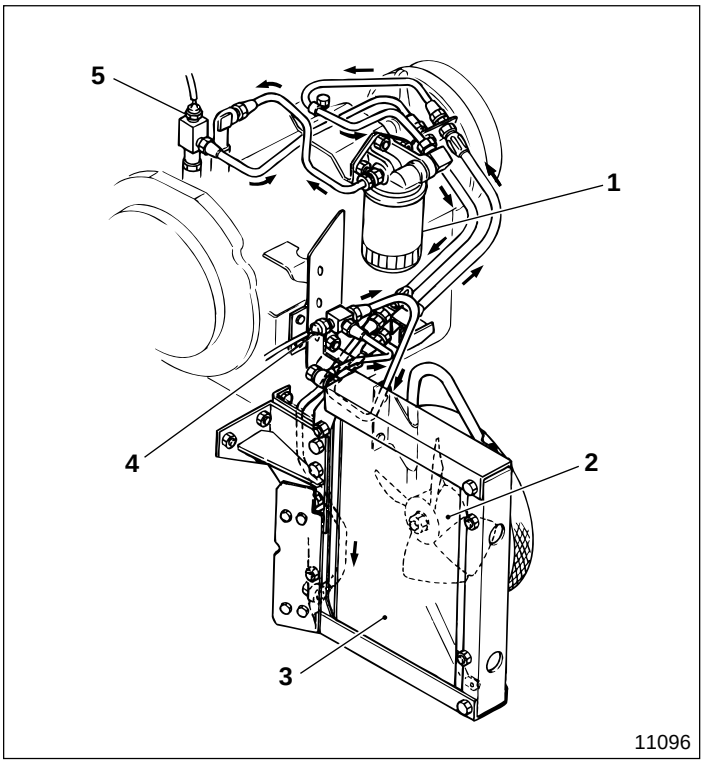

1 Oil filter
2 Blower assembly
3 Oil cooler
4 Automatic transmission fluid thermostat switch (Oil cooler fan)
5 Automatic transmission fluid temperature switch (Warning lamp)

Oil Temperature Warning System

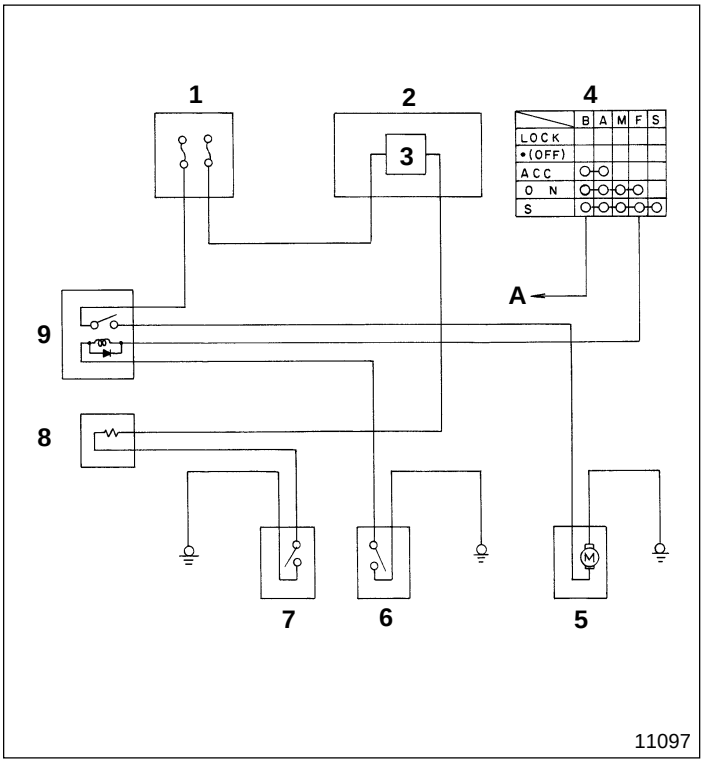

1 Relay and fuse box
2 Meter cluster
3 Indicator lamp
4 Starter switch
5 Automatic transmission fluid cooler fan motor
6 Automatic transmission fluid thermostat switch
7 Automatic transmission fluid temperature switch
8 Resistor
9 Automatic transmission fluid cooler fan motor relay

A : To high-current fuse box

TROUBLESHOOTING

Possible causes	Symptoms	Excessive shock when shifting from Ⓝ to Ⓓ	Engagement interval too long when shifting from Ⓝ to Ⓓ	Engine races when shifting up	Does not shift up	Kick down impossible or shifting down abnormal	Abnormal shifting	Slips out of gear while driving forward	Slips out of gear in Ⓡ position
Engine faulty	Engine idling speed too fast	○							
	Engine idling speed too slow		○						
Incorrect adjustment of cables	Selector cable adjusted incorrectly		○		○		○	○	○
	Modulator cable adjusted incorrectly	○				○			
Automatic transmission fluid unsuitable situation	Fluid level too low		○	○	○		○	○	○
	Oil filter clogged		○	○			○	○	○
	Air mixed in fluid		○	○			○	○	
	Fluid level too high								
	Oil cooler pipe damaged or deteriorated								
	Oil cooler fan malfunctioning								
Internal malfunction of automatic transmission assembly	Fluid pressure too low		○	○	○		○	○	○
	Valve body abnormality or leakage	○	○	○	○	○	○	○	○
	Oil pump malfunctioning		○				○	○	○
	Output shaft bearing or bushing damaged								
	Governor abnormal				○	○	○		
	Clutch damaged or malfunctioning		○	○	○		○	○	○
	Breather clogged								
	Fluid pressure too high	○							
	Clutch plate clearance insufficient								
	Clutch dragging								
	Planetary gear damaged or stuck								

Possible causes \ Symptoms		Slips out of gear while in any position	Vehicle does not move irrespective of selector position	Vehicle does not move while selector in forward position	Vehicle does not move while selector in Ⓡ position	Vehicle moves while selector is in Ⓝ position	Scraping or squeaking noise	Humming noise	Trouble in fluid supply. Automatic transmission fluid spouting from filler tube	Excessive shock when shifting	Shift up too slow	Automatic transmission overheating
Engine faulty	Engine idling speed too fast											○
	Engine idling speed too slow											
Inccorect adjustment of cables	Selector cable adjusted incorrectly				○	○						○
	Modulator cable adjusted incorrectly									○	○	
Automatic transmission fluid unsuitable situation	Fluid level too low	○	○	○				○				○
	Oil filter clogged	○	○						○			
	Air mixed in fluid	○						○	○			
	Fluid level too high								○			
	Oil cooler pipe damaged or deteriorated											○
	Oil cooler fan malfunctioning											○
Internal malfunction of automatic transmission assembly	Fluid pressure too low	○	○	○	○					○		○
	Valve body abnormality or leakage	○	○	○	○	○		○		○	○	
	Oil pump malfunctioning	○	○									○
	Output shaft bearing or bushing damaged						○					
	Governor abnormal										○	
	Clutch damaged or malfunctioning			○	○						○	
	Breather clogged								○			
	Fluid pressure too high									○		
	Clutch plate clearance insufficient											○
	Clutch dragging					○						
	Planetary gear damaged or stuck		○	○	○		○					

INSPECTION AND ADJUSTMENT MOUNTED IN VEHICLE

Inspection of Automatic Transmission Fluid

(1) Inspection of characteristics

If the automatic transmission fluid smells burnt or if it contains metal particles or sludge as a result of internal friction and wear of metal or other material, the transmission assembly must be completely overhauled. Make sure you carefully examine the automatic transmission fluid on the dipstick. If you find the quality questionable, take a sample and examine it more closely.

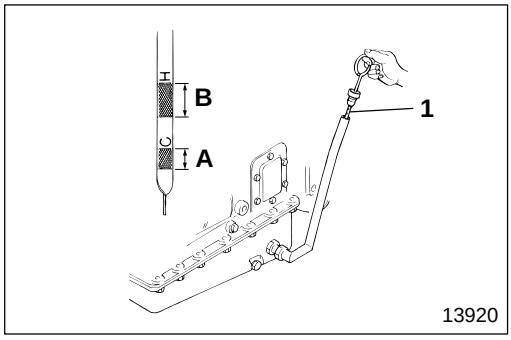

(2) Inspection of automatic transmission fluid level

- Park the vehicle on level ground, make sure that the parking brake is fully activated and chock the wheels to keep them from rolling.
- Start the engine and let it idle. To fill the hydraulic circuit with automatic transmission fluid, shift the range selector lever from N → R → N → D → 2 → D → N. Repeat this process five times, finally shifting to N.
- While the engine is still idling, pull out dipstick **1** and wipe off the fluid sticking to it. Reinsert the dipstick, then pull it out again and check the fluid level.
- If the fluid level is inspected right after the engine is started and the fluid temperature is still low (approximately 15 to 49°C {60 to 120°F}), the level should be within area **A** marked COLD on dipstick **1**.
- If the fluid level is inspected after the vehicle has been driven and the fluid temperature is high (approximately 71 to 93°C {160 to 200°F}), the level should be within area **B** marked HOT on dipstick **1**.

WARNING ⚠

Take care during the inspection because the engine will be running. Take sufficient care to avoid burns or injuries resulting from contact with moving parts.

NOTE

- **Make sure the vehicle is parked on level ground when you are checking the fluid level.**
- **Make sure the selector lever is in the N position and the engine is idling when you are checking the fluid level. When the engine is stopped, the fluid level appears higher than it actually is.**
- **Be sure to wipe off the dust from the safety cap and the upper part of dipstick guide 2 before you pull out dipstick 1.**
- **To ensure the fluid is correct, reinspect the fluid level after an actual drive.**

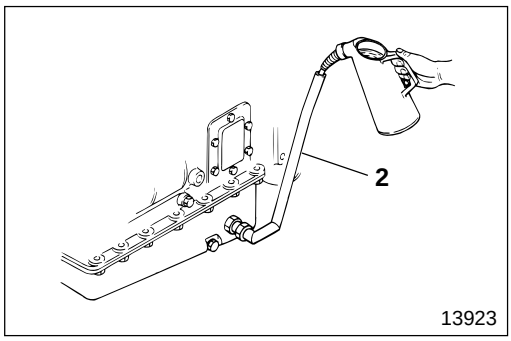

- If the fluid level is low, add automatic transmission fluid (DEXRON or DEXRON II type) through dipstick guide **2** until the correct level on dipstick **1** is reached.

Replacement of Automatic Transmission Fluid

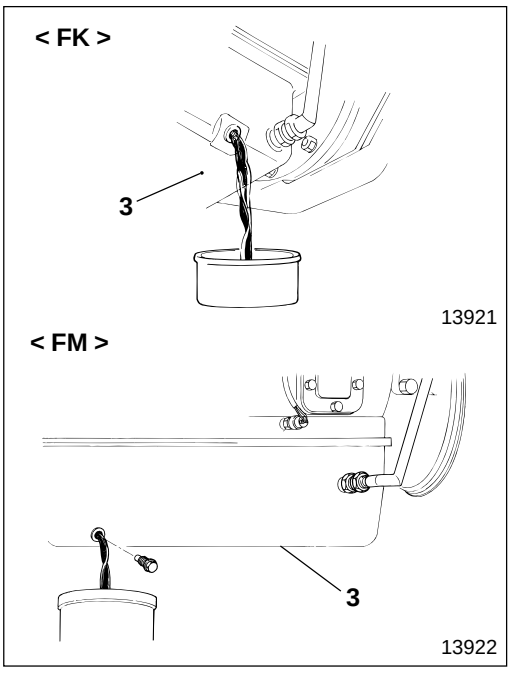

(1) Draining

- Park the vehicle on level ground, chock the wheels and shift the selector lever to the **N** position.
- Place a container under oil pan **3**, remove the drain plug and drain the fluid.
- Clean oil pan **3** and the drain plug. Replace the oil filter. P23-19
- Replace the outer oil filter. P23-30

WARNING

Take care because the fluid temperature immediately after the engine has stopped is very high. To avoid scalds, wait until a safe temperature has been reached before draining the fluid.

NOTE

- **The fluid will drain faster if the engine is first run to raise the fluid temperature.**
- **The fluid cannot be drained from the hydraulic circuit, the torque converter or the oil cooler.**
- **Check the drained fluid for dirt, metal particles and metal fragments.**

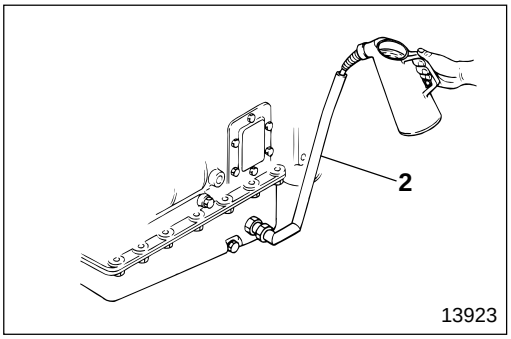

(2) Supply

- Install the oil filter, oil pan **3** and the drain plug. P23–19
- Add automatic transmission fluid (DEXRON or DEXRON II type) through dipstick guide **2**.
  FK : 8.5 L {9.0 qts}
  FM : 15 L {16 qts}

CAUTION

Make sure that dirt and foreign particles do not become mixed in with the fluid when it is added.

- Shift the range selector lever to the **N** position, start the engine and let it idle for about one minute.
- After shifting the lever through all positions once, shift it back to the **N** position.

CAUTION

To prevent burning out the interior of the automatic transmission assembly, make sure that the engine is not allowed to race when you do the above.

INSPECTION AND ADJUSTMENT MOUNTED IN VEHICLE

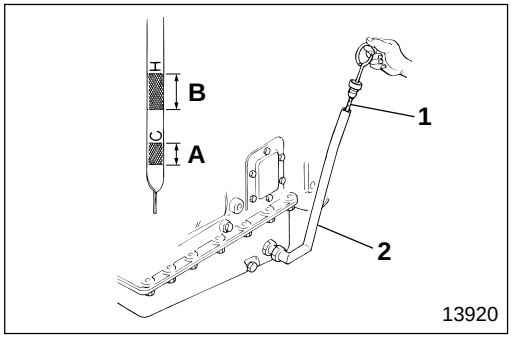

- Check and adjust so that the fluid level is within the specified area on dipstick **1**.

NOTE

- **As the temperature of the fluid rises, so does the fluid level. If you add fluid while the temperature is still low (approximately 15 to 49°C {60 to 120°F}), make sure that the level stays within area A, marked COLD on dipstick 1.**
- **Let the engine idle and, while paying attention to the fluid level, pour in the fluid slowly.**
- **It is sometimes hard to check the fluid level, immediately after supplying fluid, because of the fluid adhering to the interior of dipstick guide 2. If this is the case, check the fluid level several times at intervals.**
- **Be careful not to supply too much fluid because you might mistake the fluid that overflows from the air breather for fluid leakage.**

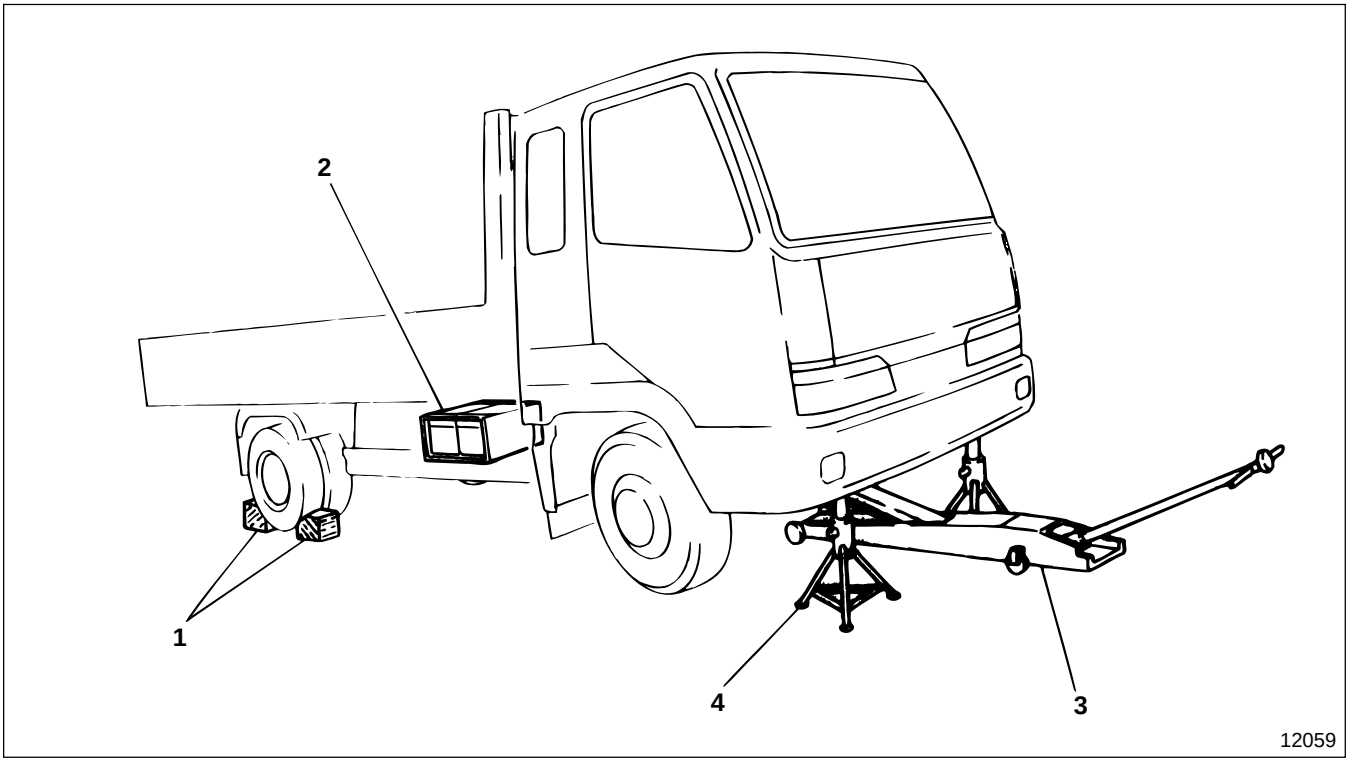

● **Work sequence before removal**

1 Place wheel chocks.
2 Disconnect the negative battery cable Gr 54
3 Jack up the front axle with a garage jack.
4 Support the front frame on rigid racks.

WARNING⚠

- **The parking brake will be removed so naturally it cannot be used. Chock the wheels securely so the vehicle does not move.**
- **Do not remove the chocks until the entire operation is completed.**
- **Supporting a vehicle on a garage jack only is extremely dangerous, so always support the frame on rigid racks.**
- **Leave the garage jack and rigid racks in place until the entire operation is completed. Never remove them during the operation.**

CAUTION⚠

Be sure to keep the automatic transmission in neutral throughout the operation.

● **Work sequence after installation**

Follow the work sequence before removal in reverse.

REMOVAL AND INSTALLATION OF AUTOMATIC TRANSMISSION ASSEMBLY

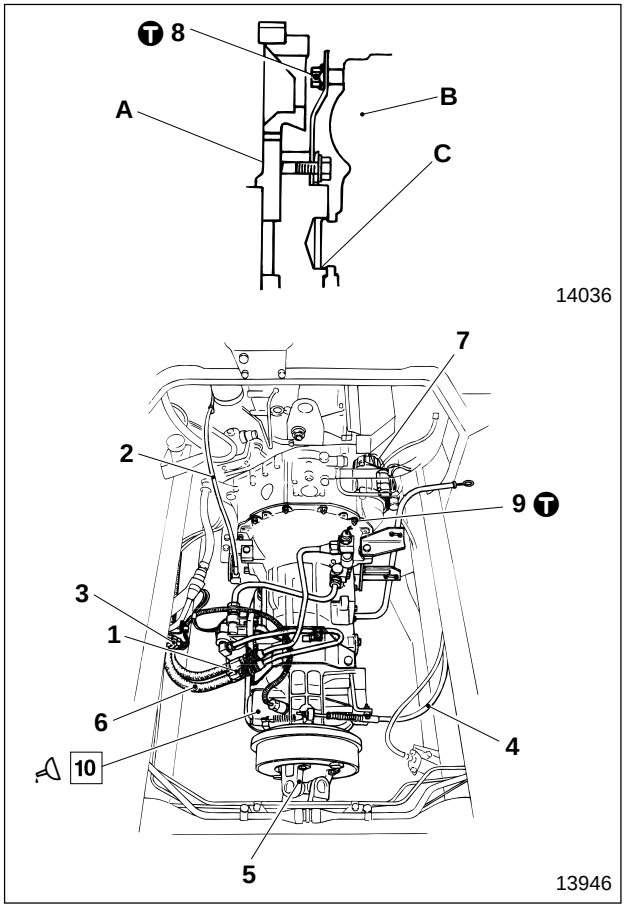

● **Removal Sequence**

1 Modulator
2 Selector cable
3 Harness connector
4 Parking brake cable Gr 36A
5 Propeller shaft Gr 25
6 Oil cooler hose
7 Starter Gr 54
8 Bolt
9 Nut
10 Automatic transmission assembly

A : Flywheel
B : Torque converter
C : Torque converter pilot area

● **Installation sequence**

Follow the removal sequence in reverse.

Tightening torque

Unit : N·m {lbf.ft, kgf·m}

Location	Parts to be tightened	Tightening torque	Remarks
8	Bolt (Torque converter and flywheel mounting)	51 to 61 {38 to 45, 5.20 to 6.22}	—
9	Nut (Automatic transmission assembly mounting)	39 to 58 {28 to 43, 3.9 to 6.0}	—

Lubricant

Location	Points of application	Kinds	Quantity
10	Torque converter pilot area (area C)	Molybdenum disulfide grease [NLGI No.2 (Li soap)]	As required

Special tools

Location	Tool name and shape	Part No.	Application
10	Converter installer 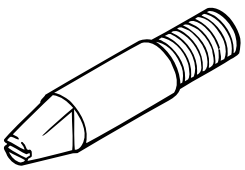 03726	ME633437	Automatic transmission assembly installation guide

◆ Service procedure

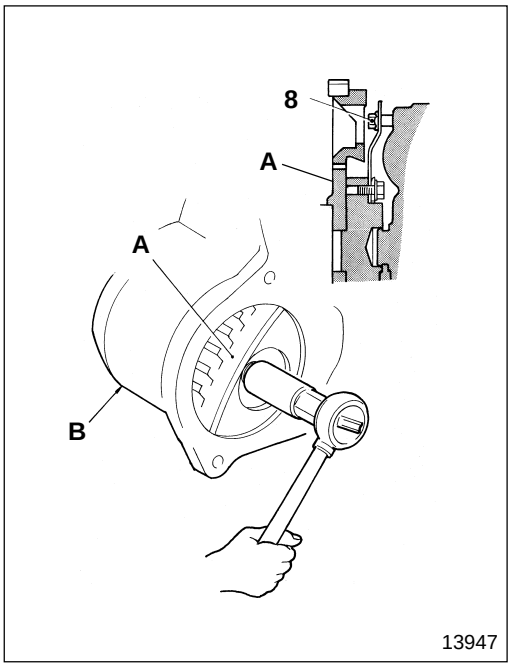

10 **Automatic transmission assembly**

[Removal]

- Rotate flywheel **A** and remove bolts **8** in sequence.
  B : Starter housing

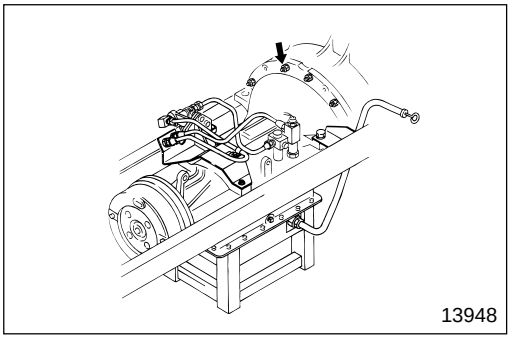

- Use a square bar or a similar object to support the oil pan of automatic transmission assembly **10**, then remove it by pulling it out backward.

CAUTION

- **Be careful not to apply force unevenly to any of the oil pan parts.**
- **Be careful not to let the torque converter fall from the transmission body because as a single unit the torque converter can come loose easily.**

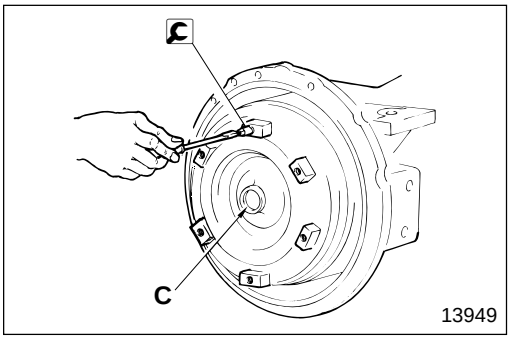

[Installation]

- Apply molybdenum disulfide grease to torque converter pilot area **C**.
- Mount torque converter installer in the tapped hole on the torque converter periphery.

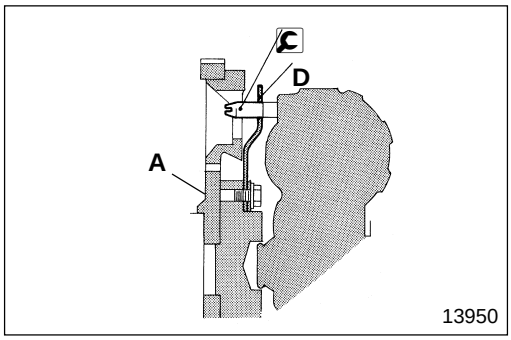

- Install the automatic transmission assembly to the engine flywheel housing, by aligning torque converter installer with the hole in flexplate **D** of flywheel **A**.

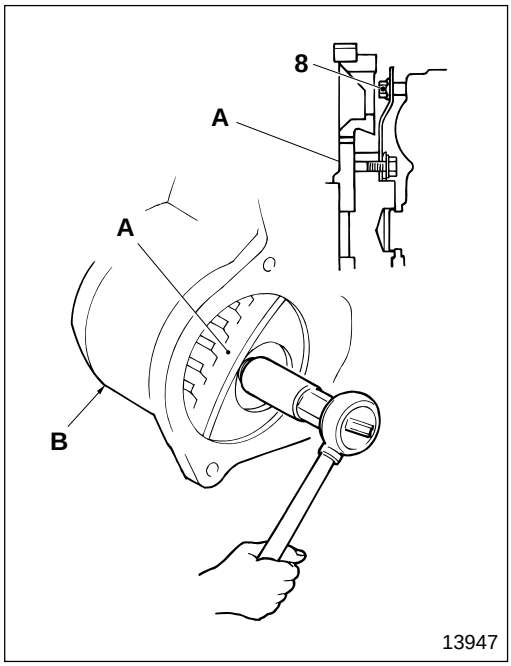

- Rotate flywheel **A** and tighten bolts **8**, in sequence, through the working hole of starter housing **B**. (6 points)
- Remove the converter installer and replace it with bolt **8**.
- First tighten all six bolts **8** temporarily, then tighten at specified torque.

NOTE

Be careful not to drop bolts 8 into the gap between flywheel A and the torque converter.

M E M O

OIL SEAL AND SPEEDOMETER WORM

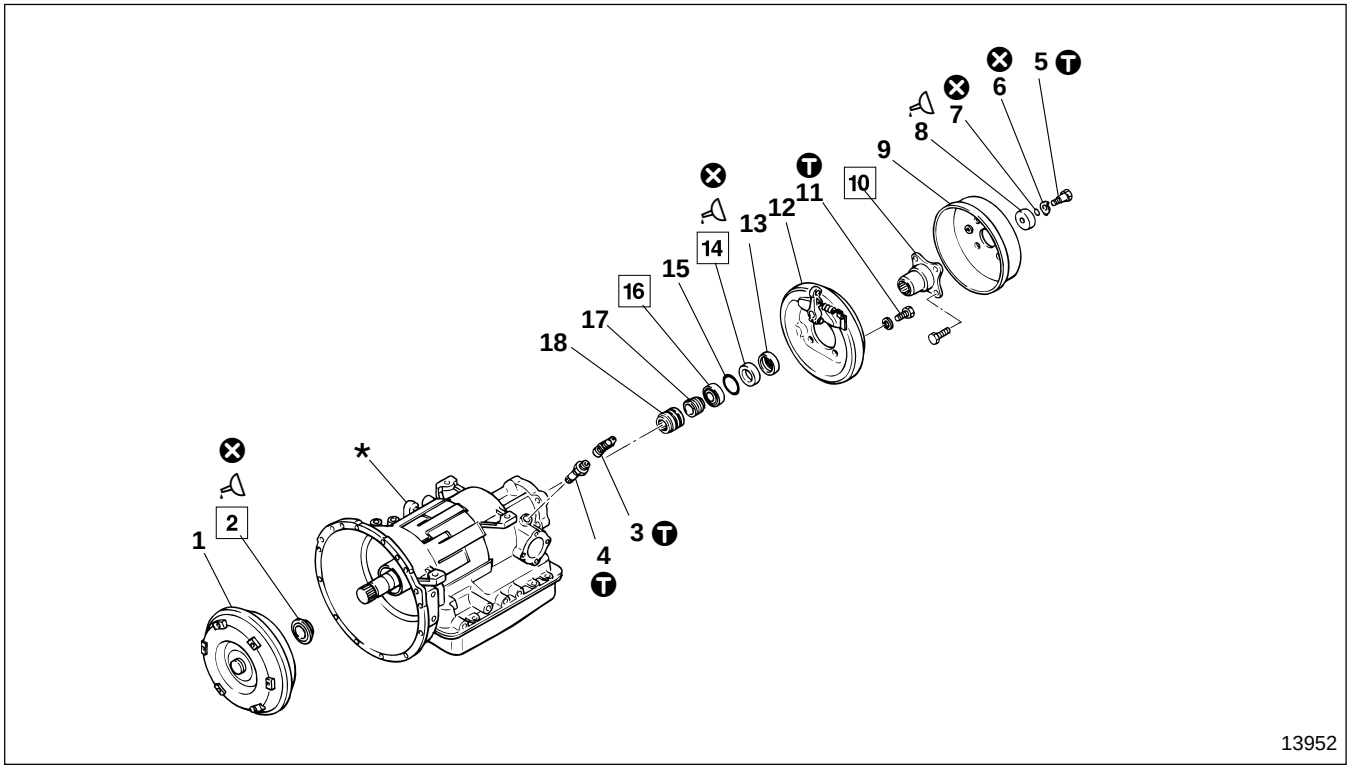

● **Disassembly sequence**

1 Torque converter
2 Oil seal
3 Speedometer gear adapter
4 Speedometer gear
5 Flange set bolt
6 Lock washer
7 O-ring
8 Retainer washer
9 Parking brake drum
10 Companion flange
11 Bolt
12 Support plate and shoe assembly
13 Seal plate
14 Oil seal
15 Snap ring
16 Bearing
17 Spacer
18 Speedometer worm

*: Automatic transmission assembly
⊗: Non-reusable parts

● **Assembly sequence**

Follow the disassembly sequence in reverse.

Service standards

Unit : mm {in.}

Location	Maintenance item	Standard value	Limit	Remedy
4, 18	Backlash between speedometer gear and speedometer worm	0.13 to 0.29 {0.0051 to 0.011}	0.36 {0.014}	Replace

Ⓣ Tightening torque

Unit : N·m {lbf.ft, kgf·m}

Location	Parts to be tightened	Tightening torque	Remarks
3	Speedometer gear adapter	55 to 82 {41 to 61, 5.6 to 8.4}	—
4	Speedometer gear	61 to 68 {45 to 50, 6.22 to 6.93}	—
5	Flange set bolt	140 to 160 {100 to 120, 14.1 to 16.72}	—
11	Bolt (Support plate and shoe assembly mounting)	110 to 130 {81 to 97, 11.22 to 13.46}	—

Lubricant and sealant

Location	Points of application	Kinds	Quantity
2	Lip area of oil seal	Wheel bearing grease [NLGI No.2 (Li soap)]	As required
	Oil seal periphery	THREEBOND 1215	As required
8	Retainer washer periphery	THREEBOND 1215	As required
14	Lip area of oil seal	Wheel bearing grease [NLGI No.2 (Li soap)]	As required
	Oil seal periphery	THREEBOND 1215	As required

Special tools

Unit : mm {in.}

Location	Tool name and shape	Part No.	Application
2	**A**=ø116.84 {4.60} **B**=ø107.19 {4.22} **C**=ø73.91 {2.91} **D**=ø45.97 {1.81} Pump seal installer 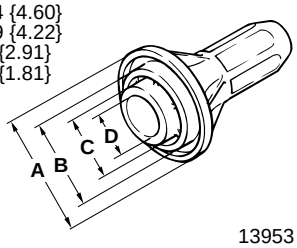 13953	ME633191	Installation of front side oil seal
14	**A**=ø78.6 {3.09} **B**=ø47.5 {1.87} **C**=ø39.6 {1.56} Rear oil seal installer 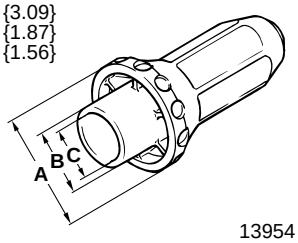 13954	ME633192	Installation of rear side oil seal
16	Bearing remover set 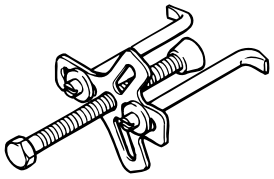 13955	ME633221	Removal of bearing
	A=ø80.96 {3.19} **B**=ø45.339 {1.78} Rear bearing installer 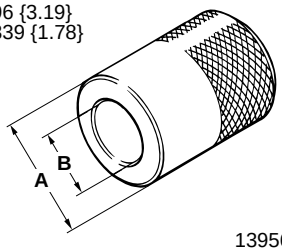 13956	ME633220	Installation of bearing

OIL SEAL AND SPEEDOMETER WORM

◆ Service procedure

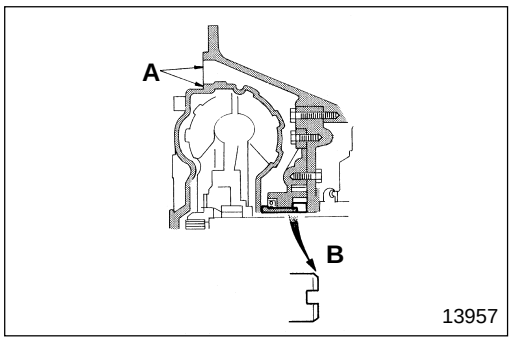

1 **Installation of torque converter**

Align the hub groove of torque converter **1** with the claw of the oil pump, then insert until the welded part on the converter periphery and the housing flange almost coincide.

CAUTION

Be careful not to scratch the oil seal.

A : Guide to insertion position (Align faces)
B : Align claw position

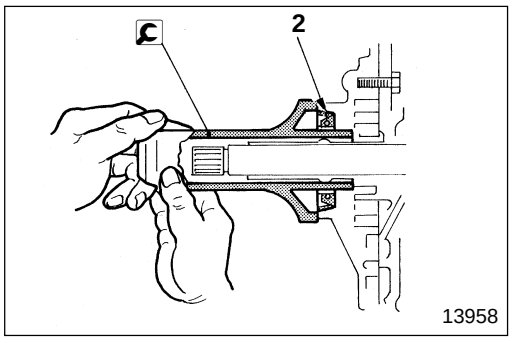

2 **Installation of oil seal**

- Apply grease to the lip area, and apply sealant to the periphery of oil seal **2**.
- Use 🔧 pump seal installer and install oil seal **2**.

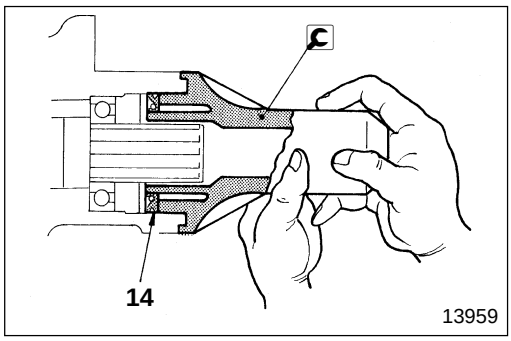

14 **Installation of oil seal**

- Apply grease to the lip area, and apply sealant to the periphery of oil seal **14**.
- Use 🔧 rear oil seal installer and install oil seal **14**.

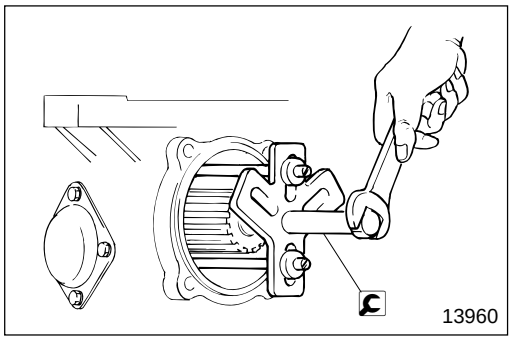

16 **Bearing**

[Removal]

- Insert the claw on the tip of 🔧 bearing remover set rod between the bearing race of bearing **16**.
- Insert the bolt of 🔧 bearing remover set into the automatic transmission output shaft, then remove bearing **16** by tightening the bearing remover.

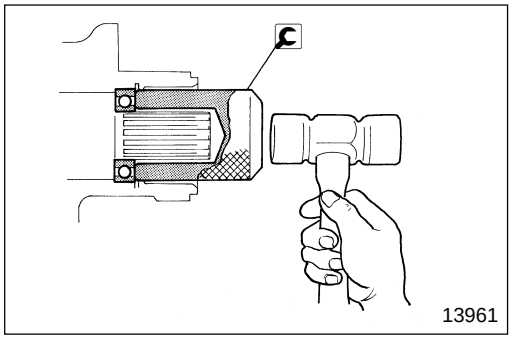

[Installation]

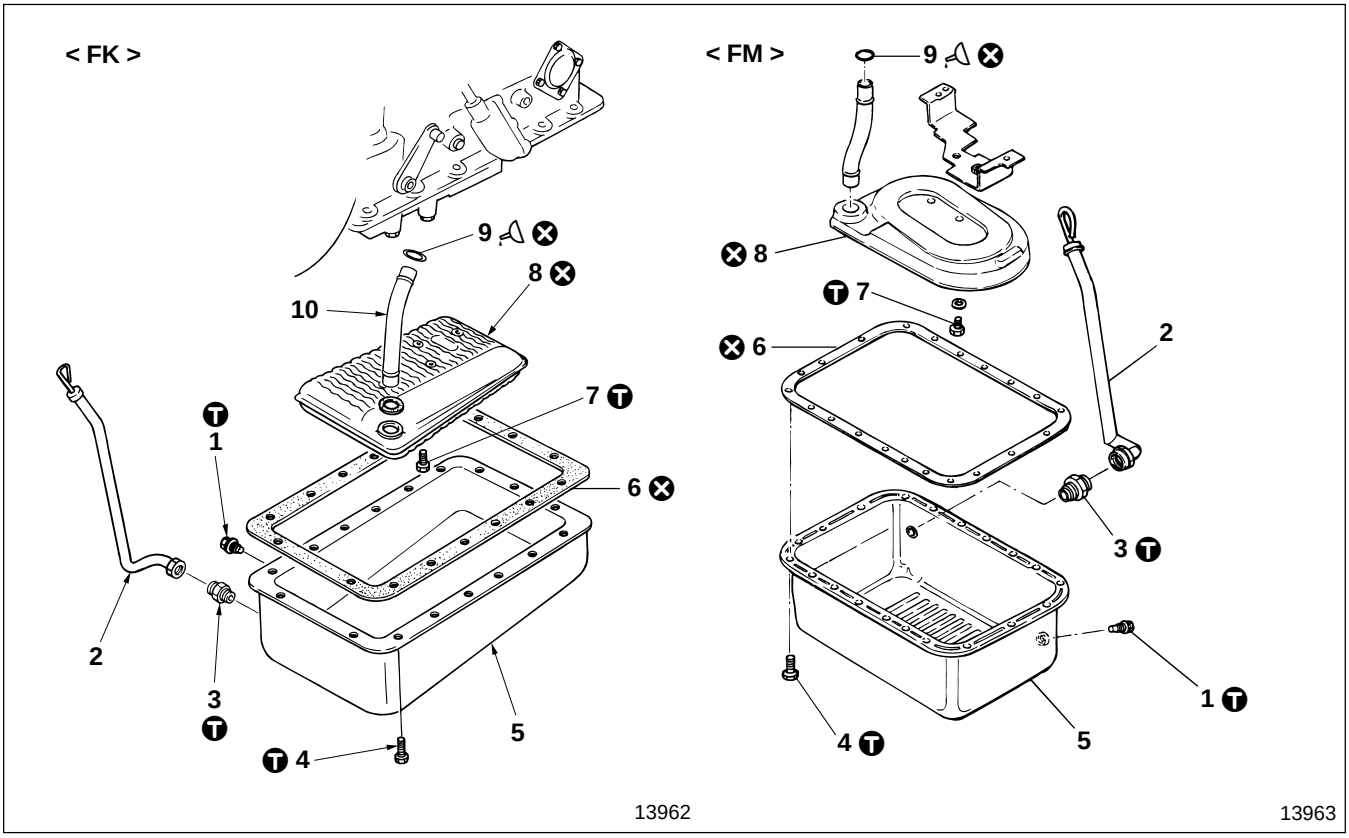

● **Removal sequence**

1 Drain plug
2 Dipstick and dipstick guide
3 Dipstick guide connector
4 Bolt
5 Oil pan
6 Gasket
7 Bolt
8 Oil filter
9 Seal ring
10 Intake pipe

⊗ : Non-reusable parts

● **Installation sequence**

Follow the removal sequence in reverse.

Repair kit : Oil filter and gasket kit

Ⓣ Tightening torque

Unit : N·m {lbf.ft, kgf·m}

Location	Parts to be tightened	Tightening torque	Remarks
1	Drain plug	20 to 27 {15 to 20, 2.05 to 2.75}	—
3	Dipstick guide connector	125 to 135 {91 to 100, 12.55 to 13.76}	—
4	Bolt (Oil pan mounting)	14 to 18 {10 to 13, 1.4 to 1.8}	—
7	Bolt (Oil filter mounting)	14 to 18 {10 to 13, 1.4 to 1.8}	—

Fluid

Location	Points of application	Kinds	Quantity
9	Seal ring	Automatic transmission fluid (DEXRON or DEXRON II type)	As required

Selector Cable

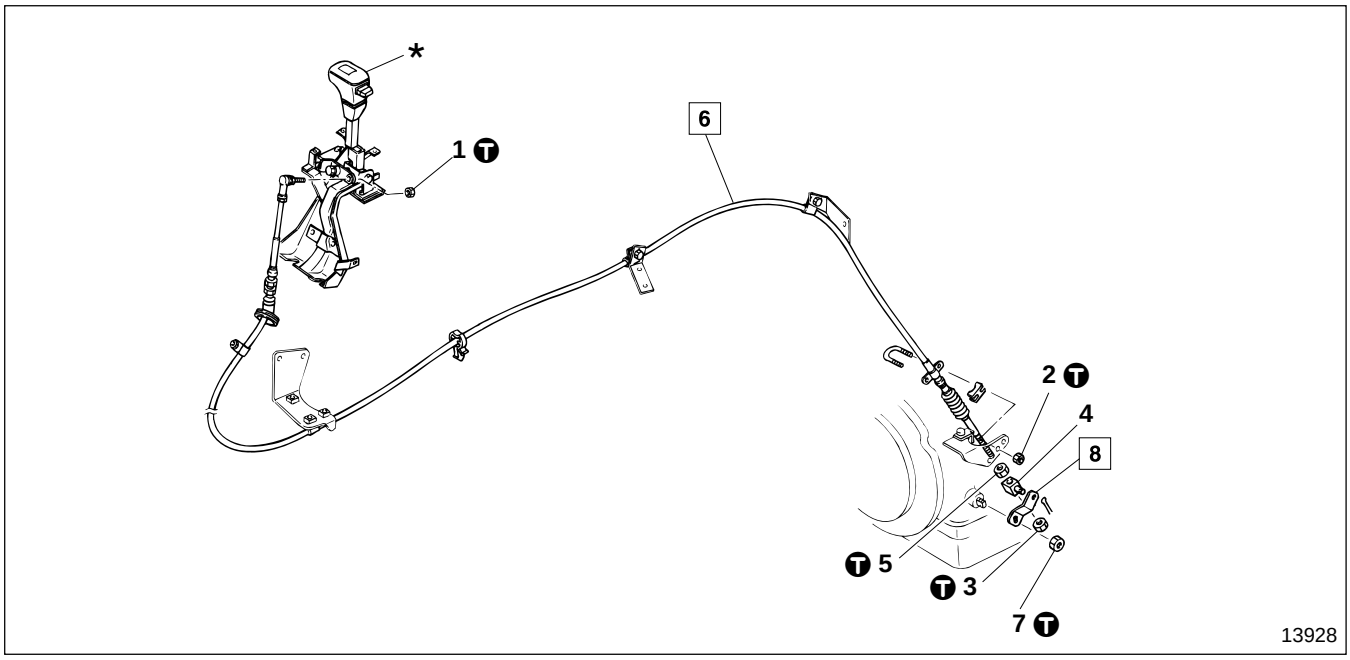

● **Removal sequence**

1 Nut
2 Nut
3 Nut
4 Adjuster
5 Nut
6 Selector cable
7 Nut
8 Selector lever

*: Range selector lever 📖 P23-22

● **Installation sequence**

*→6→1→5→4→3 → 2
8→7 → 2

● **Inspection after installation**

📖 23-21

T Tightening torque

Unit : N·m {lbf.ft, kgf·m}

Location	Parts to be tightened	Tightening torque	Remarks
1	Nut (Selector cable mounting)	18.6 to 23.5 {14 to 17, 1.9 to 2.4}	—
2	Nut (U-bolt mounting)	21 to 30 {16 to 22, 2.15 to 3.05}	—
3, 5	Nut (Selector cable mounting)	4 to 6 {3.0 to 4.4, 0.41 to 0.61}	—
7	Nut (Selector lever mounting)	23.5±3.4 {17±2.5, 2.4±0.35}	—

◆ Service procedure

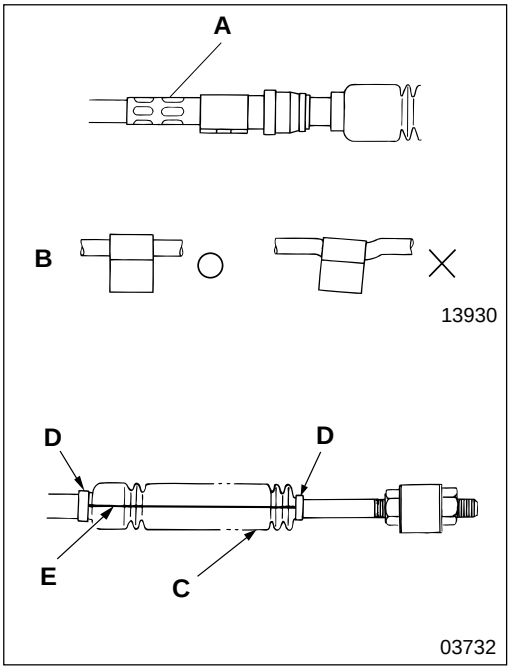

6 Installation of selector cable

NOTE

- **Make sure casing cap A is installed in a straight line.**
- **Cable bend radius must be 20 cm {7.87 in.} or more.**
- **Make sure the cable is straight.**
- **Install the clamp at right angles to the cable. (Figure B)**
- **Do not twist clamps D at the ends of boot C. Install so that white line E on the boot is a straight line. (Figure E)**

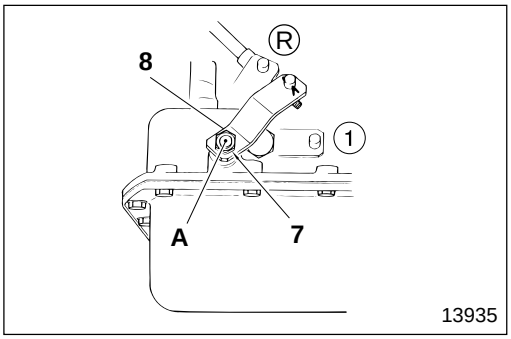

8 Installation of selector lever

If selector lever **8** has been removed, rotate selector shaft **A** and move it to an intermediate position between, but other than, ① and Ⓡ, then tighten nut **7**.

CAUTION ⚠

Be careful not to overtighten nut 7, it might cause the internal lever to malfunction.

● Inspection after installation

- Make sure that when range selector lever * on the driver's side is operated, the detent positions of selector lever **8** on the automatic transmission side agree with the corresponding positions of the range selector lever on the driver's side. Also make sure that the range selector lever on the driver's side and the selector lever on the automatic transmission side are both operating smoothly.
- Make sure the modulator cable moves smoothly.
- Make sure the starter switch can be operated only in the neutral position, and is disabled for all other positions.
- Make sure the backup lamps light when the selector is in the reverse (R) position.
  (The lamps do not light when the engine is stopped.)

Range Selector Lever

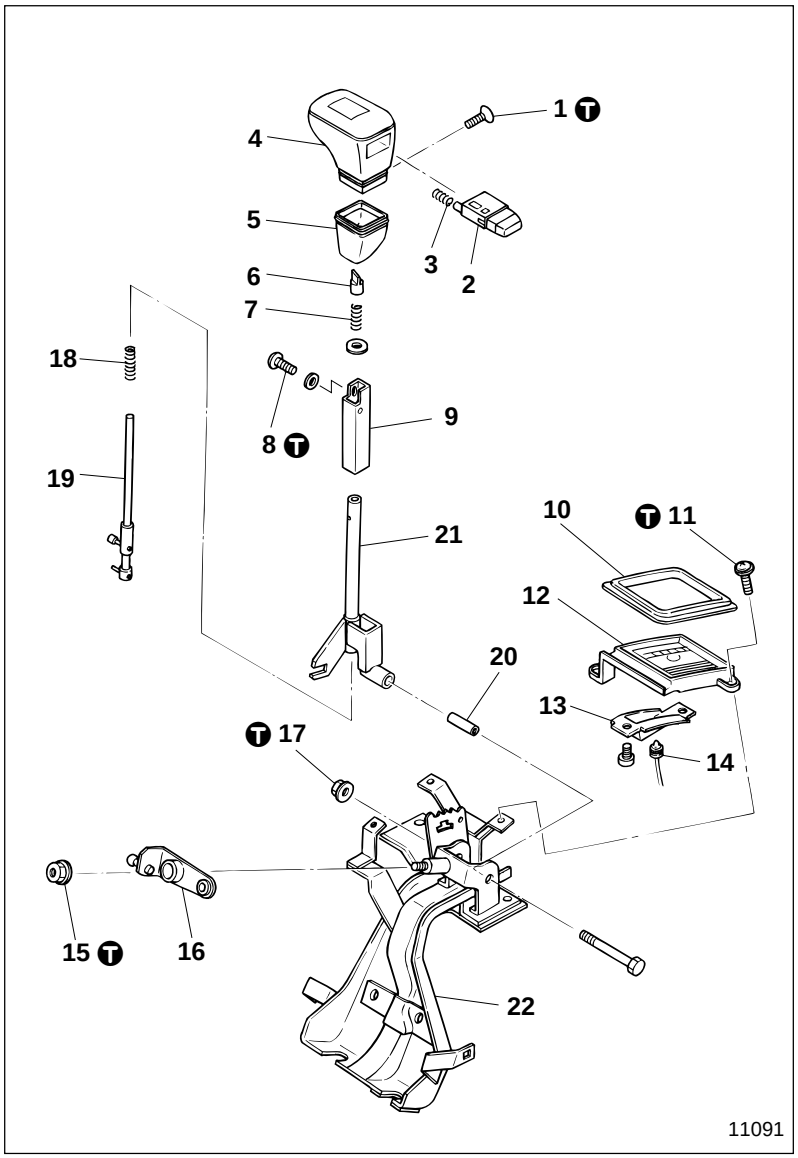

● **Disassembly sequence**

1 Screw
2 Push button
3 Spring
4 Knob assembly
5 Cover
6 Sleeve
7 Spring
8 Screw
9 Pipe
10 Indicator rubber
11 Screw
12 Panel assembly
13 Holder
14 Indicator lamp
15 Nut
16 Range selector lever B
17 Nut
18 Spring
19 Rod assembly
20 Pipe
21 Range selector lever A
22 Set board assembly

● **Assembly Sequence**

22 →17→16→15→14→13→12
21→20
19→18
→11→10→9→8→7→6→5
→1
4→3→2

T Tightening torque

Unit : N·m {lbf.ft, kgf·m}

Location	Parts to be tightened	Tightening torque	Remarks
1	Screw (Knob assembly mounting)	2 {1.4, 0.2}	—
8	Screw (Pipe mounting)	2 {1.4, 0.2}	—
11	Screw (Panel assembly mounting)	2 {1.4, 0.2}	—
15	Nut (Range selector lever B mounting)	9.8 to 15 {7.2 to 11, 1.0 to 1.5}	—
17	Nut (Range selector lever A mounting)	9.8 to 15 {7.2 to 11, 1.0 to 1.5}	—

Lubricant

Location	Points of application	Kinds	Quantity
—	All sliding areas	Chassis grease [NLGI No.1 (Ca soap)]	As required

M E M O

Modulator Assembly and Neutral Start Switch

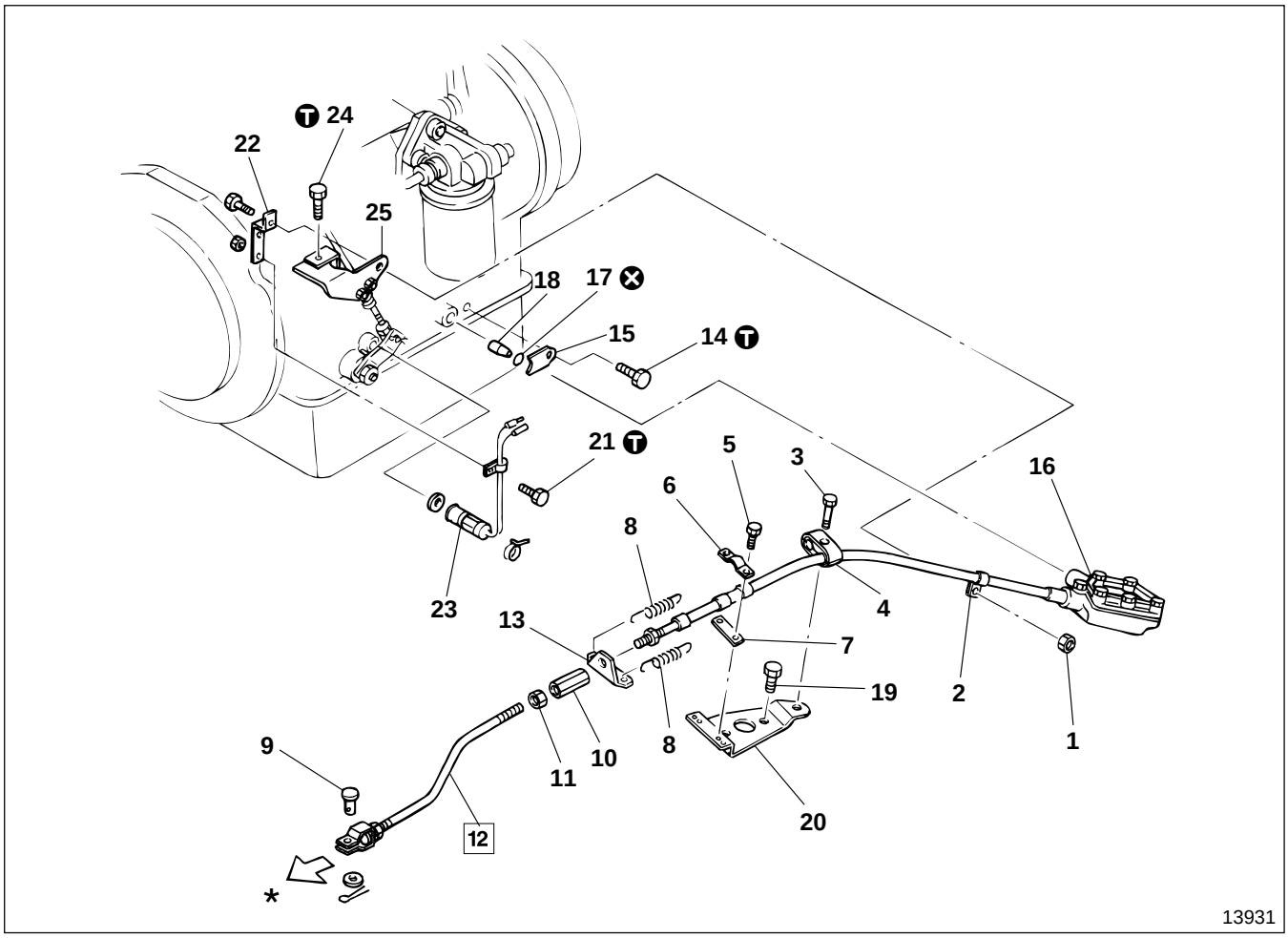

● **Removal sequence**

1 Nut
2 Clamp
3 Bolt
4 Clamp
5 Screw
6 Clamp
7 Shim
8 Spring
9 Clevis pin
10 Turnbuckle
11 Nut
12 Modulator control rod assembly
13 Hanger
14 Bolt
15 Retainer
16 Modulator assembly P23-26
17 O-ring
18 Valve rod
19 Bolt
20 Bracket
21 Bolt
22 Bracket
23 Neutral start switch Gr 54
24 Bolt
25 Bracket

*: To injection pump Gr 13
⊗: Non-reuseable parts

● **Installation sequence**

25→24→23→22→21→20→19→18→17→16→15→14→13→12→11→10→9→8→7→6→5→4→3→2→1

Tightening torque

Unit : N·m {lbf.ft, kgf·m}

Location	Parts to be tightened	Tightening torque	Remarks
14	Bolt (Retainer mounting)	17±2.5 {13±1.8, 1.75±0.25}	—
21	Bolt (Clamp mounting)	3.9 to 5.9 {2.9 to 4.3, 0.4 to 0.6}	—
24	Bolt (Bracket mounting)	59 to 83 {43 to 61, 6.0 to 8.5}	—

◆ Service Procedure

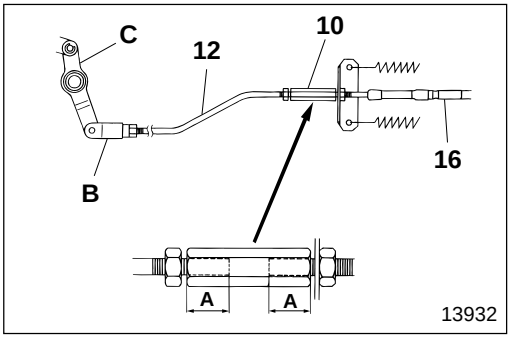

12 **Installation of modulator control rod assembly**

- Install modulator control rod assembly **12** and modulator assembly **16** in the ends of turnbuckle **10** by temporarily screwing them in so that the length of engagement **A** is the same on either side.
- Install clevis **B** of modulator control rod assembly **12** on modulator control lever **C**.

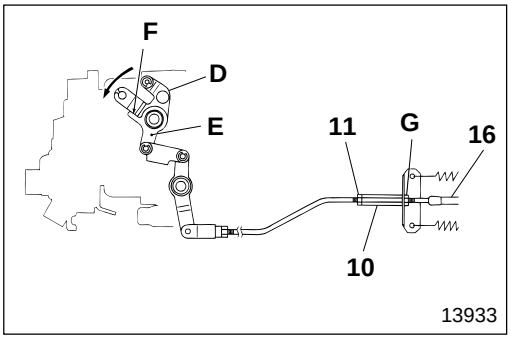

- Move speed control lever **D** to full position.
  In this condition, screw in turnbuckle **10** so that modulator assembly **16** is pulled to the position it would be in the case of maximum stroke.
- Make sure there is no gap in area **F** between speed control lever **D** and link **E**.
- Temporarily tighten nut **11** and nut **G** of modulator assembly **16**.

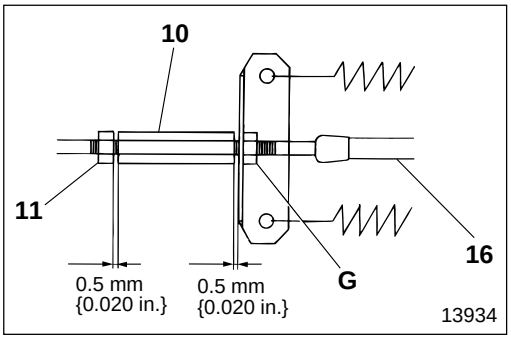

- Slacken off turnbuckle **10** until there is a 0.5 mm {0.020 in.} gap on either end of the turnbuckle.
- Tighten nuts **11** and **G** of modulator assembly **16** at specified torque.

Modulator Assembly

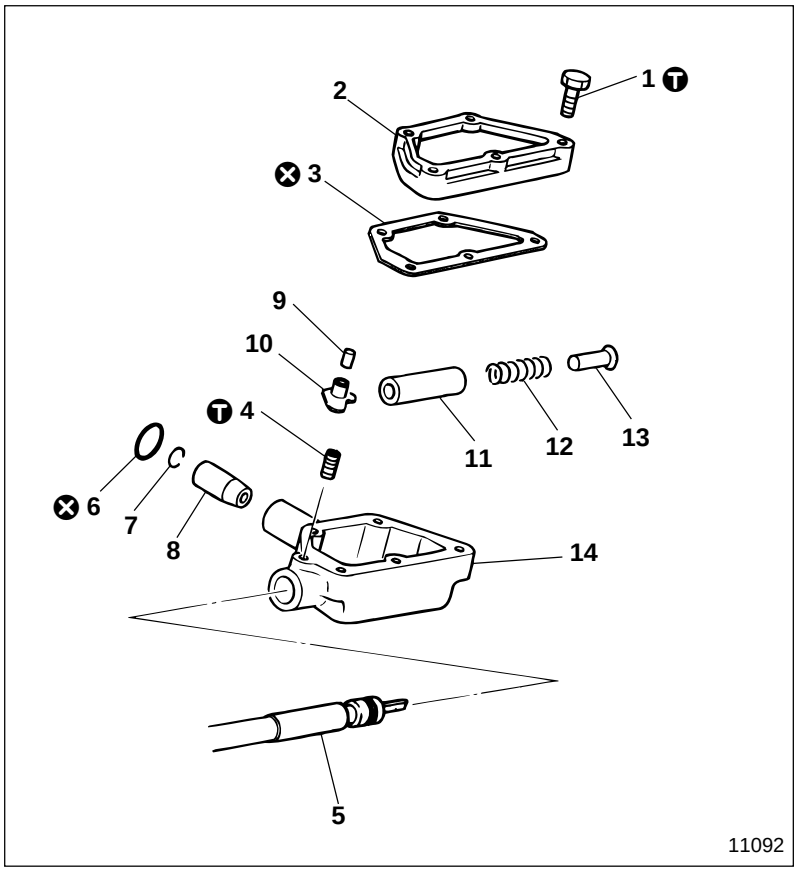

● **Disassembly sequence**

1 Screw
2 Cover
3 Gasket
4 Set screw
5 Cable assembly
6 O-ring
7 Snap ring
8 Plunger
9 Dwell pin
10 Lever
11 Retainer
12 Spring
13 Thimble
14 Housing

⊗ : Non-reusable parts

● **Assembly sequence**

Follow the disassembly sequence in reverse.

Ⓣ Tightening torque

Unit : N·m {lbf.ft, kgf·m}

Location	Parts to be tightened	Tightening torque	Remarks
1	Screw (Cover mounting)	4.8±0.3 {3.5±0.2, 0.49±0.03}	—
4	Set screw (Cable assembly mounting)	2.5±0.3 {1.9±0.2, 0.26±0.03}	—

M E M O

OIL COOLER

< FK >

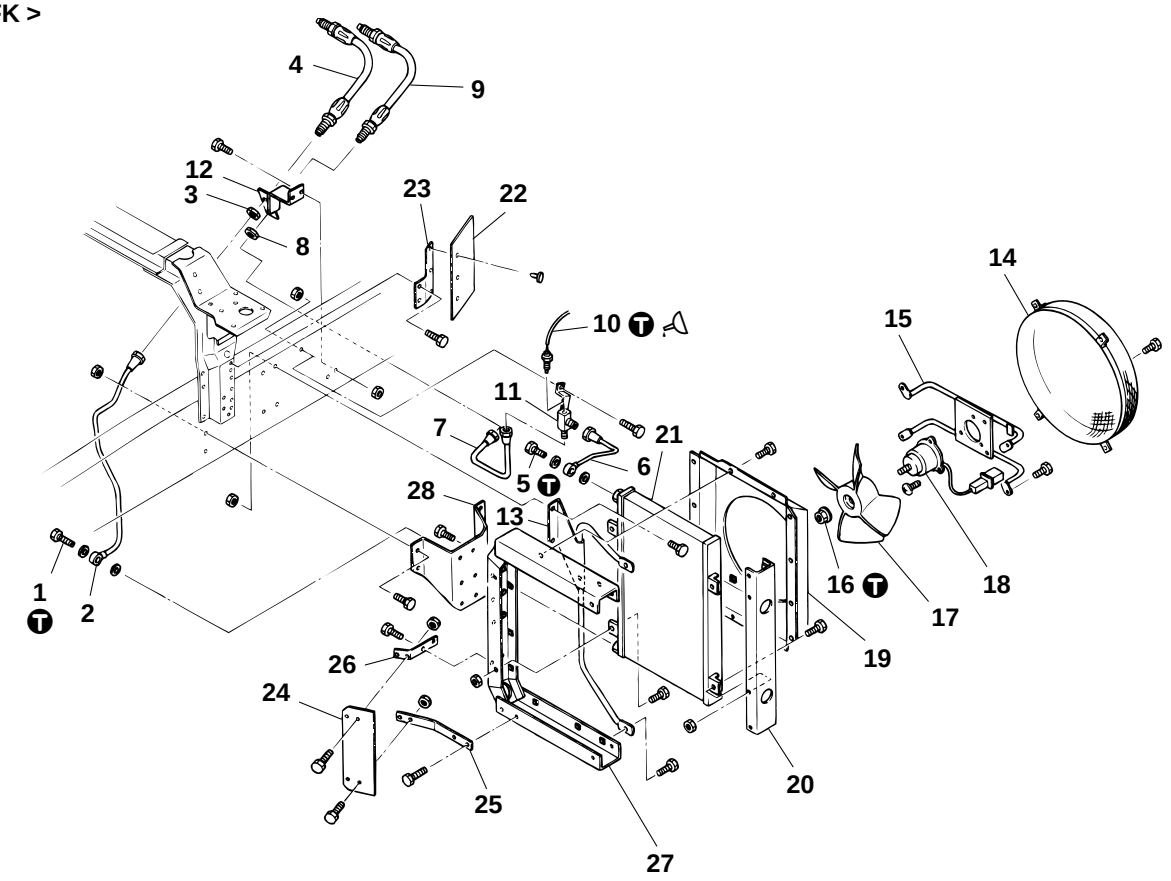

13936

< FM >

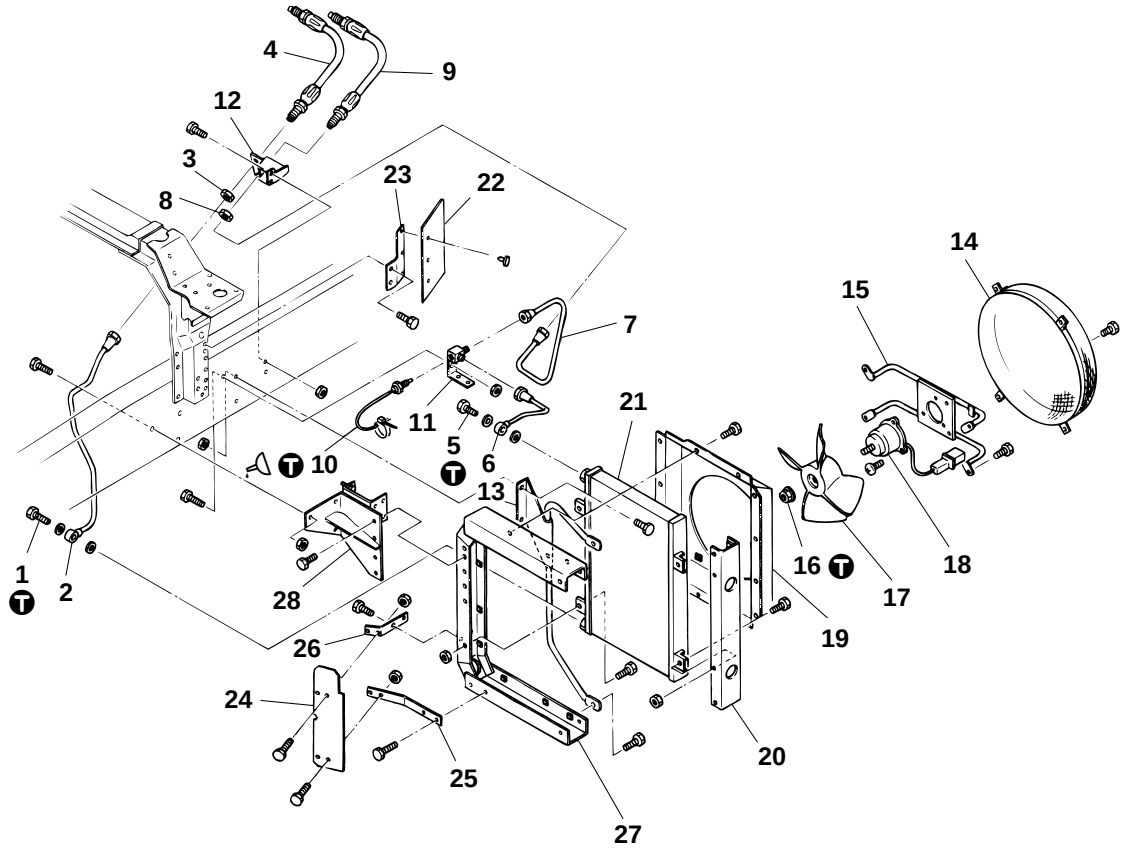

11089

● **Removal sequence**

1 Eye bolt
2 Cooler in pipe
3 Nut
4 Oil hose
5 Eye bolt
6 Cooler out pipe A
7 Cooler out pipe B
8 Nut
9 Oil hose
10 Automatic transmission fluid thermostat switch Gr 54
11 Connector
12 Hose bracket
13 Oil cooler stay
14 Fan cover
15 Fan motor bracket
16 Nut
17 Fan assembly
18 Motor assembly Gr 54
19 Fan shroud
20 Oil cooler bracket B
21 Oil cooler
22 Baffle plate
23 Baffle plate bracket
24 Air scoop
25 Air scoop bracket A
26 Air scoop bracket B
27 Oil cooler bracket A
28 Oil cooler bracket

● **Installation sequence**

28→27→26→25→24→23→22→21→20→19 ┐
→14→13→12→11→10→9→8→7→6→5→4→3→2→1
18→17→16→15 ┘

Tightening torque

Unit : N·m {lbf.ft, kgf·m}

Location	Parts to be tightened	Tightening torque	Remarks
1, 5	Eye bolt	59 to 88 {43 to 65, 6 to 9}	—
10	Automatic transmission fluid thermostat switch	29 to 39 {22 to 29, 3 to 4}	—
16	Nut (Fan assembly mounting)	4.2 to 5.2 {3.1 to 3.8, 0.43 to 0.53}	—

Sealant

Location	Points of application	Kinds	Quantity
10	Automatic transmission fluid thermostat switch	THREEBOND 1110B	As required

OIL FILTER

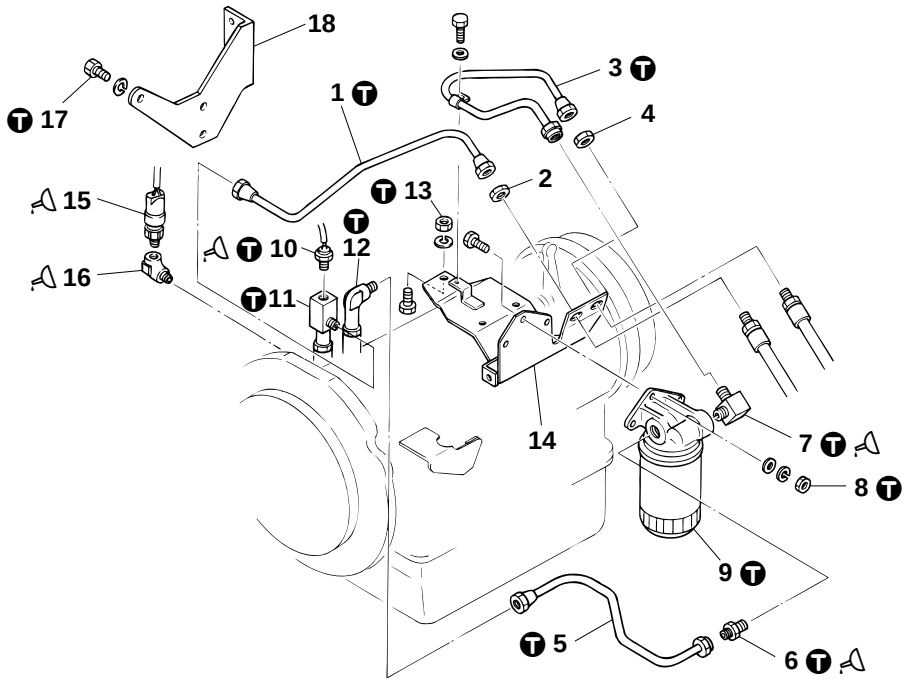

● **Removal sequence**

1 Oil pipe
2 Nut
3 Oil pipe
4 Nut
5 Oil pipe
6 Connector
7 Connector
8 Nut
9 Oil filter
10 Automatic transmission fluid temperature switch Gr 54
11 Connector
12 Connector
13 Nut
14 Oil filter bracket
15 Backup lamp switch Gr 54
16 Connector
17 Bolt
18 Hand brake cable bracket

● **Installation sequence**

Follow the removal sequence in reverse.

Tightening torque

Unit : N·m {lbf.ft, kgf·m}

Location	Parts to be tightened	Tightening torque	Remarks
1, 3, 5	Oil pipe	69 to 93 {51 to 69, 7.0 to 9.5}	—
6, 7	Connector	59 to 98 {43 to 72, 6 to 10}	—
8	Nut (Oil filler mounting)	21 {15, 2.13}	—
9	Oil filter (Cartridge mounting)	9.8 to 20 {7.2 to 14, 1 to 2}	—
10	Automatic transmission fluid temperature switch	29 to 39 {22 to 29, 3 to 4}	—
11, 12	Connector	39 to 49 {29 to 36, 4 to 5}	—
13	Nut (Oil filter bracket mounting)	115 to 155 {87 to 115, 12 to 16}	—
17	Bolt (Hand brake cable bracket)	58 to 68 {43 to 50, 5.9 to 6.9}	—

Sealant

Location	Points of application	Kinds	Quantity
6, 7, 15, 16	Connector and thread area of backup lamp switch	THREEBOND 1207B	As required
10	Thread area of automatic transmission fluid temperature switch	THREEBOND 1110B	As required

MITSUBISHI
FUSO

FK.FM
Service Manual

Group 25
Propeller Shaft

Table of Contents

BACK

HOME

MITSUBISHI FUSO TRUCK OF AMERICA, Inc.

Pub No. TWME9503-25

GROUP 25 PROPELLER SHAFT

SPECIFICATIONS 2

STRUCTURE AND OPERATION 2

TROUBLESHOOTING 3

REMOVAL AND INSTALLATION OF PROPELLER SHAFT 4

REAR PROPELLER SHAFT

< P4 > 6
< P8 > 10
< P10 > 14

FRONT PROPELLER SHAFT

< P4 > 18
< P8 > 22
< P10 > 28

BALANCING PROPELLER SHAFT 33

SPECIFICATIONS/STRUCTURE AND OPERATION

SPECIFICATIONS

Item \ Vehicle model			FK617	FM617 FM657-A	FM657-B, C
Propeller shaft	Model		P4	P8	P10
Pipe	Outer diameter×Wall thickness	mm {in.}	90×2.6 {3.54×0.10}	90×3.2 {3.54×0.13}	101.6×3.2 {4.0×0.13}
Universal joint	Spider outer diameter	mm {in.}	26.7 {1.05}	28.56 {1.12}	30.494 {1.20}
Needle roller bearing	Outer diameter	mm {in.}	3.0 {0.12}	3.46 {0.14}	3.55 {0.14}
	Length of neddle roller	mm {in.}	21.8 {0.86}	20.8 {0.82}	22.8 {0.90}
	Quantity of neddle rollers		31	29	30
Slip yoke joint	Spline diameter	mm {in.}	48 {1.89}	54 {2.13}	54 {2.13}
Center bearing	Model No.		6209	6211	6211
	Inner diameter×Outer diameter	mm {in.}	45×85 {1.77×3.35}	55×100 {2.17×3.94}	55×100 {2.17×3.94}

STRUCTURE AND OPERATION
Swing of Propeller Shaft

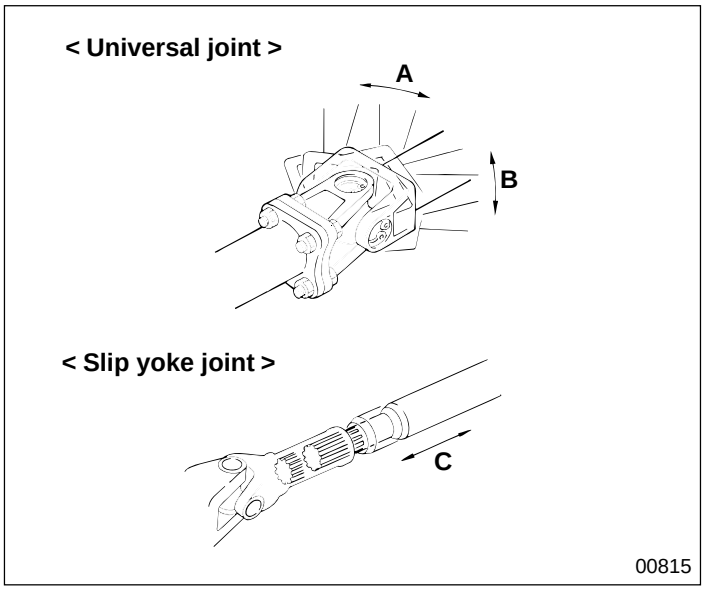

A : Lateral swing
B : Longitudinal swing
C : Fore-and-aft movement

Relative positions of transmission, rear axle and front axle vary depending on the fluctuation of the road surface and load carried when operating the vehicle. The universal joint and the slip yoke joint are provided to absorb these influences.

Configuration of Propeller Shaft Connection

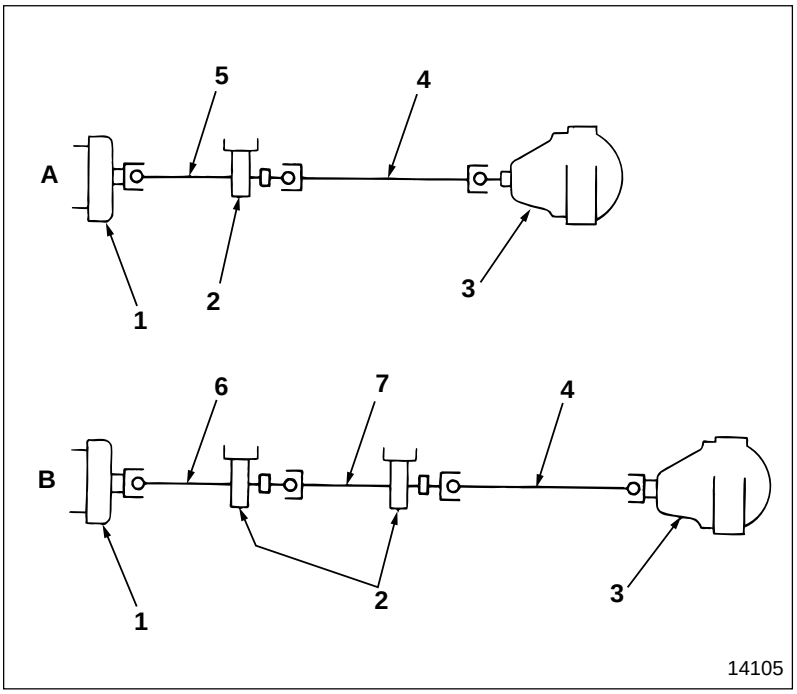

1 Parking brake drum
2 Center bearing
3 Rear axle
4 Rear propeller shaft
5 Front propeller shaft
6 Front propeller shaft No. 1
7 Front propeller shaft No. 2

A : Twin-shaft connection
B : Triple-shaft connection

TROUBLESHOOTING

Symptoms / Possible causes		Propeller shaft vibrating		Noise from propeller shaft		
		Vibration at high speed	Vibration at low speed	Noise when starting or while coasting	Noise while cruising	Clicking noise
Flange yoke assembly direction incorrect		○				
Companion flange tightening torque excessive						○
Slip yoke joint	Lubrication insufficient				○	
	Spline play excessive		○	○		
Universal joint	Clearance in spider axial direction excessive		○		○	
	Needle bearing lubricated insufficiently				○	
	Needle bearing worn	○		○	○	
Center bearing < Twin-shaft and triple-shaft connection >	Lubrication insufficient				○	
	Seized, worn, or rotation faulty	○			○	
	Cushion rubber deteriorated or deformed			○		
	Bracket mounting bolt loose			○		
Propeller shaft	Mounting bolt loose	○		○		
	Bent	○				
	Dynamic balance adjusted incorrectly	○				
Transmission gear selection too high			○			

REMOVAL AND INSTALLATION OF PROPELLER SHAFT

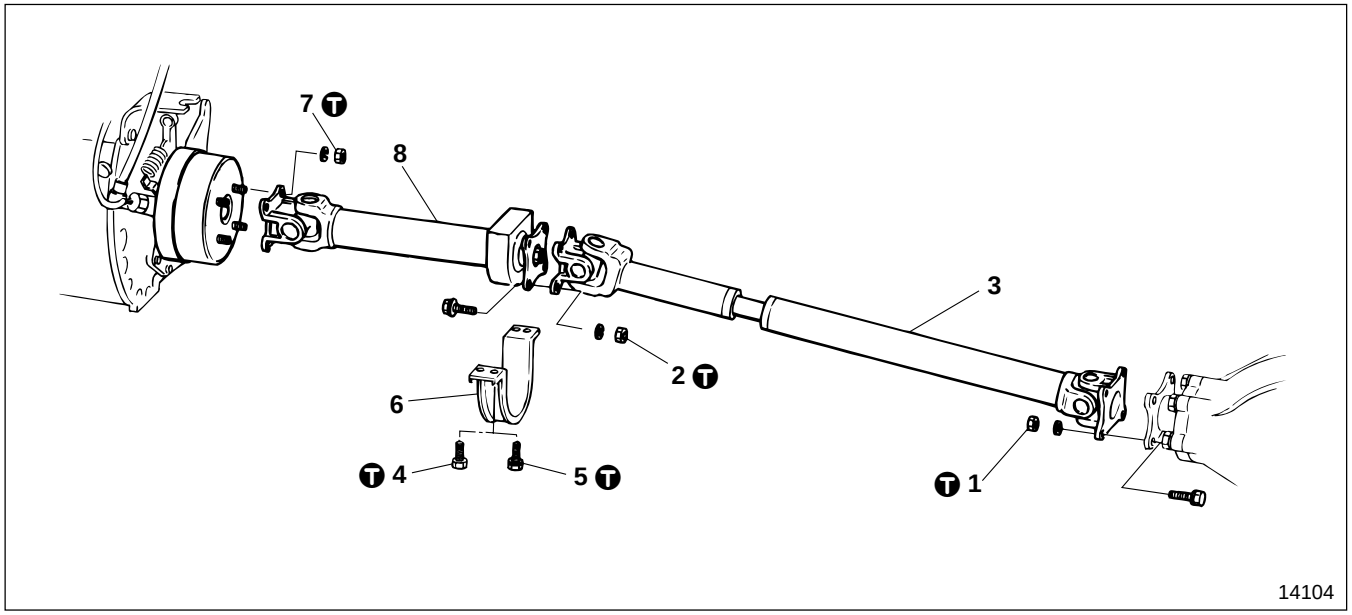

● **Work before removal**

P25-5

● **Removal sequence**

1 Nut
2 Nut
3 Rear propeller shaft
P25-6
4 Bolt
5 Bolt
6 Center bearing bracket
7 Nut
8 Front propeller shaft
P25-18

● **Installation sequence**

Follow the removal sequence in reverse.

T Tightening torque

Unit : N·m {lbf.ft, kgf·m}

Location	Parts to be tightened		Tightening torque	Remarks
1	Nut (Propeller shaft mounting at rear axle side)	P4, P8	85 {61, 8.5}	—
		P10	120 to 180 {87 to 130, 12 to 18}	—
2	Nut (Propeller shaft mounting at center bearing side)	P4, P8	85 {61, 8.5}	—
		P10	120 to 180 {87 to 130, 12 to 18}	—
4	Bolt (Center bearing bracket mounting)	P4	39 to 59 {28 to 43, 3.9 to 6.0}	—
		P8 , P10	70 to 95 {51 to 69, 7.0 to 9.5}	—
5	Bolt (Center bearing bracket mounting)	P4	36 to 52 {25 to 40, 3.5 to 5.5}	With spring washer
7	Nut (Propeller shaft mounting at propeller shaft side)	P4, P8	85 {61, 8.5}	—
		P10	120 to 180 {87 to 130, 12 to 18}	—

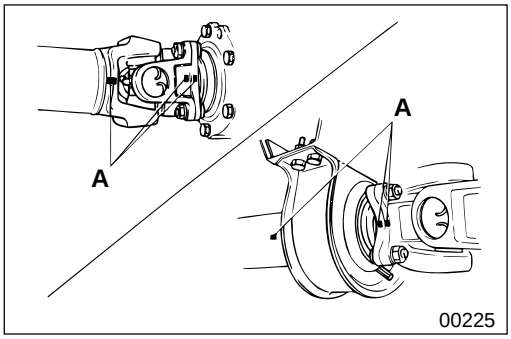

◆ Service procedure

● **Work before removal**

WARNING⚠

- **Since the propeller shaft will be removed, the parking brake (center parking brake) cannot be used. Therefore, you must chock the wheels securely so the vehicle does not move.**
- **Do not remove the chocks until the entire operation is completed.**

Remember to make alignment marks **A** before removal.

REAR PROPELLER SHAFT < P4 >

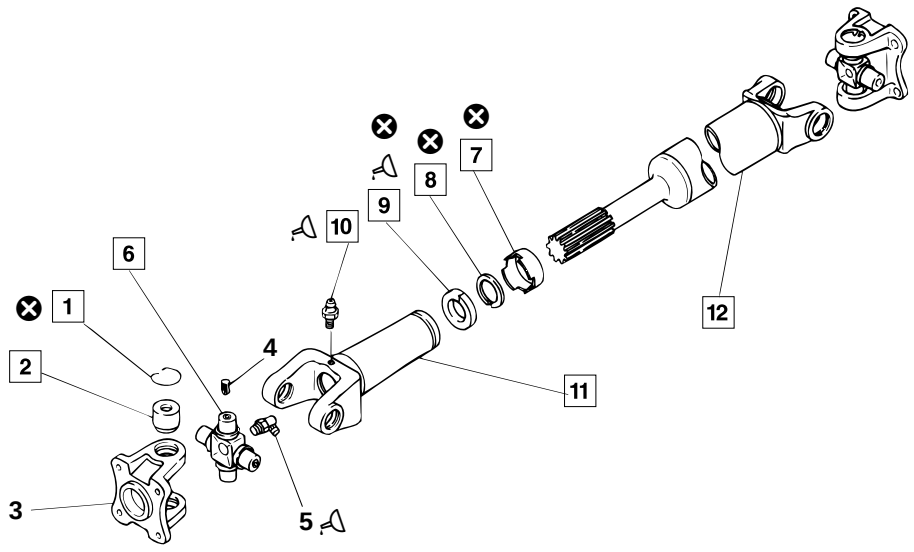

04404

● **Inspection before disassembly**

P25-7

● **Disassembly sequence**

1 Snap ring
2 Needle bearing
3 Flange yoke
4 Grease keeper
5 Grease nipple
6 Spider
7 Dust cap
8 Retainer
9 Cork seal
10 Grease nipple
11 Slip yoke joint
12 Rear propeller shaft

⊗ : Non-reusable parts

● **Assembly sequence**

Follow the disassembly sequence in reverse.
Repair kit : Universal joint spider kit

Service standards

Unit : mm {in.}

Location	Maintenance item	Standard value (Basic diameter in [ ])	Limit	Remedy
1 to 6	Clearance of spider in axial direction	0 to 0.25 {0 to 0.0098}	—	Adjust
2, 6	Clearance between needle bearing and spider	[26.7] 0.02 to 0.07 {[1.05] 0.00079 to 0.0028}	0.2 {0.0079}	Replace
11, 12	Play to revolving direction between slip yoke joint and rear propeller shaft	0.07 to 0.18 {0.0028 to 0.0071}	0.3 {0.012}	Replace
12	Bend of rear propller shaft (Center)	—	0.6 {0.024}	Correct or replace

Lubricant

Location	Points of application	Kinds	Quantity
5	Supply via grease nipple	Wheel bearing grease [NLGI No. 2 (Li soap)]	Pack until grease overflows from spider dust cover
9	Inner surface of cork seal	Wheel bearing grease [NLGI No. 2 (Li soap)]	As required
10	Supply via grease nipple	Wheel bearing grease [NLGI No. 2 (Li soap)]	Pack until grease overflows from dust plug hole

Special tools

Location	Tool name and shape	Part No.	Application
1	Snap ring expander 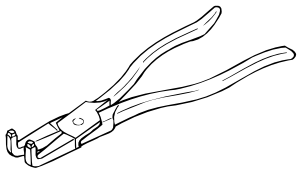 00227	MH061001	Removal and installation of snap ring

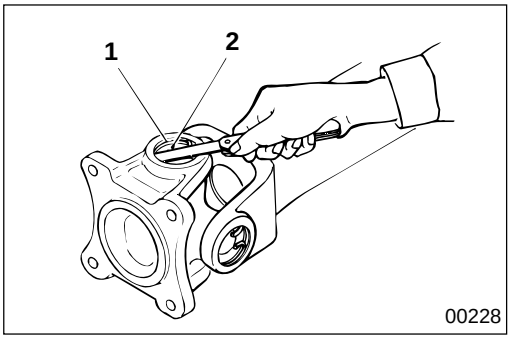

00228

◆ Service procedure

● **Inspection before disassembly**

Clearance in axial direction for spider

Press needle bearing **2** downward firmly, and measure the clearance between snap ring **1** and the needle bearing. If the measured value is higher than the standard value, adjust it by changing the thickness of the snap ring.

- Available snap ring thicknesses

Part name	Thickness	Identification color
Snap ring A	2.5 mm {0.098 in.}	Green
Snap ring B	2.6 mm {0.10 in.}	Red

NOTE

For snap ring 1, it is recommended that you use rings with the same thickness on both ends to ensure balanced revolution.

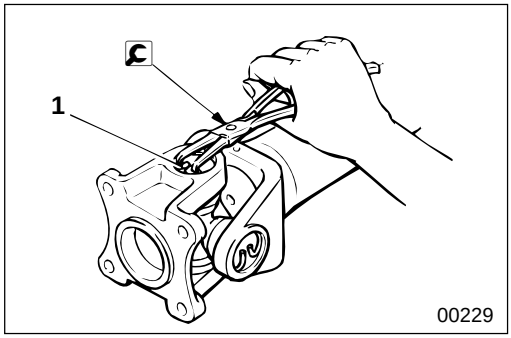

1 **Removal and installation of snap ring**

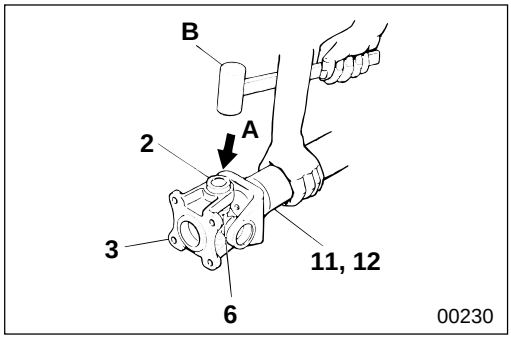

2 **Removal of needle bearing**

- Put alignment marks on needle bearing **2** and spider **6**.
- Put alignment marks across flange yoke **3**, slip yoke joint **11** and rear propeller shaft **12**.
- Hit the yoke lightly at shoulder area **A** so that needle bearing **2** bounces out due to reaction.
  B : Mallet

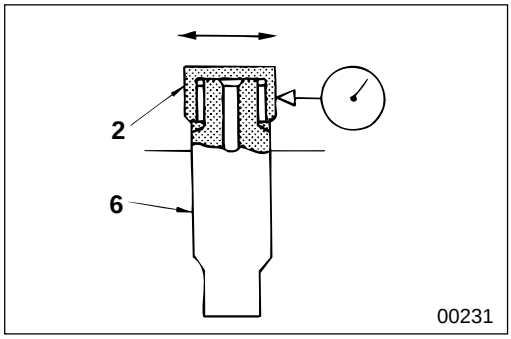

2 **6** **Clearance between needle bearing and spider**

Measure the play towards the diameter direction between needle bearing **2** and spider **6**. If the measured value is higher than the limit, replace with universal joint spider kit.

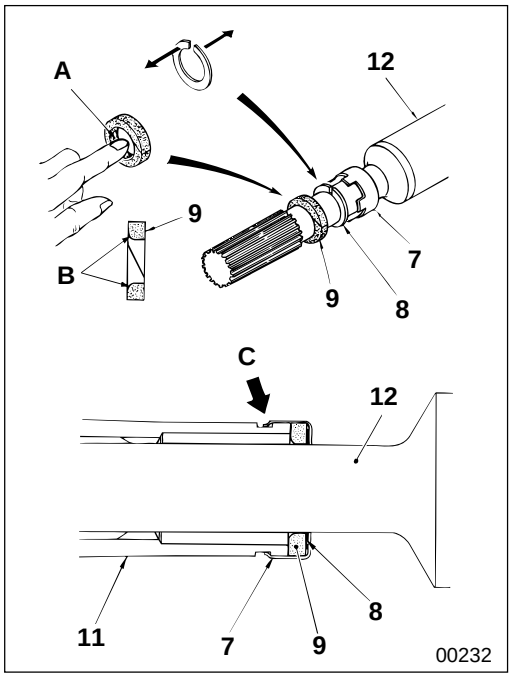

7 **to** **9** **Assembly of dust cap, retainer and cork seal**

- Insert dust cap **7** into rear propeller shaft **12** and expand retainer **8** carefully to mount it on the propeller shaft. Then, release the retainer and allow it to return to its original shape.
- Apply grease to inner surface **A** of cork seal **9**, face its chamfered side **B** towards the spline and mount in the same way as retainer **8**.
- Press cork seal **9**, compressing it by 1 to 2 mm {0.039 to 0.079 in.}, against slip yoke joint **11**, then caulk pawl area **C**.

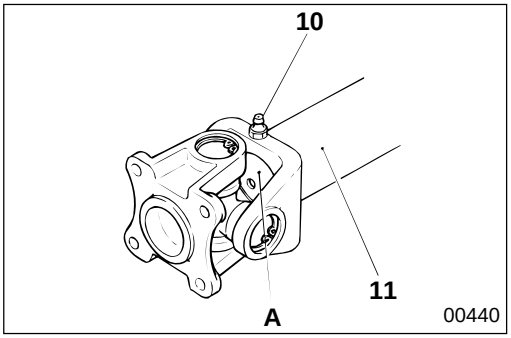

10 **Supply of grease via grease nipple**

Pack grease via grease nipple **10** until grease starts overflowing from the hole in dust plug **A** of slip yoke joint **11**.

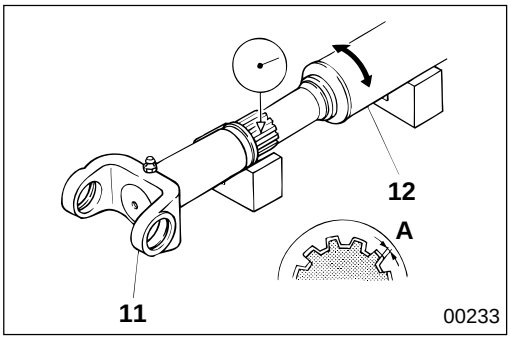

11 **12** **Play between slip yoke joint and rear propeller shaft spline in rotating direction**

Measure play **A** in the rotation direction between slip yoke joint **11** and rear propeller shaft **12** at the spline area. If the measured value is higher than the limit, replace the faulty parts.

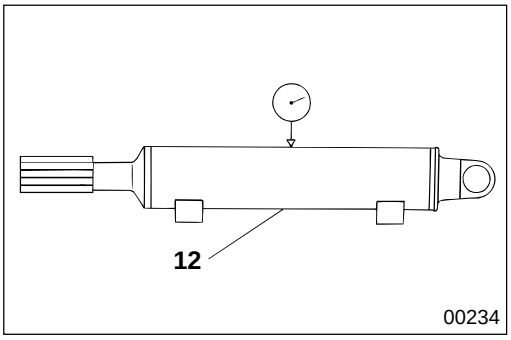

12 **Bend of rear propeller shaft**

Measure bend of rear propeller shaft **12** at its center. If the measured value is higher than the limit, correct or replace it.

CAUTION

Be sure to check for cracks at the welded area after straightening has been done by means of a press.

NOTE

To measure the bend of rear propeller shaft 12, turn it one full revolution and read the dial gauge indicator. The bend is one half of the indicated value.

REAR PROPELLER SHAFT < P8 >

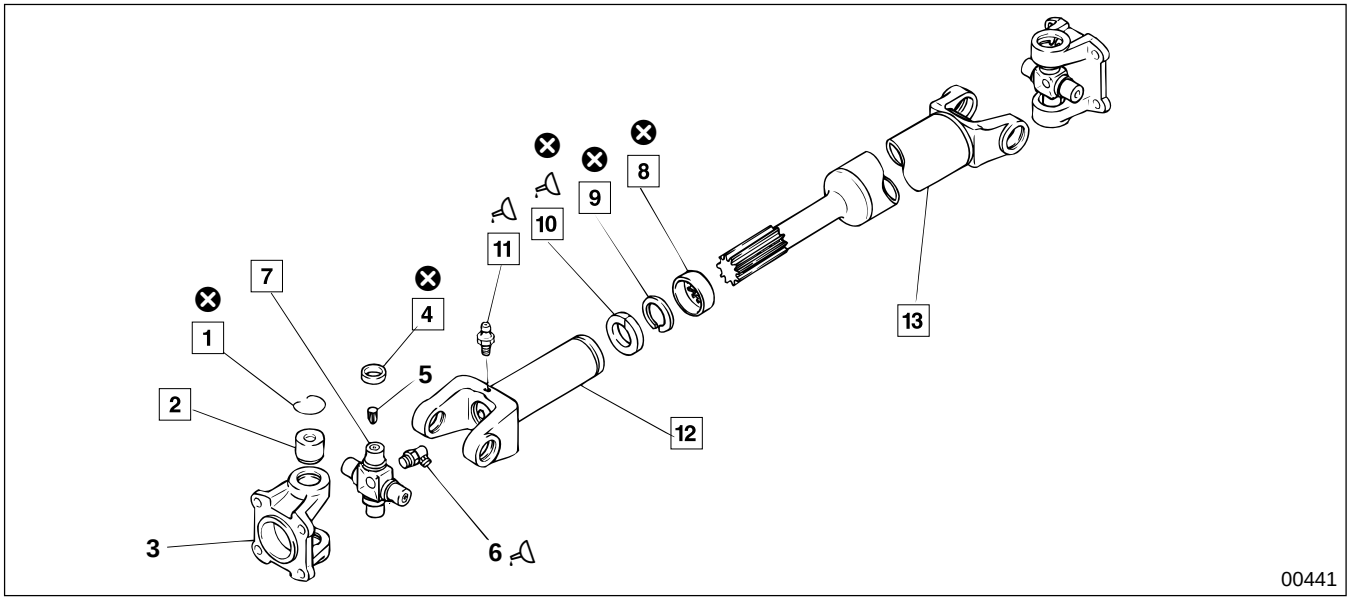

● **Inspection before disassembly**

P25-11

● **Disassembly sequence**

1 Snap ring
2 Needle bearing
3 Flange yoke
4 Dust seal
5 Grease keeper
6 Grease nipple
7 Spider
8 Dust cap
9 Retainer
10 Cork seal
11 Grease nipple
12 Slip yoke joint
13 Rear propeller shaft

⊗ : Non-reusable parts

● **Assembly sequence**

Follow the disassembly sequence in reverse.
Repair kit : Universal joint spider kit

Service standards

Unit : mm {in.}

Location	Maintenance item	Standard value (Basic diameter in [ ])	Limit	Remedy
1 to 7	Clearance of spider in axial direction	0 to 0.15 {0 to 0.0059}	—	Adjust
2, 7	Clearance between needle bearing and spider	[28.56] 0.02 to 0.07 {[1.12] 0.00079 to 0.0028}	0.2 {0.0079}	Replace
12, 13	Play to revolving direction between slip yoke joint and rear propeller shaft	0.07 to 0.18 {0.0028 to 0.0071}	0.3 {0.012}	Replace
13	Bend of rear propeller shaft (Center)	—	0.6 {0.024}	Correct or replace

Lubricant

Location	Points of application	Kinds	Quantity
6	Supply via grease nipple	Wheel bearing grease [NLGI No.2 (Li soap)]	Pack until grease overflows from spider dust seal
10	Inner surface of cork seal	Wheel bearing grease [NLGI No.2 (Li soap)]	As required
11	Supply via grease nipple	Wheel bearing grease [NLGI No.2 (Li soap)]	Pack until grease overflows from dust plug hole

Special tools

Unit : mm {in.}

Location	Tool name and shape	Part No.	Application
1	Snap ring expander 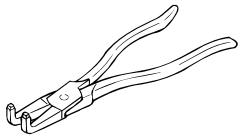 00227	MH061001	Removal and installation of snap ring
4	Dust seal installer 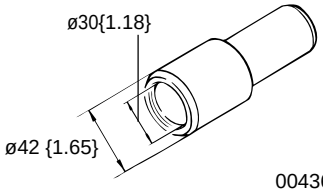 00436	03724-04000	Press-fitting of spider dust seal
4	Spider assembly rest A 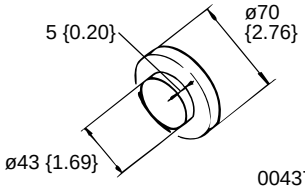 00437	03724-13000	Press-fitting of spider dust seal

◆ Service procedure

● **Inspection before disassembly**

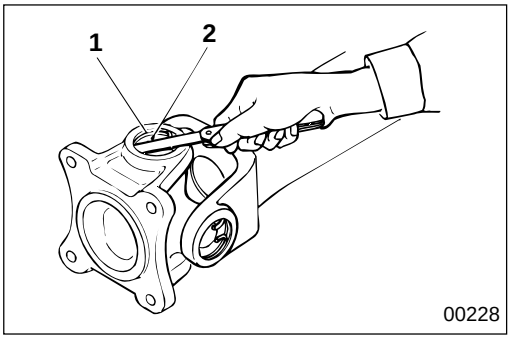

00228

Clearance in axial direction for spider

Press needle bearing **2** downward firmly, and measure the clearance between snap ring **1** and the needle bearing. If the measured value is higher than the standard value, adjust it by changing the thickness of the snap ring.

- Available snap ring thicknesses

Part name	Thickness	Identification color
Snap ring A	3mm {0.118 in.}	Green
Snap ring B	3.05mm {0.120 in.}	White
Snap ring C	3.1mm {0.122 in.}	Red
Snap ring D	3.15mm {0.124 in.}	Blue
Snap ring E	3.2mm {0.126 in.}	Yellow

NOTE

For snap ring 1, it is recommended that you use rings with the same thickness on both ends to ensure balanced revolution.

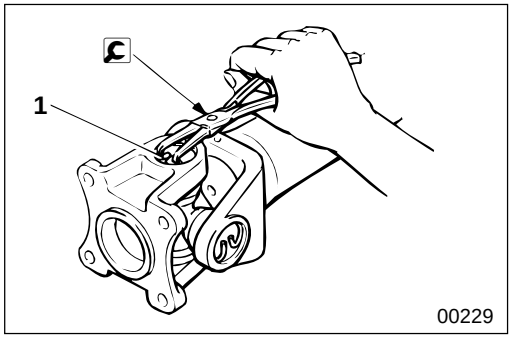

1 **Removal and installation of snap ring**

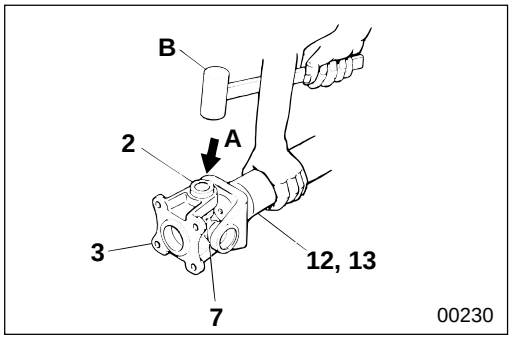

2 **Removal of needle bearing**

- Put alignment marks on needle bearing **2** and spider **7**.
- Put alignment marks across flange yoke **3**, slip yoke joint **12** and rear propeller shaft **13**.
- Hit the yoke lightly at shoulder area **A** so that needle bearing **2** bounces out due to reaction.
  B : Mallet

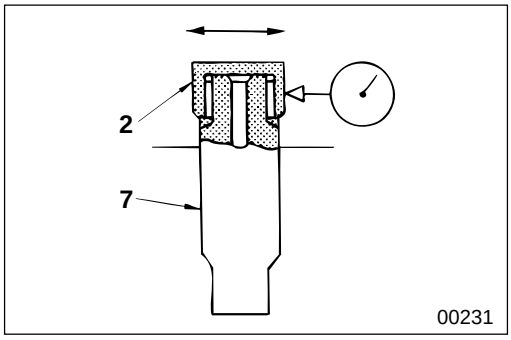

2 **7** **Clearance between needle bearing and spider**

Measure the play towards the diameter direction between needle bearing **2** and spider **7**. If the measured value is higher than the limit, replace with universal joint spider kit.

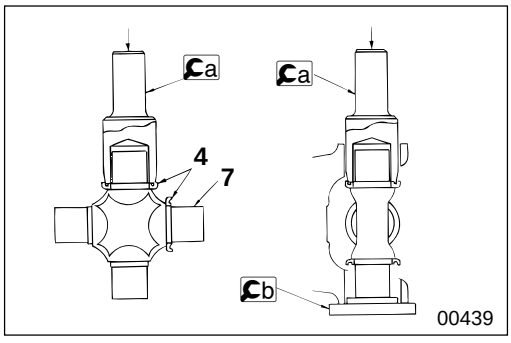

4 **Mounting of dust seal**

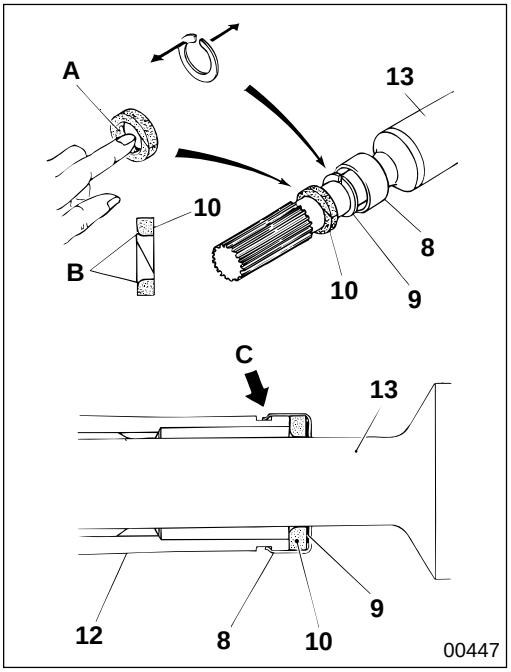

8 to **10** **Assembly of dust cap, retainer and cork seal**

- Insert dust cap **8** into rear propeller shaft **13** and expand retainer **9** carefully to mount it on the propeller shaft. Then, release the retainer and allow it to return to its original shape.
- Apply grease to inner surface **A** of cork seal **10**, face its chamfered side **B** towards the spline and mount in the same way as the retainer.
- Press cork seal **10**, compressing it by 1 to 2 mm {0.039 to 0.079 in.}, against slip yoke joint **12**, then caulk area **C**.

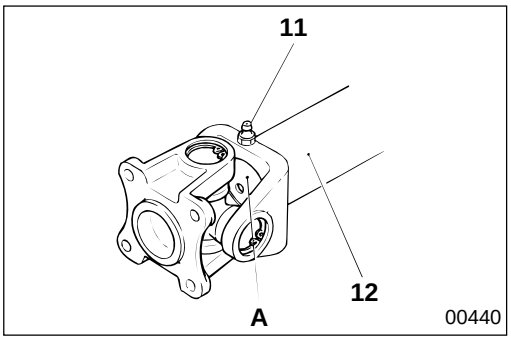

11 **Supply of grease via grease nipple**

Pack grease via grease nipple **11** until grease starts overflowing from the hole in dust plug **A** of slip yoke joint **12**.

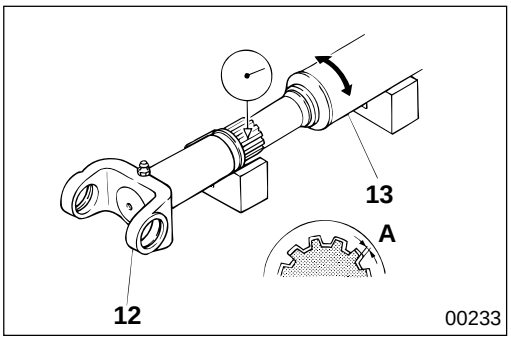

12 **13** **Play between slip yoke joint and rear propeller shaft spline in rotating direction**

Measure play **A** in the rotation direction between slip yoke joint **12** and rear propeller shaft **13** at the spline area. If the measured value is higher than the limit, replace the faulty parts.

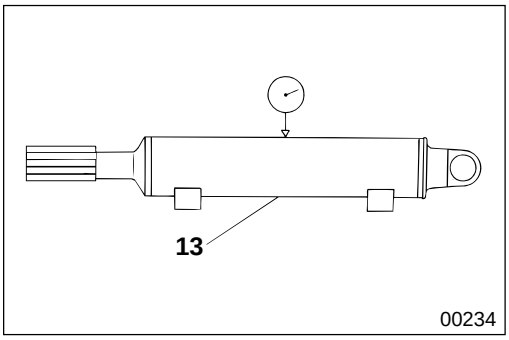

13 **Bend of rear propeller shaft**

Measure bend of rear propeller shaft **13** at its center. If the measured value is higher than the limit, correct or replace it.

CAUTION

Be sure to check for cracks at the welded area after straightening has been done by means of a press.

NOTE

To measure the bend of rear propeller shaft 13, turn it one full revolution and read the dial gauge indicator. The bend is one half of the indicated value.

REAR PROPELLER SHAFT < P10 >

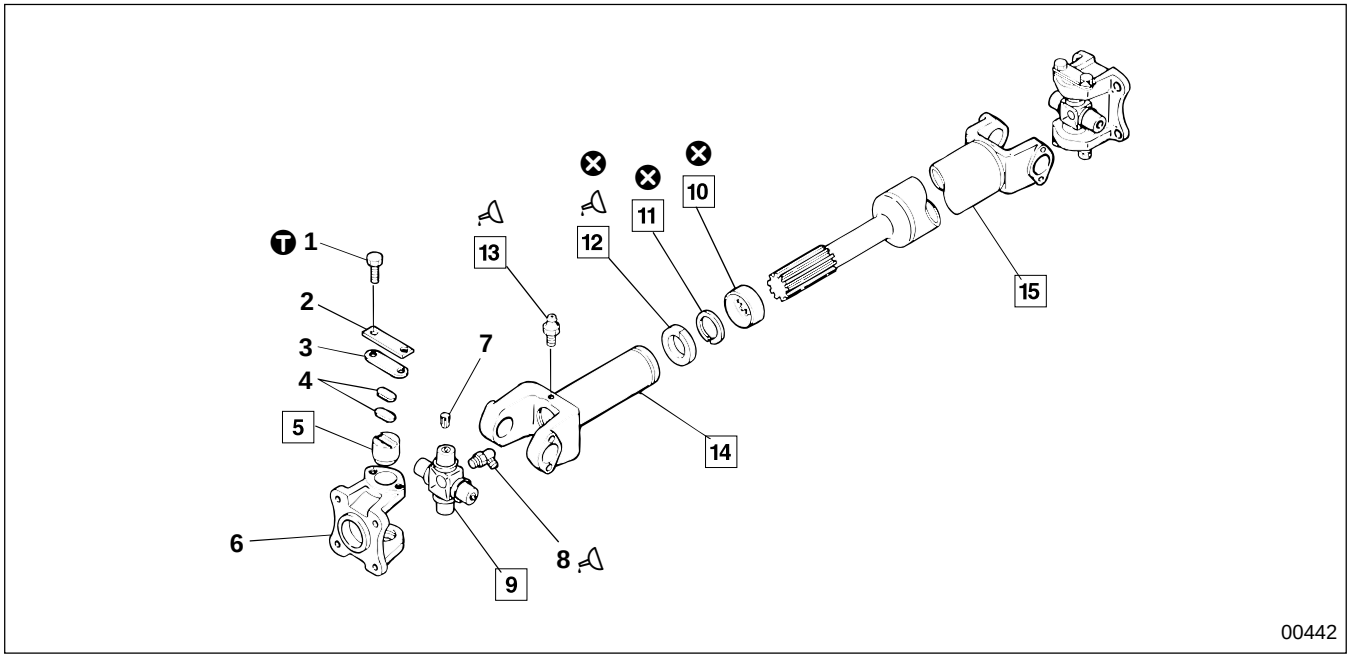

● **Inspection before disassembly**

P25-15

● **Disassembly sequence**

1 Bolt
2 Lock plate
3 Bearing case retainer
4 Shim
5 Needle bearing
6 Flange yoke
7 Grease keeper
8 Grease nipple
9 Spider
10 Dust cap
11 Retainer
12 Cork seal
13 Grease nipple
14 Slip yoke joint
15 Rear propeller shaft

⊗ : Non-reusable parts

● **Assembly sequence**

Follow the disassembly sequence in reverse.

Repair kit : Universal joint spider kit

Service standards

Unit : mm {in.}

Location	Maintenance item	Standard value (Basic diameter in [ ])	Limit	Remedy
1 to 9	Clearance of spider in axial direction	0 to 0.15 {0 to 0.0059}	—	Adjust
5, 9	Clearance between needle bearing and spider	[30.494] 0.02 to 0.08 {[1.20] 0.00079 to 0.0031}	0.2 {0.0079}	Replace
14, 15	Play to revolving direction between slip yoke joint and rear propeller shaft	0.07 to 0.18 {0.0028 to 0.0071}	0.3 {0.012}	Replace
15	Bend of rear propeller shaft (Center)	—	0.6 {0.024}	Correct or replace

Ⓣ Tightening torque

Unit : N·m {lbf.ft, kgf·m}

Location	Parts to be tightened	Tightening torque	Remarks
1	Bolt (Needle bearing mounting)	18 to 26 {13 to 20, 1.8 to 2.7}	—

Lubricant

Location	Points of application	Kinds	Quantity
8	Supply via grease nipple	Wheel bearing grease [NLGI No.2 (Li soap)]	Pack until grease overflows from spider dust cover
12	Inner surface of cork seal	Wheel bearing grease [NLGI No.2 (Li soap)]	As required
13	Supply via grease nipple	Wheel bearing grease [NLGI No.2 (Li soap)]	Pack until grease overflows from dust plug hole

Special tools

Unit : mm {in.}

Location	Tool name and shape	Part No.	Application
5	Spider assembly rest A 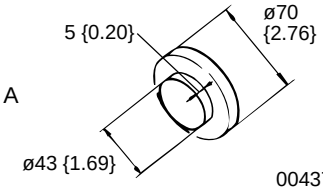	03724-13000	Press-fitting of needle bearing
6	Spider assembly rest B 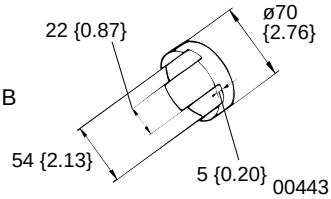	03724-14000	Press-fitting of needle bearing

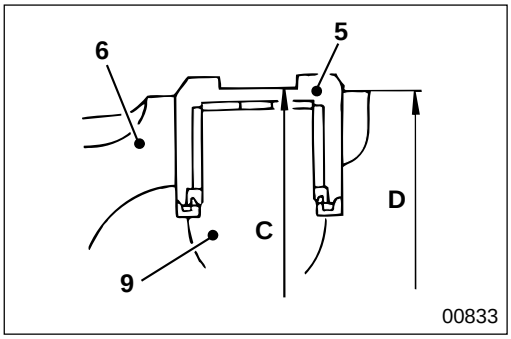

◆ Service procedure

● Inspection before disassembly

Clearance in axial direction for spider

Measure the clearance of needle bearing **5** (shim adjustment clearance = **D** – **C**). If the measured value is higher than the standard value, adjust it by changing the thickness of shim **4**.

- Available shim thicknesses

Part name	Thickness
Shim A	0.1 mm {0.0039 in.}
Shim B	0.2 mm {0.0079 in.}

CAUTION

Make sure that shim 4 does not protrude above the surface of flange yoke 6 or needle bearing 5 will seize up.

NOTE

For shim 4, it is recommended that you use shims with the same thickness on both ends to ensure balanced revolution.

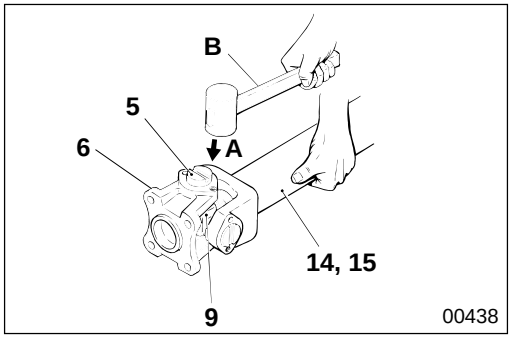

5 Needle bearing

[Removal]

- Put alignment marks on needle bearing **5** and spider **9**.
- Put alignment marks across flange yoke **6**, slip yoke joint **14** and rear propeller shaft **15**.
- Hit the yoke lightly at shoulder area **A** so that needle bearing **5** bounces out due to reaction.
  B : Mallet

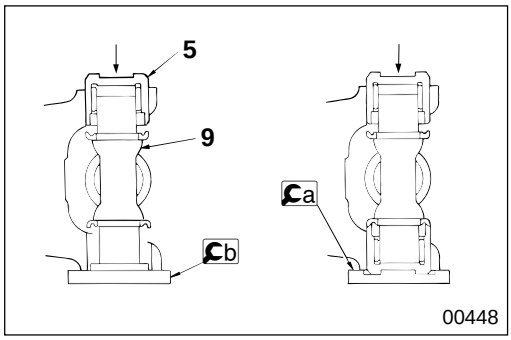

[Installation]

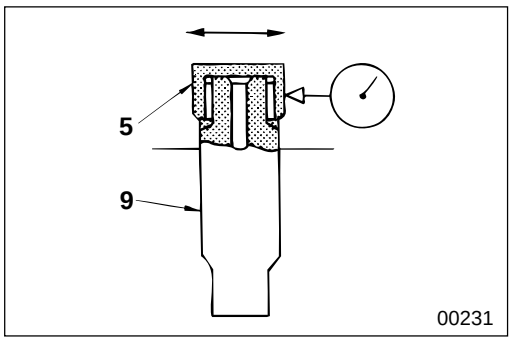

5 **9** **Clearance between needle bearing and spider**

Measure the play towards the diameter direction between needle bearing **5** and spider **9**. If the measured value is higher than the limit, replace with universal joint spider kit.

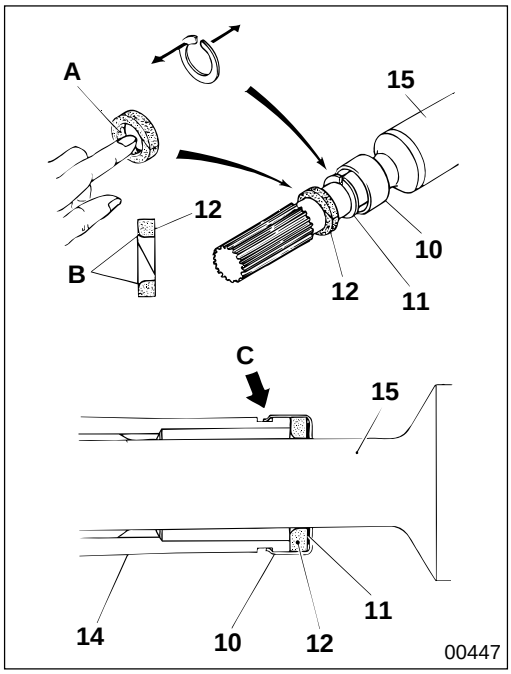

10 **to** **12** **Assembly of dust cap, retainer and cork seal**

- Insert dust cap **10** into rear propeller shaft **15** and expand retainer **11** carefully to mount it on the propeller shaft. Then, release the retainer and allow it to return to its original shape.
- Apply grease to inner surface **A** of cork seal **12**, face its chamfered side **B** towards the spline and mount in the same way as the retainer.
- Press cork seal **12**, compressing it by 1 to 2 mm {0.039 to 0.079 in.}, against slip yoke joint **14**, then caulk pawl area **C**.

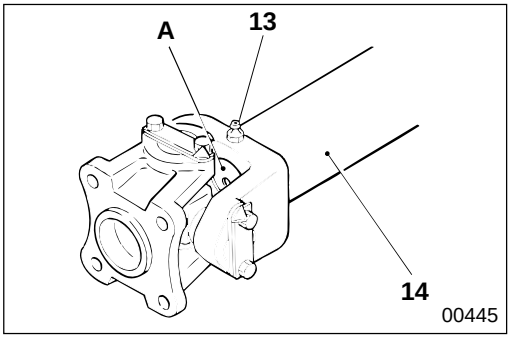

13 **Supply of grease via grease nipple**

Pack grease via grease nipple **13** until grease starts overflowing from the hole in dust plug **A** of slip yoke joint **14**.

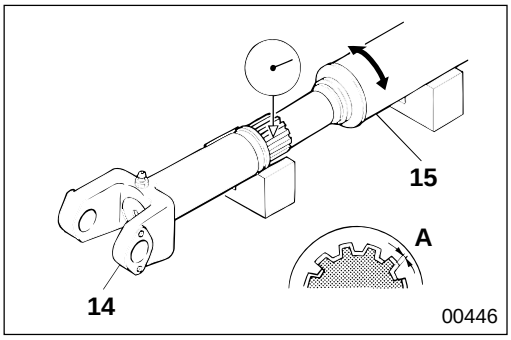

14 **15** **Play between slip yoke joint and rear propeller shaft spline in rotating direction**

Measure play **A** in the rotation direction between slip yoke joint **14** and rear propeller shaft **15** at the spline area. If the measured value is higher than the limit, replace the faulty parts.

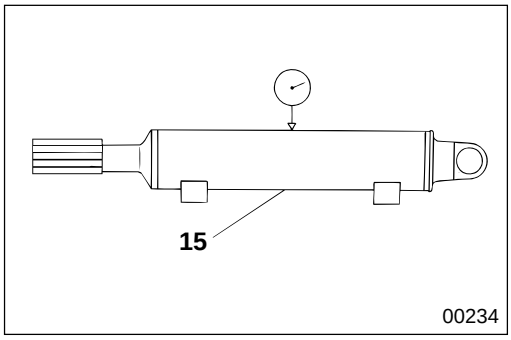

15 **Bend of rear propeller shaft**

Measure bend of rear propeller shaft **15** at its center. If the measured value is higher than the limit, correct or replace it.

CAUTION

Be sure to check for cracks at the welded area after straightening has been done by means of a press.

NOTE

To measure the bend of rear propeller shaft 15, turn it one full revolution and read the dial gauge indicator. The bend is one half of the indicated value.

FRONT PROPELLER SHAFT < P4 >

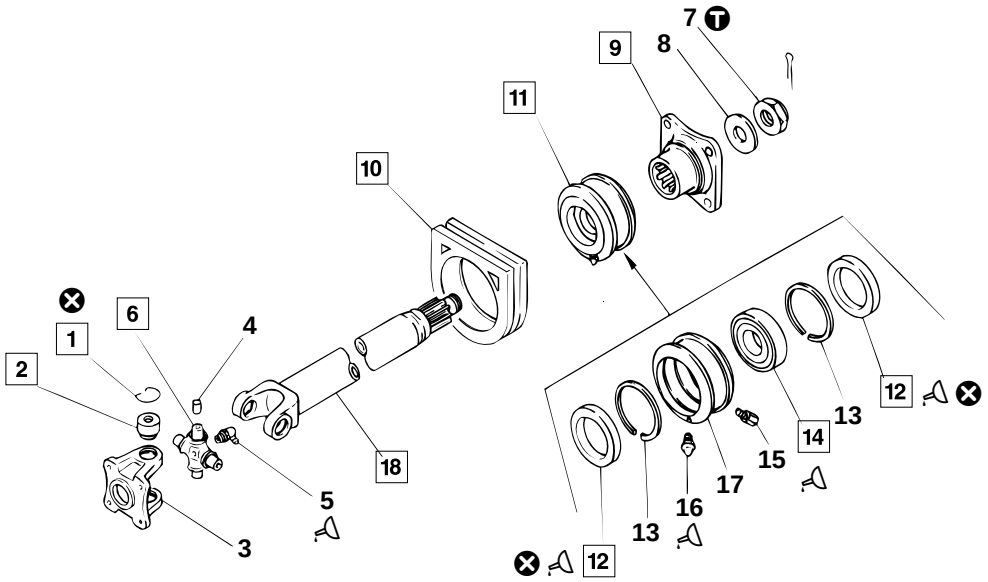

● **Inspection before disassembly**

P25-19

● **Disassembly sequence**

1 Snap ring
2 Needle bearing
3 Flange yoke
4 Grease keeper
5 Grease nipple
6 Spider
7 Nut
8 Washer
9 Companion flange
10 Cushion rubber
11 Center bearing
12 Oil seal
13 Snap ring
14 Center bearing
15 Relief valve
16 Grease nipple
17 Center bearing case
18 Front propeller shaft

⊗ : Non-reusable parts

● **Assembly sequence**

Follow the disassembly sequence in reverse.

Repair kit : Universal joint spider kit

Service standards

Unit : mm {in.}

Location	Maintenance item	Standard value (Basic diameter in [ ])	Limit	Remedy
1 to 6	Clearance of spider in axial direction	0 to 0.25 {0 to 0.0098}	—	Adjust
2, 6	Clearance between needle bearing and spider	[26.7] 0.02 to 0.07 {[1.05] 0.00079 to 0.0028}	0.2 {0.0079}	Replace
18	Bend of front propeller shaft (Center)	—	0.6 {0.024}	Correct or replace

Ⓣ Tightening torque

Unit : N·m {lbf.ft, kgf·m}

Location	Parts to be tightened	Tightening torque	Remarks
7	Nut (Companion flange mounting)	200 to 340 {145 to 255, 20 to 35}	—

Lubricant

Location	Points of application	Kinds	Quantity
5	Supply via grease nipple	Wheel bearing grease [NLGI No.2 (Li soap)]	Pack until grease overflows from spider dust cover
12	Lip area of oil seal	Wheel bearing grease [NLGI No.2 (Li soap)]	As required
14	Pack area of center bearing assembly that houses ball bearings	Wheel bearing grease [NLGI No.2 (Li soap)]	As required
16	Supply via grease nipple	Wheel bearing grease [NLGI No.2 (Li soap)]	Pack until grease overflows from relief valve

Special tools

Unit : mm

Location	Tool name and shape	Part No.	Application
1	Snap ring expander 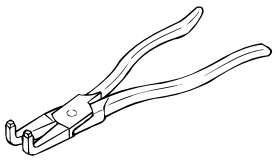 00227	MH061001	Removal and installation of snap ring
9	Flange puller 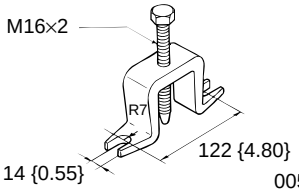 00552	MC881524	Removal of companion flange
17	Gear puller 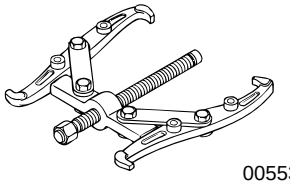 00553	MH061102	Removal of center bearing

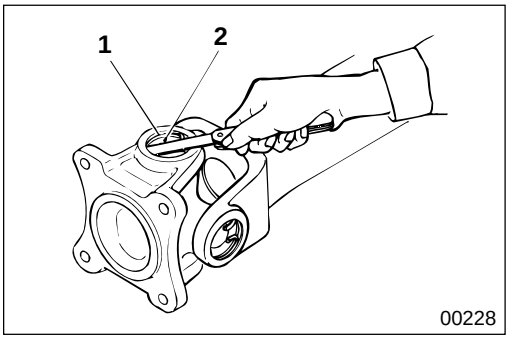

00228

◆ Service procedure

● **Inspection before disassembly**

Clearance in axial direction for spider

Press needle bearing **2** downward firmly, and measure the clearance between snap ring **1** and the needle bearing. If the measured value is higher than the standard value, adjust it by changing the thickness of the snap ring.

- Available snap ring thicknesses

Part name	Thickness	Identification color
Snap ring A	2.5mm {0.098 in.}	Green
Snap ring B	2.6mm {0.10 in.}	Red

NOTE

For snap ring 1, it is recommended that you use rings with the same thickness on both ends to ensure balanced revolution.

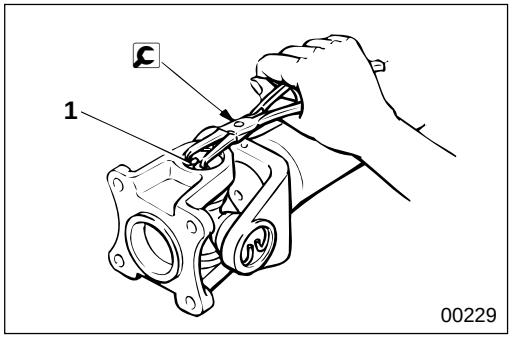

1 **Removal and installation of snap ring**

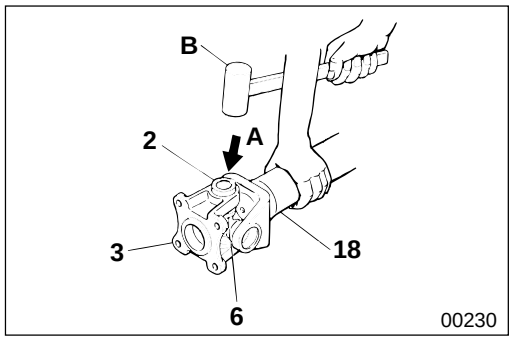

2 **Removal of needle bearing**

- Put alignment marks on needle bearing **2** and spider **6**.
- Put alignment marks across flange yoke **3** and front propeller shaft **18**.
- Hit the yoke lightly at shoulder area **A** so that needle bearing **2** bounces out due to reaction.
  B : Mallet

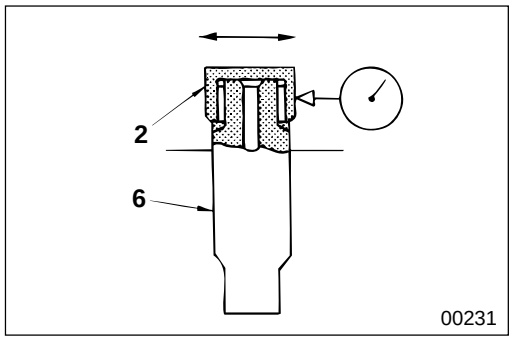

2 **6** **Clearance between needle bearing and spider**

Measure the play towards the diameter direction between needle bearing **2** and spider **6**. If the measured value is higher than the limit, replace with universal joint spider kit.

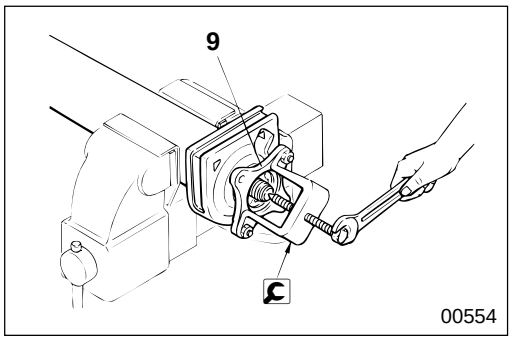

9 **Removal of companion flange**

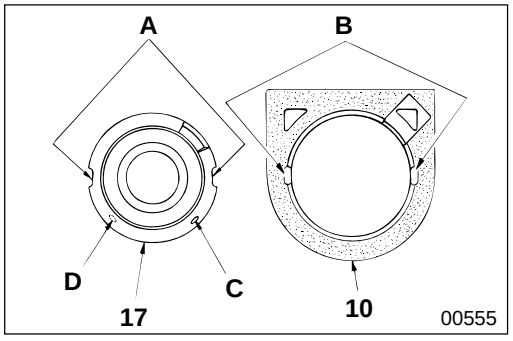

10 **Installation of cushion rubber**

- Align part **A** of center bearing case **17** with part **B** of cushion rubber **10**, and fit them together. If it is difficult to fit them together, use some soap water to make the job easier.
- Assemble center bearing case **17** so that grease nipple mounting hole **D** faces downward.

  C : Relief valve mounting hole
  D : Grease nipple mounting hole

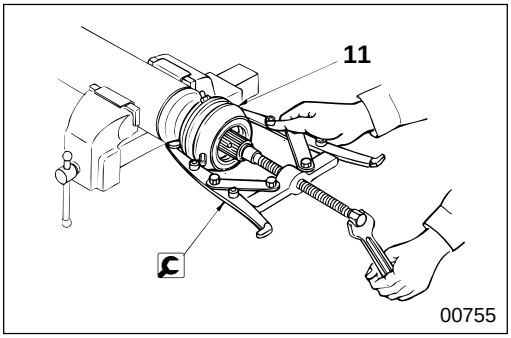

11 **Removal of center bearing housing**

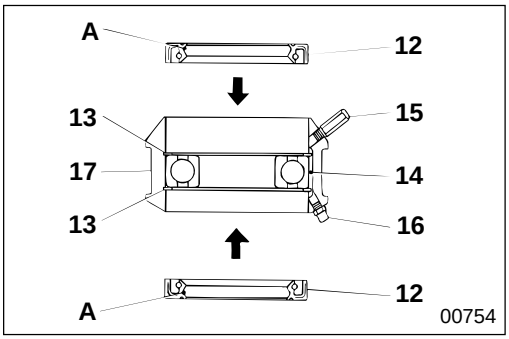

12 **Installation of oil seal**

- Apply grease to lip area **A** of oil seal **12** and install in the direction as illustrated.
- Install oil seal **12** flush with the end of center bearing case **17**.

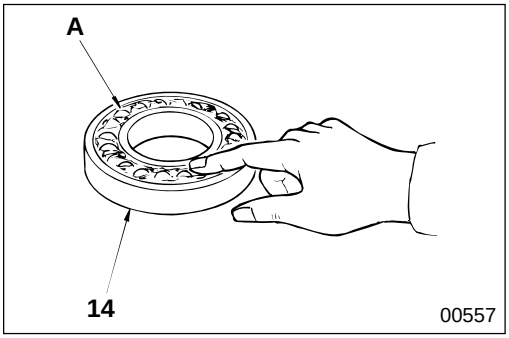

14 **Packing grease in center bearing**

Pack grease into the area that houses ball bearings **A** of center bearing **14**.

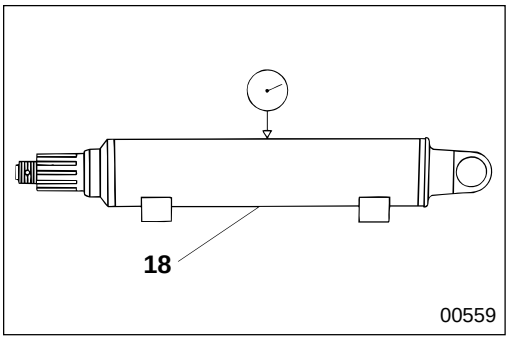

18 **Bend of front propeller shaft**

Measure bend of front propeller shaft **18** at its center. If the measured value is higher than the limit, correct or replace it.

CAUTION

Be sure to check for cracks at the welded area after straightening has been done by means of a press.

NOTE

To measure the bend of front propeller shaft 18, turn it one full revolution and read the dial gauge indicator. The bend is one half of the indicated value.

FRONT PROPELLER SHAFT < P8 >

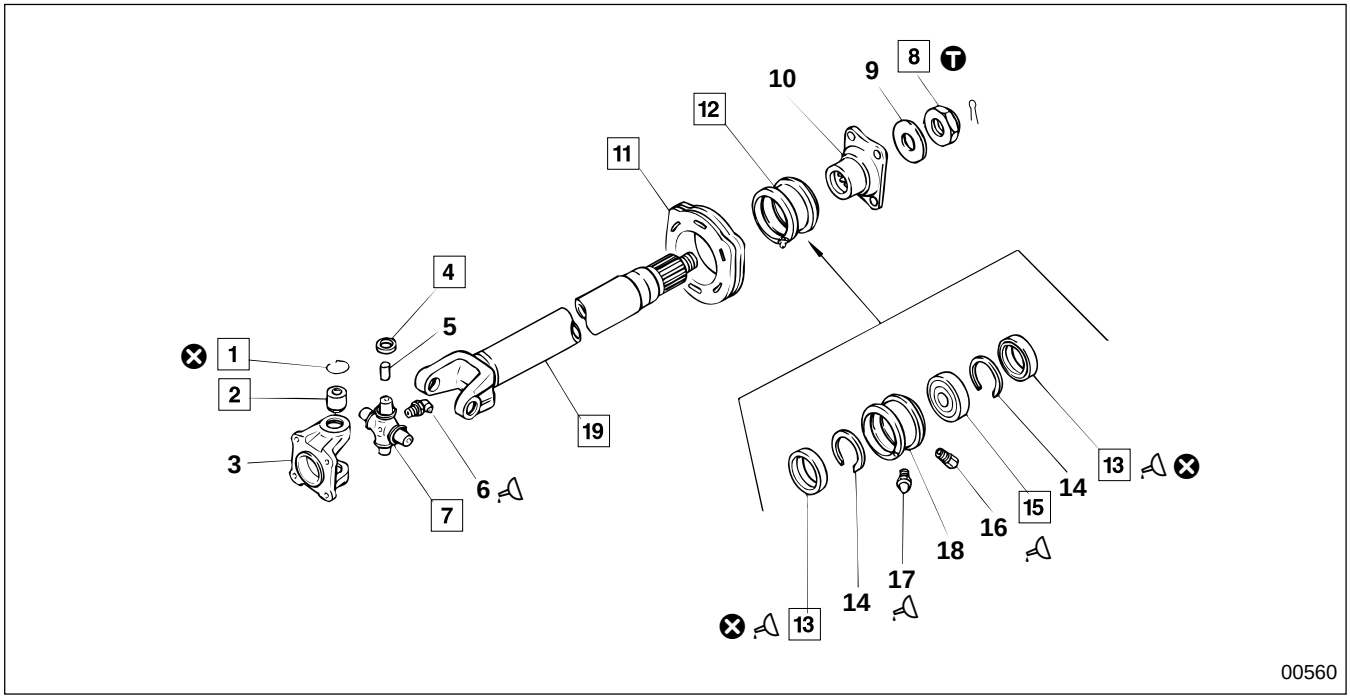

● **Inspection before disassembly**

P25-24

● **Disassembly sequence**

1 Snap ring
2 Needle bearing
3 Flange yoke
4 Dust seal
5 Grease keeper
6 Grease nipple
7 Spider
8 Nut
9 Washer
10 Companion flange
11 Cushion rubber
12 Center bearing assembly
13 Oil seal
14 Snap ring
15 Center bearing
16 Relief valve
17 Grease nipple
18 Center bearing case
19 Front propeller shaft

⊗ : Non-reusable parts

● **Assembly sequence**

Follow the disassembly sequence in reverse.
Repair kit : Universal joint spider kit

Service standards

Unit : mm {in.}

Location	Maintenance item	Standard value (Basic diameter in [ ])	Limit	Remedy
1 to 7	Clearance of spider in axial direction	0 to 0.15 {0 to 0.0059}	—	Adjust
2, 7	Clearance between needle bearing and spider	[28.56] 0.02 to 0.07 {[1.12] 0.00079 to 0.0028}	0.2 {0.0079}	Replace
19	Bend of front propeller shaft (Center)	—	0.6 {0.024}	Correct or replace

Ⓣ Tightening torque

Unit : N·m {lbf.ft, kgf·m}

Location	Parts to be tightened	Tightening torque	Remarks
8	Nut (Companion flange mounting)	640 {470, 65}	—

Lubricant

Location	Points of application	Kinds	Quantity
6	Supply via grease nipple	Wheel bearing grease [NLGI No.2 (Li soap)]	Pack until grease overflows from spider dust seal
13	Lip area of oil seal	Wheel bearing grease [NLGI No.2 (Li soap)]	As required
15	Pack area of center bearing assembly that houses ball bearings	Wheel bearing grease [NLGI No.2 (Li soap)]	As required
17	Supply via grease nipple	Wheel bearing grease [NLGI No.2 (Li soap)]	Pack until grease overflows from relief valve

Special tools

Unit : mm {in.}

Location	Tool name and shape	Part No.	Application
1	Snap ring expander 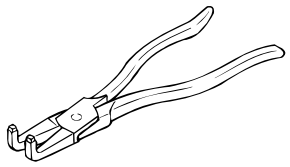 00227	MH061001	Removal and installation of snap ring
4	Dust seal installer 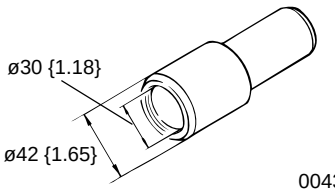 00436	03724-04000	Press-fitting of spider dust seal
4	Spider assembly rest A 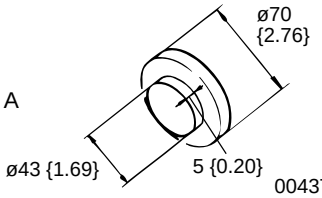 00437	03724-13000	Press-fitting of spider dust seal
8	Socket wrench 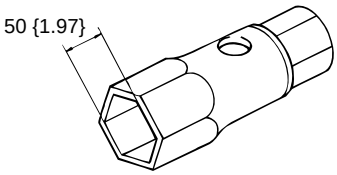 00561	44490-44101	Removal and installation of companion flange nut (Commercially available equivalent can be used)
12	Gear puller 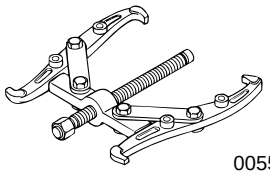 00553	MH061102	Removal of center bearing assembly

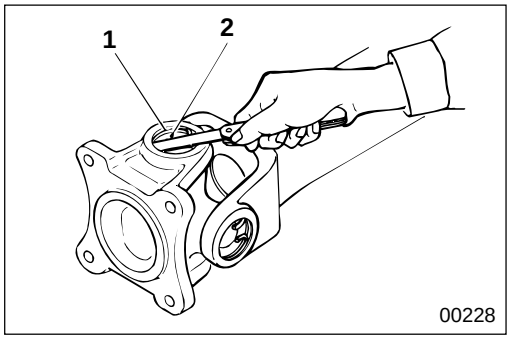

◆ Service procedure

● **Inspection before disassembly**

Clearance in axial direction for spider

Press needle bearing **2** downward firmly, and measure the clearance between snap ring **1** and the needle bearing. If the measured value is higher than the standard value, adjust it by changing the thickness of the snap ring.

- Available snap ring thicknesses

Part name	Thickness	Identification color
Snap ring A	3 mm {0.118 in.}	Green
Snap ring B	3.05 mm {0.120 in.}	White
Snap ring C	3.1 mm {0.122 in.}	Red
Snap ring D	3.15 mm {0.124 in.}	Blue
Snap ring E	3.2 mm {0.126 in.}	Yellow

NOTE

For snap ring 1, it is recommended that you use rings with the same thickness on both ends to ensure balanced revolution.

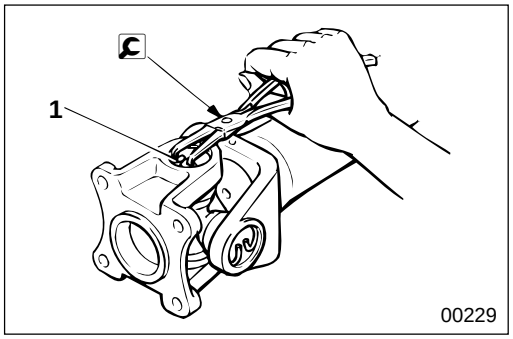

1 **Removal and installation of snap ring**

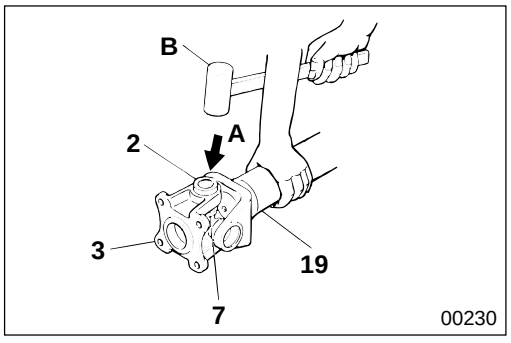

2 **Removal of needle bearing**

- Put alignment marks on needle bearing **2** and spider **7**.
- Put alignment marks across flange yoke **3** and front propeller shaft **19**.
- Hit the yoke lightly at shoulder area **A** so that needle bearing **2** bounces out due to reaction.

  B : Mallet

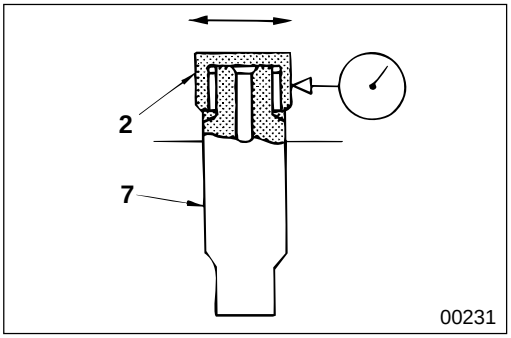

2 **7** **Clearance between needle bearing and spider**

Measure the play towards the diameter direction between needle bearing **2** and spider **7**. If the measured value is higher than the limit, replace with universal joint spider kit.

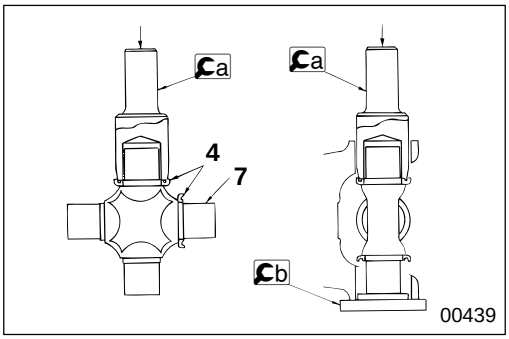

4 **Mounting of dust seal**

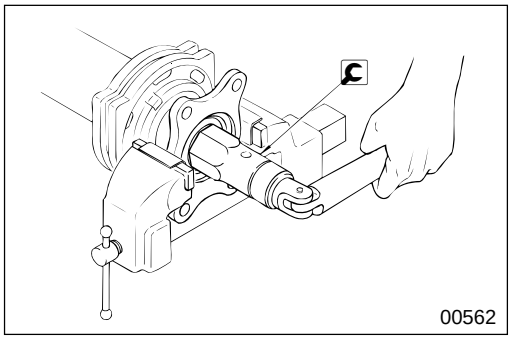

8 **Removal and installation of nut**

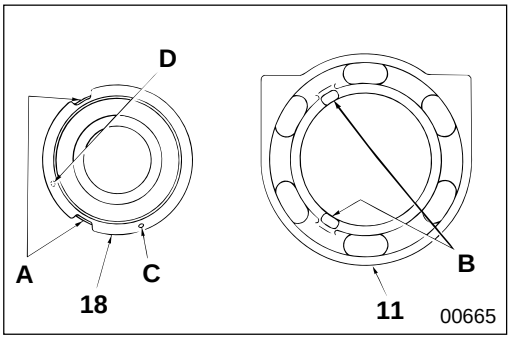

11 **Installation of cushion rubber**

- Align part **A** of center bearing case **18** with part **B** of cushion rubber **11**, and fit them together. If it is difficult to fit them together, use some soap water to make the job easier.
- Assemble center bearing case **18** so that grease nipple mounting hole **D** faces downward.

C : Relief valve mounting hole
D : Grease nipple mounting hole

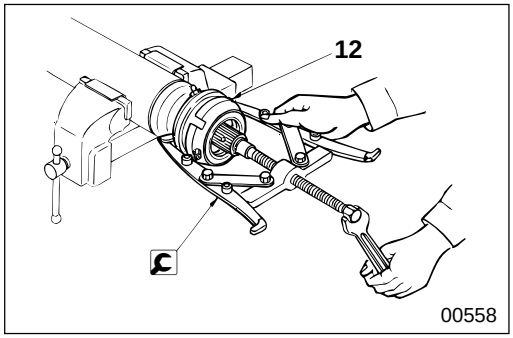

12 **Removal of center bearing housing**

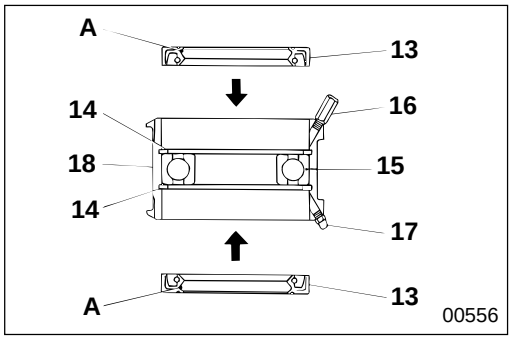

13 **Installation of oil seal**

- Apply grease to lip area **A** of oil seal **13** and install in the direction as illustrated.
- Install oil seal **13** flush with the end of center bearing case **18**.

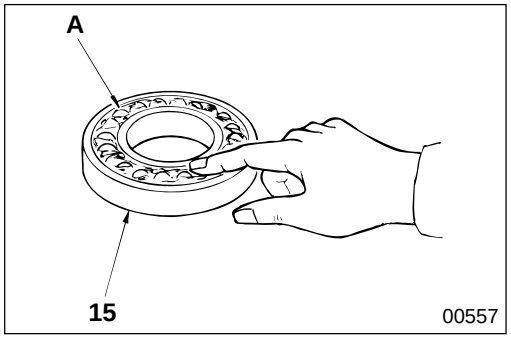

15 **Packing grease in center bearing**

Pack grease into the area that houses ball bearings **A** of center bearing **15**.

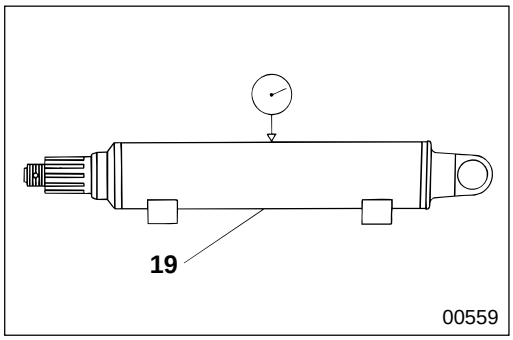

19 **Bend of front propeller shaft**

Measure bend of front propeller shaft **19** at its center. If the measured value is higher than the limit, correct or replace it.

CAUTION

Be sure to check for cracks at the welded area after straightening has been done by means of a press.

NOTE

To measure the bend of front propeller shaft 19, turn it one full revolution and read the dial gauge indicator. The bend is one half of the indicated value.

M E M O

FRONT PROPELLER SHAFT < P10 >

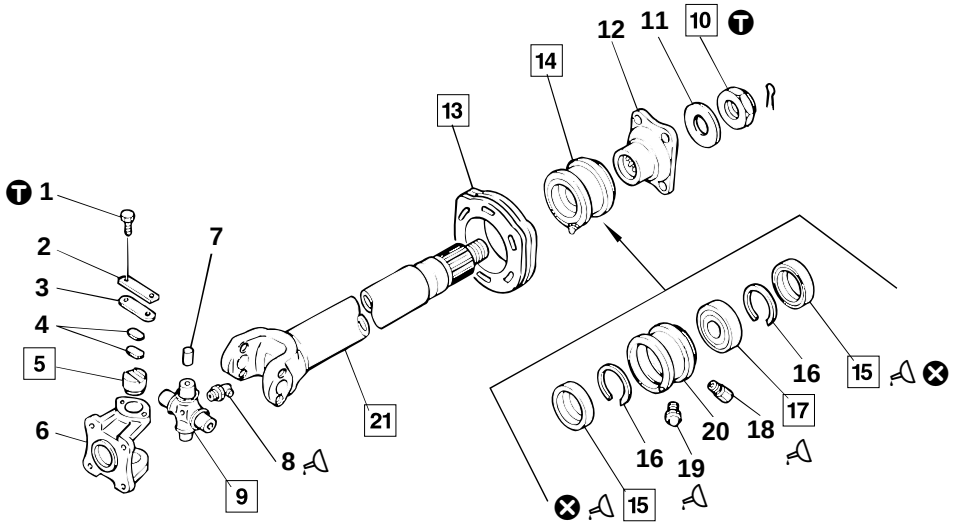

● **Inspection before disassembly**

P25-30

● **Disassembly sequence**

1 Bolt
2 Lock plate
3 Bearing case retainer
4 Shim
5 Needle bearing
6 Flange yoke
7 Grease keeper
8 Grease nipple
9 Spider
10 Nut
11 Washer
12 Companion flange
13 Cushion rubber
14 Center bearing assembly
15 Oil seal
16 Snap ring
17 Center bearing
18 Relief valve
19 Grease nipple
20 Center bearing case
21 Front propeller shaft

⊗ : Non-reusable parts

● **Assembly sequence**

Follow the disassembly sequence in reverse.
Repair kit : Universal joint spider kit

Service standards

Unit : mm {in.}

Location	Maintenance item	Standard value (Basic diameter in [ ])	Limit	Remedy
1 to 7	Clearance of spider in axial direction	0 to 0.15 {0 to 0.0059}	—	Adjust
5, 9	Clearance between needle bearing and spider	[30.494] 0.02 to 0.08 {[1.20] 0.00079 to 0.0031}	0.2 {0.0079}	Replace
21	Bend of front propeller shaft (Center)	—	0.6 {0.024}	Correct or replace

Ⓣ Tightening torque

Unit : N·m {lbf.ft, kgf·m}

Location	Parts to be tightened	Tightening torque	Remarks
1	Bolt (Needle bearing mounting)	18 to 26 {13 to 20, 1.8 to 2.7}	—
10	Nut (Companion flange mounting)	640 {470, 65}	—

Lubricant

Location	Points of application	Kinds	Quantity
8	Supply via grease nipple	Wheel bearing grease [NLGI No.2 (Li soap)]	Pack until grease overflows from spider dust cover
15	Lip area of oil seal	Wheel bearing grease [NLGI No.2 (Li soap)]	As required
17	Pack area of center bearing assembly that houses ball bearings	Wheel bearing grease [NLGI No.2 (Li soap)]	As required
19	Supply via grease nipple	Wheel bearing grease [NLGI No.2 (Li soap)]	Pack until grease overflows from relief valve

Special tools

Unit : mm {in.}

Location	Tool name and shape	Part No.	Application
5	Spider assembly rest A 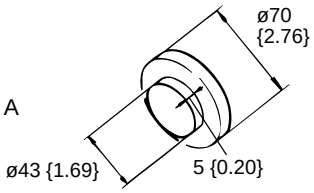	03724-13000	Press-fitting of needle bearing
5	Spider assembly rest B 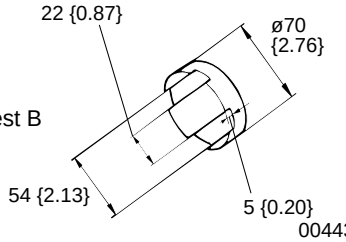	03724-14000	Press-fitting of needle bearing
10	Socket wrench 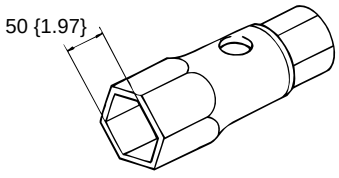	44490-44101	Removal and installation of companion flange nut (Commercially available equivalent can be used)
20	Gear puller 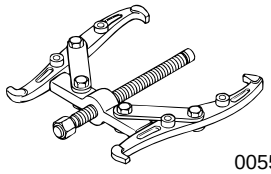	MH061102	Removal of center bearing assembly

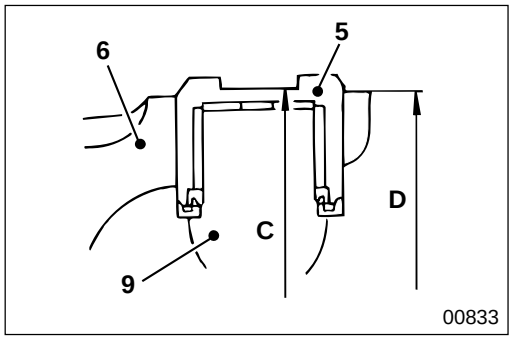

◆ Service procedure

● Inspection before disassembly

Clearance in axial direction for spider

Measure the clearance of needle bearing **5** (shim adjustment clearance = **D** – **C**). If the measured value is higher than the standard value, adjust it by changing the thickness of shim **4**.

- Available shim thicknesses

Part name	Thickness
Shim A	0.1 mm {0.0039 in.}
Shim B	0.2 mm {0.0079 in.}

CAUTION⚠

Make sure that shim 4 does not protrude above the surface of flange yoke 6 or needle bearing 5 will seize up.

NOTE

For shim 4, it is recommended that you use shims with the same thickness on both ends to ensure balanced revolution.

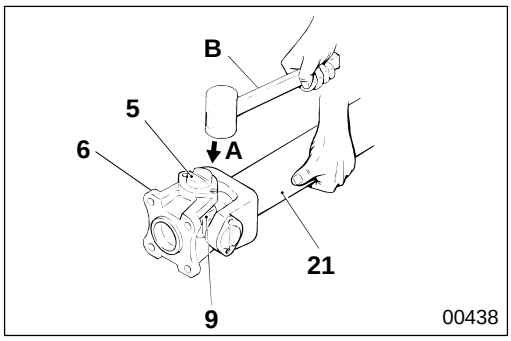

5 **Needle bearing**

[Removal]

- Put alignment marks on needle bearing **5** and spider **9**.
- Put alignment marks across flange yoke **6** and front propeller shaft **21**.
- Hit the yoke lightly at shoulder area **A** so that needle bearing **5** bounces out due to reaction.
  B : Mallet

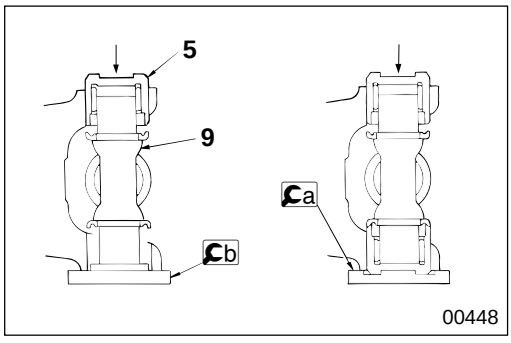

[Installation]

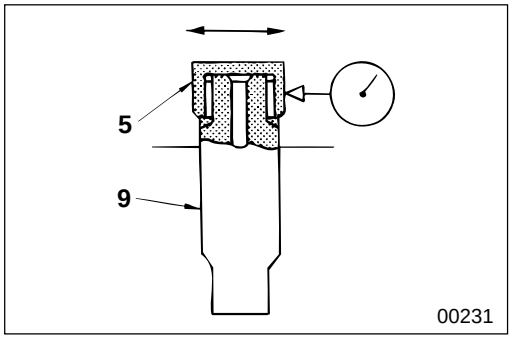

5 **9** **Clearance between needle bearing and spider**

Measure the play towards the diameter direction between needle bearing **5** and spider **9**. If the measured value is higher than the limit, replace with universal joint spider kit.

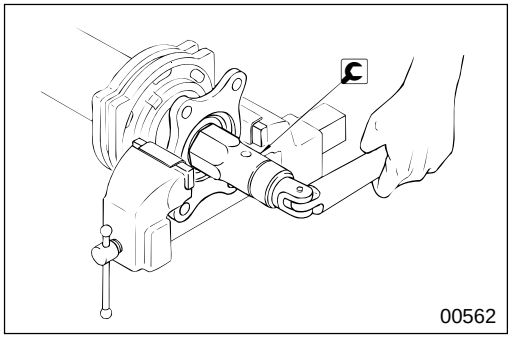

10 Removal and installation of nut

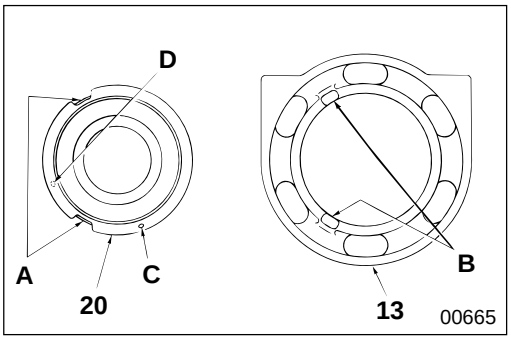

13 Installation of cushion rubber

- Align part **A** of center bearing case **20** with part **B** of cushion rubber **13**, and fit them together. If it is difficult to fit them together, use some soap water to make the job easier.

  C : Relief valve mounting hole
  D : Grease nipple mounting hole

- Assemble center bearing case **20** so that grease nipple mounting hole **D** faces downward.

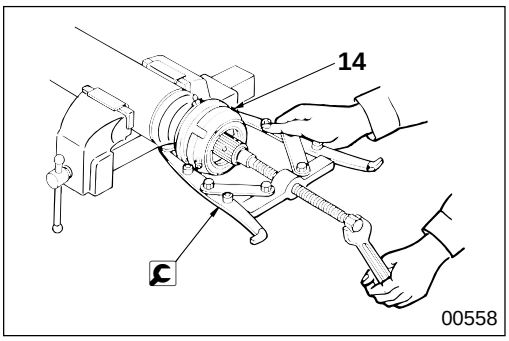

14 Removal of center bearing housing

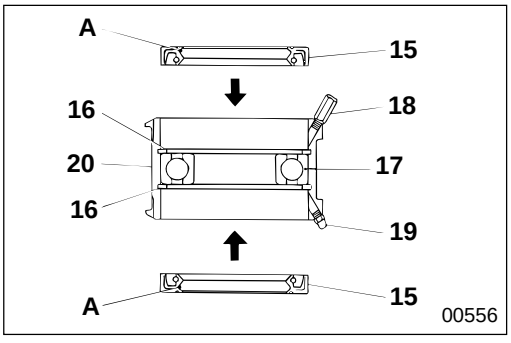

15 Installation of oil seal

- Apply grease to lip area **A** of oil seal **15** and install in the direction as illustrated.
- Install oil seal **15** flush with the end of center bearing case **20**.

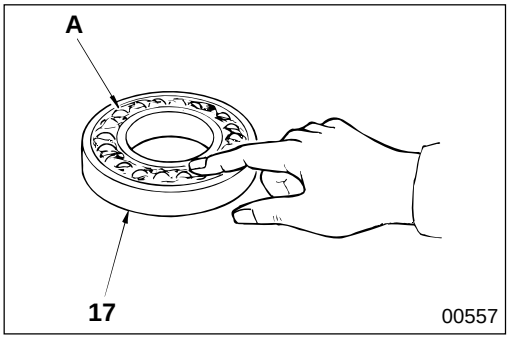

17 Packing grease in center bearing

Pack grease into the area that houses ball bearings **A** of center bearing **17**.

FRONT PROPELLER SHAFT < P10 >

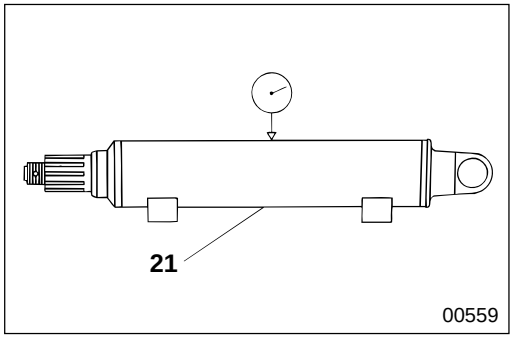

21 **Bend of front propeller shaft**

Measure bend of front propeller shaft **21** at its center. If the measured value is higher than the limit, correct or replace it.

CAUTION

Be sure to check for cracks at the welded area after straightening has been done by means of a press.

NOTE

To measure the bend of front propeller shaft 21, turn it one full revolution and read the dial gauge indicator. The bend is one half of the indicated value.

Adjustment after Assembly

(1) After any correction has been made of propeller shaft deflection, or replacement of flange yoke and universal joint, adjust the amount of balance of completed propeller shaft assembly on a balancing machine, and make adjustment by installing a balance piece(s) so that the amount comes within the permissible limit.

(2) There are two methods of correcting dynamic balance: the polar coordinate system method, and the 90-degree component force method.
Polar coordinate system method: P4, P8, P10
90-degree component force method: P10

(3) Permissible amount of unbalance
0.49 N·cm {0.0036 lbf.ft, 50 gf·cm}/1600 rpm (Pipe outer periphery)

NOTE
When adjusting a propeller shaft with a large amount of deflection, the 90-degree component force < P10 > method is preferred since this method requires a smaller number of balance pieces.

(4) Method of correction by way of polar coordination method

- Balance piece attachment point

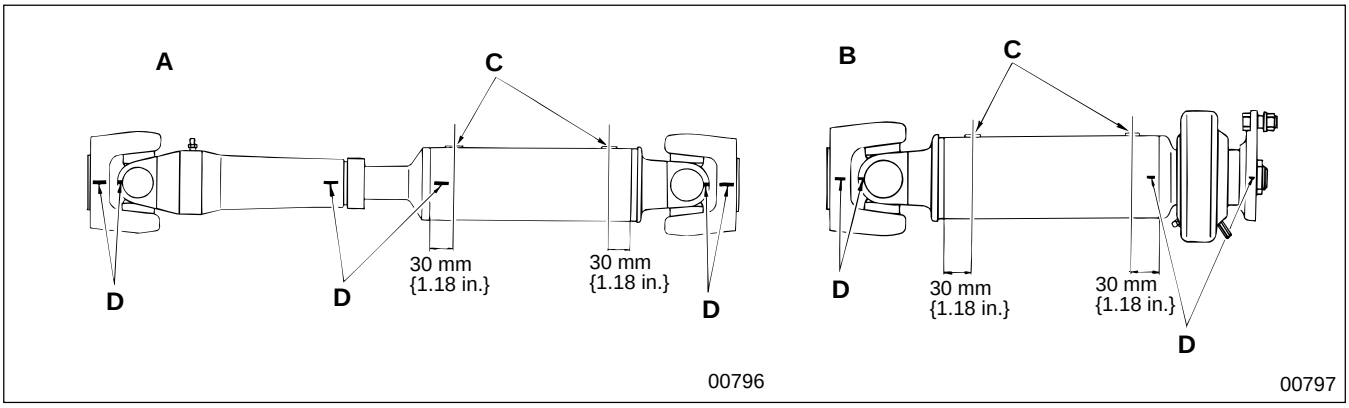

A : Rear propeller shaft
B : Front propeller shaft
C : Balance piece attachment point
D : Aligning mark

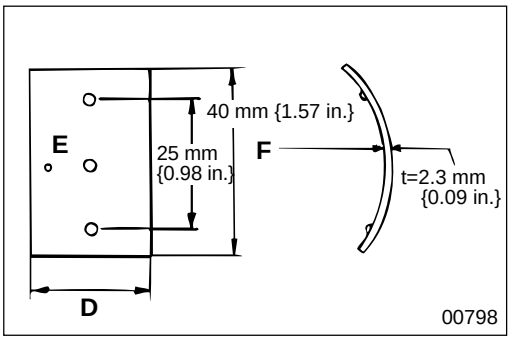

- Balance pieces available

Part name	P4	P8, P10	Mass g {oz}	Dimension D mm {in.}
Balance piece	G	G	10 {0.35}	14 {0.55}
Balance piece	A	A	20 {0.71}	28 {1.10}
Balance piece	B	B	40 {1.41}	55.7 {2.19}
Balance piece	C	C	60 {2.36}	83.5 {3.29}
Balance piece	H	—	30 {1.06}	42 {1.65}

E : Piece punch mark
F : R45 mm {1.77 in.} (R41.3 mm {1.63 in.} only for P8 and P10 balance piece G)

NOTE
- **Maximum balance piece allowed for one point is 120g {4.23 oz}.**
- **Use a combination that keeps balance pieces to the minimum.**

(5) Correction using 90-degree component force method

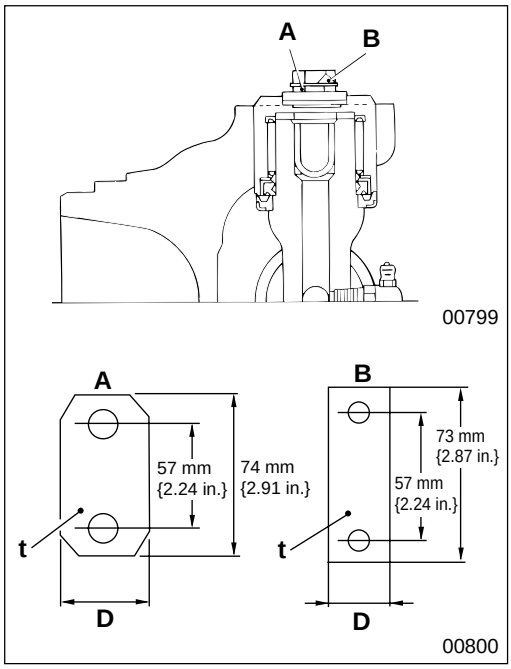

● **Installation of balance pieces**

Alignment marks are the same as for the polar coordinate system. P25-33

A : Balance piece
B : Lock plate

- Available lock plates and balance pieces

Model	Part name	Mass g {oz.}	Dimension D mm {in.}	Plate thickness t mm {in.}
P10	Lock plate	8 {0.28}	18 {0.71}	0.8 {0.031}
	Balance piece A	20 {0.71}	25 {0.98}	1.6 {0.063}
	Balance piece B	35 {1.23}	21.6 {0.85}	3.2 {0.13}
	Balance piece C	50 {1.76}	32.2 {1.27}	3.2 {0.13}

NOTE

- **Maximum balance piece allowance for one point is 120 g {4.23 oz}.**
- **Use a combination that keeps the number of balance pieces to the minimum.**

MITSUBISHI
FUSO

FK.FM
Service Manual

Group 26
Front Axle

Table of Contents

BACK

HOME

MITSUBISHI FUSO TRUCK OF AMERICA, Inc.

Pub No. TWME9503-26

GROUP 26 FRONT AXLE

SPECIFICATIONS 2

STRUCTURE AND OPERATION 2

INSPECTION AND ADJUSTMENT MOUNTED IN VEHICLE
- Adjustment of Wheel Alignment 6
- Adjustment of Steering Angle 10
- Measurement of Side Slip 10

WORK BEFORE REMOVAL AND INSTALLATION OF FRONT AXLE 11

WHEEL HUB AND BRAKE DRUM 12

FRONT AXLE, KNUCKLE AND KINGPIN < FK > 22

FRONT AXLE, KNUCKLE AND KINGPIN < FM > 28

SPECIFICATIONS

Item \ Vehicle model		FK617	FM617	FM657
Front axle Model Type		F040T	F060T I-section, reverse Elliot type	F070T
Kingpin Outer diameter × Length	mm {in.}	35×195 {1.38×7.68}	45×221 {1.77×8.70}	50×243 {1.97×9.57}
Tread	mm {in.}	1785 {70.3}	1900 {74.8} (10R22.5) 1880 {74.0} (11R22.5)	1920 {75.6}
Mass	kg {lb}	Approximately 185 {405}	Approximately 300 {660}	Approximately 360 {795}

STRUCTURE AND OPERATION

Front Axle, Knuckle and Kingpin

< FK617 >

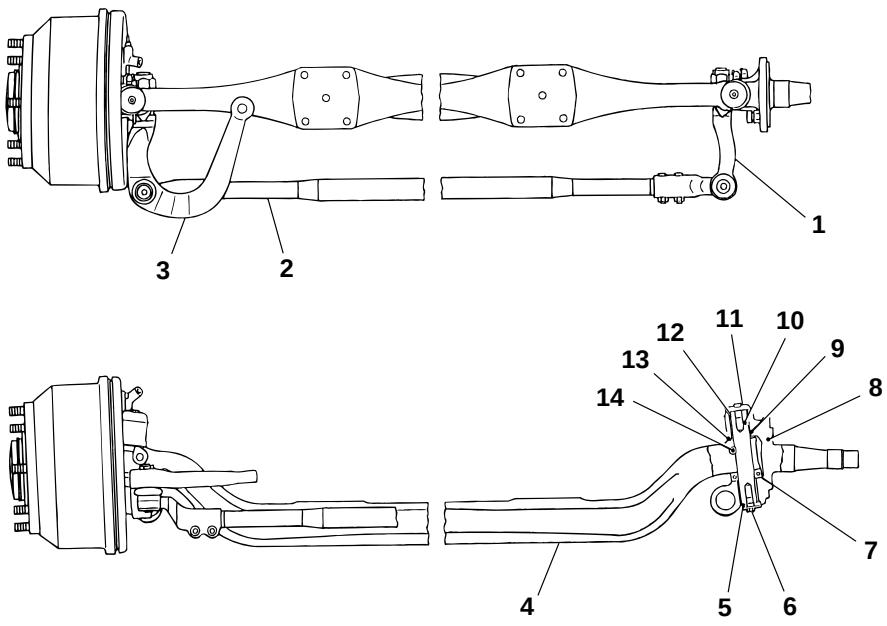

12998

1 Tie rod arm
2 Tie rod assembly
3 Knuckle arm
4 Front axle
5 Dust seal
6 Lower kingpin cover
7 Bearing
8 Knuckle
9 Oil seal
10 Kingpin
11 Kingpin cap
12 Bushing
13 Thrust washer
14 Set bolt

< FM617 >

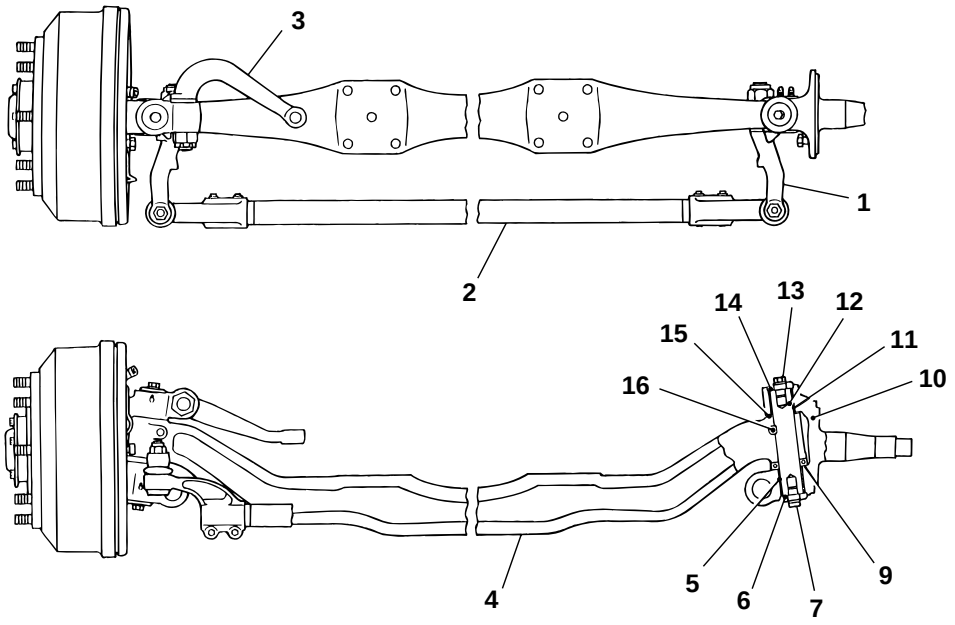

04152

< FM657 >

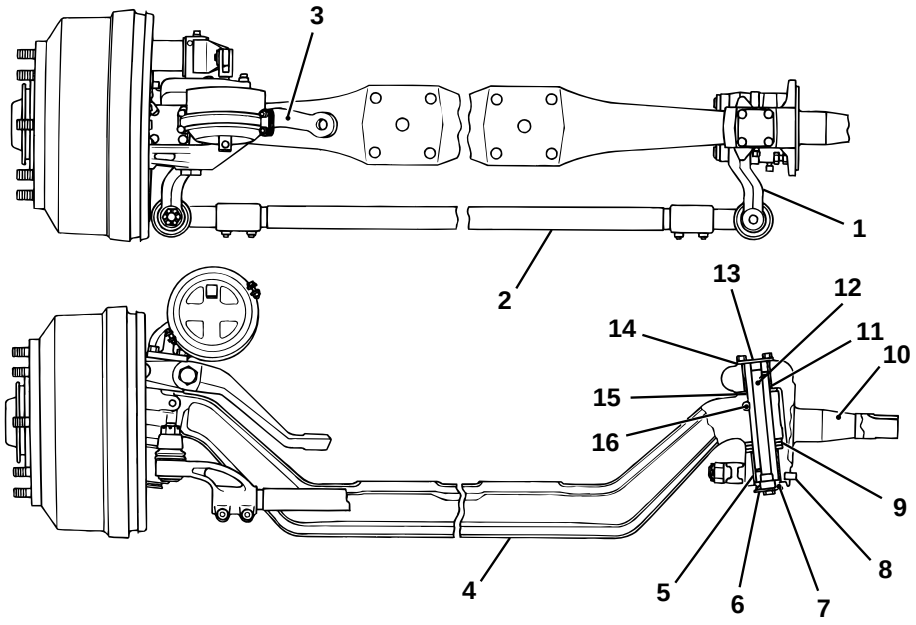

13127

1 Tie rod arm
2 Tie rod assembly
3 Knuckle arm
4 Front axle
5 Bushing
6 Dust seal
7 Lower kingpin cover
8 Knock pin < FM657 >
9 Bearing
10 Knuckle
11 Oil seal
12 Kingpin
13 Upper kingpin cover
14 Dust seal < FM617 >
Gasket < FM657 >
15 Thrust washer
16 Set bolt

Wheel Hub and Brake Drum

< FK617 >

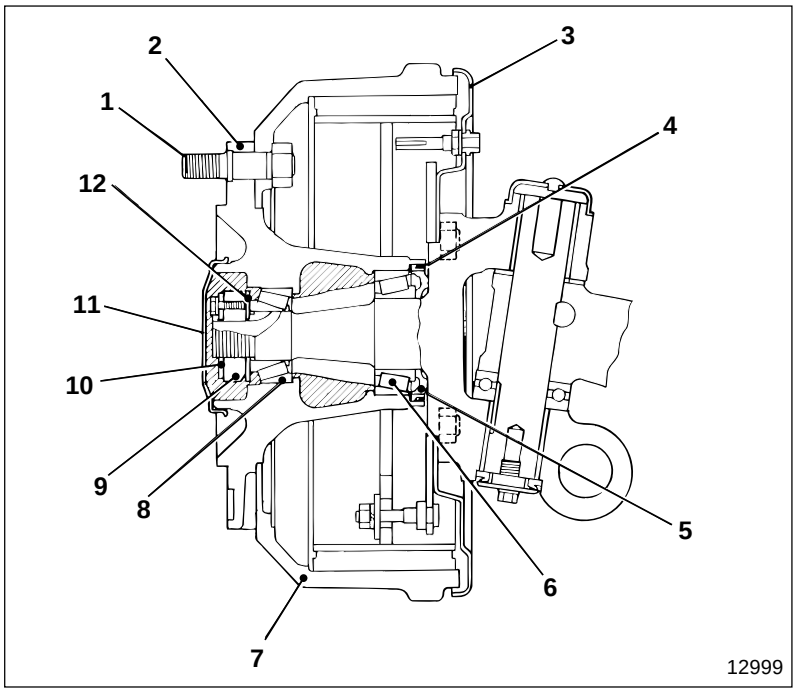

1 Hub bolt
2 Front wheel hub
3 Front brake assembly
4 Oil seal
5 Knuckle retainer
6 Inner bearing
7 Front brake drum
8 Outer bearing
9 Lock nut
10 Lock plate
11 Wheel hub cap
12 Lock washer

< FM617 >

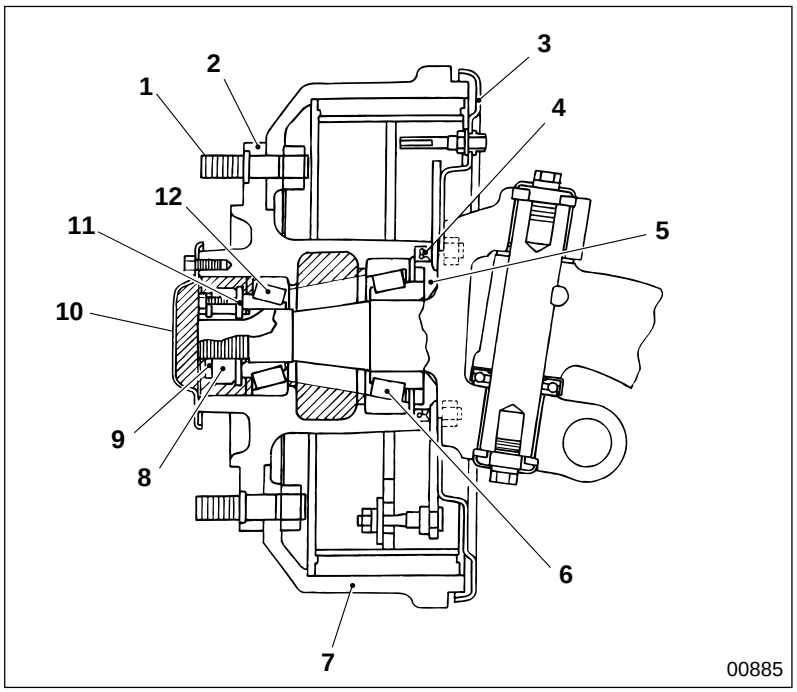

1 Hub bolt
2 Front wheel hub
3 Front brake assembly
4 Oil seal
5 Knuckle retainer
6 Inner bearing
7 Front brake drum
8 Lock nut
9 Lock plate
10 Wheel hub cover
11 Lock washer
12 Outer bearing

< FM657 >

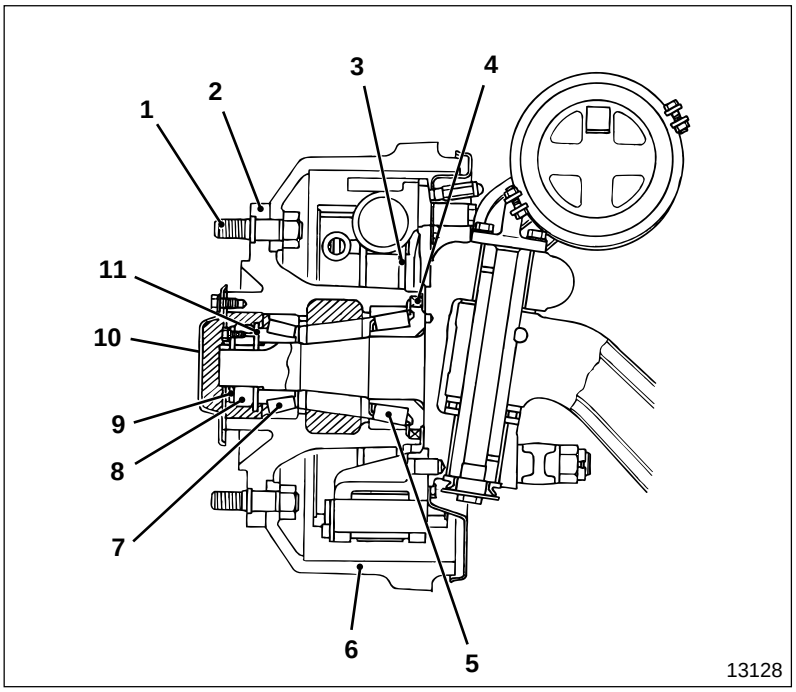

1 Hub bolt
2 Front wheel hub
3 Front brake assembly
4 Oil seal
5 Inner bearing
6 Front brake drum
7 Outer bearing
8 Lock nut
9 Lock plate
10 Wheel hub cover
11 Lock washer

INSPECTION AND ADJUSTMENT MOUNTED IN VEHICLE

Adjustment of Wheel Alignment

Service standards

Unit : mm {in.}

Location	Maintenance item			Standard value	Limit	Remedy
—	Wheel alignment	Toe-in (with tires on the ground)		0±1 {0±0.039}	—	Adjust
		Camber	FK	1°30'±1°00'	—	Adjust
			FM	1°00'±1°00'	—	Adjust
		Caster		$2°30'^{+1°30'}_{-1°00'}$	—	Adjust
		Kingpin inclination angle		7°00'	7°00'±30'	Replace

Tightening torque

Unit : N·m {lbf.ft, kgf·m}

Location	Parts to be tightened		Tightening torque	Remarks
1	Nut (Tie rod end clamp fastening)	FK	78 {58, 8}	Wet
		FM	78 {58, 8}	—

NOTE

- **Measure the wheel alignment when the vehicle is empty and level.**
- **Be sure that each part of the front axle has been serviced perfectly before adjusting the wheel alignment.**

Before adjusting the wheel alignment, check for the following faults:

- Play in front wheel hub
- Play or looseness in kingpin
- Play or looseness in the joint between the tie rod and the knuckle arm
- Looseness of any fasteners
- Fatigued or damaged leaf springs
- Incorrect tire pressure
- Incorrect power steering booster backlash

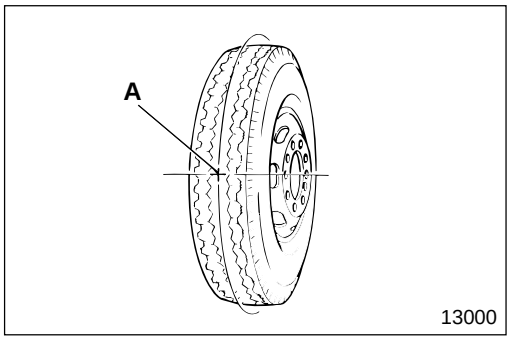

(1) Measurement and adjustment of toe-in

- Point the front wheels exactly forward.
- Put mark **A** on the left and right front tires at the height of front wheel axis and in the middle of the tire width.

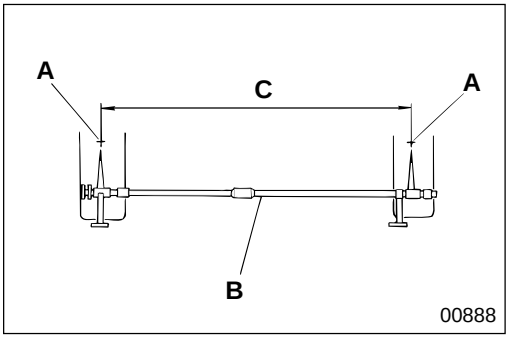

- Align the two points of toe-in gauge **B** to the respective marks **A** on the front tires. Measure the distance **C** between the marks at the front of the vehicle.

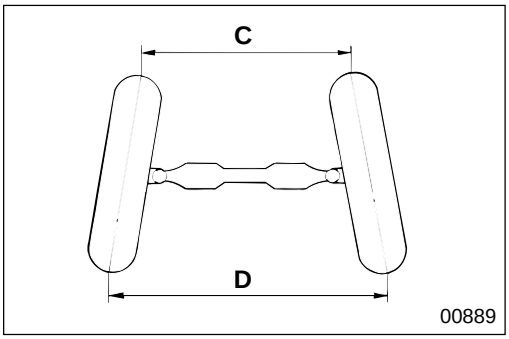

- Rotate the tires 180° and measure distance **D** between the marks at the rear of the vehicle with the tires on the ground.
- Check if the difference between distances **C** and **D** is within the standard value.

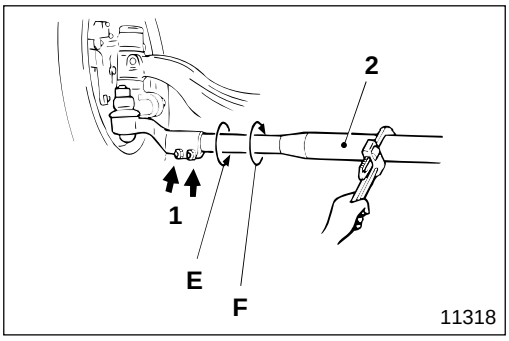

- If the measured value deviates from the standard value, with the tires pointed forward, loosen all four left and right nuts **1**.
- Adjust the toe-in to the standard value by turning tie rod **2** with a pipe wrench.
  E : When adjusting to the toe-out direction
  F : When adjusting to the toe-in direction
  (★ : If tie rod **2** does not swing after the adjustment on 🕮 P26-8, redo from this item.)

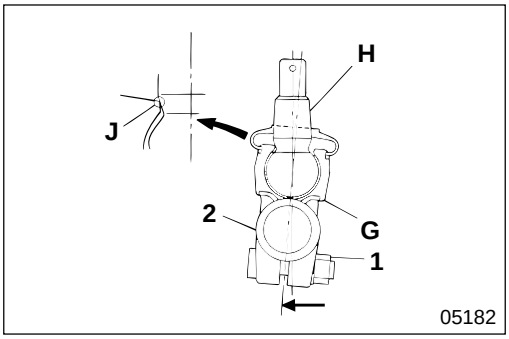

- Hold down tie rod **2** toward the front or rear of the vehicle so that left and right tie rod ends **G** are in contact **J** with ball studs **H** at the same time. In this state tighten four nuts **1**.
- When tightening nuts **1**, do not let tie rod ends **G** move toward the front or rear of the vehicle.
- When you are working on your own: first tighten nut **1** on one tie rod end **G**, then tighten the nut on the other tie rod end. When you tighten the nuts, make sure you hold down tie rod **2** towards the same direction each time.

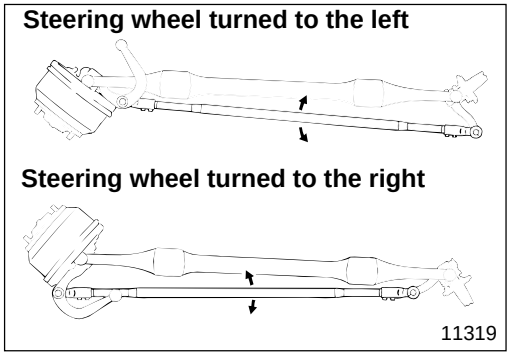

- After adjustment, turn the steering wheel fully to the left until the knuckle stopper bolt is hit. In this state, shake tie rod **2** to check that you can move it toward the front or rear of the vehicle.
  Carry out the same inspection on the right side.
  (Movability of the tie rod indicates that tie rod ends **G** are in contact with ball studs **H** at the same time.)

WARNING⚠

Be very careful that your hand, or anything else, is not caught due to the movement of the tie rod when the steering wheel is turned left and right.

- If tie rod **2** does not swing, redo the procedure from the item marked ★. 📖 P26-7

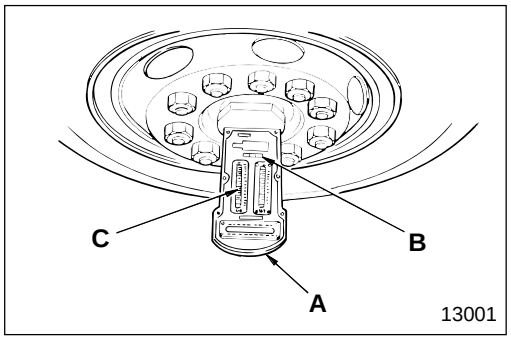

(2) Measurement of camber

- Point the front wheels exactly forward.
- Remove the wheel hub caps < FK > or the wheel hub covers < FM >.
- Wipe off grease from the knuckle end, and attach camber/caster /kingpin gauge **A** to the front wheel hub.
- While keeping the bubble in level **B** centered, measure the camber angle by reading the scale mark at the center of the bubble on camber scale **C**. Follow this procedure to measure the camber angles on the left and right sides.

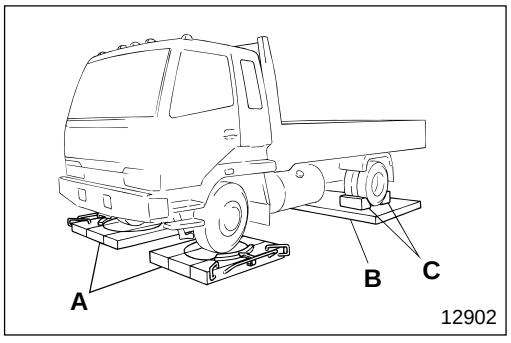

(3) Measurement of caster and kingpin inclination angle

- Align turning radius gauges **A**. Prepare a platform **B** having the same height as the turning radius gauges and place the platform under the rear wheels so that the vehicle is kept level.
- Keep turning radius gauges **A** locked.
- Jack up the vehicle and set the left and right front wheels so that the ground contact area of both front tires and the turntables of turning radius gauge **A** meet at their respective centers.

WARNING⚠

- **After jacking up the vehicle, chock the rear wheels securely with chocks C.**
- **Do not remove chocks C until the entire operation is completed.**

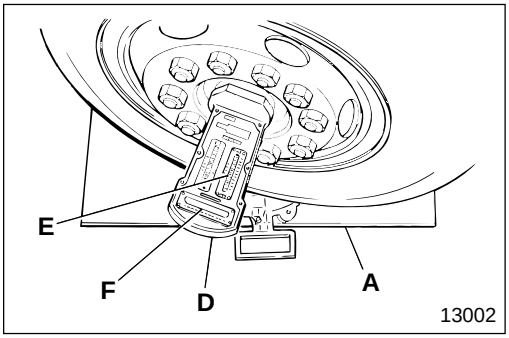

- Unlock turning radius gauge **A**, and set the scale to 0°.
- As in measuring camber explained previously, attach camber/caster kingpin gauge **D** tightly to the front wheel hub and keep the bubble centered.
- Apply the brake to the front wheels and turn the steering wheel slowly from the 0° point on the scale of turning radius gauge **A**, until direction changes 20° to the left for the left front wheel and 20° to the right for the right front wheel.

NOTE

It is not possible to obtain an exact reading of camber unless the brake is applied to the front wheels because the tires might rotate slightly.

- At the 20° point, align the bubbles in caster scale **E** and kingpin scale **F** to 0° by turning the adjuster.

NOTE

Kingpin scale F has scales for left and right; use the left scale when adjusting the left wheel, and the right scale when adjusting the right wheel.

- Turn the steering wheel slowly until the left front wheel changes its direction 20° to the right, or until the right front wheel changes its direction 20° to the left, past the 0° point of turning radius gauge **A** scale. At this point read the scale marks at the center of the bubbles on caster scale **E** and kingpin scale **F**. The scale marks indicate the caster and kingpin inclination angles.

INSPECTION AND ADJUSTMENT MOUNTED IN VEHICLE

Adjustment of Steering Angle

Service standards

Location	Maintenance item			Standard value	Limit	Remedy
—	Steering angle	Inside (Outside : reference)	FK617	43° (33°57')	—	Adjust
			FM617	40° (34°38')	—	Adjust
			FM657	44° (35°44')	—	Adjust

Ⓣ Tightening torque

Unit : N·m {lbf.ft, kgf·m}

Location	Parts to be tightened	Tightening torque	Remarks
2	Lock nut (Knuckle stopper bolt fastening)	71±12 {52±9, 7.25±1.25}	—

NOTE

Be sure that wheel alignment is adjusted perfectly before adjusting the steering angle.

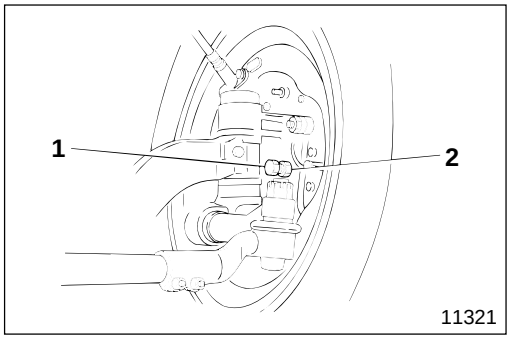

- To adjust the steering angle, set the turning radius gauges and platform in the same way as for caster and kingpin inclination angle measurement.
- Turn the steering wheel to the left or right completely, and from the position where the turning radius gauge is aligned to 0°, adjust knuckle stopper bolt **1**. Adjust so that the steering angle is within the standard inside steering angle value, to the left for the left front wheel, and to the right for the right front wheel. Then, tighten lock nut **2** at specified torque.

Measurement of Side Slip

NOTE

Be sure that wheel alignment is adjusted fully before measuring side slip.

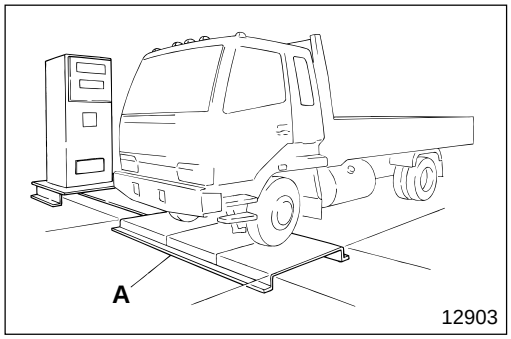

- Point the front wheels exactly forward.
- Maintain this position and slowly move vehicle forward, over side slip tester **A**, as slowly as possible.

NOTE

Make sure, when measuring side slip, that the wheels point exactly forward when the vehicle passes over side slip tester A. Do not allow the wheels to veer from side-to-side.

- The side slip is indicated by side slip tester **A** after the vehicle has passed through the tester. Readjust wheel alignment if slippage is 3 mm {0.12 in.} or more per meter {3.28 ft.}.

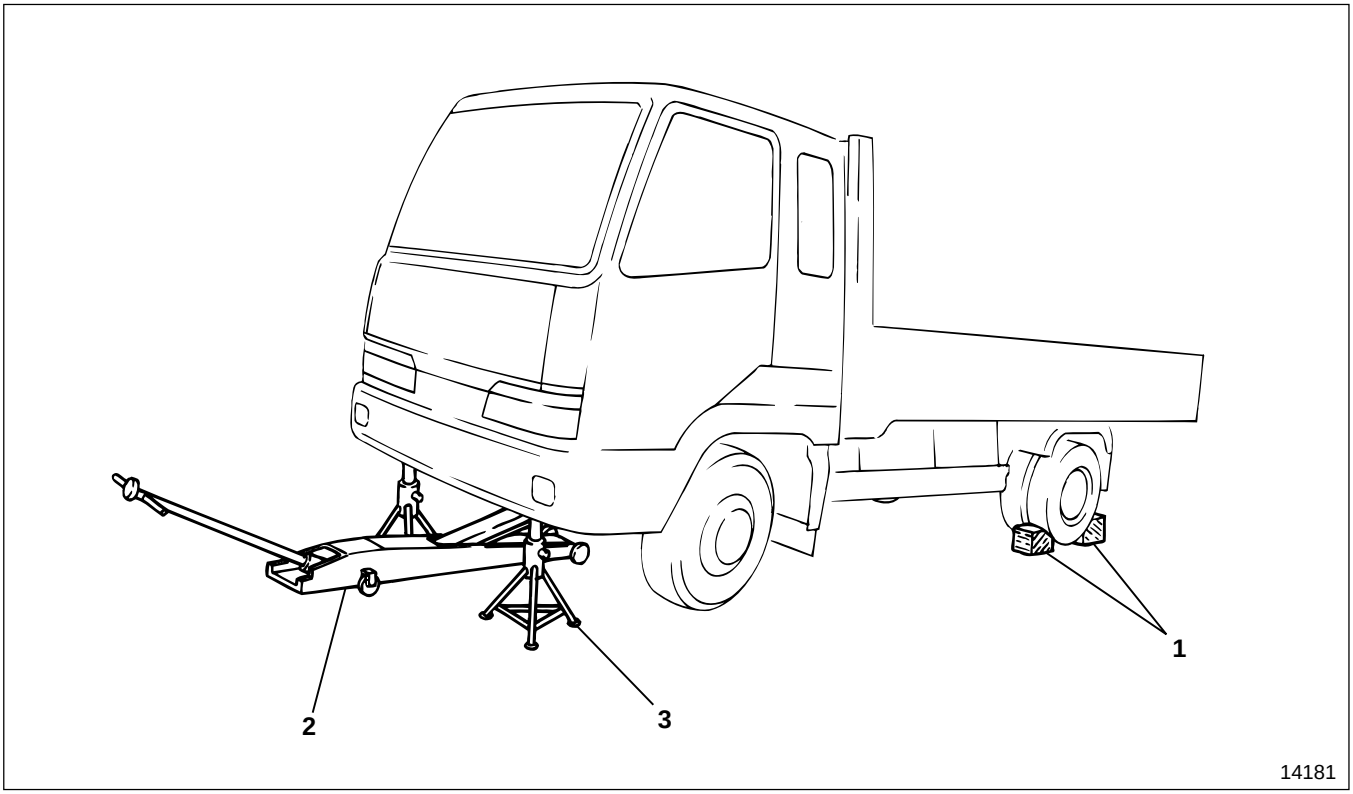

● **Work sequence before removal**

1 Place wheel chocks.
2 Jack up the front axle with a garage jack.
3 Support the front frame on rigid racks.

WARNING⚠

- **Chock the wheels securely so the vehicle does not move.**
- **Do not remove the chocks until the entire operation is completed.**
- **Supporting a vehicle on a garage jack only is extremely dangerous, so always support the frame on rigid racks.**
- **Leave the garage jack and rigid racks in place until the entire operation is completed. Never remove them during the operation.**

● **Work sequence after installation**

Follow the work sequence before removal in reverse.

WHEEL HUB AND BRAKE DRUM

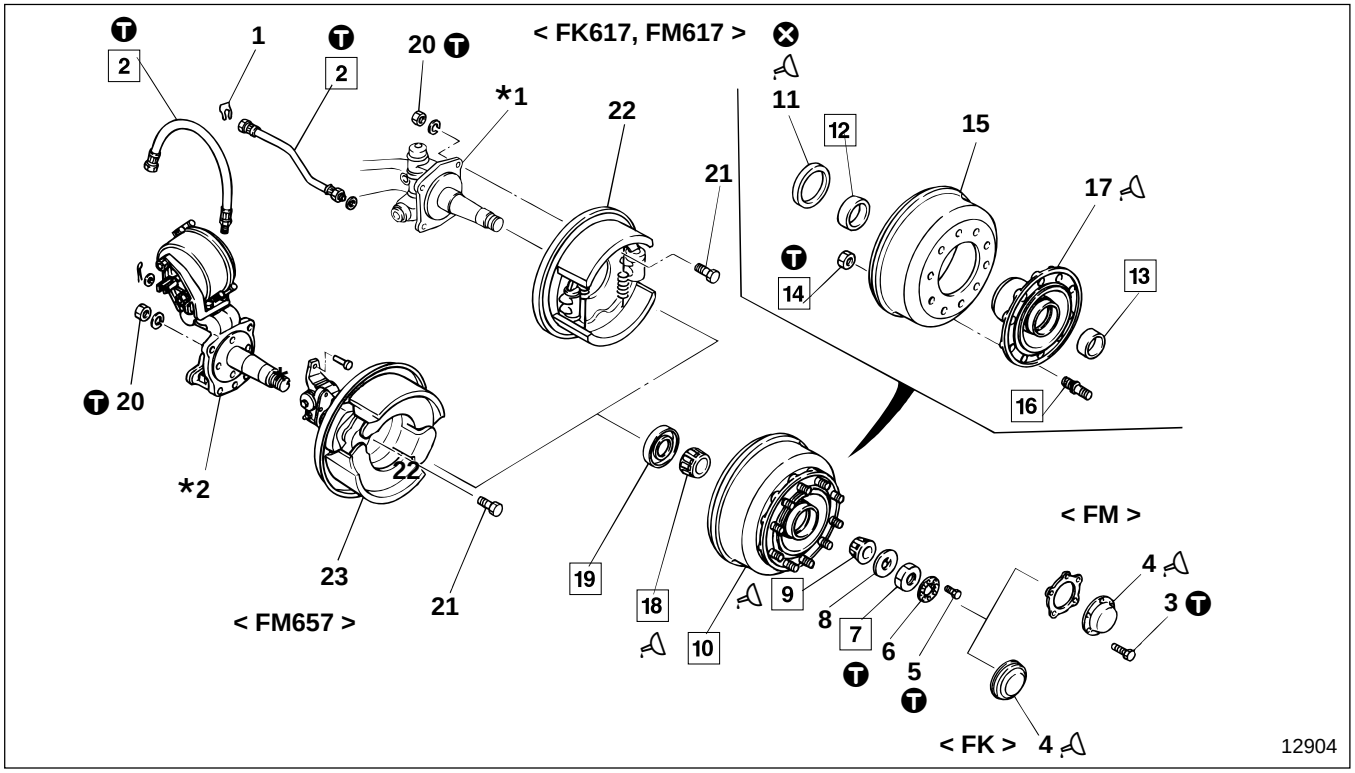

● **Disassembly sequence**

1 Clip < FK617, FM617 >
2 Brake hose
3 Bolt < FM >
4 Wheel hub cap < FK >
Wheel hub cover < FM >
5 Bolt
6 Lock plate
7 Lock nut
8 Lock washer
9 Outer bearing inner race
10 Wheel hub and brake drum assembly
11 Oil seal
12 Inner bearing outer race
13 Outer bearing outer race
14 Nut
15 Brake drum Gr 35A, B
16 Hub bolt
17 Wheel hub
18 Inner bearing inner race
19 Knuckle retainer < FK617, FM617 >
20 Nut
21 Bolt
22 Brake assembly Gr 35A
23 Brake assembly Gr 35B

***1** : Knuckle P26-22 < FK617 >, P26-28 < FM617 >
***2** : Knuckle P26-28 < FM657 >

⊗ : Non-reusable parts

CAUTION⚠

Be sure to protect brake hose 2 from dust by fitting blanking plugs after removal.

NOTE

Do not disassemble brake drum 15 and wheel hub 17 except for replacement.

● **Assembly sequence**

Follow the disassembly sequence in reverse.

WARNING⚠

You must bleed air from the brake system after installing the brake hose, failure to do so would cause the brake to malfunction. Gr 35A

CAUTION⚠

Be careful not to damage oil seal 11 when installing wheel hub and brake drum assembly 10 onto knuckle *.

Service standards

Location	Maintenance item		Standard value	Limit	Remedy
9, 12, 13, 18	Starting torque of wheel hub bearing	FK	1 to 4 N·m {0.72 to 2.89 lbf.ft, 0.1 to 0.4 kgf·m}	—	Tangential force at wheel hub bearing FK : 9 to 35 N {1.98 to 7.94 lbf, 0.9 to 3.6 kgf} FM : 18 to 38 N {3.97 to 8.60 lbf, 1.8 to 3.9 kgf}
		FM	2.5 to 5.5 N·m {1.81 to 3.98 lbf.ft, 0.25 to 0.55 kgf·m}	—	

Tightening torque

Unit : N·m {lbf.ft, kgf·m}

Location	Parts to be tightened			Tightening torque	Remarks
2	Brake hose	Axle side	FK617 FM617	21 to 30 {15 to 22, 2.1 to 3.1}	—
		Frame side	FM657	39 to 44 {29 to 33, 4.0 to 4.5}	—
3	Bolt (Wheel hub cover mounting)		FM	23±4 {17±3.3, 2.35±0.45}	—
5	Bolt (Lock plate mounting)			7 to 11 {5.1 to 8, 0.7 to 1.1}	—
7	Lock nut		FK617 FM617	200 {145, 20}	Slackening off angle : 30° (one twelfth of a turn)
			FM657	200 {145, 20}	Slackening off angle: 22.5° (one sixteenth of a turn)
14	Nut (Wheel hub and brake drum mounting)			320 {235, 32.8}	—
20	Nut (Brake assembly mounting)		FK617 FM617	135 {100, 13.8}	—
			FM657	215±32 {160±24, 22±3.3}	—

Lubricant and sealant

Location	Points of application		Kinds	Quantity
4	Pack wheel hub cap or wheel hub cover		Wheel bearing grease [NLGI No.2 (Li soap)]	120 g {4.23 oz}
	Mating area of wheel hub cap and wheel hub	FK	THREEBOND 1104	As required
9, 18	Pack the space between rollers of wheel bearing inner race		Wheel bearing grease [NLGI No.2 (Li soap)]	As required
11	Lip area of oil seal		Wheel bearing grease [NLGI No.2 (Li soap)]	As required
17	Pack interior of wheel hub	FK617	Wheel bearing grease [NLGI No.2 (Li soap)]	250 g {8.82 oz}
		FM617	Wheel bearing grease [NLGI No.2 (Li soap)]	500 g {17.6 oz}
		FM657	Wheel bearing grease [NLGI No.2 (Li soap)]	570 g {20.1 oz}

WHEEL HUB AND BRAKE DRUM

Special tools

Unit : mm {in.}

<table>
<tr><th>Location</th><th>Tool name and shape</th><th>Part No.</th><th>Application</th></tr>
<tr><td rowspan="2">4</td><td>Hub cap wrench
 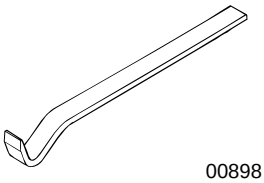
00898</td><td>< FK >
MH061948</td><td>Removal of wheel hub cap</td></tr>
<tr><td>Hub cap installer
 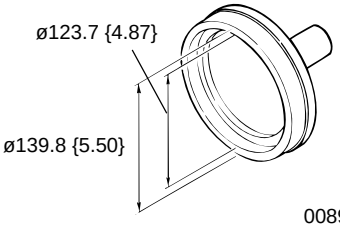
00899</td><td>< FK >
MH062204</td><td>Press-fitting of wheel hub cap</td></tr>
<tr><td>7</td><td>Socket wrench
 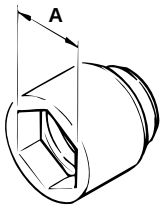
<table><tr><th></th><th>A</th></tr><tr><td>FK617</td><td>65 {2.56}</td></tr><tr><td>FM617</td><td>70 {2.76}</td></tr><tr><td>FM657</td><td>75 {2.95}</td></tr></table>
00900</td><td>< FK617 >
MH061531

< FM617 >
MH061528

< FM657 >
MH061530</td><td>Removal and installation of hub bearing lock nut</td></tr>
<tr><td>10</td><td>Wheel hub puller
 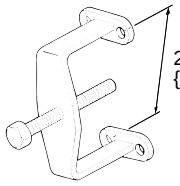
13003</td><td>MH061993</td><td>Removal of hub and brake drum</td></tr>
<tr><td>12</td><td>Inner bearing installer
<table><tr><th></th><th>A</th><th>B</th><th>C</th></tr><tr><td>FK</td><td>ø103
{4.06}</td><td>ø96
{3.78}</td><td>ø91
{3.58}</td></tr><tr><td>FM</td><td>ø128
{5.04}</td><td>ø115
{4.53}</td><td>ø110
{4.33}</td></tr></table> 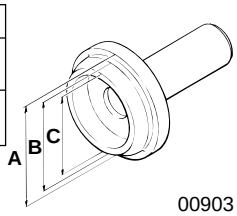
00903</td><td>< FK >
MH061974

< FM >
03724-62000</td><td>Press-fitting of inner bearing outer race</td></tr>
<tr><td>13</td><td>Outer bearing installer
<table><tr><th></th><th>A</th><th>B</th><th>C</th></tr><tr><td>FK617</td><td>ø78.5
{3.09}</td><td>ø72
{2.83}</td><td>ø66
{2.60}</td></tr><tr><td>FM617</td><td>ø98
{3.86}</td><td>ø87
{3.43}</td><td>ø82
{3.23}</td></tr><tr><td>FM657</td><td>ø108
{4.25}</td><td>ø98
{3.86}</td><td>ø92.5
{3.64}</td></tr></table> 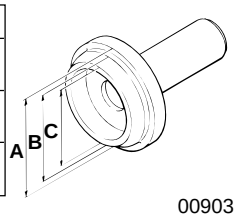
00903</td><td>< FK617 >
MC881484

< FM617 >
03724-63000

< FM657 >
03723-23000</td><td>Press-fitting of outer bearing outer race</td></tr>
</table>

Special tools

Unit : mm {in.}

Location	Tool name and shape	Part No.	Application
18, 19	Lever 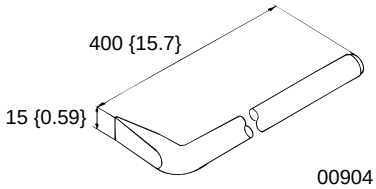 00904	MH061683	Prying lever for knuckle to knuckle retainer
	Gear puller 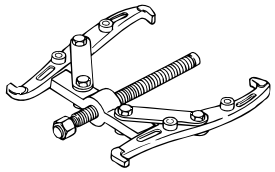 00905	MH061102	Removal of knuckle retainer and inner bearing inner race
	Inner bearing installer D: FK ø65 {2.56}, FM ø76.2 {3.00} d: FK ø56 {2.20}, FM ø67 {2.64} A: FK 164 {6.46}, FM 186 {7.32} 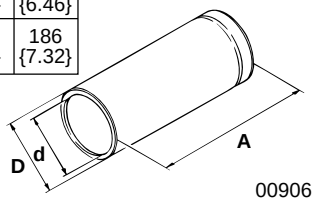 00906	< FK > MH061475 < FM > MH061473	Press-fitting of inner bearing inner race and knuckle retainer

◆ Service procedure

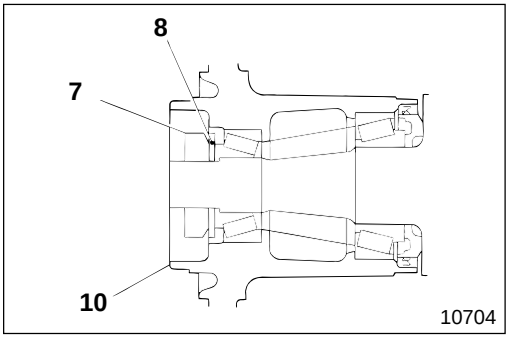

10704

● Starting torque of wheel hub drum

[Adjustment]

- Install lock washer **8** and lock nut **7**, then tighten the lock nut at specified torque while turning wheel hub and brake drum assembly **10** several times.
- Next, slacken off the lock nut fully until a clearance is obtained between lock nut **7** and lock washer **8**.

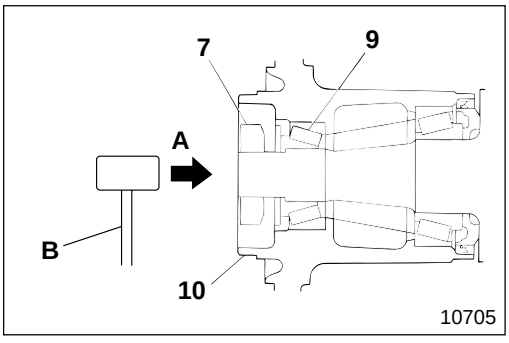

10705

- Return outer bearing **9** toward lock nut **7** by hitting illustrated part **A**, while turning wheel hub and brake drum assembly **10** again.
  B : Copper-headed mallet

WHEEL HUB AND BRAKE DRUM

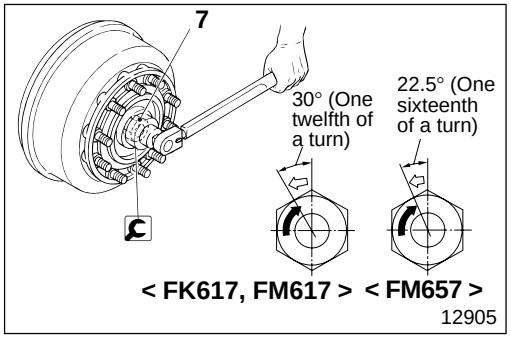

★ • After retightening lock nut **7** at specified torque, slacken it off by 30° (one twelfth of a turn) for < FK617, FM617 >, or by 22.5° (one sixteenth of a turn) for < FM657 >.
(★ : If there is any deviation found when you measure the tangential force, carried out following the procedure on 🕮 P26-17, repeat the work.)

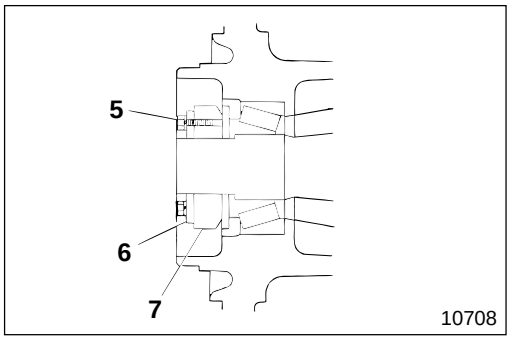

- Install lock plate **6**.
- Make sure that the bolt mounting holes of lock plate **6** and lock nuts **7** align.
- Tighten mounting bolts **5** at specified torque.

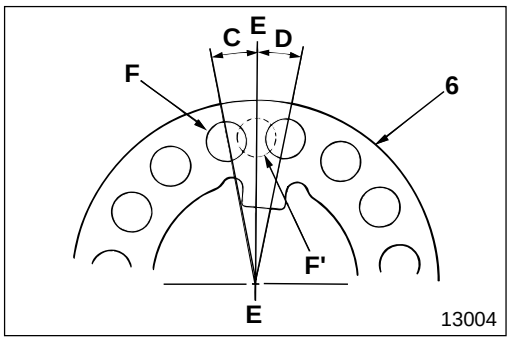

- If the mounting holes of lock plate **6** and lock nuts **7** do not align, align as follows:

Hole position of lock nut	How to align hole of lock plate
Within range **C**	Loosen lock nuts to align holes
Within range **D**	Turn over lock plate and loosen lock nut to align holes
On **E**–**E** line	Turn over the lock plate to align the holes (Lock nut hole position changes from **F'** to **F**)

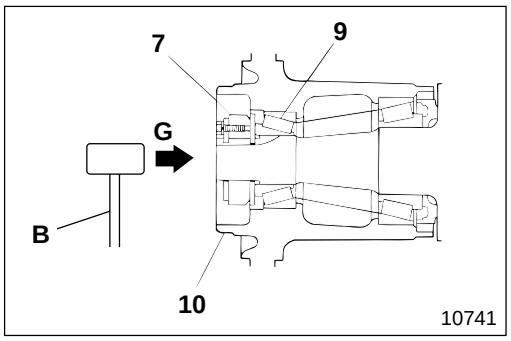

- To slide outer bearing **9** towards lock nut **7**, hit end **G** two or three times with a copper-headed mallet, while turning wheel hub and brake drum assembly **10**.
B : Copper-headed mallet

- Once again, hit one end of the knuckle two or three times with a soft-faced mallet while turning the hub and drum assembly so that the outer bearing fits tightly to the lock nut.

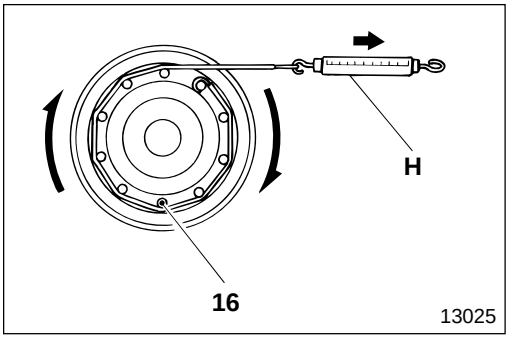

[Measurement]
- Fasten spring balance **H** to hub bolt **16** and measure the tangential force.
- If the measured tangential force is the standard value, the starting torque conforms to the standard value.
- Make sure that the starting torque is smaller than the tangential force.
- If the tangential force deviates from the specified value, adjust the starting torque again.
- If the measured value deviates from the specified value, redo the procedure from the item marked ★. 📖 P26-16
- If any fault is found after adjustment, replace outer bearings **9**, **13** and inner bearings **12**, **18**.

NOTE
- **Measure the starting torque when oil seal 11 has been installed.**
- **Make sure that the brake lining and brake drum 15 do not drag before measurement.**

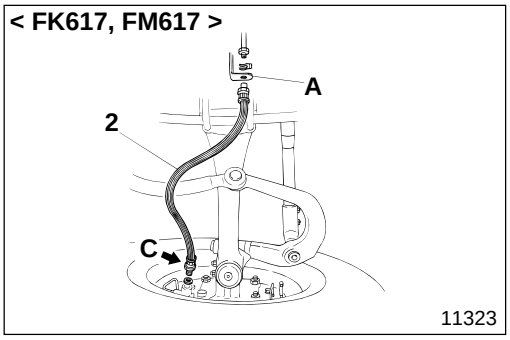

2 **Removal and installation of brake hose**

First remove brake hose **2** from bracket **A** or connector **B** (on the frame), then remove the brake hose from wheel brake **C** or front brake chamber **D**. For installation, follow this procedure in reverse.

CAUTION ⚠
Make sure that brake hose 2 is not twisted when you install it.

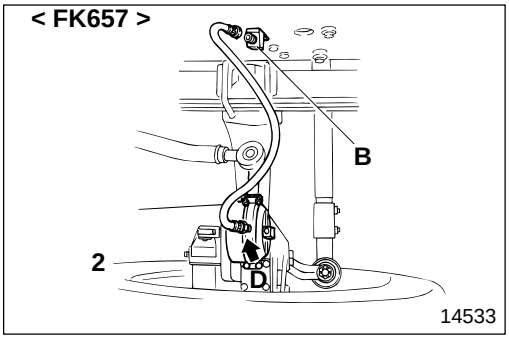

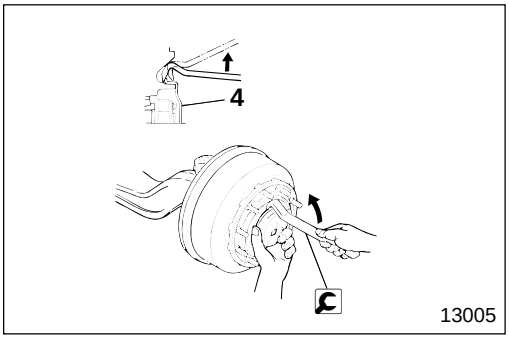

4 **Wheel hub cap < FK >**

[Removal]

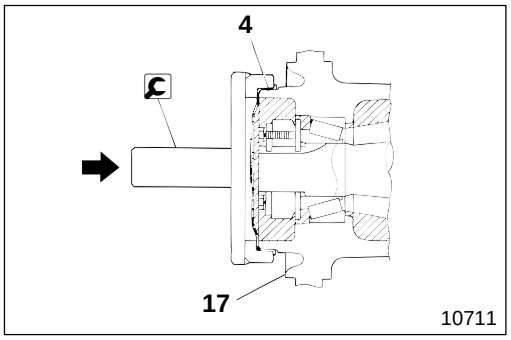

[nstallation]
Pack wheel hub cap **4** with grease, apply sealant to contact surfaces of wheel hub **17**, and press-fit it.

CAUTION
Do not use a hammer, etc. when you install wheel hub cap 4, or you might deform the mating surface, destroying watertightness.

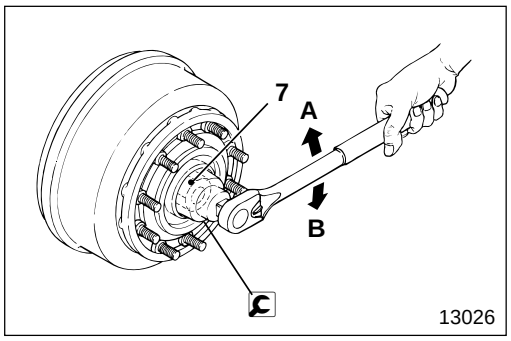

7 **Removal and installation of lock nut**

See adjustment of wheel hub bearing starting torque. P26-15
A : Removal
B : Installation

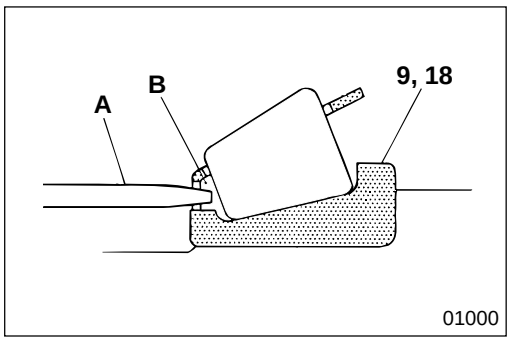

9 **18** **Packing grease in outer bearing inner race and inner bearing inner race**

A : Grease pump nozzle
B : Between rollers

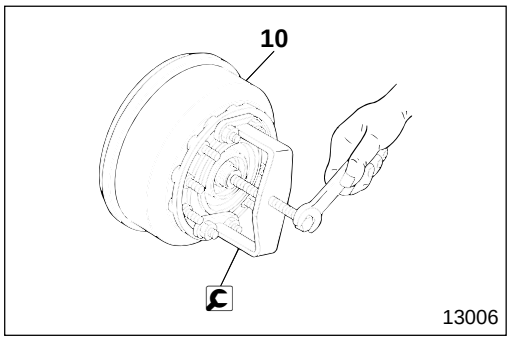

10 **Wheel hub and brake assembly**

[Removal]

CAUTION
Make sure you remove wheel hub and brake drum assembly 10 in a straight line to prevent damage to oil seal 11.

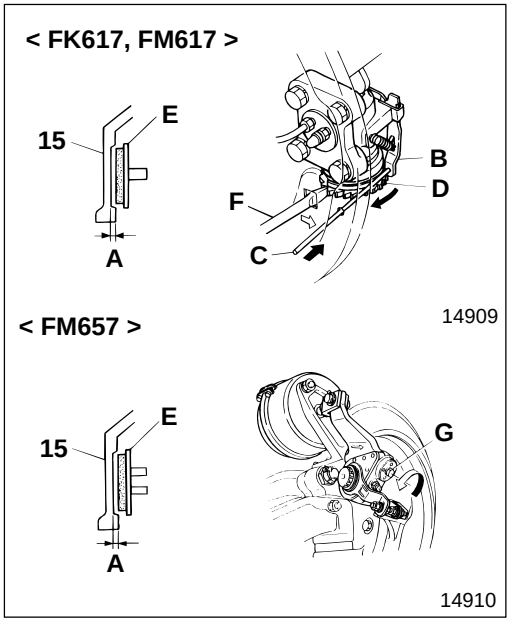

If wheel hub and brake drum assembly **10** cannot be removed because of stepped wear **A** in brake drum **15**, carry out the following:

< FK617, FM617 >

- Remove the packing plate cover.
- Lift lever **B**.
  C : Wire approximately ø5 mm {0.020 in.}
- Turn adjuster **D** in the opposite direction to the arrow on the packing plate, and expand the clearance between brake drum **15** and brake shoe assembly **E**.
  F : Screwdriver
- Remove wheel hub and brake drum assembly **10**.

< FM657 >

- Turn worm shaft **G** of the automatic slack adjuste counterclockwise, and expand the clearance between brake drum **15** and brake shoe assembly **E**.
- Remove wheel hub and brake drum assembly **10**.

CAUTION

If brake drum 15 is faulty, correct it. Gr 35A, B

[Installation]

After installing wheel hub and brake drum assembly **10**, adjust the brake shoe clearnace.

Gr 35A < FK617, FM617 >
Gr 35B < FM657 >

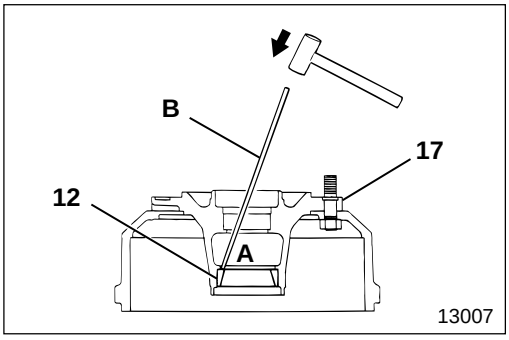

12 **Inner bearing outer race**

[Removal]

Drive out inner bearing outer race **12** evenly from two indented parts **A** in wheel hub **17**.

B : Pin-punch

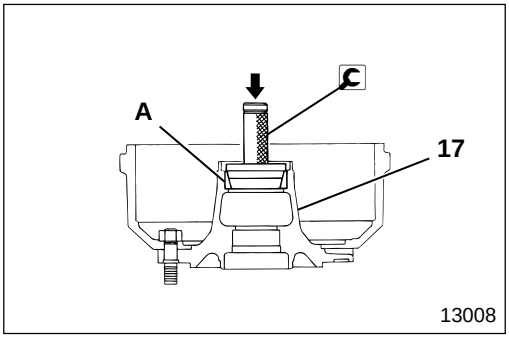

[Installation]

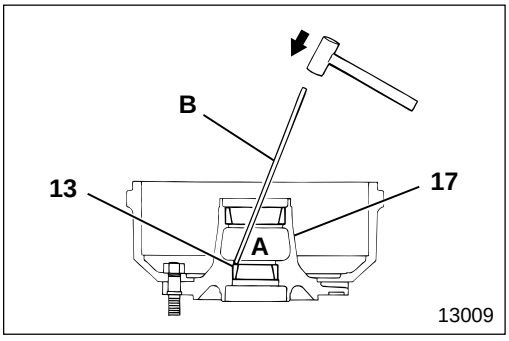

13 **Outer bearing outer race**

[Removal]

Drive out outer bearing outer race **13** evenly from two indented parts **A** in wheel hub **17**.

B : Pin-punch

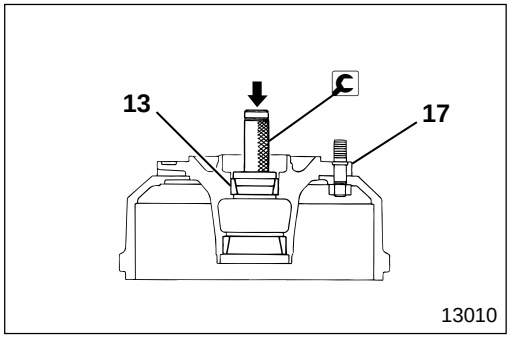

[Installation]

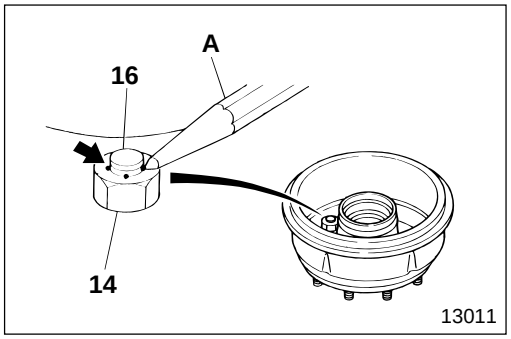

14 **16** **Installation of nut and hub bolts**

Tighten nut **14** at specified torque, then caulk hub bolt **16** evenly at four points.
A :Punch

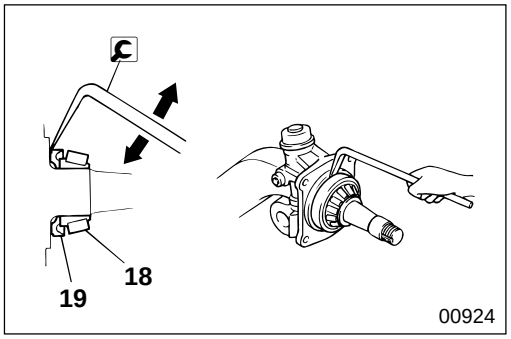

18 **19** **Inner bearing inner race and knuckle retainer (Knuckle retainer 19 is installed only on FK617 and FM617.)**

[Removal]

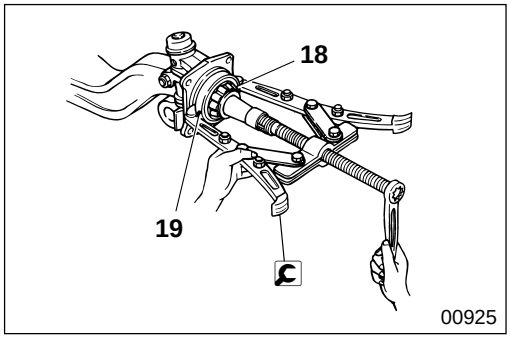

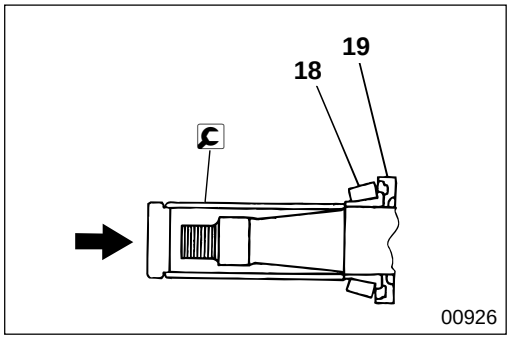

[Installation]

M E M O

FRONT AXLE, KNUCKLE AND KINGPIN < FK >

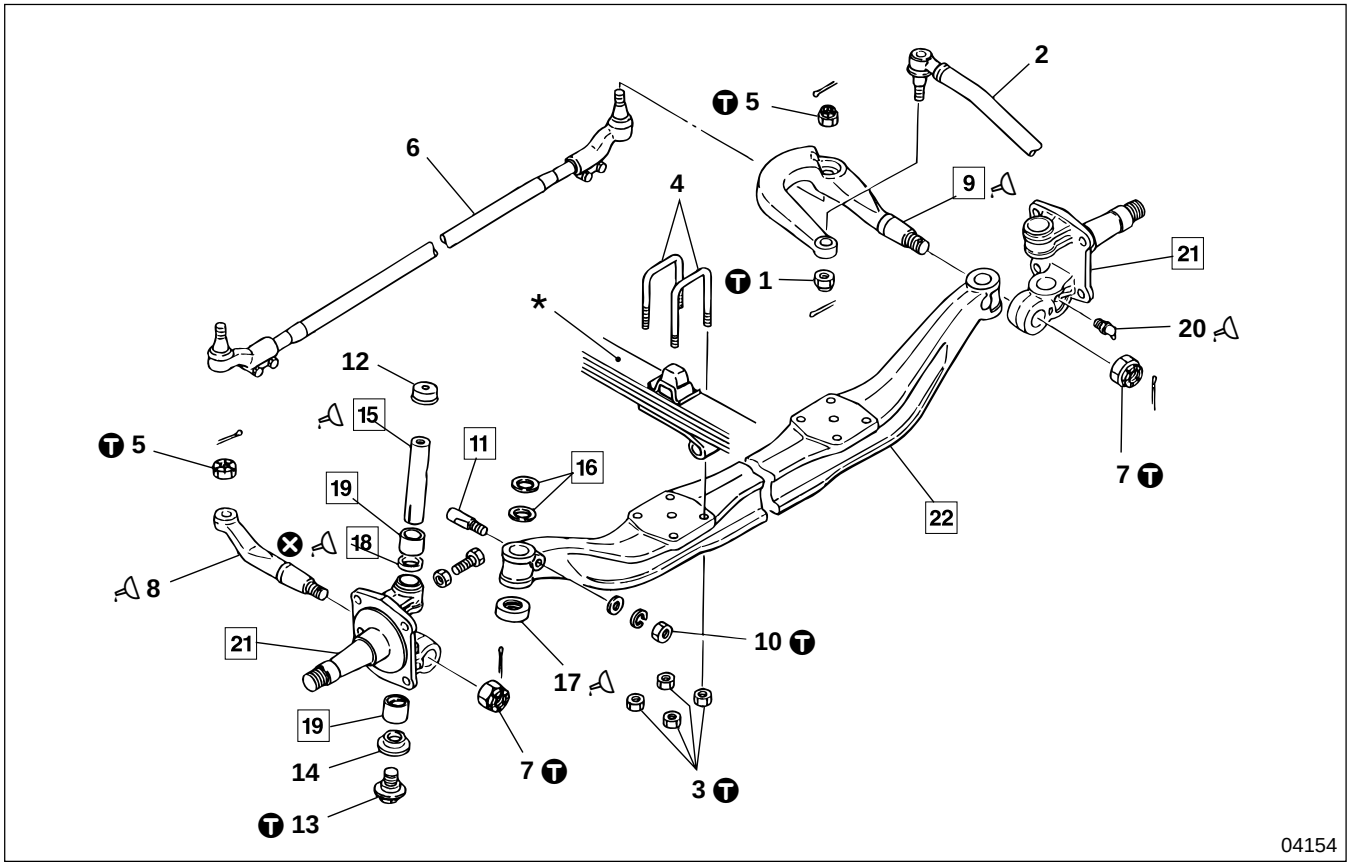

● **Disassembly sequence**

1 Nut
2 Drag link Gr 37
3 U-bolt nut Gr 33
4 U-bolt
5 Nut
6 Tie rod Gr 37
7 Nut
8 Tie rod arm
9 Knuckle arm
10 Nut
11 Set bolt
12 Kingpin cap
13 Lower kingpin cover
14 Dust seal
15 Kingpin
16 Thrust washer
17 Bearing
18 Oil seal
19 Bushing
20 Grease nipple
21 Knuckle
22 Front axle

*: Front leaf spring Gr 33
⊗: Non-reusable parts

● **Assembly sequence**

21 → 20 → 19 → 18 ┐
→ 15 → 11 → 10 → 14 → 13 → 12 → 9 → 8 → 7 → 6 → 5 → 4 → 3 → 2 → 1
22 → 17 → 16 ┘

Repair kit : Kingpin kit

● **Work after assembly**

P26-24

Service standards

Unit : mm {in.}

Location	Maintenance item		Standard value (Basic diameter in [ ])	Limit	Remedy
15	Kingpin	Outer diameter	$[35]^{-0.002}_{-0.015}$ {$[1.38]^{-0.000079}_{-0.00059}$}	34.9 {1.37}	Replace
		Inclination angle	7°00'	7°00'±30'	
19	Kingpin bushing	Inner diameter (After press-fitting knuckle)	$[35]^{+0.045}_{+0.018}$ {$[1.38]^{+0.0018}_{+0.00071}$}	—	Replace
		Clearance between kingpin bushing and kingpin	0.02 to 0.06 {0.00079 to 0.0024}	0.15 {0.0059}	
21, 22	Vertical clearance between knuckle and front axle		0.1 {0.0039} or less	0.2 {0.0079}	Adjust with thrust washer
22	Font axle	Bend (Longitudinal)	2.5 {0.098} or less	7 {0.28}	Replace
		Bend (Vertical)	3 {0.12} or less	7 {0.28}	

Tightening torque

Unit : N·m {lbf.ft, kgf·m}

Location	Parts to be tightened	Tightening torque	Remarks
1	Nut (Drag link mounting)	190±48 {140±35, 19.4±4.85}	—
3	U-bolt nut (U-bolt mounting)	240±36 {175±27, 24.5±3.7}	Wet
5	Nut (Tie rod mounting)	190±48 {140±35, 19.4±4.85}	—
7	Nut (Tie rod arm and knuckle arm mounting)	686±98 {505±72, 70±10}	—
10	Nut (Set bolt tightening)	29 {22, 3}	—
13	Lower kingpin cover	39±10 {29±7, 4±1}	—

Lubricant

Location	Points of application	Kinds	Quantity
8, 9	Thread area of knuckle arm and tie rod arm	Wheel bearing grease [NLGI No.2 (Li soap)]	As required
15	Periphery of kingpin and hole	Wheel bearing grease [NLGI No.2 (Li soap)]	As required
17	Pack interior of bearing	Wheel bearing grease [NLGI No.2 (Li soap)]	As required
18	Lip area of oil seal	Wheel bearing grease [NLGI No.2 (Li soap)]	As required
20	Supply via grease nipple	Wheel bearing grease [NLGI No.2 (Li soap)]	As required

Special tools

Unit : mm {in.}

Location	Tool name and shape	Part No.	Application
11	Kingpin set bolt remover 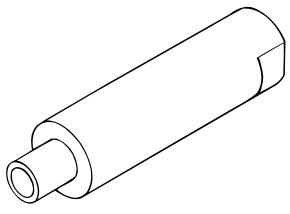 00938	MH061688	Removal of kingpin set bolt
15	Kingpin puller 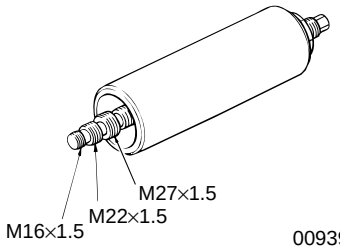 00939	MH061684	Removal of kingpin
18	Oil seal installer 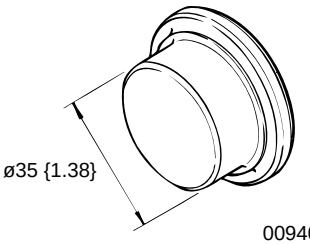 00940	MH062201	Press-fitting of oil seal
19	Kingpin bushing remover 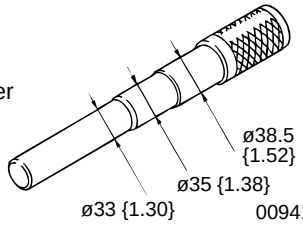 00941	MH061037	Removal and installation of kingpin bushing

◆ Service procedure

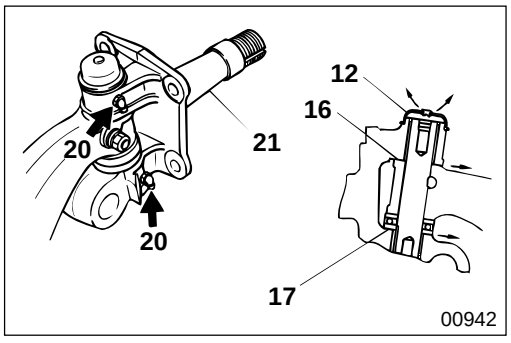

00942

● Work after assembly

Supply grease via grease nipple **20** of knuckle **21**. Supply grease until it overflows from the dust plugs of upper cap **12**, thrust washer **16**, and the press side of ball bearing **17**.

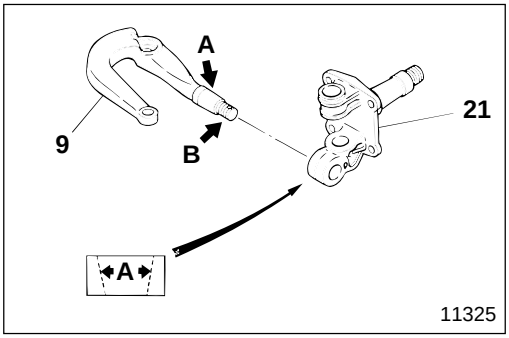

9 **21** **Installation of knuckle arm and knuckle**

(1) Reassembly of existing knuckle arm 9 and/or knuckle 21

- Evenly polish taper surfaces **A** of knuckle arm **9** and knuckle **21** using emery paper (120 grit or finer), until abrasion traces left by the emery paper are only just visible. For new parts, polishing is not required.
- Clean taper surfaces **A** of knuckle arm **9** and knuckle **21** and thread area **B** of the knuckle arm. (Use a cleaning solvent for acetone color checking or other solvent.)
- Install knuckle arm **9** after applying grease to thread area **B**. (Do not grease the taper surfaces of the knuckle arm and the knuckle.)
- Tighten new nut **7** at specified torque. Without loosening the nut, insert split pin **C** into the pin hole to lock the nut.

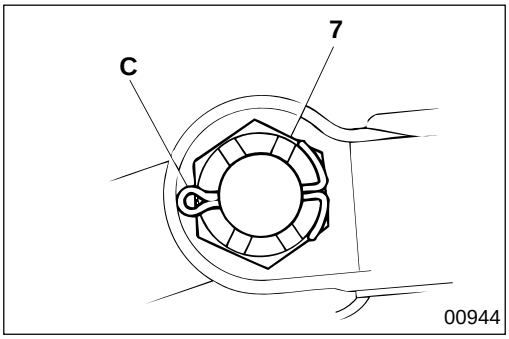

(2) Installation of new knuckle arm 9 and knuckle 21

- Clean taper surfaces **A**, or thread area **B**, of knuckle arm **9** and knuckle **21**, and install them without greasing.
- Tighten new nut **7** at specified torque. Without loosening the nut, insert split pin **C** into the pin hole to lock the nut.

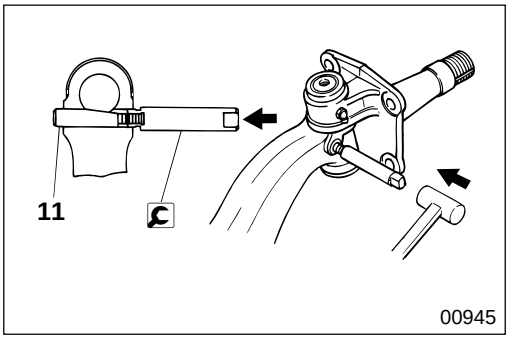

11 **Removal of set bolt**

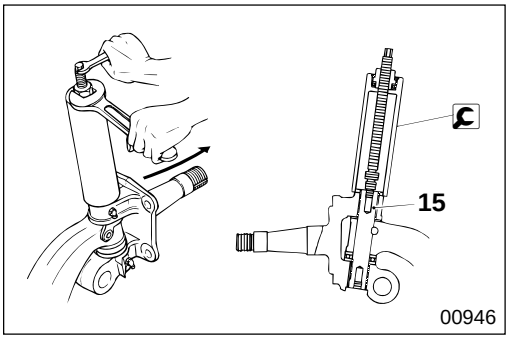

15 **Removal of kingpin**

- Remove the kingpin cap. Screw the bolt of kingpin puller into the threads of kingpin **15**, and remove the kingpin.

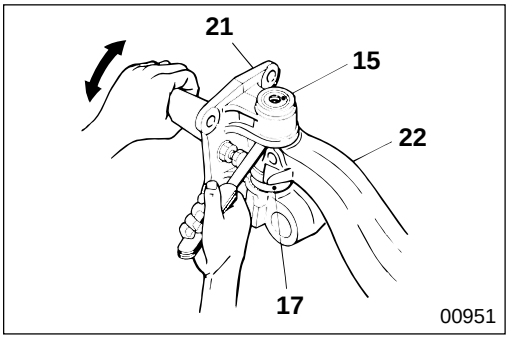

16 **21** **22** **Thrust washer, knuckle, and front axle**

[Inspection]

- Assemble kingpin **15** and bearing **17** temporarily, and turn knuckle **21** a couple of times to smooth its operation.
- Measure the clearance between the upper surface of front axle **22** and the lower part of knuckle **21**.
- If the measured value is higher than the limit, adjust with thrust washer **16**.

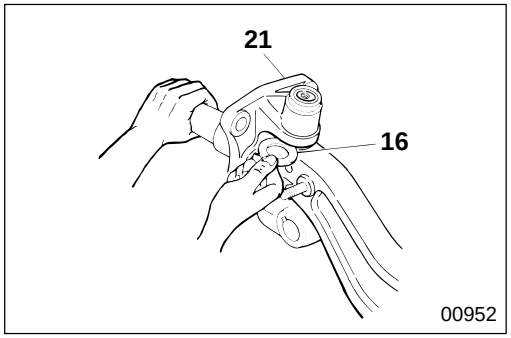

[Adjustment]
- Adjusting thrust washers **16** are available in the following sizes: 2.1 to 2.8 mm {0.083 to 0.11 in.} (eight thicknesses in 0.1 mm {0.0039 in.} increments)
- Be sure to minimize the clearance by selecting appropriate thrust washer **16**.
- Make sure that knuckle **21** moves smoothly after assembly.

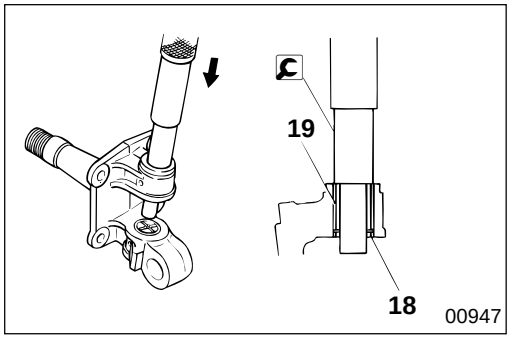

18 **19** **Oil seal and bushing**

[Removal]

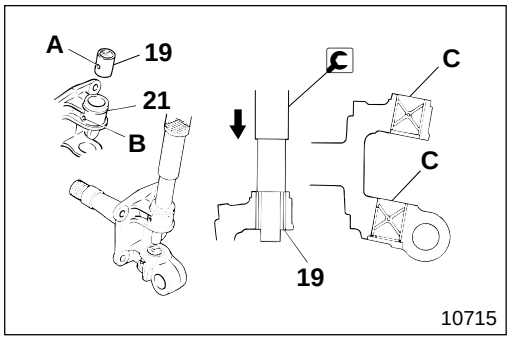

[Installation]
- Press bushing **19** in, with its oil hole **A** aligned to oil hole **B** of knuckle **21**, until end **C** is flush with the knuckle end.

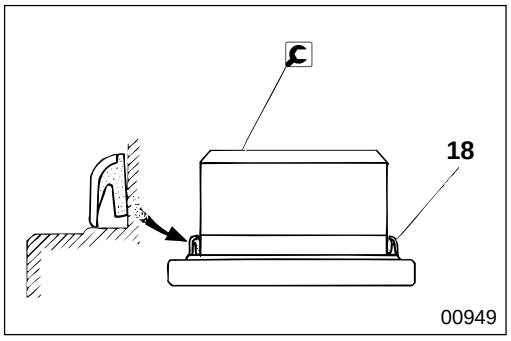

- Apply grease to the lip area of oil seal **18**, and position the oil seal on oil seal installer.

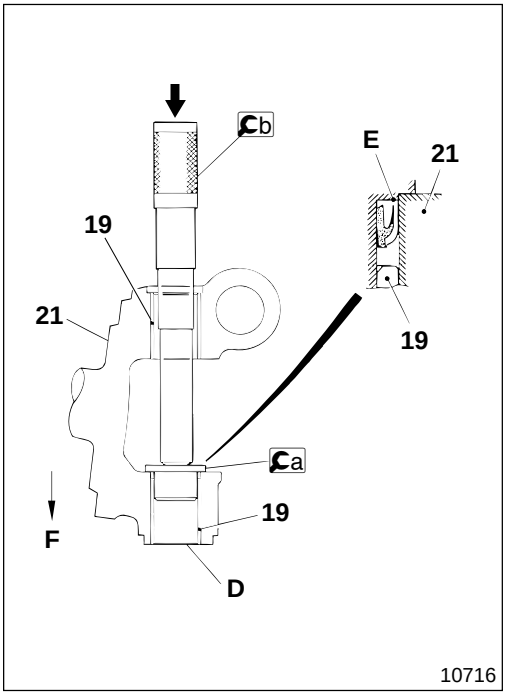

- Next, install a oil seal installer on knuckle **21** in the direction as illustrated.
- Pass b kingpin bushing remover through the kingpin hole and position it on a oil seal installer.
- Hit the head of b kingpin bushing remover until a oil seal installer makes contact with the knuckle.
- Make sure that end **D** of bushing **19** makes contact with knuckle **21** on the same level.
- Make sure that oil seal end **E** does not protrude from knuckle **21**.

F : Upper side of vehicle

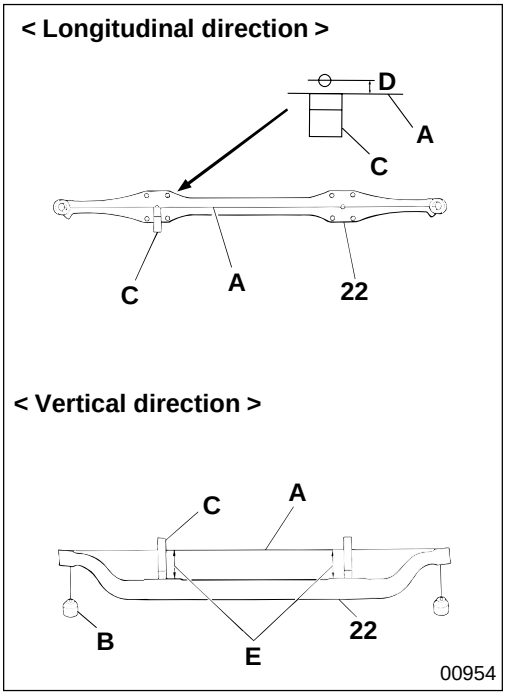

22 Inspection of front axle

(1) Measurement of bend in front axle 22 in longitudinal and vertical directions

- Pass a piece of thread **A** through the kingpin hole of front axle **22** and hang weights **B** on both ends.
- Use square **C** to find the degree of bend in both the longitudinal direction **D** and the vertical direction **E**.
- If the measured value is higher than the limit, replace front axle **22**.

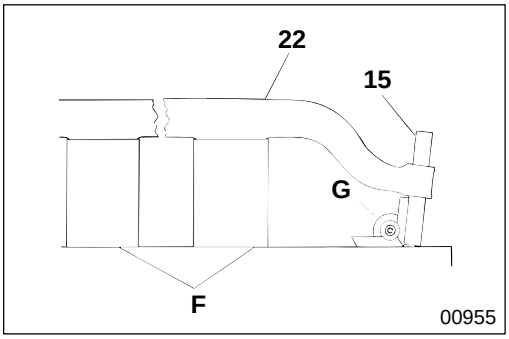

(2) Measurement of kingpin inclination angle

Mount kingpin **15** in front axle **22** as illustrated, and measure the kingpin inclination angle. If the measured value is higher than the limit, replace the front axle.

F : Block gauge
G : Bevel square

FRONT AXLE, KNUCKLE AND KINGPIN < FM >

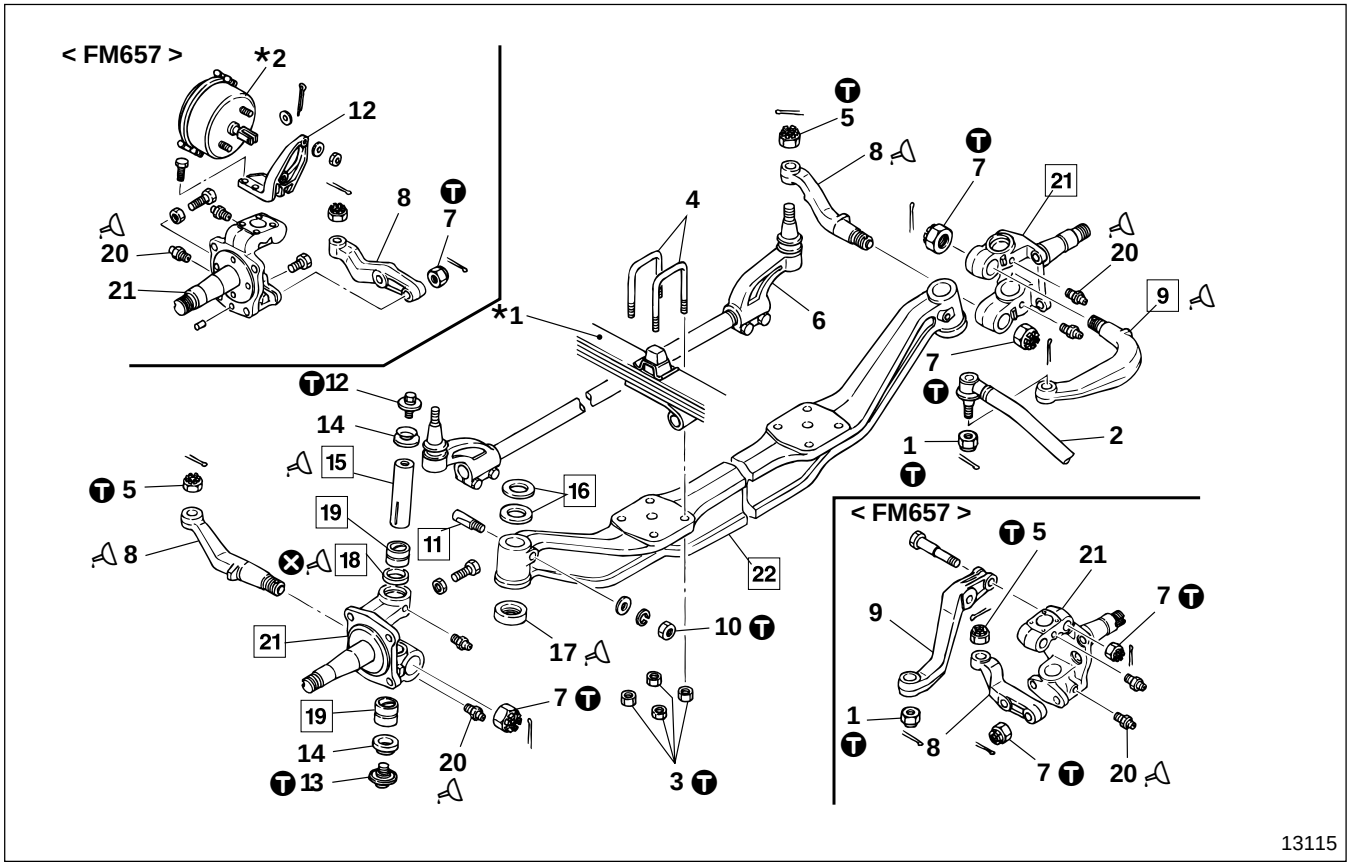

● **Disassembly sequence**

1 Nut
2 Drag link Gr 37
3 U-bolt nut Gr 33
4 U-bolt
5 Nut
6 Tie rod
7 Nut
8 Tie rod arm
9 Knuckle arm
10 Nut
11 Set bolt
12 Upper kingpin cover < FM617 >
Chamber bracket < FM657 >
13 Lower kingpin cover
14 Dust seal
15 Kingpin
16 Thrust washer
17 Bearing
18 Oil seal
19 Bushing
20 Grease nipple
21 Knuckle
22 Front axle

***1** : Front leaf spring Gr 33
***2** : Front brake chamber Gr 35B
⊗ : Non-reusable parts

● **Assembly Sequence**

21 → 20 → 19 → 18 ┐
→ 15 → 11 → 10 → 14 → 13 → 12→ 9 → 8 → 7 → 6 → 5 → 4 → 3 → 2 → 1
22 → 17 → 16 ┘

Repair kit : Kingpin kit

● **Work after assembly**

P26-30

Service standards

Unit : mm {in.}

Location	Maintenance item			Standard value (Basic diameter in [ ])	Limit	Remedy
15	Kingpin	Outer diameter	FM617	$[45]^{-0.002}_{-0.015}$ {$[1.77]^{-0.000079}_{-0.00059}$}	44.9 {1.77}	Replace
			FM657	$[50]^{-0.002}_{-0.015}$ {$[1.97]^{-0.000079}_{-0.00059}$}	49.9 {1.96}	
		Inclination angle		7°00'	7°00'±30'	
19	Kingpin bushing	Inner diameter (After press-fitting) knuckle	FM617	$[45]^{+0.045}_{+0.018}$ {$[1.77]^{+0.0018}_{+0.00071}$}	—	Replace
			FM657	$[50]^{+0.045}_{+0.018}$ {$[1.97]^{+0.0018}_{+0.00071}$}	—	
		Clearance between kingpin bushing and kingpin		0.02 to 0.06 {0.00079 to 0.0024}	0.15 {0.0059}	
21, 22	Vertical clearance between knuckle and front axle		FM617	0.1 {0.0039} or less	0.2 {0.0079}	Adjust with thrust washer
			FM657	0.1 {0.0039} or less	0.3 {0.012}	
22	Font axle	Bend (Longitudinal)		2.5 {0.098} or less	7 {0.28}	Replace
		Bend (Vertical)		3 {0.12} or less	7 {0.28}	

Tightening torque

Unit : N·m {lbf.ft, kgf·m}

Location	Parts to be tightened		Tightening torque	Remarks
1	Nut (Drag link mounting)	FM617	190±48 {140±35, 19.4±4.85}	—
		FM657	353±88 {260±65, 36±9}	—
3	U-bolt nut (U-bolt mounting)	FM617	372±56 {275±41, 37.9±5.7}	Wet
		FM657	472±71 {345±52, 48.1±7.2}	Wet
5	Nut (Tie rod mounting)	FM617	190±48 {140±35, 19.4±4.85}	—
		FM657	270±68 {200±50, 27.6±6.9}	—
7	Nut (Tie rod arm and knuckle arm mounting)	FM617	677 {500, 69}	—
		FM657	515±123 {380±90, 52.5±12.5}	—
10	Nut (Set bolt tightening)		29 {22, 3}	—
12	Upper kingpin cover	FM617	74±15 {54±11, 7.5±1.5}	—
13	Lower kingpin cover	FM617	74±15 {54±11, 7.5±1.5}	—
		FM657	137±29.4 {100±22, 14±3}	—

Lubricant

Location	Points of application	Kinds	Quantity
8, 9	Thread areas of tie rod arm and knuckle arm < FM617 >	Wheel bearing grease [NLGI No.2 (Li soap)]	As required
15	Periphery of kingpin and hole	Wheel bearing grease [NLGI No.2 (Li soap)]	As required
17	Pack interior of bearing	Wheel bearing grease [NLGI No.2 (Li soap)]	As required
18	Lip area of oil seal	Wheel bearing grease [NLGI No.2 (Li soap)]	As required
20	Supply via knuckle grease nipple	Wheel bearing grease [NLGI No.2 (Li soap)]	As required

Special tools

Unit : mm {in.}

Location	Tool name and shape	Part No.	Application
11	Kingpin set bolt remover 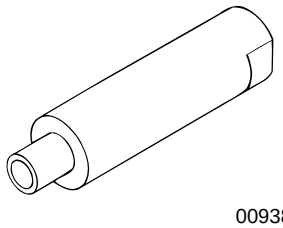 00938	MH061688	Removal of kingpin set bolt
15	Kingpin puller 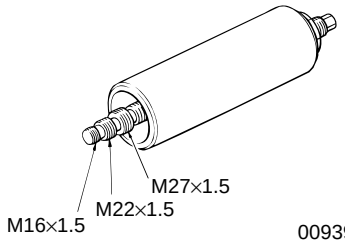 00939	MH061684	Removal of kingpin
18	Oil seal installer A: FM617 ø45 {1.77}; FM657 ø50 {1.97} 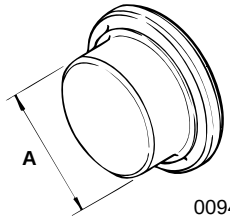 00940	< FM617 > MH062202 < FM657 > MH062203	Press-fitting of oil seal
19	Kingpin bushing remover 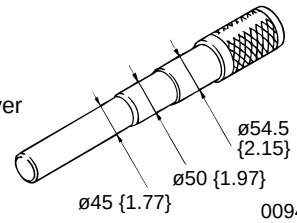 00941	MH061792 (MH061037)	Removal and installation of kingpin bushing. Tool No. in ( ) is used for press-fitting oil seal installer

◆ Service procedure

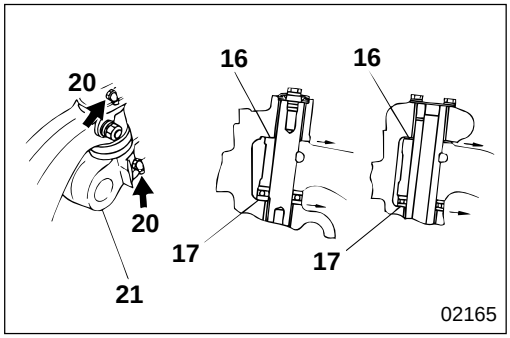

02165

● Work after assembly

Supply grease via grease nipple **20** of knuckle **21**. Supply grease until it overflows from thrust washer **16** and the press side of ball bearing **17**.

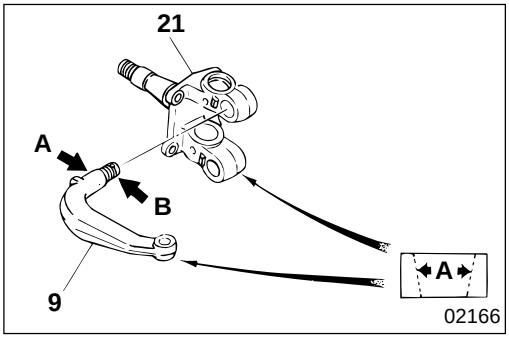

9 **21** **Installation of knuckle arm and knuckle < FM617 >**

(1) Reassembly of existing knuckle arm 9 and/or knuckle 21

- Evenly polish taper surfaces **A** of knuckle arm **9** and knuckle **21** using emery paper (120 grit or finer), until abrasion traces left by the emery paper are only just visible. For new parts, polishing is not required.
- Clean taper surfaces **A** of knuckle arm **9** and knuckle **21** and thread area **B** of the knuckle arm. (Use a cleaning solvent for acetone color checking or other solvent.)
- Install knuckle arm **9** after applying grease to thread area **B**. (Do not grease the taper surfaces of the knuckle arm and the knuckle.)

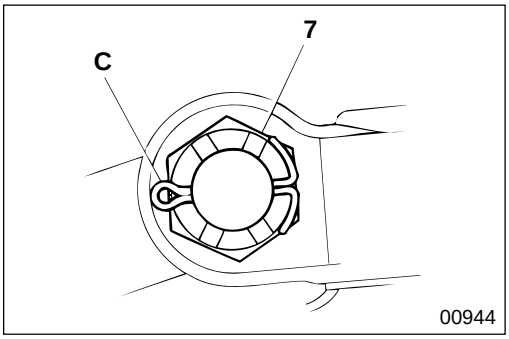

- Tighten new nut **7** at specified torque. Without loosening the nut, insert split pin **C** into the pin hole to lock the nut.

(2) Installation of new knuckle arm 9 and knuckle 21

- Clean taper surfaces **A**, or thread area **B**, of knuckle arm **9** and knuckle **21**, and install them without greasing.
- Tighten new nut **7** at specified torque. Without loosening the nut, insert split pin **C** into the pin hole to lock the nut.

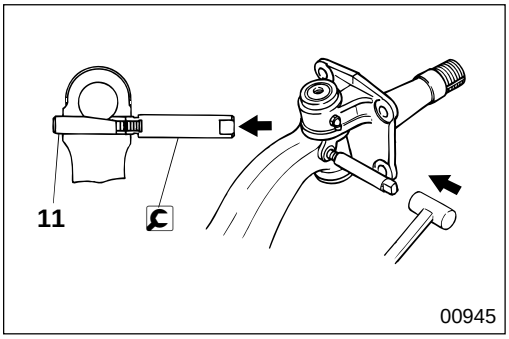

11 **Removal of set bolt**

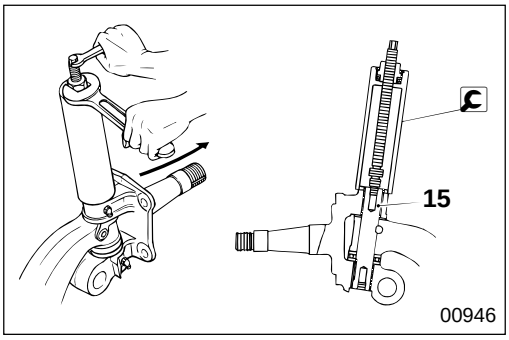

15 **Removal of kingpin**

Remove the kingpin cover and dust seal < FM617 >, or gasket < FM657 >. Screw the bolt of kingpin puller into the threads of kingpin **15**, and remove the kingpin.

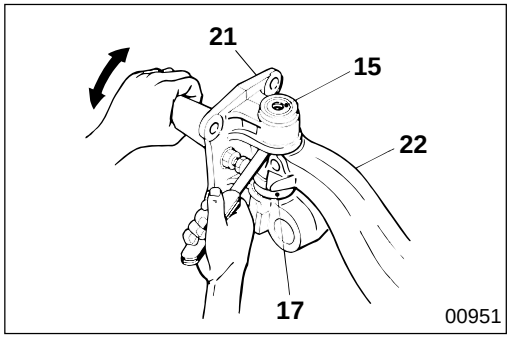

16 **21** **22** **Thrust washer, knuckle, and front axle**

[Inspection]

- Assemble kingpin **15** and bearing **17** temporarily, and turn knuckle **21** a couple of times to smooth its operation.
- Measure the clearance between the upper surface of front axle **22** and the lower part of knuckle **21**.
- If the measured value is higher than the limit, adjust with thrust washer **16**.

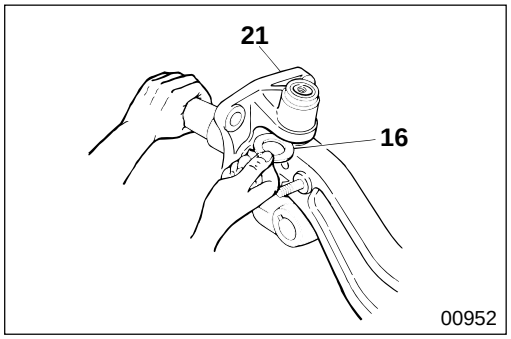

[Adjustment]

- Adjusting thrust washers **16** are available in the following sizes:2.9 to 3.6 mm {0.11 to 0.14 in.} (eight thicknesses in 0.1 mm {0.0039 in.} increments)
- Be sure to minimize the clearance by selecting appropriate thrust washer **16**.
- Make sure that knuckle **21** moves smoothly after assembly

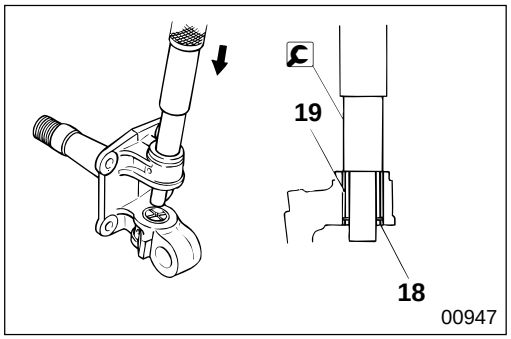

18 **19** **Oil seal and bushing**

[Removal]

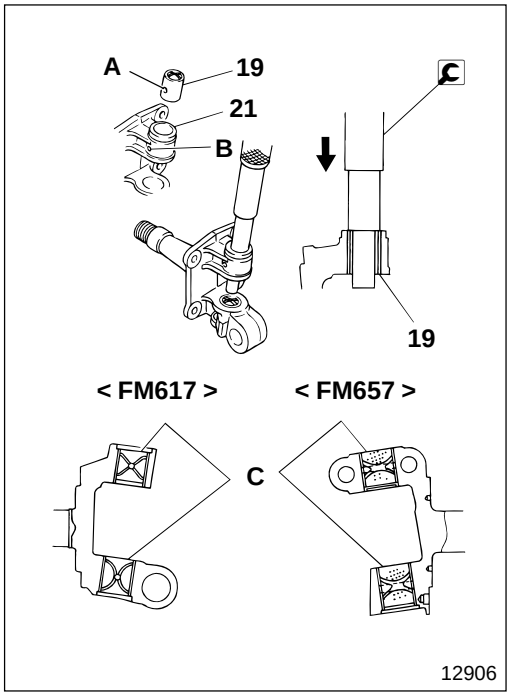

[Installation]

- Press bushing **19** in, with its oil hole **A** aligned to oil hole **B** of knuckle **21**, until end **C** is flush with the knuckle end.

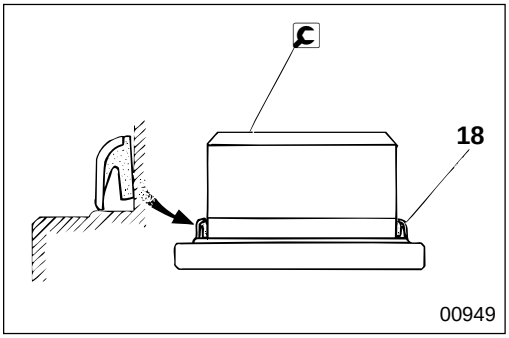

- Apply grease to lip area of oil seal **18**, and position the oil seal on [c] oil seal installer.

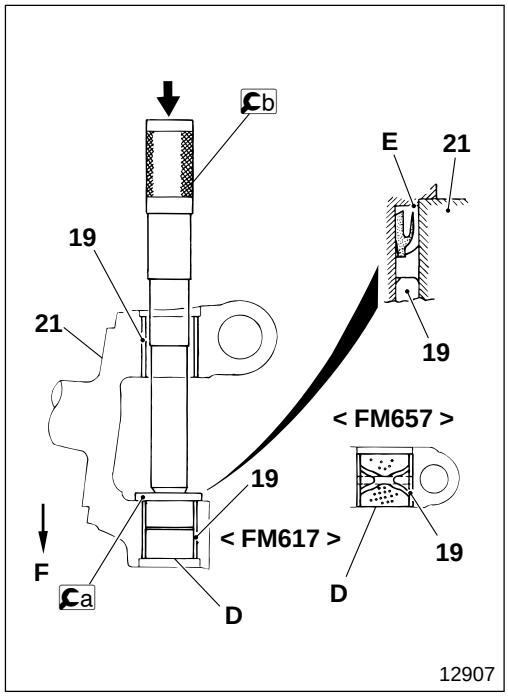

- Next, install [a] oil seal installer on knuckle **21** in the direction as illustrated.
- Pass [b] kingpin bushing remover through the kingpin hole and position it on [a] oil seal installer.
- Hit the head of [b] kingpin bushing remover until [a] oil seal installer makes contact with knuckle **21**.
- Make sure that end **D** of bushing **19** makes contact with knuckle **21** on the same level.
- Make sure that oil seal end **E** does not protrude from knuckle **21**.

F : Upper side of vehicle

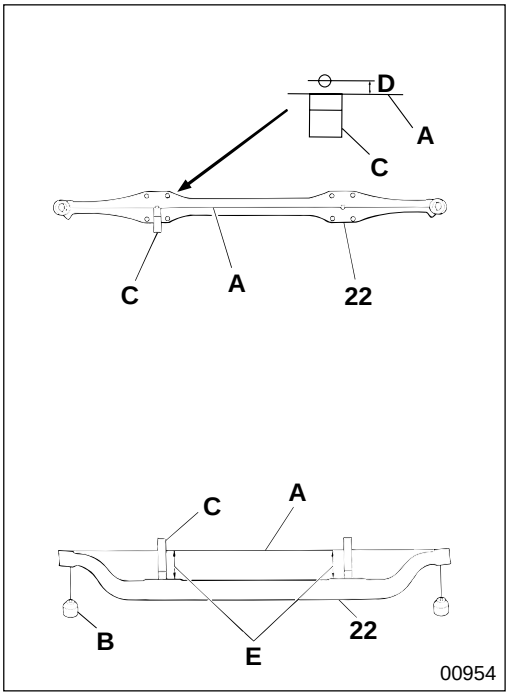

22 Inspection of front axle

(1) Measurement of bend in front axle 22 in longitudinal and vertical directions

- Pass a piece of thread **A** through the kingpin hole of front axle **22** and hang weights **B** on both ends.
- Use square **C** to find the degree of bend in both the longitudinal direction **D** and the vertical direction **E**.
- If the measured value is higher than the limit, replace front axle **22**.

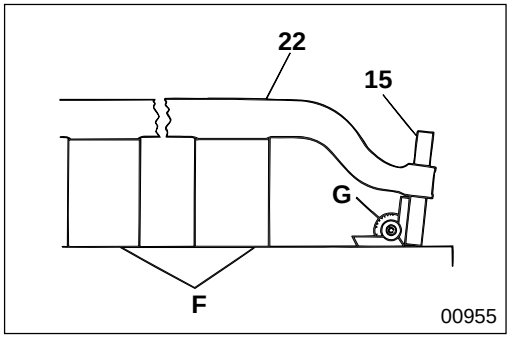

(2) Measurement of kingpin inclination angle

Mount kingpin **15** in front axle **22** as illustrated, and measure the kingpin inclination angle. If the measured value is higher than the limit, replace the front axle.

F : Block gauge
G : Bevel square

MITSUBISHI
FUSO

FK.FM
Service Manual

Group 27
Rear Axle

Table of Contents

BACK

HOME

MITSUBISHI FUSO TRUCK OF AMERICA, Inc.

Pub No. TWME9503-27

GROUP 27 REAR AXLE

SPECIFICATIONS 2
STRUCTURE AND OPERATION 3
TROUBLESHOOTING 6
WORK BEFORE REMOVAL AND INSTALLATION OF REAR AXLE ... 8
WHEEL HUB AND BRAKE DRUM 10
AXLE HOUSING 22
REDUCTION AND DIFFERENTIAL 26

SPECIFICATIONS

Item \ Vehicle model		FK	FM617	FM657
Rear axle	Model	R050T (M)	R060T	
	Type	Banjo type, full floating		
Reduction	Model	D050H	D8H	
	Type	Single-reduction		
	Tooth shape	Hypoid gear		
	Speed reduction ratio	4.444 4.625	4.625 4.875 5.571	4.625 4.875
Differential	Tooth shape	Straight bevel gear		
Gear oil	Grade	* Normal : Maximum air temperature during operation below 40°C {104°F} API GL-5 SAE 90 Hot areas : Maximum air temperature during operation above 40°C {104°F} API GL-5 SAE 140		
	Quantity L {qts}	6.5 {6.9}		
Mass kg {lb}		Approximately 380 {835}	Approximately 615 {1360}	Approximately 615 {1360}

* When used under heavily-loaded, severe conditions such as continuous driving on uphill grades, it is recommended that you use gear oil with a SAE viscosity grade of 140. However, the air temperature must be above 10°C {50°F}.

Wheel Hub and Brake Drum

< FK >

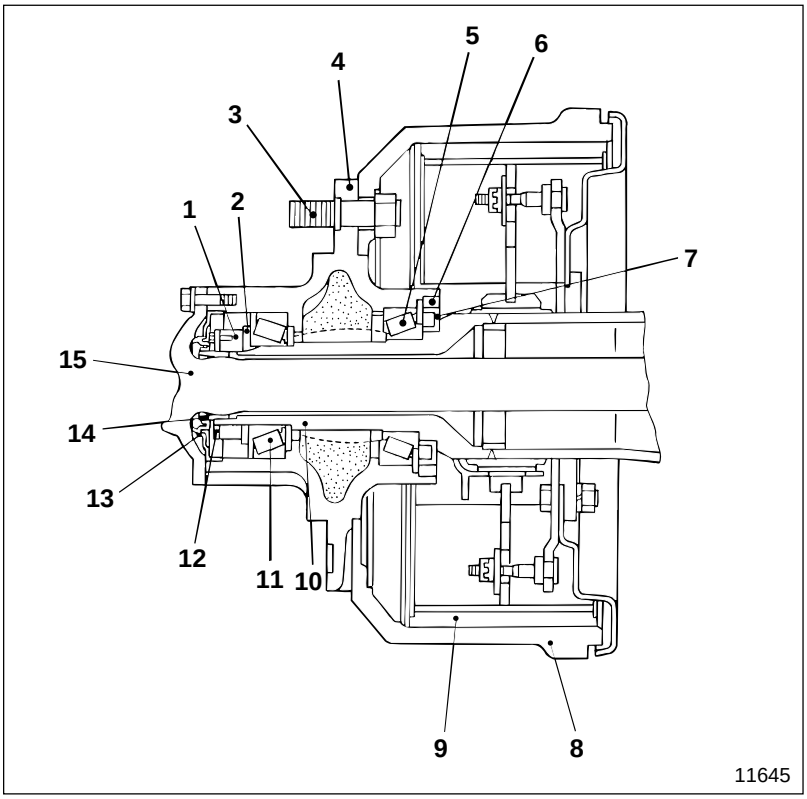

1 Lock nut
2 Lock washer
3 Hub bolt
4 Wheel hub
5 Inner bearing
6 Oil seal
7 Oil seal retainer
8 Brake drum
9 Brake assembly
10 Axle tube
11 Outer bearing
12 Lock plate
13 Oil seal
14 Oil seal retainer
15 Rear axle shaft

< FM617 >

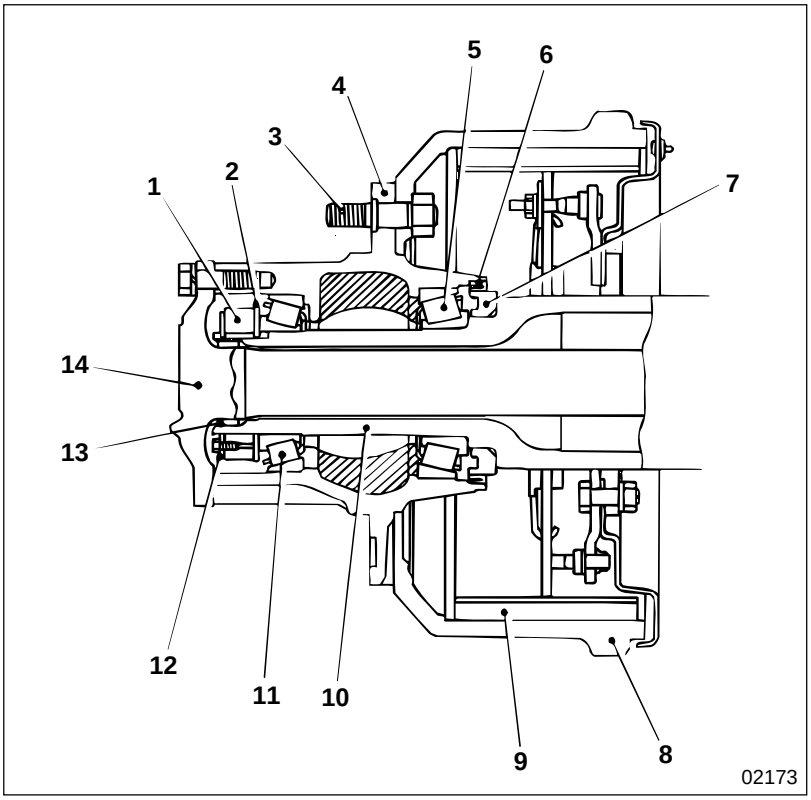

1 Lock nut
2 Lock washer
3 Hub bolt
4 Wheel hub
5 Inner bearing
6 Oil seal
7 Oil seal retainer
8 Brake drum
9 Brake assembly
10 Axle tube
11 Outer bearing
12 Lock plate
13 Oil seal
14 Axle shaft

< FM657 >

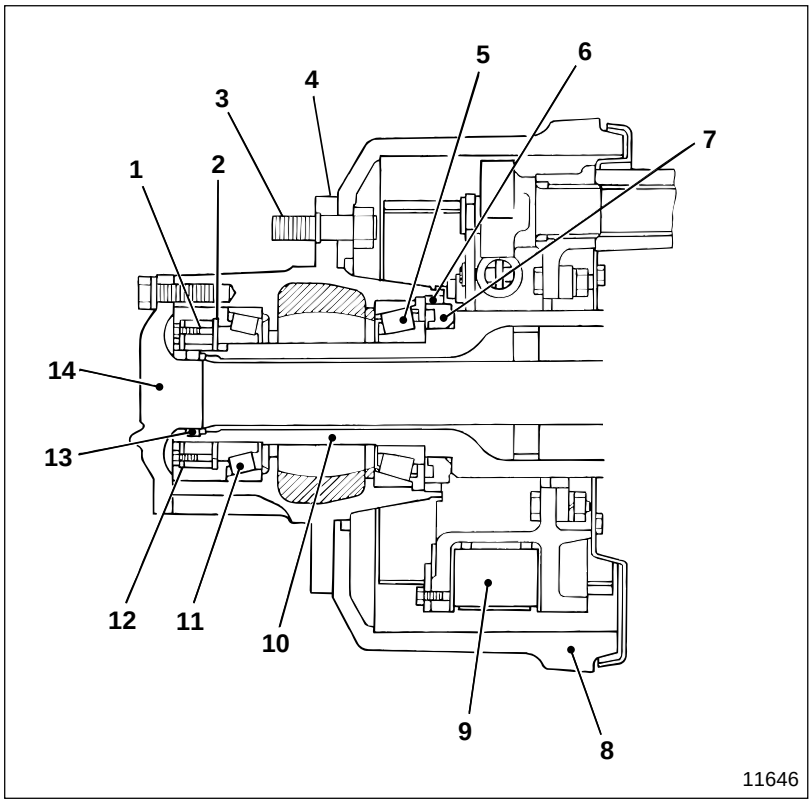

1 Lock nut
2 Lock washer
3 Hub bolt
4 Wheel hub
5 Inner bearing
6 Oil seal
7 Oil seal retainer
8 Brake drum
9 Brake assembly
10 Axle tube
11 Outer bearing
12 Lock plate
13 Oil seal
14 Axle shaft

Reduction and Differential

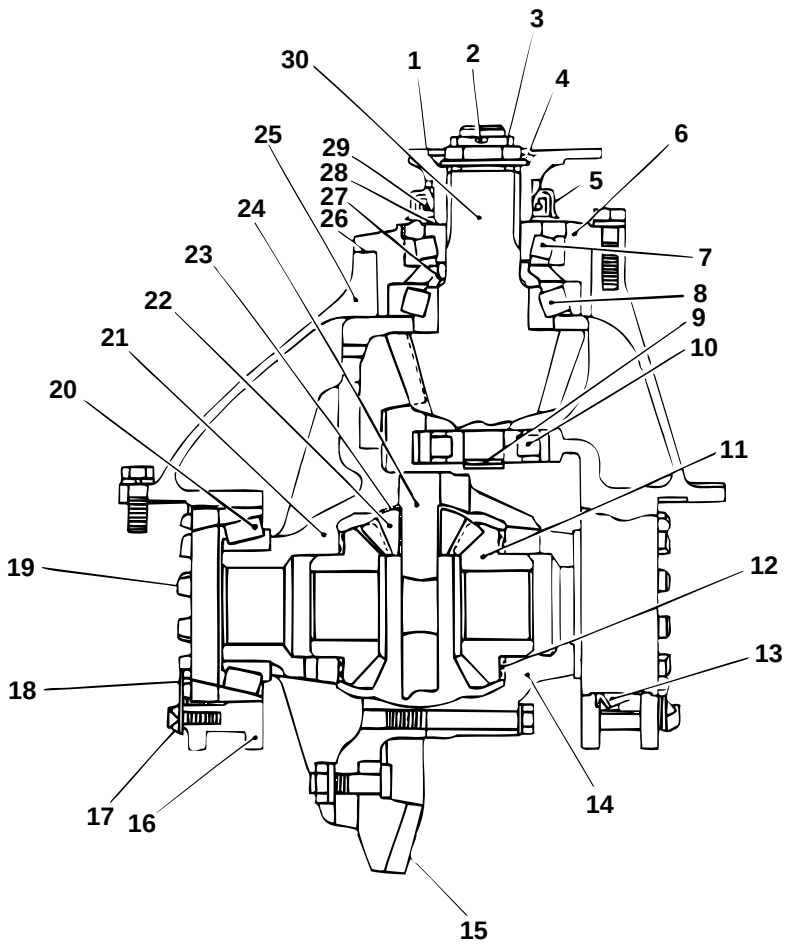

1 Companion flange
2 Split pin
3 Lock nut
4 Washer < D8H >
5 Dust cover
6 Bearing retainer
7 Outer bearing
8 Inner bearing
9 Lock ring
10 Pinion pilot bearing
11 Differential gear
12 Differential gear washer
13 Lock plate
14 Differential case, RH
15 Reduction gear
16 Bearing cap
17 Lock sheet
18 Lock pawl
19 Adjusting screw
20 Side bearing
21 Differential case, LH
22 Differential pinion
23 Differential pinion washer
24 Pinion spider
25 Differential carrier
26 Shim
27 Collar
28 Oil separator < D8H >
29 Oil seal
30 Reduction pinion

TROUBLESHOOTING

Possible causes	Symptoms	Oil leaking from companion flange assembly	Oil leaking from differential carrier and axle housing	Oil leaking from axle shaft	Power transmission insufficient							
					Propeller shaft turns but vehicle does not move	Noise when starting and changing speed	Continuous noise while cruising	Intermittent noise while cruising	Noise while cornering	Tires drag while cornering	Seizure	Damage
Wheel hub, axle housing	Axle shaft mounting bolt loose		○				○					
	Axle housing bent						○					
	Axle shaft bent						○					
	Axle shaft fractured				○							
	Axle shaft slips out of engagement			○								
	Oil seal faulty			○								
	Air breather clogged			○								
	Wheel hub bearing seized, worn or rotation faulty						○					
	Wheel hub bearing broken							○				
Reduction and differential	Gear oil excessive	○										
	Gear oil insufficient					○	○				○	
	Oil seal faulty	○										
	Sealant faulty		○									
	Side bearing seized, worn or rotation faulty						○		○			
	Side bearing broken							○				
	Side bearing preload adjusted incorrectly						○				○	
	Side bearing starting torque faulty					○	○		○			○
	Reduction and differential assembly mounting bolt and nut loose		○									
	Differential carrier cracked or damaged		○									
	Reduction gear and differential case tightening bolts loose					○		○				
	Reduction gear or reduction pinion broken				○	○	○	○	○			
	Reduction gear or reduction pinion worn						○		○			
	Reduction gear to reduction pinion backlash excessive					○						○
	Reduction gear to reduction pinion backlash insufficient						○				○	
	Reduction gear tooth contact adjusted incorrectly						○					

Possible causes \ Symptoms		Oil leaking from companion flange assembly	Oil leaking from differential carrier and axle housing	Oil leaking from axle shaft	Power transmission insufficient							
					Propeller shaft turns but vehicle does not move	Noise when starting and changing speed	Continuous noise while cruising	Intermittent noise while cruising	Noise while cornering	Tires drag while cornering	Seizure	Damage
Reduction and differential	Reduction pinion assembly starting torque excessive					○	○				○	
	Reduction pinion assembly starting torque insufficient					○	○					
	Reduction pinion lock nut loose					○	○					
	Reduction pinion assembly inner bearing and outer bearing seized				○		○					
	Reduction pinion assembly inner bearing or outer bearing worn						○					
	Reduction pinion assembly inner bearing or outer bearing broken							○				
	Reduction pinion pilot bearing worn						○					
	Reduction pinion pilot bearing seized or damaged							○				
	Differential pinion spider broken				○							
	Differential gear or differential pinion broken				○			○	○	○		
	Differential gear or differential pinion seized				○					○		
	Differential gear or differential pinion worn								○	○		
	Differential gear washer worn or damaged							○	○	○		
	Differential gear backlash excessive					○						○
	Differential gear backlash insufficient								○		○	
	Play between differential gear and axle shaft spline excessive					○						○

WORK BEFORE REMOVAL AND INSTALLATION OF REAR AXLE

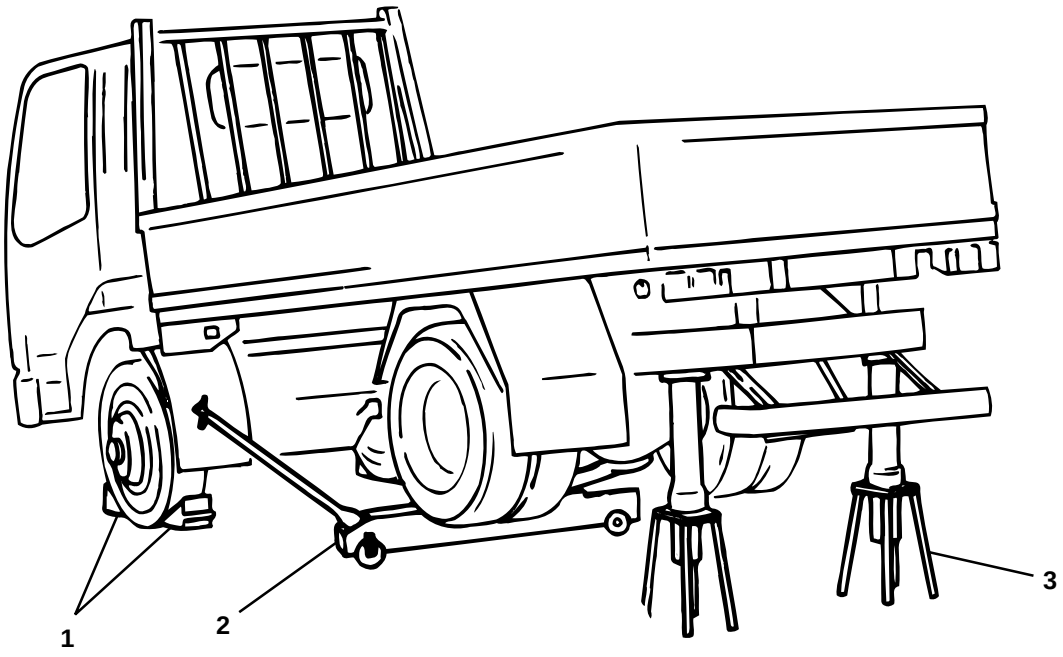

14176

● **Work sequence before removal**

1 Place wheel chocks.
2 Jack up the rear axle using a garage jack.
3 Support the rear frame on rigid racks.

WARNING

- **Chock the wheels securely so the vehicle does not move.**
- **Do not remove the chocks until the entire operation is completed.**
- **Supporting a vehicle on a garage jack only is extremely dangerous, so always support the frame on rigid racks.**
- **Leave the garage jack and rigid racks in place until the entire operation is completed. Never remove them during the operation.**

● **Work sequence after installation**

Follow the work sequence before removal in reverse.

M E M O

WHEEL HUB AND BRAKE DRUM

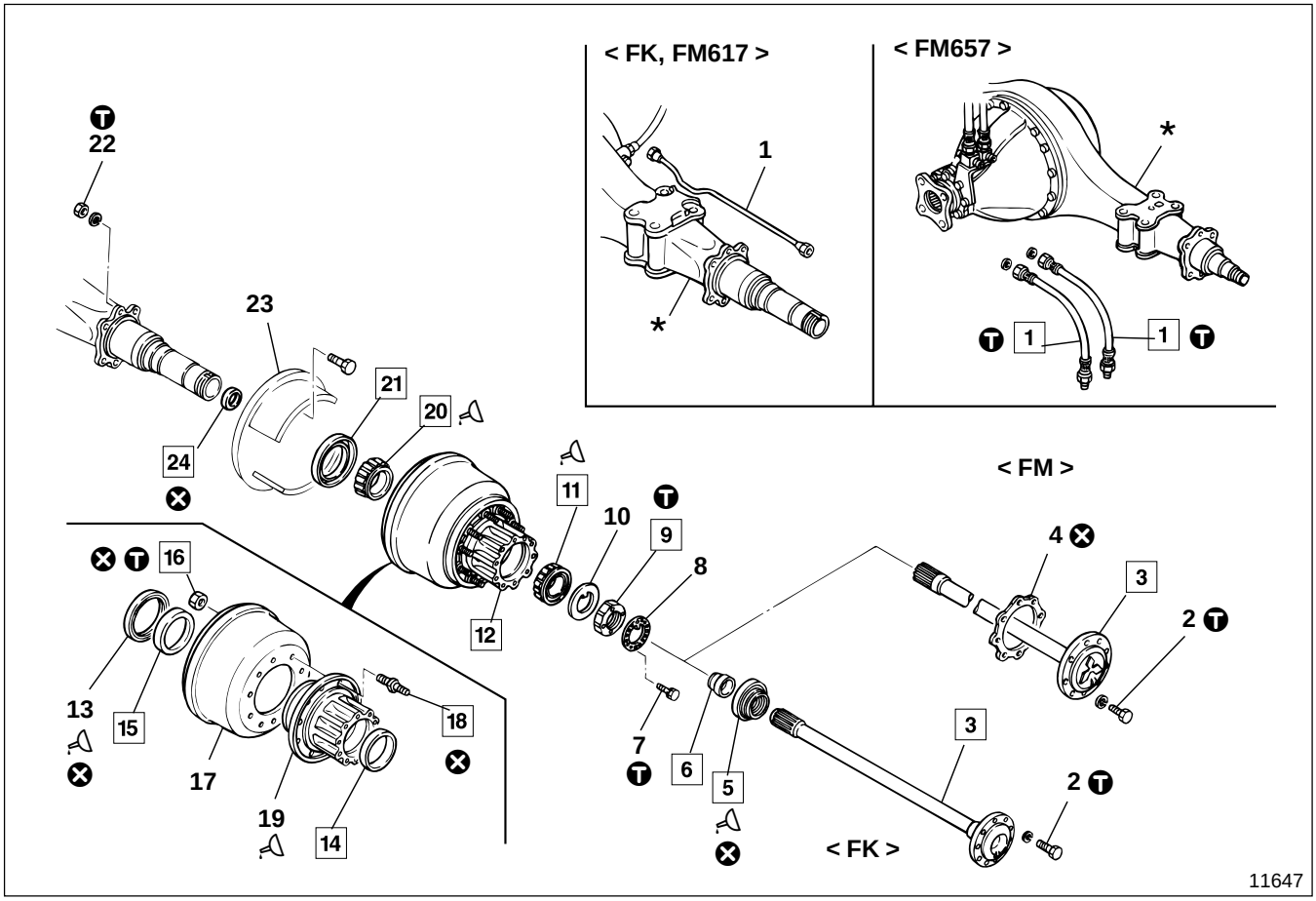

● **Disassembly sequence**

1 Brake pipe < FK, FM617 >
Brake hose < FM657 >
2 Bolt
3 Axle shaft
4 Gasket < FM >
5 Oil seal < FK >
6 Oil seal retainer
7 Bolt
8 Lock plate
9 Lock nut
10 Lock washer
11 Outer bearing inner race
12 Wheel hub and brake drum assembly
13 Oil seal
14 Outer bearing outer race
15 Inner bearing outer race
16 Nut
17 Brake drum
18 Hub bolt
19 Wheel hub
20 Inner bearing inner race
21 Oil seal retainer
22 Nut
23 Brake assembly
Gr 35A < FK, FM617 >
Gr 35B < FM657 >
24 Oil seal < FM >

***** : Axle housing P27-22

⊗ : Non-reusable parts

CAUTION

Be sure to protect brake pipe 1 < FK, FM617 >, or brake hose 1 < FM657 >, from dust by fitting blanking plugs after removal.

NOTE

Do not disassemble brake drum 17 and wheel hub 19 unless they are faulty.

● **Assembly sequence**

Follow the disassembly sequence in reverse.

WARNING

You must bleed air from the brake system after assembly, failure to do so would cause the brake to malfunction. Gr 35A < FK, FM617 >

CAUTION⚠

Be careful not to damage oil seal 13 when installing wheel hub and brake drum assembly 12 in axle housing *.

Service standards

Unit : mm {in.}

Location	Maintenance item			Standard value	Limit	Remedy
3	Axle shaft	Bend of shaft center		1.0 {0.039} or less	2.0 {0.079}	Replace
		Wobble of flange face	FK	0.04 {0.0016}	0.5 {0.020}	Replace
			FM	0.05 {0.0020}	0.5 {0.020}	Replace
11, 14, 15, 20	Starting torque of wheel hub bearing			2.5 to 5.4 N·m {1.8 to 4.0 lbf.ft, 0.25 to 0.55 kgf· m}	—	Tangential force at hub bolt position : 18 to 38 N {4.0 to 8.6 lbf, 1.8 to 3.9 kgf}

Tightening torque

Unit : N·m {lbf.ft, kgf·m}

Location	Parts to be tightened		Tightening torque	Remarks
1	Brake hose (T-connector side)	FM657	39 to 44 {29 to 33, 4.0 to 4.5}	—
2	Bolt (Axle shaft mounting)	FK	105 {80, 11}	—
		FM	270 {200, 27.7}	—
7	Bolt (Lock plate mounting)		6.9 to 11 {5.1 to 8.0, 0.7 to 1.1}	—
9	Lock nut	FK	195 {145, 20}	Slackening off angle : 22.5° (0ne sixteenth of a turn)
		FM	295 {215, 30}	Slackening off angle : 22.5° (0ne sixteenth of a turn)
16	Nut (Wheel hub and brake drum mounting)		320 {235, 32.8}	—
22	Nut (Brake assembly mounting)	FK	76 {56, 7.8}	—
		FM	135 {100, 13.8}	—

Lubricant

Location	Points of application		Kinds	Quantity
5, 13	Lip area of oil seal		Wheel bearing grease [NLGI No.2 (Li soap)]	As required
11, 20	Pack the space between rollers of outer bearing inner race and inner bearing inner race		Wheel bearing grease [NLGI No.2 (Li soap)]	As required
19	Pack interior of wheel hub	FK	Wheel bearing grease [NLGI No.2 (Li soap)]	700 g {24.7 oz}
		FM	Wheel bearing grease [NLGI No.2 (Li soap)]	1100 g {38.8 oz}

WHEEL HUB AND BRAKE DRUM

Special tools

Unit : mm {in.}

Location	Tool name and shape	Part No.	Application
9	Socket wrench | | D | | FK | 95 {3.74} | | FM | 120 {4.72} | 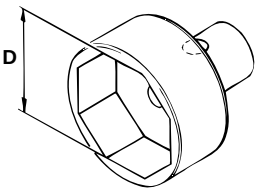 00969	< FK > MH061597 < FM > MH061536	Removal and installation of lock nut
12	Wheel hub puller 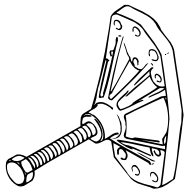 00973	MH061458	Removal of wheel hub and brake drum assembly
14	Wheel hub outer bearing installer | | A | B | | FK | ø118 {4.65} | ø112 {4.41} | | FM | ø149 {5.87} | ø138 {5.43} | 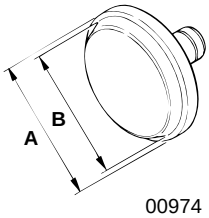 00974	< FK > MH061012 < FM > 03723-20000	Press-fitting of outer bearing outer race
15	Wheel hub inner bearing installer | | A | B | | FK | ø128 {5.04} | ø122.5 {4.82} | | FM | ø158 {6.22} | ø146 {5.75} | 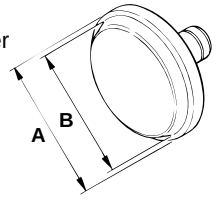 00974	< FK > MH061010 < FM > 03723-21000	Press-fitting of inner bearing outer race
20	**A** : Gear puller **B** : Adapter | | C | D | | FK | ø70 {2.76} | ø66 {2.60} | | FM | ø95 {3.74} | ø91 {3.58} | 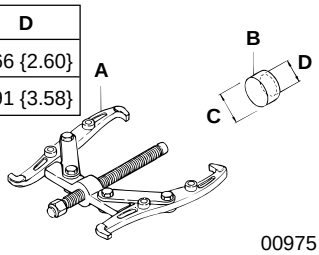 00975	**A** : MH061102 **B** : < FK > MH061962 < FM > MH061103	Removal of inner bearing inner race

Unit : mm {in.}

Location	Tool name and shape	Part No.	Application
20	Wheel bearing installer 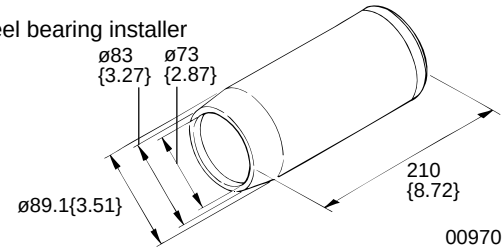	< FK > MH061009	Press-fitting of inner bearing inner race
	Oil seal retainer installer 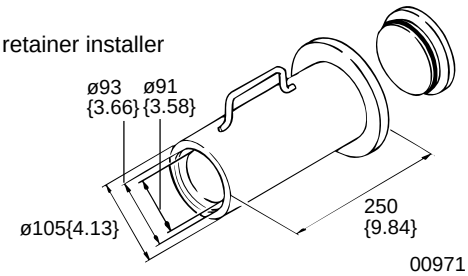	< FM > 03723-31001	
21	**A** : Gear puller **B** : Adapter **C** : Oil seal retainer puller adapter 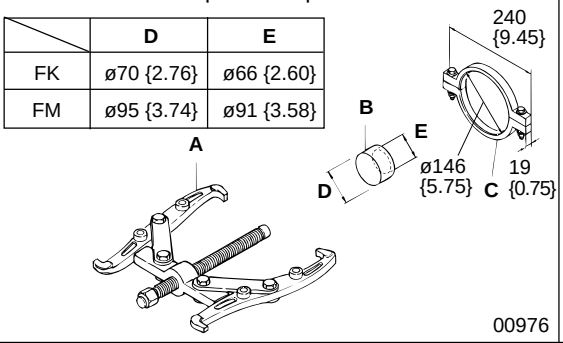	**A** : MH061102 **B** : < FK > MH061962 < FM > MH061103 **C** : < FM > 03724-16000	Removal of oil seal retainer
	Oil seal retainer installer 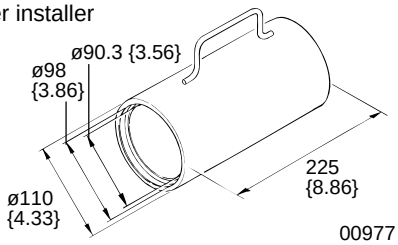	< FK > MH061008	Press-fitting of oil seal retainer
	Oil seal retainer installer 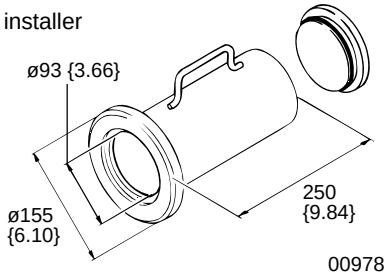	< FM > 03723-31001	

Unit : mm {in.}

Location	Tool name and shape	Part No.	Application
24	Oil seal installer 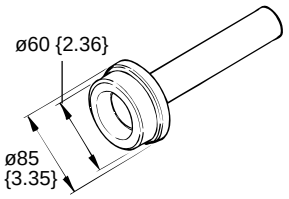	< FM > MH062016	Press-fitting of oil seal at axle tube end

◆ Service procedure

● Starting torque of wheel hub bearing

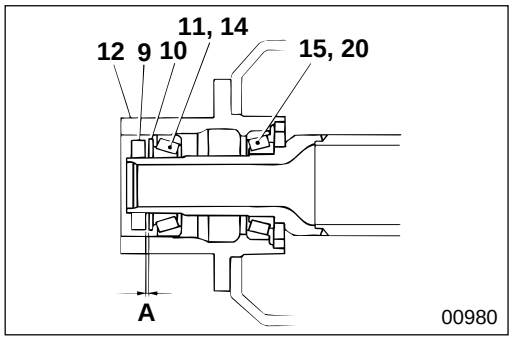

[Adjustment]

- Install lock washer **10** and lock nut **9**.
- Turn wheel hub and brake drum assembly **12** several times to smooth operation of outer bearings **11**, **14** and inner bearings **15**, **20**.
- Tighten lock nut **9** at specified torque.
- Slacken off lock nut **9** to obtain clearance **A** between the lock nut and lock washer **10**.

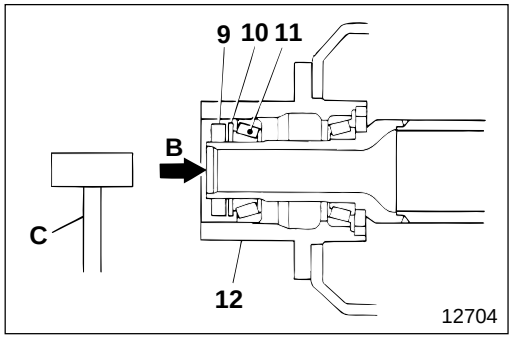

- To slide outer bearing inner race **11** towards lock nut **9**, hit end **B** of the axle tube two or three times with a mallet, while turning wheel hub and brake drum assembly **12**.
  C : Copper-headed mallet

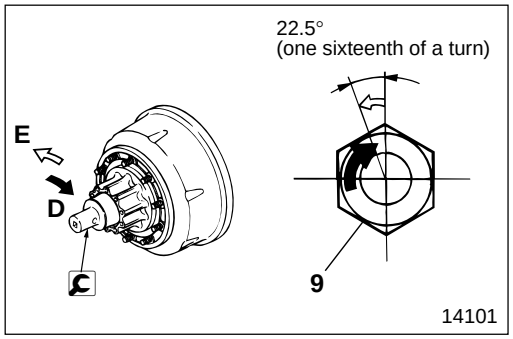

★ • Tighten lock nut **9** at specified torque.
  D : Tightening direction

- Slacken off lock nut **9** by 22.5° (one sixteenth of a turn).
  E : Slackening off direction

(★ : If any fault is found when measuring tangential force, redo from this item.)

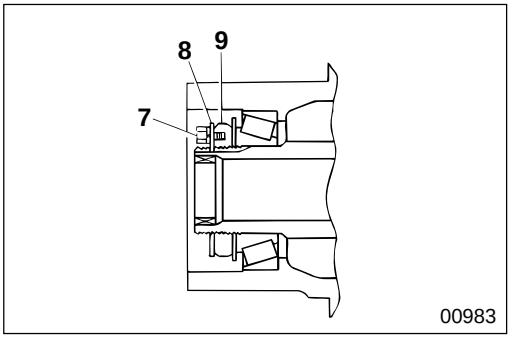

- Install lock plate **8**.
- Make sure that bolt **7** mounting holes of lock nut **9** and lock plate **8** align.
- Tighten bolt **7** at specified torque.

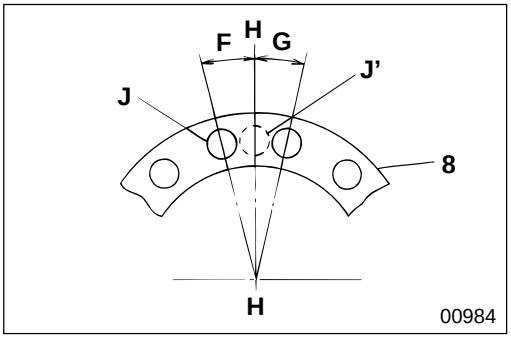

- If mounting holes of lock plate **8** and lock nut **9** do not align, align as follows:

Hole position of lock nut	How to align hole of lock plate
Within range **F**	Loosen lock nut to align holes
Within range **G**	Turn over lock plate and loosen lock nut to align holes
On line **H-H**	Turn over lock plate to align holes (Hole position **J'** changes to **J**)

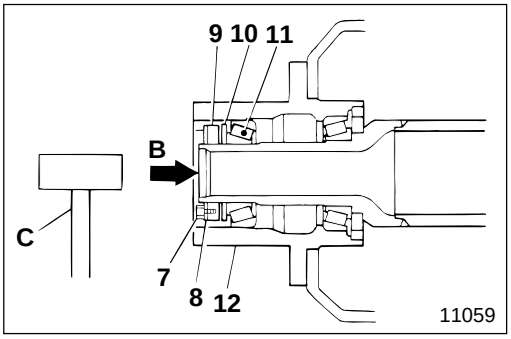

- To slide outer bearing inner race **11** towards lock nut **9**, hit end **B** of the axle tube two or three times with a mallet, while turning wheel hub and brake drum assembly **12**.
  C : Copper-headed mallet

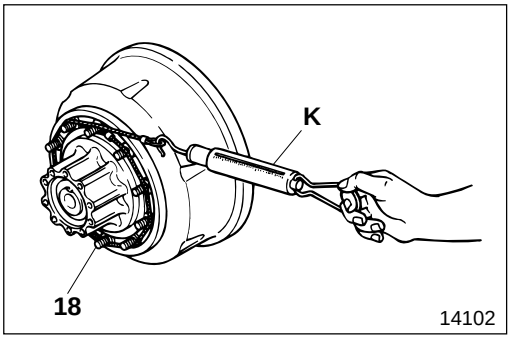

[Measurement]

- Install spring balance **K** on hub bolt **18**.
- Measure the tangential force.
- If the measured tangential force is within the specified value, the starting torque conforms to the standard value.
- Do not allow the tangential force to become higher than the upper limit of the specified value.
- If the measured value deviates from the specified value, repeat from step ★. 📖 P27-14
- If the result is still not satisfactory, replace outer bearings **11, 14** and inner bearings **15, 20**.

NOTE

- **Make sure that there is no drag in brake lining and brake drum 17 before you measure the tangential force.**
- **Measure the starting torque when oil seal 13 has been installed.**

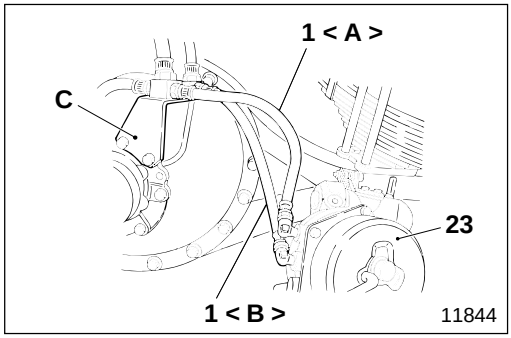

1 **Removal and installation of brake hose < FM657 >**

- Remove brake hoses **1** from T-connector **C** side first, then remove from brake assembly **23** side.

- For installation, follow the removal sequence in reverse.
  A : Service brake hose
  B : Spring brake hose

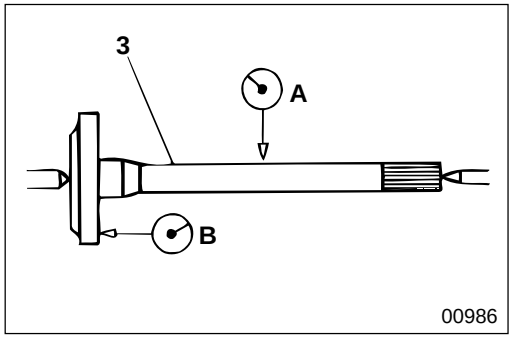

3 **Axle shaft**

[Inspection]
A : Bend of shaft center

NOTE

To measure the bend of axle shaft 3, turn it one full revolution and read the dial gauge indicator. The bend is one half of the indicated value.

B : Wobble of flange face

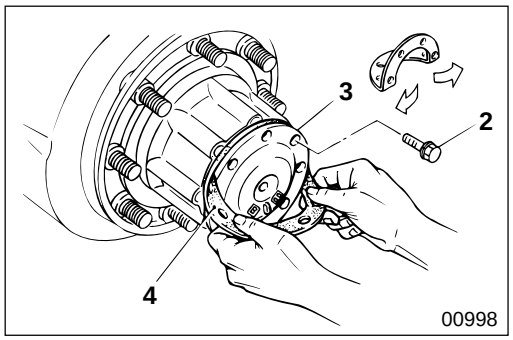

[Installation] < FM >
Install gasket **4** on axle shaft **3**, and tighten bolt **2** at specified torque.

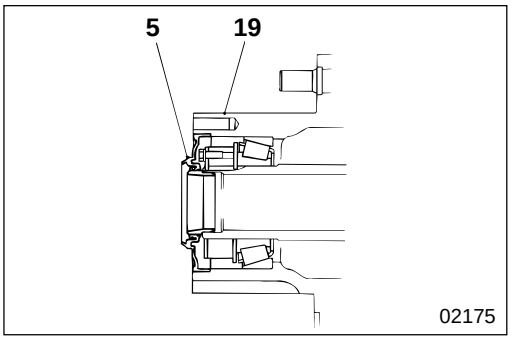

5 **Installation of oil seal**

Press-fit oil seal **5** until it is flush with the end of wheel hub **19**.

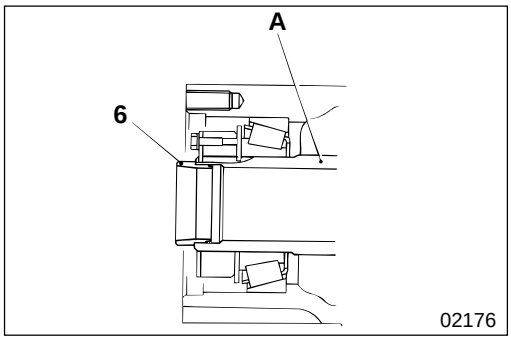

6 **Oil seal retainer**

[Removal]
It is not necessary to remove oil seal retainer **6** other than for replacement of oil seal **5**.

[Installation]
Press-fit oil seal retainer **6** until it is flush with the end of axle tube **A**.

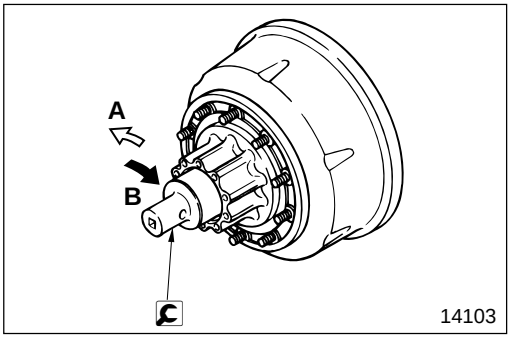

9 **Removal and installation of lock nut**

After installation, adjust the starting torque of the wheel hub bearing. See P27-14

A : Removal
B : Installation

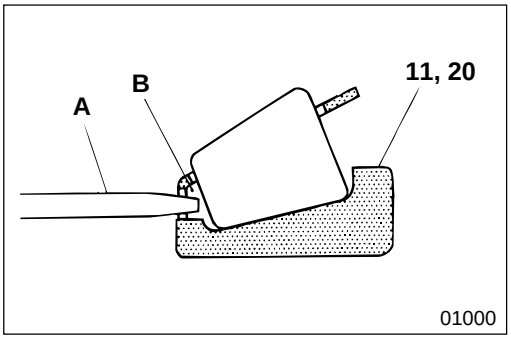

11 **20** **Packing grease in outer bearing inner race and inner bearing inner race**

A : Grease pump nozzle
B : Space between rollers

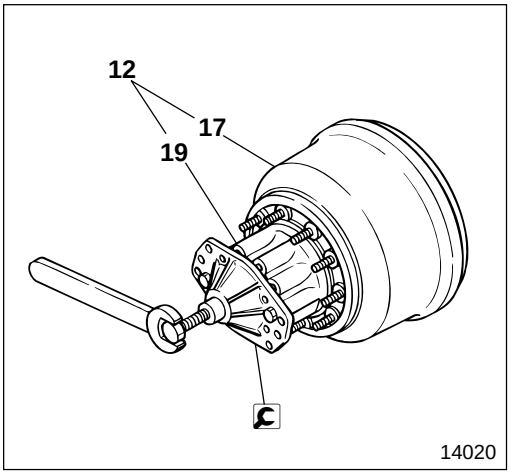

12 **Wheel hub and brake drum assembly**

[Removal]

CAUTION

Make sure you remove wheel hub and brake drum assembly 12 in a straight line to prevent damage to oil seal 13.

If wheel hub and brake drum assembly **12** cannot be removed because of stepped wear **A** in brake drum **17**, carry out the following:

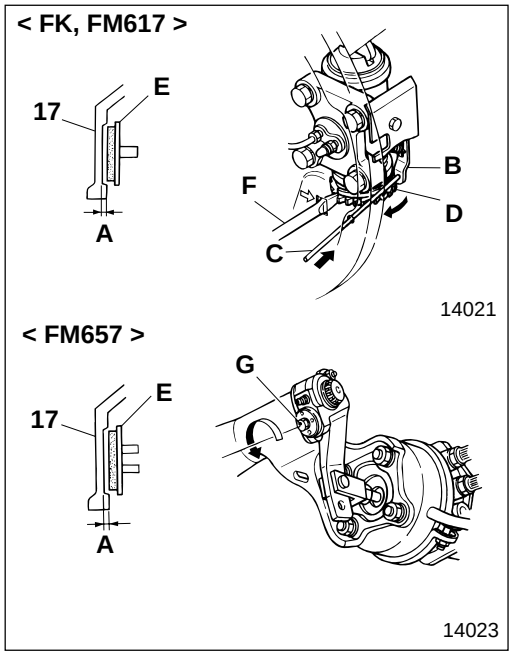

< FK, FM617 >
- Remove the packing plate cover.
- Lift lever **B**.
  C : Wire approximately ø5 mm {0.020 in.}
- Turn adjuster **D** in the opposite direction to the arrow on the packing plate, and expand the clearance between brake drum **17** and brake shoe assembly **E**.
  F : Screwdriver
- Remover wheel hub and brake drum assembly **12**.

< FM657 >
- Turn worm shaft **G** of the automatic slack adjuster counterclockwise, and expand the clearance between brake drum **17** and brake shoe assembly **E**.
- Remove wheel hub and brake drum assembly **12**.

CAUTION
If brake drum 17 is faulty, correct it. Gr 35A, B

[Installation]
After installing wheel hub and brake drum assembly **12**, adjust the brake shoe clearance.
Gr 35A < FK, FM617 >
Gr 35B < FM657 >

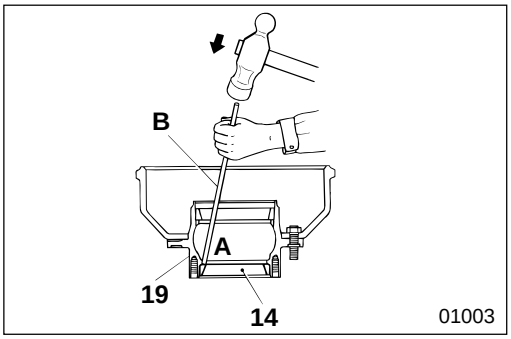

14 **Outer bearing outer race**

[Removal]
Drive out outer bearing outer race **14** evenly from four indented parts **A** in wheel hub **19**.
B : Pin-punch

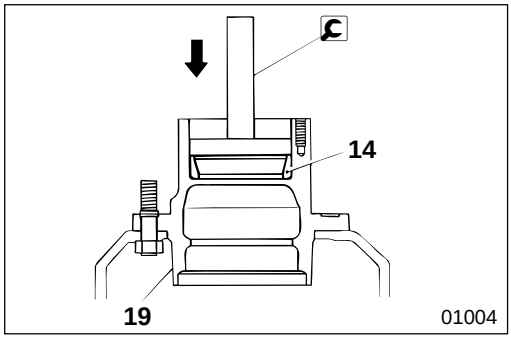

[Installation]

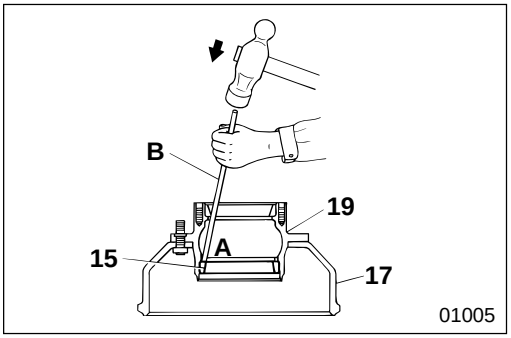

15 **Inner bearing outer race**

[Removal]
Drive out inner bearing outer race **15** evenly from four indented parts **A** in wheel hub **19**.

B : Pin-punch

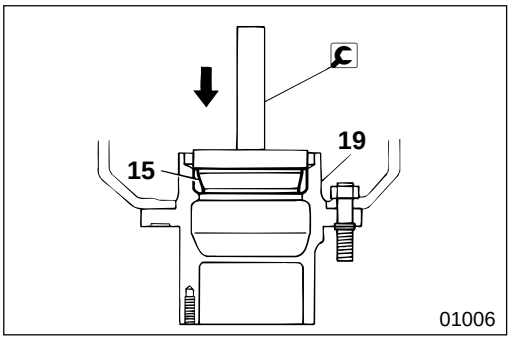

[Installation]

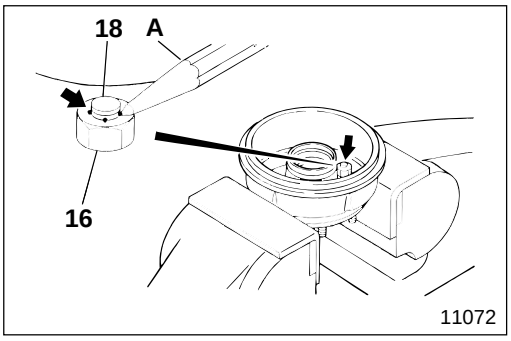

16 **18** **Installation of hub bolt and nut**

- Install hub bolt **18**.
- Tighten nut **16** at specified torque.
- Caulk nut **16** evenly at four points to keep it from turning.

A : Pin-punch

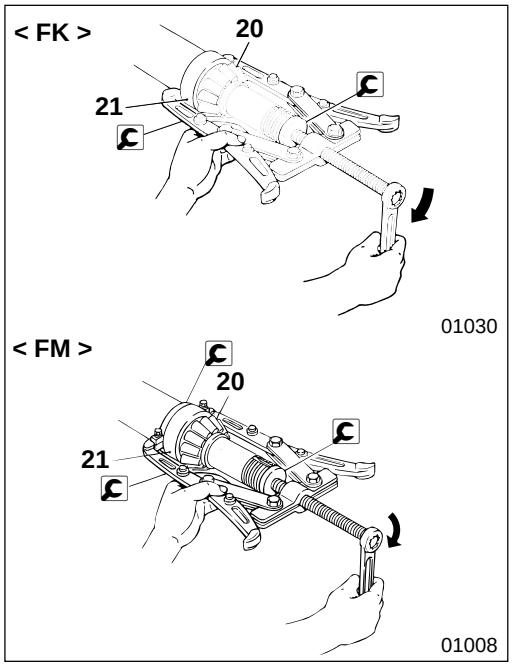

20 **21** **Inner bearing inner race and oil seal retainer**

[Removal]

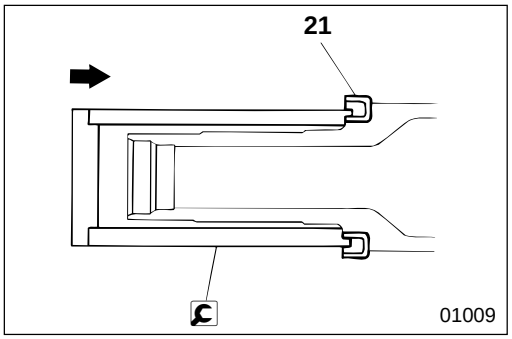

[Press-fitting]

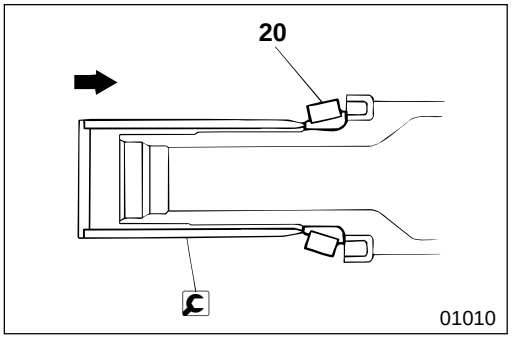

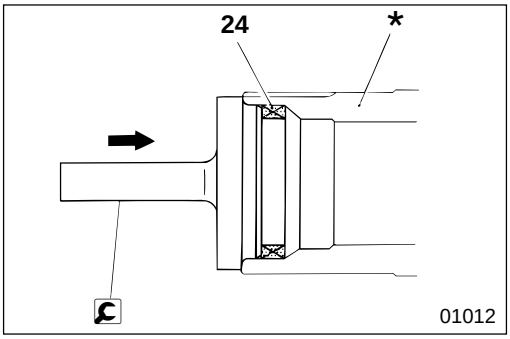

24 **Installation of oil seal < FM >**

M E M O

AXLE HOUSING

< FM657 >

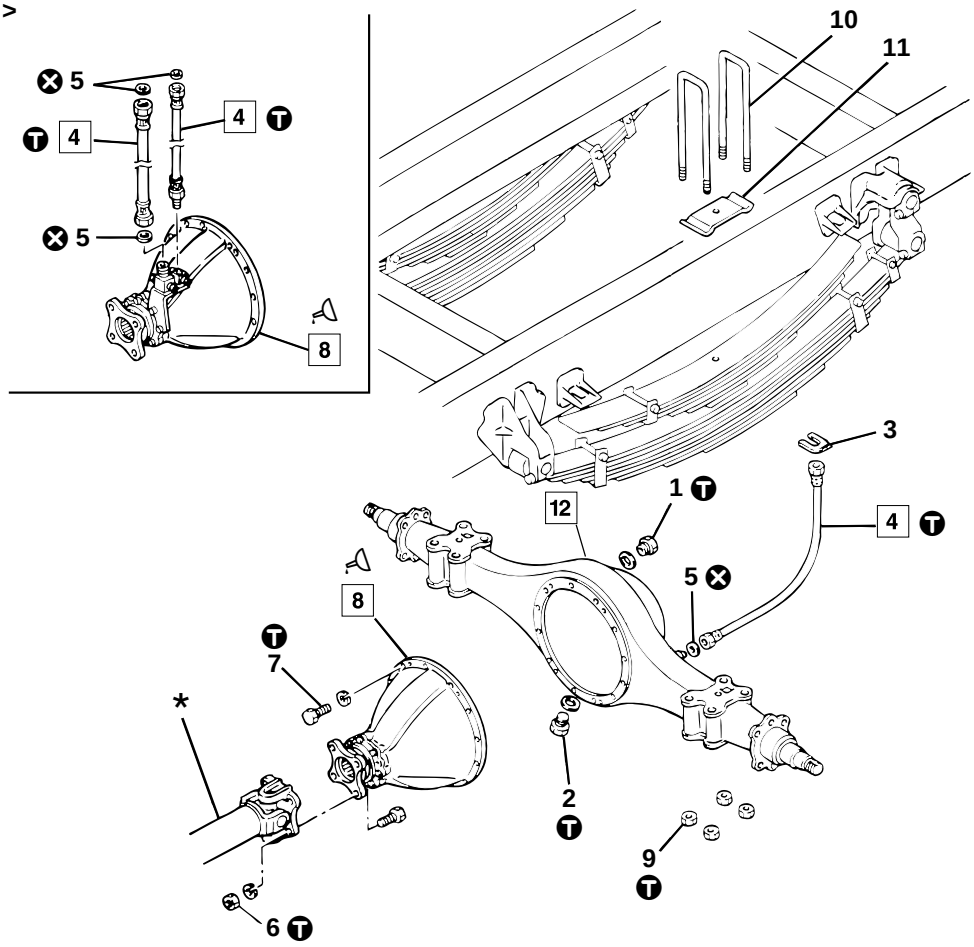

11648

● **Work before removal** P27-24

● **Removal sequence**

1 Inspection plug
2 Drain plug
3 Clip < FK, FM617 >
4 Brake hose
5 Packing
6 Nut
7 Bolt
8 Reduction and differential assembly P27-26
9 U-bolt nut
10 U-bolt
11 Spring upper pad
12 Axle housing

***** : Propeller shaft Gr 25

CAUTION

Be sure to protect brake hose 4 from dust by fitting blanking plugs after removal.

NOTE

Do not remove axle housing 12 unless it is faulty.

● **Installation sequence**

Follow the removal sequence in reverse.

CAUTION

Make sure that brake hose 4 is not twisted when you install it.

NOTE

Do not let sealant ooze from the mounting surfaces of reduction and differential assembly 8 and axle housing 12.

● **Work after installation** P27-24

Service standards

Unit : mm {in.}

Location	Maintenance item	Standard value	Limit	Remedy
12	Bend of axle housing (C-B)	0.2 {0.0079} or less	0.5 {0.020} or more	Replace

Tightening torque

Unit : N·m {lbf.ft, kgf·m}

Location	Parts to be tightened				Tightening torque	Remarks
1	Inspection plug			FK	98 to 115 {72 to 87, 10 to 12}	—
				FM	175 to 195 {130 to 145, 18 to 20}	—
2	Drain plug			FK	98 to 115 {72 to 87, 10 to 12}	—
				FM	175 to 195 {130 to 145, 18 to 20}	—
4	Brake hose	FK, FM617	Axle housing side		21 to 30 {15 to 22, 2.1 to 3.1}	—
		FM657	For service brake		69 to 74 {51 to 54, 7.0 to 7.5}	—
			For spring brake (Frame side)		39 to 44 {29 to 33, 4.0 to 4.5}	—
6	Nut (Propeller shaft mounting)		Propeller shaft model	P4, P8	85 {61, 8.5}	—
				P10	120 to 180 {87 to 130, 12 to 18}	—
7	Bolt (Reduction and differential assembly mounting)				120 {90, 12.5}	—
9	U-bolt nut (U-bolt mounting)			FK	414±62 {305±46, 42.2±6.3}	Wet
				FM	546±82 {400±61, 55.7±8.4}	Wet

Sealant

Location	Points of application	Kinds	Quantity
8	Connecting surfaces of reduction and differential assembly and axle housing	THREEBOND 1215	As required

Special tools

Unit : mm {in.}

Location	Tool name and shape	Part No.	Application
12	Measuring bar 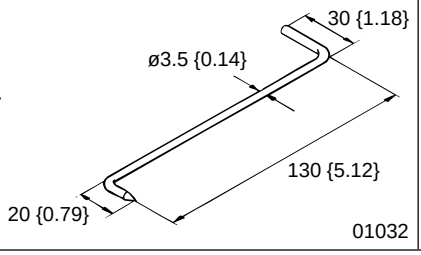	MH061003	Measures bend of axle housing : Two required

◆ Service procedure

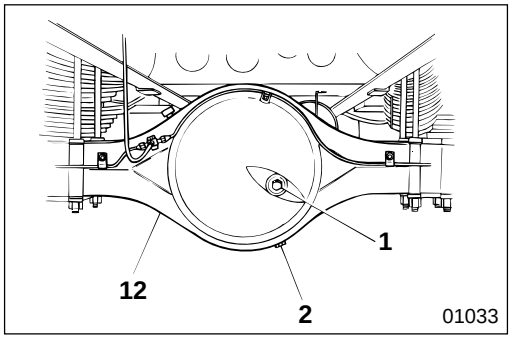

● **Work before removal**

Remove drain plug **2** and drain the gear oil.

WARNING⚠

The oil temperature is high immediately after the vehicle has stopped, so take care not to scald yourself.

● **Work after installation**

Fill with the specified amount of gear oil via inspection plug **1**.

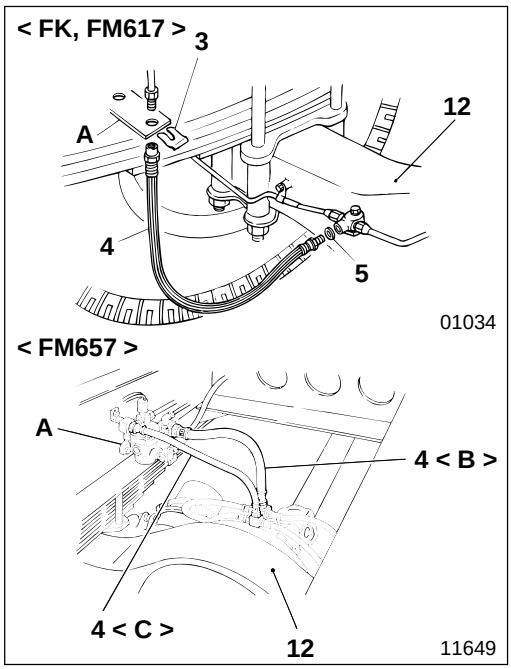

4 **Removal and installation of brake hose**

- Remove brake hose **4** from frame **A** side first, then from axle housing **12** side.
- For installation, follow the removal sequence in reverse.

B : Service brake hose
C : Spring brake hose

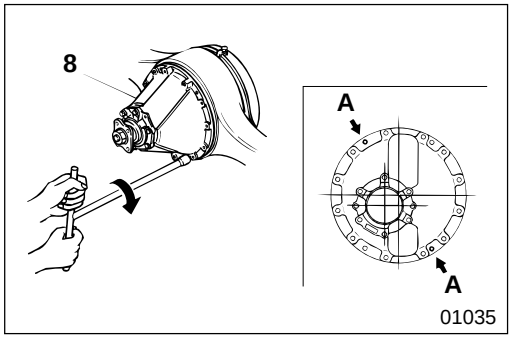

8 **Removal of reduction and differential assembly**

To remove reduction and differential assembly **8**, screw two M12×1.25 mm bolts evenly into two screw holes **A**.

NOTE

Completely remove adhered sealant from the mounting surfaces of reduction differential assembly 8 and axle housing 12.

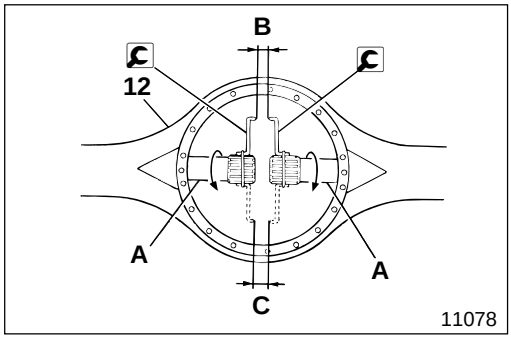

12 **Bend of axle housing**

- Leave axle shaft **A** installed in axle housing **12**.
- Install measuring bar on axle shaft **A**, and measure clearance **B**.
- Turn axle shaft **A** 180°, and measure clearance **C**.
- The difference between **B** and **C** is the amount of bend of axle housing **12**.
- If the bend of axle housing **12** is higher than the limit, replace the axle housing.

M E M O

REDUCTION AND DIFFERENTIAL

Reduction and Differential Assembly

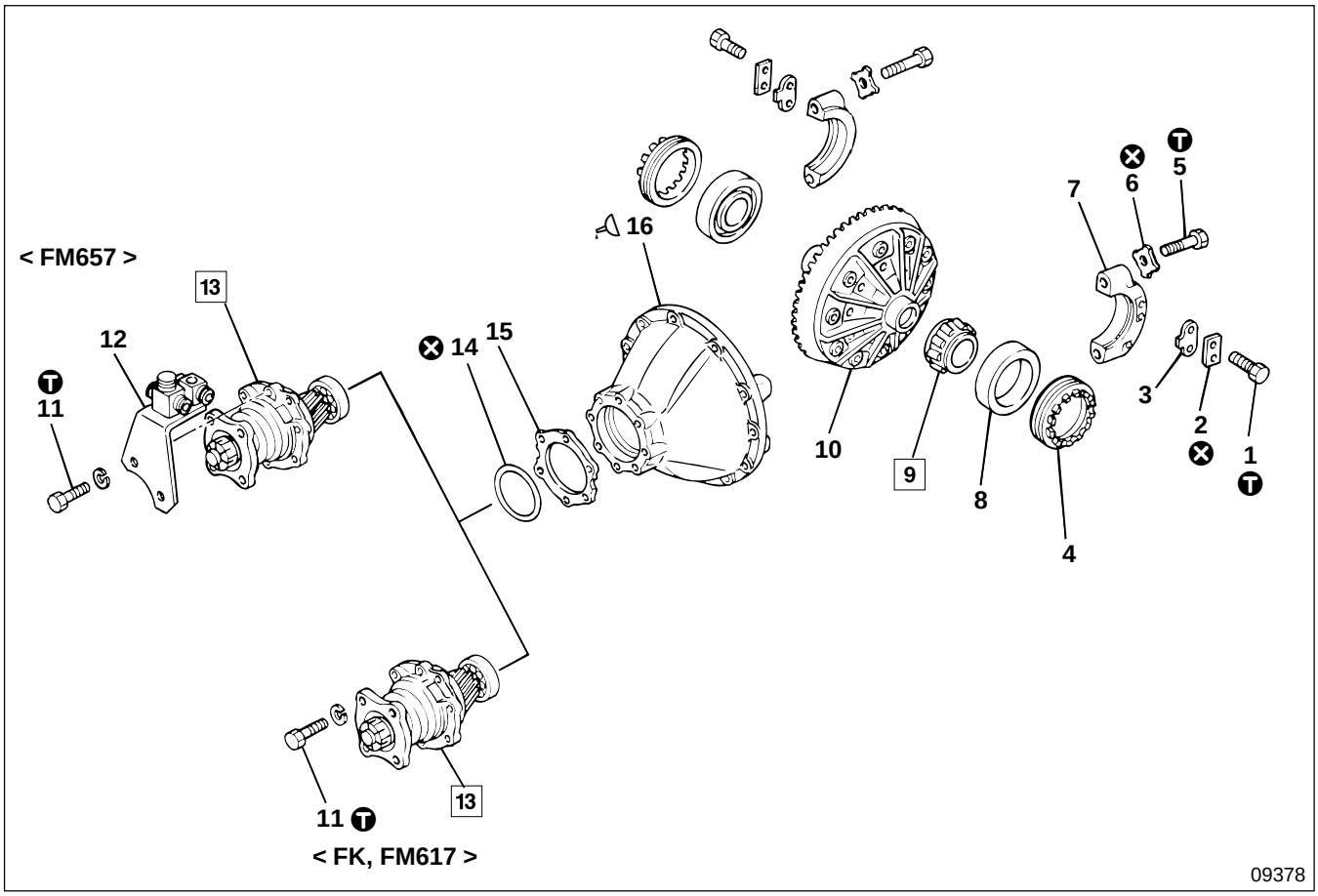

● **Inspection before disassembly** 📖 **P27-29**

● **Work before disassembly** 📖 **P27-29**

● **Disassembly sequence**

1 Bolt
2 Lock seat
3 Lock pawl
4 Adjusting screw
5 Bolt
6 Lock plate
7 Bearing cap
8 Side bearing outer race
9 Side bearing inner race
10 Differential assembly 📖 P27-36
11 Bolt
12 T-connector < FM657 >
13 Pinion assembly 📖 P27-40
14 O-ring < D050H >
15 Shim
16 Differential carrier

⊗ : Non-reusable pars

CAUTION ⚠

- **Make sure you replace bearing caps 7, differential carrier 16 and bolt 5 as a differential carrier set.**
- **Make sure you replace the reduction gear of differential assembly 10 and the reduction pinion of pinion assembly 13 as a reduction gear set.**
- **Make sure you keep left and right side bearings 8, 9 separate after removal, and be careful not to mix them up when installing them.**

NOTE

Write down the thickness of shim 15 before disassembly to use it as reference when assembling.

● **Assembly sequence**

Follow the disassembly sequence in reverse.

● **Inspection and adjustment after assembly** 📖 **P27-30**

Service standards

Unit : mm {in.}

Location	Maintenance item		Standard value	Limit	Remedy
8, 9	Starting torque of side bearing	D050H	2.0 to 2.9 N·m {1.4 to 2.2 lbf.ft, 0.20 to 0.30 kgf·m}	—	• Adjust using adjusting screw • Tangential force at 170 {6.69} outer periphery point of differential case : 24 to 34 N {5.3 to 7.7 lbf, 2.4 to 3.5 kgf}
		D8H	2.5 to 3.4 N·m {1.8 to 2.5 lbf.ft, 0.25 to 0.35 kgf·m}	—	• Adjust using adjusting screw • Tangential force at 213 {8.39} outer periphery point of differential case : 23 to 32 N {5.1 to 7.3 lbf, 2.3 to 3.3 kgf}
10	Wobble of reduction gear back face	D050H	0.15 {0.0059} or less	0.2 {0.0079}	• Adjust or replace as a gear set • Measure at the 145 {5.71} radial point from reduction gear center
		D8H	0.15 {0.0059} or less	0.2 {0.0079}	• Adjust or replace as a gear set • Measure at the 185 {7.28} radial point from reduction gear center
10, 13	Backlash between reduction gear and reduction pinion		0.25 to 0.33 {0.0098 to 0.013}	0.6 {0.024}	Adjust or replace as a gear set

Tightening torque

Unit : N·m {lbf.ft, kgf·m}

Location	Parts to be tightened		Tightening torque	Remarks
1	Bolt (Lock pawl mounting)		34 {25, 3.5}	—
5	Bolt (Bearing cap mounting)	D050H	235 {175, 24}	—
		D8H	445 {330, 45.5}	—
11	Bolt (Differential carrier and pinion assembly mounting)	D050H	78 {58, 8}	—
		D8H	115 {87, 12}	—

Sealant

Location	Points of application	Kinds	Quantity
16	Mounting surface of pinion pilot bearing	LOCTITE 601	As required

Special tools

Unit : mm {in.}

Location	Tool name and shape	Part No.	Application
9	Side bearing installer 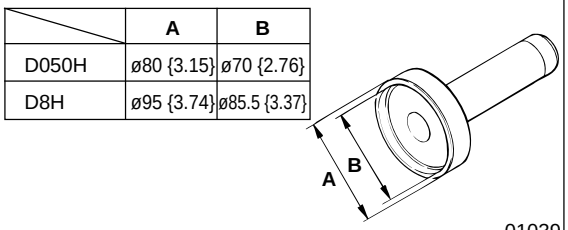 	< D050H > MH061748 < D8H > 03723-25000	Press-fitting of side bearing inner race
13	Bearing retainer remover 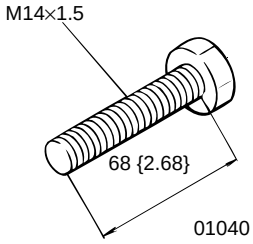 	< D8H > MH062172	Removal of pinion assembly : Two required
	Bearing retainer guide pin 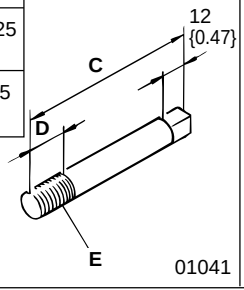 	< D050H > MH061745 < D8H > MH061746	Installation of pinion assembly : Two required

	C	D	E
D050H	85 {3.35}	18 {0.71}	M12×1.25
D8H	95 {3.74}	23 {0.91}	M14×1.5

	A	B
D050H	ø80 {3.15}	ø70 {2.76}
D8H	ø95 {3.74}	ø85.5 {3.37}

◆ Service procedure

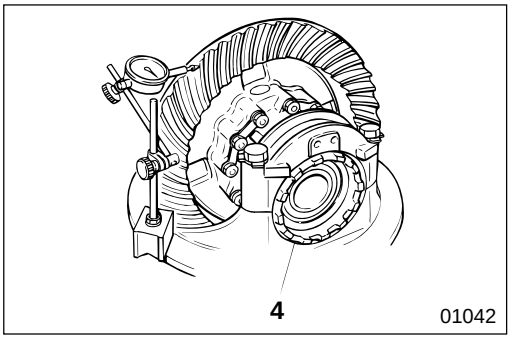

● Inspection before disassembly

Inspect for faulty parts before disassembly.

(1) Backlash of reduction gear and reduction pinion

If there is any fault, it is considered to be because of the amount adjusting screw **4** was tightened.

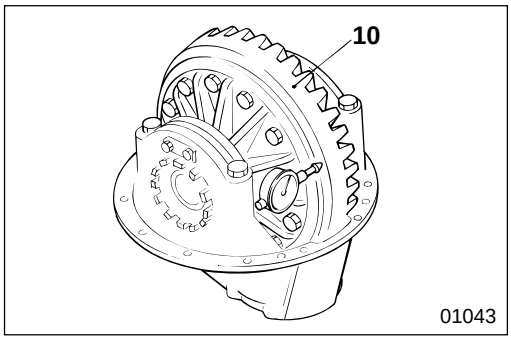

(2) Wobble of back face of reduction gear

Measure wobble at a point 145 mm {5.71 in.} (on the radius) for < D050H >, 185 mm {7.28 in.} for < D8H >, from the center of the reduction gear, turning differential assembly **10** one full revolution.

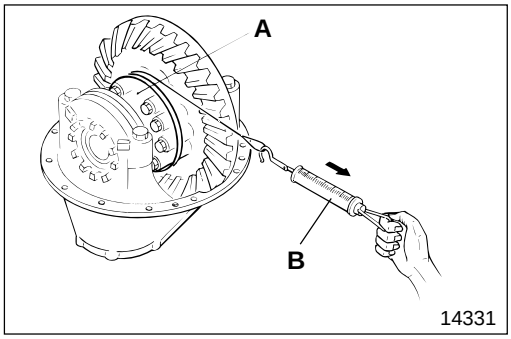

(3) Starting torque of side bearing

- Install spring balance **B** at 170 mm {6.69 in.} for < D050H >, 213 mm {8.39 in.} for < D8H >, outer periphery point of differential case **A**.
- Measure the tangential force.
- If the measured tangential force is within the specified value, the starting torque conforms to the standard value.

NOTE

Measure the starting torque within reduction gear and reduction pinion backlash range.

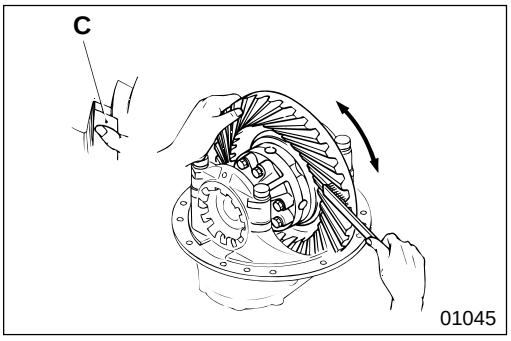

(4) Tooth contact of reduction gear

Apply red lead to three or four gear teeth, turn the gear a few times, and examine tooth contact with a piece of paper **C**.

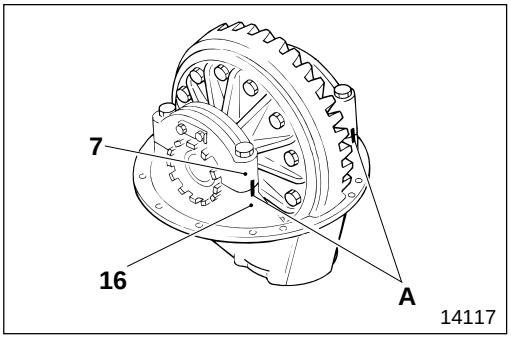

● Work before disassembly

Put alignment marks **A** on bearing cap **7** and differential carrier **16** to identify left and right.

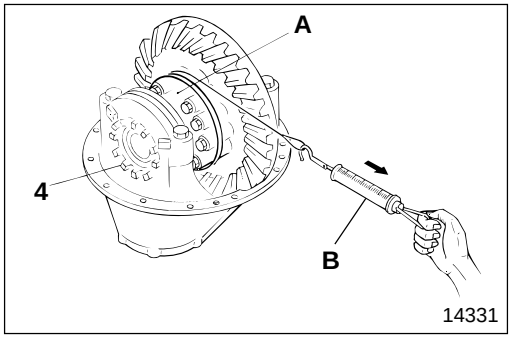

● **Inspection and adjustment after assembly**

(1) Starting torque of side bearing

[Inspection]

- Install spring balance **B** at 170 mm {6.69 in.} for < D050H >, 213 mm {8.39 in.} for < D8H >, outer periphery point of differential case **A**.
- Measure the tangential force.
- If the measured tangential force is within the specified value, the starting torque conforms to the standard value.
- If the measured value deviates from the specified value, adjust.

[Adjustment]

If the measured value does not meet the standard value, adjust using left and right adjusting screws **4**.

CAUTION ⚠

- **Tighten left and right adjusting screws 4 the same amount.**
- **Adjust the starting torque within the reduction gear and reduction pinion backlash range.**

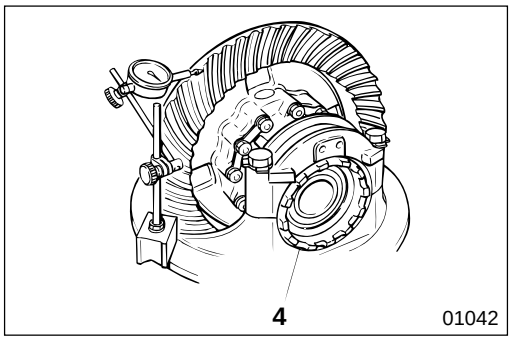

(2) Adjustment of backlash between reduction gear and reduction pinion

Adjust the starting torque of the side bearings using left and right adjusting screws **4**, taking care not to change the starting torque.

CAUTION ⚠

Make sure when you loosen one adjusting screw 4 that you tighten the other adjusting screw by the same amount, because the starting torque of the side bearing changes.

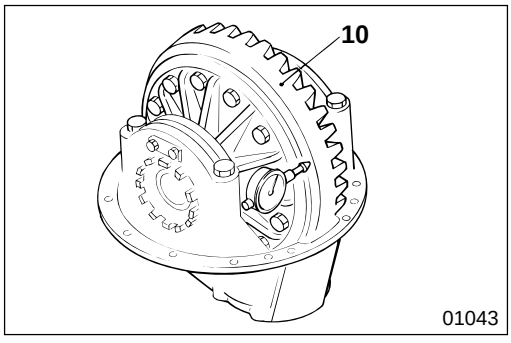

(3) Inspection of wobble of back face of reduction gear

Measure wobble at a point 145 mm {5.71 in.} (on the radius) for < D050H >, 185 mm {7.28 in.} for < D8H >, from the center of the reduction gear, turning differential assembly **10** one full revolution.

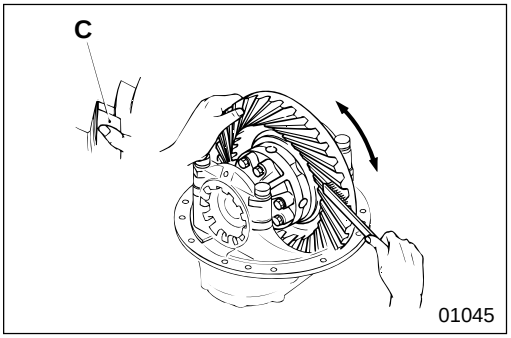

(4) Tooth contact of reduction gear

[Inspection]
Apply red lead to three or four gear teeth, turn the gear a few times, and examine tooth contact with a piece of paper **C**.

[Adjustment]
If contact area is remarkably offset, adjust with reduction pinion mounting adjusting shims to increase or decrease the backlash.

CAUTION

- **Make sure you replace as a reduction gear set (reduction gear and reduction pinion), when you replace the gear because of excessive teeth wear.**
- **When good tooth contact adjustment has been obtained, but backlash does not meet the standard value, tooth contact has priority. It is not necessary to adjust backlash to the standard value if it is less than 0.15 mm {0.0059 in.} out.**

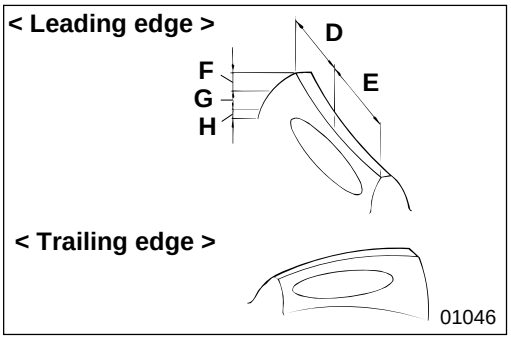

● **Normal tooth contact at no load**

< Reduction gear >

D : Heel
E : Toe
F : Face
G : Flank
H : Clearance

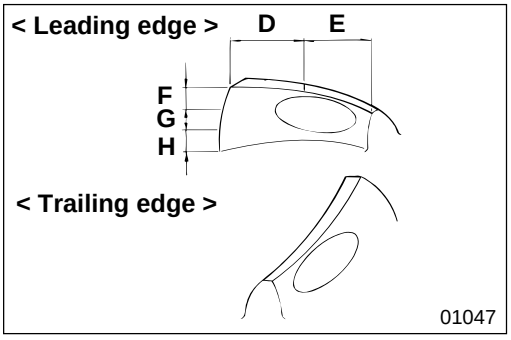

< Reduction pinion >

D : Heel
E : Toe
F : Face
G : Flank
H : Clearance

Maintenance item			Assembly standards
At no load	Tooth contact position	Lengthwise direction of tooth	From center toward toe
		Vertical direction	From center toward top of tooth for reduction gear and center of tooth for pinion
	Tooth contact shape	Length	About 50 to 70% of tooth width
		Width	About 50 to 70% of tooth depth
	Degree of tooth contact		Degree of tooth contact becomes weaker as it comes nearer to root or top

NOTE

When tooth contact area is nearer to toe at no load, it becomes middle area contact under load.

Adjustment of Tooth Contact

	Mode of adjustment	Moving direction
Adjustment by adding or reducing shims	Advances reduction pinion to reduction gear (Shims are reduced) 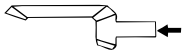	< Leading edge > 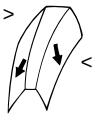 < Trailing edge > Tooth contact moves toward root of tooth
	Retards reduction pinion from reduction gear (Shims are added) 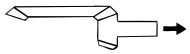	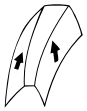 Tooth contact moves toward top of tooth
Adjustment by controlling adjusting screw	Advance reduction gear to reduction pinion axis (Less backlash) 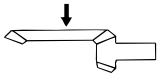	 Tooth contact moves in lengthwise direction of tooth Leading edge: Nearer to toe and slightly nearer to root of tooth Trailing edge: Nearer to heel and slightly nearer to top of tooth
	Retard reduction gear from reduction pinion axis (More backlash) 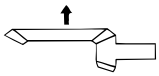	 Tooth contact moves in lengthwise direction of tooth Leading edge: Nearer to heel and slightly nearer to top of tooth Trailing edge: Nearer to toe and slightly nearer to root of tooth

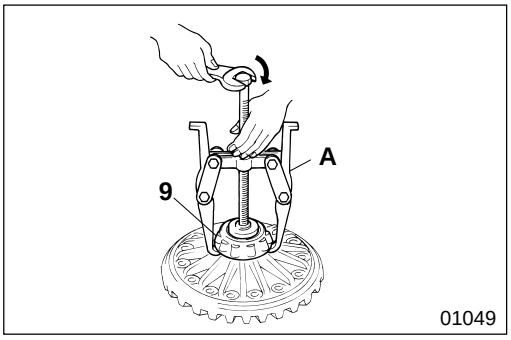

9 **Side bearing inner race**

[Removal]
A : Gear puller (General tool)

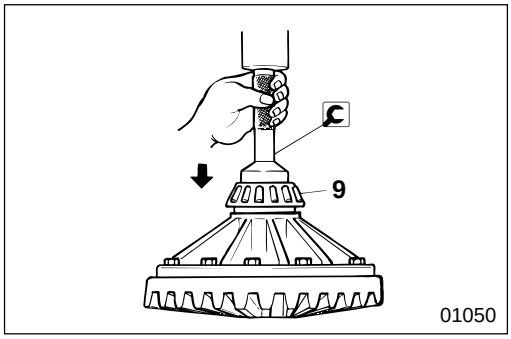

[Installation]

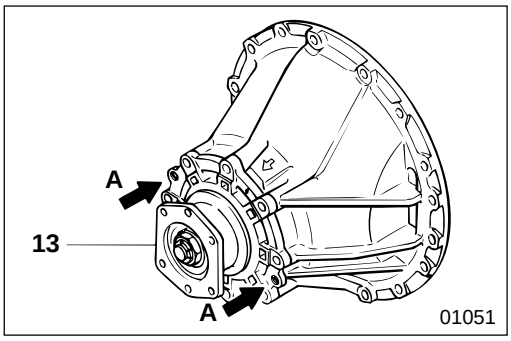

13 **Pinion assembly**

[Removal]
< D050H >
To remove pinion assembly **13**, screw two M12×1.25 mm bolts evenly into the two pinion assembly removal screw holes **A**.

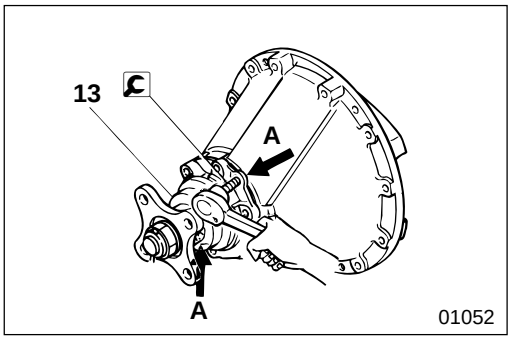

< D8H >
To remove pinion assembly **13**, screw two bearing retainer removers into the two pinion assembly removal screw holes **A**.

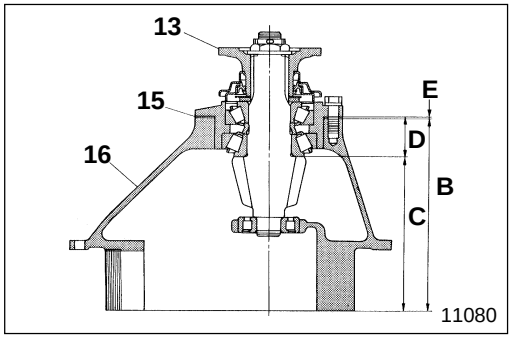

[Adjustment]

- Carry out the following procedure so that **B**, **C** and **D** conform to the standard dimension.
- Calculate shim thickness **E** according to the following formula based upon the machining error data stamped on pinion assembly **13** and differential carrier **16**.

Formula for calculation

E = 0.5 {0.020}–b+c+d

b : Deviation from basic dimension **B**
c : Deviation from basic dimension **C**
d : Deviation from basic dimension **D**

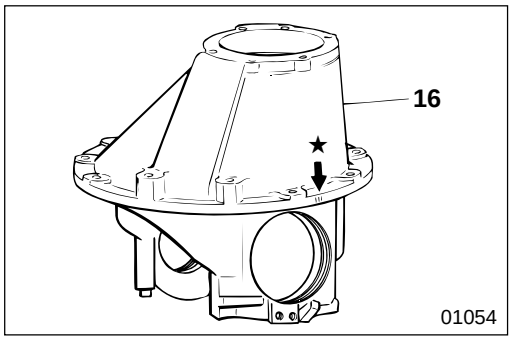

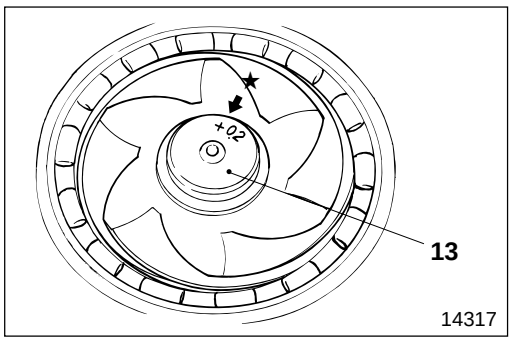

NOTE

Thickness is stamped in millimeters.

Unit : mm {in.}

Location	Standard dimension		How to calculate deviation
	D050H	D8H	
Shim thickness	0.5 {0.020}		—
B	232 {9.13}	261 {10.3}	The basic dimension, multiplied by 100, is stamped on the periphery of differential carrier **16** flange
C	180 {7.09}	208 {8.19}	The basic dimension is stamped on the top of pinion assembly **13**
D	52 {2.05}	53.5 {2.11}	Measure the deviation from **D** using a dial gauge. However, If it is difficult to measure the actual deviation, assume a value from 0 to 0.2 {0 to 0.0079}

★ : Stamped number position

- Select shim **15** from shim thickness **E**.
  Available thicknesses of shim **15** : 0.1 mm {0.0039 in.} and 0.2 mm {0.0079 in.}

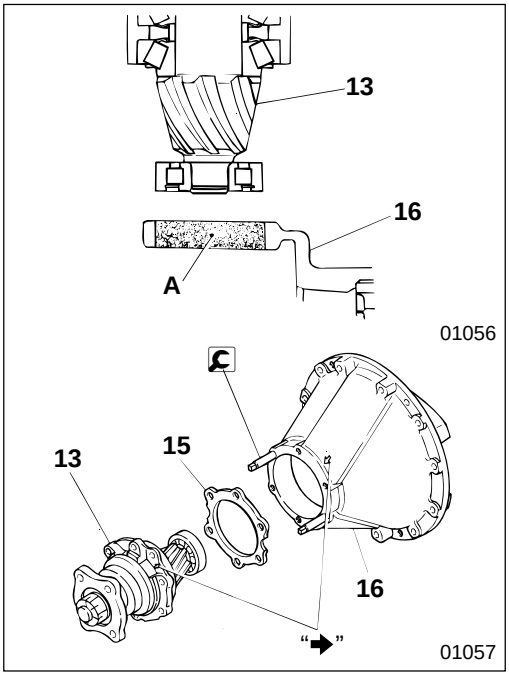

[Installation]

- Apply lock paint to pinion pilot bearing mounting surface **A** of differential carrier **16**.
- Install pinion assembly **13**.

CAUTION⚠

- **Be sure to let the lock paint harden undisturbed for 30 minutes to two hours after installation.**
- **Be sure to wait at least three hours before running the vehicle, and if possible wait 24 hours to let the lock paint harden.**

REDUCTION AND DIFFERENTIAL

Differential Assembly

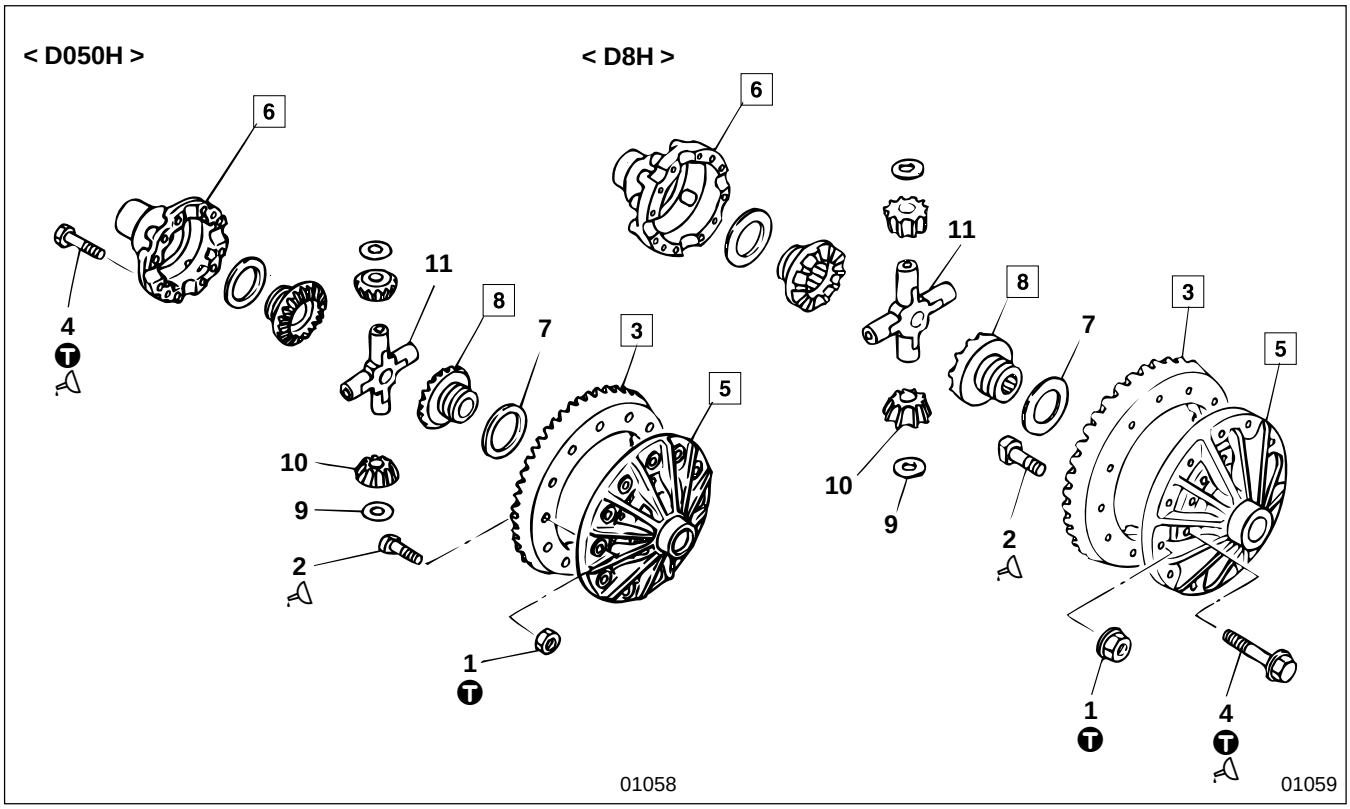

● **Disassembly sequence**

1 Nut
2 Bolt
3 Reduction gear
4 Bolt
5 Differential case , LH
6 Differential case, RH
7 Differential gear washer
8 Differential gear
9 Differential pinion washer
10 Differential pinion
11 Pinion spider

CAUTION

Make sure you replace differential case LH 5 and differential case RH 6 as a differential case set.

● **Assembly sequence**

Follow the disassembly sequence in reverse.

● **Adjustment after assembly** **P27-37**

Service standards

Unit : mm {in.}

Location	Maintenance item		Standard value (Basic diameter in [ ])	Limit	Remedy
8	Play between differential gear and axle shaft spline	D050H	0.10 to 0.18 {0.0039 to 0.0071}	0.5 {0.020}	Replace
		D8H	0.07 to 0.22 {0.0028 to 0.0082}	0.5 {0.020}	Replace
8, 10	Backlash between differential pinion and differential gear	D050H	0.19 to 0.25 {0.0075 to 0.0098}	0.5 {0.020}	Replace
		D8H	0.20 to 0.28 {0.0079 to 0.011}	0.8 {0.031}	Replace
10, 11	Clearance between differential pinion and pinion spider	D050H	[26] 0.17 to 0.27 {[1.02] 0.067 to 0.011}	0.5 {0.020}	Replace
		D8H	[35] 0.17 to 0.28 {[1.38] 0.0067 to 0.011}	0.5 {0.020}	Replace

Tightening torque

Unit : N·m {lbf.ft, kgf·m}

Location	Parts to be tightened		Tightening torque	Remarks
1	Nut (Reduction gear and differential case LH mounting)	D050H	295 {215, 30}	—
		D8H	490 to 540 {360 to 395, 50 to 55}	—
4	Bolt (Differential case LH and differential case RH mounting)	D050H	180 {135, 18.5}	—
		D8H	165 to 225 {120 to 165, 17 to 23}	—

Lubricant and sealant

Location	Points of application	Kinds	Quantity
2, 4	Entire bolt	Rust preventive	As required
	Thread area of bolt	LOCTITE 271	As required

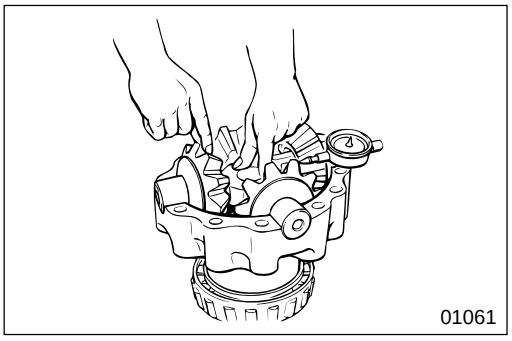

◆ Service procedure

● **Adjustment after assembly**

Backlash between differential gear and differential pinion

If the measured value deviates from the standard value, replace differential gear washer **7**.

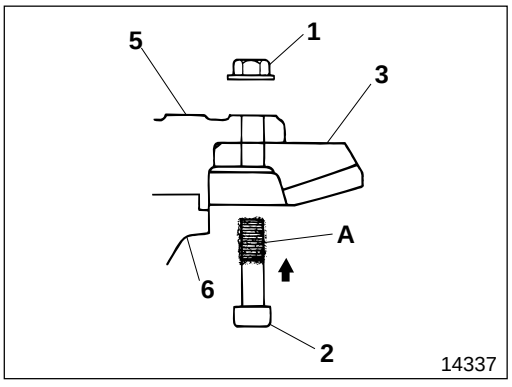

3 **5** **Installation of differential case LH and reduction gear**

- Apply rust preventive to entire surface of bolt **2**.
- Apply lock paint to thread area **A** of bolt **2**.
- Tighten nut **1** at specified torque.

CAUTION ⚠

- **Be sure to apply rust preventive to nut 1 because of the need to tighten it at specified torque.**
- **Be sure not to operate the vehicle for at least one hour after installation in order to let the lock paint harden.**
- **Be sure not to operate the vehicle at full torque for at least four hours after installation in order to let the lock paint harden.**

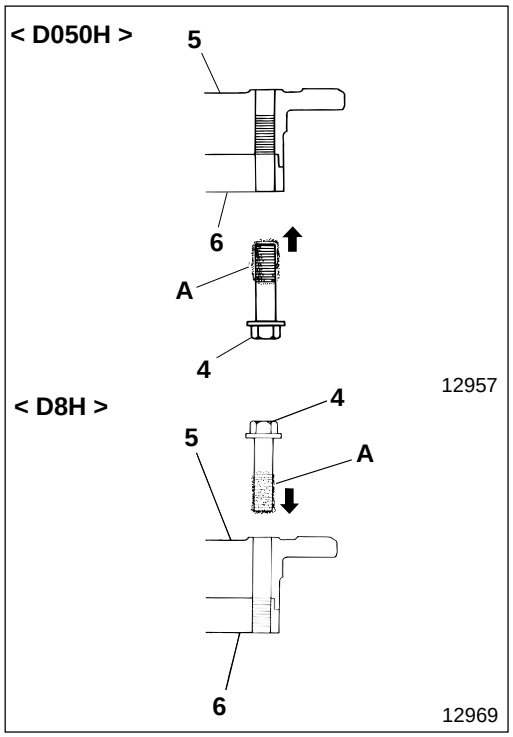

5 **6** **Installation of differential case LH and differential case RH**

- Apply rust preventive to entire surface of bolt **4**.
- Apply lock paint to thread area **A** of bolt **4**.
- Tighten bolt **4** at specified torque.

CAUTION ⚠

- **Be sure to apply rust preventive to bolt 4 because of the need to tighten it at specified torque.**
- **Be sure not to operate the vehicle for at least one hour after installation in order to let the lock paint harden.**
- **Be sure not to operate the vehicle at full torque for at least four hours after installation in order to let the lock paint harden.**

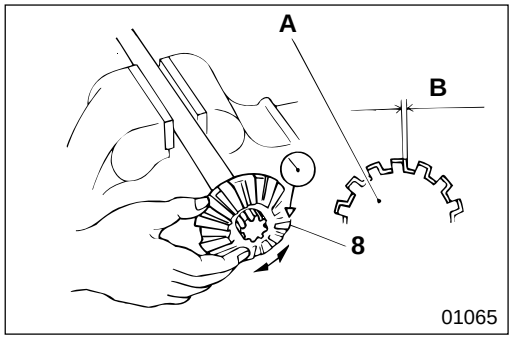

8 **Play between differential gear and rear axle shaft at the spline**

A : Axle shaft
B : Play

M E M O

Pinion Assembly

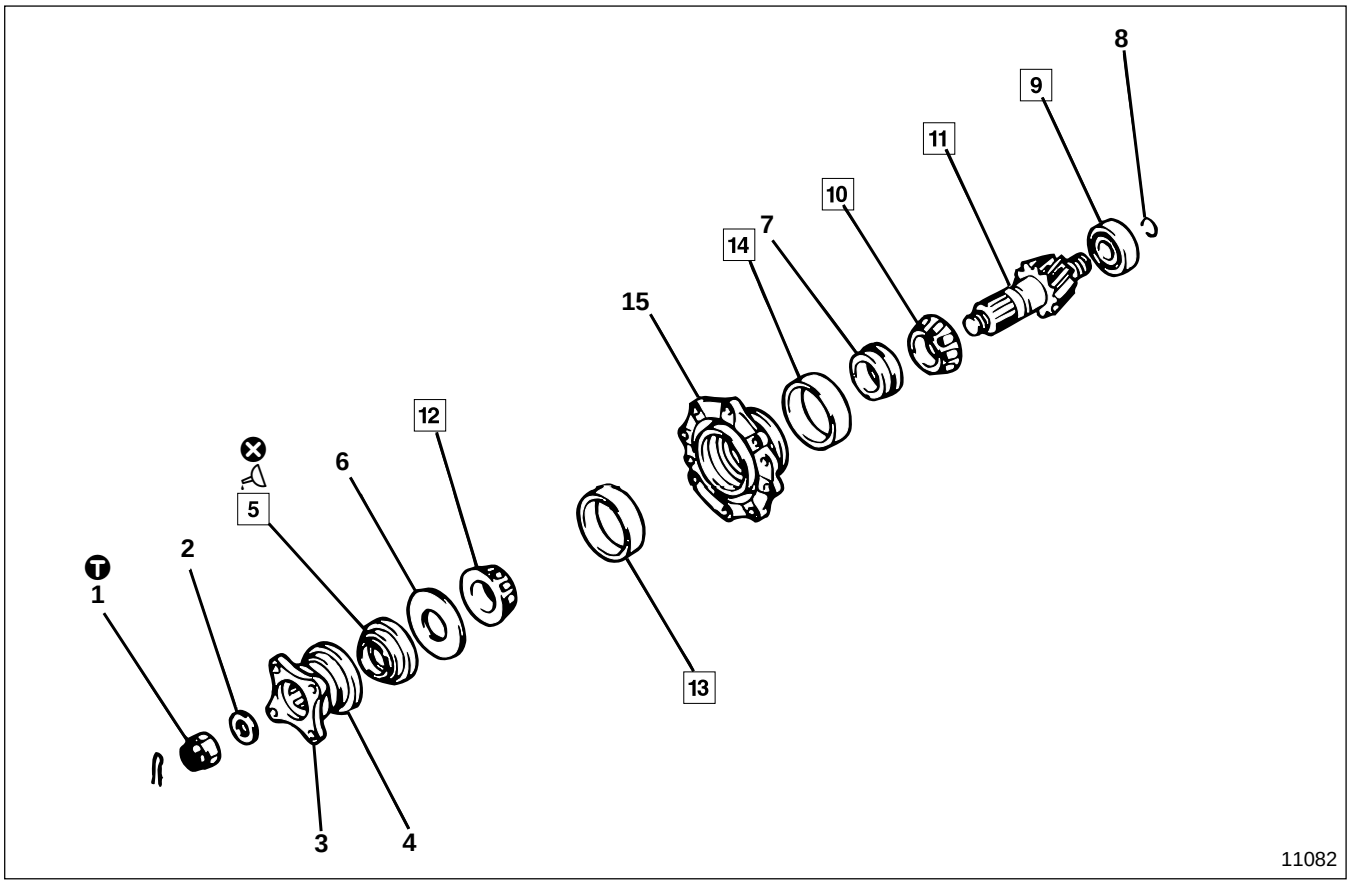

● **Disassembly sequence**

1 Lock nut
2 Washer < D8H >
3 Companion flange
4 Dust cover
5 Oil seal
6 Oil separator < D8H >
7 Collar
8 Lock ring
9 Pinion pilot bearing
10 Inner bearing inner race
11 Reduction pinion
12 Outer bearing inner race
13 Outer bearing outer race
14 Inner bearing outer race
15 Bearing retainer

⊗ : Non-reusable parts

NOTE

Record the thicknesses and number of collars 7 before disassembling for reference when assembling.

● **Assembly sequence**

15→14→13 ┐
→12→6→5 ┐
11→10→9→8→7 ┘ →2→1
4→3 ┘

● **Inspection and adjustment after assembly** 📖 **P27-43**

Service standards

Unit : mm {in.}

Location	Maintenance item			Standard value	Limit	Remedy
10, 12, 13, 14	Starting torque of pinion bearing	D050H	When new bearings are used	2.0 to 2.9 N·m {1.4 to 2.2 lbf.ft, 0.20 to 0.30 kgf·m}	—	• Adjust using collar • Tangential force at 170 {6.69} outer periphery point of bearing retainer : 24 to 34 N {5.3 to 7.7 lbf, 2.4 to 3.5 kgf}
			When bearings are reused	1.6 to 2.4 N·m {1.2 to 1.7 lbf.ft, 0.16 to 0.24 kgf·m}	—	• Adjust using collar • Tangential force at 170 {6.69} outer periphery point of bearing retainer : 19 to 28 N {4.2 to 6.4 lbf, 1.9 to 2.9 kgf}
		D8H	When new bearings are used	2.5 to 3.4 N·m {1.8 to 2.5 lbf.ft, 0.25 to 0.35 kgf·m}	—	• Adjust using collar • Tangential force at 160 {6.30} outer periphery point of bearing retainer : 30 to 43 N {6.8 to 9.7 lbf, 3.1 to 4.4 kgf}
			When bearings are reused	2.0 to 2.7 N·m {1.4 to 2.0 lbf.ft, 0.20 to 0.28 kgf·m}	—	• Adjust using collar • Tangential force at 160 {6.30} outer periphery point of bearing retainer : 25 to 34 N {5.5 to 7.7 lbf, 2.5 to 3.5 kgf}

Tightening torque

Unit : N·m {lbf.ft, kgf·m}

Location	Parts to be tightened		Tightening torque	Remarks
1	Lock nut (Companion flange and reduction pinion mounting)	D050H	195 to 345 {145 to 255, 20 to 35}	—
		D8H	540 to 735 {395 to 540, 55 to 75}	—

Lubricant

Location	Points of application	Kinds	Quantity
5	Lip area of oil seal	Chassis grease [NLGI No. 1 (Ca soap)]	As required

Special tools

Unit : mm {in.}

<table>
<tr><th>Location</th><th>Tool name and shape</th><th>Part No.</th><th>Application</th></tr>
<tr><td>5</td><td>Oil seal installer
 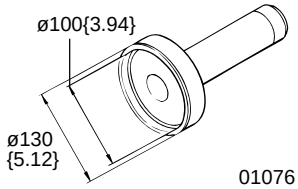
</td><td>MH061752</td><td>Press-fitting of oil seal</td></tr>
<tr><td>9</td><td>Pinion pilot bearing installer
 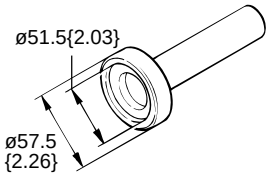
</td><td>03723-27001</td><td>Press-fitting of pinion pilot bearing</td></tr>
<tr><td>10</td><td>Pinion inner bearing installer
<table>
<tr><th></th><th>A</th><th>B</th><th>C</th></tr>
<tr><td>D050H</td><td>ø70
{2.76}</td><td>ø58
{2.28}</td><td>170
{6.69}</td></tr>
<tr><td>D8H</td><td>ø85
{3.35}</td><td>ø65
{2.56}</td><td>180
{7.09}</td></tr>
</table>
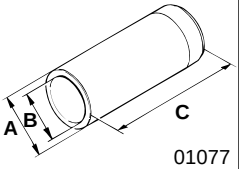
</td><td>< D050H >
MH061004

< D8H >
03724-51000</td><td>Press-fitting of inner bearing inner race</td></tr>
<tr><td>12</td><td>Pinion outer bearing installer
 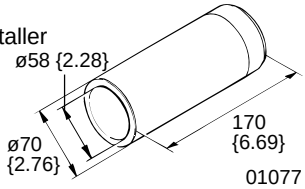
</td><td>MH061004</td><td>Press-fitting of outer bearing inner race</td></tr>
<tr><td>13</td><td>Pinion outer bearing installer
<table>
<tr><th></th><th>A</th><th>B</th></tr>
<tr><td>D050H</td><td>ø108 {4.25}</td><td>ø102.5 {4.04}</td></tr>
<tr><td>D8H</td><td>ø118 {4.65}</td><td>ø103 {4.06}</td></tr>
</table>
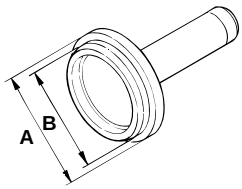
</td><td>< D050H >
MH061007

< D8H >
MH061006</td><td>Press-fitting of outer bearing outer race</td></tr>
<tr><td>14</td><td>Pinion inner bearing installer
<table>
<tr><th></th><th>A</th><th>B</th></tr>
<tr><td>D050H</td><td>ø118 {4.65}</td><td>ø103 {4.06}</td></tr>
<tr><td>D8H</td><td>ø129 {5.08}</td><td>ø123 {4.84}</td></tr>
</table>
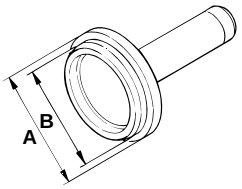
</td><td>< D050H >
MH061006

< D8H >
03724-55000</td><td>Press-fitting of inner bearing outer race</td></tr>
</table>

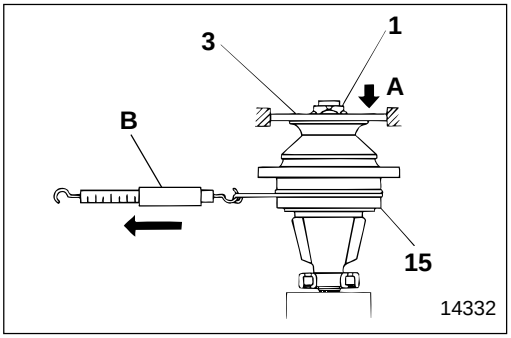

◆ Service procedure

● Inspection and adjustment after assembly

Starting torque of pinion bearing

[Inspection]

- Apply load **A** to companion flange **3** or tighten lock nut **1** at specified torque.
  A : Approximately 39.2 kN {8.8 klbf, 4000 kgf} < D050H >
  Approximately 49 kN {11 klbf, 5000 kgf} < D8H >

- Install spring balance **B** at 170 mm {6.69 in.} for < D050H >, 160 mm {6.30 in.} for < D8H >, outer periphery point of differential case **A**.
- Measure the tangential force.
- If the measured tangential force is within the specified value, the starting torque conforms to the standard value.
- If the measured value deviates from the specified value, adjust.

NOTE

- **Tighten companion flange 3 before measuring.**
- **Oil separator 6 must be installed when you measure. < D8H >**
- **Measure with oil seal 5 removed.**

[Adjustment]

If the measured value does not conform to the specified value, adjust with collar **7** to obtain specified tangential force. Choose an appropriate collar by referring to the table below.

Unit : mm {in.}

Applicable model	Thickness of collar
D050H	13.875 to 14.475 {0.55 to 0.57} (25 thicknesses in 0.025 {0.00098} increments)
D8H	14.975 to 15.575 {0.59 to 0.61} (25 thicknesses in 0.025 {0.00098} increments)

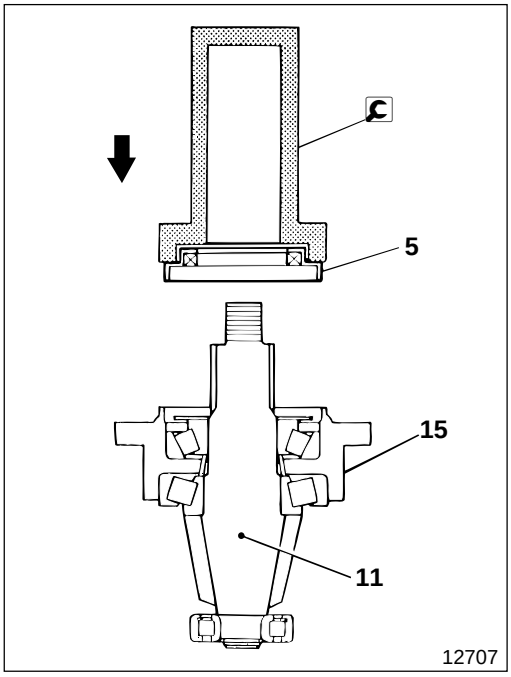

5 **Installation of oil seal**

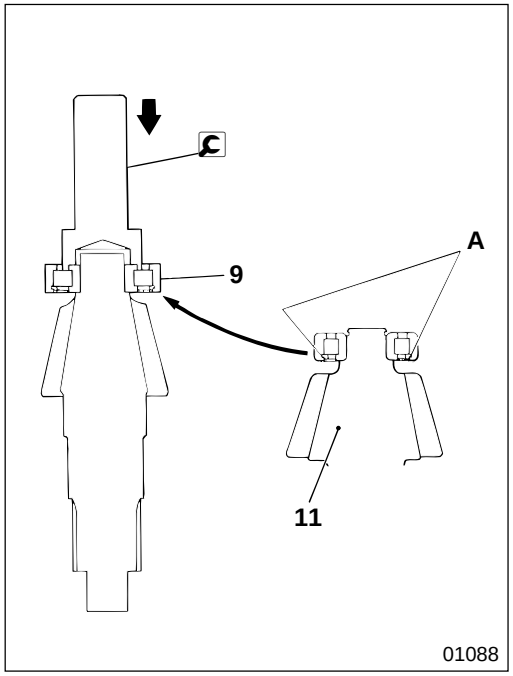

9 **Installation of pinion pilot bearing**

Press-fit pinion pilot bearing **9** in the direction as illustrated.

A : Lock ring

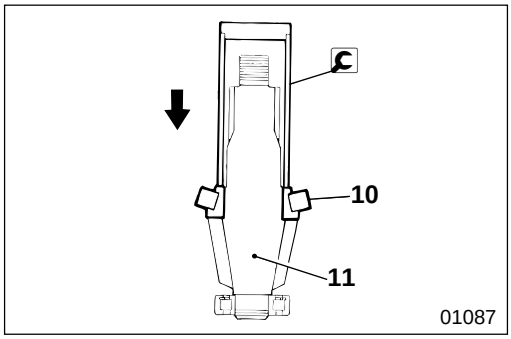

10 **Installation of inner bearing inner race**

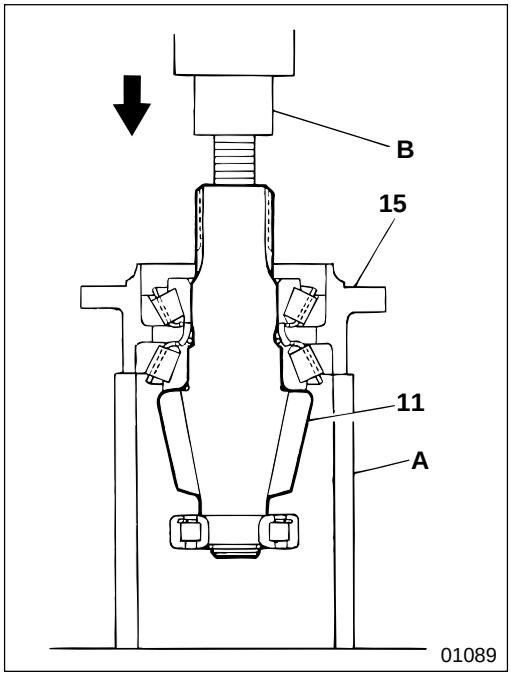

11 **Removal of reduction pinion**

A : Cylindrical guide

B : Press

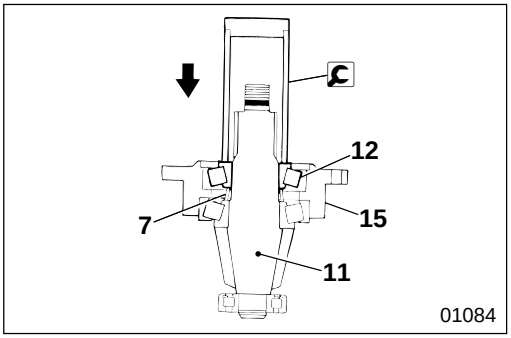

12 **Installation of outer bearing inner race**

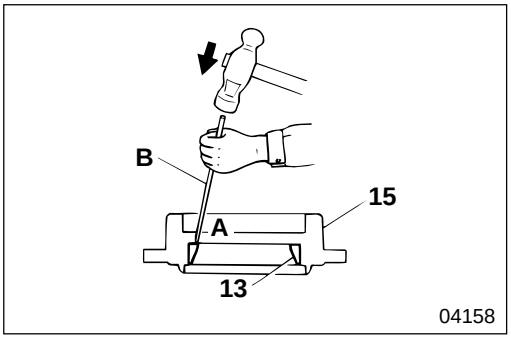

13 **Outer bearing outer race**

[Removal]
Drive out outer bearing outer race **13** evenly from three indented parts **A** in bearing retainer **15**.

B : Pin-punch

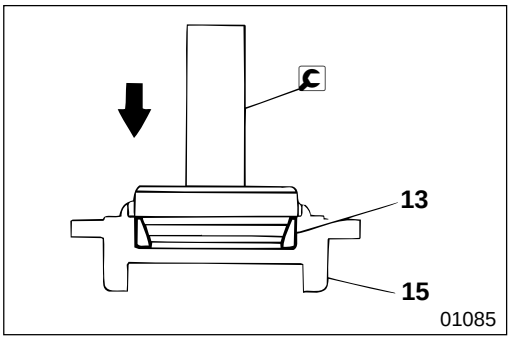

[Installation]

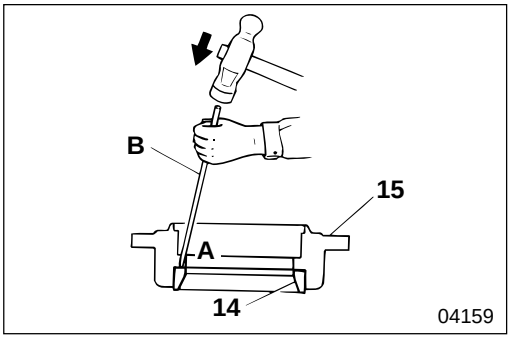

14 **Inner bearing outer race**

[Removal]
Drive out inner bearing outer race **14** evenly from three indented parts **A** in bearing retainer **15**.

B : Pin-punch

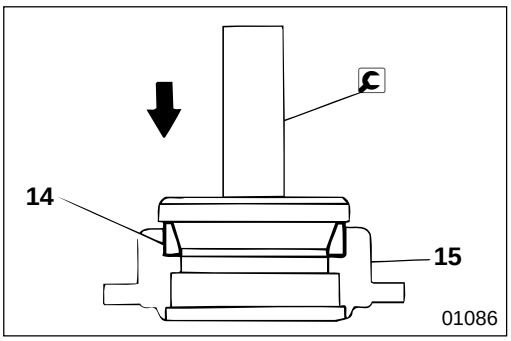

[Installation]

MITSUBISHI
FUSO

FK.FM
Service Manual

Group 31
Wheel and Tire

Table of Contents

BACK

HOME

MITSUBISHI FUSO TRUCK OF AMERICA, Inc.

Pub No. TWME9503-31

GROUP 31 WHEEL AND TIRE

SPECIFICATIONS 2

TROUBLESHOOTING 2

WHEEL AND TIRE 3

SPECIFICATIONS/TROUBLESHOOTING

SPECIFICATIONS

Item / Vehicle model	Tire size	Air pressure kPa {Psi, kgf/cm²}		Application wheel
		Front	Rear	
FK617	9R22.5-12PR	750 {105, 7.50}	675 {95, 6.75}	22.5×6.75-152-11
FM617	11R22.5-14PR	750 {105, 7.50}	675 {95, 6.75}	22.5×7.50-162-12
FM657	11R22.5-14PR	750 {105, 7.50}	675 {95, 6.75}	22.5×7.50-162-12

TROUBLESHOOTING

Possible causes / Symptoms			Tire tread worn										Remarks
			Both shoulders worn	Center worn	Outside worn	Inside worn	Feather-edged wear from outside to inside	Feather-edged wear from inside to outside	Wavy wear	Dished wear (one or more spots)	Pitted wear (dented) all around	Jagged wear	
Overloading			○										
Tire air pressure		Insufficient	○						○	○	○	○	
		Excessive		○									
Wheel alignment	Toe-in	Excessive			○		○						
Gr 26		Insufficient				○							
	Camber	Excessive			○								
		Insufficient				○							
	Toe-out excessive					○		○					
	Overall misalignment		○		○	○	○	○	○	○	○		
Knuckle arm bent					○	○	○	○					Gr 26
Left and right tie rod lengths different							○						Gr 26
Wheel balance incorrect									○	○	○	○	
Wheel bearing loose									○	○	○	○	Gr 26, 27
Ball joint loose										○			Gr 26
Tie rod end loose										○			Gr 37
Brake drum eccentric										○	○		Gr 35
Axle bent									○	○			Gr 26, 27
Sudden starting, sudden braking or sharp turn										○	○		
Left and right front wheel turning radius incorrect												○	Gr 26
Road surface influence					○	○							

Work for Removal and Installation of Wheel and Tire

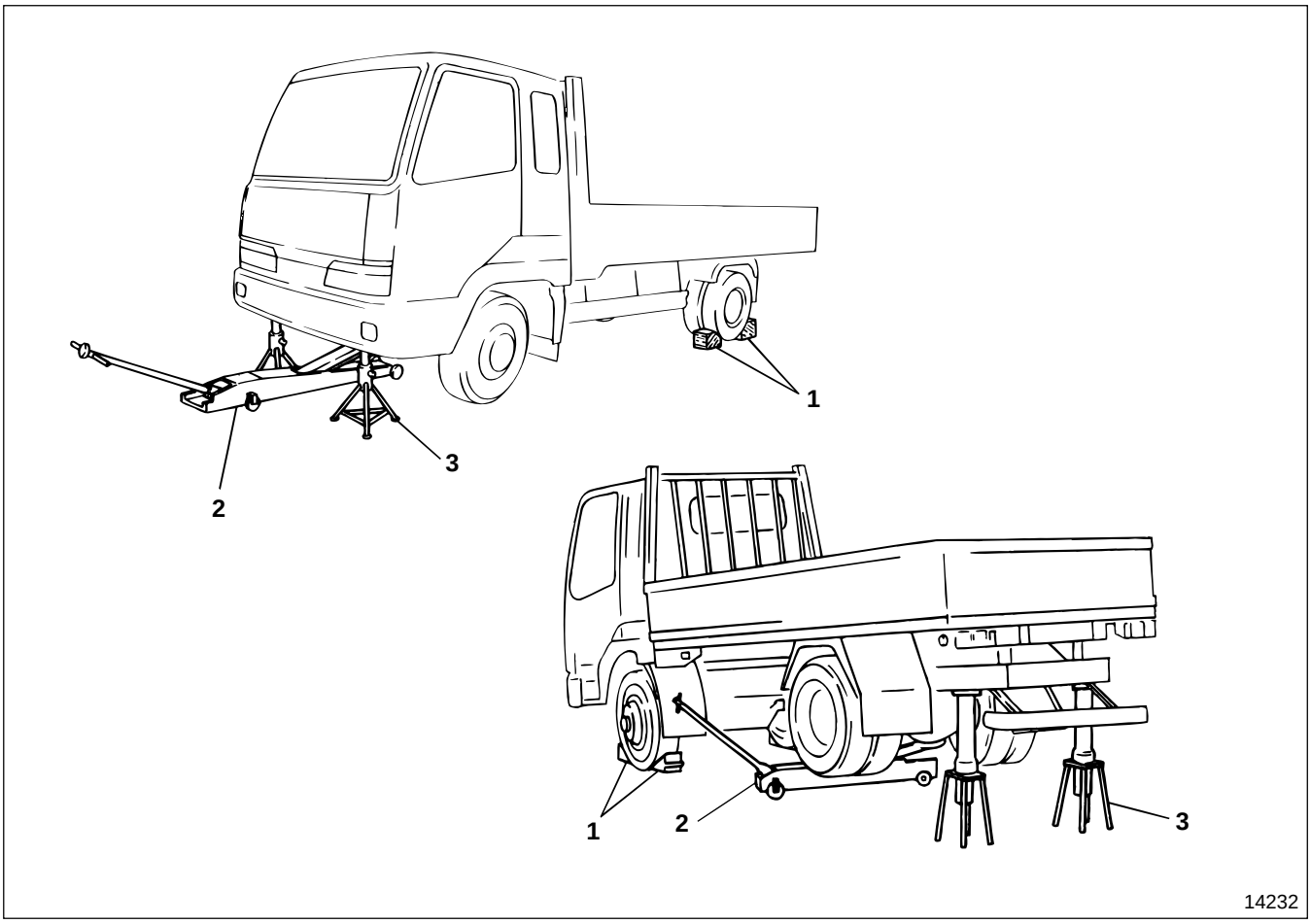

● **Work sequence**

1 Place wheel chocks.
2 Jack up the front or rear axle using a garage jack placed under the center of the axle.
3 Support the frame on rigid racks.

WARNING⚠

- **Chock the wheels securely so the vehicle does not move.**
- **Do not remove the chocks until the entire operation is completed.**
- **Supporting a vehicle on a garage jack only is extremely dangerous, so always support the frame on rigid racks.**
- **Leave the garage jack and rigid racks in place until the entire operation is completed. Never remove them during the operation.**

● **Work sequence after removal and installation**

Follow the work sequence in reverse.

WHEEL AND TIRE

NOTE

Use right-hand threaded wheel nuts marked “R” for right side wheel and left-hand threaded wheel nuts marked “L” for left side wheel.

< Single tire >

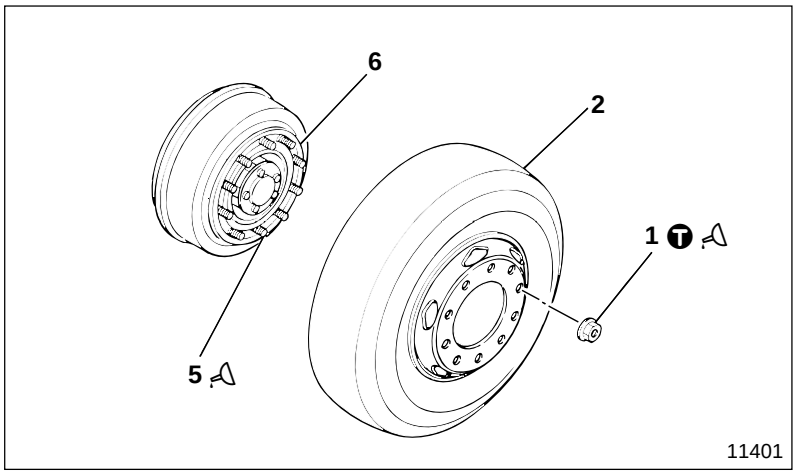

- **Removal sequence**
  - **1** Wheel nut
  - **2** Tire assembly P31-6
  - **5** Hub bolt
  - **6** Hub
- **Cleaning and applying grease before installation**

  P31-5
- **Installation sequence**

  Follow the removal sequence in reverse.

< Double tire >

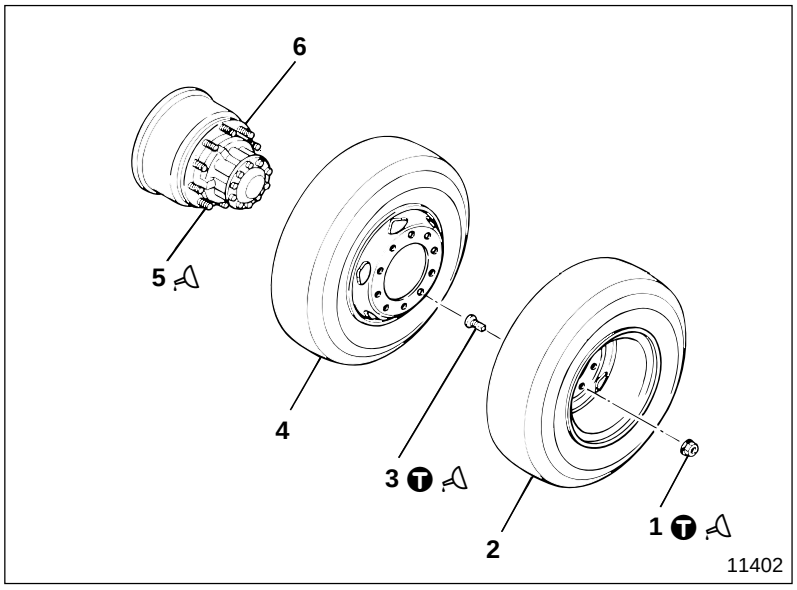

- **Removal sequence**
  - **1** Wheel nut (outer)
  - **2** Tire assembly P31-6
  - **3** Wheel nut (inner)
  - **4** Tire assembly P31-6
  - **5** Hub bolt
  - **6** Hub
- **Cleaning and applying grease before installation**

  P31-5
- **Installation sequence**

  Follow the removal sequence in reverse.

Tightening torque

Unit : N·m {lbf.ft, kgf·m}

Location	Parts to be tightened	Tightening torque	Remarks
1, 3	Wheel nut	400 to 440 {295 to 325, 41 to 45}	Wet

Lubricant

Location	Points of application	Kinds	Quantity
1	Wheel nut spherical area	Chassis grease [NLGI No. 1 (Ca soap)] or Wheel bearing grease [NLGI No. 2 (Li soap)]	As required
3	Thread and spherical areas of wheel nut (inner)	Chassis grease [NLGI No. 1 (Ca soap)] or Wheel bearing grease [NLGI No. 2 (Li soap)]	As required
5	Thread area of hub bolt	Chassis grease [NLGI No. 1 (Ca soap)] or Wheel bearing grease [NLGI No. 2 (Li soap)]	As required

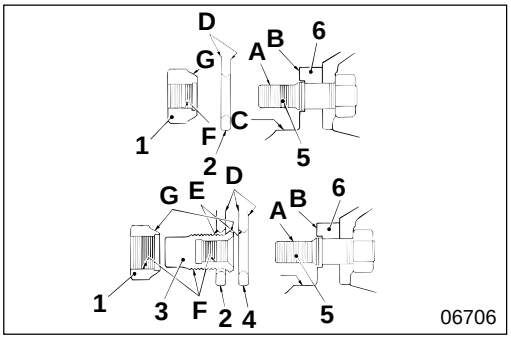

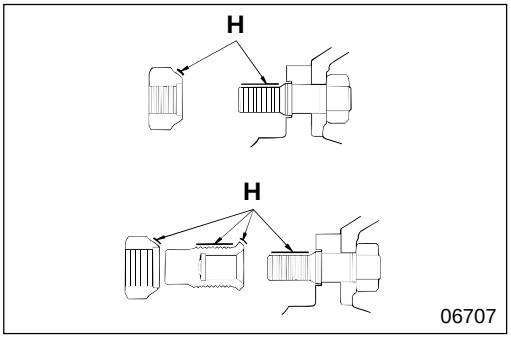

◆ Service procedure

● Cleaning and applying grease before installation

[Cleaning]

To prevent wheel nuts **1** and **3** and hub bolt **5** from becoming loose and to prevent mounting parts (tire assemblies **2** and **4** and hub **6**) from being damaged, remove rust, dust, additional coatings of paint, and foreign particles from the following areas:

A : Hub bolt thread area
B : Wheel mounting surface of hub
C : Wheel alignment area of hub
D : Disc wheel mating surface
E : Disc wheel nut mounting surface
F : Wheel nut thread area
G : Wheel nut spherical area

[Applying grease]

H : Grease application location

WARNING⚠

Never use grease containing molybdenum disulfide, since it can cause loosening of fitted screws.

WHEEL AND TIRE

Tire Assembly

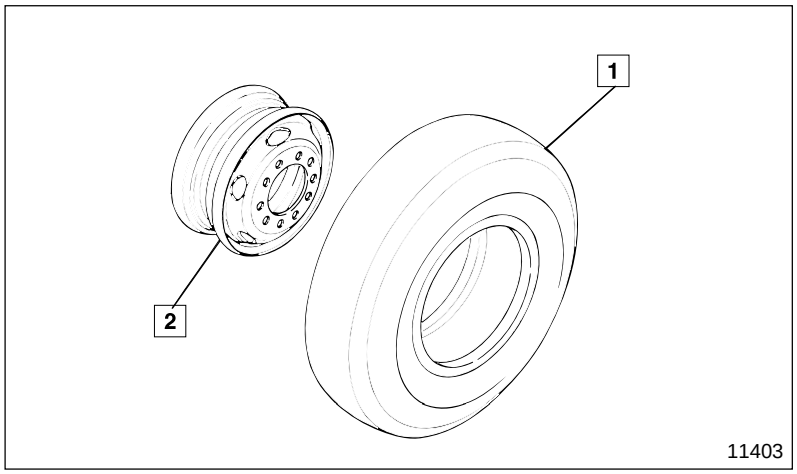

● **Disassembly sequence**

1 Tire
2 Disc wheel

● **Assembly sequence**

Follow the disassembly sequence in reverse.

Service standards

Unit : mm {in.}

Location	Maintenance item		Standard value	Limit	Remedy
1	Horizontal deflection of tire (When assembled)		3.5 {0.14} or less	—	—
2	Disc wheel < 22.5×6.75-152-11 >	Flatness	0.3 {0.012} or less	—	—
		Horizontal deflection	2.0 {0.079} or less	—	—
		Vertical deflection	1.8 {0.071} or less	—	—
	Disc wheel < 22.5×7.50-162-12 >	Flatness	0.25 {0.0098} or less	—	—
		Horizontal deflection	2.0 {0.079} or less	—	—
		Vertical deflection	1.8 {0.071} or less	—	—

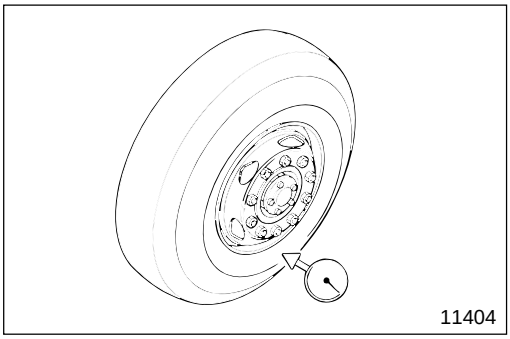

◆ Service procedure

1 **Deflection of tire**

[Inspection]
If the measured value is higher than the limit, make corrections as follows.

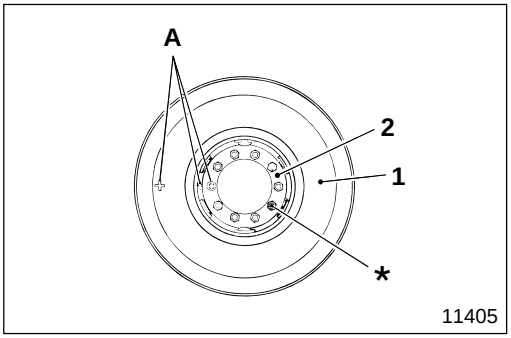

[Correction]

- Put chalk marks on tire **1**, disc wheel **2**, and hub bolt * (positions **A** as illustrated).
- Remove tire **1** from disc wheel **2**.

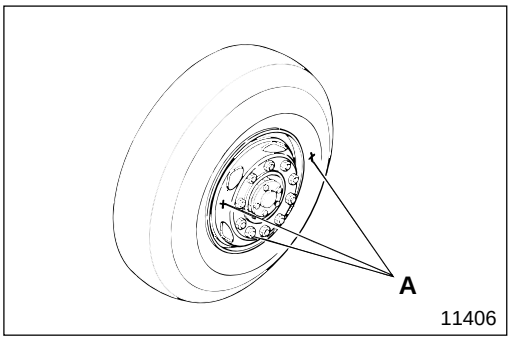

- Measure deflection of disc wheel **2**. If the most deflective position is near the chalk mark, reinstall tire **1** rotating it half a turn from the chalk mark and tighten nuts.
- Remeasure deflection of tire **1**.
- If the measured value is still higher than the limit, replace tire **1** and disc wheel **2** together as an assembly.

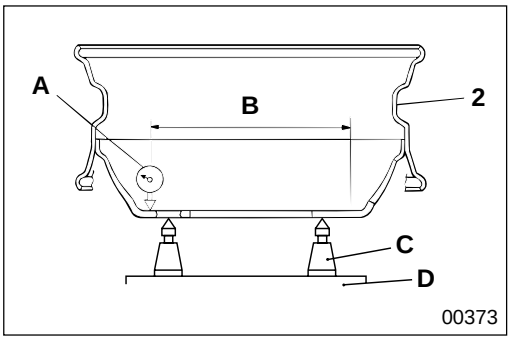

2 Inspection of disc wheel

(1) Flatness

- Measure flatness at specified position **B** from the center of disc wheel **2**.
  Measure flatness at ten equidistant points on the wheel.
  A : Dial gauge
  B : ø235 to 340 mm {9.25 to 13.4 in.}
  C : Portable screw jacks (x 4)
  D : Surface plate
- Replace disc wheel **2** if the measured value is higher than the limit.

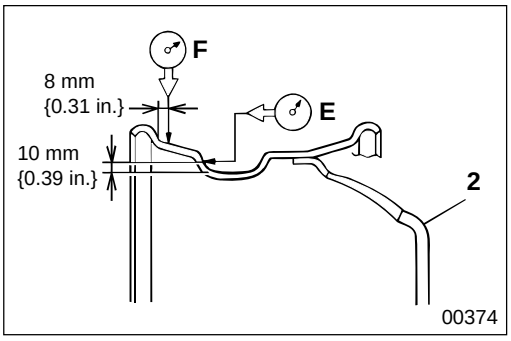

(2) Deflection

Replace disc wheel **2** if the measured value is higher than the limit.
E : Horizontal deflection measuring point
F : Vertical deflection measuring point

MITSUBISHI
FUSO

FK.FM
Service Manual

Group 33
Front Suspension

Table of Contents

BACK

HOME

MITSUBISHI FUSO TRUCK OF AMERICA, Inc.

Pub No. TWME9503-33

GROUP 33 FRONT SUSPENSION

STRUCTURE AND OPERATION 2

TROUBLESHOOTING 3

WORK BEFORE REMOVAL AND INSTALLATION OF FRONT SUSPENSION 4

REMOVAL AND INSTALLATION OF LEAF SPRING ASSEMBLY 6

LEAF SPRING ASSEMBLY 10

SHOCK ABSORBER 12

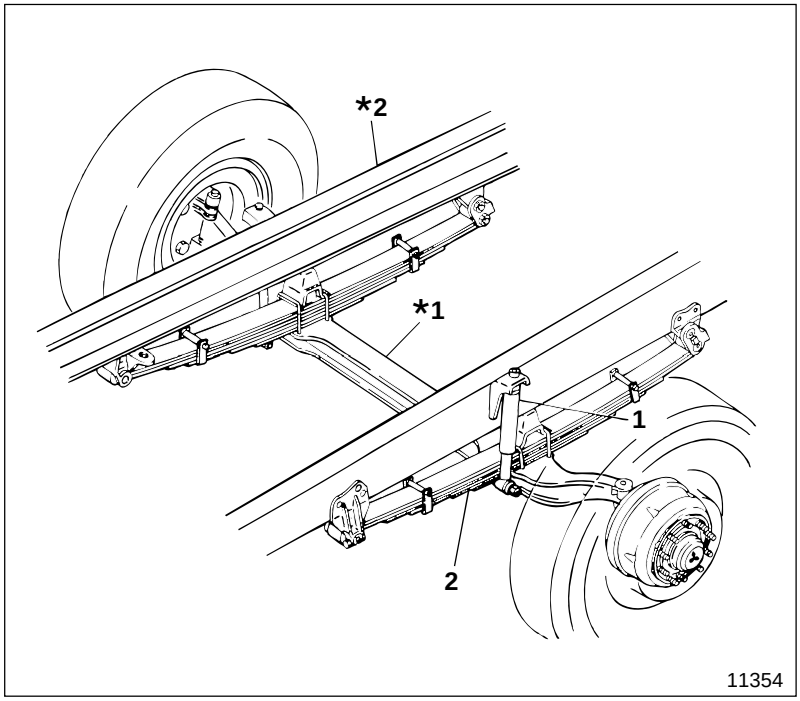

1 Shock absorber
2 Leaf spring assembly
***1** : Front axle
***2** : Frame

Leaf spring assembly **2** and shock absorber **1** are installed between frame ***2** and front axle ***1** to support the vehicle body mass and absorb vibration and shock from the road surface to prevent them from being directly transmitted to the vehicle body thereby protecting the crew, the vehicle body, and the cargo. In addition, irregular vibration from the wheels is restrained, ensuring driving stability.

Possible causes \ Symptoms		Ride soft with gentle swaying	Noise generated when vehicle is unloaded	Impact transmitted from uneven road surface	Noise generated when vehicle is loaded	Excessive rolling while cruising	Periodic jolts received from the road surface	Remarks
Leaf spring	Cracked or damaged			○				
	Fractured		○					
	Spring bracket broken				○			
	U-bolts loose				○			
	Spring bushing worn		○					
Shackle pins thrust play excessive			○					
Shackle pin tightening torque excessive					○			
Bump stopper damaged or broken					○			
Shock absorber	Oil leaking noticeably or damping force decreased	○						
	Rubber bushing worn		○					
	Bolt loose		○					
Tire	Tires worn unevenly						○	
	Tires and wheels unbalanced						○	Gr 31
	Air pressure excessive			○				

WORK BEFORE REMOVAL AND INSTALLATION OF FRONT SUSPENSION

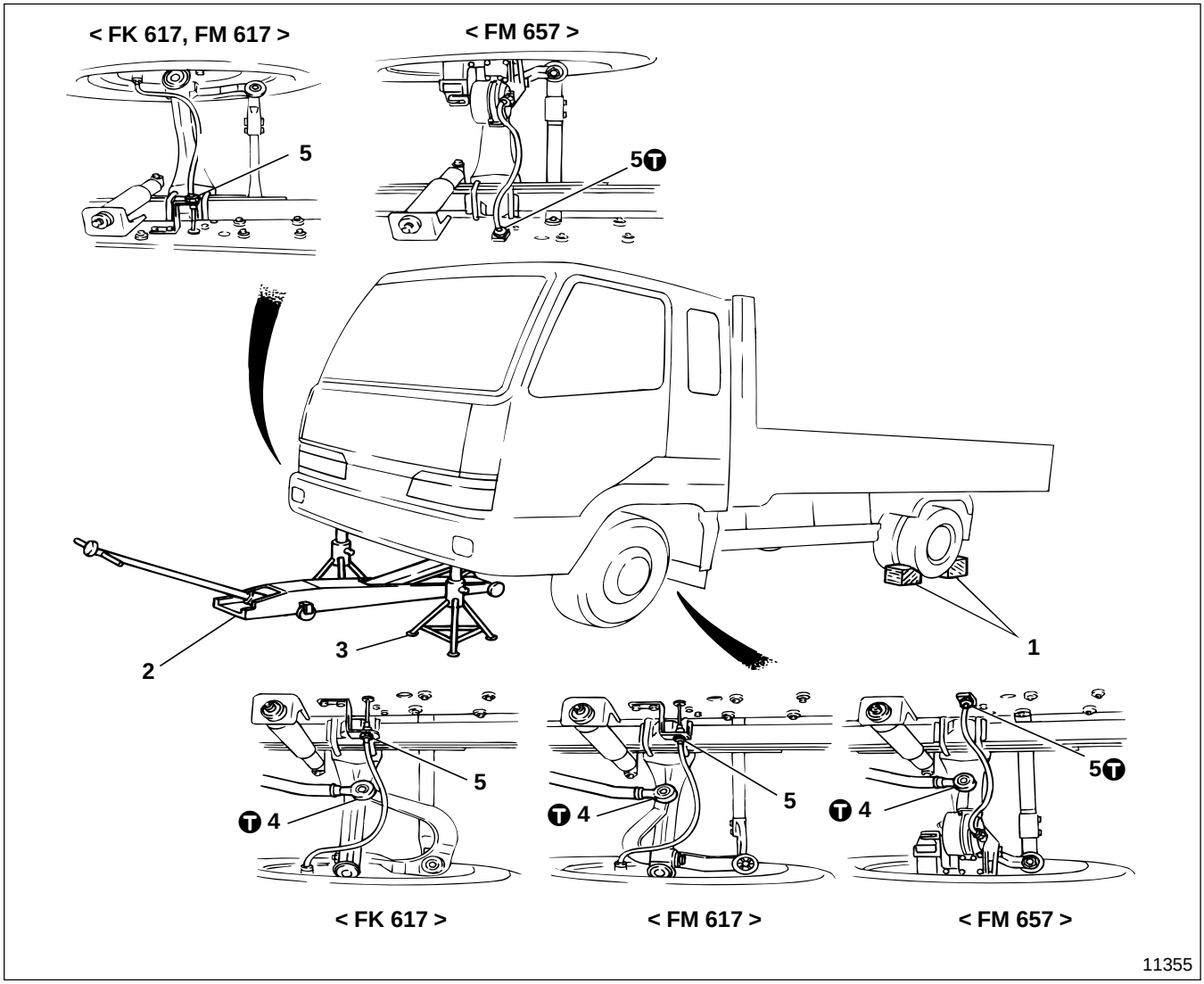

● **Removal sequence**

1 Place wheel chocks.
2 Jack up the front axle with a garage jack.
3 Support the front frame on rigid racks.
4 Remove the nut (on the joint between the knuckle arm and the drag link).
5 Remove the brake hose joint (on the frame).

WARNING

- **Chock the wheels securely so the vehicle does not move.**
- **Do not remove the chocks until the entire operation is completed.**
- **Supporting a vehicle on a garage jack only is extremely dangerous, so always support the frame with rigid racks.**
- **Leave the garage jack and rigid racks in place until the entire operation is completed. Never remove them during the operation.**

CAUTION

Be sure to protect the brake hose from dust by fitting blanking plugs.

● **Installation sequence**

Follow the removal sequence in reverse.

WARNING

You must bleed air from the brake system after connecting the brake hose, failure to do so would cause the brakes to malfunction. Gr 35A

CAUTION

Be sure that the brake hose is not twisted when you install it.

Tightening torque

Unit : N·m {lbf.ft, kgf·m}

Location	Parts to be tightened		Tightening torque	Remarks
4	Nut (Knuckle arm and drag link connecting)	FK617, FM617	190±47.5 {140±35, 19.4±4.85}	—
		FM657	353±88 {260±65, 36±9}	—
5	Brake hose (Frame side)	FM657	39 to 44 {29 to 33, 4.0 to 4.5}	—

REMOVAL AND INSTALLATION OF LEAF SPRING ASSEMBLY

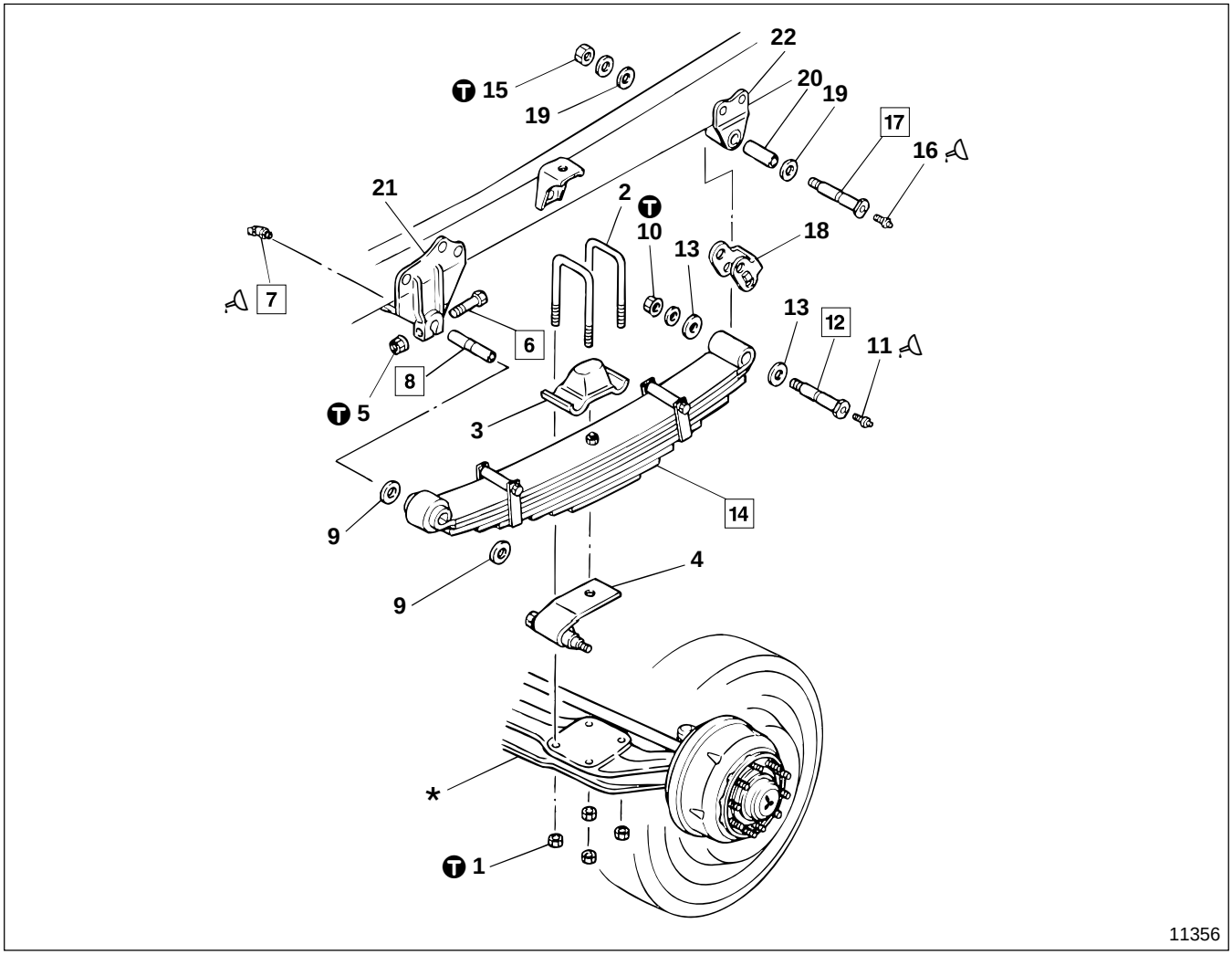

● **Removal sequence**

1 U-bolt nut
2 U-bolt
3 Bump stopper
4 Lower bracket
5 Nut
6 Bolt
7 Grease nipple
8 Shackle pin
9 Side washer
10 Nut
11 Grease nipple
12 Shackle pin
13 Side washer
14 Leaf spring assembly P33-10
15 Nut
16 Grease nipple
17 Shackle pin
18 Shackle link
19 Side washer
20 Bushing
21 Front spring front bracket
22 Front spring rear bracket

***** Front axle Gr 26

NOTE

Do not remove front spring front bracket 21 or rear bracket 22 unless they are faulty. **Gr 41**

● **Installation sequence**

Follow the removal sequence in reverse.

Service standards

Unit : mm {in.}

Location	Maintenance item		Standard value (Basic diameter in [ ])	Limit	Remedy
8, 12, 14	Clearance between shackle pin and spring bushing	FK	[28] 0 to 0.12 {[1.10] 0 to 0.0047}	0.3 {0.012}	Replace
		FM	[30] 0 to 0.15 {[1.18] 0 to 0.0059}		
8, 21	Clearance between shackle pin and front spring front bracket	FK	[28] 0 to 0.04 {[1.10] 0 to 0.0016}	0.3 {0.012}	Replace
		FM	[30] 0 to 0.05 {[1.18] 0 to 0.0020}		
12, 17, 18	Clearance between shackle pin and shackle link	FK	[28] 0.02 to 0.24 {[1.10] 0.00079 to 0.0094}	0.3 {0.012}	Replace
		FM	[30] 0.02 to 0.25 {[1.18] 0.00079 to 0.0098}		
14, 18	Clearance between leaf spring assembly and shackle link	FK	1.2 to 2.2 {0.047 to 0.087}	—	Replace side washer
		FM	0.8 to 1.7 {0.031 to 0.067}		
14, 21	Clearance between leaf spring assembly and front spring front bracket	FK	0.2 to 0.9 {0.0079 to 0.035}	—	Replace side washer
		FM	0 to 0.7 {0 to 0.028}		
17, 20	Clearance between shackle pin and bushing	FK	[28] 0.02 to 0.14 {[1.10] 0.00079 to 0.0055}	0.3 {0.012}	Replace
		FM	[30] 0.02 to 0.15 {[1.18] 0.00079 to 0.0059}		
18, 22	Clearance between shackle link and front spring rear bracket	FK	1.2 to 2.2 {0.047 to 0.087}	—	Replace side washer
		FM	0.8 to 1.7 {0.031 to 0.067}		

Tightening torque

Unit : N·m {lbf.ft, kgf·m}

Location	Parts to be tightened		Tightening torque	Remarks
1	U-bolt nut (U-bolt mounting)	FK	240±36 {175±27, 24.5±3.7}	Wet
		FM617	372±56 {275±41, 37.9±5.7}	
		FM657	472±71 {345±52, 48.1±7.2}	
5	Flange nut (Shackle pin mounting)		80 to 110 {58 to 80, 8.0 to 11}	—
10, 15	Shackle pin nut (Shackle pin mounting)	FK	190 to 260 {135 to 190, 19 to 26}	—
		FM	260 to 340 {190 to 255, 26 to 35}	

Lubricant

Location	Points of application	Kinds	Quantity
7, 11, 16	Supply via grease nipple	Chassis grease [NLGI No.1 (Ca soap)]	As required

Special tools

Unit : mm {in.}

Location	Tool name and shape	Part No.	Application
6	Shackle pin setting bar 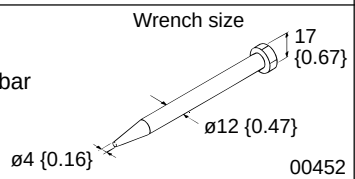	MC023419	Removal of bolt (shackle pin installation), alignment of the shackle pin bolt groove
8, 12, 17	Shackle pin puller 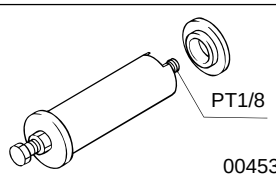	MH061452	Removal of shackle pin

REMOVAL AND INSTALLATION OF LEAF SPRING ASSEMBLY

◆ Service procedure

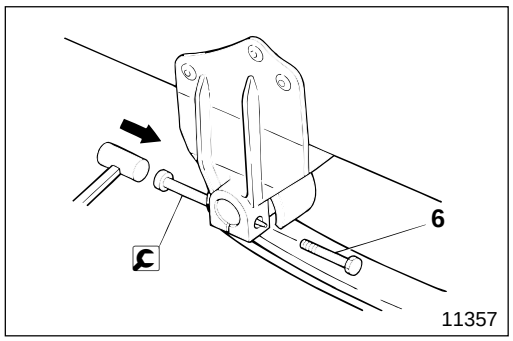

6 **Removal of bolt**

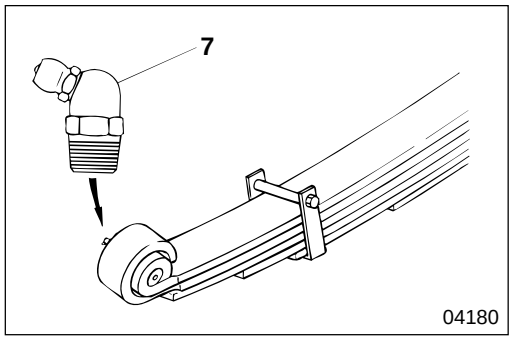

7 **Grease nipple < FK >**

- Install grease nipple **7**, on the driver's side, so that it can be easily accessed for grease supply. This is the only nipple that is installed on • the inner side of the vehicle. Grease nipples, **11**, **16** are straight types and are installed on the outer side of the vehicle.
- Grease nipple **7** at the forward side of the assistant driver's seat is a straight type, and it is installed on the outer side of the vehicle.

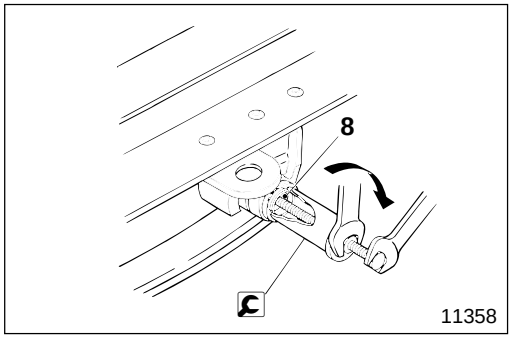

8 **Shackle pin**

[Removal]

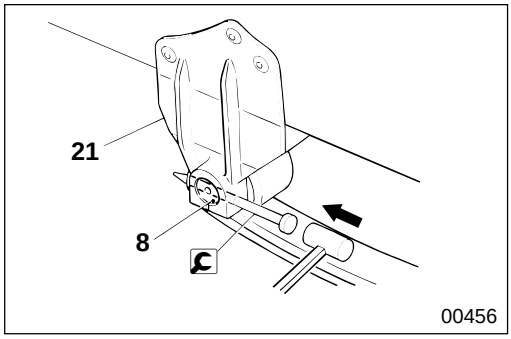

[Installation]
Align the bolt hole of front spring front bracket **21** with the bolt groove of shackle pin **8** using shackle pin setting bar.

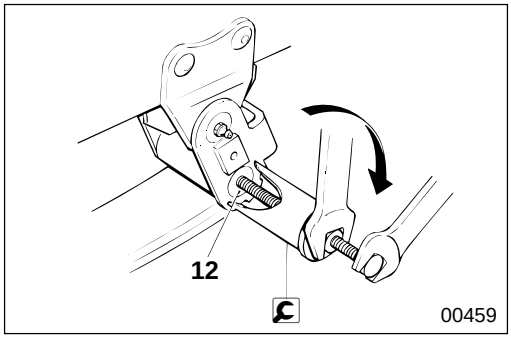

12 **Removal of shackle pin**

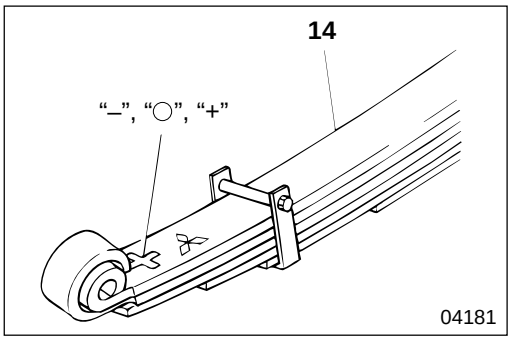

14 **Leaf spring assembly left/right height combinations**

When replacing leaf spring assembly **14**, select the members so that the left and right height marks "+", "○" and "–" are combined as shown below.

Item	Combination				
	1	2	3	4	5
Right leaf spring assembly, passenger's side	–	–	○	○	+
Left leaf spring assembly, driver's side	–	○	○	+	+

CAUTION⚠

Passenger's side leaf spring assembly 14 differs from the driver's side leaf spring assembly in camber (arch). Do not mix them up when mounting, or this would cause vehicle tilt.

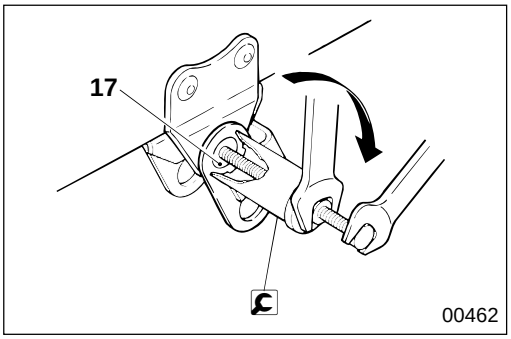

17 **Removal of shackle pin**

LEAF SPRING ASSEMBLY

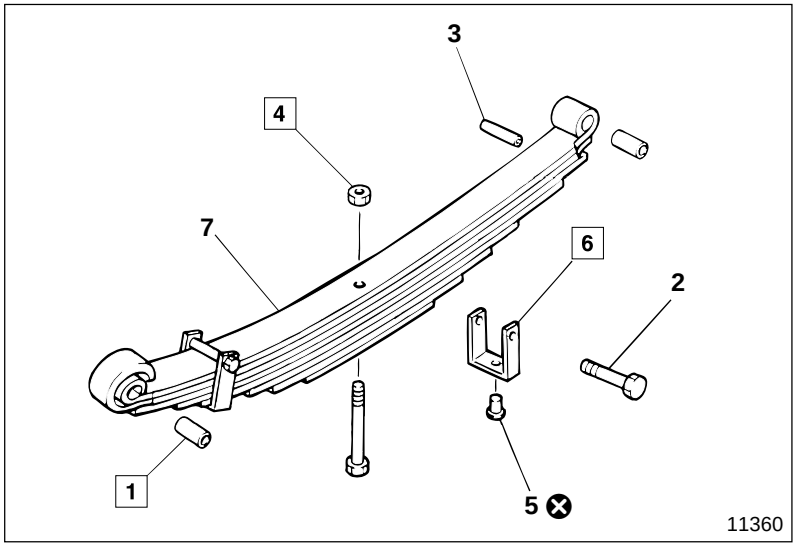

● **Disassembly sequence**

1 Spring bushing
2 Clip bolt
3 Pipe < FM >
4 Rivet
5 Clip
6 Leaf spring

⊗ : Non-reusable parts

● **Assembly sequence**

Follow the disassembly sequence in reverse.

Special tools

Unit : mm {in.}

Location	Tool name and shape	Part No.	Application
1	Bushing installer set **A** : Bushing installer A **B** : Bushing installer B 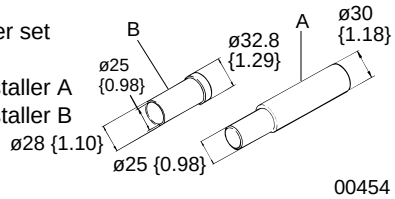	MB999066 **A** : MB999067 **B** : MB999068	Removal and press-fitting of spring bushing

◆ Service procedure

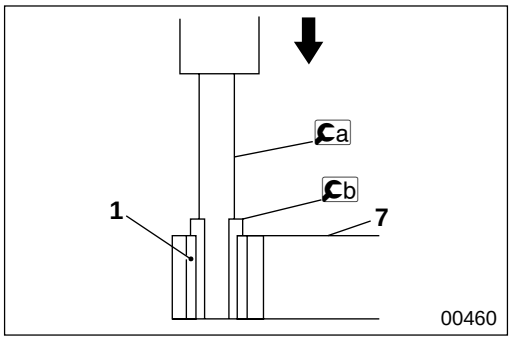

1 **Removal of spring bushing**

Remove the spring bushing from leaf spring **7** using a bushing installer **A** and b bushing installer **B**. For installation, follow the removal sequence in reverse.

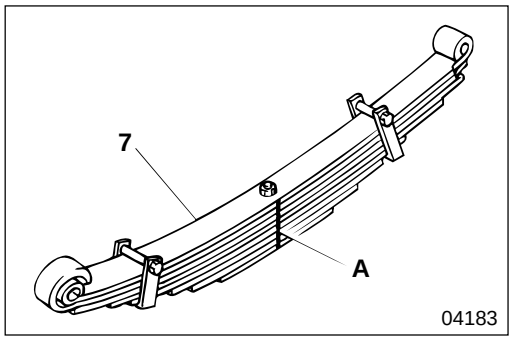

4 **Center nut**

[Removal]

- Put aligning marks **A** across leaves of leaf spring **7**.

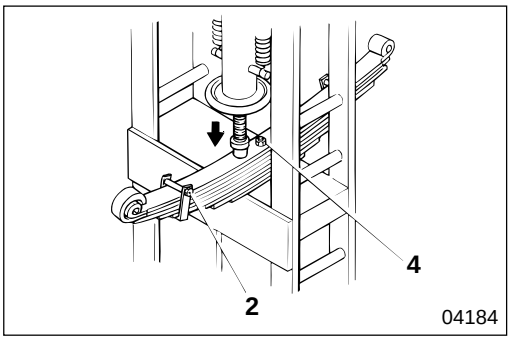

- Compress the leaf springs using a press to remove clip bolt **2** and center nut **4**.

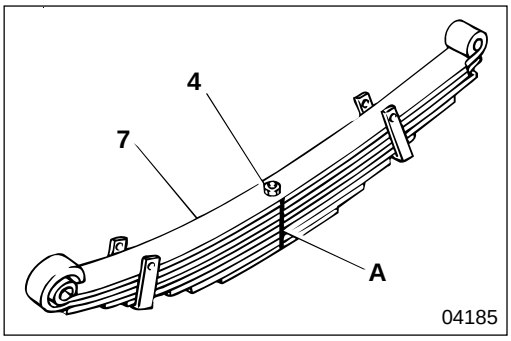

[Installation]
- Align alignment marks **A** on leaf springs **7** and assemble.
- Tighten center nut **4** temporarily.

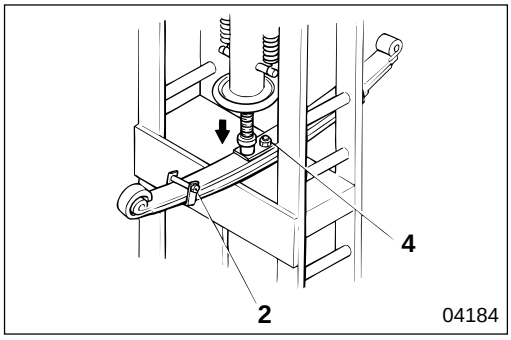

- Compress leaf spring **7** using a press, then install center nut **4**.
- Tighten clip bolt **2**.

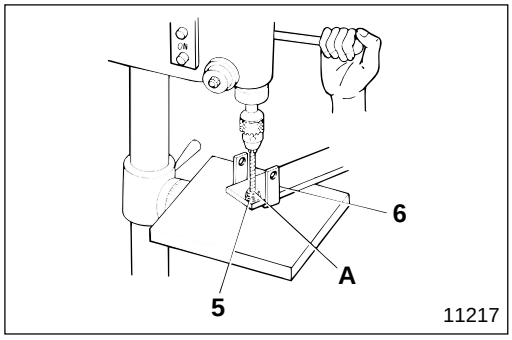

6 Clip

[Removal]
Drill out caulked ends **A** of rivet **5** on a drill press to remove clip **6**.

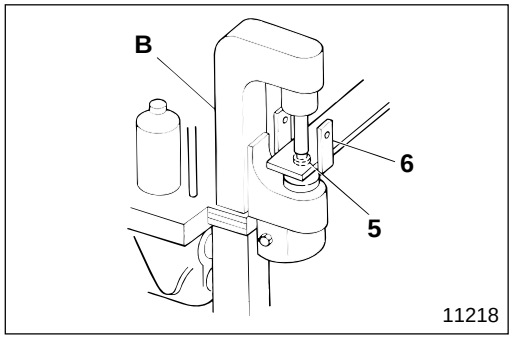

[Installation]
Using riveting machine **B**, install clip **6** by caulking rivet **5**.

SHOCK ABSORBER

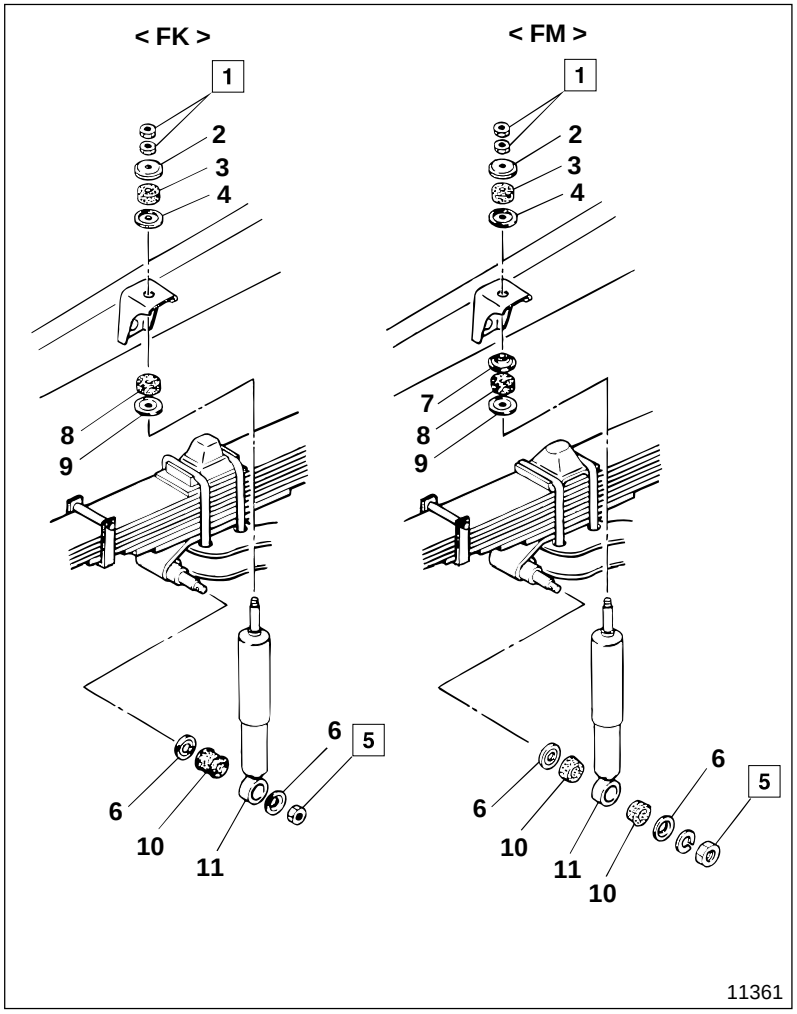

● **Removal sequence**

1 Nut
2 Washer
3 Rubber bushing
4 Centering washer
5 Nut
6 Washer
7 Centering washer < FM >
8 Rubber bushing
9 Washer
10 Rubber bushing
11 Shock absorber

● **Installation sequence**

Follow the removal sequence in reverse.

◆ Service procedure

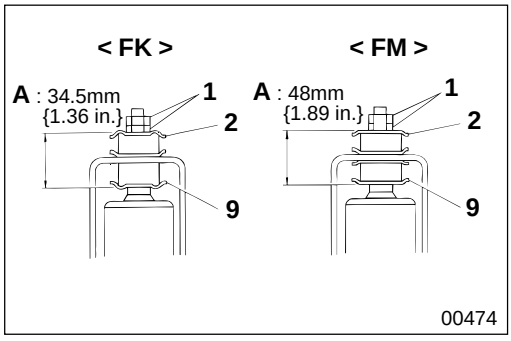

1 **Nut**

Install nut **1** so that the distance between washers **2**, **9** is **A**.

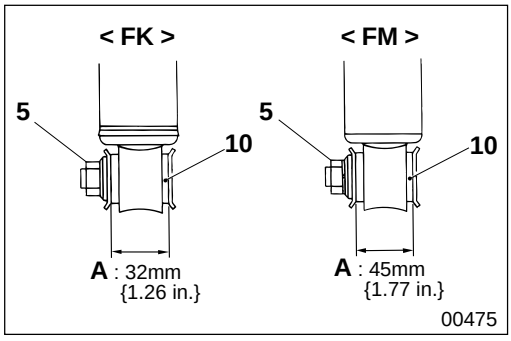

5 **Nut**

Install nut **5** so that dimension of rubber bushing **10** is **A**.

MITSUBISHI
FUSO

FK.FM
Service Manual

Group 34
Rear Suspension

Table of Contents

BACK

HOME

MITSUBISHI FUSO TRUCK OF AMERICA, Inc.

Pub No. TWME9503-34

GROUP 34 REAR SUSPENSION

STRUCTURE AND OPERATION 2

TROUBLESHOOTING 3

WORK BEFORE REMOVAL AND INSTALLATION OF REAR SUSPENSION 4

REMOVAL AND INSTALLATION OF LEAF SPRING ASSEMBLY 6

LEAF SPRING ASSEMBLY 12

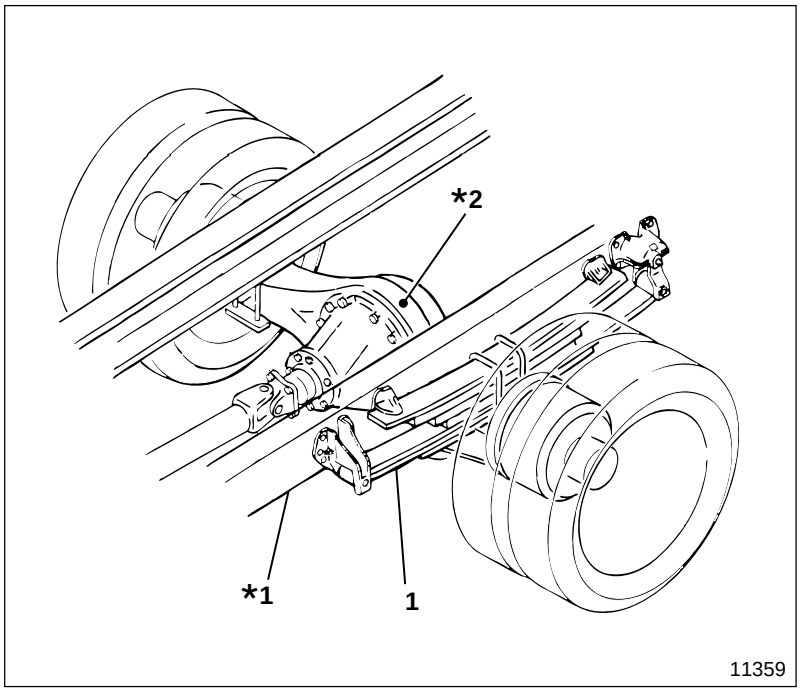

1 Leaf spring assembly

***1** : Frame
***2** : Rear axle

Leaf spring assembly **1** is installed between frame ***1** and rear axle ***2** to support the vehicle body mass and absorb vibration and shock from the road surface to prevent them from being directly transmitted to the vehicle body thereby protecting the crew, the vehicle body, and the cargo. In addition, irregular vibration from the wheels is restrained, ensuring driving stability.

Possible causes \ Symptoms		Ride spongy	Noise generated when vehicle is unloaded	Impact transmitted from uneven road surface	Noise generated when vehicle is loaded	Excessive rolling while cruising	Periodic jolts caused by the road surface	Remarks
Leaf spring	Cracked or damaged			○				
	Damaged		○					
	Spring bracket broken				○			
	U-bolts loose				○			
	Spring bushing worn		○					
Shackle pins thrust play excessive			○					
Sliding seat < FM > or helper stopper damaged or broken					○			
Tire	Tires worn unevenly						○	
	Tires and wheels unbalanced						○	Gr 31
	Air pressure excessive			○				

WORK BEFORE REMOVAL AND INSTALLATION OF REAR SUSPENSION

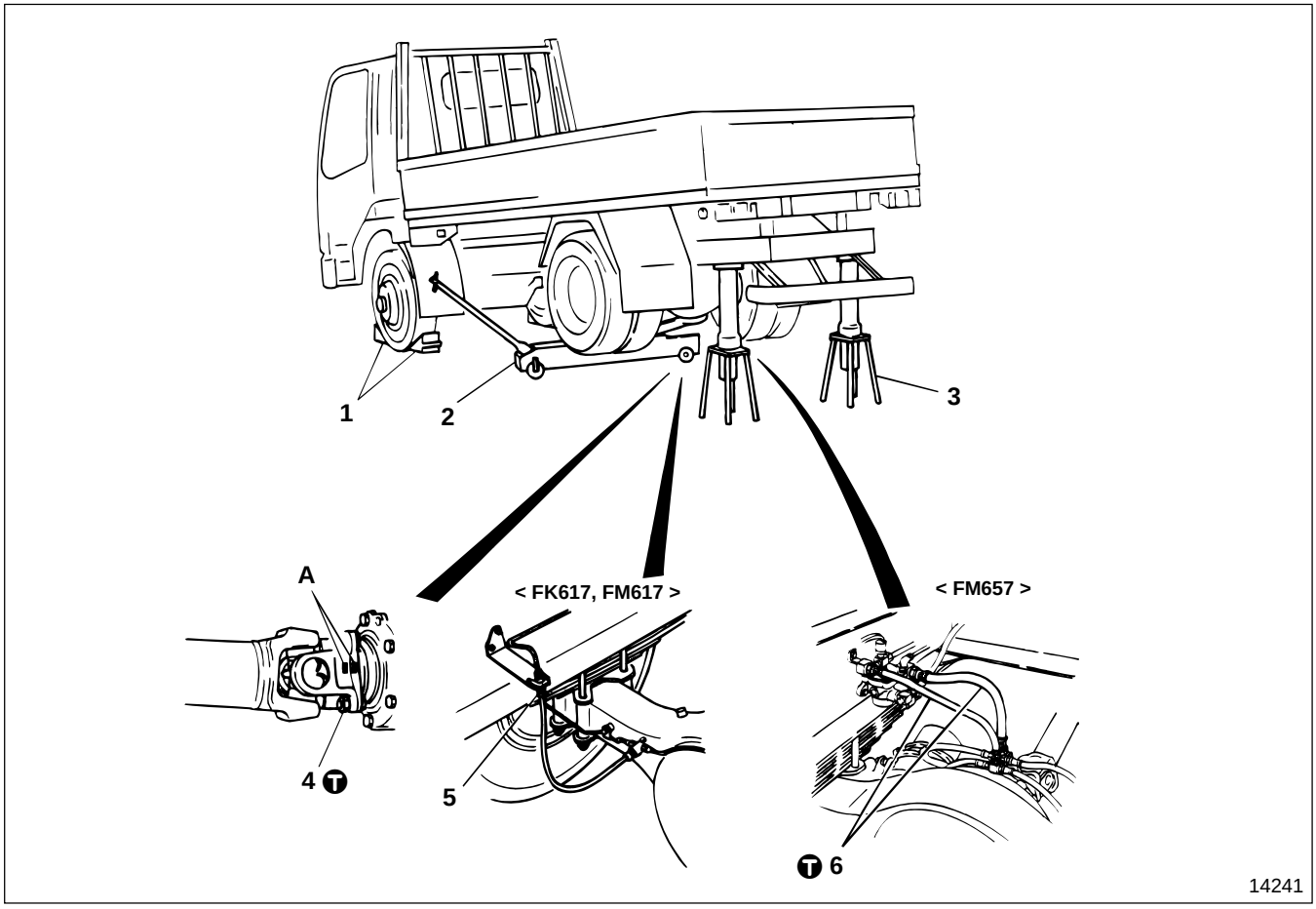

● **Removal sequence**

1 Place wheel chocks.
2 Jack up the rear axle with a garage jack.
3 Support the rear frame on rigid racks.
4 Put alignment marks **A** on the rear axle companion flange and the propeller shaft flange yoke, then remove the nuts (on the joint between the rear axle and the propeller shaft).
5 Remove the brake hose joint (on the frame). < FK617, FM617 >
6 Remove the brake hose joint (on the frame side). < FM657 >

WARNING

- **Chock the wheels securely so the vehicle does not move.**
- **Do not remove the chocks until the entire operation is completed.**
- **Supporting a vehicle on a garage jack only is extremely dangerous, so always support the frame on rigid racks.**
- **Leave the garage jack and rigid racks in place until the entire operation is completed. Never remove them during the operation.**

CAUTION

Be sure to protect the brake hose from dust by fitting blanking plugs.

● **Installation sequence**

Follow the removal sequence in reverse.

WARNING⚠

You must bleed air from the brake system after installing the brake hose, failure to do so would cause the brake to malfunction. Gr 35A

CAUTION⚠

Be sure that the brake hose is not twisted when you install it.

Tightening torque

Unit : N·m {lbf.ft, kgf·m}

Location	Parts to be tightened		Tightening torque	Remarks
4	Nut (Rear axle and propeller shaft connecting)	P4, P8	85 {61, 8.5}	—
		P10	120 to 180 {87 to 130, 12 to 18}	—
6	Brake hose (Service brake : Frame side)		69 to 74 {51 to 54, 7.0 to 7.5}	—
	Brake hose (Spring brake : Frame side)		39 to 44 {29 to 33, 4.0 to 4.5}	—

REMOVAL AND INSTALLATION OF LEAF SPRING ASSEMBLY

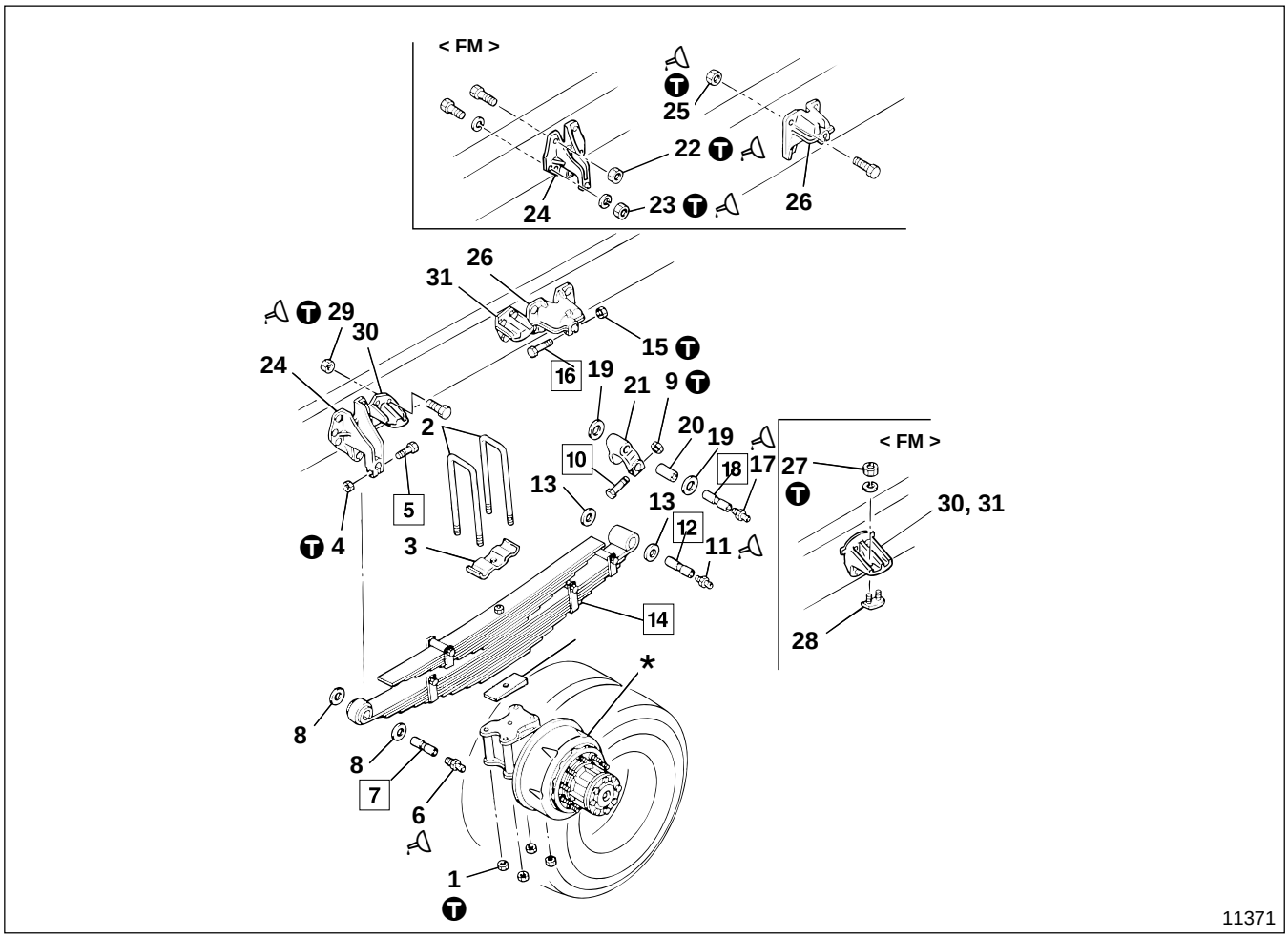

● **Removal sequence**

1 U-bolt nut
2 U-bolt
3 Rear spring pad
4 Nut
5 Bolt
6 Grease nipple
7 Shackle pin
8 Side washer
9 Nut
10 Bolt
11 Grease nipple
12 Shackle pin
13 Side washer
14 Leaf spring assembly
📖 P34-12
15 Nut
16 Bolt
17 Grease nipple
18 Shackle pin
19 Side washer
20 Bushing
21 Shackle link
22 Nut < FM >
23 Nut < FM >
24 Rear spring front bracket
25 Nut < FM >
26 Rear spring rear bracket
27 Nut < FM >
28 Sliding seat < FM >
29 Nut
30 Front helper stopper
31 Rear helper stopper

***** Rear axle Gr 27

NOTE

Do not remove rear spring front bracket 24, or rear spring rear bracket 26, front helper stopper 30, or rear helper stopper 31 unless they are faulty. **Gr 41**

● **Installation sequence**

Follow the removal sequence in reverse.

Service standards

Unit : mm {in.}

Location	Maintenance item		Standard value (Basic diameter in [ ])	Limit	Remedy
7, 12, 14	Clearance between shackle pin and spring bushing	FK	[28] 0 to 0.12 {[1.10] 0 to 0.0047}	0.3 {0.012}	Replace
		FM	[30] 0 to 0.15 {[1.18] 0 to 0.0059}		
7, 12, 21, 24	Clearance between shackle pin and each of rear spring front bracket and shackle link	FK	[28] 0 to 0.04 {[1.10] 0 to 0.0016}	0.3 {0.012}	Replace
		FM	[30] 0 to 0.05 {[1.18] 0 to 0.0020}		
14, 21	Clearance between leaf spring assembly and shackle link	FK	0.2 to 0.9 {0.0079 to 0.035}	—	Replace side washer
		FM	1.0 to 1.7 {0.039 to 0.067}	—	
14, 24	Clearance between leaf spring assembly and rear spring front bracket	FK	0.2 to 0.9 {0.0079 to 0.035}	—	Replace side washer
		FM	1.0 to 1.7 {0.039 to 0.067}	—	
18, 20	Clearance between shackle pin and bushing	FK	[28] 0.02 to 0.14 {[1.10] 0.00079 to 0.0055}	0.3 {0.012}	Replace
		FM	[30] 0.03 to 0.15 {[1.18] 0.0012 to 0.059}		
18, 26	Clearance between shackle pin and rear spring rear bracket	FK	[28] 0 to 0.04 {[1.10] 0 to 0.0016}	0.3 {0.012}	Replace
		FM	[30] 0 to 0.05 {[1.18] 0 to 0.0020}		
21, 26	Clearance between shackle link and rear spring rear bracket	FK	0.2 to 0.6 {0.0079 to 0.024}	—	Replace side washer
		FM	0 to 0.4 {0 to 0.016}	—	

Ⓣ Tightening torque

Unit : N·m {lbf.ft, kgf·m}

Location	Parts to be tightened		Tightening torque	Remarks
1	U-bolt nut (U-bolt mounting)	FK	414±62 {305±46, 42.2±6.3}	Wet
		FM	546±82 {400±61, 55.7±8.4}	
4, 9, 15	Nut (Shackle pin mounting)		80 to 110 {58 to 80, 8 to 11}	—
22, 25	Nut (Rear spring front and rear bracket mounting)	FM	200 to 270 {145 to 200, 20.4 to 27.5}	Wet
23	Nut (Rear spring front bracket mounting)	FM	157 to 216 {115 to 160, 16 to 22}	Wet
27	Nut (Sliding seat mounting)	FM	59 to 84 {43 to 61, 6.0 to 8.5}	—
29	Nut (Helper stopper mounting)	FK	157 to 216 {115 to 160, 16 to 22}	Wet

Lubricant and sealant

Location	Points of application		Kinds	Quantity
6, 11, 17	Supply via grease nipple		Chassis grease [NLGI No. 1 (Ca soap)]	As required
22, 23, 25	Thread area and contacting surface of nut	FM	LOCTITE 271 and Nippon grease Rusfighter J36	As required
29	Thread area and contacting surface of nut	FK	Engine oil	As required

REMOVAL AND INSTALLATION OF LEAF SPRING ASSEMBLY

Special tools

Unit : mm {in.}

Location	Tool name and shape	Part No.	Application
5, 10, 16	Shackle pin setting bar 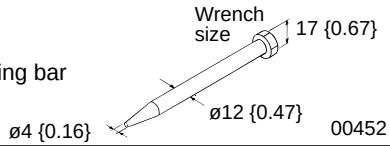	MC023419	Removal of shackle pin mounting bolt and aligning of holes
7, 12, 18	Shackle pin puller 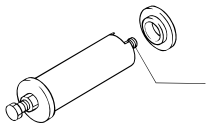	MH061452	Removal of shackle pin

◆ Service procedure

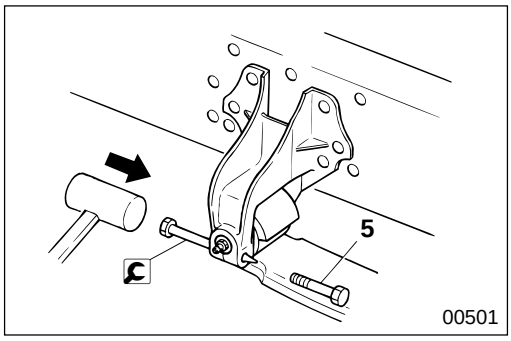

5 **Removal of bolt**

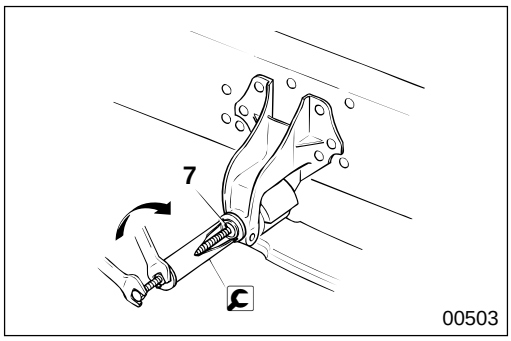

7 **Shackle pin**

[Removal]

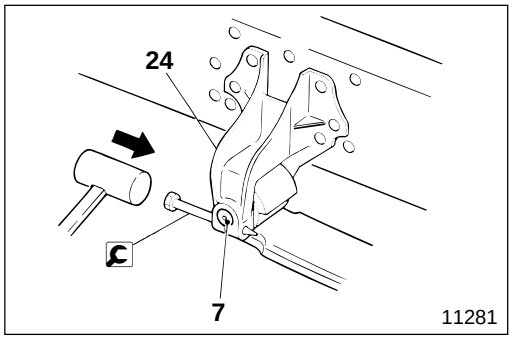

[Installation]

Align the bolt hole of rear spring front bracket **24** with the bolt groove of shackle pin **7** using shackle pin setting bar.

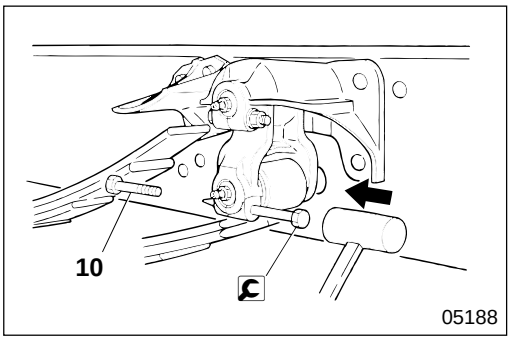

10 **Removal of bolt**

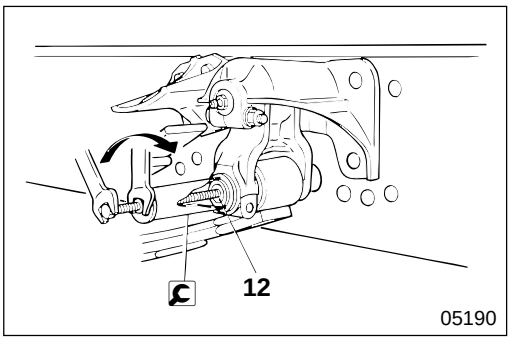

12 **Shackle pin**

[Removal]

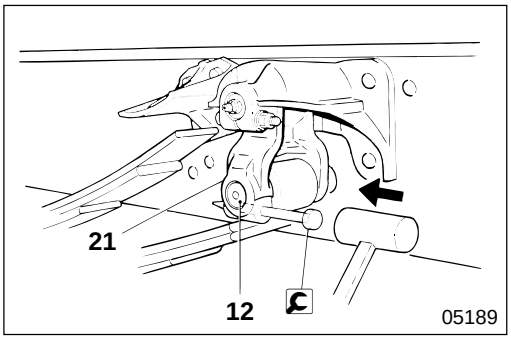

[Installation]
Align the bolt hole of shackle link **21** with the bolt groove of shackle pin **12** using 🔧 shackle pin setting bar.

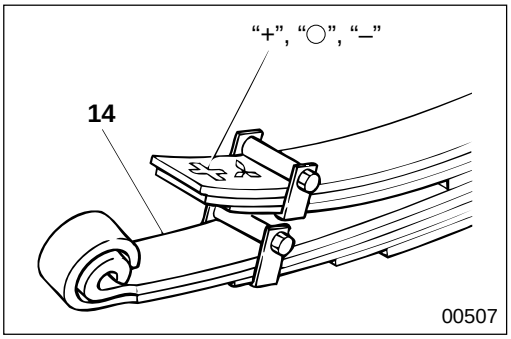

14 **Leaf spring assembly left/right height combinations**

When replacing leaf spring assembly **14**, select the members so that the left and right height marks "+", "○" and "–" are combined as shown below.

Item	Combination		
	1	2	3
Leaf spring assembly, left side	+	○	–
Leaf spring assembly, right side	+	○	–

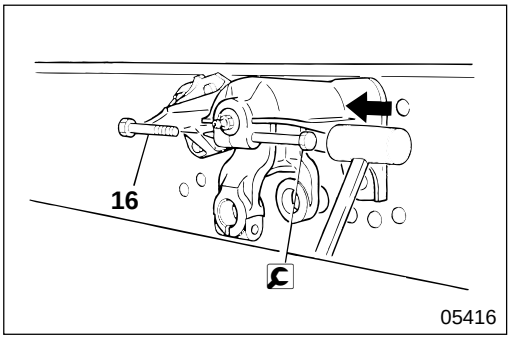

16 **Removal of bolt**

REMOVAL AND INSTALLATION OF LEAF SPRING ASSEMBLY

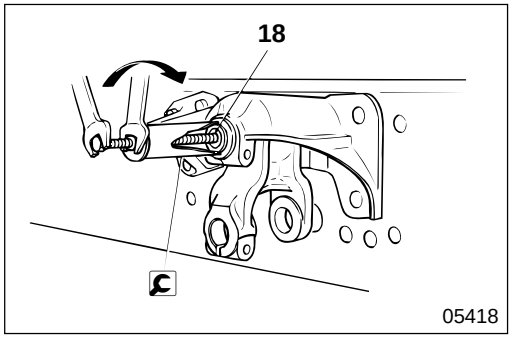

18 **Shackle pin**

[Removal]

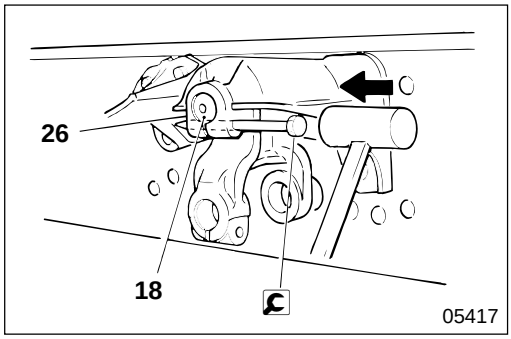

[Installation]

Align the bolt hole of rear spring rear bracket **26** and the bolt groove of shackle pin **18** using shackle pin setting bar.

M E M O

LEAF SPRING ASSEMBLY

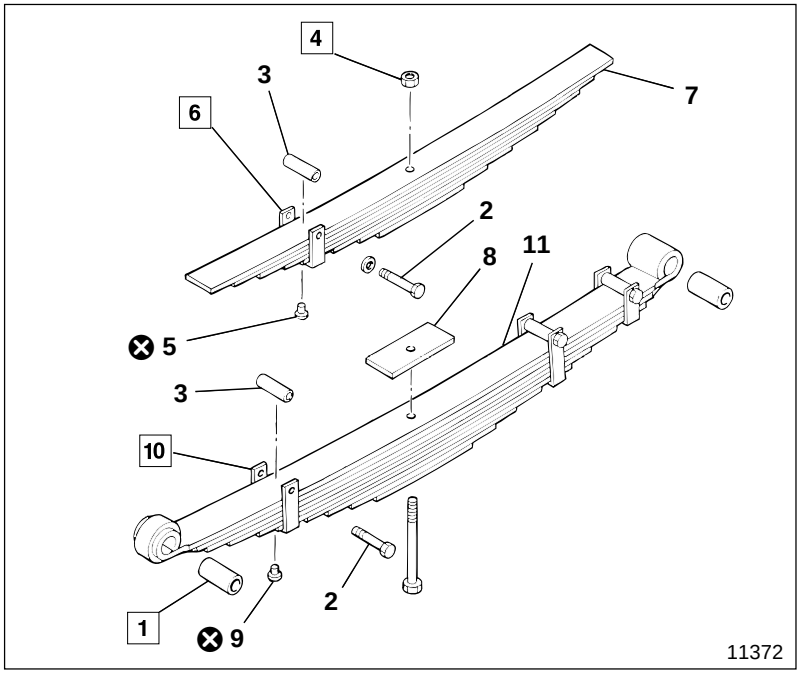

● **Disassembly sequence**

1 Spring bushing
2 Clip bolt
3 Pipe < FM >
4 Center nut
5 Rivet
6 Clip
7 Helper spring
8 Seat
9 Rivet
10 Clip
11 Main spring

⊗ : Non-reusable parts

● **Assembly sequence**

Follow the disassembly sequence in reverse.

Special tools

Unit : mm {in.}

Location	Tool name and shape	Part No.	Application
1	Bushing installer set **A** : Bushing installer A **B** : Bushing installer B 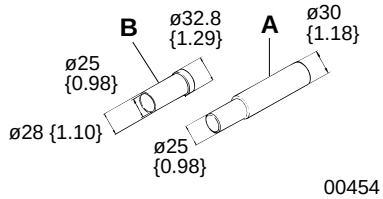	MB999066 **A** : MB999067 **B** : MB999068	Removal and installation of bushing

◆ Service procedure

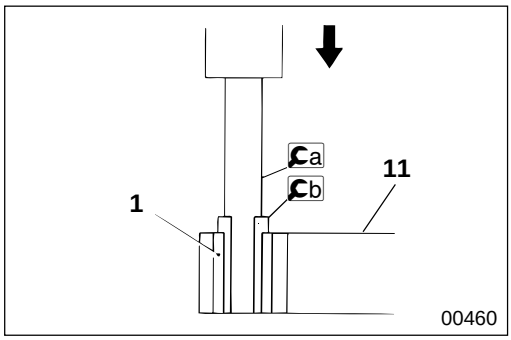

1 **Removal and installation of spring bushing**

Remove spring bushing **1** from main springs **11** using a bushing installer **A** and b bushing installer **B**. For installation, follow the removal sequence in reverse.

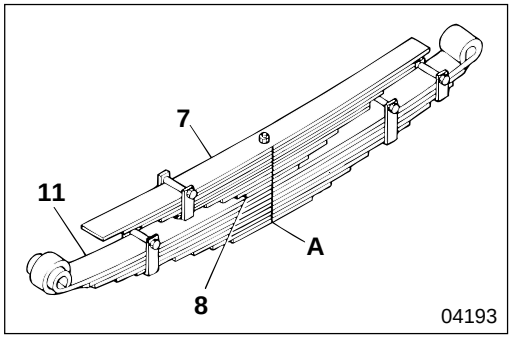

4 **Center nut**

[Removal]

- Put alignment marks **A** on the sides of helper springs **7**, seat **8**, and main springs **11**.

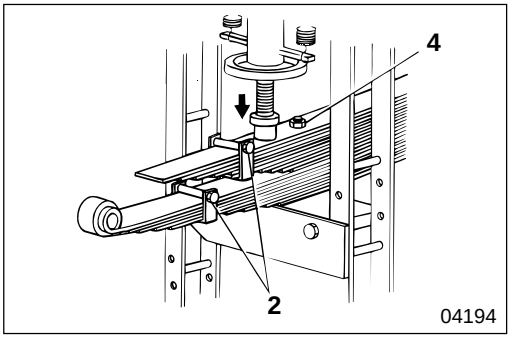

- Compress the leaf springs using a press to remove clip bolt **2** and center nut **4**.

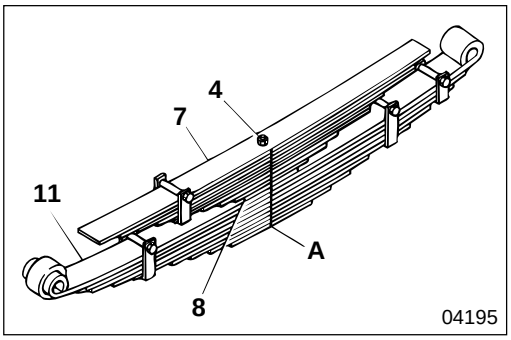

[Installation]
- Align alignment marks **A** on helper springs **7**, seat **8**, and main springs **11** to assemble them.
- Tighten center nut **4** temporarily.

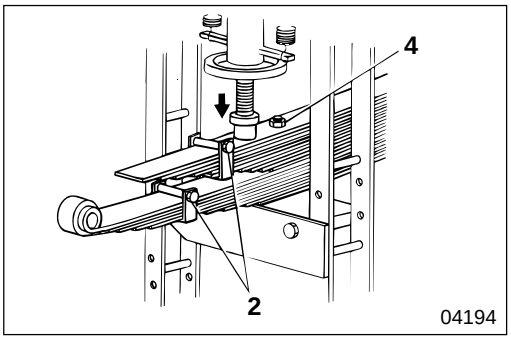

- Compress leaf springs using a press to install center nut **4**.
- Install clip bolt **2**.

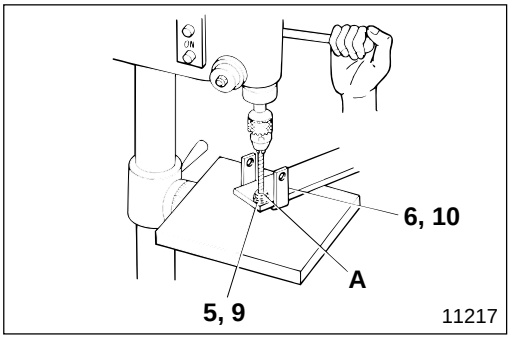

6 **10** **Clip**

[Removal]
Drill out caulked ends **A** of rivets **5**, **9** on a drill press to remove clips **6**, **10**.

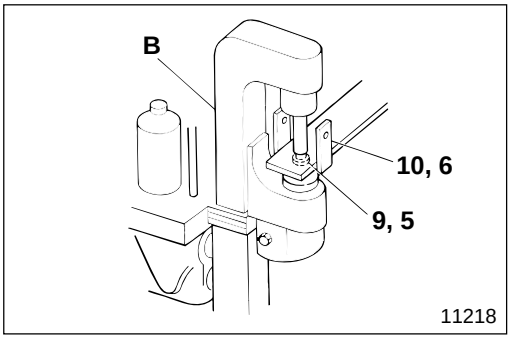

[Installation]
Caulk rivets **9**, **5** using riveting machine **B** to install clip **10**, **6**.

BACK HOME

MITSUBISHI FUSO

FK.FM

Service Manual

Group 35A - Brake
<Air Over Hydraulic Brake>

Group 35B - Brake
<Full Air Brake>

Group 35C - Anti-lock Brake System <ABS>
1999 Minor Changes

MITSUBISHI FUSO TRUCK OF AMERICA, Inc.

MITSUBISHI
FUSO

FK.FM

Service Manual

Group 35C
Anti-Lock Brake System
(ABS)

'99 Minor Change

Table of Contents

MITSUBISHI FUSO TRUCK OF AMERICA, Inc.

BACK HOME

Pub No. TWME9503-335C

GROUP 35C ANTI-LOCK BRAKE SYSTEM (ABS)

SPECIFICATIONS 35C-2

STRUCTURE AND OPERATION 35C-2

ON-VEHICLE INSPECTION AND ADJUSTMENT
- Periodic Inspection Procedures 35C-20
- Adjustment of Wheel Speed Sensor Clearance 35C-22
- Inspection of Wheel Speed Sensor Signal Waveform Using Oscilloscope 35C-24

TROUBLESHOOTING
- Troubleshooting Procedures 35C-25
- Troubleshooting Flowchart 35C-26
- Tester 35C-28
- Procedure of Inspection Using MUT-II 35C-30
- Procedure of Inspection Using Diagnosis Switch 35C-36

WHEEL SPEED SENSOR AND ROTOR
< FRONT AXLE > 35C-40
< REAR AXLE > 35C-58

CONTROL VALVE 35C-79

ELECTRIC CIRCUIT AND PART INSTALLATION LOCATIONS 35C-80

SPECIFICATIONS/STRUCTURE AND OPERATION

SPECIFICATIONS

Item \ Model	FK617	FM617	FM657
Brake system	Air-over hydraulic brake		Full-air brake
Anti-lock brake system (number of sensors/number of channels)	ABS (CN12: 4S/3K)		
Manufacturer	NABCO		

STRUCTURE AND OPERATION
Anti-lock Brake System (ABS)

● System outline

<Air-over hydraulic brake>

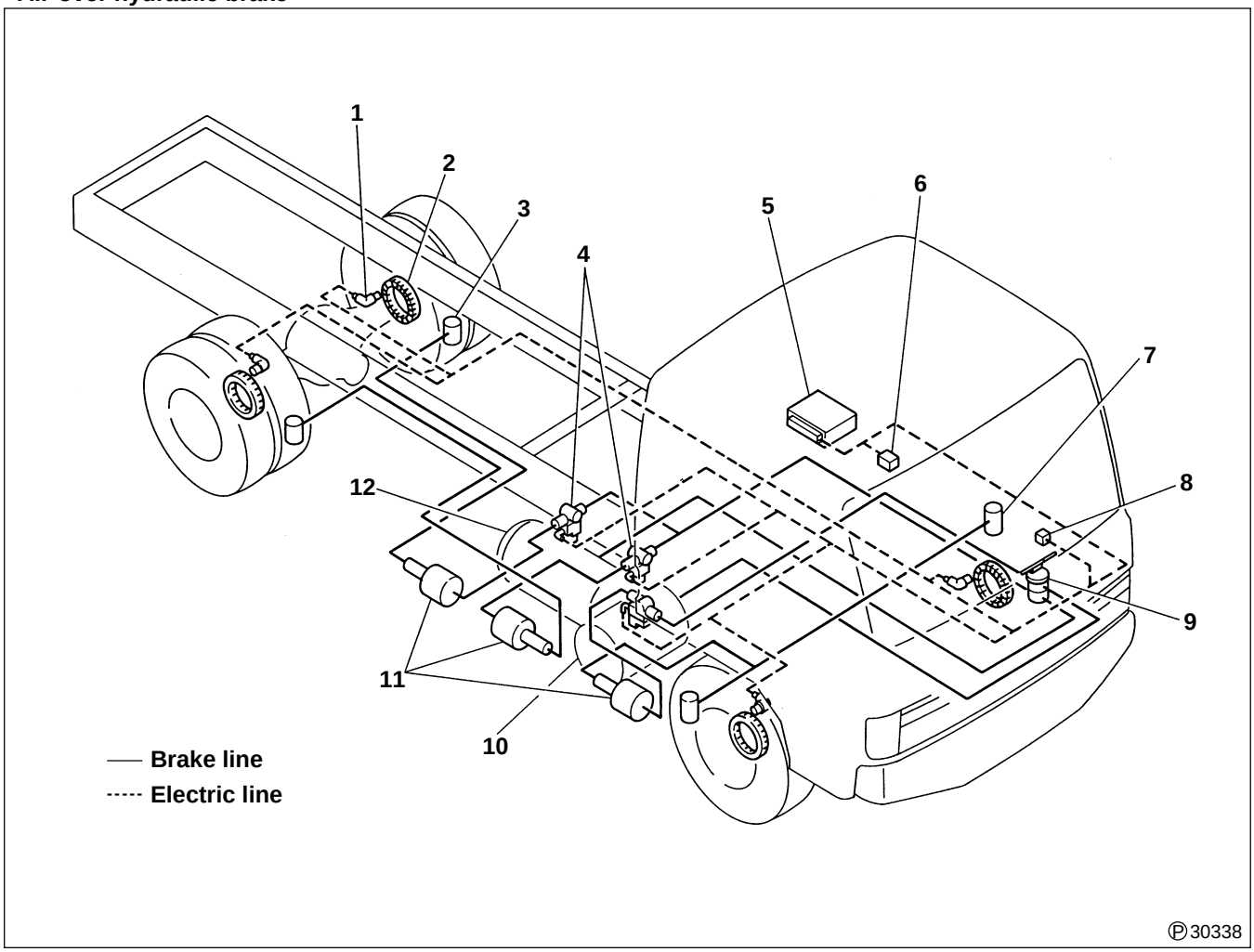

1 Wheel speed sensor
2 Rotor
3 Rear wheel cylinder
4 Control valve
5 Electronic control unit
6 Exhaust brake cut relay
7 Front wheel cylinder
8 Anti-lock brake system warning lamp
9 Dual brake valve
10 Air tank (for front brake system)
11 Brake booster
12 Air tank (for rear brake system)

<Full-air brake>

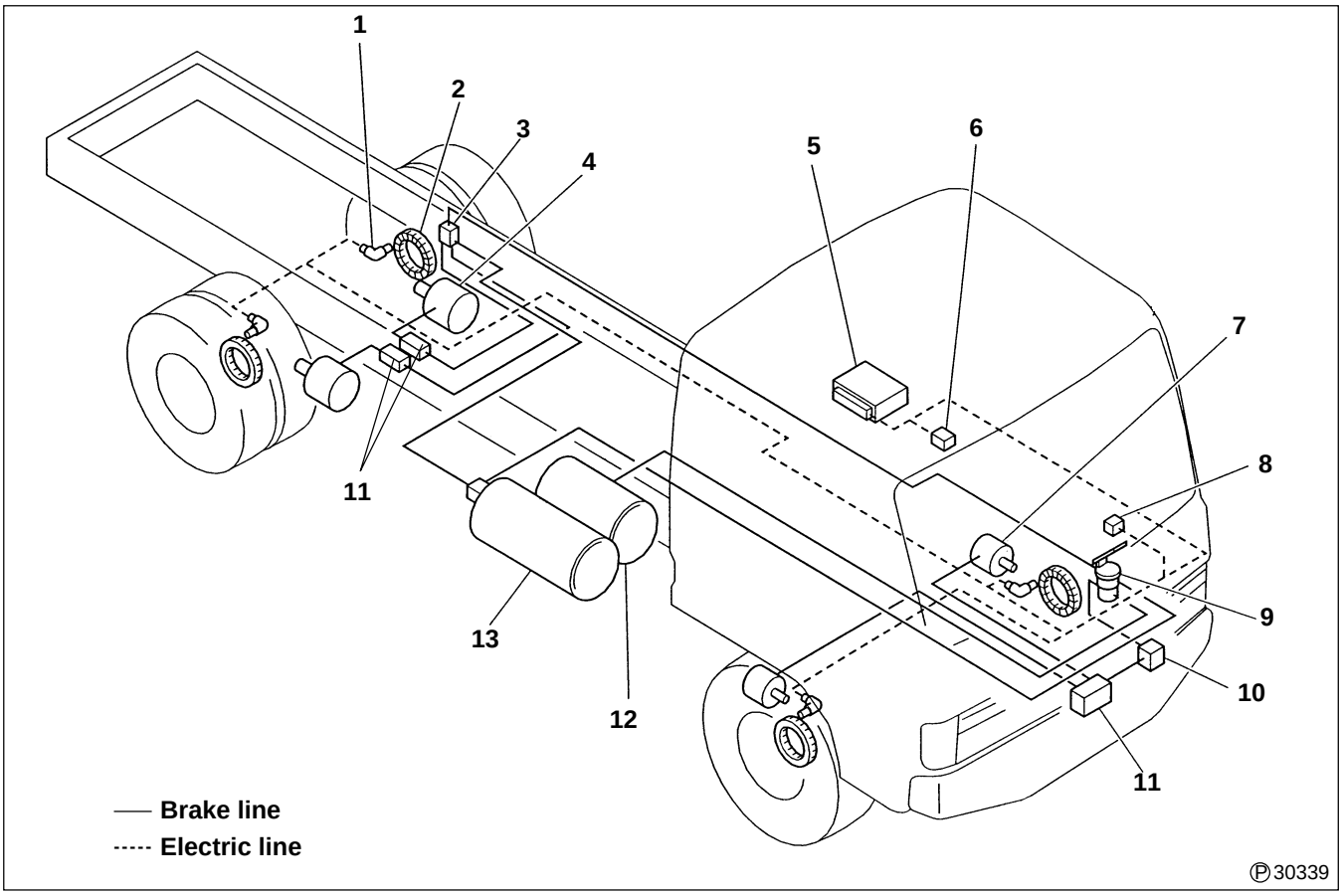

1 Wheel speed sensor
2 Rotor
3 Relay valve
4 Rear brake chamber
5 Electronic control unit
6 Exhaust brake cut relay
7 Front brake chamber
8 Anti-lock brake system warning lamp
9 Dual brake valve
10 Quick release valve
11 Control valve
12 Air tank (for front brake system)
13 Air tank (for rear brake system)

Anti-lock brake system prevents the slippage of tires resulting from wheel lockup that occurs during sudden braking on slippery pavement, thus helping maintain controllability and directional stability of the vehicle.
The following section explains how wheel lockup affects the vehicle's movement and directional stability.

Wheel lockup

Rotating tires of a moving vehicle have a tendency to travel in the direction of tire rotation. Therefore, a driver can control the vehicle's movement by turning the steering wheel to move the front tires to a desired direction. In a vehicle not equipped with Anti-lock brake system, when a driver presses the brake pedal all the way, wheel lockup occurs and tires stop rotating while the vehicle is still moving. Tires in this condition lose the tendency to maintain the direction of travel and slip in a direction of an externally applied force regardless of the tires' rotating direction. In other words, when wheels lock, the vehicle loses its directional stability, disallowing the driver to control the vehicle's movement. Anti-lock brake system eases the braking force on wheels before wheel lockup occurs, thus maintaining controllability and directional stability.

(1) Wheel lockup during cornering on slippery road

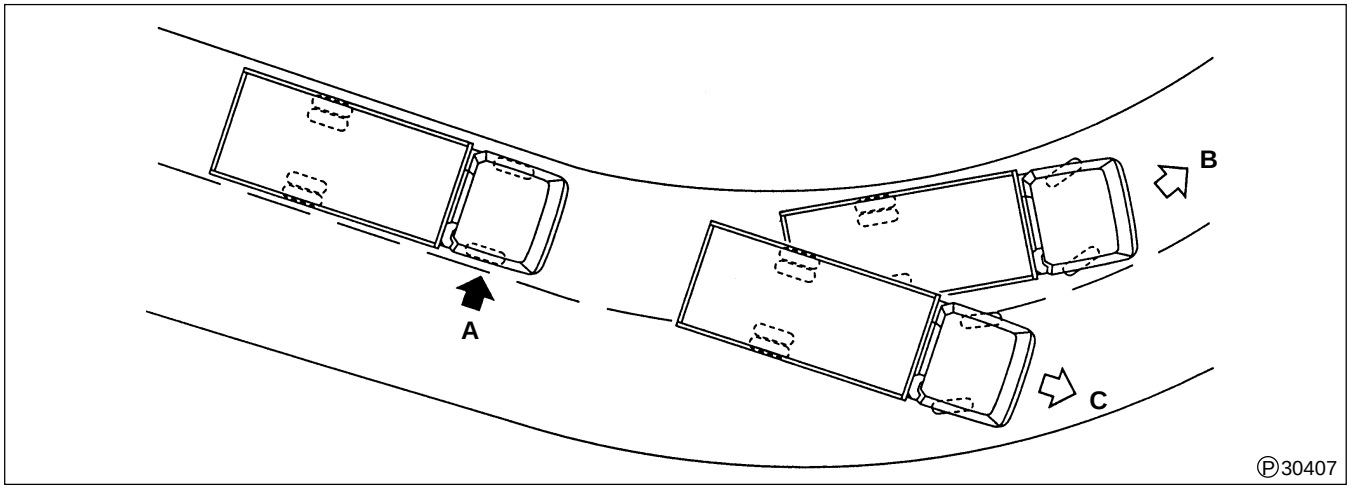

When wheel lockup occurs during braking at a curve on slippery pavement, the vehicle loses its directional stability and does not move in the steered direction.

A: Braking point (wheel lockup)
B: Steered direction
C: Vehicle continues to travel straight.

(2)Wheel lockup on straightway on slippery pavement

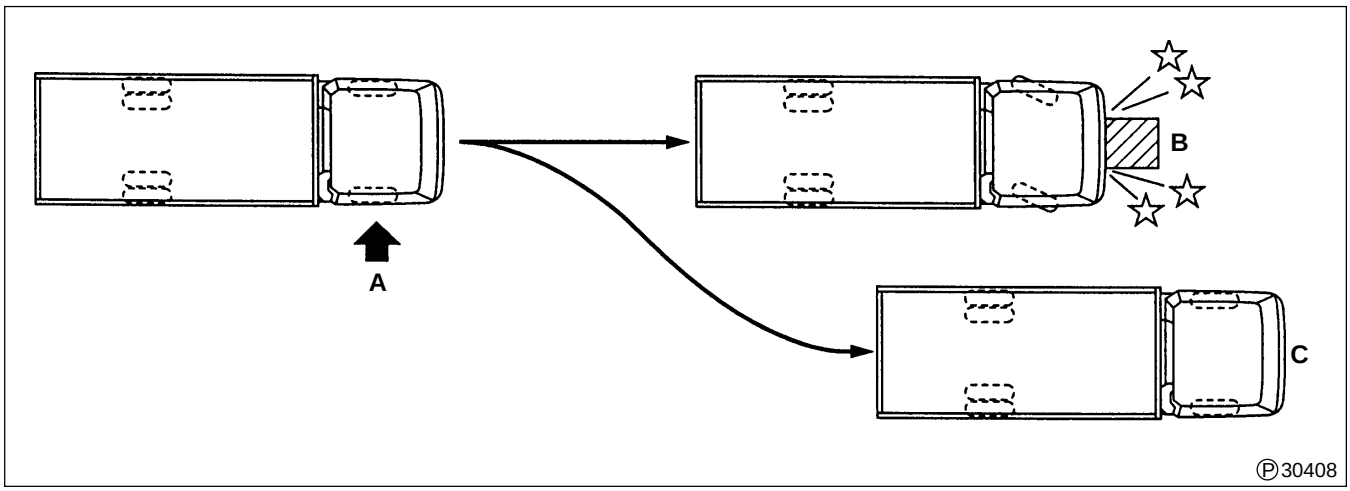

When wheel lockup occurs as a driver applies sudden braking on a straightway to avoid an obstacle ahead, the vehicle loses its directional stability and controllability. When this happens, the driver cannot control the vehicle's movement to avoid hitting the obstacle.

A: Braking point (wheel lockup)
B: Obstacle
C: Intended direction of vehicle movement

(3) Wheel lockup on surfaces with split μ factors (road surface with different friction coefficients for left and right wheels)

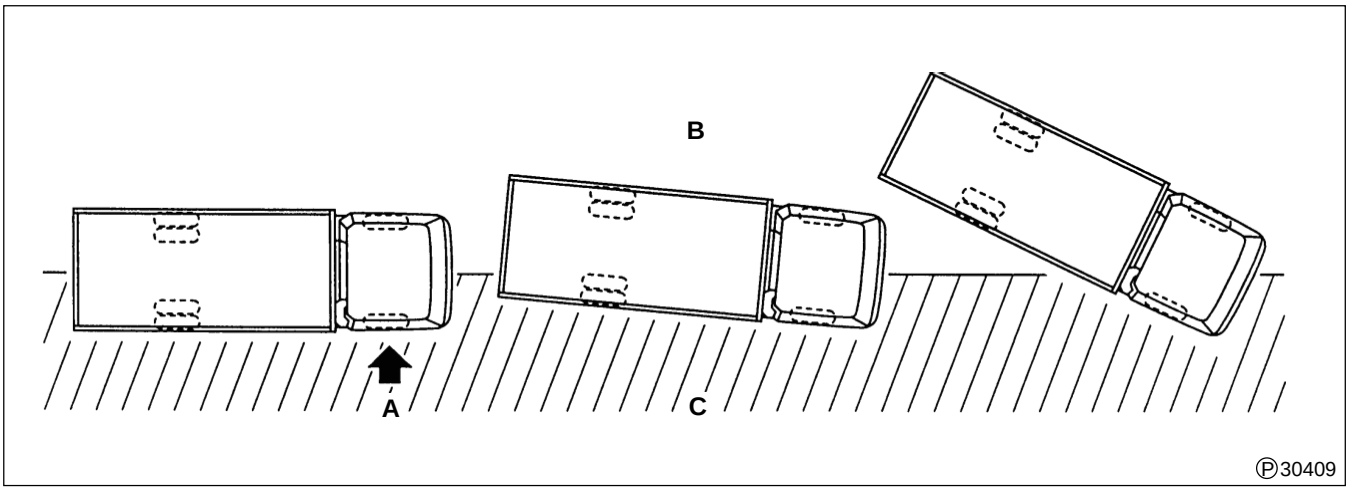

If the brake is applied hard when the friction coefficient of a road surface is different for the left and right tires, the tires which are on a surface with a lower friction coefficient lock up first and start sliding. Since the sliding of the tires on one side of the vehicle causes an imbalance in the stopping power between the left and right tires, one side of the vehicle slows down while the other side continues traveling at the same speed, resulting in the loss of directional stability. In this condition, the driver cannot maneuver the vehicle properly. When this happens during sudden braking, the vehicle spins.

A: Braking point (wheel lockup)
B: Slippery pavement
C: Non-slippery pavement

To prevent the above mentioned conditions, Anti-lock brake system controls the braking force to provide optimum stopping power to each wheel and prevents wheel lockup. Therefore, the vehicle maintains controllability and directional stability during hard braking without slipping or sliding.

● Anti-lock brake system structure

Anti-lock brake system consists of wheel speed sensors **2** that detect wheel speed, control unit **9** that detects wheel lockup tendencies based on wheel speed data and outputs signals to control the braking force, control valves **7** that physically regulate the braking force, and Anti-lock brake system warning lamp **10** that indicates system abnormalities.

The following shows the Anti-lock brake system control process in a wheel lockup condition.

Schematic system diagram

<Air-over hydraulic brake>

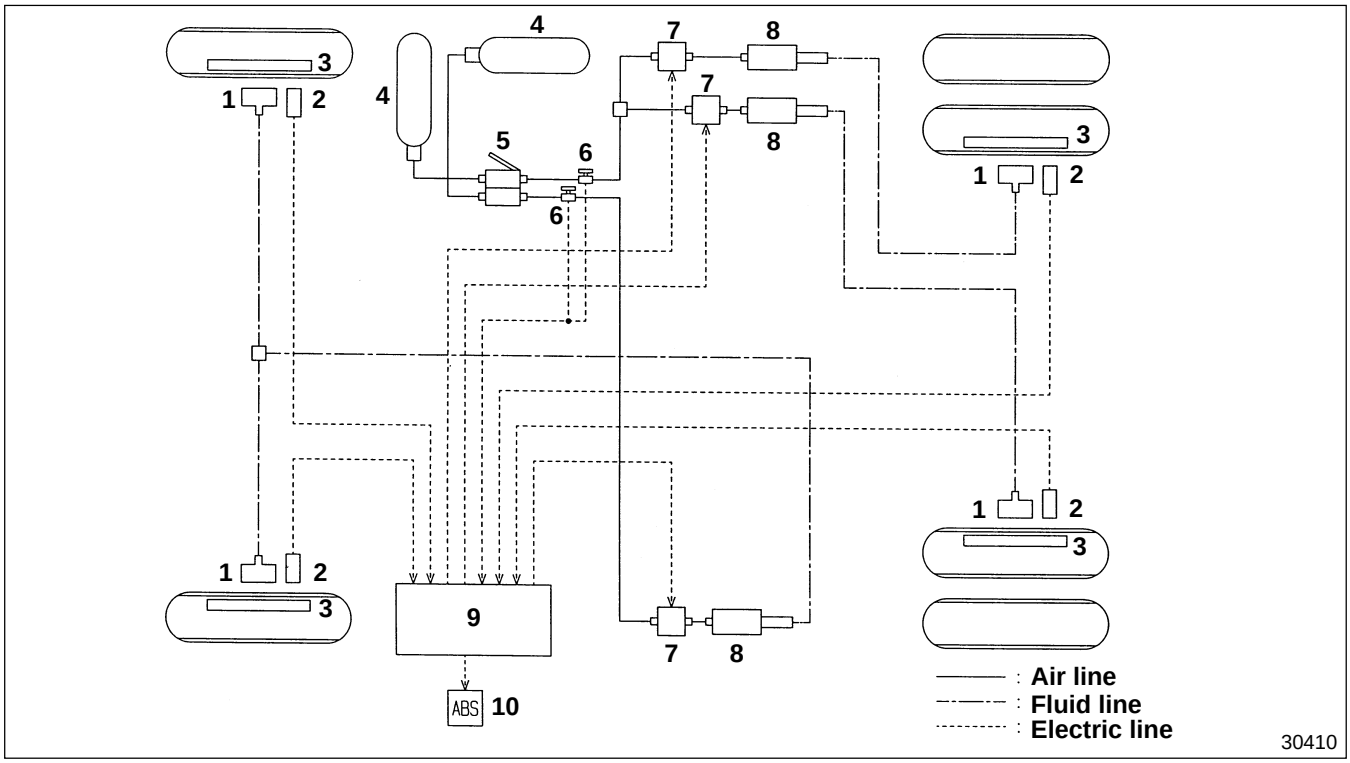

1 Wheel brake
2 Wheel speed sensor
3 Rotor
4 Air tank
5 Dual brake valve
6 Stop lamp switch
7 Control valve
8 Brake booster
9 Electronic control unit
10 Anti-lock brake system warning lamp

- Anti-lock brake system uses wheel speed sensors **2** and Electronic control unit **9** to monitor the rotating speed of wheels. When the wheel speed exceeds the preset deceleration speed or slip rate, the Electronic control unit detects it as the tendency leading to wheel lockup and activates control valves **7** to reduce air pressure inside brake boosters **8**. This decreases the braking force and prevents wheel lockup. Then, when the wheel speed increases, the wheel speed sensors send signals to the control valves by way of the Electronic control unit to increase air pressure in the brake boosters to augment the braking force.
- This control cycle is repeated to prevent wheel lockup on slippery pavements and ensure the vehicle's directional stability during braking. The 4-sensor 3-channel Anti-lock brake system uses four wheel speed sensors **2**, which are located at the front and rear wheels, to control each of the four wheels. For the front wheels, the control function is integrated for the left and right wheels.

Schematic system diagram

<Full-air brake>

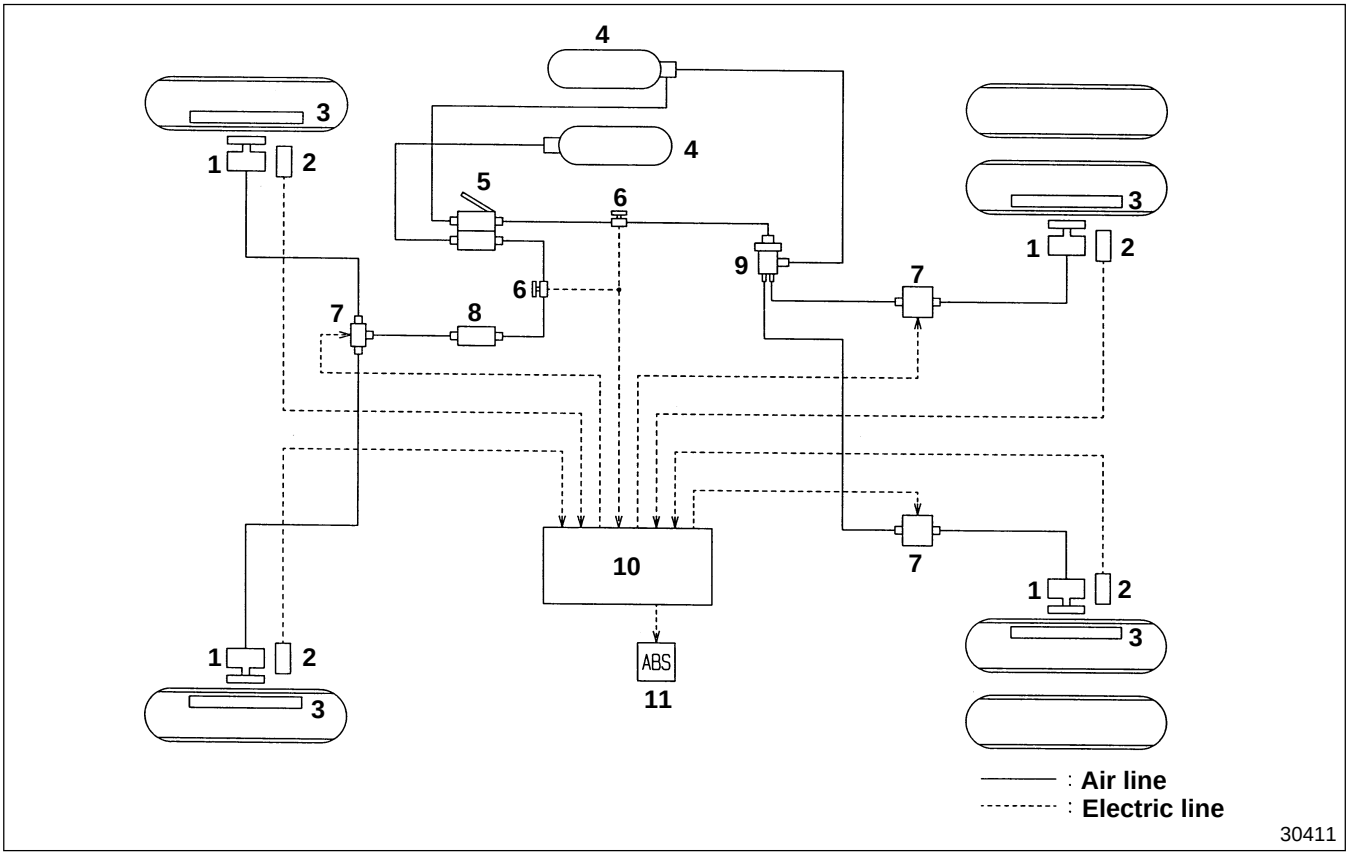

1 Brake chamber
2 Wheel speed sensor
3 Rotor
4 Air tank
5 Dual brake valve
6 Stop lamp switch
7 Control valve
8 Quick release valve
9 Relay valve
10 Electronic control unit
11 Anti-lock brake system warning lamp

- Anti-lock brake system uses wheel speed sensors **2** and Electronic control unit **10** to monitor the rotating speed of wheels. When the wheel speed exceeds the preset deceleration speed or slip rate, the Electronic control unit detects it as a wheel lockup tendency and activates control valves **7** to reduce air pressure inside brake chambers **1**. This decreases the braking force and prevents wheel lockup. Then, when the wheel speed increases, the wheel speed sensors send signals to the control valves by way of the Electronic control unit to increase air pressure in the brake chambers to augment the braking force.
- This control cycle is repeated to prevent wheel lockup on slippery pavements and ensure the vehicle's directional stability during braking. The 4-sensor 3-channel Anti-lock brake system uses four wheel speed sensors **2**, which are located at the front and rear wheels, to control each of the four wheels. For the front wheels, the control function is integrated for the left and right wheels.

Anti-lock brake system function

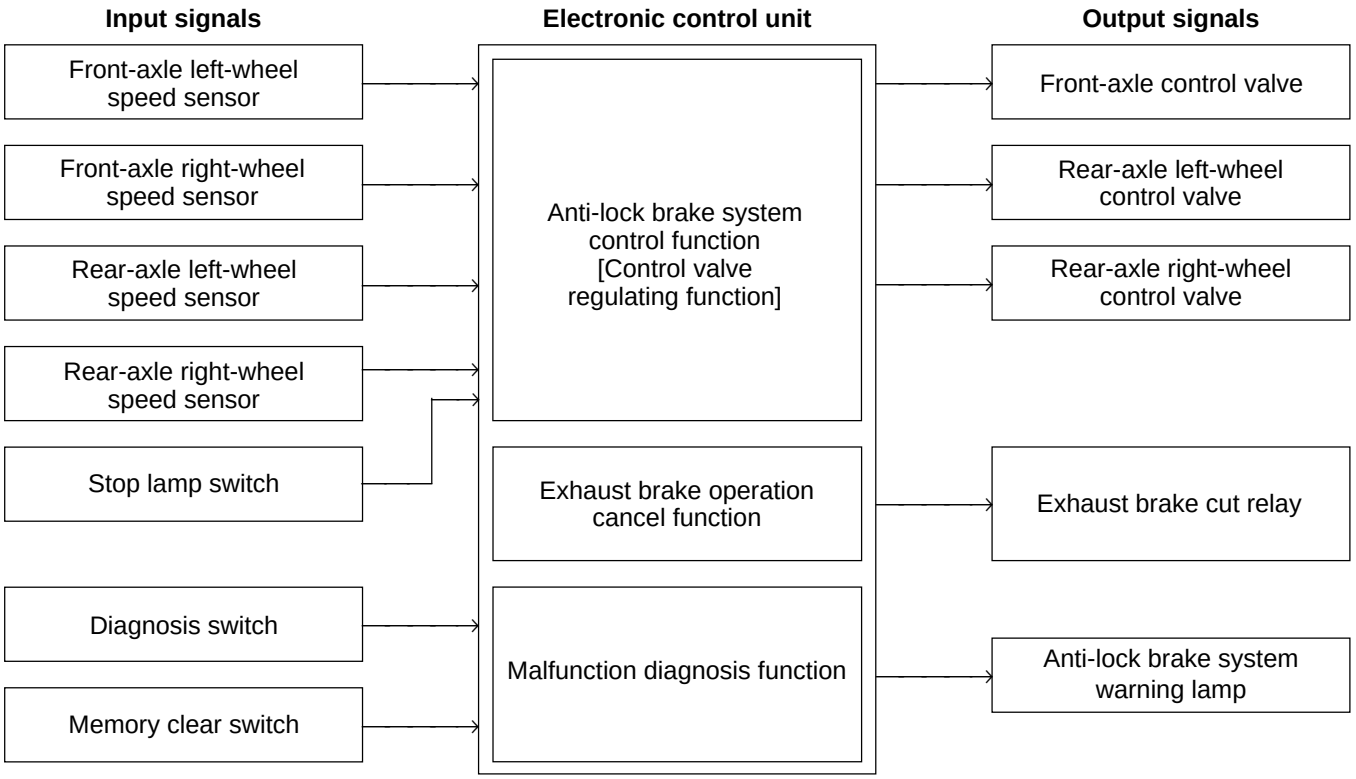

Anti-lock brake system malfunction diagnosis function

When the Electronic control unit detects malfunction of the following components, it turns on the Anti-lock brake system warning lamp to indicate the system abnormality.

- Broken wire, short-circuit or output abnormality in wheel speed sensors
- Broken wire or short-circuit in outlet and holding valves of control valves
- Broken wire, short-circuit or power supply voltage abnormality in power relays
- Abnormal detection of Electronic control unit

M E M O

Brake piping diagram

< Air-over hydraulic brake >

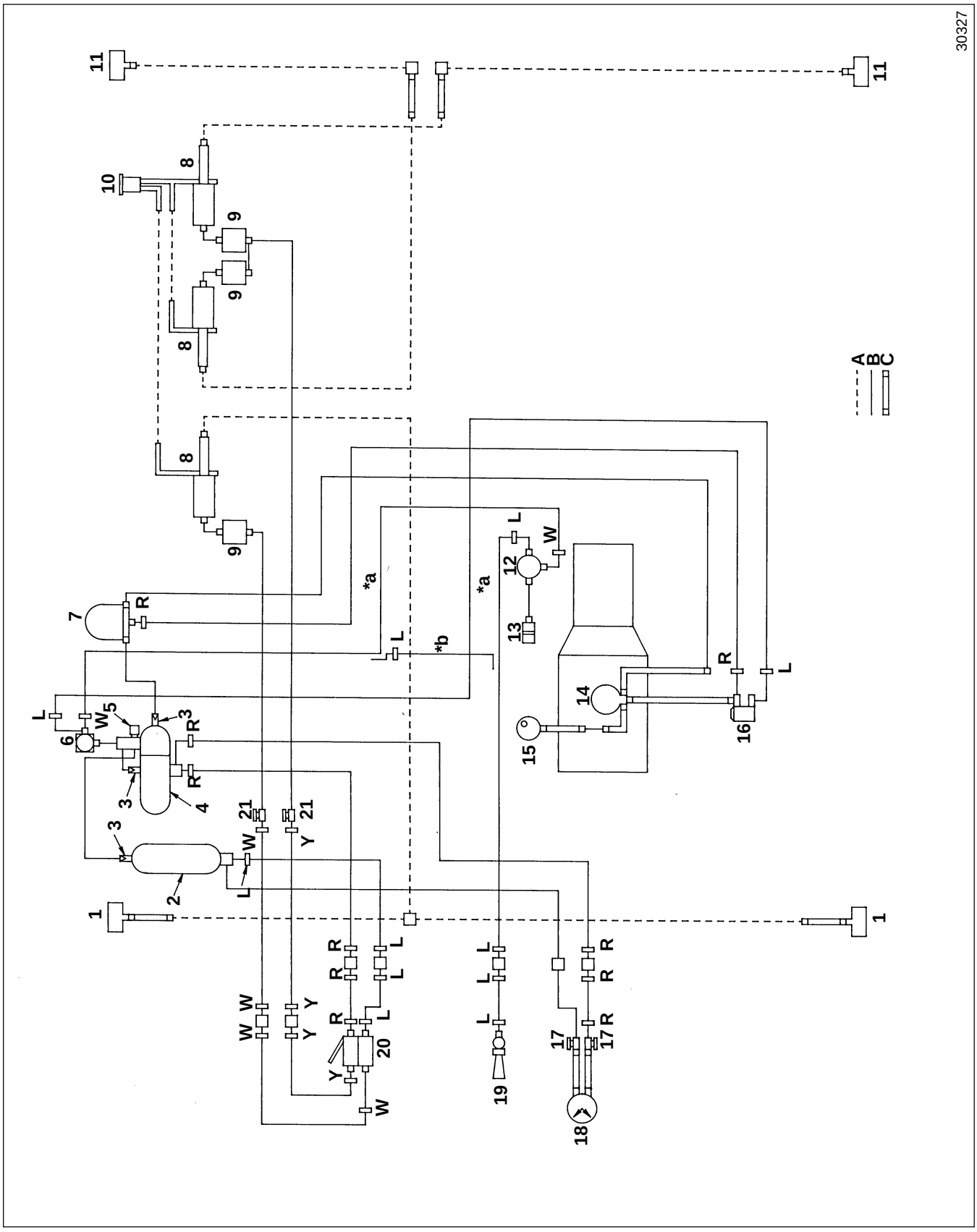

1 Front wheel cylinder
2 Air tank (front)
3 Check valve
4 Air tank (rear, wet)
5 Safety valve
6 Supply valve
7 Air dryer
8 Brake booster
9 Control valve
10 Brake fluid tank
11 Rear wheel cylinder
12 3-way magnetic valve
13 Exhaust brake unit
14 Air compressor
15 Air cleaner
16 Air pressure governor
17 Low air pressure switch
18 Air pressure gauge
19 Air horn
20 Dual brake valve
21 Stop lamp switch

A : Fluid line
B : Air line
C : Hose
L : Blue tape
R : Red tape
W : White tape
Y : Yellow tape
***a**: With exhaust brake
***b**: Without exhaust brake

< Full-Air Brake >

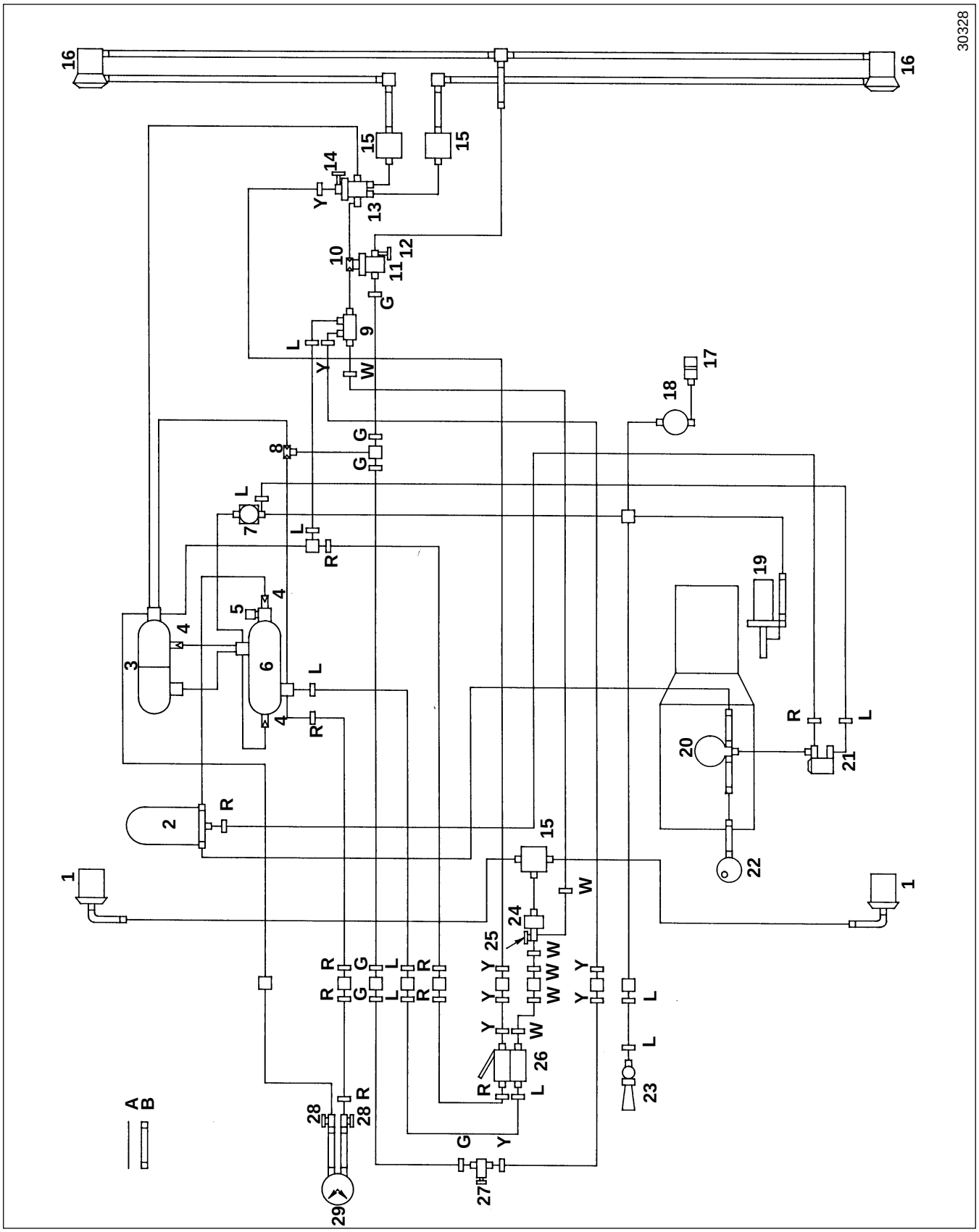

1 Front brake chamber
2 Air dryer
3 Air tank (Rear, Parking brake)
4 Check valve
5 Safety valve
6 Air tank (Front, Wet)
7 Supply valve
8 Double check valve
9 Spring brake valve
10 Double check valve
11 Relay valve
12 Paring brake switch
13 Relay valve
14 Stop lamp switch
15 Control valve
16 Rear brake chamber
17 Exhaust brake unit
18 3-way magnetic valve
19 Clutch booster <M8S2×5>
20 Air compressor
21 Air pressure governor
22 Air cleaner
23 Air horn
24 Quick release valve
25 Stop lamp switch
26 Dual brake valve
27 Parking brake control vlave
28 Low air pressure switch
29 Air pressure gauge

A : Air pipe
B : Hose
G : Green tape
L : Blue tape
R : Red tape
Y : Yellow tape
W : White tape

● Anti-lock brake system control

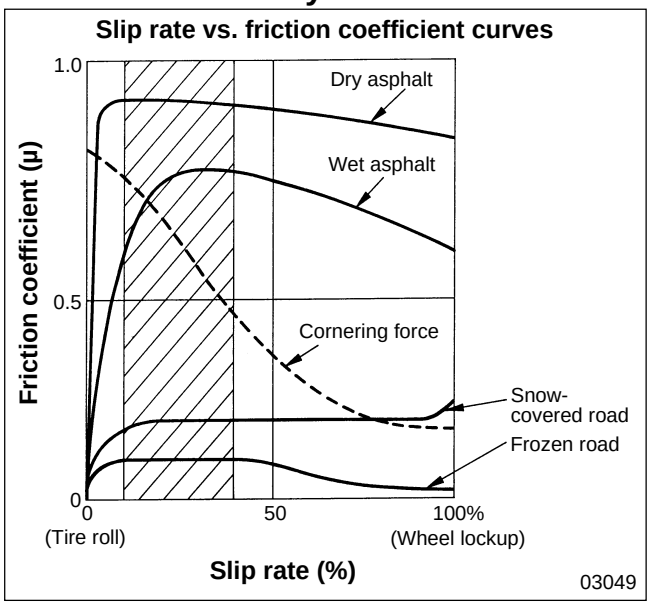

To provide optimum stopping power, Anti-lock brake system controls the braking force based on the slip rate determined by the relationship between the wheel speed and vehicle speed. When the brake is applied, the resulting force creates resistance which slows down the wheel rotation, thus reducing the speed of the vehicle. However, inertia acts on the vehicle and maintains the vehicle's forward movement despite the stopping force applied by the tires. When there is a difference between the wheel speed and vehicle speed, slipping occurs. The degree of slippage is expressed by a slip rate.

$$\text{Slip rate (\%)} = \frac{\text{Vehicle speed} - \text{Wheel speed}}{\text{Vehicle speed}} \times 100$$

When the slip rate is 0%, there is no slippage between the tires and pavement. The slip rate of 100% refers to a wheel lockup condition.

The graph shows the relationship between the slip rate and the friction coefficient of tire and pavement. In a vehicle equipped with Anti-lock brake system, the Electronic control unit and control valves adjust the braking force and maintains it within the shaded area on the graph where the friction coefficient is high, thus preventing tire slippage and maintaining stability during stopping.

● Anti-lock brake system operation

Characteristic curve

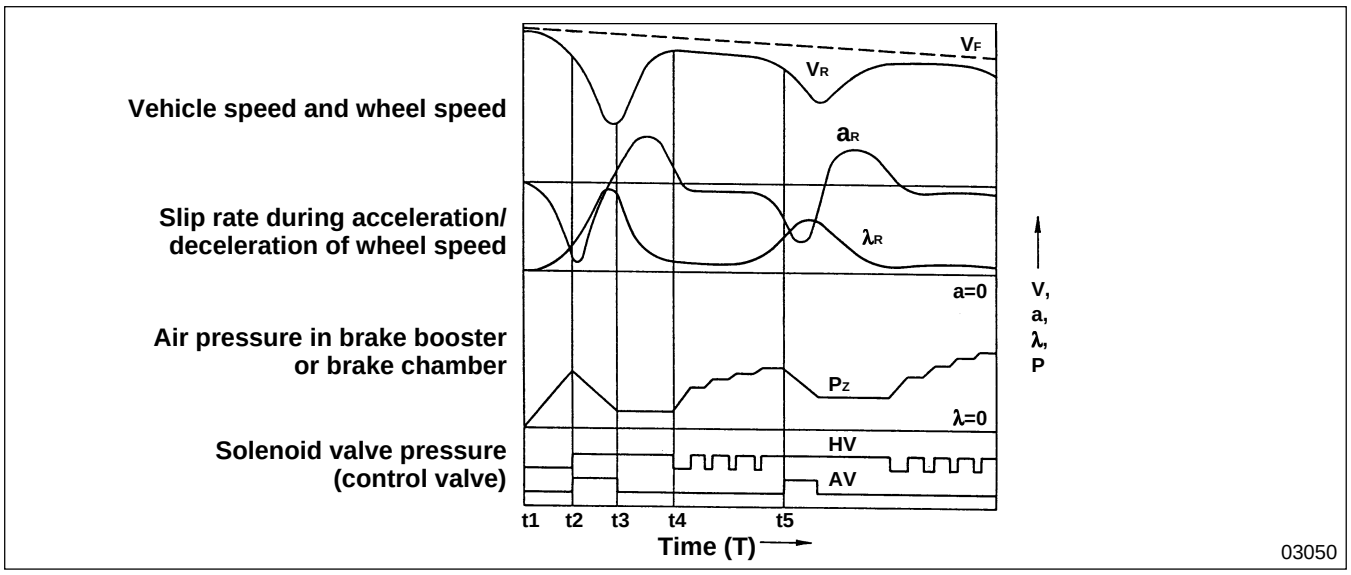

The above Anti-lock brake system characteristic graph shows the time-based changes in vehicle speed, wheel speed of individual tires, and brake pressure levels during braking. The Electronic control unit calculates the wheel speed and estimates the vehicle speed based on signals sent from wheel speed sensors, and continuously monitors the slip rate and deceleration speed. When the Electronic control unit detects a tendency toward wheel lockup, it sends a signal to the solenoid valves of the control valves. The following shows the control system.

- **V_F** : Vehicle speed
- **V_R** : Wheel speed
- **a_R** : Acceleration/deceleration of wheel speed
- **λ_R** : Slip rate
- **P_Z** : Air pressure inside brake booster <air-over hydraulic brake> or brake chamber <full-air brake>
- **HV** : Solenoid valve (Pressure holding valve of control valve)
- **AV** : Solenoid valve (Outlet valve of control valve)

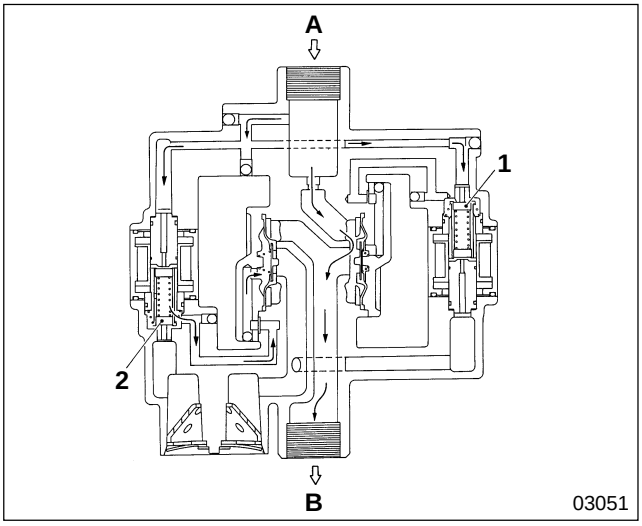

During normal braking

When there is no tendency toward wheel lockup under normal braking, solenoid valves **1**, **2** do not activate, thus air pressure is fed from the dual brake valve to the air master.

A: From dual brake valve < air-over hydraulic brake > From quick release valve (front) and relay valve (rear) < full-air brake >

B: To brake booster < air-over hydraulic brake > To brake chamber < full-air brake >

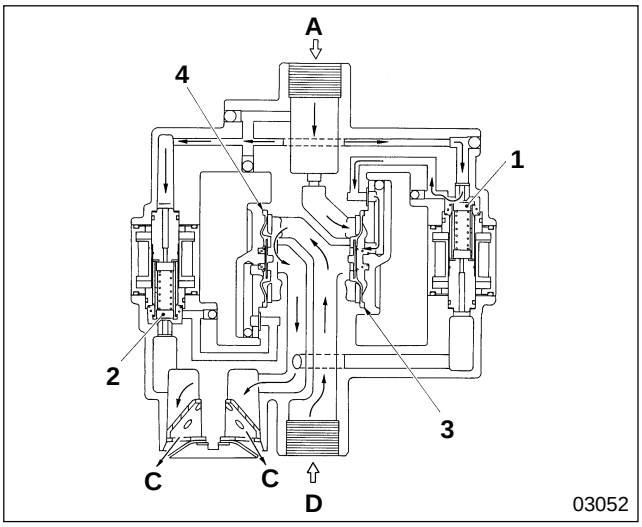

During depressurizing

- When the brake is applied at t_1 on the previous Anti-lock brake system characteristic graph, the air pressure inside the brake boosters or brake chambers increases, and the vehicle speed and wheel speed start decreasing. When the wheels show a tendency toward wheel lockup at t_2 on the graph, the Electronic control unit outputs a control signal to turn ON solenoid valve (holding valve) **1** and solenoid valve (outlet valve) **2**.
- Pressure holding valve **3** closes, and outlet valve **4** opens, discharging the air from the brake booster or brake chamber to minimize the wheel lockup tendency. ($t_2 \rightarrow t_3$)

A: From dual brake valve < air-over hydraulic brake > From quick release valve (front) and relay valve (rear) < full-air brake >

C: Pressure discharge

D: From brake booster < air-over hydraulic brake > From brake chamber < full-air brake >

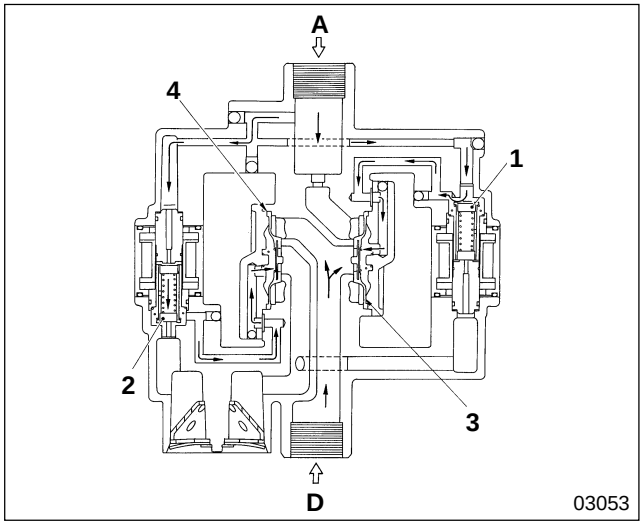

During pressure holding

- At t_3 on the previous Anti-lock brake system characteristic graph, solenoid valve (outlet valve) **2** turns OFF and closes outlet valve **4**. Therefore, the air pressure inside the brake booster or brake chamber is retained. This makes the slip rate closer to ($\lambda = 0$) and the wheel speed increases.
- At t_4, solenoid valve (holding valve) **1** repeats ON and OFF operations until t_5. Momentary opening and closing of pressure holding valve **3** increase the pressure in steps. This operation reduces the wheel speed. The above control cycle ($t_2 \rightarrow t_5$) is repeated until the vehicle comes to a complete stop.

  A: From dual brake valve < air-over hydraulic brake >
  From quick release valve (front) and relay valve (rear) < full-air brake >

  D: From brake booster < air-over hydraulic brake >
  From brake chamber < full-air brake >

Anti-lock brake system and exhaust brake

On slippery pavement, the use of the exhaust brake can result in a condition similar to wheel lockup. Therefore, if the exhaust brake is activated while the Anti-lock brake system control is in operation, it hinders the Anti-lock brake system from providing proper brake control. To prevent this, when the Anti-lock brake system is in operation, the exhaust brake is deactivated even when the exhaust brake switch is turned ON.
When the Anti-lock brake system deactivates, the exhaust brake provides its normal function when the exhaust brake switch is ON.

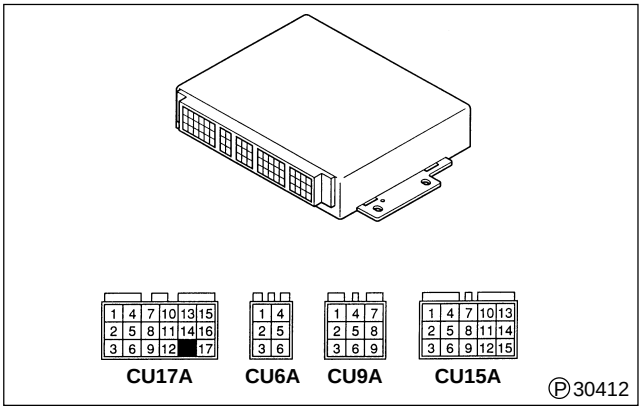

● Anti-lock brake system components

Electronic control unit

This component calculates the wheel speed and estimates the vehicle speed based on a signal sent from the wheel speed sensors. Based on the calculation results, it determines a tendency for wheel lockup, and sends a brake pressure control signal to the solenoid valves of the control valves to regulate air pressure accordingly.
The Electronic control unit is equipped with a self-diagnosis function. If an abnormality occurs, the Electronic control unit turns on the warning lamp to indicates the system malfunction and deactivates the Anti-lock brake system control to set the brake system in the normal condition (without Anti-lock brake system control).

Connector type	Terminal No.	Connection destination
CU17A	1	—
	2	—
	3	—
	4	Memory clear switch
	5	Diagnosis switch
	6	—
	7	Fuse (M12 Electronic control unit power supply)
	8	Fuse (B20 control valve power supply)
	9	Fuse (B20 control valve power supply)
	10	Grounding
	11	Grounding
	12	Grounding
	13	MUT-II connector
	14	MUT-II connector
	15	—
	16	Exhaust brake cut relay
	17	Anti-lock brake system warning lamp
CU6A	1	Control valve (front outlet)
	2	—
	3	Control valve (front grounding)
	4	Wheel speed sensor (front-axle left-wheel input)
	5	Wheel speed sensor (front-axle left-wheel grounding)
	6	Stop lamp relay

Connector type	Terminal No.	Connection destination
CU9A	1	—
	2	—
	3	—
	4	Wheel speed sensor (front-axle right-wheel input)
	5	Wheel speed sensor (front-axle right-wheel grounding)
	6	—
	7	—
	8	Control valve (front holding)
	9	—
CU15A	1	Control valve (rear LH outlet)
	2	Control valve (rear LH holding)
	3	Control valve (rear LH grounding)
	4	—
	5	Wheel speed sensor (rear-axle left-wheel input)
	6	Wheel speed sensor (rear-axle left-wheel grounding)
	7	—
	8	Wheel speed sensor (rear-axle right-wheel input)
	9	Wheel speed sensor (rear-axle right-wheel grounding)
	10	Control valve (rear RH outlet)
	11	Control valve (rear RH holding)
	12	Control valve (rear RH grounding)
	13	—
	14	—
	15	—

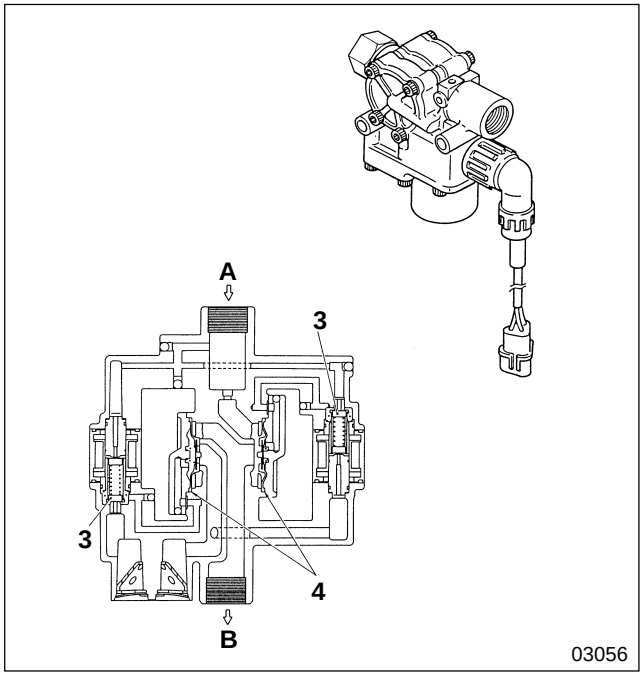

Control valve

The valve is comprised of solenoid valves **3** that receive a signal from the Electronic control unit and controls air pressure supplied from the dual brake valve, and diaphragm valves **4**.

The two solenoid valves operate in different combinations to increase, maintain and decrease air pressure.

A: Inlet port 1 (From dual brake valve < air-over hydraulic brake > or quick release valve (front), and relay valve (rear) < full-air brake >)

B: Outlet port 2 (To brake booster < air-over hydraulic brake > or brake chamber < full-air brake >)

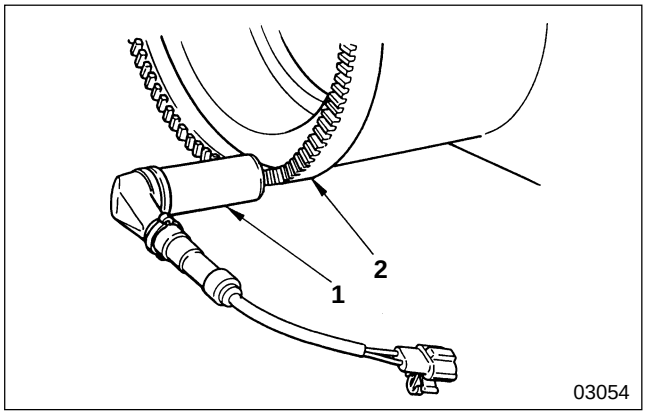

Wheel speed sensor

Wheel speed sensor **1** detects the rotating speed of the wheel and sends a signal to the Electronic control unit. The sensor unit houses an electromagnetic pickup with a permanent magnet core placed inside the coil.

Rotor **2** is connected to the wheel hub. The rotor has a ring gear, and the evenly spaced tooth ridges are positioned perpendicular to the sensor. When the wheel rotates and the rotor teeth cross the magnetic flux of the sensor, the electric potential difference generated by the coil results in an alternate-current voltage that is directly proportional to the rotating speed. The resulting signal is then sent to the Electronic control unit.

M E M O

ON-VEHICLE INSPECTION AND ADJUSTMENT

Periodic Inspection Procedures

(1) Periodic inspection of Anti-lock brake system

- Inspect the vehicle's Anti-lock brake system following the procedure below.
- If an abnormality is found in this inspection, further inspect the Anti-lock brake system using MUT-II (multi-use tester) or the diagnosis switch by referring to TROUBLESHOOTING section.
  P35C-25

- Inspection procedure

  ① With the vehicle stationary, press the brake pedal and inspect the control valves for air leaks.
  If air leaks from the control valve unit, replace it. If air leaks from the air pipe or connector, tighten the joint.
  Then, release the brake pedal and inspect the air discharge condition of the control valve. If there is no air discharging operation, replace the control valve.
  Conduct the above inspection for each control valve.

  ② Inspection using brake tester
  Check the braking force at each wheel with a brake tester by following the inspection procedure for ordinary vehicles.
  If an abnormality is found, inspect the wheel brake units, service brake system and control valves.

  ③ Drive the vehicle and check the operation of the Anti-lock brake system.
  - Conduct a test drive at an open area to ensure safety.
  - Conduct a test drive without cargo.

  Attach white tape **A** on the sides of tires, so that it is easy to observe the rotation of the front and rear wheels.
  - Turn the starter switch from the OFF position to the ON position, and make sure that the ABS warning lamp lights.
    Then, check that the ABS warning lamp turns off approximately two seconds after the starter switch is turned on.
  - Drive the vehicle at a speed of 20 to 30 km/h {12 to 19 mph}, and apply a sudden brake. Make sure that wheel lockup does not occur in any of the tires.

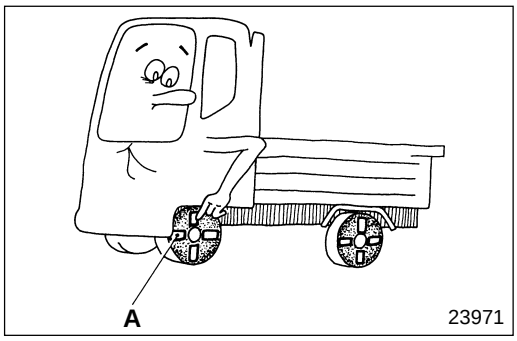

(2) Operating conditions resulting from Anti-lock brake system malfunction

Lamp condition	Possible causes		Fail-safe functions (operation in the case of malfunction)
ABS warning lamp ABS Warning lamp does not turn off two seconds after starter switch is turned on. ① ABS warning lamp lights when starter switch is turned to ON position, does not turn off two seconds after starter switch is turned on. ② ABS warning lamp lights during driving. ③ ABS warning lamp lights after 30 to 60 minutes regardless of whether vehicle is driven or stationary.	Power supply system (Lamp condition: ①, ②)	Faulty relay (for power supply) inside Electronic control unit	Anti-lock brake system control becomes inactive for all systems, and all wheels operate under normal brake system.
		Blown fuse	
		Broken wire in harness, short-circuit or disconnected connector, faulty contact or faulty grounding	
		Low battery voltage	
	Wheel speed sensor system	Excessive clearance between wheel speed sensor and rotor (Lamp condition: ②)	• When malfunction occurs in one front wheel Properly operating front wheel speed sensor of the other front wheel is used for Anti-lock brake system control of the wheel with malfunctioning sensor. • When malfunction occurs in both front wheels Anti-lock brake system control is deactivated for front wheels. • When malfunction occurs in one rear wheel Anti-lock brake system control is provided only to the rear wheel with properly operating sensor.
		Defective wheel speed sensor (Lamp condition: ①, ②)	
		Broken wire, short-circuit or disconnected connector or faulty contact in wheel speed sensor harness (Lamp condition: ①, ②)	
	Control valve system (Lamp condition: ①, ②)	Short-circuit in coil or power-supply side of harness	Anti-lock brake system control becomes inactive for all systems, and all wheels operate under normal brake system.
		Defective relay (for power supply) inside Electronic control unit	
	Control valve	Broken wire or short-circuit in coil or harness	Only the properly operating control valves are used for Anti-lock brake system control.
	Electronic control unit (Lamp condition: ①, ③)	Electronic control unit internal malfunction or disconnected connector	Anti-lock brake system control becomes inactive for all systems, and all wheels operate under normal brake system.
	ABS warning lamp system (Lamp condition: ①, ②)	Short-circuit in harness	Anti-lock brake system control operates normally.

Adjustment of Wheel Speed Sensor Clearance

Tightening torque

Unit : N·m {lbf.ft, kgf·m}

Location	Parts to be tightened	Tightening torque	Remarks
7	Bolt (Anchor bracket mounting)	135 {100, 13.8}	—

Special tools

Unit : mm {in.}

Location	Tool name and shape	Part No.	Application
1	Adjuster 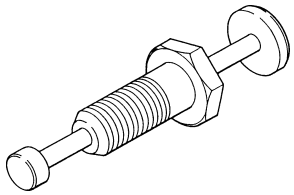 14912	MH062080	Adjustment of wheel speed sensor clearance

< Air-over hydraulic brake >

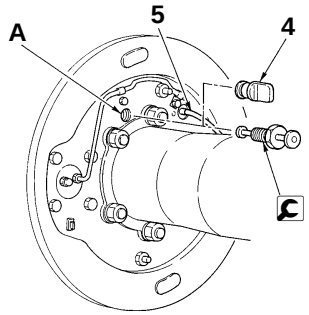

14913

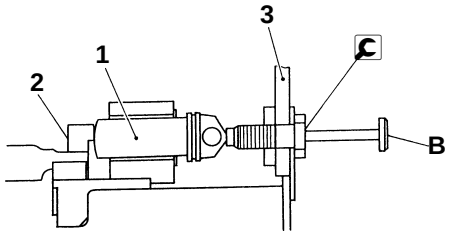

23974

Tighten adjuster to extend wheel speed sensor **1**, and adjust clearance between the sensor and rotor **2**.

- Remove plug **4** located on the back side of back plate **3**.
- Mount adjuster in adjustment hole **A**, and tighten the adjuster.
- Wheel speed sensor **1** contacts the rotor before adjuster is completely tightened. Therefore, do not press shaft **B**, and tighten the adjuster until resistance is felt.
- Be sure to reinstall plug **4** after adjustment.

5: Wheel speed sensor harness

< Full-air brake >

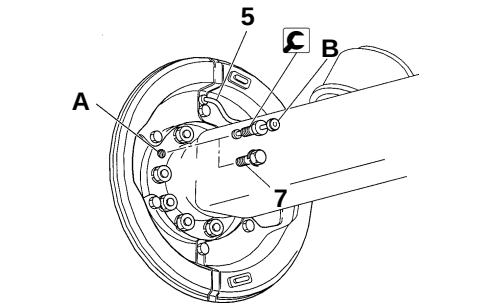

Ⓟ30555

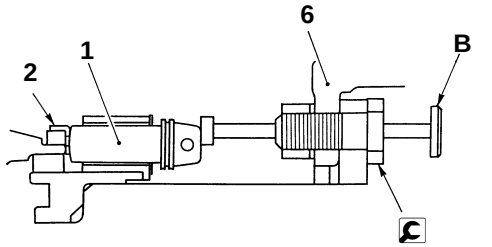

23976

Tighten adjuster to extend wheel speed sensor **1**, and adjust clearance between the sensor and rotor **2**.

- Remove bolt **7** located on the back side of anchor bracket **6**.
- Mount adjuster in adjustment hole **A**, and tighten the adjuster.
- Wheel speed sensor **1** contacts the rotor before adjuster is completely tightened. Therefore, do not press shaft **B**, and tighten the adjuster until resistance is felt.
- After adjustment, tighten bolt **7** to the specified torque.

  5: Wheel speed sensor harness

Inspection of Wheel Speed Sensor Signal Waveform Using Oscilloscope

Inspect the rotor for dents using an oscilloscope, since the tester cannot be used for dent detection.

NOTE

Use an oscilloscope with a waveform recording function.

- Lift the wheel to be tested off the ground, and disconnect the connector at the wheel speed sensor.
- Connect the terminal of the oscilloscope to the terminal of the disconnected connector. Rotate the wheel at a constant speed. Check the waveform shown on the oscilloscope to check for dents on the rotor.

Normal waveform (no dent on rotor)

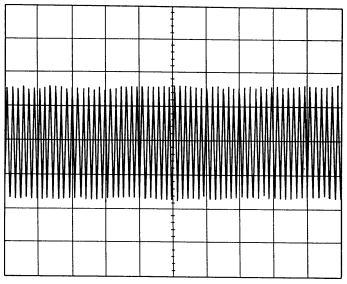

03122

Abnormal waveform (with dents on rotor)

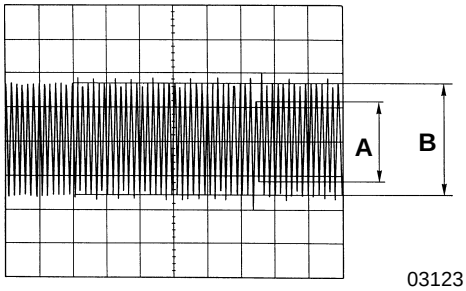

03123

- Rotor dents are often made by the rotor press-fit on the hub end contacting the axle during installation of the hub and brake drum assembly on the axle. When installing the hub & brake drum assembly, pay close attention to prevent the rotor from contacting other parts.

A: Vmin (Minimum peak)

B: Vmean (Average of maximum peaks)

$$\frac{\text{Vmean} - \text{Vmin}}{\text{Vmean}} = 0.2\text{(20\% or lower)}$$

If more than 20%, replace the rotor.

Troubleshooting Procedures

Inspection the following components when the ABS warning lamp lights.
When the above warning lamp lights, conduct an inspection according to the following flowchart.

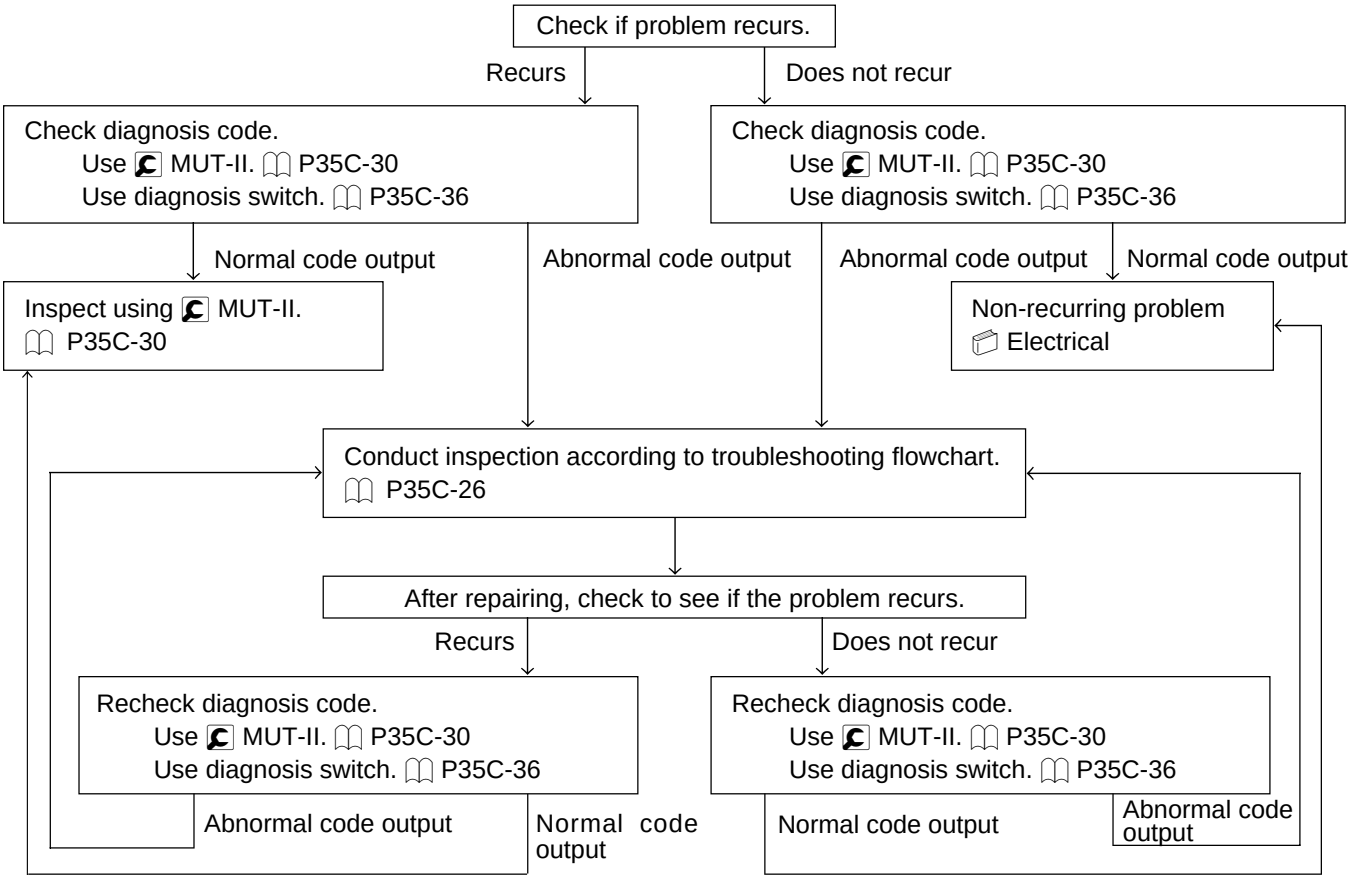

TROUBLESHOOTING

Troubleshooting Flowchart

- The Electronic control unit is equipped with a diagnosis function that monitors system operations. If the diagnosis function detects an abnormality, it turns on the ABS warning lamp on the meter cluster and stores the problem location data.
- The stored problem location data can be recalled by using MUT-II or the diagnosis switch.
- Follow the instruction below to recall diagnosis codes.

(1) MUT-II
MUT-II displays diagnosis codes that indicate problem locations. The MUT-II can also be used to check service data and actuator operations. P35C-30

(2) Diagnosis switch
The diagnosis switch allows the indication of diagnosis codes and problem locations. When the diagnosis switch is operated, the ABS warning lamp on the meter cluster flashes. The number of lamp flashing operations indicates the code of problem location stored in the Electronic control unit. P35C-36

(3) Deletion of diagnosis code data
The method of erasing diagnosis code data from the Electronic control unit memory differs from model to model. Follow the procedure below.
- MUT-II P35C-31
- Memory clear switch P35C-37

- Check the following items before conducting the troubleshooting described on the following page.

(1) Check to make sure that air pressure in the air tank is 685 kPa {100 lbf/in^2, 7 kgf/cm^2} or higher.
(2) Check to make sure that the battery voltage is 12 V or higher.
(3) Check harness and connectors for secure connection. Before disconnecting connectors, turn starter switch to the LOCK position and wait for 20 seconds or longer.

- To inspect the ABS warning lamp, follow the procedure below.

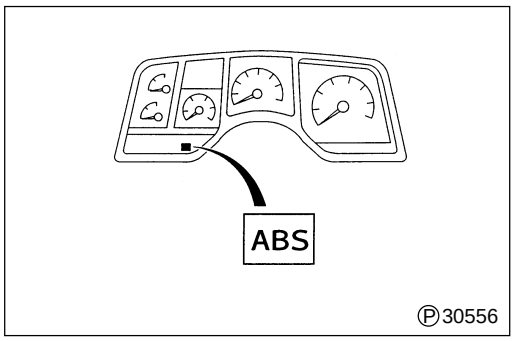

- Check to see that the ABS warning lamp turns on and off in the following manner.
- Turn the starter switch to the ON position and check to see that the ABS warning lamp lights.
- The ABS warning lamp turns off approximately two seconds after the starter switch is turned on.
- If the warning lamp does not turn on and off in the above manner, check the diagnosis code. P35C-30, 36

<Troubleshooting Flowchart>

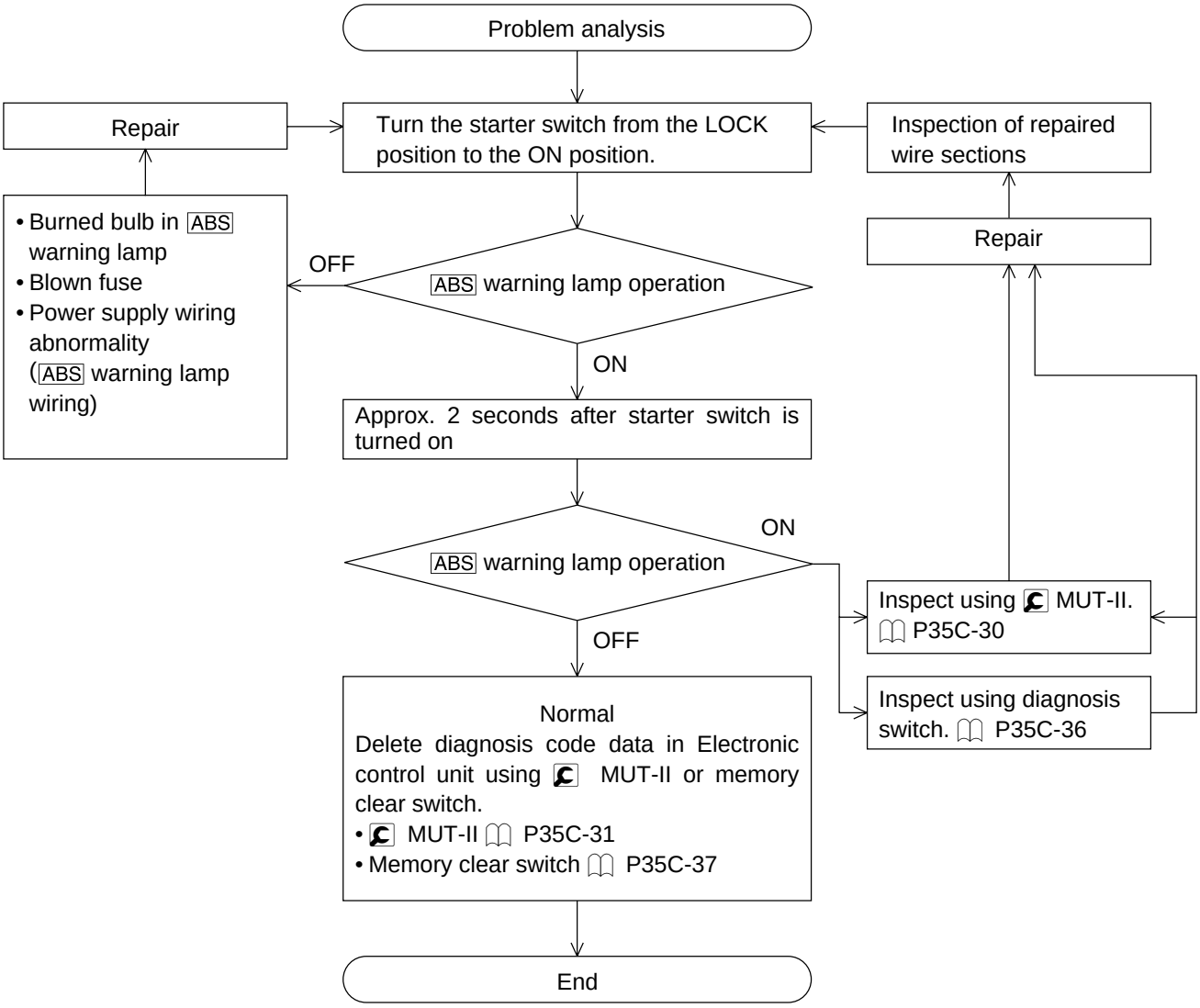

Tester

To inspect Anti-lock brake system, use MUT-II.

(1) The MUT-II displays inspection items on its LCD for easy data reading. It also enables detection of connection errors after rear wheel sensor connectors are repaired.

(2) The following items can be checked by the tester.

Inspection item
Diagnosis code
Service data
Actuator operation
Electronic control unit power supply voltage
Control valve power supply voltage
Stop lamp switch
Exhaust brake cut relay
ABS warning lamp
Control valve function
Wheel speed sensor function
Diagnosis switch

For details of tester inspection items, see the following pages. P35C-30

Special tools

Unit : mm {in.}

Tool name and shape	Part No.	Application
MUT-II PLUS 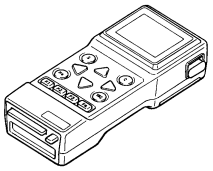 19492	MB991496-A	Inspection of Anti-lock brake system
MUT-II harness (for data communication) 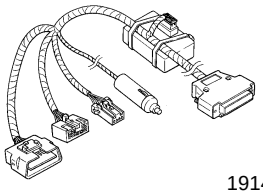 19141	MK327601	
ROM pack (MRT-E4) 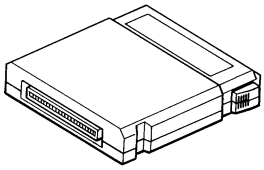 19493	MK327927	
MUT-II harness (for circuit tester) 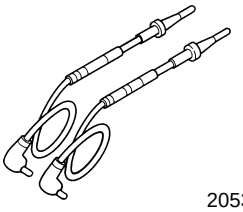 20536	MB991499	
Memory card (for MUT-II) 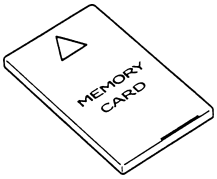 20538	MB991500	

Procedure of Inspection Using MUT-II

Use the MUT-II to conduct necessary service operations listed below.

Test the operations of actuators related to the problem locations indicated by diagnosis codes, and inspect data list.

- Recall of diagnosis codes P35C-31
  Use the self-diagnosis function to recall the diagnosis codes stored in the Electronic control unit.
  Diagnosis codes of both current and previous malfunctions are indicated.
  The diagnosis code of the current malfunction is indicated when the starter switch remains in the ON position after abnormality generation.
  When the starter switch is turned from the ON position to the ACC or LOCK position after abnormality generation, diagnosis codes of previous malfunctions stored in the Electronic control unit are indicated. Diagnosis codes of non-recurring problem malfunctions that generated during vehicle operation but did not reproduce after the starter switch is turned from the ON position to the ACC or LOCK position are also stored as previous malfunctions.
- Deletion of diagnosis codes P35C-31
  Use the diagnosis code delete function in the special test mode to erase diagnosis codes stored in the Electronic control unit.
- Forced drive of devices P35C-35
  Use the actuator test function to forcibly turn devices on and off to check faulty device operations.
- Service data check and switch on/off check P35C-34
  Use the data list function to check the data of voltage and vehicle speed. When each switch is turned on and off in the data list mode using the tester, the MUT-II displays the ON and OFF switch status, thus allowing inspection of switches for proper function after repair or replacement is performed.
- Use the above MUT-II functions to locate causes of malfunctions.
- The following shows how to connect and use the MUT-II. For other MUT-II functions and further details, refer to the MUT-II operation manual.

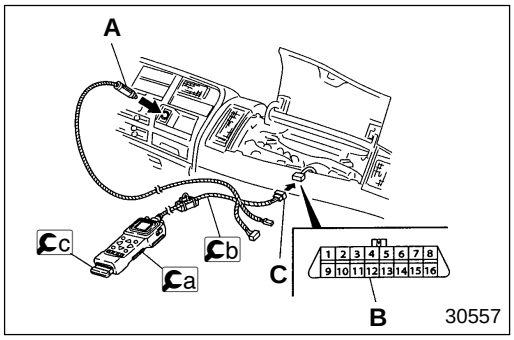

Connection of MUT-II

- Turn the starter switch to the LOCK position.
- Connect Ⓒa MUT-II and Ⓒb MUT-II harness, and insert Ⓒc ROM pack.
- Insert connector **A** into the cigarette lighter socket.
  Connect connector **C** (16-pin) to MUT-II connector **B** (16-pin) located inside the relay and fuse box.

NOTE

Regarding the operating procedure, refer to the MUT-II operation manual.

Diagnosis code of current malfunction

- Turn the starter switch to the ON position.
- Check the diagnosis code using the self-diagnosis function of MUT-II to obtain data of the problem location. P35C-32

Diagnosis codes of previous malfunctions

- Turn the starter switch to the ON position.
- With the diagnosis switch disconnected, disengage the memory clear switch to set the Electronic control unit to the previous malfunction indication mode. P35C-35
- Check the diagnosis codes of previous malfunctions using the self-diagnosis function of MUT-II, and obtain data of problem locations. P35C-37
- After checking diagnosis codes, connect the diagnosis switch and memory clear switch in that order.

Deletion of diagnosis codes

- Turn the starter switch to the ON position.
- Delete all diagnosis codes stored in the Electronic control unit by using MUT-II.

CAUTION

- **Before erasing diagnosis codes, test-drive the vehicle after the malfunction is repaired (when system is in normal condition), and make sure the ABS warning lamp is not lit.**
- **If diagnosis codes are deleted when some of the connectors are not connected or the system is still malfunctioning, the Electronic control unit becomes damaged.**

Diagnosis Code Chart

MUT-II indication		Possible cause
Diagnosis code	Problem location	
21	FL-SNSR GAP	Front-axle left-wheel speed sensor: Improper clearance
22	FL-ROTA	Excessive wobbling of front-axle left rotor
23	FL-ROTA	Damaged front-axle left rotor
24	FL-SNSR SHORT	Front-axle left-wheel speed sensor: Prolonged period of unstable output
25	FL-SNSR OPEN	Front-axle left-wheel speed sensor: Abnormally fast speed drop
26	FL-SNSR WIRE	Front-axle left-wheel speed sensor: Short-circuit to positive (+) wire, short-circuit to grounding wire, broken wire
27	FL-SNSR ECU	Front-axle left-wheel speed sensor: Electronic control unit internal damage
31	FR-SNSR GAP	Front-axle left-wheel speed sensor: Improper clearance
32	FR-ROTA	Excessive wobbling of front-axle right rotor
33	FR-ROTA	Damaged front-axle right rotor
34	FR-SNSR SHORT	Front-axle right-wheel speed sensor: Prolonged period of unstable output
35	FR-SNSR OPEN	Front-axle right-wheel speed sensor: Abnormally fast speed drop
36	FR-SNSR WIRE	Front-axle right-wheel speed sensor: Short-circuit to positive (+) wire, short-circuit to grounding wire, broken wire
37	FR-SNSR ECU	Front-axle right-wheel speed sensor: Electronic control unit internal damage
41	RL-SNSR GAP	Rear-axle right-wheel speed sensor: Improper clearance
42	RL-ROTA	Excessive wobbling of rear-axle left rotor
43	RL-ROTA	Damaged rear-axle left rotor
44	RL-SNSR SHORT	Rear-axle left-wheel speed sensor: Prolonged period of unstable output
45	RL-SNSR OPEN	Rear-axle left-wheel speed sensor: Abnormally fast speed drop
46	RL-SNSR WIRE	Rear-axle left-wheel speed sensor: Short-circuit to positive (+) wire, short-circuit to grounding wire, broken wire
47	RL-SNSR ECU	Rear-axle left-wheel speed sensor: Electronic control unit internal damage
51	RR-SNSR GAP	Rear-axle right-wheel speed sensor: Improper clearance
52	RR-ROTA	Excessive wobbling of rear-axle right rotor
53	RR-ROTA	Damaged rear-axle right rotor
54	RR-SNSR SHORT	Rear-axle right-wheel speed sensor: Prolonged period of unstable output
55	RR-SNSR OPEN	Rear-axle right-wheel speed sensor: Abnormally fast speed drop
56	RR-SNSR WIRE	Rear-axle right-wheel speed sensor: Short-circuit to positive (+) wire, short-circuit to grounding wire, broken wire
57	RR-SNSR ECU	Rear-axle right-wheel speed sensor: Electronic control unit internal damage
61	F-DV 2BATT	Front-axle control valve: Short-circuit of outlet valve to positive (+) wire
62	F-DV 2GND	Front-axle control valve: Short-circuit of outlet valve to grounding wire
63	F-DV OPEN	Front-axle control valve: Broken wire in outlet valve
64	F-SOL OPEN	Front-axle control valve: Broken grounding wire
68	VALVE CONFIG	Front-axle control valve: Configuration error (*1)
75	F-HV 2BATT	Front-axle control valve: Short-circuit of holding valve to positive (+) wire
76	F-HV 2GND	Front-axle control valve: Short-circuit of holding valve to grounding wire
77	F-HV OPEN	Front-axle control valve: Broken wire in holding valve
78	VALVE CONFIG	Front-axle control valve: Configuration error (*1)
81	RL-DV 2BATT	Rear-axle left-wheel control valve: Short-circuit of outlet valve to positive (+) wire
82	RL-DV 2GND	Rear-axle left-wheel control valve: Short-circuit of outlet valve to grounding wire
83	RL-DV OPEN	Rear-axle left-wheel control valve: Broken wire in outlet valve
84	RL-SOL OPEN	Rear-axle left-wheel control valve: Broken grounding wire
85	RL-HV 2BATT	Rear-axle left-wheel control valve: Short-circuit of holding valve to positive (+) wire
86	RL-HV 2GND	Rear-axle left-wheel control valve: Short-circuit of holding valve to grounding wire
87	RL-HV OPEN	Rear-axle left-wheel control valve: Broken wire in holding valve
89	SOL 2BATT	Control valve grounding 2: Short-circuit to positive (+) wire
8A	SOL 2GND	Control valve grounding 2: Short-circuit to negative (-) wire

MUT-II indication		Possible cause
Diagnosis code	Problem location	
91	RR-DV 2BATT	Rear-axle right-wheel control valve: Short-circuit of outlet valve to positive (+) wire
92	RR-DV 2GND	Rear-axle right-wheel control valve: Short-circuit of outlet valve to grounding wire
93	RR-DV OPEN	Rear-axle right-wheel control valve: Broken wire in outlet valve
94	RR-SOL OPEN	Rear-axle right-wheel control valve: Broken grounding wire
95	RR-HV 2BATT	Rear-axle right-wheel control valve: Short-circuit of holding valve to positive (+) wire
96	RR-HV 2GND	Rear-axle right-wheel control valve: Short-circuit of holding valve to grounding wire
97	RR-HV OPEN	Rear-axle right-wheel control valve: Broken wire in holding valve
99	SOL 2BATT	Control valve grounding 1: Short-circuit to positive (+) wire
9A	SOL 2GND	Control valve grounding 1: Short-circuit to negative (-) wire
D1	ECU ERR	Electronic control unit internal damage
D2	EEPROM ERR	Electronic control unit internal damage
D3	CAN RAM ERR	Electronic control unit internal damage
D4	ECU RLY ERR	Electronic control unit internal damage
D5	ECU RLY ERR	Electronic control unit internal damage
E1	SOL OVER VOLT	Control valve power supply voltage 1: Overvoltage
E2	SOL LOW VOLT	Control valve power supply voltage 1: Low voltage
E3	SOL OPEN	Control valve power supply voltage 1: Broken wire
E4	SOL OPEN	Control valve grounding 1: Broken wire
E5	SOL OVER VOLT	Control valve power supply voltage 2: Overvoltage
E6	SOL LOW VOLT	Control valve power supply voltage 2: Low voltage
E7	SOL OPEN	Control valve power supply voltage 2: Broken wire
E8	SOL OPEN	Control valve grounding 2: Broken wire
E9	ECU OVER VOLT	Electronic control unit power supply voltage: Overvoltage
EA	ECU LOW VOLT	Electronic control unit power supply voltage: Low voltage
EB	SOL VOLT ERR	Excessive voltage difference between control valve power supply voltages 1 and 2
F1	EXB RLY OPEN	Exhaust brake cut relay: Short-circuit to positive (+) wire, broken wire
F2	EXB RLY 2GND	Exhaust brake cut relay: Short-circuit to grounding wire
F5	ILLEGAL WHEEL	Wheel arrangement error: Excessive wheel speed difference between front and rear wheels
F6	ILLEGAL WHEEL	Wheel arrangement error: Wheel speed difference between front and rear wheels exceeding allowed range
FC	SNSR ERR	Wheel speed sensor abnormality generated previously. (*2)

*1: Configuration error (mismatch between vehicle system and Electronic control unit system)

*2: When a wheel speed sensor abnormality is generated in the previous driving operation, this diagnosis code is output. When this diagnosis code is generated, the ABS warning lamp does not turn off two seconds after the starter switch is turned on. However, if the wheel speed sensor is restored to its proper condition, the ABS warning lamp turns off and this diagnosis code is reset when the vehicle is operated at a speed of 10 km/h {6.2 mph} or faster.

Service Data Chart

MUT-II indication			Data description	Inspection condition	Judgement criterion
Item No.	Item name	Service data			
21	SPEED FL	■■■.■MPH	Front-axle left-wheel speed	Drive at constant speed.	Should synchronize with speedometer
22	SPEED FR	■■■.■MPH	Front-axle right-wheel speed		
23	SPEED RL	■■■.■MPH	Rear-axle left-wheel speed		
24	SPEED RR	■■■.■MPH	Rear-axle right-wheel speed		
25	GAP SPEED FL	■■■.■MPH	Front-axle left-wheel speed sensor clearance	Drive prior to inspection.	Less than 8.7 MPH
26	GAP SPEED FR	■■■.■MPH	Front-axle right-wheel speed sensor clearance		
27	GAP SPEED RL	■■■.■MPH	Rear-axle left-wheel speed sensor clearance		
28	GAP SPEED RR	■■■.■MPH	Rear-axle right-wheel speed sensor clearance		
35	VALVE VOLTAGE	■■.■■V	Front-axle control valve power supply voltage	Starter switch OFF	Same as battery voltage
36	VALVE VOLTAGE	■■.■■V	Rear-axle control valve power supply voltage		
45	BATT VOLTAGE	■■.■■V	Electronic control unit power supply voltage	Starter switch ON	Same as battery voltage
51	DIAGNOSIS SW	ON/OFF	Diagnosis switch connector	Diagnosis switch connector in connection	ON
52	RR-DV	ON/OFF	Rear-axle right-wheel control valve	In all conditions	ON/OFF
54	RR-HV	ON/OFF		In all conditions	ON/OFF
55	RL-DV	ON/OFF	Rear-axle left-wheel control valve	In all conditions	ON/OFF
56	RL-HV	ON/OFF		In all conditions	ON/OFF
58	F-HV	ON/OFF	Front-axle control valve	In all conditions	ON/OFF
59	F-DV	ON/OFF		In all conditions	ON/OFF
61	STOP LAMP SW	ON/OFF	Stop lamp switch	Brake pedal depressed	ON
62	EXB CUT RLY	ON/OFF	Exhaust brake cut relay	Exhaust brake in operation	ON

Actuator Drive Chart

MUT-II indication		Operation description
Item No.	Item name	
06	F-HV ON	Holding valve of front-axle control valve: ON
07	RL-HV ON	Holding valve of rear-axle left-wheel control valve: ON
08	RR-HV ON	Holding valve of rear-axle right-wheel control valve: ON
09	F-DV ON	Outlet valve of front-axle control valve: ON
11	RL-DV ON	Outlet valve of rear-axle left-wheel control valve: ON
12	RR-DV ON	Outlet valve of rear-axle right-wheel control valve: ON
15	EXB RLY ON	Exhaust brake cut relay: ON
16	EXB RLY OFF	Exhaust brake cut relay: OFF
19	ABS LAMP ON	ABS warning lamp: ON
20	ABS LANP OFF	ABS warning lamp: OFF

Item Nos. 15 and 16 are for vehicles equipped with an exhaust brake system.

Procedure of Inspection Using Diagnosis Switch

- When the ABS warning lamp lights, analyze the problem by following the procedure below.
- Diagnosis codes are used for the analysis of malfunctions. Diagnosis codes of both current and previous malfunctions are indicated.
- The diagnosis code of the current malfunction is indicated when the starter switch remains in the ON position after abnormality generation.
- When the starter switch is turned from the ON position to the ACC or LOCK position after abnormality generation, diagnosis codes of previous malfunctions stored in the Electronic control unit are indicated. Diagnosis codes of non-recurring malfunctions that generated during vehicle operation but did not reproduce after the starter switch is turned from the ON position to the ACC or LOCK position are also stored as previous malfunctions.

Diagnosis code indications and operations

Diagnosis switch	Memory clear switch		Current malfunction			
			Normal	Malfunction	Normal	Malfunction
			Previous malfunctions			
			Normal	Normal	Malfunction	Malfunction
Connect	Connect	ABS warning lamp	OFF	ON	OFF	ON
Disconnect	Connect		Lamp flashes to indicate diagnosis code for normal condition.	Lamp flashes to indicate diagnosis code of current malfunction.	Lamp flashes to indicate diagnosis code for normal condition.	Lamp flashes to indicate diagnosis code of current malfunction.
Disconnect	Disconnect		Lamp flashes to indicate diagnosis code for normal condition.	Lamp flashes to indicate diagnosis code of current malfunction.	Lamp flashes to indicate diagnosis codes of previous malfunctions.	Lamp flashes to indicate diagnosis codes of current and previous malfunctions.
Connect	Disconnect		OFF	ON	OFF	ON

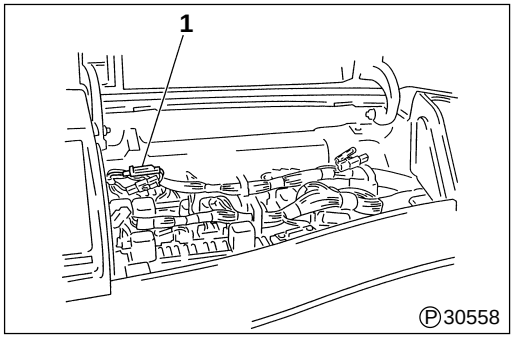

Diagnosis code indication

- Turn the starter switch to the ON position.
- Disconnect diagnosis switch **1** (white BN1A connector). The ABS warning lamp on the meter cluster begins flashing.
  The flashing pattern of the warning lamp indicates a diagnosis code. Check the code list to locate the problem location. 📖P35C-38

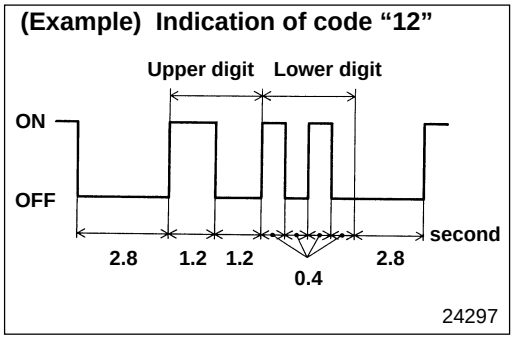

Reading diagnosis code of current malfunction

- After the Electronic control unit completes the self-diagnosis operation, the ABS warning lamp turns off in approximately 2.4 seconds, then starts indicating a diagnosis code.
  Each diagnosis code consists of two digits. The two digits are indicated in the following manner.
  - Tens digit indication
    The lamp remains ON for 1.2 seconds, then remains OFF for 1.2 seconds.
  - Ones digit indication
    The lamp remains ON for 0.4 second, then remains OFF for 0.4 second.
- Each malfunction code is indicated three consecutive times.

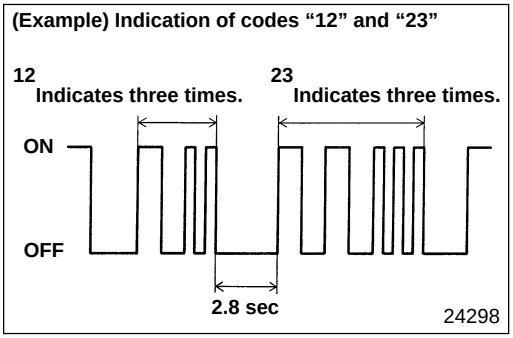

- If there are two or more malfunction codes in the memory, the lamp indicates the first malfunction code three times, turns off for 2.8 seconds, then indicates the next code three times.
  The lamp continues indicating all malfunction codes stored in the memory even if diagnosis switch **1** (white BN1A connector) is disconnected in the middle of code indication.

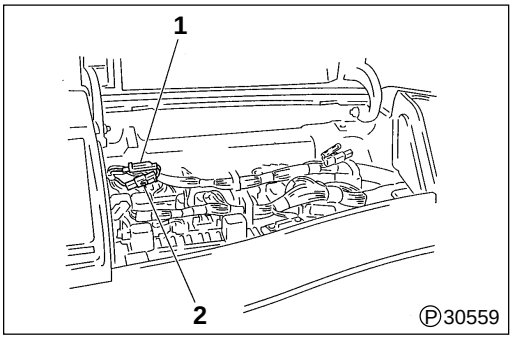

Reading diagnosis codes of previous malfunctions

- After reading the diagnosis code of the current malfunction, read the diagnosis codes of previous malfunctions.

CAUTION⚠

- **Note that connecting memory clear switch 2 (brown AL1A connector) erases diagnosis codes of current and previous malfunctions from the Electronic control unit memory.**
- **If diagnosis codes are deleted when some of the connectors are not connected or the system is still malfunctioning, the Electronic control unit becomes damaged.**

- To indicate diagnosis codes of previous malfunctions, with diagnosis switch **1** (white BN1A connector) disconnected, disengage memory clear switch **2** (brown AL1A connector). The ABS warning lamp starts flashing to indicate a diagnosis code.

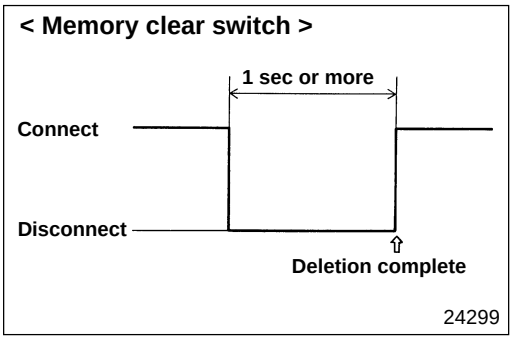

Deleting diagnosis codes

CAUTION⚠

- **Before erasing diagnosis codes, test-drive the vehicle after the malfunction is repaired (when system is in normal condition), and make sure the ABS warning lamp is not lit.**
- **If diagnosis codes are deleted when some of the connectors are not connected or the system is still malfunctioning, the Electronic control unit becomes damaged.**

- Leave the starter switch in the ON position.
- After connecting diagnosis switch **1** (white BN1A connector), keep memory clear switch **2** (brown AL1A connector) disconnected for two seconds or more, then reconnect the memory clear switch.

Diagnosis Code Chart

Diagnosis code	Possible cause
11	Normal
21	Front-axle left-wheel speed sensor: Improper clearance
22	Excessive wobbling of front-axle left rotor
23	Damaged front-axle left rotor
24	Front-axle left-wheel speed sensor: Prolonged period of unstable output
25	Front-axle left-wheel speed sensor: Abnormally fast speed drop
26	Front-axle left-wheel speed sensor: Short-circuit to positive (+) wire, short-circuit to grounding wire, broken wire
27	Front-axle left-wheel speed sensor: Electronic control unit internal damage
31	Front-axle right-wheel speed sensor: Improper clearance
32	Excessive wobbling of front-axle right rotor
33	Damaged front-axle right rotor
34	Front-axle right-wheel speed sensor: Prolonged period of unstable output
35	Front-axle right-wheel speed sensor: Abnormally fast speed drop
36	Front-axle right-wheel speed sensor: Short-circuit to positive (+) wire, short-circuit to grounding wire, broken wire
37	Front-axle right-wheel speed sensor: Electronic control unit internal damage
41	Rear-axle left-wheel speed sensor: Improper clearance
42	Excessive wobbling of rear-axle left rotor
43	Damaged rear-axle left rotor
44	Rear-axle left-wheel speed sensor: Prolonged period of unstable output
45	Rear-axle left-wheel speed sensor: Abnormally fast speed drop
46	Rear-axle left-wheel speed sensor: Short-circuit to positive (+) wire, short-circuit to grounding wire, broken wire
47	Rear-axle left-wheel speed sensor: Electronic control unit internal damage
51	Rear-axle right-wheel speed sensor: Improper clearance
52	Excessive wobbling of rear-axle right rotor
53	Damaged rear-axle right rotor
54	Rear-axle right-wheel speed sensor: Prolonged period of unstable output
55	Rear-axle right-wheel speed sensor: Abnormally fast speed drop
56	Rear-axle right-wheel speed sensor: Short-circuit to positive (+) wire, short-circuit to grounding wire, broken wire
57	Rear-axle right-wheel speed sensor: Electronic control unit internal damage
61	Front-axle control valve: Short-circuit of outlet valve to positive (+) wire
62	Front-axle control valve: Short-circuit of outlet valve to grounding wire
63	Front-axle control valve: Broken wire in outlet valve
64	Front-axle control valve: Broken grounding wire
68	Front-axle control valve: Configuration error (*1)
75	Front-axle control valve: Short-circuit of holding valve to positive (+) wire
76	Front-axle control valve: Short-circuit of holding valve to grounding wire
77	Front-axle control valve: Broken wire in holding valve
78	Front-axle control valve: Configuration error (*1)
81	Rear-axle left-wheel control valve: Short-circuit of outlet valve to positive (+) wire
82	Rear-axle left-wheel control valve: Short-circuit of outlet valve to grounding wire
83	Rear-axle left-wheel control valve: Broken wire in outlet valve
84	Rear-axle left-wheel control valve: Broken grounding wire
85	Rear-axle left-wheel control valve: Short-circuit of holding valve to positive (+) wire
86	Rear-axle left-wheel control valve: Short-circuit of holding valve to grounding wire
87	Rear-axle left-wheel control valve: Broken wire in holding valve
89	Control valve grounding 2: Short-circuit to positive (+) wire
8A	Control valve grounding 2: Short-circuit to negative (-) wire

Diagnosis code	Possible cause
91	Rear-axle right-wheel control valve: Short-circuit of outlet valve to positive (+) wire
92	Rear-axle right-wheel control valve: Short-circuit of outlet valve to grounding wire
93	Rear-axle right-wheel control valve: Broken wire in outlet valve
94	Rear-axle right-wheel control valve: Broken grounding wire
95	Rear-axle right-wheel control valve: Short-circuit of holding valve to positive (+) wire
96	Rear-axle right-wheel control valve: Short-circuit of holding valve to grounding wire
97	Rear-axle right-wheel control valve: Broken wire in holding valve
99	Control valve grounding 1: Short-circuit to positive (+) wire
9A	Control valve grounding 1: Short-circuit to negative (-) wire
D1	Electronic control unit internal damage
D2	Electronic control unit internal damage
D3	Electronic control unit internal damage
D4	Electronic control unit internal damage
D5	Electronic control unit internal damage
E1	Control valve power supply voltage 1: Overvoltage
E2	Control valve power supply voltage 1: Low voltage
E3	Control valve power supply voltage 1: Broken wire
E4	Control valve grounding 1: Broken wire
E5	Control valve power supply voltage 2: Overvoltage
E6	Control valve power supply voltage 2: Low voltage
E7	Control valve power supply voltage 2: Broken wire
E8	Control valve grounding 2: Broken wire
E9	Electronic control unit power supply voltage: Overvoltage
EA	Electronic control unit power supply voltage: Low voltage
EB	Excessive voltage difference between control valve power supply voltages 1 and 2
F1	Exhaust brake cut relay: Short-circuit to positive (+) wire, broken wire
F2	Exhaust brake cut relay: Short-circuit to grounding wire
F5	Wheel arrangement error: Excessive wheel speed difference between front and rear wheels
F6	Wheel arrangement error: Wheel speed difference between front and rear wheels exceeding allowed range
FC	Wheel speed sensor abnormality generated previously. (*2)

*1: Configuration error (mismatch between vehicle system and Electronic control unit system)

*2: When a wheel speed sensor abnormality is generated in the previous driving operation, this diagnosis code is output. When this diagnosis code is generated, the ABS warning lamp does not turn off two seconds after the starter switch is turned on. However, if the wheel speed sensor is restored to its proper condition, the ABS warning lamp turns off and this diagnosis code is reset when the vehicle is operated at a speed of 10 km/h {6.2 mph} or faster.

NOTE

Alphabetic letters in the diagnosis codes indicate the following lighting cycles. A: 10, B:11, C: 12, D: 13, E: 14, F: 15

(Example) Diagnosis code: 8 A

Number of ones

Number of tens

Diagnosis code 8A indicates that the indication lights eight times first, then 10 times.

WHEEL SPEED SENSOR AND ROTOR < FRONT AXLE >

<FK>

The following describes the service procedures for wheel speed sensors and rotors only.
Regarding the procedures for servicing other components, refer to Gr 26.

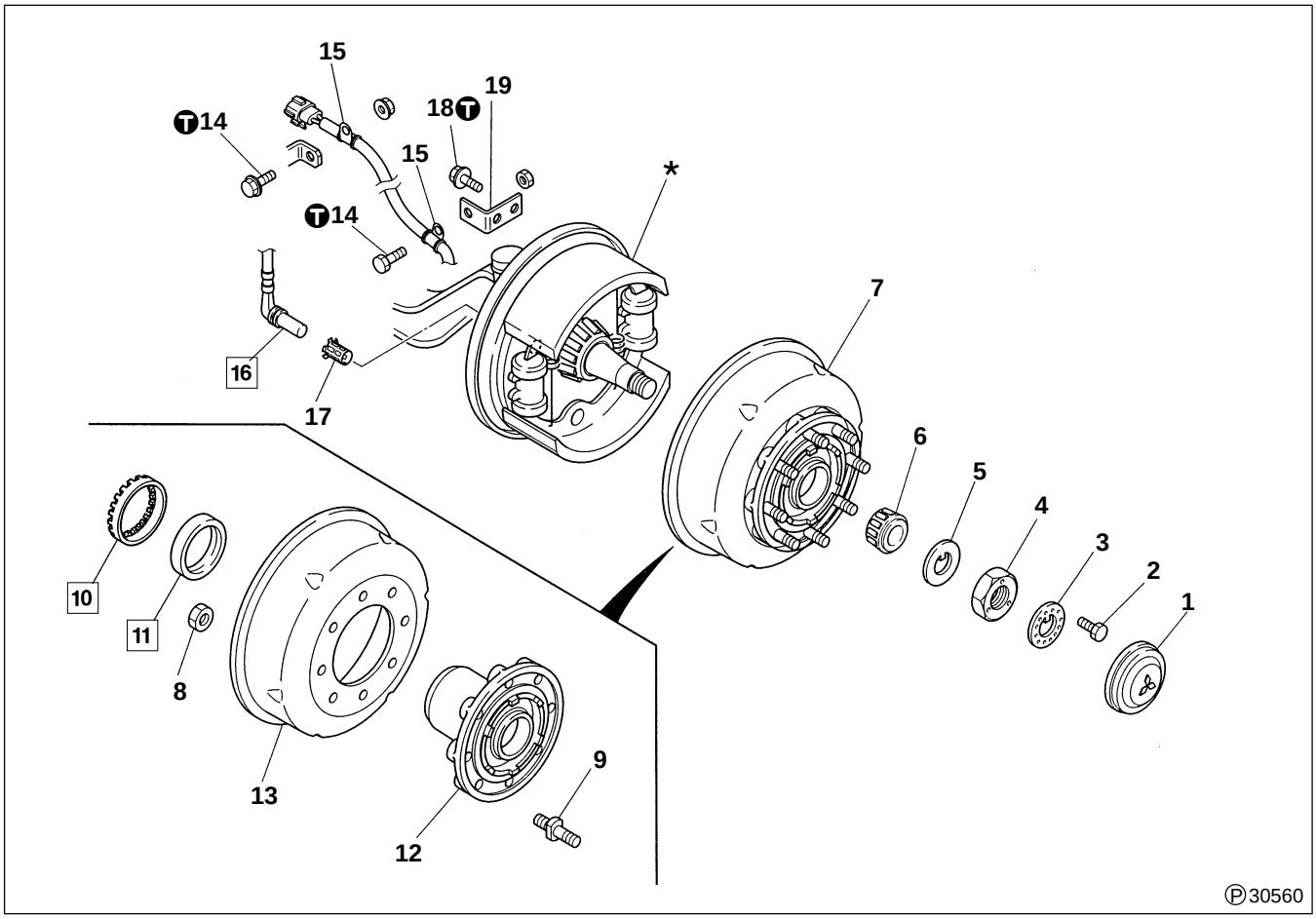

● **Disassembly sequence**

1 Wheel hub cap
2 Bolt
3 Lock plate
4 Lock nut
5 Lock washer
6 Outer bearing inner race
7 Hub and brake drum assembly
8 Nut
9 Hub bolt
10 Rotor
11 Oil seal
12 Wheel hub
13 Brake drum
14 Bolt
15 Clip
16 Wheel speed sensor
17 Spring spacer
18 Bolt
19 Bracket
*: Front brake assembly

● **Assembly sequence**

Follow the disassembly sequence in reverse.

CAUTION

- **When removing or installing hub and brake drum assembly 7, handle rotor 10 with care to prevent damage. Also, do not damage oil seal 11 during assembly.**
- **Keep oil and grease off lining surface of front brake assembly * and the inner surface of brake drum 13.**

Service standards

Unit : mm {in.}

Location	Maintenance item		Standard value	Limit	Remedy
10	Wobbling of rotor		0.1 {0.0039}	—	Replace
16	Wheel speed sensor	Resistance between terminals	950 to 1450Ω	—	Replace
		Insulation resistance	1MΩ or higher	—	Replace

Tightening torque

Unit : N·m {lbf.ft, kgf·m}

Location	Parts to be tightened	Tightening torque	Remarks
14	Bolt (Clip mounting)	39 to 59 {29 to 43, 4 to 6}	—
18	Bolt (Bracket mounting)	9.8 to 14.0 {7 to 10, 1.0 to 1.4}	—

Special tools

Unit : mm {in.}

Location	Tool name and shape	Part No.	Application
11	ABS oil seal installer 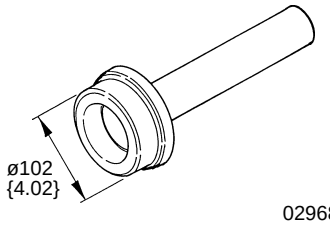	MH062305	Press-fitting of oil seal

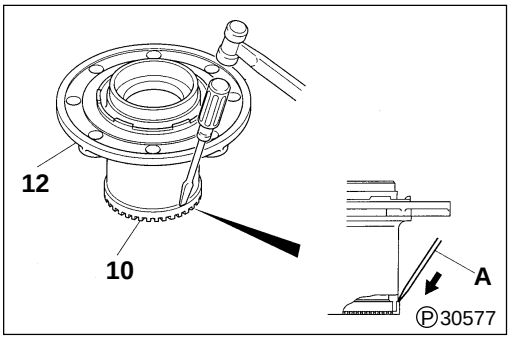

◆ Service procedure

10 Rotor

[Removal]

Strike the outer edge of rotor **10** evenly with flat-tip screwdriver **A** to remove the rotor from the wheel hub.

CAUTION⚠

Be careful not to damage wheel hub 12.

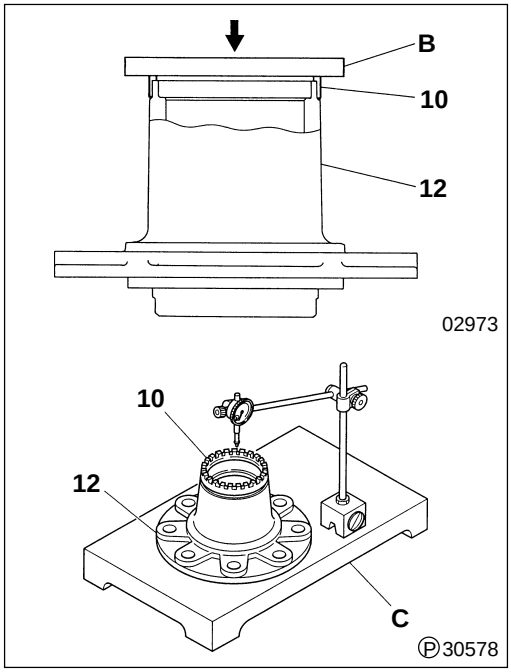

[Installation]
Heat rotor **10** to approximately 150°C {302°F}. Press the rotor evenly with iron plate **B** to press-fit the rotor to wheel hub **12**. Make sure there is no space between the rotor and wheel hub.

[Inspection]
- If the amount of wobbling exceeds the standard value, repeat the assembly procedure from the beginning.
- If the amount of wobbling exceeds the standard value after reassembly, replace defective parts.
  C : Base

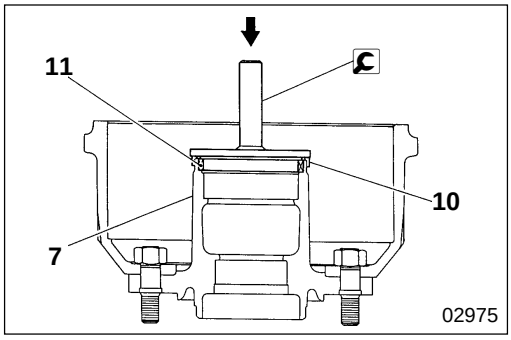

11 Installation of oil seal

CAUTION
When hub and brake drum assembly 7 is removed for a service operation and if rotor 10 is still mounted on the wheel hub, use 0 ABS oil seal installer to press-fit oil seal 11.

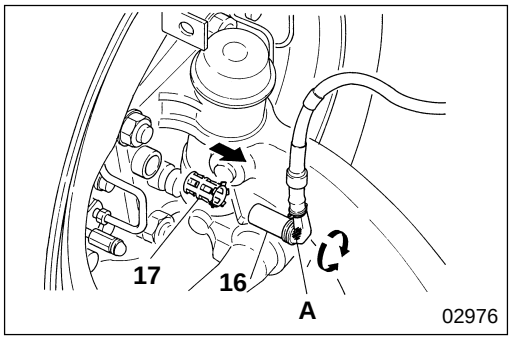

16 Wheel speed sensor

[Removal]
Hold shaded section **A** of wheel speed sensor **16** with pliers, and remove the sensor by twisting it slightly in left and right directions.

CAUTION
- **When holding wheel speed sensor 16 with pliers, do not grip any section other than shaded area A in the diagram.**
- **When removing wheel speed sensor 16, do not apply force on the sensor, such as by hitting with a hammer, prying with a screwdriver or pulling the harness, since these actions can result in wire breakage.**
- **If wheel speed sensor 16 dismounts easily, replace spring spacer 17.**

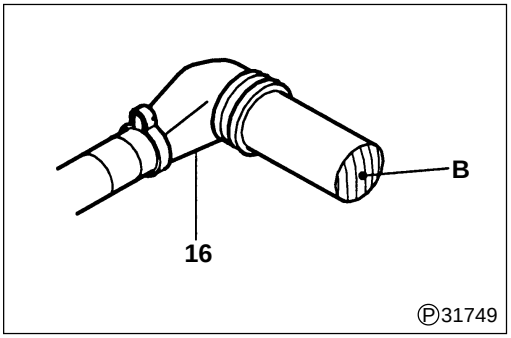

[Inspection]

- Since pole piece section **B** is magnetized by the magnet inside wheel speed sensor **16**, it attracts metals. Do not allow the pole piece to collect metallic objects.

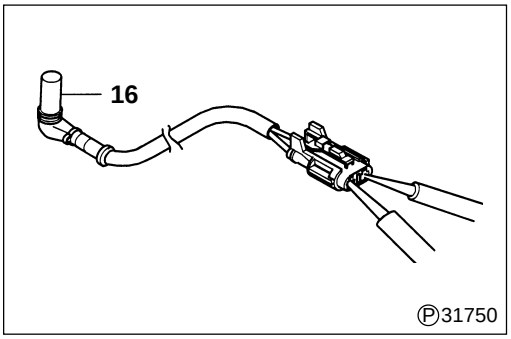

- Measure the resistance between the terminals of wheel speed sensor **16**.
  If the measured value deviates from the standard value, replace the wheel speed sensor.

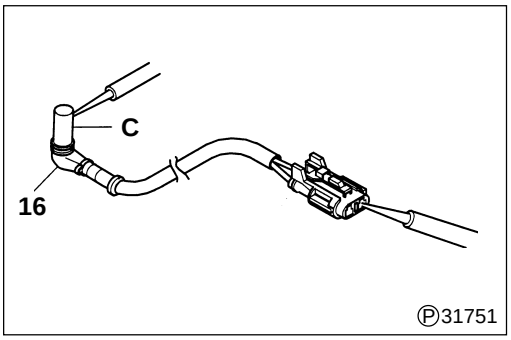

- Measure the insulation resistance between body **C** of wheel speed sensor **16** and each terminal.
  If the measured values deviate from the standard value, replace the wheel speed sensor.

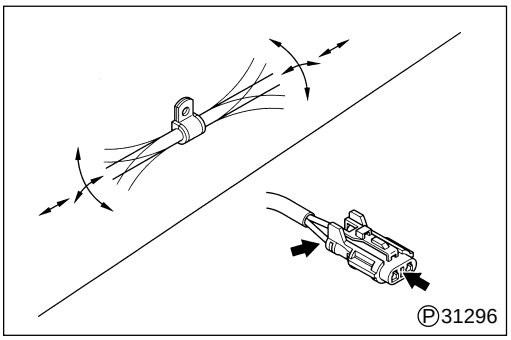

- To check for broken wires, remove the harness clamp section from the vehicle. Bend and extend the harness to check if there is any broken wire in the harness. Also, inspect the connector for proper contact.
  If a defect is found, replace wheel speed sensor **16**.

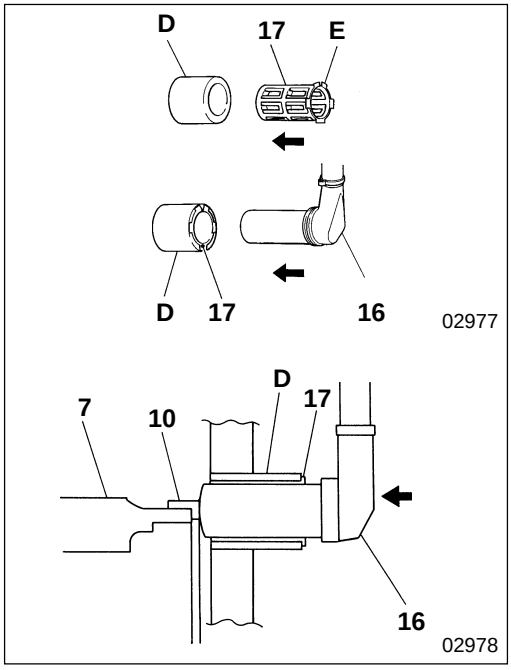

[Installation]

- Insert spring spacer **17** into holder section **D** of the knuckle, and press until stopper section **E** contacts the holder.
- Insert wheel speed sensor **16**, and press until it contacts rotor **10**.
- Rotate hub and brake drum assembly **7** slowly for two or three turns (2 seconds per turn) to make sure it rotates smoothly.

CAUTION

When installing wheel speed sensor 16, do not apply force on the sensor, such as by hitting with a hammer, prying with a screwdriver or pulling the harness, since these actions can result in wire breakage.

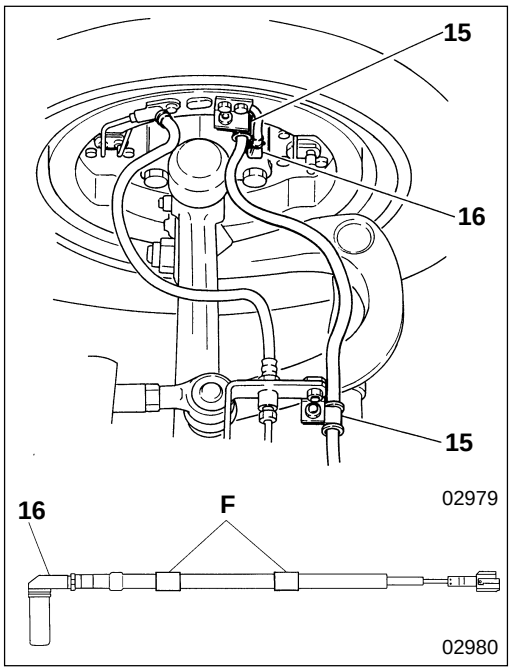

- Secure white tape section **F** of the harness of wheel speed sensor **16** in place using clip **15** on the wheel brake side and clip **15** on the frame side.

CAUTION

Be sure to clamp the harness of wheel speed sensor 16 at two white tape sections F. Make sure the harness does not interfere with other parts and there is no twist or slack in the harness.

M E M O

WHEEL SPEED SENSOR AND ROTOR < FRONT AXLE >

< FM (Air-Over Hydraulic Brake) >

The following describes the service procedures for wheel speed sensors and rotors only.
Regarding the procedures for servicing other components, refer to Gr 26.

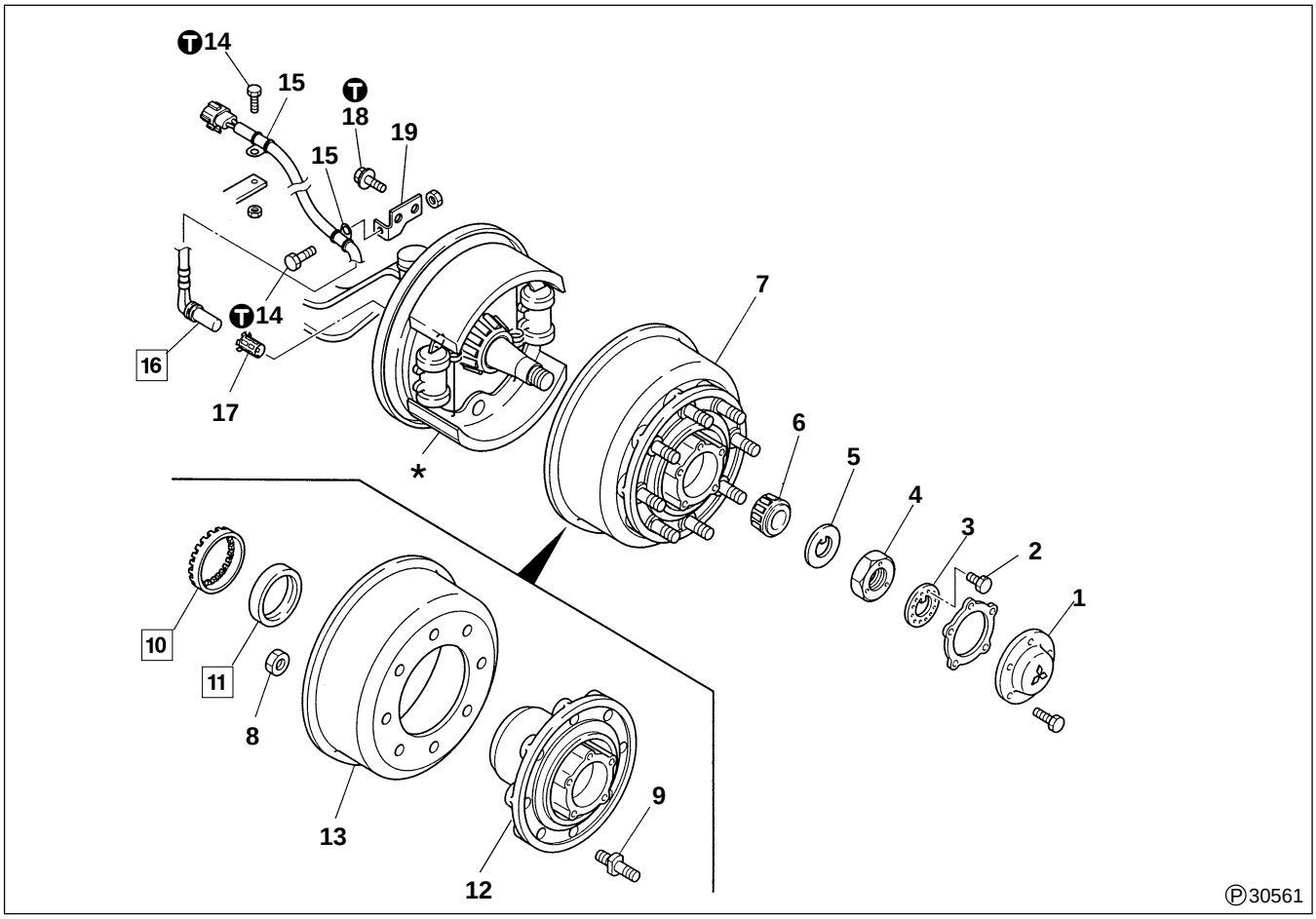

● **Disassembly sequence**

1 Wheel hub cover
2 Bolt
3 Lock plate
4 Lock nut
5 Lock washer
6 Outer bearing inner race
7 Hub and brake drum assembly
8 Nut
9 Hub bolt
10 Rotor
11 Oil seal
12 Wheel hub
13 Brake drum
14 Bolt
15 Clip
16 Wheel speed sensor
17 Spring spacer
18 Bolt
19 Bracket

***** : Front brake assembly

● **Assembly sequence**

Follow the disassembly sequence in reverse

CAUTION⚠

- **When removing or installing hub and brake drum assembly 7, handle rotor 10 with care to prevent damage. Also, do not damage oil seal 11 during assembly.**
- **Keep oil and grease off lining surface of front brake assembly * and the inner surface of brake drum 13.**

Service standards

Unit : mm {in.}

Location	Maintenance item		Standard value	Limit	Remedy
10	Wobbling of rotor		0.1 {0.0039}	—	Replace
16	Wheel speed sensor	Resistance between terminals	950 to 1450	—	Replace
		Insulation resistance	1MΩ or higher	—	Replace

Tightening torque

Unit : N·m {lbf.ft, kgf·m}

Location	Parts to be tightened	Tightening torque	Remarks
14	Bolt (Clip mounting)	39 to 59 {29 to 43, 4 to 6}	—
18	Bolt (Bracket mounting)	9.8 to 14.0 {7 to 10, 1.0 to 1.4}	—

Special tools

Unit : mm {in.}

Location	Tool name and shape	Part No.	Application
11	ABS oil seal installer 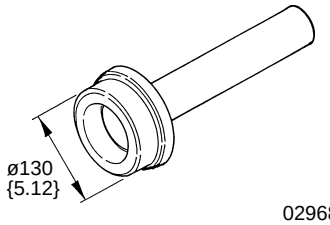 02968	MH062609	Press-fitting of oil seal

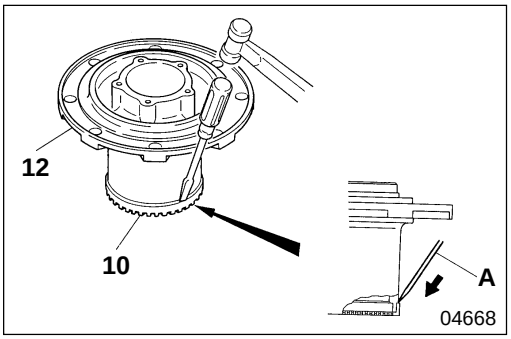

04668

◆ Service procedure

10 Rotor

[Removal]

Strike the outer edge of rotor **10** evenly with flat-tip screwdriver **A** to remove the rotor from the wheel hub.

CAUTION

Be careful not to damage wheel hub 12.

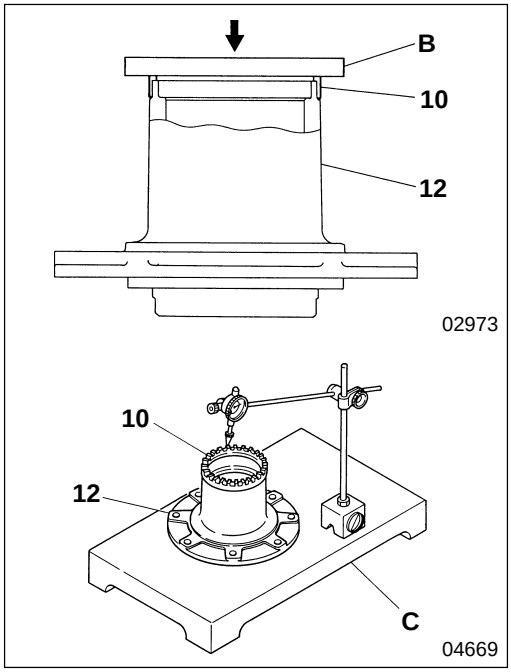

[Installation]
Heat rotor **10** to approximately 150°C {302°F}. Press the rotor evenly with iron plate **B** to press-fit the rotor to wheel hub **12**. Make sure there is no space between the rotor and wheel hub.

[Inspection]
- If the amount of wobbling exceeds the standard value, repeat the assembly procedure from the beginning.
- If the amount of wobbling exceeds the standard value after reassembly, replace defective parts.
  C: Base

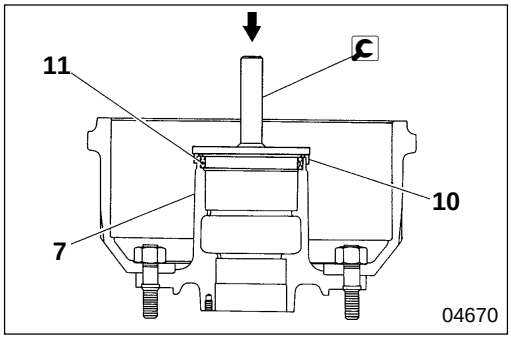

11 **Installation of oil seal**

NOTE

When hub and brake drum assembly 7 is removed for a service operation and if rotor 10 is still mounted on the wheel hub, use ABS oil seal installer to press-fit oil seal 11.

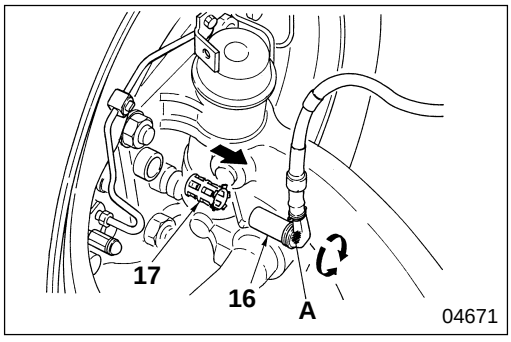

16 **Wheel speed sensor**

[Removal]
Hold shaded section **A** of wheel speed sensor **16** with pliers, and remove the sensor by twisting it slightly in left and right directions.

CAUTION
- **When holding wheel speed sensor 16 with pliers, do not grip any section other than shaded area A in the diagram.**
- **When removing wheel speed sensor 16, do not apply force on the sensor, such as by hitting with a hammer, prying with a screwdriver or pulling the harness, since these actions can result in wire breakage.**
- **If wheel speed sensor 16 dismounts easily, replace spring spacer 17.**

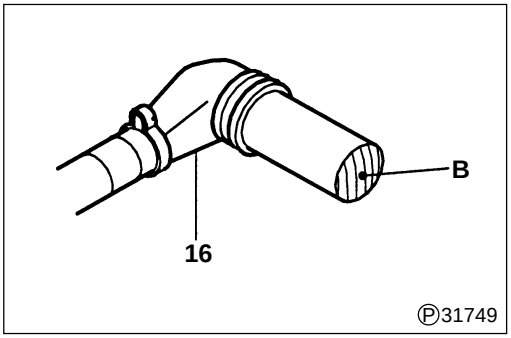

[Inspection]

- Since pole piece section **B** is magnetized by the magnet inside wheel speed sensor **16**, it attracts metals. Do not allow the pole piece to collect metallic objects.

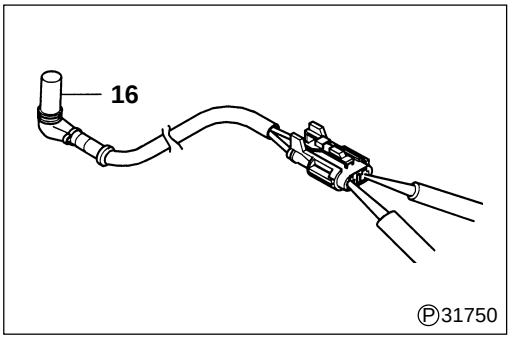

- Measure the resistance between the terminals of wheel speed sensor **16**.
  If the measured value deviates from the standard value, replace the wheel speed sensor.

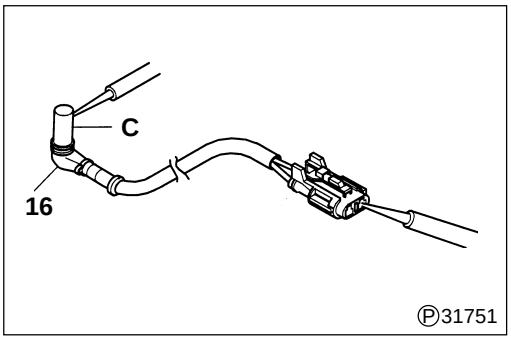

- Measure the insulation resistance between body **C** of wheel speed sensor **16** and each terminal.
  If the measured values deviate from the standard value, replace the wheel speed sensor.

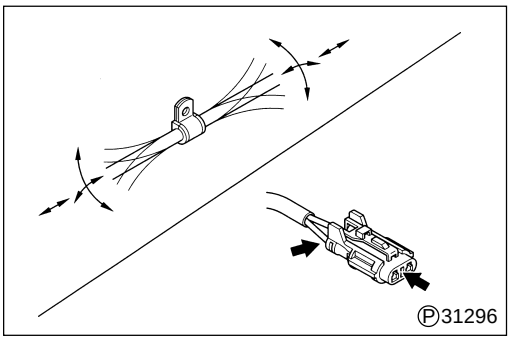

- To check for broken wires, remove the harness clamp section from the vehicle. Bend and extend the harness to check if there is any broken wire in the harness. Also, inspect the connector for proper contact.
  If a defect is found, replace wheel speed sensor **16**.

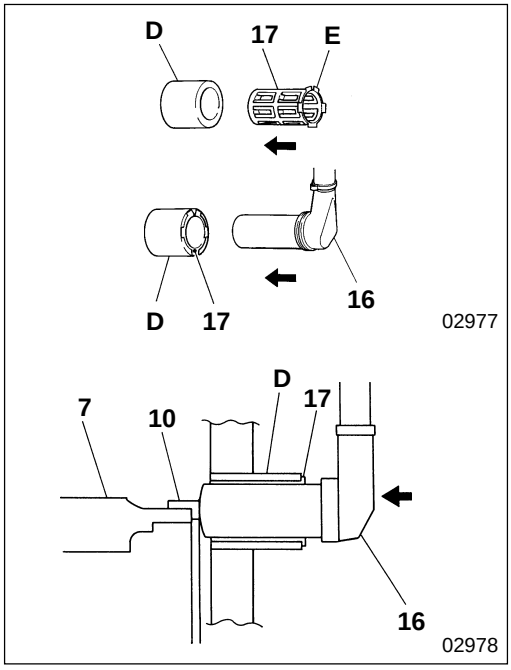

[Installation]

- Insert spring spacer **17** into holder section **D** of the knuckle, and press until stopper section **E** contacts the holder.
- Insert wheel speed sensor **16**, and press until it contacts rotor **10**.
- Rotate hub and brake drum assembly **7** slowly for two or three turns (2 seconds per turn) to make sure it rotates smoothly.

CAUTION

When installing wheel speed sensor 16, do not apply force on the sensor, such as by hitting with a hammer, prying with a screwdriver or pulling the harness, since these actions can result in wire breakage.

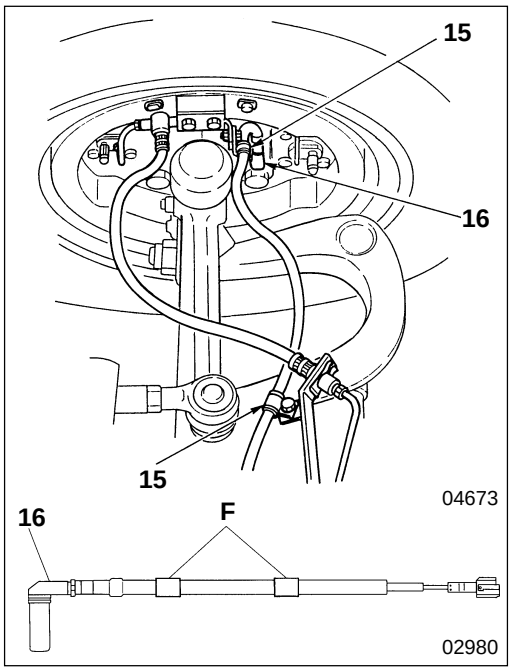

- Secure white tape section **F** of the harness of wheel speed sensor **16** in place using clip **15** on the wheel brake side and clip **15** on the frame side.

CAUTION

Be sure to clamp the harness of wheel speed sensor 16 at two white tape sections F. Make sure the harness does not interfere with other parts and there is no twist or slack in the harness.

M E M O

WHEEL SPEED SENSOR AND ROTOR < FRONT AXLE >

< FM (Full-Air Brake) >

The following describes the service procedures for wheel speed sensors and rotors only.
Regarding the procedures for servicing other components, refer to Gr 26.

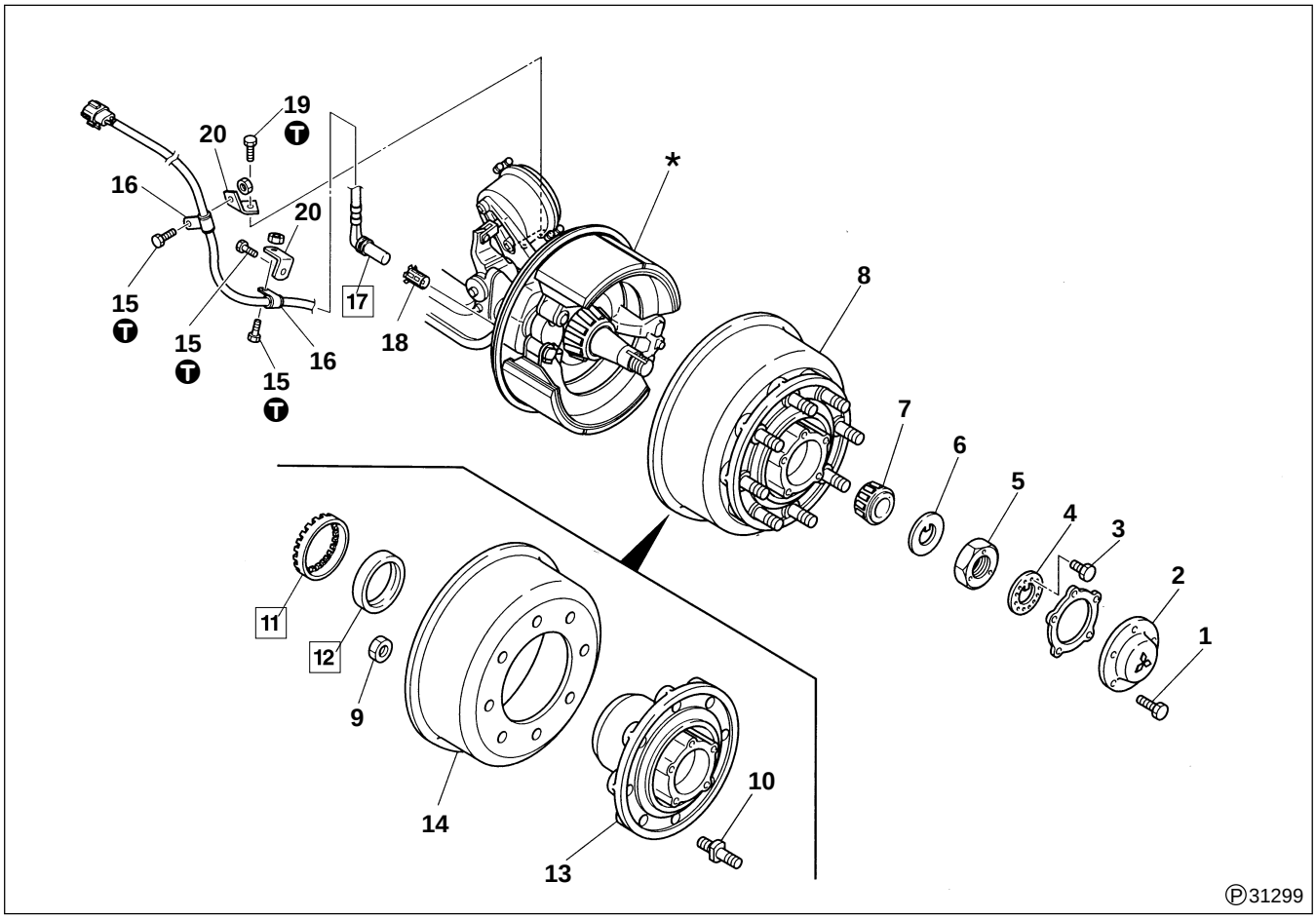

● **Disassembly sequence**

1 Bolt
2 Wheel hub cover
3 Bolt
4 Lock plate
5 Lock nut
6 Lock washer
7 Outer bearing inner race
8 Hub and brake drum assembly
9 Nut
10 Hub bolt
11 Rotor
12 Oil seal
13 Wheel hub
14 Brake drum
15 Bolt
16 Clip
17 Wheel speed sensor
18 Spring spacer
19 Bolt
20 Bracket

***** : Front brake assembly

● **Assembly sequence**

Follow the disassembly sequence in reverse

CAUTION

- **When removing or installing hub and brake drum assembly 8, handle rotor 11 with care to prevent damage. Also, do not damage oil seal 12 during assembly.**
- **Keep oil and grease off lining surface of front brake assembly * and the inner surface of brake drum 14.**

Service standards

Unit : mm {in.}

Location	Maintenance item		Standard value	Limit	Remedy
11	Wobbling of rotor		0.1 {0.0039}	—	Replace
17	Wheel speed sensor	Resistance between terminals	950 to 1450	—	Replace
		Insulation resistance	1M or higher	—	Replace

Tightening torque

Unit : N·m {lbf.ft, kgf·m}

Location	Parts to be tightened	Tightening torque	Remarks
15	Bolt (Clip mounting)	44±9.8 {33±7.2, 4.5±1.0}	—
19	Bolt (Bracket mounting)	41.2±7.8 {30±5.8, 4.2±0.8}	—

Special tools

Unit : mm {in.}

Location	Tool name and shape	Part No.	Application
12	ABS oil seal installer 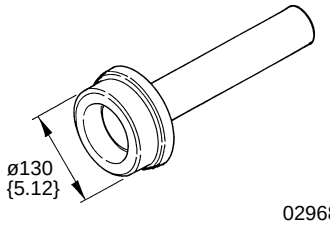	MH062609	Press-fitting of oil seal

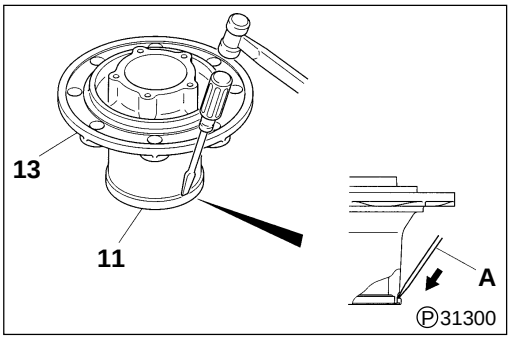

◆ Service procedure

11 Rotor

[Removal]

Strike the outer edge of rotor **11** evenly with flat-tip screwdriver **A** to remove the rotor from the wheel hub.

CAUTION⚠

Be careful not to damage wheel hub 13.

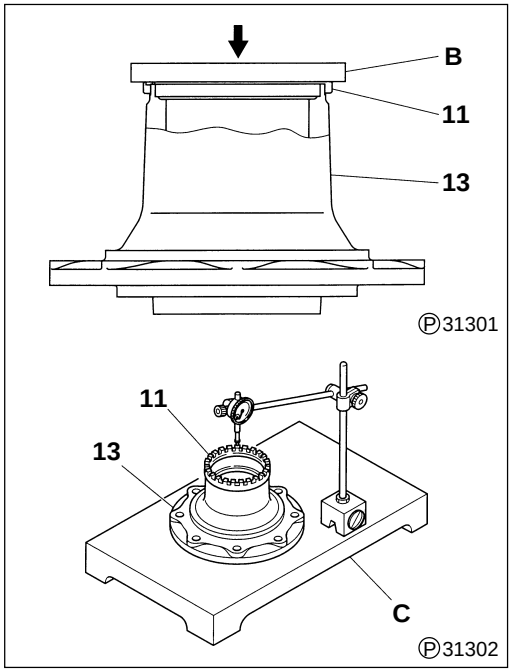

[Installation]
Heat rotor **11** to approximately 150°C {302°F}. Press the rotor evenly with iron plate **B** to press-fit the rotor to wheel hub **13**. Make sure there is no space between the rotor and wheel hub.

[Inspection]
- If the amount of wobbling exceeds the standard value, repeat the assembly procedure from the beginning.
- If the amount of wobbling exceeds the standard value after reassembly, replace defective parts.
  C: Base

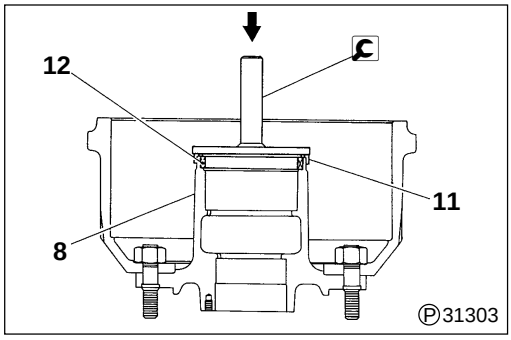

12 Installation of oil seal

NOTE

When hub and brake drum assembly 8 is removed for a service operation and if rotor 11 is still mounted on the wheel hub, use Anti-lock brake system oil seal installer to press-fit oil seal 12.

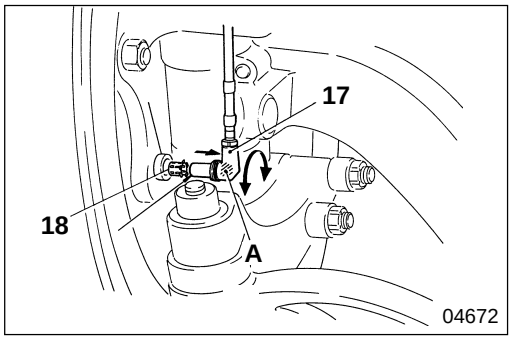

17 Wheel speed sensor

[Removal]
Hold shaded section **A** of wheel speed sensor **17** with pliers, and remove the sensor by twisting it slightly in left and right directions.

CAUTION

- **When holding wheel speed sensor 17 with pliers, do not grip any section other than shaded area A in the diagram.**
- **When removing wheel speed sensor 17, do not apply force on the sensor, such as by hitting with a hammer, prying with a screwdriver or pulling the harness, since these actions can result in wire breakage.**
- **If wheel speed sensor 17 dismounts easily, replace spring spacer 18.**

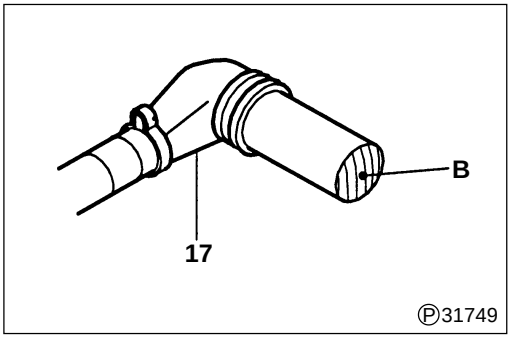

[Inspection]

- Since pole piece section **B** is magnetized by the magnet inside wheel speed sensor **17**, it attracts metals. Do not allow the pole piece to collect metallic objects.

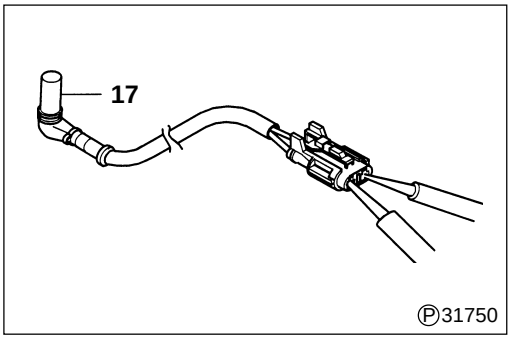

- Measure the resistance between the terminals of wheel speed sensor **17**.
  If the measured value deviates from the standard value, replace the wheel speed sensor.

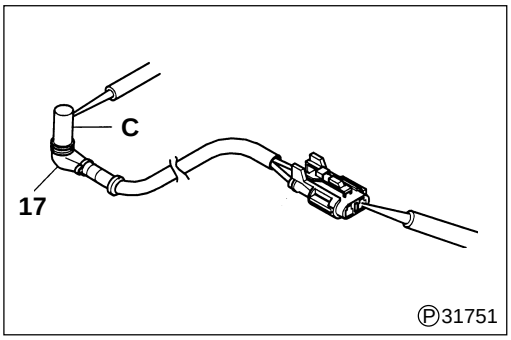

- Measure the insulation resistance between body **C** of wheel speed sensor **17** and each terminal.
  If the measured values deviate from the standard value, replace the wheel speed sensor.

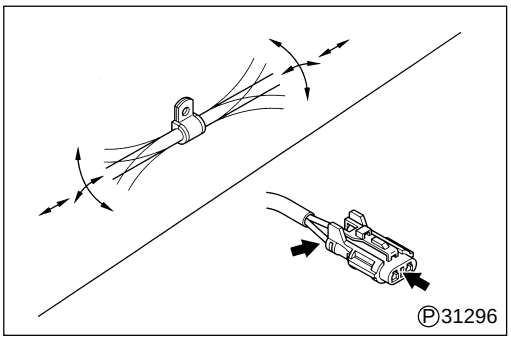

- To check for broken wires, remove the harness clamp section from the vehicle. Bend and extend the harness to check if there is any broken wire in the harness. Also, inspect the connector for proper contact.
  If a defect is found, replace wheel speed sensor **17**.

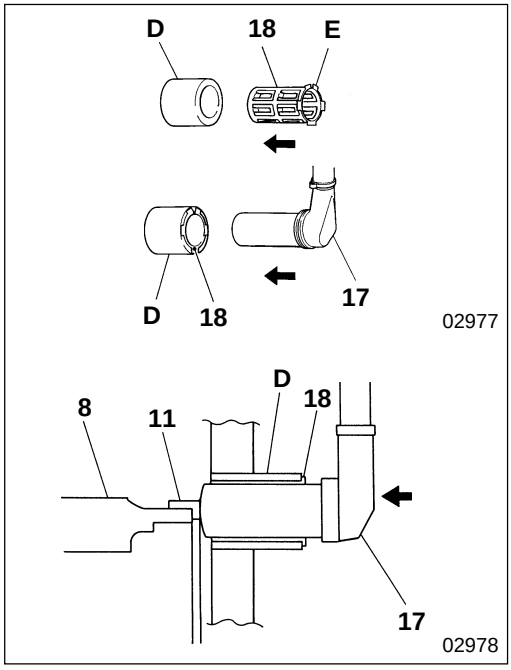

[Installation]

- Insert spring spacer **18** into holder section **D** of the knuckle, and press until stopper section **E** contacts the holder.
- Insert wheel speed sensor **17**, and press until it contacts rotor **11**.
- Rotate hub and brake drum assembly **8** slowly for two or three turns (2 seconds per turn) to make sure it rotates smoothly.

CAUTION

When installing wheel speed sensor 17, do not apply force on the sensor, such as by hitting with a hammer, prying with a screwdriver or pulling the harness, since these actions can result in wire breakage.

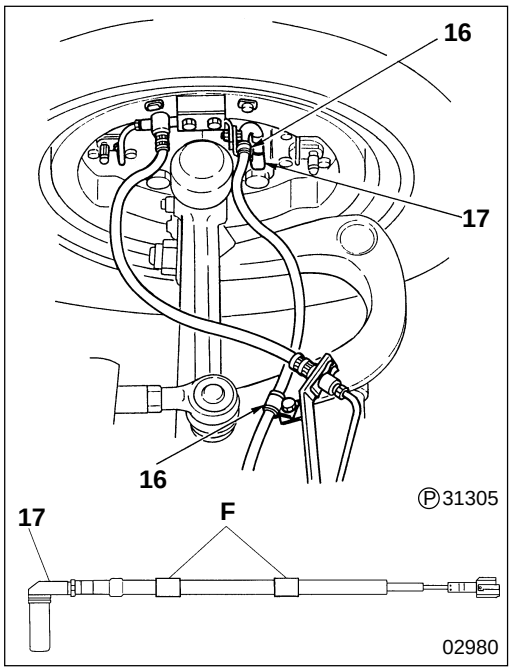

- Secure white tape section **F** of the harness of wheel speed sensor **17** in place using clip **16** on the wheel brake side and clip **16** on the frame side.

CAUTION

Be sure to clamp the harness of wheel speed sensor 17 at two white tape sections F. Make sure the harness does not interfere with other parts and there is no twist or slack in the harness.

M E M O

WHEEL SPEED SENSOR AND ROTOR < REAR AXLE >

< FK >

The following describes the service procedures for wheel speed sensors and rotors only.
Regarding the procedures for servicing other components, refer to Gr 27.

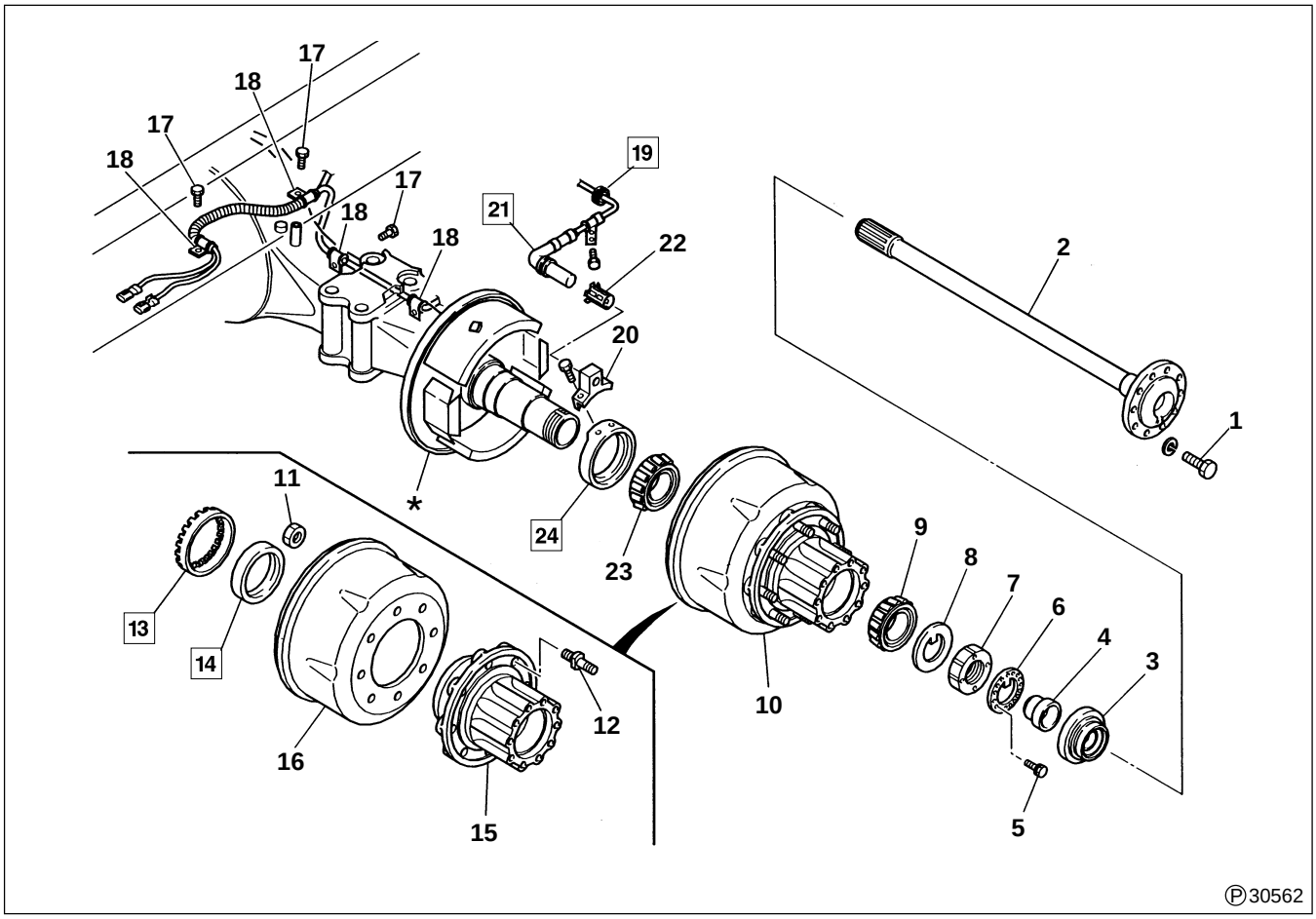

● **Disassembly sequence**

1 Bolt
2 Rear axle shaft
3 Oil seal
4 Oil seal retainer
5 Bolt
6 Lock plate
7 Lock nut
8 Lock washer
9 Outer bearing inner race
10 Hub and brake drum assembly
11 Nut
12 Hub bolt
13 Rotor
14 Oil seal
15 Wheel hub
16 Brake drum
17 Bolt
18 Clip
19 Grommet
20 Sensor holder
21 Wheel speed sensor
22 Spring spacer
23 Inner bearing inner race
24 Oil seal retainer

*: Rear brake assembly

● **Assembly sequence**

Follow the disassembly sequence in reverse.

- Do not remove oil seal retainer **4** unless it is damaged (scratches, bending, tilting).

CAUTION⚠

- **When removing or installing hub and brake drum assembly 10, handle rotor 13 with care to prevent damage. Also, do not damage oil seal 14 during assembly.**
- **Keep oil and grease off lining surface of rear brake assembly * and the inner surface of brake drum 16.**

Service standards

Unit : mm {in.}

Location	Maintenance item		Standard value	Limit	Remedy
13	Wobbling of rotor		0.1 {0.0039}	—	Replace
21	Wheel speed sensor	Resistance between terminals	950 to 1450	—	Replace
		Insulation resistance	1M or higher	—	Replace

Special tools

Unit : mm {in.}

Location	Tool name and shape	Part No.	Application
14	Anti-lock brake system oil seal installer 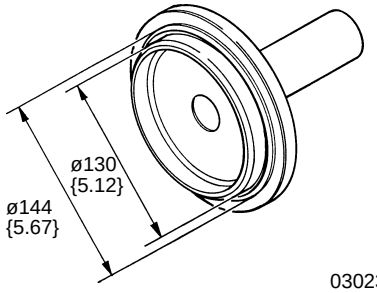	MH062664	Press-fitting of oil seal

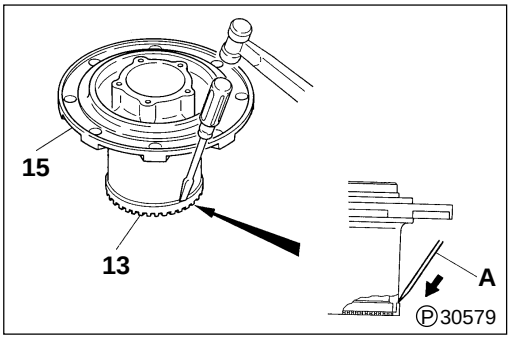

◆ Service procedure

13 Rotor

[Removal]

Strike the outer edge of rotor **13** evenly with flat-tip screwdriver **A** to remove the rotor from the wheel hub.

CAUTION⚠

Be careful not to damage wheel hub 15.

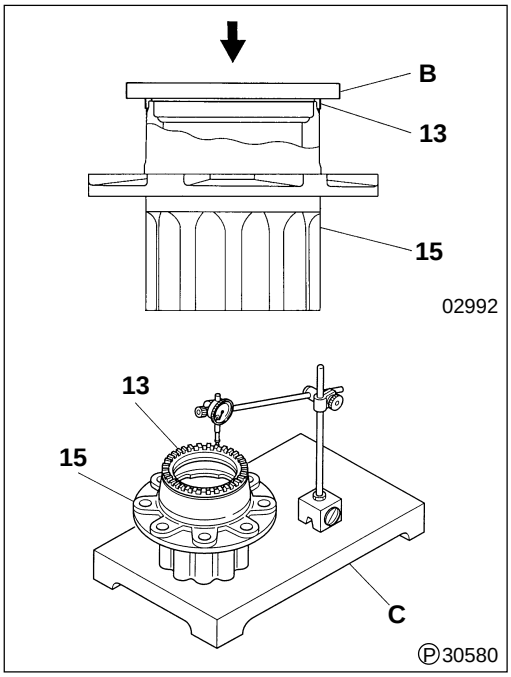

[Installation]

Heat rotor **13** to approximately 150°C {302°F}. Press the rotor evenly with iron plate **B** to press-fit the rotor to wheel hub **15**. Make sure there is no space between the rotor and wheel hub.

[Inspection]

- If the amount of wobbling exceeds the standard value, repeat the assembly procedure from the beginning.
- If the amount of wobbling exceeds the standard value after reassembly, replace defective parts.

C : Base

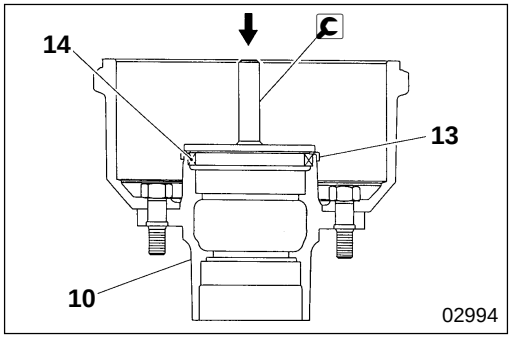

14 Installation of oil seal

NOTE

When hub and brake drum assembly 10 is removed for a service operation and if rotor 13 is still mounted on the wheel hub, use Anti-lock brake system oil seal installer to press-fit oil seal 14.

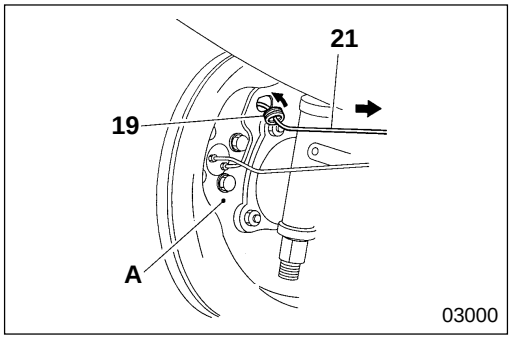

19 Installation of grommet

Mount grommet **19** on back plate **A**, and pull the harness of wheel speed sensor **21** to make sure there is no slack inside the wheel brake.

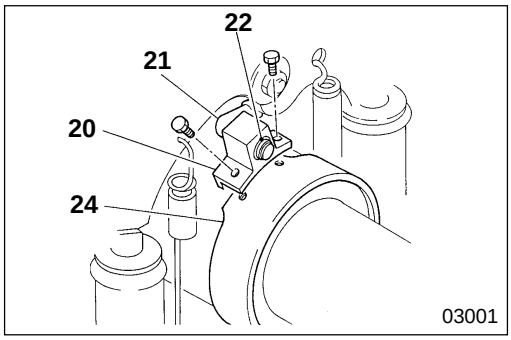

21 Wheel speed sensor

[Removal]

- With wheel speed sensor **21** and spring space **22** installed in sensor holder **20**, remove the sensor holder from oil seal retainer **24**.

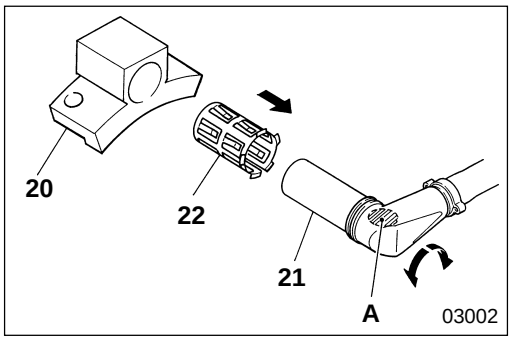

- Hold shaded section **A** of wheel speed sensor **21** with pliers, and remove the sensor by twisting it slightly in left and right directions.

CAUTION

- **When holding wheel speed sensor 21 with pliers, do not grip any section other than shaded area A in the diagram.**
- **When removing wheel speed sensor 21, do not apply force on the sensor, such as by hitting with a hammer, prying with a screwdriver or pulling the harness, since these actions can result in wire breakage.**
- **If wheel speed sensor 21 dismounts easily, replace spring spacer 22.**

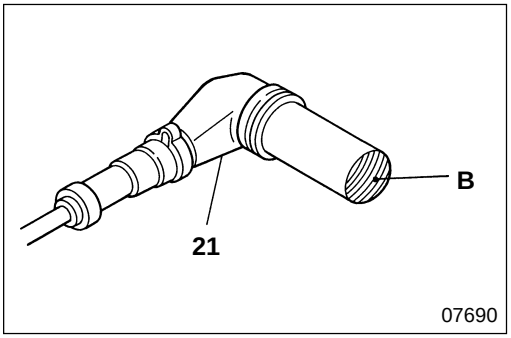

[Inspection]

- Since pole piece section **B** is magnetized by the magnet inside wheel speed sensor **21**, it attracts metals. Do not allow the pole piece to collect metallic objects.

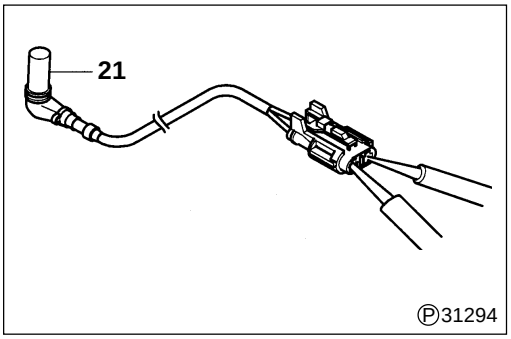

- Measure the resistance between the terminals of wheel speed sensor **21**.
  If the measured value deviates from the standard value, replace the wheel speed sensor.

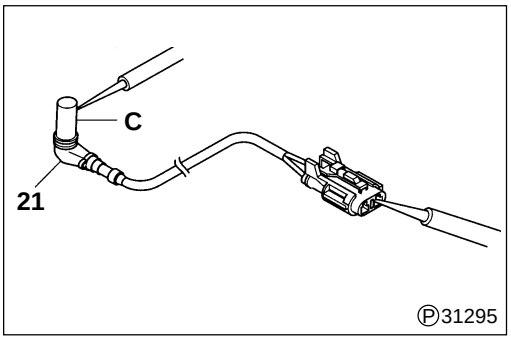

- Measure the insulation resistance between body **C** of wheel speed sensor **21** and each terminal.
  If the measured values deviate from the standard value, replace the wheel speed sensor.

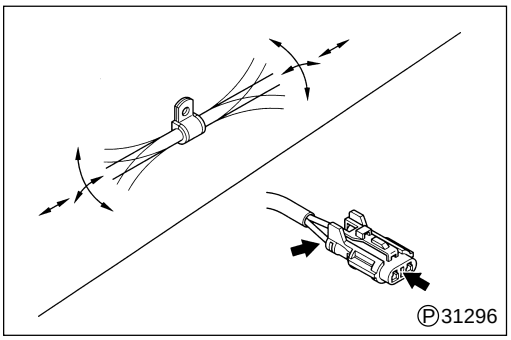

- To check for broken wires, remove the harness clamp section from the vehicle. Bend and extend the harness to check if there is any broken wire in the harness. Also, inspect the connector for proper contact.
  If a defect is found, replace wheel speed sensor **21**.

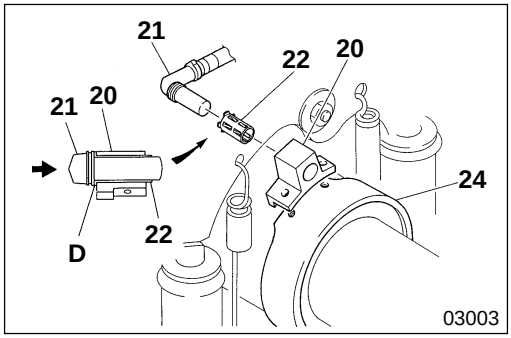

[Installation]

- Insert wheel speed sensor **21** from the back plate, and press until spring spacer **22** and stopper section **D** of the wheel speed sensor contacts sensor holder **20**.
- With wheel speed sensor **21** and spring spacer **22** installed in sensor holder **20**, mount the sensor holder on oil seal retainer **24**.

CAUTION

- **When installing wheel speed sensor 21, do not apply force on the sensor, such as by hitting with a hammer, prying with a screwdriver or pulling the harness, since these actions can result in wire breakage.**
- **Note that wheel speed sensor 21 is different for left and right wheels.**

Location	Harness connector color	Harness connector shape
Left wheel	Gray	Male
Right wheel	Black	Female

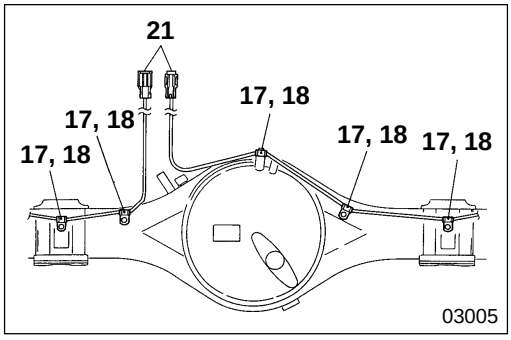

- Rear axle housing section
  Starting from the wheel brake side, secure the harness of wheel speed sensor **21** in place with clip **18** and bolt **17**. Make sure the harness does not interfere with other parts and there is no twist or slack in the harness.

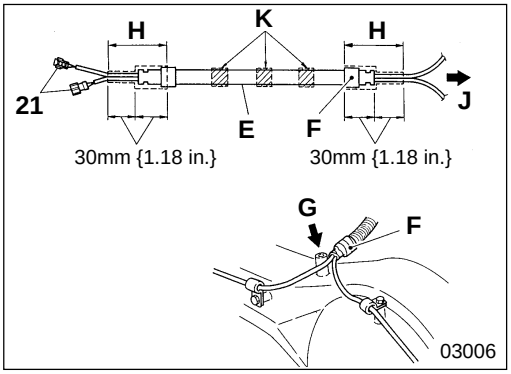

- Binding of harness
  - Gather the harnesses of left and right wheel speed sensors **21**, and bind with corrugated tube **E**.
  - Adjust the position of the corrugated tube **E** so that white tape section **F** is located at clip position **G** on the rear axle housing. Then, turn the corrugated tube so that the slit faces down. Wrap black tape (electric harness tape) on both ends **H** of the corrugated tube. The tape should be placed over the tube end and harness.
    J: Rear axle housing side
  - Wrap tape on the harnesses of wheel speed sensors **21** at sections **K** (three locations at equal intervals).

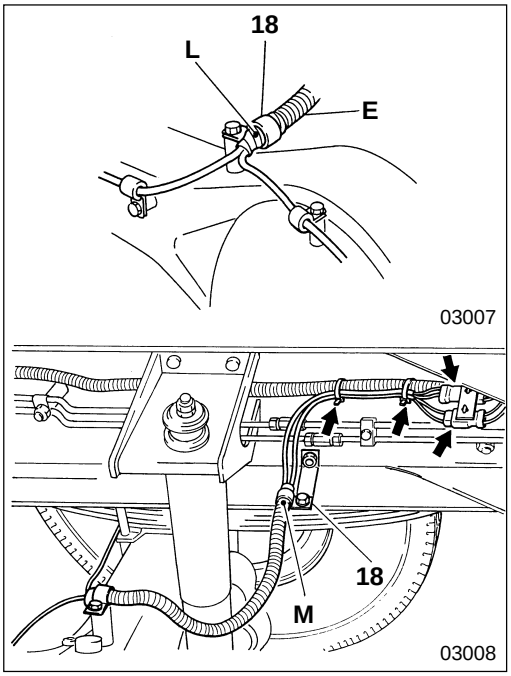

- Clamping of harness
  - Secure section **L** of corrugated tube **E** to the rear axle housing using clip **18**, and attach section **M** of the corrugated tube to the frame using clip **18**.
  - Connect the wheel speed sensor connector to the harness connector on the chassis side, and secure the connectors in place using the bracket.

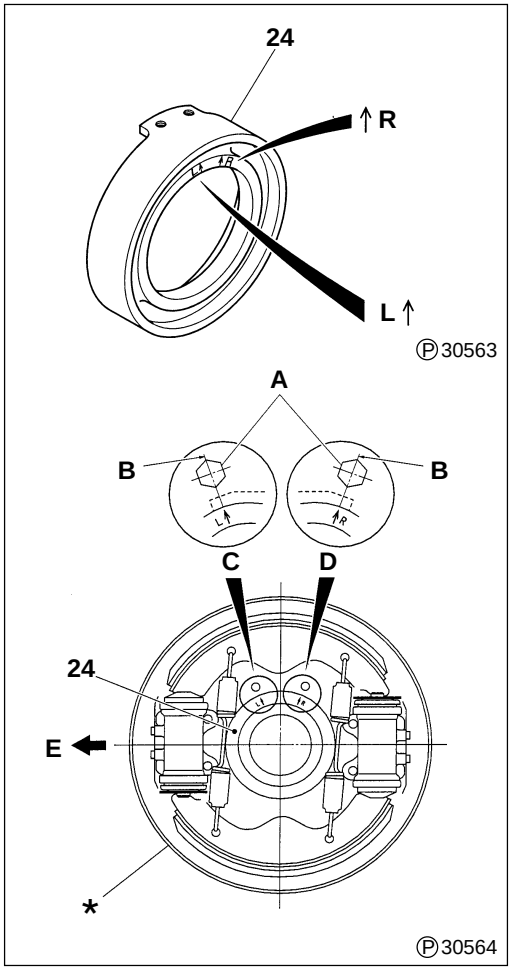

24 **Installation of oil seal retainer**

- Oil seal retainer **24** is stamped with identification marks "**L**", "**R**" and "↑" at the locations indicated in the diagram.
  L: For right wheel
  R: For left wheel
  ↑: For position alignment (next to "L" and "R" marks)

- According to the wheel location, align the identification mark "**L**" or "**R**" to center line **B** of mounting bolt **A** of rear brake assembly *****.
  C: For right wheel
  D: For left wheel
  E: Front of vehicle

M E M O

WHEEL SPEED SENSOR AND ROTOR < REAR AXLE >

< FM (Air-Over Hydraulic Brake) >

The following describes the service procedures for wheel speed sensors and rotors only.
Regarding the procedures for servicing other components, refer to Gr 27.

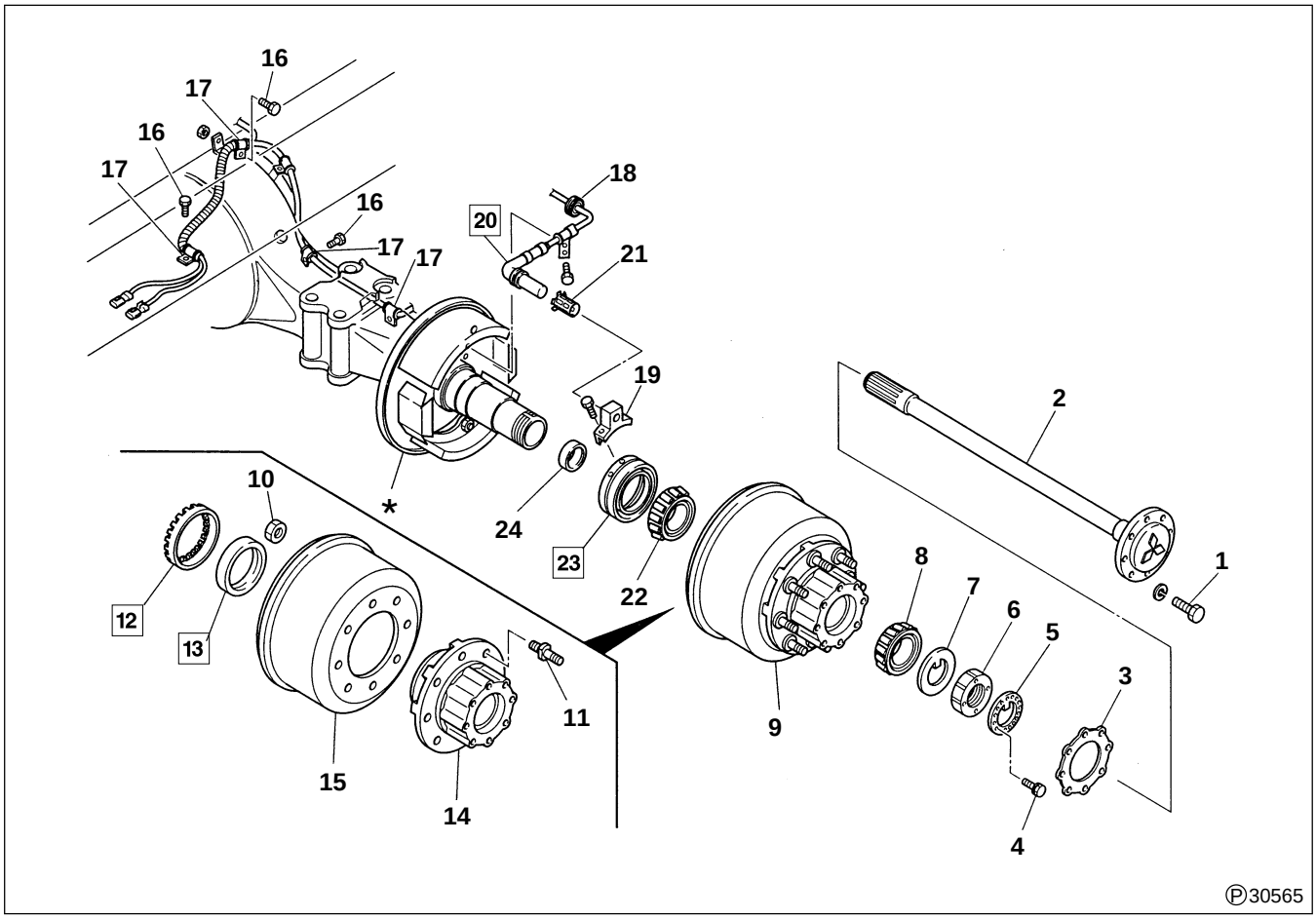

● **Disassembly sequence**

1 Bolt
2 Rear axle shaft
3 Gasket
4 Bolt
5 Lock plate
6 Lock nut
7 Lock washer
8 Outer bearing inner race
9 Hub and brake drum assembly
10 Nut
11 Hub bolt
12 Rotor
13 Oil seal
14 Wheel hub
15 Brake drum
16 Bolt
17 Clip
18 Grommet
19 Sensor holder
20 Wheel speed sensor
21 Spring spacer
22 Inner bearing inner race
23 Oil seal retainer
24 Oil seal

***** : Rear brake assembly

● **Assembly sequence**

Follow the disassembly sequence in reverse.

CAUTION

- **When removing or installing hub and brake drum assembly 9, handle rotor 12 with care to prevent damage. Also, do not damage oil seal 13 during assembly.**
- **Keep oil and grease off lining surface of rear brake assembly * and the inner surface of brake drum 15.**

Service standards

Unit : mm {in.}

Location	Maintenance item		Standard value	Limit	Remedy
12	Wobbling of rotor		0.1 {0.0039}	—	Replace
20	Wheel speed sensor	Resistance between terminals	950 to 1450	—	Replace
		Insulation resistance	1M or higher	—	Replace

Special tools

Unit : mm {in.}

Location	Tool name and shape	Part No.	Application
9	Anti-lock brake system hub stopper Note: Not being used in U.S. Market 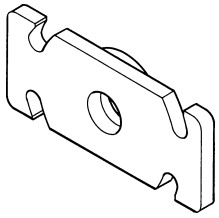 04677	MH062058	Installation of wheel hub & brake drum assembly
13	Anti-lock brake system oil seal installer 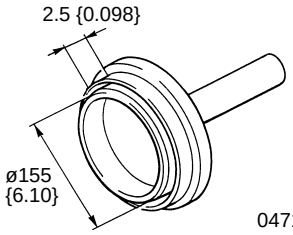 04719	MH062057	Press-fitting of oil seal

◆ Service procedure

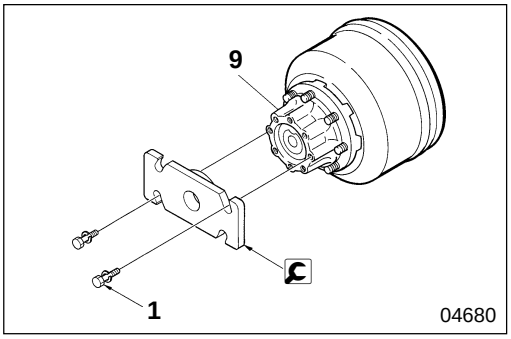

04680

9 Installation of wheel hub and brake drum assembly

- Using two bolts **1**, mount ABS hub stopper on wheel hub and brake drum assembly **9**.

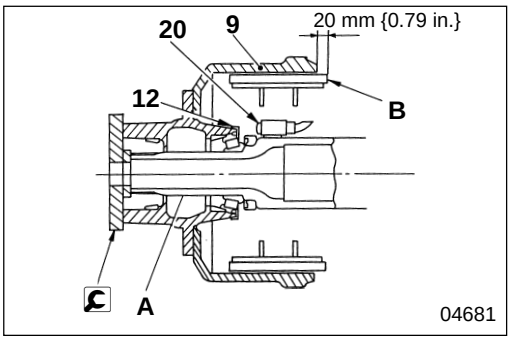

04681

- Mount wheel hub and brake drum assembly **9** on axle housing **A** and press until ABS Anti-lock brake system hub stopper contacts the end surface of the axle housing.
- Remove ABS Anti-lock brake system hub stopper, and mount outer bearing inner lace **8**, lock washer **7** and lock nut **6**. Tighten the lock nut slowly.

CAUTION

When installing wheel hub and brake drum assembly 9 without using ABS Anti-lock brake system hub stopper, mount the assembly without jiggling until brake lining B extends approximately 20 mm {0.79 in.} from the edge of brake drum. Then, tighten lock nut 6 slowly.

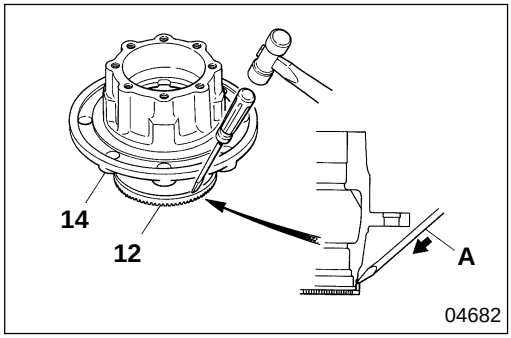

12 Rotor

[Removal]
Strike the outer edge of rotor **12** evenly with flat-tip screwdriver **A** to remove the rotor from the wheel hub.

CAUTION
Be careful not to damage wheel hub 14.

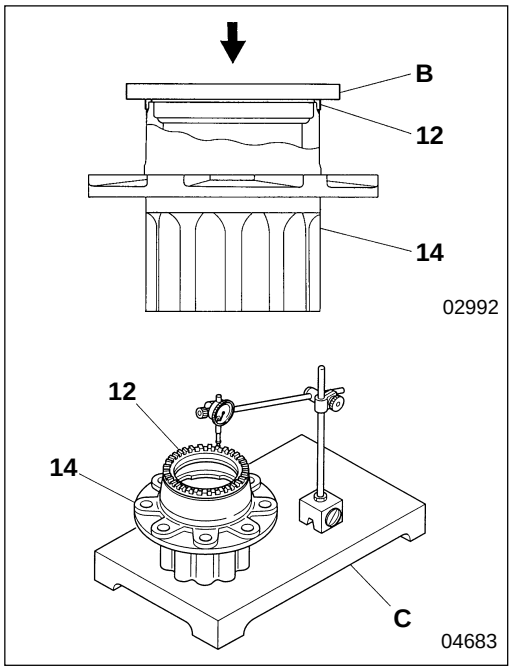

[Installation]
Heat rotor **12** to approximately 150°C {302°F}. Press the rotor evenly with iron plate **B** to press-fit the rotor to wheel hub **14**. Make sure there is no space between the rotor and wheel hub.

[Inspection]
- If the amount of wobbling exceeds the standard value, repeat the assembly procedure from the beginning.
- If the amount of wobbling exceeds the standard value after reassembly, replace defective parts.

C: Base

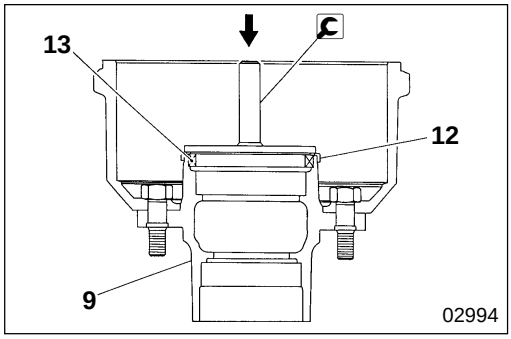

13 Installation of oil seal

NOTE
When hub and brake drum assembly 9 is removed for a service operation and if rotor 12 is still mounted on the wheel hub, use Anti-lock brake system oil seal installer to press-fit oil seal 13.

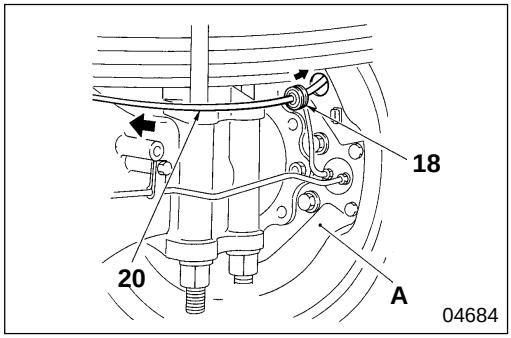

18 Installation of grommet

Mount grommet **18** on back plate **A**, and pull the harness of wheel speed sensor **20** to make sure there is no slack inside the wheel brake.

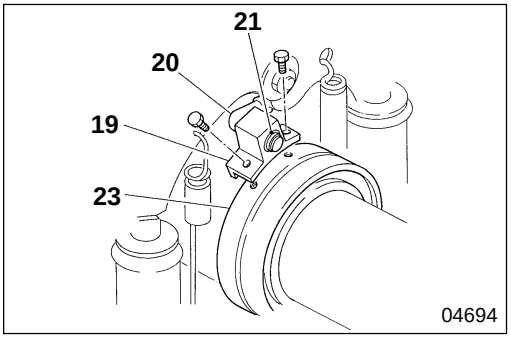

20 **Wheel speed sensor**

[Removal]

- With wheel speed sensor **20** and spring space **21** installed in sensor holder **19**, remove the sensor holder from oil seal retainer **23**.

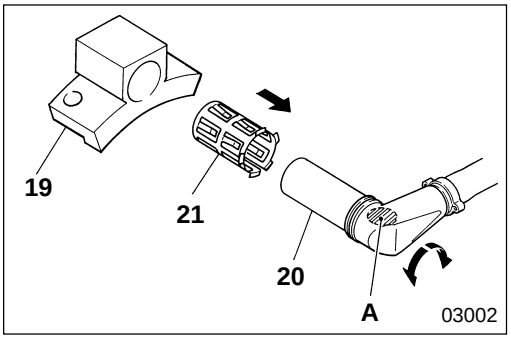

- Hold shaded section **A** of wheel speed sensor **20** with pliers, and remove the sensor by twisting it slightly in left and right directions.

CAUTION

- **When holding wheel speed sensor 20 with pliers, do not grip any section other than shaded area A in the diagram.**
- **When removing wheel speed sensor 20, do not apply force on the sensor, such as by hitting with a hammer, prying with a screwdriver or pulling the harness, since these actions can result in wire breakage.**
- **If wheel speed sensor 20 dismounts easily, replace spring spacer 21.**

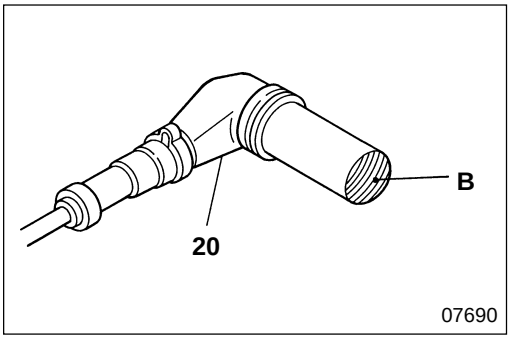

[Inspection]

Since pole piece section **B** is magnetized by the magnet inside wheel speed sensor **20**, it attracts metals. Do not allow the pole piece to collect metallic objects.

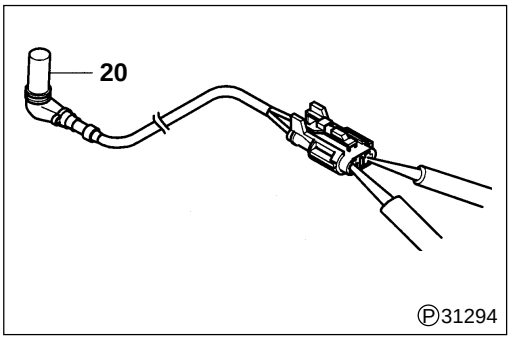

- Measure the resistance between the terminals of wheel speed sensor **20**.
  If the measured value deviates from the standard value, replace the wheel speed sensor.

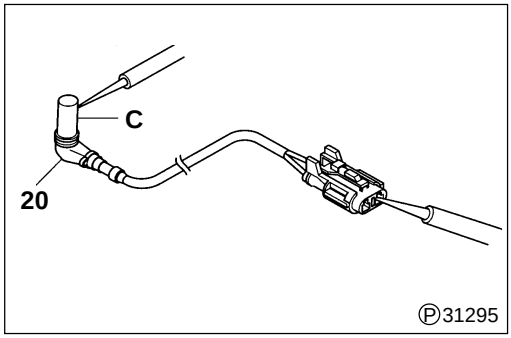

- Measure the insulation resistance between body **C** of wheel speed sensor **20** and each terminal.
  If the measured values deviate from the standard value, replace the wheel speed sensor.

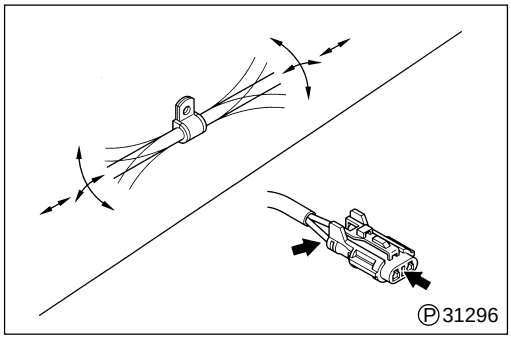

- To check for broken wires, remove the harness clamp section from the vehicle. Bend and extend the harness to check if there is any broken wire in the harness. Also, inspect the connector for proper contact.
  If a defect is found, replace wheel speed sensor **20**.

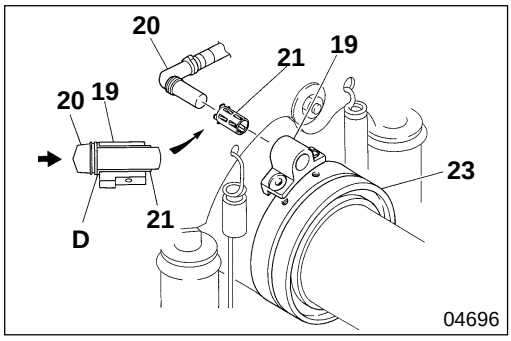

[Installation]

- Insert wheel speed sensor **20** from the back plate, and press until spring spacer **21** and stopper section **D** of the wheel speed sensor contacts sensor holder **19**.
- With wheel speed sensor **20** and spring spacer **21** installed in sensor holder **19**, mount the sensor holder on oil seal retainer **23**.

CAUTION

- **When installing wheel speed sensor 20, do not apply force on the sensor, such as by hitting with a hammer, prying with a screwdriver or pulling the harness, since these actions can result in wire breakage.**
- **Note that wheel speed sensor 20 is different for left and right wheels.**

Location	Harness connector color	Harness connector shape
Left wheel	Gray	Male
Right wheel	Black	Female

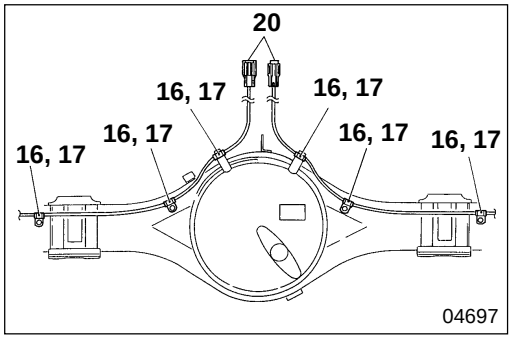

- Rear axle housing section
  Starting from the wheel brake side, secure the harness of wheel speed sensor **20** in place with clip **17** and bolt **16**. Make sure the harness does not interfere with other parts and there is no twist or slack in the harness.

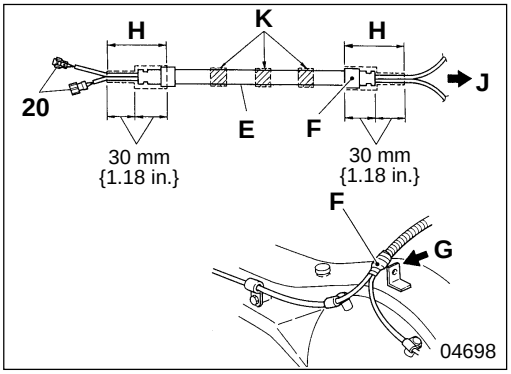

- Binding of harness
  - Gather the harnesses of left and right wheel speed sensors **20**, and bind with corrugated tube **E**.
  - Adjust the position of the corrugated tube **E** so that white tape section **F** is located at clip position **G** on the rear axle housing. Then, turn the corrugated tube so that the slit faces down. Wrap black tape (electric harness tape) on both ends **H** of the corrugated tube. The tape should be placed over the tube end and harness.
    J: Rear axle housing side
  - Wrap tape on the harnesses of wheel speed sensors **20** at sections **K** (three locations at equal intervals).

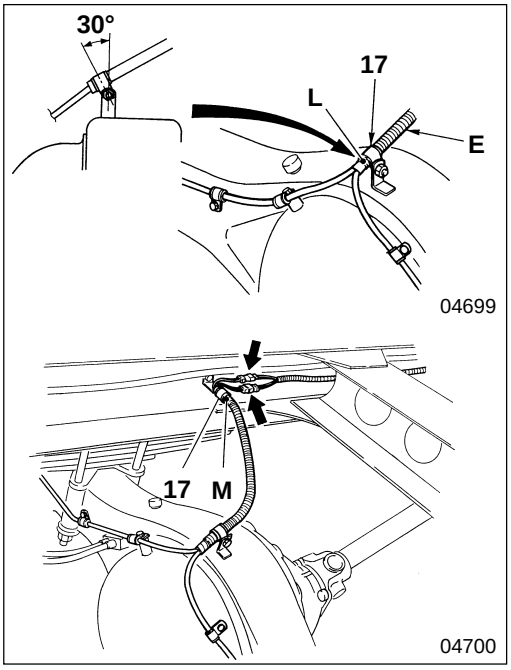

- Clamping of harness
  - Position section **L** of corrugated tube **E** so that it forms a 30° angle with clip **17**, then secure it to the rear axle housing.
  - Secure section **M** of the corrugated tube to the frame using the clip.
  - Connect the wheel speed sensor connector to the harness connector on the chassis side.

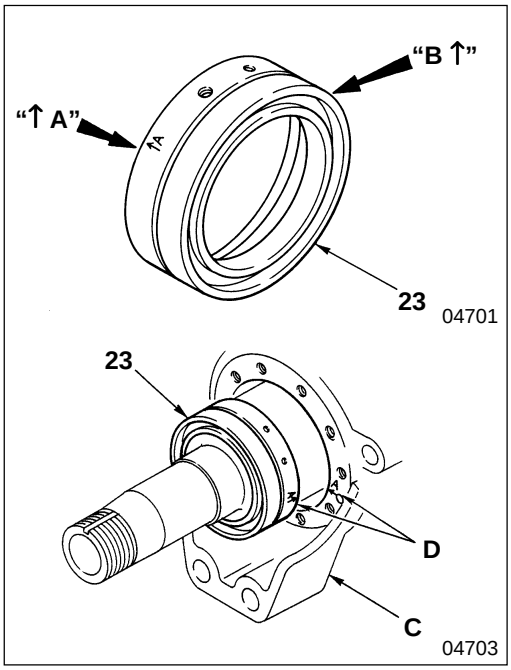

23 **Installation of oil seal retainer**

- Oil seal retainer **23** is stamped with identification marks "**A**", "**B**" and "↑"at the locations indicated in the diagram.
  A: For left wheel
  B: For right wheel
  ↑: For position alignment

- Check the identification mark ("**A**" or "**B**") to select the proper part. Align the arrow mark on the oil seal retainer with arrow mark **D** of anchor bracket **C**.

WHEEL SPEED SENSOR AND ROTOR < REAR AXLE >

< FM657 (Full-Air Brake) >

The following describes the service procedures for wheel speed sensors and rotors only.
Regarding the procedures for servicing other components, refer to Gr 27.

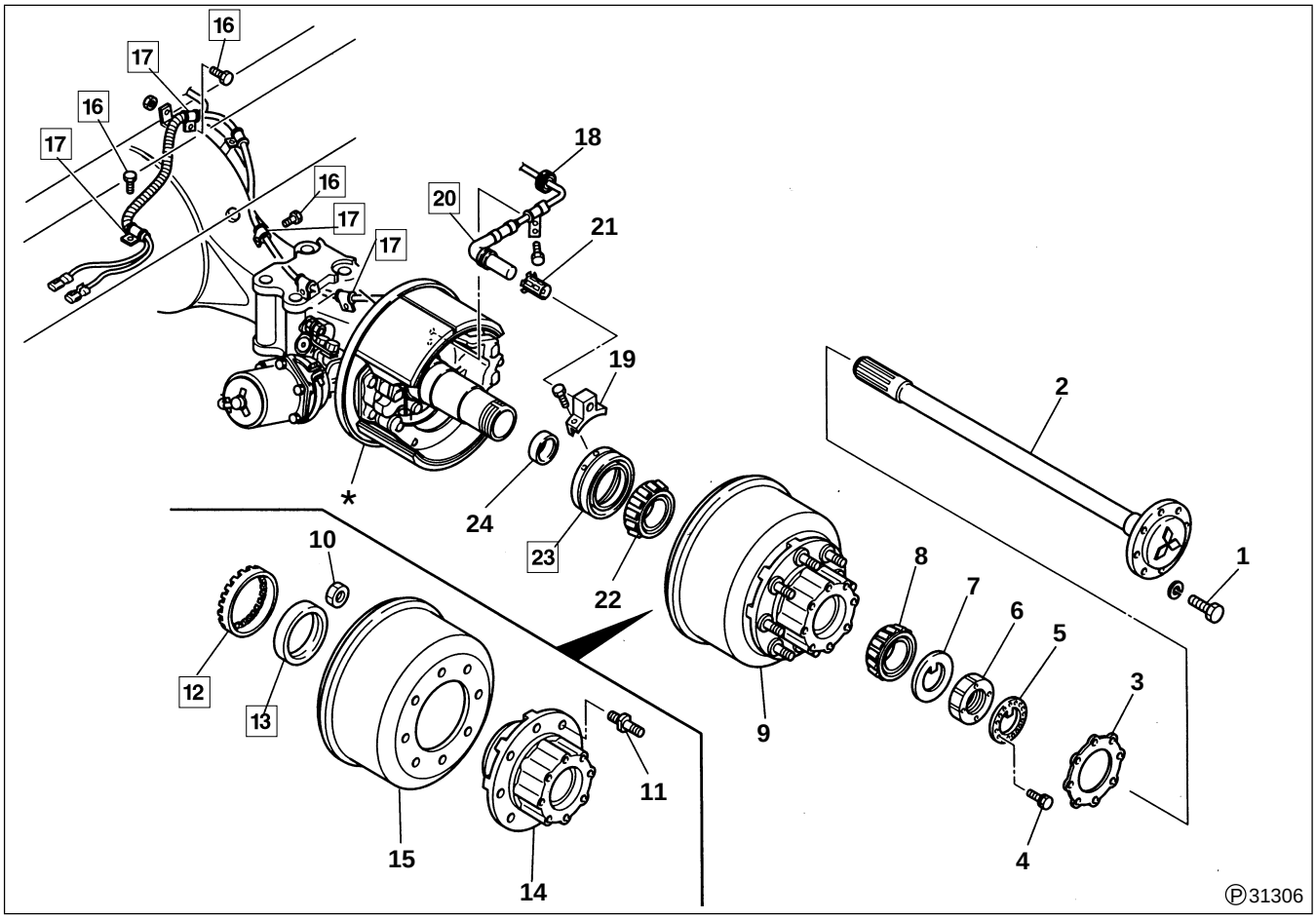

● **Disassembly sequence**

1 Bolt
2 Rear axle shaft
3 Gasket
4 Bolt
5 Lock plate
6 Lock nut
7 Lock washer
8 Outer bearing inner race
9 Hub and brake drum assembly
10 Nut
11 Hub bolt
12 Rotor
13 Oil seal
14 Wheel hub
15 Brake drum
16 Bolt
17 Clip
18 Grommet
19 Sensor holder
20 Wheel speed sensor
21 Spring spacer
22 Inner bearing inner race
23 Oil seal retainer
24 Oil seal

***** : Rear brake assembly

● **Assembly sequence**

Follow the disassembly sequence in reverse.

CAUTION

- **When removing or installing hub and brake drum assembly 9, handle rotor 12 with care to prevent damage. Also, do not damage oil seal 13 during assembly.**
- **Keep oil and grease off lining surface of rear brake assembly * and the inner surface of brake drum 15.**

Service standards

Unit : mm {in.}

Location	Maintenance item		Standard value	Limit	Remedy
12	Wobbling of rotor		0.1 {0.0039}	—	Replace
20	Wheel speed sensor	Resistance between terminals	1570 to 1980	—	Replace
		Insulation resistance	1M or higher	—	Replace

Special tools

Unit : mm {in.}

Location	Tool name and shape	Part No.	Application
9	ABS hub stopper Note: Not being used in U.S. Market 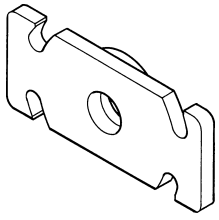 04677	MH062058	Installation of wheel hub & brake drum assembly
13	ABS oil seal installer 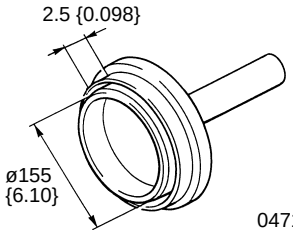 04719	MH062057	Installation of oil seal

◆ Service procedure

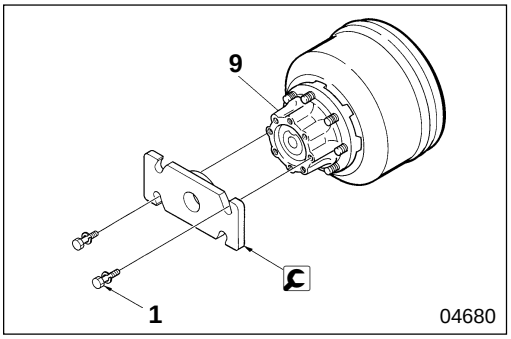

04680

9 **Installation of wheel hub and brake drum assembly**

- Using two bolts **1**, mount ABS hub stopper on wheel hub and brake drum assembly **9**.

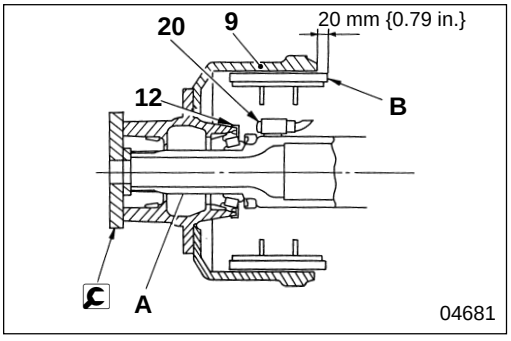

04681

- Mount wheel hub and brake drum assembly **9** on axle housing **A** and press until ABS hub stopper contacts the end surface of the axle housing.
- Remove ABS hub stopper, and mount outer bearing inner lace **8**, lock washer **7** and lock nut **6**. Tighten the lock nut slowly.

CAUTION

When installing wheel hub and brake drum assembly 9 without using ABS hub stopper, mount the assembly without jiggling until brake lining B extends approximately 20 mm {0.79 in.} from the edge of brake drum. Then, tighten lock nut 6 slowly.

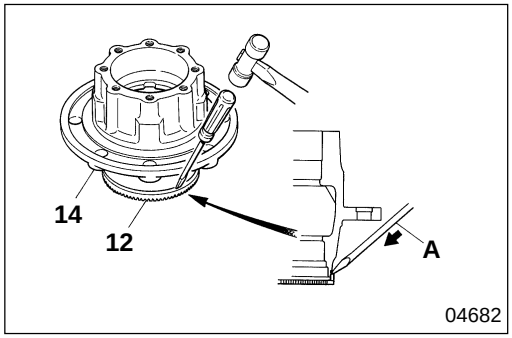

12 Rotor

[Removal]
Strike the outer edge of rotor **12** evenly with flat-tip screwdriver **A** to remove the rotor from the wheel hub.

CAUTION
Be careful not to damage wheel hub 14.

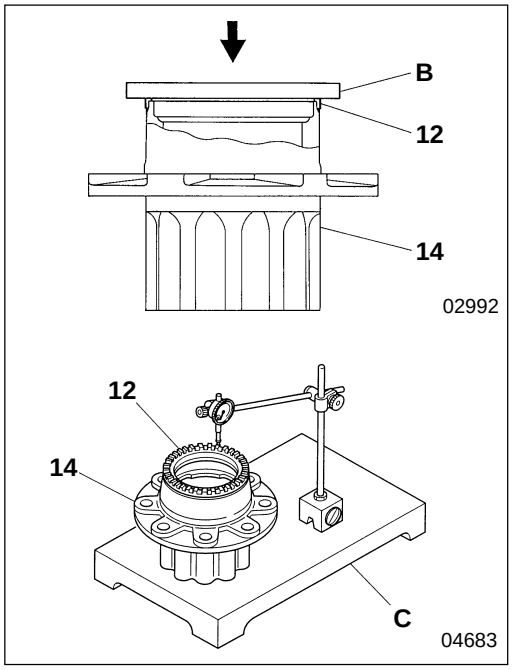

[Installation]
Heat rotor **12** to approximately 150°C {302°F}. Press the rotor evenly with iron plate **B** to press-fit the rotor to wheel hub **14**. Make sure there is no space between the rotor and wheel hub.

[Inspection]
- If the amount of wobbling exceeds the standard value, repeat the assembly procedure from the beginning.
- If the amount of wobbling exceeds the standard value after reassembly, replace defective parts.

C: Base

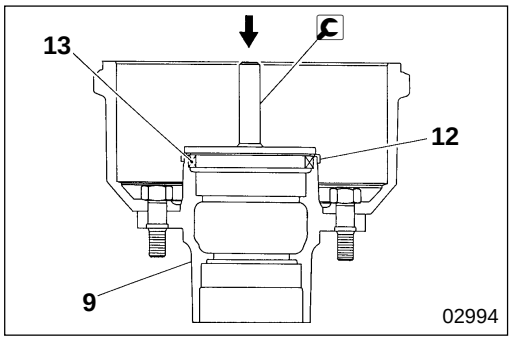

13 Installation of oil seal

NOTE
When hub and brake drum assembly 9 is removed for a service operation and if rotor 12 is still mounted on the wheel hub, use Anti-lock brake system oil seal installer to press-fit oil seal 13.

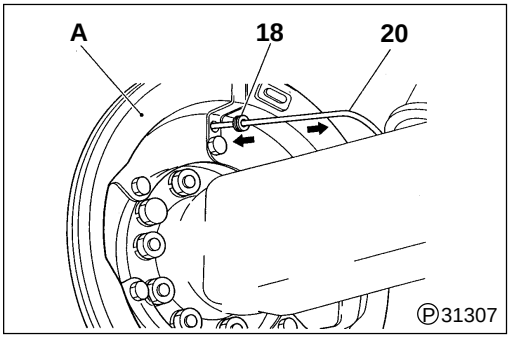

18 **Installation of grommet**

Mount grommet **18** on back plate **A**, and pull the harness of wheel speed sensor **20** to make sure there is no slack inside the wheel brake.

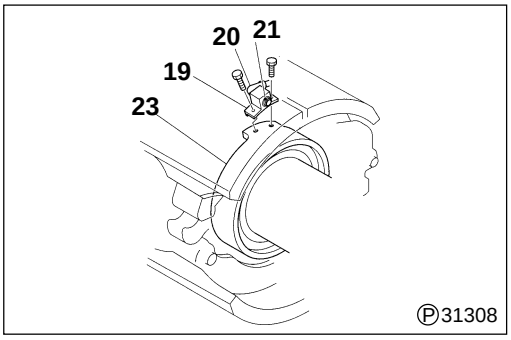

20 **Wheel speed sensor**

[Removal]

- Remove the return spring. Gr 35A
- With wheel speed sensor **20** and spring space **21** installed in sensor holder **19**, remove the sensor holder from oil seal retainer **23**.

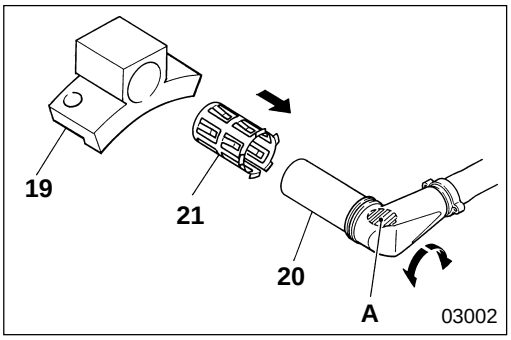

- Hold shaded section **A** of wheel speed sensor **20** with pliers, and remove the sensor by twisting it slightly in left and right directions.

CAUTION

- **When holding wheel speed sensor 20 with pliers, do not grip any section other than shaded area A in the diagram.**
- **When removing wheel speed sensor 20, do not apply force on the sensor, such as by hitting with a hammer, prying with a screwdriver or pulling the harness, since these actions can result in wire breakage.**
- **If wheel speed sensor 20 dismounts easily, replace spring spacer 21.**

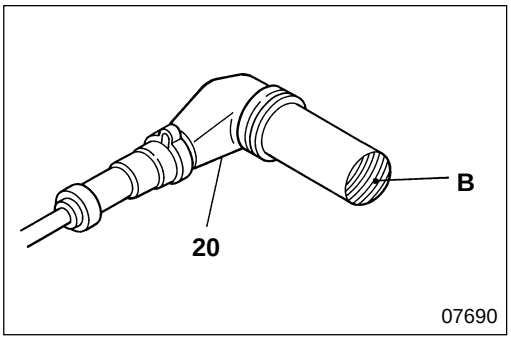

[Inspection]

- Since pole piece section **B** is magnetized by the magnet inside wheel speed sensor **20**, it attracts metals. Do not allow the pole piece to collect metallic objects.

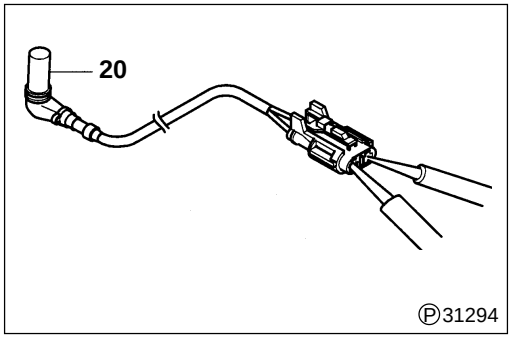

- Measure the resistance between the terminals of wheel speed sensor **20**.
  If the measured value deviates from the standard value, replace the wheel speed sensor.

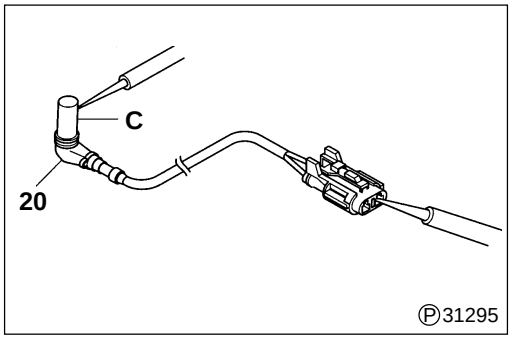

- Measure the insulation resistance between body **C** of wheel speed sensor **20** and each terminal.
  If the measured values deviate from the standard value, replace the wheel speed sensor.

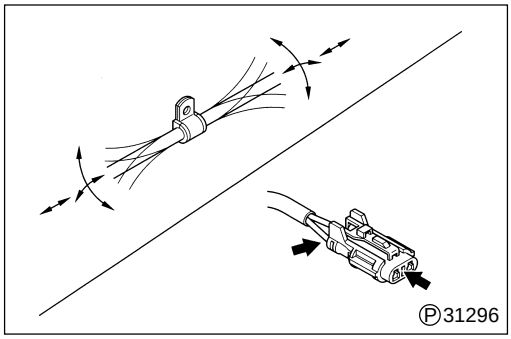

- To check for broken wires, remove the harness clamp section from the vehicle. Bend and extend the harness to check if there is any broken wire in the harness. Also, inspect the connector for proper contact.
  If a defect is found, replace wheel speed sensor **20**.

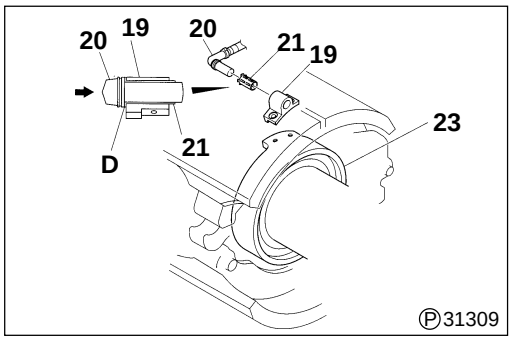

[Installation]

- Insert wheel speed sensor **20** from the back plate, and press until spring spacer **21** and stopper section **D** of the wheel speed sensor contacts sensor holder **19**.
- With wheel speed sensor **20** and spring spacer **21** installed in sensor holder **19**, mount the sensor holder on oil seal retainer **23**.

CAUTION

- **When installing wheel speed sensor 20, do not apply force on the sensor, such as by hitting with a hammer, prying with a screwdriver or pulling the harness, since these actions can result in wire breakage.**
- **Note that wheel speed sensor 20 is different for left and right wheels.**

Location	Harness connector color	Harness connector shape
Left wheel	Gray	Male
Right wheel	Black	Female

- Install the return spring. Gr 35A

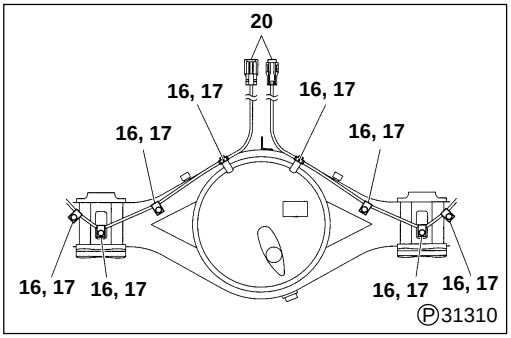

- Rear axle housing section
  Starting from the wheel brake side, secure the harness of wheel speed sensor **20** in place with clip **17** and bolt **16**. Make sure the harness does not interfere with other parts and there is no twist or slack in the harness.

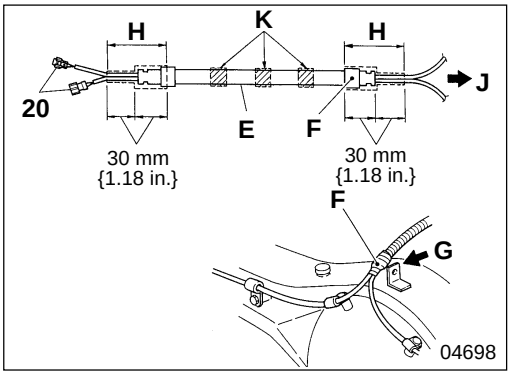

- Binding of harness
  - Gather the harnesses of left and right wheel speed sensors **20**, and bind with corrugated tube **E**.
  - Adjust the position of the corrugated tube **E** so that white tape section **F** is located at clip position **G** on the rear axle housing. Then, turn the corrugated tube so that the slit faces down. Wrap black tape (electric harness tape) on both ends **H** of the corrugated tube. The tape should be placed over the tube end and harness.
    J: Rear axle housing side
  - Wrap tape on the harnesses of wheel speed sensors **20** at sections **K** (three locations at equal intervals).

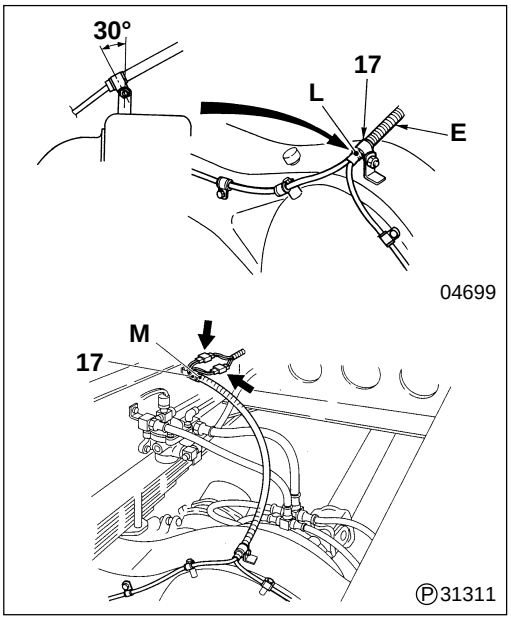

- Clamping of harness
  - Position section **L** of corrugated tube **E** so that it forms a 30° angle with clip **17**, then secure it to the rear axle housing.
  - Secure section **M** of the corrugated tube to the frame using the clip.
  - Connect the wheel speed sensor connector to the harness connector on the chassis side.

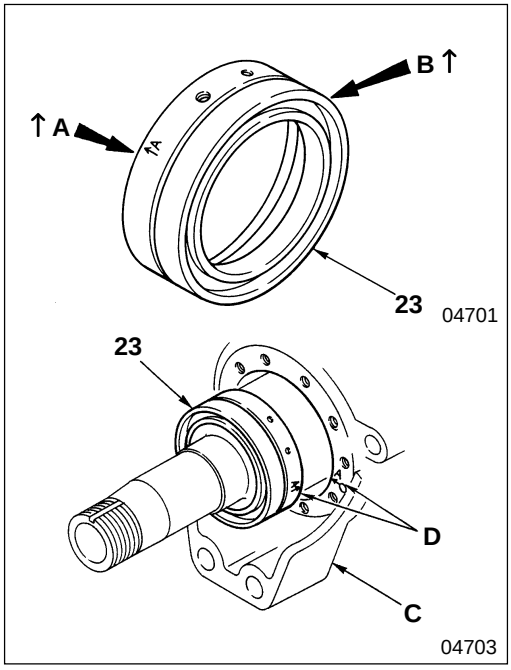

23 **Installation of oil seal retainer**

- Oil seal retainer **23** is stamped with identification marks "**A**", "**B**" and "↑" at the locations indicated in the diagram.
  A: For left wheel
  B: For right wheel
  ↑: For position alignment

- Check the identification mark ("**A**" or "**B**") to select the proper part. Align the arrow mark on the oil seal retainer with arrow mark **D** of anchor bracket **C**.

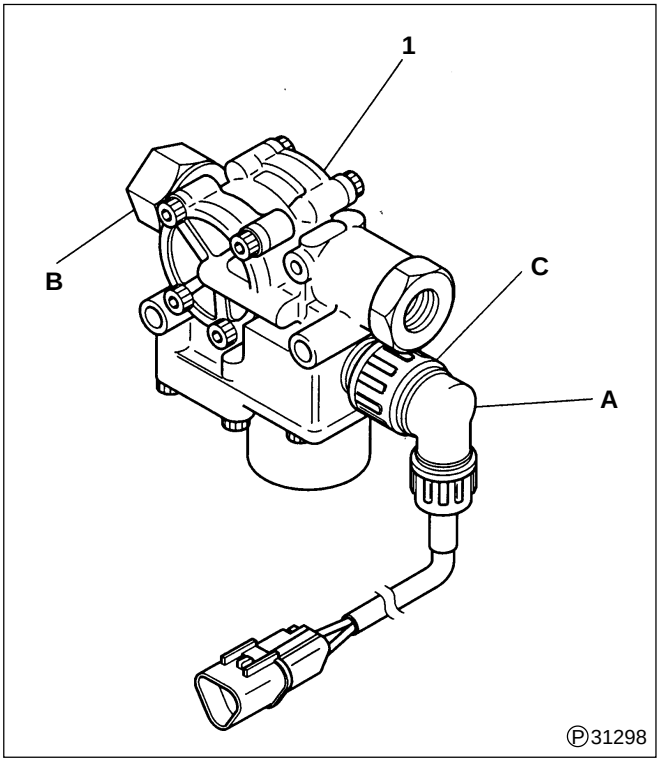

● **Disassembly sequence**

1: Control valve

A: Sub-harness
B: Connector < air-over hydraulic brake >
C: Connector < full-air brake >

● **Assembly sequence**

Follow the disassembly sequence in reverse.

CAUTION⚠

- **Control valve 1 cannot be disassembled. If it is defective, replace.**
- **Do not disconnect sub-harness A from control valve 1.**
- **In the air-over hydraulic brake system, connector B at the outlet (port 2) and connector C at the inlet (port 1) cannot be disassembled. Do not remove these connectors from control valve 1.**

ELECTRIC CIRCUIT AND PART INSTALLATION LOCATIONS

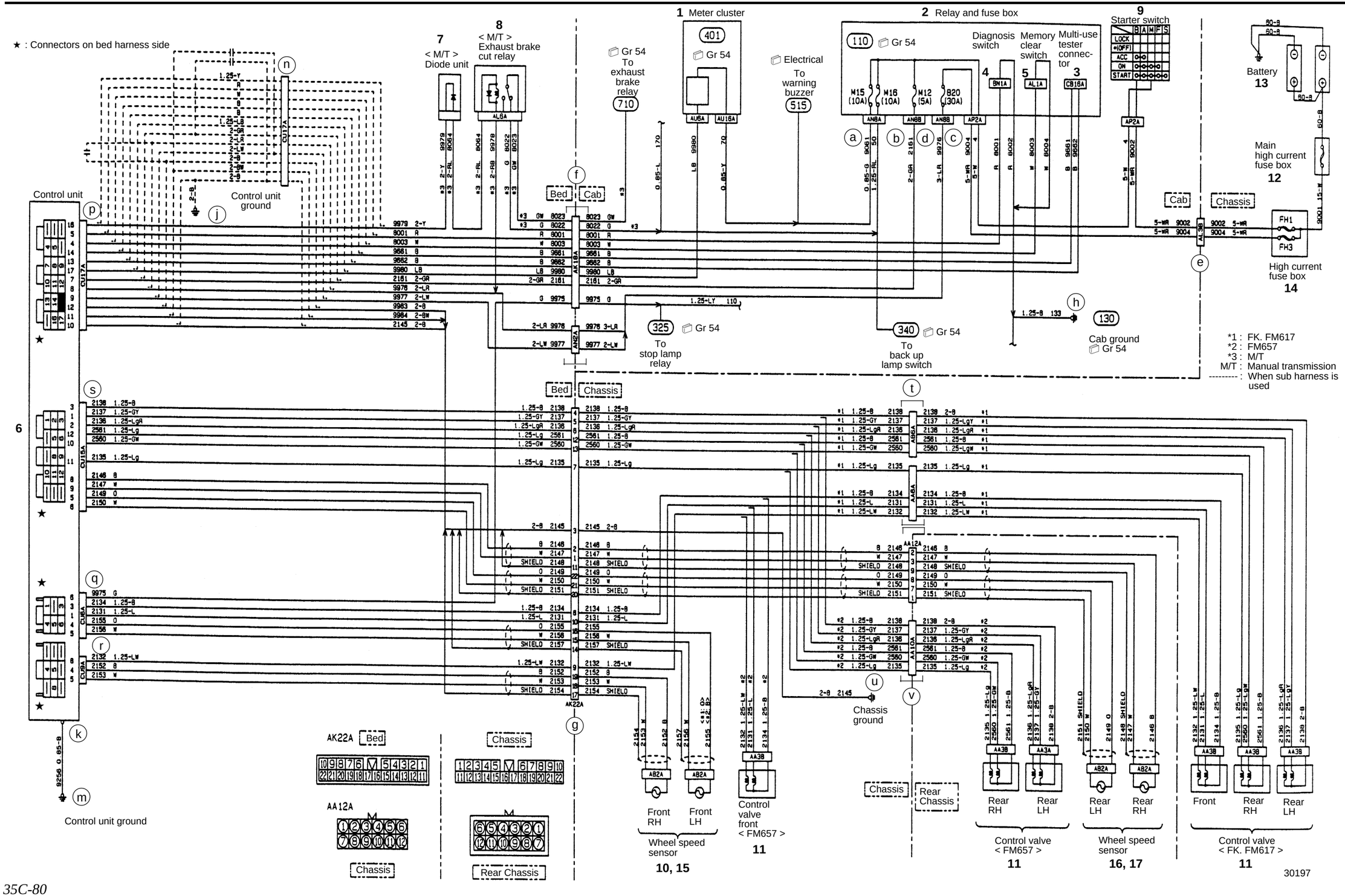

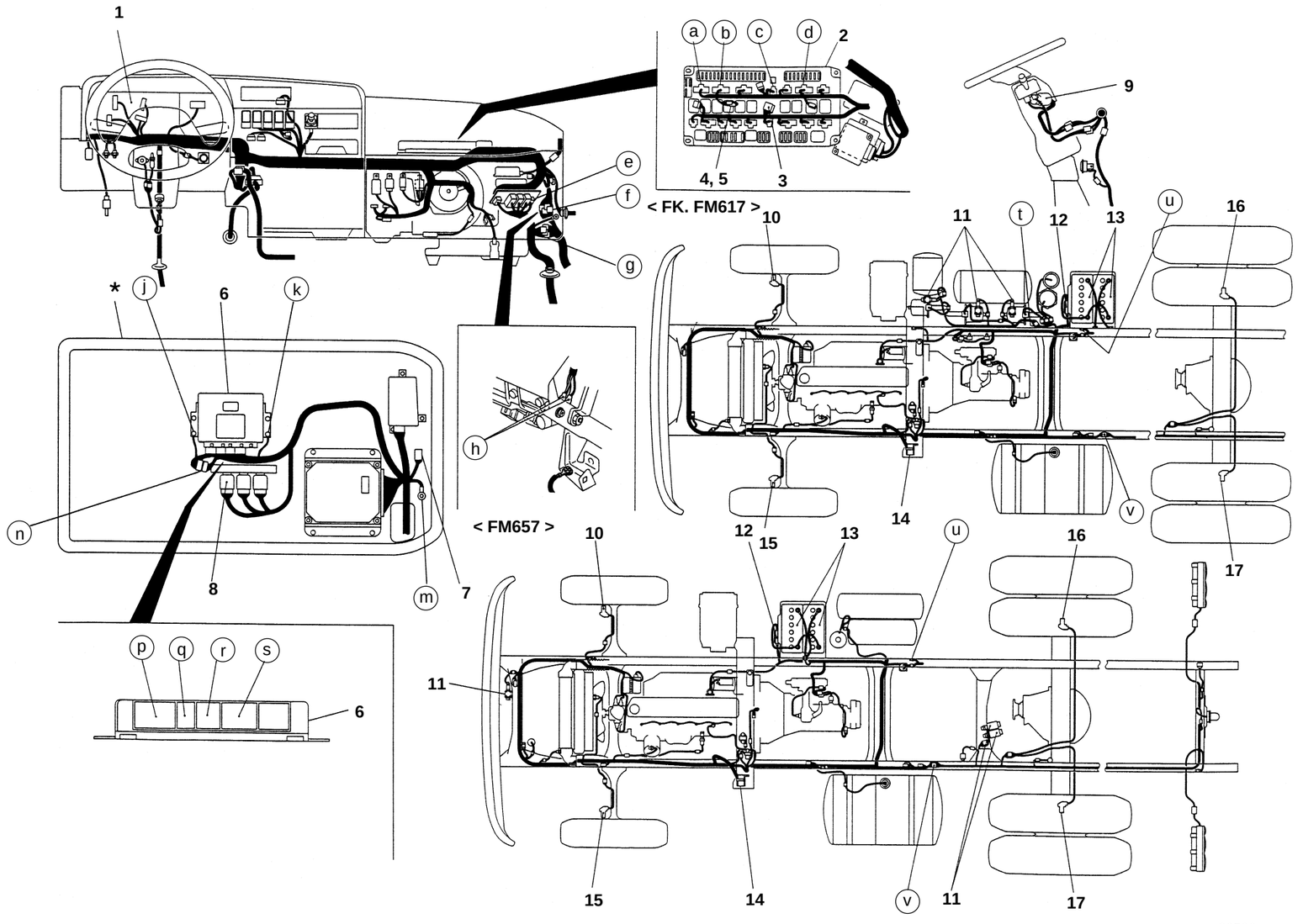

1 Meter cluster
2 Relay and fuse box
3 Multi-use tester connector
4 Diagnosis switch
5 Memory clear switch
6 Control unit
7 Diode unit < M/T >
8 Exhaust brake cut relay < M/T >
9 Starter switch
10 Wheel speed sensor, front RH
11 Control valve
12 Main high current fuse box
13 Battery
14 High current fuse box
15 Wheel speed sensor, front LH
16 Wheel speed sensor, rear RH
17 Wheel speed sensor, rear LH

***** : Bed under box (behind assistant driver's seat side)
M/T : Manual transmission

MITSUBISHI
FUSO

FK.FM
Service Manual

Group 35A
Brake
< Air Over Hydraulic Brake >

Table of Contents

MITSUBISHI FUSO TRUCK OF AMERICA, Inc.

BACK HOME

Pub No. TWME9503-35A

GROUP 35A BRAKE (AIR OVER HYDRAULIC BRAKE)

SPECIFICATIONS 2

STRUCTURE AND OPERATION 4

TROUBLESHOOTING 30

INSPECTION AND ADJUSTMENT MOUNTED IN VEHICLE
- Replacement of Brake Fluid 34
- Air bleeding of Brake System 36
- Inspection and Adjustment of Brake Pedal Free Play 38
- Thickness Inspection and Replacement of Brake Lining 39
- Inspection of Brake Shoe Clearance 39
- Inspection and Maintenance of Air Dryer 40

HANDLING OF CONNECTOR 42

BRAKE PEDAL 44

DUAL BRAKE VALVE 46

BRAKE BOOSTER (AIRMASTER) 53

FRONT WHEEL BRAKE 60

REAR WHEEL BRAKE 70

AIR COMPRESSOR 80

AIR DRYER 88

AIR PRESSURE GOVERNOR 92

FLUID TANK 94

CHECK VALVE 95

SAFETY VALVE 95

SUPPLY VALVE 96

EXHAUST BRAKE SYSTEM 98

SPECIFICATIONS

< Equipment for Service Brake >

Item			Specifications
Brake booster (Airmaster)	Power cylinder Inner diameter×Stroke mm {in.}	Short type	ø114.3×79 {4.50×3.11}
		Long type	ø114.3×114 {4.50×4.49}
	Hydraulic cylinder Inner diameter×Stroke mm {in.}	Short type	ø23.8×76 {0.94×2.99}
		Long type	ø23.8×111 {0.94×4.37}
	Operating starting pressure kPa {lbf/in^2, kgf/cm^2}		18±9.8 {2.6±1.4, 0.18±0.1}
	Residual pressure kPa {lbf/in^2, kgf/cm^2}		78 to 125 {11 to 18, 0.8 to 1.3}
	Manufacturer		JIDOSHA KIKI
Air compressor	Type		Water-cooled one cylinder
	Cylinder diameter×Stroke mm {in.}		ø80×40 {3.15×1.57}
	Cylinder capacity cm^3 {cu.in.}		201 {12.3}
	Manufacturer		SANWA SEIKI
Air dryer	Type		DR-31
	Heater capacity V-W		12-60
	Thermostat operating temperature °C {°F}	ON	7±4.0 {45±7.2}
		OFF	25±5.0 {77±9.0}
	Purge chamber capacity L {qts}		1.4 {1.48}
	Required time for recycling desiccant Sec		50
	Manufacturer		NABCO
Air tank	Capacity L {qts}		8+9+13 {8.45+9.50+13.7}

< Wheel Brake >

Item			Specifications
Brake type	Front		Drum brake (2-leading type)
	Rear		Drum brake (Dual 2-leading type)
Brake drum inner diameter		mm {in.}	ø400 {15.7}
Wheel cylinder inner diameter	Front	mm {in.}	ø34.93 {1.38}
	Rear	mm {in.}	ø38.10 {1.50}
Brake lining Width×Thickness	Front	mm {in.}	120×9.5 {4.72×0.37}
	Rear	mm {in.}	155×15.4 {6.10×0.61}

< Exhaust Brake >

Item	Specifications
Control type	Combined electric and air
Valve type	Butterfly valve

M E M O

Brake System

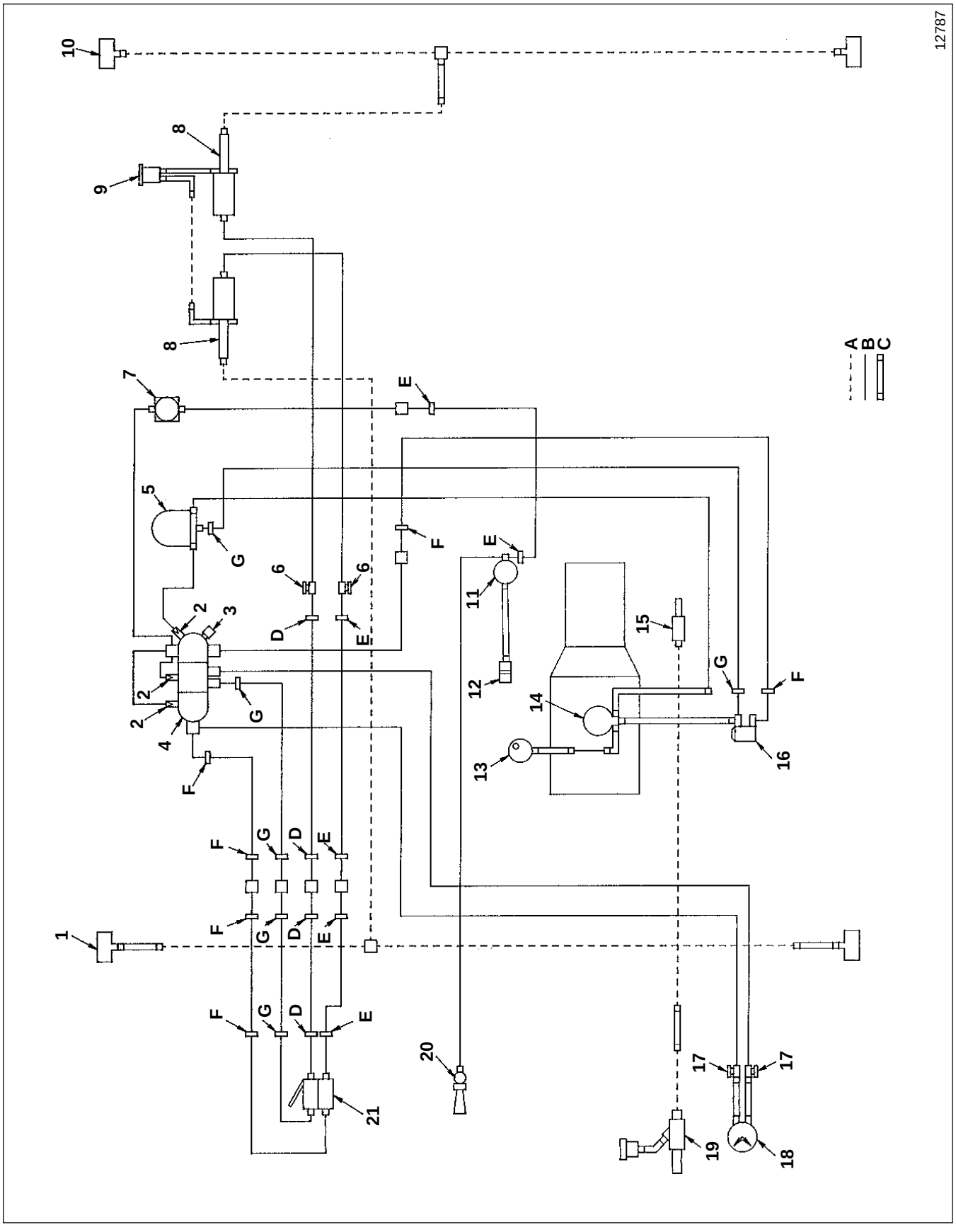

1 Front wheel cylinder
2 Check valve
3 Safety valve
4 Air tank
5 Air dryer
6 Stop lamp switch
7 Supply valve
8 Airmaster
9 Fluid tank
10 Rear wheel cylinder
11 3-way magnetic valve
12 Exhaust brake unit
13 Air cleaner
14 Air compressor
15 Power cylinder
16 Air pressure governor
17 Low air pressure switch
18 Air pressure gauge
19 Clutch master cylinder
20 Air horn
21 Dual brake valve

A : Fluid line
B : Air line
C : Hose
D : Yellow identification tape
E : White identification tape
F : Blue identification tape
G : Red identification tape

- The brake system is an air over hydraulic, all-wheel brake type consisting of separate front and rear systems.
- The servo system is fitted with airmasters **8**.
- An exhaust brake system, of the exhaust pipe opening and closing valve type, is fitted as a sub-brake system.

Dual Brake Valve

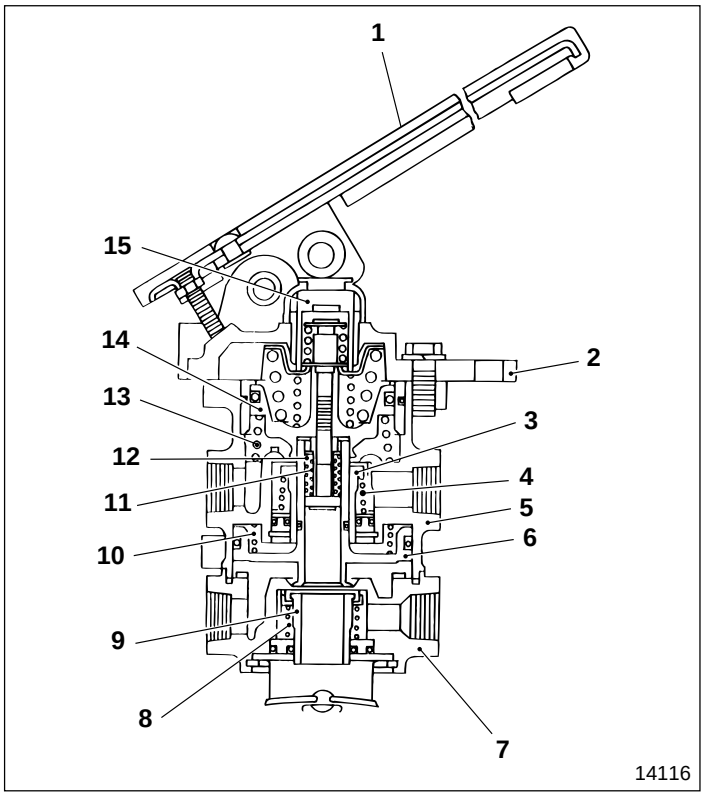

1 Brake pedal
2 Plate assembly
3 Primary inlet valve
4 Primary valve spring
5 Body
6 Relay piston
7 Cover
8 Secondary valve spring
9 Secondary inlet valve
10 Relay piston spring
11 Inner spring
12 Outer spring
13 Primary piston spring
14 Primary piston
15 Plunger

The dual brake valve controls the braking force of the vehicle by feeding pressurized air to the airmaster in accordance with the brake pedal depression angle of brake pedal **1**.

● When brake not operating

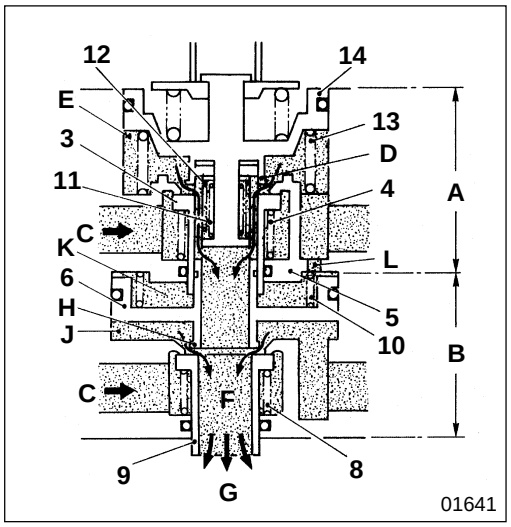

- The repercussive forces of primary valve springs **4**, secondary valve spring **8** seat primary inlet valve **3** at primary side **A**, and inlet valve **9** at secondary side **B**, on their respective seats. This shuts off air **C** from the air tank to maintain airtightness.
- The repercussive force of primary piston spring **13** raises primary piston **14** to its upper position. Exhaust valve seat **D** opens and chamber **E** is open to atmosphere **G** via chamber **F**.
- Since the repercussive forces of inner spring **11** and outer spring **12** is stronger than the repercussive force of relay piston spring **10**, relay piston **6** is raised to its upper position and exhaust valve seat **H** is opened. This opens chamber **J** to atmosphere **G** via chamber **F**.
  Chamber **E** at the primary side and chamber **K** at the upper part of relay piston **6** at the secondary side are connected via passage port **L** of body **5**.

● When depressing brake pedal (before braking pressure is generated)

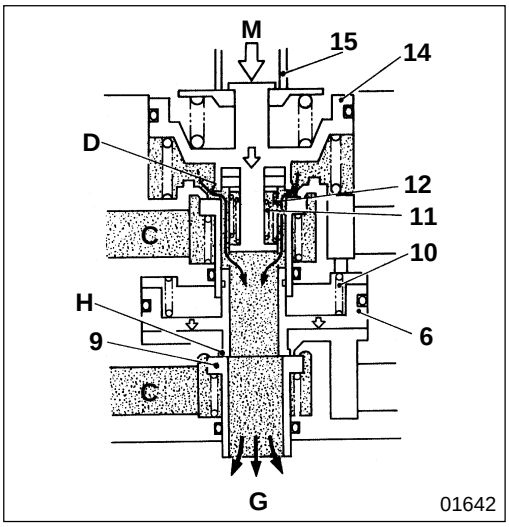

- Depressing the brake pedal (illustrated as pedal action **M**), forces down primary piston **14** via plunger **15**.
- Forcing down primary piston **14** changes the balance between the repercussive forces of inner spring **11** and outer spring **12**, and the repercussive force of relay piston spring **10**, forcing down relay piston **6**. This seats the relay piston on secondary inlet valve **9** and closes exhaust valve seat **H**.
- This closes the secondary side exhaust passage; however, primary side exhaust valve seat **D** remains open. No braking pressure is generated at either primary or secondary sides.

● When depressing brake pedal (braking pressure is generated)

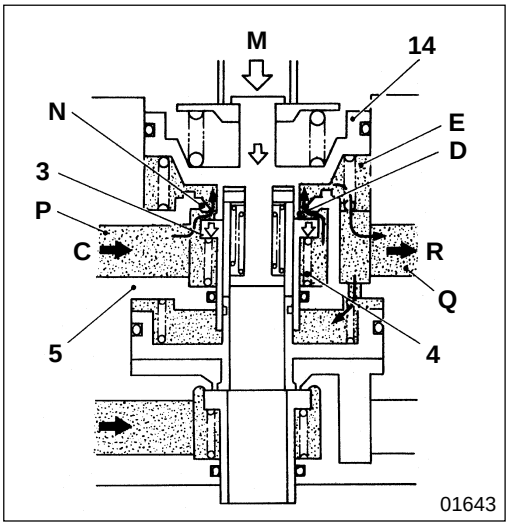

Primary side

- As the brake pedal is depressed further (illustrated as brake pedal action **M**), primary piston **14** is forced down until it is seated on primary inlet valve **3**, closing exhaust valve seat **D**.
- Primary inlet valve **3** is forced down, compressing primary valve spring **4**, and supply valve seat **N** of body **5** separates from the primary inlet valve. The air in chamber **P** flows into chamber **E** and is fed to rear brake system **R** via discharge port **Q** as braking pressure.

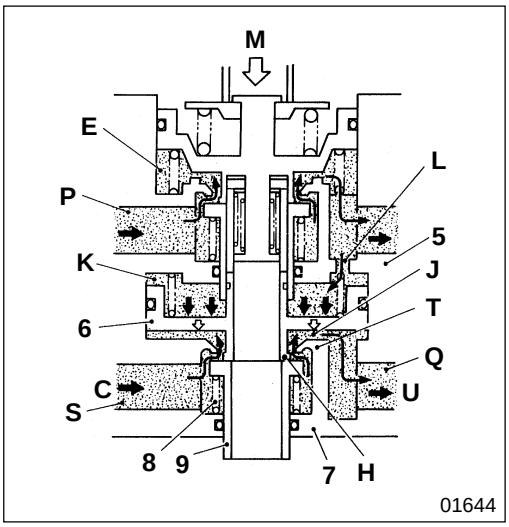

Secondary side

- The air at the primary side flows into chamber **K** via passage port **L** of body **5**.
- The air fed into chamber **K** acts on the upper part of relay piston **6** to force down the relay piston and compress secondary valve spring **8**, forcing down secondary inlet valve **9**.
- This separates supply valve seat **T** and secondary inlet valve **9** of cover **7**.
- The air in supply port chamber **S** flows into chamber **J** and is fed to front brake system **U** via discharge port **Q** as braking pressure.

● Stabilization of braking pressure

When the brake pedal remains depressed at the specified depression angle, the braking air pressure stabilizes at the pressure corresponding to the brake pedal depression angle.

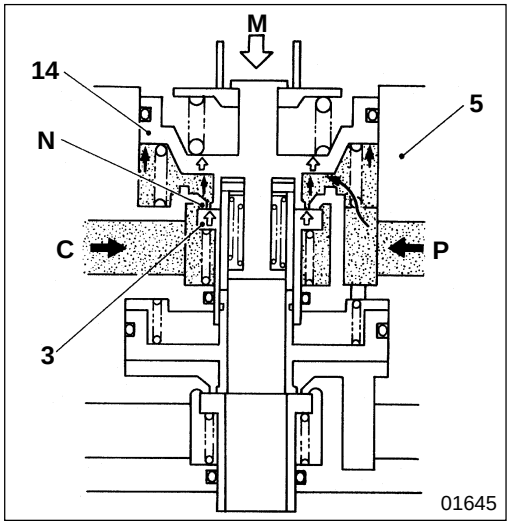

Primary side

- The braking air pressure fed under the bottom of primary piston **14** raises the primary piston and primary inlet valve **3** together in tandem.
- Primary inlet valve **3** makes contact with supply valve seat **N** of body **5**, then the supply of air **C** from the air tank ceases and the increases in the braking air pressure stops. This stabilizes braking pressure **R** for the rear brake system.

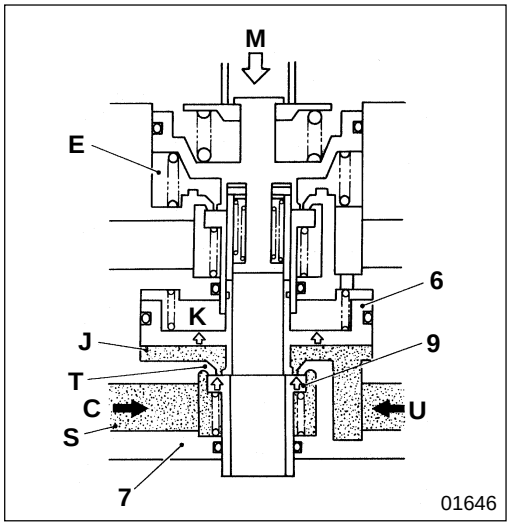

Secondary side

- As the braking pressure (pressure in chamber **J**) for the front brake system balances the pressures in chambers **E** and **K**, the force raising relay piston **6** disappears, and the relay piston rises in tandem with secondary inlet valve **9**.
- Secondary inlet valve **9** makes contact with supply valve seat **T** of cover **7**, then the supply of air from supply port chamber **S** to chamber **J** ceases. This stabilizes brake pressure **U** for the front system.

● Release of brake pressure

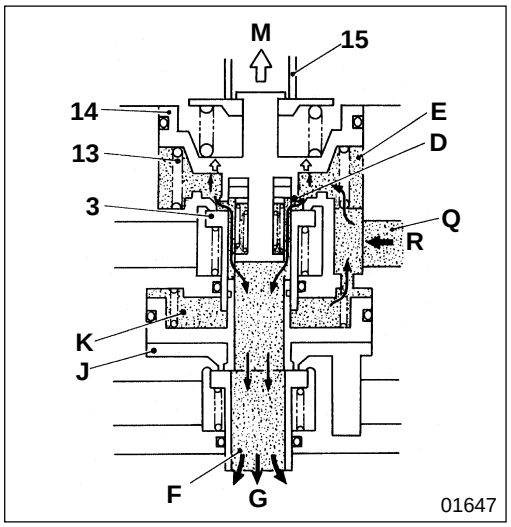

Primary side

When the brake pedal is released (illustrated as brake pedal action **M**), primary piston spring **13** and air pressure **R** at discharge port **Q** (pressure in chamber **E**) raise plunger **15** and primary piston **14**. Then, exhaust valve seat **D** at the lower end of the primary piston separates from primary inlet valve **3**. The air pressure of the rear brake system flows through chamber **E** to be discharged from exhaust passage chamber **F** into atmosphere **G**.

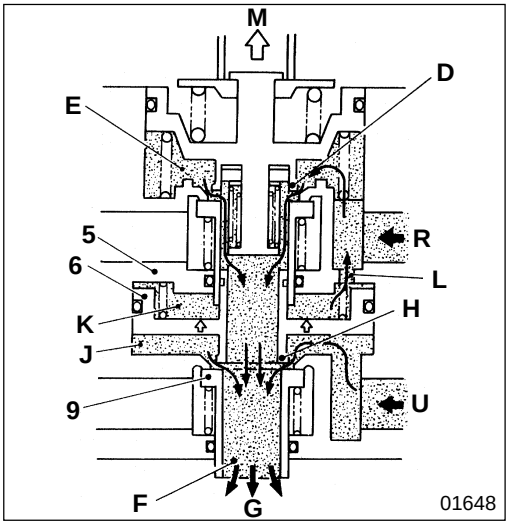

Secondary side

- As the air pressure in the rear brake system drops, the air pressure in chamber **K** is discharged via passage port **L** of body **5**, and chambers **E**, **F** into atmosphere **G**.
- This changes the air pressure balance between chambers **K** and **J**. The air pressure in chamber **J** raises relay piston **6**, and exhaust valve seat **H** at the lower end of the relay piston separates from secondary inlet valve **9**. Air pressure **U** in the front brake system is discharged from exhaust passage chamber **F** into atmosphere **G**.

● When abnormality occurs

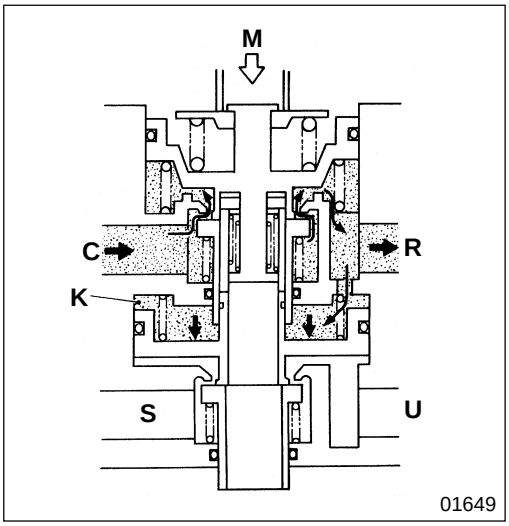

Operation when the air pipe of the front brake system fails

- The primary side operates the same as normal, generating braking pressure in rear brake system **R**.
- At the secondary side, even if the primary side generates air pressure in chamber **K**, braking pressure is not generated in front brake system **U**, since no air pressure is generated in supply port **S**.

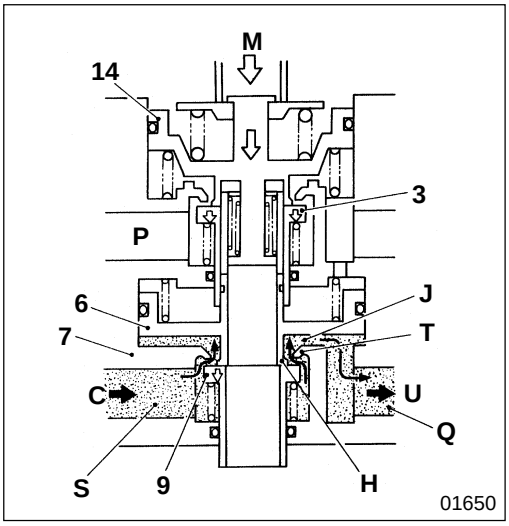

Operation when the air pipe of the rear brake system fails

- In the rear brake system, air pressure is not generated up to supply port **P**. Therefore, even if the brake pedal is depressed (causing primary piston **14** to force down primary inlet valve **3**), braking pressure is not generated.
- If the brake pedal is depressed further (illustrated as brake pedal action **M**), primary piston **14** makes contact with relay piston **6** and they force down secondary inlet valve **9**.
- This action separates supply valve seat **T** of cover **7** from secondary inlet valve **9**. The air pressure flows into chamber **J** from chamber **S** and is fed to front brake system **U** via discharge port **Q** as braking pressure.

Brake Booster (Airmaster)

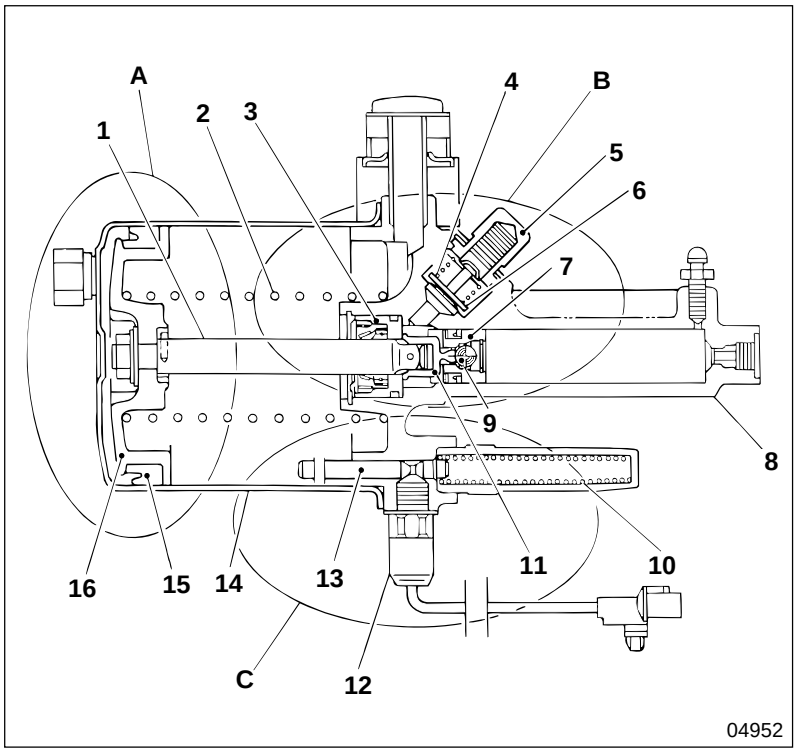

1 Push rod
2 Return spring
3 Retainer assembly
4 Spring
5 Connector
6 Residual valve
7 Hydraulic piston
8 Body assembly
9 Steel ball
10 Return spring
11 Yoke
12 Stroke switch
13 Rod
14 Cylinder shell
15 Cup packing
16 Piston plate

A : Power cylinder area
B : Hydraulic piston area
C : Power piston stroke detection switch area

● **Power cylinder area**

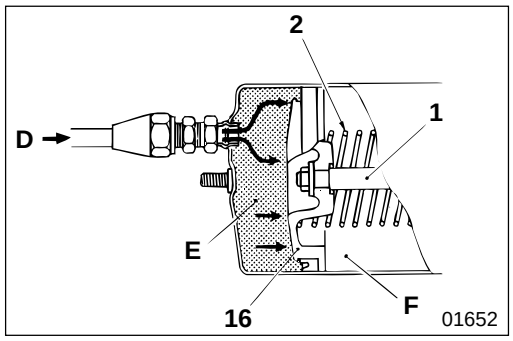

- Operation of the dual brake valve feeds compressed air **D** into chamber **E**, activating piston plate **16**. This opens chamber **F** to the atmosphere, generating a pressure difference between chambers **E** and **F**. When this force becomes greater than the repercussive force of return spring **2**, the piston plate moves to the right.
- Piston plate **16** is fitted with push rod **1** that transmits the force of the compressed air received at the piston plate to hydraulic piston area **B**.

● **Hydraulic piston area**

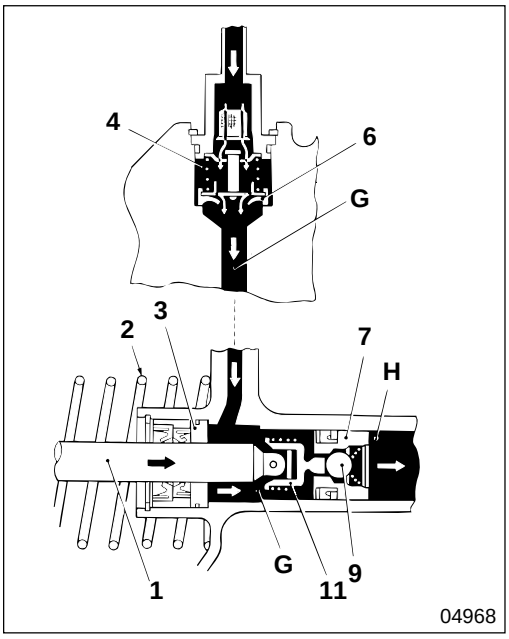

When functioning

- The movement of the piston plate compresses return spring **2**, which moves push rod **1**, then hydraulic piston **7** to the right. This movement separates yoke **11** from retainer assembly **3**, and seats steel ball **9** at the end of the hydraulic piston. This closes the passage between brake fluid tank chamber **G** and wheel cylinder chamber **H**. The hydraulic piston moves to the right and pressurizes the brake fluid in chamber **H**, transmitting power to the wheel cylinder.
- In residual valve **6**, negative pressure from chamber **G** increases as the volume expands in line with the movement of the hydraulic piston. This opens the residual valve, allowing it to suck brake fluid from the fluid tank.

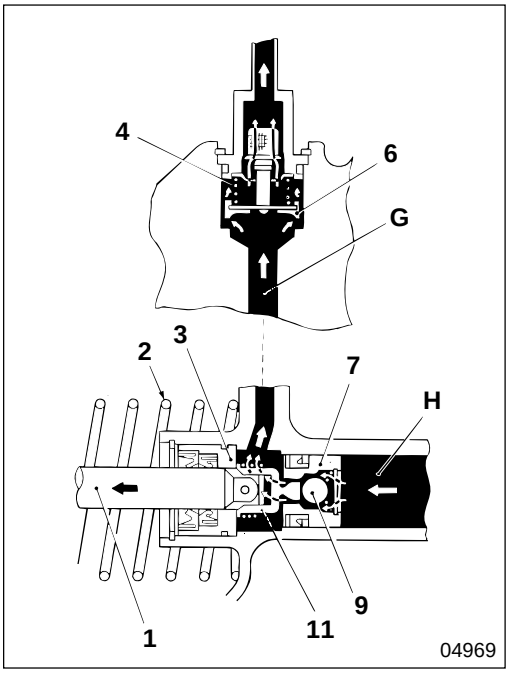

When released

- Releasing the brake pedal frees the compressed air at the rear side of the piston plate into the atmosphere. Hydraulic piston **7** is returned to its original position by the combined repercussive forces of return spring **2** of push rod **1**, and the brake fluid pressure of chamber **H** yoke **11** hits retainer assembly **3**, connecting chamber **G** and chamber **H**.
- Brake fluid flows through chamber **G** to compress spring **4** of residual valve **6**. The brake fluid passes around the residual valve and returns to the fluid tank.
- Residual valve **6** closes when the repercussive forces of spring **4** and the brake fluid pressure balance.

● **Power piston stroke detecting switch area**

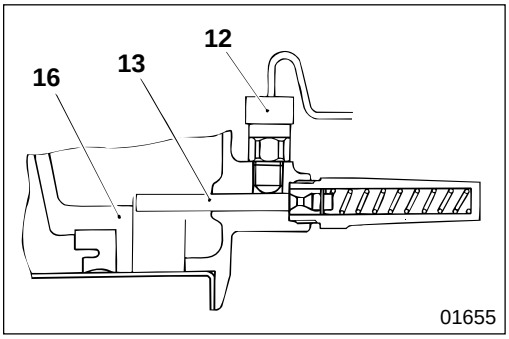

- When brake fluid has been lost due to damage to the brake pipe, the stroke of the power piston increases, and piston plate **16** hits the end of rod **13**, and the rod is moved to the right.
- Because of this, stroke switch **12** leaves the recessed area of rod **13**, and turns the stroke switch ON. This turns on a warning lamp within the meter cluster to alert the driver.

Wheel Brake

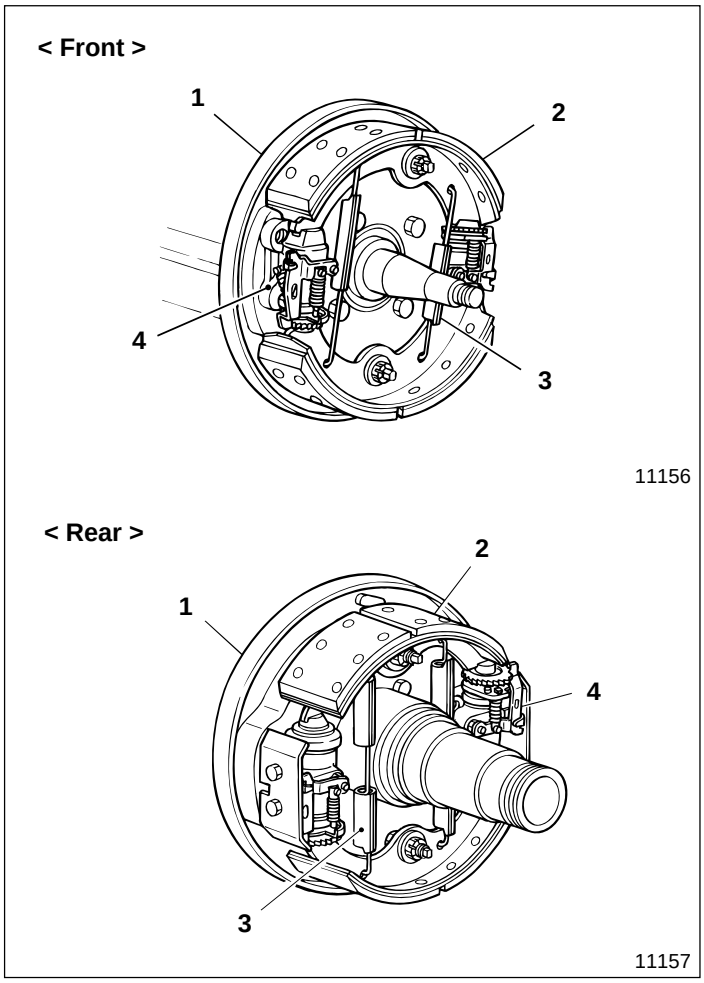

1 Backing plate
2 Brake shoe assembly
3 Return spring
4 Wheel cylinder assembly

- The front wheel brake is an internal expanding 2-leading brake type.
- The rear wheel brake is an internal expanding dual 2-leading brake type.
- Front and rear wheel cylinder assemblies **4** have shoe clearance automatic adjusting mechanisms to maintain the shoe clearance within a specific range.

Wheel Cylinder Assembly

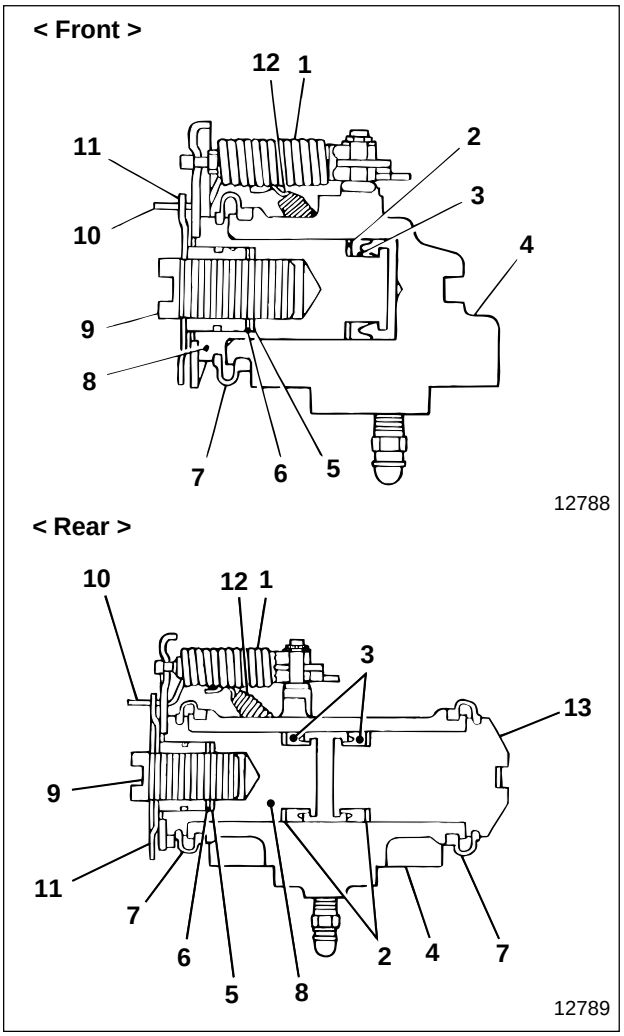

1 Spring
2 Backup ring
3 Piston cup
4 Cylinder body
5 Washer (Thick)
6 Washer (Thin)
7 Boot
8 Piston
9 Screw
10 Adjusting lever
11 Adjuster
12 Set spring
13 Piston < Rear wheel cylinder >

The automatic shoe clearance adjuster automatically adjusts the brake shoe clearance as the lining wears and the brake shoe clearance becomes higher than the specified value.

● **Operation of automatic shoe clearance adjusting mechanism**

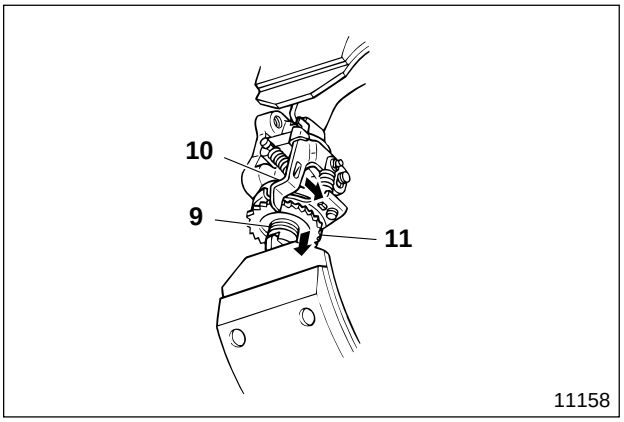

Adjusting lever **10** turns adjuster **11** to push out screw **9**, maintaining correct shoe clearance.

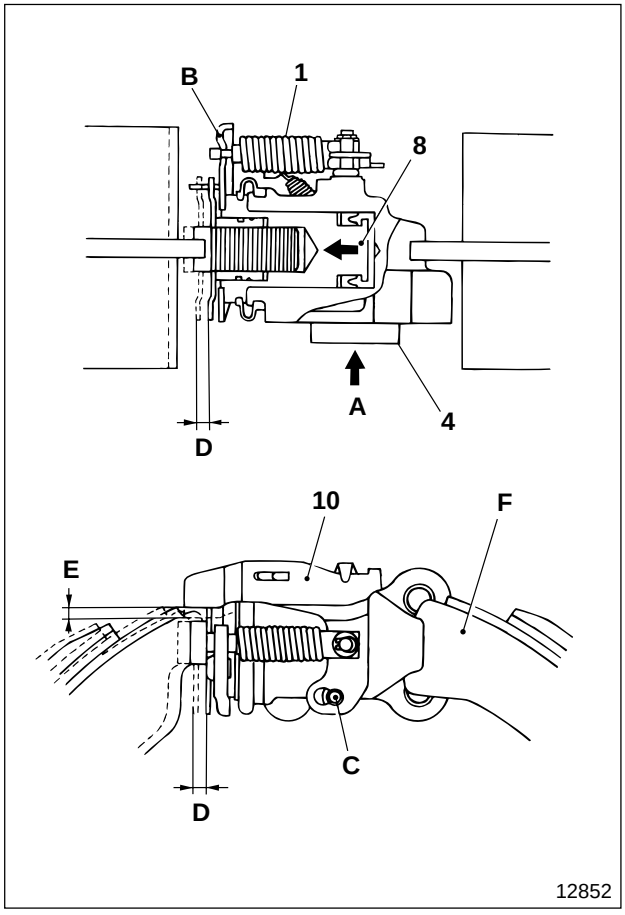

When depressing brake pedal

- Hydraulic pressure **A** acts on cylinder body **4** to push piston **8** forward.
- As spring hanger **B** of piston **8** is pushed forward, spring **1** which is connected to the spring hanger is pulled, and adjuster lever **10** turns around pin **C**.
  D : Travel of piston **8**
  E : Travel of adjusting lever **10**
  F : Brake shoe assembly

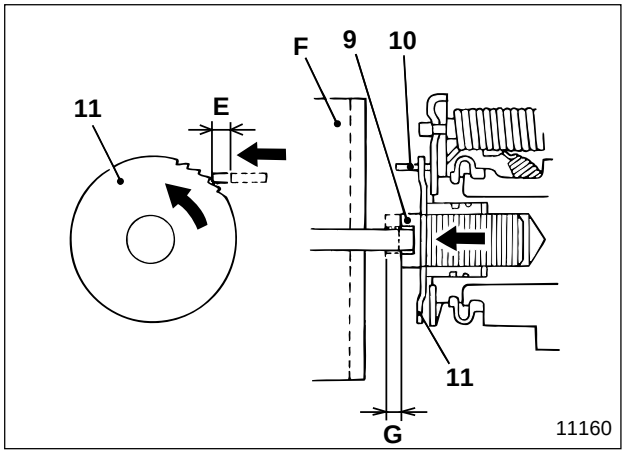

When the brake shoe clearance conforms to the specified value

- When the brake shoe clearance conforms to the specified value, the amount of travel of piston **8** is small. Therefore, the amount adjusting lever **10** turns is less than a one-tooth pitch of adjuster **11** and the adjuster does not turn, so no adjustment is made.
  E : Travel of adjusting lever **10**
  F : Brake shoe assembly
  G : Travel of screw **9**

- When the brake pedal is released, adjusting lever **10** does not climb one tooth of adjuster **11**, so the original engagement is maintained.

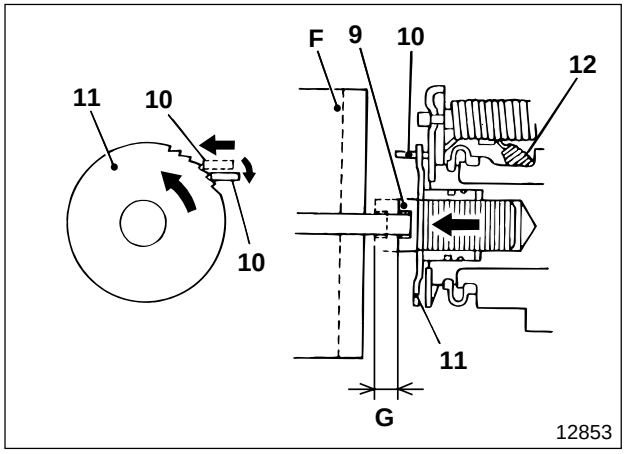

When the brake shoe clearance is higher than the specified value

- When the brake shoe clearance is higher than the specified value, the amount of travel of piston **8** is large. Therefore, adjusting lever **10** and adjuster **11** turn by a greater amount.
- The further adjuster **11** turns, the further screw **9** is pushed out. This regulates the brake shoe clearance to an amount within the specified value.
- When the brake pedal is released, adjuster **11** maintains the position after turning. Adjusting lever **10** climbs one tooth of the adjuster due to the action of set spring **12** to change the engagement, and is returned to the original position.

F : Brake shoe assembly
G : Travel of screw **9**

Air Compressor

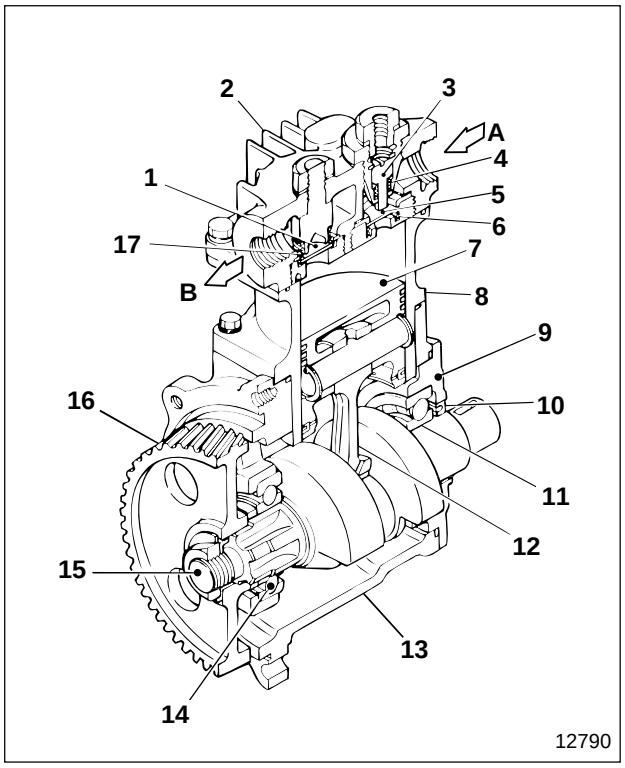

1 Delivery valve
2 Cylinder head
3 Unloader valve
4 Unloader valve spring
5 Suction valve
6 Suction valve spring
7 Piston
8 Cylinder liner
9 Bearing holder
10 Oil seal
11 Bearing
12 Connecting rod
13 Crankcase
14 Bearing
15 Crankshaft
16 Drive gear
17 Delivery valve spring

A : Air delivery port (From air cleaner)
B : Air discharge port (To air dryer)

● **During suction**

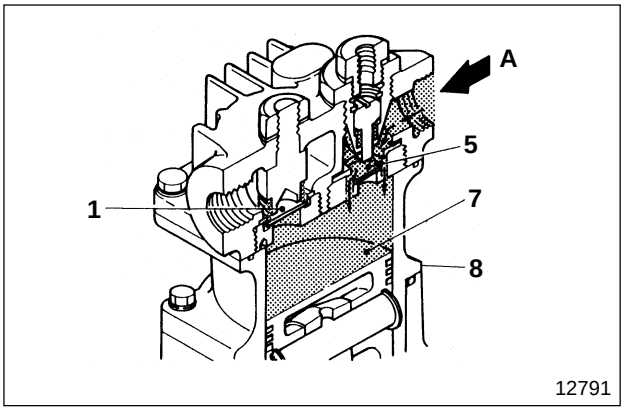

- When drive gear **16** is driven, crankshaft **15** engaged with the drive gear turns to force down piston **7**.
- The negative pressure generated at this time opens suction valve **5**, sucking air **A** into cylinder liner **8**.

● **During pressurized delivery**

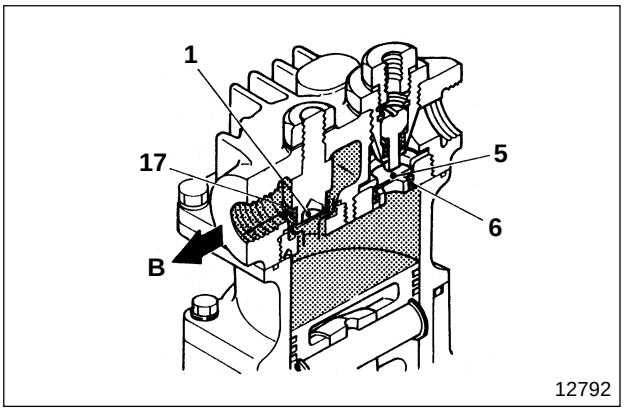

- As piston **7** rises and enters into the compression stroke, suction valve spring **6** closes suction valve **5**.
- The pressure of the compressed air overcomes the repercussive force of delivery valve spring **17** and opens delivery valve **1** to compress and deliver air **B** to the air dryer.

● **When unloader valve operates**

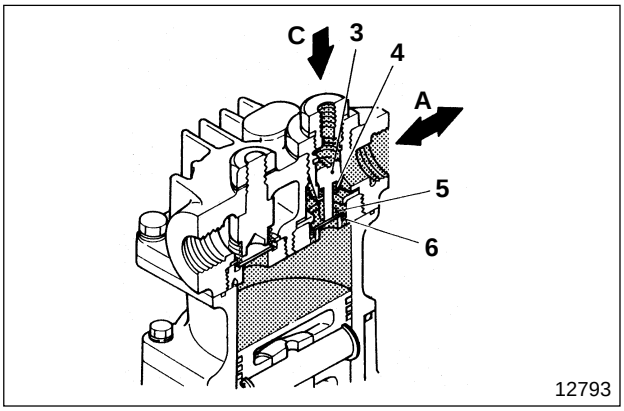

- When the air pressure in the air tank raises higher than the specified value, the air pressure governor operates to feed pressured air **C** to unloader valve **3**. This forces down the unloader valve and holds suction valve **5** open at the same time. Therefore, air **A** is not compressed and the air compressor idles.
- When the air pressure in the air tank drops lower than the specified value, the air pressure governor operates again to discharge pressured air from the upper side of unloader valve **3**. So, unloader spring **4** returns the unloader valve to its original position and the air compressor operates under a load.

Air Dryer

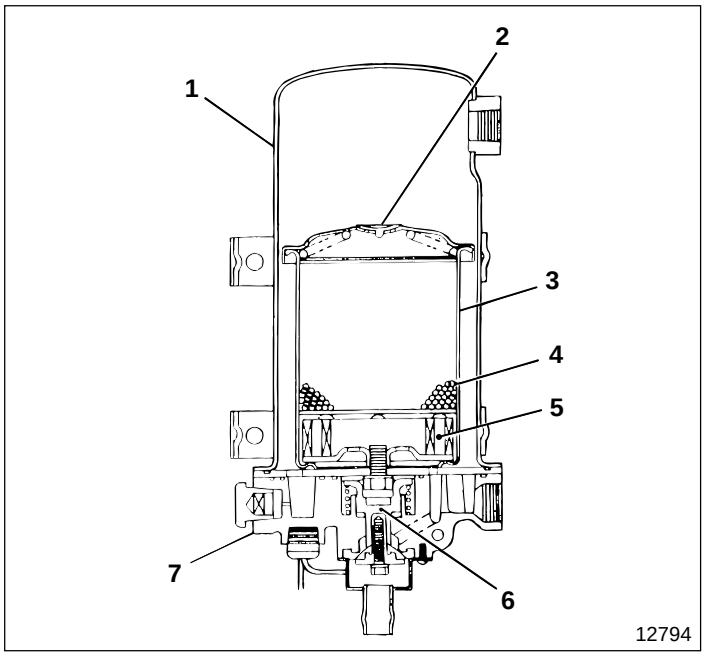

1 Shell assembly
2 Check valve
3 Cartridge assembly
4 Desiccant
5 Oil filter
6 Valve
7 End cover

The air dryer removes moisture and oil in the air compressed by the air compressor and protects the brake assembly from rust or faulty operation.

● Dehumidification

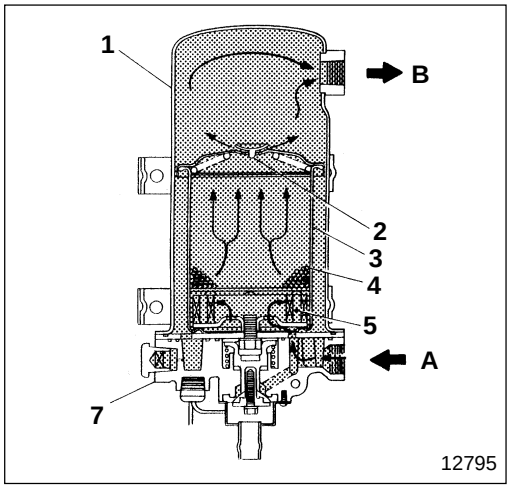

- The pressurized air from the air compressor enters delivery side **A** of the air dryer. Once in end cover **7**, moisture and oil are separated from the air and collected in the bottom. Then, the air passes through oil filter **5**, where small oil droplets and dust are removed. Next, the air is delivered into cartridge assembly **3**, where moisture is removed by desiccant **4**.
- As the air travels from the bottom to the top of cartridge assembly **3**, it comes into contact with more dried desiccant. This removes residual moisture from the air, drying the air as it reaches the top of the cartridge assembly. The air passes through check valve **2** and shell assembly **1**, and is delivered to the air tank through exhaust side **B**.

● Regeneration of desiccant

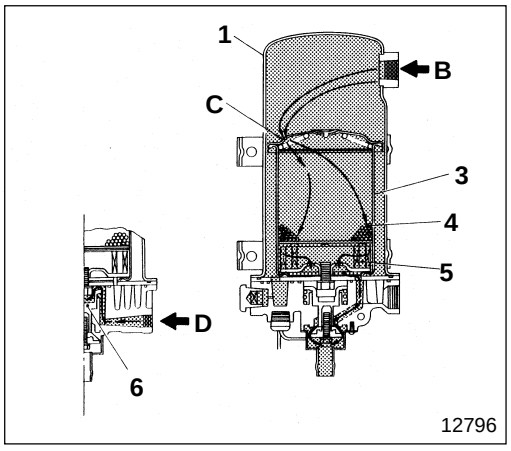

- When the supply of air from the air compressor stops, pressure **D** from the air pressure governor opens valve **6** of the control port of the air dryer. The pressure in cartridge assembly **3** cleans oil filter **5**, releasing the condensed water and oil into the atmosphere.
- After being quickly decompressed, the dry air in shell assembly **1** passes through hole **C**, where the air expands under the reduced pressure, becoming super dry air. This air flows back through cartridge assembly **3** and collects the moisture in desiccant **4**, releasing this moisture into the atmosphere, thereby recycling the desiccant.

M E M O

Air Pressure Governor

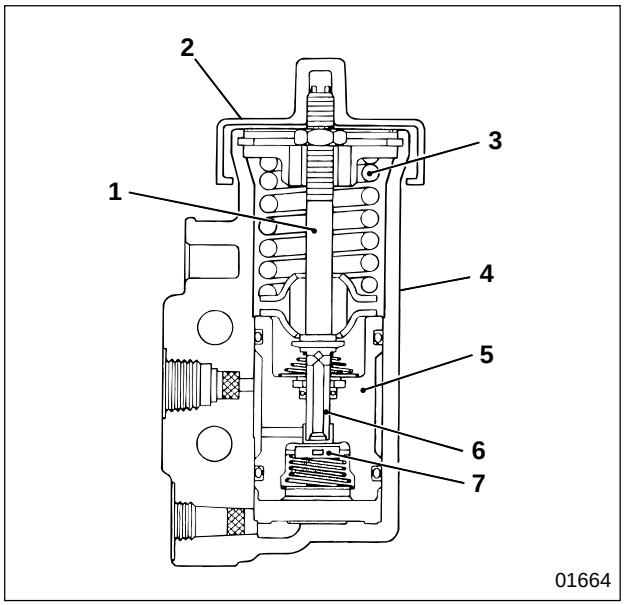

1 Adjusting screw
2 Cover
3 Spring
4 Body
5 Piston
6 Exhaust stem
7 Valve

The air pressure governor keeps the air pressure in the air tank at the specified pressure, by operating the air compressor with or without load in accordance with the air pressure in the air tank.

● High specified-pressure

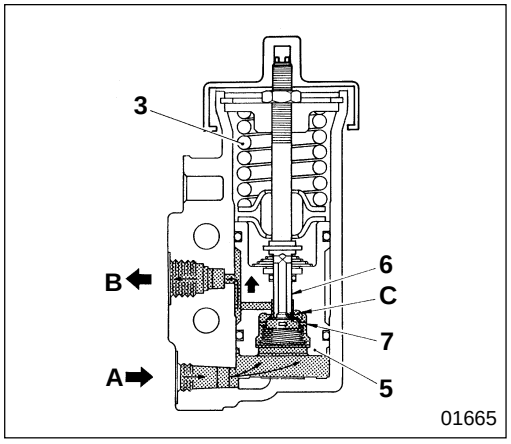

- Pressurized air **A** from the air tank acts constantly on piston **5**. As the pressure in the air tank rises to overcome the repercussive force of spring **3**, the piston rises and valve **7** closes.
- As air pressure **A** from the air tank rises further to become higher than the high specified-pressure, piston **5** rises further. Therefore, exhaust stem **6** opens inlet valve **C** and the air pressure in the air tank flows from unloader port **B** to the unloader valve of the air compressor via the inlet valve. Then the air compressor enters unloaded operation. Pressure also reaches the air dryer to recycle the desiccant

● Low specified-pressure

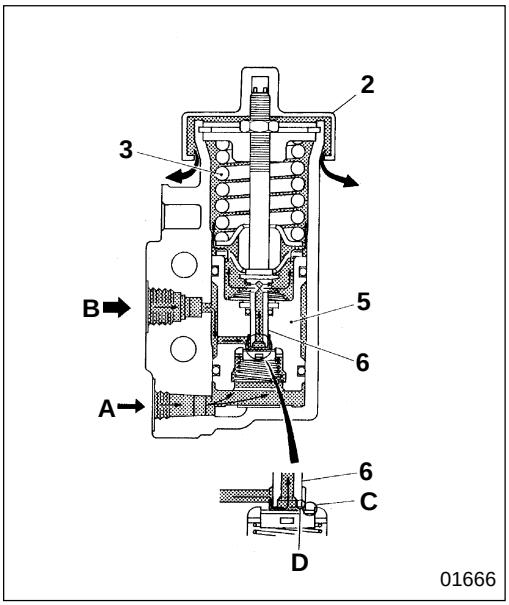

When pressurized air **A** from the air tank gradually drops below the specified-pressure, spring **3** forces down piston **5**. This closes inlet valve **C** and opens exhaust valve seat **D** so pressurized air **B**, up to the unloader valve of the air compressor, is discharged through the opening of cover **2** via exhaust stem **6**, operating the air compressor at load. The pressurized air up to the air dryer is also discharged into the atmosphere.

Exhaust Brake System

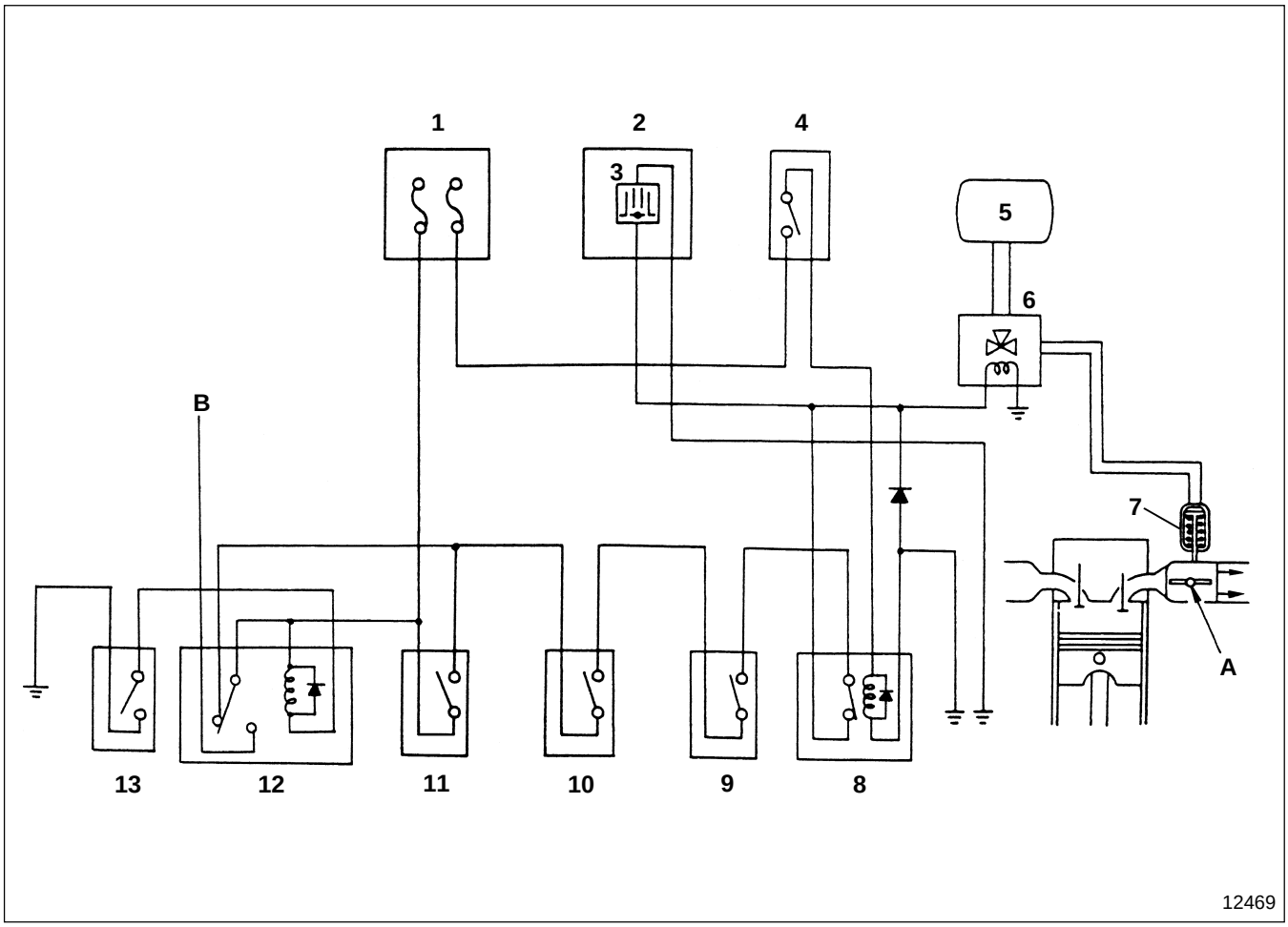

1 Relay and fuse box
2 Meter cluster
3 Exhaust brake indicator lamp
4 Transmission neutral switch
5 Air tank
6 3-way magnetic valve
7 Exhaust brake unit
8 Exhaust brake cut relay
9 Accelerator switch
10 Exhaust brake switch
11 Clutch switch < without power take-off >
12 Power take-off relay < with power take-off >
13 Clutch switch < with power take-off >

A : Butterfly valve
B : To power take-off switch

- Excitation of 3-way magnetic valve **6** causes the air pressure in air tank **5** to act on exhaust brake unit **7** to close butterfly valve **A**, activating the exhaust brake.
- If the exhaust brake is activated while the vehicle is stationary, the coolant temperature can rise excessively, overheating the engine. To avoid this, when the transmission is in neutral, transmission neutral switch **4** turns ON, cutting the exhaust brake system.

● When exhaust brake system is activated

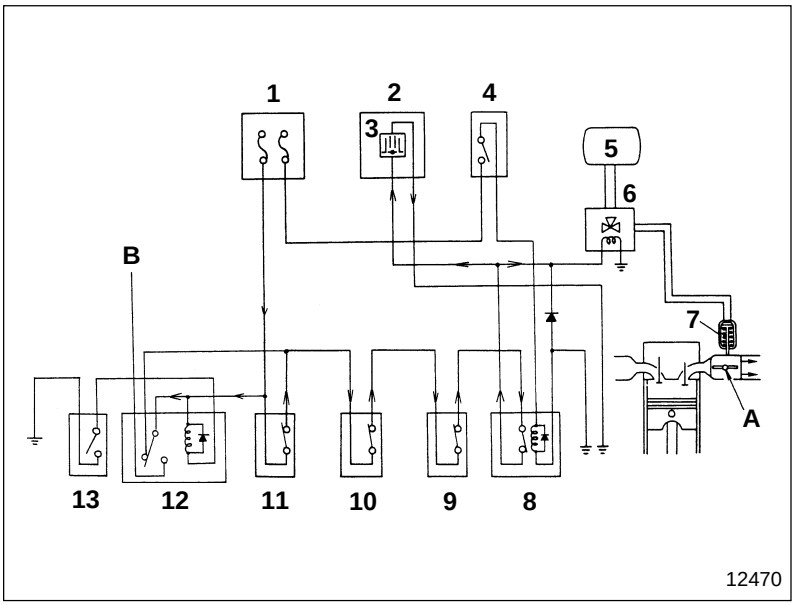

When exhaust brake switch **10** is turned on, the current flows as illustrated to activate the exhaust brake.

Fuse **1** → Power take-off relay **12** → Clutch switch **11** → Exhaust brake switch **10** → Accelerator switch **9** → Exhaust brake cut relay **8**
→ 3-way magnetic valve **6** → Ground
→ Exhaust brake indicator lamp **3** (ON) → Ground

● When the exhaust brake system is released

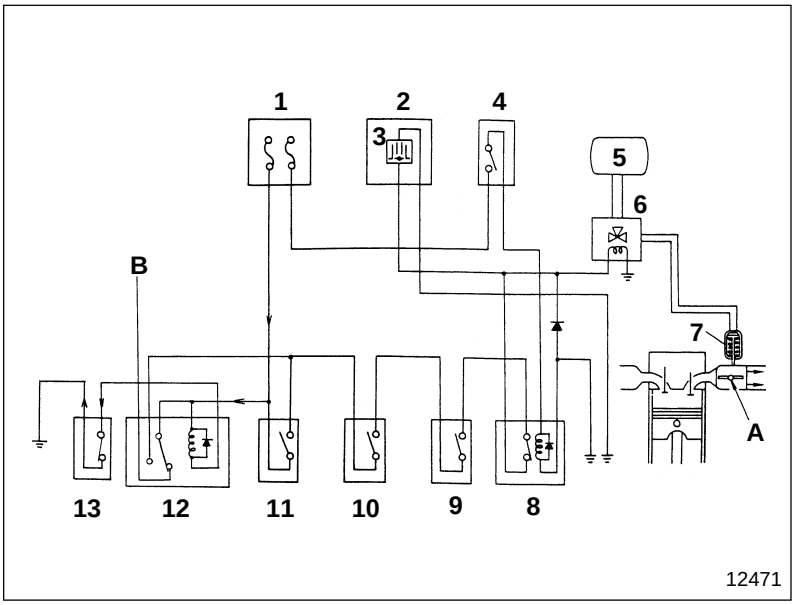

When the accelerator pedal or clutch pedal is depressed while the exhaust brake is working, all switches **9**, **11** turn off, shutting off the current, releasing the exhaust brake.

● When clutch pedal is depressed

Fuse **1** → Clutch switch **11** (OFF) → Since no current flows, the circuit turns off and the exhaust brake is released.
→ Power take-off relay **12** excitation → Clutch switch **13** (ON) → Ground

● When accelerator pedal is depressed

Fuse **1** → Power take-off relay **12** → Clutch switch **11** → Exhaust brake switch **10** → Accelerator switch **9**(OFF) → Since there is no grounding, current does not flow, so the exhaust brake is released.

● Releasing exhaust brake system by placing transmission in neutral

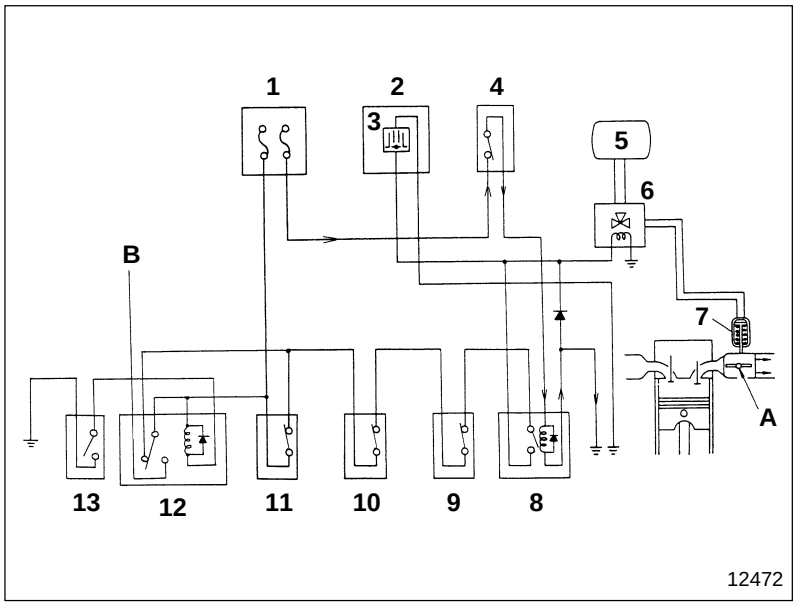

When the transmission is placed in neutral, the current flows as illustrated and the exhaust brake is released.

Fuse **1**⟶Transmission neutral switch **4**→Exhaust brake cut relay **8** excitation →Ground
Fuse **1**⟶Clutch switch **11**⟶ Exhaust brake switch **10**→Accelrator switch **9**→Exhaust brake cut relay **8** (OFF)
→Power take-off relay **12**
→Beyond this, current does not flow so the exhaust brake is released.

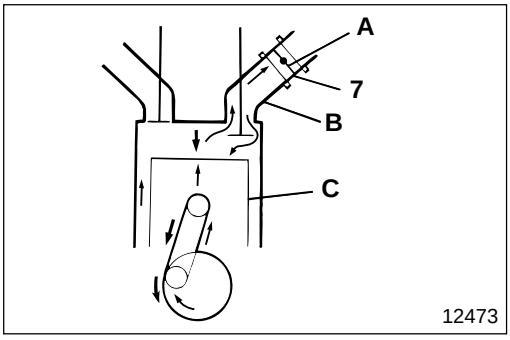

● Working principle of exhaust brake

When butterfly valve **A** of exhaust brake unit **7**, in exhaust pipe **B**, is closed, the pressure in the exhaust pipe rises. The pressure rises further in the exhaust stroke, generating a force that pushes back piston **C**, the exhaust braking force.

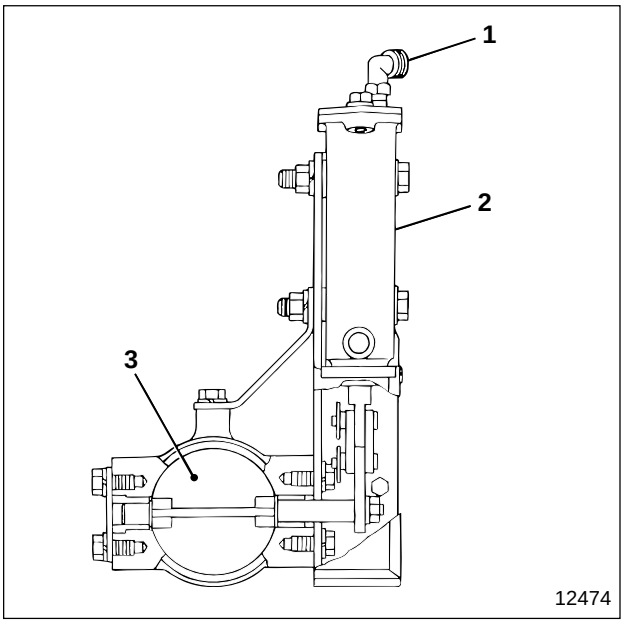

● Exhaust brake unit

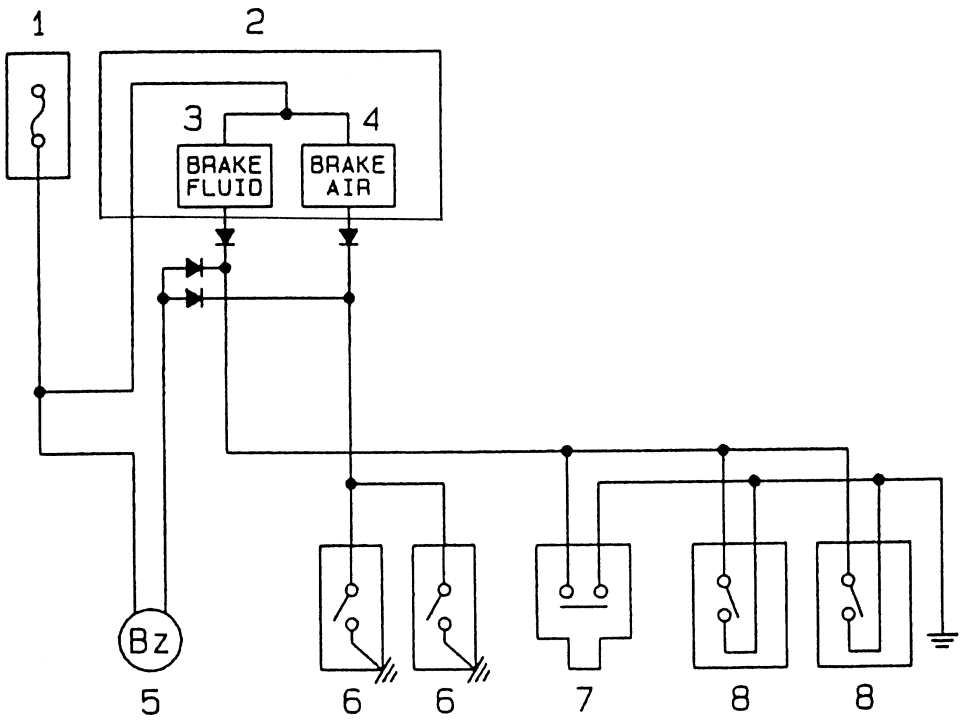

1 Fuse and relay box
2 Meter cluster
3 Brake fluid warning lamp
4 Air warning lamp
5 Warning buzzer
6 Low air pressure switch
7 Brake fluid level switch (installed on fluid tank)
8 Stroke switch (installed on airmaster)

The brake warning system consists of two circuits: the air pressure warning circuit and the brake fluid warning circuit. The first detects decrease of air pressure in the air tank, the second detects decrease in brake fluid in the fluid tank and brake fluid leakage in the brake fluid system. Both circuits light warning lamps and at the same time sound a buzzer to alert the driver.

● Air pressure warning circuit

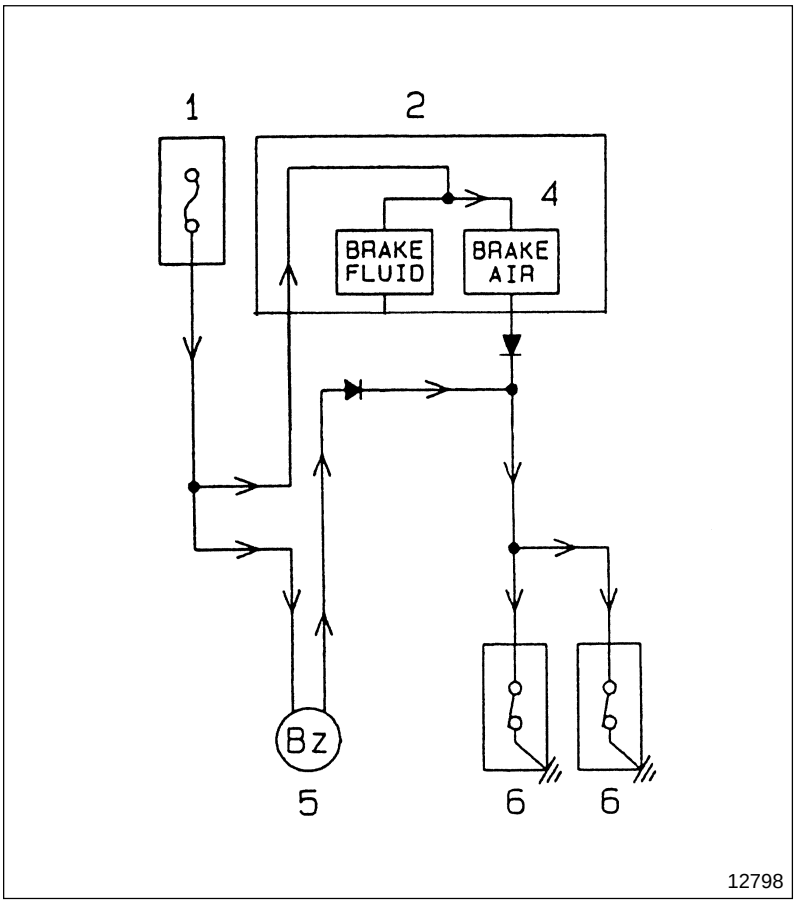

When the air pressure in the air tank drops below the specified value, low air pressure switch **6** turns on to light air warning lamp **4** and sound warning buzzer **5**. The current flows as follows:

Fuse **1** → Air warning lamp **4** → Low air pressure switch **6** → Ground
Fuse **1** → Warning buzzer **5** → Low air pressure switch **6** → Ground

● Brake fluid warning circuit

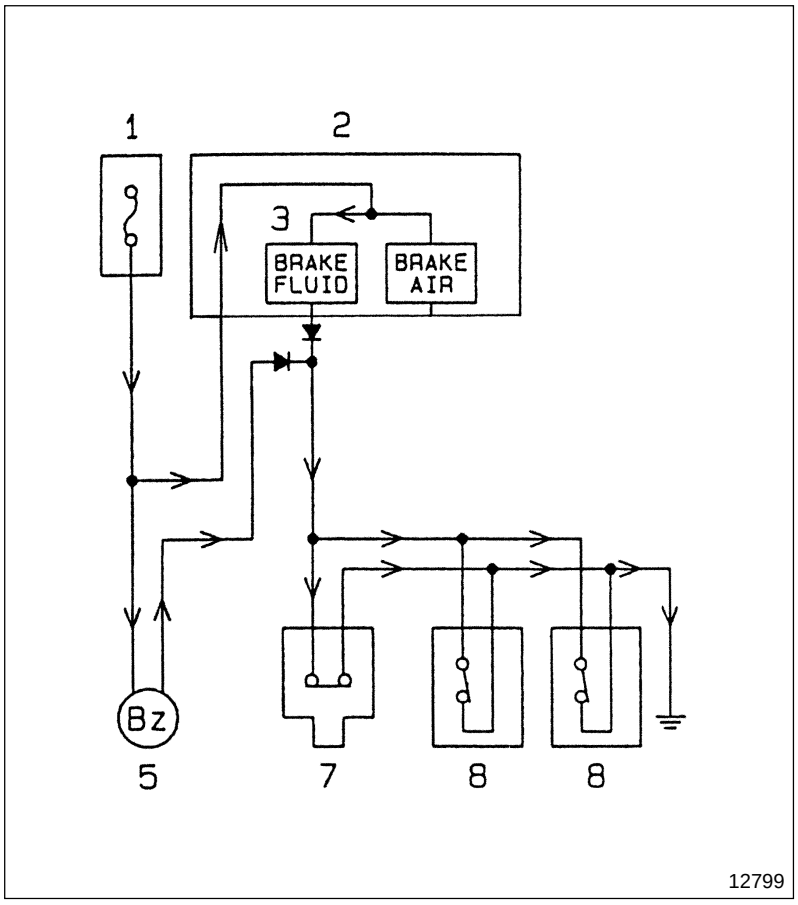

- When the brake fluid in the fluid tank drops below the specified level, brake fluid level switch **7** in the fluid tank turns on, brake fluid warning lamp **3** lights and warning buzzer **5** sounds. At this time, current flows as follows:

  Fuse **1** → Brake fluid warning lamp **3** → Brake fluid level switch **7** → Ground
  Fuse **1** → Warning buzzer **5** → Brake fluid level switch **7** → Ground

- If brake fluid leaks from the brake fluid system, stroke switch **8** of the airmaster turns on, brake fluid warning lamp **3** lights and warning buzzer **5** sounds. At this time, current flows as follows:

  Fuse **1** → Brake fluid warning lamp **3** → Stroke switch **8** → Ground
  Fuse **1** → Warning buzzer **5** → Stroke switch **8** → Ground

● Brake fluid level switch

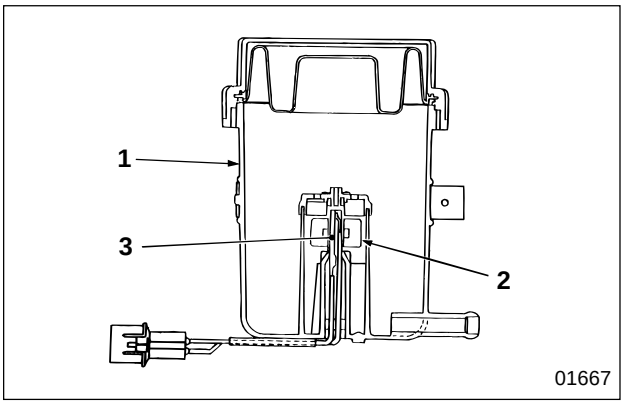

1 Fluid tank
2 Float
3 Brake fluid level switch

- Brake fluid level switch **3**, installed on fluid tank **1**, detects the brake fluid level in the fluid tank. If the brake fluid level drops below the specified level, float **2** moves to turn on the brake fluid level switch and light up the brake fluid warning lamp to alert the driver.

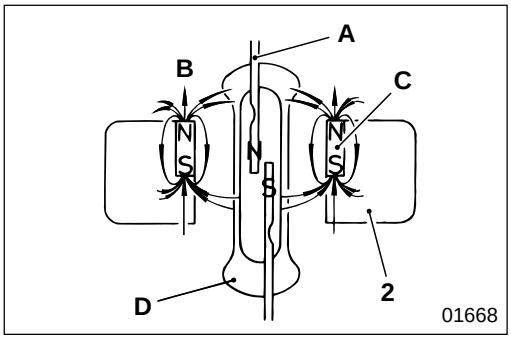

- If the brake fluid level in fluid tank **1** drops and float **2** drops lower than level **L**, magnetic force **B** that passes through the contact points (ferromagnetic material **A**) increase, generating north and south poles at the ends of the contact points. Therefore, the contact points pull each other and overcome the repercussive force of the springs of the contact points, forming an electric circuit.
  C : Permanent magnet
  D : Glass

Possible causes	Symptoms	Wheel brake does not work effectively				Brake drum over-heating				
		Air leakage when brake pedal depressed	Air leakage when brake pedal released	No air leakage but brake works ineffectively	Air pressure low	Brake shoe self-return poor after releasing brake pedal (Wheel drags)	Noise when brake pedal depressed	One-sided braking	Wheel brake works suddenly	Brake fluid warning lamp lights
Wheel brake	Wheel cylinder malfunctioning			○				○		○
	Brake lining surface contaminated with oil			○						
	Brake lining surface hardened			○			○			
	Brake fluid leaking because wheel cylinder cup worn			○						
	Brake lining worn									○
	Brake lining worn exposing rivet head						○			
	Brake drum interior worn unevenly						○			
	Brake shoe and brake lining close contact faulty						○			
	Brake drum installation loose						○	○		
	Brake lining materials unequal							○		
	Brake lining contact faulty							○		
	Brake drum runout							○		
	Backing plate warped							○		
	Brake shoe clearance insufficient					○		○	○	
	Brake shoe return spring deteriorated or fractured					○		○		
	Wheel cylinder piston return faulty					○		○		
	Brake fluid return faulty because brake pipe or joints clogged					○				

Possible causes	Symptoms	Wheel brake does not work effectively				Brake drum over-heating				
		Air leakage when brake pedal depressed	Air leakage when brake pedal released	No air leakage but brake works ineffectively	Air pressure low	Brake shoe self-return poor after releasing brake pedal (Wheel drags)	Noise when brake pedal depressed	One-sided braking	Wheel brake works suddenly	Brake fluid warning lamp lights
Dual brake valve	O-ring damaged	○								
	Primary and secondary valve airtightness faulty	○	○							
	Primary and secondary valve return faulty or exhaust port clogged with foreign particles					○				
Airmaster	Power cylinder lubrication faulty or rubber packing damaged			○						
	Hydraulic piston valve seal close contact faulty			○						
	Hydraulic piston cup packing damaged, wrong combination, or foreign particles adhering to it			○				○		
	Exhaust port clogged with foreign particles					○				
	Push rod bent					○				
	Power cylinder rubber packing lubricated incorrectly					○				
Brake air system	Connector loose	○	○							
	Air leakage				○					
	Air pressure governor adjusted incorrectly				○					
	Air compressor malfunctioning				○					
Brake fluid system	Brake fluid leaking or insufficient			○						○
	Air mixed in brake fluid system			○						○
Tire	Left and right air pressure different Gr 31							○		
Suspension	Leaf spring U-bolt loose Gr 33, 34							○		

Possible causes \ Symptoms		Drainage from air tank drain cock	Drainage not drawn off from exhaust port	Air dryer interior frozen	Air leakage from exhaust port	Air pressure in air reservoir drops extraordinarily	Engine oil coming out exhaust port	Remarks
Air Dryer	Desiccant deteriorated	○						
	Heater not working and air dryer frozen		○					
	Valve malfunctioning because of foreign particles adhering to it		○					
	No warming because heater wiring broken			○				
	Heater malfunctioning because thermostat faulty			○				
	Temperature extremely low because of snow and ice sticking to air dryer body			○				
	Heater malfunctioning because wiring to thermostat disconnected			○				
	Valve seat close contact faulty because of clogging by foreign particles				○			
	Dry air returning from air tank because air tank check valve malfunctioning during air compressor unloading cycle					○		
	Air compressor oiling-up						○	

● Exhaust Brake

Possible causes \ Symptoms		Exhaust brake does not work	Exhaust brake cannot be released	Intake silencer does not work	Intake silencer cannot be released	Remarks
Exhaust brake unit	Valve assembly malfunctioning	○	○			
	Valve assembly shaft stuck	○	○			
	Control cylinder malfunctioning	○				
	Butterfly valve adjusted incorrectly	○				
Intake silencer	Malfunctioning			○	○	
3-way magnetic valve	Malfunctioning	○	○	○		Gr 54
Brake air system	Air pressure abnormal	○		○		
	Air pipes crushed	○		○		
Electric system	Malfunctioning	○	○	○	○	Gr 54

INSPECTION AND ADJUSTMENT MOUNTED IN VEHICLE

Replacement of Brake Fluid

Fluid

Location	Points of application	Kinds	Quantity
—	Fluid tank	Brake fluid (SAE J1703f or FMVSS No.116, DOT3)	As required

Special tools

Unit : mm {in.}

Location	Tool name and shape	Part No.	Application
1	Vinyl hose 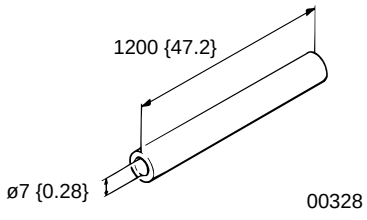	MH033102	Air bleeding

WARNING

- **You must use new brake fluid (SAE J1703f or FMVSS No. 116, DOT3).**
- **Do not add different quality fluid or mineral oil (gas oil, engine oil, gear oil, automatic transmission fluid, etc.) to the brake system, because this will cause the rubber parts of the brake system to swell, resulting in brake dragging or ineffective braking.**
- **Do not allow foreign particles or water to get mixed in with the brake fluid when you add it.**
- **If you use a mug for adding brake fluid, keep it solely for that purpose to prevent contamination from different quality fluids or mineral oil.**

CAUTION

- **Be careful not to splash brake fluid on related parts as this could damage the paintwork.**
- **Be sure to wipe off brake fluid immediately if you splash it on the paintwork.**

NOTE

Supply and maintain brake fluid to the “H” level of the fluid tank.

- Start engine and let it idle until brake fluid replacement is completed.

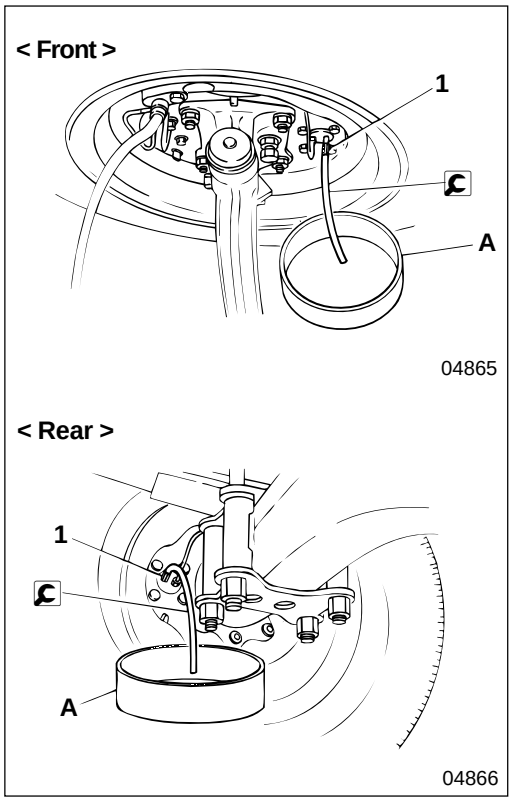

- Attach one end of vinyl hose to air bleeder **1** and place the other end in container **A**.

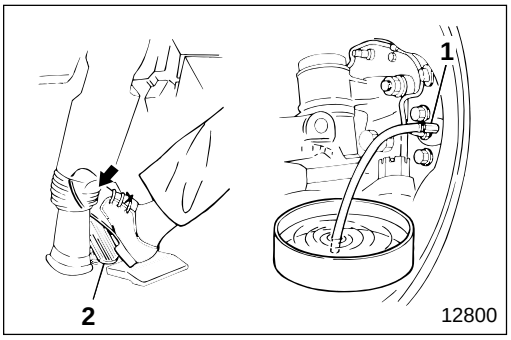

- Loosen air bleeder **1** and depress brake pedal **2** to drain brake fluid completely.

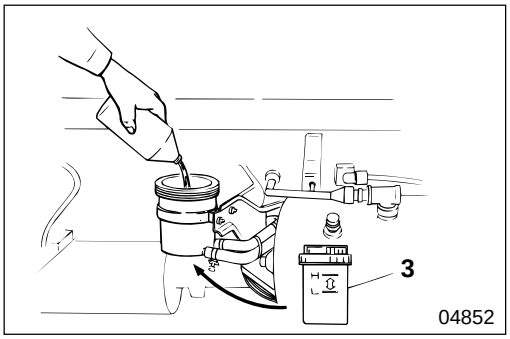

- Maintain a supply of new brake fluid up to the "**H**" level of fluid tank **3**, depress the brake pedal repeatedly until the old brake fluid of the brake system is replaced with new fluid.

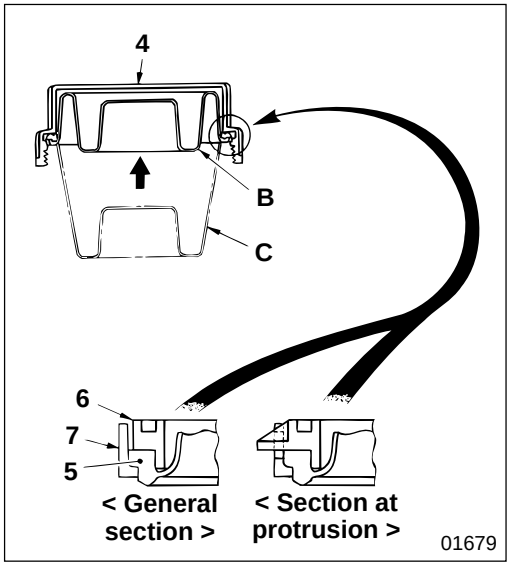

- If diaphragm **5** is not in its normal posture when the brake fluid is supplied, correct it to its normal posture, and install cap **4**. If brake fluid leaks from the cap area after you have supplied brake fluid, check whether the diaphragm is assembled as illustrated.

  6 : Slide ring
  7 : Ring cover
  B : Correct condition of diaphragm when brake fluid is being supplied
  C : Condition when diaphragm is extended when brake fluid has decreased

- Air bleeding of brake system. P35A-36

Air Bleeding of Brake System

Tightening torque

Unit : N·m {lbf.ft, kgf·m}

Location	Parts to be tightened	Tightening torque	Remarks
—	Air bleeder (Airmaster)	6.9 to 12.7 {5.1 to 9.4, 0.7 to 1.3}	—
—	Air bleeder (Wheel brake)	7.8 to 12 {5.8 to 8.5, 0.8 to 1.2}	—

Fluid

Location	Points of application	Kinds	Quantity
—	Fluid tank	Brake fluid (SAE J1703f or FMVSS No.116, DOT3)	As required

Special tools

Unit : mm {in.}

Location	Tool name and shape	Part No.	Application
2	Vinyl hose 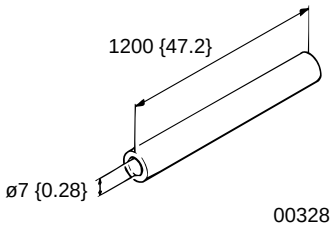	MH033102	Air bleeding

WARNING⚠

- **You must use new brake fluid (SAE J1703f or FMVSS No. 116, DOT3).**
- **Do not add different quality fluid or mineral oil (gas oil, engine oil, gear oil, automatic transmission fluid, etc.) to the brake system, because this will cause the rubber parts of the brake system to swell, resulting in brake dragging or ineffective braking.**
- **Do not allow foreign particles or water to get mixed in with the brake fluid when you add it.**
- **If you use a mug for adding brake fluid, keep it solely for that purpose to prevent contamination from different quality fluids or mineral oil.**

CAUTION⚠

- **Be careful not to splash brake fluid on related parts as this could damage the paintwork.**
- **Be sure to wipe off brake fluid immediately if you splash it on the paintwork.**

NOTE

- **Supply and maintain brake fluid to the "H" level of the fluid tank.**
- **Make sure you maintain brake fluid at the "H" level of the fluid tank since the brake fluid level drops during air bleeding.**

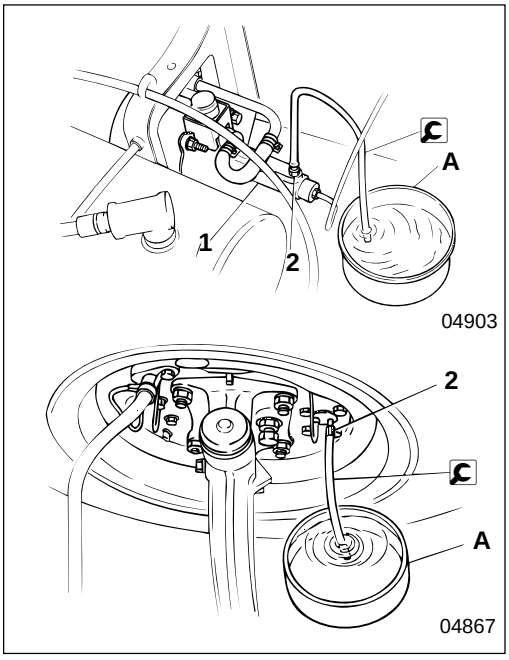

- Start engine and let it idle until brake fluid replacement is completed.
- Attach one end of vinyl hose to front or rear airmaster **1**. Then, attach one end of another vinyl hose to air bleeder **2** of the wheel brake. Finally, place both free ends in container **A** filled with brake fluid.
- Carry out air bleeding in the following sequence:

Front brake system	Rear brake system
Airmaster for front	Airmaster for rear
↓	↓
Right-hand side wheel brake	Right-hand side wheel brake
↓	↓
Left-hand side wheel brake	Left-hand side wheel brake

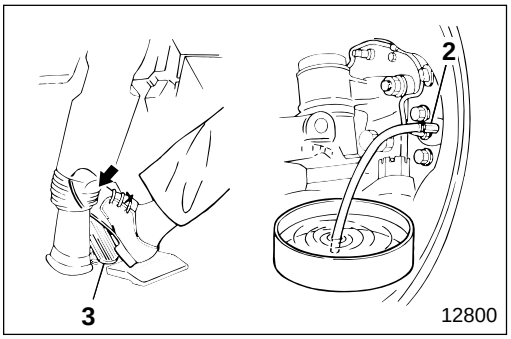

- Depress brake pedal **3** slowly a few times, and with the brake pedal depressed, loosen air bleeder **2** to drain brake fluid containing air.

- Tighten air bleeder **2**, and release brake pedal **3**.
- Repeat this service procedure until air is no longer present in the fluid being drained.
- Tighten air bleeder **2** at specified torque as soon as brake fluid flowing out is free of air bubbles.

- Adjust brake shoe clearance when you have finished air bleeding. P35A-62
- Check that brake fluid comes up to level "**H**" of fluid tank. If it does not, refill with new brake fluid.
- Depress brake pedal **3** a few times and check for any leakage of brake fluid, then test the brakes.
- When you test the brakes, if the brake fluid warning lamp within the meter cluster lights, it means that air has not been bled completely. Redo air bleeding.

Inspection and Adjustment of Brake Pedal Free Play

Service standards

Unit : mm {in.}

Location	Maintenance item		Standard value	Limit	Remedy
—	Free play of pedal	Pedal toe	$12^{+3.0}_{-1.5}\{0.47^{+0.12}_{-0.059}\}$	—	Adjust using set screw
		Depression angle	$3.5°^{+1.0°}_{-0.5°}$	—	

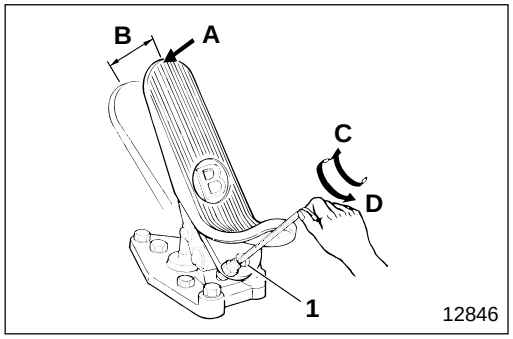

Press pedal toe **A** with your hand and measure free play **B**. If the measured value deviates from the standard value, adjust it by turning set screw **1**.

C : Turning clockwise decreases the free play (For a small angle)

D : Turning counterclockwise increases the free play (For a large angle)

Thickness Inspection and Replacement of Brake Lining

Service standards

Unit : mm {in.}

Location	Maintenance item	Standard value	Limit	Remedy
2	Thickness of brake lining	—	5.5 {0.22} (Side shoulder means wear limit)	Replace

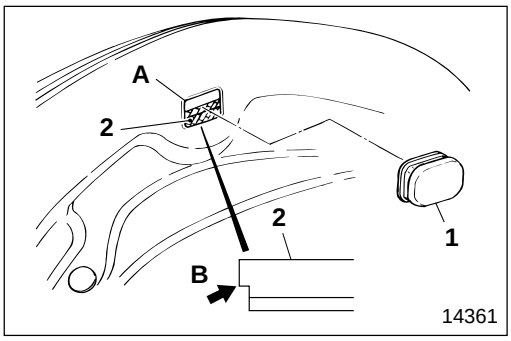

[Inspection]

NOTE

Be sure to inspect at two points for each wheel per side.

- Remove check hole plug **1** from the backing plate.
- Inspect through check hole **A** whether brake lining **2** is worn to the point of side shoulder **B** of the brake lining (the limit).
- If the measured value is lower than the limit, replace brake lining **2** on the same axle as a unit.
- After inspection, be sure to reinstall check hole plug **1**.

[Replacement]

P35A-60

Inspection of Brake Shoe Clearance

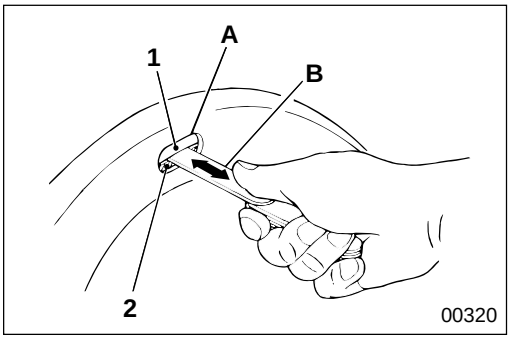

NOTE

When the vehicle is jacked up and the wheel is being turned, make sure that there is no dragging.

- Remove the check hole plug from the backing plate.
  A : Check hole
- Try to insert a 1 mm {0.039 in.} feeler gauge **B** between brake drum **1** and brake lining **2**. Check that the clearance is too small to let the feeler gauge enter.
  If feeler gauge **A** enters the clearance, disassemble the wheel cylinder and inspect.
  P35A-60

INSPECTION AND ADJUSTMENT MOUNTED IN VEHICLE

Inspection and Maintenance of Air Dryer

Carry out inspection and maintenance according to the following interval or vehicle milage.

(1) Every 10000 km (6000 miles)

- To check that the air dryer operates correctly, open the drain cock of the tank and see if any drainage comes out.
- If a little drainage comes out, remove the indicator from the unit and check the indicator assembly for color change. If its color has changed to pink, replace with a new cartridge assembly and indicator assembly.
  P35A-88

NOTE

In an operational environment, where the decrease of the ambient temperature in the air tank is higher than 16°C {29°F}, a little moisture might collect.

- Carefully inspect the drainage from the exhaust port of the air dryer body.

(2) Every year or every 60000 km {36000 miles}

Disassemble the air dryer body and replace the cartridge assembly, the indicator assembly and all rubber parts.
P35A-88

M E M O

HANDLING OF CONNECTOR

Sealant

Location	Points of application	Kinds	Quantity
—	Taper thread of connector	THREEBOND 1110B	As required

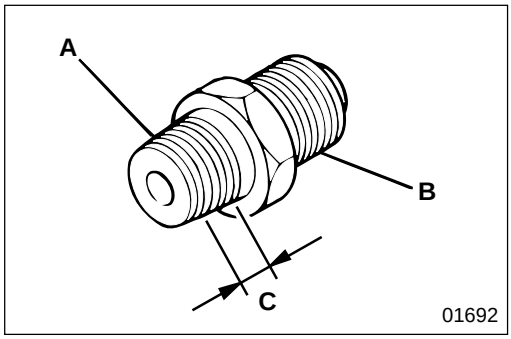

- If the connectors for the brake air system are to be reused after removal, thoroughly remove residual sealant, oil, moisture, etc.
- Apply sealant to the threads of the connector taper except for one or two turns from the end, then tighten.
- When positioning, adjust in the tightening direction.
  A : Taper thread
  B : Parallel thread (Do not apply sealant here)
  C : Apply sealant here

M E M O

BRAKE PEDAL

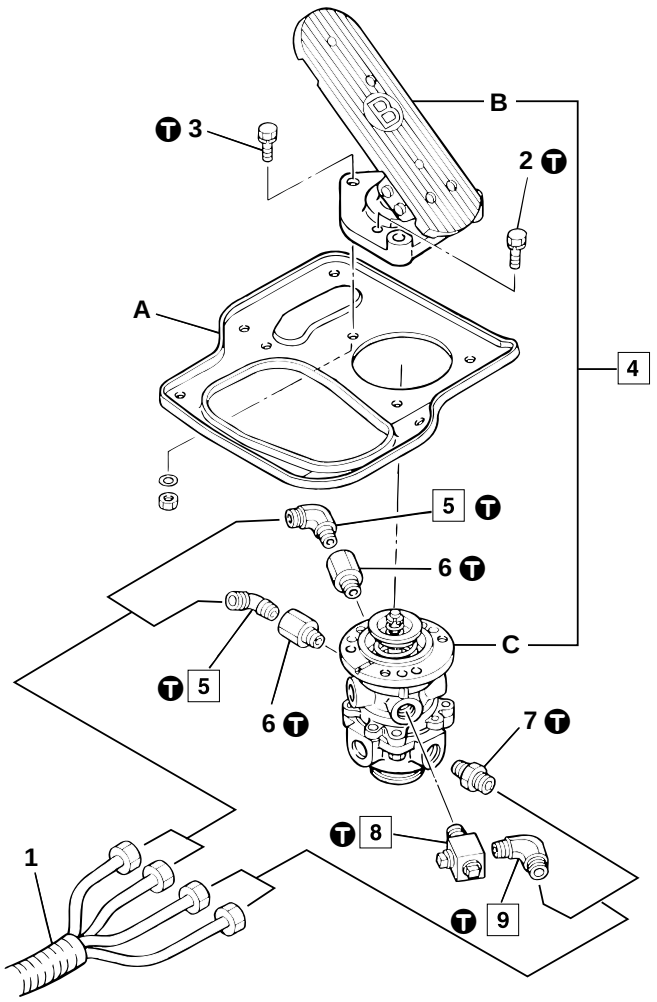

Remove pedal assembly **B** upward from valve board **A**, and valve assembly **C** downward from the valve board to separate dual brake valve **4** (pedal assembly and valve assembly). Do this without removing the valve board from the vehicle.

● **Removal sequence**

1 Nylon tube
2 Bolt
3 Bolt
4 Dual brake valve 📖 P35A-46
5 Connector
6 Connector
7 Connector
8 Connector
9 Connector

● **Assembly sequence**

Follow the removal sequence in reverse.

Tightening torque

Unit : N·m {lbf.ft, kgf·m}

Location	Parts to be tightened	Tightening torque	Remarks
2	Bolt (Pedal assembly and valve assembly mounting)	12 to 19 {0.047 to 0.075, 1.2 to 1.9}	—
3	Bolt (Dual brake valve and valve board mounting)	12 to 19 {0.047 to 0.075, 1.2 to 1.9}	—
5, 8, 9	Connector	29.4 to 117.7 {0.12 to 0.47, 3.0 to 12}	—
6, 7	Connector	29.4 to 39.2 {0.12 to 0.16, 3 to 4}	—

◆ Service procedure

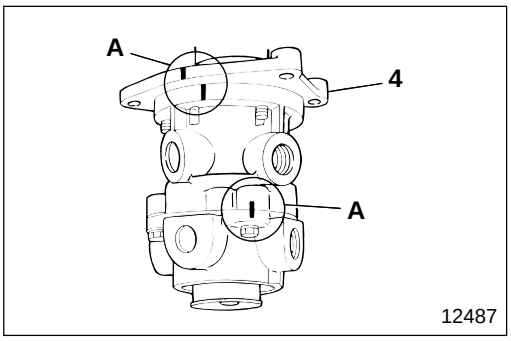

4 **Dual brake valve**

A : Alignment mark

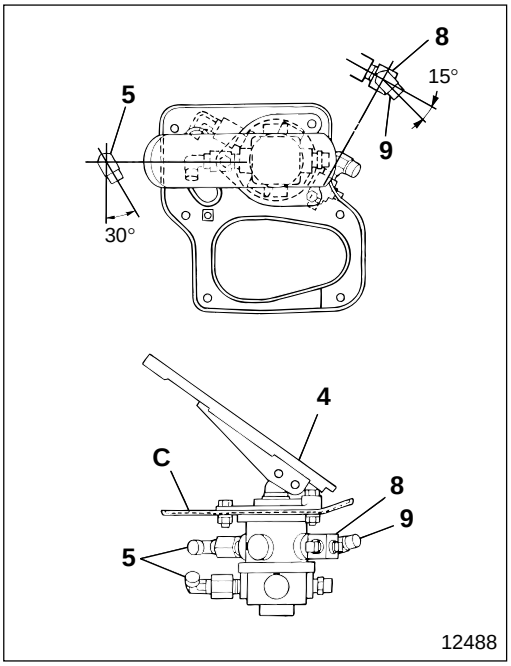

5 **8** **9** **Connector positioning**

Position the connector within one turn after the lower limit tightening torque has been reached.

DUAL BRAKE VALVE

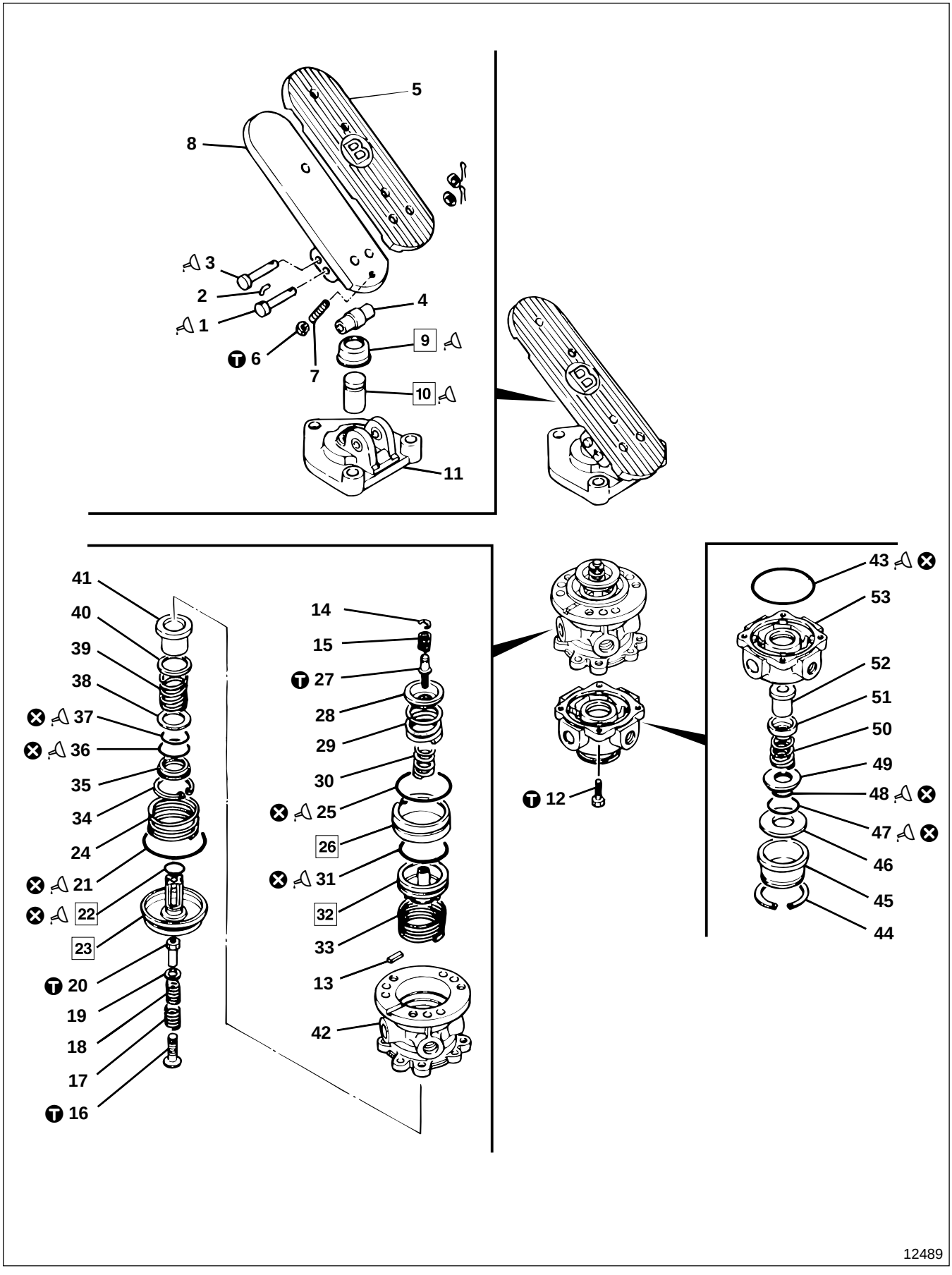

● **Disassembly sequence**

1 Straight pin
2 L-pin
3 Straight pin
4 Roller
5 Pedal cover
6 Lock nut
7 Set screw
8 Pedal
9 Boot
10 Plunger
11 Plate
12 Bolt
13 Plug
14 Retaining ring
15 Spring
16 Screw
17 Outer spring
18 Inner spring
19 Washer
20 Sleeve
21 O-ring
22 O-ring
23 Relay piston
24 Relay piston spring
25 O-ring
26 Bushing
27 Self-locking bolt
28 Spring seat
29 Outer spring
30 Inner spring
31 O-ring
32 Primary piston
33 Spring
34 Retaining ring
35 Valve retainer
36 O-ring
37 O-ring
38 Washer
39 Valve spring
40 Washer
41 Inlet valve
42 Body
43 O-ring
44 Retaining ring
45 Exhaust cover
46 Washer
47 O-ring
48 O-ring
49 Valve retainer
50 Valve spring
51 Valve retainer
52 Inlet valve
53 Cover

⊗ : Non-reusable parts

● **Assembly sequence**

First assemble pedal assembly **A** and valve assembly **B**, then assemble by sandwiching valve board **C** between these two assemblies.

< Pedal assembly **A** >

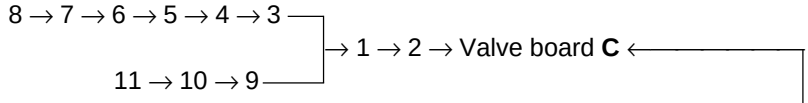

< Valve assembly **B** >

(Primary side)

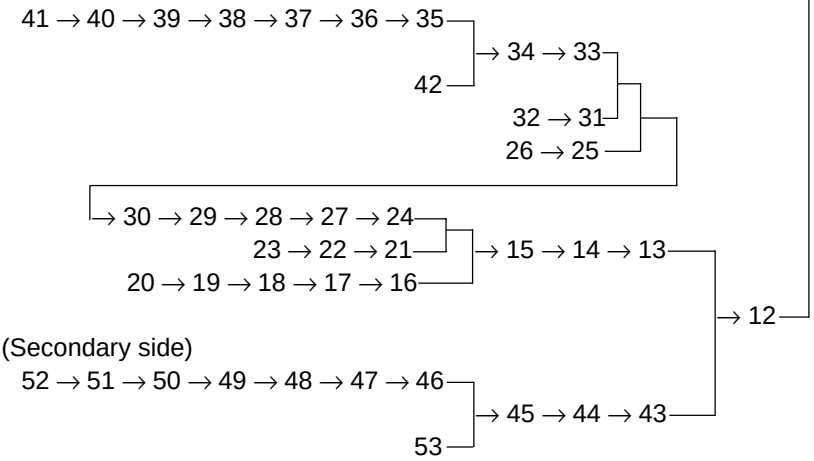

(Secondary side)

Repair kit : Dual brake valve kit

● **Inspection of function after assembly**

🕮 P35A-49

DUAL BRAKE VALVE

Service standards

Unit : mm {in.}

Location	Maintenance item		Standard value	Limit	Remedy
1, 3	Outer diameter of straight pin	Roller mounting	9.5 {0.374}	9.44 {0.371}	Replace
		Pedal mounting	9.5 {0.374}	9.45 {0.372}	
4	Roller	Inner diameter	9.5 {0.374}	9.67 {0.38}	Replace
		Outer diameter	18.3 {0.72}	18.15 {0.71}	
8	Pedal play	Pedal toe	$12^{+3.0}_{-1.5}$ {$0.47^{+0.12}_{-0.059}$}	—	Adjust using set screw
		Depression angle	$3.5°^{+1.0°}_{-0.5°}$	—	
10	Outer diameter of plunger		19.9 {0.783}	19.8 {0.780}	Replace
11	Plate	Inner diameter of straight pin hole	9.5 {0.374}	9.68 {0.381}	Replace
		Inner diameter of bushing	20 {0.787}	20.08 {0.791}	
15	Spring load (Installed length 12.6 {0.50})		—	215 N {49 lbf, 22 kgf}	Replace
24	Relay piston spring load (Installed length 12.8 {0.50})		—	47 N {11 lbf, 4.8 kgf}	Replace
29	Outer spring load (Installed length 26.5 {1.04})		—	215 N {48 lbf, 21.8 kgf}	Replace
30	Inner spring load (Installed length 19.1 {0.75})		—	60 N {13 lbf, 6.1 kgf}	Replace
33	Spring load (Installed length 17 {0.67})		—	97 N {22 lbf, 9.9 kgf}	Replace
39	Valve spring load (Installed length 14.3 {0.56})		—	37 N {8.4 lbf, 3.8 kgf}	Replace
50	Valve spring load (Installed length 12.9 {0.51})		—	47 N {11 lbf, 4.8 kgf}	Replace
—	Pressure stroke	Input air pressure 685 kPa {100 lbf/in², 7 kgf/cm²} — Pedal toe	25.5 {1.00}	Output air pressure — 105^{+25}_{-54} kPa {$16^{+3.6}_{-7.8}$ lbf/in², $1.1^{+0.25}_{-0.55}$ kgf/cm²}	—	Replace springs
		Depression angle	7.5°		
		Pedal toe	45.5 {1.79}	355^{+39}_{-98} kPa {$52^{+5.7}_{-1.4}$ lbf/in², $3.65^{+0.4}_{-1.0}$ kgf/cm²}	—	
		Depression angle	13.5°		
		Pedal toe	$52^{+8.5}_{-1.5}$ {$2.0^{+0.33}_{-0.059}$}	685 kPa {100 lbf/in², 7 kgf/cm²}	—	
		Depression angle	$15.5°^{+2.5°}_{-0.5°}$		

Tightening torque

Unit : N·m {lbf.ft, kgf·m}

Location	Parts to be tightened	Tightening torque	Remarks
6	Lock nut	4.9 to 7.8 {3.6 to 5.8, 0.5 to 0.8}	—
12	Bolt (Valve assembly primary and secondary sides assembling)	4.9 to 7.8 {3.6 to 5.8, 0.5 to 0.8)	—
16	Screw	4.9 to 7.8 {3.6 to 5.8, 0.5 to 0.8)	—
20	Sleeve	1.0 to 2.9 {0.7 to 2.2, 0.1 to 0.3}	—
27	Self-locking bolt	4.9 to 7.8 {3.6 to 5.8, 0.5 to 0.8}	—

Lubricant

Location	Points of application	Kinds	Quantity
1, 3	Outer periphery of straight pin	High pressure-resistant, high abrasion-resistant grease [NLGI No.2 (Li soap)]	As required
9, 10	Pack between boot and plunger	High pressure-resistant, high abrasion-resistant grease [NLGI No.2 (Li soap)]	1 cm^3 {0.061 cu. in.}
10	Friction surfaces of plunger and other parts	High pressure-resistant, high abrasion-resistant grease [NLGI No.2 (Li soap)]	As required
—	Friction surface and groove of O-ring, friction surfaces of metals	Multipurpose grease [NLGI No.2 (Li soap)]	As required

Special tools

Location	Tool name and shape	Part No.	Application
21	Insert tool	*910-24461	Installation of O-ring
32	Retainer	*910-24590	Holding of primary piston

* : JIDOSHA KIKI part No.

◆ Service procedure

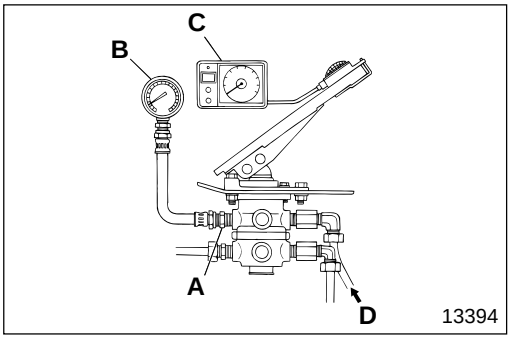

● Inspection of function after assembly

Check that the output air pressure, corresponding to the pedal depression angle, conforms to the specified value.

- Mount pressure gauge **B**, capable of measuring 980 kPa {142 lbf/in^2, 10 kgf/cm^2} or more, on primary output side port **A**.
- Mount depression gauge **C** on the brake pedal.
- Apply air pressure of 685 kPa {100 lbf/in^2, 7 kgf/cm^2} to primary input side port **D** and inspect related parts for air leakage.
- If air leakage is found, do the following:
  - Tighten connectors.
  - Disassemble the dual brake valve and inspect the O-ring assemblies of all parts.

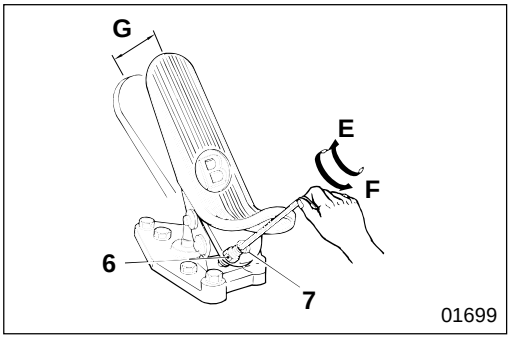

- Turn set screw **7** and adjust brake pedal play **G** to the standard value.
- Tighten lock nut **6** at specified torque to lock set screw **7**.
- Read pressure gauge **B** and make sure that the primary output pressure and brake pedal depression force angle, corresponding to the brake pedal depression angle, conform to the standard values shown in the input/output characteristic curve diagram overleaf.
- If the output air pressure is lower than the standard value, replace the following springs:
  - Spring **15**
  - Outer spring **29**
  - Inner spring **30**

E : Turning clockwise decreases the play (To decrease brake pedal depression angle)

F : Turning counterclockwise increases the play (To increase brake pedal depression angle)

Input/Output Characteristic Curve Diagram

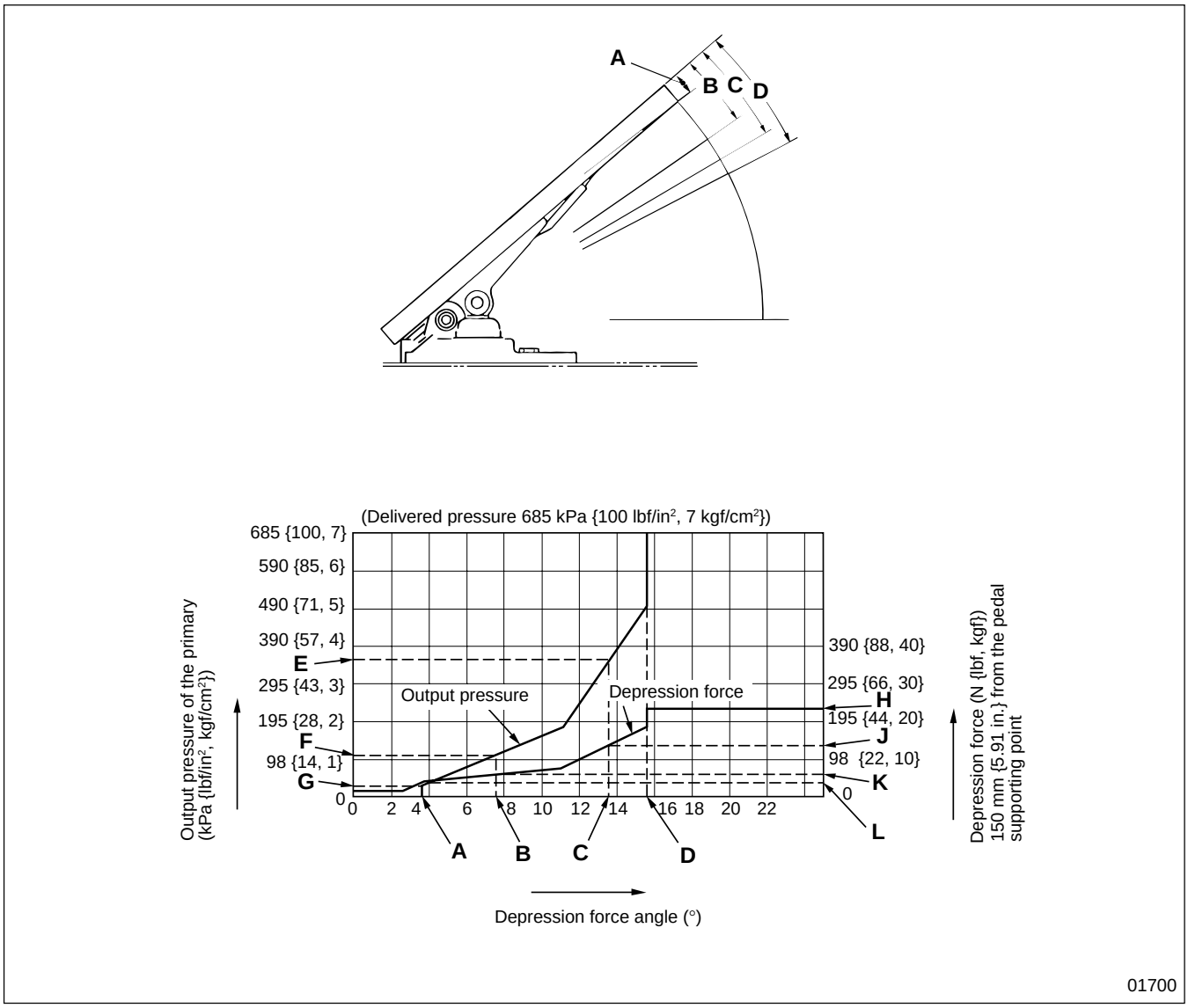

A : Play 3.5° $^{+1.0°}_{-0.5°}$(12 $^{+3.0}_{-1.5}$ mm {0.47 $^{+0.12}_{-0.059}$ in.})
B : Pressure stroke 7.5° (25.5 mm {1.0 in.})
C : Pressure stroke 13.5° (45.5 mm {1.8 in.})
D : Pressure stroke 15.5° $^{+2.5°}_{-0.5°}$(52 $^{+8.5}_{-0.5}$ mm {2.0 $^{+0.33}_{-0.020}$ in.})
E : 355$^{+39}_{-98}$ kPa {52$^{+5.7}_{-1.4}$ lbf/in², 3.65$^{+0.4}_{-1.0}$ kgf/cm²}
F : 105$^{+25}_{-54}$ kPa {16$^{+3.6}_{-7.8}$ lbf/in², 1.1$^{+0.25}_{-0.55}$ kgf/cm²}
G : 29 kPa {4.3 lbf/in², 0.3 kgf/cm²} or less
H : 230.5±20 N {52±4.4 lbf, 23.5±2 kgf}
J : 132±25 N {30±5.5 lbf, 13.5±2.5 kgf}
K : 59±25 N {13±5.5 lbf, 6±2.5 kgf}
L : 39±10 N {8.8±2.2 lbf, 4±1 kgf}

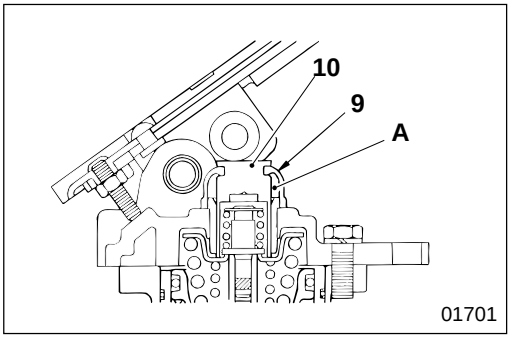

9 **10** **Packing grease between boot and plunger**

Pack area A with **1** cm^3 {0.061 cu in.} of grease.

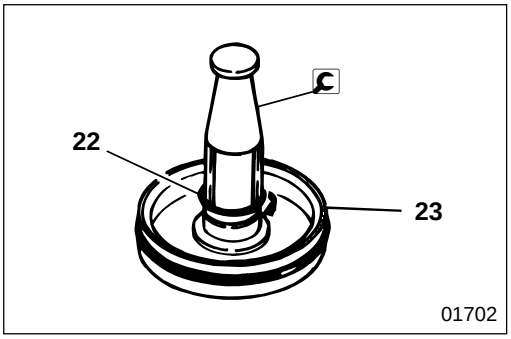

22 **Installation of O-ring**

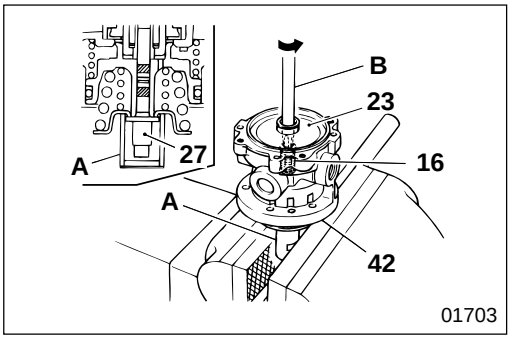

23 **Removal of relay piston**

- Grip (14 mm {0.55 in.}) socket wrench **A** in a vise.
- Insert the head of self-locking bolt **27** into socket wrench **A** to tighten body **42**.

WARNING ⚠

You must be careful when you loosen screw 16, because the spring in body 42 can forcibly eject relay piston 23. To avoid this hazard, press down on the relay piston with your hand when you carry out the above work.

- Loosen screw **16** gradually to remove relay piston **23**.
  B : Phillips screwdriver

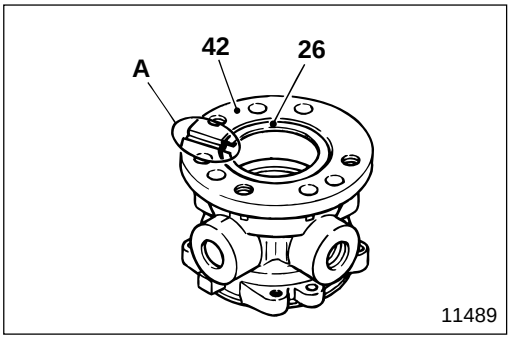

26 **Installation of bushing**

A : Indent

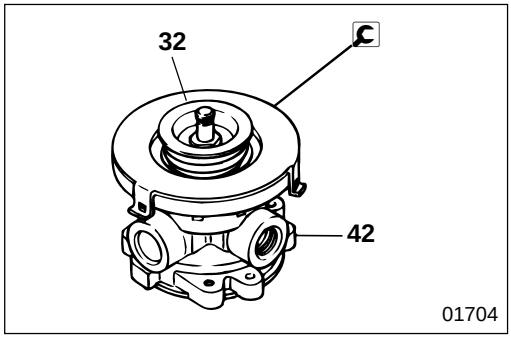

32 **Removal and installation of primary piston**

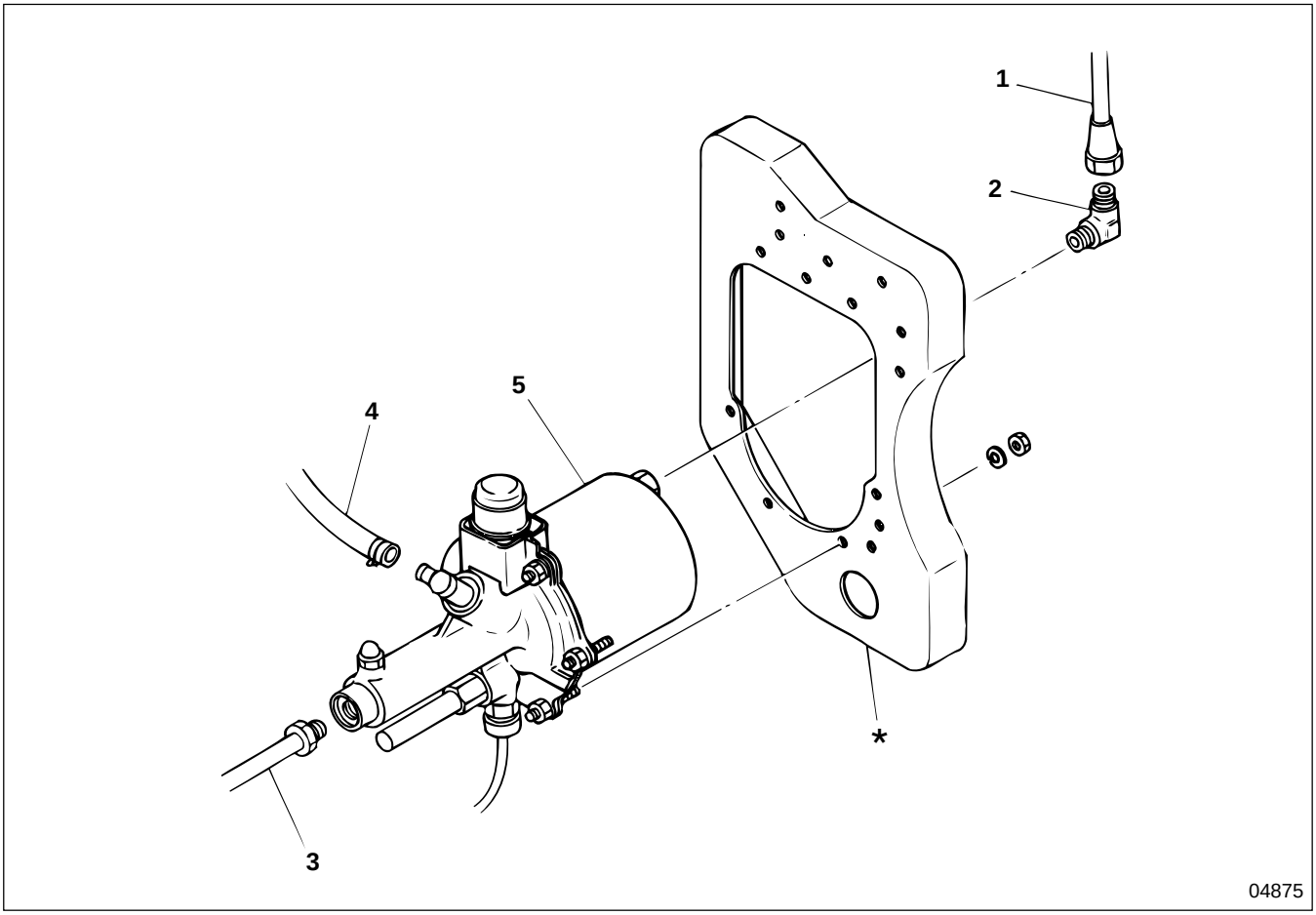

● **Disassembly sequence**

1 Air pipe
2 Connector
3 Brake pipe
4 Brake hose
5 Airmaster 🕮 P35A-54

***** : Airmaster and air tank bracket

● **Assembly sequence**

Follow the disassembly sequence in reverse.

NOTE

Check for air and liquid leakage after installation. Also, carry out air bleeding of brake system. 🕮 **P35A-36**

BRAKE BOOSTER (AIRMASTER)

Airmaster Assembly

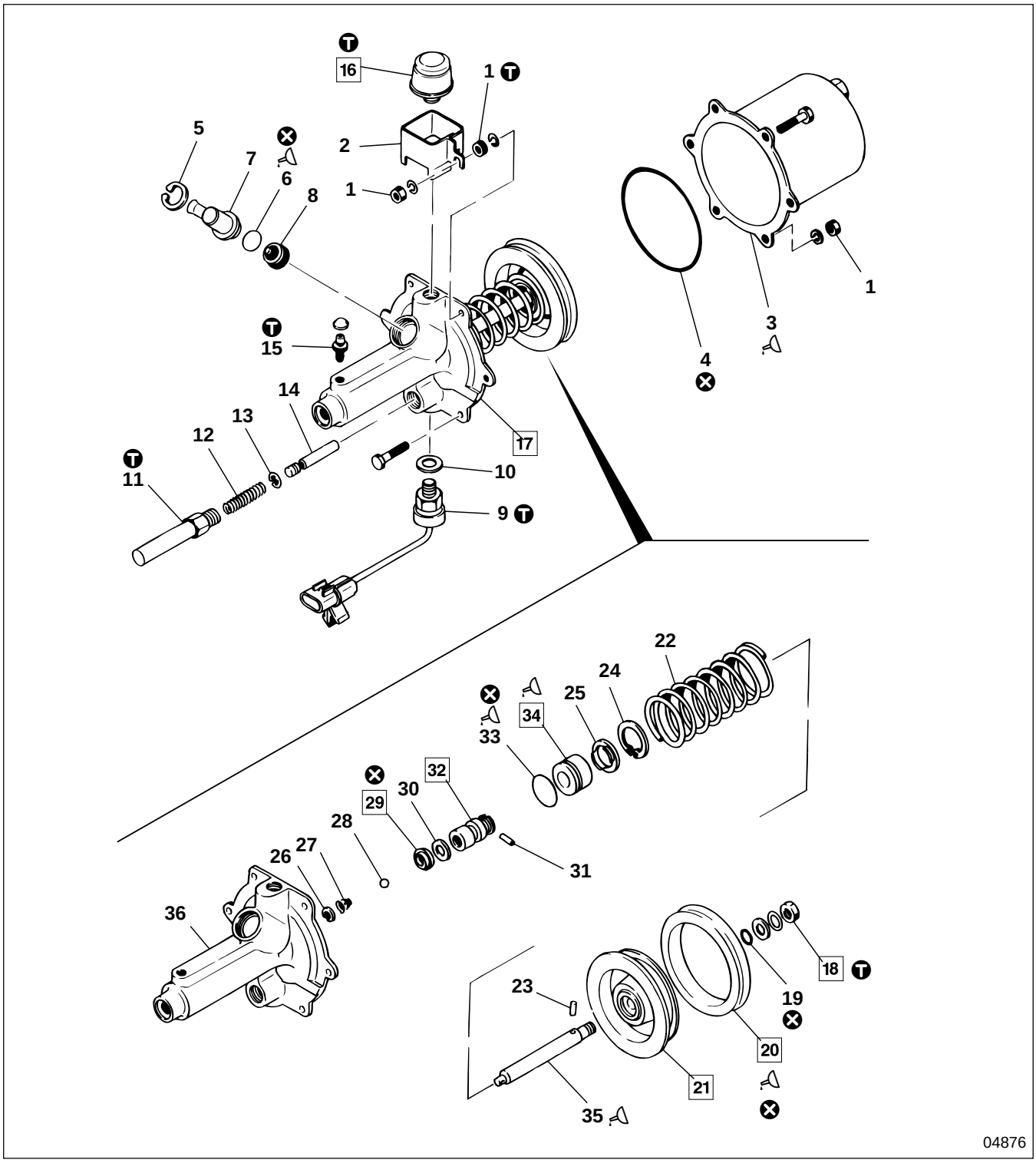

● **Disassembly sequence**

1 Nut
2 Bracket
3 Cylinder shell
4 O-ring
5 Retaining ring
6 O-ring
7 Connector
8 Residual valve
9 Stroke switch Gr 54
10 Shim
11 Retainer
12 Return spring
13 Retaining ring
14 Rod
15 Air bleeder
16 Exhaust cover
17 Body assembly
18 Nut
19 O-ring
20 Cup packing
21 Piston plate
22 Return spring
23 Straight pin
24 Retaining ring
25 Washer
26 Retaining ring
27 Spring
28 Steel ball
29 Cup packing
30 Backup ring
31 Straight pin
32 Hydraulic piston
33 O-ring
34 Retainer assembly
35 Push rod
36 Body

⊗ : Non-reusable parts

● **Assembly sequence**

Follow the disassembly sequence in reverse.
Repair kit : Airmaster kit

Service standards

Unit : mm {in.}

Location	Maintenance item	Standard value (Basic diameter in [ ])	Limit	Remedy
3, 21	Clearance between cylinder shell and piston plate	[114.3] 0.5 to 1.4 {[4.50] 0.20 to 0.055}	1.8 {0.071}	Replace piston plate
22	Return spring load (Installed length 120 {4.72})	78±7.8 N {18±1.8 lbf, 8±0.8 kgf}	69 N {15 lbf, 7 kgf}	Replace
32, 36	Clearance between body and hydraulic piston	[23.8] 0.04 to 0.11 {[0.94] 0.0016 to 0.0043}	0.15 {0.0059}	Replace hydraulic piston
35	Bend of push rod	0.05 {0.0020} or less	0.15 {0.0059}	Replace

Tightening torque

Unit : N·m {lbf.ft, kgf·m}

Location	Parts to be tightened	Tightening torque	Remarks
1	Nut (Body and cylinder shell mounting)	11 to 15 {8.0 to 12, 1.1 to 1.6}	—
9	Stroke switch	24.6 to 34.3 {18 to 25, 2.5 to 3.5}	—
11	Retainer	7.9 to 19 {5.8 to 14, 0.8 to 2}	—
15	Air bleeder	6.9 to 12.7 {5.1 to 9.4, 0.7 to 1.3}	—
16	Exhaust cover	7.9 to 19 {5.8 to 14, 0.8 to 2}	—
18	Nut (Piston plate and push rod mounting)	20 to 29 {14 to 22, 2 to 3}	—

BRAKE BOOSTER (AIRMASTER)

Lubricant and fluid

Location	Points of application	Kinds	Quantity
3	Cylinder shell bore	Multipurpose grease [NLGI No.2 (Li soap)]	10 g {0.35 oz}
6	O-ring	Brake fluid (SAE J1703f or FMVSS No.116, DOT3)	As required
8	Residual valve	Brake fluid (SAE J1703f or FMVSS No.116, DOT3)	As required
20	Surface of cup packing and friction surface of push rod	Multipurpose grease [NLGI No.2 (Li soap)]	5 g {0.18 oz}
29	Interior surface of cup packing	Multipurpose grease [NLGI No.2 (Li soap)]	As required
33	O-ring	Brake fluid (SAE J1703f or FMVSS No.116, DOT3)	As required
34	Fill oil seal groove of inside of retainer	Silicon grease	As required
35	Push rod friction surface against retainer	Silicon grease	As required

Special tools

Location	Tool name and shape	Part No.	Application
16	L-spanner	*910-23370	Removal and installation of exhaust cover
17	Stand	*910-00450	Working bench
21	Holder	*910-24831	Removal and installation of piston plate
29	Cup insert guide	*910-23289	Installation of cup packing

* : JIDOSHA KIKI Part No.

◆ Service procedure

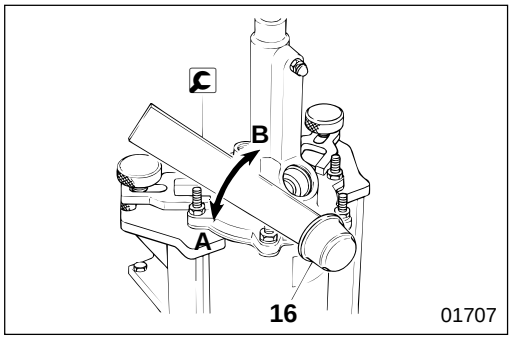

16 **Removal and installation of exhaust cover**

A : Removal
B : Installation

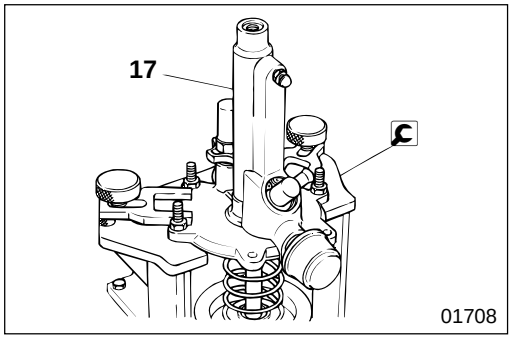

17 **Installation of body assembly**

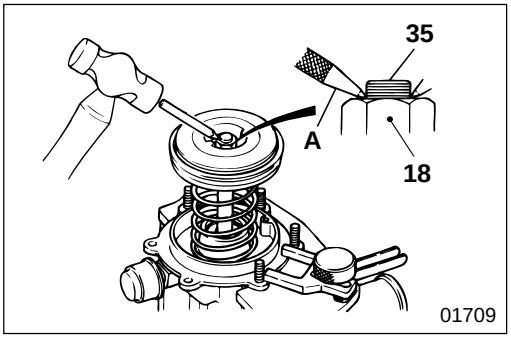

18 **Installation of nut**

After tightening nut **18** at specified torque, caulk the nut and push rod **35** thread area.

A : Center punch

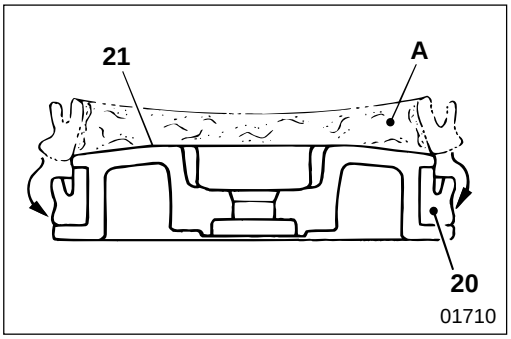

20 **Installation of cup packing**

A : Grease

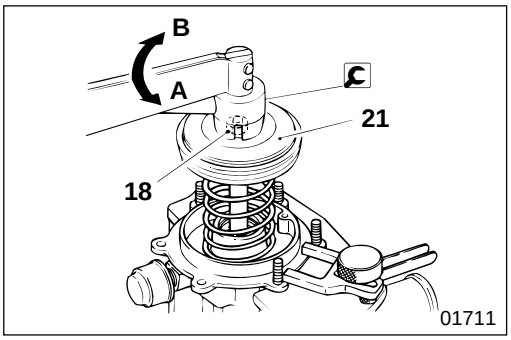

21 **Removal and installation of piston plate**

A : Removal

B : Installation

NOTE

After installation, tighten nut 18 at specified torque.

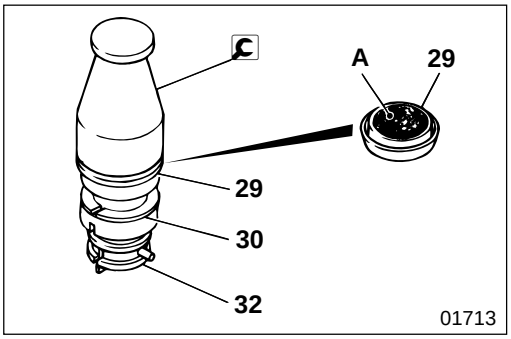

29 **Installation of cup packing**

A : Grease

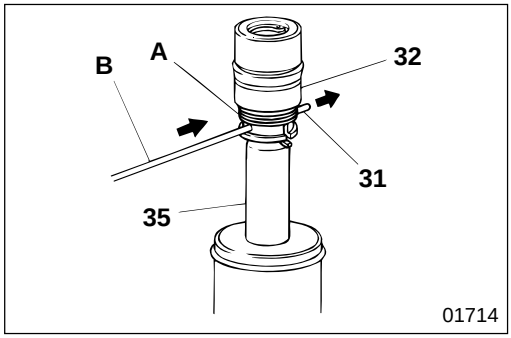

32 **Hydraulic piston**

[Removal]

A : Spring

B : Needle

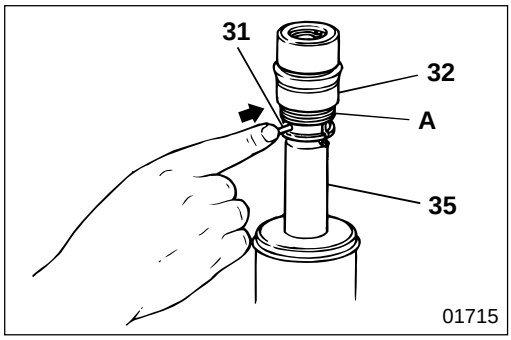

[Installation]

Align holes of hydraulic piston **32** and push rod **35**, and insert straight pin **31**.

A : Spring

NOTE

After inserting straight pin 31, make sure that the hydraulic piston spring is hanging over the straight pin and working as a stopper.

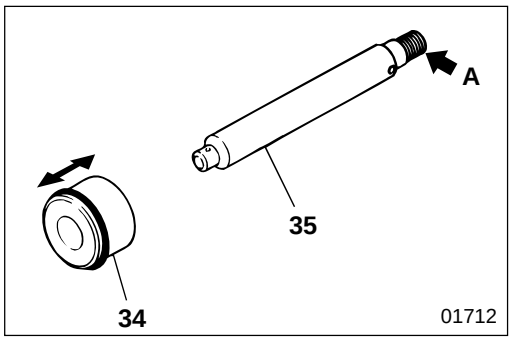

34 **Removal and installation of retainer**

CAUTION ⚠

Do not remove or install retainer 34 from the side of thread area A, or the inside of the retainer might be damaged.

M E M O

FRONT WHEEL BRAKE

Front Wheel Brake Assembly

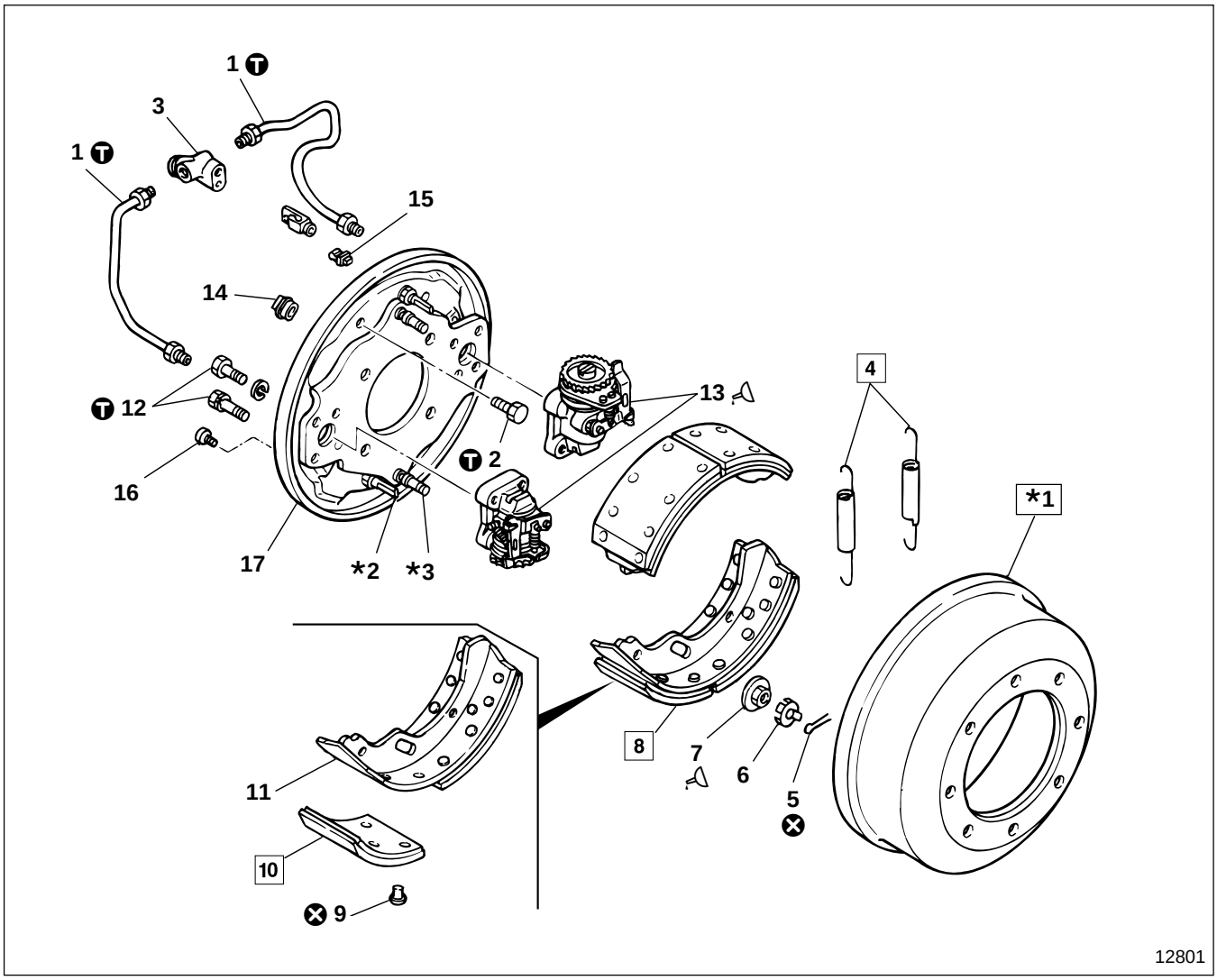

● **Disassembly sequence**

1 Brake pipe
2 Bolt
3 Joint
4 Return spring
5 Cotter pin
6 Lock plate
7 Nut
8 Brake shoe assembly
9 Rivet
10 Brake lining
11 Brake shoe
12 Bolt
13 Wheel cylinder assembly
P35A-66
14 Check hole plug
15 Adjusting hole plug
16 Cover
17 Backing plate

⊗ : Non-reusable parts
***1** : Brake drum Gr 26
***2** : Bolt
***3** : Stud pin

WARNING⚠

Do not leave grease or oil on the surface of brake lining 10 or inner surface of brake drum *1 because this reduces braking performance.

CAUTION⚠

- **If you are replacing only brake lining 10, clean the adjuster and screw thread area of wheel cylinder assembly 13 and apply rubber grease to the thread area.**
- **Do not turn or remove bolt *2 that is fitted to keep brake shoe assembly 8 at 90°.**

● **Assembly sequence**

Follow the disassembly sequence in reverse.
Repair kit : Brake lining kit

● **Adjustment of initial brake shoe clearance after installation**

🕮 P35A-62

Service standards

Unit : mm {in.}

Location	Maintenance item		Standard value		Limit	Remedy
4	Return spring load (Installed length 228.4 {8.99})		380 N {86 lbf. ft, 39 kgf}		Clearance between coils or coil and cover	Replace
8	Thickness of brake lining		15 {0.59}		5.5 {0.22} (Side shoulder means wear limit)	Replace brake lining
***1**	Brake drum	Inner diameter	400 {15.75}	*401 {15.79}	402 {15.83}	Repair or replace
		Cylindrical accuracy	0.025 {0.00098}		0.2 {0.0079}	Correct

* : Indicates correction limit.

Tightening torque

Unit : N·m {lbf.ft, kgf·m}

Location	Parts to be tightened	Tightening torque	Remarks
1	Brake pipe flare nut	12.75 to 17.65 {9.4 to 13, 1.3 to 1.8}	—
2	Bolt (Joint mounting)	37.27 to 49.03 {27 to 36, 3.8 to 5.0}	—
12	Bolt (Wheel cylinder assembly mounting)	37.27 to 49.03 {27 to 36, 3.8 to 5.0}	M10
		122.58 to 166.7 {90 to 120, 12.5 to 17.0}	M12

Lubricant

Location	Points of application	Kinds	Quantity
7	Brake shoe assembly contact surface of nut	Brake grease	As required
13	Wheel cylinder assembly anchor and screw groove contact area with brake shoe	Brake grease	As required

◆ Service procedure

● Initial adjustment of brake shoe clearance after installation

Turning the adjuster of wheel cylinder assembly **13** in arrow ⇨ direction expands brake shoe assembly **8**, narrowing the clearance between brake drum ***1** and brake lining **10**.

- Jack up the vehicle to make sure that the wheel hub bearing has no play. If there is any play, correct it. Gr 26
- Remove adjusting hole plug **15** and check hole plug **14**.
- Adjust the brake shoe clearance as follows, so that 0.3 mm {0.012 in.} feeler gauge **B** can be inserted or extracted through check hole **A**, between brake drum ***1** and brake lining **10** with a little resistance.

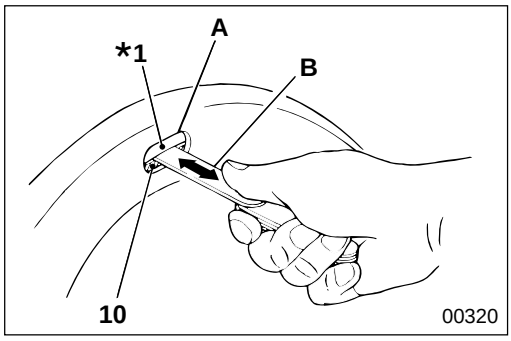

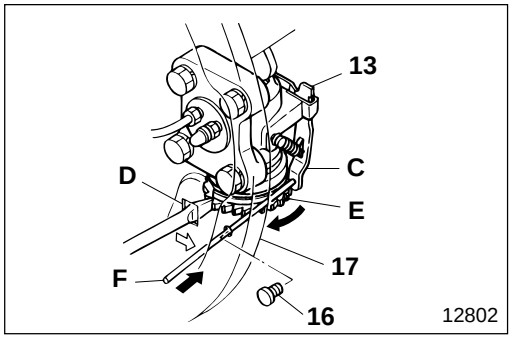

- To increase brake shoe clearance
  - Remove cover **16** on the rear of backing plate **17**.
  - Insert a wire (approximately ø5 mm {0.20 in.}) into the hole of cover **16** and lift adjusting lever **C** of wheel cylinder **13**.
  - Turn adjuster **E** of wheel cylinder **13**, through adjusting hole **D**, in the opposite direction to arrow ⇨ on backing plate **17**.

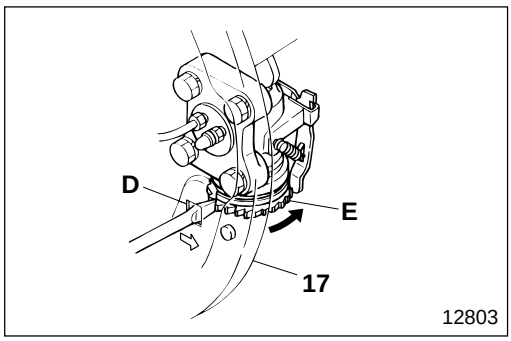

- To decrease brake shoe clearance
  Turn adjuster **E** in the arrow ⇨ direction marked on backing plate **17** through adjusting hole **D**.

- Extract the feeler gauge and depress the brake pedal two or three times fully, then the specified value brake shoe clearance can be obtained.
- Insert a 0.2 mm {0.0079 in.} feeler gauge through check hole **A** and make sure that it can be inserted or extracted with a little resistance.
  If there is any fault, disassemble and inspect wheel cylinder **13**.
  P35A-66

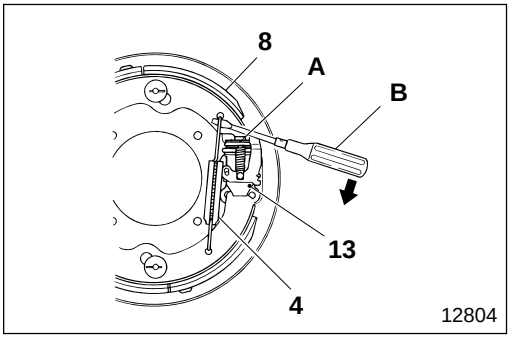

4 Return spring

[Removal]
To remove the return spring, place screwdriver **B** on the hook of the return spring, then pry and remove the return spring making use of wheel cylinder **13** adjusting screw **A** as a fulcrum.

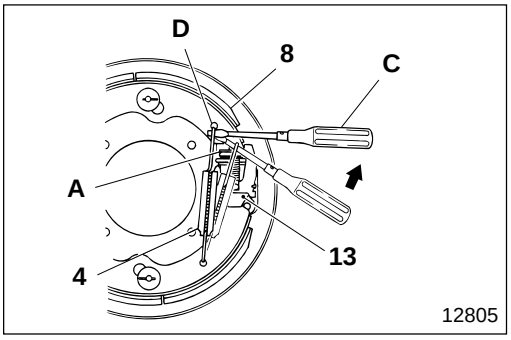

[Installation]
- Install the shorter hook of return spring **4** on brake shoe assembly **8**.
- Insert a small Phillips screwdriver **C** into the hook of return spring **4**, insert the tip of the screwdriver into return spring installation hole **D** of brake shoe assembly **8** to pry on the return spring.

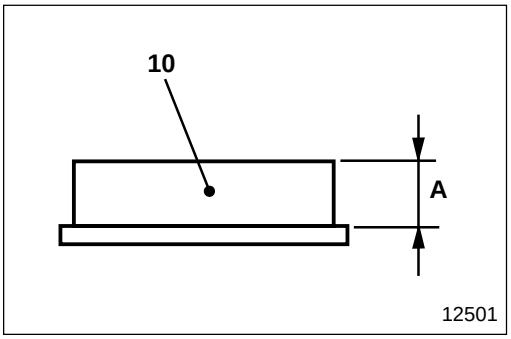

8 Brake shoe assembly

[Inspection]
If thickness **A** of brake lining **10** is lower than the limit replace the brake lining on the same axle as a unit.

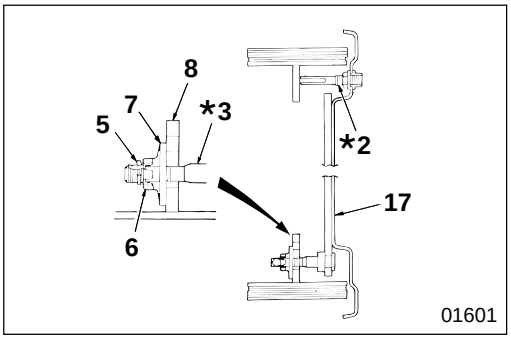

[Installation]
- Install brake shoe assembly **8**.
- Tighten nut **7**. When brake shoe assembly **8** makes contact with bolt ***2** of backing plate **17**, slacken off the nut by one third of a turn.
- Slacken off nut **7** until the holes of stud pin ***3** and lock plate **6** align with each other.
- Install cotter pin **5** and bend it.

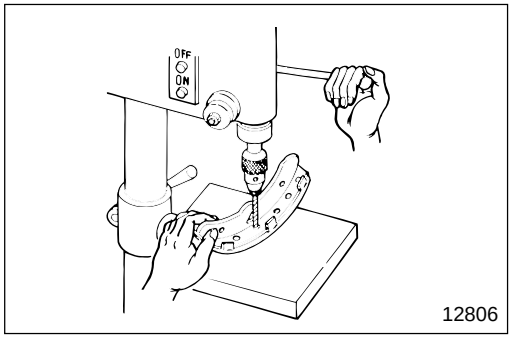

10 **Brake lining**

[Removal]

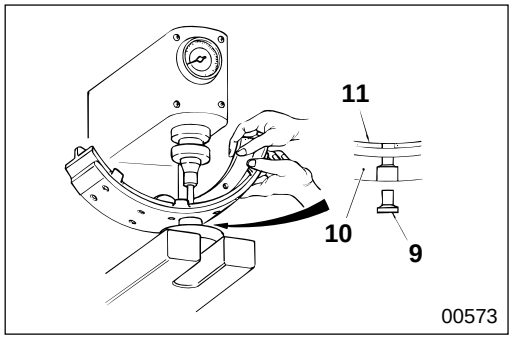

[Installation]

- Clean the mounting surfaces of brake lining **10** and brake shoe **11** with cleaning fluid and dry them.
- Insert rivets **9** from brake lining **10** side, and caulk the rivets at the specified load so that there is no clearance between brake shoe **11** and the brake lining.

  Caulking load for rivets : 17 to 19 kN {3750 to 4190 lbf, 1700 to 1900 kgf}

- Make sure that you inspect contact with the inner surface of brake drum ***1** after you replace brake linings **10**. If contact is incorrect, correct with the brake assembled.

WARNING

Do not leave lubricant on the surface of brake lining 10 because this reduces braking performance.

CAUTION

Make sure that the type of brake linings 10 you fit are suitable for the intended use of the vehicle. Make sure that you fit identical size and color coated linings on the left and right sides of one shaft.

***1** **Correction of brake drum**

If the cylindrical accuracy of brake drum ***1** is higher than the limit, or there are seams, correct by machining to the correction limit. Machining of the brake drum should be done with the wheel hub attached as an integral part.

M E M O

FRONT WHEEL BRAKE

Wheel Cylinder Assembly

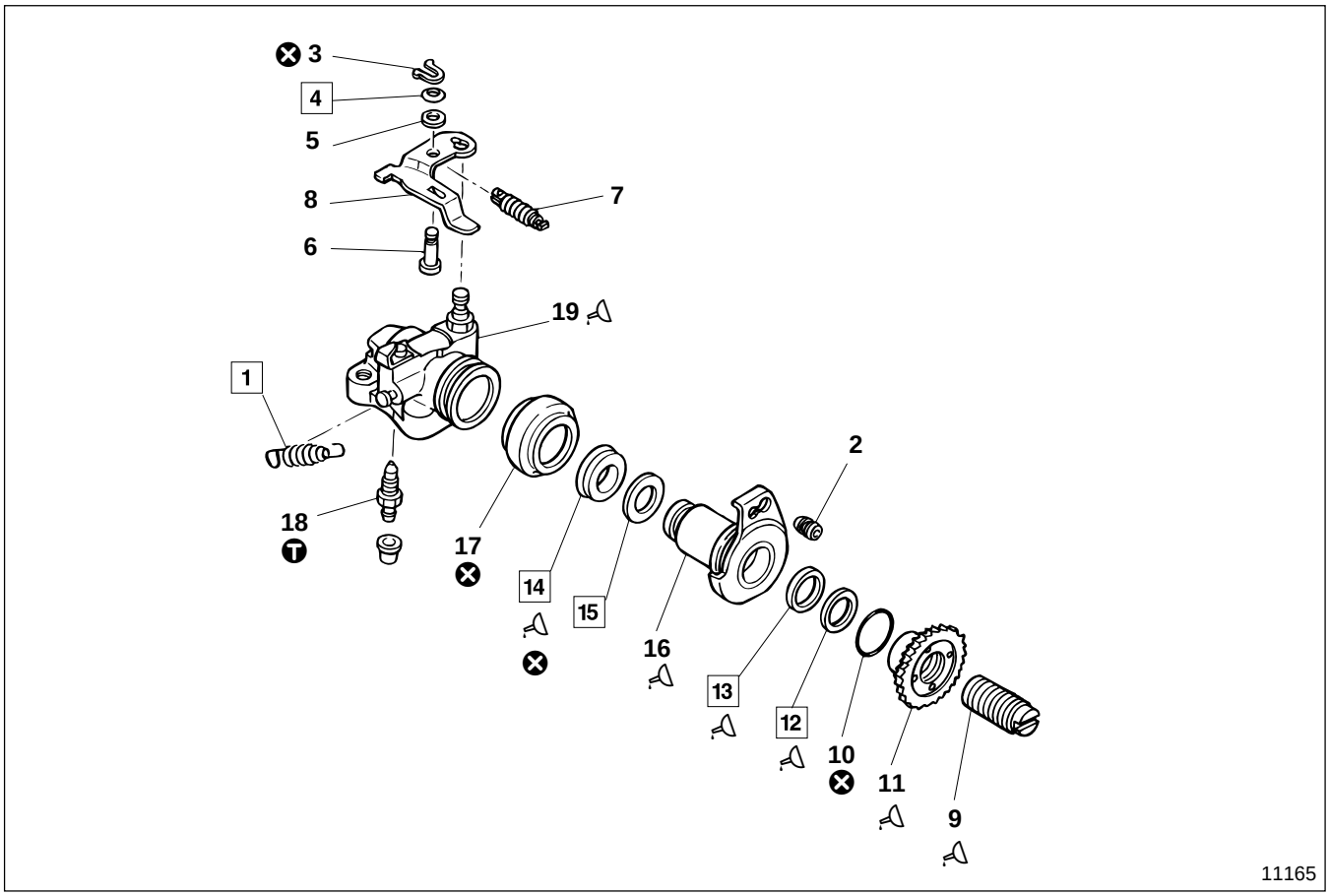

● **Disassembly sequence**

1 Set spring
2 Cover
3 Retainer
4 Wave washer
5 Washer
6 Pin
7 Spring
8 Adjusting lever
9 Screw
10 O-ring
11 Adjuster
12 Washer (Thin)
13 Washer (Thick)
14 Piston cup
15 Backup ring
16 Piston
17 Boot
18 Air bleeder
19 Cylinder body

⊗ : Non-reusable parts

● **Assembly sequence**

Follow the disassembly sequence in reverse.
Repair kit : Wheel cylinder kit

Service standards

Unit : mm {in.}

Location	Maintenance item	Standard value (Basic diameter in [ ])	Limit	Remedy
16, 19	Clearance between piston and cylinder body	[34.93] 0.03 to 0.13 {[1.38] 0.0012 to 0.0051}	0.2 {0.0079}	Replace piston

Tightening torque

Unit : N·m {lbf.ft, kgf·m}

Location	Parts to be tightened	Tightening torque	Remarks
18	Air bleeder	6.86 to 11.77 {5.1 to 8.7, 0.7 to 1.2}	—

Lubricant

Location	Points of application	Kinds	Quantity
9	Thread area of screw	Rubber grease	As required
11	Screw mounting thread of adjuster and friction surface with piston	Rubber grease	As required
12, 13	Both sides of washer	Rubber grease	As required
14	Periphery of piston cup	Rubber grease	As required
16	Periphery and interior of piston	Rubber grease	As required
19	Boot mounting groove of cylinder body	Rubber grease	As required

◆ Service procedure

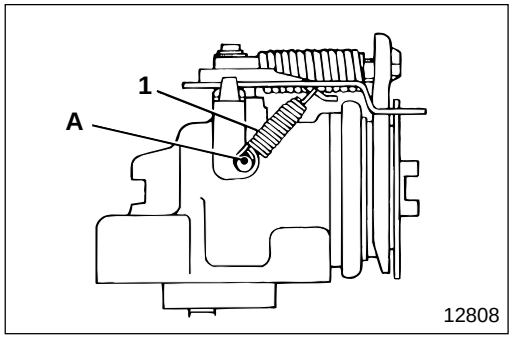

1 **Installation direction of set spring**

Fasten the closed end hook of set spring **1** on pin **A**.

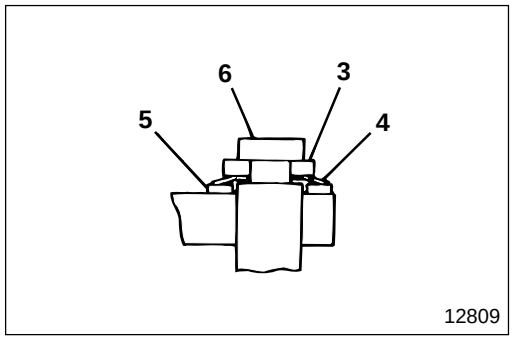

4 **Installation direction of wave washer**

Caulk retainer **3**.

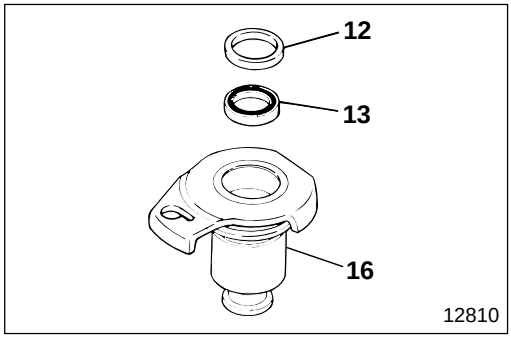

12 **13** **Installation sequence and direction of washer**

- Install thicker washer **13** first.
- Install washer **13** with its black face upward.

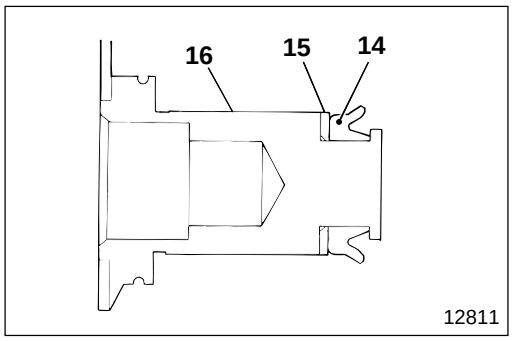

14 **Installation direction of piston cup**

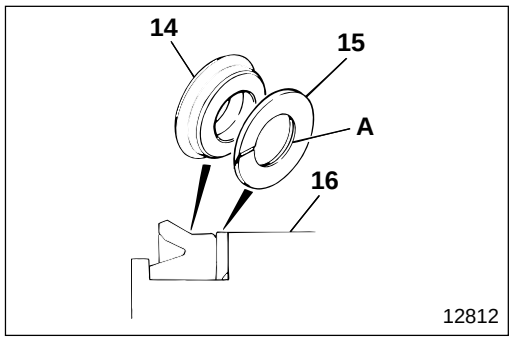

15 **Installation direction of backup ring**

Install backup ring **15** facing the side without chamfer **A** to piston cup **14**.

M E M O

REAR WHEEL BRAKE

Rear Wheel Brake Assembly

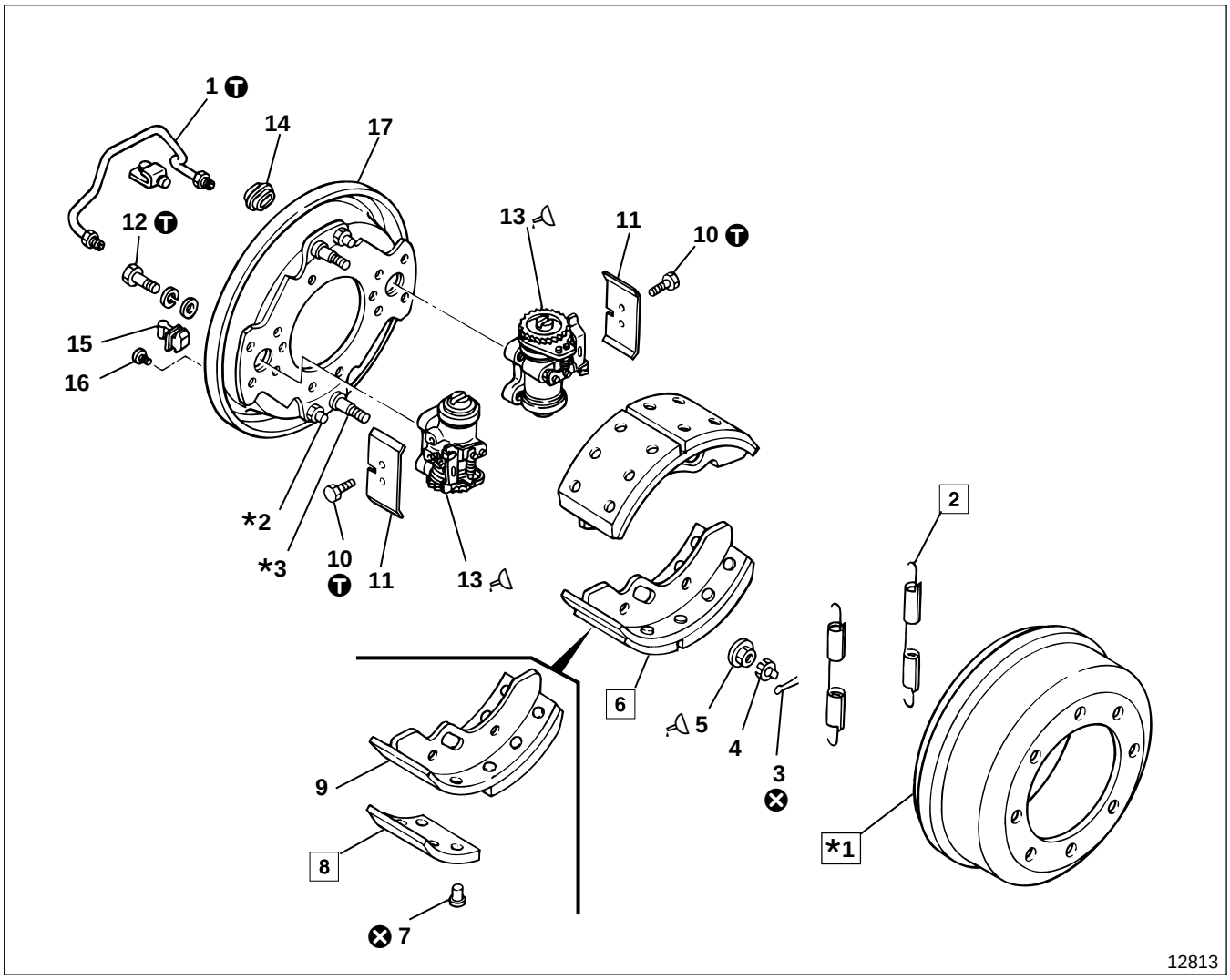

● **Disassembly sequence**

1 Brake pipe
2 Return spring
3 Cotter pin
4 Lock plate
5 Nut
6 Brake shoe assembly
7 Rivet
8 Brake lining
9 Brake shoe
10 Bolt
11 Wheel cylinder cover
12 Bolt
13 Wheel cylinder assembly
35A-76
14 Check hole plug
15 Adjusting hole plug
16 Cover
17 Backing plate

⊗ : Non-reusable parts
***1** : Brake drum Gr 27
***2** : Bolt
***3** : Stud pin

WARNING⚠

Do not leave grease or oil on the surface of brake lining 8 or inner surface of brake drum *1 because this reduces braking performance.

CAUTION⚠

- **If you are replacing only brake lining 8, clean the adjuster and screw thread area of wheel cylinder assembly 13 and apply rubber grease to the thread area.**
- **Do not turn or remove bolt *2 that is fitted to keep brake shoe assembly 6 at 90°.**

● **Assembly sequence**

Follow the disassembly sequence in reverse.
Repair kit : Brake lining kit

● **Adjustment of initial brake shoe clearance after installation**

🕮 P35A-72

Service standards

Unit : mm {in.}

Location	Maintenance item		Standard value		Limit	Remedy
2	Return spring load (Installed length 266.5 {10.5})		420 N {95 lbf, 43 kgf}		Clearance between coils or coil and cover	Replace
6	Thickness of Brake lining		15 {0.59}		5.5 {0.22} (Side shoulder means wear limit)	Replace brake lining
***1**	Brake drum	Inner diameter	400 {15.75}	*401 {15.79}	402 {15.83}	Correct or replace
		Cylinder accuracy	0.025 {0.00098}		0.2 {0.0079}	Correct

* : Indicates correction limit

Tightening torque

Unit : N·m {lbf.ft, kgf·m}

Location	Parts to be tightened	Tightening torque	Remarks
1	Brake pipe flare nut	12.75 to 17.65 {9.4 to 13, 1.3 to 1.8}	—
10	Bolt (Wheel cylinder assembly cover mounting)	7.85 to 11.77 {5.8 to 8.7, 0.8 to 1.2}	—
12	Bolt (Wheel cylinder assembly mounting)	122.58 to 166.7 {90 to 120, 12.5 to 17.0}	—

Lubricant

Location	Points of application	Kinds	Quantity
5	Brake shoe assembly contact surface of nut	Brake grease	As required
13	Wheel cylinder assembly anchor and screw groove contact areas with brake shoe	Brake grease	As required

◆ Service procedure

● **Adjustment of initial brake shoe clearance after installation**

Turning the adjuster of wheel cylinder **13** in arrow ⇨ direction expands brake shoe assembly **6**, narrowing the clearance between brake drum ***1** and brake lining **8**.

- Jack up the vehicle to make sure that the wheel hub bearing has no play. If there is any play, correct it. Gr 27
- Remove adjusting hole plug **15** and check hole plug **14**.
- Adjust the brake shoe clearance as follows, so that 0.3 mm {0.012 in.} feeler gauge **B** can be inserted or extracted through check hole **A**, between brake drum ***1** and brake lining **8** with a little resistance.

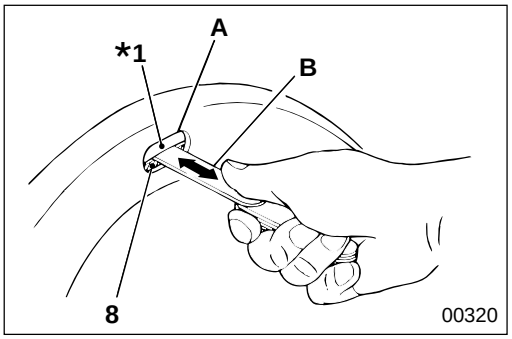

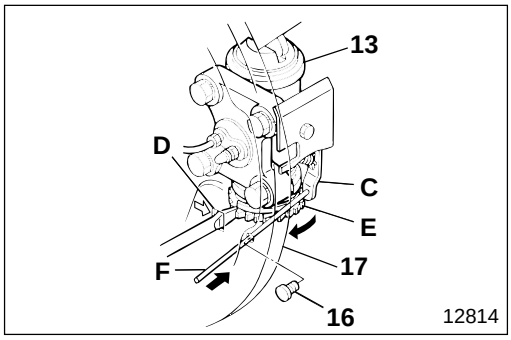

- To increase brake shoe clearance
  - Remove cover **16** on the rear of backing plate **17**.
  - Insert a wire (approximately ø5 mm {0.20 in.}) into the hole of cover **16** and lift adjusting lever **C** of wheel cylinder **13**.
  - Turn adjuster **E** of wheel cylinder **13**, through adjusting hole **D**, in the opposite direction to arrow ⇨ on backing plate **17**.

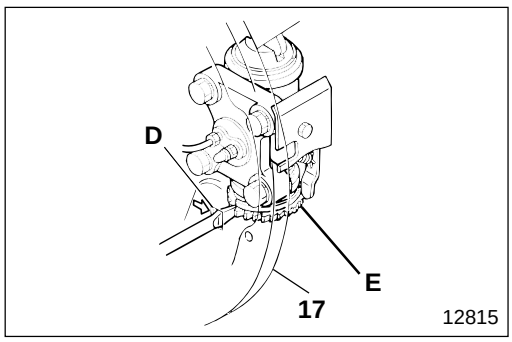

- To decrease brake shoe clearance
  Turn adjuster **E** in the arrow ⇨ direction marked on backing plate **17** through adjusting hole **D**.

- Extract the feeler gauge and depress the brake pedal two or three times fully, then the specified value brake shoe clearance can be obtained.
- Insert a 0.2 mm {0.0079 in.} feeler gauge through check hole **A** and make sure that it can be inserted or extracted with a little resistance.
  If there is any fault, disassemble and inspect wheel cylinder **13**. P35A-76

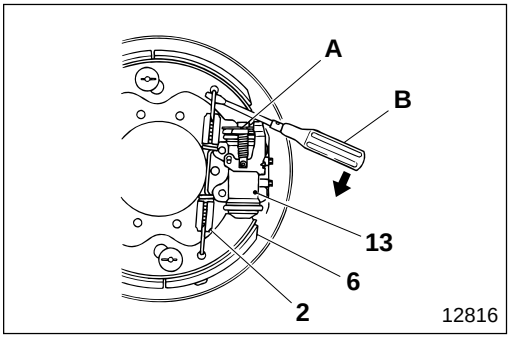

2 **Return spring**

[Removal]

To remove the return spring, place screwdriver **B** on the hook of the return spring, then pry and remove the return spring making use of wheel cylinder assembly **13** adjusting screw **A** as a fulcrum.

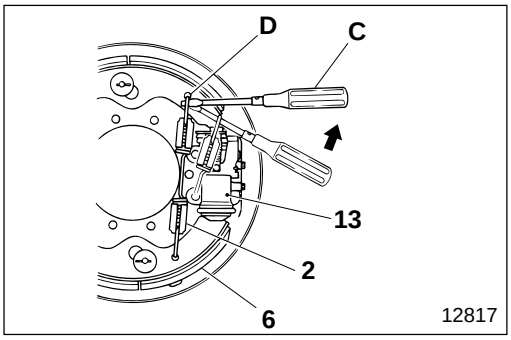

[Installation]

- Install the shorter hook of return spring **2** on brake shoe assembly **6**.
- Insert a small Phillips screwdriver **C** into the hook of return spring **2**, insert the tip of the screwdriver into return spring installation hole **D** of brake shoe assembly **6** to pry on the return spring.

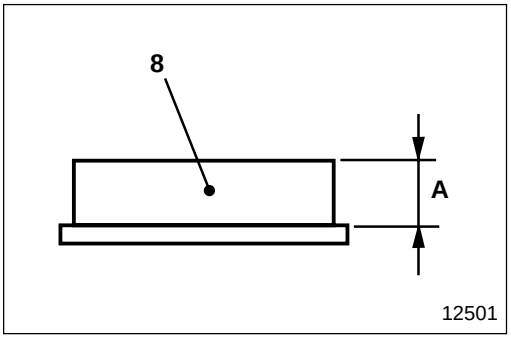

6 **Brake shoe assembly**

[Inspection]

If thickness **A** of brake lining **8** is lower than the limit replace the brake lining on the same axle as a unit.

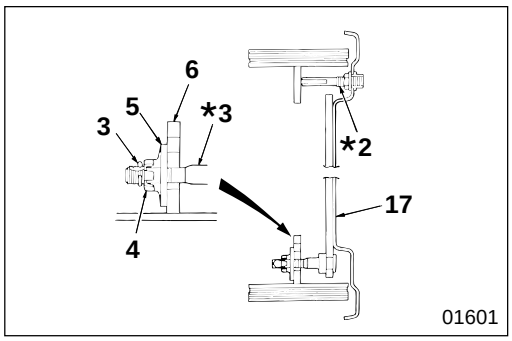

[Installation]

- Install brake shoe assembly **6**.
- Tighten nut **5**. When brake shoe assembly **6** makes contact with bolt ***2** of backing plate **17**, slacken off the nut by one third of a turn.
- Slacken off nut **5** until the holes of stud pin ***3** and lock plate **4** align with each other.
- Install cotter pin **3** and bend it.

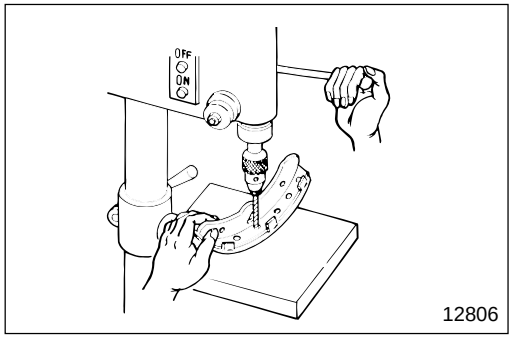

8 **Brake lining**

[Removal]

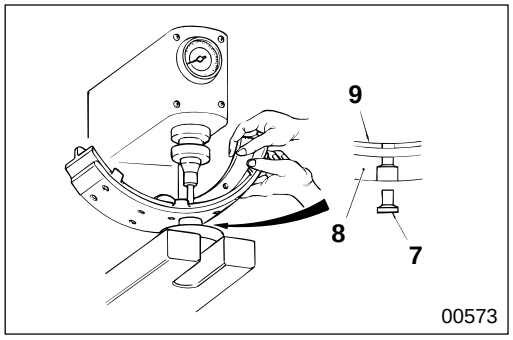

[Installation]

- Clean the mounting surfaces of brake lining **8** and brake shoe **9** with cleaning fluid and dry them.
- Insert rivets **7** from brake lining **8** side, and caulk the rivets at the specified load so that there is no clearance between brake shoe **9** and the brake lining.

  Caulking load for rivets : 17 to 19 kN {3750 to 4190 lbf, 1700 to 1900 kgf}

- Make sure that you inspect contact with the inner surface of brake drum ***1** after you replace brake linings **8**. If contact is incorrect, correct with the brake assembled.

WARNING

Do not leave lubricant on the surface of brake lining 8 because this reduces braking performance.

CAUTION

Make sure that the type of brake linings 8 you fit are suitable for the intended use of the vehicle. Make sure that you fit identical size and color coated linings on the left and right sides of one shaft.

***1** **Correction of brake drum**

If the cylindrical accuracy of brake drum ***1** is higher than the limit, or there are seams, correct by machining to the correction limit. Machining of the brake drum should be done with the wheel hub attached as an integral part.

M E M O

Wheel Cylinder Assembly

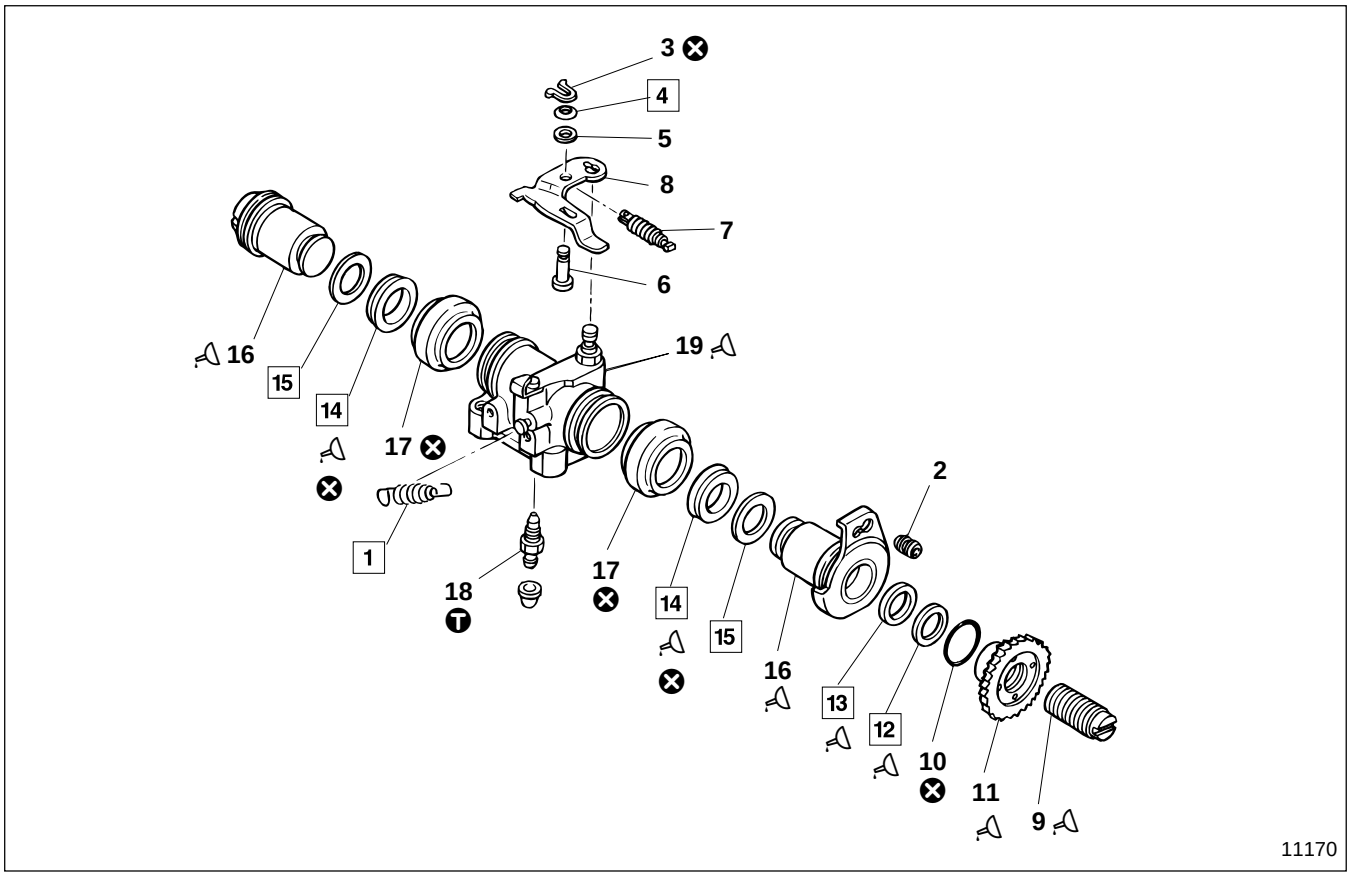

● **Disassembly sequence**

1 Set spring
2 Cover
3 Retainer
4 Wave washer
5 Washer
6 Pin
7 Spring
8 Adjusting lever
9 Screw
10 O-ring
11 Adjuster
12 Washer (Thin)
13 Washer (Thick)
14 Piston cup
15 Backup ring
16 Piston
17 Boot
18 Air bleeder
19 Cylinder body

⊗ : Non-reusable parts

● **Assembly sequence**

Follow the disassembly sequence in reverse.
Repair kit : Wheel cylinder kit

Service standards

Unit : mm {in.}

Location	Maintenance item	Standard value (Basic diameter in [ ])	Limit	Remedy
16, 19	Clearance between piston and cylinder body	[38.10] 0.03 to 0.13 {[1.50] 0.0012 to 0.0051}	0.2 {0.0079}	Replace piston

Tightening torque

Unit : N·m {lbf.ft, kgf·m}

Location	Parts to be tightened	Tightening torque	Remarks
18	Air bleeder	6.86 to 11.77 {5.1 to 8.7, 0.7 to 1.2}	—

Lubricant

Location	Points of application	Kinds	Quantity
9	Thread area of screw	Rubber grease	As required
11	Screw mounting thread of adjuster and friction surface with piston	Rubber grease	As required
12, 13	Both sides of washer	Rubber grease	As required
14	Periphery of piston cup	Rubber grease	As required
16	Periphery and interior of piston	Rubber grease	As required
19	Boot mounting groove of cylinder body	Rubber grease	As required

◆ Service procedure

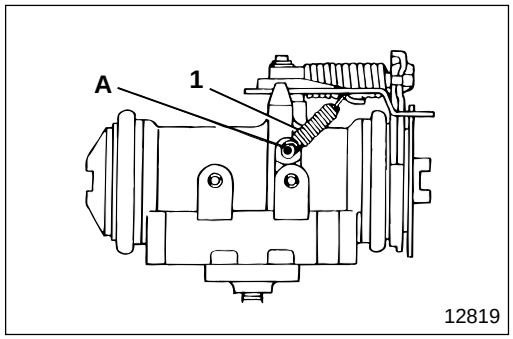

1 Installation direction of set spring

Fasten the closed end hook of set spring **1** on pin **A**.

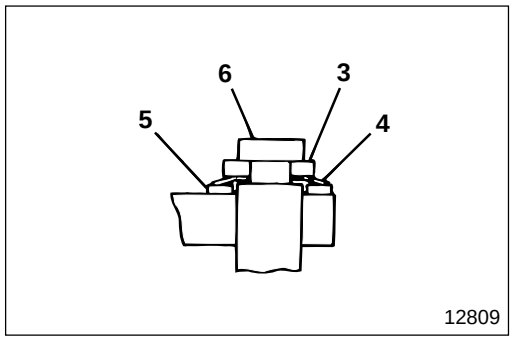

4 Installation direction of wave washer

Caulk retainer **3**.

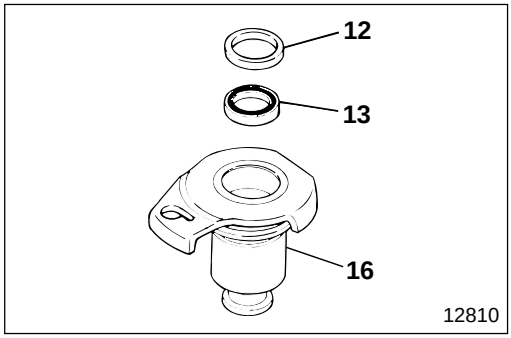

12 **13** **Installation sequence and direction of washer**

- Install thicker washer **13** first.
- Install washer **13** with its black face upward.

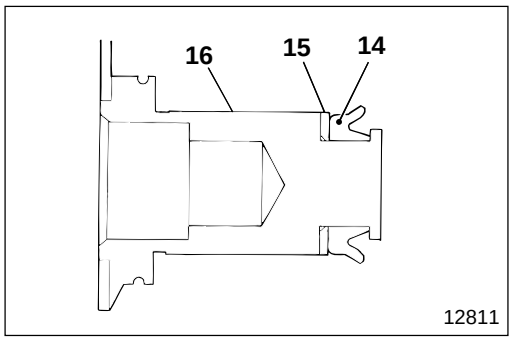

14 **Installation direction of piston cup**

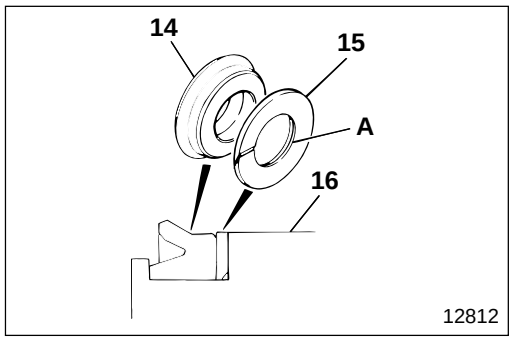

15 **Installation direction of backup ring**

Install backup ring **15** facing the side without chamfer **A** to piston cup **14**.

M E M O

AIR COMPRESSOR

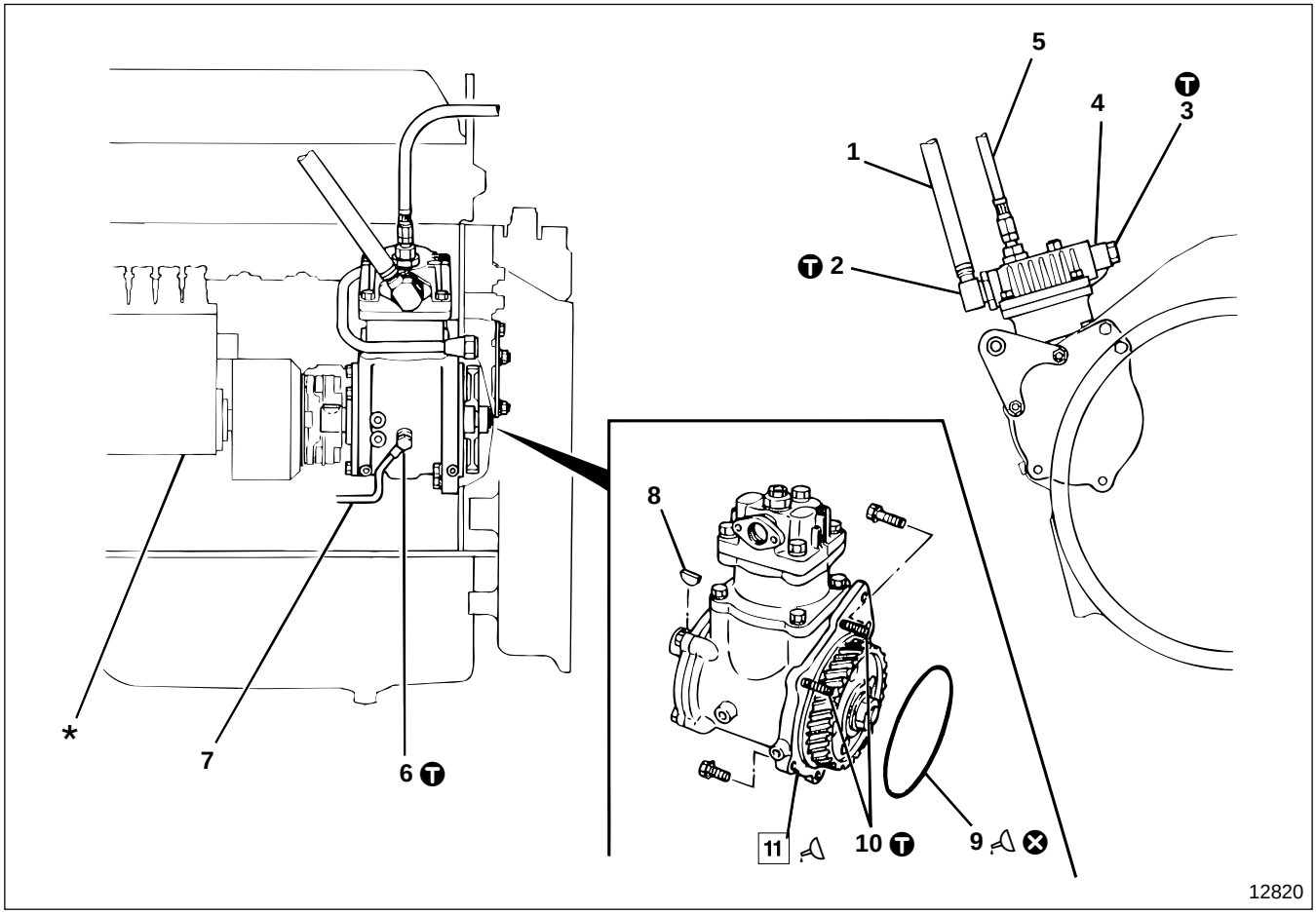

● **Removal sequence**

1 Suction hose
2 Connector
3 Eye bolt
4 Air outlet pipe
5 Unloader hose
6 Eye bolt
7 Oil pipe
8 Key
9 O-ring
10 Stud bolt
11 Air compressor assembly
P35A-82

*: Injection pump assembly Gr 13
⊗: Non-reusable parts

● **Installation sequence**

Follow the removal sequence in reverse.

Ⓣ Tightening torque

Unit : N·m {lbf.ft, kgf·m}

Location	Parts to be tightened	Tightening torque	Remarks
2	Connector	98 {72, 10.0}	—
3	Eye bolt	98 {72, 10.0}	—
6	Eye bolt	21 {15, 2.1}	—
10	Stud	5.9 to 12 {4.3 to 8.7, 0.6 to 1.2}	—

Lubricant and sealant

Location	Points of application	Kinds	Quantity
9	O-ring	Engine oil	As required
11	Air compressor assembly stud bolt mounting hole	LOCTITE 271	As required

◆ Service procedure

11 Installation of air compressor assembly

- Position No.1 cylinder at top dead center in the compression cycle. Gr 11
- Align punched marks **B** of drive gear **A** and crankcase **C** of air compressor assembly **11**. Then mount on flywheel housing **D**.
- Remove inspection plug **E** from flywheel housing **D** and check that punched mark **B** of drive gear **A** and pointer **F** align. If they do not, reinstall them.

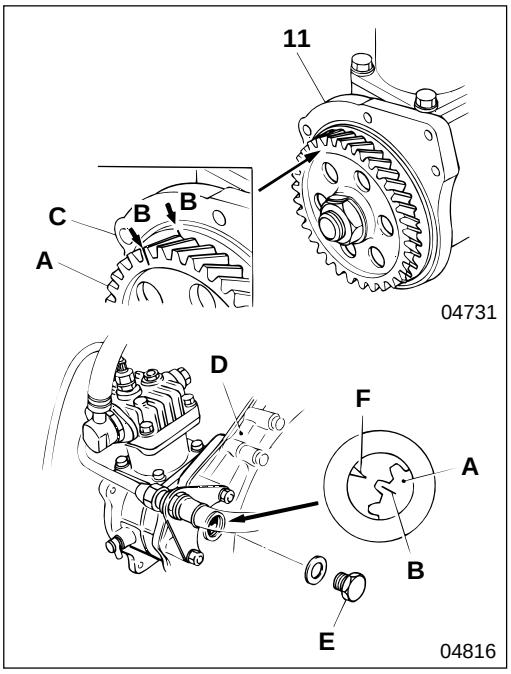

AIR COMPRESSOR

Air Compressor Assembly

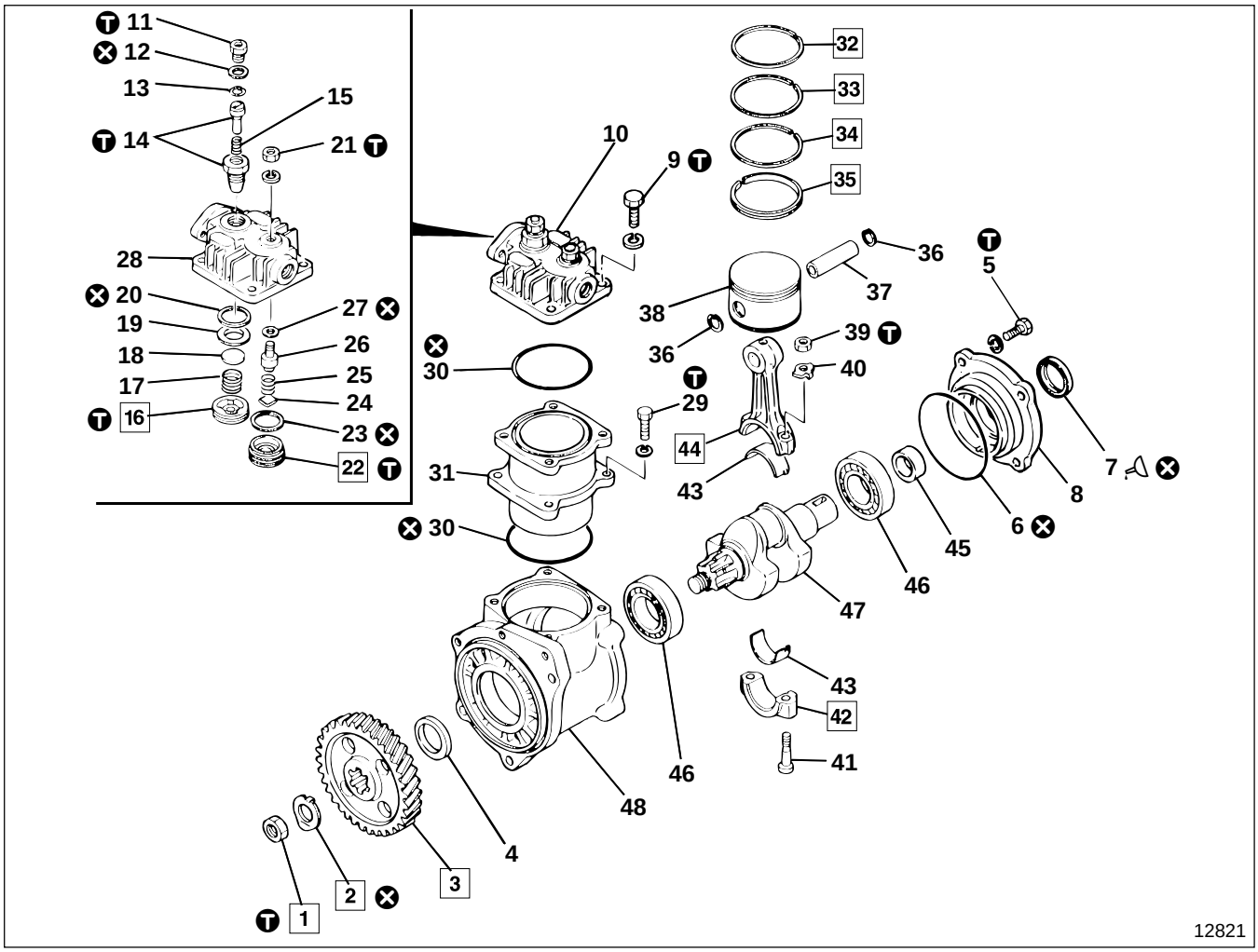

● **Disassembly sequence**

1 Nut
2 Lock washer
3 Drive gear
4 Collar
5 Bolt
6 O-ring
7 Oil seal
8 Bearing holder
9 Bolt
10 Cylinder head assembly
11 Connector
12 Gasket
13 Snap ring
14 Unloader valve assembly
15 Unloader spring
16 Suction valve holder
17 Suction valve spring
18 Suction valve
19 Suction valve seat
20 Suction gasket
21 Nut
22 Delivery valve holder
23 Suction gasket
24 Delivery valve
25 Delivery valve spring
26 Spring holder
27 Gasket
28 Cylinder head
29 Bolt
30 O-ring
31 Cylinder liner
32 1st compression ring
33 2nd compression ring
34 3rd compression ring
35 Oil ring
36 Snap ring
37 Piston pin
38 Piston
39 Nut
40 Lock washer
41 Bolt
42 Connecting rod cap
43 Connecting rod bearing
44 Connecting rod
45 Sleeve
46 Bearing
47 Crankshaft
48 Crankcase

⊗ : Non-reusable parts

● **Assembly sequence**

Follow the disassembly sequence in reverse.
Repair kit : Piston ring kit

Service standards

Unit : mm {in.}

Location	Maintenance item		Standard value (Basic diameter in [ ])	Limit	Remedy
17	Suction valve spring load (Installed length 9 {0.35})		2.3 N {0.51 lbf, 0.23 kgf}	1.3 N {0.29 lbf, 0.13 kgf}	Replace
25	Delivery valve spring load (Installed length 10.5 {0.41})		3.2 N {0.73 lbf, 0.33 kgf}	2.4 N {0.53 lbf, 0.24 kgf }	Replace
31, 38	Clearance between piston and cylinder liner	Top	[80] 0.27 to 0.33 {[3.15] 0.011 to 0.013}	0.35 {0.014}	Replace cylinder liner
		Skirt	[80] 0.11 to 0.17 {[3.15] 0.0043 to 0.0067}	0.19 {0.0075}	
32 to 35	Clearance of piston ring gap (Measure at interior of cylinder liner)	Compression ring	—	1.0 {0.039}	Replace piston ring kit
		Oil ring	—	1.0 {0.039}	
32 to 35, 38	Clearance between piston ring and piston ring groove of piston	Compression ring	—	0.08 {0.0031}	Replace piston ring kit
		Oil ring	—	0.08 {0.0031}	
37, 38	Clearance between piston pin and piston		[16] {[0.63]}	0.08 {0.0031}	Replace piston pin
37, 44	Clearance between piston pin and connecting rod small end		[16] {[0.63]}	0.07 {0.0028}	Replace connecting rod
43, 47	Clearance between connecting rod bearing and crankshaft		[34] {[1.34]}	0.1 {0.0039}	Replace
42, 44, 47	End play of connecting rod		—	0.5 {0.020}	Replace
47, 48	End play of crankshaft		—	1.0 {0.039}	Replace

Tightening torque

Unit : N·m {lbf.ft, kgf·m}

Location	Parts to be tightened	Tightening torque	Remarks
1	Nut (Drive gear mounting)	116.7 to 210.8 {120 to 155, 17.0 to 21.5}	—
5	Bolt (Bearing holder mounting)	13.7 to 17.7 {10 to 13, 1.4 to 1.8}	—
9	Bolt (Cylinder head assembly mounting)	24.5 to 29.4 {18 to 22, 2.5 to 3.0}	—
11	Connector	29.4 to 34.3 {22 to 25, 3.0 to 3.5}	—
14	Unloader valve assembly	98.1 to 117.7 {72 to 87, 10 to 12}	—
16	Suction valve holder	98.1 to 117.7 {72 to 87, 10 to 12}	—
21	Nut (Spring holder mounting)	44.1 to 58.8 {33 to 43, 4.5 to 6.0}	—
22	Delivery valve seat	98.1 to 117.7 {72 to 87, 10 to 12}	—
29	Bolt (Cylinder liner mounting)	24.5 to 29.4 {18 to 22, 2.5 to 3.0}	—
39	Nut (Connecting rod mounting)	22.6 to 25.5 {17 to 19, 2.3 to 2.6}	—

Lubricant

Location	Points of application	Kinds	Quantity
7	Oil seal lip	Engine oil	As required

Special tools

Unit : mm {in.}

Location	Tool name and shape	Part No.	Application
16	Suction valve tool 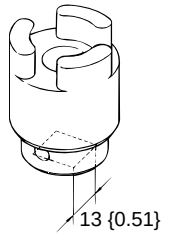 01730	MH061263	Removal and installation of suction valve holder
22	Delivery valve tool 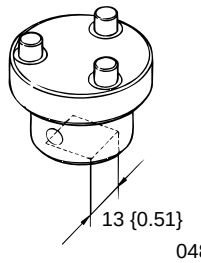 04813	MH062014	Removal and installation of delivery valve holder
32 to 35	Piston ring tool 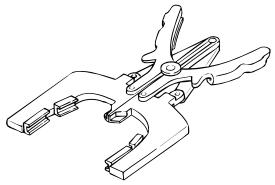 01732	MH060014	Removal and installation of piston ring (Compression ring, oil ring)

◆ Service procedure

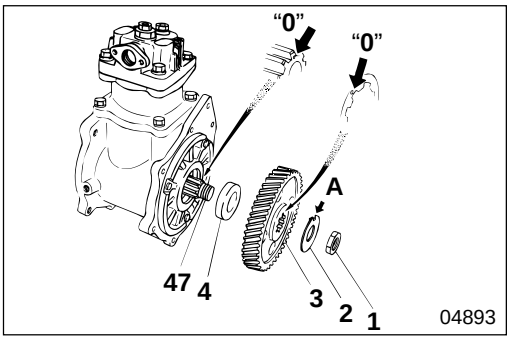

1 **to** **3** **Installation of drive gear**

- To install, align mark "**0**" of crankshaft **47** with alignment mark "**0**" of drive gear **3**.
  Assemble by aligning the alignment mark of the drive gear with indent **A** of lock washer **2**, then tighten nut **1** at specified torque.

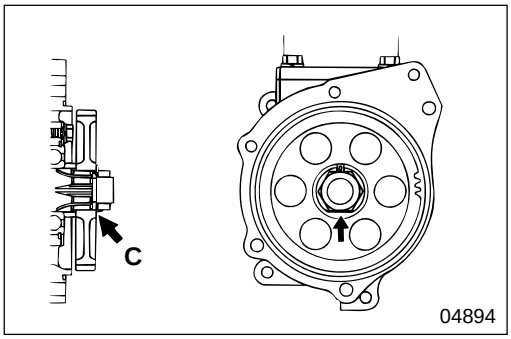

- Bend the lock washer toward nut **C** after assembly.

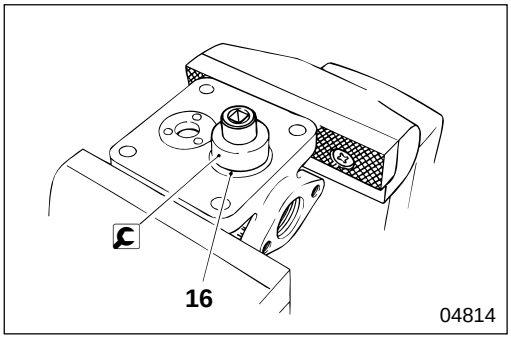

16 **Suction valve holder**

[Removal and installation]

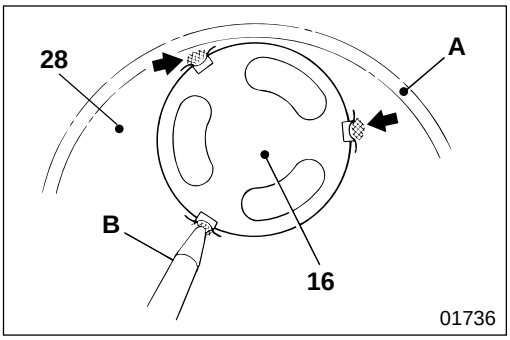

[Caulking]
Caulk cylinder head **28** taking care not to damage seal surface **A** of the O-ring.

B : Center punch

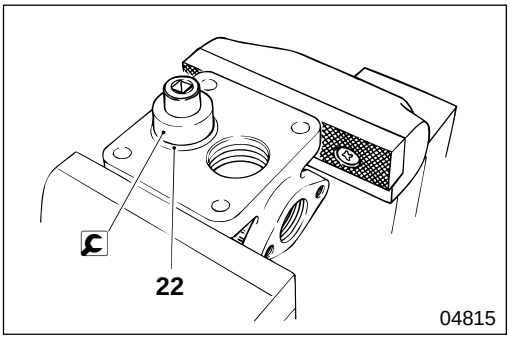

22 **Removal and installation of delivery valve holder**

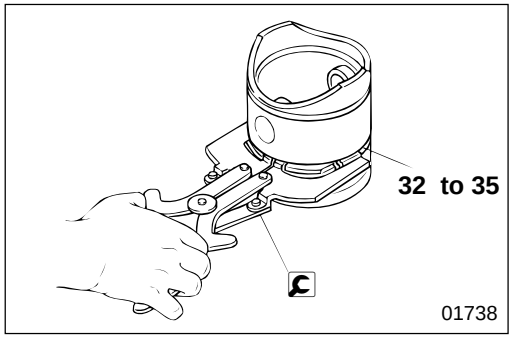

32 to **35** **Piston ring (Compression ring and oil ring)**

[Removal and installation]

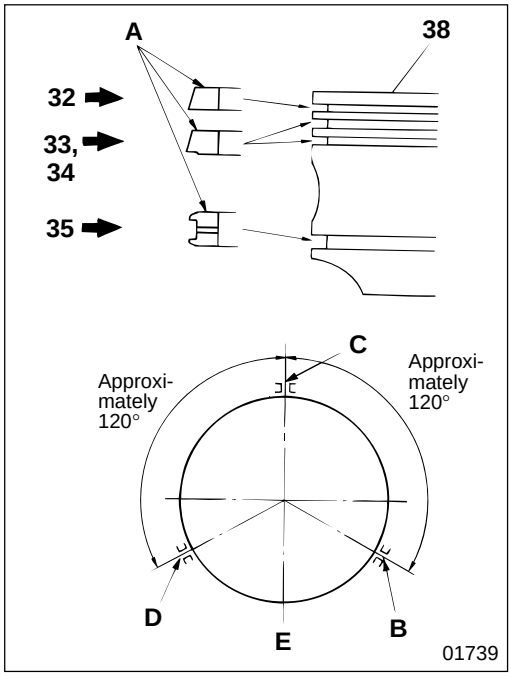

[Mounting position]

- Pay attention to the mounting positions of compression rings **32** to **34** and oil ring **35**. Assemble the piston rings so that lettered side **A** faces toward the top of piston **38**.
- Arrange the piston rings so that each split, **B** to **D**, of the compression rings is offset by 120° from the preceding split.

  B : 1st compression ring split
  C : 2nd compression ring split
  D : 3rd compression ring split
- Position oil ring split **E** so that it comes midway between the splits of the two compression rings.

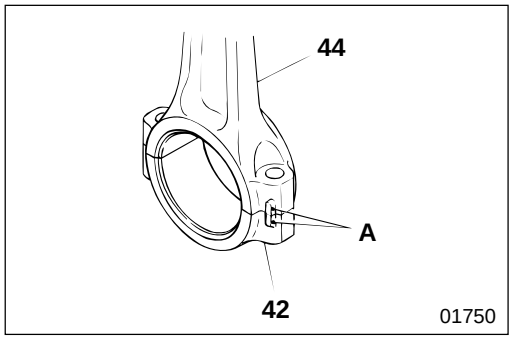

42 **44** **Installation of connecting rod and connecting rod cap**

Assemble connecting rod **44** and connecting rod cap **42** with alignment marks **A** aligned.

M E M O

AIR DRYER

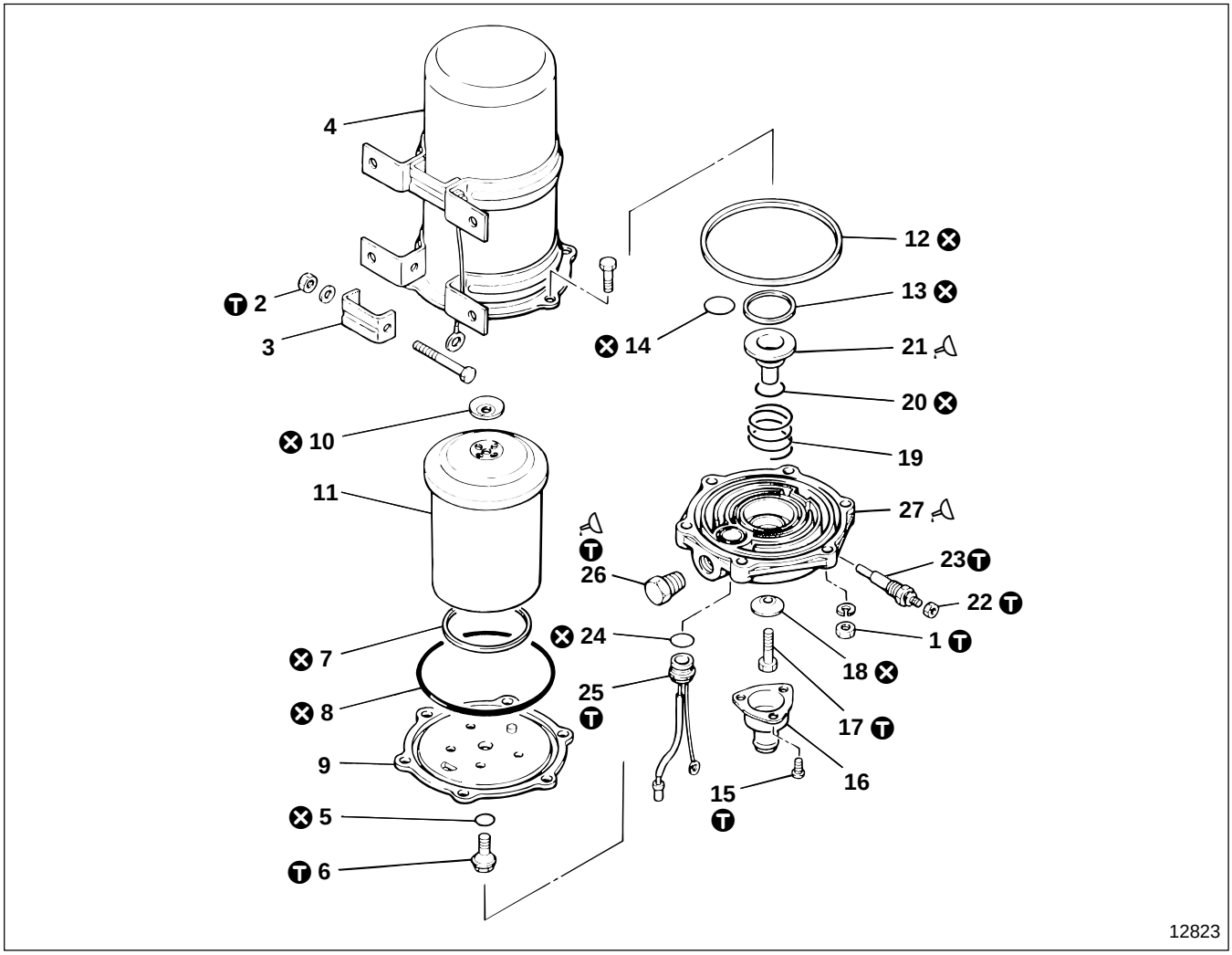

CAUTION⚠

Cartridge assembly 11 cannot be disassembled.

● **Disassembly sequence**

1 Nut
2 Nut
3 Bracket
4 Shell assembly
5 O-ring
6 Bolt
7 Square ring
8 O-ring
9 Plate and pin assembly
10 Check valve
11 Cartridge assembly
12 Square ring
13 Square ring
14 O-ring
15 Screw
16 Exhaust cover assembly
17 Screw
18 Purge valve
19 Spring
20 O-ring
21 Valve piston
22 Nut
23 Heater assembly Gr 54
24 O-ring
25 Thermostat assembly Gr 54
26 Indicator assembly
27 End cover

⊗ : Non-reusable parts

CAUTION⚠

- **Clean disassembled parts, except for rubber parts, cartridge assembly 11, heater assembly 23, thermostat assembly 25 and indicator assembly 26 with clean wash oil thoroughly, wipe off foreign particles and dry.**
- **When replacing O-rings 5, 8, 14, 20, 24 and cartridge assembly 11, replace with the repair kit.**

● **Assembly sequence**

Follow the disassembly sequence in reverse.

Repair kit : Air dryer kit

● **Inspection after assembly**

🕮 P35A-90

● **Inspection after installation**

🕮 P35A-90

Ⓣ Tightening torque

Unit : N·m {lbf.ft, kgf·m}

Location	Parts to be tightened	Tightening torque	Remarks
1	Nut (Shell assembly and end cover mounting)	20 to 29 {14 to 22, 2 to 3}	—
2	Nut (Bracket mounting)	11 to 16 {8 to 12, 1.1 to 1.6}	—
6	Bolt (Plate and pin assembly mounting)	15 to 20 {11 to 14, 1.5 to 2.0}	—
15	Screw (Exhaust cover assembly mounting)	2.9 to 4.4 {2.2 to 3.3, 0.30 to 0.45}	—
17	Screw (Purge valve and valve piston mounting)	3.9 to 5.9 {2.9 to 4.3, 0.4 to 0.6}	—
22	Nut (Thermostat assembly harness mounting)	1.0 to 1.5 {0.7 to 1.1, 0.10 to 0.15}	—
23	Heater assembly	20 to 25 {14 to 18, 2.0 to 2.5}	—
25	Thermostat assembly	15 to 20 {11 to 14, 1.5 to 2.0}	—
26	Indicator assembly	51 to 67 {38 to 49, 5.2 to 6.8}	—

Lubricant and sealant

Location	Points of application	Kinds	Quantity
21, 27	Friction surfaces of valve piston and end cover, and valve piston O-ring	Multipurpose grease [NLGI No.2 (Li soap)]	As required
26	Thread area of indicator assembly	THREEBOND No.1213	As required

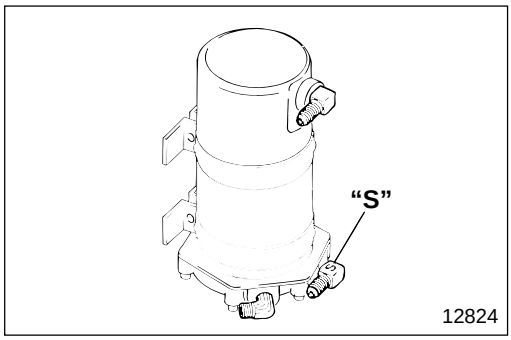

◆ Service procedure

● **Inspection after installation**

- Make sure that the connector with "**S**" mark is installed at the air supply side.
- Start the engine.
- Make sure that air is exhausted from the port of exhaust cover assembly **16** when the air pressure reaches the specified level and the air compressor is switched to idling.

NOTE

If high air pressure is exhausted first and approximately three seconds later, you cannot hear an exhausting sound, do not worry, it is normal.

M E M O

AIR PRESSURE GOVERNOR

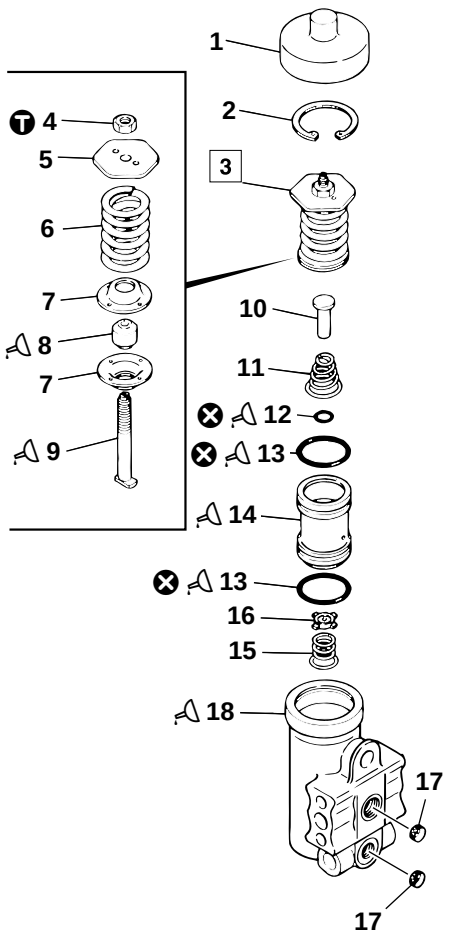

12536

● **Disassembly sequence**

1 Cover
2 C-ring
3 Adjusting screw assembly
4 Lock nut
5 Upper spring seat
6 Spring
7 Lower spring seat
8 Spring guide
9 Adjusting screw
10 Exhaust stem
11 Exhaust stem spring
12 O-ring
13 O-ring
14 Piston
15 Valve spring
16 Valve
17 Filter
18 Body

⊗ : Non-reusable parts

● **Assembly sequence**

Follow the disassembly sequence in reverse.

Repair kit : Air pressure governor kit

● **Inspection of function after assembly**

P35A-93

Service standards

Location	Maintenance item		Standard value	Limit	Remedy
—	Specified pressure	High specified pressure	805^{+29}_{-20} kPa {$115^{+4.3}_{-2.8}$ lbf/in^2, $8.2^{+0.3}_{-0.2}$ kgf/cm^2}	—	Adjust
		Low specified pressure	685±20 kPa {100±2.8 lbf/in^2, 7.0±0.2 kgf/cm^2}		

Ⓣ Tightening torque

Unit : N·m {lbf.ft, kgf·m}

Location	Parts to be tightened	Tightening torque	Remarks
4	Lock nut	3.9 to 6.9 {2.9 to 5.1, 0.4 to 0.7}	—

Lubricant

Location	Points of application	Kinds	Quantity
8	Surface of spring guide	Multipurpose grease [NLGI No. 2 (Li soap)]	As required
9	Surface of adjusting screw, except for thread area	Multipurpose grease [NLGI No. 2 (Li soap)]	As required
12, 13	O-ring	Multipurpose grease [NLGI No. 2 (Li soap)]	As required
14	Outer periphery of piston and O-ring groove	Multipurpose grease [NLGI No. 2 (Li soap)]	As required
18	Interior of body	Multipurpose grease [NLGI No. 2 (Li soap)]	As required

◆ Service procedure

● Inspection of function after assembly

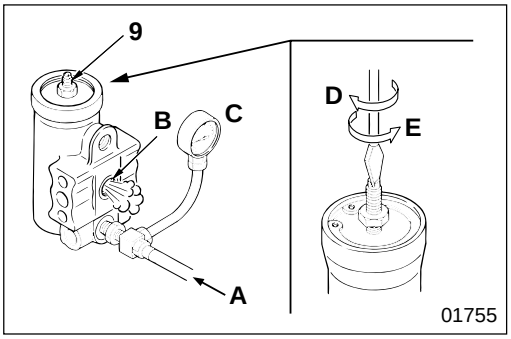

- Increase air pressure **A** gradually and read the value on air pressure gauge **C** when air is discharged from **B**. Adjust by turning adjusting screw **9** so that the reading conforms to the standard value (high specified-pressure).
  D : Turning clockwise decreases the pressure
  E : Turning counterclockwise increases the pressure
- Lower air pressure **A** to 685 kPa {100 lbf/in^2, 7 kgf/cm^2} or less, then raise the air pressure gradually. Read air pressure gauge **C** when it stops and check that the value conforms to the standard value (high specified-pressure). If the value deviates from the standard value, readjust.

- Lower air pressure **A** gradually. When the discharge of air from **B** ceases, read air pressure gauge **C** to check that the valve conforms to the standard value (high specified-pressure). If the value deviates from the standard value, replace the air pressure governor assembly.

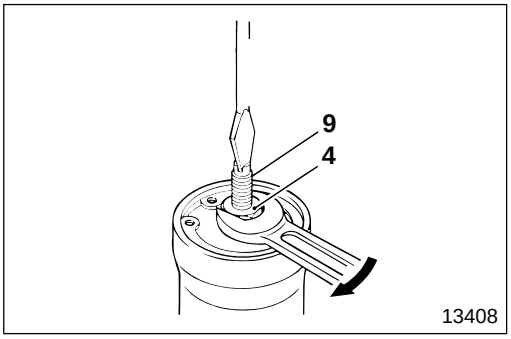

- After adjusting, tighten lock nut **4** to prevent adjusting screw **9** being turned accidentally.

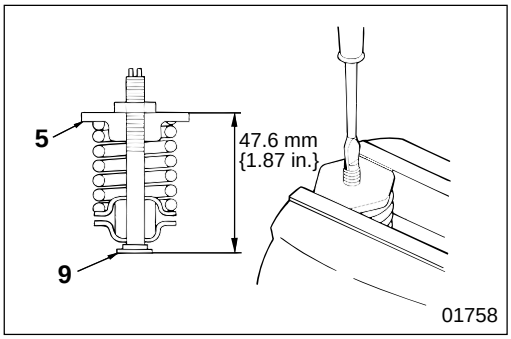

3 **Preliminary adjustment of adjusting screw assembly**

It is recommended that you adjust the distance from the upper level of upper spring seat **5** to the lower level of adjusting screw **9** to 47.6 mm {1.87 in.} by turning the adjusting screw, because this makes adjustment to the specified value easier.

FLUID TANK

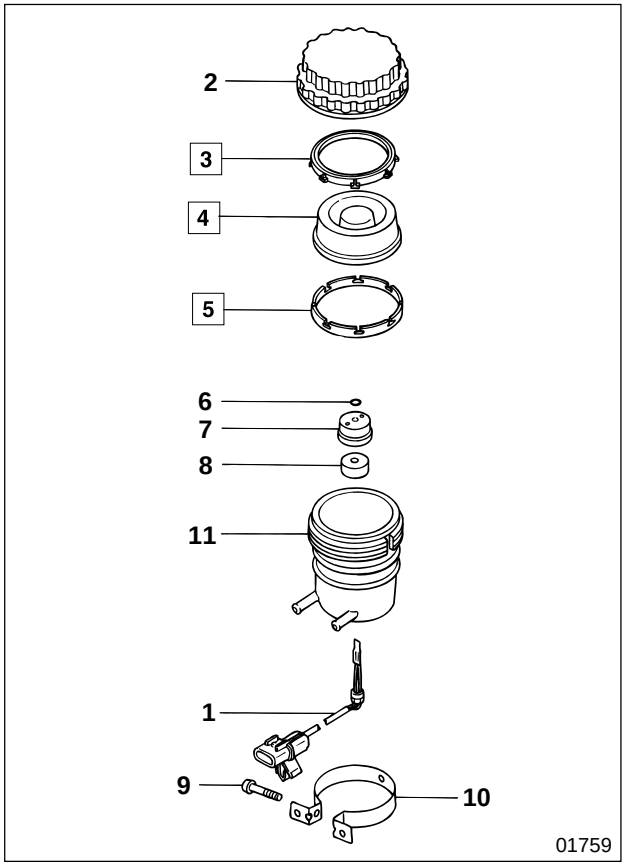

● **Disassembly sequence**

1 Brake fluid level switch Gr 54
2 Cap
3 Slide ring
4 Diaphragm
5 Ring cover
6 Stopper ring
7 Float stopper
8 Float
9 Screw
10 Fluid tank bracket
11 Tank

● **Assembly sequence**

Follow the disassembly sequence in reverse.

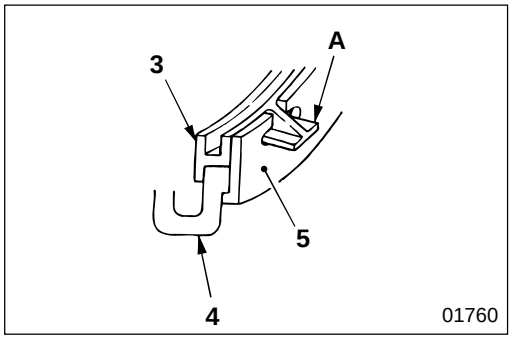

◆ Service procedure

3 **to** **5** **Installation of slide ring, diaphragm and ring cover**

Be sure to install claw **A** of slide ring **3** to ring cover **5** securely. Install diaphragm **4** in the direction as illustrated.

CHECK VALVE

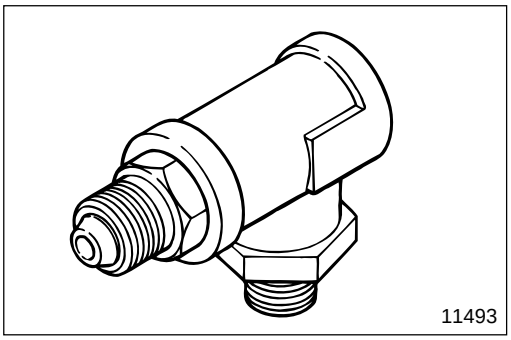

CAUTION⚠

Do not disassemble this check valve because it is a unit construction.

Service standards

Location	Maintenance item	Standard value	Limit	Remedy
—	Pressure difference between inlet and outlet	29 kPa {4.3 lbf/in^2, 0.3 kgf/cm^2} or less	—	Replace

SAFETY VALVE

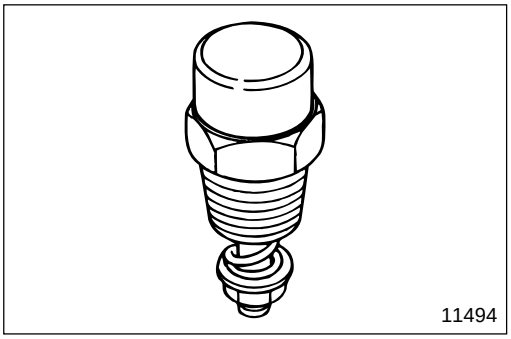

Service standards

Location	Maintenance item	Standard value	Limit	Remedy
—	Release pressure of safety valve	950±20 kPa {135±2.8 lbf/in^2, 9.7±0.2 kgf/cm^2}	—	Replace

SUPPLY VALVE

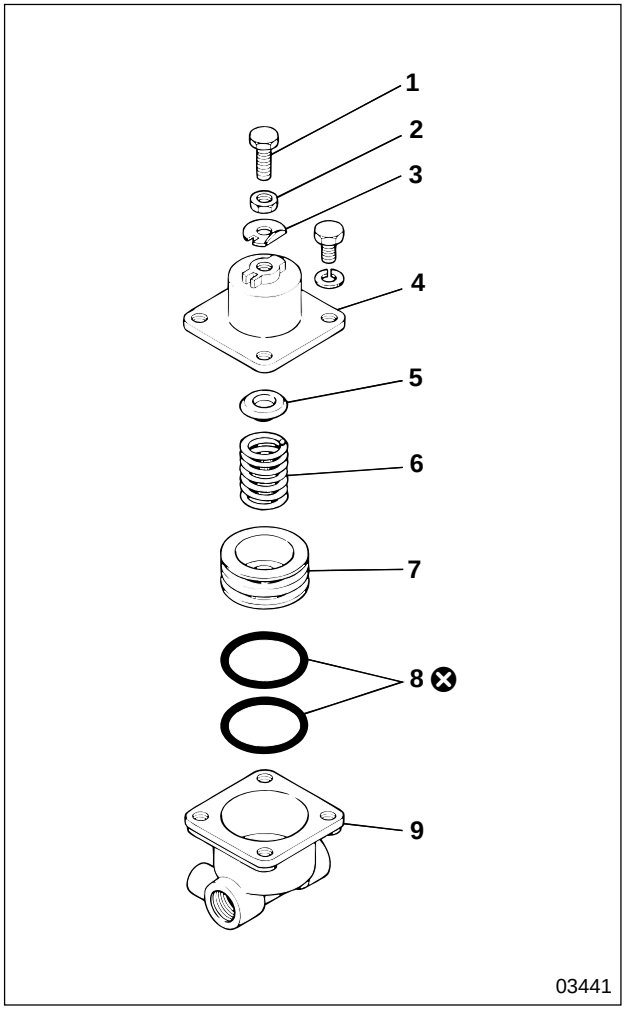

● **Disassembly sequence**

1 Adjusting bolt
2 Lock nut
3 Claw washer
4 Cap
5 Spring retainer
6 Spring
7 Piston
8 O-ring
9 Valve body

⊗ : Non-reusable parts

CAUTION ⚠

Make sure that adjusting bolt 1 is not turned except for adjustment.

● **Assembly sequence**

Follow the disassembly sequence in reverse.

● **Inspection after assembly**

P35A-96

Service standards

Location	Maintenance item		Standard value	Limit	Remedy
—	Specified pressure	Valve opening pressure	345±29 kPa {50±4.3 lbf/in^2, 3.5±0.3 kgf/cm^2}	—	Adjust or replace
		Valve closing pressure	315±20 kPa {46±2.8 lbf/in^2, 3.2±0.2 kgf/cm^2}	—	

◆ Service procedure

● **Inspection after assembly**

Adjust by turning adjusting bolt **1** after loosening lock nut **2**. After adjusting, tighten the lock nut without turning the adjusting bolt, and bend claw washer **3** to secure the lock nut.

- Adjust adjusting bolt **1** so that air is discharged from the outlet port (arrow mark **B** in the illustration), when valve opening pressure is applied to the inlet port (arrow mark **A** in the illustration).
- After adjusting valve opening pressure, adjust adjusting bolt **1** so that air is not discharged from the outlet port (arrow mark **B** in the illustration) when valve closing pressure is applied to the inlet port (arrow mark **A** in the illustration).

  B : Arrow showing the air flow direction

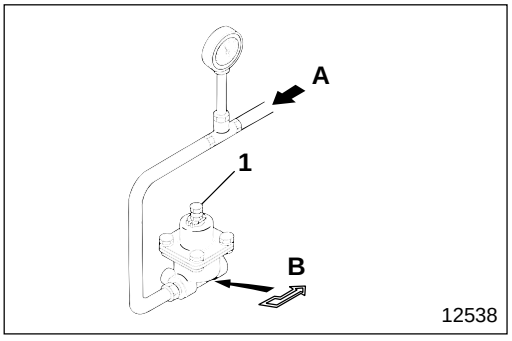

M E M O

EXHAUST BRAKE SYSTEM

Exhaust Brake Unit

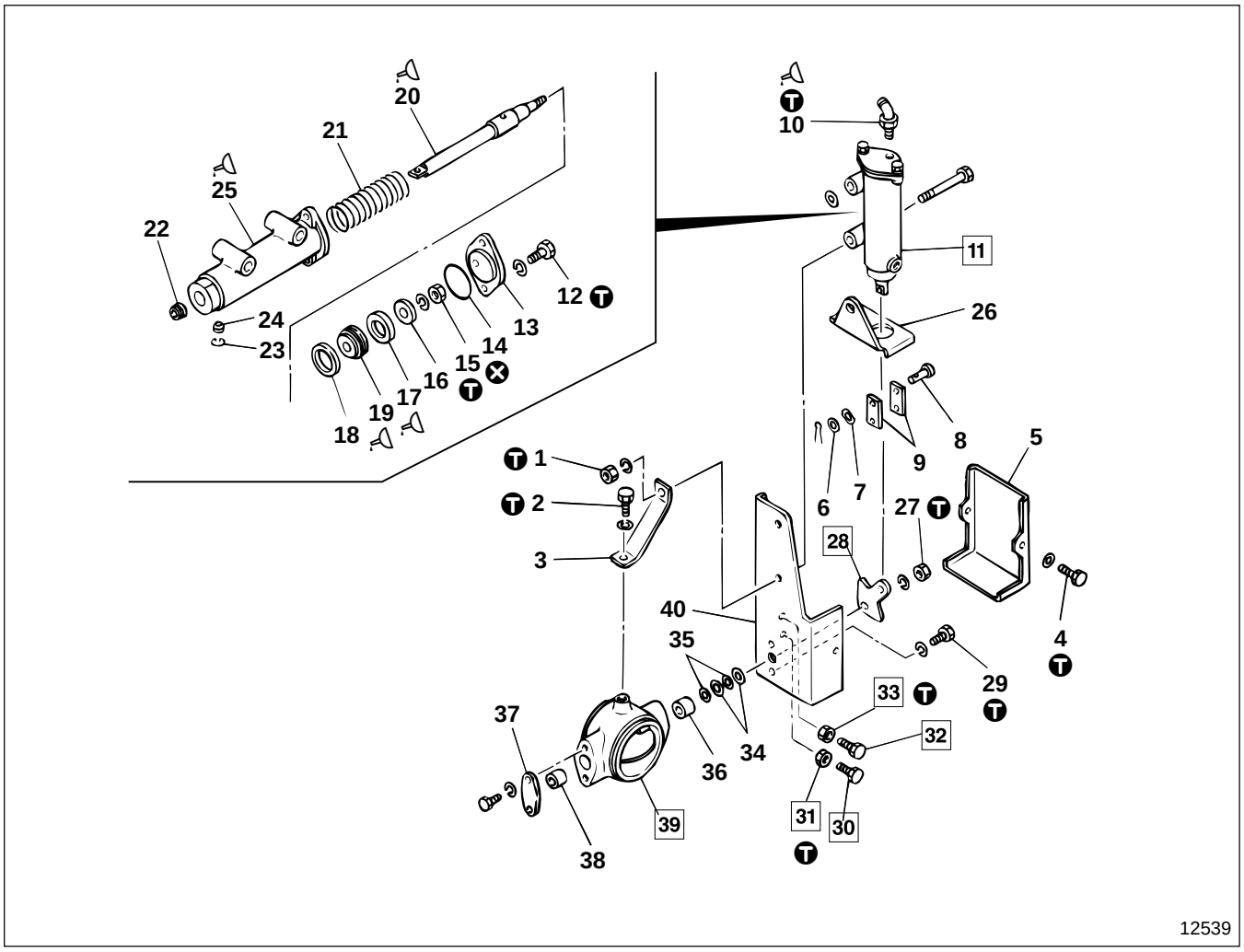

● **Disassembly sequence**

1 Nut
2 Bolt
3 Arm
4 Screw
5 Cover
6 Plain washer
7 Wave washer
8 Pin
9 Link
10 Connector
11 Control cylinder
12 Bolt
13 Cover
14 O-ring
15 Nut
16 Retainer
17 Packing
18 Wear ring
19 Plate
20 Shaft
21 Spring
22 Dust seal
23 Retaining ring
24 Filter
25 Cylinder
26 Cover
27 Nut
28 Lever
29 Bolt
30 Adjusting bolt
31 Lock nut
32 Adjusting bolt
33 Lock nut
34 Seal ring (Large)
35 Seal ring (Small)
36 Bushing
37 Cover
38 Bushing
39 Valve assembly
40 Plate

⊗ : Non-reusable parts

● **Assembly sequence**

Follow the disassembly sequence in reverse.

Service standards

Unit : mm {in.}

Location	Maintenance item	Standard value	Limit	Remedy
11	Airtightness of control cylinder (Air leakage at air pressure 980 kPa {140 lbf/in^2, 10 kgf/cm^2})	No air leakage	—	Replace
21	Spring load (Installed length 109 {4.3})	72 N {16 lbf, 7.3 kgf}	61 N {13.7 lbf, 6.2 kgf}	Replace
39	Clearance between butterfly valve and body when valve assembly butterfly valve operating (Air pressure 685±49 kPa {100±7.1 lbf/in^2, 7±0.5 kgf/cm^2} supplied to control cylinder)	0.2 to 0.4 {0.0079 to 0.016}	—	Adjust

Tightening torque

Unit : N·m {lbf.ft, kgf·m}

Location	Parts to be tightened	Tightening torque	Remarks
1	Nut (Control cylinder mounting)	20.6 to 25.5 {15 to 19, 2.1 to 2.6}	—
2	Bolt (Arm mounting)	9.81 to 15.7 {7.2 to 12, 1.0 to 1.6}	—
4	Screw (Cover mounting)	4.9 to 6.86 {3.6 to 5.1, 0.5 to 0.7}	—
10	Connector	4.9 {3.6, 0.5} or more	—
12	Bolt (Cover mounting)	9.8 to 15.7 {7.2 to 12, 1.0 to 1.6}	—
15	Nut (Plate mounting)	9.8 to 15.7 {7.2 to 12, 1.0 to 1.6}	—
27	Nut (Lever mounting)	9.81 to 15.7 {7.2 to 12, 1.0 to 1.6}	—
29	Bolt (Valve assembly mounting)	9.81 to 15.7 {7.2 to 12, 1.0 to 1.6}	—
31	Lock nut	4.9 to 6.86 {3.6 to 5.1, 0.5 to 0.7}	—
33	Lock nut	4.9 to 6.86 {3.6 to 5.1, 0.5 to 0.7}	—

Lubricant and sealant

Location	Points of application	Kinds	Quantity
10	Thread area of connector	THREEBOND No.1211 or No.1213	As required
17	Surface of packing	Molybdenum disulfide bearing grease [NLGI No.2 (Li soap)]	As required
19, 20	Mounting areas of plate and shaft	Sealant [Hermetic GA (SANNOW KOGYO)]	As required
20	Shaft at ø12 {0.47}	Molybdenum disulfide bearing grease [NLGI No.2 (Li soap)]	As required
25	Interior of cylinder	Molybdenum disulfide bearing grease [NLGI No.2 (Li soap)]	2 cm^3 {0.12 cu. in.}

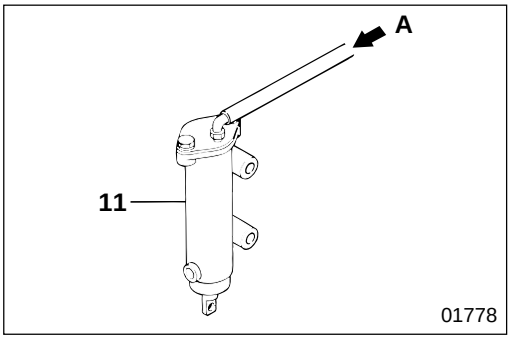

◆ Service procedure

11 **Inspection on airtightness of control cylinder**

Make sure that there is no air leakage when air pressure of 980 kPa {140 lbf/in^2, 10 kgf/cm^2} is applied to control cylinder **11**. If any air leakage is found, replace the control cylinder assembly.

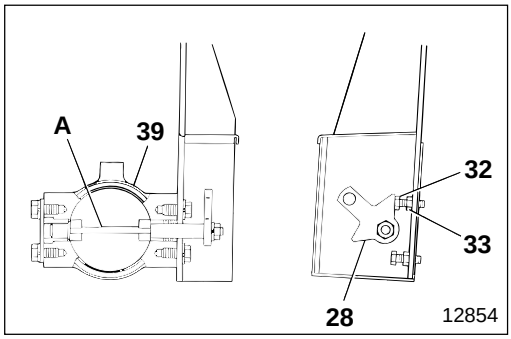

28 **30** **to** **33** **39** **Lever, adjusting bolt, lock nut, and valve assembly**

[Butterfly valve **A** fully-opened adjustment]

- Turn the adjusting bolt so that lever **28** and the head of adjusting bolt **32** make contact horizontally.
- Tighten lock nut **33** at specified torque.

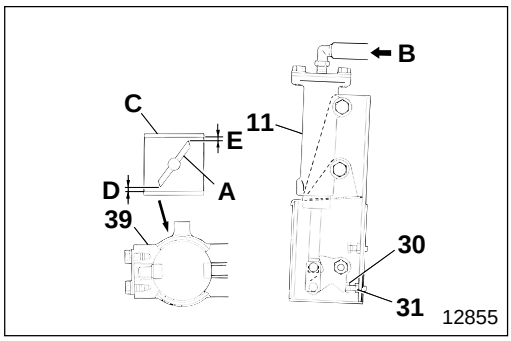

[Butterfly valve **A** fully-closed adjustment]

- Apply air pressure **B** of 685±49 kPa {100±7.1 lbf/in^2, 7±0.5 kgf/cm^2} to control cylnder **11**.
- Turn adjusting bolt **30** so that the average value of clearances **D**, **E** between butterfly valve **A** and body **C** conforms to the standard value.
- Calculate the average of clearances **D**, **E** by (**D**+**E**)/2.
- Tighten lock nut **31** at specified torque.

Exhaust Brake Electric Equipment

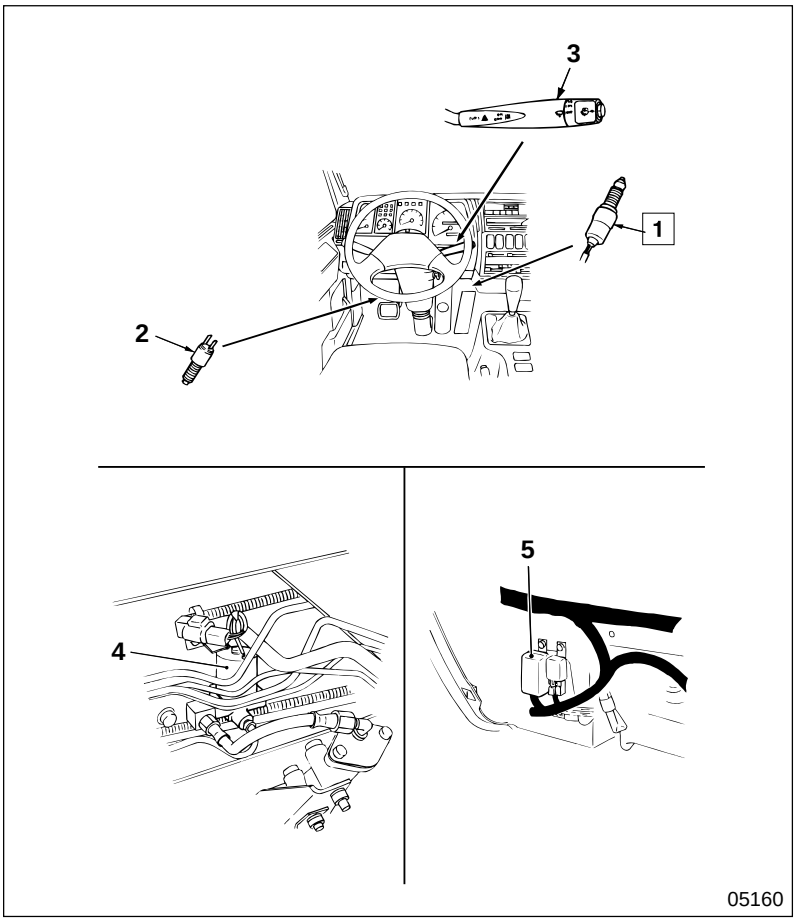

1 Accelerator switch
Gr 54
2 Clutch switch
Gr 21, 54
3 Exhaust brake switch
Gr 37, 54
4 3-way magnetic valve
Gr 54
5 Exhaust brake cut relay
Gr 54

◆ Service procedure

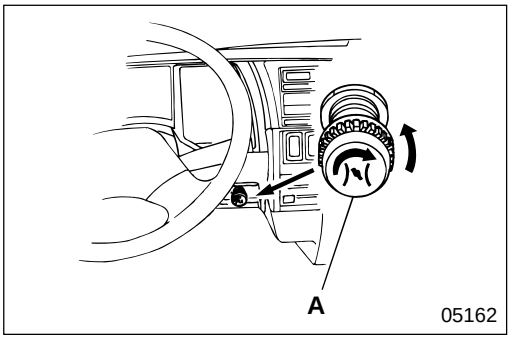

1 **Installation of accelerator switch**

- Turn idling control knob **A** in direction ⇨ (counterclockwise) to free the accelerator pedal.

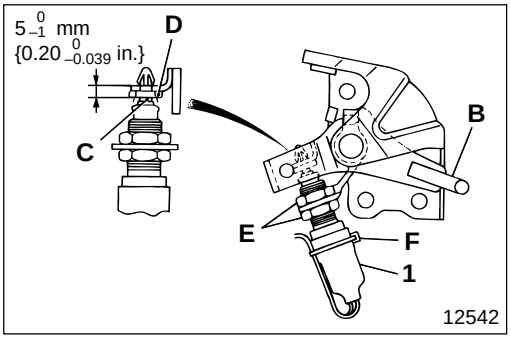

- Screw in accelerator switch **1**, holding accelerator control lever **B** still, until push rod **C** makes contact with stopper **D**. Then screw in by a further 5 $^{0}_{-1}$ mm {0.20 $^{0}_{-0.039}$ in.} and tighten lock nut **E**.
- Secure accelerator switch **1** harness using band **F**.

MITSUBISHI
FUSO

FK.FM
Service Manual

Group 35B
Brake
< Full Air Brake >

Table of Contents

MITSUBISHI FUSO TRUCK OF AMERICA, Inc.

BACK HOME

Pub No. TWME9503-35B

GROUP 35B BRAKE (FULL AIR BRAKE)

SPECIFICATIONS 2

STRUCTURE AND OPERATION 3

TROUBLESHOOTING 24

INSPECTION AND ADJUSTMENT MOUNTED IN VEHICLE
- Inspection and Adjustment of Brake Pedal Free Play 28
- Thickness Inspection and Replacement of Brake Lining 28
- Inspection of Automatic Slack Adjuster Function 29
- Inspection and Maintenance of Air Dryer 31

HANDLING OF CONNECTOR 32

BRAKE PEDAL 34

DUAL BRAKE VALVE 36

RELAY VALVE 44

QUICK RELEASE VALVE 46

FRONT WHEEL BRAKE 48

REAR WHEEL BRAKE 60

AIR COMPRESSOR 74

AIR DRYER 82

AIR PRESSURE GOVERNOR 86

CHECK VALVE 88

SAFETY VALVE 88

SUPPLY VALVE 90

EXHAUST BRAKE SYSTEM 92

SPECIFICATIONS

< Equipment for Service Brake >

Item			Specifications
Air compressor	Type		Water-cooled one cylinder
	Cylinder diameter×Stroke mm {in.}		ø85×60 {3.35×2.36}
	Cylinder capacity cm² {cu.in.}		340 {20.7}
	Manufacturer		SANWA SEIKI
Air dryer	Type		DR-5
	Heater capacity V-W		12 - 100 (50 W×2)
	Thermostat operating temperature °C {°F}	ON	4±4 {39±7.2}
		OFF	20 {68} or less
	Purge chamber capacity L {gal}		Approximately 2.7 {0.71}
	Required time for recycling desiccant Sec.		50
	Manufacturer		NABCO
Air tank	Capacity L {gal}		22+30+23 {5.8+7.9+6.1}

< Wheel Brake >

Item			Specifications
Brake type			Drum brake (Leading-trailing shoe)
Brake drum inner diameter mm {in.}			ø410 {16.1}
Brake lining	Width×Thickness mm {in.}	Front	140×16 {5.51×0.63}
		Rear	200×16 {7.87×0.63}

< Exhaust Brake >

Item	Specifications
Control type	Combined electric and air
Valve type	Butterfly valve

Brake System

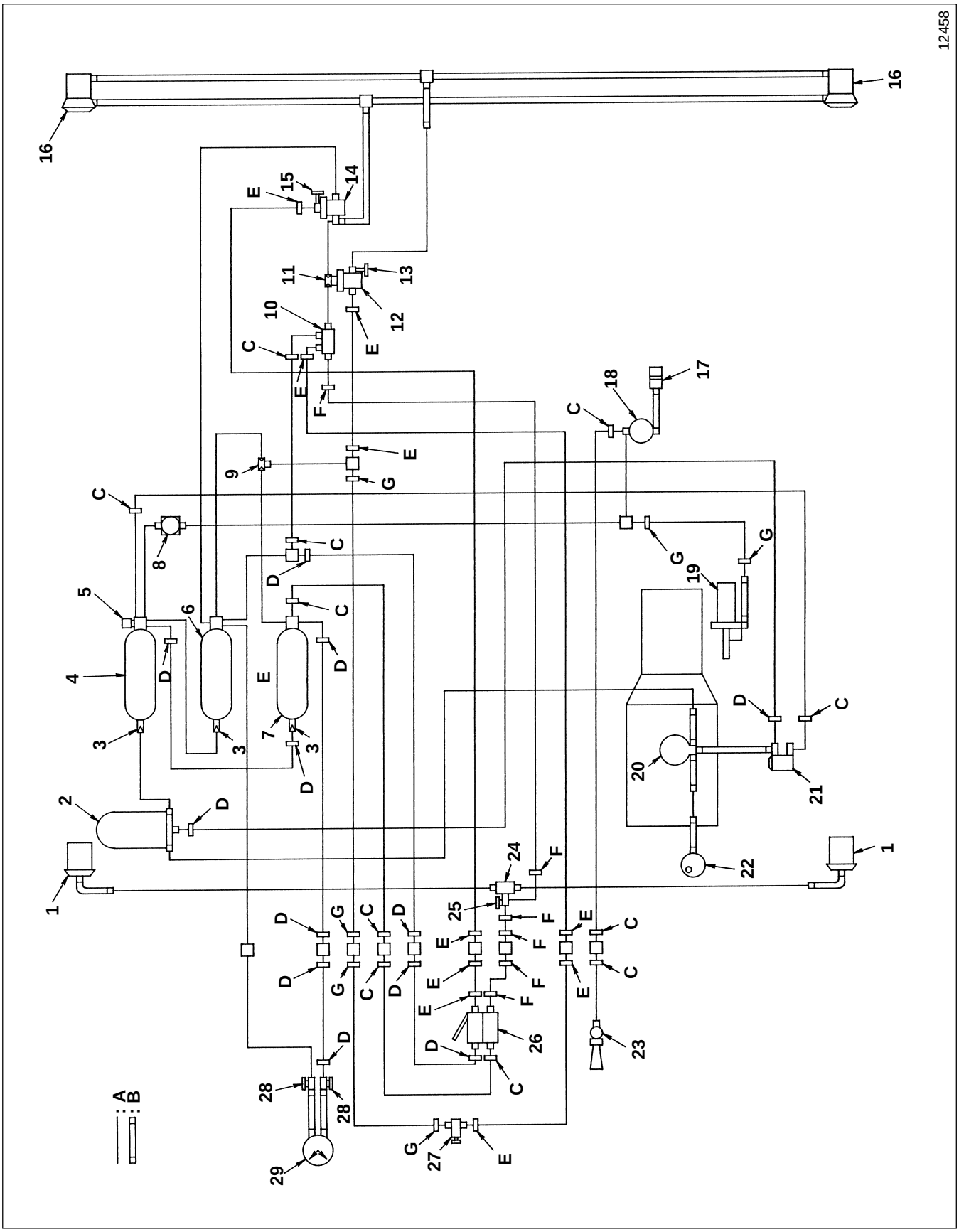

1 Front brake chamber
2 Air dryer
3 Check valve
4 Air tank (Wet : 23 L {6.1 gal})
5 Safety valve
6 Air tank (For rear brake system : 30 L {7.9 gal})
7 Air tank (For front brake system : 22 L {5.8 gal})
8 Supply valve
9 Double check valve
10 Spring brake valve
11 Double check valve
12 Relay valve
13 Parking brake switch
14 Relay valve
15 Stop lamp switch
16 Rear brake chamber
17 Exhaust brake unit
18 3-way magnetic valve
19 Clutch booster < M8S2×5 >
20 Air compressor
21 Air pressure governor
22 Air cleaner
23 Air horn
24 Quick release valve
25 Strap lamp switch
26 Dual brake valve
27 Parking brake control valve
28 Low air pressure switch
29 Air pressure gauge

A : Air pipe
B : Hose
C : Blue identification tape
D : Red identification tape
E : Yellow identification tape
F : White identification tape
G : Green identification tape

- The brake system is a full-air, all-wheel brake type consisting of separate front and rear systems.
- Spring brake valve **10** is fitted as a safety mechanism. It provides normal braking action on the spring brake of rear brake chamber **16** even if the rear brake system air line fails.
- An exhaust brake system, of the exhaust pipe opening and closing valve type, is fitted as a sub-brake system.

● Safety mechanism for rear brake system failure (Spring brake)

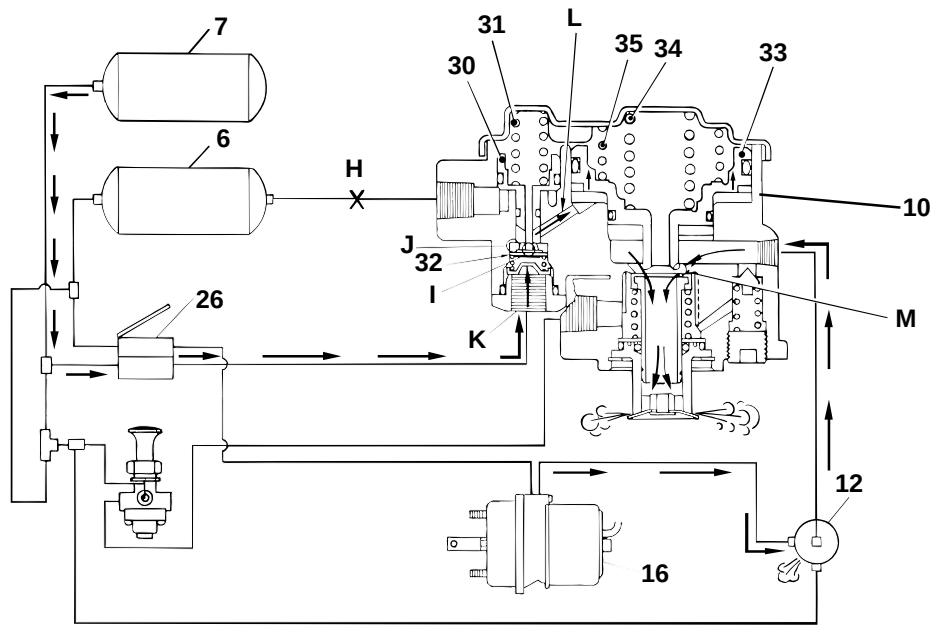

- If any part of the rear brake system fails and the air pressure in air tank **6** (for the rear brake system) drops below the specified pressure, the air pressure under piston **30** of spring brake valve **10** is overcome by the repercussive force of spring **31** and the piston is forced down.
- When forced down, piston **30** makes contact with valve **32** to close exhaust port **I** and open inlet port **J**.
- When brake pedal **26** is depressed, the air pressure in the air tank (for the front brake system) is fed to control port **K** of spring brake valve **10**, and is then fed under piston **33** via inlet port **J** and passage **L**.
- The air pressure under piston **33** overcomes the repercussive force of springs **34**, **35** to raise the piston and open exhaust valve **M**.
- When exhaust valve **M** opens, the pressurized air that flowed from spring brake valve **10** to relay valve **12** is discharged through the exhaust port in accordance with brake pedal **26** depression force.
- Since relay valve **12** opens the exhaust valve when air pressure is lost, and discharges the air in the spring brake of rear brake chamber **16**, the spring brake works to generate braking force.

H : Failure

Dual Brake Valve

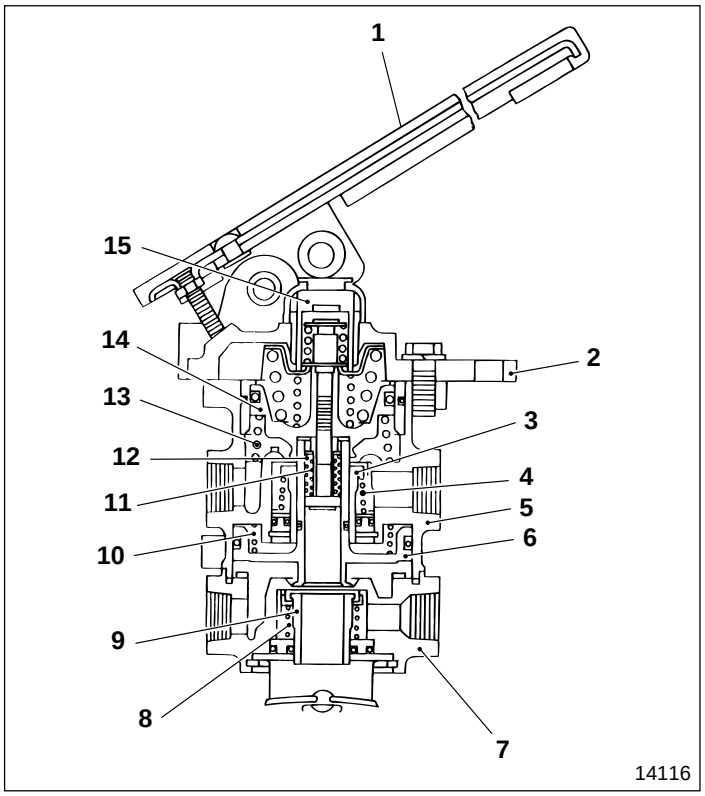

1 Brake pedal
2 Plate assembly
3 Primary inlet valve
4 Primary valve spring
5 Body
6 Relay piston
7 Cover
8 Secondary valve spring
9 Secondary inlet valve
10 Relay piston spring
11 Inner spring
12 Outer spring
13 Primary piston spring
14 Primary piston
15 Plunger

The dual brake valve controls the braking force of the vehicle by feeding pressurized air to the air master in accordance with the brake pedal depression angle of brake pedal **1**.

● When brake not operating

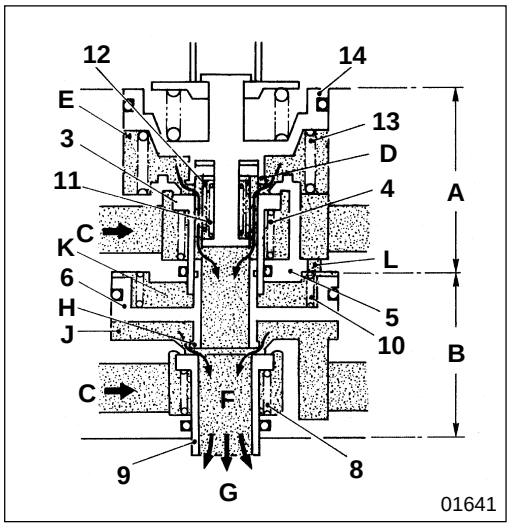

- The repercussive forces of primary valve springs **4**, secondary valve spring **8** seat primary inlet valve **3** at primary side **A**, and inlet valve **9** at secondary side **B**, on their respective seats. This shuts off air **C** from the air tank to maintain airtightness.
- The repercussive force of primary piston spring **13** raises primary piston **14** to its upper position. Exhaust valve seat **D** opens and chamber **E** is open to atmosphere **G** via chamber **F**.
- Since the repercussive forces of inner spring **11** and outer spring **12** is stronger than the repercussive force of relay piston spring **10**, relay piston **6** is raised to its upper position and exhaust valve seat **H** is opened. This opens chamber **J** to atmosphere **G** via chamber **F**.
  Chamber **E** at the primary side and chamber **K** at the upper part of relay piston **6** at the secondary side are connected via passage port **L** of body **5**.

● When depressing brake pedal (before braking pressure is generated)

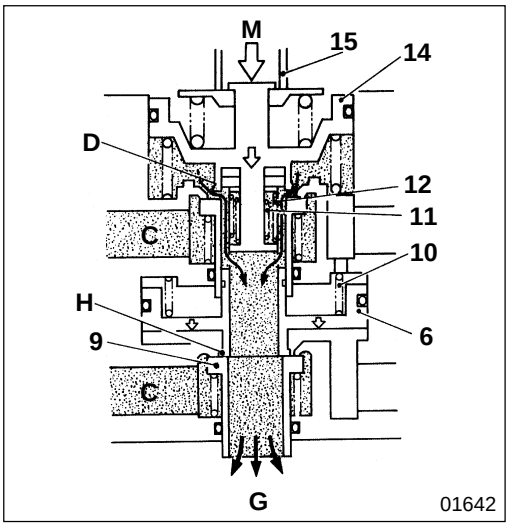

- Depressing the brake pedal (illustrated as pedal action **M**), forces down primary piston **14** via plunger **15**.
- Forcing down primary piston **14** changes the balance between the repercussive forces of inner spring **11** and outer spring **12**, and the repercussive force of relay piston spring **10**, forcing down relay piston **6**. This seats the relay piston on secondary inlet valve **9** and closes exhaust valve seat **H**.
- This closes the secondary side exhaust passage; however, primary side exhaust valve seat **D** remains open. No braking pressure is generated at either primary or secondary sides.

● When depressing brake pedal (braking pressure is generated)

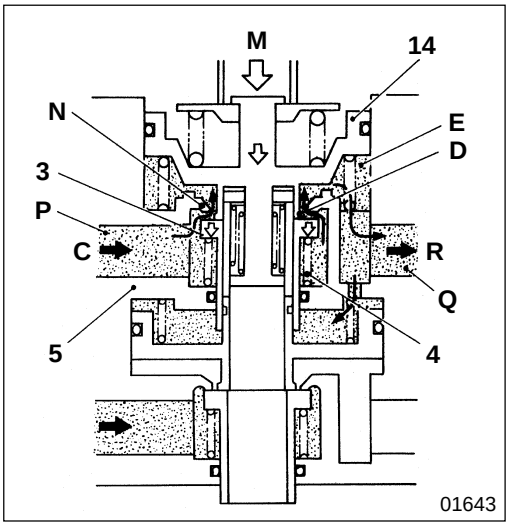

Primary side

- As the brake pedal is depressed further (illustrated as brake pedal action **M**), primary piston **14** is forced down until it is seated on primary inlet valve **3**, closing exhaust valve seat **D**.
- Primary inlet valve **3** is forced down, compressing primary valve spring **4**, and supply valve seat **N** of body **5** separates from the primary inlet valve. The air in chamber **P** flows into chamber **E** and is fed to rear brake system **R** via discharge port **Q** as braking pressure.

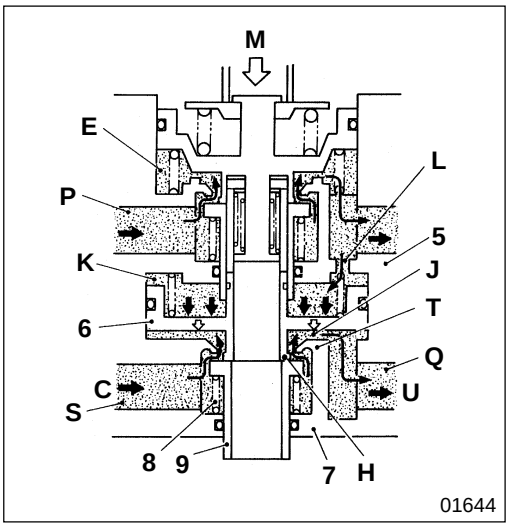

Secondary side

- The air at the primary side flows into chamber **K** via passage port **L** of body **5**.
- The air fed into chamber **K** acts on the upper part of relay piston **6** to force down the relay piston and compress secondary valve spring **8**, forcing down secondary inlet valve **9**.
- This separates supply valve seat **T** and secondary inlet valve **9** of cover **7**.
- The air in supply port chamber **S** flows into chamber **J** and is fed to front brake system **U** via discharge port **Q** as braking pressure.

● Stabilization of braking pressure

When the brake pedal remains depressed at the specified depression angle, the braking air pressure stabilizes at the pressure corresponding to the brake pedal depression angle.

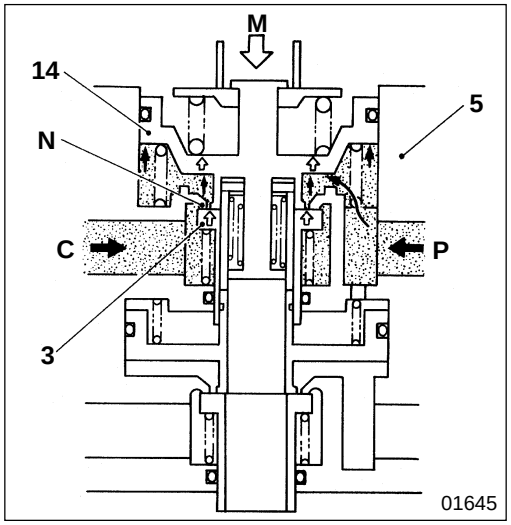

Primary side

- The braking air pressure fed under the bottom of primary piston **14** raises the primary piston and primary inlet valve **3** together in tandem.
- Primary inlet valve **3** makes contact with supply valve seat **N** of body **5**, then the supply of air **C** from the air tank ceases and the increases in the braking air pressure stops. This stabilizes braking pressure **R** for the rear brake system.

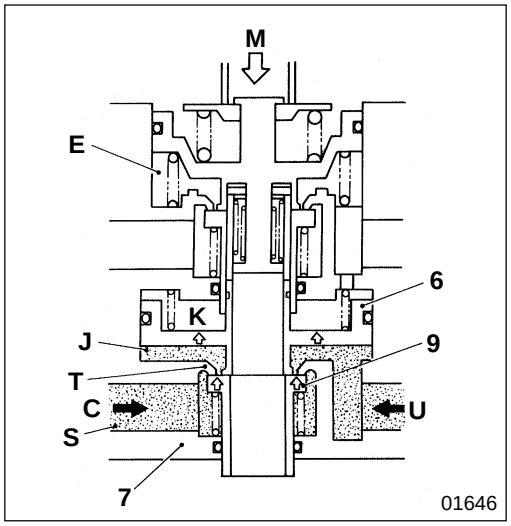

Secondary side

- As the braking pressure (pressure in chamber **J**) for the front brake system balances the pressures in chambers **E** and **K**, the force raising relay piston **6** disappears, and the relay piston rises in tandem with secondary inlet valve **9**.
- Secondary inlet valve 9 makes contact with supply valve seat **T** of cover **7**, then the supply of air from supply port chamber **S** to chamber **J** ceases. This stabilizes brake pressure **U** for the front system.

● Release of brake pressure

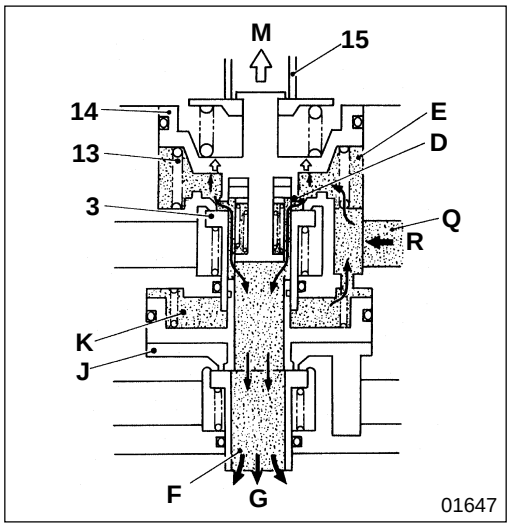

Primary side

When the brake pedal is released (illustrated as brake pedal action **M**), primary piston spring **13** and air pressure **R** at discharge port **Q** (pressure in chamber **E**) raise plunger **15** and primary piston **14**. Then, exhaust valve seat **D** at the lower end of the primary piston separates from primary inlet valve **3**. The air pressure of the rear brake system flows through chamber **E** to be discharged from exhaust passage chamber **F** into atmosphere **G**.

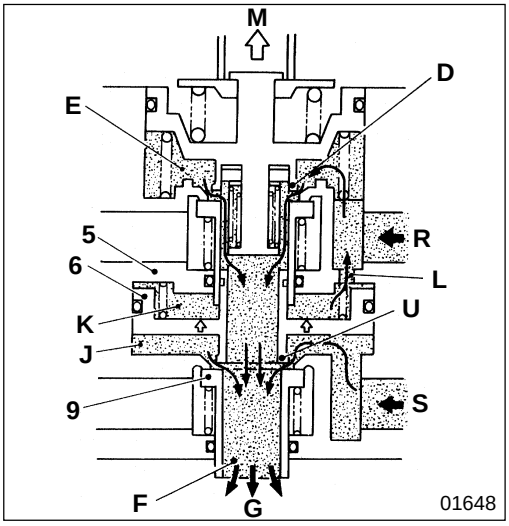

Secondary side

- As the air pressure in the rear brake system drops, the air pressure in chamber **K** is discharged via passage port **L** of body **5**, and chambers **E**, **F** into atmosphere **G**.
- This changes the air pressure balance between chambers **K** and **J**. The air pressure in chamber **J** raises relay piston **6**, and exhaust valve seat **H** at the lower end of the relay piston separates from secondary inlet valve **9**. Air pressure **U** in the front brake system is discharged from exhaust passage chamber **F** into atmosphere **G**.

● When abnormality occurs

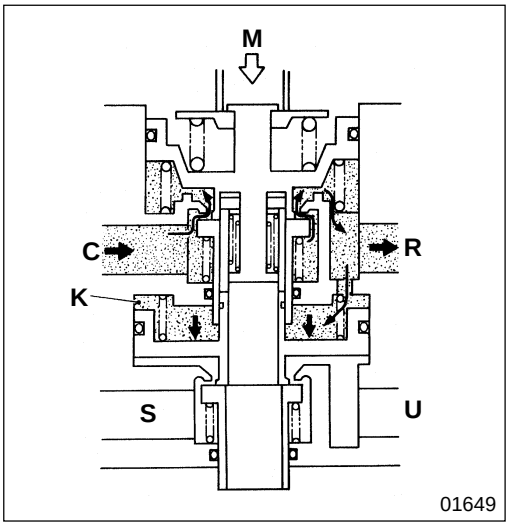

Operation when the air pipe of the front brake system fails

- The primary side operates the same as normal, generating braking pressure in rear brake system **R**.
- At the secondary side, even if the primary side generates air pressure in chamber **K**, braking pressure is not generated in front brake system **U**, since no air pressure is generated in supply port **S**.

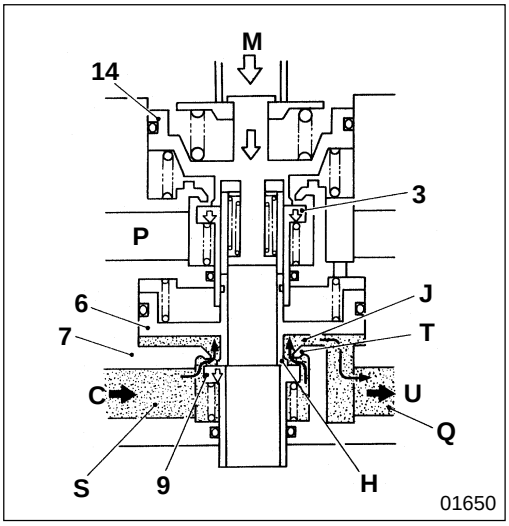

Operation when the air pipe of the rear brake system fails

- In the rear brake system, air pressure is not generated up to supply port **P**. Therefore, even if the brake pedal is depressed (causing primary piston **14** to force down primary inlet valve **3**), braking pressure is not generated.
- If the brake pedal is depressed further (illustrated as brake pedal action **M**), primary piston **14** makes contact with relay piston **6** and they force down secondary inlet valve **9**.
- This action separates supply valve seat **T** of cover **7** from secondary inlet valve **9**. The air pressure flows into chamber **J** from chamber **S** and is fed to front brake system **U** via discharge port **Q** as braking pressure.

Wheel Brake

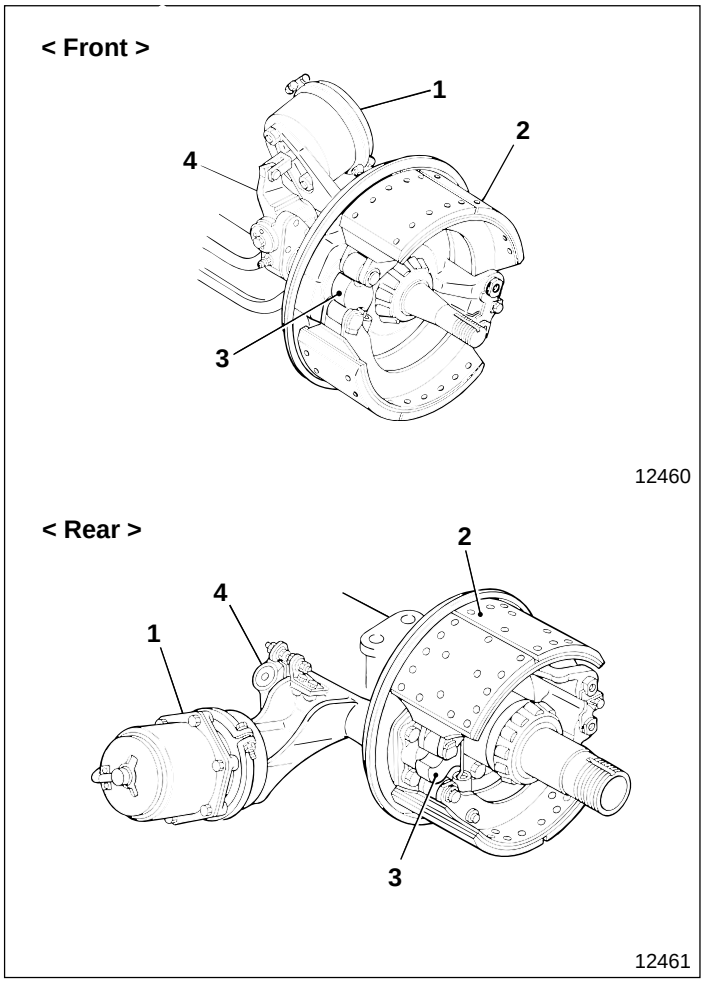

1 Brake chamber
2 Brake shoe assembly
3 Camshaft
4 Automatic slack adjuster

- The wheel brake is an internal expanding leading trailing brake type. Brake chamber **1** turns camshaft **3** to extend and press brake shoe assembly **2** against the brake drum, creating the braking force.
- Automatic slack adjuster **4** automatically adjusts the brake shoe clearance as the lining wears and the brake shoe clearance becomes higher than the specified value.

Automatic slack adjuster

● **When brake is operating**

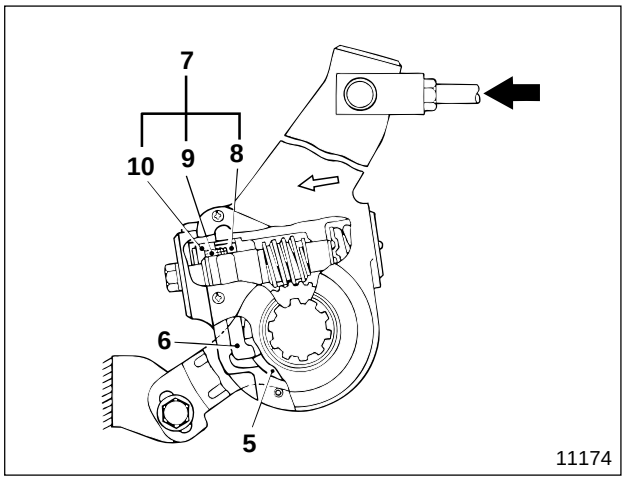

- Control disc **5** raises rack **6** in accordance with the lining wear.
- Rack **6** turns gear wheel **8** of one-way clutch **7**, but the gear wheel runs idle.

NOTE

One-way clutch 7 — **Gear wheel 8**, **Clutch spring 9**, **Clutch ring 10**

- As automatic slack adjuster **4** turns further and the force of the lining that pushes against the brake drum gradually increases, the torque of camshaft **3** of the wheel brake increases.

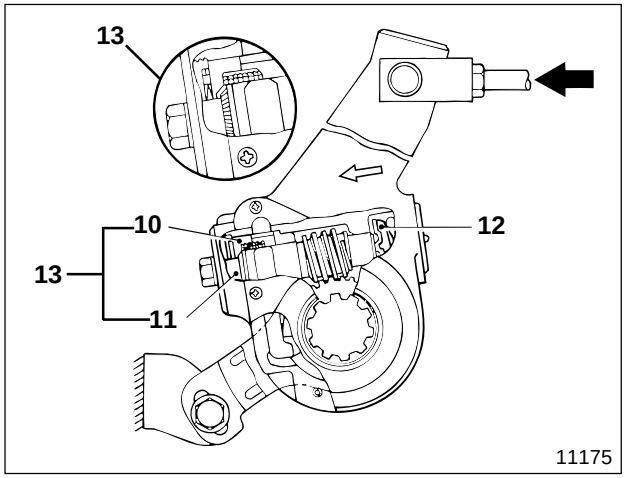

- As the torque of camshaft **3** of the wheel brake increases, worm screw **11** compresses spring **12** and moves in the axial direction to separate cone clutch **13**.

NOTE

Cone clutch 13 — **Clutch ring 10**, **Worm screw 11**

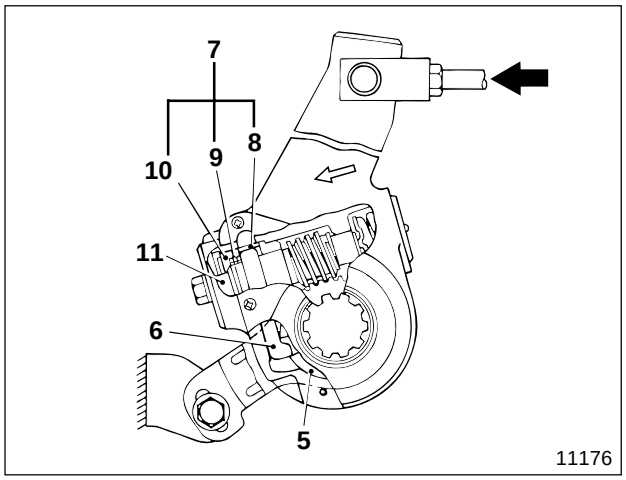

- Although control disc **5** pushes rack **6** further upward, the rack lets one-way clutch **7** idle, since cone clutch **13** is not engaged.

● **When releasing brake pedal**

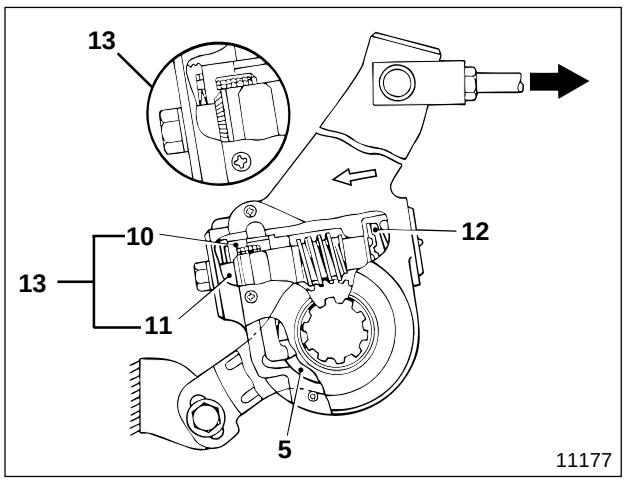

- When the brake pedal is released, the torque from camshaft **3** of the wheel brake disappears, and the repercussive force of spring **12** pushes back worm screw **11**, engaging cone clutch **13**.

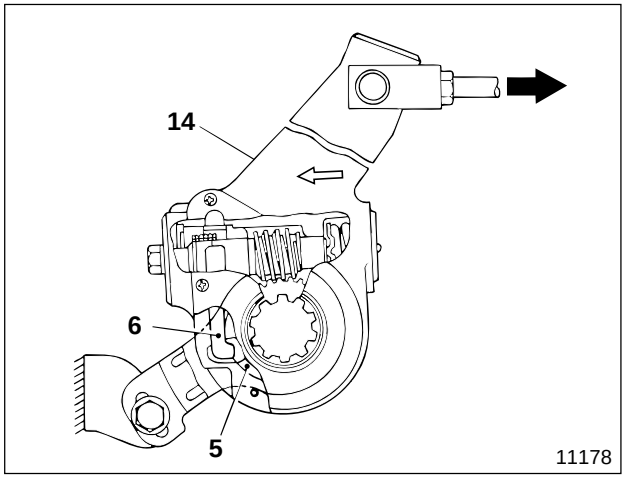

- Rack **6** is to be pushed down by the spring; however, gear wheel **8** engaged with the rack cannot turn because cone clutch **13** is engaged with the gear wheel.
- Therefore, rack **6** turns together with housing **14** until the rack makes contact with control disc **5**.

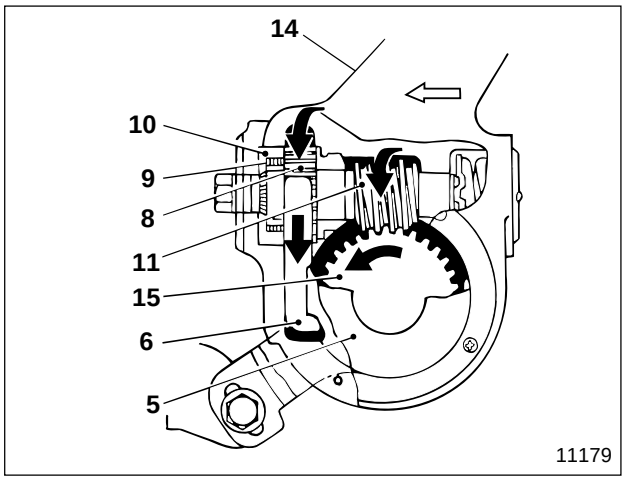

- When rack **6** makes contact with control disc **5**, the control disc is pushed down to the bottom of the rack under housing **14**.
- When rack **6** is pushed down, since cone clutch **13** is engaged with the rack, it turns worm wheel **15** and worm screw **11**.
- Therefore, since worm screw **11** turns camshaft **3** of the wheel brake in accordance with lining wear, constant brake shoe clearance is maintained.

Air Compressor

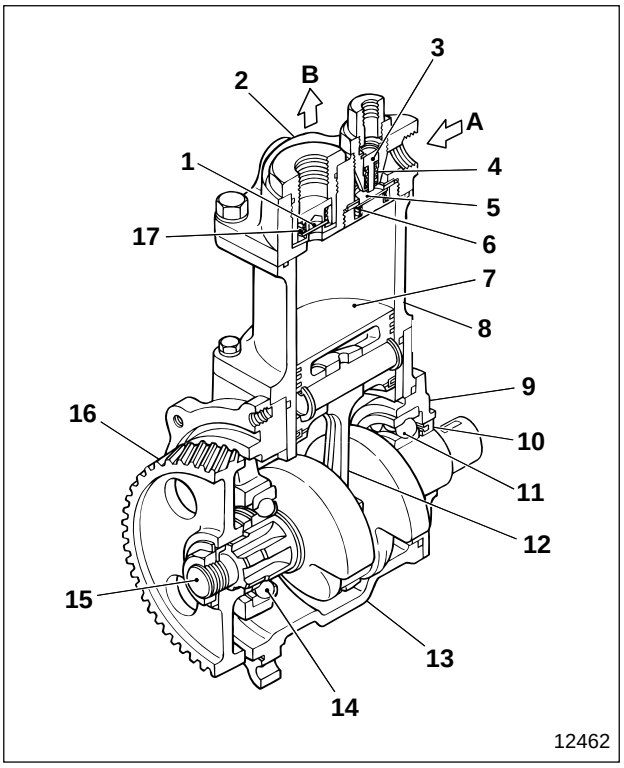

1 Delivery valve
2 Cylinder head
3 Unloader valve
4 Unloader valve spring
5 Suction valve
6 Suction valve spring
7 Piston
8 Cylinder liner
9 Bearing holder
10 Oil seal
11 Bearing
12 Connecting rod
13 Crankcase
14 Bearing
15 Crankshaft
16 Drive gear
17 Delivery valve spring

A : Air delivery port (From air cleaner)
B : Air discharge port (To air dryer)

● During suction

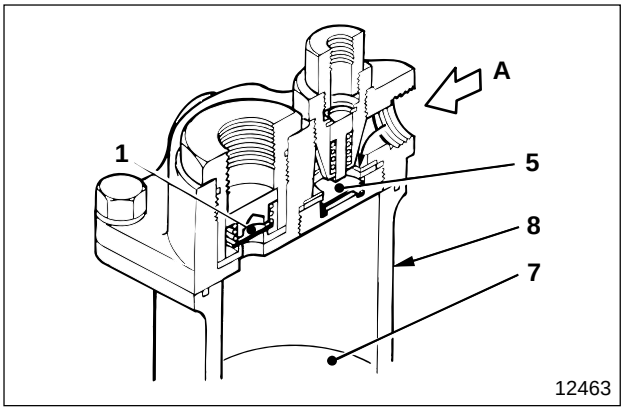

- When drive gear **16** is driven, crankshaft **15** engaged with the drive gear turns to force down piston **7**.
- The negative pressure generated at this time opens suction valve **5**, sucking air **A** into cylinder liner **8**.

● During pressurized delivery

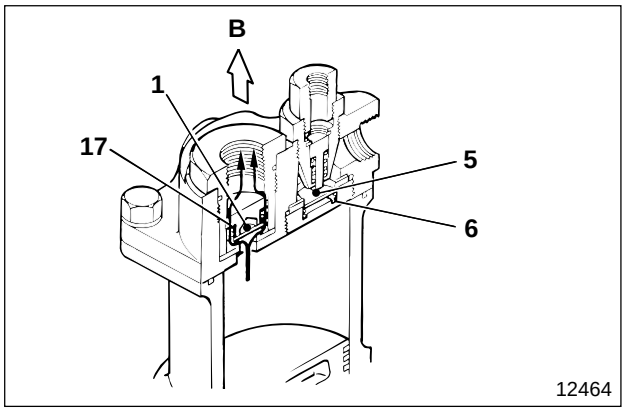

- As piston **7** rises and enters into the compression stroke, suction valve spring **6** closes suction valve **5**.
- The pressure of the compressed air overcomes the repercussive force of delivery valve spring **17** and opens delivery valve **1** to compress and deliver air **B** to the air dryer.

● When unloader valve operates

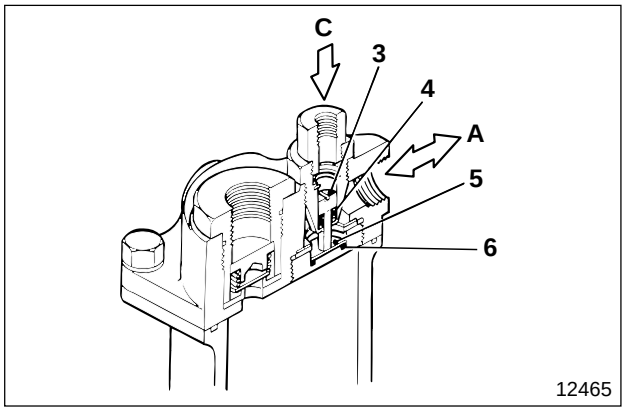

- When the air pressure in the air tank raises higher than the specified value, the air pressure governor operates to feed pressured air **C** to unloader valve **3**. This forces down the unloader valve and holds suction valve **5** open at the same time. Therefore, air **A** is not compressed and the air compressor idles.
- When the air pressure in the air tank drops lower than the specified value, the air pressure governor operates again to discharge pressured air from the upper side of unloader valve **3**. So, unloader spring **4** returns the unloader valve to its original position and the air compressor operates under a load.

Air Dryer

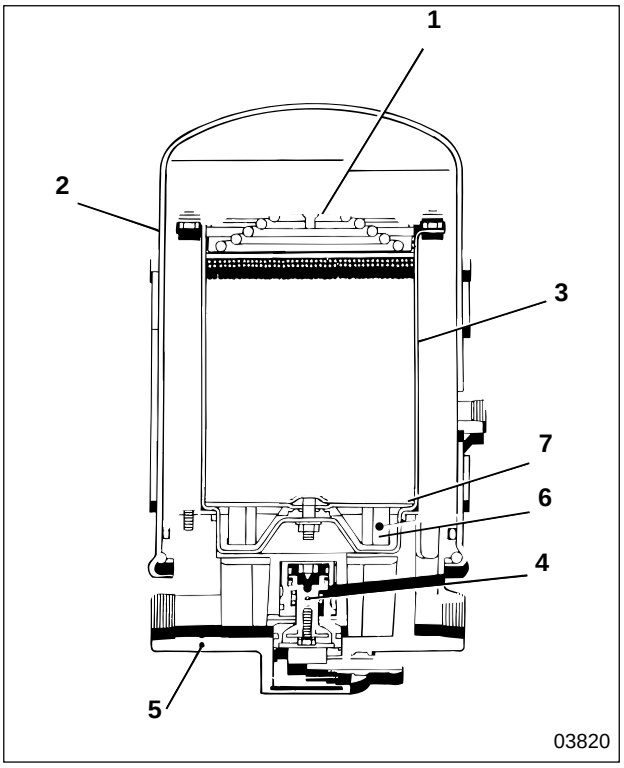

1 Check valve
2 Case
3 Desiccant
4 Oil filter
5 Valve
6 Body
7 Purge chamber

The air dryer removes moisture and oil in the air compressed by the air compressor and protects the brake assembly from rust or faulty operation.

● Dehumidification

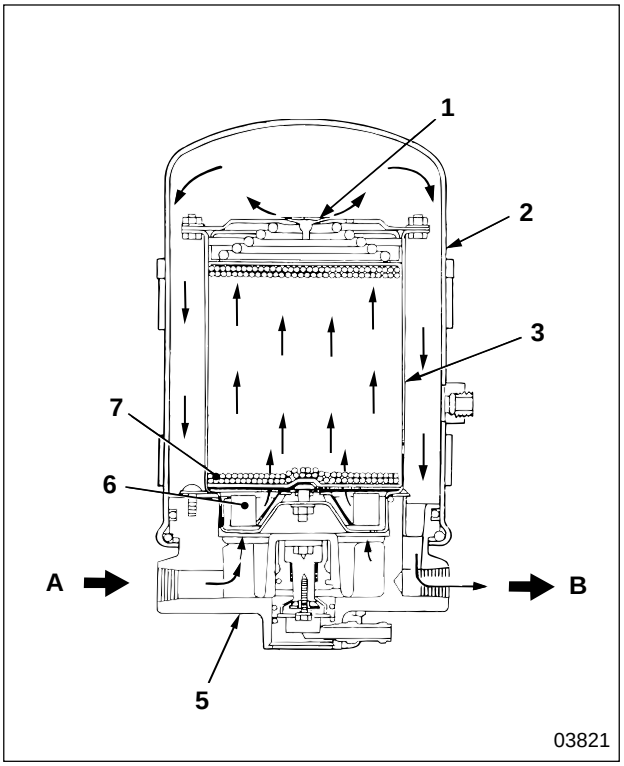

- The air from the air compressor enters delivery side **A** of the air dryer. Once in body **6**, moisture and oil are separated from the air and collected in the bottom. Then, the air passes through oil filter **4**, where small oil droplets and dust are removed. Next, the air is delivered into case **2**, where moisture is removed by desiccant **3**.
- As the air travels from the bottom to the top of case **2**, it comes into contact with more dried desiccant. This removes residual moisture from the air, drying the air as it reaches the top of the case. the air passes through check valve **1** and purge chamber **7**, and is delivered to the air tank through exhaust side **B**.

● Regeneration of desiccant

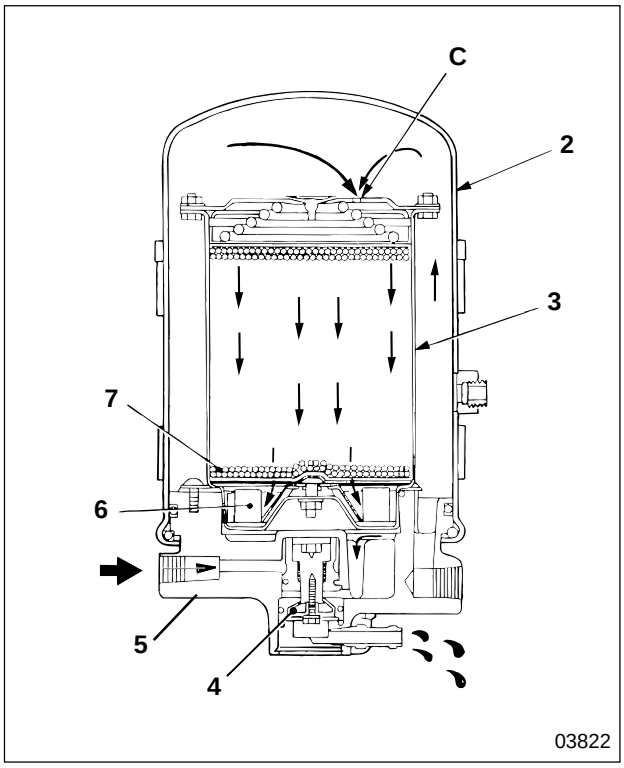

- When the supply of air from the air compressor stops, the pressure from the air pressure governor opens valve **5** of the control port of the air dryer. The pressure in case **2** cleans oil filter **4**, releasing the condensed water and oil into the atmosphere.
- After being quickly decompressed, the dry air in purge chamber **7** passes through hole **C**, where the air expands under the reduced pressure, becoming super dry air. This air flows back through case **2** and collects the moisture in desiccant **3**, releasing this moisture into the atmosphere, thereby recycling the desiccant.

Air Pressure Governor

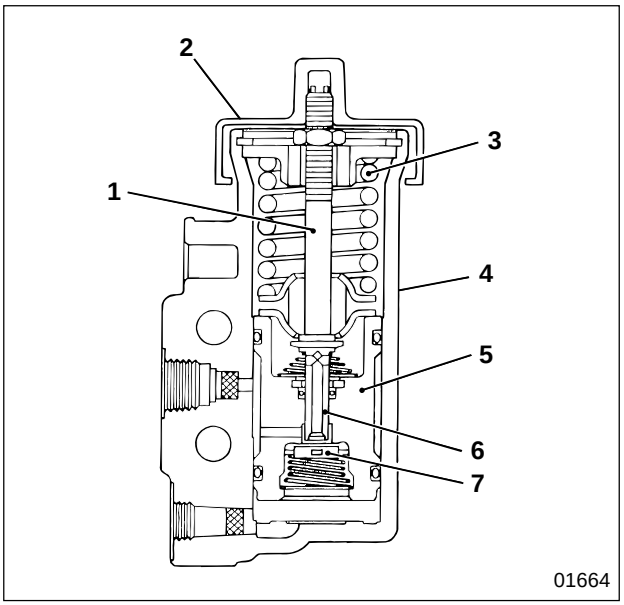

1 Adjusting screw
2 Cover
3 Spring
4 Body
5 Piston
6 Exhaust stem
7 Valve

The air pressure governor keeps the air pressure in the air tank at the specified pressure, by operating the air compressor with or without load in accordance with the air pressure in the air tank.

● High specified-pressure

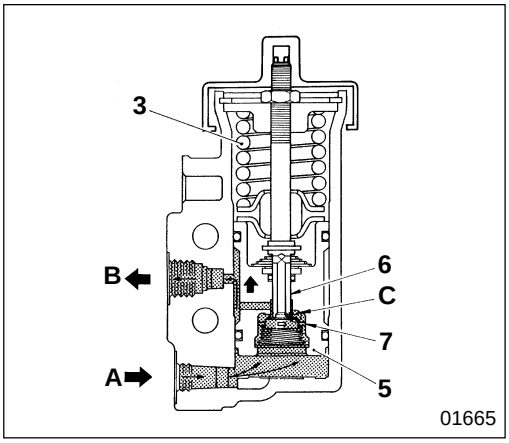

- Pressurized air **A** from the air tank acts constantly on piston **5**. As the pressure in the air tank rises to overcome the repercussive force of spring **3**, the piston rises and valve **7** closes.
- As air pressure **A** from the air tank rises further to become higher than the high specified-pressure, piston **5** rises further. Therefore, exhaust stem **6** opens inlet valve **C** and the air pressure in the air tank flows from unloader port **B** to the unloader valve of the air compressor via the inlet valve. Then the air compressor enters in unloaded operation. Pressure also reaches the air dryer to recycle the desiccant.

● Low specified-pressure

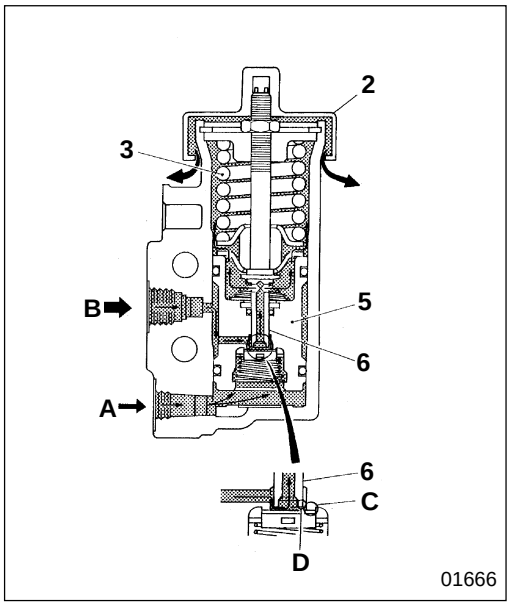

When pressurized air **A** from the air tank gradually drops below the specified-pressure, spring **3** forces down piston **5**. This closes inlet valve **C** and opens exhaust valve seat **D** so pressurized air **B**, up to the unloader valve of the air compressor, is discharged through the opening of cover **2** via exhaust stem **6**, operating the air compressor at load. The pressurized air up to the air dryer is also discharged into the atmosphere.

Exhaust Brake System

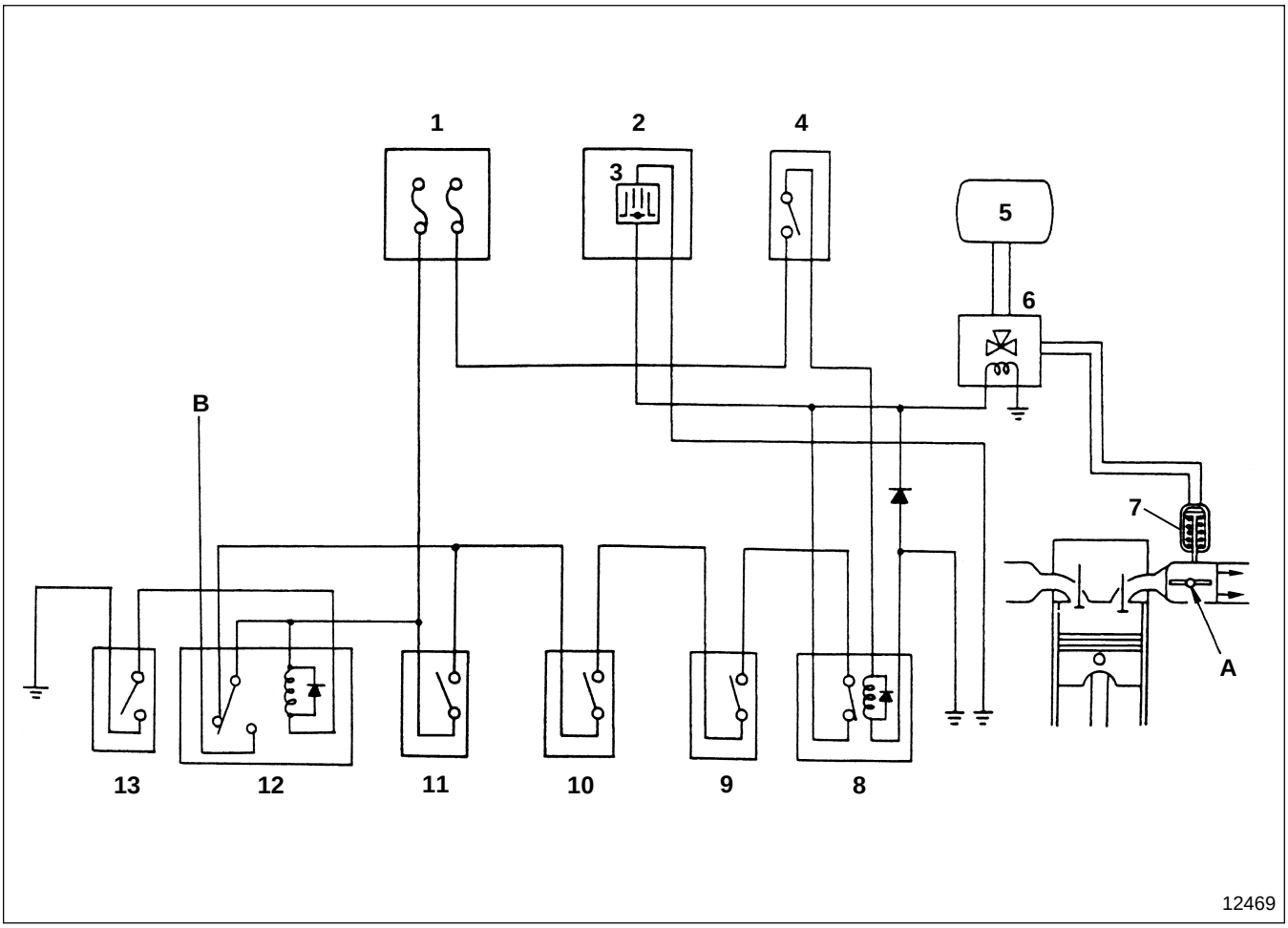

1 Relay and fuse box
2 Meter cluster
3 Exhaust brake indicator lamp
4 Transmission neutral switch
5 Air tank
6 3-way magnetic valve
7 Exhaust brake unit
8 Exhaust brake cut relay
9 Accelerator switch
10 Exhaust brake switch
11 Clutch switch < without power take-off >
12 Power take-off relay < with power take-off >
13 Clutch switch < with power take-off >

A : Butterfly valve
B : To power take-off switch

- Excitation of 3-way magnetic valve **6** causes the air pressure in air tank **5** to act on exhaust brake unit **7** to close butterfly valve **A**, activating the exhaust brake.
- If the exhaust brake is activated while the vehicle is stationary, the coolant temperature can rise excessively, overheating the engine. To avoid this, when the transmission is in neutral, transmission neutral switch **4** turns ON, cutting the exhaust brake system.

● When exhaust brake system is activated

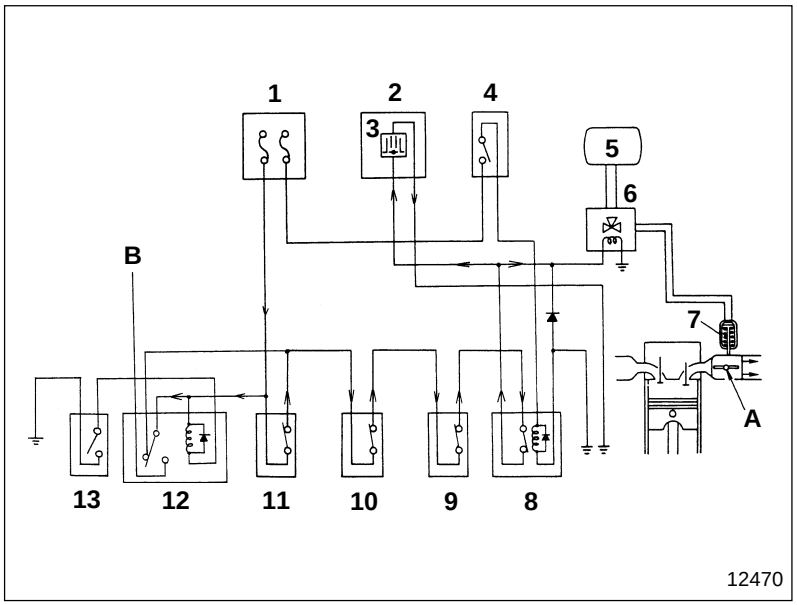

When exhaust brake switch **10** is turned on, the current flows as illustrated to activate the exhaust brake.

Fuse **1**→Power take-off relay **12**→Clutch switch **11**→Exhaust brake switch **10**→Accelerator switch **9**→Exhaust brake cut relay **8**→3-way magnetic valve **6**→Ground
Fuse **1**→Power take-off relay **12**→Clutch switch **11**→Exhaust brake switch **10**→Exhaust brake cut relay **8**→Exhaust brake indicator lamp **3** (ON)→Ground

● When the exhaust brake system is released

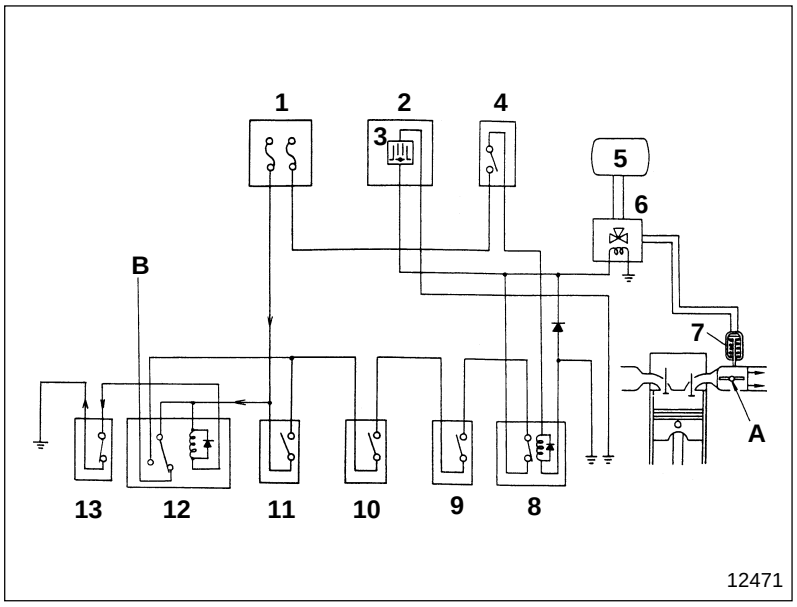

When the accelerator pedal or clutch pedal is depressed while the exhaust brake is working, all switches **9**, **11** turn off, shutting off the current, releasing the exhaust brake.

● When clutch pedal is depressed

Fuse **1**→Clutch switch **11** (OFF)→Since no current flows, the circuit turns off and the exhaust brake is released.
Fuse **1**→Power take-off relay **12** excitation→Clutch switch **13** (ON)→Ground

Fuse **1**→Power take-off relay **12**→Clutch switch **11**→Exhaust brake switch **10**→Accelerator switch **9**(OFF)→Since there is no grounding, current does not flow, so the exhaust brake is released.

● Releasing exhaust brake system by placing transmission in neutral

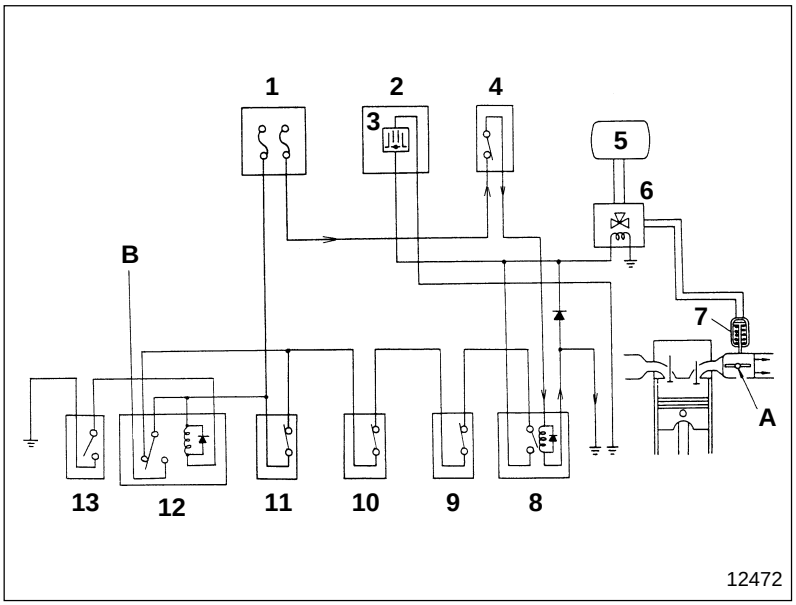

Fuse **1**⟶Transmission neutral switch **4**→Exhaust brake cut relay **8** excitation →Ground
Fuse **1**⟶Clutch switch **11**⟶ Exhaust brake switch **10**→Accelrator switch **9**→Exhaust brake cut relay **8** (OFF)
→Power take-off relay **12**

→Beyond this, current does not flow so the exhaust brake is released.

● Working principle of exhaust brake

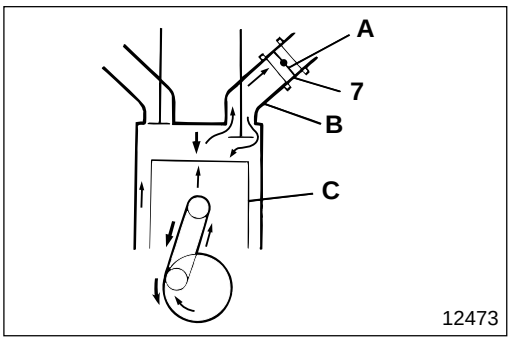

When butterfly valve **A** of exhaust brake unit **7**, in exhaust pipe **B**, is closed, the pressure in the exhaust pipe rises. The pressure rises further in the exhaust stroke, generating a force that pushes back piston **C**, the exhaust braking force.

● Exhaust brake unit

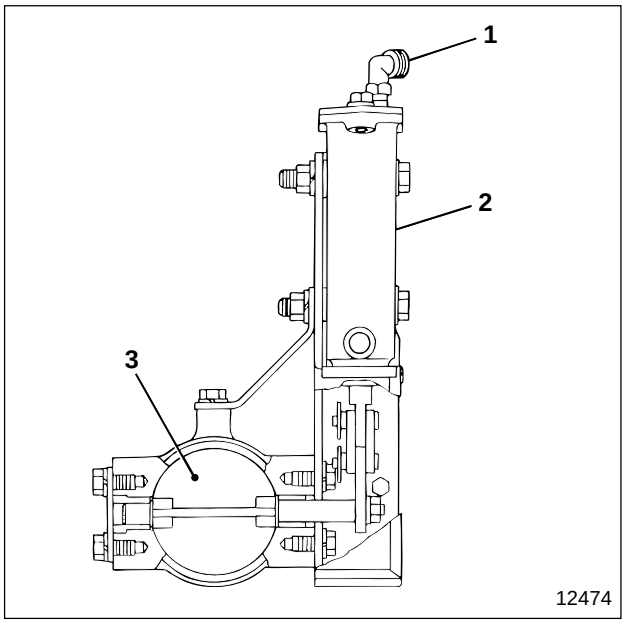

1 Connector
2 Control cylinder
3 Butterfly valve

Air pressure Warning Circuit

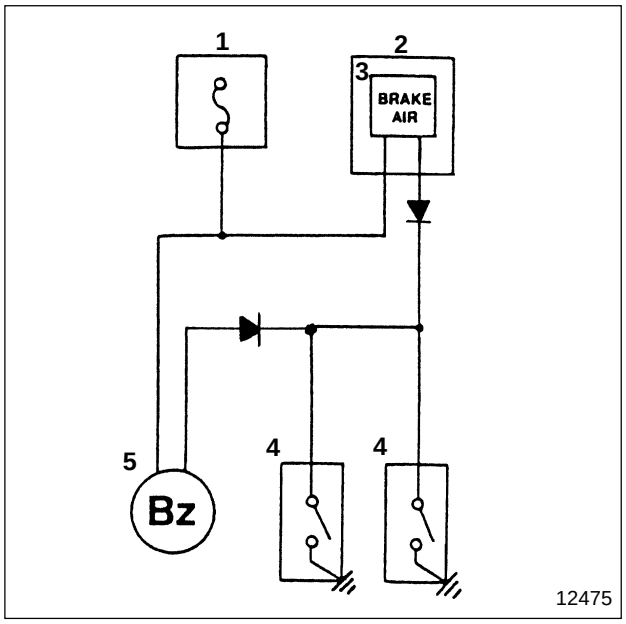

1 Relay and fuse box
2 Meter cluster
3 Air warning lamp
4 Low air pressure switch
5 Warning buzzer

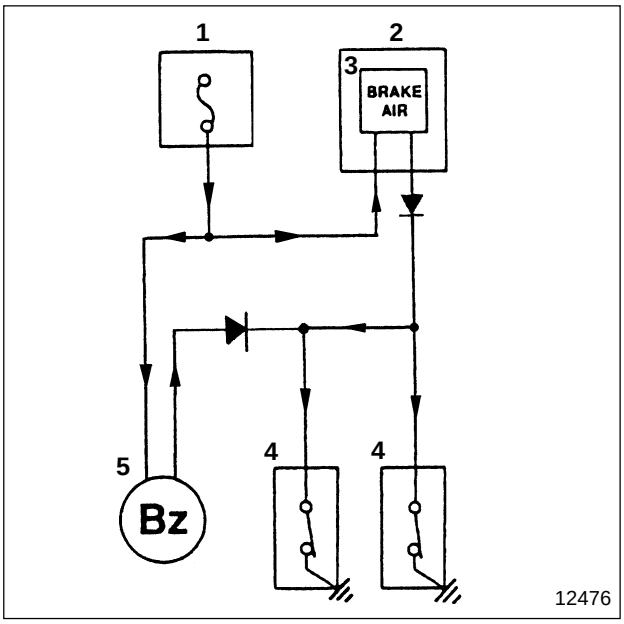

When the air pressure in the air tank drops below the specified value, low air pressure switch **4** turns ON to light air warning lamp **3** and sound warning buzzer **5**. The warning buzzer continues sounding until the starter switch is turned OFF, or until the air pressure in the air tank becomes higher than the specified value and the low air pressure switch is turned OFF.

Fuse **1**→Air warning lamp **3**→Low air pressure switch **4**→Ground
Warning buzzer **5**

TROUBLESHOOTING

Wheel Brake

Symptoms / Possible causes		Wheel brake does not work efficiently				Brake drum overheating			
		Air leakage when brake pedal depressed	Air leakage when brake pedal released	Air pressure low	No air leakage but brake works inefficiently	Brake shoe self-return poor after releasing brake pedal (Wheel drags)	Noise when brake pedal depressed	One-sided braking	Wheel brake works suddenly
Wheel brake	Brake lining surface contaminated with oil				○			○	
	Brake lining surface hardened				○		○		
	Brake lining worn exposing rivet head						○		
	Brake lining materials unequal							○	
	Automatic slack adjuster malfunctioning 🕮 P35B-28				○	○		○	○
	Brake shoe return faulty because anchor pin rusted					○			
	Anchor pin loose						○		
	Camshaft rusted					○			
	Brake shoe return spring fractured					○		○	
	Brake shoe return spring deteriorated					○			
	Brake drum interior worn unevenly						○		
	Brake drum and brake linings close contact faulty						○		
	Brake drum runout							○	
	Brake drum installation loose						○	○	
	Brake drum and brake linings contact faulty							○	
	Air pressure fed to brake chambers unequally							○	
	Air pressure in brake chamber not released					○			
	Wheel parking brake working 🕮 Gr 36B					○			

Possible causes	Symptoms	Wheel brake does not work efficiently				Brake drum overheating			
		Air leakage when brake pedal depressed	Air leakage when brake pedal released	Air pressure low	No air leakage but brake works inefficiently	Brake shoe self-return poor after releasing brake pedal (Wheel drags)	Noise when brake pedal is depressed	One-sided braking	Wheel brake works suddenly
Air compressor	Malfunctioning			○					
Dual brake valve	Primary and secondary valves airtightness faulty	○	○						
	Primary and secondary valves return faulty					○			
	O-ring damaged	○							
	Exhaust port clogged with foreign particles					○			
Air pressure governor	Specified pressure set incorrectly			○					
Air piping	Air leakage in air piping	○	○	○					
Tire	Left and right air pressure different Gr 31							○	
Suspension	U-bolt loose Gr 33, 34							○	

Air Dryer

Possible causes / Symptoms		Drainage from air reservoir drain cock	Drainage not drawn off from exhaust port	Air dryer interior frozen	Air leakage from exhaust port	Air pressure in air reservoir drops extraordinarily	Engine oil coming out exhaust port	Remarks
Air dryer	Desiccant deteriorated	○						
	Heater not working and air dryer interior frozen		○					
	No warming because heater wiring broken			○				
	Heater or thermostat wiring disconnected			○				
	Heater not working because thermostat faulty			○				
	Temperature extremely low because of snow or ice sticking to air dryer body			○				
	Valves clogged with foreign particles		○					
	Valve seat clogged with foreign particles				○			
Check valve	Air returning from air tank because air tank side check valve malfunctioning during air compressor unloading cycle					○		
Air compressor	Air compressor oiling-up						○	

Exhaust Brake

Symptoms / Possible causes	Exhaust brake does not work	Exhaust brake cannot be released	Remarks
Air pressure low	○		
Electrical system faulty	○	○	
Air pipe crushed	○		
3-way magnetic valve does not work	○	○	
Exhaust brake unit does not work	○	○	
Exhaust brake unit shaft stuck	○	○	
Control cylinder does not work	○		

INSPECTION AND ADJUSTMENT MOUNTED IN VEHICLE

Inspection and Adjustment of Brake Pedal Free Play

Service standards

Unit : mm {in.}

Location	Maintenance item		Standard value	Limit	Remedy
—	Pedal play	Pedal toe	$12^{+3.0}_{-1.5}$ {$0.47^{+0.12}_{-0.059}$}	—	Adjust using set screw
		Depression angle	$3.5°^{+1.0°}_{-0.5°}$	—	

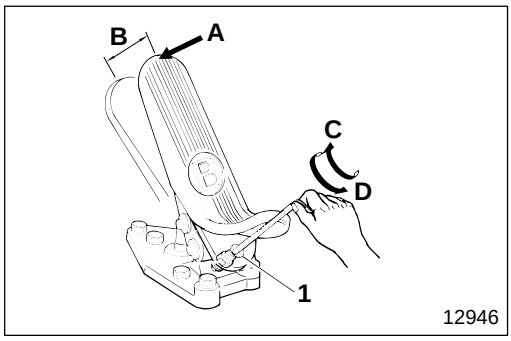

Press pedal toe **A** with your hand and measure free play **B**. If the measured value deviates from the standard value, adjust it by turning set screw **1**.

C : Turning clockwise decreases the free play (For a small angle)

D : Turning counterclockwise increases the free play (For a large angle)

Thickness Inspection and Replacement of Brake Lining

Service standards

Unit : mm {in.}

Location	Maintenance item	Standard value	Limit	Remedy
2	Thickness of brake lining	16 {0.63}	6{0.24} (Side shoulder means wear limit)	Replace

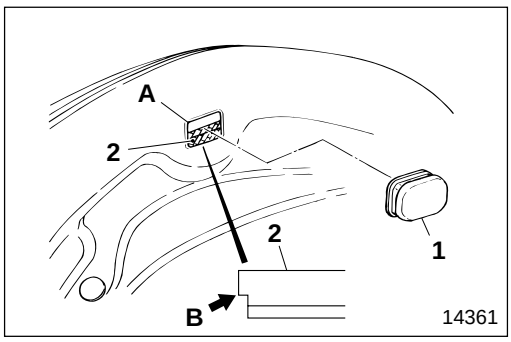

[Inspection]

NOTE

Be sure to inspect at two points for each wheel per side.

- Remove check hole plug **1** from the backing plate.
- Inspect through check hole **A** whether brake lining **2** is worn to the point of side shoulder **B** of the brake lining (the limit).
- If the measured value is lower than the limit, replace brake lining **2** on the same axle as a unit.
- After inspection, be sure to reinstall check hole plug **1**.

[Replacement]

P35B-48, 60

Inspection of Automatic Slack Adjuster Function

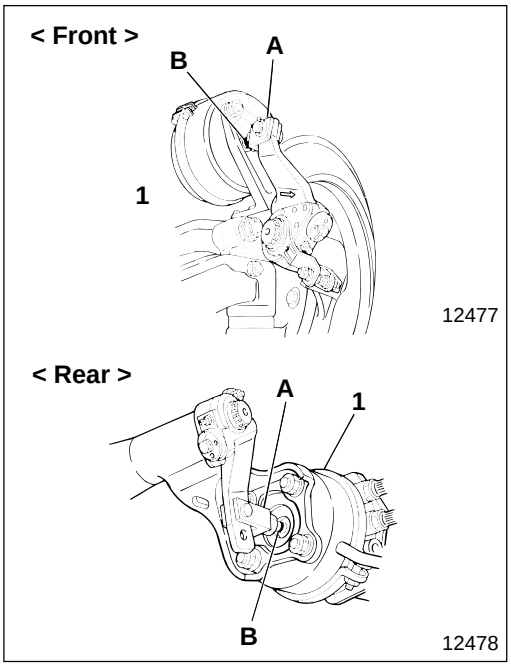

If red painted area **B** of push rod **A** of brake chamber **1** can be seen when the brake pedal is depressed fully, or if any abnormality is sensed in braking, inspect as follows:

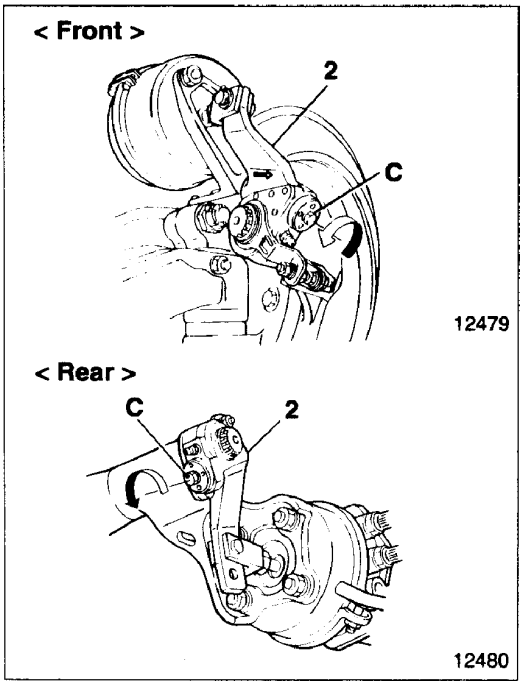

- Increase the air pressure in the air tank to approximately 685 kPa {100 lbf/in^2, 7 kgf/cm^2}.
- Turn worm shaft **C** of automatic slack adjuster **2** in direction ➡ (counterclockwise) to compress the brake shoe assembly and increase the brake shoe clearance to approximately 1.5 mm {0.059 in.}.

NOTE

A large force is required to turn worm shaft A.

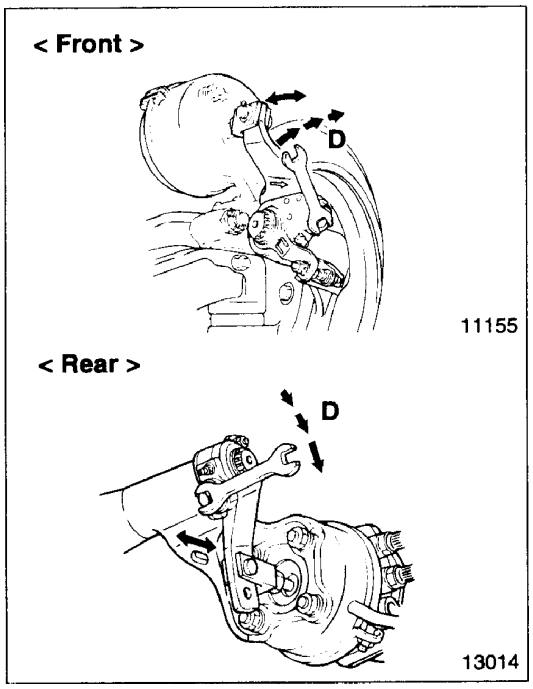

- Put a spanner on worm shaft **C** of automatic slack adjuster **2** and inspect operation by watching how far the spanner moves.

NOTE

Hold the spanner so that it does not fall off.

- Depress the brake pedal fully to work the brake, then release it.
- Check that worm shaft **C** of automatic slack adjuster **2** turns clockwise when the brake is released, and check if the turning stroke decreases every time the brake is depressed and released. If the automatic slack adjuster is faulty, replace it.

D : Stroke

Inspection and Maintenance of Air Dryer

Carry out inspection and maintenance according to the following interval or vehicle milage.

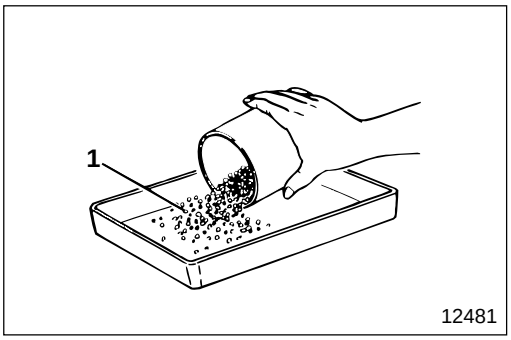

(1) Every 10000 km {6000 miles}

- To check that the air dryer operates correctly, open the drain cock of the air tank and see if any drainage comes out.
- If a little drainage comes out, check if the desiccant **1** is discolored. If more than one fifth of the desiccant has changed color from white to brown, renew desiccant.

NOTE

In an operational environment where the decrease of the ambient temperature in the air tank is higher than 16°C {29°F}, a little moisture might collect.

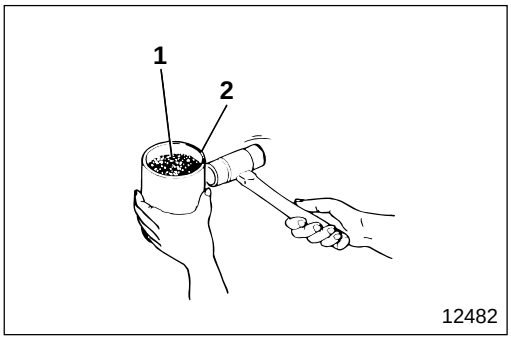

- Pour desiccant **1** into case **2**, tap around the container lightly to settle the desiccant.
- Carefully inspect the drainage from the exhaust port of the air dryer body. Inspect the air compressor and take appropriate action for abnormal oil consumption.
  P35B-74

NOTE

Appropriate action means to inspect the clearance between the oil ring and the cylinder liner.

(2) Every year or every 60000 km {36000 miles}

Disassemble the air dryer body. Replace the oil filter, filter and all the rubber parts together with a repair kit.
P35B-82

HANDLING OF CONNECTOR

Sealant

Location	Points of application	Kinds	Quantity
—	Taper thread of connector	THREEBOND 1110B	As required

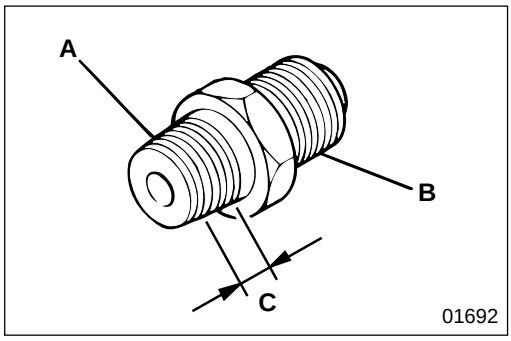

- If the connectors for the brake air system are to be reused after removal, thoroughly remove residual sealant, oil, moisture, etc.
- Apply sealant to the threads of the connector taper except for one or two turns from the end, then tighten.
- When positioning, adjust in the tightening direction.
  A : Taper thread
  B : Parallel thread (Do not apply sealant here)
  C : Apply sealant here

M E M O

BRAKE PEDAL

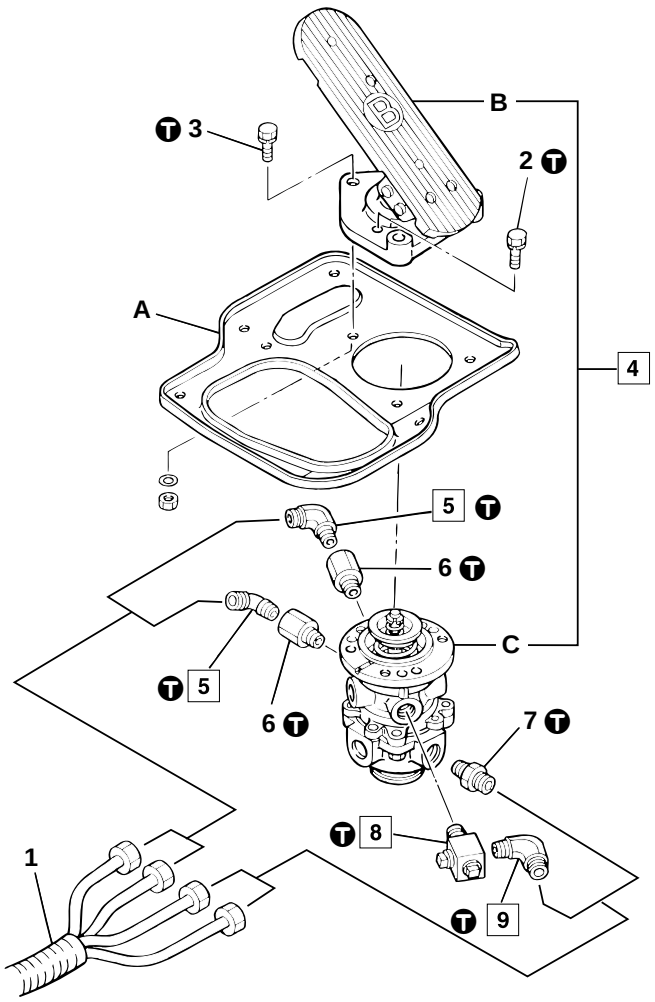

Remove pedal assembly **B** upward from valve board **A**, and valve assembly **C** downward from the valve board to separate dual brake valve **4** (pedal assembly and valve assembly). Do this without removing the valve board from the vehicle.

● **Removal sequence**

1 Nylon tube
2 Bolt
3 Bolt
4 Dual brake valve
📖 P35B-35
5 Connector
6 Connector
7 Connector
8 Connector
9 Connector

● **Assembly sequence**

Follow the disassembly sequence in reverse.

Tightening torque

Unit : N·m {lbf.ft, kgf·m}

Location	Parts to be tightened	Tightening torque	Remarks
2	Bolt (Pedal assembly and valve assembly mounting)	12 to 19 {0.047 to 0.075, 1.2 to 1.9}	—
3	Bolt (Dual brake valve and valve board mounting)	12 to 19 {0.047 to 0.075, 1.2 to 1.9}	—
5, 8, 9	Connector	29.4 to 117.7 {0.12 to 0.47, 3.0 to 12}	—
6, 7	Connector	29.4 to 39.2 {0.12 to 0.16, 3.0 to 4.0}	—

◆ Service procedure

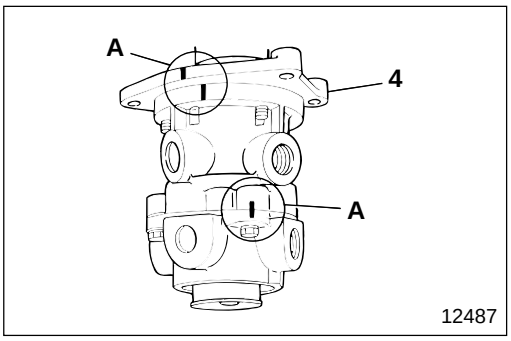

4 **Dual brake valve**

A : Alignment mark

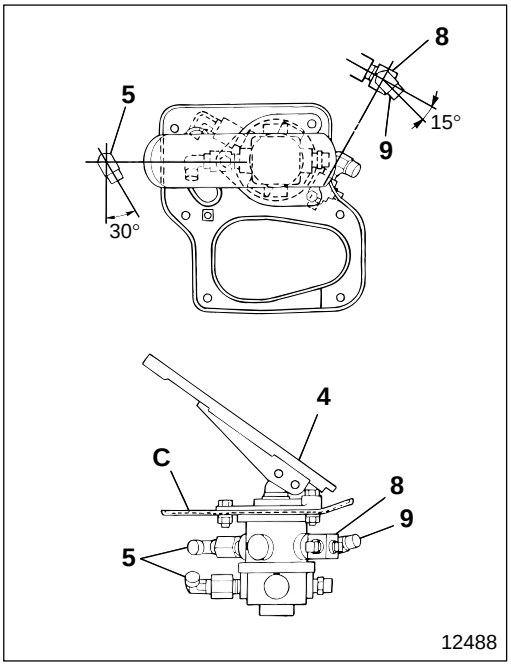

5 **8** **9** **Connector positioning**

Position the connector within one turn after the lower limit tightening torque has been reached.

DUAL BRAKE VALVE

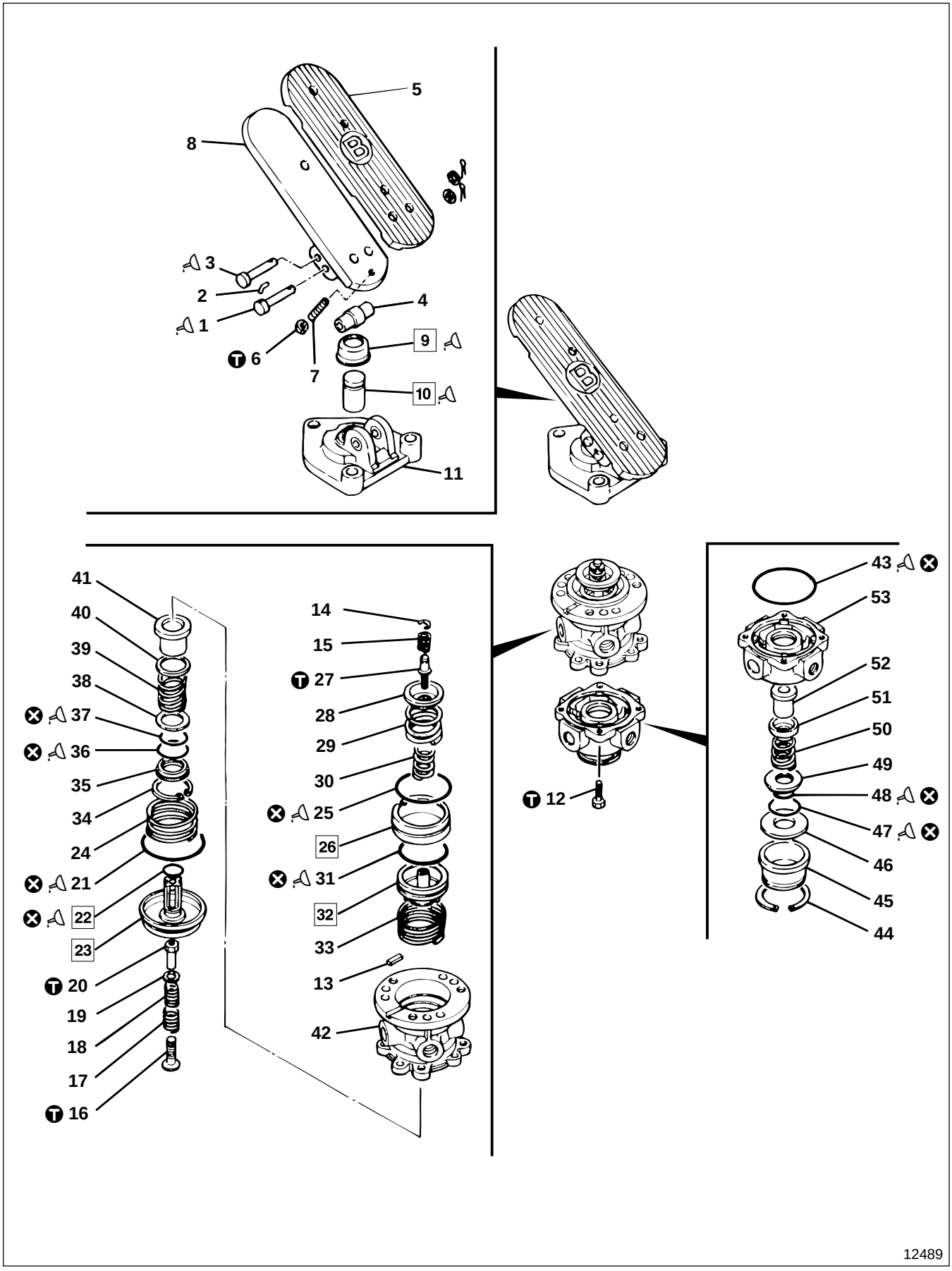

● **Disassembly sequence**

1 Straight pin
2 L-pin
3 Straight pin
4 Roller
5 Pedal cover
6 Lock nut
7 Set screw
8 Pedal
9 Boot
10 Plunger
11 Plate
12 Bolt
13 Plug
14 Retaining ring
15 Spring
16 Screw
17 Outer spring
18 Inner spring
19 Washer
20 Sleeve
21 O-ring
22 O-ring
23 Relay piston
24 Relay piston spring
25 O-ring
26 Bushing
27 Self-locking bolt
28 Spring seat
29 Outer spring
30 Inner spring
31 O-ring
32 Primary piston
33 Spring
34 Retaining ring
35 Valve retainer
36 O-ring
37 O-ring
38 Washer
39 Valve spring
40 Washer
41 Inlet valve
42 Body
43 O-ring
44 Retaining ring
45 Exhaust cover
46 Washer
47 O-ring
48 O-ring
49 Valve retainer
50 Valve spring
51 Valve retainer
52 Inlet valve
53 Cover

⊗ : Non-reusable parts

● **Assembly sequence**

First assemble pedal assembly **A** and valve assembly **B**, then assemble by sandwiching valve board **C** between these two assemblies.

< Pedal assembly **A** >

8 → 7 → 6 → 5 → 4 → 3 → 1 → 2 → Valve board **C** ←
11 → 10 → 9 →

< Valve assembly **B** >

(Primary side)

41 → 40 → 39 → 38 → 37 → 36 → 35 → 34 → 33 → 32 → 31 → 26 → 25 →
42 →

→ 30 → 29 → 28 → 27 → 24 →
23 → 22 → 21 →
20 → 19 → 18 → 17 → 16 → 15 → 14 → 13 → 12 →

(Secondary side)

52 → 51 → 50 → 49 → 48 → 47 → 46 → 45 → 44 → 43 →
53 →

Repair kit : Dual brake valve kit

● **Inspection of function after assembly**

P35B-39

DUAL BRAKE VALVE

Service standards

Unit : mm {in.}

Location	Maintenance item		Standard value	Limit	Remedy
1, 3	Outer diameter of straight pin	Roller mounting	9.5 {0.374}	9.44 {0.371}	Replace
		Pedal mounting	9.5 {0.374}	9.45 {0.372}	
4	Roller	Inner diameter	9.5 {0.374}	9.67 {0.38}	Replace
		Outer diameter	18.3 {0.72}	18.15 {0.71}	
8	Pedal play	Pedal toe	$12^{+3.0}_{-1.5}$ {$0.47^{+0.12}_{-0.059}$}	—	Adjust using set screw
		Depression angle	$3.5°^{+1.0°}_{-0.5°}$	—	
10	Outer diameter of plunger		19.9 {0.783}	19.8 {0.780}	Replace
11	Plate	Inner diameter of straight pin hole	9.5 {0.374}	9.68 {0.381}	Replace
		Inner diameter of bushing	20 {0.787}	20.08 {0.791}	
15	Spring load (Installed length 12.6 {0.50})		—	215 N {49 lbf, 22 kgf}	Replace
24	Relay piston spring load (Installed length 12.8 {0.50})		—	47 N {11 lbf, 4.8 kgf}	Replace
29	Outer spring load (Installed length 26.5 {1.04})		—	215 N {48 lbf, 21.8 kgf}	Replace
30	Inner spring load (Installed length 19.1 {0.75})		—	60 N {13 lbf, 6.1 kgf}	Replace
33	Spring load (Installed length 17 {0.67})		—	97 N {22 lbf, 9.9 kgf}	Replace
39	Valve spring load (Installed length 14.3 {0.56})		—	37 N {8.4 lbf, 3.8 kgf}	Replace
50	Valve spring load (Installed length 12.9 {0.51})		—	47 N {11 lbf, 4.8 kgf}	Replace
—	Pressure stroke	Input air pressure 685 kPa {100 lbf/in², 7 kgf/cm²} — Pedal toe	25.5 {1.00}	Output air pressure — 105^{+25}_{-54} kPa {$16^{+3.6}_{-7.8}$ lbf/in², $1.1^{+0.25}_{-0.55}$ kgf/cm²}	—	Replace springs
		Depression angle	7.5°		
		Pedal toe	45.5 {1.79}	355^{+39}_{-98} kPa {$52^{+5.7}_{-1.4}$ lbf/in², $3.65^{+0.4}_{-1.0}$ kgf/cm²}	—	
		Depression angle	13.5°		
		Pedal toe	$52^{+8.5}_{-1.5}$ {$2.0^{+0.33}_{-0.059}$}	685 kPa {100 lbf/in², 7 kgf/cm²}	—	
		Depression angle	$15.5°^{+2.5°}_{-0.5°}$		

Tightening torque

Unit : N·m {lbf.ft, kgf·m}

Location	Parts to be tightened	Tightening torque	Remarks
6	Lock nut	4.9 to 7.8 {3.6 to 5.8, 0.5 to 0.8}	—
12	Bolt (Valve assembly primary and secondary sides assembling)	4.9 to 7.8 {3.6 to 5.8, 0.5 to 0.8)	—
16	Screw	4.9 to 7.8 {3.6 to 5.8, 0.5 to 0.8)	—
20	Sleeve	1.0 to 2.9 {0.7 to 2.2, 0.1 to 0.3}	—
27	Self-locking bolt	4.9 to 7.8 {3.6 to 5.8, 0.5 to 0.8}	—

Lubricant

Location	Points of application	Kinds	Quantity
1, 3	Outer periphery of straight pin	High pressure-resistant, high abrasion-resistant grease [NLGI No.2 (Li soap)]	As required
9, 10	Pack between boot and plunger	High pressure-resistant, high abrasion-resistant grease [NLGI No.2 (Li soap)]	1 cm^3 {0.061 cu. in.}
10	Friction surfaces of plunger and other parts	High pressure-resistant, high abrasion-resistant grease [NLGI No.2 (Li soap)]	As required
—	Friction surface and groove of O-ring, friction surfaces of metals	Multipurpose grease [NLGI No.2 (Li soap)]	As required

Special tools

Location	Tool name and shape	Part No.	Application
21	Insert tool	*910-24461	Installation of O-ring
32	Retainer	*910-24590	Holding of primary piston

* : JIDOSHA KIKI part No.

◆ Service procedure

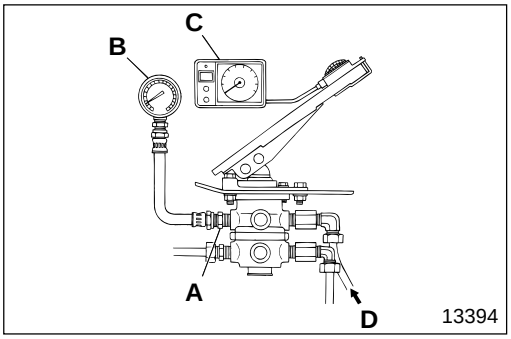

● Inspection of function after assembly

Check that the output air pressure, corresponding to the pedal depression angle, conforms to the specified value.

- Mount pressure gauge **B**, capable of measuring 980 kPa {142 lbf/in^2, 10 kgf/cm^2} or more, on primary output side port **A**.
- Mount depression gauge **C** on the brake pedal.
- Apply air pressure of 685 kPa {100 lbf/in^2, 7 kgf/cm^2} to primary input side port **D** and inspect related parts for air leakage.
- If air leakage is found, do the following:
  - Tighten connectors.
  - Disassemble the dual brake valve and inspect the O-ring assemblies of all parts.

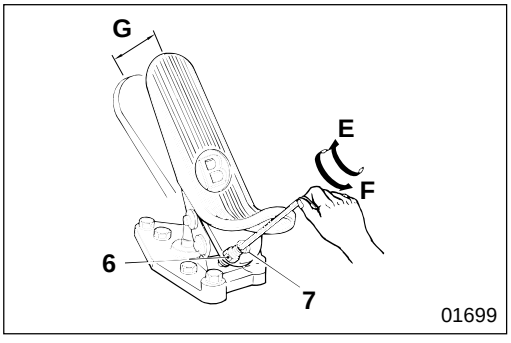

- Turn set screw **7** and adjust brake pedal play **G** to the standard value.
- Tighten lock nut **6** at specified torque to lock set screw **7**.
- Read pressure gauge **B** and make sure that the primary output pressure and brake pedal depression force angle, corresponding to the brake pedal depression angle, conform to the standard values shown in the Input/Output characteristic curve diagram overleaf.
- If the output air pressure is lower than the standard value, replace the following springs:
  - Spring **15**
  - Outer spring **29**
  - Inner spring **30**

  E : Turning clockwise decreases the play (To decrease brake pedal depression angle)

  F : Turning counterclockwise increases the play (To increase brake pedal depression angle)

DUAL BRAKE VALVE

Input/Output Characteristic Curve Diagram

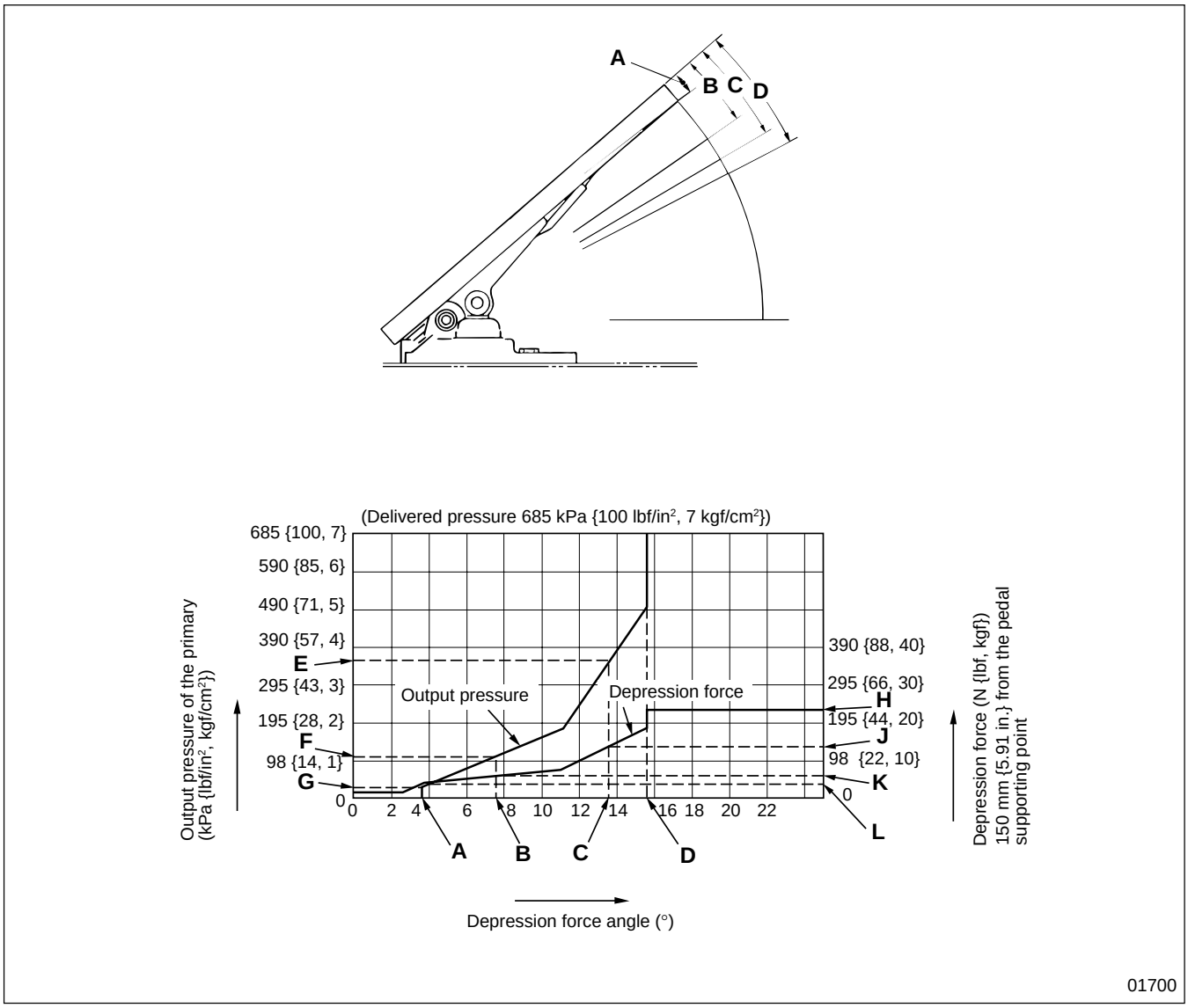

A : Play 3.5° $^{+1.0°}_{-0.5°}$(12 $^{+3.0}_{-1.5}$ mm {0.47 $^{+0.12}_{-0.059}$ in.})
B : Pressure stroke 7.5° (25.5 mm {1.0 in.})
C : Pressure stroke 13.5° (45.5 mm {1.8 in.})
D : Pressure stroke 15.5° $^{+2.5°}_{-0.5°}$ (52 $^{+8.5}_{-0.5}$ mm {2.0 $^{+0.33}_{-0.020}$ in.})
E : 355 $^{+39}_{-98}$ kPa {52 $^{+5.7}_{-1.4}$ lbf/in², 3.65 $^{+0.4}_{-0.1}$ kgf/cm²}
F : 105 $^{+25}_{-54}$ kPa {16 $^{+3.6}_{-7.8}$ lbf/in², 1.1 $^{+0.25}_{-0.55}$ kgf/cm²}
G : 29 kPa {4.3 lbf/in², 0.3 kgf/cm²} or less
H : 230.5±20 N {52±4.4 lbf, 23.5±2 kgf}
J : 132±25 N {30±5.5 lbf, 13.5±2.5 kgf}
K : 59±25 N {13±5.5 lbf, 6±2.5 kgf}
L : 39±10 N {8.8±2.2 lbf, 4±1 kgf}

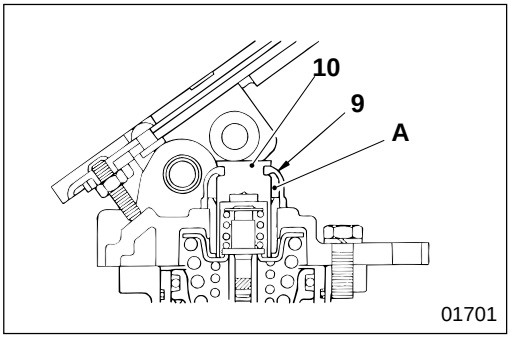

9 **10** **Packing grease between boot and plunger**

Pack area **A** with 1 cm^3 {0.061 cu. in.} of grease.

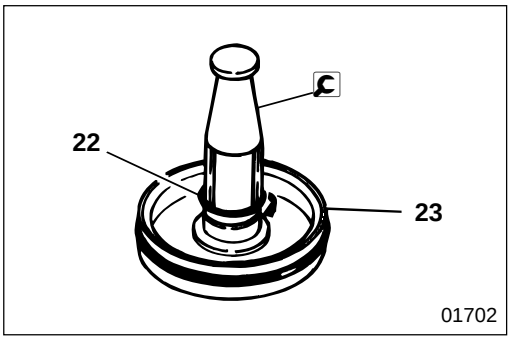

22 **Installation of O-ring**

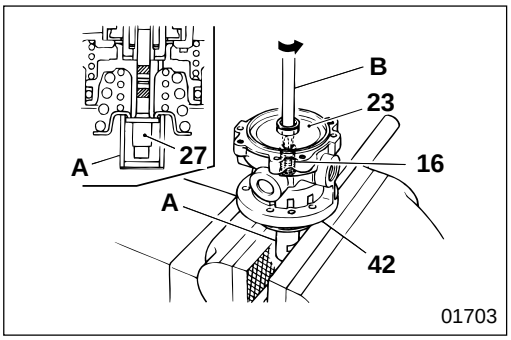

23 **Removal of relay piston**

- Grip (14 mm {0.55 in.}) socket wrench **A** in a vise.
- Insert the head of self-locking bolt **27** into socket wrench **A** to tighten body **42**.

WARNING

You must be careful when you loosen screw 16, because the spring in body 42 can forcibly eject relay piston 23. To avoid this hazard, press down on the relay piston with your hand when you carry out the above work.

- Loosen screw **16** gradually to remove relay piston **23**.
  B : Phillips screwdriver

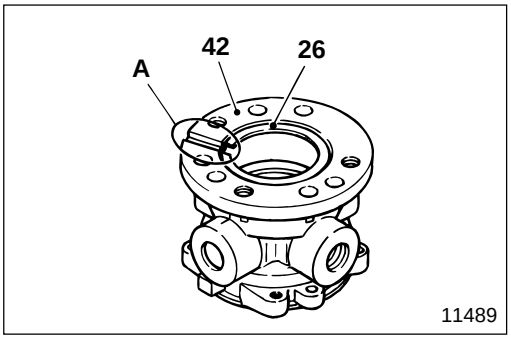

26 **Installation of bushing**

A : Indent

DUAL BRAKE VALVE

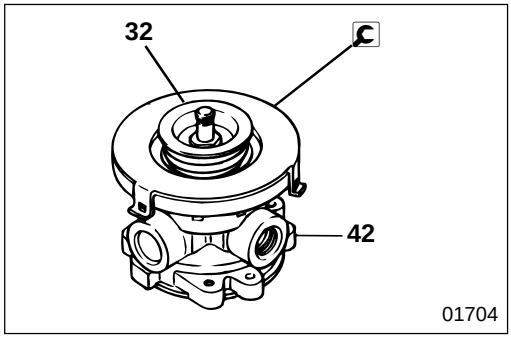

32 **Removal and installation of primary piston**

M E M O

RELAY VALVE

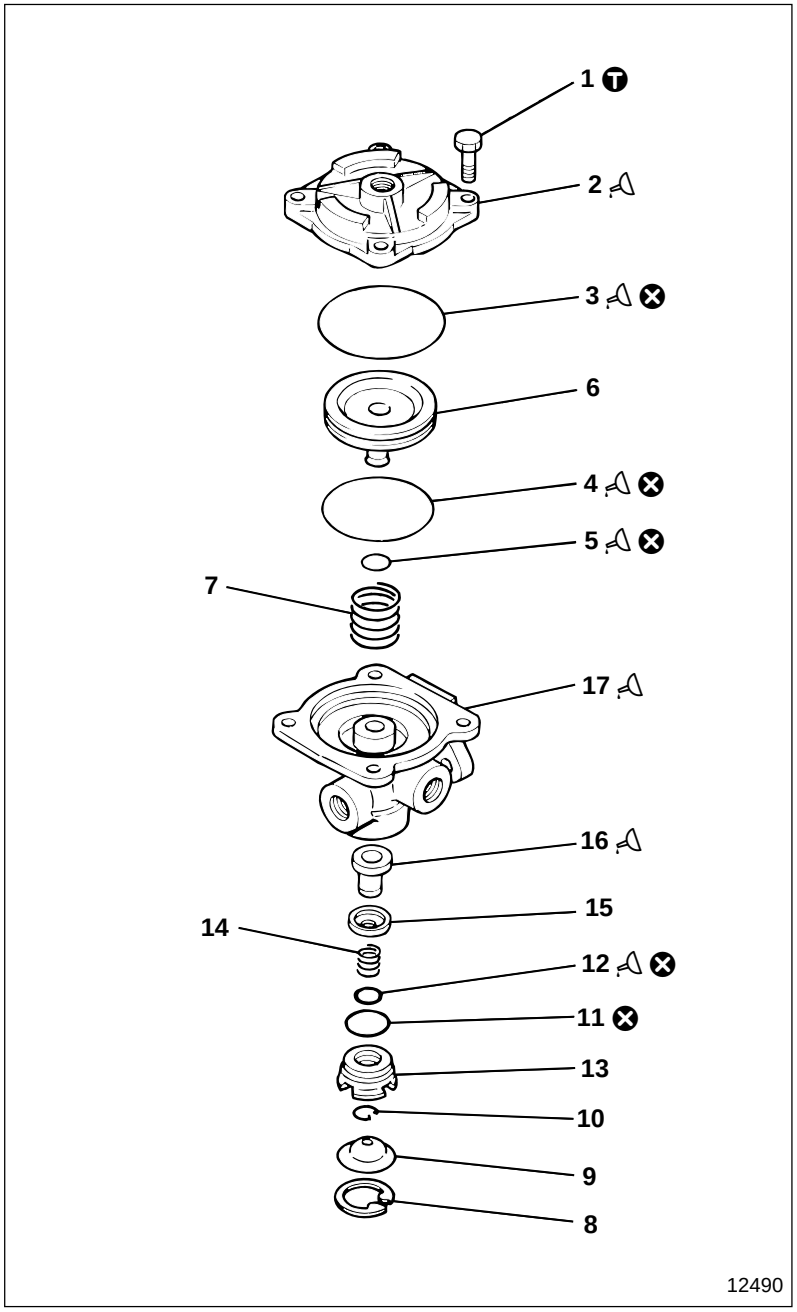

● **Disassembly sequence**

1 Bolt
2 Cover
3 O-ring
4 O-ring
5 O-ring
6 Piston
7 Spring
8 Retaining ring
9 Exhaust cover
10 Retaining ring
11 O-ring
12 O-ring
13 Valve guide
14 Spring
15 Valve retainer
16 Inlet valve
17 Body

⊗ : Non-reusable parts

● **Assembly sequence**

Follow the disassembly sequence in reverse.

Repair kit : Relay valve kit

● **Inspection after assembly** 🕮 P35B-45

Service standards

Unit : mm {in.}

Location	Maintenance item	Standard value	Limit	Remedy
7	Spring load (Installed length 10.3 {0.41})	16 N {3.6 lbf, 1.65 kgf}	13 N {3.0 lbf, 1.35 kgf}	Replace
14	Spring load (Installed length 15.7 {0.62})	29 N {6.6 lbf, 3.0 kgf}	24 N {5.3 lbf, 2.4 kgf}	Replace

Tightening torque

Unit : N·m {lbf.ft, kgf·m}

Location	Parts to be tightened	Tightening torque	Remarks
1	Bolt (Cover and body mounting)	12 to 19 {8.7 to 14, 1.2 to 1.9}	—

Lubricant

Location	Points of application	Kinds	Quantity
2	Friction surface of cover and piston	Multipurpose grease [NLGI No.2 (Li soap)]	As required
3, 4, 5,12	Periphery of O-ring	Multipurpose grease [NLGI No.2 (Li soap)]	As required
16	Friction surface of inlet valve and valve guide	Multipurpose grease [NLGI No.2 (Li soap)]	As required
17	Friction surface of body and piston	Multipurpose grease [NLGI No.2 (Li soap)]	As required

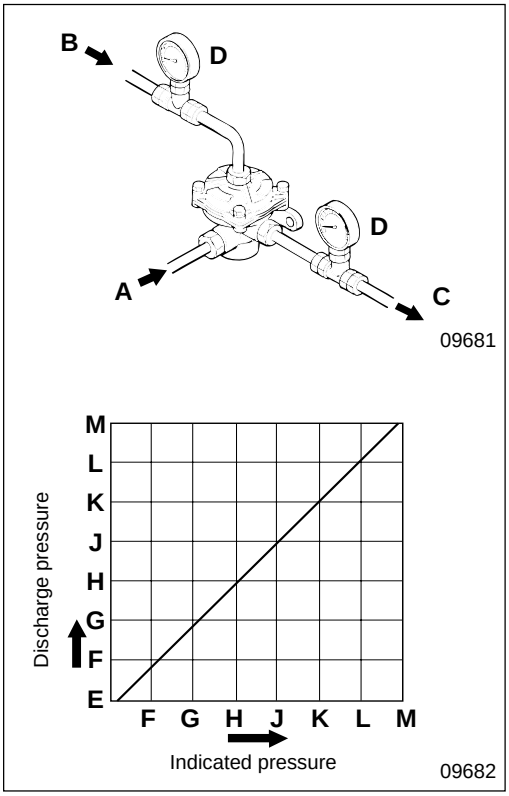

◆ Service procedure

● Inspection after assembly

Mount the gauges on the pipes as illustrated. Apply pressurized air to air supply port **A** and indicated pressure port **B**, and measure the difference in operating pressure between the indicated pressure and the discharge pressure.

Operational pressure difference : 25 kPa {3.6 lbf/in^2, 0.25 kgf/cm^2}

C : Discharge port
D : Pressure gauge
E : 0 kPa {0 lbf/in^2, 0 kgf/cm^2}
F : 98 kPa {14 lbf/in^2, 1 kgf/cm^2}
G : 195 kPa {28 lbf/in^2, 2 kgf/cm^2}
H : 295 kPa {43 lbf/in^2, 3 kgf/cm^2}
J : 390 kPa {57 lbf/in^2, 4 kgf/cm^2}
K : 490 kPa {71 lbf/in^2, 5 kgf/cm^2}
L : 590 kPa {85 lbf/in^2, 6 kgf/cm^2}
M : 685 kPa {100 lbf/in^2, 7 kgf/cm^2}

If any fault is found, replace springs **7, 14**.

QUICK RELEASE VALVE

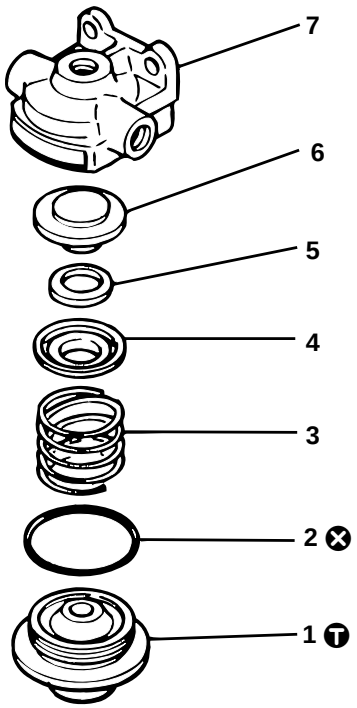

12491

● **Disassembly sequence**

1 Body
2 O-ring
3 Spring
4 Retainer
5 Ring
6 Diaphragm assembly
7 Housing

⊗ : Non-reusable parts

● **Assembly sequence**

Follow the disassembly sequence in reverse.

Repair kit : Quick release valve kit

● **Inspection after assembly**

🕮 P35B-47

Ⓣ Tightening torque

Unit : N·m {lbf.ft, kgf·m}

Location	Parts to be tightened	Tightening torque	Remarks
1	Body	17 to 23 {12 to 17, 1.7 to 2.3}	—

◆ Service procedure

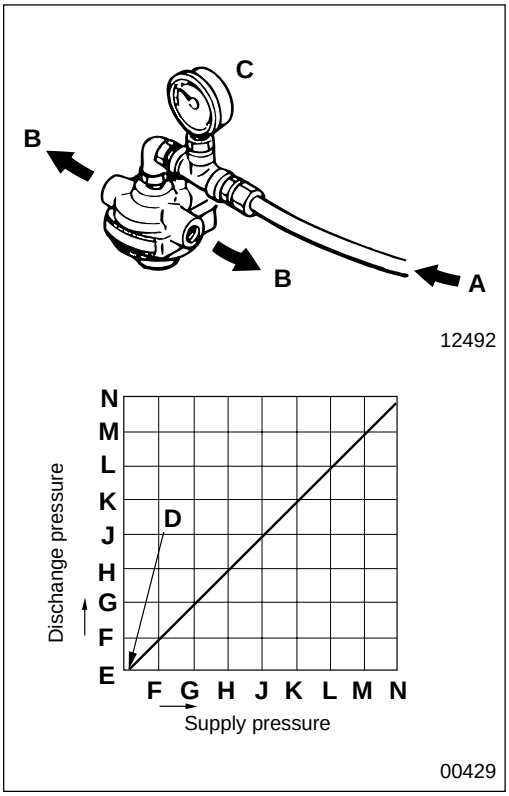

● Inspection after assembly

Mount the gauge on the pipe as illustrated. Apply pressurized air from air supply port **A** gradually. Make sure that air flows out discharge port **B** when the applied air pressure reaches the operating starting pressure.

Operational starting pressure : 9.8±4.9 kPa {1.4±0.7 lbf/in^2, 0.1±0.05 kgf/cm^2}

C : Pressure gauge
D : Operating starting pressure point
E : 0 kPa {0 lbf/in^2, 0 kgf/cm^2}
F : 98 kPa {14 lbf/in^2, 1 kgf/cm^2}
G : 195 kPa {28 lbf/in^2, 2 kgf/cm^2}
H : 295 kPa {43 lbf/in^2, 3 kgf/cm^2}
J : 390 kPa {57 lbf/in^2, 4 kgf/cm^2}
K : 490 kPa {71 lbf/in^2, 5 kgf/cm^2}
L : 590 kPa {85 lbf/in^2, 6 kgf/cm^2}
M : 685 kPa {100 lbf/in^2, 7 kgf/cm^2}
N : 785 kPa {115 lbf/in^2, 8 kgf/cm^2}

FRONT WHEEL BRAKE

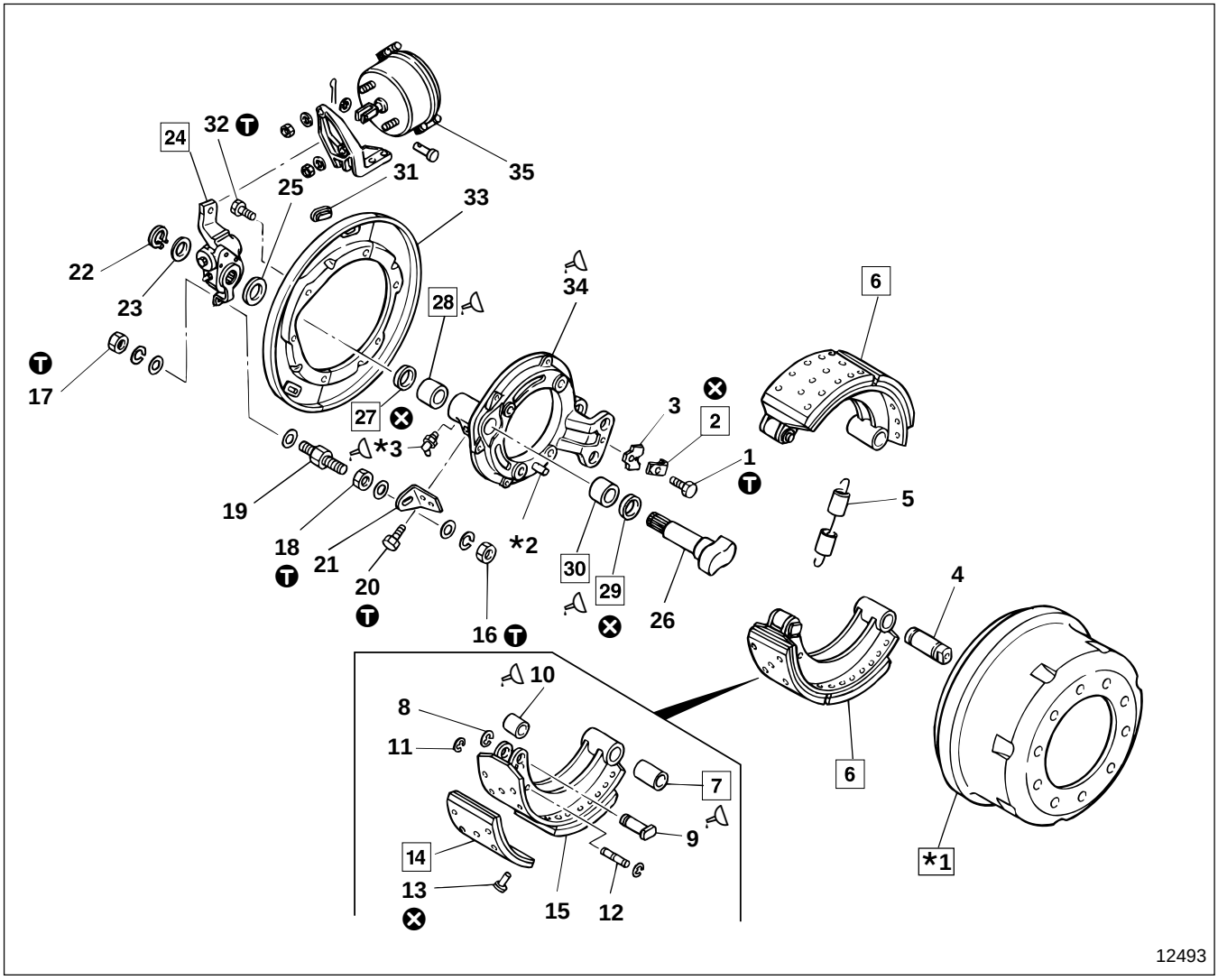

● **Disassembly sequence**

1 Bolt
2 Lock washer
3 Lock plate
4 Anchor pin
5 Return spring
6 Brake shoe assembly
7 Bushing
8 Snap ring
9 Roller pin
10 Roller
11 Snap ring
12 Pin
13 Rivet
14 Brake lining
15 Brake shoe
16 Nut
17 Nut
18 Nut
19 Stopper pin
20 Bolt
21 Stopper pin bracket
22 Snap ring
23 Washer
24 Automatic slack adjuster
25 Spacer
26 Camshaft
27 Dust seal
28 Bushing
29 Oil seal
30 Bushing
31 Check hole plug
32 Bolt
33 Dust cover
34 Anchor bracket
35 Front brake chamber
Gr 26
P35B-58

⊗ : Non-reusable parts
***1** : Brake drum Gr 26
***2** : Positioning pin
***3** : Grease nipple

WARNING⚠

Do not leave lubricant on the surface of brake lining 14 because this reduces braking performance.

● **Assembly sequence**

Follow the disassembly sequence in reverse.

WARNING⚠

Do not leave lubricant on the surface of brake lining 14 because this reduces braking performance.

CAUTION⚠

Make sure you use a 1.2 mm {0.047 in.} thick washer for washer 23, not a 2 mm {0.079 in.} thick one.

Repair kit : Brake lining kit

● **Inspection of operation after installation**

🕮 P35B-50

● **Adjustment of initial brake shoe clearance**

🕮 P35B-51

Service standards

Unit : mm {in.}

Location	Maintenance item		Standard value (Basic diameter in [ ])		Limit	Remedy
4, 7	Clearance between anchor pin and bushing		[35] 0.05 to 0.14 {[1.34] 0.0020 to 0.0055}		0.3 {0.012}	Replace bushing
5	Return spring load (Installed length 265 {10.4})		410 N {92 lbf, 41.8 kgf}		Clearance between coils and between coil and cover	Replace
6	Thickness of brake lining		16 {0.63}		6 {0.24} (Side shoulder means wear limit)	Replace brake lining
26, 28, 30	Clearance between bushing and camshaft		[40] 0.16 to 0.21 {[1.57] 0.0063 to 0.0083}		0.5 {0.020}	Replace bushing
***1**	Brake drum	Inner diameter	ø410 {16.1}	ø*412 {*16.2}	ø414 {16.3}	Replace
		Cylindrical accuracy	0.05 {0.0020}		0.2 {0.0079}	Correct

* : Indicates correction limit.

Tightening torque

Unit : N·m {lbf.ft, kgf·m}

Location	Parts to be tightened	Tightening torque	Remarks
1	Bolt (Lock plate mounting)	21 to 34 {15 to 25, 2.1 to 3.5}	—
16, 18	Nut (Stopper pin mounting)	14 to 20 {10 to 14, 1.4 to 2.0}	—
17	Nut (Stopper pin mounting)	27 to 40 {20 to 30, 2.7 to 4.1}	—
20	Bolt (Stopper pin bracket mounting)	27 to 40 {20 to 30, 2.7 to 4.1}	—
32	Bolt (Dust cover mounting)	16 to 24, {12 to 17, 1.6 to 2.4}	—

Lubricant

Location	Points of application	Kinds	Quantity
7	Interior of bushing	Wheel bearing grease [NLGI No.2 (Li soap)]	0.75 g {0.026 oz} or more
10	Interior of roller	Molybdenum disulfide grease	As required
28, 30	Interior of bushing	Wheel bearing grease [NLGI No.2 (Li soap)]	As required
34	Anchor bracket inserting hole for anchor pin	Wheel bearing grease [NLGI No.2 (Li soap)]	As required
***3**	Pack via grease nipple after assembling wheel brake	Wheel bearing grease [NLGI No.2 (Li soap)]	10 g {0.35 oz}

Special tools

Unit : mm {in.}

Location	Tool name and shape	Part No.	Application
4	Anchor pin puller 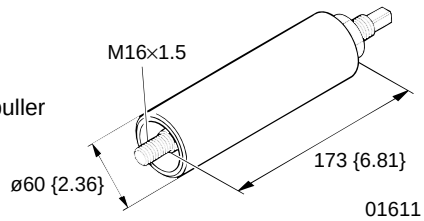	03727-60000	Removal of anchor pin

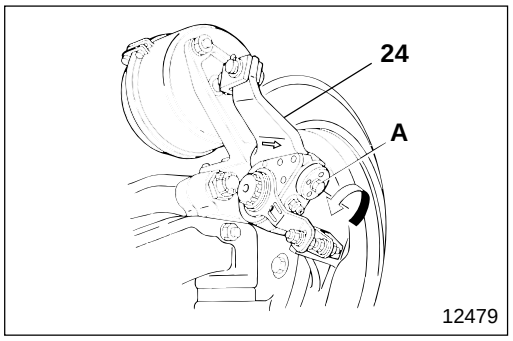

◆ Service procedure

● **Inspection of function after assembly**

- Increase the air pressure in the air tank to approximately 685 kPa {100 lbf/in^2, 7 kgf/cm^2}.
- Turn worm shaft **A** of automatic slack adjuster **24** in direction ➡ (counterclockwise) to compress brake shoe assembly **6** and increase the brake shoe clearance to approximately 1.5 mm {0.059 in}.

NOTE

A large force is required to turn worm shaft A.

- Put a spanner on worm shaft **A** of automatic slack adjuster **24** and inspect operation by watching how far the spanner moves.

NOTE

Hold the spanner so that it does not fall off.

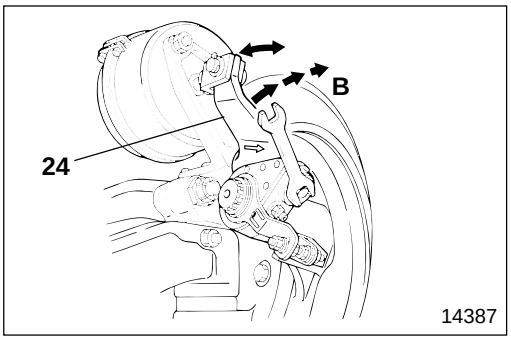

- Depress the brake pedal fully to work the brake, then release it.
- Check that worm shaft **A** of automatic slack adjuster **24** turns clockwise when the brake is released, and if the turning stroke decreases every time the brake is depressed and released. If the automatic slack adjuster is faulty, replace it.

  B : Stroke

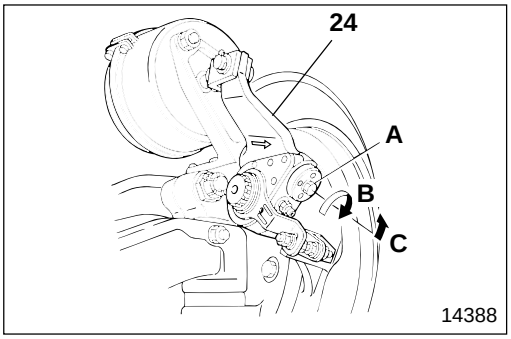

● **Adjustment of initial brake shoe clearance after installation**

- Turn worm shaft **A** of automatic slack adjuster **24** clockwise to open brake shoe assembly **6** until the brake shoe clearance is 0 mm {0 in.}.
- Slacken off worm shaft **A** counterclockwise by one quarter of a turn.
  B : Turn clockwise fully.
  C : Slacken off counterclockwise by one quarter of a turn.

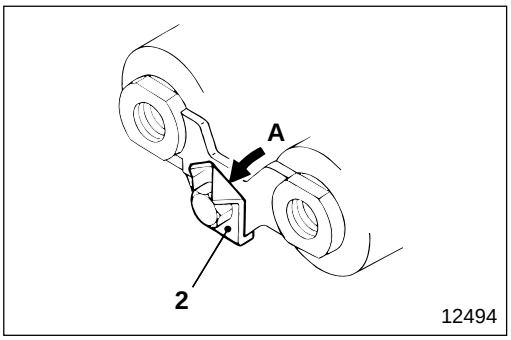

2 **Bending up lock washer**

A : Bend

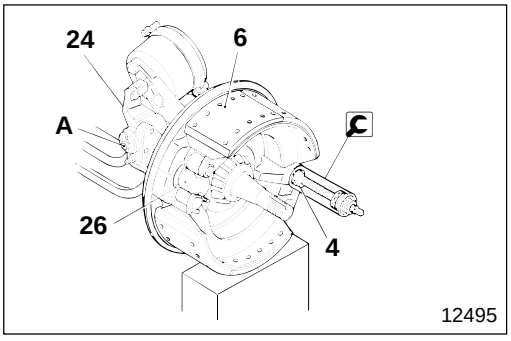

6 **Brake shoe assembly**

[Removal]

- Turn worm shaft **A** of automatic slack adjuster **24** so that camshaft **26** does not open brake shoe assembly **6**.
- Remove anchor pin **4** using anchor pin puller.

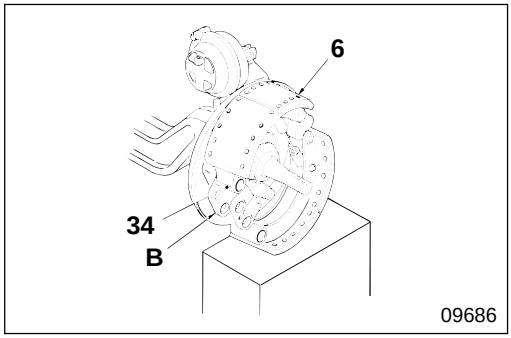

- Remove heel part **B** of lower brake shoe assembly **6** from anchor bracket **34**.
- Remove heel part **B** of upper brake shoe assembly **6** from anchor bracket **34**.

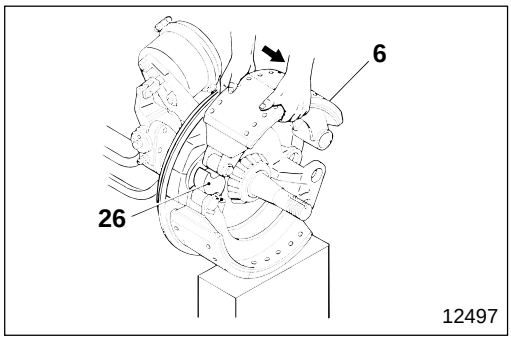

- Hold upper brake shoe assembly **6**, and remove it from camshaft **26** by sliding horizontally.

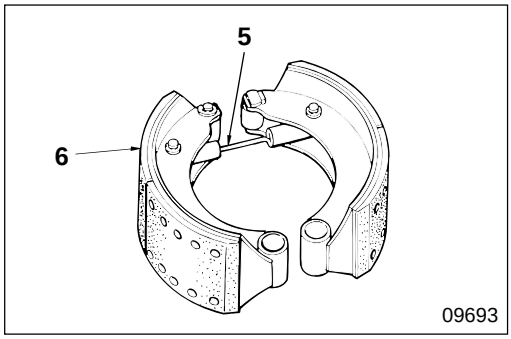

[Installation]

- Install return spring **5** in both brake shoe assemblies **6**.

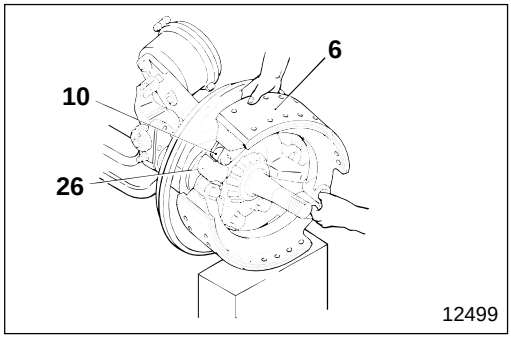

- Insert your thumb and forefinger into the anchor pin hole of both brake shoe assemblies **6**, and lift the upper brake shoe assembly with your other hand.
- Place and slide roller **10** of brake shoe assembly **6** onto camshaft **26**.

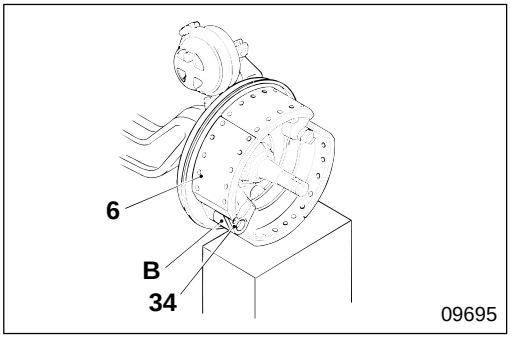

- Install heel part **B** of upper brake shoe assembly **6** in anchor bracket **34**.
- Install heel part **B** of lower brake shoe assembly **6** in anchor bracket **34**.

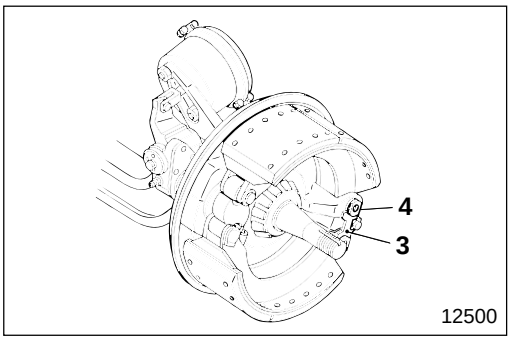

- Drive in anchor pin **4** and fix it with lock plate **3**.

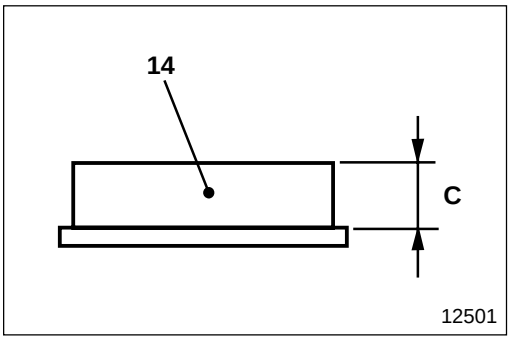

[Inspection]
If thickness **C** of brake lining **14** is lower than the limit replace the brake lining on the same axle as a unit.

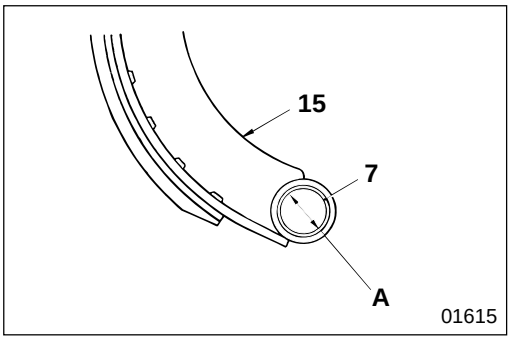

7 **Inner diameter of bushing**

- After installing bushing **7** in brake shoe **15**, measure inner diameter **A** of the bushing.
- If the inner diameter deviates from dimension A ream the diameter to the standard value.

Dimension **A** : $35\ ^{+0.05}_{0}$ mm {$1.4\ ^{+0.0020}_{0}$ in.}

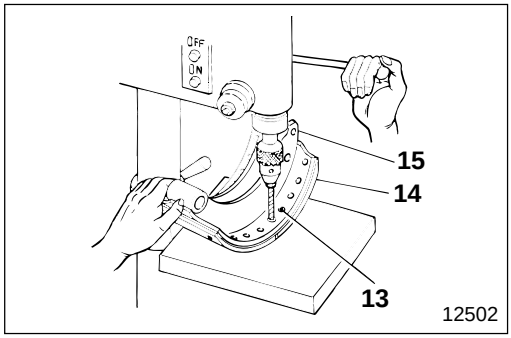

14 **Rivet, brake lining and brake shoe**

[Removal]

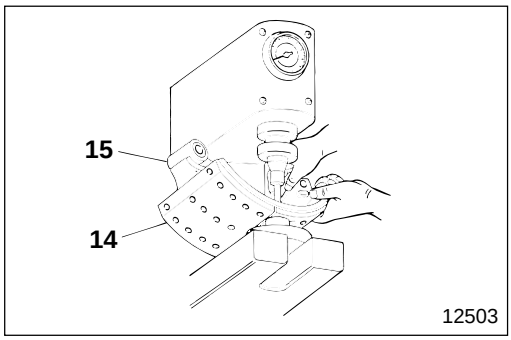

[Installation]

- Clean the mounting surfaces of brake lining **14** and brake shoe **15** with cleaning fluid and dry them.
- Insert rivets **13** from brake lining **14** side, and caulk the rivets at the specified load so that there is no clearance between brake shoe **15** and the brake lining.
  Caulking load for rivets : 17 to 19 kN {3750 to 4190 lbf, 1700 to 1900 kgf}

WARNING

Do not leave lubricant on the surface of brake lining 14 because this reduces braking performance.

CAUTION

- **Make sure that the type of brake linings 14 you fit are suitable for the intended use of the vehicle. Make sure that you fit identical size and color coated linings on the left and right sides of one shaft.**
- **Make sure that you inspect contact with the inner surface of brake drum *1 after you replace brake linings 14. If contact is incorrect, correct with the brake assembled.**

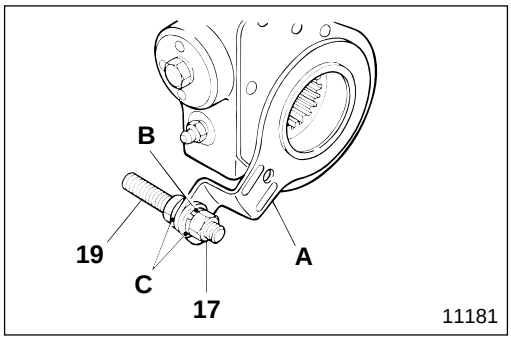

24 **Automatic slack adjuster**

[Installation]

- Install stopper pin **19** in control arm **A** of automatic slack adjuster **24** temporarily.

  B : Spring washer
  C : Plain washer

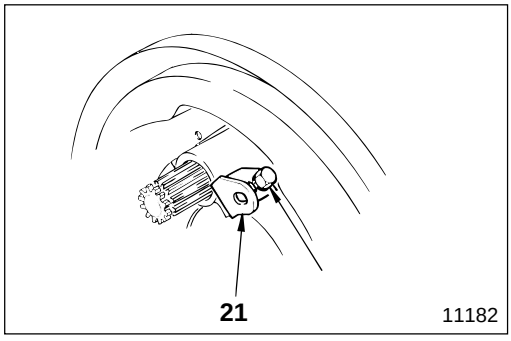

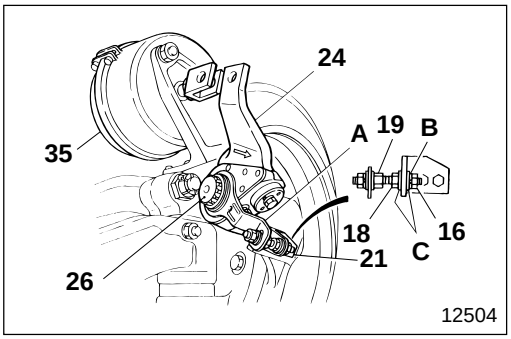

★ • Fit nuts **16**, **18**, spring washer **B** and plain washer **C** on stopper pin **19** that is installed in automatic slack adjuster **24**.
• Position control arm **A** so that stopper pin **19** can be fitted into the hole of stopper pin bracket **21**.
• Install automatic slack adjuster **24** on camshaft **26** of the wheel brake so that mark "⇨" on the arm of the automatic slack adjuster points away from brake chamber **35** as illustrated.

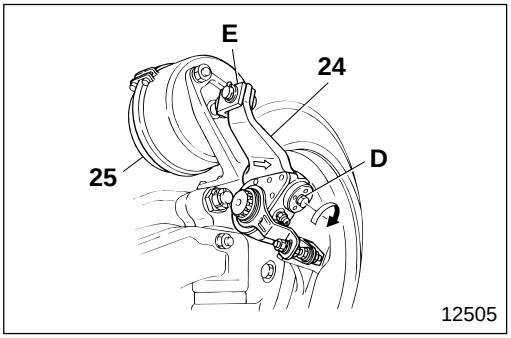

• Turn and align worm shaft **D** of automatic slack adjuster **24** clockwise in the direction of mark "➡" as illustrated, and install push rod **E** of brake chamber **35** in the arm.

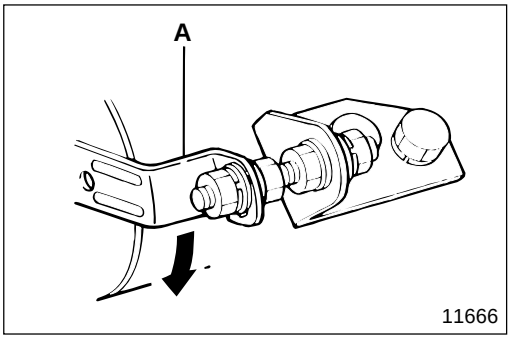

• Push control arm **A** of automatic slack adjuster **24** in direction ➡ as illustrated, and confirm that the arm does not move due to contact with the inner stopper.
If the control arm does move, repeat the operation from step ★.

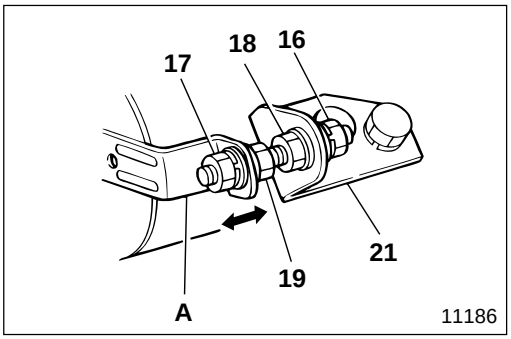

• First install stopper pin **19** in control arm **A**, then in stopper pin bracket **21**, tighten nuts **16**, **17**, **18** at specified torque. Check that the control arm does not move. When tightening the nuts at specified torque, do not apply force to the control arm in arrow mark direction ⟷ as illustrated.

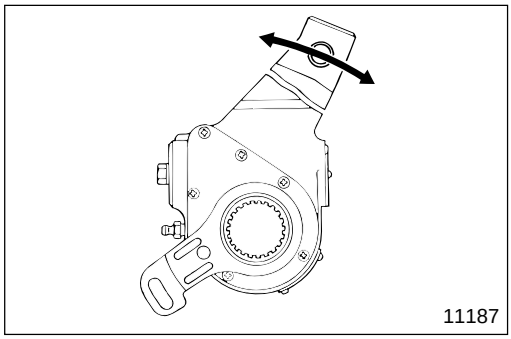

[Inspection of play]

- Inspect automatic slack adjuster **24** when it is disconnected from brake chamber **35**.
- To inspect play, move automatic slack adjuster **24** in direction ⟷ as illustrated. If play is higher than the limit, replace the automatic slack adjuster.
  Limit : 4 mm {0.16 in.} or less

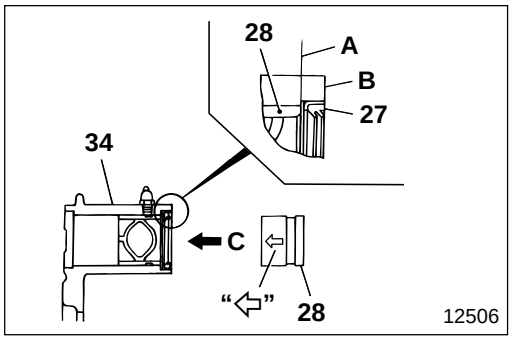

27 **28** **Press-fitting of dust seal and bushing**

A : Press-fit bushing **28** to this level
B : Press-fit dust seal **27** to this level
C : Press-fitting direction for bushing **28**

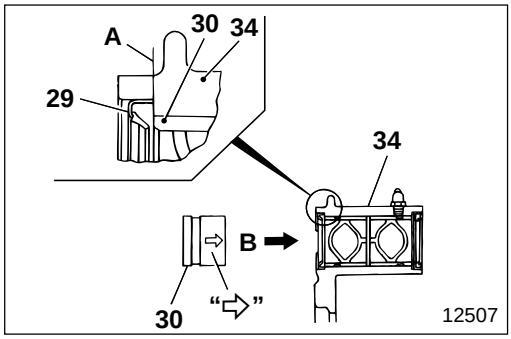

29 **30** **Press-fitting of oil seal and bushing**

A : Press-fit oil seal **29** and bushing **30** to this level
B : Press-fitting direction for bushing **30**

***1** **Correction of brake drum**

If the cylindrical accuracy of brake drum ***1** is higher than the limit, or there are seams, correct by machining to the correction limit. Machining of the brake drum should be done with the wheel hub attached as an integral part.

M E M O

FRONT WHEEL BRAKE

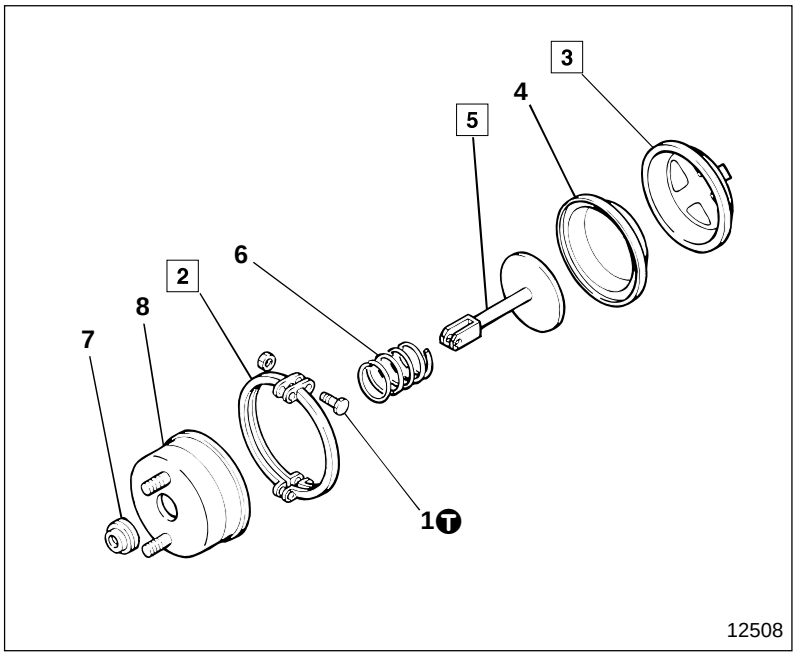

● **Disassembly sequence**

1 Bolt
2 Clamp
3 Pressure plate
4 Diaphragm
5 Push rod
6 Spring
7 Dust cover
8 Non-pressure plate

● **Assembly sequence**

Follow the disassembly sequence in reverse.

Repair kit : Brake chamber kit

T Tightening torque

Unit : N·m {lbf.ft, kgf·m}

Location	Parts to be tightened	Tightening torque	Remarks
1	Bolt (Clamp tightening)	14.7 to 19.6 {11 to 14, 1.5 to 2.0}	—

◆ Service procedure

2 **3** **5** **Assembly direction for clamp, pressure plate and push rod**

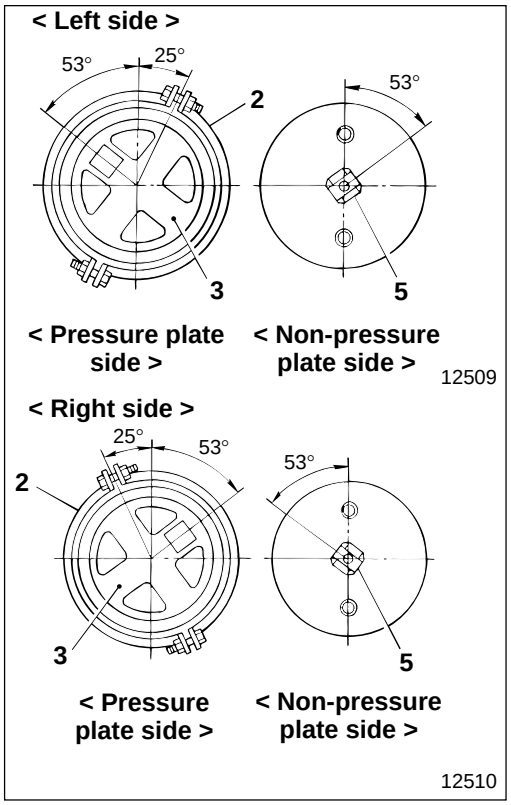

M E M O

REAR WHEEL BRAKE

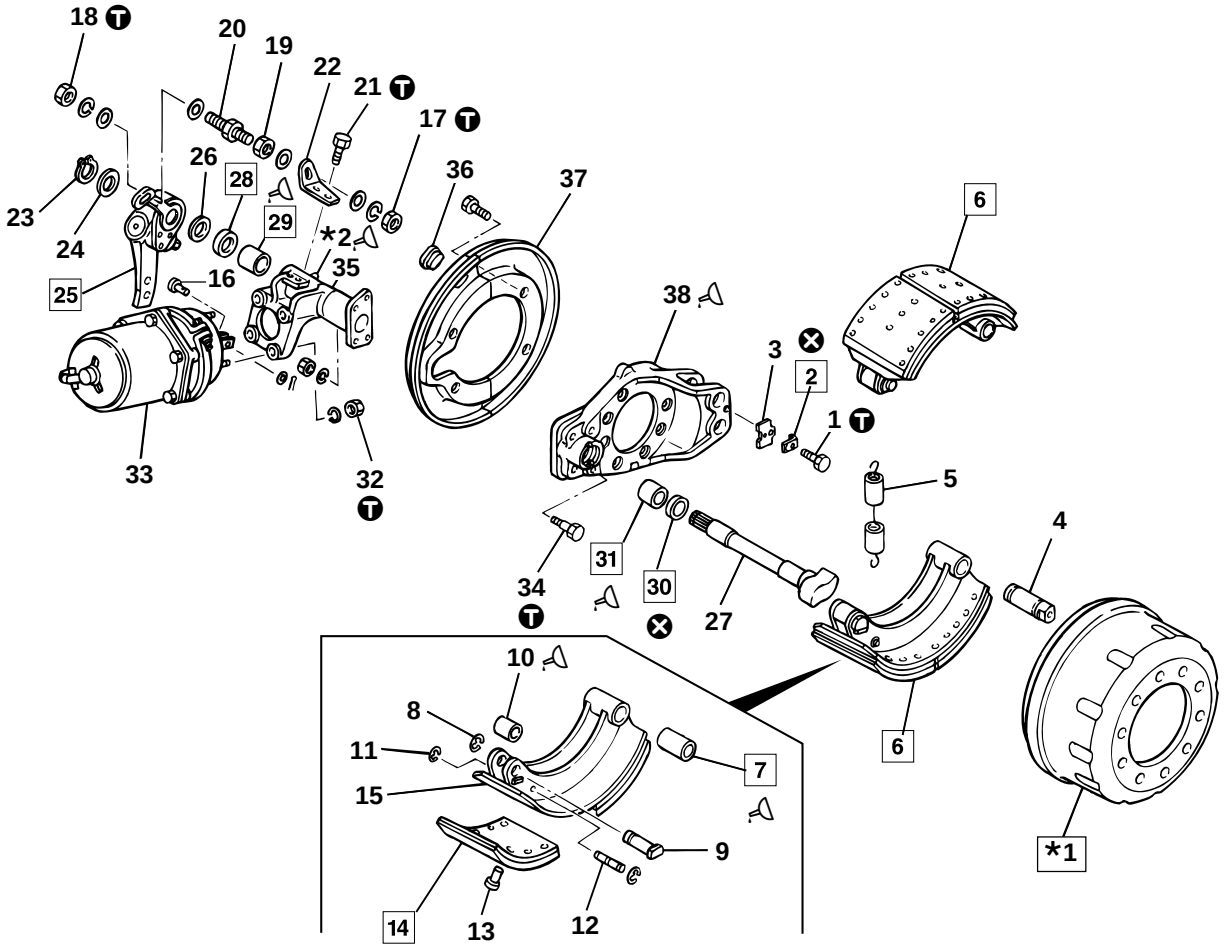

● **Disassembly sequence**

1 Bolt
2 Lock washer
3 Lock plate
4 Anchor pin
5 Return spring
6 Brake shoe assembly
7 Bushing
8 Snap ring
9 Roller pin
10 Roller
11 Snap ring
12 Pin
13 Rivet
14 Brake lining
15 Brake shoe
16 Clevis pin
17 Nut
18 Nut
19 Nut
20 Stopper pin
21 Bolt
22 Stopper pin bracket
23 Snap ring
24 Washer
25 Automatic slack adjuster
26 Spacer
27 Camshaft
28 Dust seal
29 Bushing
30 Oil seal
31 Bushing
32 Nut
33 Rear brake chamber P35B-70
34 Bolt
35 Chamber bracket
36 Check hole plug
37 Dust cover
38 Anchor bracket

⊗ : Non-reusable parts
***1** : Brake drum Gr 27
***2** : Grease nipple

WARNING⚠

Do not leave lubricant on the surface of brake lining 14 because this reduces braking performance.

● **Assembly sequence**

Follow the disassembly sequence in reverse.

WARNING⚠

Do not leave lubricant on the surface of brake lining 14 because this reduces braking performance.

CAUTION⚠

Make sure you use a 1.2 mm {0.047 in.} thick washer for washer 23, not a 2 mm {0.079 in.} thick one.

Repair kit : Brake lining kit

● **Inspection of operation after installation**

🕮 P35B-62

● **Adjustment of initial brake shoe clearance**

🕮 P35B-63

Service standards

Unit : mm {in.}

Location	Maintenance item		Standard value		Limit	Remedy
4, 7	Clearance between anchor pin and bushing		[35] 0.05 to 0.14 {[1.34] 0.0020 to 0.0055}		0.3 {0.012}	Replace bushing
5	Return spring load (Installed length 268 {10.6})		520 N {115 lbf, 53 kgf}		Clearance between coils and between coil and cover	Replace
6	Thickness of brake lining		16 {0.63}		6 {0.24} (Side shoulder means wear limit)	Replace brake lining
27, 29, 31	Clearance between bushing and camshaft		[40] 0.16 to 0.21 {[1.57] 0.0063 to 0.0083}		0.5 {0.020}	Replace bushing
***1**	Brake drum	Inner diameter	ø410 {16.1}	ø*412 {*16.2}	ø414 {16.3}	Replace
		Cylindrical accuracy	0.05 {0.0020}		0.2 {0.0079}	Correct

* : Indicates earrection limit.

Tightening torque

Unit : N·m {lbf.ft, kgf·m}

Location	Parts to be tightened	Tightening torque	Remarks
1	Bolt (Lock plate mounting)	16 to 24 {12 to 17, 1.6 to 2.4}	—
17, 19	Nut (Stopper pin mounting)	14 to 20 {10 to 14, 1.4 to 2.0}	—
18	Nut (Stopper pin mounting)	27 to 40 {20 to 30, 2.7 to 4.1}	—
21	Bolt (Stopper pin bracket mounting)	27 to 40 {20 to 30, 2.7 to 4.1}	—
32	Bolt (Brake chamber mounting)	135 to 195, {100 to 145, 14 to 20}	—
34	Bolt (Chamber bracket mounting)	78 to 115 {58 to 87, 8 to 12}	—

Lubricant

Location	Points of application	Kinds	Quantity
7	Interior of bushing	Wheel bearing grease [NLGI No.2 (Li soap)]	0.75 g {0.026 oz} or more
10	Interior of roller	Molybdenum disulfide grease	As required
29, 31	Interior of bushing	Wheel bearing grease [NLGI No.2 (Li soap)]	As required
38	Anchor bracket inserting hole for anchor pin	Wheel bearing grease [NLGI No.2 (Li soap)]	As required
***2**	Pack via grease nipple after assembling wheel brake	Wheel bearing grease [NLGI No.2 (Li soap)]	60 g {2.1 oz} or more

Special tools

Unit : mm {in.}

Location	Tool name and shape	Part No.	Application
4	Anchor pin puller 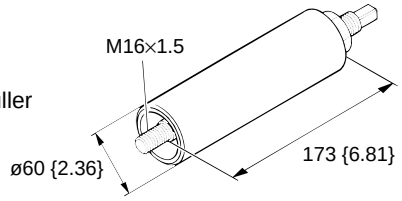	03727-60000	Removal of anchor pin

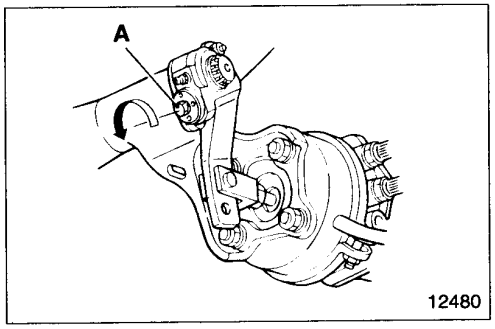

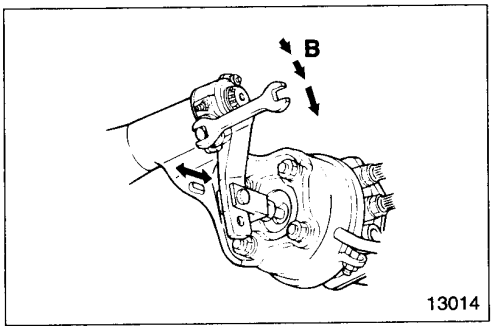

◆ Service procedure

● Inspection of operation after installation

- Increase the air pressure in the air tank to approximately 685 kPa {100 lbf/in², 7 kgf/cm²}.
- Turn worm shaft **A** of automatic slack adjuster **25** in direction ➡ (counterclockwise) to compress the brake assembly and increase the brake shoe clearance to approximately 1.5 mm {0.059 in}.

NOTE

A large force is required to turn worm shaft A.

- Put a spanner on worm shaft **A** of automatic slack adjuster **25** and inspect its operation by watching how far the spanner moves.

NOTE

Hold the spanner so that it does not fall off.

- Depress the brake pedal fully to work the brake, then release it.
- Check that worm shaft **A** of automatic slack adjuster **25** turns clockwise when the brake is released, and if the turning stroke decreases every time the brake is depressed and released. If the automatic slack adjuster is faulty, replace it.

B : Stroke

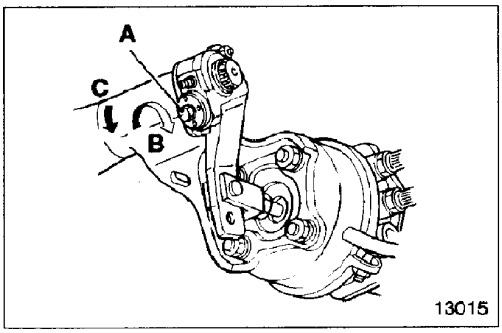

● **Adjustment of initial brake shoe clearance after installation**

- Turn worm shaft **A** of automatic slack adjuster **25** clockwise to open brake shoe assembly **6** until the brake shoe clearance is 0 mm {0 in.}.
- Slacken off worm shaft **A** counterclockwise by one quarter of a turn.

B : Turn clockwise fully.
C : Slacken off counterclockwise by one quarter of a turn.

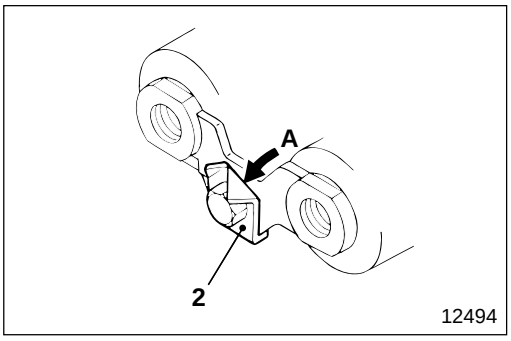

2 **Bending up lock washer**

A : Bend

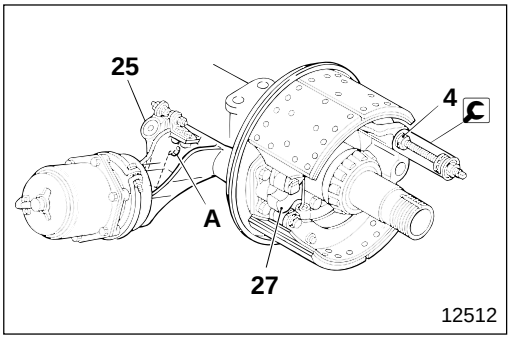

6 **Brake shoe assembly**

[Removal]

- Turn worm shaft **A** of automatic slack adjuster **25** so that camshaft **27** does not open brake shoe assembly **6**.
- Remove anchor pin **4** using 🔧 anchor pin puller.

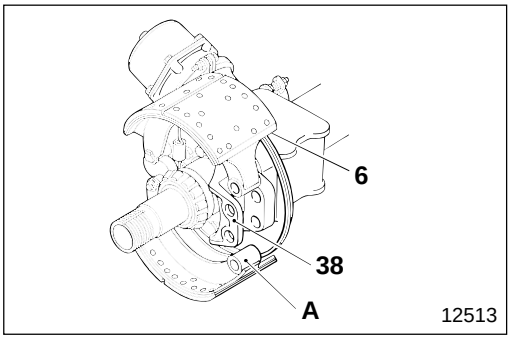

- Remove heel part **A** of lower brake shoe assembly **6** from anchor bracket **38**.
- Remove heel part **A** of upper brake shoe assembly **6** from anchor bracket **38**.

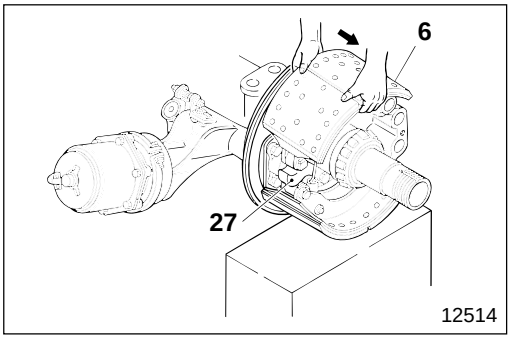

- Hold upper brake shoe assembly **6**, and remove it from camshaft **27** by sliding horizontally.

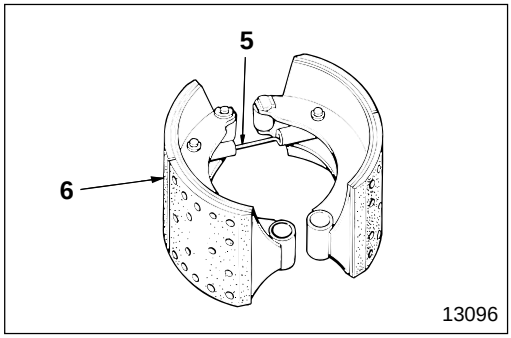

[Installation]

- Install return spring **5** in both brake shoe assemblies **6**.

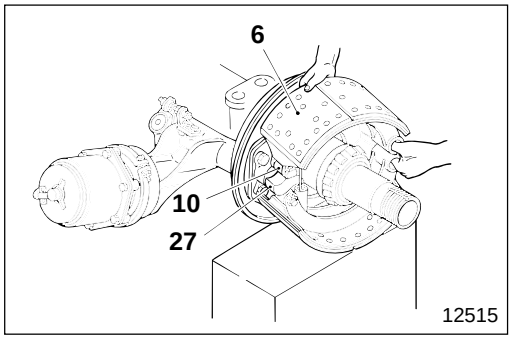

- Insert your thumb and forefinger into the anchor pin hole of both brake shoe assemblies **6**, and lift the upper brake shoe assembly with your other hand.
- Place and slide roller **10** of brake shoe assembly **6** onto camshaft **27**.

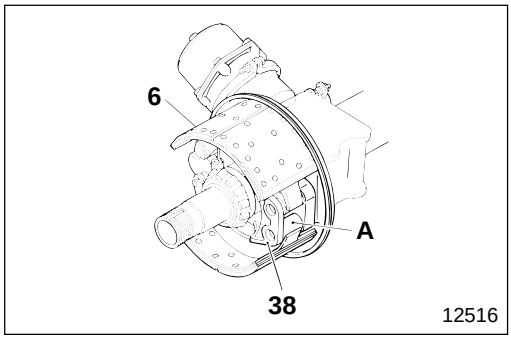

- Install heel part **A** of upper brake shoe assembly **6** in anchor bracket **38**.
- Install heel part **A** of lower brake shoe assembly **6** in anchor bracket **38**.

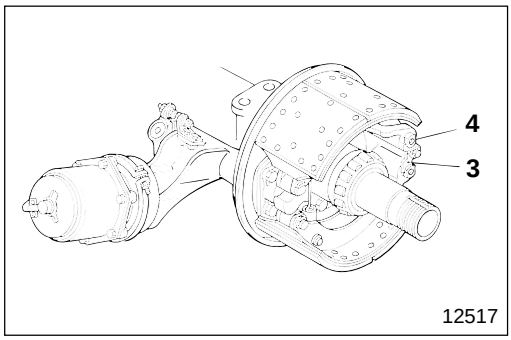

- Drive in anchor pin **4** and fix it with lock plate **3**.

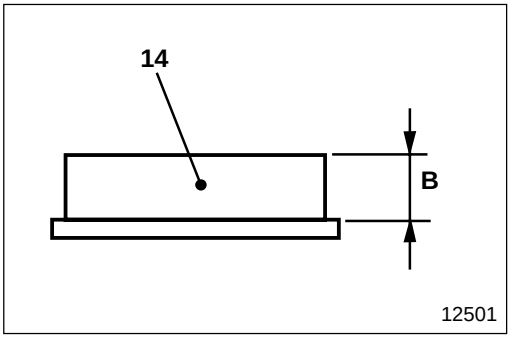

[Inspection]
If thickness **B** of brake lining **14** is lower than the limit replace the brake lining on the same axle as a unit.

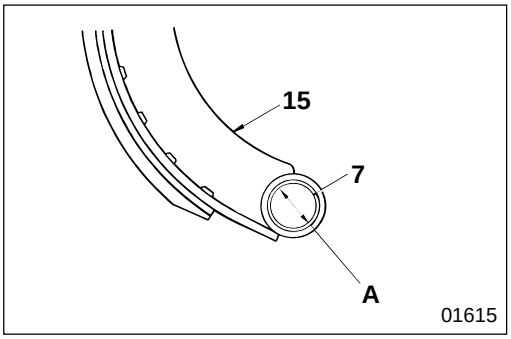

7 **Inner diameter of bushing**

- After installing bushing **7** in brake shoe **15**, measure inner diameter **A** of the bushing.
- If the inner diameter deviates from dimension **A** ream the diameter to the standard value.

  Dimension **A** : $35\ ^{+0.05}_{0}$ mm {$1.4\ ^{+0.0020}_{0}$ in.}

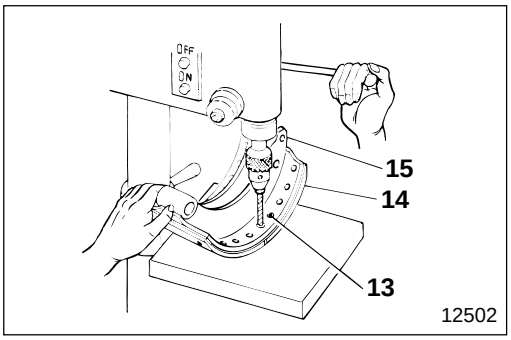

14 **Brake lining**

[Removal]

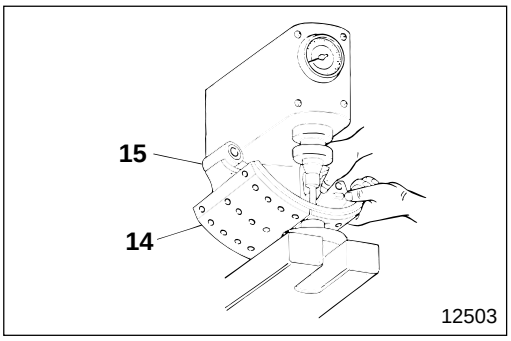

[Installation]

- Clean the mounting surfaces of brake lining **14** and brake shoe **15** with cleaning fluid and dry them.
- Insert rivets **13** from brake lining **14** side, and caulk the rivets at the specified load so that there is no clearance between brake shoe **15** and the brake lining.

  Caulking load for rivets : 17 to 19 kN {3750 to 4190 lbf, 1700 to 1900 kgf}

WARNING ⚠

Do not leave lubricant on the surface of brake lining 14 because this reduces braking performance.

CAUTION ⚠

- **Make sure that the type of brake linings 14 you fit are suitable for the intended use of the vehicle. Make sure that you fit identical size and color coated linings on the left and right sides of one shaft.**
- **Make sure that you inspect contact with the inner surface of brake drum *1 after you replace brake linings 14. If contact is incorrect, correct with the brake assembled.**

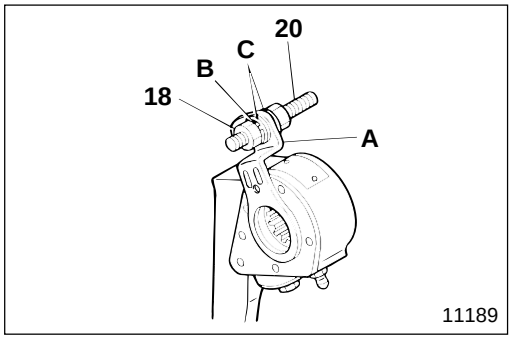

25 Automatic slack adjuster

[Installation]

- Install stopper pin **20** in control arm **A** of automatic slack adjuster **25** temporarily.
  B : Spring washer
  C : Plain washer

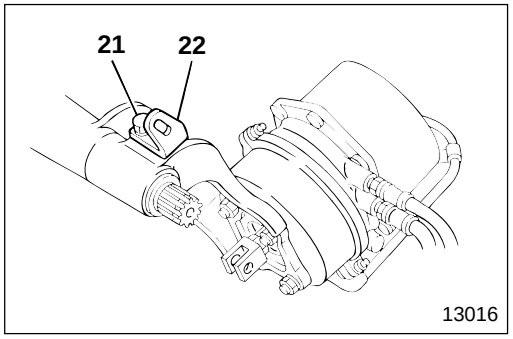

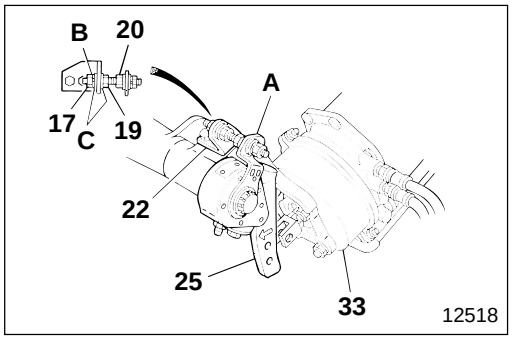

★ • Fit nuts **17**, **19**, spring washer **B** and plain washer **C** on stopper pin **20** that is installed in automatic slack adjuster **25**.

- Position control arm **A** so that stopper pin **20** can be fitted into the hole of stopper pin bracket **22**.
- Install automatic slack adjuster **25** on camshaft **27** of the wheel brake so that mark "⇨" on the arm of the automatic slack adjuster points away from brake chamber **33** as illustrated.

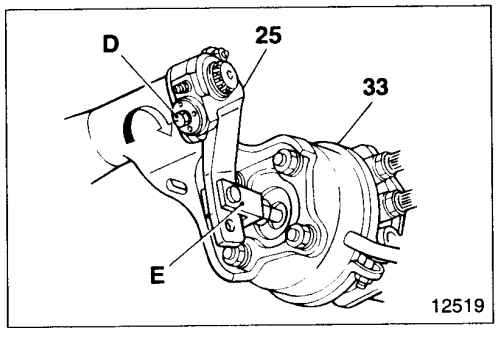

- Turn and align worm shaft **D** of automatic slack adjuster **25** clockwise in the direction of mark "➡" as illustrated, and install push rod **E** of brake chamber **33** in the arm.

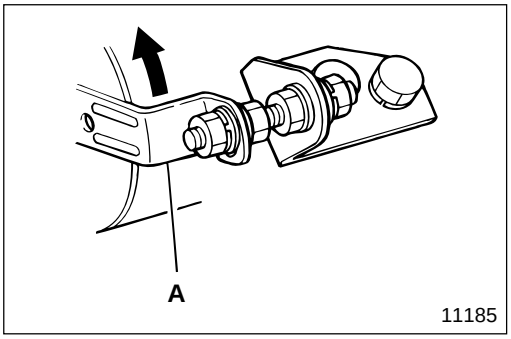

- Push control arm **A** of automatic slack adjuster **25** in direction ➡ as illustrated, and confirm that the arm does not move due to contact with the inner stopper.
  If the control arm does moves, repeat the operation from step ★.

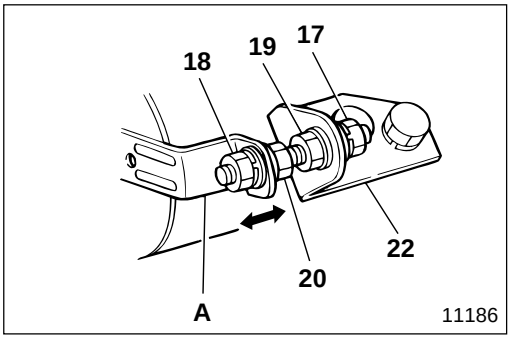

- First install stopper pin **20** in control arm **A**, then in stopper pin bracket **22**, tighten nuts **17**, **18**, **19** at specified torque. Check that the control arm does not move. When tightening the nuts at specified torque, do not apply force to the control arm in arrow mark direction ⟷ as illustrated.

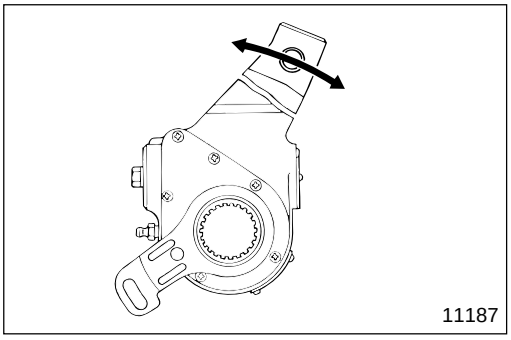

[Inspection of play]

- Inspect automatic slack adjuster **25** when it is disconnected from brake chamber **33**.
- To inspect play, move automatic slack adjuster **25** in direction ⟷ as illustrated. If play is higher than the limit, replace the automatic slack adjuster.
  Limit : 4 mm {0.16 in.} or less

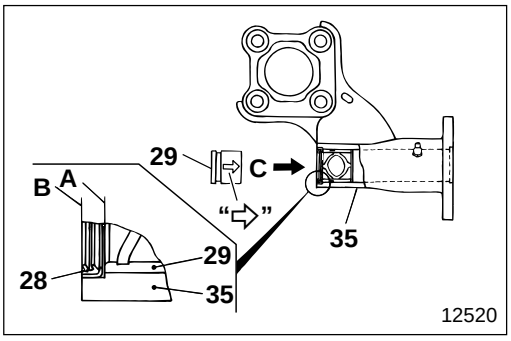

28 **29** **Press-fitting of dust seal and bushing**

A : Press-fit bushing **29** to this level
B : Press and fit dust seal **28** to this level
C : Press-fitting direction for bushing **29**

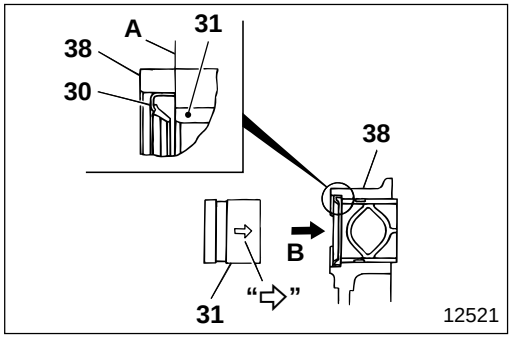

30 **31** **Press-fitting of oil seal and bushing**

A : Press-fit oil seal **30** and bushing **31** to this level
B : Press-fitting direction for the bushing

***1** **Correction of brake drum**

If the cylindrical accuracy of brake drum ***1** is higher than the limit, or there are seams, correct by machining to the correction limit. Machining of the brake drum should be done with the wheel hub attached as an integral part.

M E M O

REAR WHEEL BRAKE

Rear Brake Chamber

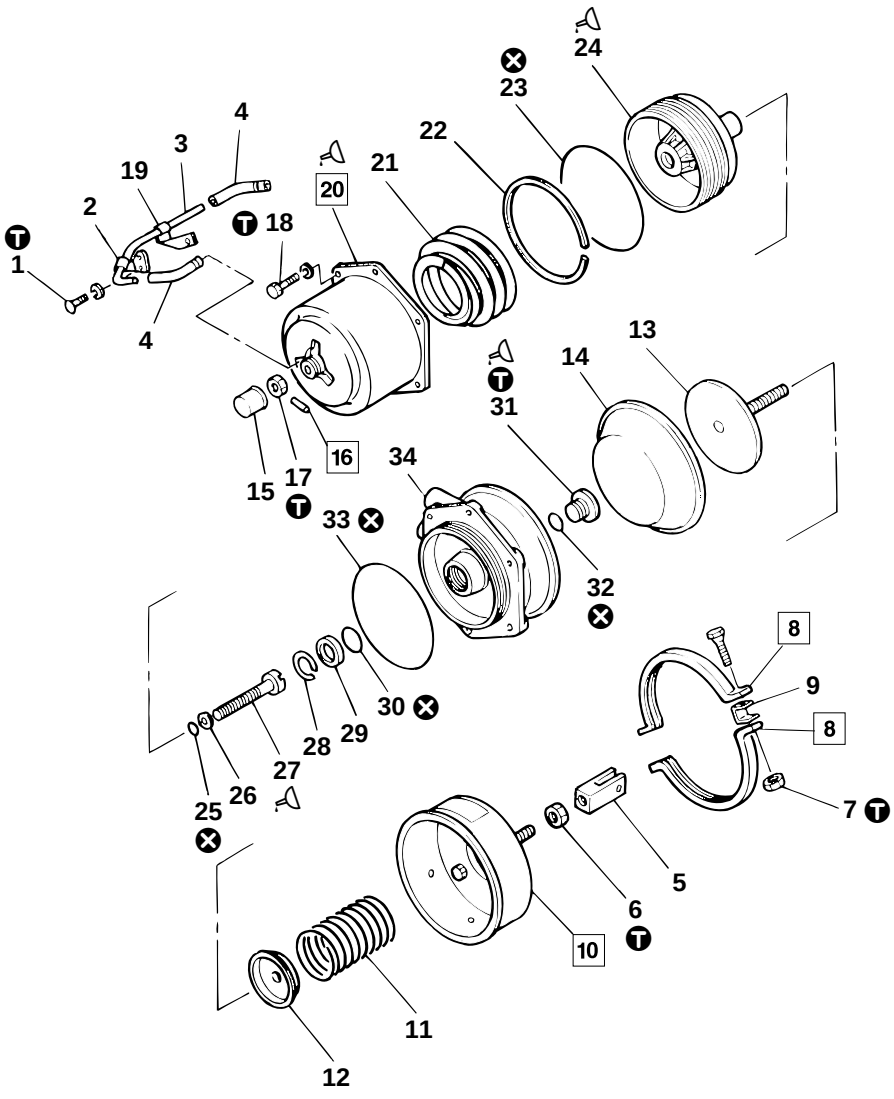

12522

● **Disassembly sequence**

1 Screw
2 Holder
3 Pipe
4 Rubber bushing
5 Clevis
6 Nut
7 Nut
8 Clamp
9 Spacer
10 Chamber
11 Spring
12 Spring retainer
13 Push rod
14 Diaphragm
15 Cap
16 Spring pin
17 Lock nut
18 Bolt
19 Holder
20 Cylinder
21 Spring
22 Piston ring
23 O-ring
24 Piston
25 Rubber ring
26 Washer
27 Release bolt
28 C-ring
29 Bushing
30 Rod ring
31 Follower
32 O-ring
33 O-ring
34 Bulkhead

⊗ : Non-reusable parts

Tightening torque

Unit : N·m {lbf.ft, kgf·m}

Location	Parts to be tightened	Tightening torque	Remarks
1	Screw (Holder mounting)	1.2±0.2 {0.9±0.18, 0.125±0.025}	—
6	Nut (Clevis fixing)	44±5 {33±3.6, 4.5±0.5}	—
7	Nut (Clamp tightening)	29.4±2.9 {22±2.2, 3.0±0.3}	—
17	Lock nut (Release bolt fixing)	41.7±2.5 {31±1.8, 4.25±0.25}	—
18	Bolt (Cylinder and bulkhead mounting)	13.7±3.9 {10±2.9, 1.4±0.4}	—
31	Follower	44±5 {33±3.6, 4.5±0.5}	—

Lubricant and sealant

Location	Points of application	Kinds	Quantity
20	Interior of cylinder	Silicon grease	As required
24	Outer periphery of piston	Silicon grease	As required
27	Thread area of release bolt	Multipurpose grease [NLGI No.2 (Li soap)]	As required
31	Thread area of follower	LOCTITE 242	As required

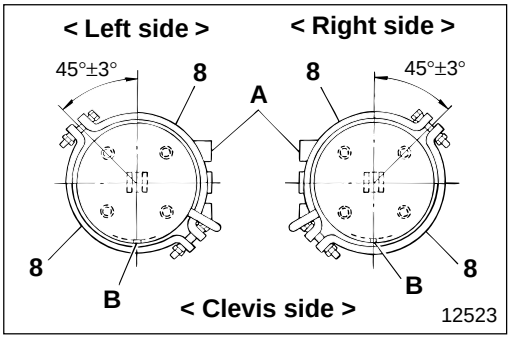

◆ Service procedure

8 **Points of clamp installation**

A : Service port
B : Drain port

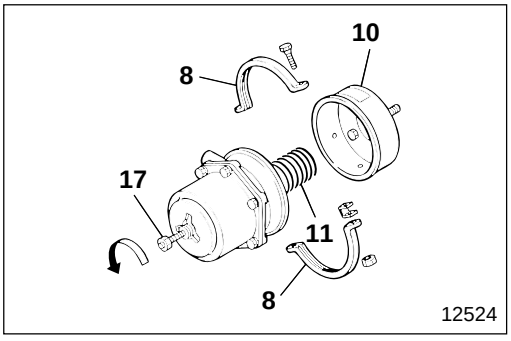

10 **Removal of chamber**

- Turn lock nut **17** in direction ➔ (counterclockwise) fully to compress spring **21**.
- Remove clamp **8** and chamber **10**.

WARNING

You must be careful when you remove the clamp, because spring 11 in chamber 10 can be forcibly ejected. To avoid this hazard, press down the chamber with your hand when you carry out the above work.

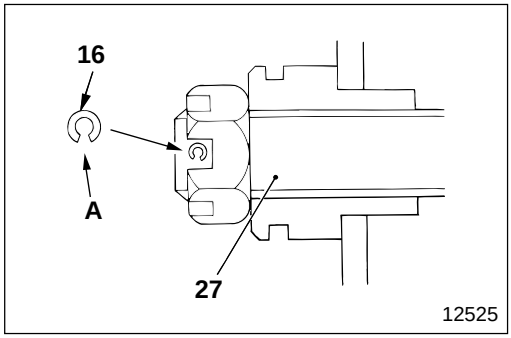

16 **Installation of spring pin**

Drive in spring pin **16** so that slit **A** faces release bolt **27** at a right angle.

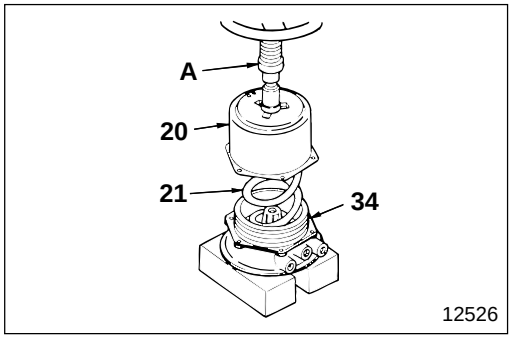

20 **Cylinder**

[Removal]

When you remove cylinder **20**, spring **21** might spring out. To prevent this, press down the cylinder using press **A** during removal.

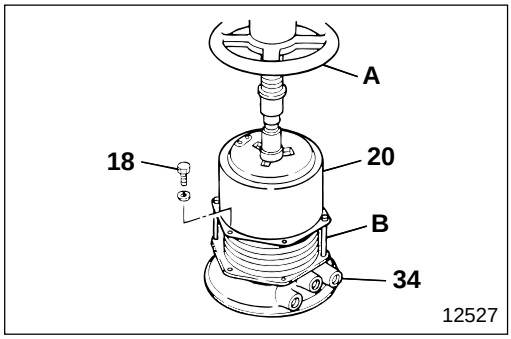

[Installation]

- Arrange bolt **B** (M8×1.25) as a guide.
- Install bolt **B** as a guide, pressing down cylinder **20** using press **A**.
- Align the bolt holes of cylinder **20** and bulk head **34**, and press down using press **A**. Tighten bolt **18** at specified torque.

M E M O

AIR COMPRESSOR

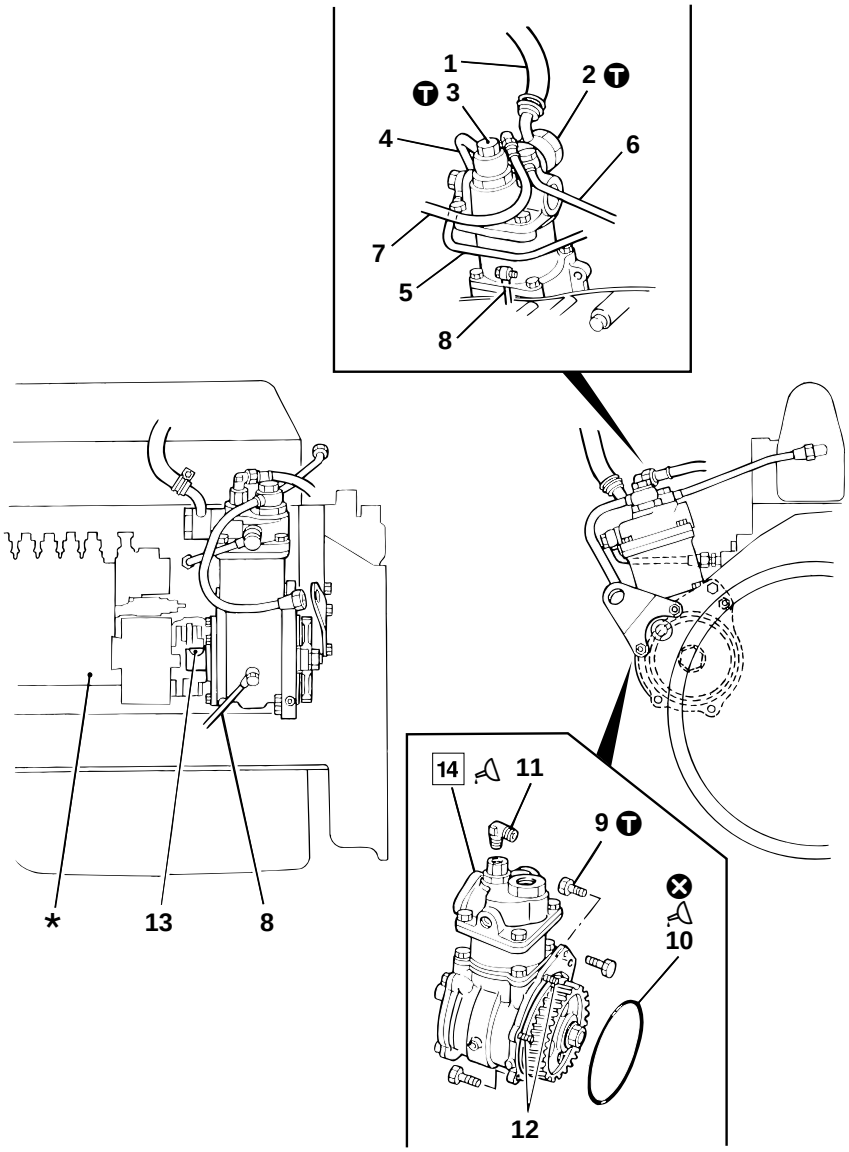

12528

● **Removal sequence**

1 Suction hose
2 Eye bolt
3 Eye bolt
4 Air outlet pipe
5 Water inlet pipe
6 Water outlet pipe
7 Unloader hose
8 Oil pipe
9 Bolt
10 O-ring
11 Connector
12 Stud bolt
13 Key
14 Air compressor assembly
P35B-76

*: Injection pump assembly Gr 13
⊗: Non-reusable parts

● **Installation sequence**

Follow the removal sequence in reverse.

Tightening torque

Unit : N·m {lbf.ft, kgf·m}

Location	Parts to be tightened	Tightening torque	Remarks
2	Eye bolt	98 {72, 10}	—
3	Eye bolt	98 {72, 10}	—
9	Bolt (Air compressor assembly mounting)	37 {27, 3.8}	—

Lubricant and sealant

Location	Points of application	Kinds	Quantity
10	Periphery of O-ring	Engine oil	As required
14	Air compressor assembly stud bolt mounting hole	LOCTITE 271	As required

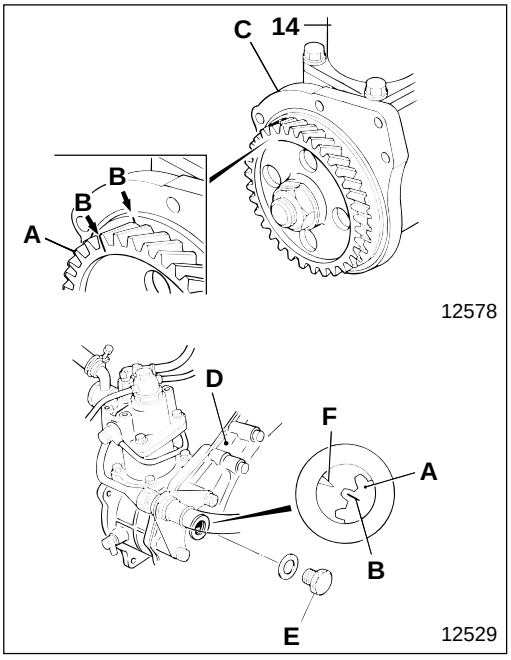

◆ Service procedure

14 **Installation of air compressor assembly**

- Position No.1 cylinder at top dead center in the compression cycle. Gr 11
- Align punched marks **B** of drive gear **A** and crankcase **C** of air compressor **14**. Then mount on flywheel housing **D**.
- Remove inspection plug **E** from flywheel housing **D** and check that punched mark **B** of drive gear **A** and pointer **F** align. If they do not, reinstall them.

AIR COMPRESSOR

Air Compressor Assembly

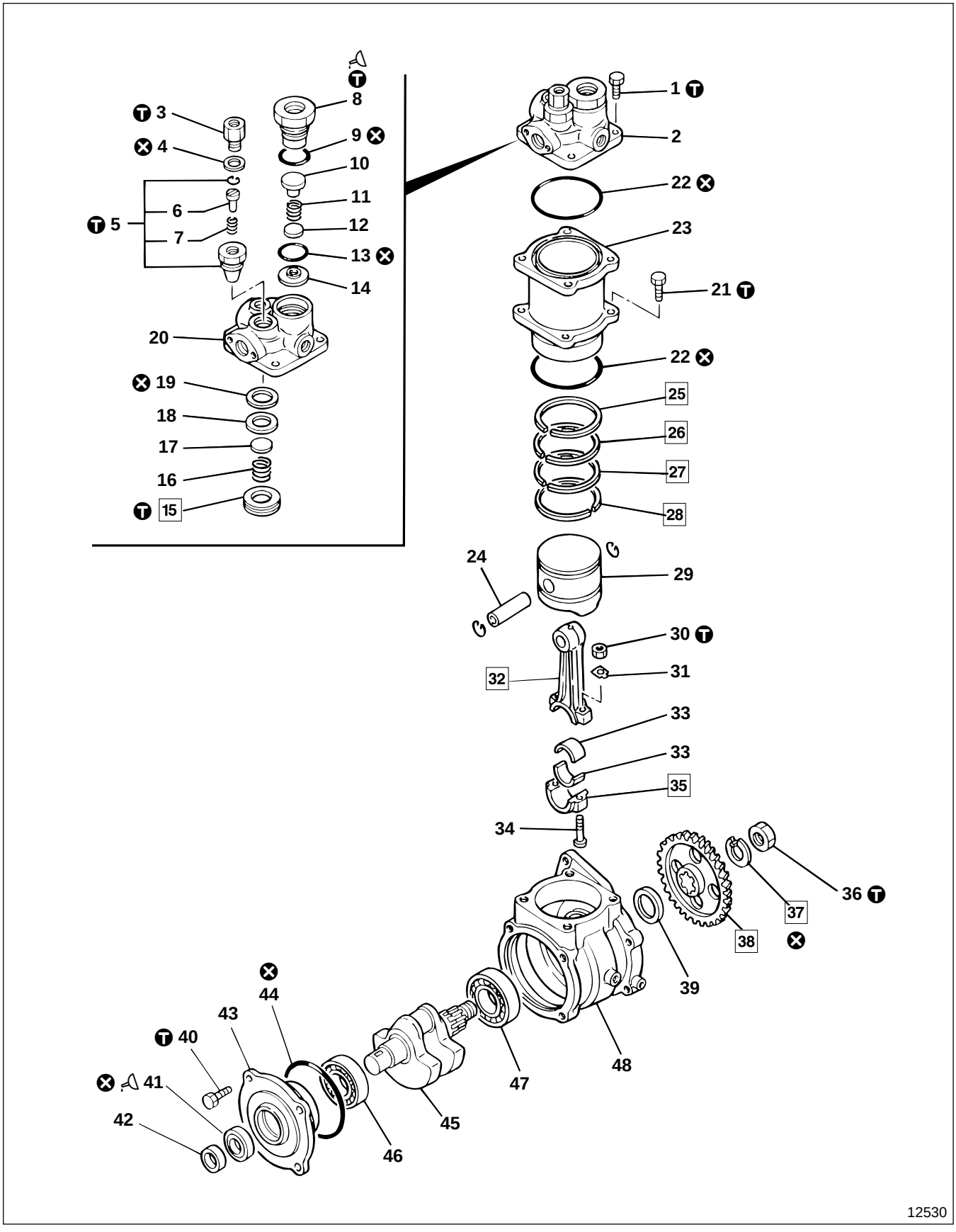

● **Disassembly sequence**

1 Bolt
2 Cylinder head assembly
3 Connector
4 Gasket
5 Unloader valve assembly
6 Unloader valve
7 Spring
8 Delivery valve holder
9 O-ring
10 Spring holder
11 Spring
12 Delivery valve
13 O-ring
14 Delivery seat
15 Suction valve holder
16 Spring
17 Suction valve
18 Suction seat
19 Gasket
20 Cylinder head
21 Bolt
22 O-ring
23 Cylinder liner
24 Piston pin
25 1st compression ring
26 2nd compression ring
27 3rd compression ring
28 Oil ring
29 Piston
30 Nut
31 Lock washer
32 Connecting rod
33 Connecting rod bearing
34 Bolt
35 Connecting rod cap
36 Nut
37 Lock washer
38 Drive gear
39 Spacer
40 Bolt
41 Oil seal
42 Sleeve
43 Bearing holder
44 O-ring
45 Crankshaft
46 Bearing
47 Bearing
48 Crankcase

⊗ : Non-reusable parts

● **Assembly sequence**

Follow the disassembly sequence in reverse.

Repair kit : Piston ring kit

Service standards

Unit : mm {in.}

Location	Maintenance item		Standard value (Basic diameter in [ ])	Limit	Remedy
11	Spring load (Installed length 9.5 {0.37})		4.5 N {1.01 lbf, 0.46 kgf}	3.6 N {0.8 lbf, 0.37 kgf}	Replace
16	Spring load (Installed length 9 {0.35})		2.3 N {0.51 lbf, 0.23 kgf}	1.3 N {0.3 lbf, 0.13 kgf}	Replace
23, 29	Clearance between cylinder liner and piston	Top	[85 {3.35}]	0.27 {0.011}	Replace
		Skirt		0.18 {0.0071}	Replace
24, 29	Clearance between piston and piston pin		[18 {0.708}]	0.08 {0.0031}	Replace piston pin
24, 32	Clearance between piston pin and connecting rod small end		[18 {0.708}]	0.08 {0.0031}	Replace connecting rod
25 to 28	Clearance of piston ring gap (Measure at interior of cylinder liner)	Compression ring	—	1.0 {0.039}	Replace piston ring kit
		Oil ring	—	1.0 {0.039}	
25 to 27, 29	Clearance between compression ring and piston compression ring groove of piston		—	0.08 {0.0031}	Replace piston ring kit
32, 35, 45	End play of connecting rod		—	0.5 {0.020}	Replace
33, 45	Clearance between crankshaft and connecting rod bearing		[34 {1.34}]	0.1 {0.0039}	Replace
45, 48	Play of crankshaft		—	1.0 {0.039}	Replace

AIR COMPRESSOR

Tightening torque

Unit : N·m {lbf.ft, kgf·m}

Location	Parts to be tightened	Tightening torque	Remarks
1	Bolt (Cylinder head assembly mounting)	25 to 29 {18 to 22, 2.5 to 3.0}	—
3	Connector	29 to 34 {22 to 25, 3.0 to 3.5}	—
5	Unloader valve assembly	98 to 115 {72 to 87, 10 to 12}	—
8	Delivery valve holder	98 to 115 {72 to 87, 10 to 12}	—
15	Suction valve holder	98 to 115 {72 to 87, 10 to 12}	—
21	Bolt (Cylinder liner mounting)	25 to 29 {18 to 22, 2.5 to 3.0}	—
30	Nut (Connecting rod and connecting rod cap mounting)	23 to 25 {17 to 19, 2.3 to 2.6}	—
36	Nut (Drive gear mounting)	165 to 210 {120 to 155, 17 to 21.5}	—
40	Bolt (Bearing holder mounting)	14 to 18 {10 to 13, 1.4 to 1.8}	—

Lubricant and sealant

Location	Points of application	Kinds	Quantity
8	Thread area of delivery valve holder	THREEBOND 1323B	As required
41	Oil seal lip	Engine oil	As required

Special tools

Unit : mm {in.}

Location	Tool name and shape	Part No.	Application
15	Suction valve tool 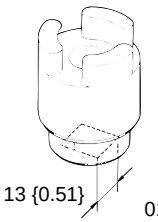 01730	MH061263	Removal and installation of suction valve holder
25 to 28	Piston ring tool 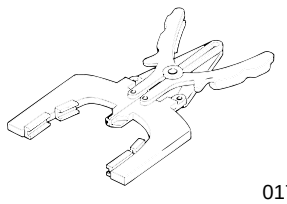 01732	MH060014	Removal and installation of piston ring (compression ring and oil ring)

◆ Service procedure

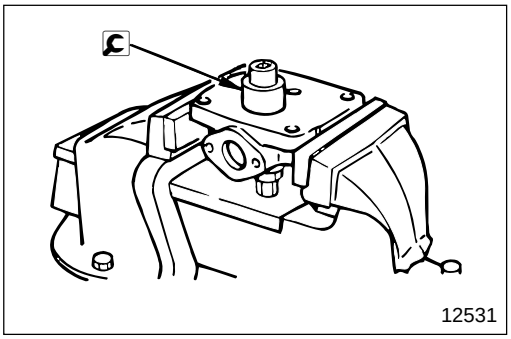

15 **Suction valve holder**

[Removal and installation]

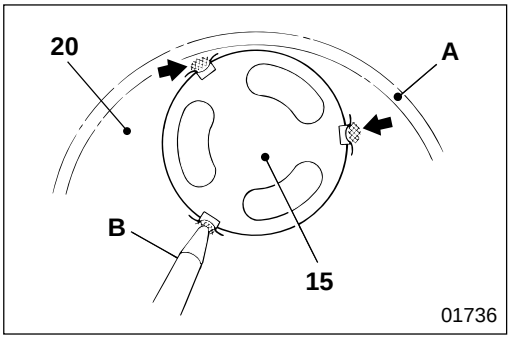

[Caulking]

Caulk cylinder head **20** taking care not to damage seal surface **A** of the O-ring.

B : Center punch

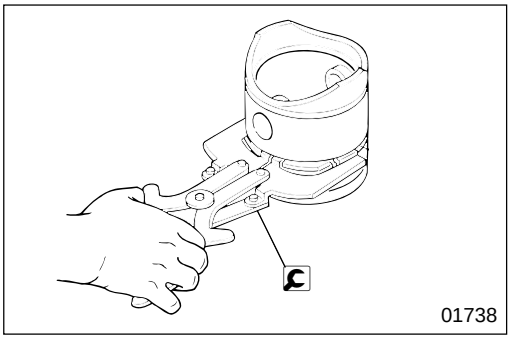

25 **to** **28** **Piston ring (compression ring and oil ring)**

[Removal and installation]

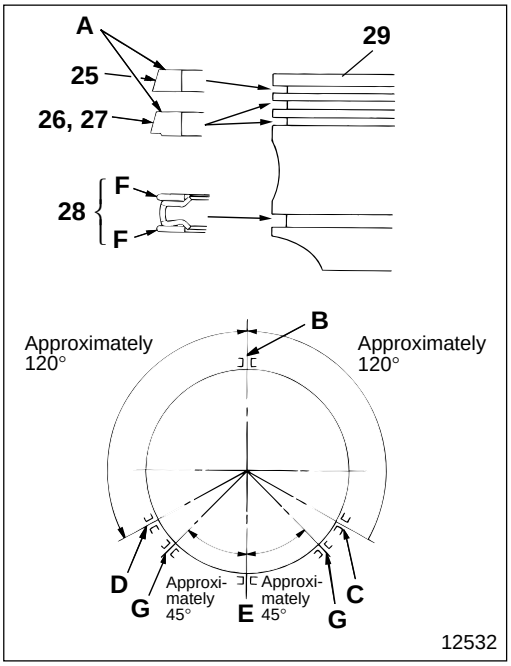

[Point of installation]

- Install compression rings **25** to **27** with punched marks **A** pointing toward the top of piston **29**.
- Stagger the splits of compression rings **25** to **27** at approximately 120°.
  - **B** : No.1 compression ring split
  - **C** : No.2 compression ring split
  - **D** : No.3 compression ring split
- Arrange split **E** of oil ring **28** so that it is at the center of two compression ring splits, and install side rails **F** in position **G** staggered by approximately a further 45° to the right and left from the split of the oil ring.

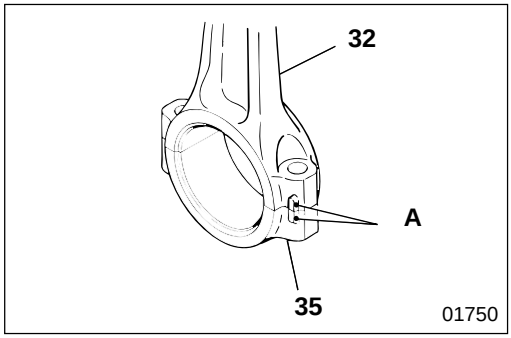

32 **35** **Installation of connecting rod and connecting cap**

A : Alignment marks

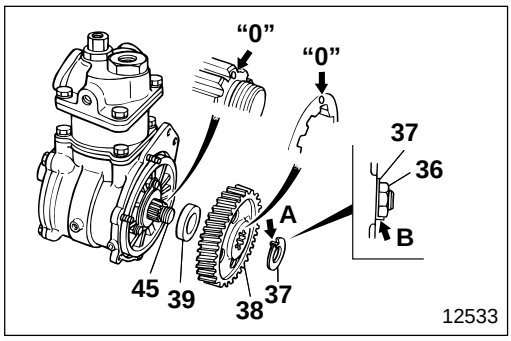

37 **38** **Installation of lock washer and drive gear**

- Align alignment marks "**0**" of crankshaft **45** and drive gear **38** and install.
- Align indent **A** of lock washer **37** and alignment mark "**0**" of drive gear **38** and install.
- Make bend **B** on lock washer **37**, against one side of nut **36**, to act as a stopper.

M E M O

AIR DRYER

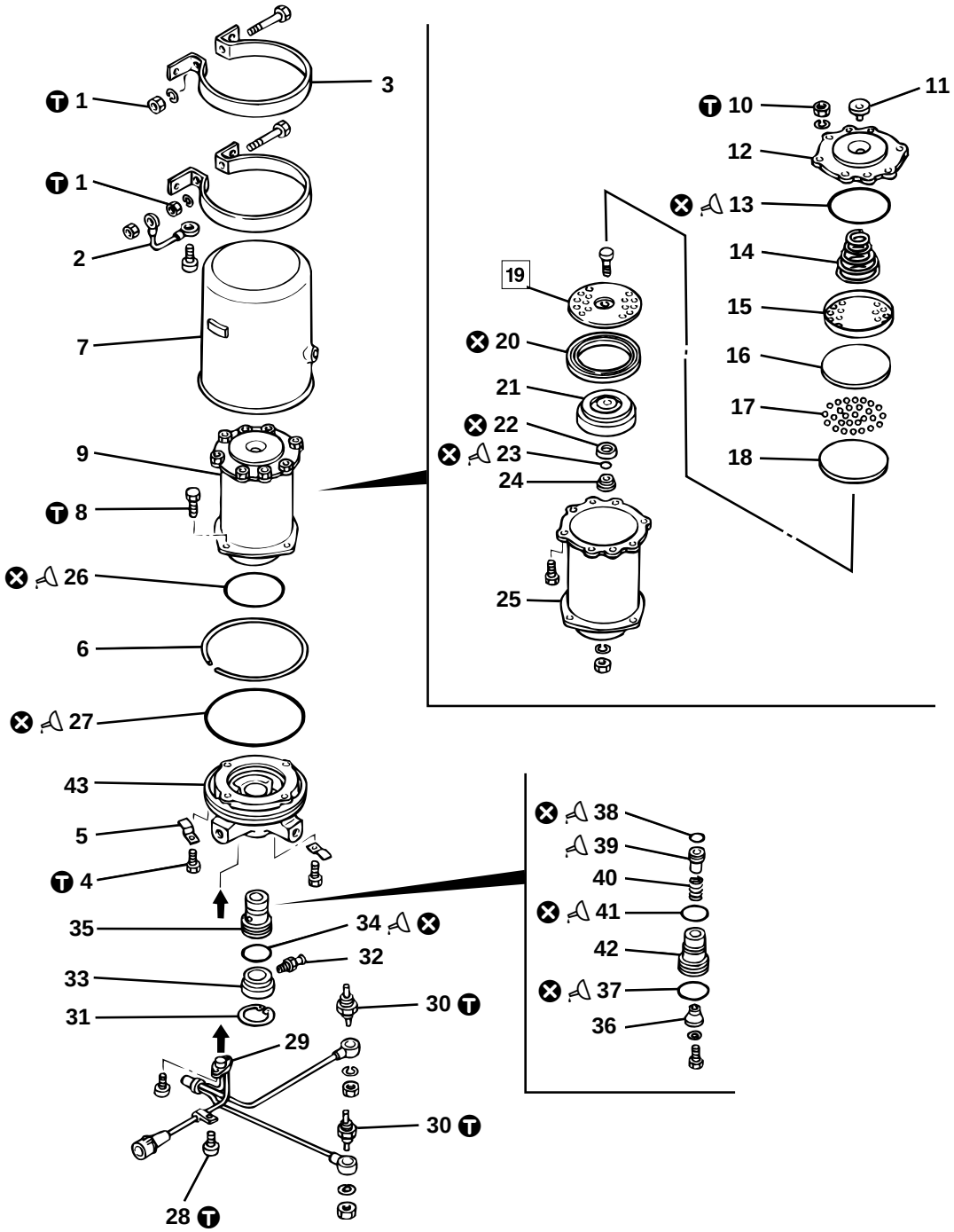
1
3
1
2
7
9
8
26
6
27
43
5
4
35
34
32
33
31
30
29
30
28
10
11
12
13
14
19
15
20
16
21
17
22
23
18
24
25
38
39
40
41
42
37
36
12534

● **Disassembly sequence**

1 Nut
2 Cord
3 Bracket
4 Bolt
5 Stopper
6 Stopper ring
7 Purge chamber
8 Bolt
9 Case assembly
10 Nut
11 Check valve
12 Case cover
13 O-ring
14 Spring
15 Filter plate
16 Filter
17 Desiccant
18 Filter
19 Filter plate
20 Gasket
21 Oil filter
22 Gasket
23 O-ring
24 Spacer
25 Case
26 O-ring
27 O-ring
28 Screw
29 Thermostat assembly Gr 54
30 Heater assembly Gr 54
31 Retaining ring
32 Nipple
33 Exhaust body
34 O-ring
35 Valve body assembly
36 Valve
37 O-ring
38 O-ring
39 Piston
40 Spring
41 O-ring
42 Valve body
43 Body

⊗ : Non-reusable parts

CAUTION⚠

Make sure you install filters 16, 18, with their soft layer sides toward the desiccant.

● **Assembly sequence**

Follow the disassembly sequence in reverse.

Repair kit : Air dryer kit

● **Inspection after installation**

P35B-84

Ⓣ Tightening torque

Unit : N·m {lbf.ft, kgf·m}

Location	Parts to be tightened	Tightening torque	Remarks
1	Nut (Bracket tightening)	4.9 to 5.9 {3.6 to 4.3, 0.5 to 0.6}	—
4	Bolt (Stopper mounting)	3.9 to 6.9 {2.9 to 5.1, 0.4 to 0.7}	—
8	Bolt (Case assembly mounting)	3.9 to 6.9 {2.9 to 5.1, 0.4 to 0.7}	—
10	Nut (Case cover mounting)	3.9 to 6.9 {2.9 to 5.1, 0.4 to 0.7}	—
28	Screw (Thermostat harness mounting)	1.5 to 2.5 {1.1 to 1.8, 0.15 to 0.25}	—
30	Heater	19.6 to 29.4 {14 to 22, 2 to 3}	—

Lubricant

Location	Points of application	Kinds	Quantity
39	Friction surface of piston	Multipurpose grease [NLGI No. 2 {Li soap)]	As required
—	Surface of O-ring	Multipurpose grease [NLGI No. 2 {Li soap)]	As required

● **Inspection after installation**

- Start the engine.
- Make sure that air is exhausted from the port of exhaust body **33** when the air pressure reaches the specified level and the air compressor is switched to idling.

NOTE

If high air pressure is exhausted first and approximately three seconds later, you cannot hear an exhausting sound, do not worry, it is normal.

- Make sure that there is no air leakage from any piping connection.

◆ Service procedure

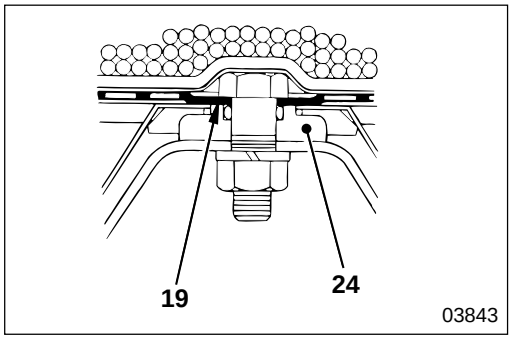

19 **Installation direction of filter plate**

M E M O

AIR PRESSURE GOVERNOR

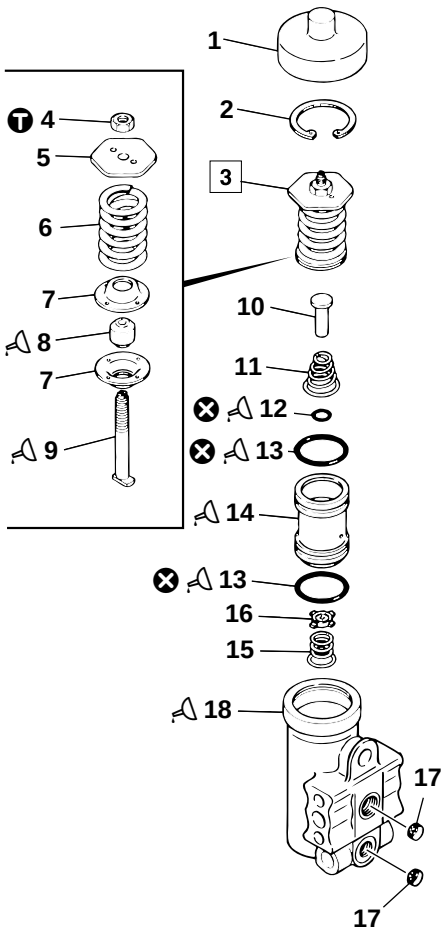

12536

● **Disassembly sequence**

1 Cover
2 C-ring
3 Adjusting screw assembly
4 Lock nut
5 Upper spring seat
6 Spring
7 Lower spring seat
8 Spring guide
9 Adjusting screw
10 Exhaust stem
11 Exhaust stem spring
12 O-ring
13 O-ring
14 Piston
15 Valve spring
16 Valve
17 Filter
18 Body

⊗ : Non-reusable parts

● **Assembly sequence**

Follow the disassembly sequence in reverse.

Repair kit : Air pressure governor kit

● **Inspection of function after assembly**

P35B-87

Service standards

Location	Maintenance item		Standard value	Limit	Remedy
—	Specified pressure	High specified pressure	805^{+29}_{-20} kPa {$115^{+4.3}_{-2.8}$ lbf/in^2, $8.2^{+0.3}_{-0.2}$ kgf/cm^2}	—	Adjust
		Low specified pressure	685±20 kPa {100±2.8 lbf/in^2, 7.0±0.2 kgf/cm^2}		

Ⓣ Tightening torque

Unit : N·m {lbf.ft, kgf·m}

Location	Parts to be tightened	Tightening torque	Remarks
4	Lock nut	3.9 to 6.9 {2.9 to 5.1, 0.4 to 0.7}	—

Lubricant

Location	Points of application	Kinds	Quantity
8	Surface of spring guide	Multipurpose grease [NLGI No. 2 (Li soap)]	As required
9	Surface of adjusting screw, except for thread area	Multipurpose grease [NLGI No. 2 (Li soap)]	As required
12, 13	Entire O-ring	Multipurpose grease [NLGI No. 2 (Li soap)]	As required
14	Outer periphery of piston and O-ring groove	Multipurpose grease [NLGI No. 2 (Li soap)]	As required
18	Interior of body	Multipurpose grease [NLGI No. 2 (Li soap)]	As required

◆ Service procedure

● Inspection of function after assembly

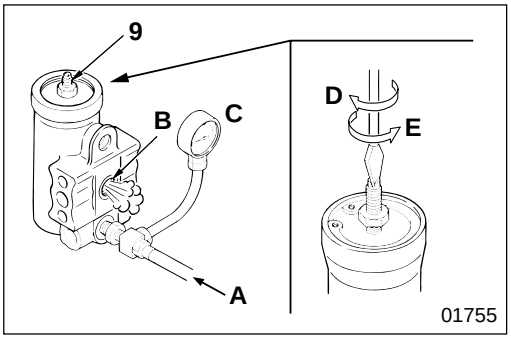

- Increase air pressure **A** gradually and read the value on air pressure gauge **C** when air is discharged from **B**. Adjust by turning adjusting screw **9** so that the reading conforms to the standard value (high specified-pressure).
  D : Turning clockwise decreases the pressure
  E : Turning counterclockwise increases the pressure
- Lower air pressure **A** to 685 kPa {100 lbf/in^2, 7 kgf/cm^2} or less, then raise the air pressure gradually. Read air pressure gauge **C** when it stops and check that the value conforms to the standard value (high specified-pressure). If the value deviates from the standard value, readjust.

- Lower air pressure **A** gradually. When the discharge of air from **B** ceases, read air pressure gauge **C** to check that the valve conforms to the standard value (high specified-pressure). If the value deviates from the standard value, replace the air pressure governor assembly.

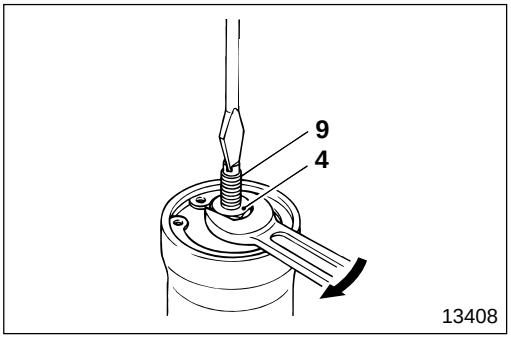

- After adjusting, tighten lock nut **4** to prevent adjusting screw **9** being turned accidentally.

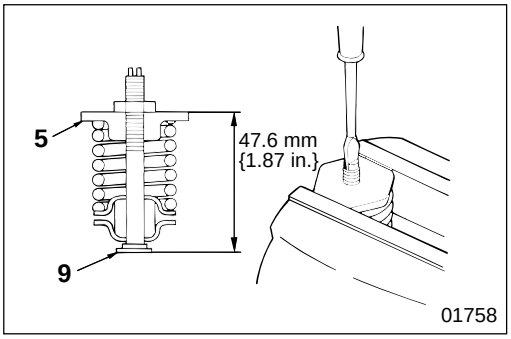

3 **Preliminary adjustment of adjusting screw assembly**

It is recommended that you adjust the distance from the upper level of upper spring seat **5** to the lower level of adjusting screw **9** to 47.6 mm {1.87 in.} by turning the adjusting screw, because this makes adjustment to the specified value easier.

CHECK VALVE/SAFETY VALVE

CHECK VALVE

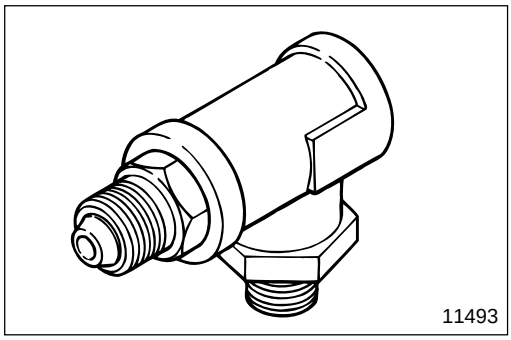

CAUTION⚠

Do not disassemble this check valve because it is a unit construction.

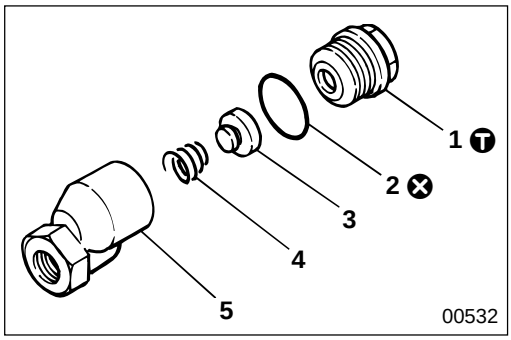

● **Disassembly sequence**

1 Cap
2 O-ring
3 Valve
4 Spring
5 Valve body

⊗ : Non-reusable parts

● **Assembly sequence**

Follow the disassembly sequence in reverse.

Service standards

Location	Maintenance item	Standard value	Limit	Remedy
—	Pressure difference between check valve inlet and outlet ports	29 kPa {4.3 lbf/in^2, 0.3 kgf/cm^2} or less	—	Replace

T Tightening torque

Unit : N·m {lbf.ft, kgf·m}

Location	Parts to be tightened	Tightening torque	Remarks
1	Cap	44 to 55 {33 to 40, 4.5 to 5.5}	—

SAFETY VALVE

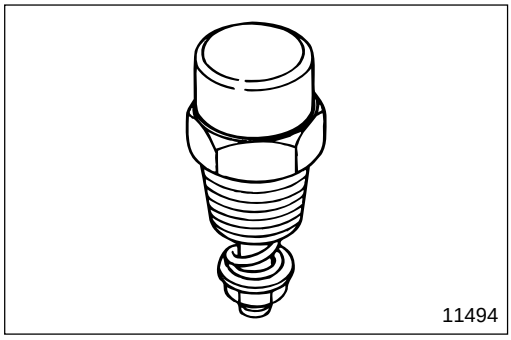

Service standards

Location	Maintenance item	Standard value	Limit	Remedy
—	Release pressure of safety valve	950±20 kPa {135±2.8 lbf/in^2, 9.7±0.2 kgf/cm^2}	—	Replace

M E M O

SUPPLY VALVE

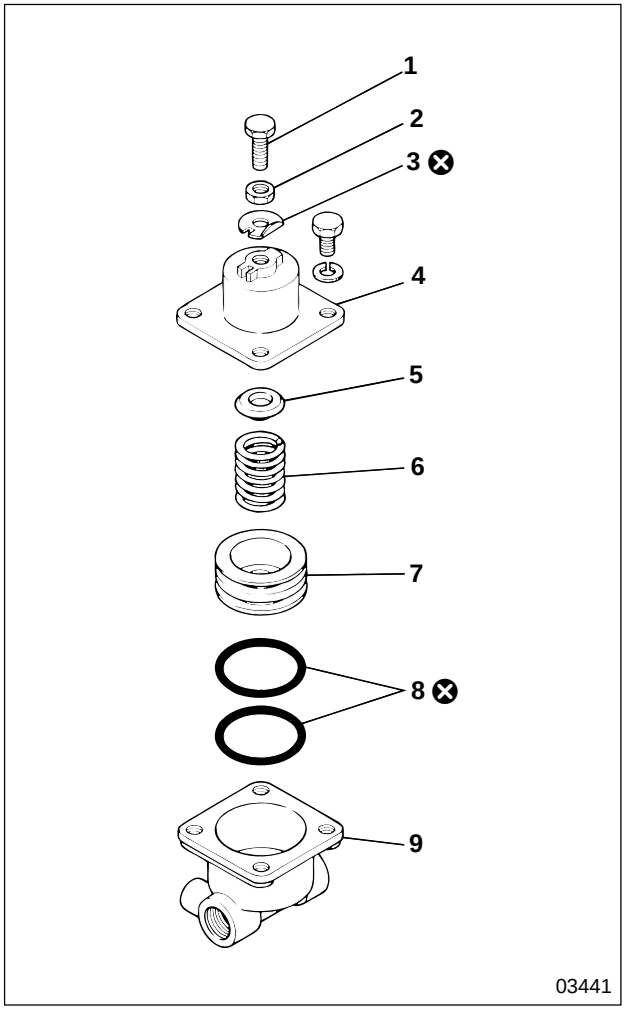

● **Disassembly sequence**

1 Adjusting bolt
2 Lock nut
3 Claw washer
4 Cap
5 Spring retainer
6 Spring
7 Piston
8 O-ring
9 Valve body

⊗ : Non-reusable parts

CAUTION ⚠

Make sure that adjusting bolt 1 is not turned except for adjustment.

● **Assembly sequence**

Follow the disassembly sequence in reverse.

● **Inspection after assembly**

P35B-90

Service standards

Unit : mm {in.}

Location	Maintenance item		Standard value	Limit	Remedy
—	Specified pressure	Valve opening pressure	345±29 kPa {50±4.3 lbf/in$_2$, 3.5±0.3 kgf/cm$_2$}	—	Adjust or replace
		Valve closing pressure	315±20 kPa {46±2.8 lbf/in$_2$, 3.2±0.2 kgf/cm$_2$}	—	

◆ Service procedure

● **Inspection after assembly**

Adjust by turning adjusting bolt **1** after loosening lock nut **2**. After adjusting, tighten the lock nut without turning the adjusting bolt, and bend claw washer **3** to secure the lock nut.

- Adjust adjusting bolt **1** so that air is discharged from the outlet port (arrow mark **B** in the illustration), when the air at valve opening pressure is applied to the inlet port (arrow mark **A** in the illustration).
- After adjusting valve opening pressure, adjust adjusting bolt **1** so that air is not discharged from the outlet port (arrow mark **B** in the illustration) when the air at valve closing pressure is applied to the inlet port (arrow mark **A** in the illustration).

B : Arrow showing the air flow direction

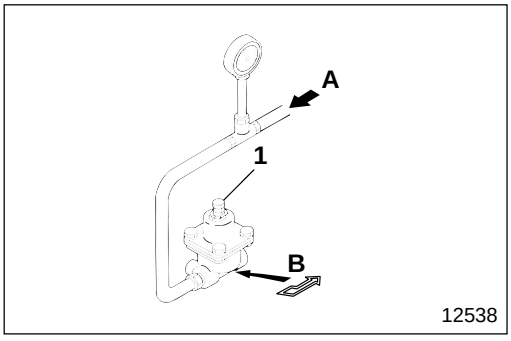

M E M O

EXHAUST BRAKE SYSTEM

Exhaust Brake Unit

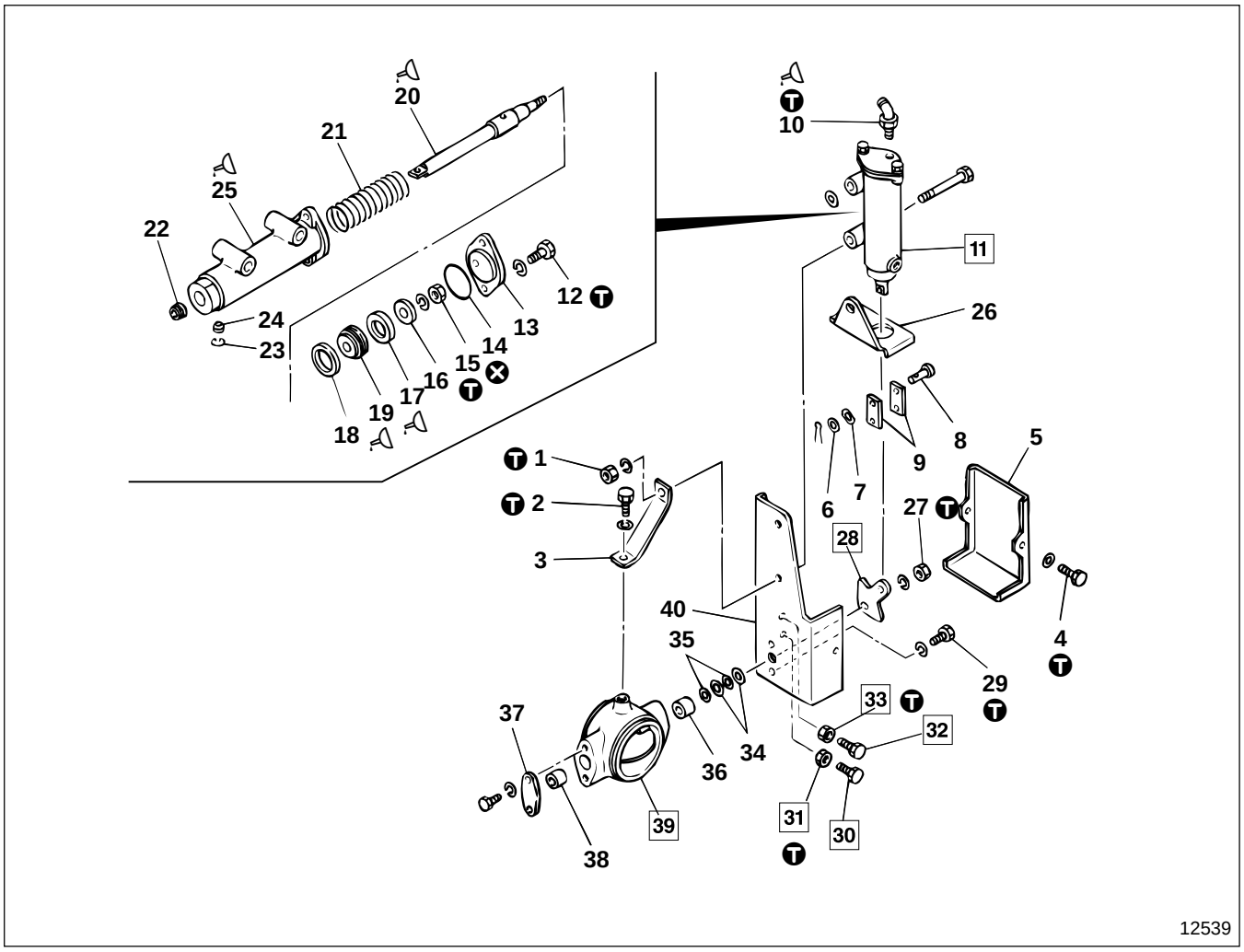

● **Disassembly sequence**

1	Nut	**15**	Nut	**29**	Bolt
2	Bolt	**16**	Retainer	**30**	Adjusting bolt
3	Arm	**17**	Packing	**31**	Lock nut
4	Screw	**18**	Wear ring	**32**	Adjusting bolt
5	Cover	**19**	Plate	**33**	Lock nut
6	Plain washer	**20**	Shaft	**34**	Seal ring (Large)
7	Wave washer	**21**	Spring	**35**	Seal ring (Small)
8	Pin	**22**	Dust seal	**36**	Bushing
9	Link	**23**	Retaining ring	**37**	Cover
10	Connector	**24**	Filter	**38**	Bushing
11	Control cylinder	**25**	Cylinder	**39**	Valve assembly
12	Bolt	**26**	Cover	**40**	Plate
13	Cover	**27**	Nut		
14	O-ring	**28**	Lever	⊗ :	Non-reusable parts

● **Assembly sequence**

Follow the disassembly sequence in reverse.

Service standards

Unit : mm {in.}

Location	Maintenance item	Standard value	Limit	Remedy
11	Airtightness of control cylinder (Air leakage at air pressure 980 kPa {140 lbf/in^2, 10 kgf/cm^2})	No air leakage	—	Replace
21	Spring load (Installed length 109 {4.29})	72 N {16 lbf, 7.3 kgf}	61 N {13.7 lbf, 6.2 kgf}	Replace
39	Clearance between butterfly valve and body when valve assembly butterfly valve operating (Air pressure 685±49 kPa {100±7.1 lbf/in^2, 7±0.5 kgf/cm^2} supplied to control cylinder)	0.2 to 0.4 {0.0079 to 0.016}	—	Adjust

Tightening torque

Unit : N·m {lbf.ft, kgf·m}

Location	Parts to be tightened	Tightening torque	Remarks
1	Nut (Control cylinder mounting)	20.6 to 25.5 {15 to 19, 2.1 to 2.6}	—
2	Bolt (Arm mounting)	9.81 to 15.7 {7.2 to 12, 1.0 to 1.6}	—
4	Screw (Cover mounting)	4.9 to 6.86 {3.6 to 5.1, 0.5 to 0.7}	—
10	Connector	4.9 {3.6, 0.5} or more	—
12	Bolt (Cover mounting)	9.8 to 15.7 {7.2 to 12, 1.0 to 1.6}	—
15	Nut (Plate mounting)	9.8 to 15.7 {7.2 to 12, 1.0 to 1.6}	—
27	Nut (Lever mounting)	9.81 to 15.7 {7.2 to 12, 1.0 to 1.6}	—
29	Bolt (Valve assembly mounting)	9.81 to 15.7 {7.2 to 12, 1.0 to 1.6}	—
31	Lock nut	4.9 to 6.86 {3.6 to 5.1, 0.5 to 0.7}	—
33	Lock nut	4.9 to 6.86 {3.6 to 5.1, 0.5 to 0.7}	—

Lubricant and sealant

Location	Points of application	Kinds	Quantity
10	Thread area of connector	THREEBOND No.1211 or No.1213	As required
17	Surface of packing	Molybdenum disulfide bearing grease [NLGI No.2 (Li soap)]	As required
19, 20	Mounting areas of plate and shaft	Sealant [Hermetic GA (SANNOW KOGYO)]	As required
20	Shaft at ø12 {0.47}	Molybdenum disulfide bearing grease [NLGI No.2 (Li soap)]	As required
25	Interior of cylinder	Molybdenum disulfide bearing grease [NLGI No.2 (Li soap)]	2 cm^3 {0.12 cu. in.}

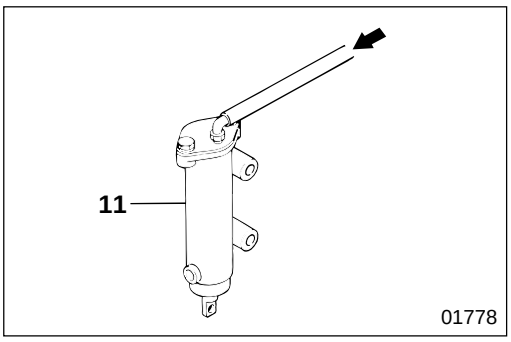

◆ Service procedure

11 **Inspection on airtightness of control cylinder**

Make sure that there is no air leakage when air pressure of 980 kPa {140 lbf/in^2, 10 kgf/cm^2} is applied to control cylinder **11**. If any air leakage is found, replace the control cylinder assembly.

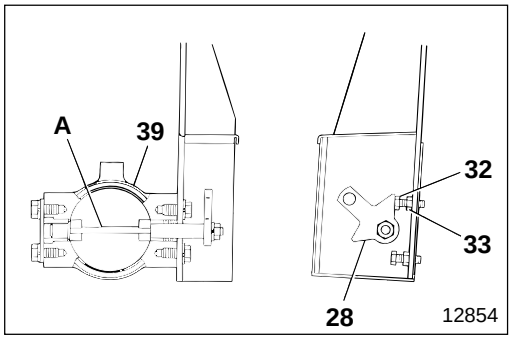

28 **30** **to** **33** **39** **Lever, adjusting bolt, lock nut, and valve assembly**

[Butterfly valve **A** fully-opened adjustment]

- Turn the adjusting bolt so that lever **28** and the head of adjusting bolt **32** make contact horizontally.
- Tighten lock nut **33** at specified torque.

[Butterfly valve **A** fully-closed adjustment]

- Apply air pressure **B** of 685±49 kPa {100±7.1 lbf/in^2, 7±0.5 kgf/cm^2} to control cylnder **11**.
- Turn adjusting bolt **30** so that the average value of clearances **D**, **E** between butterfly valve **A** and body **C** conforms to the standard value.
- Calculate the average of clearances **D**, **E** by (**D**+**E**)/2.
- Tighten lock nut **31** at specified torque.

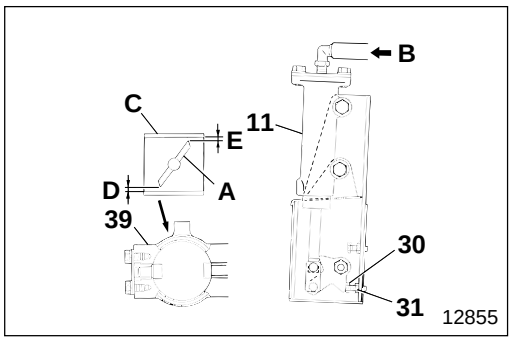

Exhaust Brake Electric Equipment

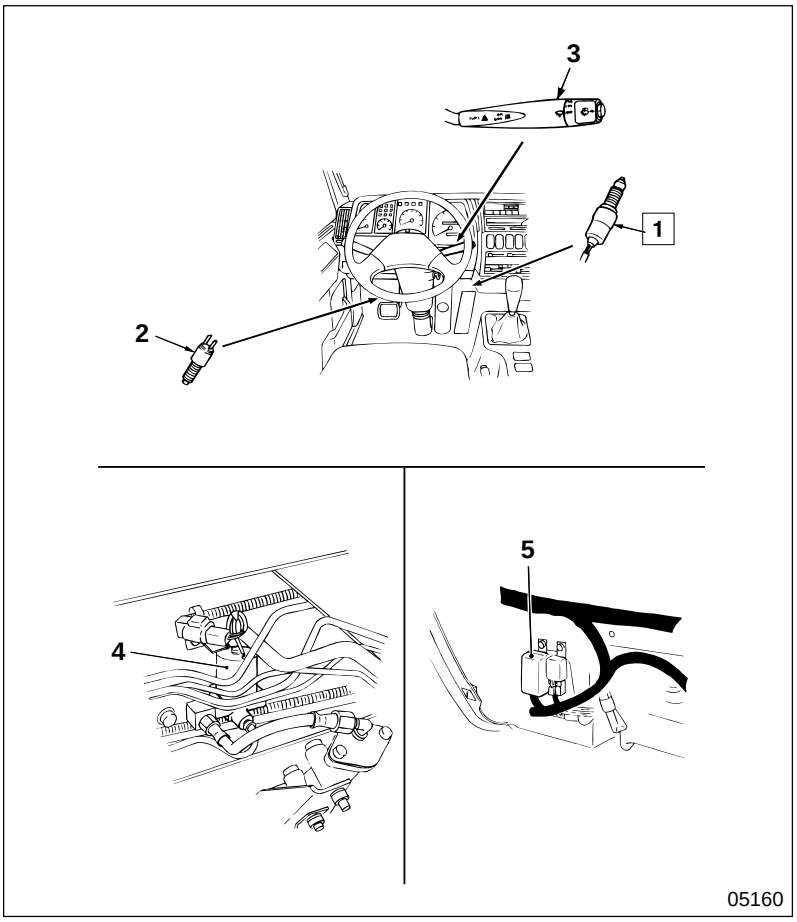

1 Accelerator switch
Gr 54
2 Clutch switch
Gr 21, 54
3 Exhaust brake switch
Gr 37, 54
4 3-way magnetic valve
Gr 54
5 Exhaust brake cut relay
Gr 54

◆ Service procedure

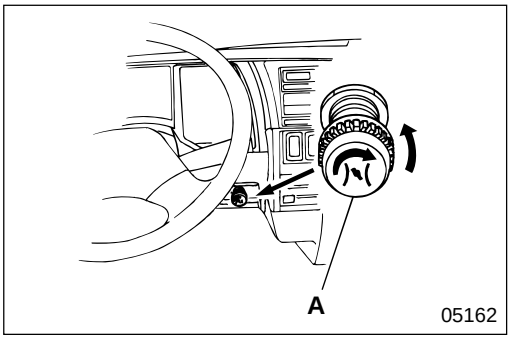

1 **Installation of accelerator switch**

- Turn idling control knob **A** in direction ➡ (counterclockwise) to free the accelerator pedal.

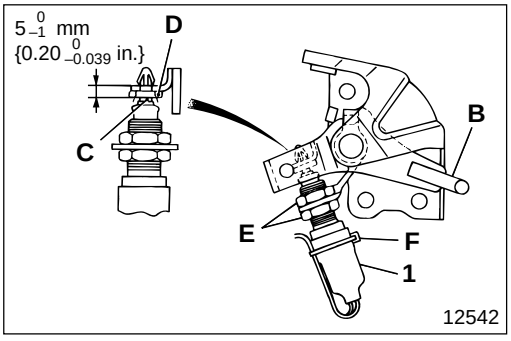

- Screw in accelerator switch **1**, holding accelerator control lever **B** still, until push rod **C** makes contact with stopper **D**. Then screw in by a further 5^{0}_{-1} mm {$0.20^{0}_{-0.039}$ in.} and tighten lock nut **E**.
- Secure accelerator switch **1** harness using band **F**.

MITSUBISHI FUSO

FK.FM

Service Manual

Group 36A - <Center Parking Brake>

Group 36B - <Wheel Parking Brake>

BACK HOME

MITSUBISHI FUSO TRUCK OF AMERICA, Inc.

MITSUBISHI
FUSO

FK.FM
Service Manual

Group 36A
Parking Brake
< Center Parking Brake >

Table of Contents

MITSUBISHI FUSO TRUCK OF AMERICA, Inc.

BACK HOME

Pub No. TWME9503-36A

GROUP 36A PARKING BRAKE (CENTER PARKING BRAKE)

SPECIFICATIONS 2

STRUCTURE AND OPERATION 2

TROUBLESHOOTING 4

INSPECTION AND ADJUSTMENT MOUNTED IN VEHICLE

- Adjustment of Parking Brake Shoe Clearance and Lever Stroke 5

PARKING BRAKE CONTROL 6

PARKING BRAKE ASSEMBLY 8

SUPPORT PLATE AND SHOE ASSEMBLY 12

SPECIFICATIONS/STRUCTURE AND OPERATION

SPECIFICATIONS

Item \ Vehicle model		FK617, FM617
Brake	Type	Propeller shaft internal expanding type brake
	Operation type	Mechanical cable type
Parking brake assembly	Type	Dual-servo type
	Inner diameter of drum mm {in.}	ø254 {10}
	Lining width×Thickness mm {in.}	60×5.8 {2.36×0.23}

STRUCTURE AND OPERATION

Parking Brake Control

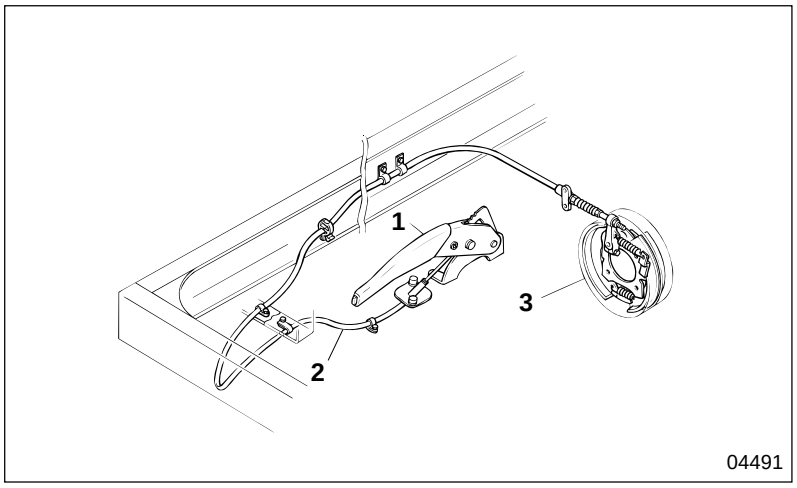

1 Parking brake lever
2 Parking brake cable
3 Parking brake assembly

Parking Brake Lever

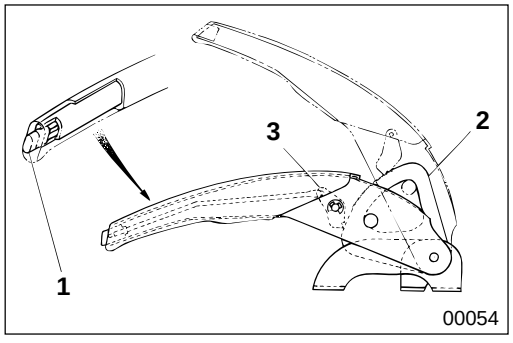

1 Release rod knob
2 Lever bracket
3 Locking latch

The parking brake has a built-in locking mechanism that prevents inadvertent release of the brake.
To release locking, push release rod knob **1** which will disengage from the serration of lever bracket **2** and the tooth of locking latch **3** freeing the parking brake lever and allowing it to return.

Parking Brake Assembly < Dual-servo Type >

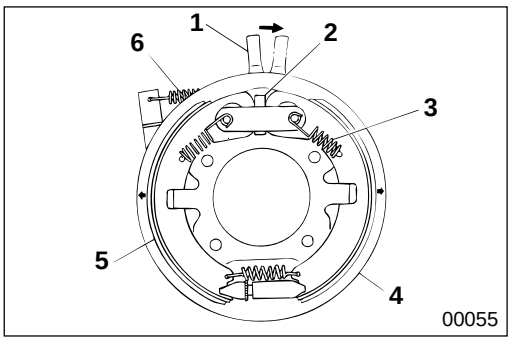

1 Camshaft lever
2 Camshaft
3 Shoe return spring
4 Brake drum
5 Shoe and lining assembly
6 Camshaft lever return spring

Pulling the parking brake lever pulls the parking brake cable, which in turn pulls camshaft lever **1**. At the same time, camshaft **2** rotates in conjunction with the camshaft lever, and expands shoe and lining assembly **5** making it press against brake drum **4**. This frictional force locks the propeller shaft that is connected to the drum. When the brake lever is released, the repercussive force of shoe return spring **3** releases the brake.

Parking Brake System Electric Circuit

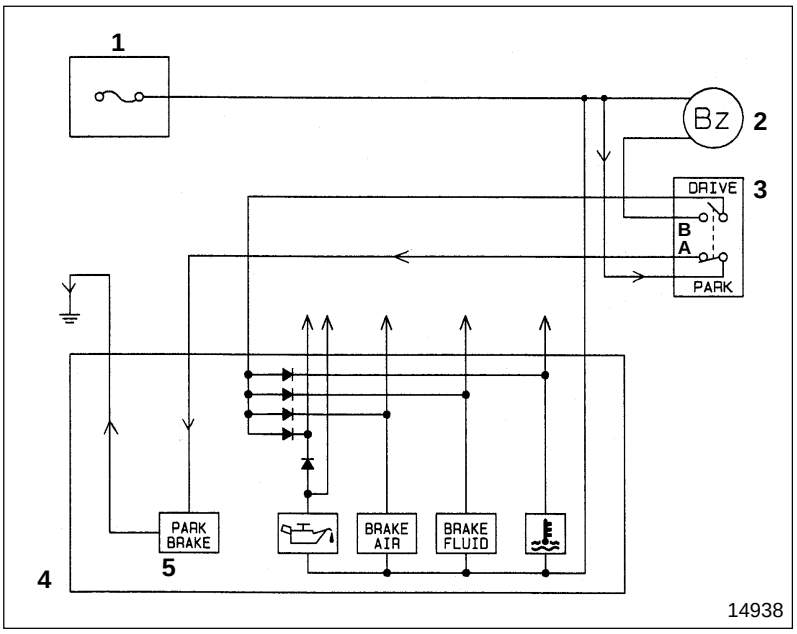

1 Relay and fuse box
2 Buzzer
3 Parking brake switch
4 Meter cluster
5 Parking brake indicator lamp

- The parking brake system electrical circuit is provided for indictaing, its detecting and indictaing function is activated by pulling the parking brake lever.
- When the parking brake lever is pulled, contact point **A** of parking brake switch **3** closes (ON), and parking brake indicator lamp **5** is lit, indicating that the parking brake is operating.
  The current flows as below:
  Fuse **1** → Parking brake switch **3** → Parking brake indicator lamp **5** → Ground
- Buzzer **2** sounds and gives a warning when any fault is detected in the engine oil pressure system, brake system or cooling system. Pulling the parking brake lever opens (OFF) contact point **B** of parking brake switch **3** to stop the buzzer from sounding.

TROUBLESHOOTING

Possible causes / Symptoms		Parking brake does not work	Parking brake does not release smoothly (dragging)	Remarks
Parking brake cable	Inner cable stretched or damaged	○	○	
	Inner cable rusted		○	
Parking brake lever	Locking ratchet and lever bracket serration engagement faulty	○		
	Pulling stroke insufficient	○	○	
	Pulling stroke excessive	○		
Parking brake assembly	Shoe clearance insufficient		○	
	Shoe clearance excessive	○		
	Parking brake drum inner surface deformed or distorted	○		
	Parking brake drum inner surface greasy or oily	○		
	Linings worn unevenly	○		
	Lining surface greasy or oily	○		
	Camshaft lever return spring permanently set or fractured		○	
	Shoe return spring fatigued or fractured		○	

Adjustment of Parking Brake Shoe Clearance and Lever Stroke

Service standards

Unit : mm {in.}

Location	Maintenance item	Standard value	Limit	Remedy
—	Brake shoe clearance	0.1 to 0.25 {0.0039 to 0.0098}	—	Adjust
3	Brake lever pulling stroke (at operation force of 490 N {110 lbf, 50 kgf})	7 to 10 notches	—	Adjust

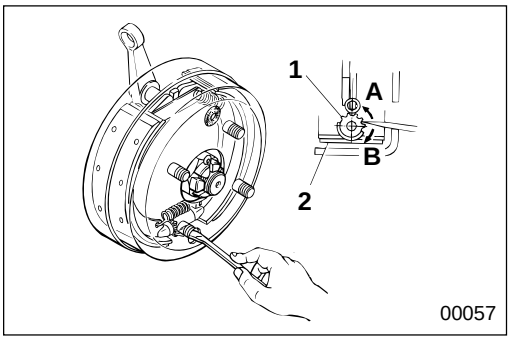

(1) Shoe clearance

When the camshaft lever is released, turn adjusting screw **1** in the expansion direction, using a screwdriver inserted through the shoe adjusting hole of the brake drum, and return 8 notches from the position where shoe **2** is in close contact with the drum. Then, the shoe clearance will be the standard value.

A : Expansion

B : Contraction

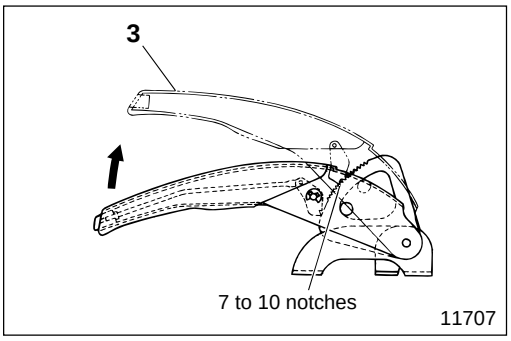

(2) Lever pulling stroke

Adjust camshaft lever lock nut **4** so that the number of notches (clicks heard) is the standard value when parking brake lever **3** is pulled from the released position by an operating force of 490 N {110 lbf, 50 kgf}. Operate the parking brake lever two or three times after adjusting to verify the pulling stroke, to make sure that the parking brake is operating properly and that the parking brake drum does not drag when the parking brake is released.

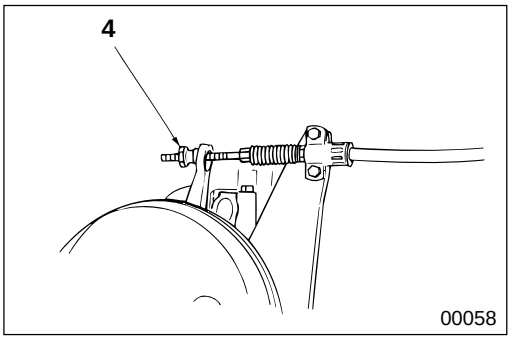

PARKING BRAKE CONTROL

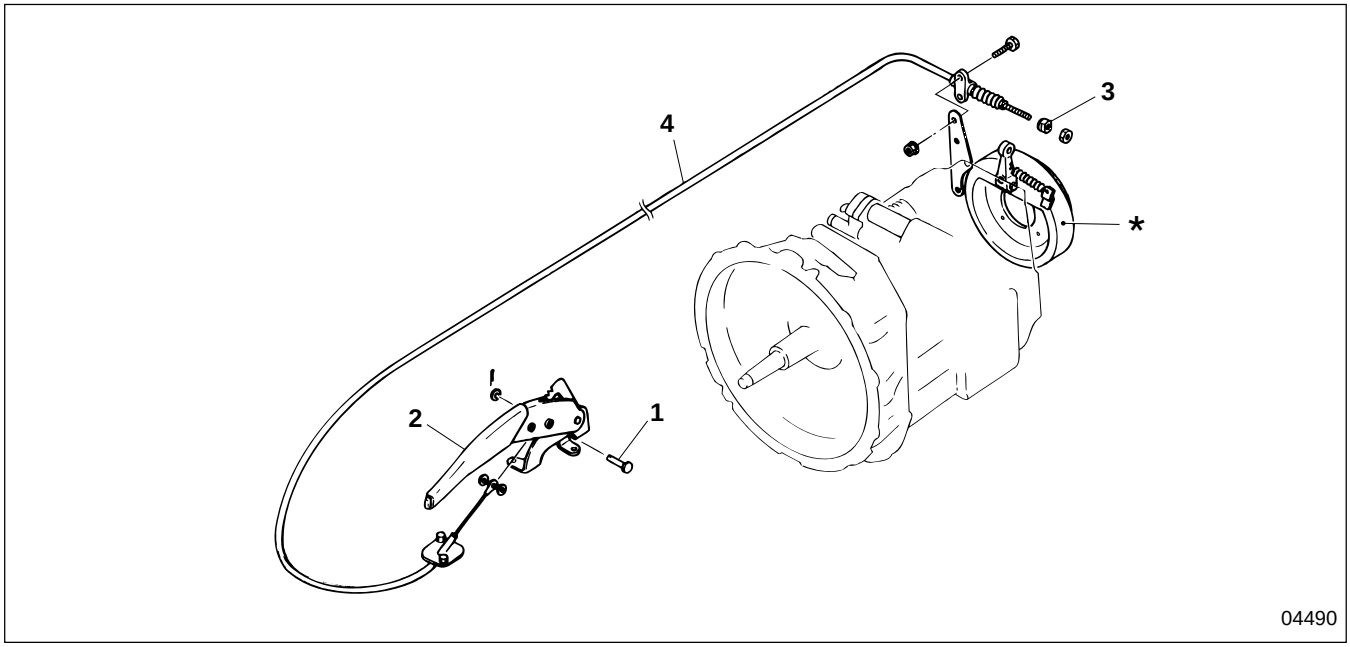

● **Removal sequence**

1 Clevis pin
2 Parking brake lever assembly 🕮 P36A-7
3 Ball bushing
4 Parking brake cable

***** : Parking brake assembly 🕮 P36A-8

WARNING⚠

- **You must place wheel chocks securely in place to prevent the vehicle from moving.**
- **Do not remove the chocks until the entire operation is completed.**

● **Installation sequence**

Follow the removal sequence in reverse

Parking Brake Lever Assembly

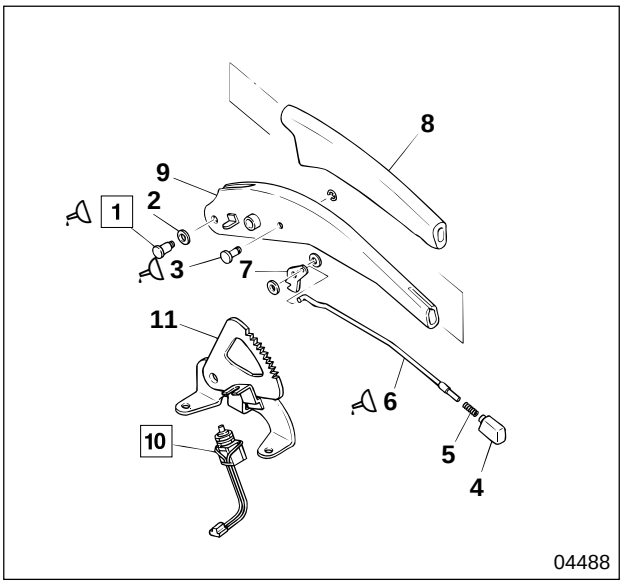

● **Disassembly sequence**

1 Pin
2 Spacer
3 Pin
4 Release rod knob
5 Return spring
6 Release rod
7 Locking latch
8 Grip
9 Parking brake lever
10 Parking brake switch Gr 54
11 Lever bracket

● **Assembly sequence**

Follow the disassembly sequence in reverse.

Lubricant and sealant

Location	Points of application	Kinds	Quantity
1, 3	Rotating area and friction surface of pins	Chassis grease [NLGI No.1 (Ca soap)]	As required
6	Thread area of release rod	Cemedine 1500	As required

◆ Service procedure

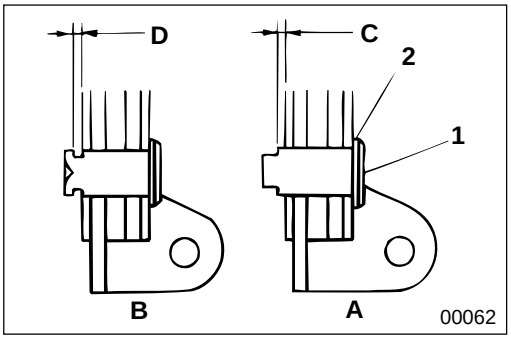

1 **Installation of pin**

A : Before caulking
B : After caulking

When clearance **C** before caulking is less than 0.6 mm {0.024 in.}, do not use spacer **2**.
Also, use spacer to adjust if it is 0.6 to 0.96 mm {0.024 to 0.038 in.}.

	Without spacer	With spacer
Dimension **D**	0.06 to 0.6 mm {0.0024 to 0.024 in.}	0 to 0.36 mm {0 to 0.014 in.}

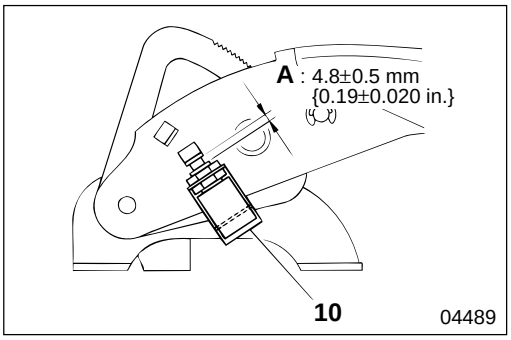

10 **Installation of parking brake switch**

Install parking brake switch **10** so that the stroke equals **A**.

PARKING BRAKE ASSEMBLY

< Manual Transmission >

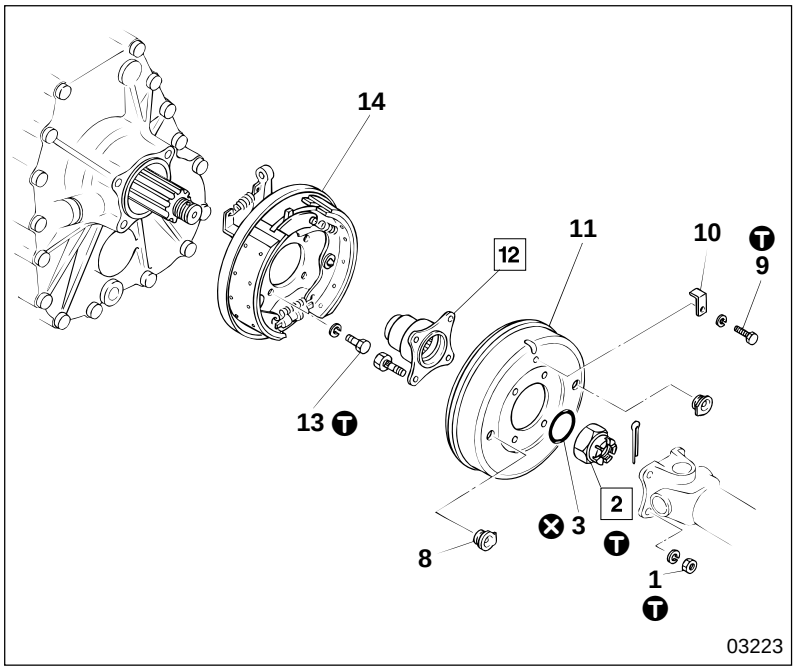

< Automatic Transmission >

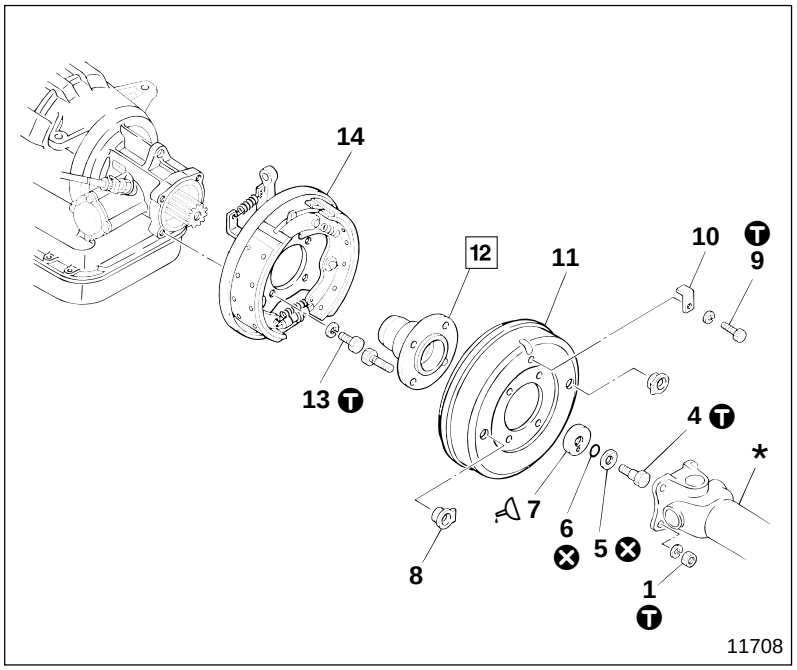

● **Inspection before disassembly**

P36A-10

● **Disassembly sequence**

1 Nut
2 Lock nut
3 O-ring
4 Flange set bolt
5 Lock washer
6 O-ring
7 Retainer washer
8 Dust plug
9 Bolt
10 Drum plate
11 Parking brake drum
12 Companion flange
13 Bolt
14 Support plate and shoe assembly
P36A-12

* : Propeller shaft Gr 25
⊗ : Non-reusable parts

WARNING

- **You must place wheel chocks securely in place to prevent the vehicle from moving.**
- **Do not remove the chocks until the entire operation is completed.**

● **Assembly sequence**

Follow the disassembly sequence in reverse.

Service standards

Unit : mm {in.}

Location	Maintenance item		Standard value	Limit	Remedy
11	Parking brake drum	Deflection at mating recession	0.15 {0.0059} or less	0.5 {0.020}	Replace
		Inner diameter	ø254.0$^{+0.5}_{0}$ {10$^{+0.020}_{0}$}	ø255.5 {10.1}	Replace
		Squareness	0.05 {0.0020} or less	—	Replace
		Coaxial trueness	ø0.1 {0.0039} or less	—	Replace
		Cylindrical trueness	0.05 {0.0020} or less	—	Replace
		Static revolution unbalance	0.88 N·cm {0.0065 lbf.ft, 90 gf·cm} or less	—	Replace

Tightening torque

Unit : N·m {lbf.ft, kgf·m}

Location	Parts to be tightened		Tightening torque	Remarks
1	Nut (Propeller shaft mounting)		85 {61, 8.5}	—
2	Lock nut (Companion flange mounting)		590 to 1080 {435 to 795, 60 to 110}	—
4	Flange set bolt (Companion flange mounting)		140 to 160 {100 to 120, 14.1 to 16.72}	—
9	Bolt (Drum plate mounting)		20 {14, 2}	—
13	Bolt (Support plate and shoe assembly mounting)	Manual transmission	74 {54, 7.5}	—
		Automatic transmission	110 to 130 {81 to 97, 11.22 to 13.46}	

Sealant

Location	Points of application	Kinds	Quantity
7	Outer periphery of retainer washer	THREEBOND 1215	As required

Special tools

Unit : mm {in.}

Location	Tool name and shape	Part No.	Application
2	Socket wrench 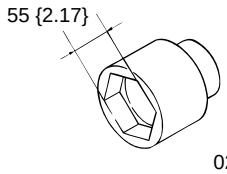 02030	MH061519	Removal and installation of main shaft rear lock nut < Manual transmission >
12	Flange puller 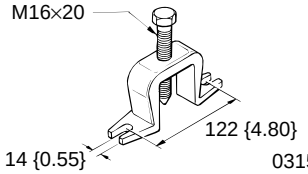 03159	<P4> MC881524	Removal of main shaft rear companion flange
	Flange puller 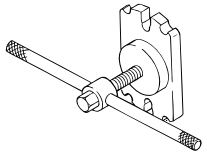 02153	<P8> MH061393	

◆ Service procedure

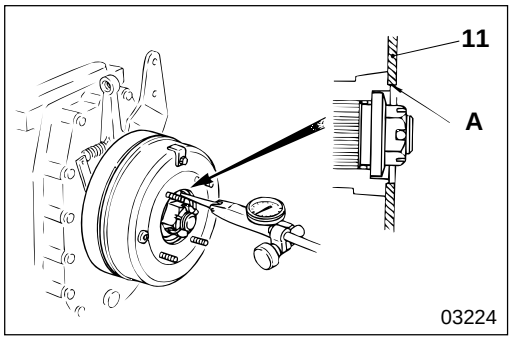

● **Inspection before disassembly**

Measure parking brake drum **11** at mating area **A**, and replace the brake drum if the measured value is higher than the limit.

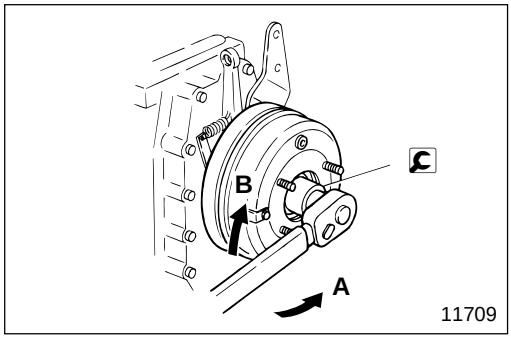

2 **Removal and installation of lock nut < Manual transmission >**

A : Removal
B : Installation

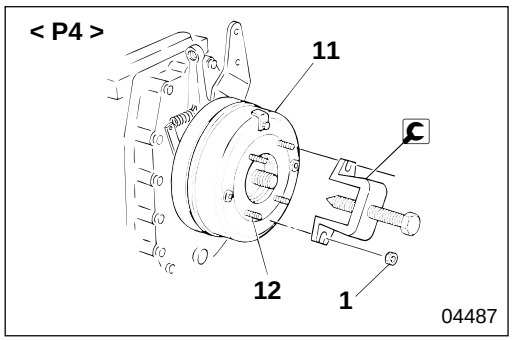

12 **Removal of companion flange**

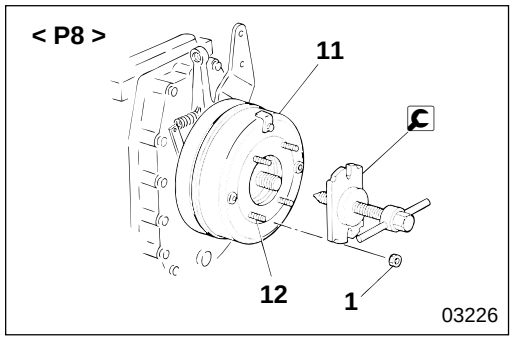

M E M O

SUPPORT PLATE AND SHOE ASSEMBLY

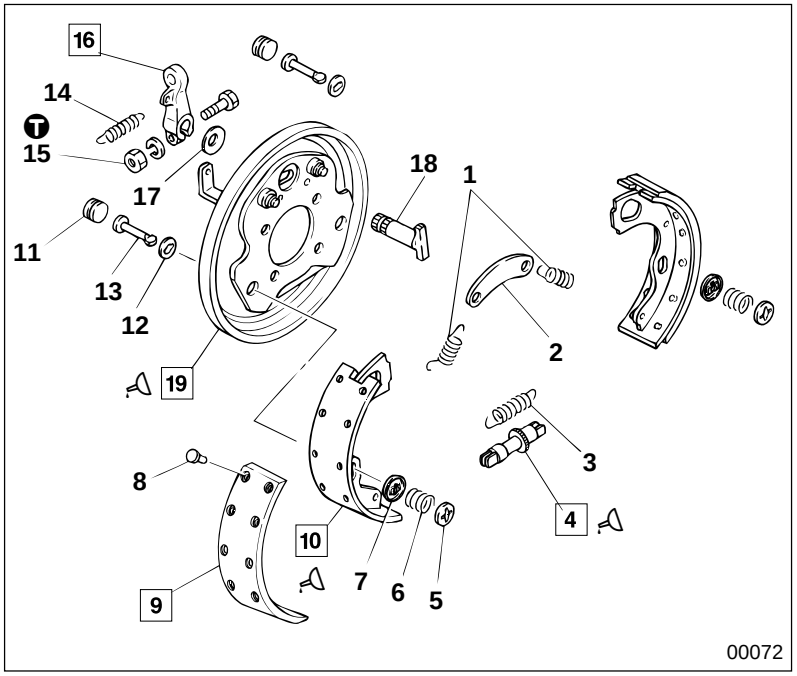

● **Disassembly sequence**

1 Shoe return spring
2 Anchor pin brace
3 Adjusting wheel return spring
4 Adjusting screw
5 Shoe hold-down cup
6 Shoe hold-down spring
7 Shoe hold-down cup
8 Rivet
9 Lining
10 Brake shoe
11 Cover
12 Shoe hold-down washer
13 Shoe hold-down pin
14 Camshaft lever return spring
15 Nut
16 Camshaft lever
17 Spring spacer
18 Camshaft
19 Support plate and cover assembly

● **Assembly sequence**

Follow the disassembly sequence in reverse.

WARNING ⚠

Do not leave grease or oil on the surface of lining 9 because this reduces braking performance.

NOTE

If lining 9 has been replaced with a new part, check correctness of contact with the parking brake drum.

Service standards

Unit : mm {in.}

Location	Maintenance item	Standard value	Limit	Remedy
1	Installed load of shoe return spring (Installed length 75 {2.95})	180±18 N {41±4.0 lbf, 18.5±1.8 kgf}	145 N {33 lbf, 15 kgf}	Replace
3	Installed load of wheel return spring (Installed length 85 {3.35})	105±11 N {24±2.4 lbf, 11±1.1 kgf}	86 N {19 lbf, 8.8 kgf}	Replace
6	Installed load of shoe hold-down spring (Installed length 14 {0.55})	145±15 N {33±3.3 lbf, 15±1.5 kgf}	115 N {26 lbf, 12 kgf}	Replace
9	Lining thickness	5.8 {0.23}	3.5 {0.14}	Replace
14	Installed load of camshaft lever return spring (Installed length 85 {3.35})	62±5.9 N {14±1.3 lbf, 6.3±0.6kgf}	49 N {11 lbf, 5 kgf}	Replace

Ⓣ Tightening torque

Unit : N·m {lbf.ft, kgf·m}

Location	Parts to be tightened	Tightening torque	Remarks
15	Nut (Camshaft lever mounting)	13.72 to 22.56 {10 to 17, 1.4 to 2.3}	—

Lubricant

Location	Points of application	Kinds	Quantity
4, 10	Apply to both ends of adjusting screw which makes contact with brake shoe	Brake grease (AKB 100)	As required
10, 19	Apply to support plate and cover assembly at the place which makes contact with brake shoe	Brake grease (AKB 100)	As required
	Apply to anchor pin area of support plate and cover assembly at the place which makes contact with brake shoe	Brake grease (AKB 100)	As required

◆ Service procedure

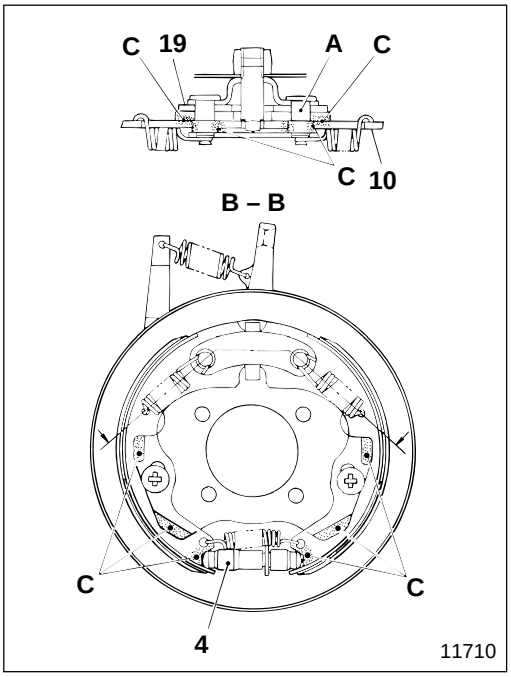

4 **10** **19** **Applying grease to adjusting screw, brake shoe, and support plate and cover assembly**

Apply grease to area **C**.

A : Anchor pin area

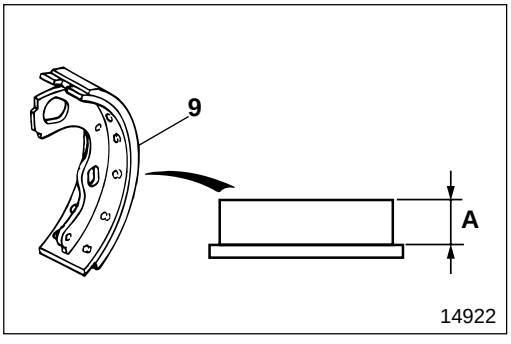

9 **Inspection of lining**

Measure thickness **A** of lining **9**. If the measured value is lower than the limit, replace the lining.

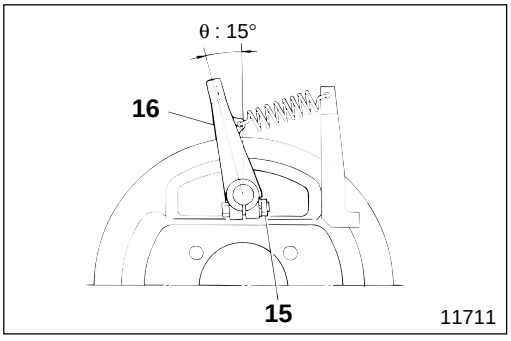

16 **Installation of camshaft lever**

Align camshaft lever **16** to lever mounting angle **θ**, and tighten nut **15** at specified torque.

MITSUBISHI
FUSO

FK.FM
Service Manual

Group 36B
Parking Brake
< Wheel Parking Brake >

Table of Contents

MITSUBISHI FUSO TRUCK OF AMERICA, Inc.

BACK HOME

Pub No. TWME9503-36B

GROUP 36B PARKING BRAKE (WHEEL PARKING BRAKE)

STRUCTURE AND OPERATION 2
TROUBLESHOOTING 7
PARKING BRAKE CONTROL VALVE 8
SPRING BRAKE VALVE 10
DOUBLE CHECK VALVE 13

Parking Brake System

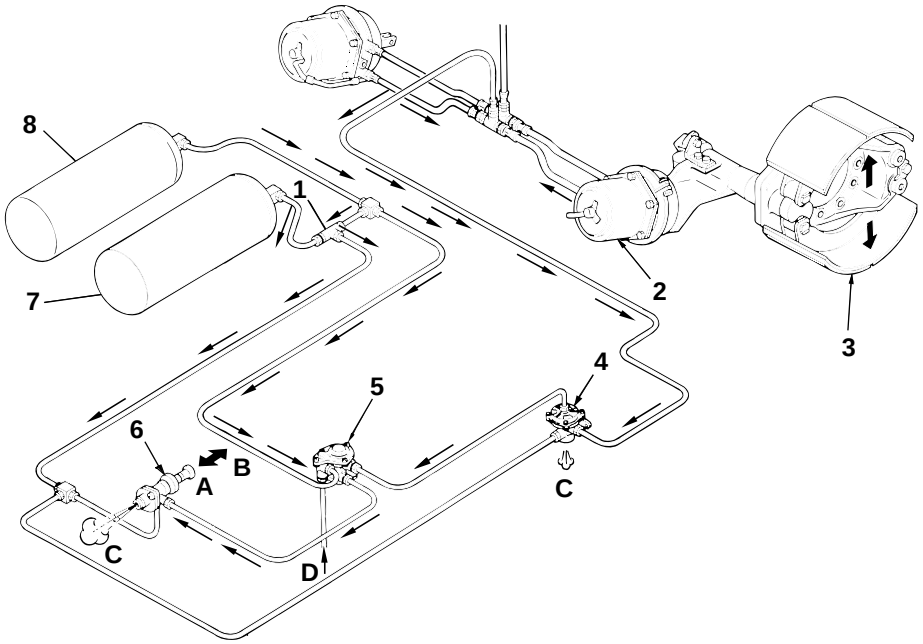

1	Double check valve	**5**	Spring brake valve	**A** :	RELEASE position
2	Rear brake chamber	**6**	Parking brake control valve	**B** :	PARK position
3	Rear wheel brake	**7**	Front brake air tank	**C** :	Pressurized air
4	Relay valve	**8**	Rear brake air tank	**D** :	From front brake system

- In the wheel parking brake system, operating parking brake control valve **6** causes rear brake chamber **2**, which contains a spring brake, to apply rear wheel brake **3**, generating braking force.
- Pulling out the knob of parking brake control valve **6** to the PARK position, feeds pressurized air **C** from the parking brake control valve and spring brake valve **5** to relay valve **4**. This exhausts pressurized air **C** in the spring brake in rear brake chamber **2** through the exhaust port of the relay valve, causing the spring brake to generate braking force.
- Pushing in the knob of parking brake control valve **6** to the RELEASE position, feeds pressurized air from rear brake air tank **8** to relay valve **4** via the parking brake control valve.
  Consequently in the separate air system, pressurized air from the rear brake air tank is fed to the spring brake of rear brake chamber **2** via the relay valve, releasing the wheel parking brake.

Parking Brake Control Valve

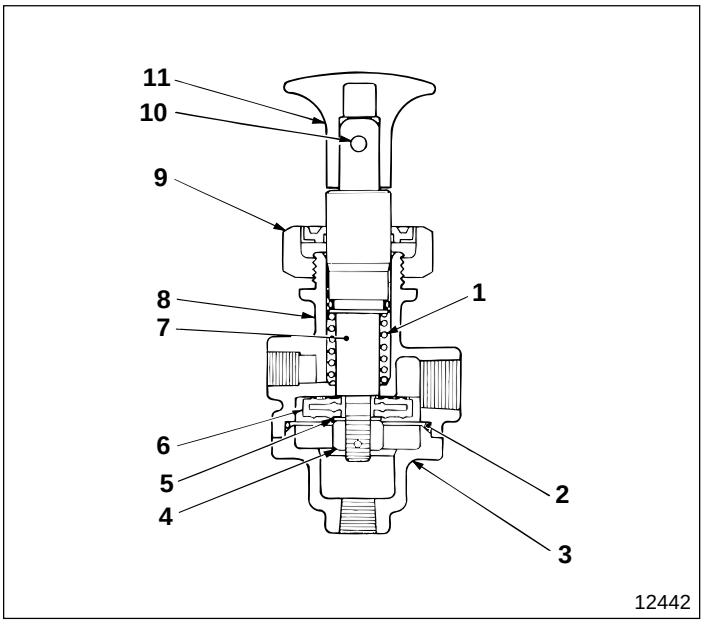

1 Plunger spring
2 Seal ring
3 Cover
4 Nut
5 Washer
6 Valve
7 Plunger
8 Body
9 Seal nut
10 Spring pin
11 Knob

● Feed action (RELEASE)

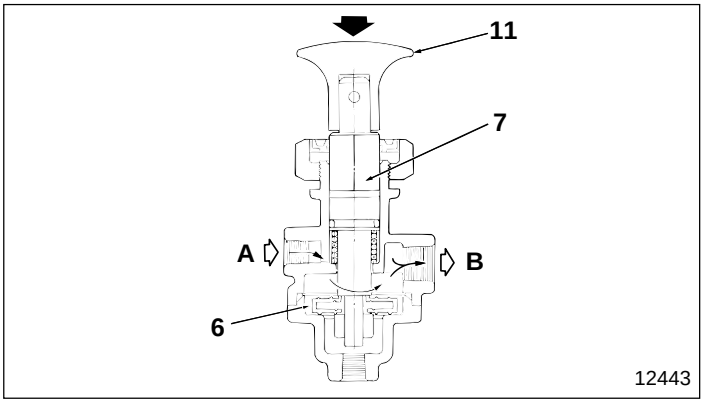

When the air pressure at feed port **A** reaches 420 kPa {61 lbf/in^2, 4.3 kgf/cm^2} or higher, pushing in knob **11** causes valve **6** at the top of plunger **7** to close the exhaust port, feeding pressurized air to exit port **B**.

● Exhaust action (PARK)

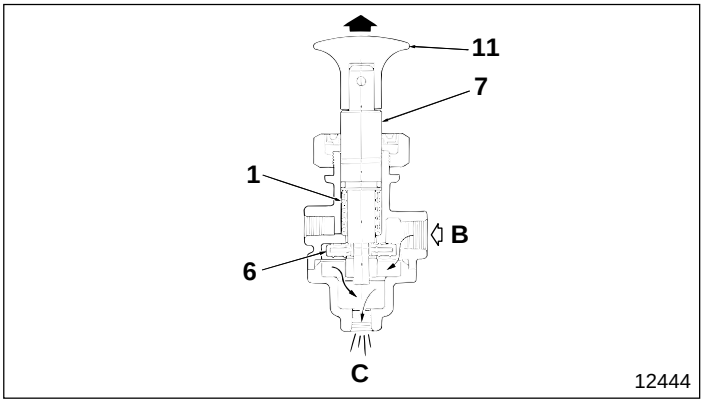

- Pulling out knob **11** causes valve **6** at the top of plunger **7** to open exhaust port **C**, and remains in that position, closing the supply port. This exhausts the air returned from exit port **B** through the air exhaust port.
- When the air pressure at the supply port drops to 275 kPa {40 lbf/in^2, 2.8 kgf/cm^2} or lower, the repercussive force of plunger spring **1** overcomes the air pressure acting on valve **6** pushing out knob **11** automatically. This exhausts the air through exit port **B**.

Spring Brake Valve

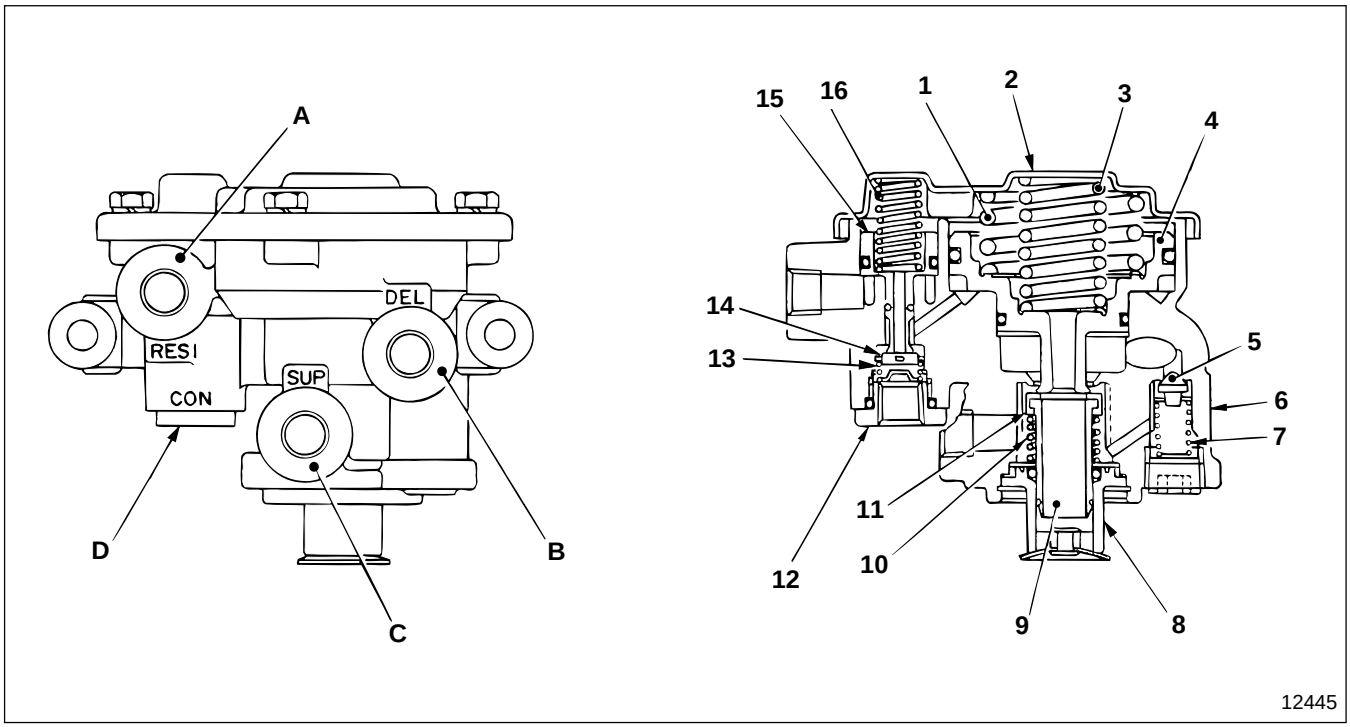

1 Piston spring
2 Cover
3 Spring
4 Piston
5 Check valve
6 Body
7 Spring
8 Exhaust cover
9 Inlet and exhaust valve
10 Valve spring
11 Valve retainer
12 Cap nut
13 Valve spring
14 Valve
15 Piston
16 Piston spring
A : From rear brake air tank
B : To spring brake
C : From parking brake control valve
D : From front brake system

● When parking brake is operated

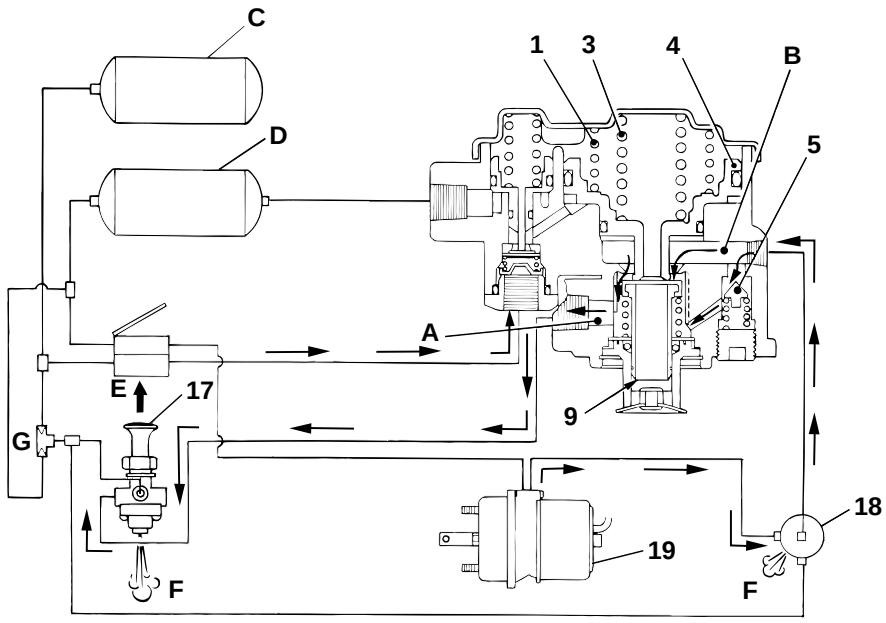

- Pulling out the knob of parking brake control valve **17** to PARK position **E**, exhausts the pressurized air in chamber **A** of the spring brake valve through the parking brake control valve. Then, the pressurized air in chamber **B** of the spring brake valve forces down check valve **5**, passes through chamber **A**, and is exhausted through the parking brake control valve.
- When the air pressure in chamber **B** of the spring brake valve drops sufficiently, springs **1**, **3** at the top of piston **4** force the piston down, opening inlet and exhaust valve **9**. This exhausts the pressurized air, which is fed to relay valve **18**, from the spring brake valve.
- Relay valve **18** exhausts the pressurized air from the spring brake in rear brake chamber **19** through the exhaust port.
- The spring brake of rear brake chamber **19** operates to generate braking force.

  C : Front brake air tank
  D : Rear brake air tank
  E : PARK position
  F : Pressurized air
  G : Double check valve

● When parking brake is released

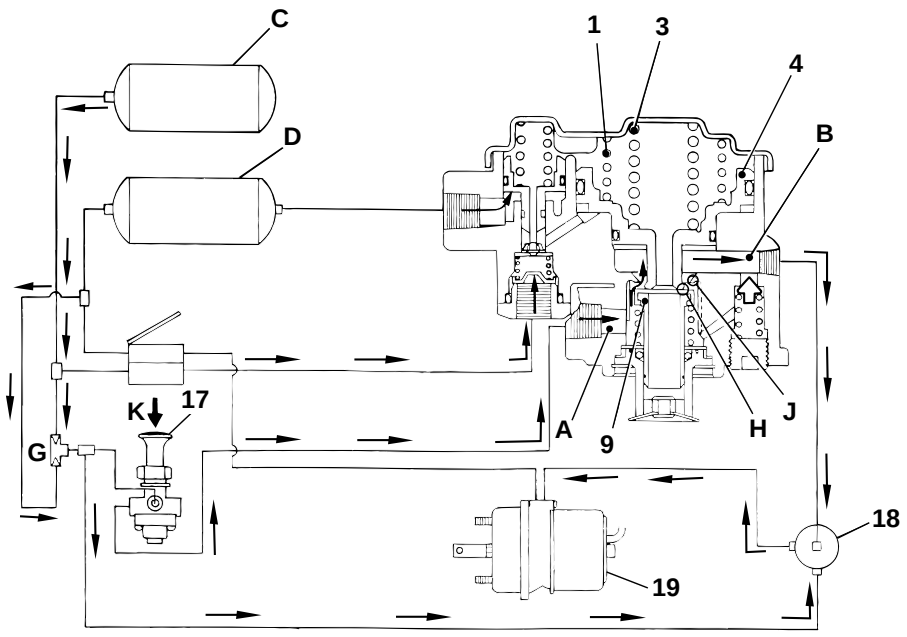

- Pushing in the knob of parking brake control valve **17** to RELEASE position **K**, causes the pressurized air to flow through chamber **A** of the spring brake valve to chamber **B**, then the pressurized air is fed to relay valve **18** as air pressure.
- As the air pressure in chamber **B** rises further, the rising force of piston **4** overcomes the repercussive force of springs **1**, **3**. This closes exhaust valve **H** of inlet and exhaust valve **9**, and at the same time lifts the piston and the inlet and exhaust valve together.
- As piston **4** and inlet and exhaust valve **9** rise further, the inlet and exhaust valve closes inlet valve **J**, isolating chambers **A** and **B** from each other, stopping the air flow between them.
- When it receives pressurized air, relay valve **18** feeds pressurized air in the separate air system to the spring brake, releasing the wheel parking brake.

  C: Front brake air tank
  D: Rear brake air tank
  G: Double check valve
  K: RELEASE position

Parking Brake System Electric Circuit

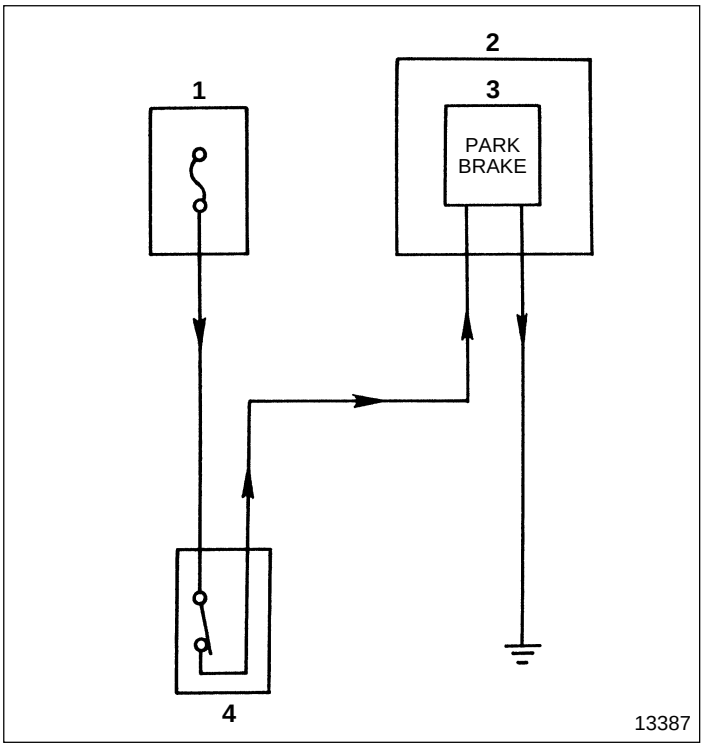

1 Fuse
2 Meter cluster
3 Parking brake indicator lamp
4 Parking brake switch

Operating the parking brake turns on parking brake switch **4** and lights parking brake indicator lamp **3**.
The current flows as below:

Fuse **1** → Parking brake switch **4** → Parking brake indicator lamp **3** → Ground

TROUBLESHOOTING

Possible causes \ Symptoms		Parking brake does not work	Parking brake does not release	Remarks
Parking control valve	Malfunctioning	○	○	
Spring brake valve	Malfunctioning	○	○	
Brake chamber	Malfunctioning	○	○	Gr 35B
Wheel brake	Malfunctioning	○	○	Gr 35B
Air line	Air leaking		○	
	Air pressure low		○	

PARKING BRAKE CONTROL VALVE

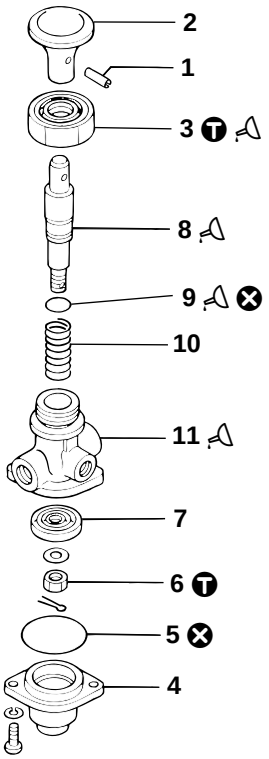

12448

● **Disassembly sequence**

1 Spring pin
2 Knob
3 Seal nut
4 Cover
5 Seal ring
6 Nut
7 Valve
8 Plunger
9 O-ring
10 Plunger spring
11 Body

⊗ : Non-reusable parts

● **Assembly sequence**

Follow the disassembly sequence in reverse.

Repair kit : Parking brake control valve kit

● **Inspection after assembly**

P36B-9

Service standards

Location	Maintenance item	Standard value	Limit	Remedy
—	Operating pressure (Air pressure when the knob is automatically pushed out from its pushed-in position)	235 to 315 kPa {34 to 45 lbf/in^2, 2.4 to 3.2 kgf/cm^2}	—	Replace

Ⓣ Tightening torque

Unit : N·m {lbf.ft, kgf·m}

Location	Parts to be tightened	Tightening torque	Remarks
3	Seal nut	25 to 34 {18 to 25, 2.5 to 3.5}	—
6	Nut (Valve mounting)	3.4 to 4.4 {2.5 to 3.3, 0.35 to 0.44}	—

Lubricant

Location	Points of application	Kinds	Quantity
3	Friction surfaces of seal nut and plunger	Multipurpose grease [NLGI No.2 (Li soap)]	As required
8	Friction surface and O-ring groove of plunger	Multipurpose grease [NLGI No.2 (Li soap)]	As required
9	Periphery of O-ring	Multipurpose grease [NLGI No.2 (Li soap)]	As required
11	Friction surfaces of body and plunger	Multipurpose grease [NLGI No.2 (Li soap)]	As required

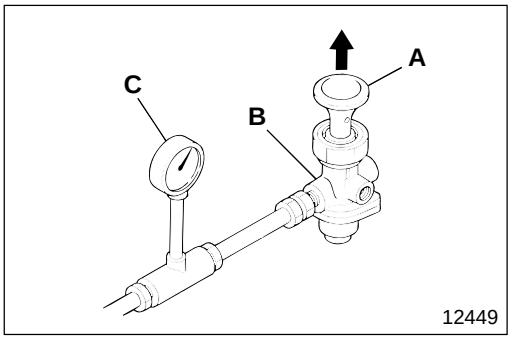

◆ Service procedure

● **Inspection after assembly**

- While pushing in knob **A**, feed air pressure of 685 kPa {100 lbf/in^2, 7 kgf/cm^2} via air supply port **B**.
- Gradually decrease the air pressure and confirm that the air pressure required to push out the knob from its pushed-in position is the standard value.
  C : Air gauge

SPRING BRAKE VALVE

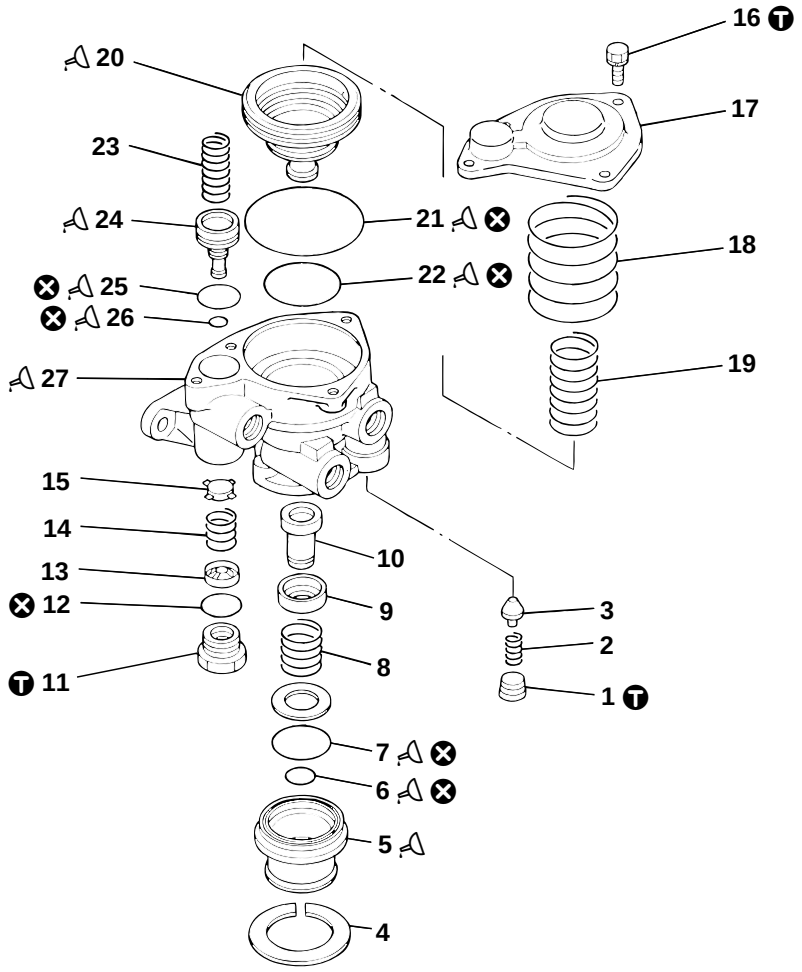

12450

● **Disassembly sequence**

1 Plug
2 Spring
3 Check valve
4 Retaining ring
5 Exhaust cover
6 O-ring
7 O-ring
8 Valve spring
9 Valve retainer
10 Inlet and exhaust valve
11 Cap nut
12 O-ring
13 Valve stop
14 Valve spring
15 Valve
16 Bolt
17 Cover
18 Piston spring
19 Piston
20 Piston
21 O-ring
22 O-ring
23 Piston spring
24 Piston
25 O-ring
26 O-ring
27 Body

⊗ : Non-reusable parts

● **Assembly sequence**

Follow the disassembly sequence in reverse.
Repair kit : Spring brake valve kit

● **Inspection of operation after assembly**

P36B-11

Tightening torque

Unit : N·m {lbf.ft, kgf·m}

Location	Parts to be tightened	Tightening torque	Remarks
1	Plug	15 to 20 {11 to 14, 1.5 to 2.0}	—
11	Cap nut	11 to 14 {8.0 to 10, 1.1 to 1.4}	—
16	Bolt (Cover mounting)	5.9 to 8.8 {4.3 to 6.5, 0.6 to 0.9}	—

Lubricant

Location	Points of application	Kinds	Quantity
5	Friction surfaces of exhaust cover and inlet and exhaust valve	Silicon grease	As required
20, 24	O-ring groove and outer periphery of piston	Silicon grease	As required
27	Friction surfaces of body and piston	Silicon grease	As required
—	Periphery of O-ring	Silicon grease	As required

◆ Service procedure

● Inspection of operation after assembly

- Place wheel chocks at the rear wheels to prevent the vehicle from moving.
- Start the engine to raise the air pressure until the air pressure gauge reads 805 $^{+29}_{-20}$ kPa {115 $^{+4.3}_{-2.8}$ lbf/in^2, 8.2 $^{+0.3}_{-0.2}$ kgf/cm^2}.

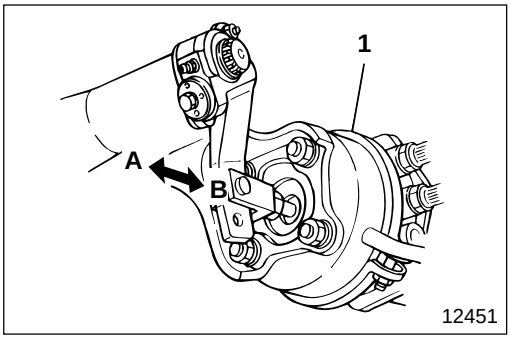

- Confirm that when the knob of the parking brake control valve is pulled out to the PARK position, rear brake chamber **1** operates immediately, applying the wheel parking brake .
- Confirm that when the knob of the parking brake control valve is pushed in to the RELEASE position, rear brake chamber **1** operates, releasing the wheel parking brake.
  A : Applied
  B : Released

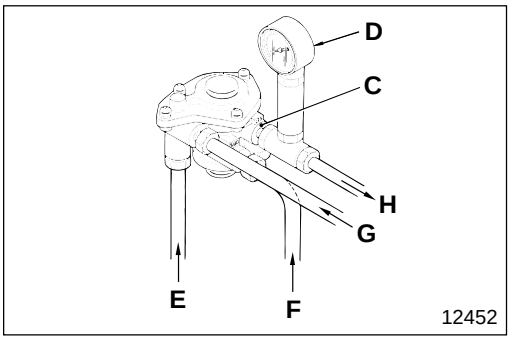

- Mount air pressure gauge **D** on delivery port **C** of the spring brake valve.
- Read air pressure gauge **D** when the knob of the parking brake control valve is pushed to the RELEASE position.
  Specified value: 65 kPa {951 lbf/in^2, 6.67 kgf/cm^2}
  E : From front brake system
  F : From parking brake control valve
  G : From rear brake air tank
  H : To spring brake of rear brake chamber

- Confirm that when the knob of the parking brake control valve is pulled out to the PARK position, the reading of air pressure gauge **B** drops immediately to 0 kPa {0 lbf/in^2, 0 kgf/cm^2}. If the air pressure gauge indicator needle drops slowly, replace check valve **3**, since it is probably faulty.

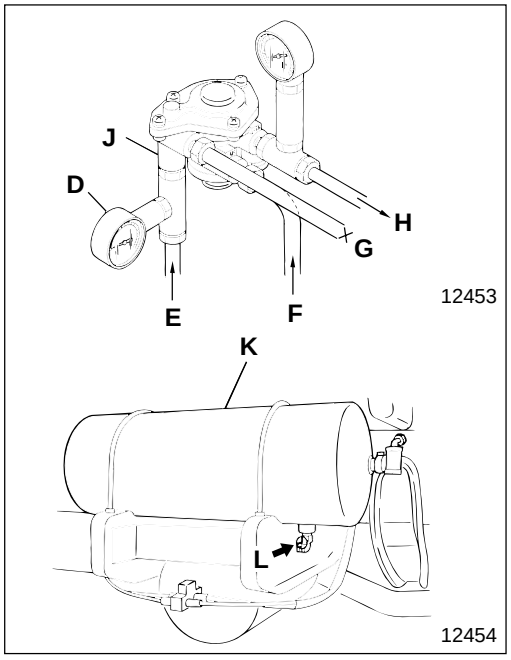

- Mount air pressure gauge **D** on control port **J**.
- Push in the knob of the parking brake control valve to the RELEASE position and pull drain cock **L** to completely bleed tank **K** of the rear brake system.
  - **E** : From front brake system
  - **F** : From parking brake control valve
  - **G** : No pressurized air from rear brake air tank
  - **H** : To spring brake of rear brake chamber

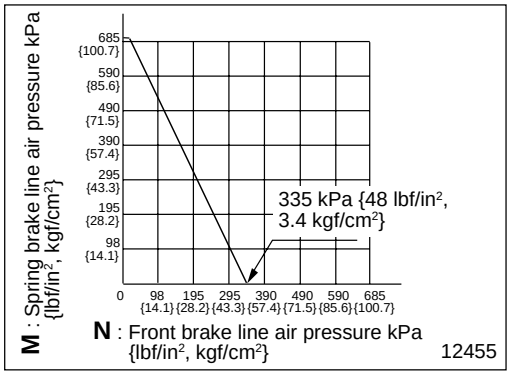

- Have the brake pedal depressed several times and read the drop in the air pressure on both air pressure gauges **D** every time the brake is pressed to confirm that each value conforms to the specified value indicated on the performance curve diagram.
- Press the brake pedal several times to compress the air until rear brake chamber **1** operates on the wheel parking brake locking the rear wheels completely.

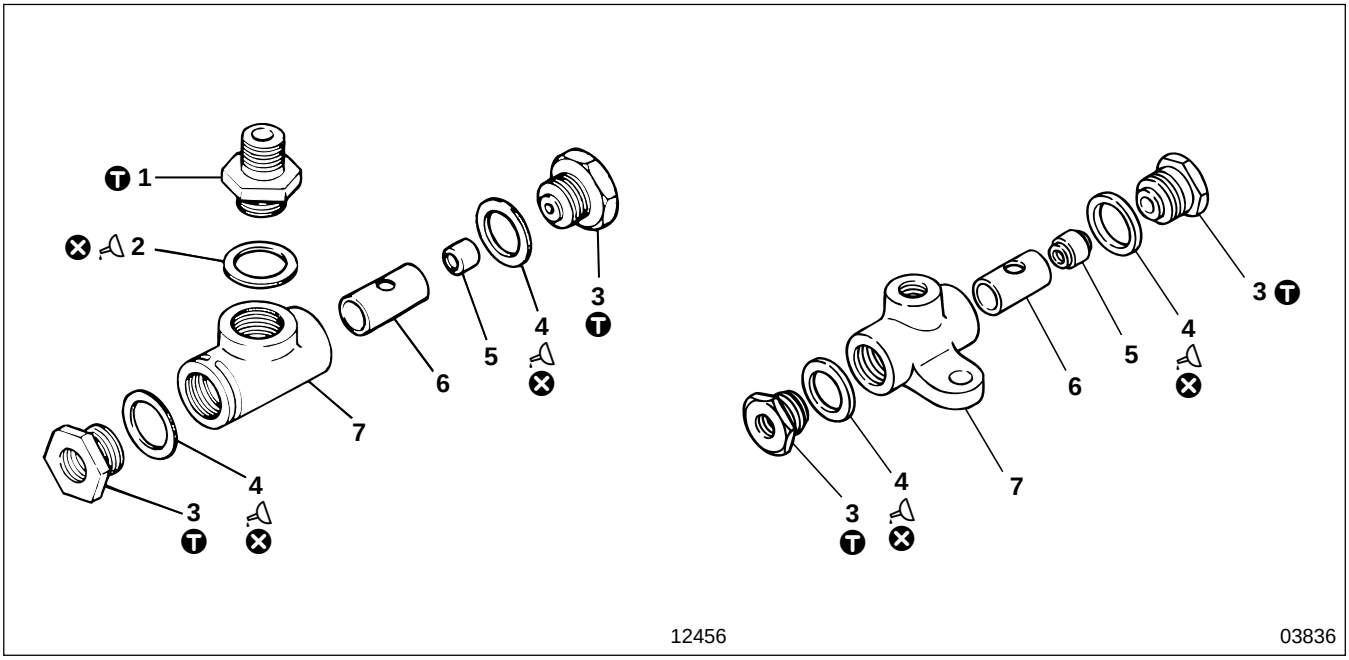

● **Disassembly sequence**

1 Joint
2 Packing
3 Joint
4 Packing
5 Check valve
6 Sleeve
7 Body

⊗ : Non-reusable parts

● **Assembly sequence**

Follow the disassembly sequence in reverse.

Repair kit : Double check valve kit

Ⓣ Tightening torque

Unit : N·m {lbf.ft, kgf·m}

Location	Parts to be tightened	Tightening torque	Remarks
1, 3	Joint	34 to 44 {25 to 33, 3.5 to 4.5}	—

Sealant

Location	Points of application	Kinds	Quantity
2, 4	Surfaces of packing	THREEBOND 1101	As required

MITSUBISHI
FUSO

FK.FM
Service Manual

Group 37
Steering

Table of Contents

BACK

HOME

MITSUBISHI FUSO TRUCK OF AMERICA, Inc.

Pub No. TWME9503-37

GROUP 37 STEERING

SPECIFICATIONS 2

STRUCTURE AND OPERATION 3

TROUBLESHOOTING 10

INSPECTION AND ADJUSTMENT MOUNTED IN VEHICLE
- Change of Power Steering Fluid 13
- Bleeding of Power Steering System 13
- Steering Wheel Play 14
- Performance Verification Test of Power Steering System 15

STEERING SYSTEM 16

LINKAGE AND BRACKET 20

POWER STEERING BOOSTER 22

POWER STEERING OIL PUMP 34

POWER STEERING OIL TANK 38

POWER STEERING FLUID LINE 39

DRAG LINK 40

TIE ROD ASSEMBLY 42

SPECIFICATIONS

Item \ Vehicle model		FK617-A	FK617-B	FM617-A FM617-C	FM617-B FM617-D	FM657
Steering wheel	Type	2-spoke type				
	Outer diameter mm {in.}	480 {18.9}				
Steering shaft	Type	Universal joint type (Tilt and telescopic type)				
Power steering booster	Manufacturer	JIDOSHA KIKI				
	Type	Ball nut type				
	Form	Integral type				
	Model No.	443-00013		446-00105		446-00545
	Gear ratio	17.1 to 20		19.05		22.4
	Cylinder diameter mm {in.}	85 {3.35}		90 {3.54}		100 {3.94}
	Mass (without pitman arm and fluid) kg {lb}	21 {46}		24 {53}		30 {66}
Power steering oil pump	Manufacturer	JIDOSHA KIKI				
	Type	Vane type				
	Model No.	475-03451	475-03454	475-03451	475-03454	475-03453
	Discharge amount cm^3 {cu.in.}/rotation	15 {0.92}				17.5 {1.07}
	Regulated flow amount L {qts}/min	12 {13}				18 {19}
	Regulated pressure (relief valve) MPa {lbf/in^2, kgf/cm^2}	13.2 {1920, 135}				12.3 {1780, 125}
	Permissible revolutions rpm	600 to 4000				
	Mass (without drive gear, and fluid) kg {lb}	4.9 {11}				

Steering System

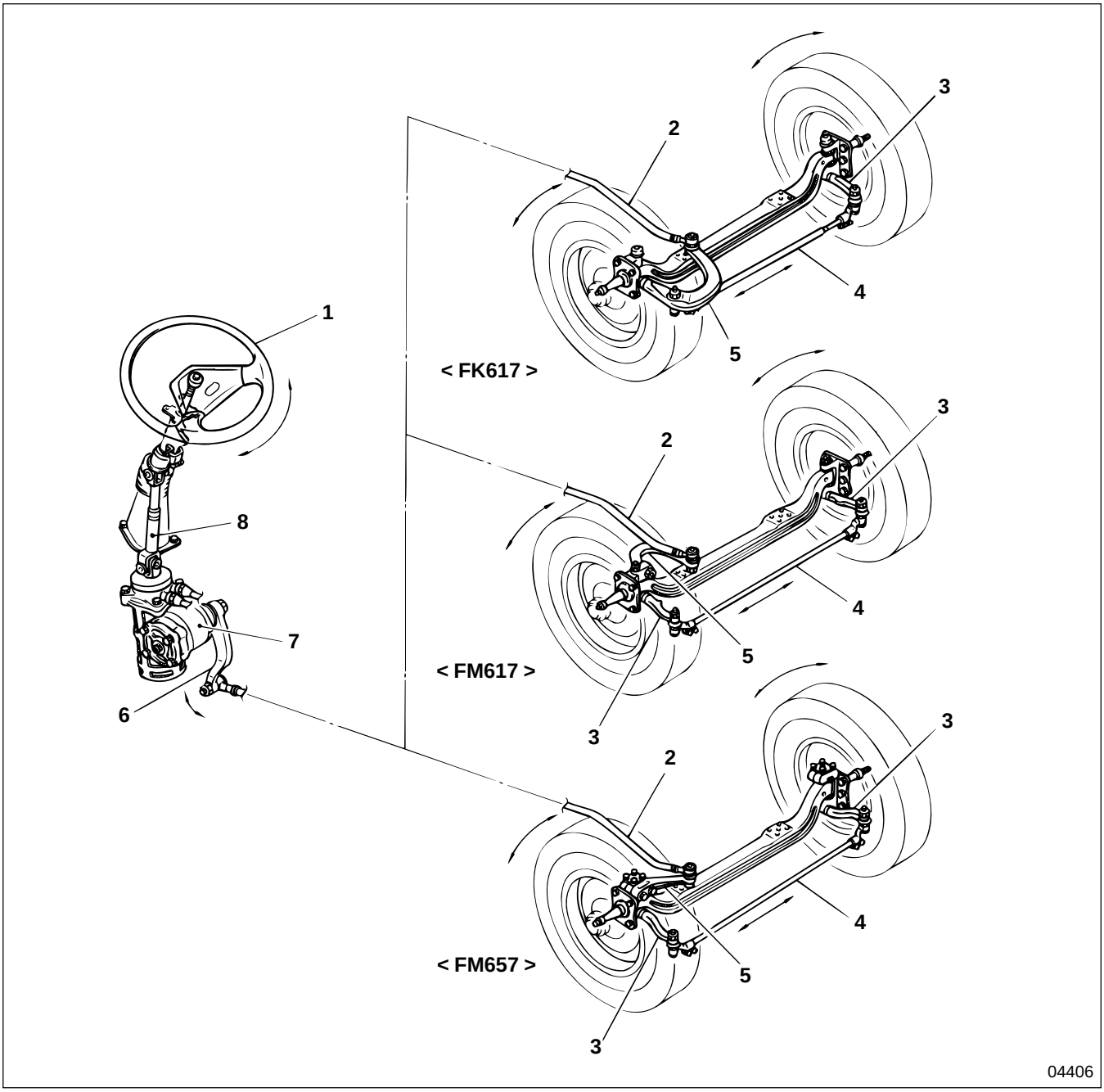

1 Steering wheel
2 Drag link
3 Tie rod arm
4 Tie rod
5 Knuckle arm
6 Pitman arm
7 Power steering booster
8 Steering shaft

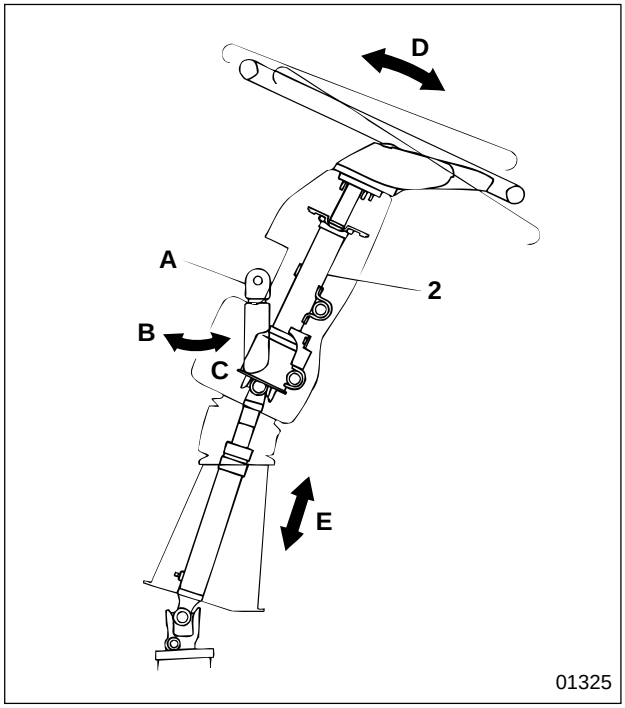

Shifting lock lever **A** from lock position **B** to release position **C** allows you to adjust tilt **D** and telescopic movement **E** of steering shaft **2** to the optimum driving position.

Power Steering System

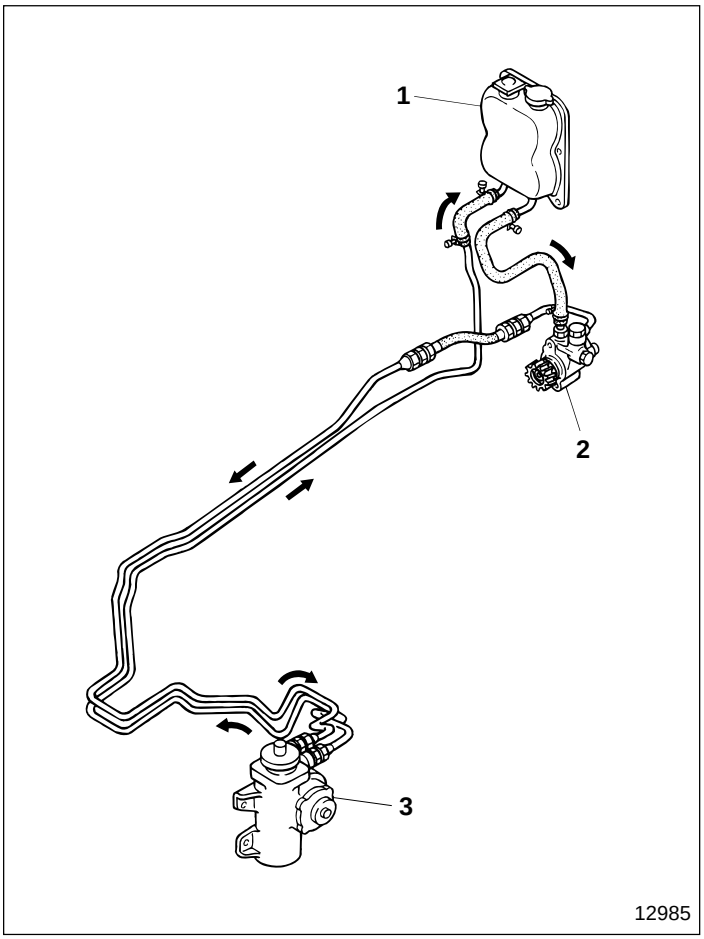

1 Power steering oil tank
2 Power steering oil pump
3 Power steering booster

⬅ : Fluid flow

Power Steering Booster

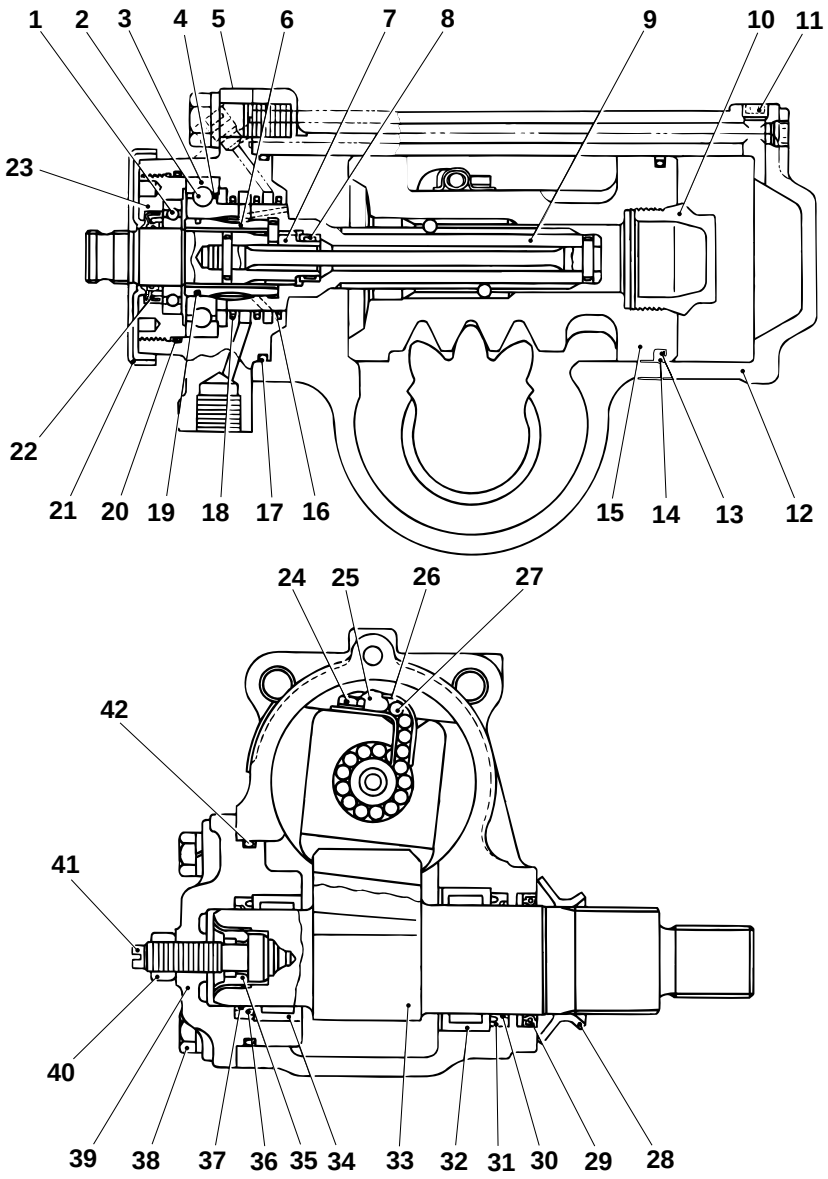

1 Ball bearing
2 Steel ball
3 Side race
4 Bearing cage
5 Valve housing
6 Rotor
7 Stub shaft
8 Needle bearing
9 Worm shaft
10 Plug
11 Taper plug
12 Body
13 O-ring
14 Seal ring
15 Piston
16 Seal ring
17 O-ring
18 O-ring
19 Seal ring
20 O-ring
21 Dust cover
22 Oil seal
23 Adjusting plug
24 Screw
25 Ball tube clip
26 Ball tube
27 Steel ball
28 Dust cover
29 Oil seal
30 Backup ring
31 Y-packing
32 Needle bearing
33 Sector shaft
34 Needle bearing
35 Retainer
36 Y-packing
37 Backup ring
38 Bolt
39 Side cover
40 Nut
41 Adjusting screw
42 O-ring

The rotary valve is the central part of the power steering booster. The torsion bar allows the steering reaction force and valve return to operate lightly and smoothly at low speed, and ensures stable steering feel even at high speed.

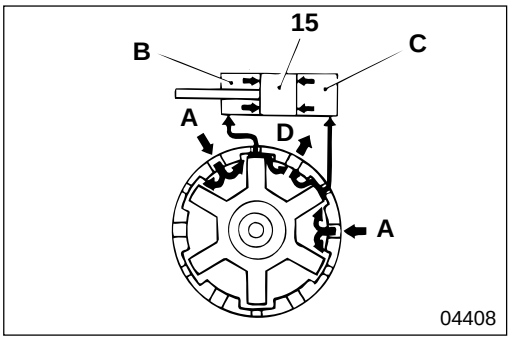

Straight-ahead operation

Piston **15** is in the neutral position as chambers **B** and **C** of the piston are under equal pressure.

A : From oil pump
D : To oil tank

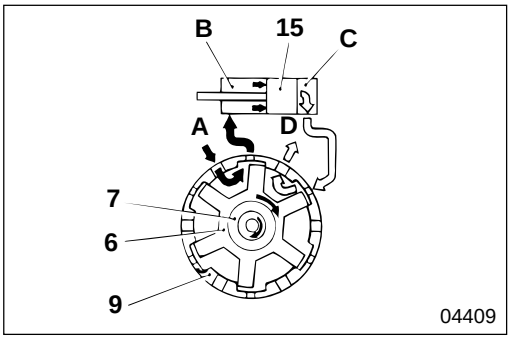

Steering operation

Turning the steering wheel rotates stub shaft **7**, causing rotor **6** to close the fluid feed passage to cylinder chamber **C**. This produces a pressure difference between cylinder chambers **B**, **C**, which causes piston **15** to move, and facilitates rotation of worm shaft **9**.

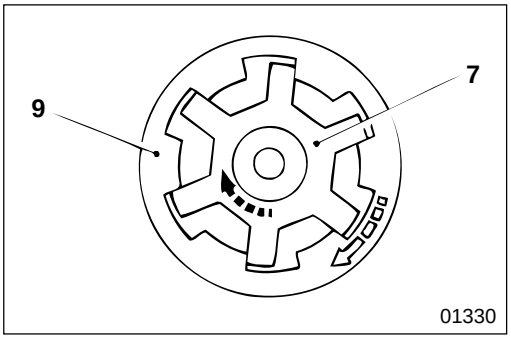

If the hydraulic circuit fails

The safety mechanism allows the vehicle to be steered manually, when the rotating force of stub shaft **7** alone directly turns worm shaft **9**, transmitting the steering force.

Power Steering Oil Pump

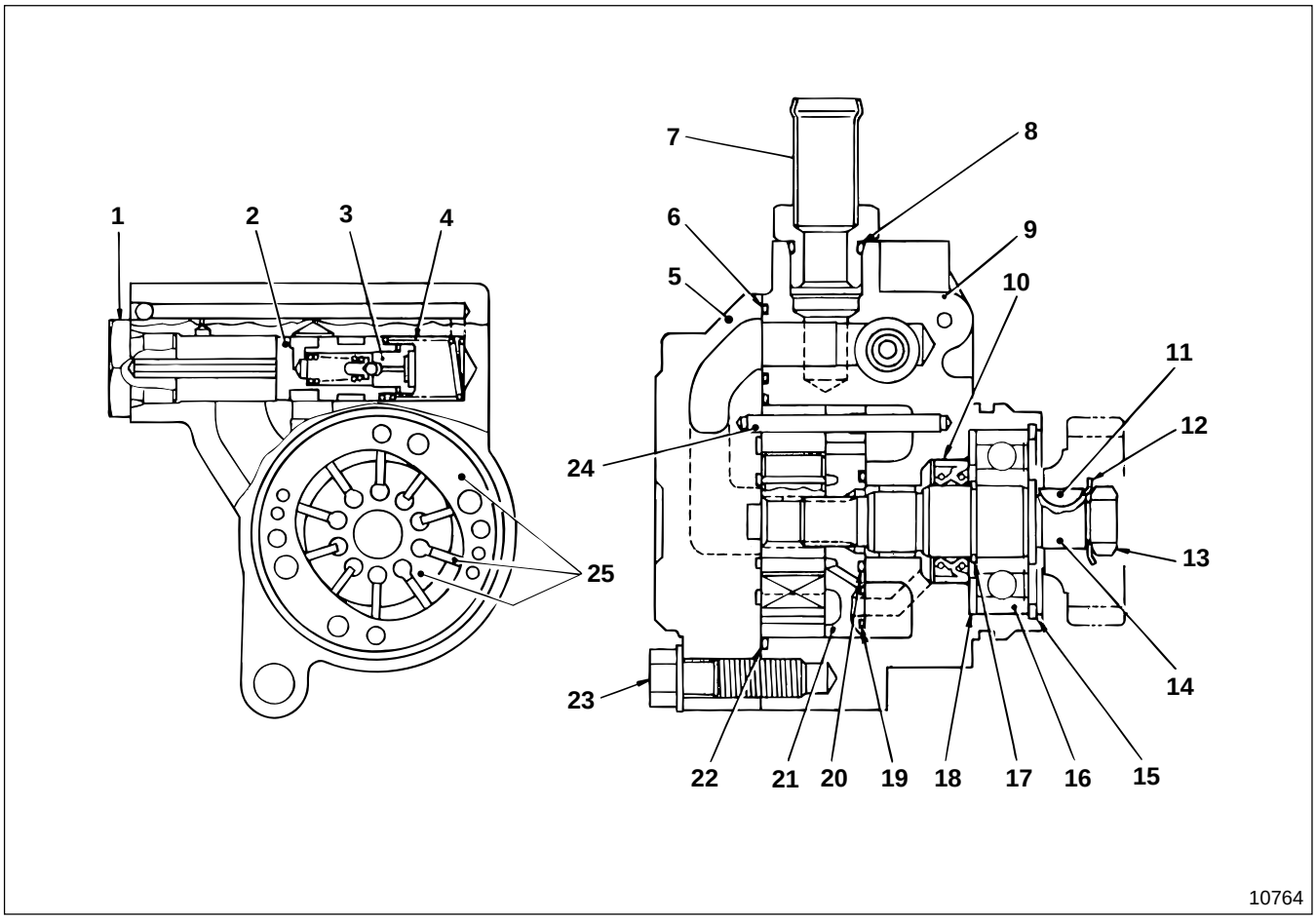

1 Plug
2 Flow control valve assembly
3 Relief valve
4 Flow control spring
5 Rear body
6 O-ring
7 Hose connector
8 O-ring
9 Front body
10 Oil seal
11 Key
12 Lock washer
13 Nut
14 Drive shaft
15 Retaining ring
16 Ball bearing
17 Retaining ring
18 Retaining ring
19 O-ring
20 O-ring
21 Pressure plate
22 O-ring
23 Bolt
24 Straight pin
25 Cartridge assembly

Flow Control Valve Assembly

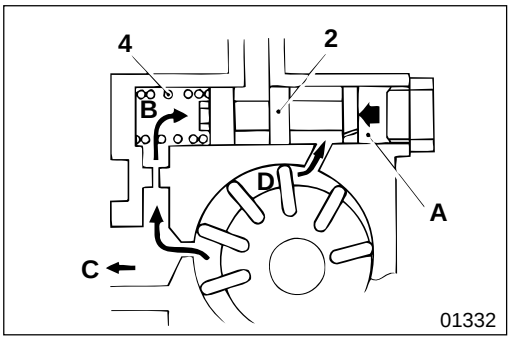

● **Operation of flow control valve**

(1) When not operating (When oil pump rotating at low speed)

The fluid pressure from chamber **A** does not move flow control valve assembly **2** because the fluid pressure is lower than the combined force of the fluid pressure from chamber **B** and the repercussive force of flow control spring **4**.

C : To power steering booster
D : Pressure chamber

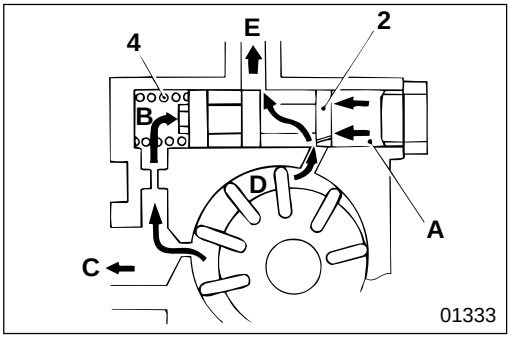

(2) When operating (When oil pump rotating at middle or high speed)

The fluid pressure from chamber **A** moves flow control valve assembly **2** because the fluid pressure is higher than the combined force of the fluid pressure from chamber **B** and the repercussive force of flow control spring **4**. Then, port **E** opens to release the fluid, maintaining the level of flow in chamber **A**.

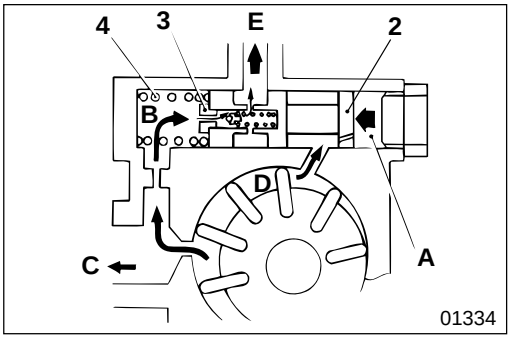

● **Operation of relief valve**

The combined force of the fluid pressure from chamber **B** and the repercussive force of flow control spring **4** moves flow control valve assembly **2** because the fluid pressure is higher than the fluid pressure from chamber **A**. The fluid pressure in chamber **B** rises further to open relief valve **3** and port **E**, stabilizing the fluid pressure in chamber **B**.

Possible causes \ Symptoms		Steering wheel operation heavy	Steering wheel play excessive and unstable	Steering wheel pulls to one side	Steering wheel vibration	Steering wheel self-return poor	Steering wheel does not turn	Steering angle insufficient or difference between right and left	Fluid leaking	Oil pump fluid pressure abnormal	Oil pump gurgles	Oil pump squeaks	Oil pump growls	Remarks
Power steering mechanism faulty	Thrust bearing damaged or worn	○			○	○								
	Ball or groove of ball screw worn	○	○		○									
	Air bled insufficient	○												
	Fluid viscosity unsuitable	○												
	Power steering booster system faulty	○												
	Flow control valve malfunctioning	○												
	Ball screw unit rack and gear worn		○											
	Sector shaft bearing worn		○		○									
	Power steering booster mounting bolt loose		○											
	Ball screw unit and sector shaft play incorrect				○									
	Valve control edge damaged or control seal ring broken				○									
	Power steering system fluid unsuitable				○									
	Rack engagement starting torque adjusted incorrectly	○				○								
	Fluid circuit clogged	○				○								
	Sector shaft gear worn		○											
	Torsion shaft serration damaged or worn		○											
	Power steering booster body faulty			○	○									
	O-ring, oil seal faulty								○					
	Sealant applied incorrectly								○					
Steering column and linkage mechanism faulty	Universal joint worn abnormally, damaged, lubricated incorrectly	○	○											
	Linkage deformed	○												
	Drag link ball stud play		○		○									
	Tie rod end ball stud play		○		○									
	Tie rod bent						○							
	Pitman arm mounting position incorrect							○						
	Steering wheel turning center offset			○										

Possible causes \ Symptoms		Steering wheel operation heavy	Steering wheel play excessive and unstable	Steering wheel pulls to one side	Steering wheel vibration	Steering wheel self-return poor	Steering wheel does not turn	Steering angle insufficient or difference between right and left	Fluid leaking	Oil pump fluid pressure abnormal	Oil pump gurgles	Oil pump squeaks	Oil pump growls	Remarks
Front axle faulty	Kingpin lubricated incorrectly	○				○								
	Front wheel alignment (toe-in, camber, caster) incorrect	○		○	○	○								
	Thrust bearing damaged	○												
	Wheel hub bearing worn or damaged		○	○	○									Gr 26
	Kingpin or bushing worn or damaged		○	○	○									
	Front axle deformed			○										
	Knuckle arm, tie rod arm, or knuckle tightened incorrectly				○									
	Front spring U-bolt, nut loose				○									Gr 33
	Front axle parts overtightened					○								
	Turning angle adjusted incorrectly						○	○						Gr 26
	Mounting parts, connection point loose		○											
	Knuckle stopper bolt adjusted incorrectly							○						
Oil pump faulty	Oil pump body faulty								○					
	O-ring or oil seal faulty								○					
	Bolt tightened incorrectly								○					
	Maximum generated fluid pressure insufficient									○				
	Fluid line crushed or clogged									○				
	Air lock in oil pump										○			
	Oil pump interior seized									○	○	○		
	Mounting bolt or nut loose												○	
	Pump body faulty												○	
	Valve malfunctioning									○				
Oil tank faulty	Oil tank leaking due to overflowing								○					
	Oil tank leaking due to air lock								○					
	Fluid level insufficient	○												

TROUBLESHOOTING

Possible causes / Symptoms		Steering wheel operation heavy	Steering wheel play excessive and unstable	Steering wheel pulls to one side	Steering wheel vibration	Steering wheel self-return poor	Steering wheel does not turn	Steering angle insufficient or difference between right and left	Fluid leaking	Oil pump fluid pressure abnormal	Oil pump gurgles	Oil pump squeaks	Oil pump growls	Remarks
Other malfunctions	Load too far forward of load-carrying platform	○												
	Load too far rearward of load-carrying platform		○											
	Load too far to one side of load-carrying platform			○										
	Leaf spring fatigued or cracked			○										Gr 33
	Braking force unbalanced			○										Gr 35 A, B
	Tire wear difference between left and right excessive			○										
	Tire outer diameter difference between left and right			○										Gr 31
	Front tire radial and lateral runout, static balance or dynamic balance faulty				○									
	Wheelbase difference between left and right excessive			○										
	Propeller shaft runout excessive				○									Gr 25
	Rear axle housing bent			○										
	Reduction pinion and gear damaged or engaged incorrectly				○									Gr 27

Change of Power Steering Fluid

Tightening torque

Unit : N·m {lbf.ft, kgf·m}

Location	Parts to be tightened	Tightening torque	Remarks
2	Oil pipe	66.69±12.75 {49±9.4, 6.8±1.3}	—

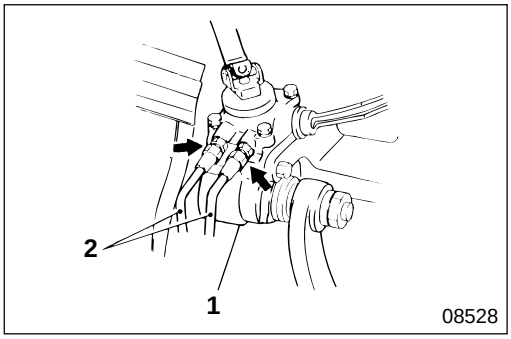

[Draining]
- Jack up the front wheels.
- Loosen oil pipe **2** connected to power steering booster **1**.
- Turn the steering wheel fully left and right repeatedly, and drain the fluid from power steering booster **1**.
- After draining the fluid, tighten oil pipe **2** at specified torque.

[Filling]
P37-13

Bleeding of Power Steering System

Fluid

Location	Points of application	Kinds	Quantity
1	Power steering oil tank	Automatic transmission fluid (DEXRON or DEXRON II type)	Filler cap dipstick between end and F

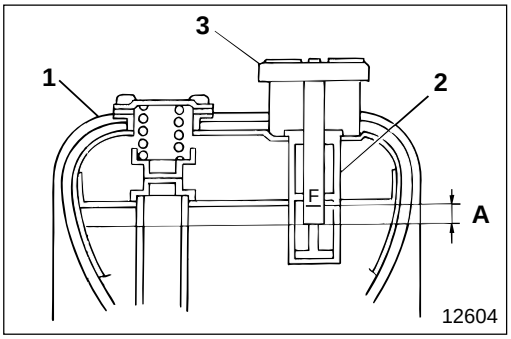

- Pour fluid into power steering oil tank **1** up to the inner port of strainer **2**.
- With the engine stopped, jack up the front wheels and turn the steering wheel fully left and right repeatedly. When the fluid level has dropped, add fluid to maintain the fluid level within range **A**.

NOTE

Check the fluid level without screwing on filler cap 3.

- Start the engine and letting it idle, turn the steering wheel fully left and right repeatedly. When the fluid level has dropped, add fluid to maintain the fluid level within range **A**. Repeat these steps until the fluid level does not drop.
- If there is an abnormal noise, air is still in the system. Turn the steering wheel several times to raise the fluid temperature to approximately 60 to 80°C {140 to 176°F}, then stop the engine and wait for approximately five minutes.
- Lower the front wheels and turn the steering wheel several times. If there is no noise, bleeding is completed.
- When bleeding is finished, check fluid level of power steering oil tank **1**, and pipe and hose connections for fluid leaks.

INSPECTION AND ADJUSTMENT MOUNTED IN VEHICLE

Steering Wheel Play

Service standards

Unit : mm {in.}

Location	Maintenance item	Standard value	Limit	Remedy
—	Steering wheel play (Measure at the outer circumference of steering wheel)	10 to 40 {0.39 to 1.57}	—	Adjust

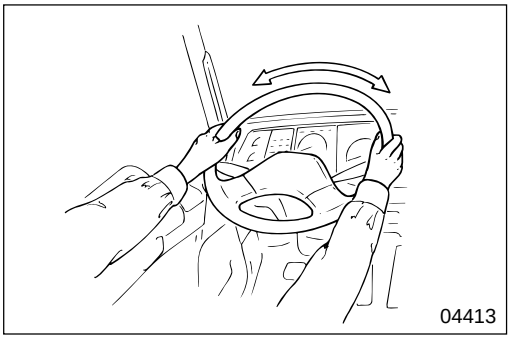

Point the wheels directly forward and gently turn the steering wheel left and right and measure the outer circumference play. If the play deviates from the standard value, adjust tightening points and power steering booster backlash. P37-27

Performance Verification Test of Power Steering System

Service standards

Location	Maintenance item	Standard value	Limit	Remedy
—	Steering system fluid pressure (With hands off steering wheel)	490 kPa {71 lbf/in^2, 5 kgf/cm^2}	—	Repair
—	Relief set pressure (Measure with engine speed at 1000 to 1500 rpm and stop valve closed)	< FK617, FM617 >: 13.2 MPa {1920 lbf.ft, 135 kgf/cm^2}, < FM657 >: 12.3 MPa {1780 lbf.in^2, 125 kgf/cm^2},	Maximum +785 KPa {115 lbf/in^2, 8 kgf/cm^2} Minimum –1180 KPa {170 lbf/in^2, 12 kgf/cm^2}	Adjust or replace

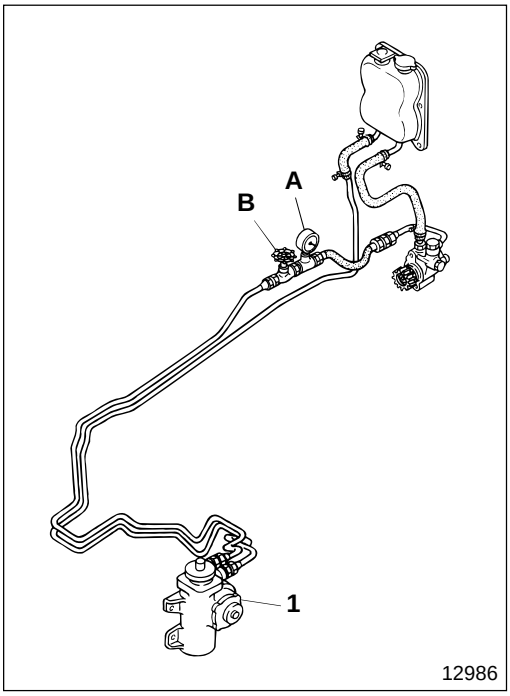

Verify that the power steering booster and the power steering oil pump are operating properly by testing the following items.

NOTE

If the fluid pressure is higher than 490 kPa {71 lbf/in^2, 5 kgf/cm^2} with engine idling and the steering wheel free, inspect power steering booster 1 and fluid circuit for clogging.

Test item	Test procedure	Assembly standards
Verification of smooth operation	Jack up the front wheels and turn steering wheel fully left and right	Smooth operation throughout test
Measurement conditions	• Install oil pressure gauge **A** capable of measuring above 14.7 MPa {2130 lbf/in^2, 150 kgf/cm^2} and stop valve **B**, then bleed air • With engine idling, turn steering wheel left and right several times to raise fluid temperature to 50 to 60°C {122 to 140°F} • With the engine idling, open stop valve **B**	
Measurement of fluid pressure	Measure fluid pressure with hands off steering wheel	490 kPa {71 lbf/in^2, 5 kgf/cm^2}
Measurement of relief pressure	• Gradually increase engine speed and maintain it at 1000 to 1500 rpm, and close stop valve **B** to measure maximum fluid pressure • Do not keep stop valve **B** closed for more than fifteen seconds	Relief set pressure < FK617, FM617 >: 13.2 MPa {1920 lbf.in^2, 135 kgf/cm^2}, < FM657 >: 12.3 MPa {1780 lbf.in^2, 125 kgf/cm^2}

STEERING SYSTEM

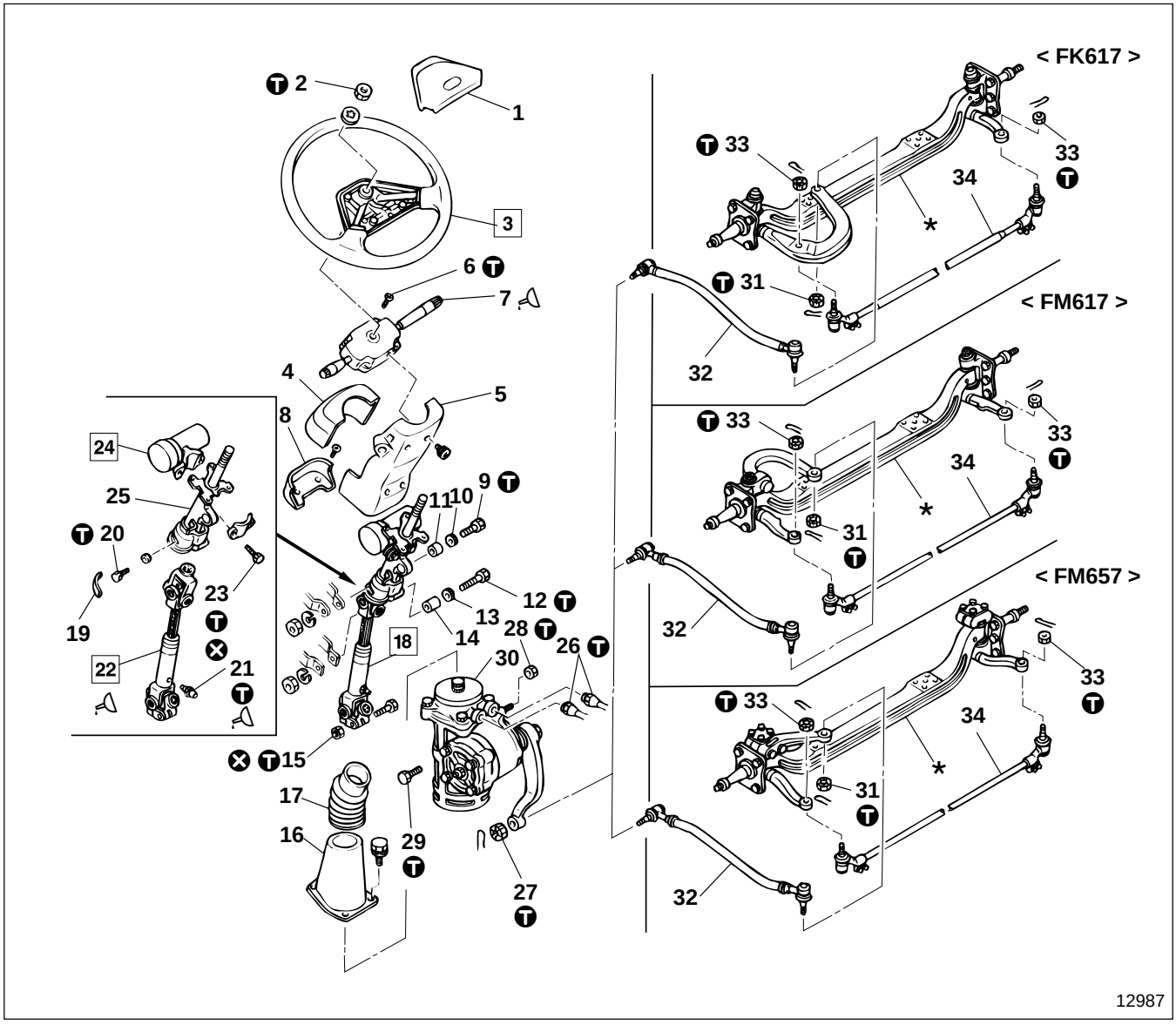

● **Removal sequence**

1 Horn pad
2 Nut
3 Steering wheel
4 Front column cover
5 Rear column cover
6 Screw
7 Combination switch Gr 54
8 Harness cover
9 Bolt
10 Wave washer
11 Collar
12 Bolt
13 Wave washer
14 Collar
15 Nut
16 Support
17 Dust cover
18 Steering shaft assembly
19 Seal
20 Bolt
21 Grease nipple
22 Steering lower shaft assembly
23 Head cutting bolt
24 Starter switch Gr 54
25 Steering upper shaft assembly
26 Oil pipe P37-39
27 Nut
28 Nut
29 Bolt
30 Power steering booster P37-22
31 Nut
32 Drag link P37-40
33 Nut
34 Tie rod assembly P37-42

*: Front axle assembly Gr 26
⊗: Non-reusable parts

CAUTION

When disconnecting oil pipe 26, clean the port to keep it free from dust and other foreign particles.

● **Installation sequence**

Follow the removal sequence in reverse.

Service standards

Unit : mm {in.}

Location	Maintenance item	Standard value	Limit	Remedy
22, **25**	Play in rotating direction of joint	15' or less	—	Replace
	Play in axial direction of steering shaft	0.2 {0.0079} or less	—	Replace
22	Play in rotating direction of spline	30' or less	—	Replace

Tightening torque

Unit : N·m {lbf.ft, kgf·m}

Location	Parts to be tightened		Tightening torque	Remarks
2	Nut (Steering wheel mounting)		78.4 {58, 8}	—
6	Screw (Combination switch mounting)		2.5±0.5 {1.8±0.36, 0.25±0.05}	—
9	Bolt (Upper lever and steering shaft assembly mounting)		9.8 {7.2, 1}	—
12	Bolt (Lower lever and steering shaft assembly mounting)		36 {27, 3.7}	—
15	Nut (Steering shaft assembly and integral power steering assembly mounting)		51.42±2.45 {38±1.8, 5.25±0.25}	—
20	Bolt (Steering lower shaft assembly mounting)		48 to 63 {35 to 46, 4.9 to 6.4}	—
21	Grease nipple		2.9 to 4.9 {2.2 to 3.6, 0.3 to 0.5}	—
23	Head cutting bolt (Starter switch mounting)		13.7±1.0 {10±1.1, 1.4±0.1}	—
26	Oil pipe mounting		67±13 {49±9.4, 6.8±1.3}	—
27	Nut (Drag link assembly and integral power steering assembly mounting)	FK617, FM617	190±48 {140±35, 19.4±4.85}	—
		FM657	353±88 {260±65, 36±9}	—
28	Nut (Integral power steering booster assembly mounting)	FK617, FM617	175.4±26.5 {130±20, 17.9±2.7}	—
		FM657	341±51 {250±38, 34.8±5.2}	—
29	Bolt (Integral power steering booster assembly mounting)	FK617, FM617	175.4±26.5 {130±20, 17.9±2.7}	—
		FM657	341±51 {250±38, 34.8±5.2}	—
31	Nut (Drag link assembly and front axle assembly mounting)	FK617, FM617	190±48 {140±35, 19.4±4.85}	—
		FM657	353±88 {260±65, 36±9}	—
33	Nut (Tie rod assembly and front axle assembly mounting)	FK617, FM617	190±48 {140±35, 19.4±4.85}	—
		FM657	270±68 {200±50, 27.6±6.9}	—

Lubricant

Location	Points of application	Kinds	Quantity
7	Contact area between combination switch and horn	Wheel bearing grease [NLGI No.2 (Li soap)]	As required
21	Supply via grease nipple after assembling spline	Chassis grease [NLGI No.1 (Ca soap)]	Supply until grease overflows from grease escape hole
22	Spline	Chassis grease [NLGI No.1 (Ca soap)]	As required

Special tools

Unit : mm {in.}

Location	Tool name and shape	Part No.	Application
3	Steering wheel puller 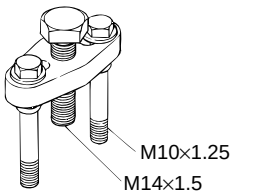	MH062421	Removal of steering wheel

◆ Service procedure

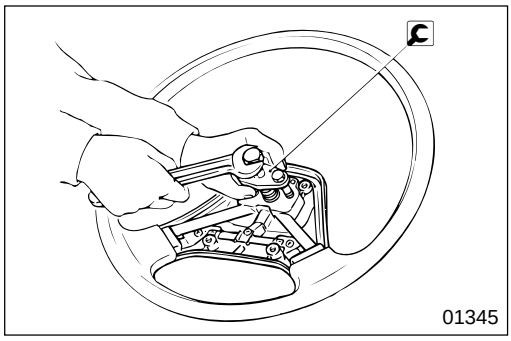

3 **Removal of steering wheel**

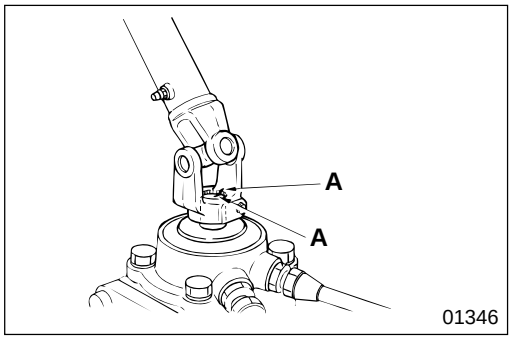

18 **Removal of steering shaft assembly**

A : Alignment mark

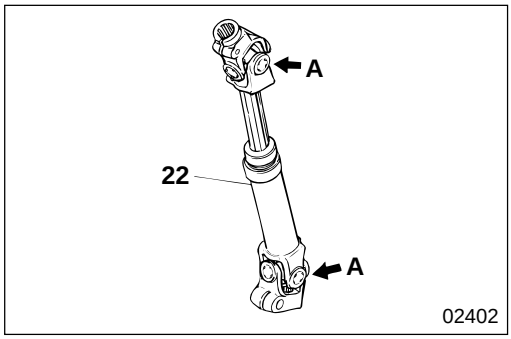

22 **Steering lower shaft assembly**

When the spline of steering lower shaft assembly **22** has been disconnected, align marks **A** on the yokes to face the same direction.

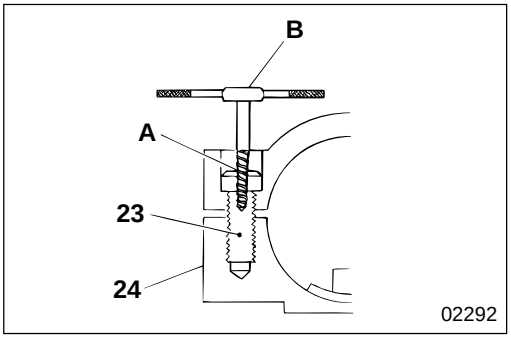

24 **Starter switch**

[Removal]

- Grip one end of the column in a vise, then drill a ø5.5 to 6 mm {0.22 to 0.24 in.} hole 10 to 15 mm {0.39 to 0.59 in.} deep in surface **A**, where the head was cut off, of head cutting bolt **23** for mounting starter switch **24**.
- Screw in screw extractor **B** counterclockwise, then remove head cutting bolt **23** from the steering column.

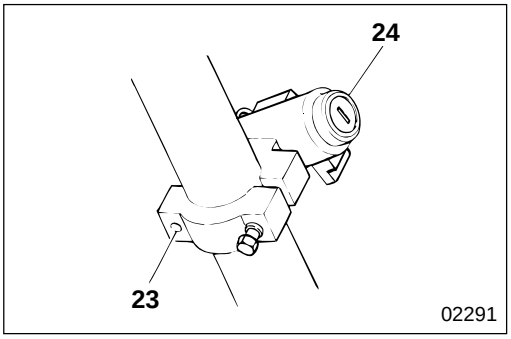

[Installation]

- Tighten new head cutting bolt **23** at specified torque to cut the head off the bolt.
- Check the steering lock mechanism after installation.

LINKAGE AND BRACKET

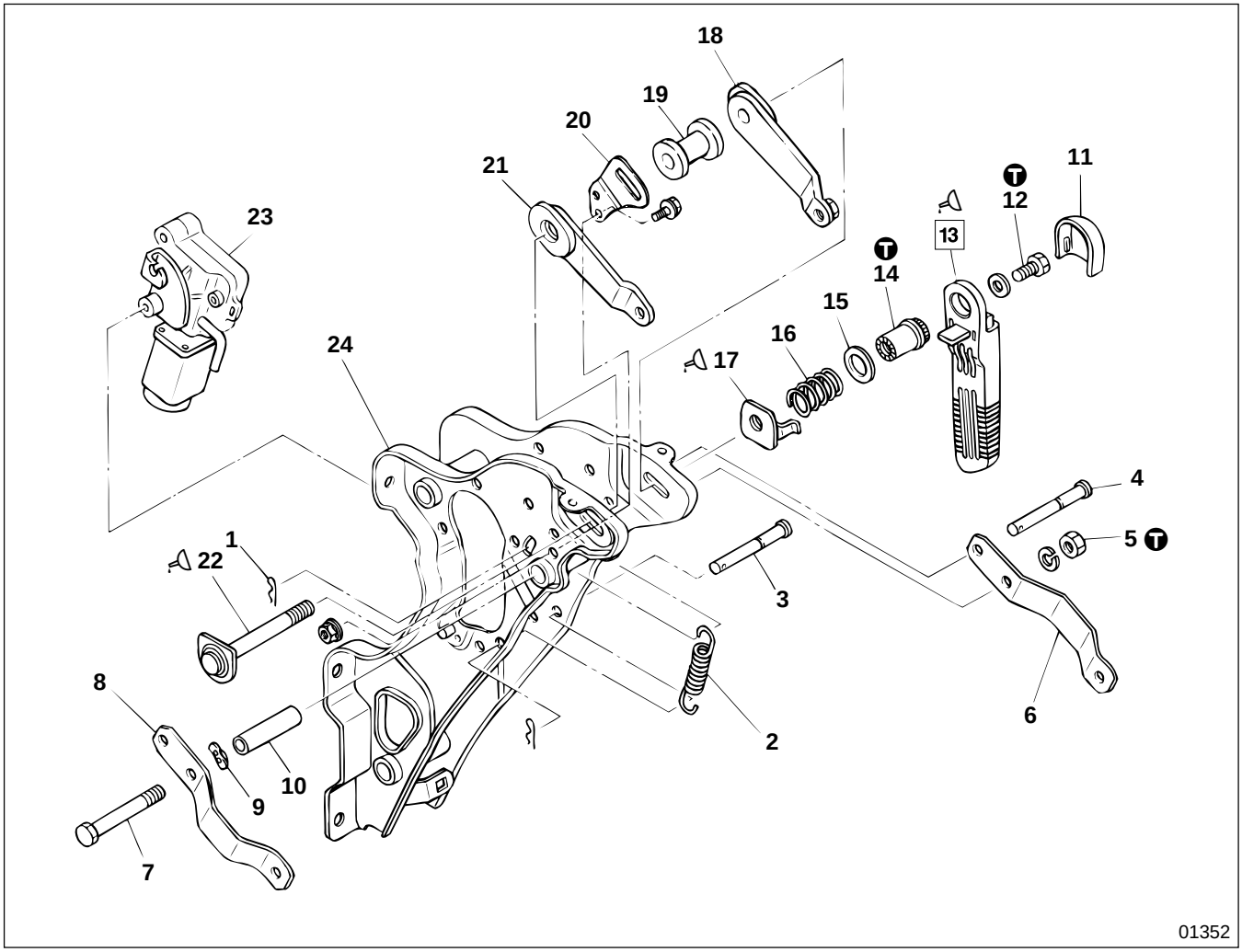

● **Disassembly sequence**

1 Snap ring
2 Coil spring
3 Clevis pin
4 Clevis pin
5 Nut
6 Lower lever, RH
7 Bolt
8 Lower lever, LH
9 Wave washer
10 Collar
11 Lock lever cap
12 Bolt
13 Lock lever
14 Nut
15 Washer
16 Coil spring
17 Washer and stopper set
18 Upper lever, RH
19 Collar
20 Steering column plate
21 Upper lever, LH
22 Adjusting bolt
23 Fuel-cut motor Gr 13 and Gr 54
24 Steering column bracket

● **Assembly sequence**

Follow the disassembly sequence in reverse.

Service standards

Unit : mm {in.}

Location	Maintenance item	Standard value	Limit	Remedy
2	Coil spring load (Installed length 106.5 {4.19})	115 N {26 lbf, 11.9 kg}	—	Replace
13	Play at lock lever tip	2.5 {0.098} or less	3.0 {0.12} or less	Replace
	Lock lever working angle	36 to 46°	—	Adjust

Tightening torque

Unit : N·m {lbf.ft, kgf·m}

Location	Parts to be tightened	Tightening torque	Remarks
5	Nut (Lower lever mounting)	36.3 {27, 3.7}	—
12	Bolt (Lock lever mounting)	9.8 {7.2, 1}	—
14	Nut (Upper lever mounting)	41.2 to 44.1 {31 to 33, 4.3 to 4.5}	—

Lubricant

Location	Points of application	Kinds	Quantity
13	Serration area on lock lever	Chassis grease [NLGI No.1 (Ca soap)]	As required
17	Friction surfaces of stopper and steering column bracket	Chassis grease [NLGI No.1 (Ca soap)]	As required
22	Friction surfaces of adjusting bolt and steering column bracket	Chassis grease [NLGI No.1 (Ca soap)]	As required
	Adjusting bolt thread area	Chassis grease [NLGI No.1 (Ca soap)]	As required

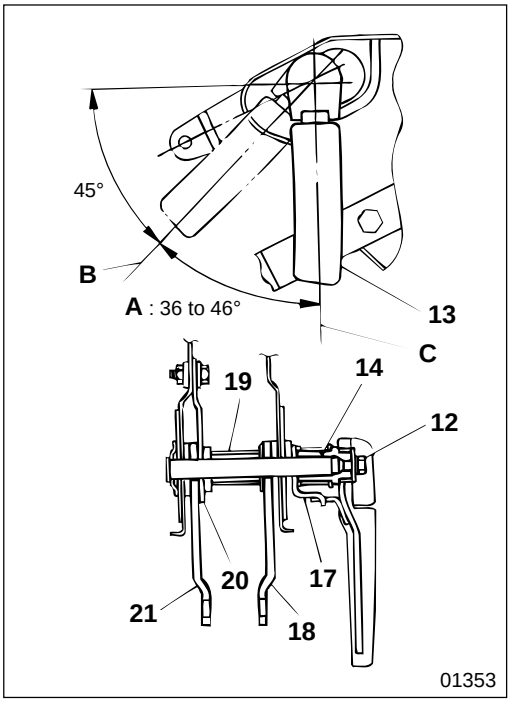

◆ Service procedure

13 **Installation of lock lever**

- Tighten nut **14** at specified torque.
- Install lock lever **13** at position **B** so it is within standard working angle **A** from where the lock lever hits stopper **17**.
- Pull up lock lever **13** to position **B**, and make sure that upper levers **18**, **21** moves vertically, as well as horizontally, smoothly.
- Pull down lock lever **13** to position **C**, and make sure that upper levers **18**, **21** are securely locked.

POWER STEERING BOOSTER

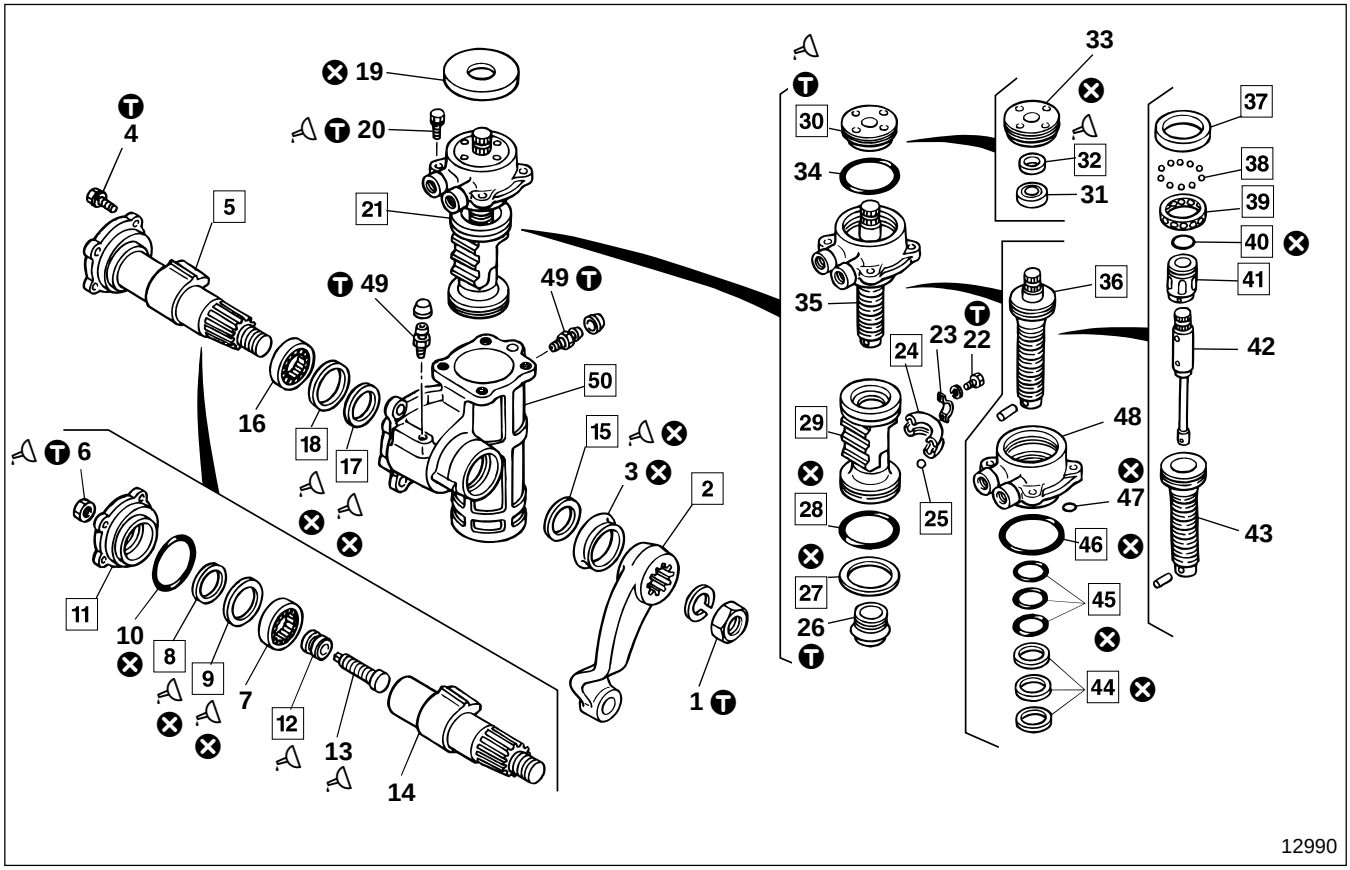

● **Work before disassembly**

P37-26

● **Disassembly sequence**

1 Lock nut
2 Pitman arm
3 Dust cover
4 Bolt
5 Sector shaft assembly and side cover assembly
6 Nut
7 Needle bearing
8 Backup ring
9 Y-packing
10 O-ring
11 Side cover
12 Retainer
13 Adjusting screw
14 Sector shaft
15 Oil seal
16 Needle bearing
17 Backup ring
18 Y-packing
19 Dust cover
20 Bolt
21 Ball screw assembly
22 Screw
23 Ball tube clip
24 Ball tube
25 Steel ball
26 Plug
27 Seal ring
28 O-ring
29 Piston
30 Adjusting plug assembly
31 Ball bearing
32 Oil seal
33 Adjusting plug
34 O-ring
35 Worm shaft assembly and valve housing assembly
36 Worm shaft assembly
37 Side race
38 Steel ball
39 Bearing cage
40 Seal ring
41 Rotor
42 Stub shaft
43 Worm shaft
44 Seal ring
45 O-ring
46 O-ring
47 O-ring
48 Valve housing
49 Plug < FM657 >
50 Body (Cylinder)

⊗ : Non-reusable parts

NOTE

- **Do not remove needle bearing 7 or 16 unless they are faulty.**
- **Do not remove retainer 12 or adjusting screw 13 unless they are faulty.**
- **Have a tray or box ready to catch steel balls 25, 38.**

● **Assembly sequence**

49 → 21 → 20 → 19 → 18 → 17 → 16 → 15 → 5 → 4 → 3 → 2 → 1

36 : 43 → 42 → 41 → 40 → 39 → 38 → 37

35 : 48 → 47 → 46 → 45 → 44 → 36

40 : 33 → 32 → 31

21 : 35 → 34 → 30 → 29 → 28 → 27 → 26 → 25 → 24 → 23 → 22

5 : 14 → 13 → 12 → 6
11 → 10 → 9 → 8 → 7 → 6

● **Adjustment after assembly**

P37-27

Service standards

Unit : mm {in.}

Location	Maintenance item			Standard value (Basic diameter in [ ])	Limit	Remedy
5, 21	Backlash between sector shaft and ball screw (Measure at the end of pitman arm)		FK617	0.2 {0.0079}	0.5 {0.020}	*l*=250 {9.84}*1
			FM617	0.2 {0.0079}	0.5 {0.020}	*l*=300 {11.8}*1
			FM657	0.2 {0.0079}	0.5 {0.020}	*l*=305 {12.0}*2
12	Retainer			Tighten the retainer then slacken off by 180°, retighten at 39 N·m {29 lbf.ft, 4 kgf·m}, then slacken off by 20°. Make sure that the adjusting screw turns smoothly, then caulk it	—	—
13, 14	Axial play of adjusting screw and sector shaft			0.01 to 0.10 {0.00039 to 0.0039}	0.2 {0.0079}	Replace
14	Outer diameter of sector shaft	Adjusting screw side	FK617	ø39.975 {1.574}	ø39.875 {1.570}	Replace
			FM617	ø47.975 {1.889}	ø47.875 {1.885}	
			FM657	ø47.975 {1.889}	ø47.875 {1.885}	
		Pitman arm side	FK617	ø44.975 {1.771}	ø44.875 {1.767}	
			FM617	ø47.975 {1.889}	ø47.875 {1.885}	
			FM657	ø57.975 {2.282}	ø57.875 {2.279}	
29, 43	Side play (Play towards the diameter direction)			—	0.5 {0.02} or less	Replace
29, 49	Clearance between outer diameter of piston and inner diameter of body (Cylinder)		FK617	[85 {3.3}] 0.11 {0.0043}	0.16 {0.0063}	Replace
			FM617	[90 {3.5}] 0.11 {0.0043}	0.16 {0.0063}	
			FM657	[100 {3.9}] 0.11 {0.0043}	0.16 {0.0063}	
41, 43	Clearance between outer diameter of rotor and worm shaft			[35.5 {1.40}] 0.02 {0.00079}	0.03 {0.0012}	Replace

*1 : Adjust (Measure with applied load of ±15 N {3.3 lbf, 1.5 kgf})

*2 : Adjust (Measure with applied load of ±20 N {4.4 lbf, 2 kgf})

POWER STEERING BOOSTER

Tightening torque

Unit : N·m {lbf.ft, kgf·m}

Location	Parts to be tightened		Tightening torque	Remarks
1	Lock nut (Pitman arm mounting)	FK617	269.5±24.5 {200±18, 27.5±2.5}	—
		FM617	338.1±24.5 {250±18, 34.5±2.5}	
		FM657	416.5±24.5 {305±18, 42.5±2.5}	
4	Bolt (Side cover mounting)	FK617, FM657	53.9 to 63.7 {40 to 47, 5.5 to 6.5}	—
		FM617	49.1 to 53.9 {36 to 40, 5 to 5.5}	
6	Nut (Adjusting screw tightening)	FK617	63.7 to 73.5 {47 to 54, 6.5 to 7.5}	—
		FM617, FM657	115 to 125 {87 to 94, 12 to 13}	
20	Bolt (Valve housing tightening)	FK617, FM617	98.1 to 107.9 {72 to 80, 10 to 11}	—
		FM657	115 to 125 {87 to 94, 12 to 13}	
22	Screw (Ball tube clip mounting)		4.41 to 5.39 {3.3 to 4.0, 0.45 to 0.55}	—
26	Plug	FK617, FM617	246 to 274 {180 to 200, 25 to 28}	—
		FM657	295 to 390 {215 to 290, 30 to 40}	
30	Adjusting plug assembly	FK617	177 to 195 {130 to 145, 18 to 20}	—
		FM617, FM657	226 to 244 {165 to 180, 23 to 25}	
49	Plug	FM657	6.9 to 13 {5.1 to 9.4, 0.7 to 1.3}	—

Lubricant and sealant

Location	Points of application	Kinds	Quantity
6	Contact surfaces of nut and side cover	Hermetic seal 101Y or THREEBOND 1102	As required
8, 17	Backup ring inner periphery	Multipurpose grease [NLGI No.2 (Li soap)]	As required
9, 18	Pack interior of Y-packing	Multipurpose grease [NLGI No.2 (Li soap)]	As required
12	Pack interior of retainer	Multipurpose grease [NLGI No.2 (Li soap)]	As required
13	Contact surfaces of adjusting screw and sector shaft	Multipurpose grease [NLGI No.2 (Li soap)]	As required
	Thread area of adjusting screw	Hermetic seal 101Y or THREEBOND 1102	As required
15, 32	Pack interior of oil seal	Multipurpose grease [NLGI No.2 (Li soap)]	As required
30	Adjusting plug assembly outer periphery	Hermetic seal 101Y or THREEBOND 1102	As required

Special tools

Unit : mm {in.}

Location	Tool name and shape	Part No.	Application
2	Pitman arm puller Part No. / **A** / **B** MH061687 *910-00183 / 59 {2.32} / ø92 {3.62} *910-00184 / 59 {2.32} / ø100 {3.94} 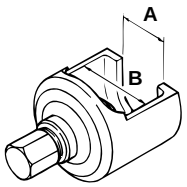 01355	MH061687 *910-00183 *910-00184	Removal of pitman arm

* JIDOSHA KIKI part No.

Unit : mm {in.}

Location	Tool name and shape	Part No.	Application
8, 15, 17	Inserting tool assembly 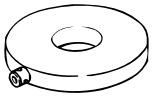 01356	MC811971 *910-11001	Forming of backup ring and press-fitting of oil seal
8, 17	Inserting tool 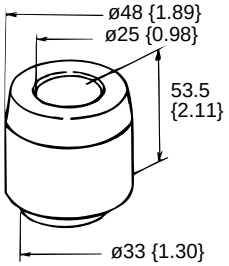 01358	MC811974 *910-21715	Forming of backup ring
10, 27, 28, 34, 40, 44, 45, 46, 47	Needle 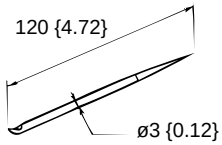 02288	MC811948 *910-21200	Removal of O-ring and seal ring
12	Bar 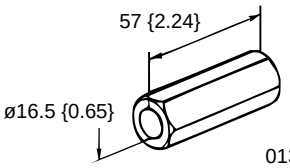 01360	MC811955 *910-22811	Turning of retainer
	Squeeze tool 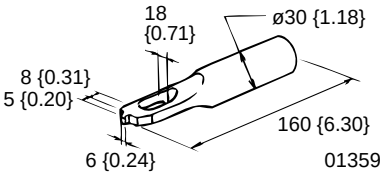 01359	MC811950 *910-21801	Caulking of retainer
27	Inserting tool 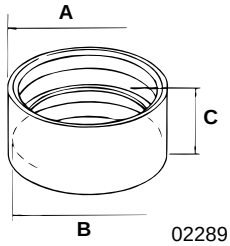 02289	MC813516 *910-21718 < FK617, FM617 > MC811985 *910-21701 < FM656 >	Forming of piston seal ring
30	Wrench assembly 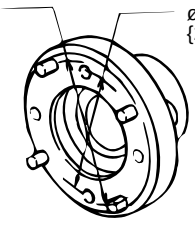 01357	MC811970 *910-10743	Removal and installation of adjusting plug assembly
	Attachment (**A** : Adapter) (**B** : Bolt)  02290	MC811969 *910-10671 (**A** : *910-23581) (**B** : *910-23194)	Holding down of valve housing

Part No.	A	B	C
MC813516 *910-21718	ø98 {3.86}	ø90.05 {3.55}	50 {1.97}
MC811985 *910-21701	ø110 {4.33}	ø103 {4.06}	37 {1.46}

* JIDOSHA KIKI part No.

Unit : mm {in.}

Location	Tool name and shape	Part No.	Application
32	Press-fitting tool 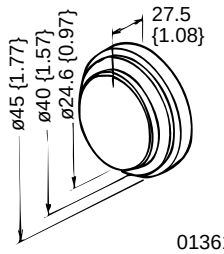	MC811972 *910-20404	Press-fitting of oil seal
37 to 39	Tool assembly 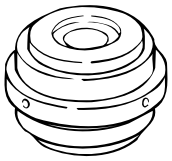	MC811968 *910-10611	Assembly of thrust bearing
	Guide assembly 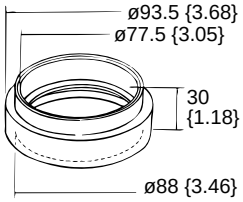	MC090148 *910-23033	
40	Inserting tool 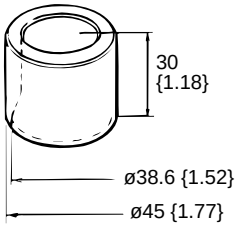	*910-22777	Forming of rotor seal ring < FK617 >
40, 44	Inserting tool 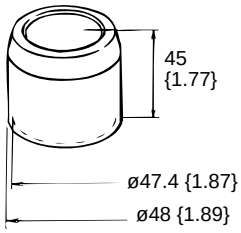	MC811975 *910-22722	Forming of rotor seal ring < FM617, FM657 > and forming of valve housing seal ring

* JIDOSHA KIKI part No.

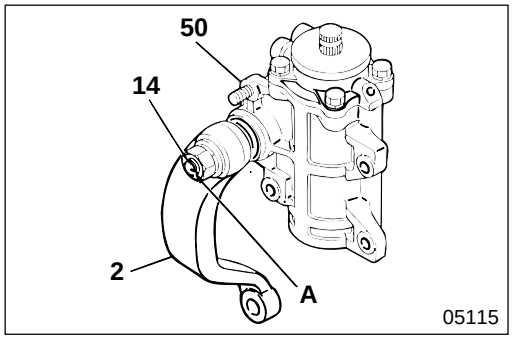

◆ Service procedure

● **Work before disassembly**

Move pitman arm **2**, and align slit **A** of the V-groove of sector shaft **14** to the center of body **50** so that the gears are in neutral position.

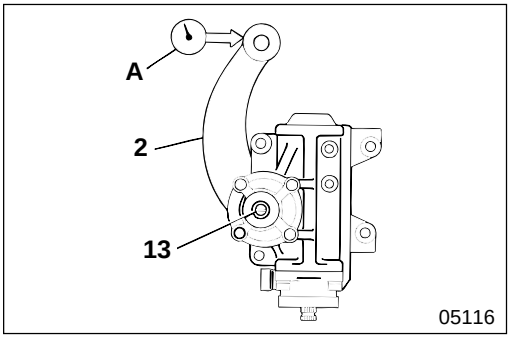

● **Adjustment after assembly**

Adjustment of backlash

- (Carry out this work with the gears in neutral position.)
  Measure play at the end of pitman arm **2** with dial gauge **A**, and adjust adjusting screw **13** so that reading meets the standard value.

Measuring load : < FK617, FM617 > ±15 N {3.3 lbf, 1.5 kgf}
< FM657 > ±20 N {4.4 lbf, 2 kgf}

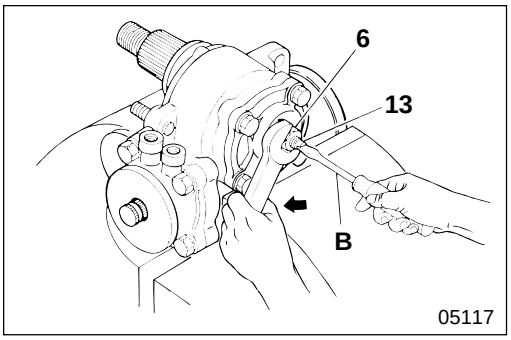

Tightening nut

- After adjusting backlash, apply sealer to thread area of adjusting screw **13**. Hold it in place with screwdriver **B** and tighten nut **6** at specified torque.

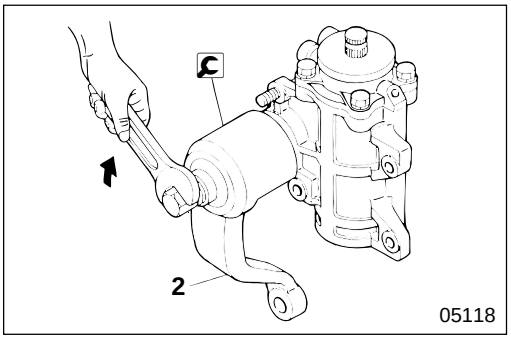

2 Pitman arm

[Removal]

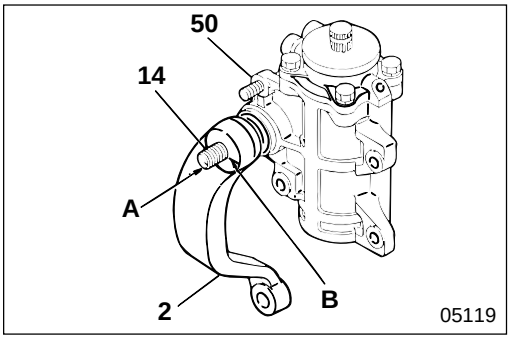

[Installation]
Align slit **A** of the V-groove of sector shaft **14** to the center of body **50**, and align slit **B** of the V-groove of pitman arm **2** on the same line.

NOTE

Have pitman arm 2 make a full stroke of the piston to make sure that the piston moves smoothly.

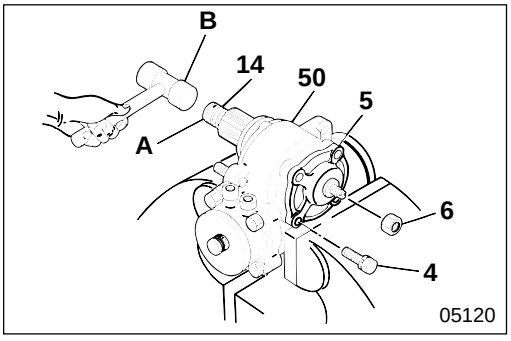

5 Sector shaft assembly and side cover assembly

[Removal]

- Make sure that the piston is in the neutral position (slit **A** of the V-groove at one end of sector shaft **14** is aligned with the center of body **50**).
- Tap the end of sector shaft **14** and pull out sector shaft assembly and side cover assembly **5**.
  B : Plastic-headed mallet

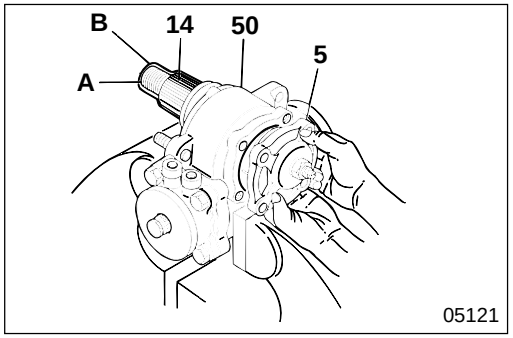

[Installation]
Position sector shaft **14** of sector shaft assembly and side cover assembly **5** so that slit **A** of its V-groove is aligned with the center of body **50**, and the piston gear and sector shaft gear engage at their centers.

CAUTION

Before installation, apply tape B to the Y-packing to prevent it being damaged by the threads of sector shaft 14.

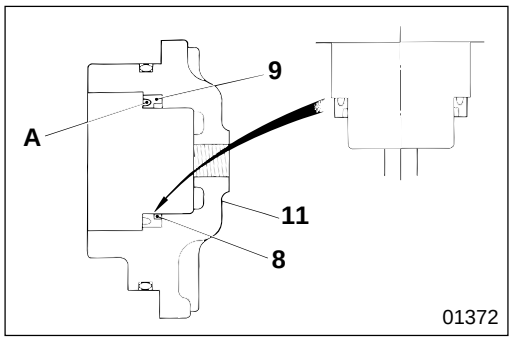

8 **9** **Backup ring, Y-packing**

[Installation]
- Install Y-packing **9** into side cover **11** in the direction as illustrated.
- After installing backup ring **8**, pack groove **A** of Y-packing **9** with grease.

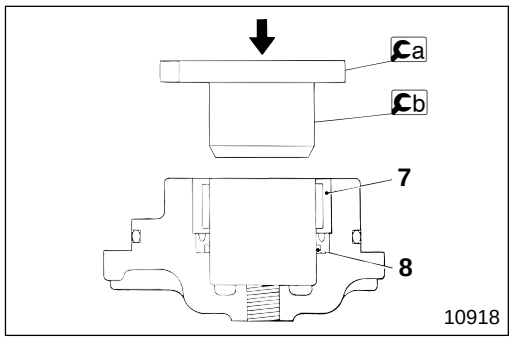

- After installing needle bearing **7** into backup ring **8**, form the bent up part of the backup ring using a insert tool assembly and b insert tool.

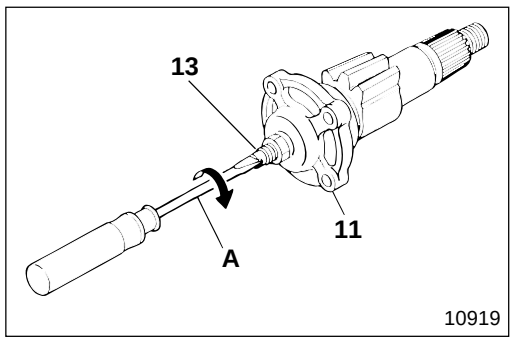

11 **Removal of side cover**

Screw in adjusting screw **13** and remove side cover **11.**

A : Screwdriver

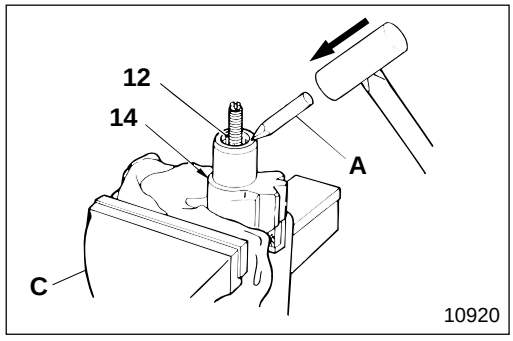

12 **Retainer**

Disassemble sector shaft **14**, as follows, only if it is faulty :
[Removal]
- Pry up (2 points) of retainer **12**.

A : Chisel

CAUTION

Make sure you use a cloth when you grip sector shaft 14 in vise C to prevent damage.

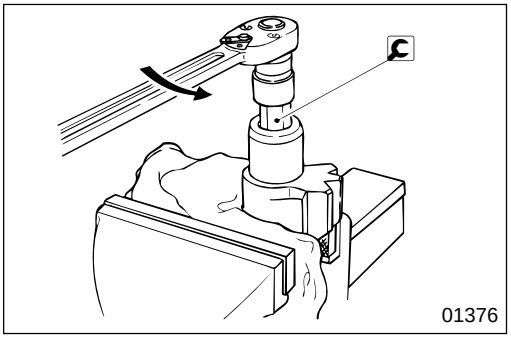

- Remove retainer **12** using [C] bar.

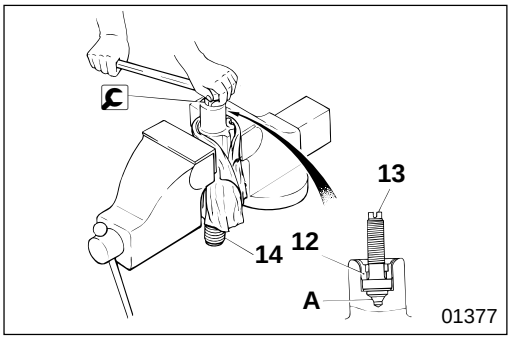

[Installation]

- Pack adjusting screw **13** mounting hole **A** of sector shaft **14** with grease.
- Install adjusting screw **13** into sector shaft **14**.
- Install retainer **12** into sector shaft **14** using [C] bar.
- After installation, slacken off by 180°, retighten at 39 N·m {29 lbf.ft, 4 kgf·m}, then slacken off by 20°.
- Make sure that adjusting screw **13** turns smoothly.

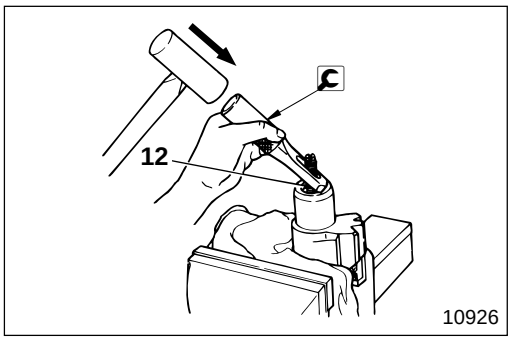

- After installing retainer **12**, caulk the retainer (2 points) using [C] squeeze tool.

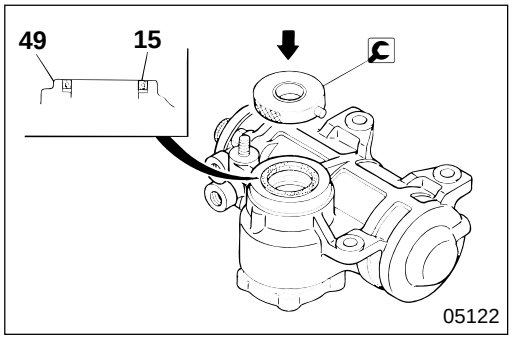

15 **Installation of oil seal**

Install oil seal **15** into body **50** in the direction as illustrated.

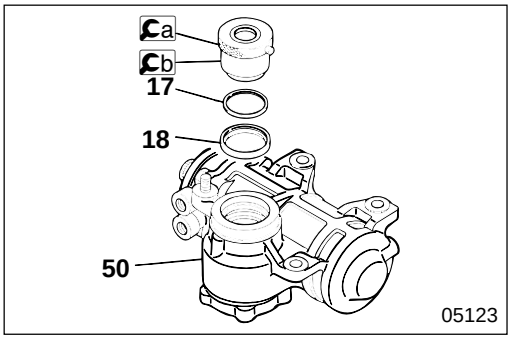

17 **18** **Installation of backup ring and Y-packing**

- Install Y-packing **18** and backup ring **17** to body **50**.
- Pack the groove of Y-packing **18** with grease.
- Form the shape of backup ring **17** using [Ca] insert tool assembly and [Cb] insert tool.

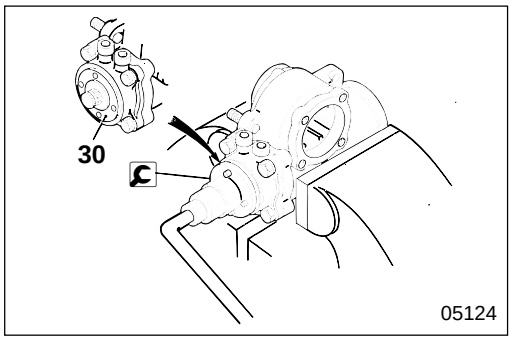

21 **Ball screw assembly**

[Removal]

- Loosen adjusting plug assembly **30** by approximately 180° using wrench assembly.

CAUTION

Make sure you only loosen adjusting plug assembly 30, do not undo it completely because the bearing inside the valve housing might spring out.

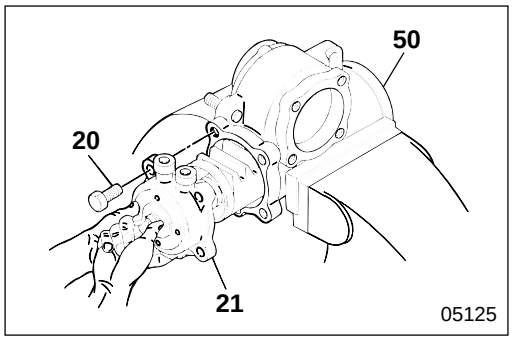

- Loosen bolt **20** and remove ball screw assembly **21** from body **50**.

CAUTION

- **Make sure that the balls of the ball screw do not spring out.**
- **Be careful not to damage the piston or the interior of body 50.**

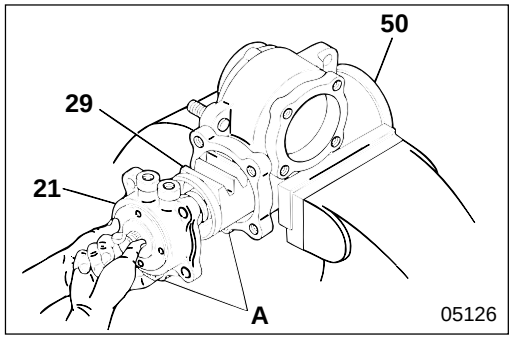

[Installation]

- Install ball screw assembly **21** into body **50**, holding piston **29** so it will not turn.

CAUTION

Be careful not to damage the piston seal ring or the interior of body 50.

- Align oil passage ports **A** of ball screw assembly **21** and body **50**, then tighten.

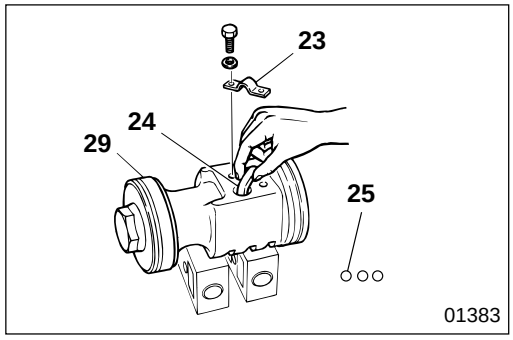

24 **25** **Ball tube and steel ball**

First remove steel balls **25** from piston **29** and place them in the receiving tray, remove ball clip **23**, grip ball tube **24** with your fingers and pull it out gently.

CAUTION

Be careful not to loose any steel balls 25.
< FK617, FM617 (×30) >
< FM657 (×32) >

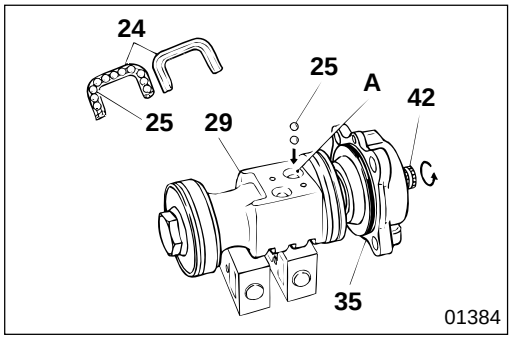

[Installation]

- Pack the interior of ball tube **24** with grease, lay 10 or 11 steel balls **25** in place, then mount the other side of the ball tube.
- Place piston **29** on a level surface, align assembled worm shaft assembly and valve housing assembly **35** and the piston ball race, then drop steel balls **25** through ball tube hole **A** while turning stub shaft **42**.

CAUTION

Make sure that you do not pull out worm shaft assembly and valve housing assembly 35 too far, or steel balls 25 will drop out of the ball race.

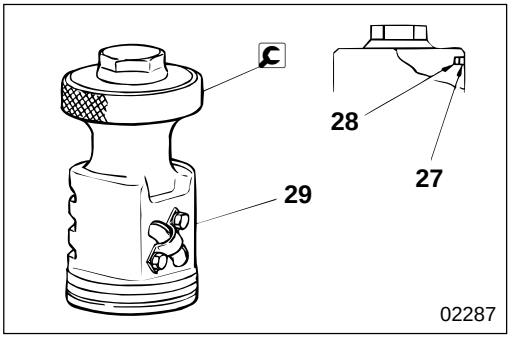

27 **28** **Installation of O-ring and seal-ring**

Install O-ring **28** and seal ring **27** in the outside grooves of piston **29**, then form the shape of the seal ring with 🔧 inserting tool.

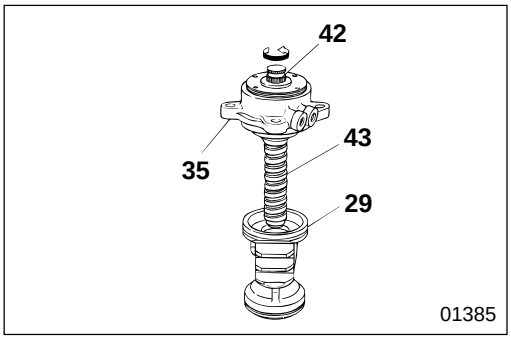

29 **Piston**

[Removal]
Holding worm shaft assembly and valve housing assembly **35** so that piston **29** is at the bottom, turn stub shaft **42** and remove the piston.

CAUTION⚠

Be careful not to tilt piston 29 when you do this, otherwise steel balls 25 in the races of the piston and worm shaft 43, will drop into the piston.

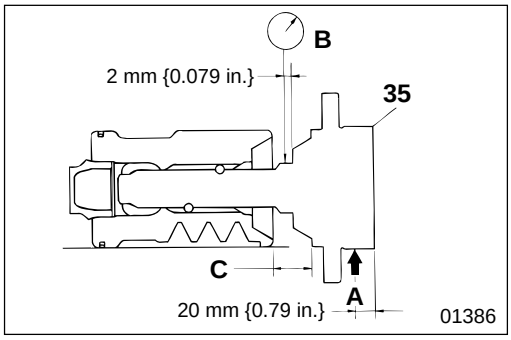

[Inspection]
Measure side play (play in axial direction) **B** of worm shaft assembly and valve housing assembly **35** when 49 N {11 lbf, 5 kgf} is applied to **A** as illustrated.

C :	< FK617 >	30.45 mm {1.20 in.}
	< FM617 >	30.24 mm {1.19 in.}
	< FM657 >	42.8 mm {1.69 in.}

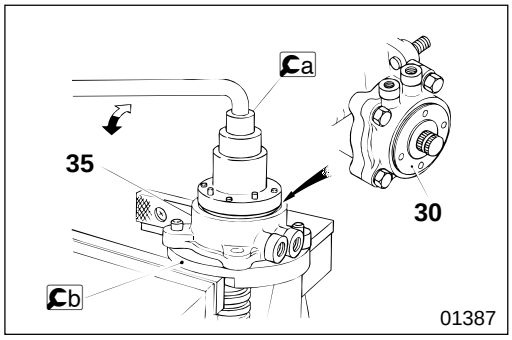

30 **Installation of adjusting plug assembly**

- After tightening adjusting plug assembly **30** of worm shaft assembly and valve housing assembly **35** at specified torque, slacken off by approximately 180°.

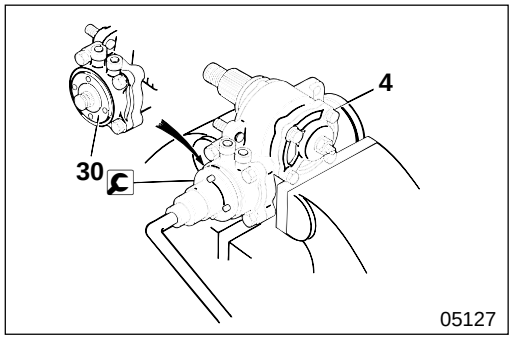

- Tighten bolt **4** at specified torque, then retighten adjusting plug assembly **30** at specified torque using 🔧 wrench assembly.

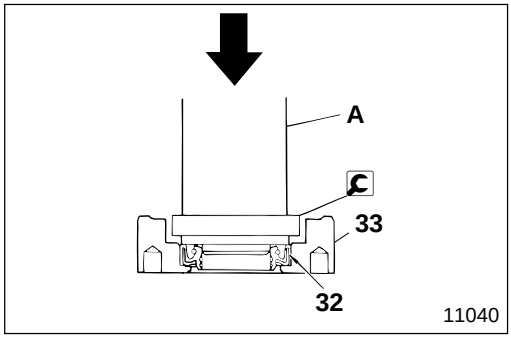

32 **Installation of oil seal**

Install oil seal **32** into adjusting plug **33** in the direction as illustrated.
A : Hand press

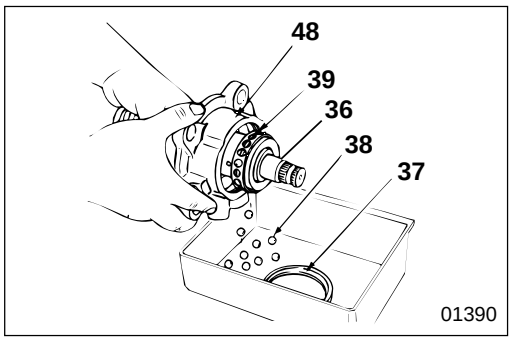

36 **Worm shaft assembly**

[Removal]
Push out worm shaft assembly **36** from valve housing **48** by pushing out the side of the worm shaft assembly where the piston is assembled.

NOTE

Have a tray or box ready to catch side race 37, steel balls 38, and bearing cage 39 as these items separate on removal.

[Installation]

CAUTION

Be careful that worm shaft assembly 36 ball race does not damage seal ring 44.

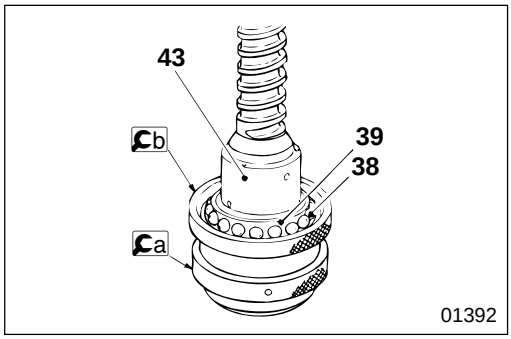

37 **to** **39** **Installation of side race, steel ball, and bearing cage**

- Install b guide assembly on a tool assembly, and insert worm shaft **43** in the direction as illustrated.
- Assemble bearing cage **39** and steel balls **38** on worm shaft **43**.

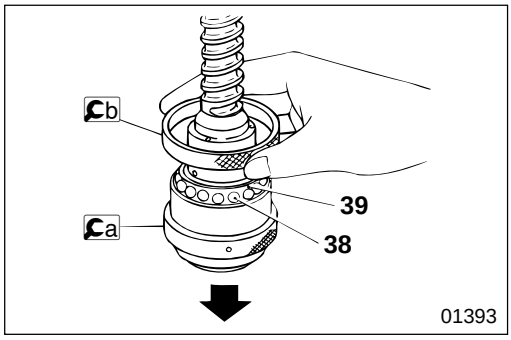

- Hold down b with your hand and slide a downward, so that you can position steel balls **38** as specified.

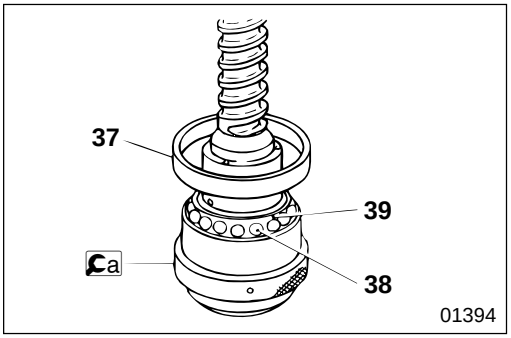

- Install side race **37** on top of steel balls **38** and bearing cage **39**.

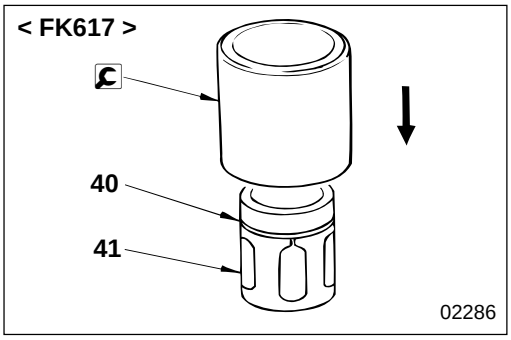

40 **Installation of seal ring**

- Install seal ring **40** onto rotor **41**.
- Form seal ring **40** using insert tool.

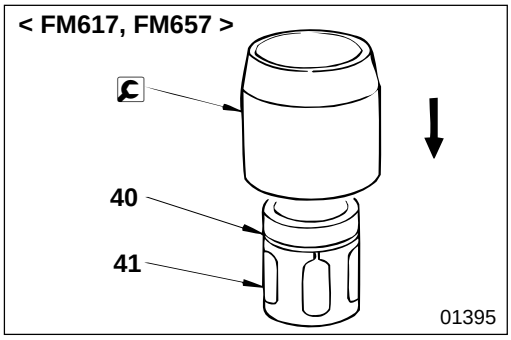

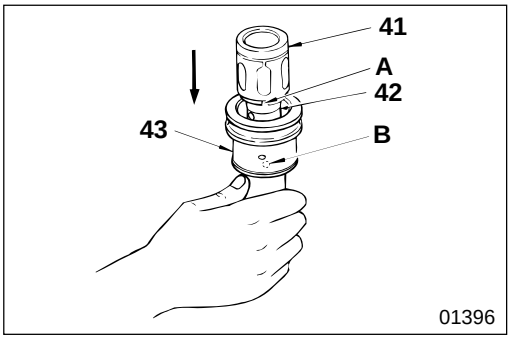

41 **Installation of rotor**

Install rotor **41** between stub shaft **42** and worm shaft **43** so that indent **A** of the rotor fits positioning pin **B** of the worm shaft.

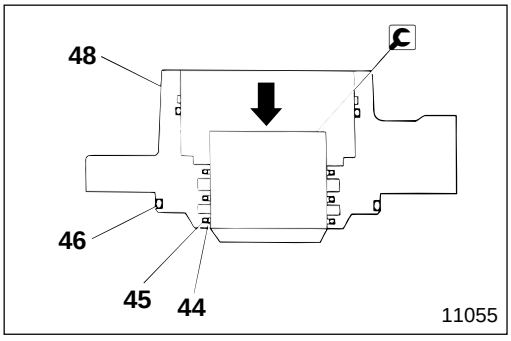

44 **to** **46** **Installation of seal ring and O-ring**

- Install seal ring **44** and O-rings **45**, **46** into valve housing **48**.
- Form seal ring **44** using insert tool.

POWER STEERING OIL PUMP

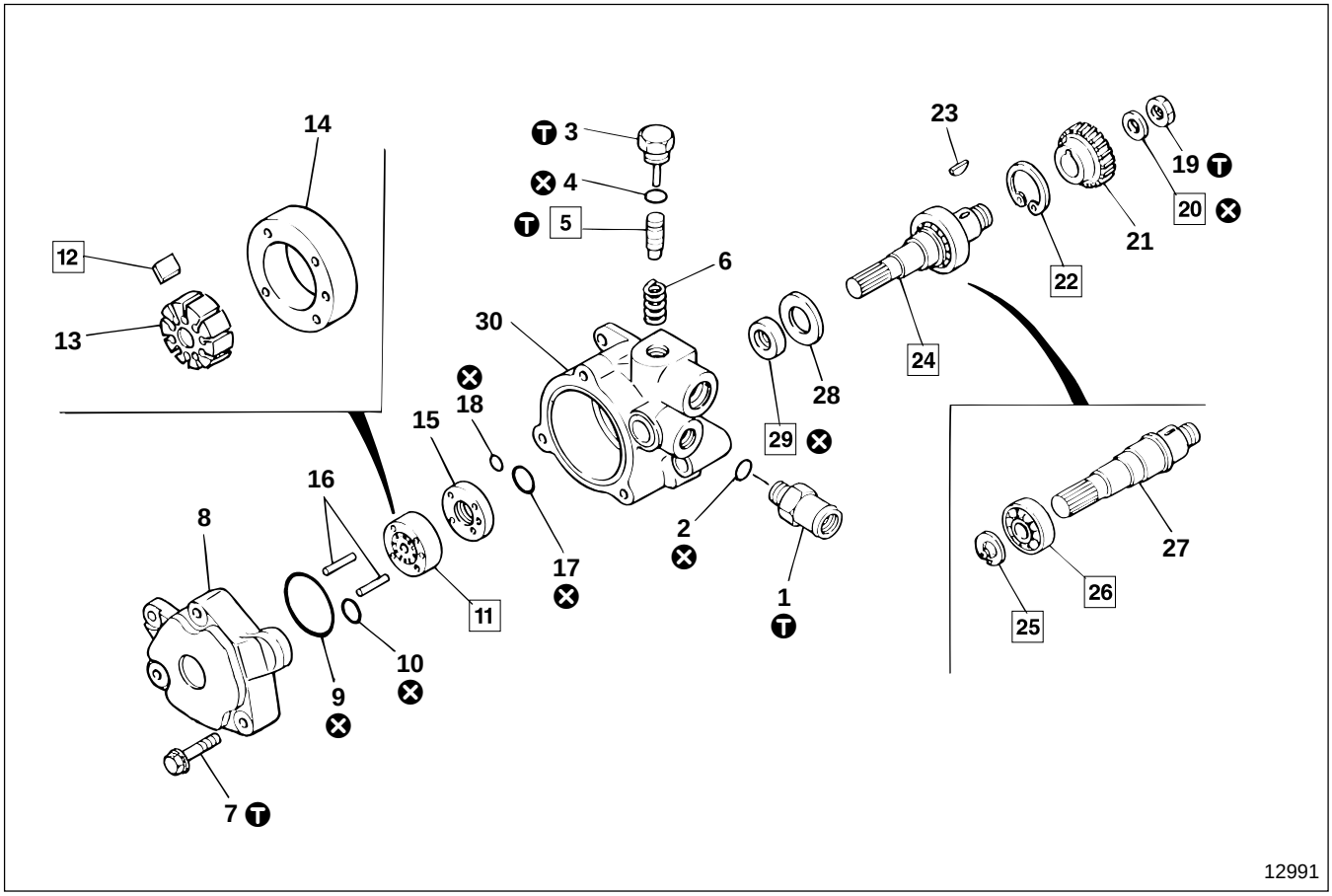

● **Disassembly sequence**

1 Hose connector
2 O-ring
3 Plug
4 O-ring
5 Flow control valve assembly
6 Flow control spring
7 Bolt
8 Rear body
9 O-ring
10 O-ring
11 Cartridge assembly
12 Vane
13 Rotor
14 Cam
15 Pressure plate
16 Straight pin
17 O-ring
18 O-ring
19 Nut
20 Lock washer
21 Gear
22 Retaining ring
23 Key
24 Drive shaft assembly
25 Retaining ring
26 Ball bearing
27 Drive shaft
28 Retaining ring
29 Oil seal
30 Front body

⊗ : Non-reusable parts

NOTE

Do not disassemble flow control valve assembly 5 unless it is faulty.

● **Assembly sequence**

Follow the disassembly sequence in reverse.
Repair kit : Seal kit, Cartridge assembly kit

Service standards

Unit : mm {in.}

Location	Maintenance item	Standard value	Limit	Remedy
5, 30	Clearance between flow control valve assembly and front body	—	0.03 {0.0012}	*1
8, 15	Stepped wear on rear body and pressure plate where it is subject to friction against rotor and vane	—	0.01 {0.00039}	*2

*1 No seizure, wear, or scoring sufficient to catch a finger nail. Replace flow control valve assembly or front body.
*2 No seizure, wear, or scoring sufficient to catch a finger nail. Replace rear body or pressure plate.

Tightening torque

Unit : N·m {lbf.ft, kgf·m}

Location	Parts to be tightened	Tightening torque	Remarks
1	Hose connector	49 to 58.8 {36 to 43, 5 to 6}	—
3	Plug	49 to 58.8 {36 to 43, 5 to 6}	—
5	Flow control valve assembly	12±2 {8.7±1.4, 1.2±0.2}	—
7	Bolt (Rear body mounting)	49 to 58.8 {36 to 43, 5 to 6}	—
19	Nut (Gear mounting)	29 to 39 {22 to 29, 3 to 4}	—

Special tools

Unit : mm {in.}

Location	Tool name and shape	Part No.	Application
22	Pliers	*910-22570	Removal and installation of retaining ring
25	Pliers	*910-22580	Removal and installation of retaining ring
26	Press-fitting tool	*910-22954	Removal of ball bearing
29	Stick	*910-21632	Driving out of oil seal
	Press-fitting tool	*910-21664	Press-fitting of oil seal

* JIDOSHA KIKI part No.

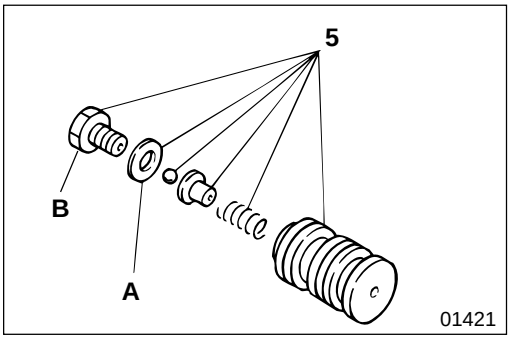

◆ Service procedure

5 Adjustment of flow control valve assembly

When you reassemble flow control valve assembly **5**, adjust the assembly so that the relief pressure conforms to the standard value. Do this with shim **A**. The thick shim lowers pressure, and the thin shim increases pressure.
After adjustment, tighten relief valve **B** at specified torque.

Shim thickness	Pressure variation
0.5mm {0.020 in.}	Approximately 1310 kPa {190 lbf/in², 13.4 kgf/cm²}
0.2mm {0.0079 in.}	Approximately 520 kPa {75 lbf/in², 5.3 kgf/cm²}

P37-15

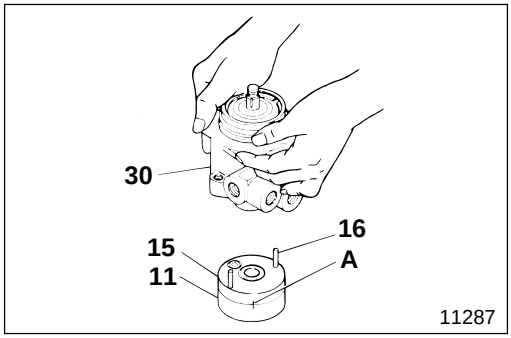

11 Removal and installation of cartridge assembly

[Removal]

- Remove cartridge assembly **11**, pressure plate **15** and straight pin **16** together from front body **30**.
- Put alignment marks **A** around the outer circumferences of cartridge assembly **11** and pressure plate **15**.

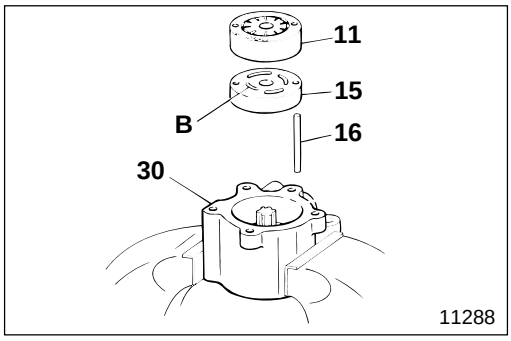

[Installation]

- Install straight pin **16** into front body **30**.
- Install pressure plate **15** onto front body **30**, so that groove **B** of the pressure plate faces the direction as illustrated.
- Align cartridge assembly **11** with straight pin **16**, then install the cartridge assembly.

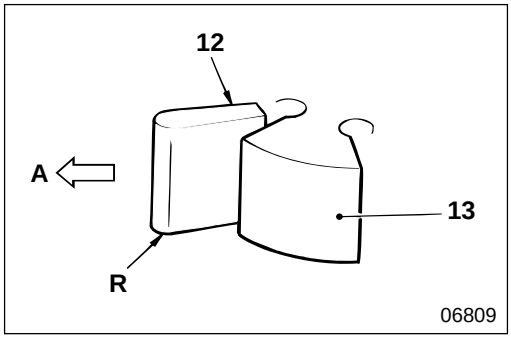

12 Installation of vane

With point **R** of vane **12** facing outside **A**, install it into rotor **13** and make sure that the vane moves smoothly. If it is faulty, replace the cartridge assembly.

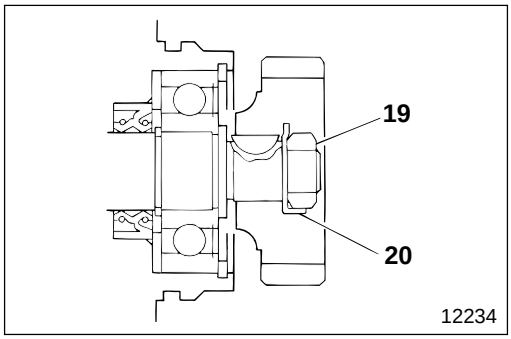

20 Installation of lock washer

After installing nut **19**, bend up one lug on the circumference of lock washer **20**.

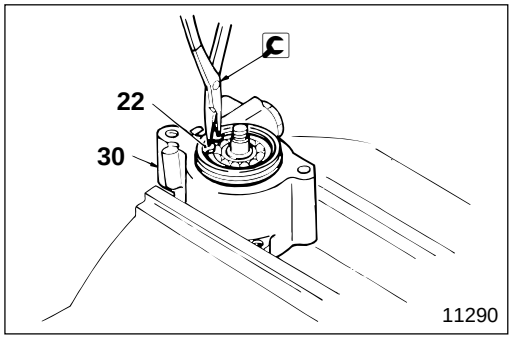

22 Removal of retaining ring

Remove retaining ring **22** using pliers.

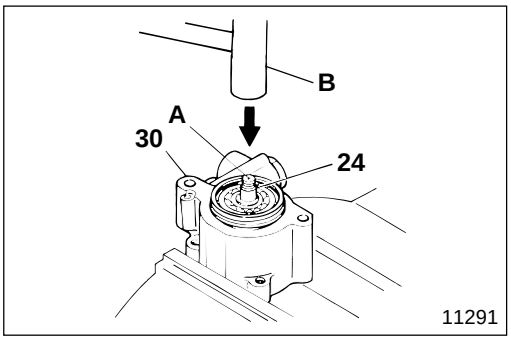

24 **Installation of drive shaft assembly**

If it is hard to install drive shaft assembly **24** in the correct position of front body **20** by hand, tap the shaft to install it.

B : Plastic-headed mallet

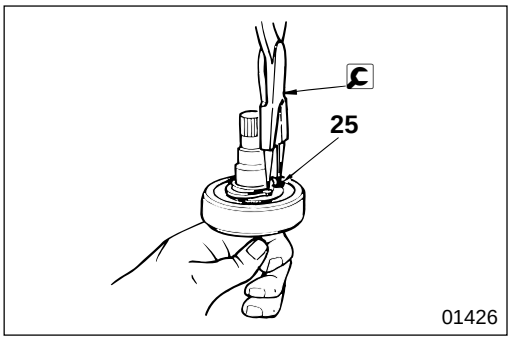

25 **Removal of retaining ring**

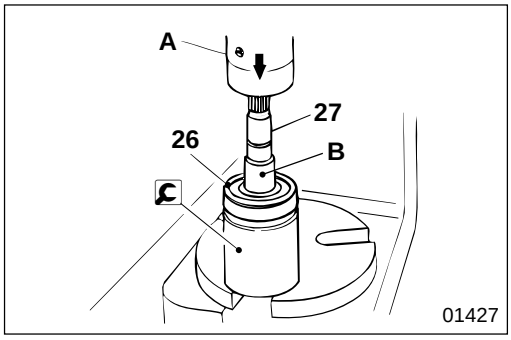

26 **Removal and installation of ball bearing**

Remove ball bearing **26** from shaft **27** using press-fitting tool. **A** : Hand press

For installation, follow the removal sequence in reverse.

CAUTION

Be careful not to damage oil seal contact surface B.

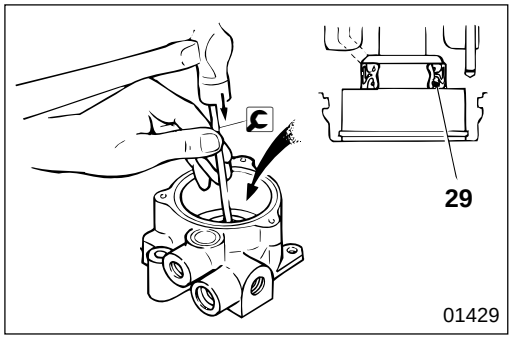

29 **Oil seal**

[Removal]

Remove oil seal **29** using stick.

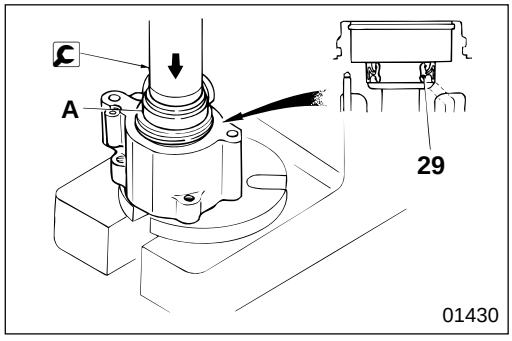

[Installation]

Install oil seal **29** in the direction as illustrated using press-fitting tool.

A : Hand press

POWER STEERING OIL TANK

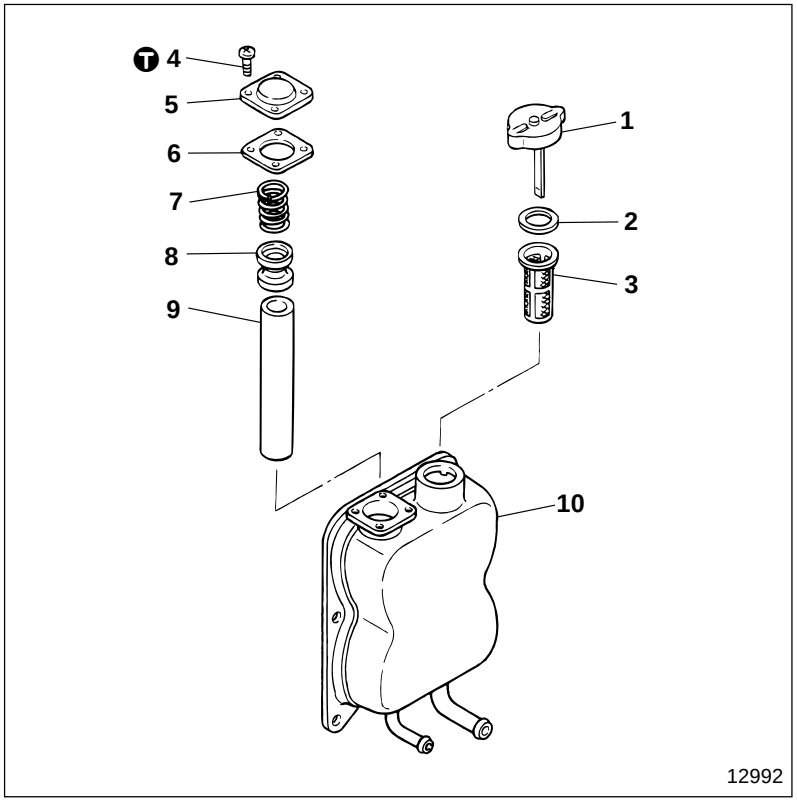

● **Disassembly sequence**

1 Filler cap
2 Packing
3 Strainer
4 Screw
5 Plate
6 Packing
7 Spring
8 Retainer
9 Return filter
10 Tank body assembly

● **Assembly sequence**

Follow the disassembly sequence in reverse.

Tightening torque

Unit : N·m {lbf.ft, kgf·m}

Location	Parts to be tightened	Tightening torque	Remarks
4	Screw (Plate mounting)	0.49 to 0.98 {0.36 to 0.72, 0.05 to 0.1}	—

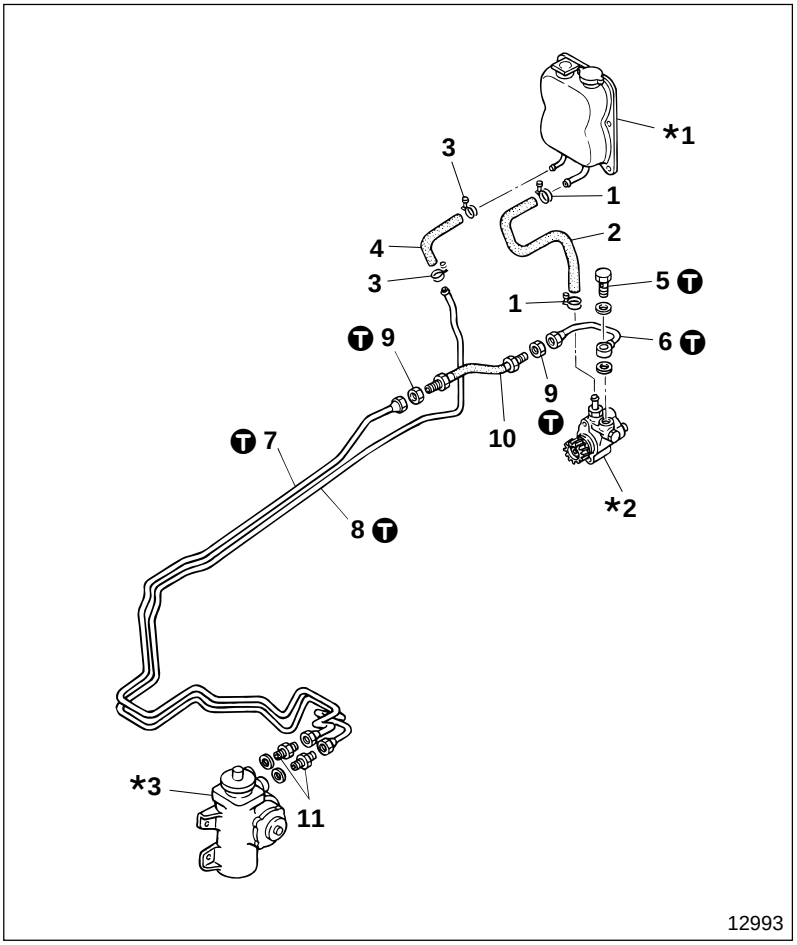

● **Removal sequence**

1 Clamp
2 Oil hose
3 Clamp
4 Oil hose
5 Bolt
6 Oil pipe
7 Oil pipe
8 Oil pipe
9 Nut
10 Oil hose
11 Connector

***1** : Power steering oil tank
***2** : Power steering oil pump
***3** : Power steering booster

● **Installation sequence**

Follow the removal sequence in reverse.

CAUTION⚠

Be sure to bleed air after removing the fluid line, failure to do so would cause the power steering to malfunction.
P37-13

T Tightening torque

Unit : N·m {lbf.ft, kgf·m}

Location	Parts to be tightened	Tightening torque	Remarks
5	Bolt (Oil pipe mounting)	125 {94, 13}	—
6	Oil pipe (Oil hose connecting)	66.69±12.75 {49±9.4, 6.8±1.3}	—
7	Oil pipe (Connector and oil hose connecting)	66.69±12.75 {49±9.4, 6.8±1.3}	—
8	Oil pipe (Connector connecting)	66.69±12.75 {49±9.4, 6.8±1.3}	—
9	Nut	66.69±12.75 {49±9.4, 6.8±1.3}	—

DRAG LINK

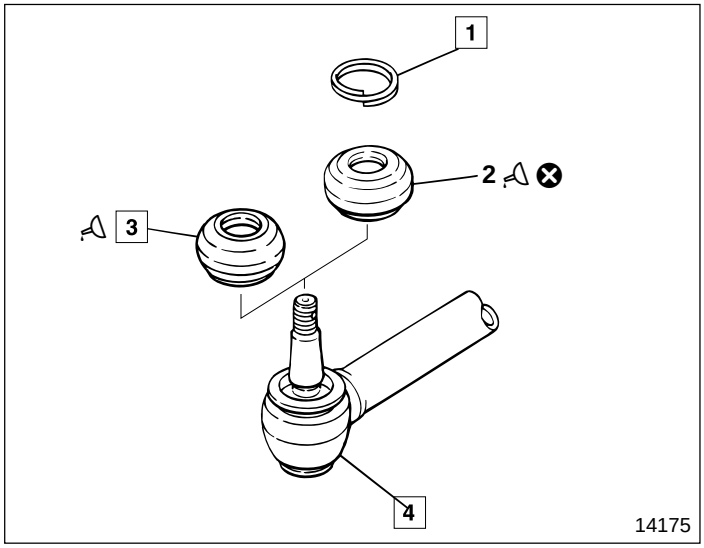

● **Disassembly sequence**

1 Clip < FK617 >
2 Dust cover < FK617 >
3 Dust cover < FM617, FM657 >
4 Drag link

⊗ : Non-reusable parts

NOTE

- **Do not remove clip 1 and dust covers 2, 3 unless they are faulty.**
- **Do not disassemble drag link 4 because it is a unit construction.**

● **Assembly sequence**

Follow the disassembly sequence in reverse.

Lubricant

Location	Points of application		Kinds	Quantity
2, 3	Lip area of dust cover		Molybdenum disulfide grease [NLGI No.2 (Li soap)]	As required
2	Pack interior of dust cover	FK617	Molybdenum disulfide grease [NLGI No.2 (Li soap)]	11 g {0.39 oz}
3	Pack interior of dust cover	FM617	Molybdenum disulfide grease [NLGI No.2 (Li soap)]	13 to 14 g {0.46 to 0.49 oz}
		FM657	Molybdenum disulfide grease [NLGI No.2 (Li soap)]	19 to 20 g {0.67 to 0.71 oz}

Special tools

Unit : mm {in.}

Location	Tool name and shape	Part No.	Application
1	Clip guide 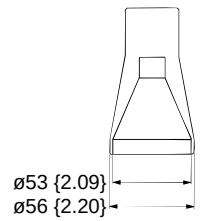	< FK617 > MH061831	Installation of clip
3	Dust cover installer A: MH061828 ø60.3 {2.37}, MH061827 ø65 {2.56} B: MH061828 ø45 {1.77}, MH061827 ø51 {2.01} C: MH061828 80 {3.15}, MH061827 ø100 {3.94} 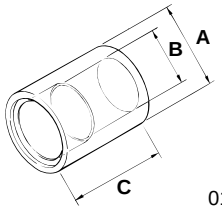	< FM617 > MH061828 < FM657 > MH061827	Installation of dust cover
	End holder A: MH061830 ø60 {2.36}, MH061829 ø64 {2.56} B: MH061830 ø50.5 {1.99}, MH061829 ø55.7 {2.19} 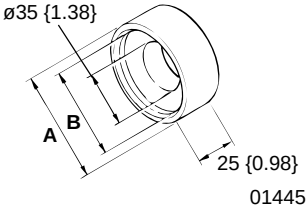	< FM617 > MH061830 < FM657 > MH061829	

◆ Service procedure

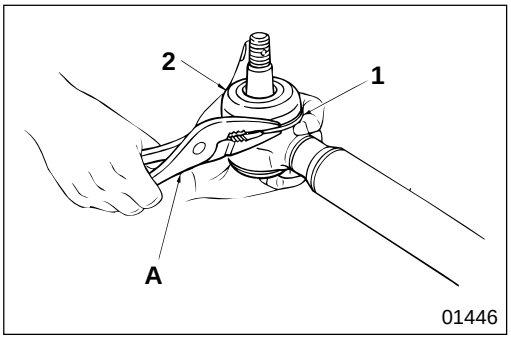

1 **Clip <FK617 >**

A : Long nose pliers

[Removal]

CAUTION

- **Be careful not to damage clip 1 or dust cover 2 when you remove the clip.**
- **If clip 1 is deformed, do not reuse it.**

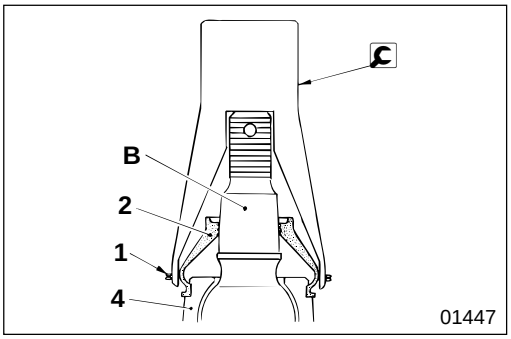

[Installation]

- Position the assembly so ball stud **B** is vertical.
- Place [C] clip guide on drag link **4**.
- Install clip **1** into the groove of dust cover **2**.

CAUTION

- **Be careful that [C] clip guide end does not dig into dust cover 2.**
- **Be especially careful that clip 1 end does not damage dust cover 2.**

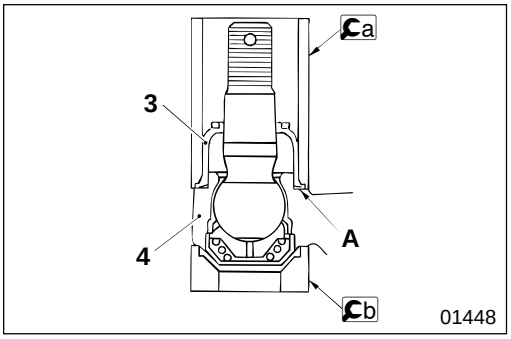

3 **Installation of dust cover < FM617, FM657 >**

- Place dust cover **3** on drag link **4**.
- Hold drag link **4** between [Ca] dust cover installer and [Cb] end cover.
- Using a vise, press-fit dust cover **3** onto drag link **4** so as the dust cover is perpendicular to the drag link, and reinforcing ring **A** is in close contact with the drag link.

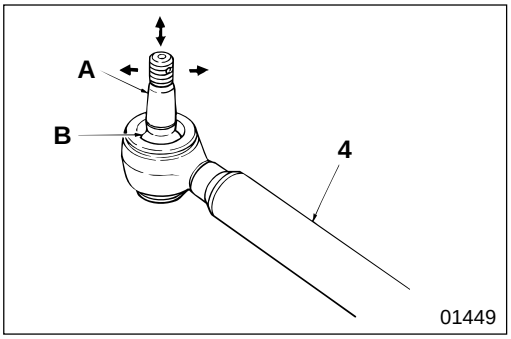

4 **Inspection of drag link**

Move ball stud area **A** of drag link **4** vertically and horizontally to make sure that there is no play. Also, check that ball section **B** moves evenly. If any fault is found, replace the tie rod assembly.

TIE ROD ASSEMBLY

< FK617 >

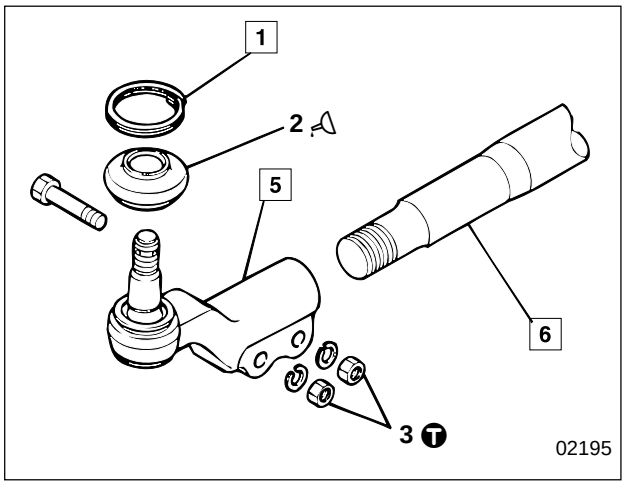

< FM617, FM657 >

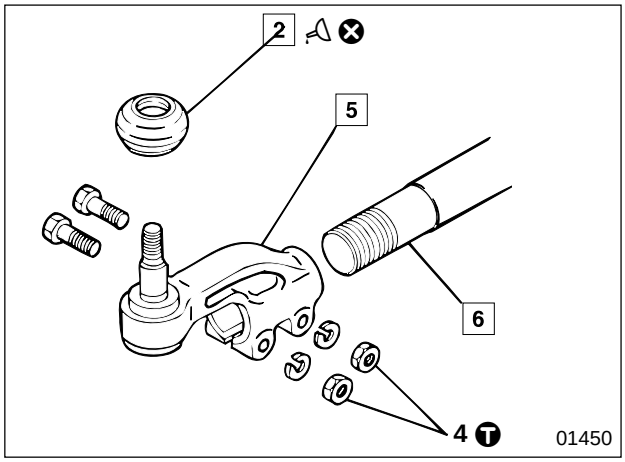

● **Disassembly sequence**

1 Clip < FK617 >
2 Dust cover
3 Nut < FK617 >
4 Nut < FM617, FM657 >
5 Tie rod end assembly
6 Tie rod

⊗ : Non-reusable parts

NOTE

- **Do not remover clip 1 or dust cover 2 unless they are faulty.**
- **Do not disassemble tie rod end assembly 5 because it is a unit construction.**

● **Assembly sequence**

Follow the disassembly sequence in reverse.

Service standards

Unit : mm {in.}

Location	Maintenance item	Standard value	Limit	Remedy
6	Bend of tie rod	1 {0.039} or less	1 {0.039}	Replace

T Tightening torque

Unit : N·m {lbf.ft, kgf·m}

Location	Parts to be tightened	Tightening torque	Remarks
3	Nut < FK617 > (Tie rod end assembly fastening)	78 {58, 8}	Wet
4	Nut < FM617, FM657 > (Tie rod end assembly fastening)	78 {58, 8}	—

Lubricant

Location	Points of application		Kinds	Quantity
2	Lip area of dust cover		Molybdenum disulfide grease [NLGI No.2 (Li soap)]	As required
	Pack into dust cover	FK617	Molybdenum disulfide grease [NLGI No.2 (Li soap)]	11 g {0.39 oz}
		FM617	Molybdenum disulfide grease [NLGI No.2 (Li soap)]	8 to 10 g {0.28 to 0.35 oz}
		FM657	Molybdenum disulfide grease [NLGI No.2 (Li soap)]	20 to 21 g {0.71 to 0.74 oz}

Special tools

Unit : mm {in.}

Location	Tool name and shape	Part No.	Application
1	Clip guide 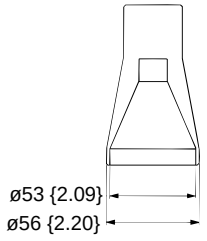 01443	< FK617 > MH061831	Installation of clip
2	Dust cover installer A: MH061828 ø60.3 {2.37}, MH061827 ø65 {2.56} B: MH061828 ø45 {1.77}, MH061827 ø51 {2.01} C: MH061828 80 {3.15}, MH061827 ø100 {3.94} 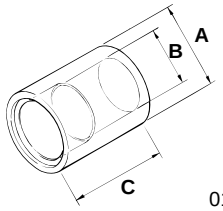 01444	< FM617 > MH061828 < FM657 > MH061827	Installation of dust cover
	End holder A: MH061830 ø60 {2.36}, MH061829 ø64 {2.56} B: MH061830 ø50.5 {1.99}, MH061829 ø55.7 {2.19} 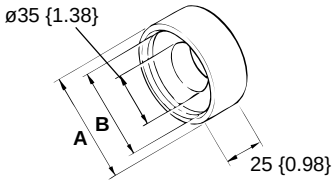 01445	< FM617 > MH061830 < FM657 > MH061829	

◆ Service procedure

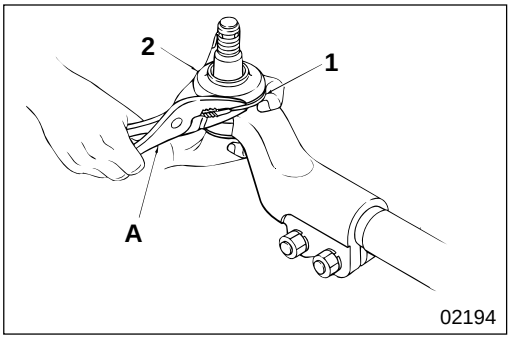

02194

1 Clip < FK617 >

[Removal]

A : Long nose pliers

CAUTION

- **Be careful not to damage clip 1 or dust cover 2 when you remove the clip.**
- **If clip 1 is deformed, do not reuse it.**

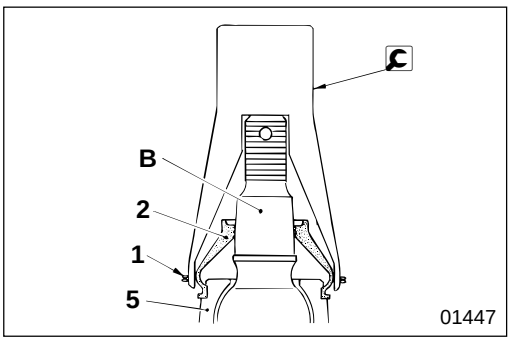

01447

[Installation]

- Position the assembly so ball stud **B** is vertical.
- Place clip guide on tie rod end assembly **5**.
- Install clip 1 into the groove of dust cover **2**.

CAUTION

- **Be careful that clip guide end does not dig into dust cover 2.**
- **Be especially careful that clip 1 end does not damage dust cover 2.**

TIE ROD ASSEMBLY

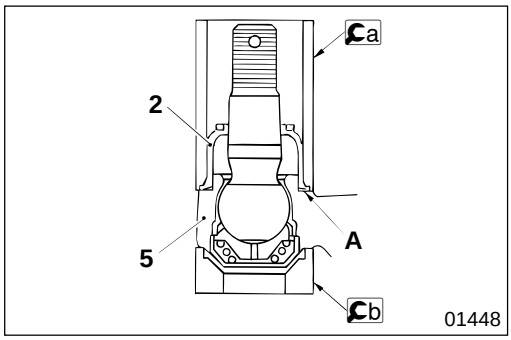

2 **Installation of dust cover < FM617, FM657 >**

- Place dust cover **2** on tie rod end assembly **5**.
- Hold tie rod end assembly **5** between a dust cover installer and b end cover.
- Using a vise, press-fit dust cover **2** onto tie rod end assembly **5** so as the dust cover is perpendicular to the tie rod end assembly, and reinforcing ring **A** is in close contact with the tie rod end assembly.

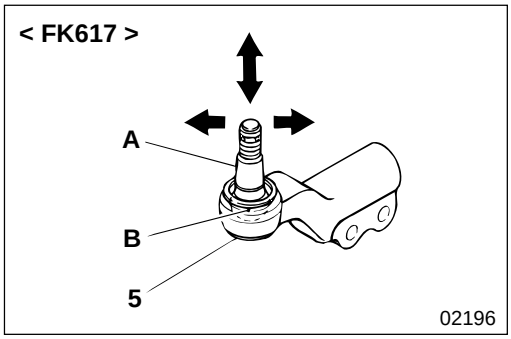

5 **Inspection of tie rod end assembly**

Move ball stud area **A** of tie rod end assembly **5** vertically and horizontally to make sure that there is no play. Also, check that ball section **B** moves evenly. If any fault is found, replace the tie rod end assembly.

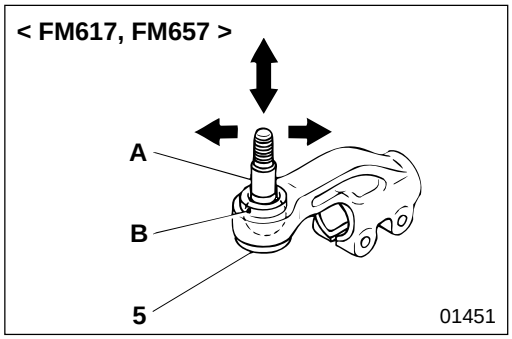

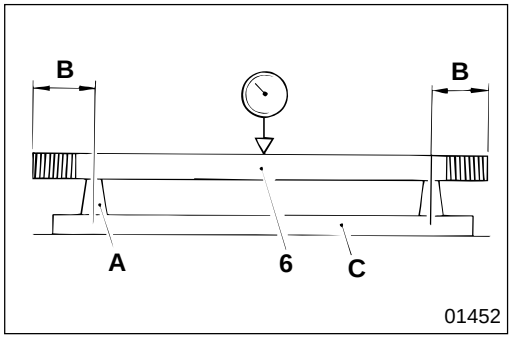

6 **Bend of tie rod**

Measure the bend of tie rod **6** at the center point. If the measured value exceeds the limit, correct or replace the tie rod.

NOTE

To measure the deflection of tie rod 6, turn it one full rotation and read the dial gauge indicator. The deflection is one half of the indicated value.

A : V-block
B : Approximately 300 mm {11.8 in.} < FK617 >
Approximately 250 mm {9.84 in.} < FM617, FM657 >
C : Surface plate

MITSUBISHI
FUSO

FK.FM
Service Manual

Group 41
Frame

Table of Contents

BACK

HOME

MITSUBISHI FUSO TRUCK OF AMERICA, Inc.

Pub No. TWME9503-41

GROUP 41 FRAME

SPECIFICATIONS 2

STRUCTURE AND OPERATION 2

INSPECTION AND REPAIR OF FRAMES 2

SPECIFICATIONS

Item	Specifications
Frame type	Ladder type
Cross section configuration of side rail	⊐ shape channel section

STRUCTURE AND OPERATION

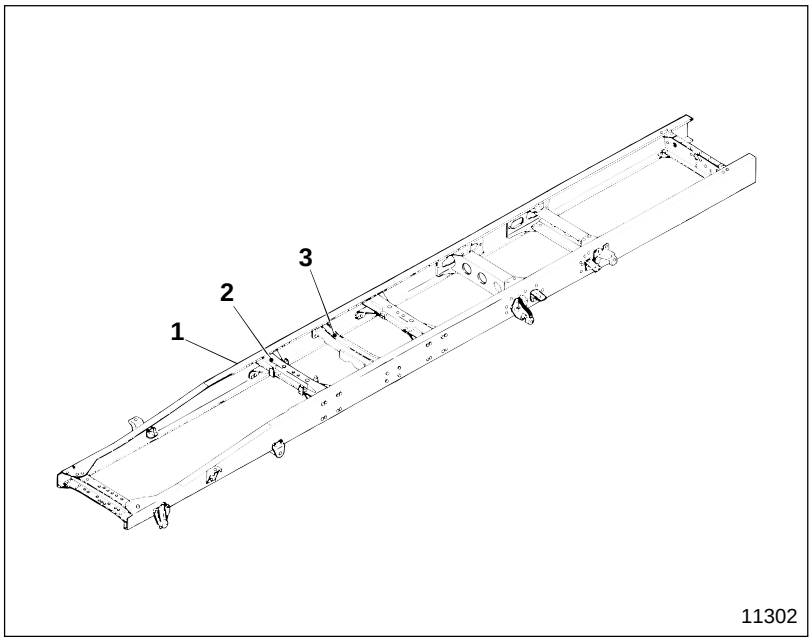

1 Side rail
2 Cross member
3 Center bearing bracket

INSPECTION AND REPAIR OF FRAMES

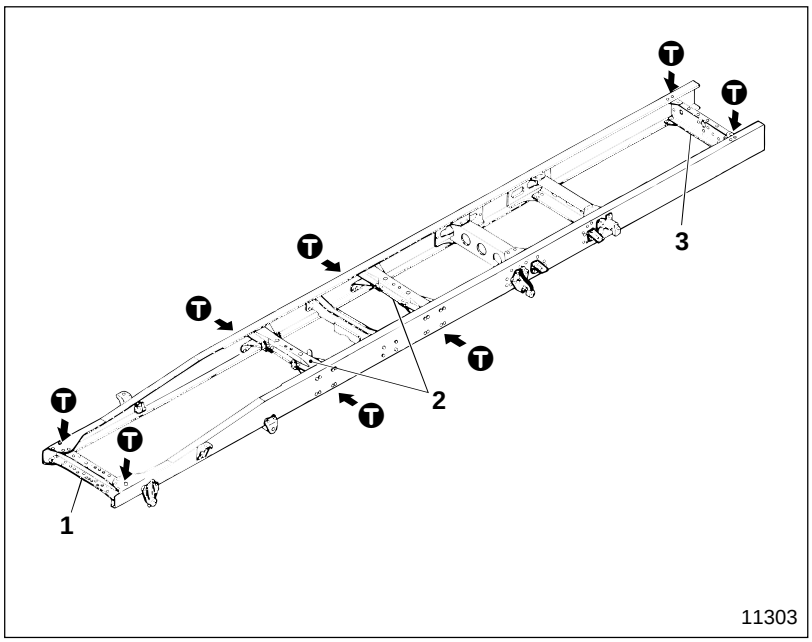

1 No.1 cross member
2 No.2 and No.3 cross member
3 Final cross member

Tightening torque

Unit : N·m {lbf.ft, kgf·m}

Location	Parts to be tightened		Tightening torque	Remarks
1	Nut (No.1 cross member to top of side rail mounting)	FM	118 to 159 {87 to 115, 12 to 16.3}	—
2	Nut (No.2 and No.3 cross members to side of side rail mounting)	FK	85 to 110 {61 to 80, 8.5 to 11}	—
		FM	200 to 269 {145 to 200, 20.4 to 27.5}	—
3	Nut (Final cross member to top of side rail mounting)		45 to 60 {33 to 43, 4.5 to 6}	—

◆ Service procedure

● Cleaning of frame

Carefully remove mud, grease, rust, etc. that is stuck to the outer and inner surfaces of the frame.

● Inspection for frame deformation

If any fault such as deformation is found, repair the frame.

● Inspection for cracks in frame

- Remove paint from any areas that are seemingly faulty and carefully inspect.
- If visual inspection is difficult, inspect using color contrast penetrant examination or other methods.
  If a crack is found, repair as follows.

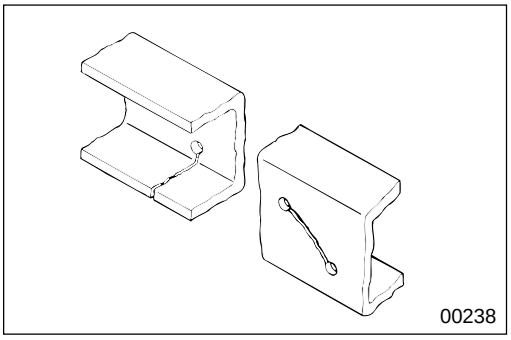

● Repair of crack in frame

- With the vehicle unloaded, level the frame.
- Drill a hole, about twice the thickness of the frame, 10 mm {0.39 in.} from the end of the crack.

NOTE

If a crack is found inside the frame, drill holes at both ends of the crack.

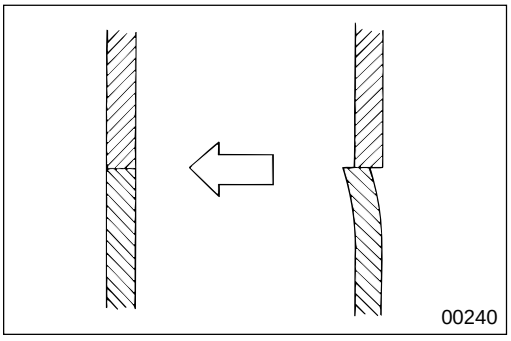

- If the edges of the crack are not flush, make them flush with each other.

INSPECTION AND REPAIR OF FRAMES

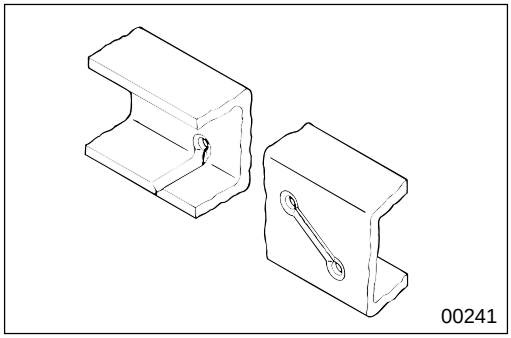

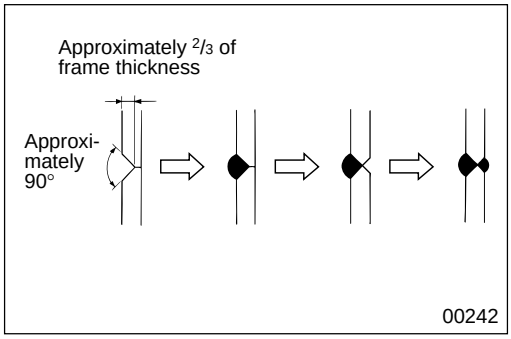

- Using a grinder, etc., grind a 90° V-section channel, two-thirds of the frame thickness, then weld.

WARNING ⚠

You must cover any inflammable materials, such as pipelines, wiring harnesses, rubber parts, and the fuel tank, that are near the welding site.

CAUTION ⚠

- **Do not use gas welding because the high temperature produced alters the material properties and weakens the welded area. Be sure, therefore, to use electric welding.**
- **Be sure to remove the negative terminal of the battery, then ground the welder near the area to be welded to prevent reversed flow of current from the welder which might burn out electrical components.**
- **Be sure to protect mountings such as main sills that can be damaged by heat, by using heat insulators, etc.**

NOTE

- **Use low-hydrogen type coated CO_2 and arc welding electrodes for welding to prevent harmful defects such as undercutting, blow holes, etc.**
- **Preheat the area to be welded to approximately 50 to 350°C {122 to 662°F} before welding when the workshop temperature is below 0°C {32°F}.**

- Next, grind a V-section channel, as described above, on the opposite side of the weld and weld. At the same time, fill the holes at both ends of the crack by welding.

NOTE

In cold districts, heat the welded area to approximately 200°C {392°F} after welding.

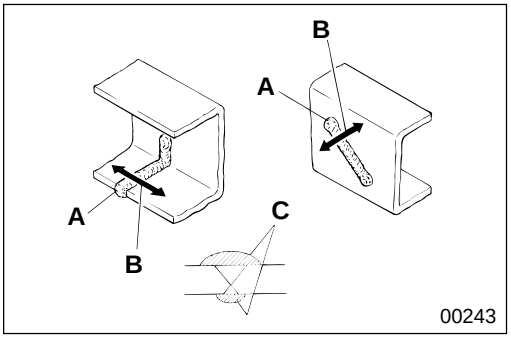

- After welding, grind bead **A** at right angles **B** to remove shaded area **C** as illustrated and grind the area flat.
- Finish the surface so that the frame thickness is identical to the original thickness.

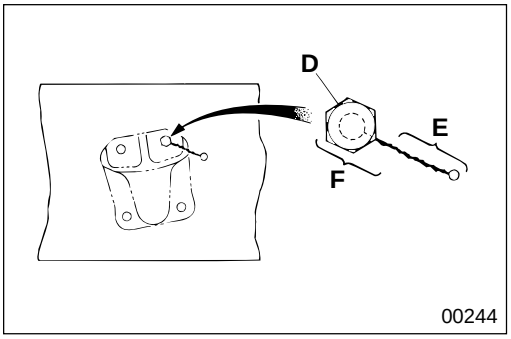

[Repairing cracks caused by rivets or bolt holes]

- To make the edges of the holes flush at the cracked area, temporarily tighten bolt **D** in the hole.
- Weld cracked point **E** at least 20 mm {0.79 in.} from the center of the bolt.
  For welding method refer to the above-mentioned procedures for repairing cracks. P41-3.
- After removing the bolt and making the edges flush, weld remaining area **F** and fill the hole.
- After drilling a hole in the filled area, install a rivet or bolt.

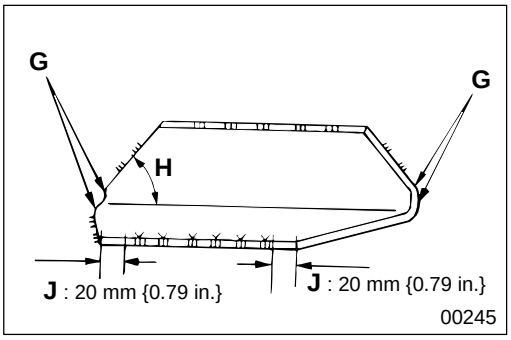

[Repairing using reinforcement plate]

- To prevent concentrated stress being produced at ends **G** of the reinforcement plate, weld the plate with angle **H** at both ends opened 30° or less.
  Do not weld area **J**.
- The reinforcement plate must have enough strength for the cracked area.

NOTE

- **Thickness of reinforcement plate : same as frame thickness**
- **Reinforcement plate material : HTP540 (high tensile strength steel) or equivalent strength.**

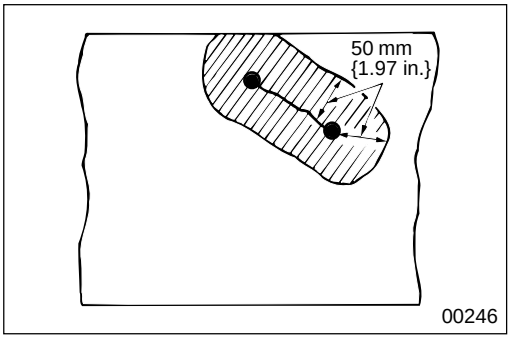

- After welding, heat the shaded area to 600 to 700°C {1112 to 1292°F}.

CAUTION

Be sure to protect mountings such as main sills that can be damaged by heat, by using heat insulators, etc.

INSPECTION AND REPAIR OF FRAMES

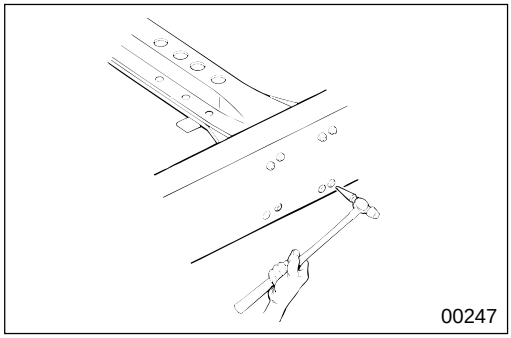

● **Inspection for loose rivets**

- Gently tap the rivet head using an inspection hammer and judge the condition by checking the vibration using the tip of your finger, or by listening to the sound.
- Rust between rivet and frame indicates that the rivet is loose.

CAUTION

Be sure to replace loose rivets because they can break or cause cracking of the frame in the area around the rivet hole, causing accidents.

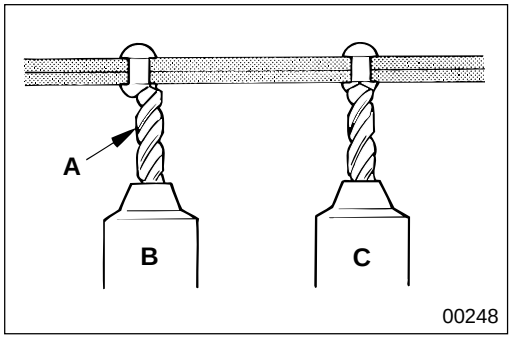

● **Repair of rivet**

- When removing rivets, use a center punch to make an indent in the center of the rivet head; then, drill out using drill **A** or grind.
  B : Incorrect
  C : Correct

CAUTION

Make sure that you do not damage the rivet hole.

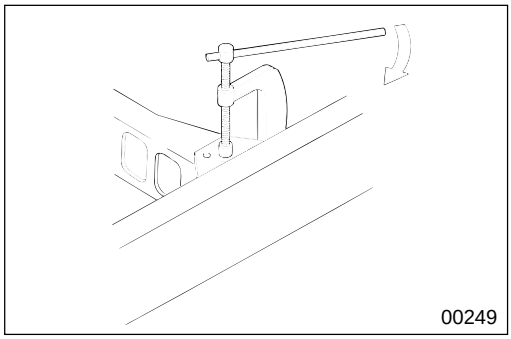

- When rivetting, first clamp both plates tightly near the rivet hole using a clamp to eliminate gaps between plates.

- Using a rivetting machine, insert the rivet (cold rivet).
- If rivetting is impossible, ream the rivet hole, drive in a reamer bolt, fully tightening the nut, then weld it in place.
  A flange bolt and flange nut should be used for the reamer bolt and nut.

● **Inspection for loose bolts and nuts**

- Inspect the mounting bolts of the cross member, the helper stopper < FK > and the rear spring bracket < FM > for looseness. Loosened bolts should be tightened at specified torque. P41-2, Gr 34

NOTE

Tighten the nut side when working on the helper stopper < FK > and the rear spring bracket < FM > mounting bolts.

MITSUBISHI
FUSO

FK.FM
Service Manual

Group 42
Cab

Table of Contents

BACK

HOME

MITSUBISHI FUSO TRUCK OF AMERICA, Inc.

Pub No. TWME9503-42

GROUP 42 CAB

SPECIFICATIONS 2

STRUCTURE AND OPERATION 4

TROUBLESHOOTING 17

INSPECTION AND ADJUSTMENT MOUNTED IN VEHICLE
- Adjustment of Cab Tilt 22
- Adjustment of Cab Tilt Lock Switch 23
- Adjustment of Door Fitting 24

REMOVAL AND INSTALLATION OF CAB 26

FRONT CAB MOUNTING 34

REAR CAB MOUNTING 37

CAB TILT LINK 38

DOOR 42

CAB EXTERIOR FITTING 48

MIRROR 54

WIPER AND WASHER 56

CAB INTERIOR FITTING 60

INSTRUMENT PANEL 66

WINDOW GLASS 70

SPECIFICATIONS

Item		Specifications
Cab assembly	Type	Cab over type (Forward control type)
	Mass kg {lb}	Approximately 440 {970}
Cab tilt	Type	Torsion bar type
	Tilt angle	45°
Cab mounting Type		Fixed type
Windshield		Laminated glass
Glass other than windshield		Tempered glass
Door glass opening and closing mechanism		Manual control type (Cable driven)

M E M O

Front Cab Mounting

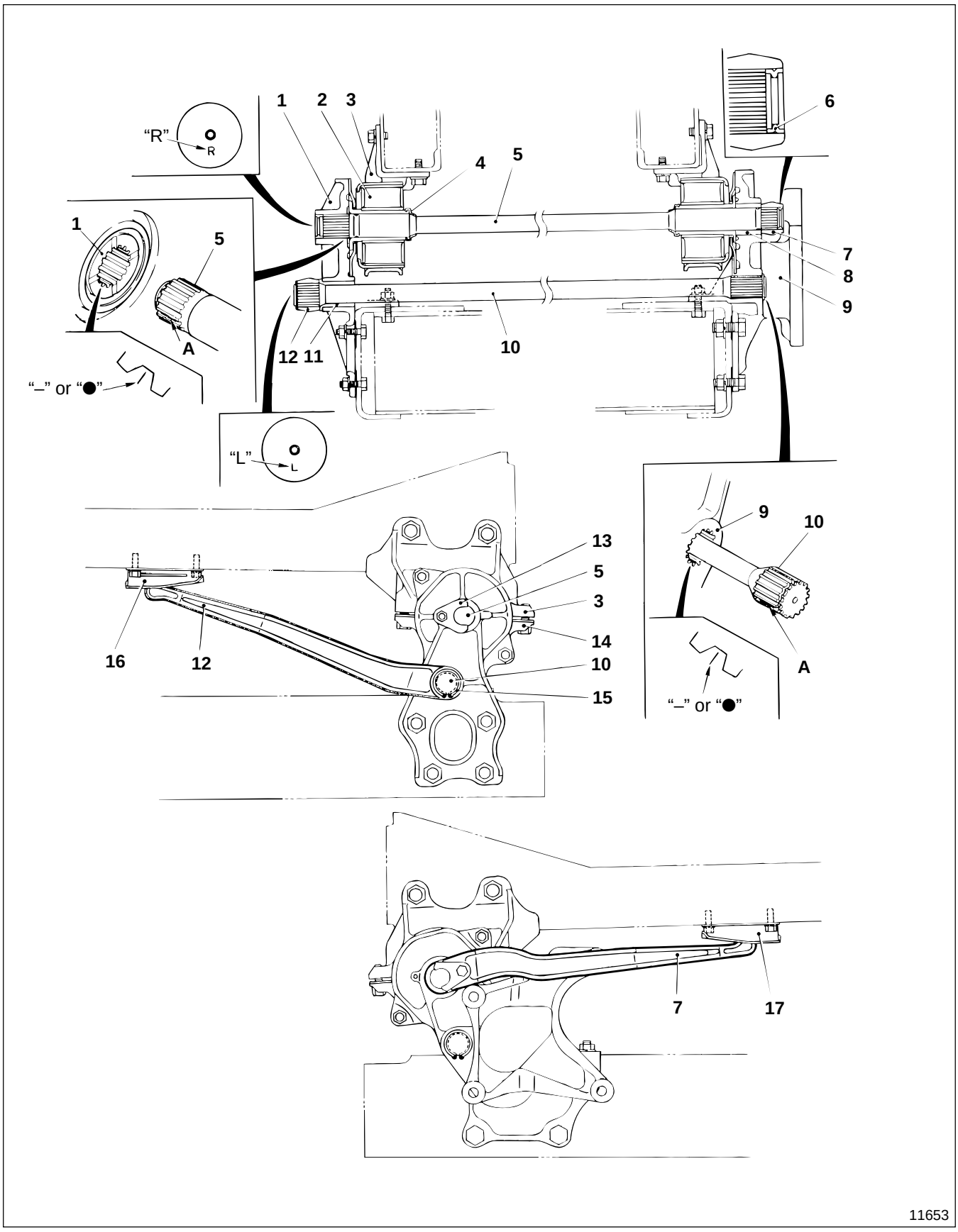

1 Cab hinge bracket
2 Cab hinge cushion
3 Cab hinge upper bracket
4 Dust cover
5 Upper torsion bar
6 Dust cover
7 Torsion bar arm, LH
8 Bushing
9 Gear box bracket
10 Lower torsion bar
11 Bushing
12 Torsion bar arm, RH
13 Stopper plate
14 Cab hinge cap
15 Snap ring
16 Torsion bar support, RH
17 Torsion bar support, LH

A : White paint

- Since upper torsion bar **5** and lower torsion bar **10** have torsional directions, they are marked "**L**" and "**R**" on their right ends, preventing mistaken installation.
- Upper torsion bar **5** and cab hinge bracket **1** have alignment marks to aid alignment. The torsion bar is marked with white paint **A**, and the cab hinge bracket is marked with "–" or "●".
- Lower torsion bar **10** and gear box bracket **9** have alignment marks to aid alignment. The torsion bar is marked with white paint **A**, and the gear box bracket is marked with "–" or "●" .

Rear Cab Mounting

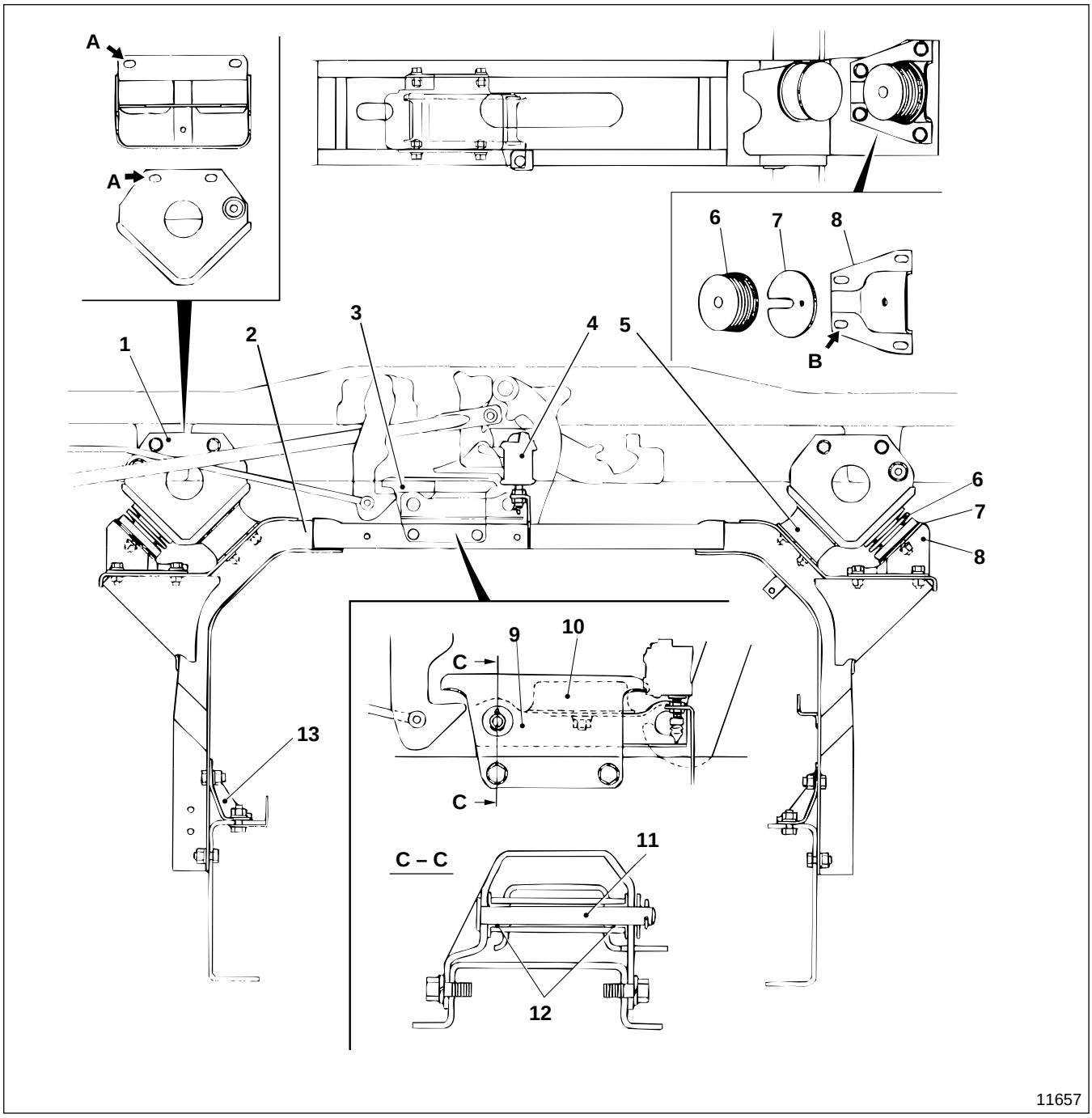

1	Bottom bracket	**5**	Side cushion	**9**	Hook pin bracket	**13**	Cab bridge stiffener
2	Cab bridge	**6**	Compression cushion	**10**	Rebound cushion		
3	Hook hinge bracket	**7**	Shim	**11**	Clevis pin		
4	Cab tilt lock switch	**8**	Mounting bracket	**12**	Bushing		

- Mounting holes **A** of bottom bracket **1** are oval to allow adjustment of contact with side cushion **5**.
- Mounting bracket **8** and shim **7** allow you to adjust the position of bottom bracket **1** and compression cushion **6**.
  - Mounting holes **B** of mounting bracket **8** are oval to allow horizontal adjustment of compression cushion **6**.
  - Shim **7** allows vertical adjustment of compression cushion **6**.

Cab Tilt Link

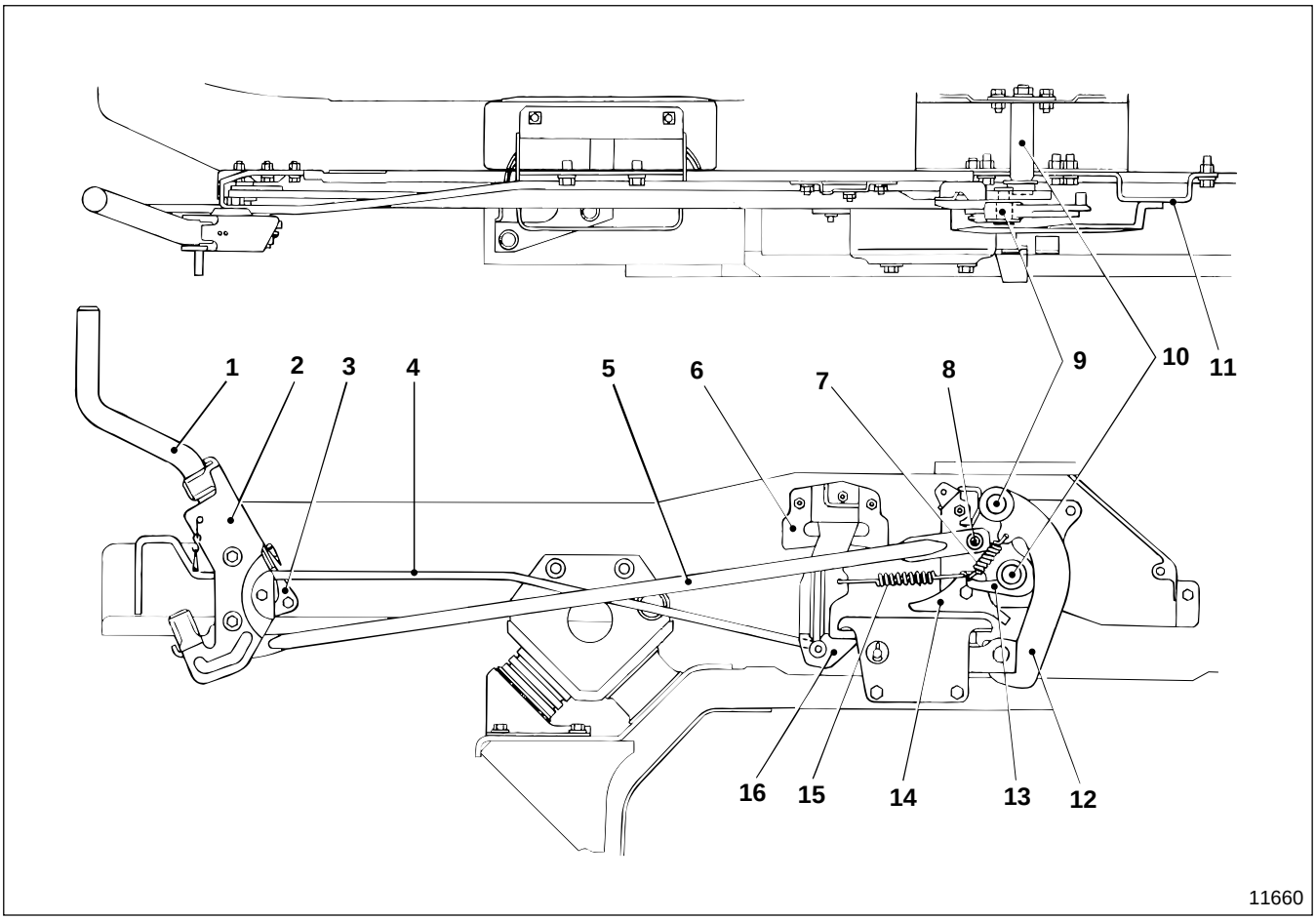

1 Control lever hook
2 Control lever hook bracket
3 Hinge bracket
4 L-lever rod
5 Control rod
6 L-lever bracket
7 Return spring
8 Lock pin
9 Main hook pin
10 Main hook shaft
11 Main hook bracket
12 Main hook
13 Main hook arm
14 Lock lever
15 Return spring
16 L-lever

The heads of lock pin **8**, main-hook pin **9** and main-hook shaft **10** were caulked after installation. Therefore, set parts **5**, and **8** to **13** constitute the main hook assembly and they must be handled together. They must not be disassembled.

Cab Tilt Warning Electric Circuit

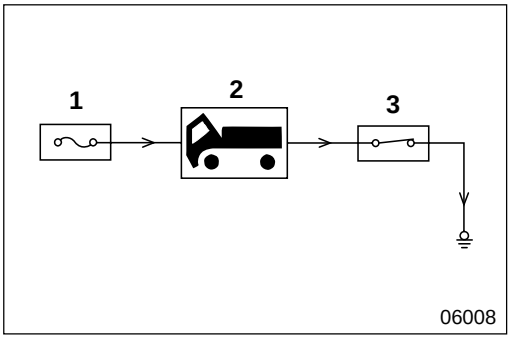

1 Relay and fuse box
2 Cab tilt warning lamp
3 Cab tilt lock switch

Door Locking System

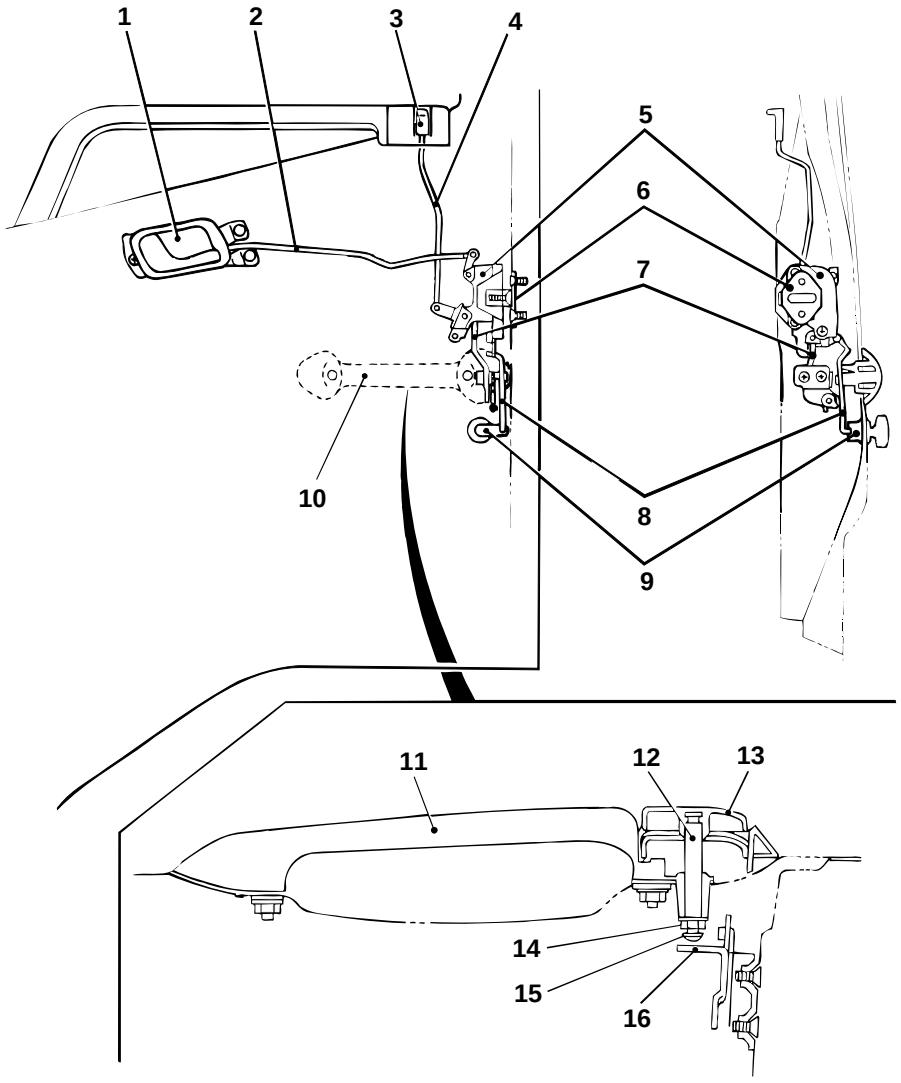

1 Inside handle
2 Door opening rod
3 Door lock knob
4 Door lock rod
5 Door latch
6 Striker
7 Door opening rod
8 Door lock cylinder rod
9 Door lock cylinder
10 Outside handle
11 Handle
12 Shaft
13 Push button
14 Nut
15 Screw
16 Stay

- Push button **13** stroke of outside handle **10** can be adjusted to optimize opening and closing of the door .
- To adjust the stroke, turn screw **15** on shaft **12**.
- The head of screw **15** pushes stay **16**, and this moves door opening rod **7**, releasing door latch **5**.

Door Glass Opening System

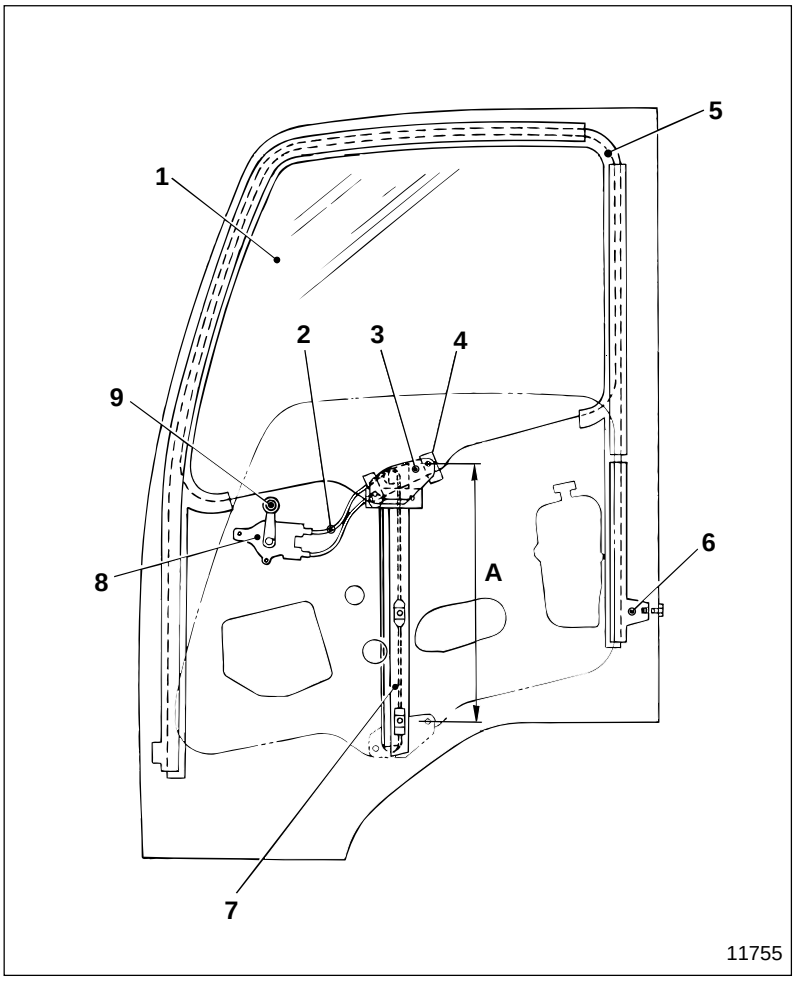

1 Door glass
2 Cable
3 Carrier plate
4 Glass holder
5 Run channel
6 Lower sash
7 Rail
8 Regulator
9 Regulator handle

A : Carrier plate moving range

- Both ends of cable **2** are secured to carrier plate **3**, and regulator **8** is installed in the middle of the cable.
- Regulator **8** winds cable **2**, and moves carrier plate **3** vertically to open and close door glass **1**.
- Carrier plate **3** and door glass **1** are secured by glass holder **4**.
- Regulator handle **9** turns regulator **8**.
- To allow removal and installation of door glass **1**, lower sash **6** is removable.

Wiper and Washer

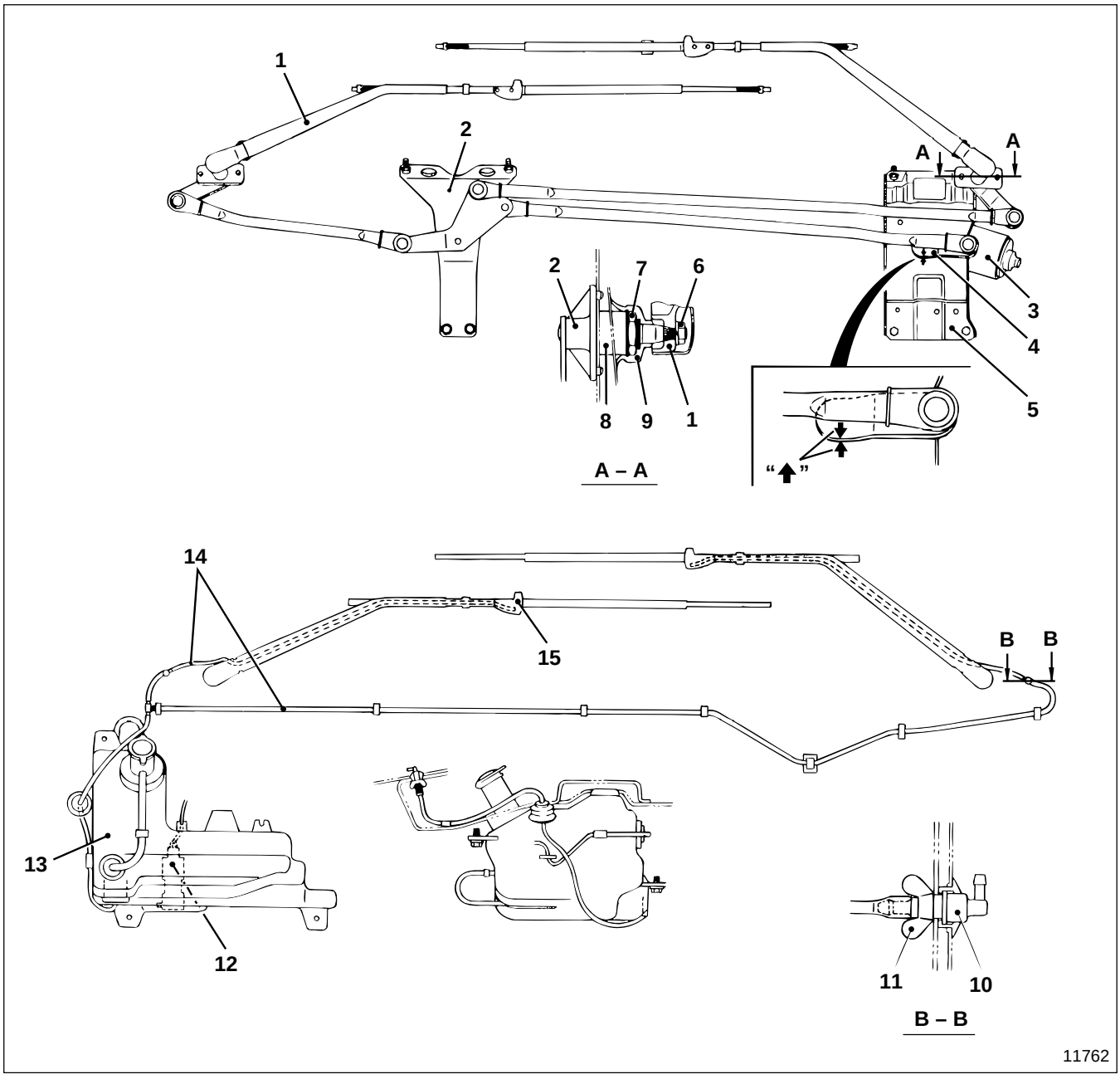

1	Wiper and blade assembly	**6**	Nut	**11**	Nut
2	Link assembly	**7**	Nut	**12**	Washer motor
3	Wiper motor	**8**	Collar	**13**	Washer tank
4	Crank arm	**9**	Pivot cap	**14**	Washer hose
5	Wiper motor bracket	**10**	Hose joint	**15**	Washer nozzle

Crank arm **4** and wiper motor bracket **5** have alignment marks "⬆" that align when wiper and blade assembly **1** stop at the specified position.

Wiper and Washer Electric Circuit

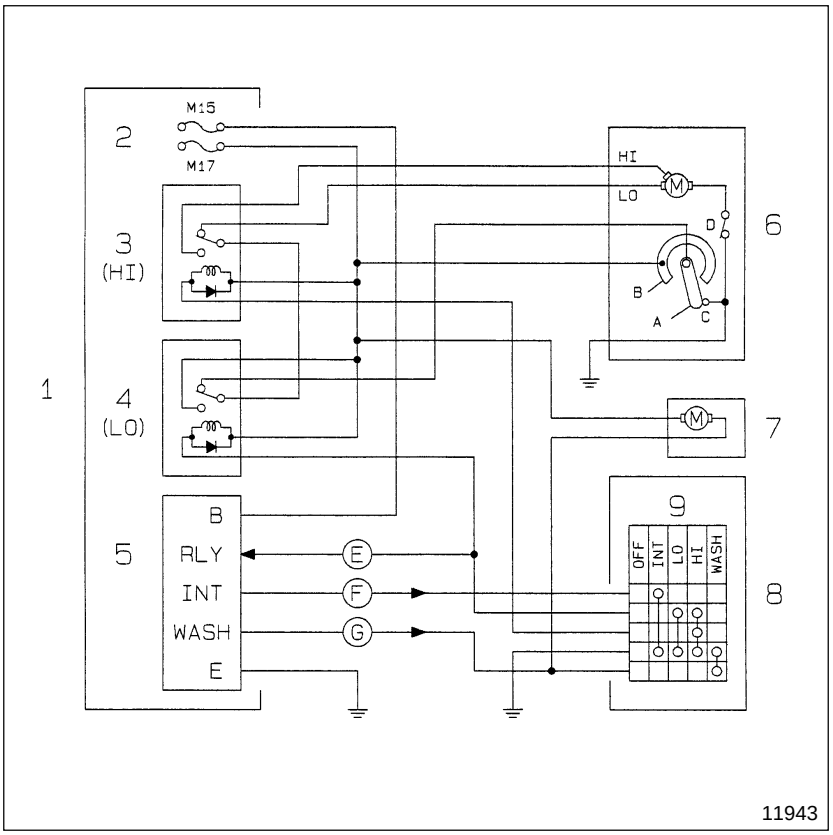

1 Fuse and realy box
2 Fuse
3 Wiper relay (HIGH)
4 Wiper relay (LOW)
5 Multipurpose timing control unit
6 Wiper motor
7 Washer motor
8 Combination switch
9 Wiper and washer switch

Wiper motor **6** section
A : Cam
B : Plate
C : Contact point
D : Circuit breaker

Ⓔ : Wiper motor driving signal (when wiper operating intermittently)
Ⓕ : Intermittent switch signal (when wiper operating intermittently)
Ⓖ : Washer switch signal

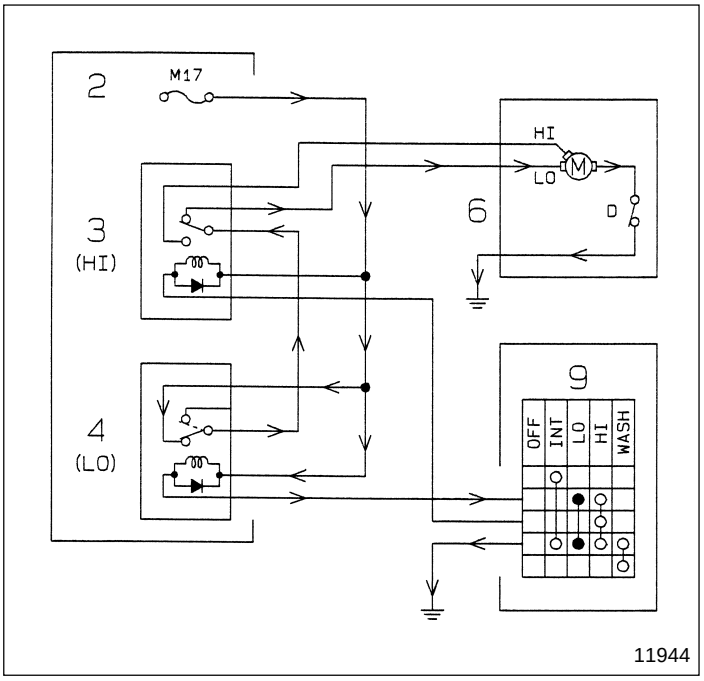

When wiper operating at LOW speed

Position of wiper and washer switch **9** : LO
- **2** (M17) → **4** (coil) → **9** (LO) → Ground
- **2** (M17) → **4** (contact point) → **3** (contact point) → **6** (LO) → **6** (D) → Ground
  Wiper motor **6** rotates at low speed.

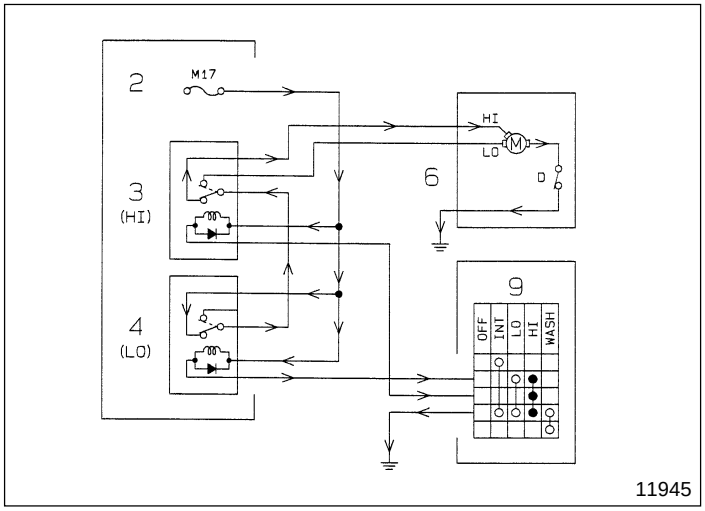

When wiper operating at HIGH speed

Position of wiper and washer switch **9** : HI

- **2** (M17) → **3** (coil) → **9** (HI) → Ground
  → **4** (coil) → ↑
- **2** (M17) → **4** (contact point) → **3** (contact point) → **6** (HI) → **6** (D) → Ground
  Wiper motor **6** rotates at high speed.

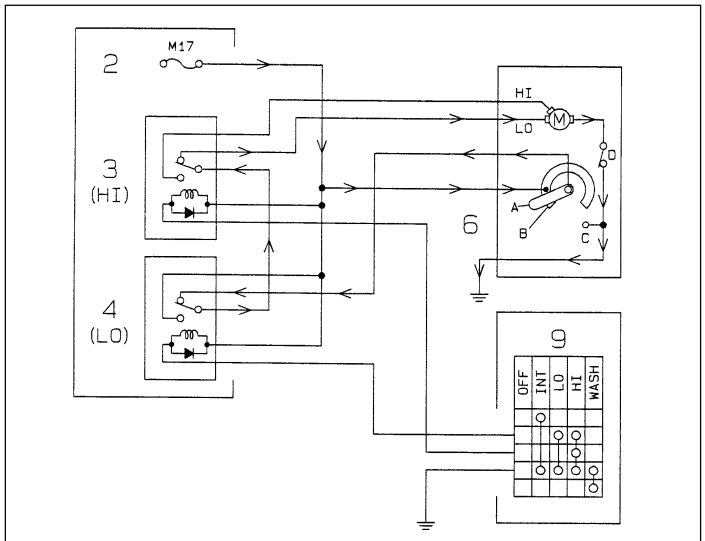

When wiper stops

Position of wiper and washer switch **9** : OFF

- **2** (M17) → **6** (B) → **6** (A) → **4** (contact point) → **3** (contact point) → **6** (LO) → **6** (D) → Ground
  Wiper motor **6** continues to rotate at low speed.

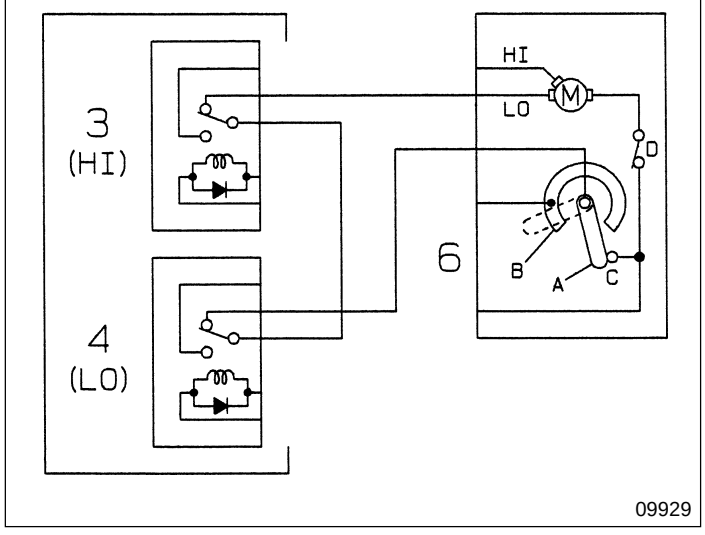

- When cam **A** is separated from plate **B** by rotation of wiper motor **6**, the current to the motor is cut off.
- Wiper motor **6** continues to rotate due to the inertia force of the motor and the wiper link.
- When cam **A** of wiper motor **6** makes contact with contact point **C**, the following ungrounded circuit is formed.
  → **6** (LO) → **6** (D) → **6** (C) → **3** (contact point) ← **4** (contact point) ← **6** (A) ←
- Wiper motor **6** stops by dynamic (electric) braking because of this circuit.

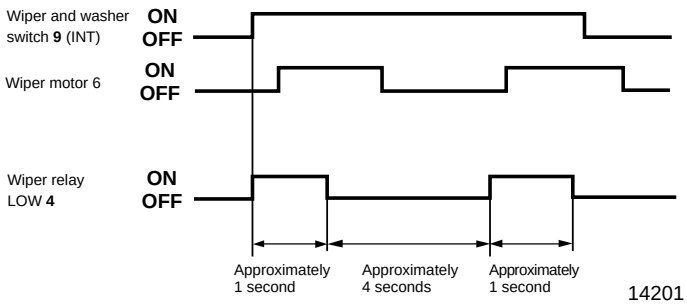

14201

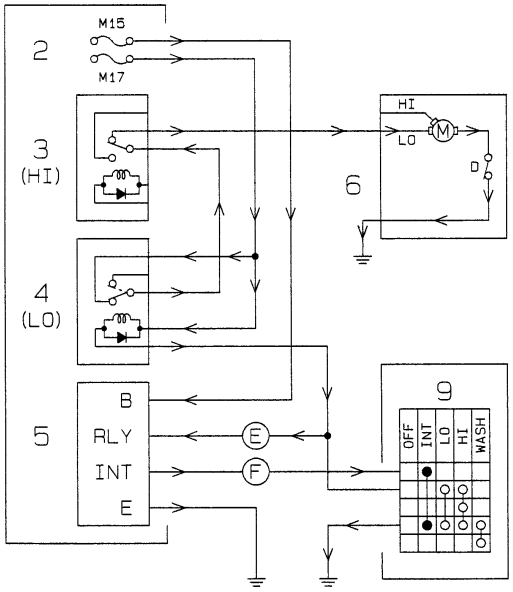

11947

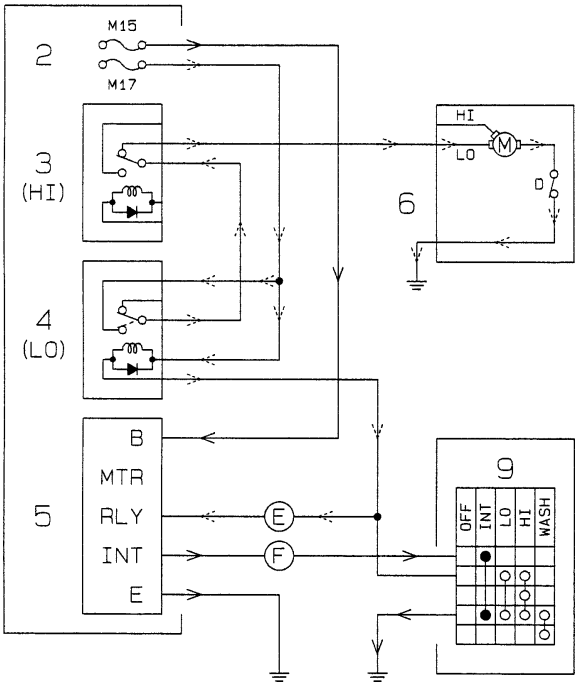

11948

When wiper operating intermittently

Operation mode with multipurpose timing control unit **5**

Position of wiper and washer switch **9** : INT

- **2** (M15) → **5** (B) → Ground
- **5** (INT) —Ⓕ→ **9** (INT) → Ground
- Multipurpose timing control unit **5** sends wiper motor driving signal Ⓔ when it receives intermittent switch signal Ⓕ.
  2 (M17) → **4** (coil) —Ⓔ→ 5 (RLY)
- **2** (M17) → **4** (contact point) → **3** (contact point) → **6** (LO) → **6** (D) → Ground
  Wiper motor **6** rotates at low speed.

- Multipurpose timing control unit **5** turns wiper motor driving signal Ⓔ OFF for specified time.
  The illustrated part ⊣⊢ of the circuit turns OFF.
- Wiper motor **6** stops. 🕮 Gr 42-12
- After specified time has passed, multipurpose timing control unit **5** sends wiper motor driving signal Ⓔ again.
- Wiper motor **6** rotates at low speed.

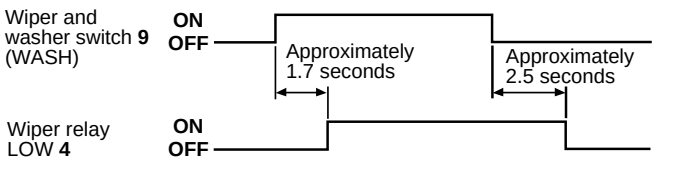

12201

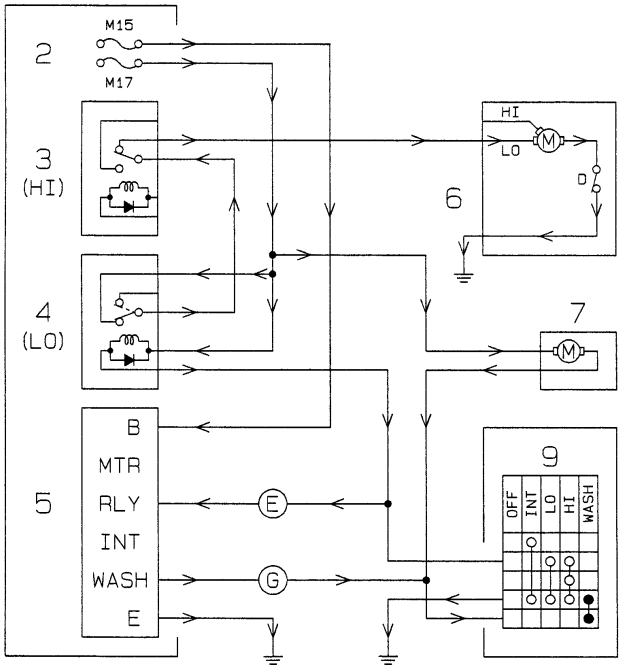

11949

When washer operating

Operation mode with multipurpose timing control unit **5**

Position of wiper and washer switch **9** : WASH

- **2** (M15) → **5** (B) → Ground
- **2** (M17) → **7** → **9** → Ground
  5 (WASH)-Ⓖ

When washer motor **7** operates to spray washer fluid, multipurpose timing control unit **5** transmits washer switch signal Ⓖ.

- **2** (M17) → **4** (coil) —Ⓔ→ **5** (RLY)
  Washer switch signal Ⓖ makes multipurpose timing control unit **5** input wiper motor drive signal Ⓔ.
- **2** (M17) → **4** (contact point) → **3** (contact point)

  → **6** (LO) → **6** (D) → Ground
  Wiper motor **6** operates at LOW speed.
- When wiper and washer switch **9** is turned to OFF, washer motor **7** stops. ◯
- Then, washer switch signal G is turned off and multipurpose timing control unit **5** turns off wiper motor drive signal Ⓔ after specified time.
- Wiper motor **6** automatically stops.
  🕮 P42-12

Emergency Locking Retractor (ELR) Type Seat Belt

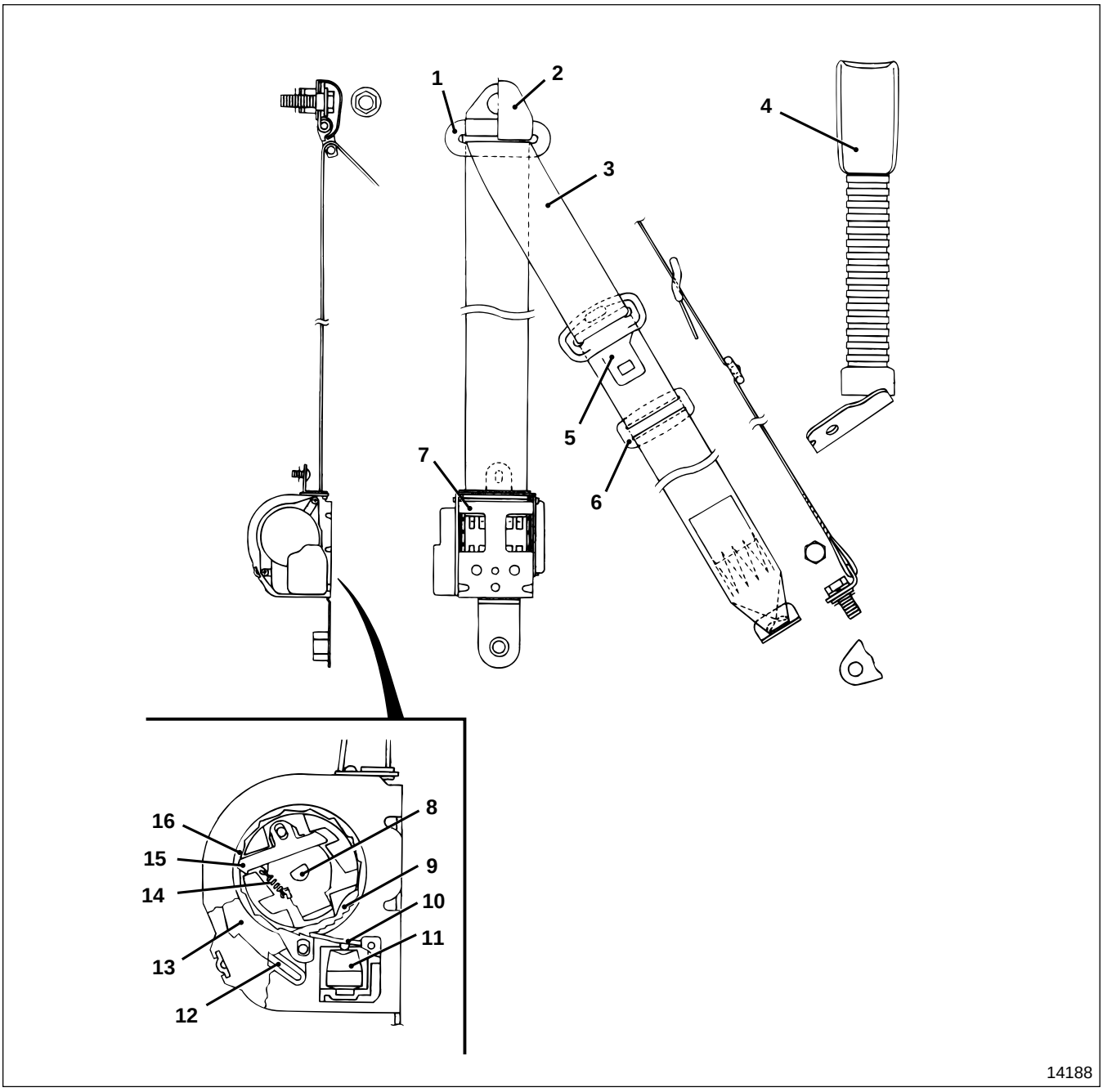

1 Sash guide
2 Cover
3 Webbing
4 Buckle assembly
5 Tongue plate
6 Tongue stopper
7 Emergency locking retractor assembly
8 Spindle
9 Locking gear
10 Mechanism lever
11 Mechanism weight
12 Pawl
13 Ratchet gear
14 Sensor spring
15 Lock arm
16 Clutch

CAUTION⚠

Do not disassemble emergency locking retractor assembly 7, or malfunctions might occur.

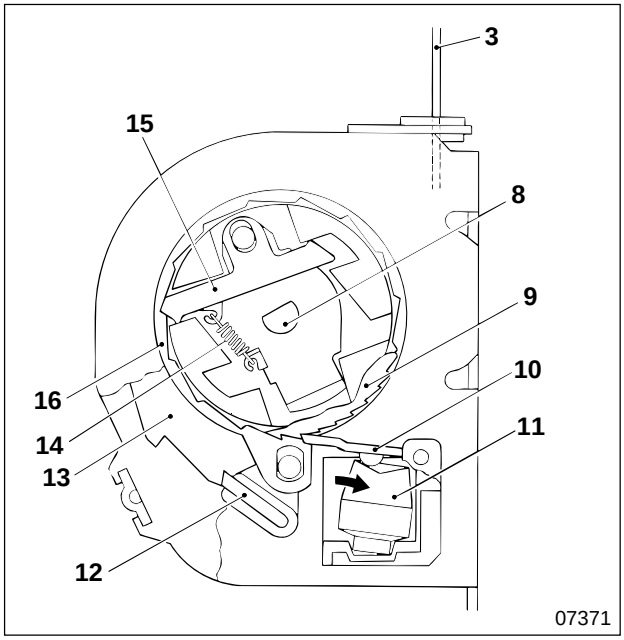

Webbing detecting lock

- When the vehicle is subjected to a sudden impact, such as a crash, webbing **3** retracts according to the movement of passengers, and spindle **8** rotates.
- As the rotation of spindle **8** is higher than the specified value, the repercussive force of sensor spring **14** can no longer retain lock arm **15**. Then, the arm is pulled out from the specified position and is locked by clutch **16**.
- If spindle **8** further rotates, clutch **16** lifts pawl **12** to lock with ratchet gear **13**, making spindle rotation impossible.

Body detecting lock

- When the body is tilted excessively, mechanism weight **11** is tilted, engaging mechanism lever **10** with locking gear **9**, locking it.
- If spindle **8** further rotates, clutch **16** operates as described above, and the spindle cannot rotate.

Cab as a Whole

Possible causes / Symptoms		Cab shimmy (pitching and rolling vibration)	Cab or steering wheel high-frequency vibration (above 20 Hz) or noise	Cab cannot be tilted up	Cab cannot be locked to rear mounting post	Cab tilt warning lamp does not light	Cab tilt warning lamp does not go out	Remarks
Cab-related	Cab mounting loose or play	○						
	Front rubber, rear rubber deteriorated		○					
	Cab mounted incorrectly		○					
	Main hook from hook pin bracket does not release			○				
	L-lever release faulty			○				
	Torsion bar damaged or fatigued			○				
	Torsion bar arm installation position incorrect			○				
	Main hook not hooked to hook pin bracket				○			
	Bottom bracket contact with cushion incorrect				○			
	Cab tilt lock switch adjusted incorrectly					○	○	
	Cab tilt lock switch faulty					○	○	
	Cab tilt warning lamp bulb burnt-out					○		
	Fuse, high-current fuse blown					○		
	Wiring broken or connection faulty					○		
Engine-related	Crossed axes angle of propeller shaft excessive due to increased tilt caused by deteriorated engine mounting		○					
	Engine installation faulty		○					Gr 10
	Intake and exhaust system installation faulty		○					
Transmission-related	Transmission installation faulty		○					Gr 22A, Gr 22B, Gr 23
Propeller shaft-related	Propeller shaft run-out excessive		○					
	Universal joint worn excessively		○					
	Slip yoke joint spline play		○					
	Center bearing play excessive		○					Gr 25
	Crossed axes angle of mounting dimension excessive due to deteriorated center bearing cushion rubber, etc.			○				
	Crossed axes angle of propeller shaft excessive due to increased tilt of drive axis caused by overloading		○					

TROUBLESHOOTING

Possible causes / Symptoms		Cab shimmy (pitching and rolling vibration)	Cab or steering wheel high-frequency vibration (above 20 Hz) or noise	Cab cannot be tilted up	Cab cannot be locked to rear mounting post	Cab tilt warning lamp does not light	Cab tilt warning lamp does not go out	Remarks
Front axle-related	Axle seat resonance	○						Gr 26
Rear axle-related	Reduction gear engaged incorrectly		○					Gr 27
	Differential gear engaged incorrectly		○					
Wheel and tire-related	Wheel and tire run-out excessive	○						Gr 31
	Wheel and tire unbalanced	○						
	Size and kinds of tire unequal	○						
	Wheel mounting surface warped	○						
Front suspension-related	Leaf spring friction between leaves excessive	○						Gr 33
Brake-related	Brake drum unbalanced	○						Gr 35
	Brake drum eccentric	○						
	Rotor of disc brake eccentric	○						

Door Lock

Symptoms / Possible causes	Door does not shut completely	Door does not lock when door look knob is pressed	Door does not lock when key is turned	Door does not open using outside door handle	Door does not open using inside door handle	Inside door handle self-return poor	Door and cab interference	Remarks
Door installation faulty	○						○	
Striker installation faulty	○							
Door latch lock faulty	○	○	○	○	○			
Door latch rod deformed		○			○			
Door latch rod removed		○	○		○			
Door latch rod obstructed						○		
Door lock cylinder deformed			○					
Left side outside door handle faulty				○				
Inside door handle installation faulty					○			
Inside door handle spring fatigued						○		

Wiper and Washer

Symptoms / Possible causes	Wiper doe not work	Wiper does not stop	Wiper intermittent operation does not work	Wiper blade stop position incorrect	Wiper operation inadequate	Noise during wiper operation	Washer motor does not work	Washer fluid jetting insufficient	Washer fluid does not jet	Remarks
Wiper motor faulty	○	○		○		○				
Washer motor faulty							○	○	○	
Wiper and washer switch faulty	○	○	○				○			
Multipurpose timing control unit faulty			○							Gr 54
Wiper relay faulty	○						○			
Fuse, high-current fuse blown	○						○			
Wiring broken or connection faulty	○		○				○		○	
Wiper motor crank arm set position faulty				○						
Wiper link and wiper arm connection faulty						○				
Wiper blade faulty					○	○				
Wiper arm faulty					○					
Washer hose twisted								○		
Washer hose connected incorrectly									○	
Washer nozzle clogged								○	○	
Washer fluid insufficient									○	

M E M O

Adjustment of Cab Tilt

Lubricant

Location	Points of application	Kinds	Quantity
1	Contact surfaces between side cushion and bottom bracket	Molybdenum disulfide grease [NLGI No.2 (Li soap)] (Molykote BR 2 plus)	As required

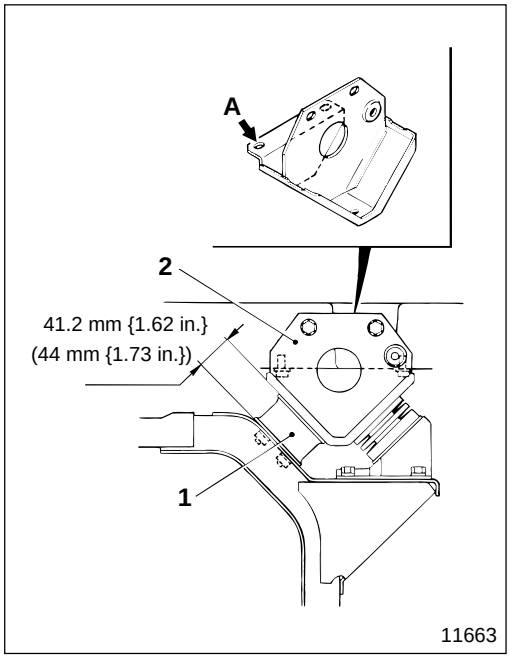

(1) Contact adjustment between bottom bracket and side cushion

- Tilt the cab down and lock securely.
- To position side cushion **1** as high as illustrated, move it horizontally to install bottom bracket **2**.
  A : Oval hole for adjustment (4 points)
  ( ): Indicates free length.

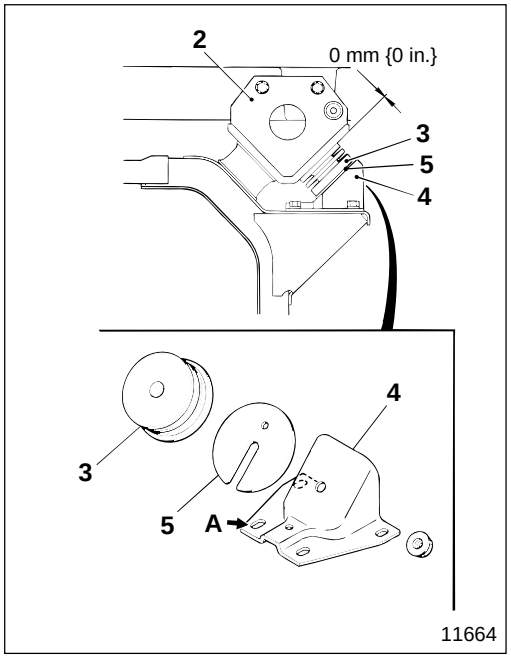

(2) Contact adjustment between bottom bracket and compression cushion

- Tilt the cab down and lock.
- Adjust the clearance between compression cushion **3** and bottom bracket **2** to 0 mm {0 in.} as follows:
  - Adjust the installation position of mounting bracket **4** by moving it horizontally.
    A : Oval hole for adjustment (4 points)
  - Adjust by changing the thickness of shim **5**.
    Available shim thicknesses: 1.0 mm {0.039 in.}, 2.0 mm {0.079 in.}

Adjustment of Cab Tilt Lock Switch

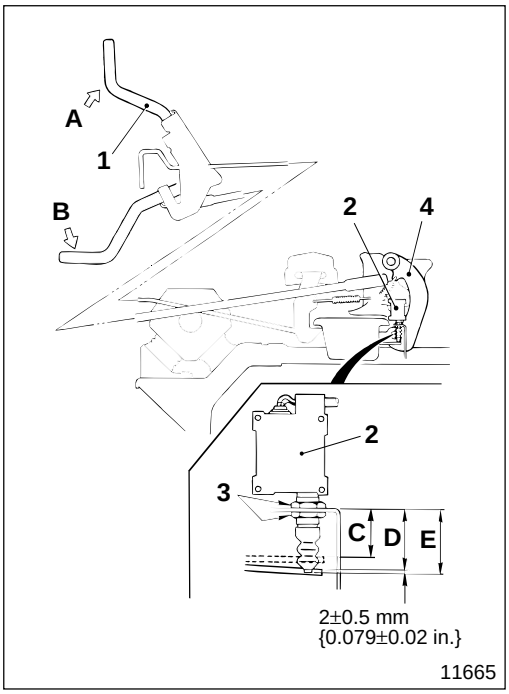

- Turn the starter switch to ON.
- Use nut **3** to adjust the position of cab tilt lock switch **2** so that when you operate hook control lever **1**, warning lamp in the meter cluster turns on or off in accordance with the following conditions.

• Position of hook control lever **1** : **A** (Main hook **4** is locked.)

State of cab tilt		Adjustment dimension of cab tilt lock switch **2**
When tilted down	OFF	**C** : 31 mm {1.22 in.}

•Position of hook control lever **1** : **B** (Main hook **4** is released.)

State of cab tilt		Adjustment dimension of cab tilt lock switch **2**
When tilted down	ON	**D** : 37 mm {1.46 in.}
When tilted up	ON	**E** : 39 mm {1.54 in.}

Adjustment of Door Fitting

Ⓣ Tightening torque

Unit : N·m {lbf.ft, kgf·m}

Location	Parts to be tightened	Tightening torque	Remarks
4	Bolt (Upper and lower hinge mounting)	17 to 25 {12 to 19, 1.7 to 2.6}	—
6	Screw (Striker mounting)	8.8 to 14 {6.5 to 10, 0.9 to 1.4}	—

Adjust door fitting at hinge and striker.
(For door fitting dimensions : 🕮 P42-25)

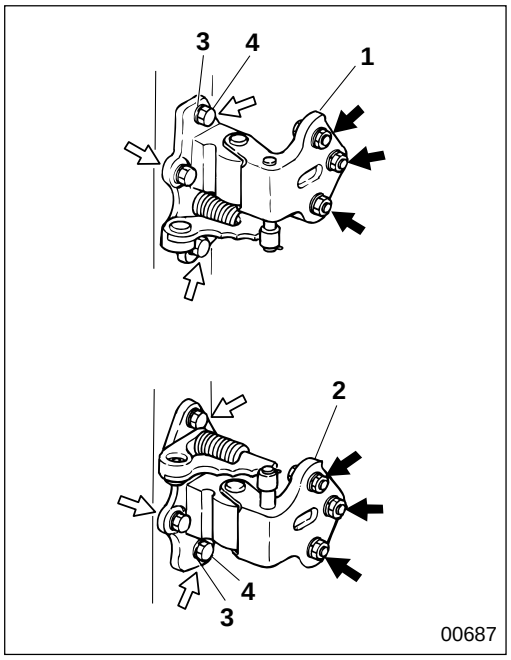

(1) Adjustment of hinge

Adjust upper hinge **1** and lower hinge **2**. Adjustment depends on whether washer **3** is welded or unwelded.

- For washer **3** that is welded:
  Adjust bolts **4** indicated by ➡.
- For washer **3** that is not welded:
  Adjust bolts **4** indicated by ⇨.

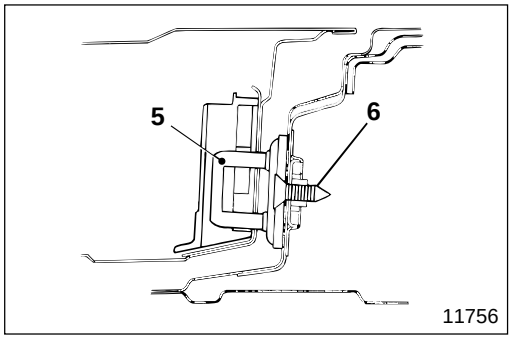

(2) Adjustment of striker

Adjust installation screw **6** of striker **5**.

Door Fitting Dimensions

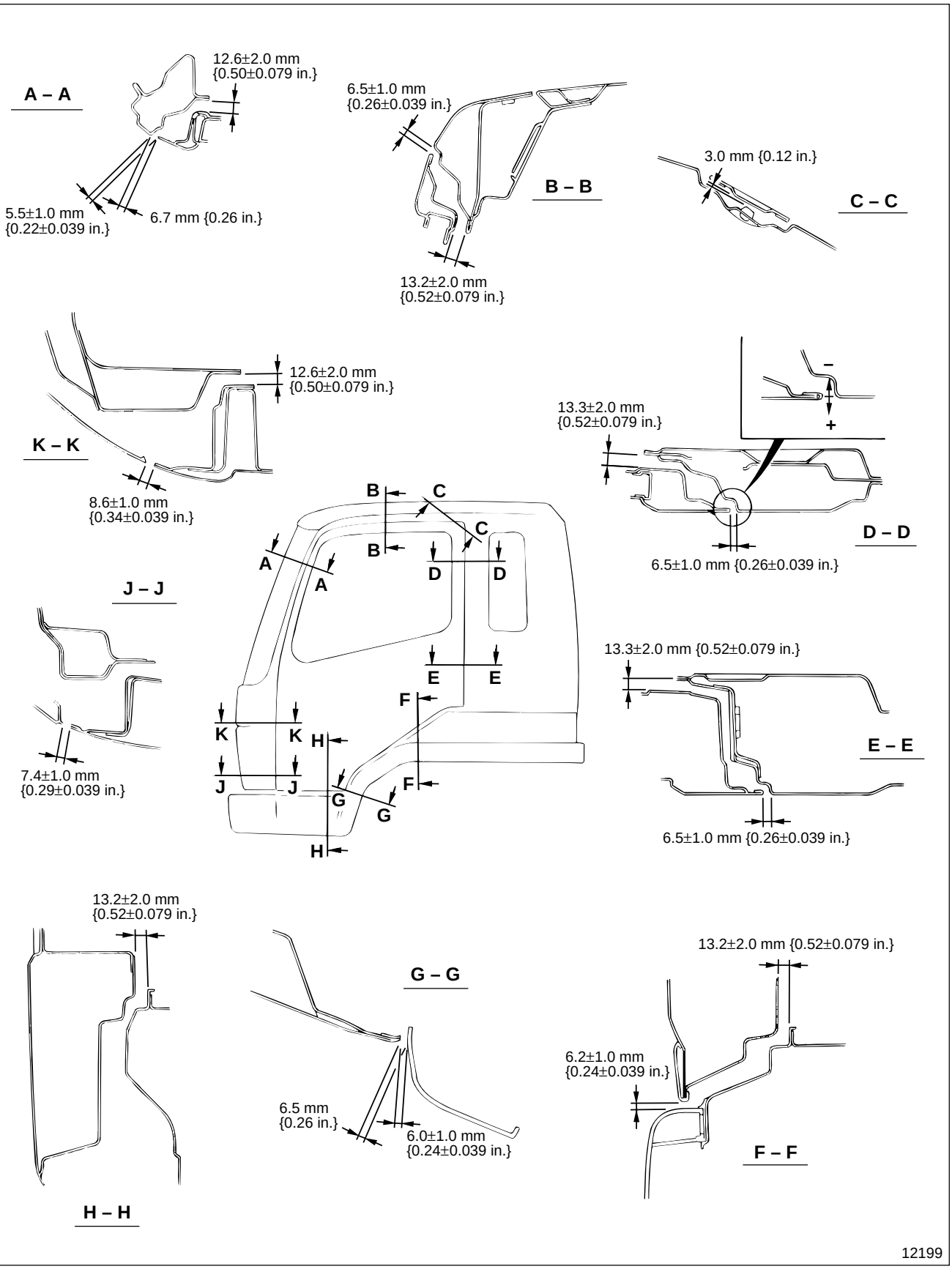

REMOVAL AND INSTALLATION OF CAB

Preliminary Work

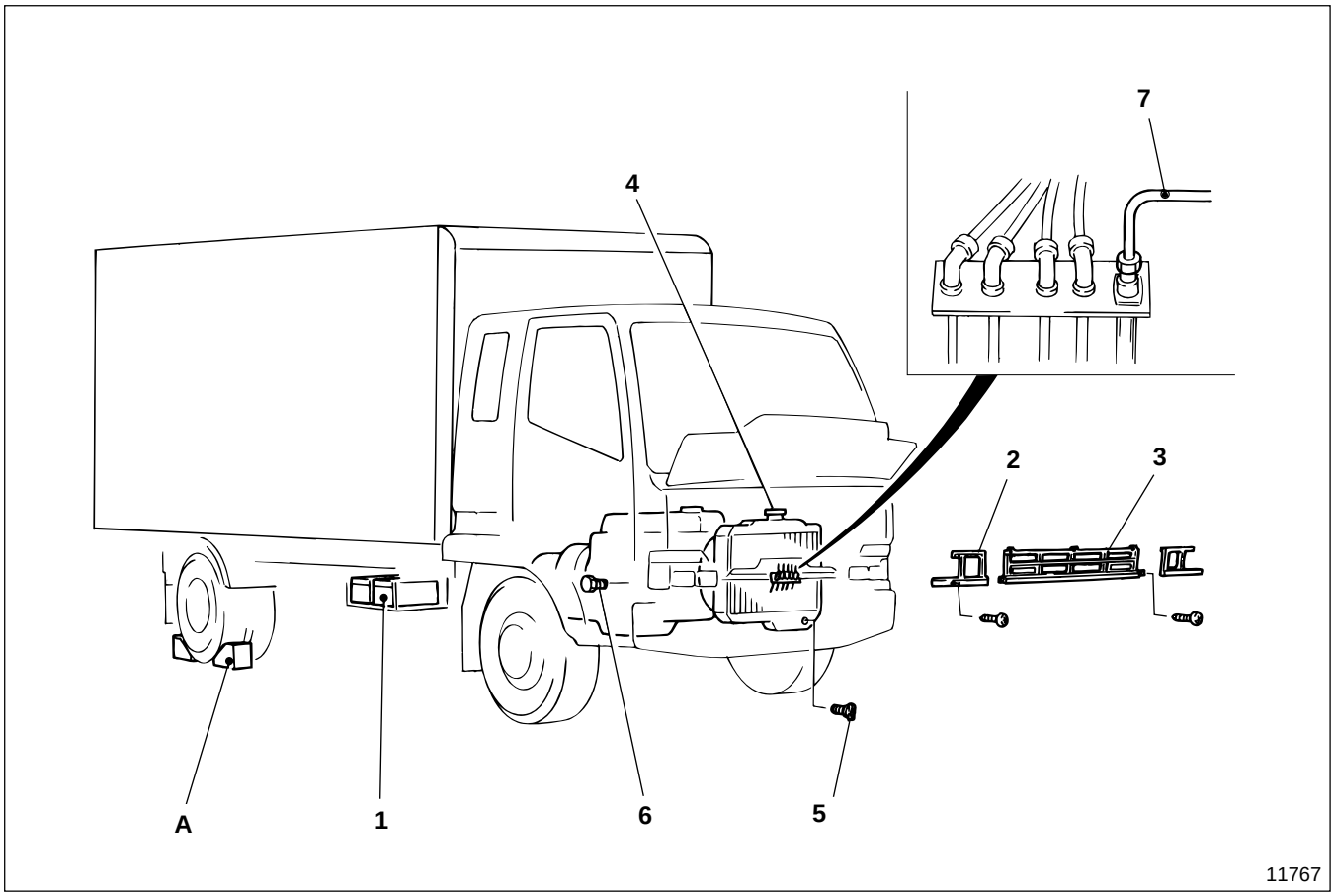

● **Disassembly sequence**

1 Battery (negative terminal) Gr 54
2 Headlamp bezel
3 Front grille Gr 42-48
4 Pressure cap Gr 14
5 Radiator drain plug Gr 14
6 Crankcase drain plug Gr 14
7 Clutch fluid pipe (Clutch)
< Manual transmission > Gr 21

A : Wheel chock

Work items

- Draining, filling, and air bleeding of clutch fluid and brake fluid Gr 21, Gr 35A
- Draining, filling, and air bleeding of coolant Gr 14

WARNING

- **Put chocks A securely in place because the vehicle cannot be maintained at a standstill just by using the parking brake, in the case of a vehicle fitted with a center brake, during removal and installation of the cab.**
- **Do not remove chocks A until the entire operation is completed.**

● **Assembly sequence**

Follow the disassembly sequence in reverse.

Work Inside Cab

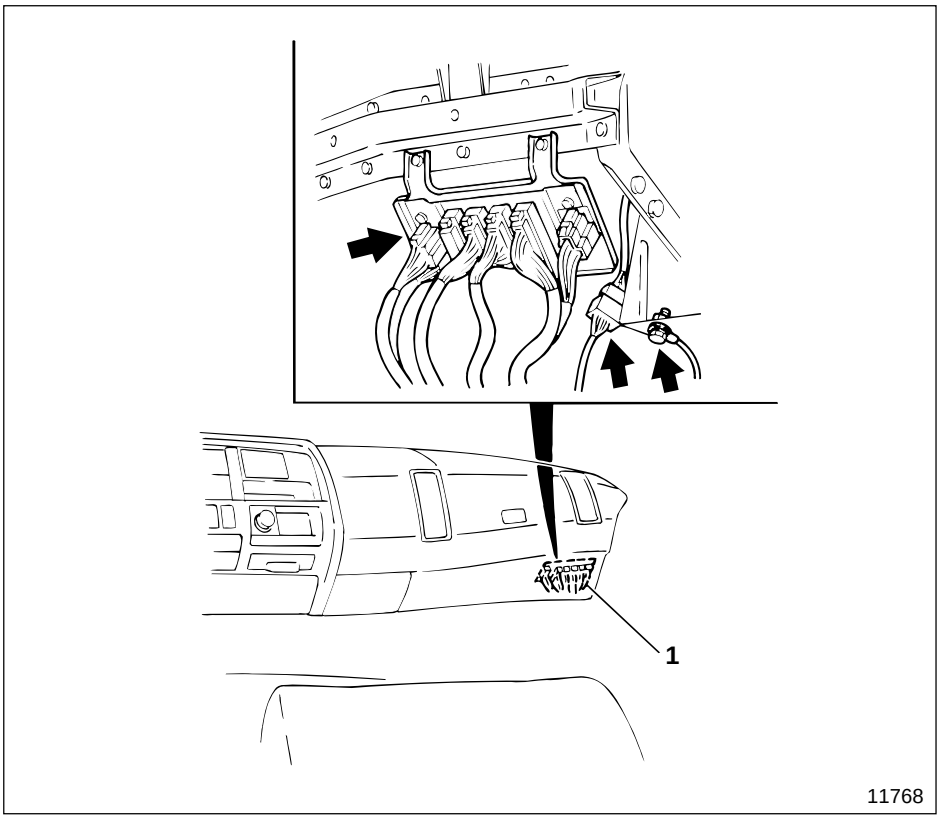

1 Connection between cab harness and chassis harness

Work from Front of Cab

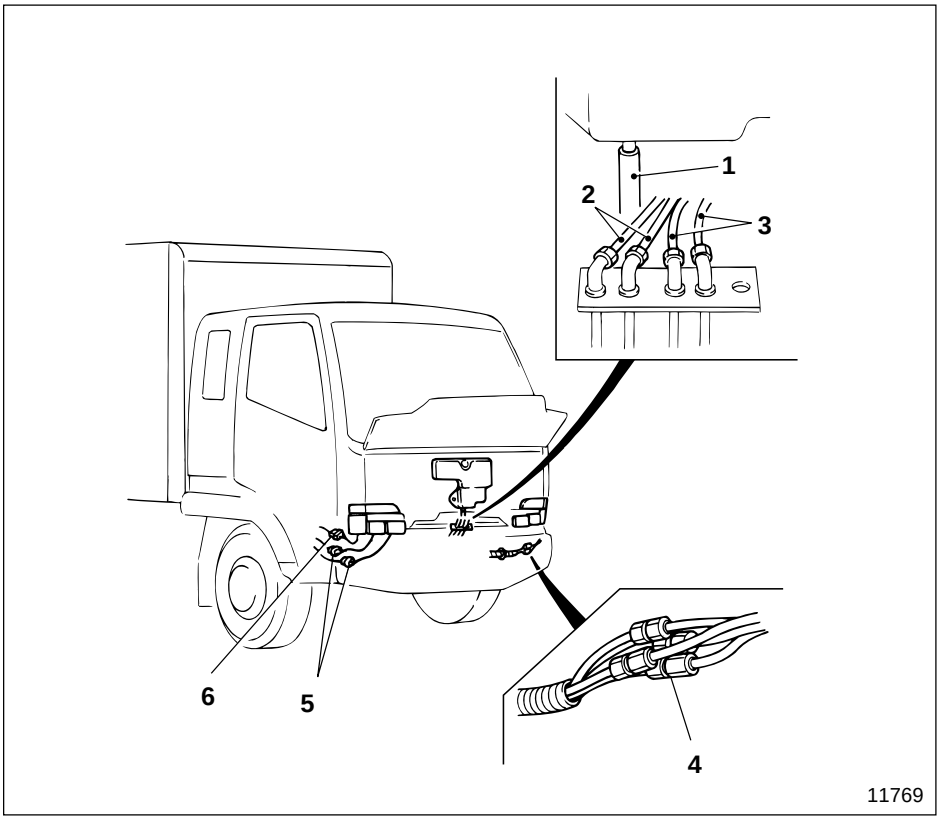

● **Disassembly sequence**

1 Coolant reservoir hose
2 Nylon tube (Parking brake) < FM >
3 Nylon tube (Air gauge)
4 Nylon tubes (1 for air horn, 4 for brake)
5 Headlamp harness connector
6 Clearance lamp harness connector

● **Assembly sequence**

Follow the disassembly sequence in reverse.

NOTE

Nylon tubes 2 to 4 are identified with colored tape. Be sure to match up the tape colors when installing.

Installation procedure: Gr 35

REMOVAL AND INSTALLATION OF CAB

Work with Cab Tilted Up

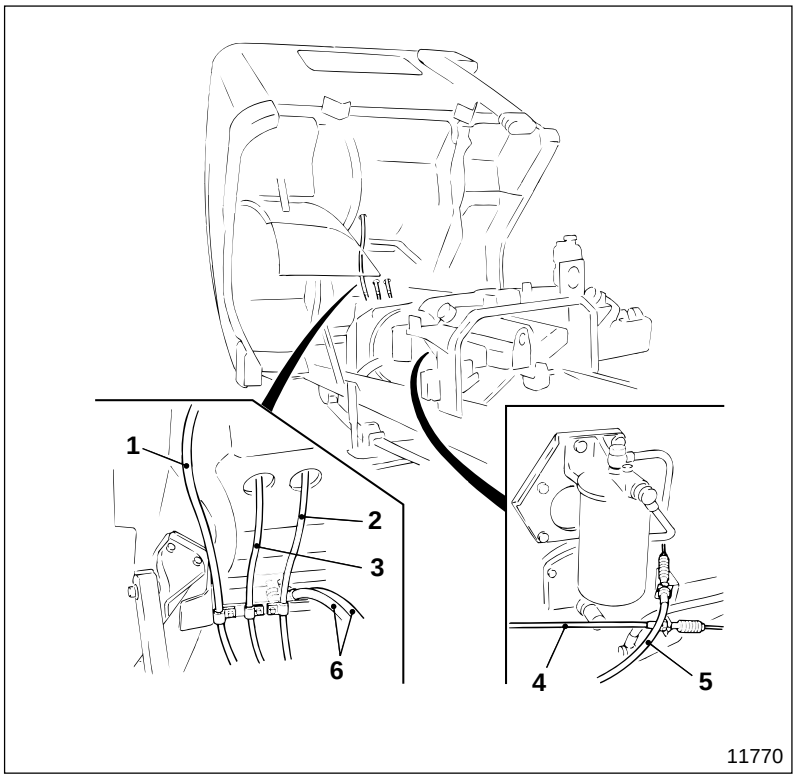

● **Disassembly sequence**

1. Parking brake cable < Center brake > Gr 36A
2. Shift cable < Manual transmission > Gr 22A, Gr 22B
   Range selector cable < Automatic transmission > Gr 23
3. Select cable < Manual transmission > Gr 22A, Gr 22B
4. Engine stop cable Gr 13
5. Accelerator control cable Gr 13
6. Heater hose Gr 55B

● **Assembly sequence**

Follow the disassembly sequence in reverse.

M E M O

REMOVAL AND INSTALLATION OF CAB

Removal and Installation of Tilt Cab Body

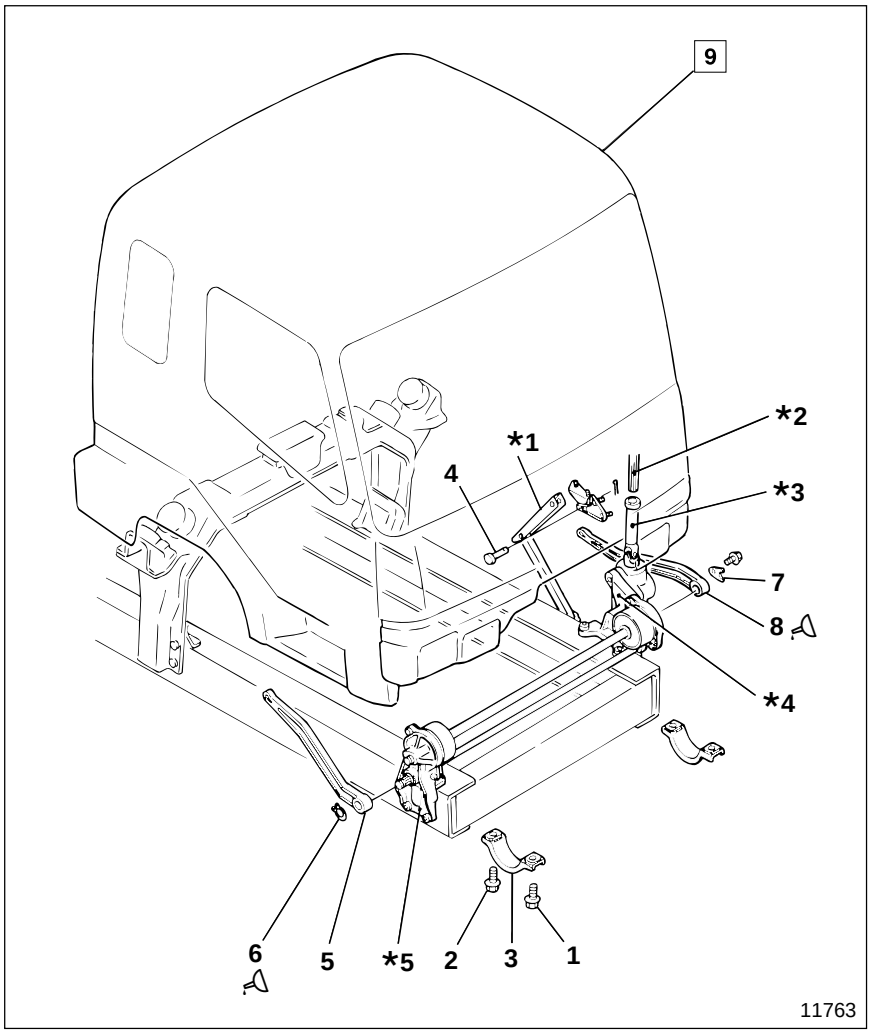

● **Disassembly sequence**

1 Bolt
2 Bolt
3 Cab hinge cap
4 Clevis pin
5 Snap ring
6 Torsion bar arm, RH
7 Stopper plate
8 Torsion bar arm, LH
9 Cab assembly

***1** : Cab stay
***2** : Steering yoke
***3** : Steering shaft
***4** : Gear box bracket
***5** : Cab hinge bracket

● **Assembly sequence**

Follow the disassembly sequence in reverse.

● **Inspection and adjustment after installation**

P42-22

Lubricant

Location	Points of application	Kinds	Quantity
6, 8	Contact area of torsion bar arm with torsion bar support	Chassis grease [NLGI No.1 (Ca soap)]	As required

◆ Service procedure

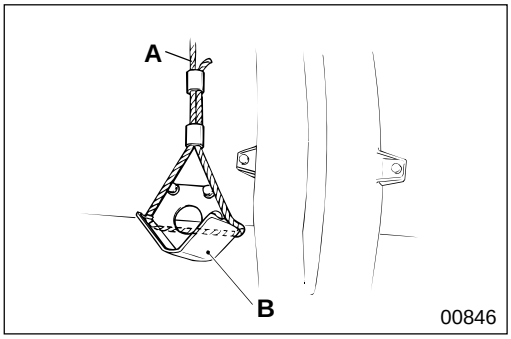

9 **Cab assembly**

[Removal]

- Tilt the cab, then fasten the hoist attachment of crane **A** around bottom bracket **B** of the cab.

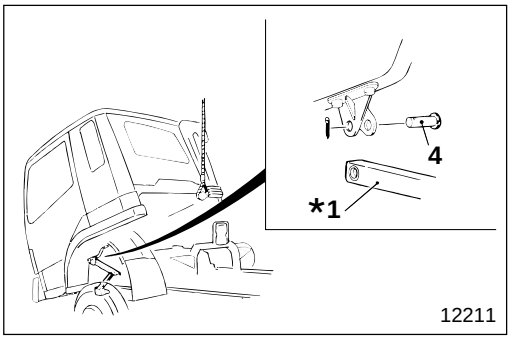

- Lower the cab until cab stay ***1** is no longer locked.
- Remove clevis pin **4** of cab stay ***1**, and separate the cab stay from the cab.

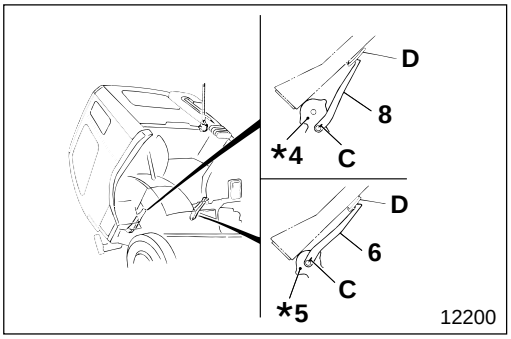

- Before removing torsion bar arm RH **6**, LH **8**, make alignment marks **C** across the torsion bar arm, cab hinge bracket ***5**, and gear box bracket ***4**.
  Remove the torsion bar arm by lifting up the cab with the crane until the torsion bar arm separates from torsion bar support **D**. If necessary, remove the torsion bar support first.

WARNING⚠

- **You must pay close attention to the tilt angle when tilting the cab. It is very dangerous to tilt the cab excessively because it will topple over.**
- **Lower the cab as soon as the torsion bar arm has been removed.**

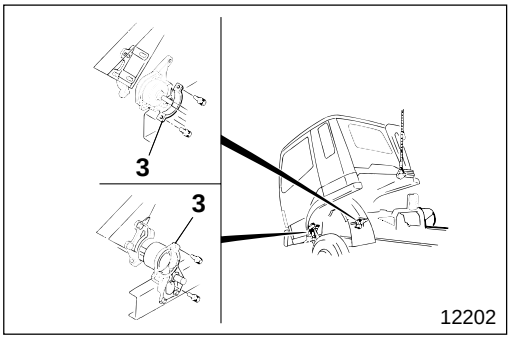

- When you remove cab hinge cap **3**, tilt the cab only by the barest minimum needed to carry out the work.

REMOVAL AND INSTALLATION OF CAB

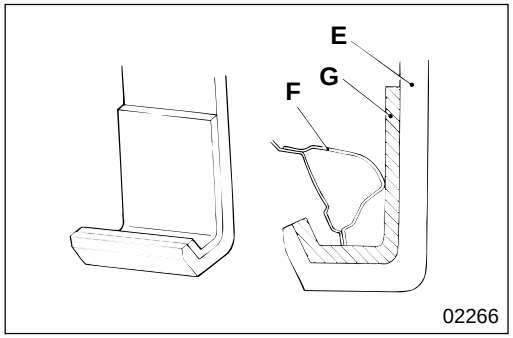

- Set up hoist attachment **E** for the cab as illustrated.

CAUTION⚠

- **Make sure when you set up hoist attachment E that it is capable of lifting cab assembly 9 which weighs approximately 440 kg {970 lb}.**
- **Make sure you install rubber G on hoist attachment E to prevent cab roof F being deformed when the cab is lifted.**

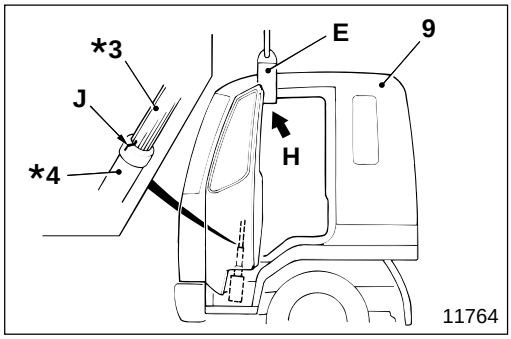

- Mount hoist attachment **E** at center-of-gravity point **H** of cab assembly **9**. Verify the position at which the cab can be lifted horizontally when the cab is lifted slightly.
- Slowly lift cab assembly **9** straight up, and finish lifting when steering yoke ***3** is pulled out from steering shaft ***4**. Make alignment mark **J** before the steering yoke is pulled out from the steering shaft.

WARNING⚠

Never get under cab assembly 9 when it is being lifted.

CAUTION⚠

Make sure, when lifting cab assembly 9, that the wiring harness, cable, hoses, etc. are completely disconnected when the cab is lifted slightly.

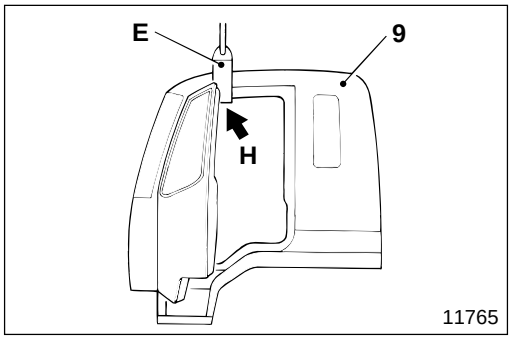

[Installation]

- Mount hoist attachment **E** at center-of-gravity point **H** of cab assembly **9**.

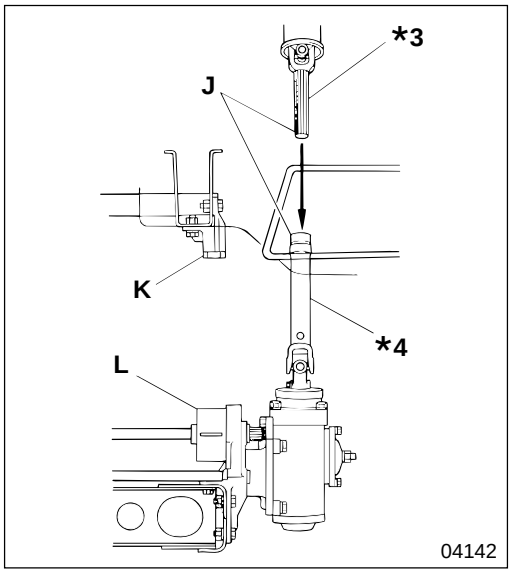

- Slowly lower cab assembly **9** horizontally to insert steering yoke ***3** into steering shaft ***4**, aligning alignment mark **J**.
- Install cab hinge upper bracket **K** aligning it to cab hinge cushion **L**.

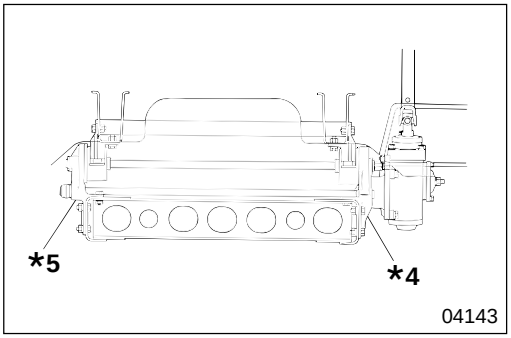

- Check if the cab is installed one-sided in relation to cab hinge bracket ***5** or gear box bracket ***4**, and correct as necessary.

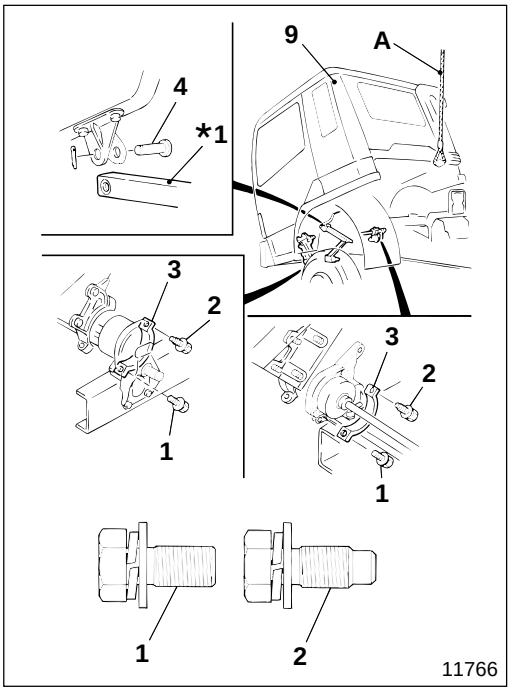

- Securely support the cab on crane **A** to tilt cab assembly **9**.
- Using crane **A** tilt cab assembly **9**, and install cab hinge cap **3** and clevis pin **4**.

WARNING ⚠

You must pay close attention to the tilt angle when tilting cab assembly 9 using crane A. It is very dangerous to tilt the cab excessively because it will topple over.

NOTE

The cab hinge cap mounting bolts have different shapes, so pay close attention when you install them.

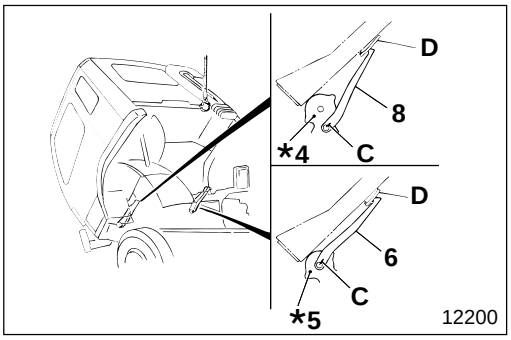

- Install torsion bar arm LH **6**, RH **8** aligning alignment marks **C** on the torsion bar arm, cab hinge bracket ***5**, and gear box bracket ***4**.
  If torsion bar support **D** has been removed, reinstall it after installing the torsion bar arm.

- After installation, tilt cab assembly **9** slowly until it is completely tilted, securely lock the cab stay, then detach the cab from crane **A**.

FRONT CAB MOUNTING

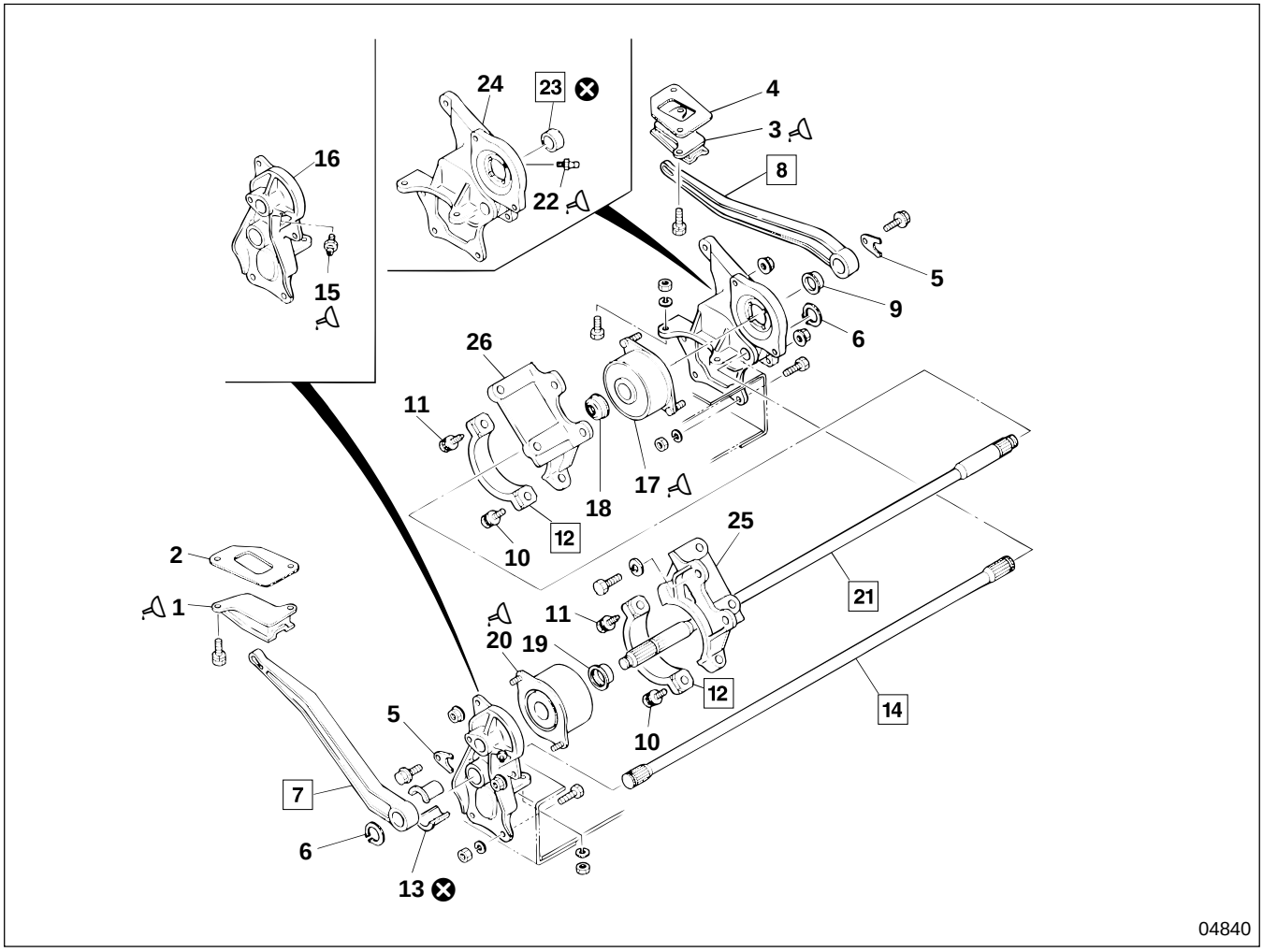

● **Disassembly sequence**

1 Torsion bar support, RH
2 Shim (for adjustment)
3 Torsion bar support, LH
4 Shim (for adjustment)
5 Stopper plate
6 Snap ring
7 Torsion bar arm, RH
8 Torsion bar arm, LH
9 Dust cover
10 Bolt
11 Bolt
12 Cab hinge cap
13 Bushing
14 Lower torsion bar
15 Grease nipple
16 Cab hinge bracket
17 Cab hinge cushion
18 Dust cover
19 Dust cover
20 Cab hinge cushion
21 Upper torsion bar
22 Grease nipple
23 Bushing
24 Gear box bracket
25 Cab hinge upper bracket, RH
26 Cab hinge upper bracket, LH

⊗ : Non-reusable parts

NOTE

Do not remove bushing 23 unless it is faulty.

● **Assembly sequence**

Follow the disassembly sequence in reverse.

Lubricant

Location	Points of application	Kinds	Quantity
1	Torsion bar arm at the area which receives torsion bar support RH	Chassis grease [NLGI No. 1 (Ca soap)]	As required
3	Torsion bar arm at the area which receives torsion bar support LH	Chassis grease [NLGI No. 1 (Ca soap)]	As required
15, 22	Supply via grease nipple	Chassis grease [NLGI No. 1 (Ca soap)]	As required
17, 20	Interior of cab hinge cushion	Chassis grease [NLGI No. 1 (Ca soap)]	As required

◆ Service procedure

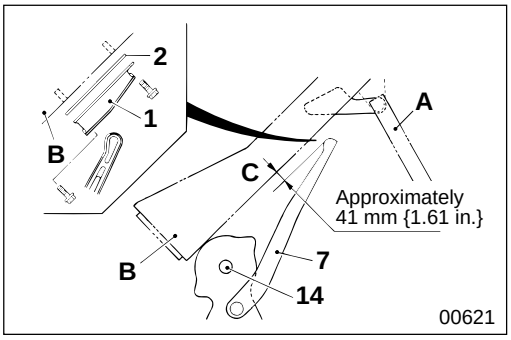

7 Installation of torsion bar arm RH

- Tilt up the cab and support using cab stay **A**.
- Install torsion bar arm RH **7** to lower torsion bar **14** so that clearance **C** between main sill **B** of the cab and the torsion bar arm conforms to the value as illustrated.
- If clearance **C** deviates from the value as illustrated, adjust using shim **2**. The shim must be installed between torsion bar support RH **1** and the cab when torsion bar support RH is installed.

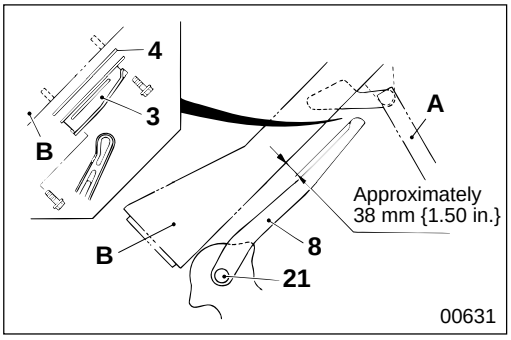

8 Installation of torsion bar arm LH

- Tilt up the cab and support using cab stay **A**.
- Install torsion bar arm LH **8** to lower torsion bar **21** so that clearance **C** between main sill **B** of the cab and the torsion bar arm conforms to the value as illustrated.
- If clearance **C** deviates from the value as illustrated, adjust using shim **4**. The shim must be installed between torsion bar support LH **3** and the cab when torsion bar LH is installed.

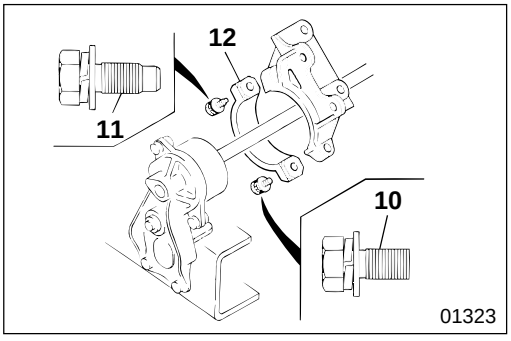

12 Installation of cab hinge cap

NOTE

Bolts 10, 11 have different shapes, so pay close attention when you install them.

FRONT CAB MOUNTING

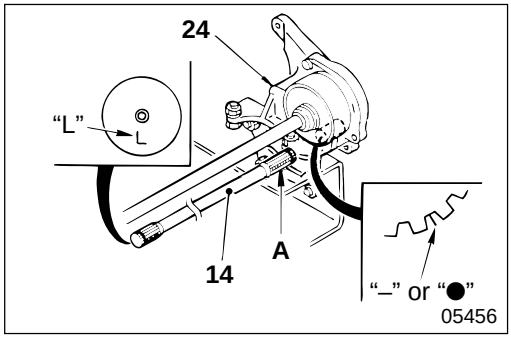

14 **Installation of lower torsion bar**

Install lower torsion bar **14** in gear box bracket **24** in the direction as illustrated. At this point, align white paint mark **A** on the torsion bar with alignment mark "–" or "●" on the gear box bracket.

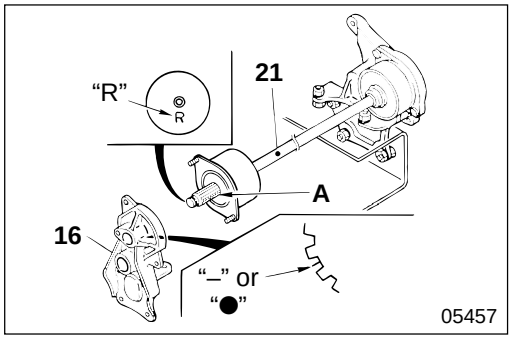

21 **Installation of upper torsion bar**

Install upper torsion bar **21** to cab hinge bracket **16** in the direction as illustrated. At this point, align white paint mark **A** on the torsion bar with alignment mark "–" or "●" on the cab hinge bracket.

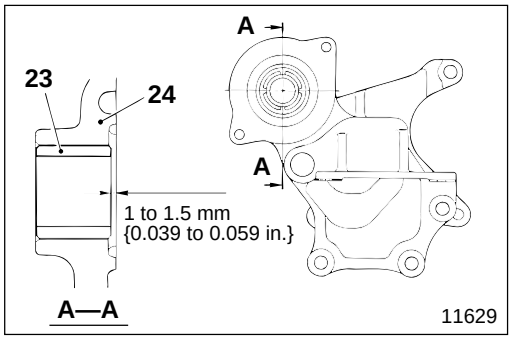

23 **Installation of bushing**

Install bushing **23** in gear box bracket **24** so that the illustrated dimension is obtained.

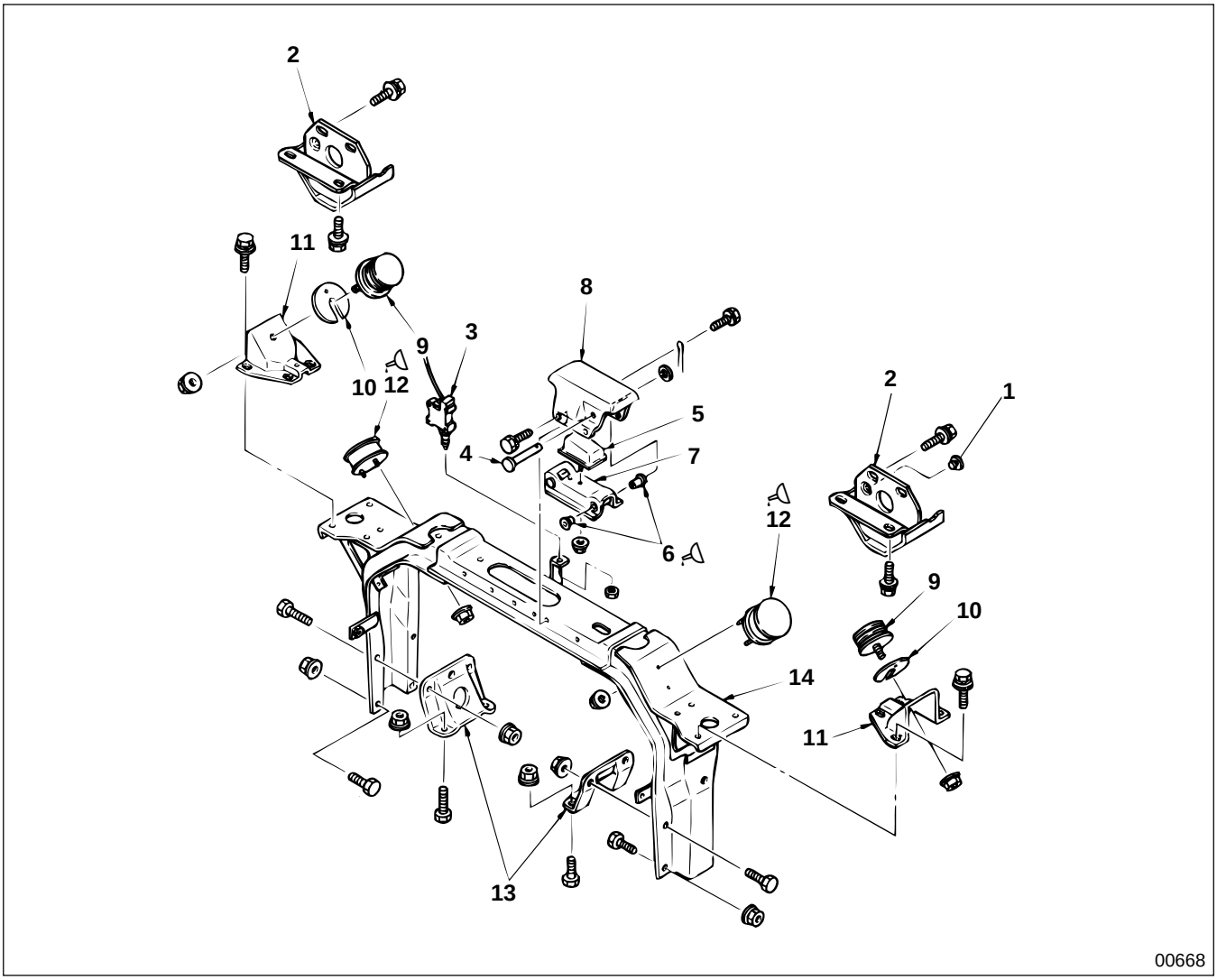

● **Disassembly sequence**

1 Pad
2 Bottom bracket
3 Cab tilt lock switch Gr 54
4 Clevis pin
5 Rebound cushion
6 Bushing
7 Hook pin bracket
8 Hook hinge bracket
9 Compression cushion
10 Shim
11 Mounting bracket
12 Side cushion
13 Cab bridge stiffener
14 Cab bridge

● **Assembly sequence**

Follow the disassembly sequence in reverse.

● **Inspection and adjustment after installation**

P42-22

Lubricant

Location	Points of application	Kinds	Quantity
6	Contact area of bushing and hook hinge bracket	Chassis grease [NLGI No. 1 (Ca soap)]	As required
12	Contact area of side cushion with bottom bracket	Molybdenum disulfide grease [NLGI No. 2 (Li soap)] (Molycoat BR2 Plus)	As required

CAB TILT LINK

Cab Tilt Link

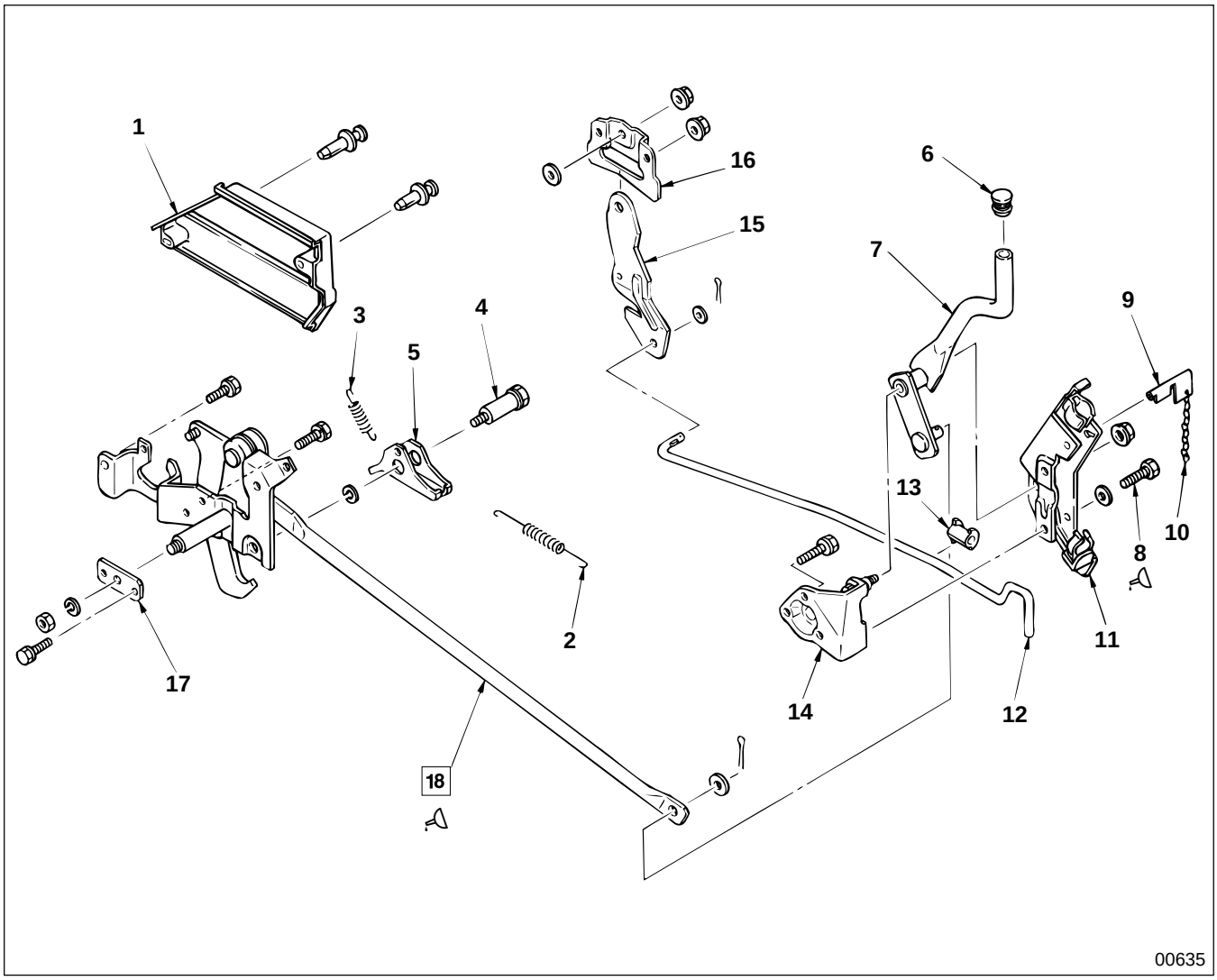

● **Disassembly sequence**

1 Main hook cover
2 Return spring
3 Return spring
4 Lock lever bolt
5 Lock lever
6 Plug
7 Hook control lever
8 Bolt
9 Key
10 Chain
11 Hook control lever bracket
12 L-lever rod
13 Sleeve
14 Hinge bracket
15 L-lever
16 L-lever bracket
17 Holder plate
18 Main hook assembly

● **Assembly sequence**

Follow the disassembly sequence in reverse.

Lubricant

Location	Points of application	Kinds	Quantity
8	Thread area of bolt (Hook control lever bracket mounting)	THREEBOND 1401 or LOCTITE 271	As required
18	Roller area of main hook assembly and friction area of roller	Chassis grease [NLGI No. 1 (Ca soap)]	As required
	Eye sections of main hook assembly control rod	Chassis grease [NLGI No. 1 (Ca soap)]	As required

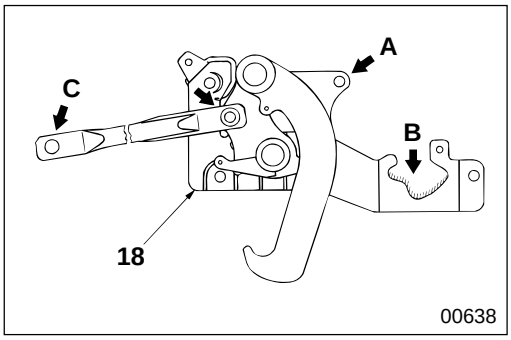

◆ Service procedure

18 **Points of greasing on main hook assembly**

A : Roller area
B : Roller frictional area
C : Eye sections at control rod ends

CAB TILT LINK

Cab Stay

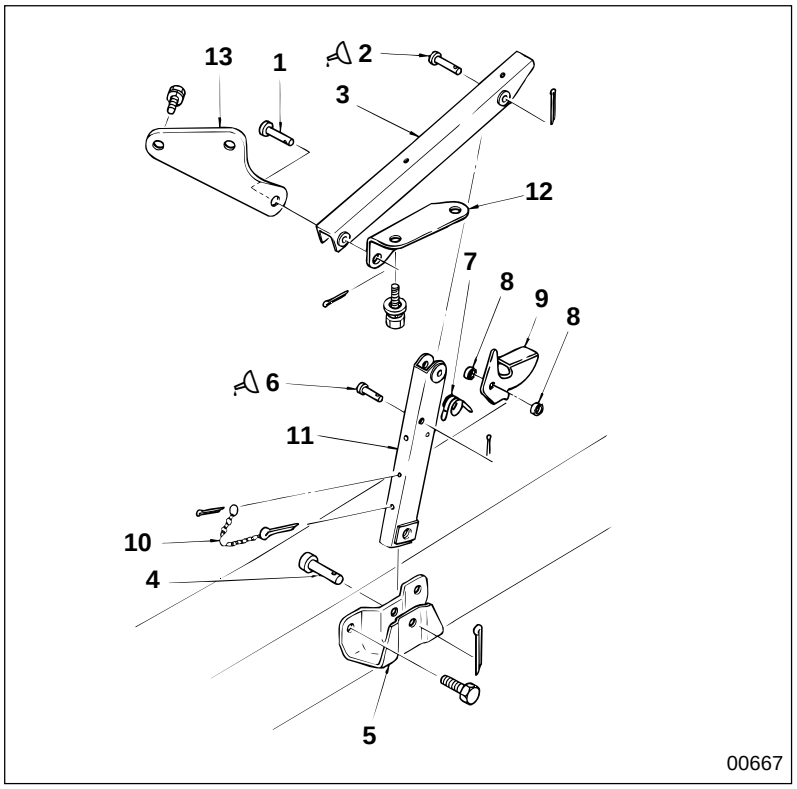

● **Disassembly sequence**

1 Clevis pin
2 Clevis pin
3 Stay
4 Clevis pin
5 Lower bracket
6 Clevis pin
7 Return spring
8 Spacer
9 Locking latch
10 Chain
11 Stay
12 Upper bracket
13 Upper bracket

● **Assembly sequence**

Follow the disassembly sequence in reverse.

WARNING⚠

You must use a hoist to support the cab when you remove the cab stay assembly.

Lubricant

Location	Points of application	Kinds	Quantity
2, 6	Clevis pin	Chassis grease [NLGI No. 1 (Ca soap)]	As required

M E M O

DOOR

Door Hinge and Striker

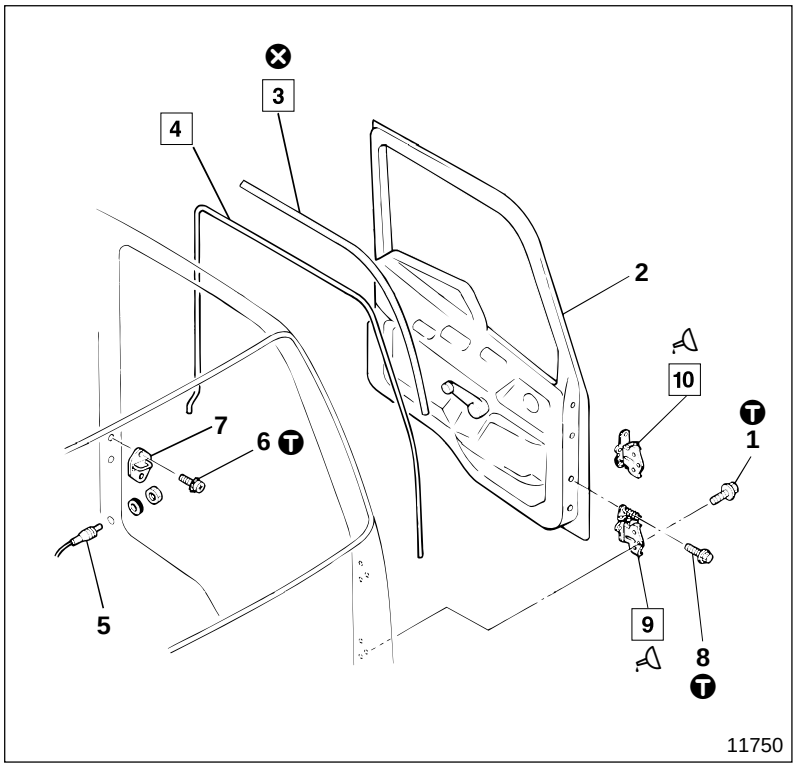

● **Removal sequence**

1 Bolt
2 Door assembly 📖 P42-44
3 Roof side weatherstrip
4 Door inner weatherstrip
5 Door switch
6 Screw
7 Striker
8 Bolt
9 Lower hinge
10 Upper hinge

⊗ : Non-reusable parts

● **Inspection and adjustment after installation** 📖 **P42-24**

● **Installation sequence**

Follow the removal sequence in reverse.

Ⓣ Tightening torque

Unit : N·m {lbf.ft, kgf·m}

Location	Parts to be tightened	Tightening torque	Remarks
1	Bolt (Door assembly mounting)	17 to 26 {12 to 19, 1.7 to 2.6}	—
6	Screw (Striker mounting)	9 to 14 {6.5 to 10.1, 0.9 to 1.4}	—
8	Bolt (Lower and upper hinge mounting)	17 to 26 {12 to 19, 1.7 to 2.6}	—

Lubricant

Location	Points of application	Kinds	Quantity
9, 10	Rotating and friction areas of lower hinge and upper hinge	Chassis grease [NLGI No.1 (Ca soap)]	As required

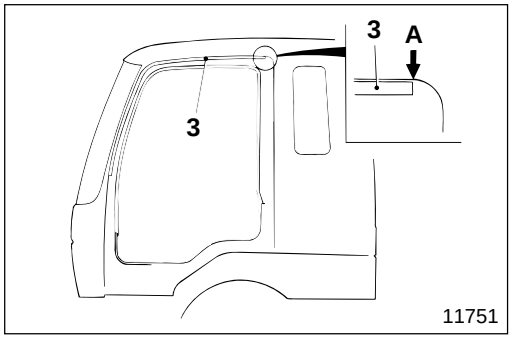

◆ Service procedure

3 **Installation of roof side weatherstrip**

Install roof side weatherstrip **3** on the cab starting from point **A** as illustrated.

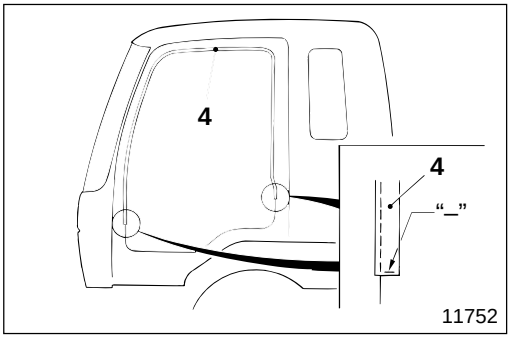

4 **Installation of door inner weatherstrip**

Install door weatherstrip **4** on the cab, aligning both ends of the weatherstrip with alignment marks "–" on the cab side.

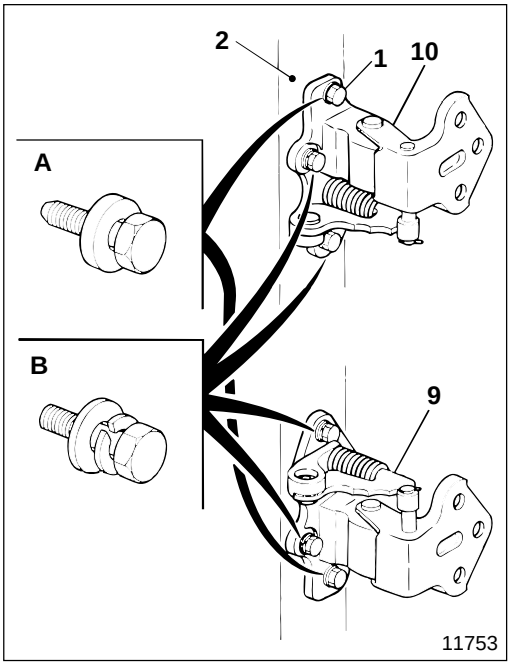

9 **10** **Installation of lower and upper hinges**

- Two types of bolt **1** are provided to install lower hinge **9** and upper hinge **10** to door assembly **2**:
  A : Bolt with built-in washer
  B : Bolt with built-in washer and spring washer
- Bolt **A** with built-in washer comes in two types; in one type the washer is welded to lower hinge **9** and upper hinge **10**, and in the other it is not welded to lower hinge **9** and upper hinge **10**.
- If the washers are not welded to the hinges, bolt **B** with built-in washer and spring washer can be used in place of bolt **A** with the built-in washer.

DOOR

Door Assembly

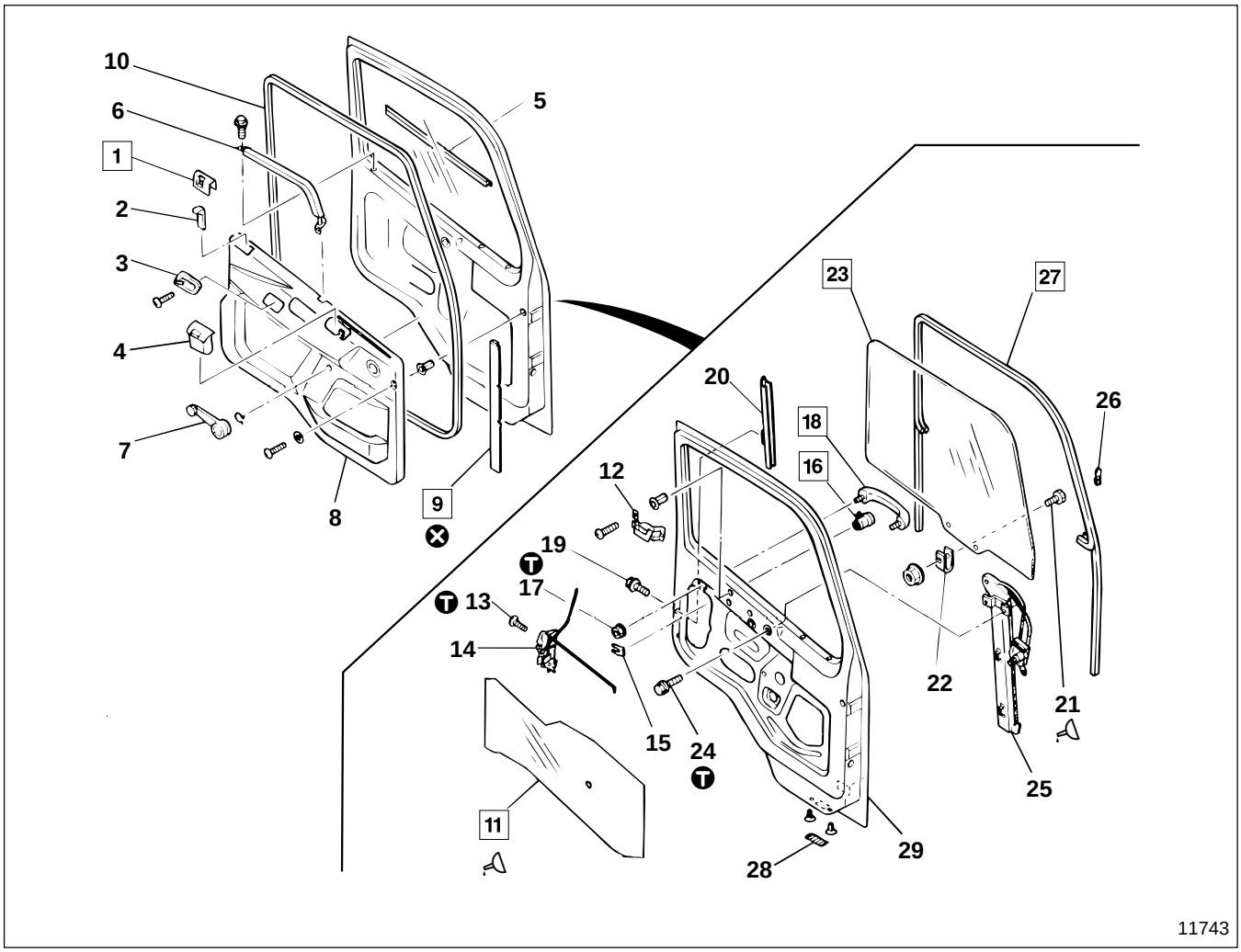

● **Disassembly sequence**

1 Door lock knob cover
2 Door lock knob
3 Inside handle cover
4 Ashtray
5 Door belt line molding
6 Door bar
7 Regulator handle
8 Door trim
9 Door outer weatherstrip
10 Door opening weatherstrip
11 Waterproof cover
12 Inside handle
13 Screw
14 Door latch
15 Clip
16 Door lock cylinder
17 Nut
18 Outside handle
19 Bolt
20 Lower sash
21 Bolt
22 Glass holder
23 Door glass
24 Bolt
25 Regulator and rail assembly
26 Glass catch
27 Run channel
28 Air outlet garnish
29 Door panel

⊗ : Non-reusable parts

● **Installation sequence**

Follow the removal sequence in reverse.

Tightening torque

Unit : N·m {lbf.ft, kgf·m}

Location	Parts to be tightened	Tightening torque	Remarks
13	Screw (Door latch mounting)	4 to 6 {2.9 to 4.3, 0.4 to 0.6}	—
17	Nut (Outside handle mounting)	4 to 6 {2.9 to 4.3, 0.4 to 0.6}	—
24	Bolt (Regulator and rail assembly mounting)	6.9 to 10.8 {5.1 to 8.0, 0.7 to 1.1}	—

Sealant

Location	Points of application	Kinds	Quantity
11	Door panel waterproof cover mounting surface	BUTYL TAPE	As required
21	Thread area of bolt	LOCTITE DRYLOCK No. 203	As required

◆ Service procedure

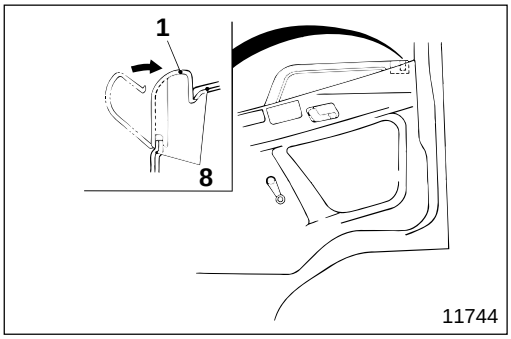

1 **Installation of door lock knob cover**

Install door lock knob cover **3** in door trim **8** in the direction as illustrated.

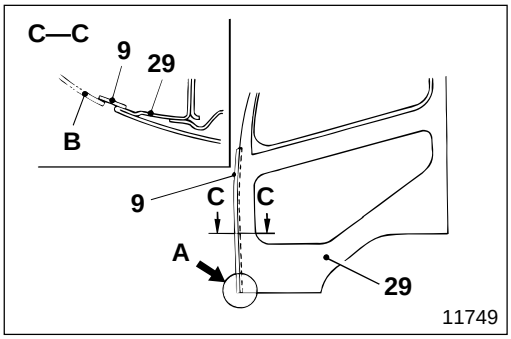

9 **Installation of door outer weatherstrip**

Install door outer weatherstrip **9** aligning it with lower edge **A** of door panel **29**.

B : Corner panel

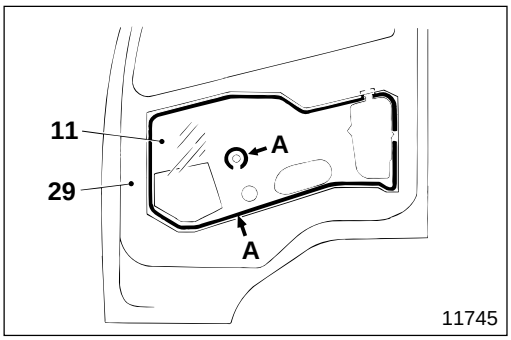

11 **Installation of waterproof cover**

- Apply butyl tape **A** to door panel **29** as illustrated.
- Stick waterproof cover **11** over butyl tape **A**.

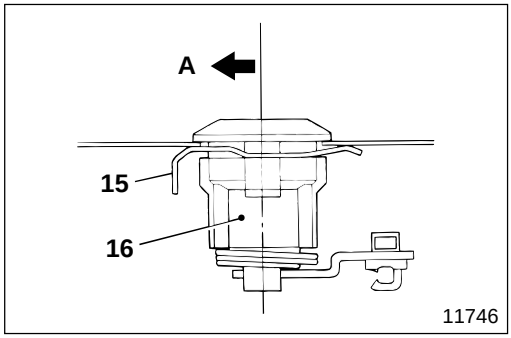

16 **Installation of door lock cylinder**

15 : Clip
A : Front of the vehicle

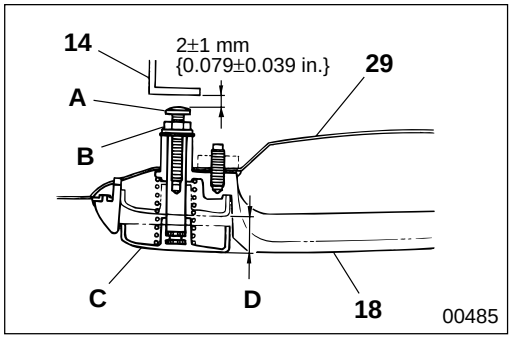

18 **Adjustment of outside handle**

- Adjust the clearance between push bolt **A** of outside handle **18** and door latch **14** to the illustrated value by turning the push bolt.
  29 : Door panel
  B : Lock nut
- After adjustment, check stroke **D** of push button **C**.
  - Maximum stroke (with push button fully depressed)
    12 mm {0.47 in.}
  - Door lock releasing stroke
    10 mm {0.39 in.}

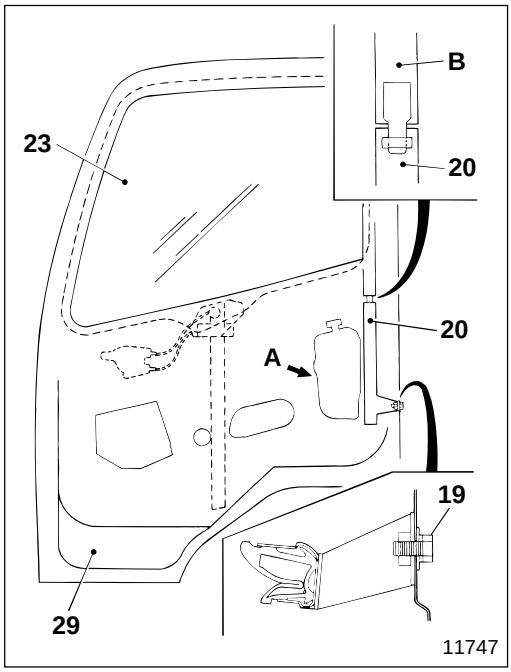

23 **Removal and installation of door glass**

Remove all parts supporting door glass **23** and remove the door glass from the door opening.

- Raise door glass **23** to the upper limit.
- Remove bolt **19** through hole **A** of door panel **29** to remove lower sash **20** which is inserted into upper sash **B**.

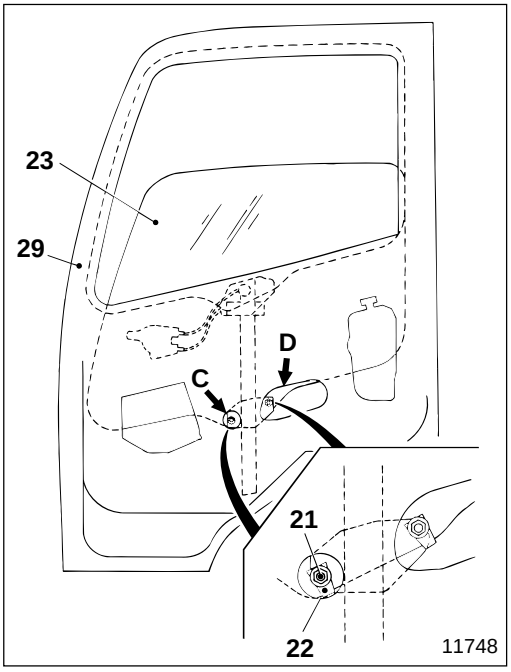

- Lower door glass **23** to the level where bolt **21** can be seen through holes **C** and **D** of door panel **29** respectively.
- Hold door glass **23** with your hands and remove glass holder **22**.
- Remove door glass **23** via the door opening.
- For installation, follow the removal sequence in reverse.

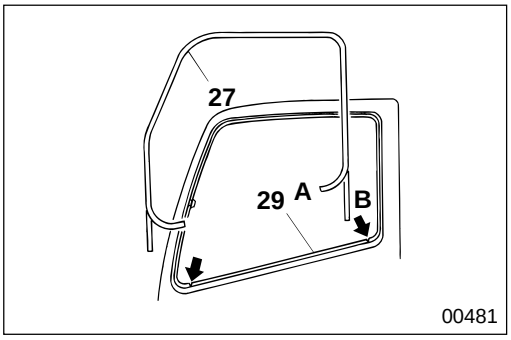

27 **Installation of run channel**

Install run channel aligning end **A** of run channel **27** to slit **B** of door panel **29**.

CAB EXTERIOR FITTING

Front Panel

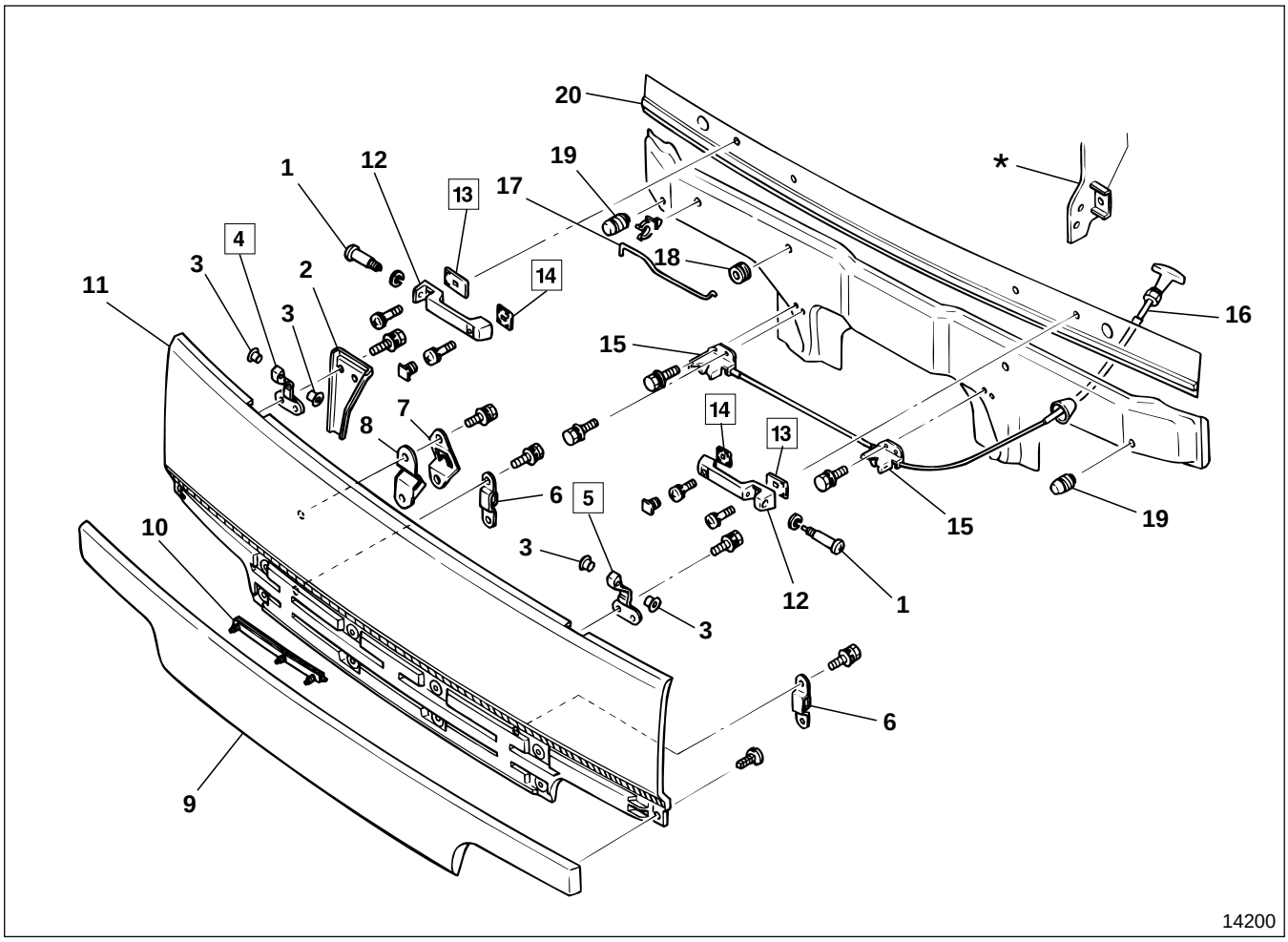

● **Disassembly sequence**

1 Front panel hinge pin
2 Splash shield plate
3 Bushing
4 Front panel hinge, RH
5 Front panel hinge, LH
6 Striker
7 Bracket A
8 Bracket B
9 Upper grille
10 Weather strip
11 Front panel
12 Front grip
13 Packing A
14 Packing B
15 Front panel latch
16 Front panel opener cable
17 Front panel support rod
18 Grommet
19 Bumper
20 Weatherstrip

***** : Brake pedal bracket

● **Assembly sequence**

Follow the disassembly sequence in reverse.

◆ Service procedure

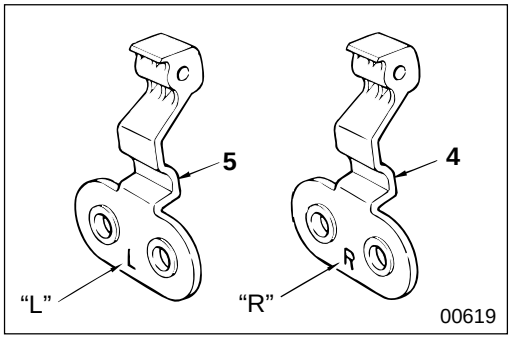

4 **5** **Installation of front panel hinge RH and LH**

Front panel hinge RH **4**, LH **5** can be distinguished by "**L**" and "**R**" identification marks.

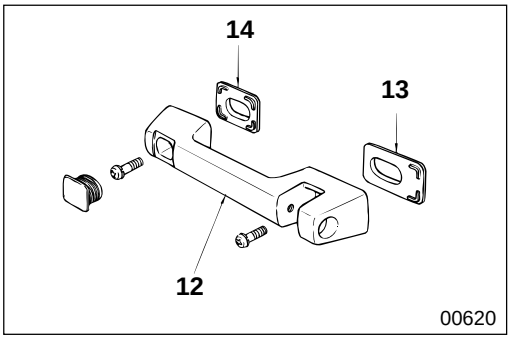

13 **14** **Installation of packing A and packing B**

Install packing **A 13** and packing **B 14** on front grip **12** in the direction as illustrated.

CAB EXTERIOR FITTING

Front Corner Panel

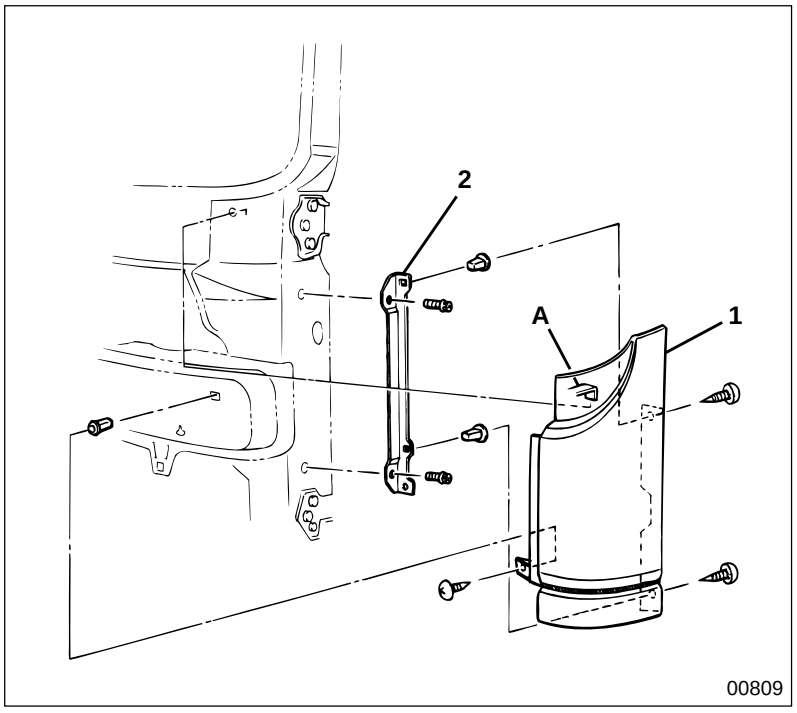

● **Disassembly sequence**

1 Front corner panel
2 Corner panel bracket

A: Claw

● **Assembly sequence**

Follow the disassembly sequence in reverse.

NOTE

The illustration shows the left side. The right side is symmetrical to the left side.

Front Grille

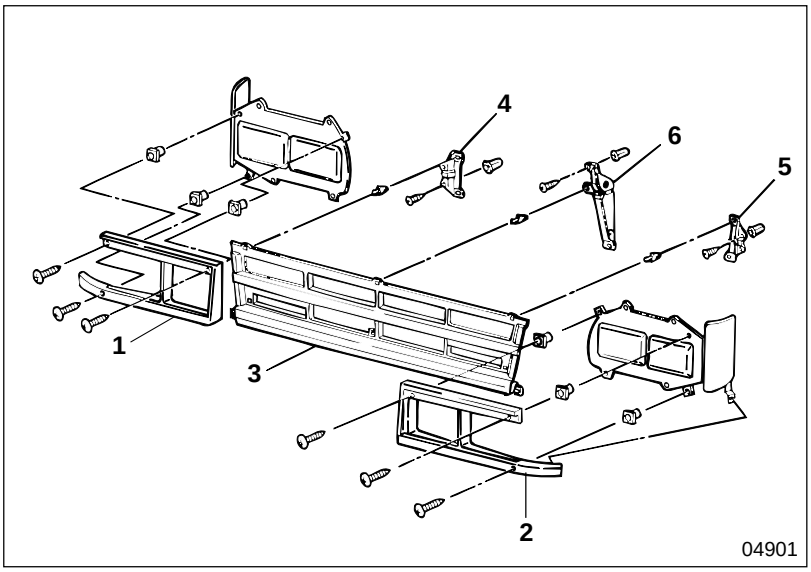

● **Disassembly sequence**

1 Headlamp bezel, RH
2 Headlamp bezel, LH
3 Front grille
4 Grille stay, RH
5 Grille stay, LH
6 Grille stay center

● **Assembly sequence**

Follow the disassembly sequence in reverse.

CAB EXTERIOR FITTING

Step

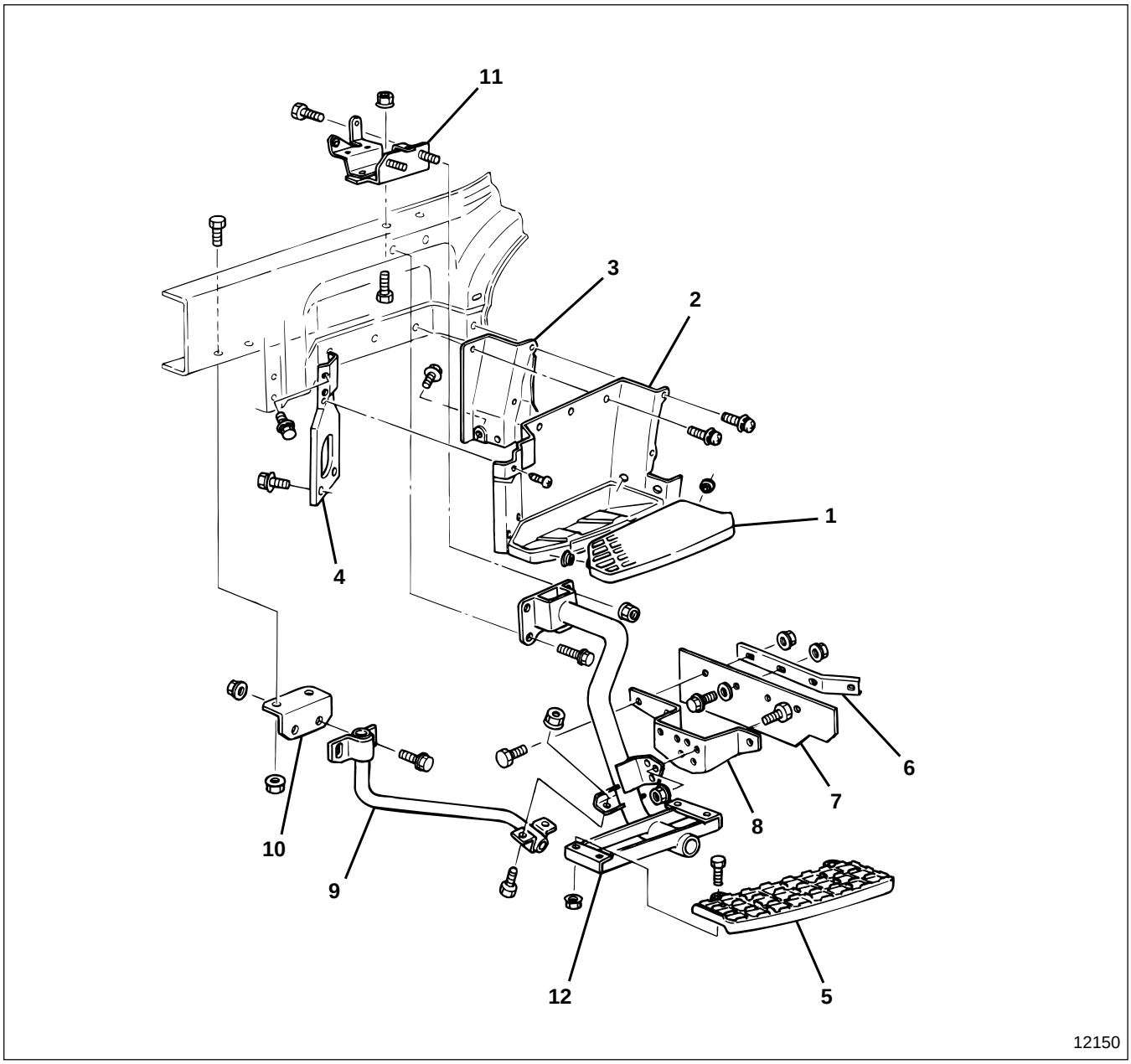

● **Removal sequence**

1 Upper step
2 Step wall
3 Step rear bracket
4 Step front bracket
5 Lower step
6 Apron support
7 Splash apron
8 Apron support
9 Step stay
10 Stay bracket
11 Step bracket
12 Step bracket assembly

● **Installation sequence**

Follow the removal sequence in reverse.

NOTE

This illustration only shows the step for the left side; the same service procedure described above is used for the right side.

Fender

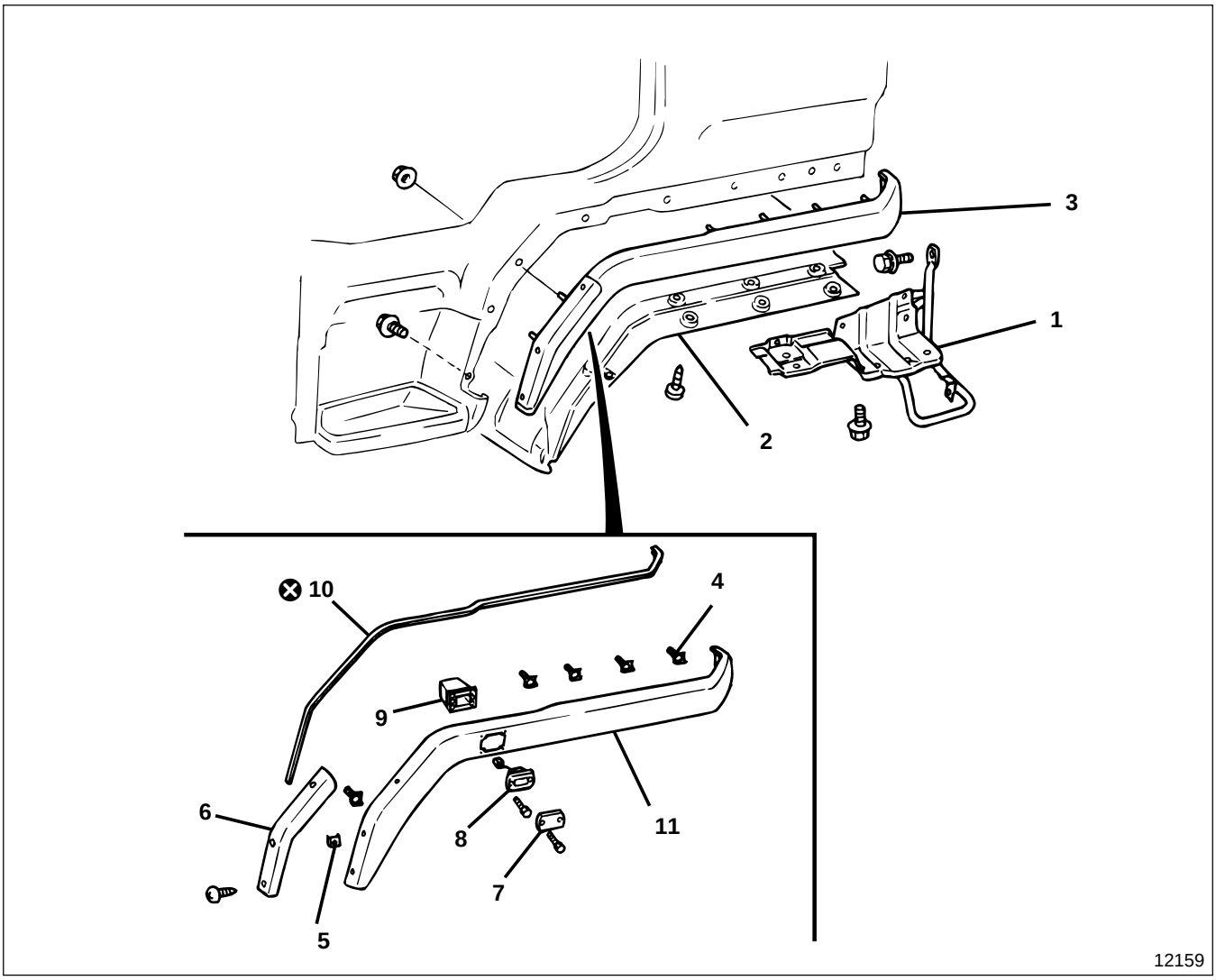

● **Disassembly sequence**

1 Cab tilt grip
2 Wheel arch cover
3 Fender assembly
4 Bolt plate
5 Nut plate
6 Fender protector
7 Lens
8 Side turn signal lamp Gr 54
9 Side turn signal lamp cover
10 Welt
11 Fender

⊗ : Non-reusable parts

● **Assembly sequence**

Follow the disassembly sequence in reverse.

NOTE

The illustration shows the left side. The right side is symmetrical to the left side except that the right side does not have cab tilt grip 1.

MIRROR

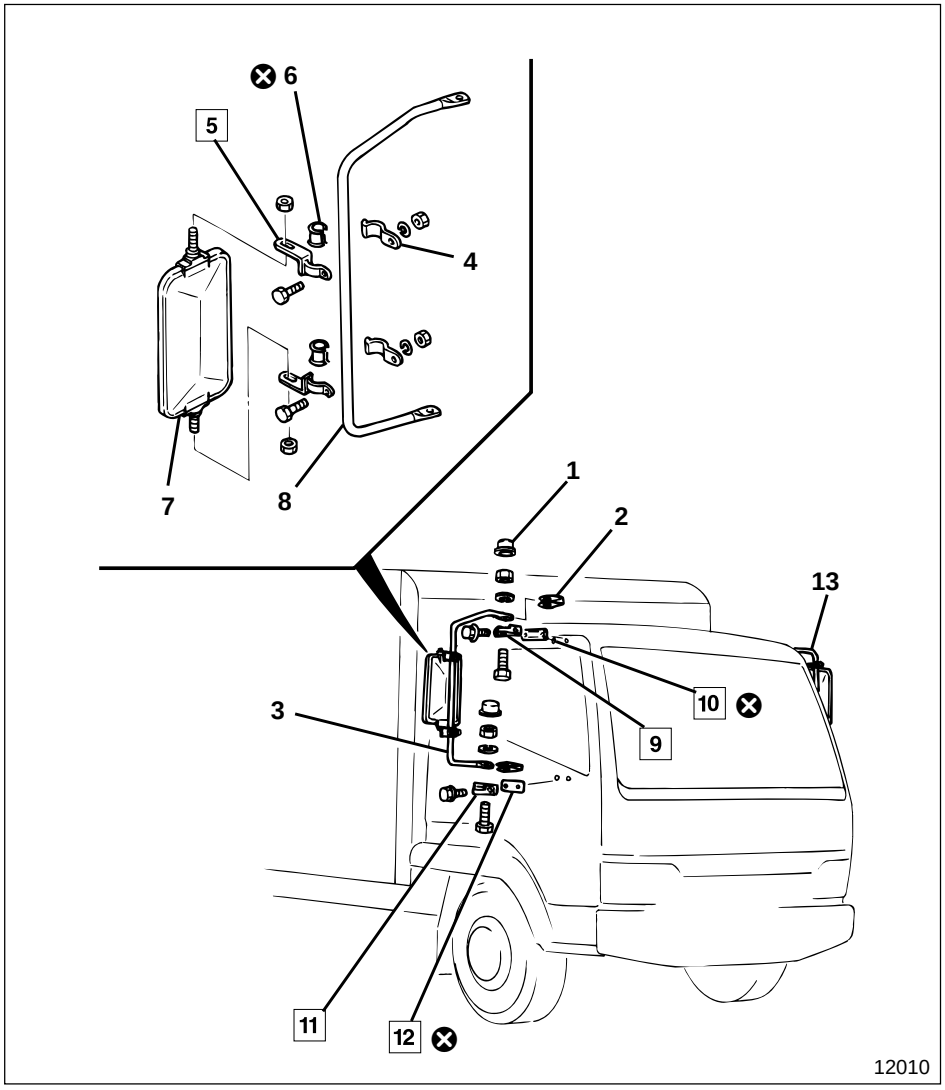

● **Removal sequence**

1 Cap
2 U-washer
3 Outside mirror stay assembly, RH
4 Mirror holder B
5 Mirror holder
6 Packing
7 Outside mirror
8 Mirror stay
9 Mirror stay upper bracket
10 Packing
11 Mirror stay lower bracket
12 Packing
13 Outside mirror stay assembly, LH

⊗ : Non-reusable parts

● **Installation sequence**

Follow the removal sequence in reverse.

NOTE

For outside mirror stay assembly LH 13, follow the same service procedure as for outside mirror stay assembly RH 3.

◆ Service procedure

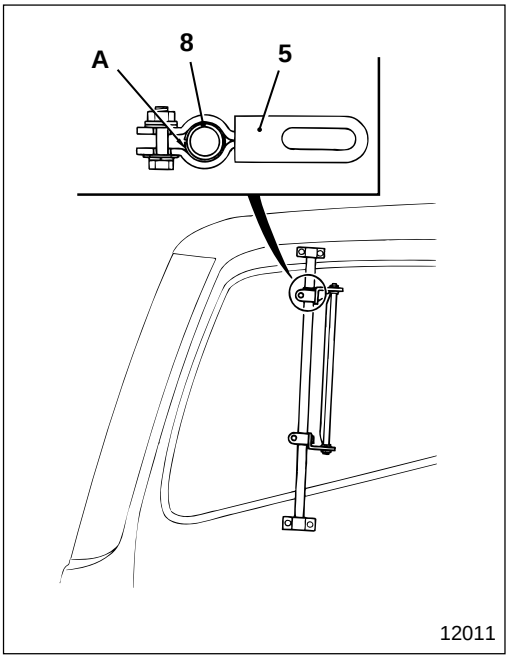

5 **Installation of mirror holder**

Install mirror holder **5** onto mirror stay **8** in the direction as illustrated.

A : Indent of mirror stay **8**

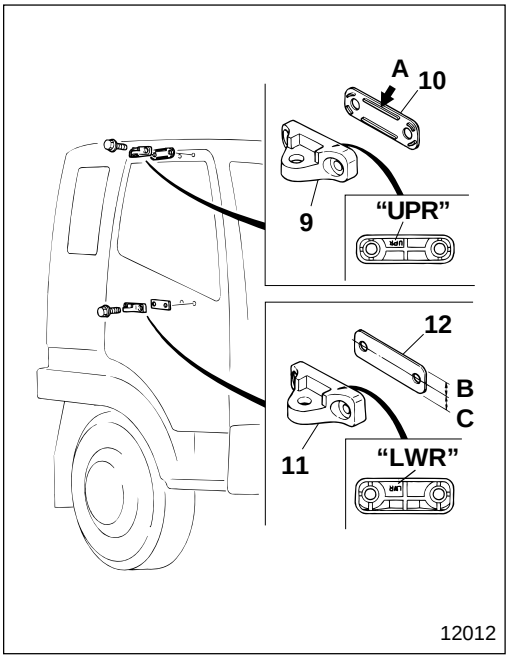

9 **to** **12** **Installation of mirror stay bracket and packing**

- "**UPR**" and "**LWR**" identification marks are marked on mirror stay upper bracket **9** and mirror stay lower bracket **11** respectively.
- Install indent **A** on packing **10**, facing mirror stay upper bracket **9**.
- Installation hole is offset on packing **12**.

  B : 13.8 mm {0.54 in.}

  C : 17.2 mm {0.68 in.}

WIPER AND WASHER

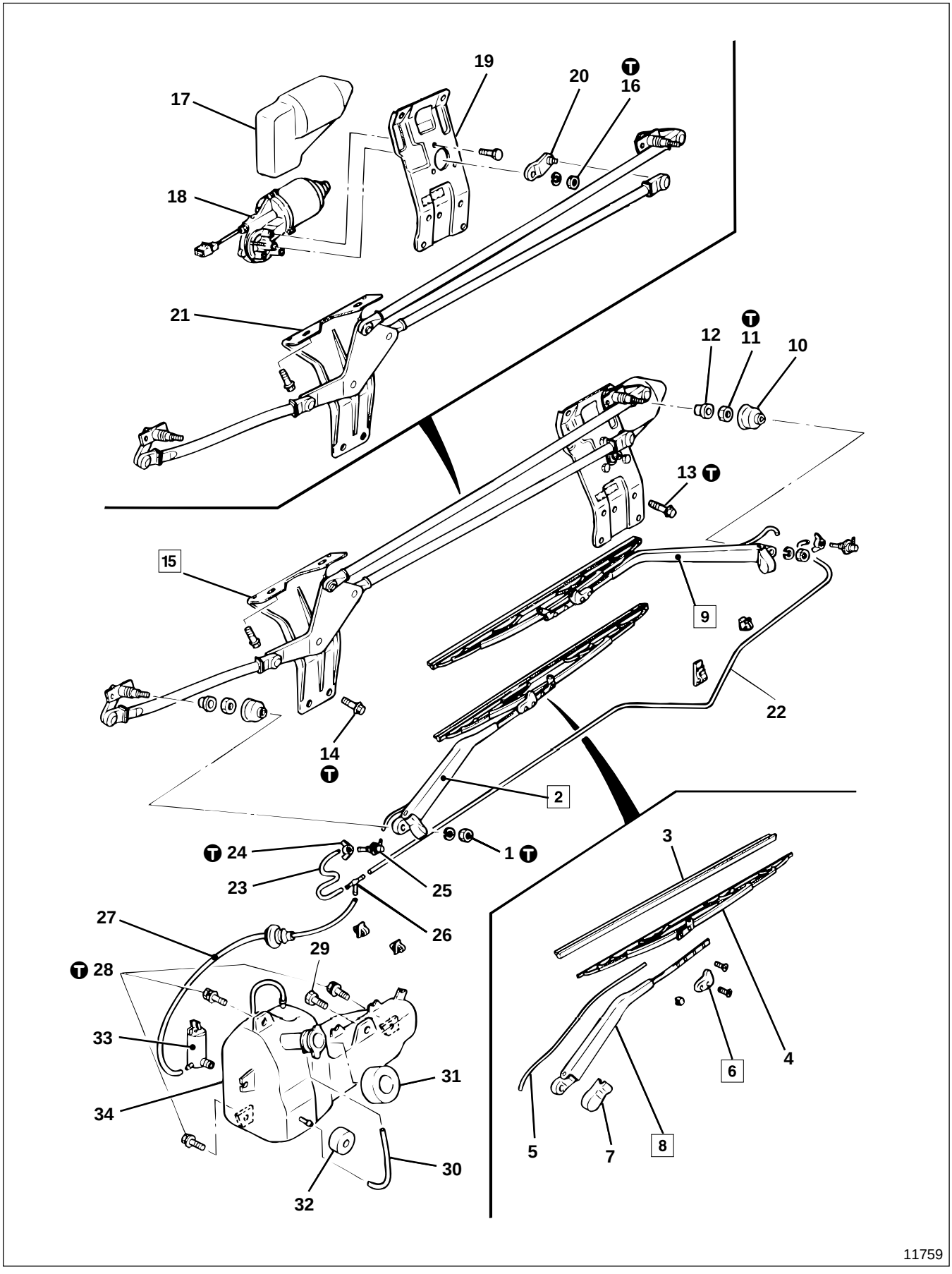

● **Disassembly sequence**

1 Nut
2 Wiper arm and blade assembly, RH
3 Blade rubber
4 Wiper blade
5 Washer hose
6 Washer nozzle
7 Head cover
8 Wiper arm
9 Wiper arm and blade assembly, LH
10 Pivot cap
11 Nut
12 Collar
13 Bolt
14 Bolt
15 Wiper link and motor assembly
16 Nut
17 Wiper motor cover
18 Wiper motor
19 Wiper motor bracket
20 Crank arm
21 Link assembly
21 Washer hose
23 Washer hose
24 Nut
25 Hose joint
26 Hose joint
27 Washer hose
28 Bolt
29 Bolt
30 Washer hose
31 Packing
32 Packing
33 Windshield washer motor
Gr 54
34 Washer tank

NOTE

Since crank arm 20 is installed corresponding to the wiper stop position of wiper motor 18, do not remove the crank arm unless it is faulty.

● **Assembly sequence**

Follow the disassembly sequence in reverse.

Service standards

Location	Maintenance item	Standard value	Limit	Remedy
2, 9	Wiping force of wiper arm	7.65±0.49 N {1.72±0.11 lbf, 0.78±0.05 kgf}	—	Replace

Ⓣ Tightening torque

Unit : N·m {lbf.ft, kgf·m}

Location	Parts to be tightened	Tightening torque	Remarks
1	Nut (Wiper arm and blade assembly mounting)	17 to 23 {12.3 to 16.6, 1.7 to 2.3}	—
11	Nut (Wiper link and motor assembly mounting)	17 to 23 {12.3 to 16.6, 1.7 to 2.3}	—
13	Bolt (Wiper motor bracket mounting)	9 to 14 {6.5 to 10.1, 0.9 to 1.4}	—
14	Bolt (Link assembly mounting)	10 to 15 {7.2 to 10.8, 1.0 to 1.5}	—
16	Nut (Crank arm mounting)	16.7 to 23.5 {12.3 to 17.4, 1.7 to 2.4}	—
24	Nut (Hose joint connecting)	0.6 to 0.9 {0.43 to 0.65, 0.06 to 0.09}	—
28	Bolt (Washer tank mounting)	7.8 to 11.8 {5.8 to 8.7, 0.8 to 1.2}	—

◆ Service procedure

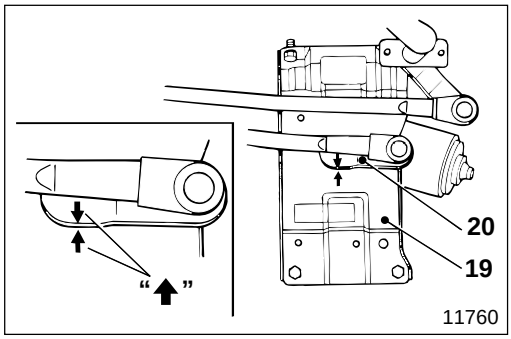

2 **9** **Installation of wiper arm and blade assembly**

- Align alignment marks "⬆" on wiper motor bracket **19** and crank arm **20**.

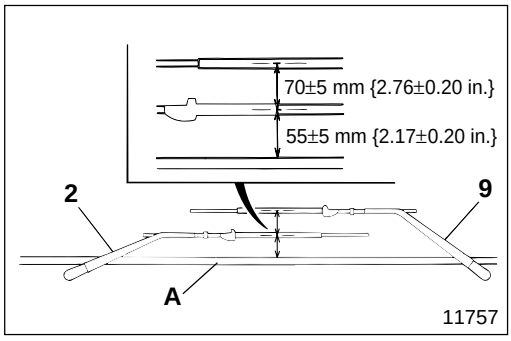

- Install wiper arm and blade assembly RH **2**, LH **9** so that dimensions from the edges of weatherstrip **A** are as illustrated.

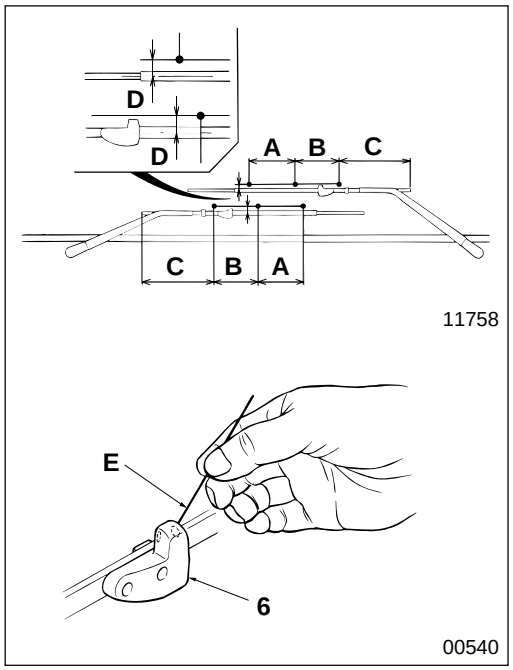

6 **Inspection of washer nozzle**

Make sure that washer fluid spreading target positions ("●" as illustrated) are within dimensions **A** to **D**.

A	130 mm {5.12 in.}
B	130 mm {5.12 in.}
C	210 mm {8.27 in.}
D	15 mm {0.59 in.}

If the washer fluid spreading target positions deviate from these dimensions, adjust the jet hole angle of washer nozzle **6** using wire **E**.

CAUTION⚠

Be careful not to damage the jet hole of washer nozzle 6 with wire E when adjusting the angle.

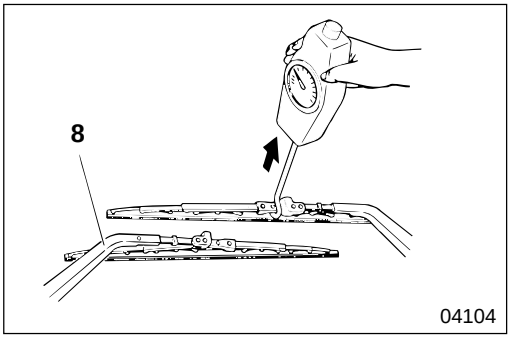

8 **Inspection of wiper arm**

If the measured value deviates from the standard value, replace wiper arm **8**.

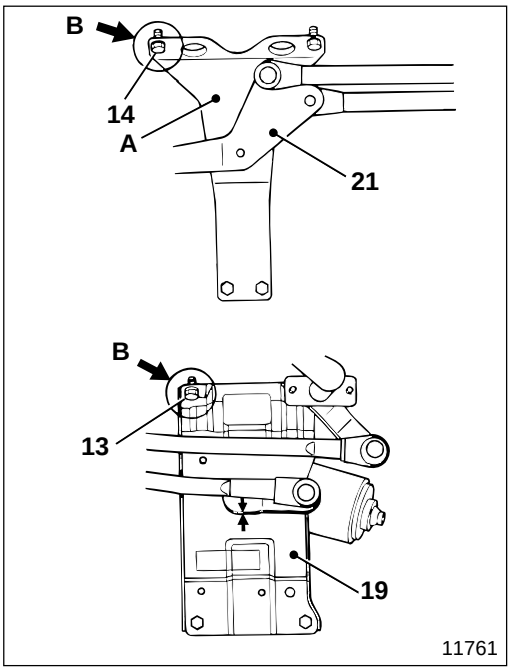

15 **Installation of wiper link and wiper motor assembly**

- Wiper motor bracket **19** and idler bracket **A** of link assembly **21** have reference holes **B** for installation.
- Tighten installation bolts **13**, **14** for wiper motor bracket **19** and idler bracket **A** starting from reference holes **B**.

CAB INTERIOR FITTING

Trim

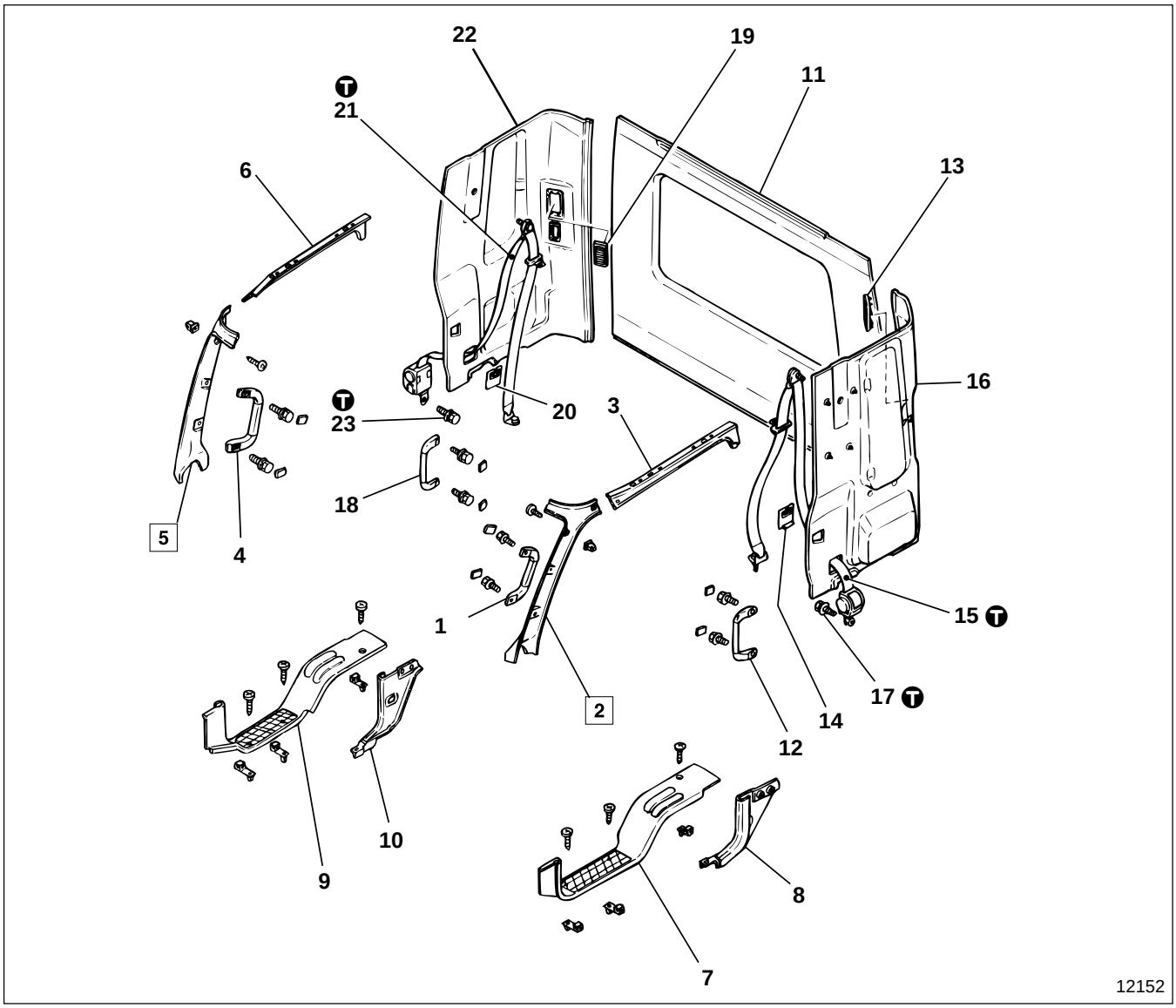

● **Removal sequence**

1 Front pillar grip, LH
2 Front pillar trim, LH
3 Door header trim, LH
4 Front pillar grip, RH
5 Front pillar trim, RH
6 Door header trim, RH
7 Front scuff plate, LH
8 Rear scuff plate, RH
9 Front scuff plate, RH
10 Rear scuff plate, RH
11 Rear trim
12 Rear pillar grip, LH
13 Inside air outlet garnish
14 Seat belt guide, LH
15 Seat belt assembly
16 Side trim, LH
17 Bolt
18 Rear pillar grip, RH
19 Inside air outlet garnish
20 Seat belt guide, RH
21 Seat belt assembly
22 Side trim, RH
23 Bolt

CAUTION

Do not disassemble seat belt assemblies 15, 21 because this might cause malfunction of the emergency locking retractor.

● **Installation sequence**

Follow the removal sequence in reverse.

Tightening torque

Unit : N·m {lbf.ft, kgf·m}

Location	Parts to be tightened	Tightening torque	Remarks
15, 21	Bolts of seat belt assembly shoulder anchor and floor anchor	34 to 54 {25 to 40, 3.5 to 5.5}	—
17, 23	Bolt (Seat belt assembly mounting)	34 to 54 {25 to 40, 3.5 to 5.5}	—

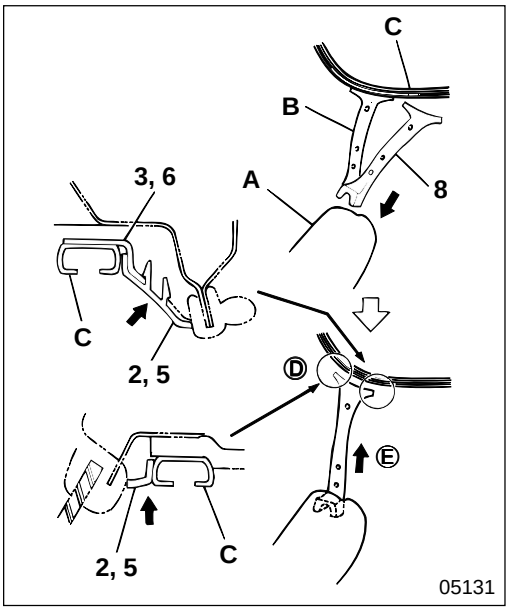

◆ Service procedure

2 **5** **Installation of front pillar trim**

- Insert lower end of front pillar trim LH **2**, RH **5** between instrument panel **A** and front pillar inner panel **B**.
- Insert upper end of trim between curtain rail **C** and front pillar inner panel **B**.
- Fit in part Ⓓ of trim as illustrated.
- Fit in part Ⓔ of trim as illustrated.

CAB INTERIOR FITTING

Headlining

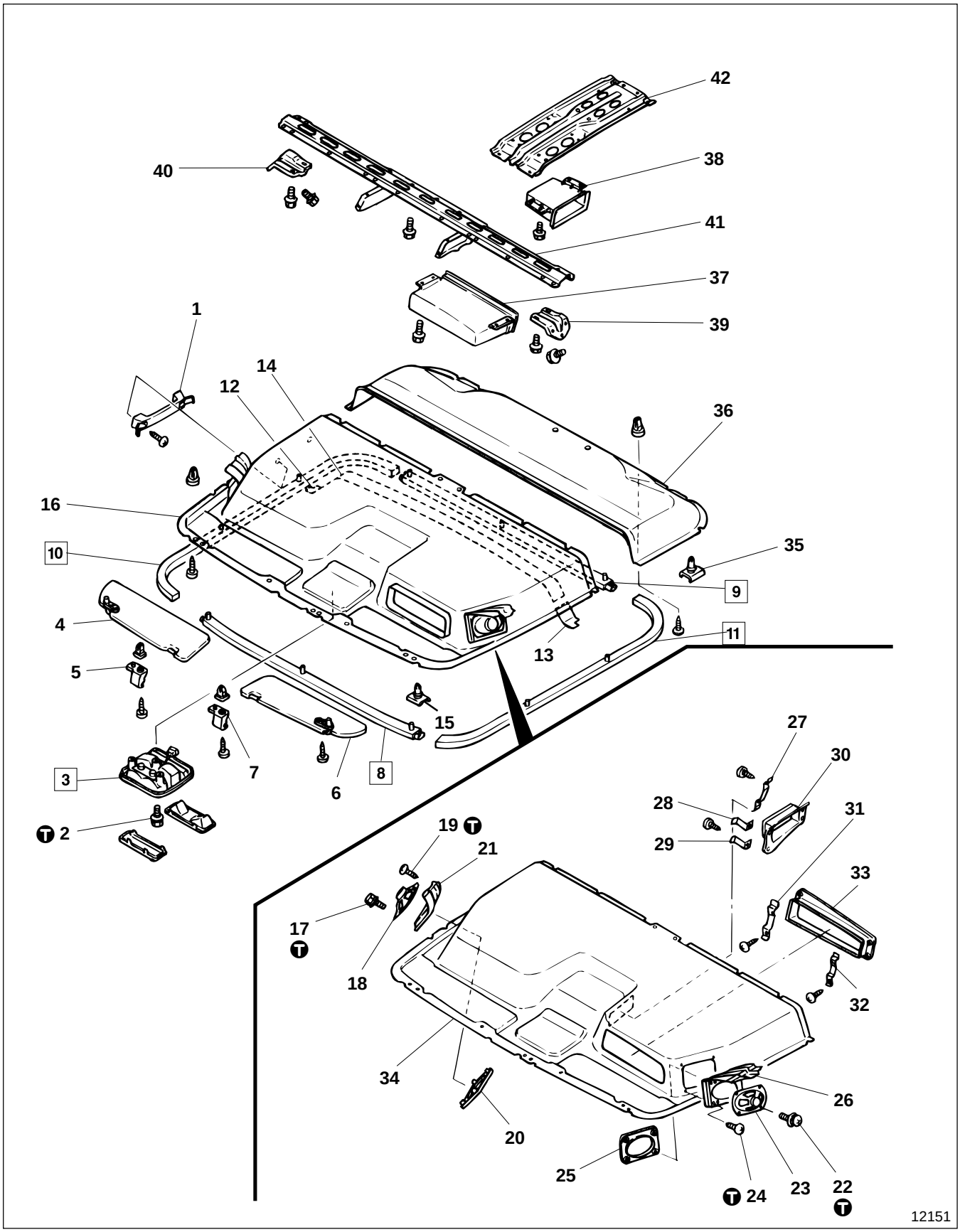

● Removal sequence

1 Grip
2 Bolt
3 Cab and spot lamp Gr 54
4 Sun visor, RH
5 Sun visor catch
6 Sun visor, LH
7 Sun visor catch
8 Front curtain rail
9 Rear curtain rail
10 Side curtain rail, RH
11 Side curtain rail, LH
12 Center curtain rail end cover, RH
13 Center curtain rail end cover, LH
14 Center curtain rail
15 Headlining clip
16 Front headlining assembly
17 Screw
18 Speaker, RH Gr 54
19 Screw
20 Speaker cover
21 Speaker bracket, RH
22 Screw
23 Speaker, LH Gr 54
24 Screw
25 Speaker cover
26 Speaker bracket, LH
27 Bracket
28 Bracket
29 Bracket
30 Facing
31 Bracket
32 Bracket
33 Facing
34 Front headlining
35 Headlining clip
36 Rear headlining
37 Overhead console box A
38 Overhead console box C
39 Overhead side bracket, LH
40 Overhead side bracket, RH
41 Overhead cross frame
42 Overhead center frame

● **Installation sequence**

Follow the removal sequence in reverse.

Tightening torque

Unit : N·m {lbf.ft, kgf·m}

Location	Parts to be tightened	Tightening torque	Remarks
2	Bolt (Cab and spot light lamp mounting)	2.9±0.5 {2.2±0.36, 0.3±0.05}	—
17, 22	Screw (Speaker mounting)	2.5 {1.8, 0.25}	—
19, 24	Screw (Speaker cover mounting)	1.8 {1.3, 0.18}	—

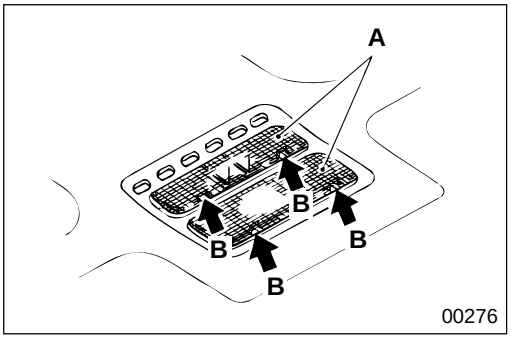

◆ Service procedure

3 **Removal of cab and spot lamp**

Insert the tip of a screwdriver in groove area **B** of lens **A**, and use the screwdriver as a pry bar.

CAUTION

Make sure that you do not pry at any area other than B or you will damage the lens.

CAB INTERIOR FITTING

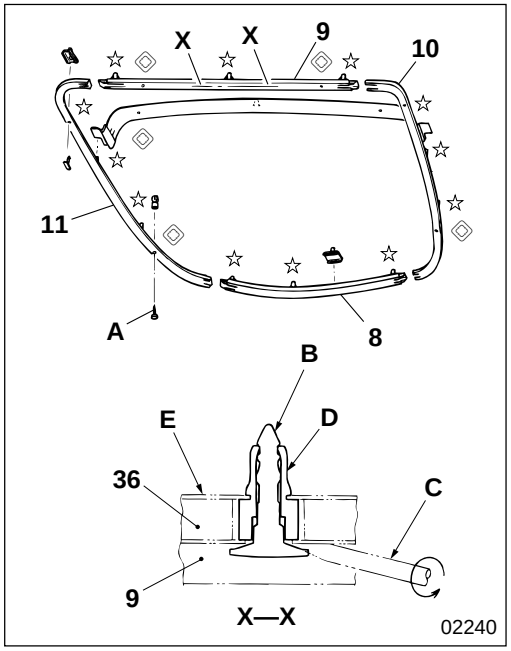

8 to 11 Removal of curtain rail

- Remove tapping screws **A**. (six points in ◇ mark)
- Insert screwdriver **C** into the taper of rail pins **B** and lever out curtain rails **8** to **11** from rail clips **D** by turning the screwdriver. (13 points in ☆ mark)

36 : Rear head lining
E : Cab metal

CAUTION ⚠

- **Be sure that you remove rail pins B first because the curtain rails would be deformed if you were to remove the rail pins after levering out curtain rails 8 to 11.**
- **Prepare extra fittings in advance because rail pins B and rail clips D might be damaged during removal.**

M E M O

INSTRUMENT PANEL

Lower Cover, Meter Cluster and Center Panel

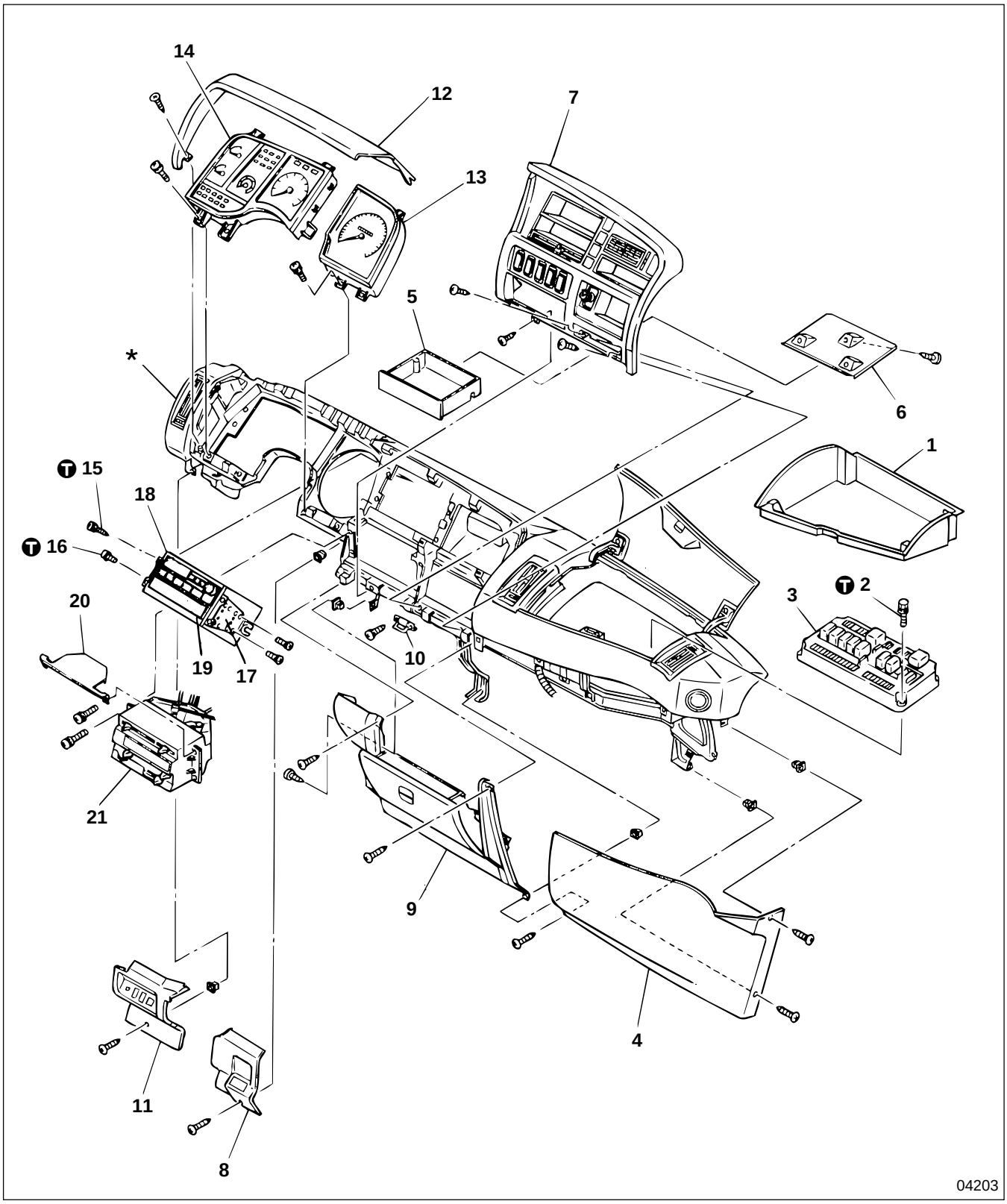

● **Disassembly sequence**

1 Glove box
2 Bolt
3 Relay and fuse box
Gr 54
4 Lower cover
5 Ashtray
6 Ashtray outer case
7 Center panel
8 Driver side lower cover B
9 Parcel box and cover
10 Parcel box lock
11 Driver side lower cover A
12 Meter hood
13 Speedometer
Gr 54
14 Meter cluster
Gr 54
15 Screw
16 Screw
17 Radio bracket
18 Radio < Option >
19 Pocket
20 Harness protector
21 Heater control assembly
Gr 55B

***** : Instrument panel assembly P42-68

● **Assembly sequence**

Follow the disassembly sequence in reverse.

Ⓣ Tightening torque

Unit : N·m {lbf.ft, kgf·m}

Location	Parts to be tightened	Tightening torque	Remarks
2	Bolt (Relay and fuse box mounting)	7.8±1.5 {5.8±1.1, 0.8±0.15}	—
15	Screw (Radio bracket mounting on instrument panel assembly)	1.8 {1.3, 0.18}	—
16	Screw (Radio bracket mounting on radio)	1.8 {1.3, 0.18}	M5×0.8 mm
		1.2 {0.87, 0.12}	M4×0.7 mm

INSTRUMENT PANEL

Instrument Panel Assembly

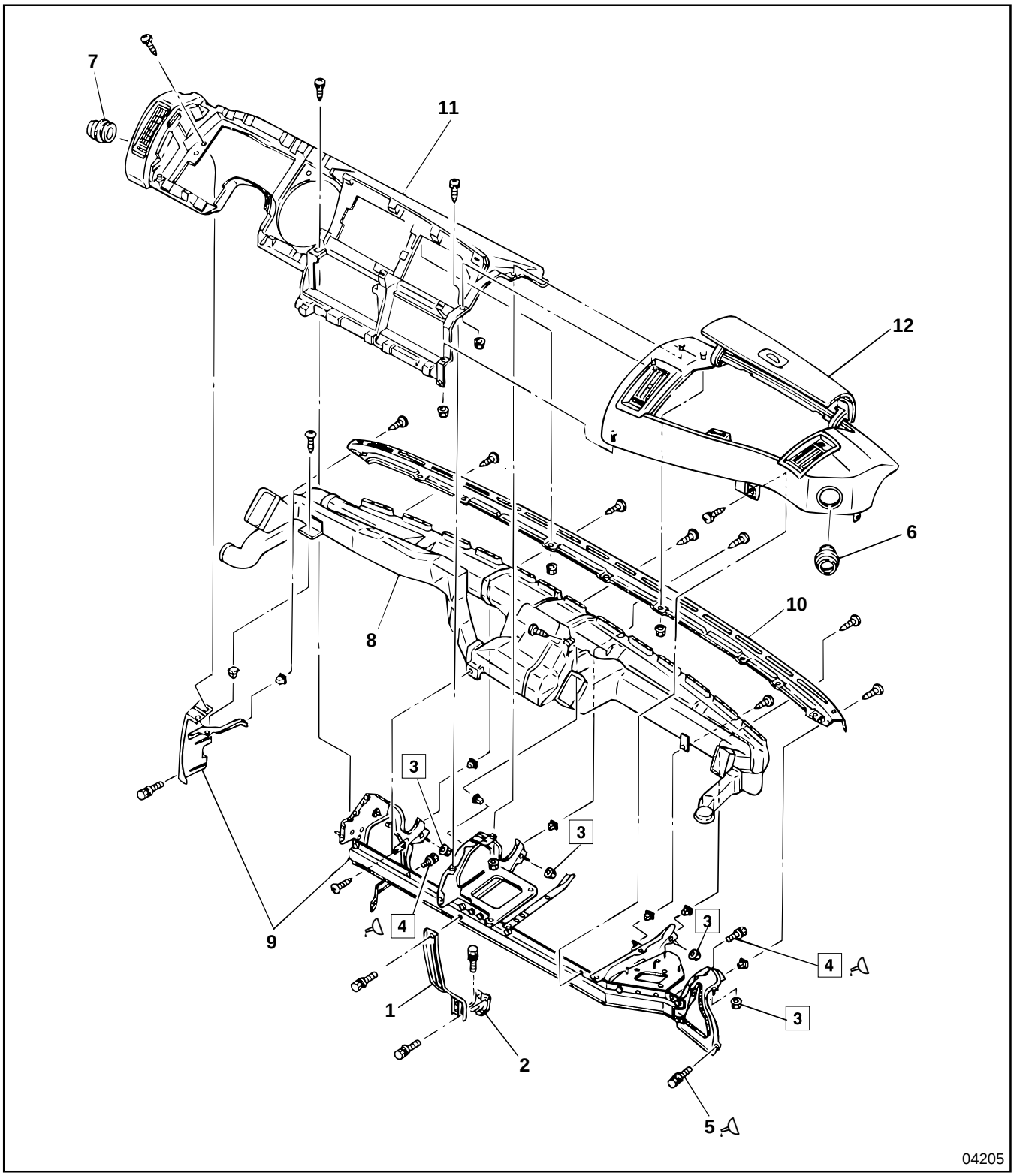

● **Disassembly sequence**

1 Vertical frame
2 Lower bracket
3 Nut
4 Bolt
5 Bolt
6 Side defroster joint
7 Side defroster joint
8 Defroster and duct assembly
Gr 55B
9 Instrument panel frame assembly
10 Duct cover
11 Instrument panel
12 Crash pad assembly

● **Assembly sequence**

Follow the disassembly sequence in reverse.

Sealant

Location	Points of application	Kinds	Quantity
4, 5	Bolt (Instrument panel frame mounting)	SUMITOMO 3M scotch grip 2353	For re-use

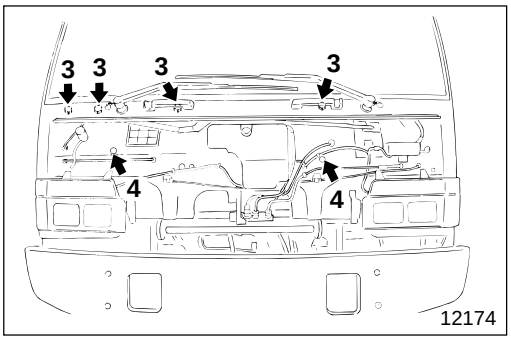

◆ Service procedure

3 **4** **Mounting position of nut and bolt**

- The four mounting positions for nut **3** are indicated by **3** ➡.
- The two mounting positions for bolt **4** are indicated by **4** ➡.

WINDOW GLASS

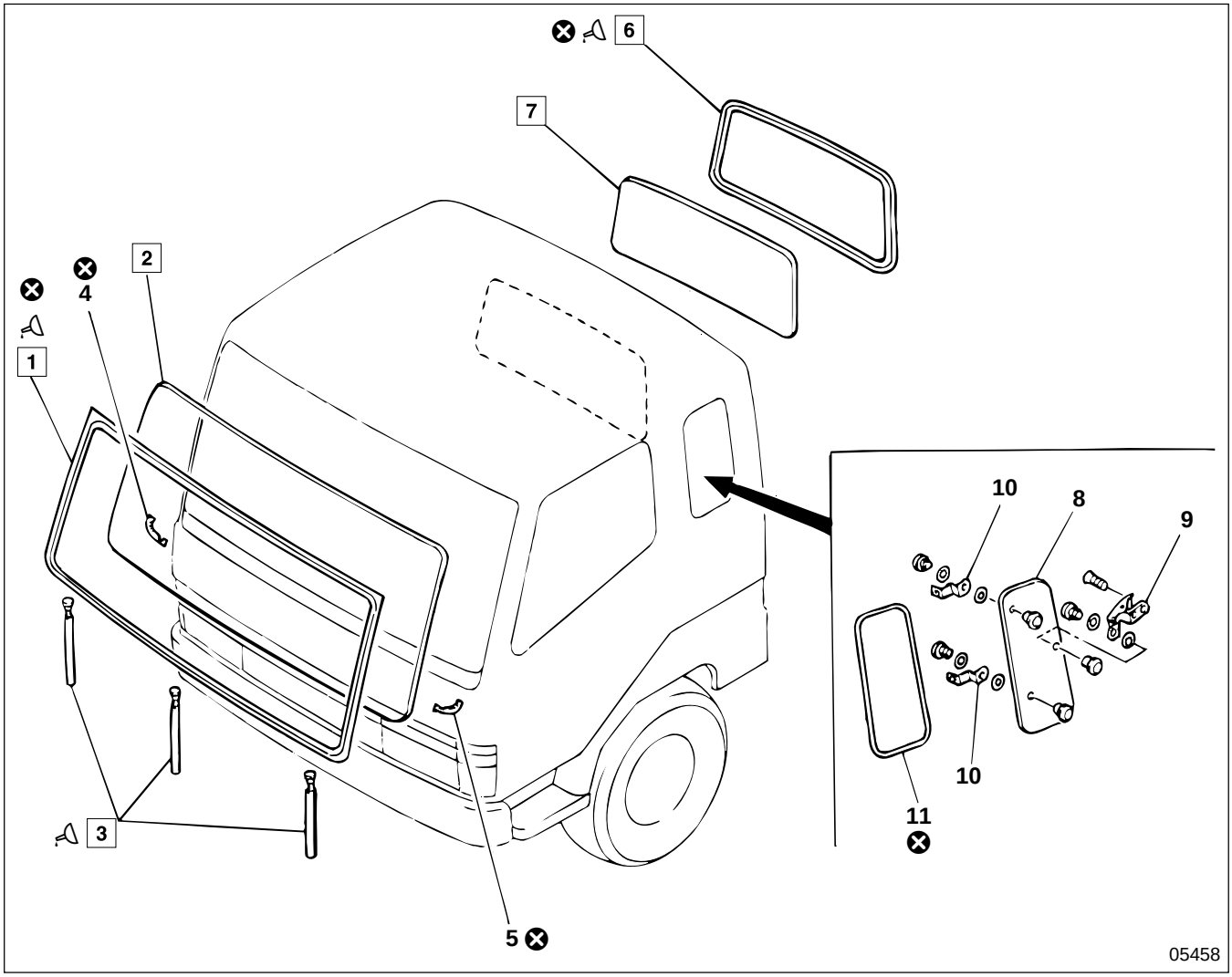

● **Disassembly sequence**

1 Windshield weatherstrip
2 Windshield
3 Drain hose
4 Seal tape, LH
5 Seal tape, RH
6 Rear window weatherstrip
7 Rear window glass
8 Side window glass
9 Side window link
10 Side window hinge
11 Side window weatherstrip

⊗ : Non-reusable parts

● **Assembly sequence**

Follow the disassembly sequence in reverse.

NOTE

The illustration shows the left side. The right side is symmetrical to the left side.

Lubricant and sealant

Location	Points of application	Kinds	Quantity
1, 6	Lip area of weatherstrip	Soapy water	As required
3	Fill the area around the drain hose mounting flange on cab	CEMEDINE 3061-D	As required

◆ Service procedure

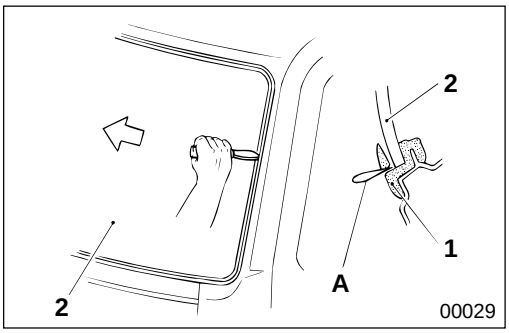

1 **2** **Weatherstrip and windshield**

[Removal]

- Cut weatherstrip **1** with knife **A** at the area as illustrated.
- Support windshield **2**, and remove by pressing it from inside the cab.

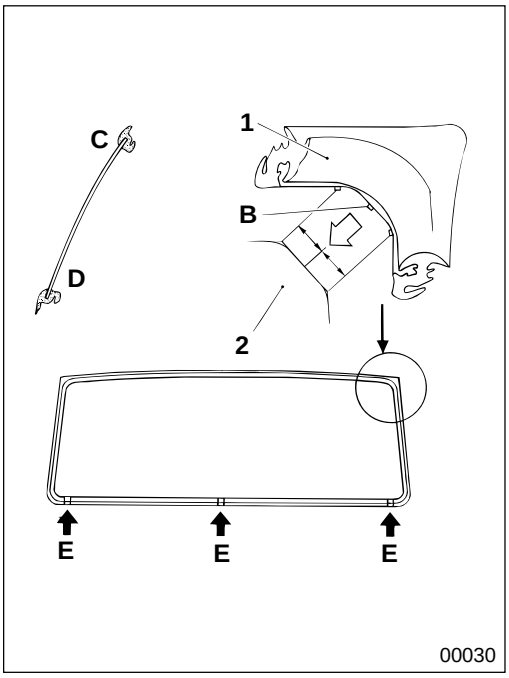

[Installation]

- Install weatherstrip **1** so that central basic point **B** meets the middle at the chamfered part of windshield **2**.
  - **C** : Outside
  - **D** : Inside
  - **E** : Water drain hole

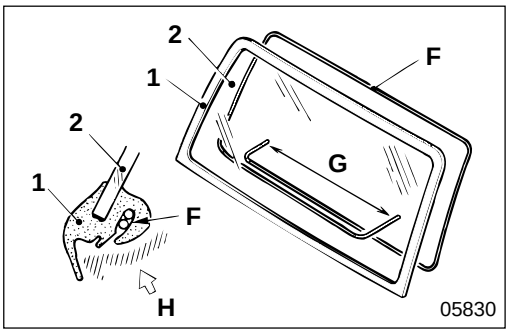

- Lay cord **F** in the cab mounting groove of weatherstrip **1** as illustrated, and overlap the cord at the lower side of the glass by the specified length, see **G**.
- Apply soapy water **H** to weatherstrip **1**.
- Align windshield **2** with the cab.

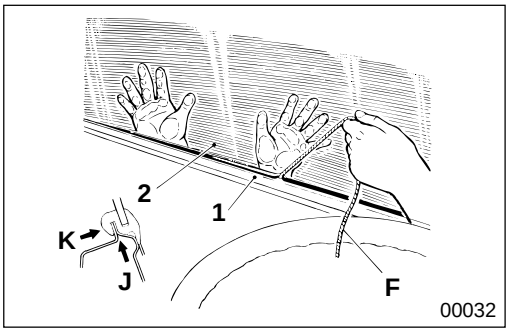

- Push windshield **2** inward from the outside of the cab firmly.
- Inside the cab, pull one end of cord **F** to install lip **K** of weatherstrip **1** into flange lip **J** of the cab.

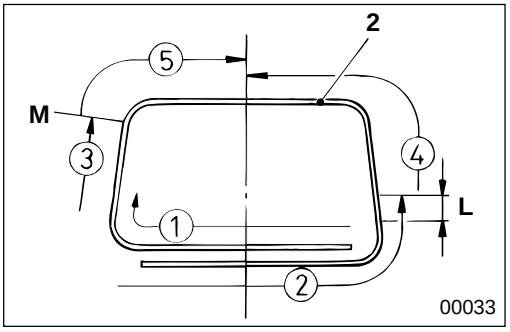

- Pull cord **F** in the numbered order as illustrated and at the same time have someone push windshield **2** into weatherstrip **1**, tapping the windshield with a rubber-headed mallet.

  L : approximately 100 mm {3.94 in.} from the starting point of the straight section
  M : up to the end of the straight section

CAUTION

Make sure that windshield 2 is installed correctly into the cab before hitting the windshield with the rubber-headed mallet, otherwise the windshield might be broken.

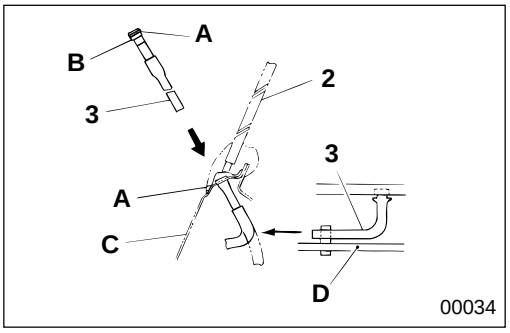

3 **Installation of drain hose**

- Fill the area around the flange of drain hose **3** with sealant **A**, and press the drain hose in until its flared area **B** fits into cab **C**. Carefully smooth down excess sealant that is squeezed out so that the hose opening is not clogged.
- Secure drain hose **3** at the middle of the vehicle together with windshield washer hose **D**.

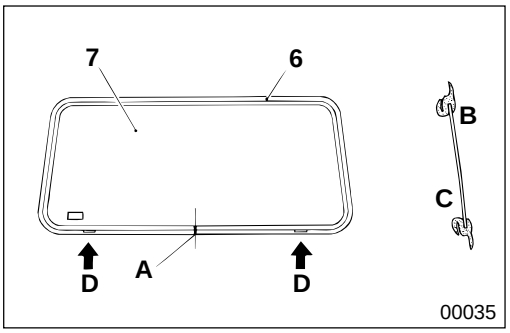

6 **7** **Weatherstrip and rear window glass**

- Install so that joint **A** of weatherstrip **6** is at the bottom center of rear window glass **7**.

  B : Outside
  C : Inside
  D : Drain hole

- Except for the point mentioned above, follow the same service procedure as for installation of the windshield.
  P42-71

MITSUBISHI
FUSO

FK.FM
Service Manual

Group 54
Electrical

Table of Contents

BACK

HOME

MITSUBISHI FUSO TRUCK OF AMERICA, Inc.

Pub No. TWME9503-54

GROUP 54 ELECTRICAL

1 POWER, CHARGING AND GROUND

SPECIFICATIONS 54-1-2

STRUCTURE AND OPERATION 54-1-3

TROUBLESHOOTING 54-1-7

(100) INSPECTION AND ADJUSTMENT MOUNTED IN VEHICLE
- Inspection of Alternator 54-1-8
- Inspection of Regulator 54-1-9

(101) BATTERY 54-1-10

(104) FUSE 54-1-14

(106) ALTERNATOR 54-1-16

(110) POWER CIRCUIT 54-1-22

(115) RESERVE POWER CIRCUIT 54-1-32

(125) BATTERY CHARGING CIRCUIT 54-1-34

(130) GROUND 54-1-36

2 STARTING, PREHEATING, AND STOPPING ENGINE

SPECIFICATIONS 54-2-2

STRUCTURE AND OPERATION 54-2-3

TROUBLESHOOTING 54-2-18

(200) INSPECTION AND ADJUSTMENT MOUNTED IN VEHICLE
Inspection of Engine Preheating System 54-2-20

(201) STARTER 54-2-21

(210) ENGINE STARTING CIRCUIT 54-2-30

(212) SUB-STARTER CIRCUIT 54-2-34

(215) ENGINE STOPPING CIRCUIT 54-2-38

(220) ENGINE PREHEATING AND COLD START CIRCUIT
< Manual Transmission > 54-2-42
< Automatic Transmission > 54-2-46

3 LIGHTING

SPECIFICATIONS 54-3-2

STRUCTURE AND OPERATION 54-3-4

TROUBLESHOOTING 54-3-6

(300) INSPECTION AND ADJUSTMENT MOUNTED IN VEHICLE
Headlamp Aiming 54-3-8

(310) HEADLAMP CIRCUIT 54-3-10

(320) TAIL LAMP, CLEARANCE LAMP AND LICENSE PLATE LAMP CIRCUITS 54-3-12

(325) STOP LAMP CIRCUIT 54-3-14

(330) TURN SIGNAL LAMP AND HAZARD LAMP CIRCUITS 54-3-18

(340) BACKUP LAMP CIRCUIT 54-3-20

(345) CAB LAMP CIRCUIT 54-3-24

(348) ILLUMINATION LAMP CIRCUIT 54-3-28

(349) MARKER LAMP AND IDENTIFICATION LAMP CIRCUITS 54-3-30

(352) VAN BODY DOME LIGHT CIRCUIT 54-3-32

4 METER

SPECIFICATIONS 54-4-2

TROUBLESHOOTING 54-4-3

(401) METER CLUSTER 54-4-4

(410) SPEEDOMETER AND TACHOMETER CIRCUITS 54-4-10

(420) FUEL GAUGE CIRCUIT 54-4-12

(425) WATER TEMPERATURE GAUGE CIRCUIT 54-4-16

5 INDICATOR AND WARNING

TROUBLESHOOTING 54-5-2

(500) INSPECTION AND ADJUSTMENT MOUNTED IN VEHICLE
- Inspection of Brake Fluid Level Switch
  < Air over hydraulic brake > 54-5-7

(510) PARKING BRAKE INDICATOR CIRCUIT [PARK BRAKE]
< Center Parking Brake > 54-5-8
< Wheel Parking Brake > 54-5-10

(515) BRAKE WARNING CIRCUIT [BRAKE FLUID] [BRAKE AIR] .. 54-5-14

(530) WATER LEVEL WARNING CIRCUIT [ ] 54-5-18

(536) ENGINE OIL PRESSURE WARNING CIRCUIT [ ] 54-5-22

(537) OVERHEATING WARNING CIRCUIT [ ] 54-5-24

(547) AUTOMATIC TRANSMISSION FLUID TEMPERATURE WARNING CIRCUIT [T/M OIL TEMP] 54-5-26

(548) TRANSMISSION HIGH/LOW INDICATOR CIRCUIT
< 10-speed Transmission > [ ] [ ] ... 54-5-30

(550) CAB TILT WARNING CIRCUIT [ ] 54-5-32

6 CAB SIDE ELECTRICS

SPECIFICATIONS 54-6-2

TROUBLESHOOTING 54-6-2

(601) SWITCH 54-6-4

(604) RELAY AND CONTROL UNIT 54-6-8

(606) WARNING BUZZER 54-6-11

(610) CIGARETTE LIGHTER CIRCUIT 54-6-12

(612) AUDIO CIRCUIT 54-6-14

(614) WIPER AND WASHER CIRCUIT 54-6-16

(616) HORN CIRCUIT 54-6-20

(618) HEATER CIRCUIT 54-6-22

7 CHASSIS ELECTRICS

(701) MAGNETIC VALVE 54-7-2

(710) EXHAUST BRAKE CIRCUIT 54-7-4
< Manual Transmission >

(718) AIR DRYER CIRCUIT 54-7-8

8 ENGINE AND TRANSMISSION ELECTRICS

(801) ENGINE ELECTRICS 54-8-2

(802) TRANSMISSION ELECTRICS
< Manual Transmission (5-speed, 6-speed Transmission) > 54-8-6
< Manual Transmission (10-speed Transmission) > 54-8-8
< Automatic Transmission > 54-8-10

(850) TRANSMISSION POWER TAKE-OFF CIRCUIT
< Option > 54-8-12

9 OTHERS

STRUCTURE AND OPERATION 54-9-2

(910) MULTIPURPOSE TIMING CONTROL UNIT CIRCUIT 54-9-6

Model (Number shows number of pins)		Connection
AA	AA 1 A	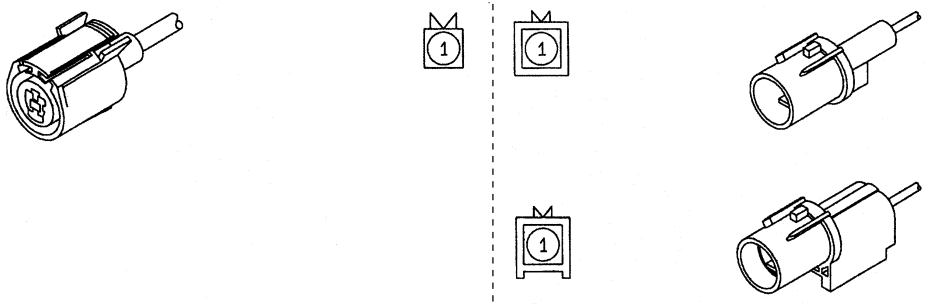
	AA 2 A	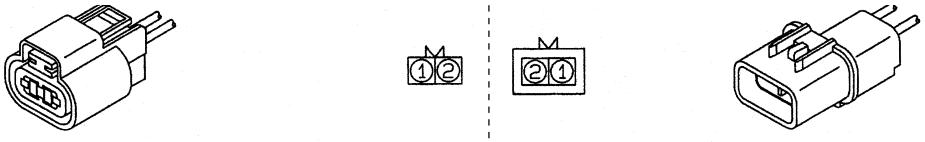
	AA 2 B	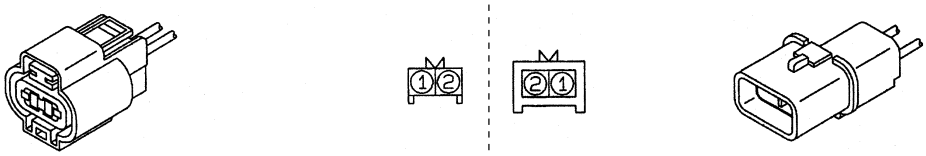
	AA 3 A	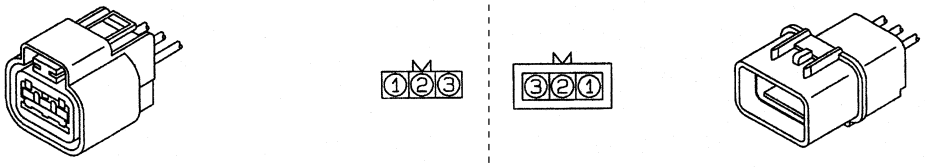
	AA 3 B	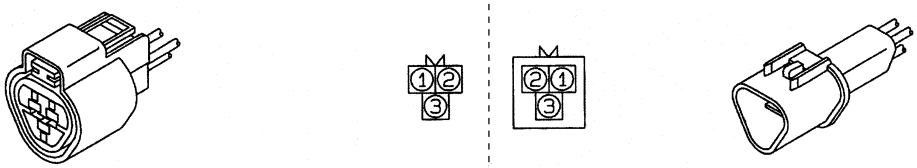
	AA 4 A	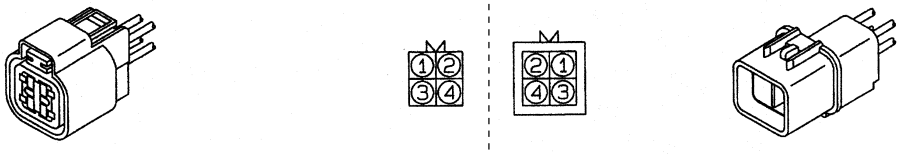
	AA 4 B	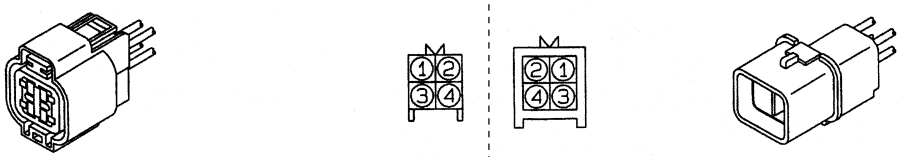
	AA 6 A	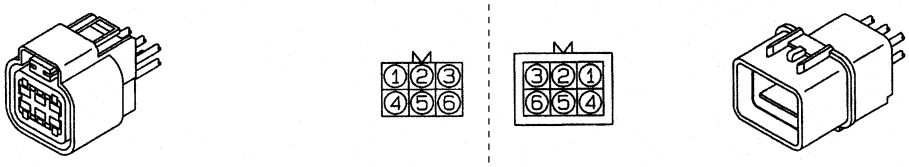

CONNECTOR CONFIGURATION CHART

Model (Number shows number of pins)		Connection			
AA	AA 6 B	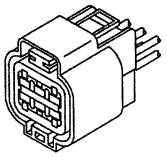		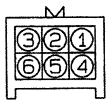	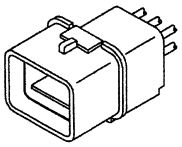
	AA 8 A	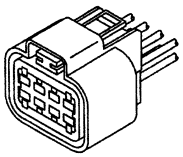	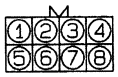	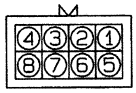	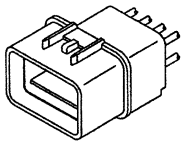
	AA10A	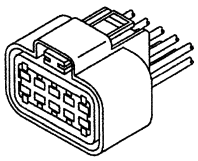	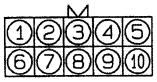	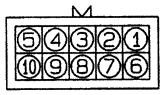	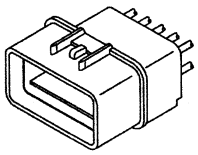
	AA12A	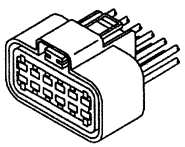	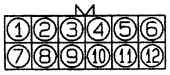	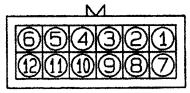	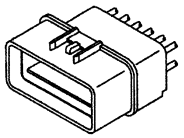
AB	AB 2 A	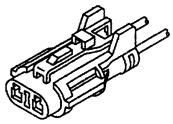	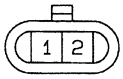	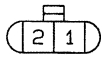	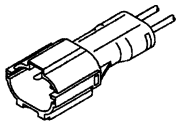
	AB 3 A	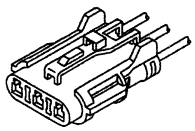	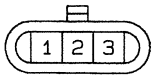	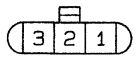	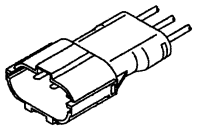
	AB 4 A	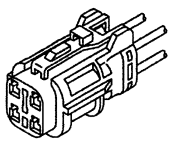	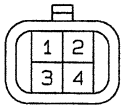	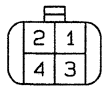	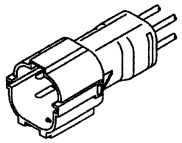
	AB 6 A	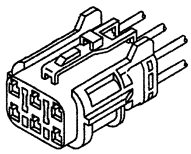	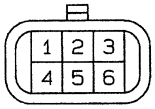	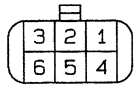	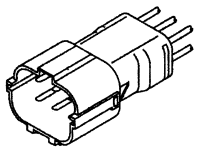
AC	AC 1 A	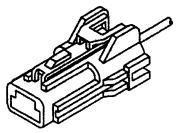			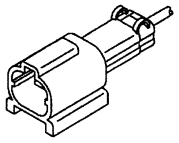

Model (Number shows number of pins)		Connection			
AC	AC 2 A	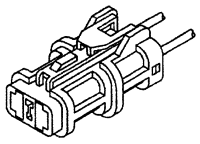			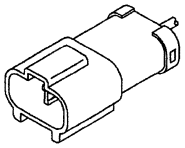
	AC 3 A	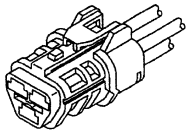		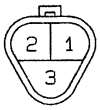	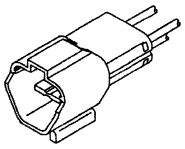
	AC 4 A	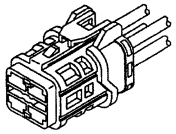	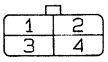	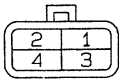	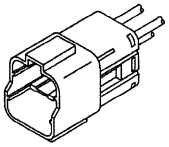
AD	AD 1 A	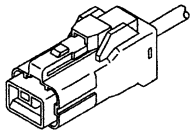			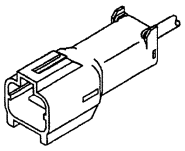
	AD 2 A	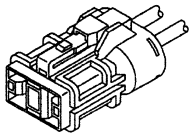	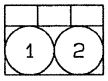	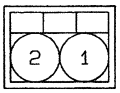	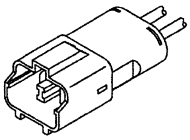
AE	AE 2 A	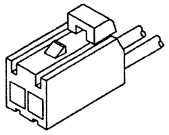			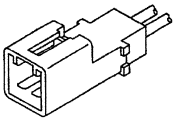
	AE 3 A	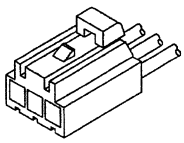	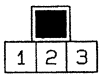	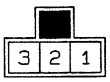	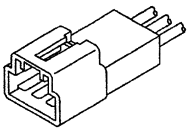
	AE 5 A	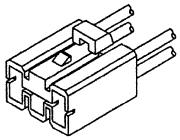	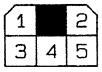	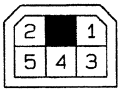	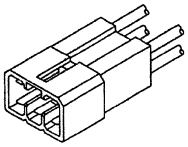
	AE 7 A	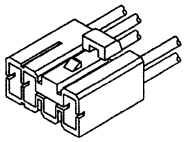		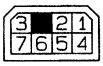	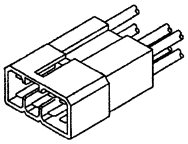

CONNECTOR CONFIGURATION CHART

Model (Number shows number of pins)		Connection			
AE	AE 9 A	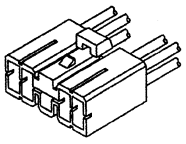	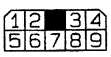	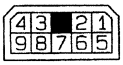	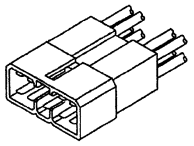
	AE11A	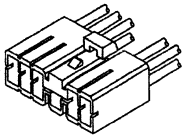	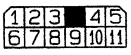	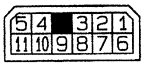	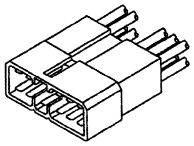
	AE13A	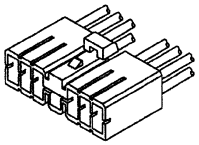	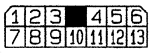	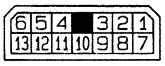	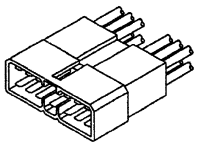
	AE15A	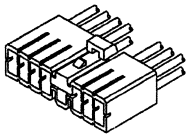	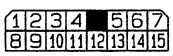	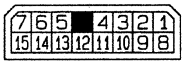	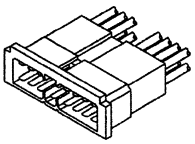
	AE16A (White, Gray, Black)	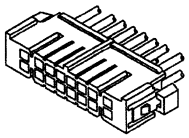	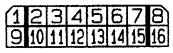	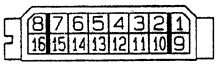	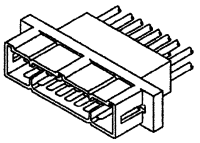
	AE16B (Green)	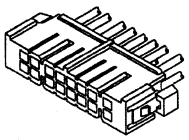	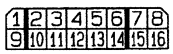	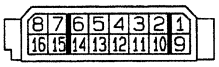	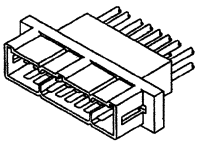
	AE16C (Blue)	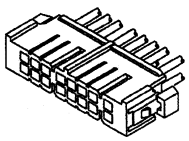	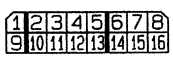	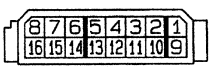	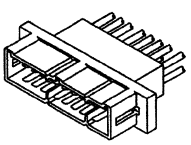
	AE17A	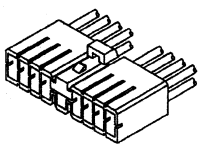	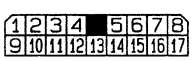	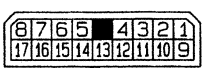	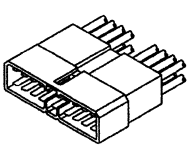
AG	AG16A	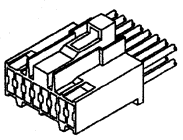	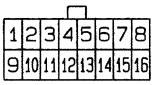		

Model (Number shows number of pins)		Connection
AG	AG20A	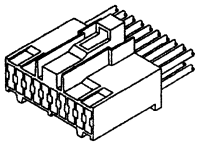 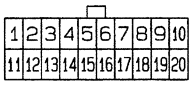
AH	AH10A	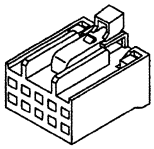 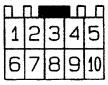 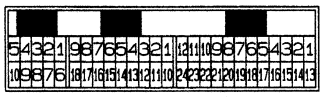 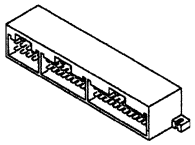
	AH12A	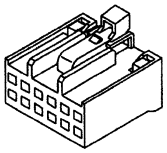 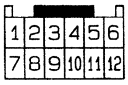 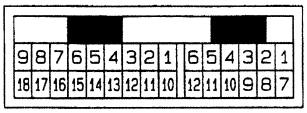 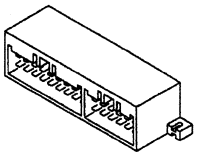
	AH18A	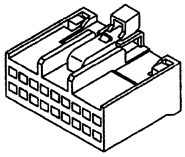 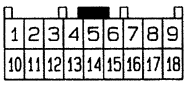 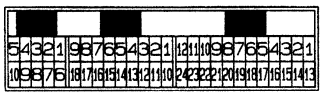 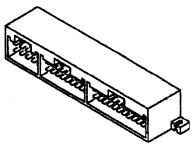
	AH18B	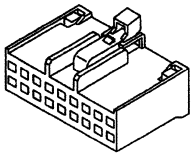 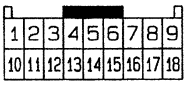 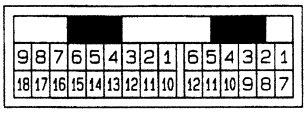 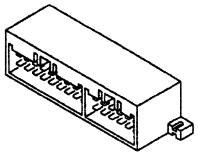

CONNECTOR CONFIGURATION CHART

Model (Number shows number of pins)		Connection
AH	AH24A	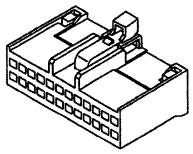 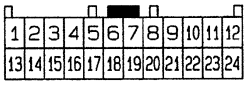 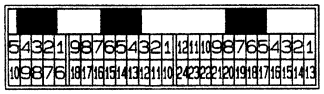 (**AH10A**) (**AH18A**) **AH24A** 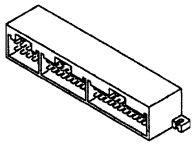
AJ	AJ 2 A	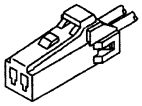   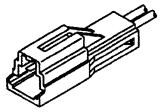
	AJ 4 A	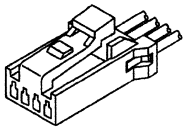  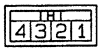 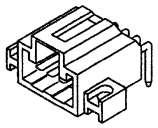
	AJ 8 A	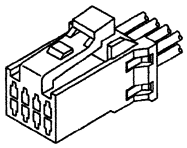  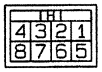 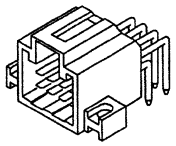
	AJ10A	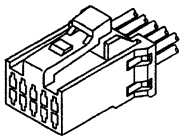 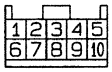 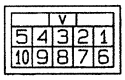 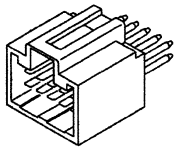 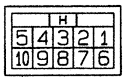 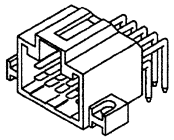
	AJ12A	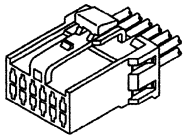 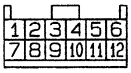 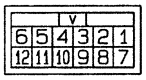 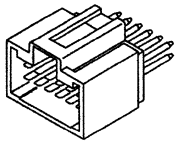 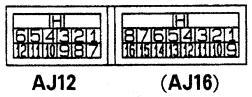 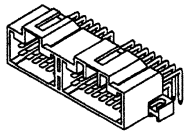 **AJ12** (**AJ16**)

Model (Number shows number of pins)		Connection
AJ	AJ16A	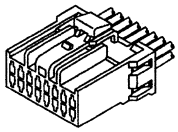 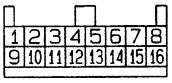 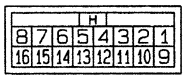 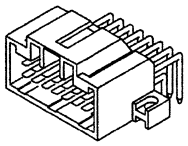 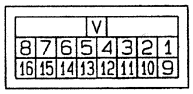 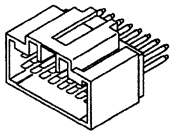 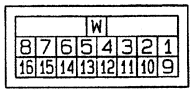 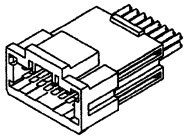 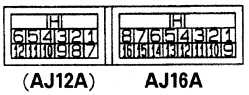 (AJ12A) AJ16A 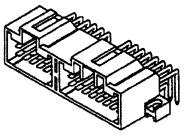 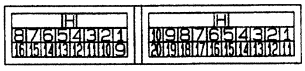 AJ16A (AJ20A) 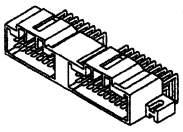

CONNECTOR CONFIGURATION CHART

Model (Number shows number of pins)		Connection
AJ	AJ20A	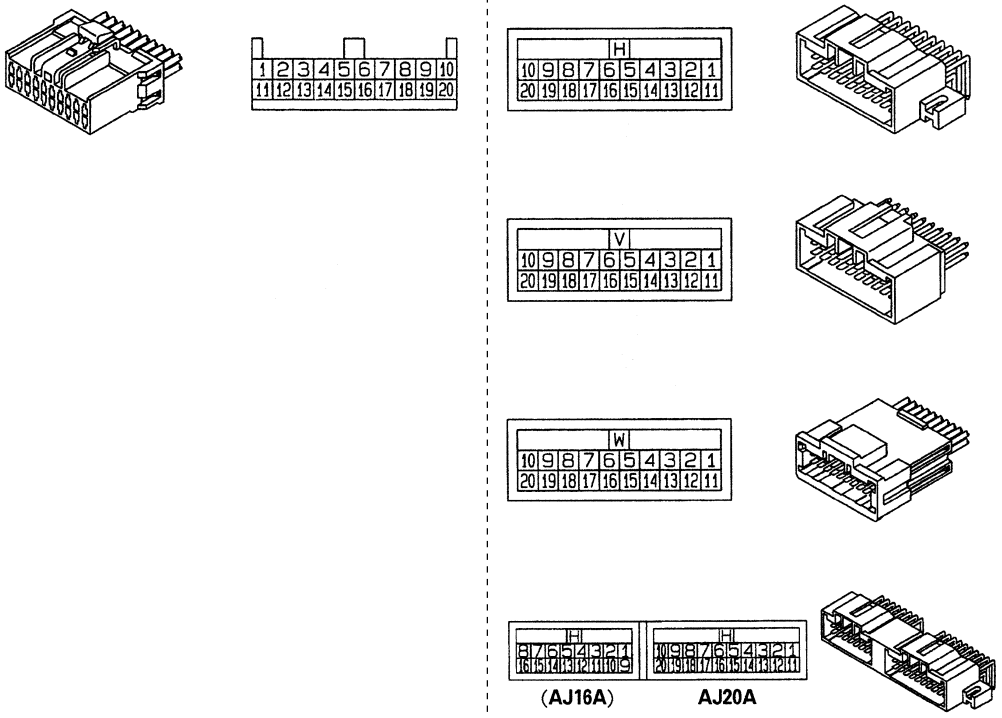
AK	AK 2 A	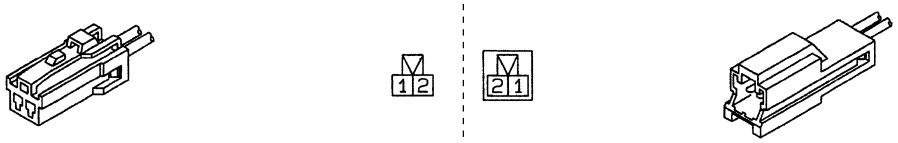
	AK 3 A	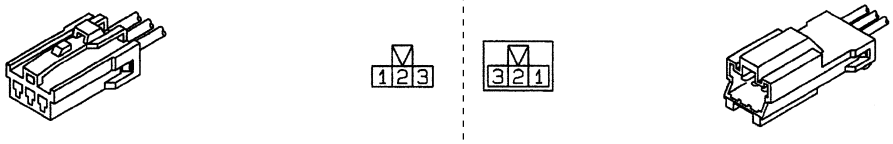
	AK 4 A	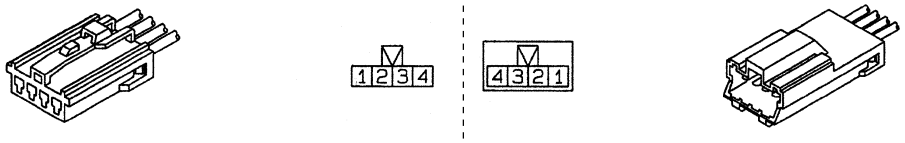
	AK 6 A	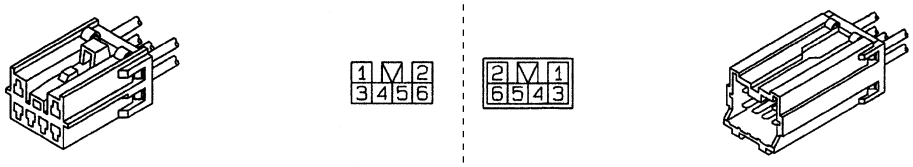

Model (Number shows number of pins)		Connection
AK	AK 8 A	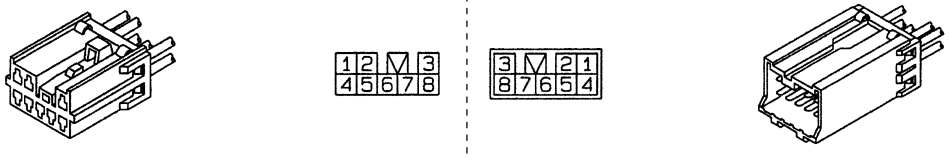
	AK10A	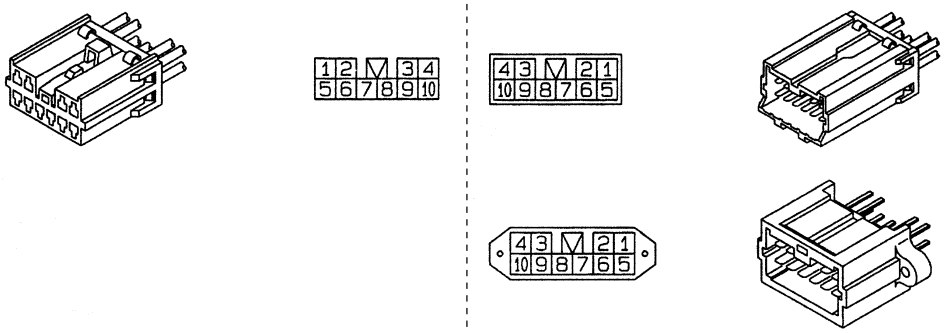
	AK14A	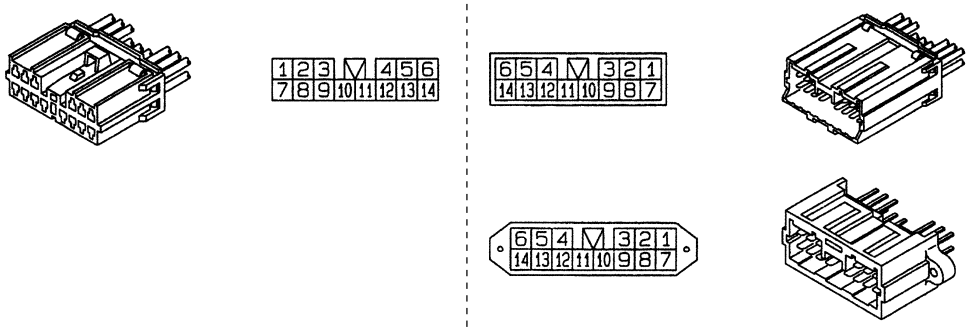
	AK18A	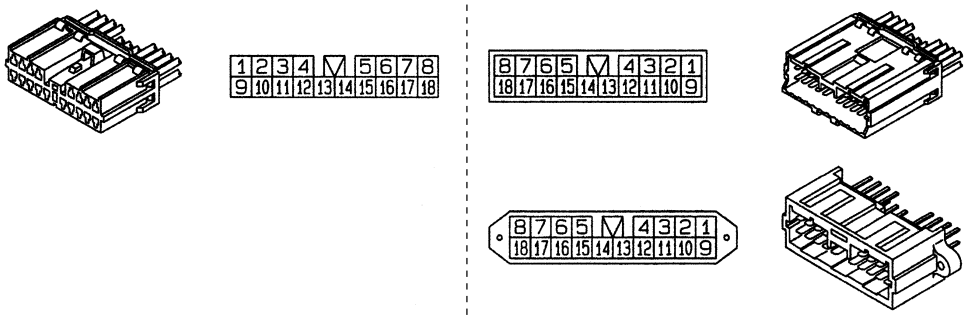
	AK20A	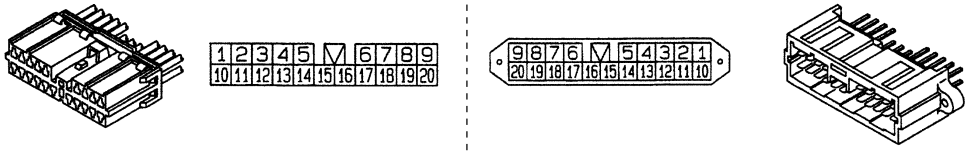

CONNECTOR CONFIGURATION CHART

Model (Number shows number of pins)		Connection
AK	AK20B	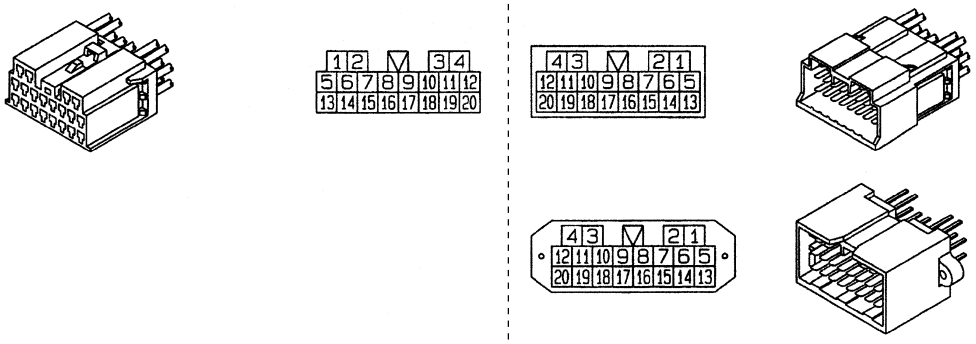
	AK22A	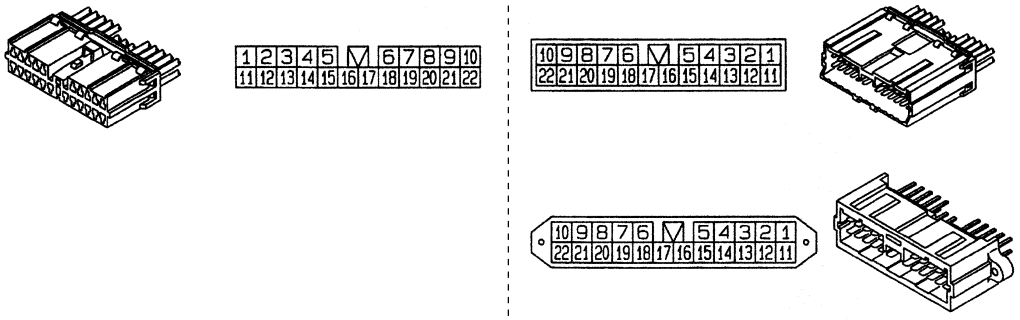
	AK22B	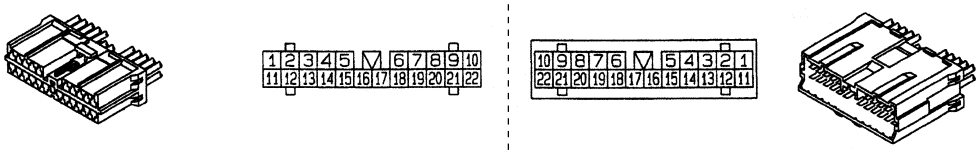
AL	AL 1 A	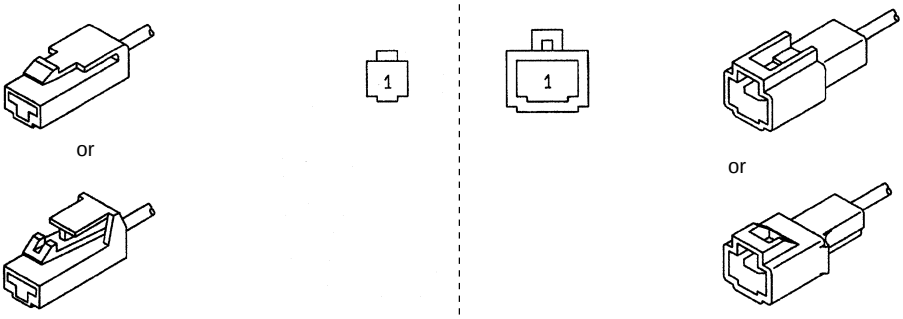
	AL 2 A	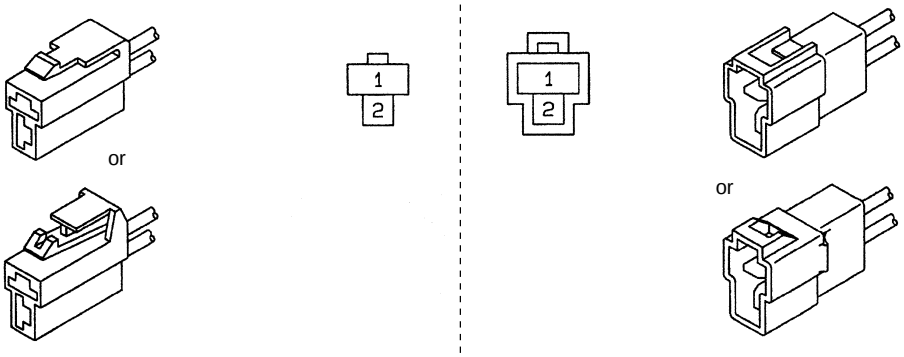

Model (Number shows number of pins)		Connection			
AL	AL 2 B	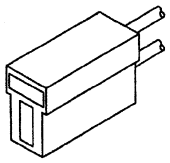			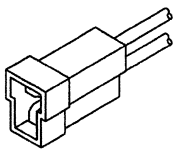
	AL 3 A	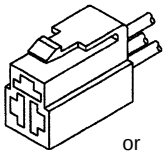 or 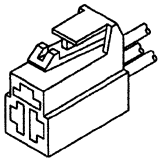		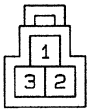	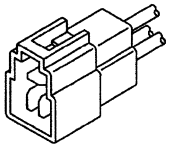 or 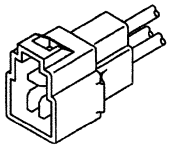
	AL 3 B	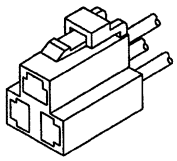		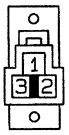	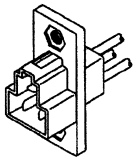
	AL 3 C	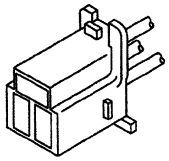			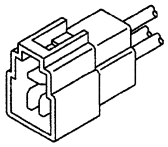
	AL 3 D	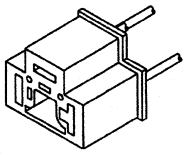 or 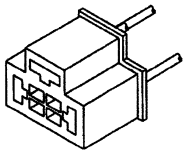			
	AL 3 E	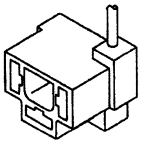 or 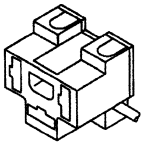	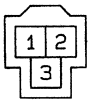		

CONNECTOR CONFIGURATION CHART

Model (Number shows number of pins)		Connection
AL	AL 4 A	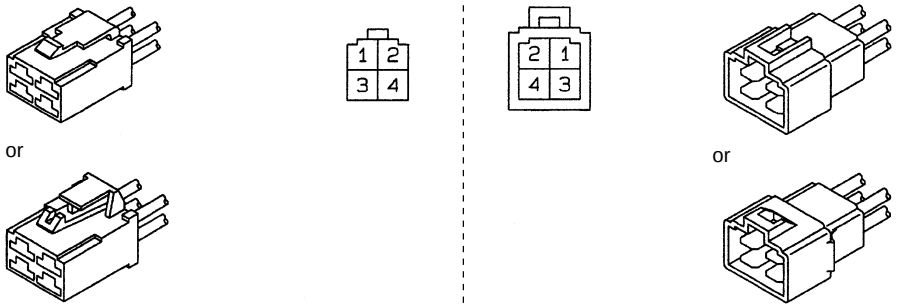
	AL 4 B	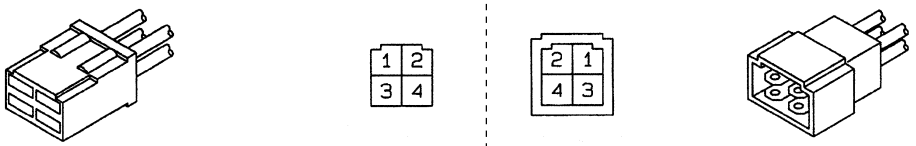
	AL 6 A	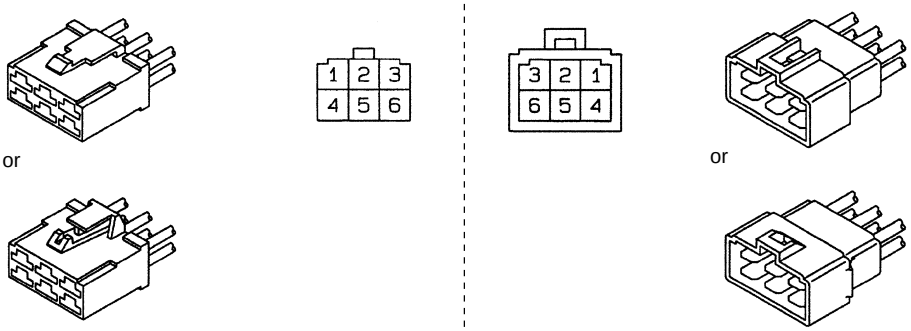
	AL 6 B	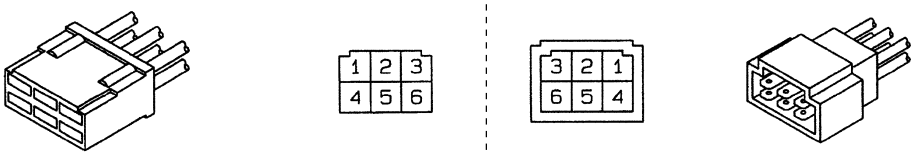
	AL 8 A	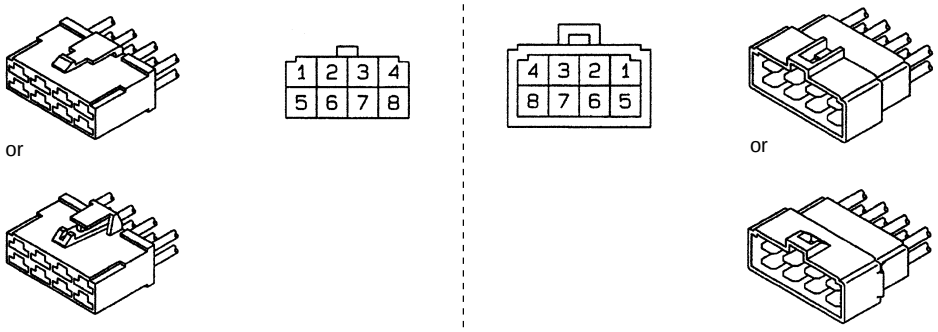
	AL 8 B	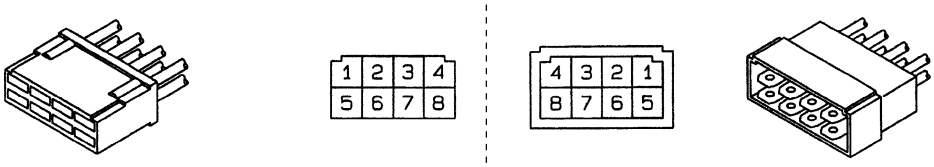

Model (Number shows number of pins)		Connection			
AM	AM 2 A	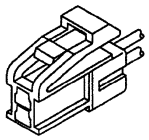			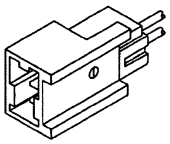
	AM 2 B	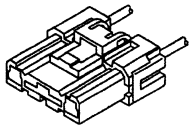			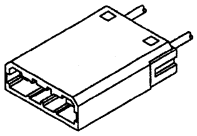
	AM 2 C	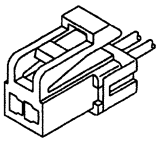			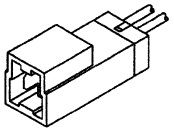
	AM 4 A	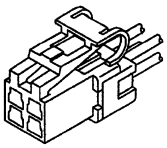			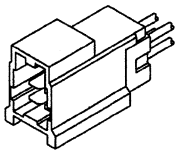
	AM 4 B	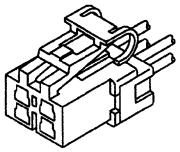			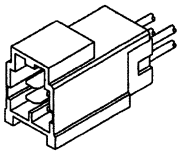
	AM 6 A	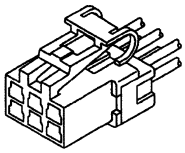		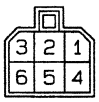	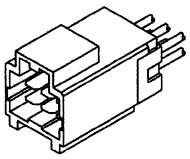
	AM 6 B	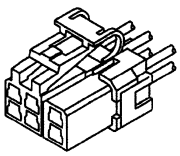			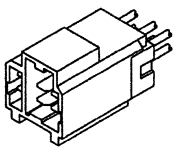
	AM 8 A	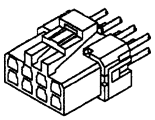	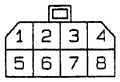	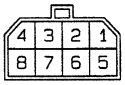	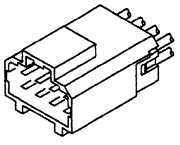
	AM 8 B	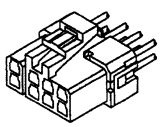	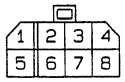	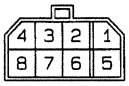	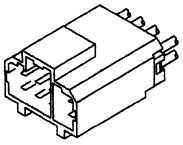

CONNECTOR CONFIGURATION CHART

Model (Number shows number of pins)		Connection			
AM	AM10A	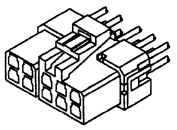	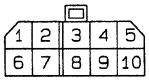	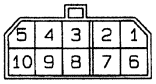	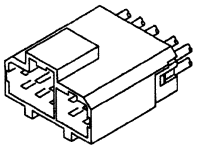
AN	AN 1 A	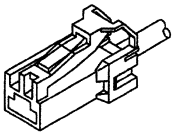			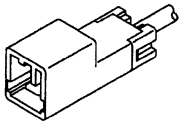
	AN 2 A	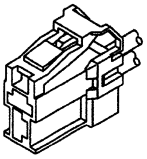			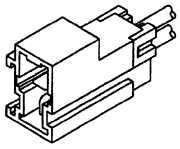
	AN 3 A	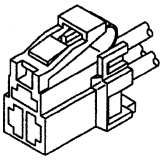	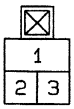	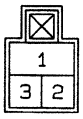	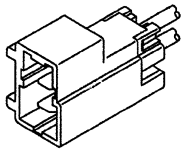
	AN 4 A	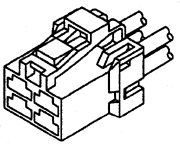	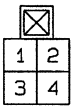	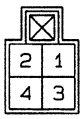	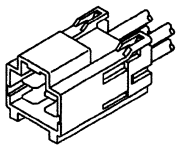
	AN 4 B	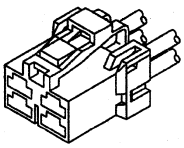	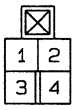	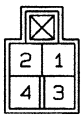	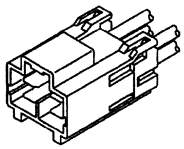
	AN 6 A	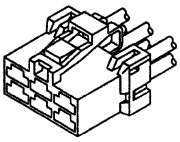	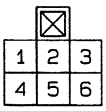	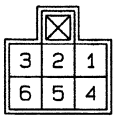	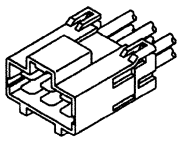
	AN 6 B	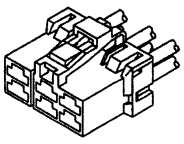	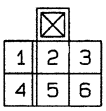	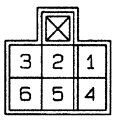	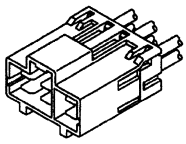
	AN 8 A	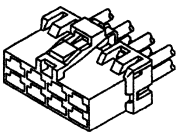	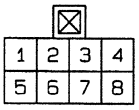	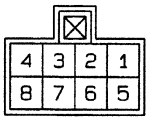	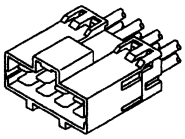

Model (Number shows number of pins)		Connection			
AN	AN 8 B	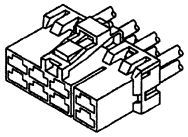	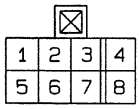	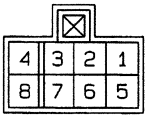	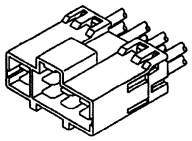
AP	AP 1 A	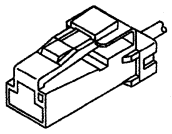	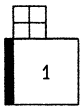	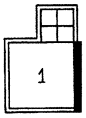	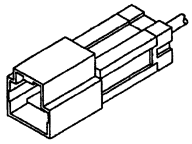
	AP 1 B	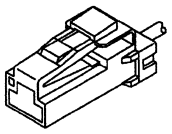	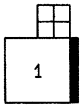	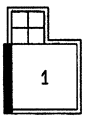	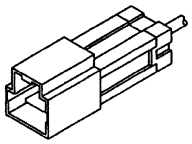
	AP 2 A	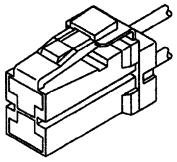	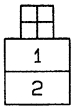	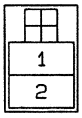	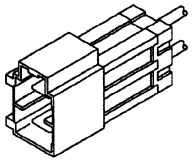
	AP 2 B	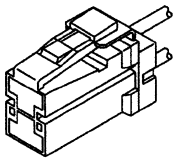	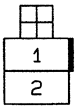	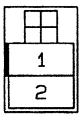	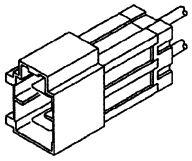
	AP 2 C	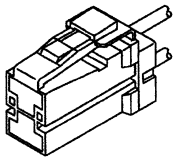	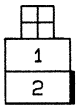	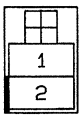	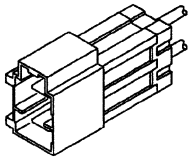
AQ	AQ 3 A	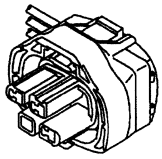			
	AQ 3 B	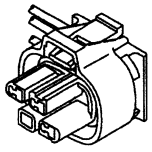			
	AQ13A	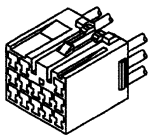	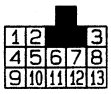	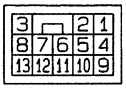	

CONNECTOR CONFIGURATION CHART

Model (Number shows number of pins)		Connection		
AQ	AQ15A	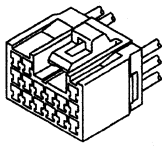	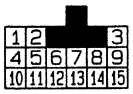	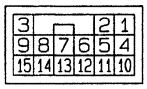
	AQ20A	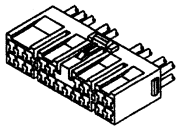	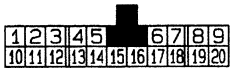	
AR	AR 2 A	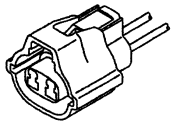		
	AR 2 B	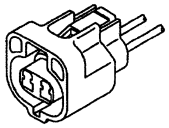		
	AR 2 C	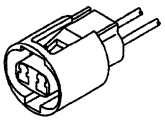		
	AR 2 D	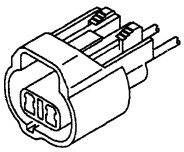		
	AR 2 E	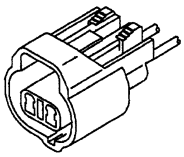		
	AR 2 F			

Model (Number shows number of pins)		Connection
AR	AR 3 A	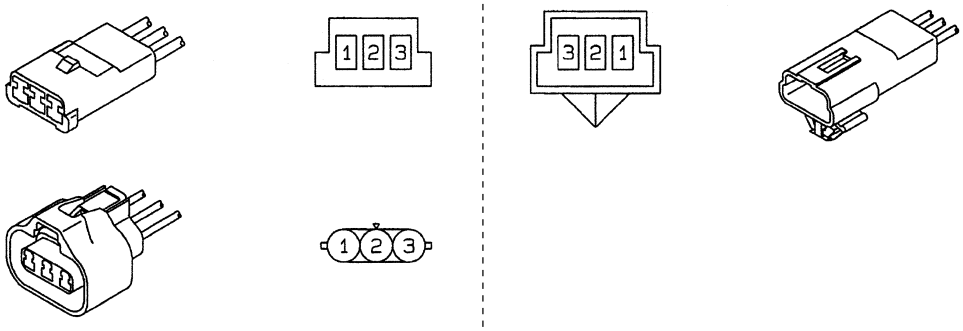
AS	AS 1 A	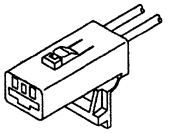
	AS 2 A	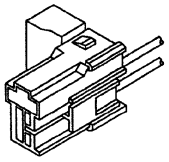
	AS 2 B	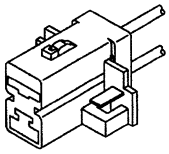
AT	AT 4 A	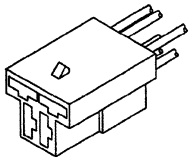
AU	AU 6 A	
	AU 8 A	
	AU10A	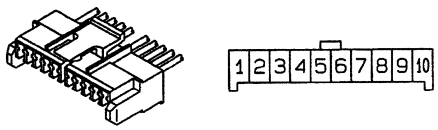

CONNECTOR CONFIGURATION CHART

Model (Number shows number of pins)		Connection
AU	AU12A	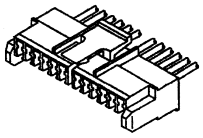 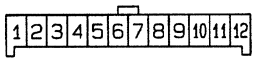
	AU13A	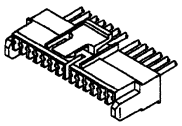 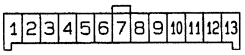
	AU16A	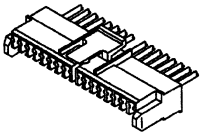 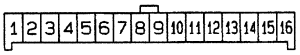
AV	AV 1 A	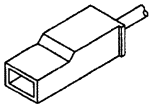 
	AV 2 A	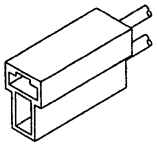 
AW	AW 1 A	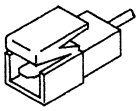   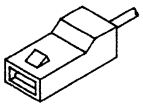
	AW 1 B	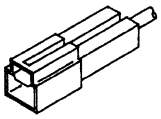   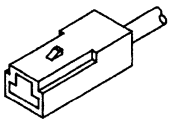
	AW 2 A	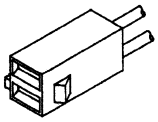   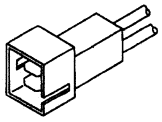
AX	AX 4 A	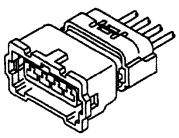  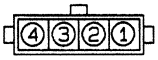 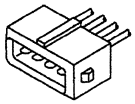

Model (Number shows number of pins)		Connection			
AY	AY 2 A	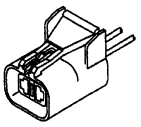			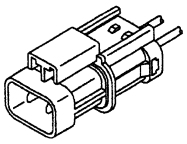
AZ	AZ 2 A	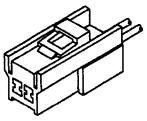			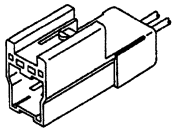
BA	BA 3 A	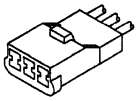	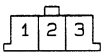	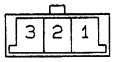	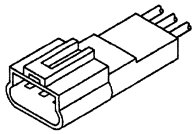
BB	BB 2 A	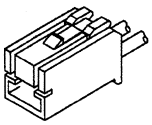			
	BB 3 A	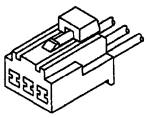	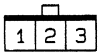	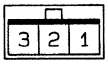	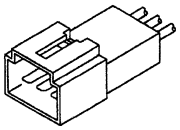
BC	BC 3 A	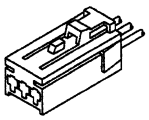	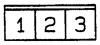	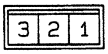	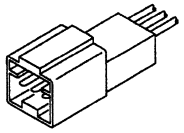
BD	BD 8 A	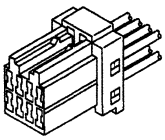	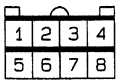	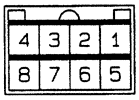	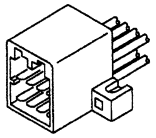
BE	BE 6 A				
BF	BF12A	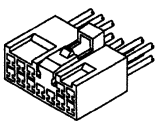	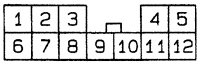	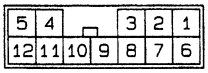	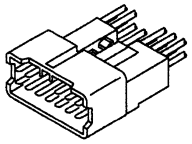

CONNECTOR CONFIGURATION CHART

Model (Number shows number of pins)		Connection	
BG	BG16A	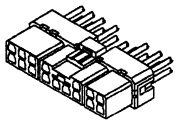 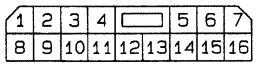	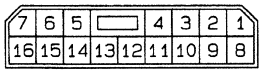 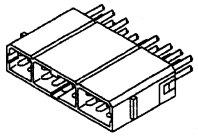
BH	BH 4 A	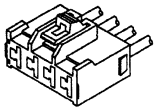 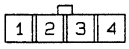	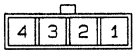 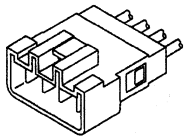
BJ	BJ 9 A	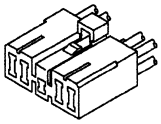 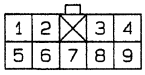	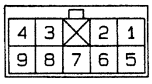 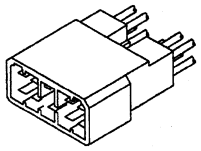
BL	BL 2 A	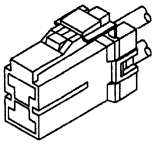 	 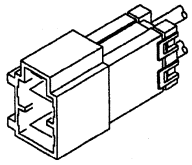
BM	BM 2 A	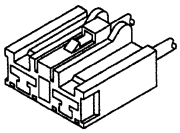 	
	BM 2 B	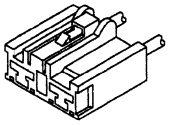 	
	BM 2 C	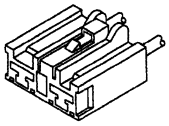 	

1 POWER, CHARGING AND GROUND

SPECIFICATIONS 54-1-2

STRUCTURE AND OPERATION 54-1-3

TROUBLESHOOTING 54-1-7

100 INSPECTION AND ADJUSTMENT MOUNTED IN VEHICLE
- Inspection of Alternator 54-1-8
- Inspection of Regulator 54-1-9

101 BATTERY 54-1-10

104 FUSE 54-1-14

106 ALTERNATOR 54-1-16

110 POWER CIRCUIT 54-1-22

115 RESERVE POWER CIRCUIT 54-1-32

125 BATTERY CHARGING CIRCUIT 54-1-34

130 GROUND 54-1-36

SPECIFICATIONS

Battery

Item		Specifications
Model		95E41R
Voltage×No.	V	12×2 (Parallel connection)
Capacity (5-hour rating)	Ah	80

Alternator

Item		Specifications
Manufacturer		MITSUBISHI ELECTRIC
Type		Alternator with built-in regulator (without brush, external fan)
Model		A4TU0286
Output	V-A	12–80

Alternator

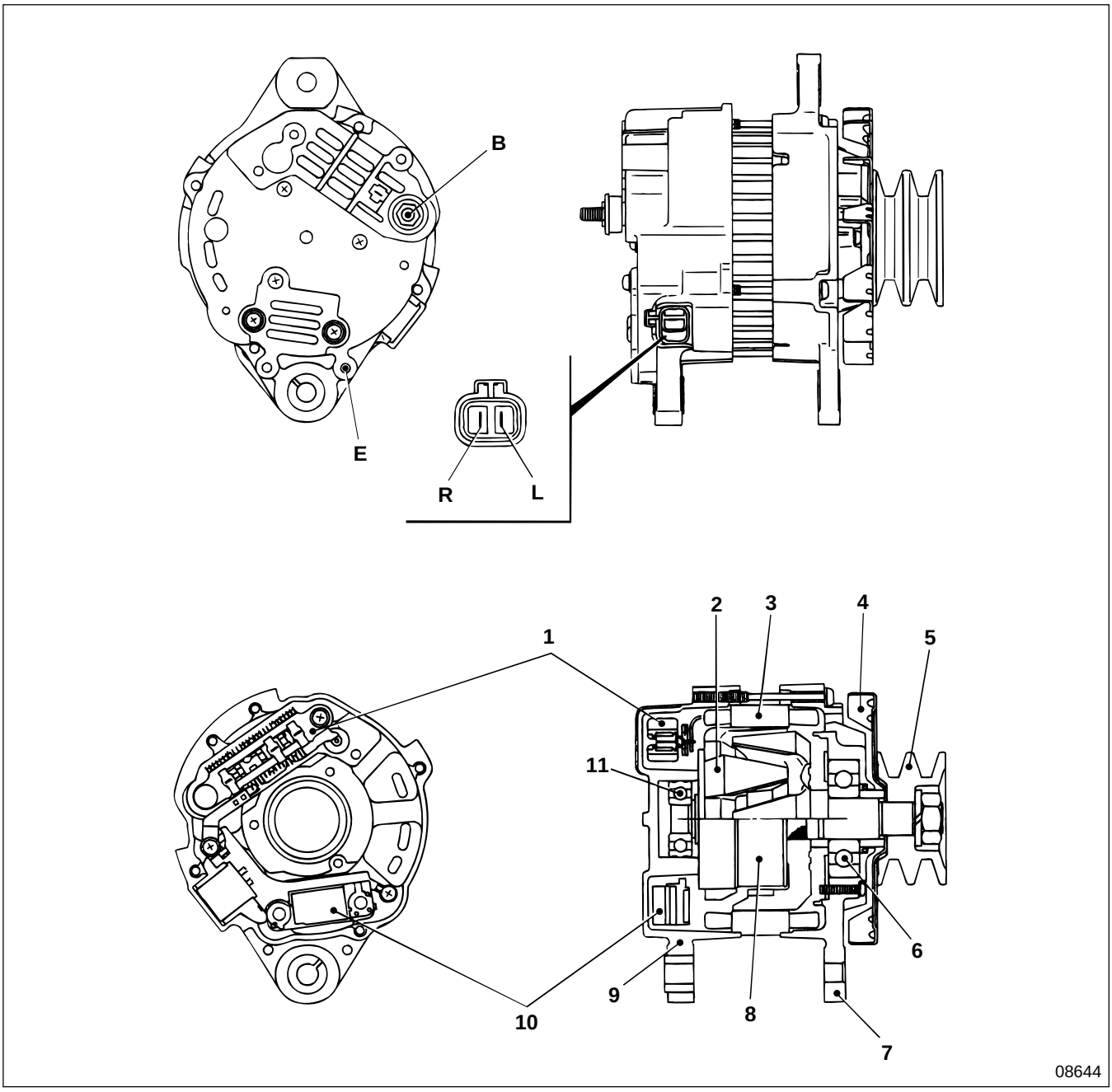

1 Rectifier
2 Rotor assembly
3 Stator assembly
4 Fan
5 Pulley
6 Front bearing
7 Front bracket
8 Field coil
9 Rear bracket
10 Regulator
11 Rear bearing

B : Terminal B
E : Terminal E
L : Terminal L
R : Terminal R

Battery Charging Circuit
< Air over hydraulic brake >

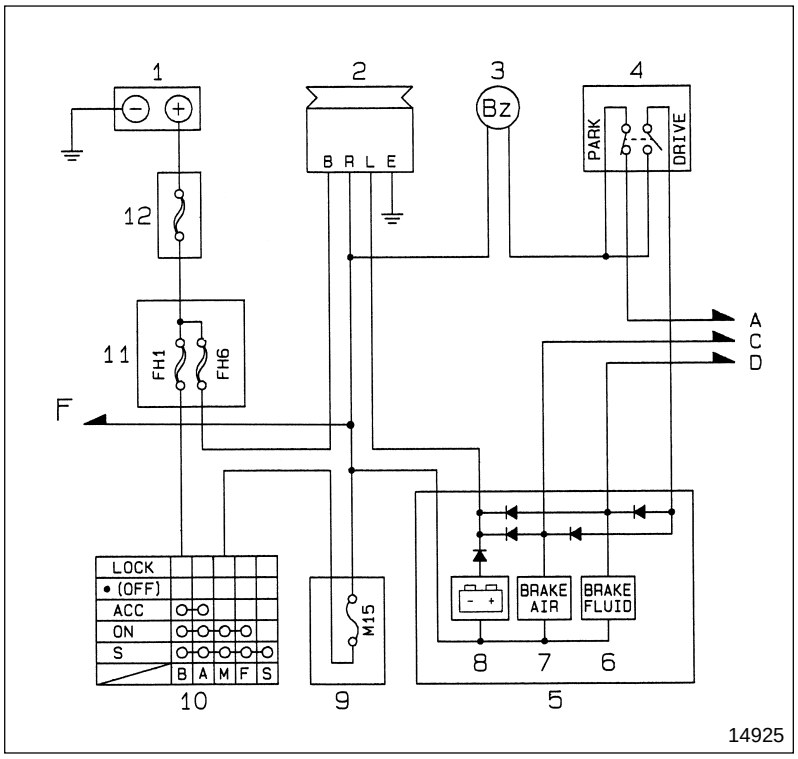

1 Battery
2 Alternator
3 Warning buzzer
4 Parking brake switch
5 Meter cluster
6 Brake warning lamp
7 Air pressure warning lamp
8 Charge warning lamp
9 Relay and fuse box
10 Starter switch
11 High-current fuse box
12 Main high-current fuse

A : To parking brake warning lamp
B : Terminal B
C : To brake fluid switch and airmaster stroke switch
D : To low air pressure switch
E : Terminal E
F : To each unit
L : Terminal L
R : Terminal R

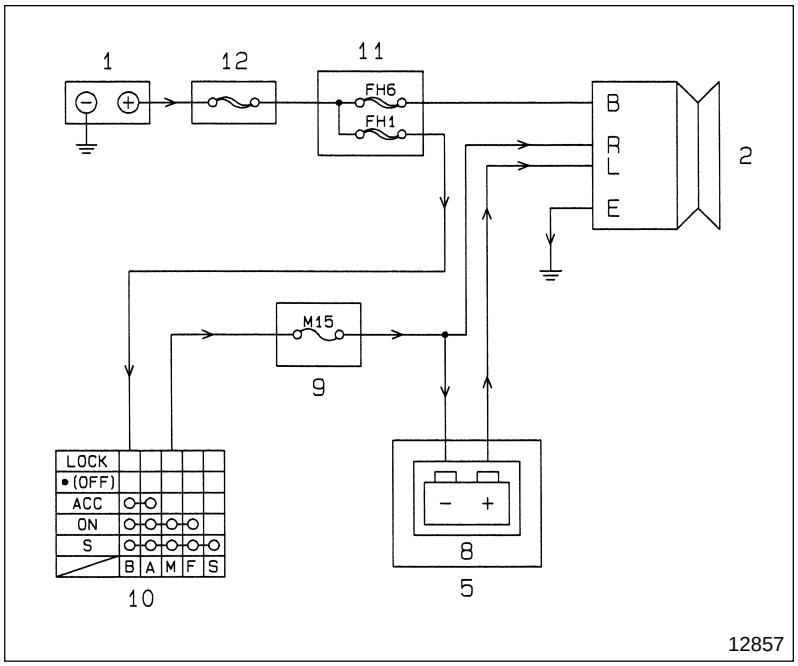

At engine standstill (before starting)

Position of starter switch **10** : ON

- 1→12→11 (FH1)→10→9 (M15)
  →2 (R→E)→Ground
  →8→2 (L→E)→Ground
- Charge warning lamp **8** lights up.
  To improve the low-speed power generation build-up performance of alternator **2**, current is fed to terminal **R** immediately after the engine is started.

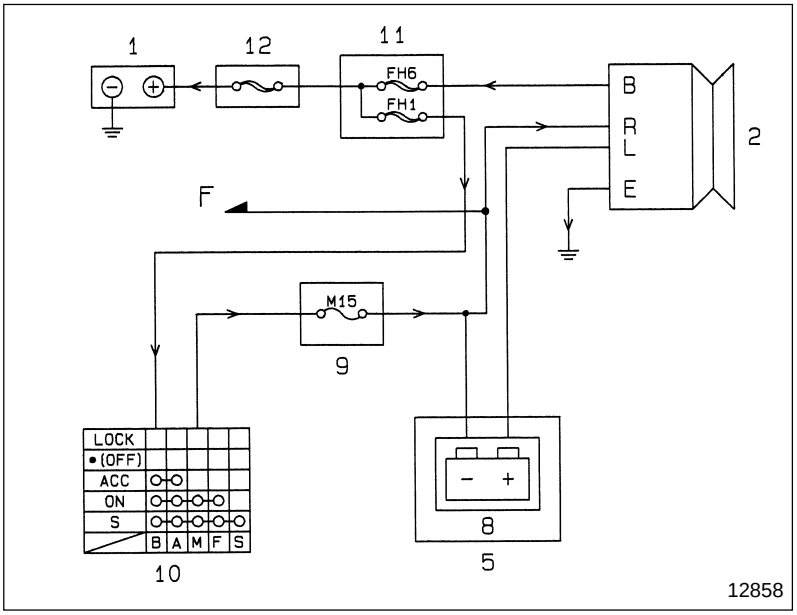

After engine start-up

Position of starter switch **10** : ON

- Alternator **2** starts to generate power.
- The voltage at terminal **B** of alternator **2** rises higher than the voltage of battery **1**.
- As alternator **2** starts to charge battery **1**, units **F** are supplied with power.
  2 (B)→11 (FH6)→12→1→Ground
  →11 (FH1)→10→9 (M15)→F
- Since there is no electric potential difference between the output voltage of terminal **L** of alternator **2** and the voltage of battery **1**, charge warning lamp [- +] **8** goes off.

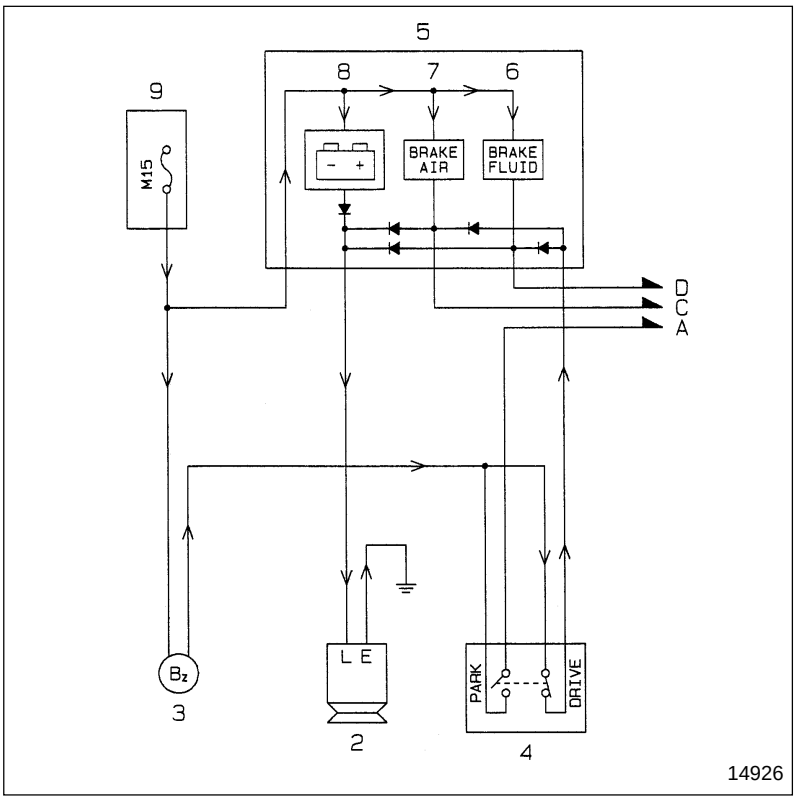

If V-belt snaps while driving

Position of starter switch **10** : ON
Position of parking brake switch **4** : DRIVE

- Alternator **2** stops generating power and battery **1** becomes the power source.
  9 (M15)→8→2 (L→E)→Ground
  →3→4 (DRIVE)
  →2 (L→E)→Ground
- Charge warning lamp [- +], brake warning lamp [BRAKE FLUID] and air pressure warning lamp [BRAKE AIR] light up.
  At the same time, warning buzzer **3** sounds.

STRUCTURE AND OPERATION

< Full air brake >

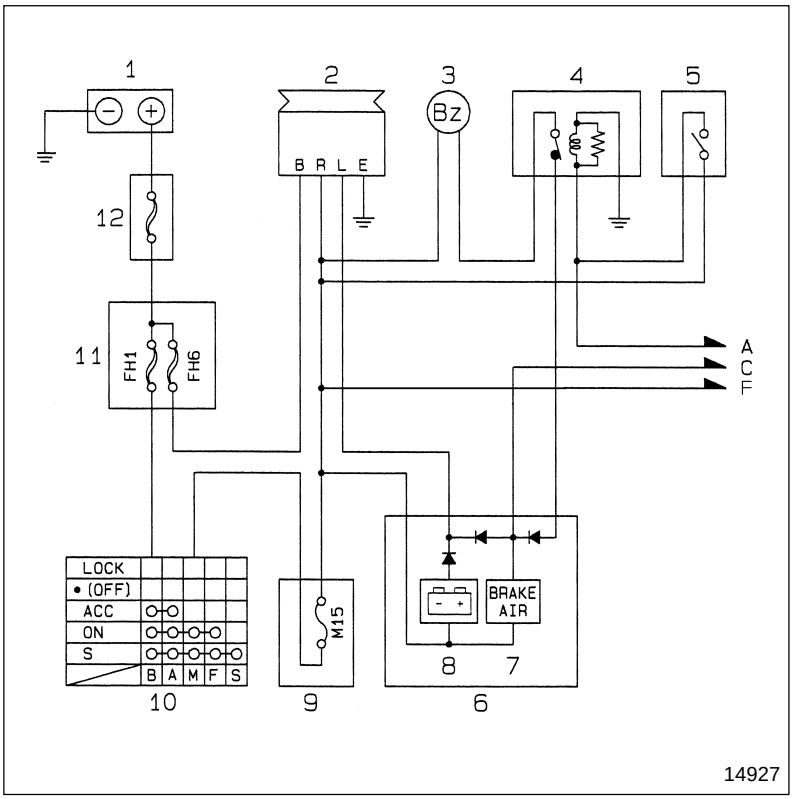

1 Battery
2 Alternator
3 Warning buzzer
4 Parking brake relay
5 Parking brake switch
6 Meter cluster
7 Air pressure warning lamp
8 Charge warning lamp
9 Relay and fuse box
10 Starter switch
11 High-current fuse box
12 Main high-current fuse

A : To parking brake warning lamp
B : Terminal B
C : To low air pressure switch
E : Terminal E
F : To each unit
L : Terminal L
R : Terminal R

With the exception of the parking brake system, the battery charging circuit for the full air brake is the same as for the air over hydraulic brake system. P54-1-2

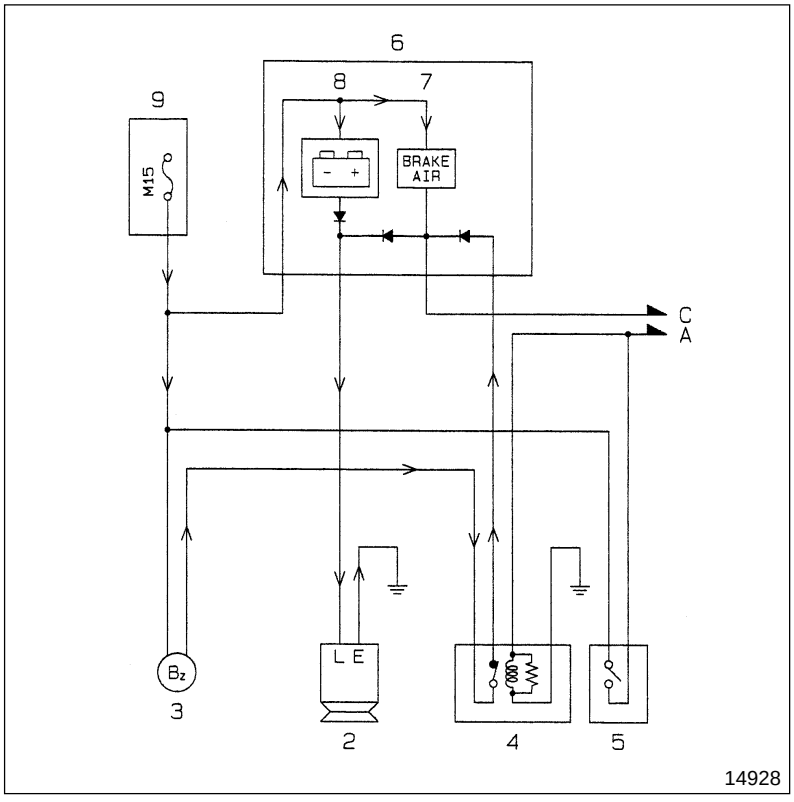

When V-belt snaps while driving

Position of starter switch **10** : ON
Position of parking brake switch **5** : OFF

- Alternator **2** stops generating power and battery **1** becomes the power source.
  9 (M15)⟶8→2 (L→E)→Ground
  └→3→4 (Contact point)→2 (L→E)
  →Ground
- Charge warning lamp [- +] and air pressure warning lamp [BRAKE AIR] light up.
  At the same time, warning buzzer **3** sounds.

Symptoms / Possible causes		Battery electrolyte decreases too early	Battery overheating	Battery is normal but overdischarged	Charge warning lamp [-+] does not light when turning starter switch ON, with engine stopped	Alternator is normal but battery overdischarged	< Air over hydraulic brake > Warning buzzer does not stop sounding although parking brake lever is pulled	< Full air brake > Warning buzzer does not stop sounding although hand control valve is pulled	Remarks
Connector connection faulty, harness broken, grounding faulty				○		○	○	○	
Fuse blown				○	○	○			
V-belts loose				○		○			Gr 14
V-belts damaged				○		○			Gr 14
Battery faulty		○				○			
Alternator	Stator coil broken			○					
	Stator coil short-circuited with core			○					
	Field coil broken			○					
	Rectifier faulty			○					
	Regulator faulty		○	○	○				
	Wiring faulty			○					
Meter cluster faulty					○		○	○	
Warning buzzer faulty							○	○	
Parking brake switch faulty							○	○	
Parking brake relay faulty								○	
Hand control valve faulty								○	Gr 35B

Inspection of Alternator

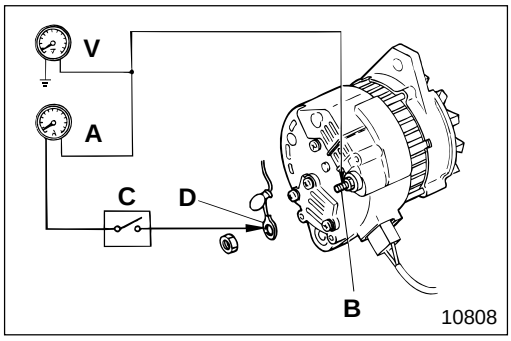

Performance test

- Connect the meters to the alternator as illustrated.
  A : Ammeter (100 amperes class)
  B : Terminal B on alternator
  C : Switch
  D : Terminal
  V : Voltmeter

WARNING

- **Terminal D is always loaded with voltage from the battery.**
- **You must handle terminal D carefully, it will short-circuit if it touches any part other than terminal B on the alternator.**

- Turn switch **C** ON to supply battery voltage to terminal **B** on the alternator.
- Start the engine.
- Turn the switches ON of all the lamps on the vehicle immediately.
- Measure the current when the engine speed reaches approximately 2420 rpm.
- The alternator is assumed to be normal if the measured value is higher than 70% of the specified output.

Specified output of alternator

Alternator model	Voltage	Output
A4TU0286	12 V	80 A

NOTE

Since the above inspection is only a simplified check, it is necessary to conduct a stringent test bench for an official check.
P54-1-19

Inspection of Regulator

Service standards

Location	Maintenance item	Standard value	Limit	Remedy
—	Adjustment voltage of regulator	14.7±0.3 V	—	Replace

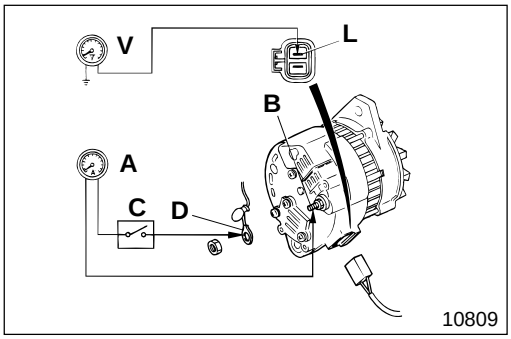

- Connect the meters to the alternator as illustrated.
  A : Ammeter (100 amperes class)
  B : Terminal B on alternator
  C : Switch
  D : Terminal
  L : Terminal L on alternator
  V : Voltmeter

WARNING⚠

- **Terminal D is always loaded with voltage from the battery.**
- **You must handle terminal D carefully, it will short-circuit if it touches any part other than terminal B on the alternator.**

- Turn switch **C** ON and make sure that voltmeter **V** indicates 0 volt.
- If the needle of voltmeter **V** oscillates, something is wrong with the alternator or the wiring.
- Turn switch **C** OFF and start the engine.

CAUTION⚠

Do not start the engine with switch C turned ON because the starter current will flow into ammeter A and damage it.

- If the charge current is five amperes or less and the engine speed is approximately 2420 rpm, measure the adjustment voltage.
- If the charge voltage is five amperes or more, do one of the following :
  - Run the engine for a while to charge the battery.
  - Replace the old battery with a fully-charged one.
  - Connect a $^1/_4$ Ω (25 W) resistor in series with the battery to limit the charge current.
- If the measured value deviates from the standard value, change the regulators.

101 BATTERY

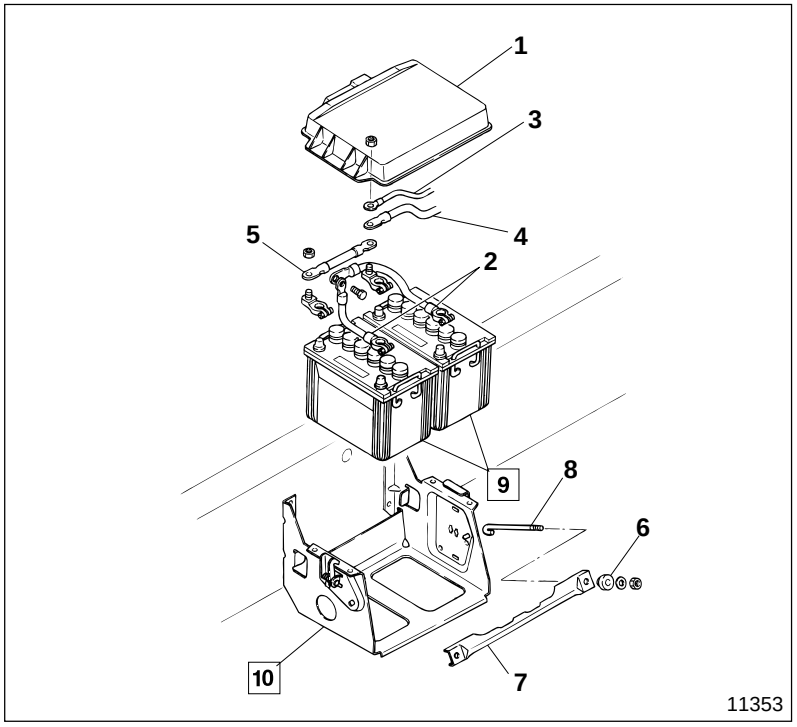

● **Removal sequence**

1 Battery cover
2 Battery cable ⊖
3 Harness (Main high-current fuse)
4 Starter cable
5 Battery cable ⊕
6 Rubber
7 Angle frame
8 Set bolt
9 Battery
10 Battery box

● **Installation sequence**

Follow the removal sequence in reverse.

DANGER⚠

- **Since flammable hydrogen gas is generated by battery 9, be sure to obey the following warnings :**
  - **Do not short-circuit the ⊕ and ⊖ terminals on the battery.**
  - **Keep sparks and lit cigarettes away from the battery.**
  - **Do not wear metal objects on your arms and lean over battery 9.**
- **Because the battery electrolyte is diluted sulfuric acid and is corrosive, when handling battery 9 wear safety glasses and rubber gloves to protect the eyes and hands.**

WARNING⚠

To prevent a short-circuit be sure that disconnected battery cables 2 and 5 do not accidentally touch the battery terminals.

CAUTION⚠

- **Make sure that you disconnect battery cable ⊖ 2 first when you disconnect battery cables 2 and 5.**
- **Make sure that all electrical switches of the vehicle are OFF before connecting battery cables 2 and 5.**
- **Make sure that you connect battery cable ⊕ 5 before you connect battery cable ⊖ 2.**

Service standards

Location	Maintenance item	Standard value	Limit	Remedy
9	Specific gravity of battery electrolyte (20°C {68°F})	1.280	1.220	Charge or replace

◆ Service procedure

9 Inspection of battery

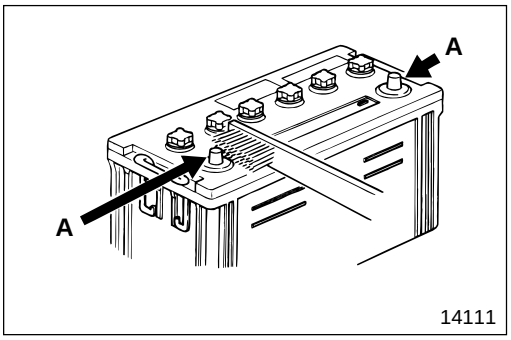

(1) Visual inspection

- If terminal **A** is corroded, scrub off the corrosion from it using a wire brush.
- If cracks or defects are found on battery **9**, replace it since the cracks or defects can cause liquid spills.

CAUTION⚠

Make sure you grease the ⊕ side of terminal A because it is easily corroded.

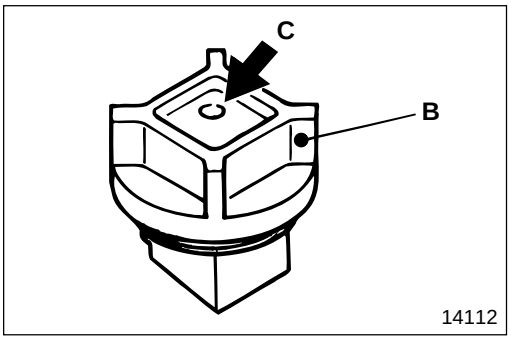

- If bleed hole **C** of vent plug **B** is clogged, clean the hole.

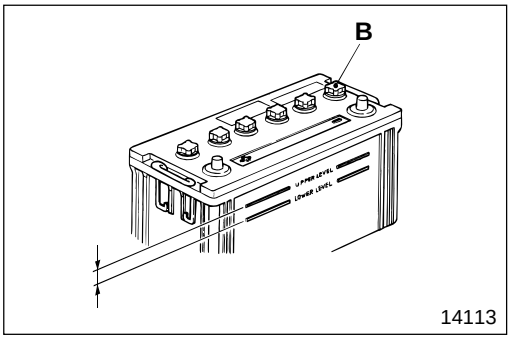

(2) Inspection of fluid level

- Make sure that the battery electrolyte level is between UPPER and LOWER.
- If the level is below LOWER, remove vent plug **B** and fill the battery with distilled water or battery replenisher to UPPER.

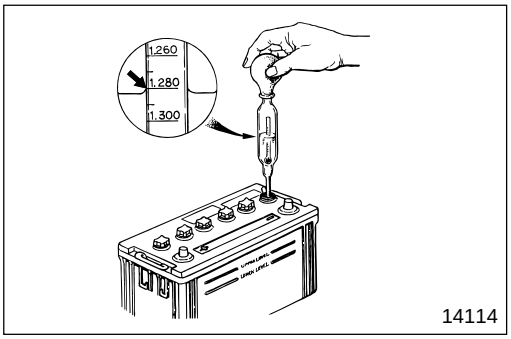

(3) Measurement of specific gravity

Measure the specific gravity of the battery electrolyte. If the measured value is lower than the limit, charge the battery.

NOTE

The specific gravity of the battery electrolyte depends on the liquid temperature. Use the following formula to convert the actual value to the value were the temperature 20°C {68°F}.

$$S_{20}\{68\} = S_t + 0.0007\,(t - 20\,\{68\})$$

S_{20} {68} : Specific gravity were the temperature 20°C {68°F}

S_t : Specific gravity actually measured with the temperature at t°C {t°F}

t : Temperature of battery electrolyte

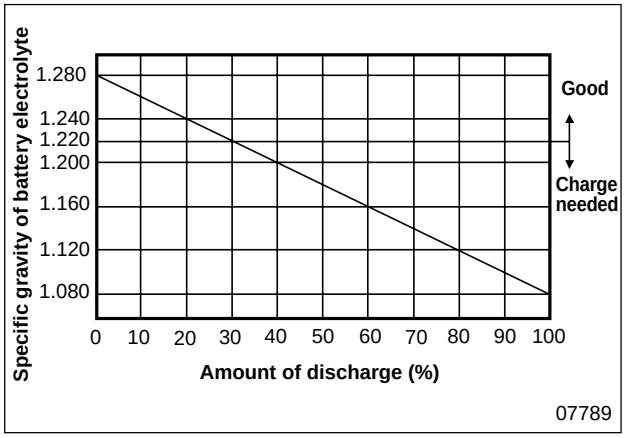

(4) Charging

- Although, as a rule, charging of battery **9** should be done with the battery removed from the vehicle, if you have to charge the battery while it is on the vehicle, make sure that you stop the engine and disconnect battery cable ⊖ **2**.
- Remove vent plug **B** before charging the battery.
- For the recommended charge time and current, see the following table to avoid overcharging.

	Charge current (A)	Charge time (H)	Upper limit of fluid temperature (°C {°F})
Normal charge	$\frac{\text{Value of 5-hour rating capacity}}{10}$	$\frac{*\text{Amount of discharge (Ah)}}{\text{Charge current (A)}} \times 1.2\text{(to 1.5)}$	45 {113}
Quick charge	$\frac{\text{Value of 5-hour rating capacity}}{1.5}$	0.5	55 {131}

* Amount of discharge (Ah)=5-hour rating capacity (Ah)$\times \frac{\text{Amount of discharge (\%)}}{100}$

- Use the graph shown on the left to calculate the amount of discharge (%).
- Use diluted sulfuric acid, made up of sulfuric acid and refined or distilled water, as the battery electrolyte.
- The specific gravity of fully-charged battery electrolyte is 1.280 with the temperature at 20°C {68°F}.

DANGER⚠

- **Do not let the battery electrolyte level rise and overflow while charging the battery.**
- **Keep naked lights away from the battery while charging it or it might explode.**
- **Be careful not to generate sparks while charging the battery because its dangerous.**
- **After charging the battery, tighten vent plug B, wash away sulfuric acid from the battery using water, and dry the surface.**

10 Inspection of battery box

- If battery box **10** is corroded, scrub off the corrosion from it using a wire brush and apply acid resistant coating.
- If battery box **10** is corroded excessively or if it is broken or cracked, replace it.

M E M O

Installation Position

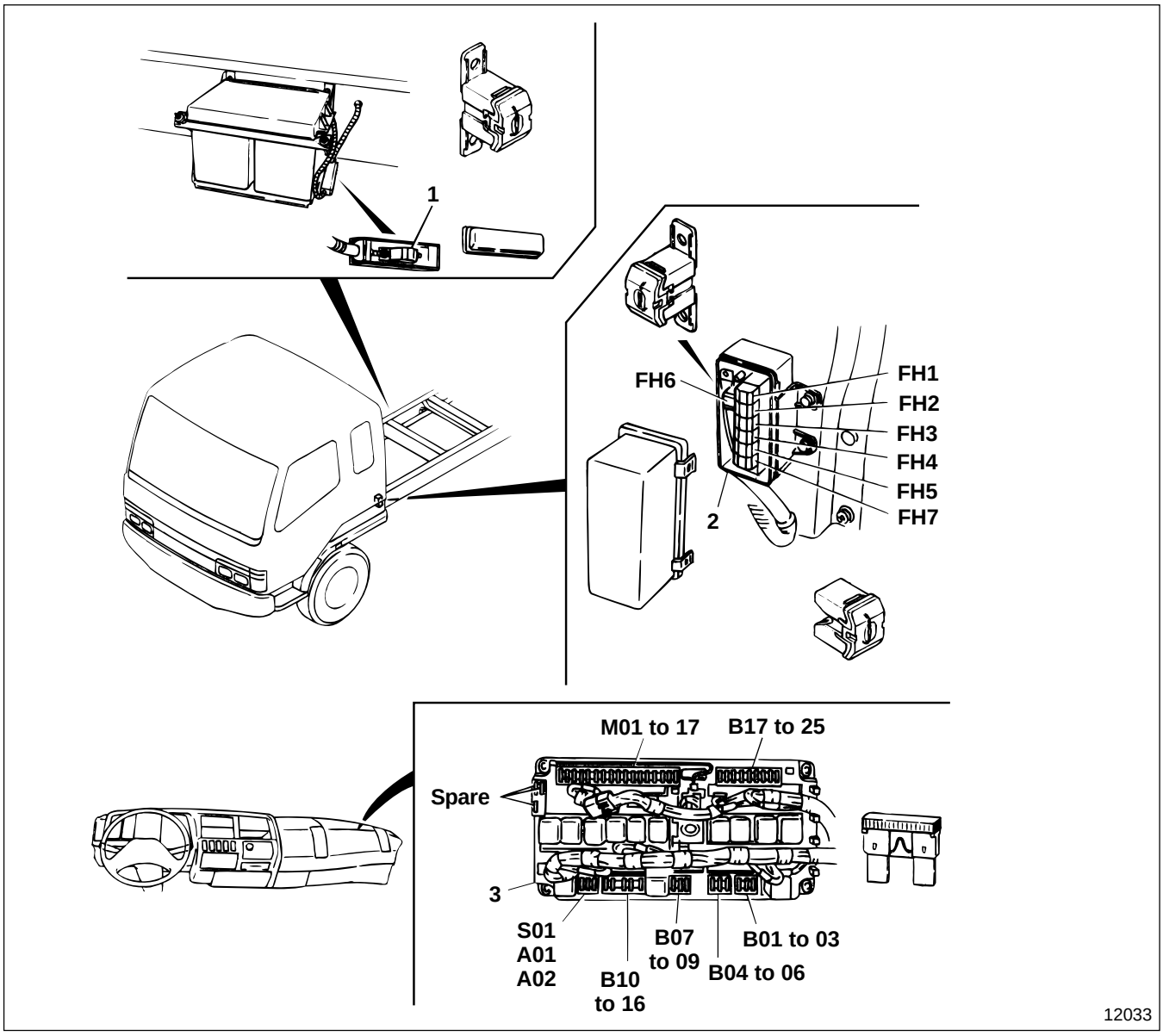

1 Main high-current fuse
2 High-current fuse box
3 Relay and fuse box

CAUTION ⚠

- **If a fuse blows, make sure you identify and remedy the cause, then replace the fuse.**
- **Make sure that you replace the fuse with one having the same rating.**
- **Make sure that you remove the ⊖ terminal of the battery cable before removing main high-current fuse 1 and high-current fuses FH1 to 7.** 🕮 101

Main high-current fuse

Fuse No.	Main load	Capacity
—	High-current fuse box	120 A

High-current fuse box

Fuse No.	Main load	Capacity
FH1	Starter switch (Terminal M)	50 A
FH2	Fuse box (B07 to 16)	40 A
FH3	Fuse box (B18 to 24)	40 A
FH4	Fuse box (B01 to 04)	40 A
FH5	Glow relay (Terminal B)	50 A
FH6	Alternator (Terminal B)	120 A
FH7	Fuse box (B6)	40 A
FH8	—	—

Fuse box

Fuse No.	Main load	Capacity
A01	Audio	10 A
A02	Cigarette lighter	15 A
B01	Reserve power (DC)	10 A
B02	—	—
B03	Van body dome light relay	15 A
B04	Socket connector	20 A
B05	—	—
B06	—	—
B07	Stop lamp	10 A
B08	Turn/hazard	15 A
B09	Tail lamp	15 A
B10	Headlamp relay	5 A
B11	—	—
B12	Headlamp main LH	10 A
B13	Headlamp main RH	10 A
B14	—	—
B15	Headlamp dimmer LH	10 A
B16	Headlamp dimmer RH	10 A
B17	—	—
B18	* Air-conditioner	20 A
B19	—	—
B20	—	—
B21	—	—

Fuse No.	Main load	Capacity
B22	Cab lamp	10 A
B23	Fuel-cut motor	10 A
B24	Horn	15 A
B25	—	—
M01	—	—
M02	Transmission power take-off	
M03	—	—
M04	—	—
M05	—	—
M06	Automatic transmission	10 A
M07	—	—
M08	Pre-stroke cut relay	20 A
M09	Heater	20 A
M10	—	—
M11	Pre-stroke control unit	10 A
M12	—	—
M13	Turn/hazard	10 A
M14	Air dryer	15 A
M15	Warning buzzer	10 A
M16	Backup lamp	10 A
M17	Wiper	15 A
S01	Safety relay	10 A

* Fuses are provided for these pieces of equipment only where they are installed.

106 ALTERNATOR

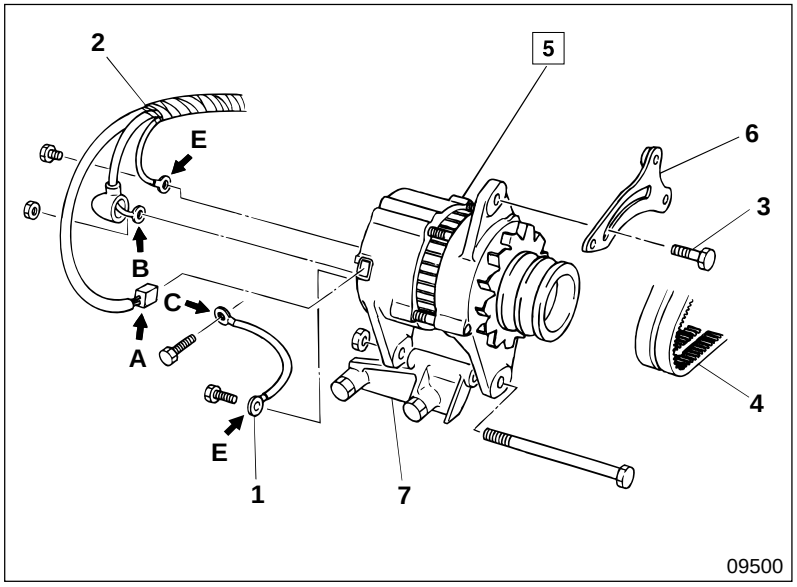

● **Removal sequence**

1 Ground cable
2 Chassis harness
3 Adjusting bolt
4 V-belts
5 Alternator P54-1-18
6 Adjusting plate
7 Alternator bracket

A : To terminals L and R
B : To terminal B
C : Connected to crankcase
E : To terminal E

WARNING

- **Terminal B is always loaded with voltage from the battery, supplied via chassis harness 2. Therefore when you remove the harness from terminal B, make sure that tools do not touch any adjacent parts because this would cause a short-circuit.**
- **Make sure that you disconnect terminal ⊖ of the battery before removing the harness and insulate the terminal with tape.**

● **Installation sequence**

Follow the removal sequence in reverse.

● **Adjustment after installation**

Adjustment of V-belt **4** tension Gr 14

Service standards

Location	Maintenance item		Standard value	Limit	Remedy
5	Output current (* When engine is hot and 13.5 V is loaded)	At 1500 rpm	38 A or more	—	Inspect
		At 2500 rpm	65 A or more	—	
		At 5000 rpm	76 A or more	—	
	Adjustment voltage of regulator (At 5000 rpm, 5 A is loaded)		14.7±0.3 V	—	Replace

* The value of the ambient temperature is measured after running the engine at maximum power (5000 rpm) for 30 minutes.

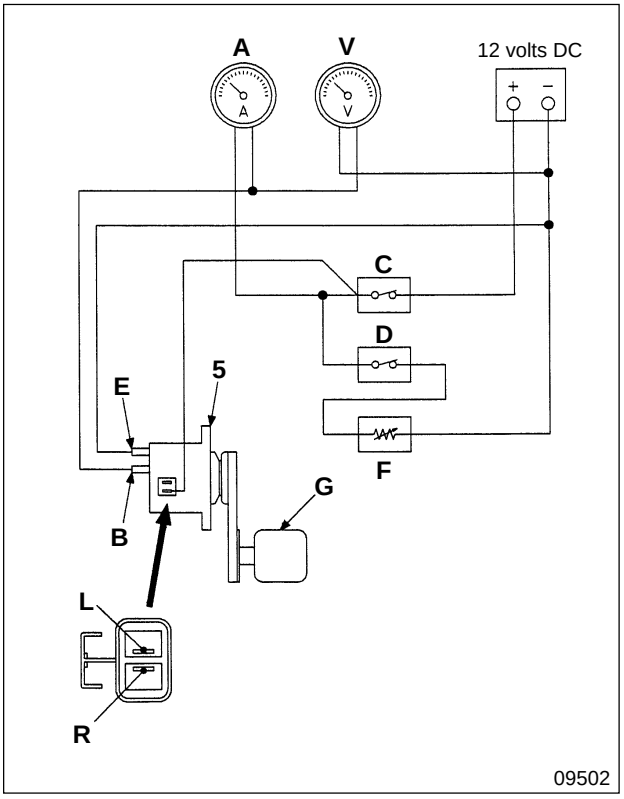

5 Inspection of alternator

(1) Inspection of alternator performance (bench test)

- Connect each unit to the alternators as illustrated.
  A : Ammeter
  B : Terminal B on alternator
  C : Switch
  D : Switch
  E : Terminal E on alternator
  F : Load resistance (variable resistance)
  G : Alternator drive motor
  L : Terminal L on alternator
  R : Terminal R on alternator
  V : Voltmeter
- Turn switches **C**, **D** OFF.
- Run alternator **5** at 5000 rpm.
- Adjust load resistance **F** to maintain the specified current.

  Specified output of the alternator : 12 V-80 A

- After adjustment, run alternator **5** for 30 minutes.
- Maximize load resistance **F** (current hardly flows).
- Turn switches **C**, **D** ON.
- Increase the rotation of alternator **5** gradually and measure current at specified rpm.
- If the measured value deviates from the standard value, disassemble and inspect alternator **5**. P54-1-20

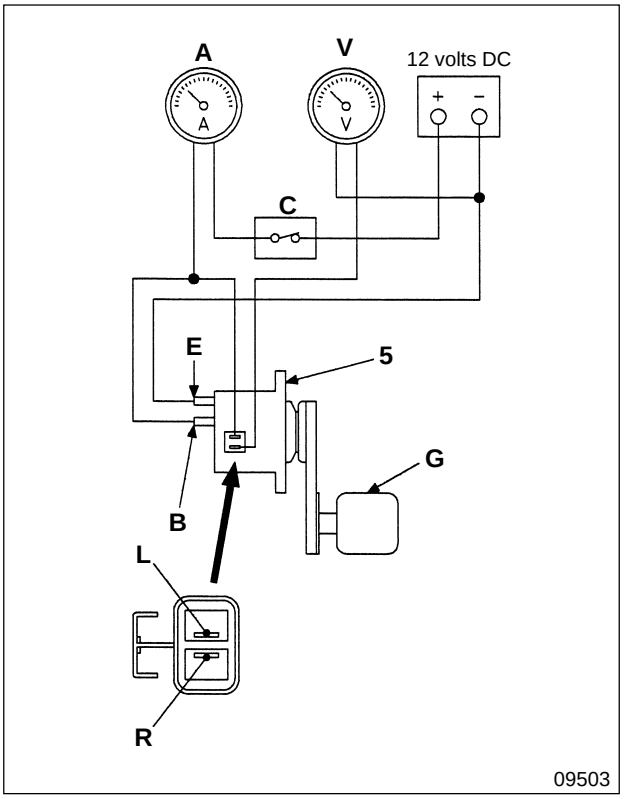

(2) Inspection of regulator (bench test)

- Connect each unit to the alternators as illustrated.
  A : Ammeter
  B : Terminal B on alternator
  C : Switch
  E : Terminal E on alternator
  G : Alternator drive motor
  L : Terminal L on alternator
  R : Terminal R on alternator
  V : Voltmeter
- Turn switch **C** ON.
- Run alternator **5**.
- Make sure that the value of the current at 5000 rpm is five amperes or less.
- Measure voltage (adjustment voltage).
- If the measured value deviates from the standard value, replace the regulator (in alternator **5**).

Alternator

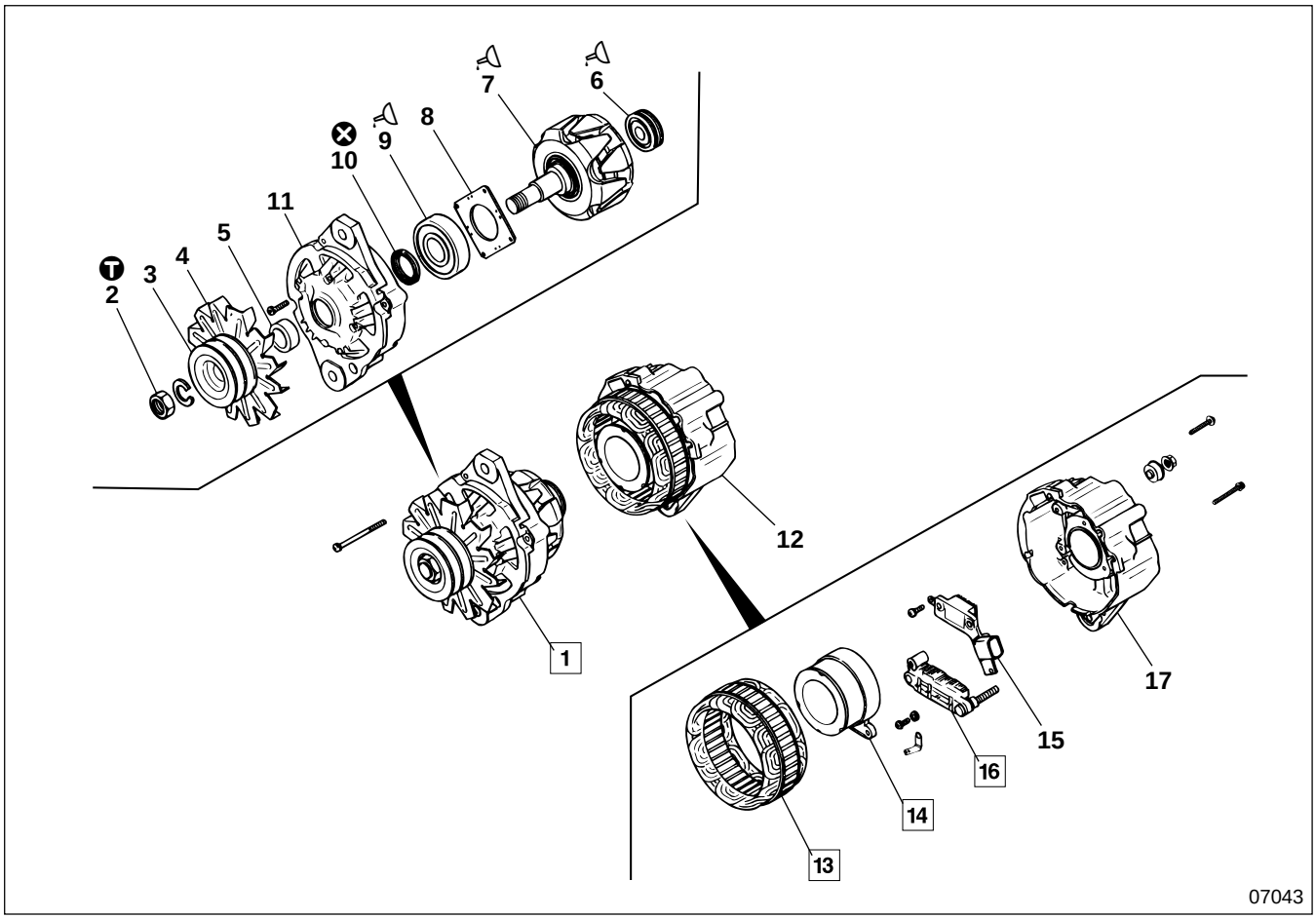

● **Disassembly sequence**

1 Rotor and front bracket assembly
2 Nut
3 Pulley
4 Fan
5 Spacer
6 Rear bearing
7 Rotor assembly
8 Cover
9 Front bearing
10 Oil seal
11 Front bracket
12 Stator and rear bracket assembly
13 Stator assembly
14 Field coil
15 Regulator
16 Rectifier
17 Rear bracket

⊗ : Non-reusable parts

NOTE

Do not remove parts 6, 9, 13 unless they are faulty.

● **Assembly sequence**

12 → 1

12 : 17 → 16 → 15 → 14 → 13

1 : 11 → 10 → 9 → 8 → 7 → 6 → 5 → 4 → 3 → 2

Service standards

Location	Maintenance item	Standard value	Limit	Remedy
14	Field coil resistance (20°C {68°F})	2.6 to 3.4 Ω	—	Replace

Tightening torque

Unit : N·m {lbf.ft, kgf·m}

Location	Parts to be tightened	Tightening torque	Remarks
2	Nut (Pulley mounting)	132 to 162 {98 to 120, 13.5 to 16.5}	—

Lubricant

Location	Points of application	Kinds	Quantity
6	Rear bearing inner periphery	Engine oil	As required
7	Front bearing installation part of rotor assembly	Engine oil	As required
9	Front bearing outer periphery	Engine oil	As required

◆ Service procedure

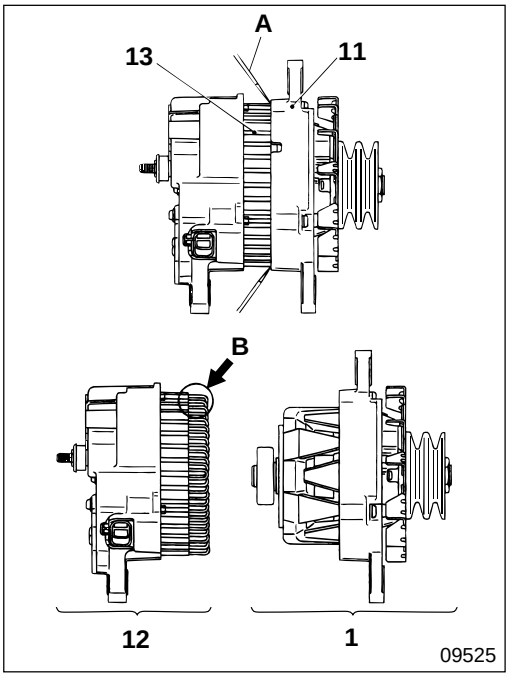

1 **Rotor and front bracket assembly**

[Removal]

- Insert screwdriver **A** between front bracket **11** and stator assembly **13**.
- Use screwdriver **A** to pry rotor and front bracket assembly **1** away from stator and rear bracket assembly **12**.

CAUTION

Be careful not to insert the screwdriver too deep or it will damage coil B of stator assembly 13 and might cause a short-circuit.

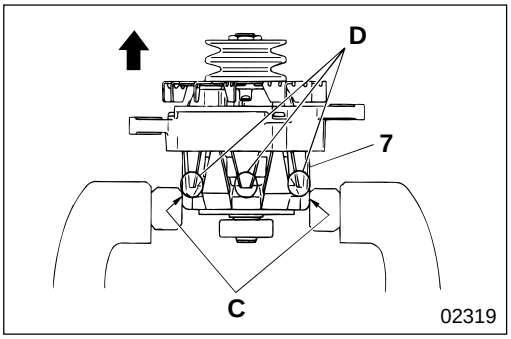

[Disassembly]

CAUTION

Make sure, when you hold rotor assembly 7 in a vise, to grip root C of the core claws. Gripping claws D can damage them.

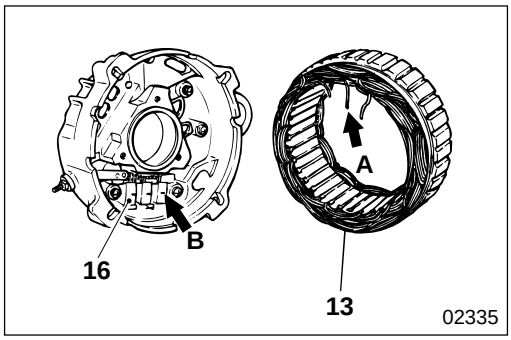

13 Stator assembly

[Removal and installation]

- Disconnect lead **A** of stator assembly **13** from rectifier **16**. The lead is soldered to diode **B** of rectifier **16** at three points.

CAUTION

Make sure that you desolder within five seconds because the diode is heat sensitive.

- To install, follow the removal sequence in reverse.

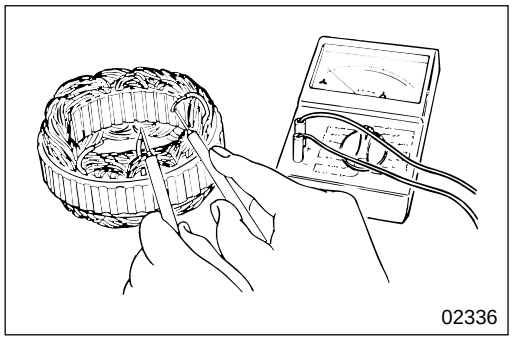

[Inspection]

(1) Continuity of each lead wire

- Make sure that each lead wire has continuity.
- If there is no continuity, the lead wire is broken. Replace stator assembly **13**.

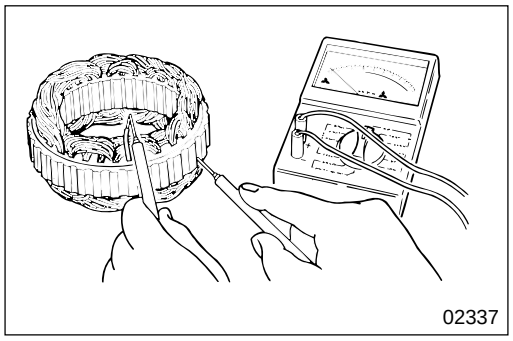

(2) Continuity between lead wires and the core

- Make sure that there is no continuity between lead wires and the core.
- If there is continuity, replace stator assembly **13**, since it might be short-circuited.

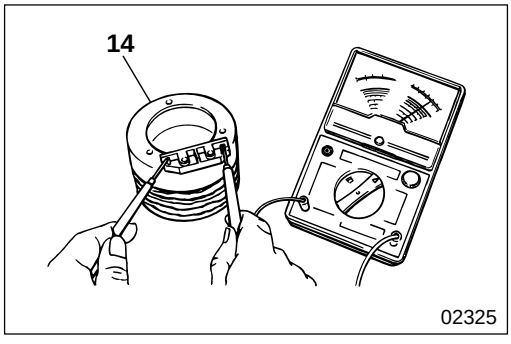

14 Inspection of field coil

- Measure the resistance between the terminals of field coil **14**.
- If the measured value deviates from the standard value, replace field coil **14**.

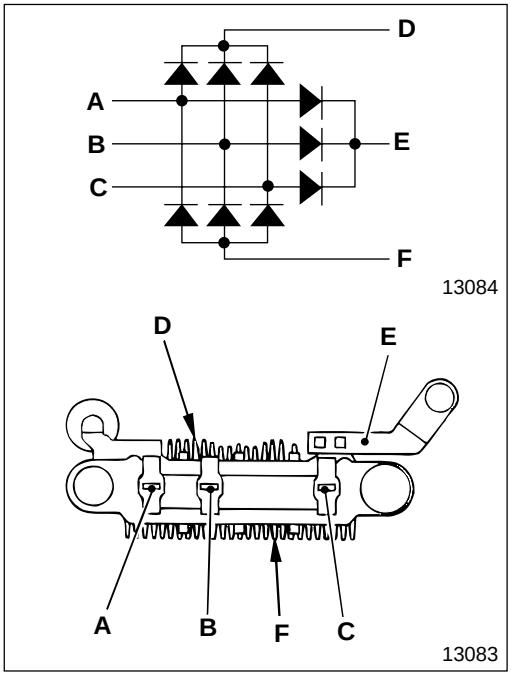

16 **Inspection of rectifier**

- Inspect whether the diode inside rectifier **16** functions properly, and if any fault is found, replace the rectifier.
  A, **B**, **C** : Lead connecting area of stator coil
  D, **E** : Heat sink area
  F : Regulator connecting area
- Inspect the rectifier twice, before and after the ⊕ side and ⊖ side of the tester have been changed over.

CAUTION ⚠

When inspecting using a tester, the current becomes weaker than the usual current flowing through rectifier 16. Therefore, an incomplete resistance value might be indicated.
Also, this tendency increases as the range of the tester gets smaller. Therefore, use as big a range as possible.

Power Supply (Battery to High-current Fuse Box to Relay and Fuse Box)

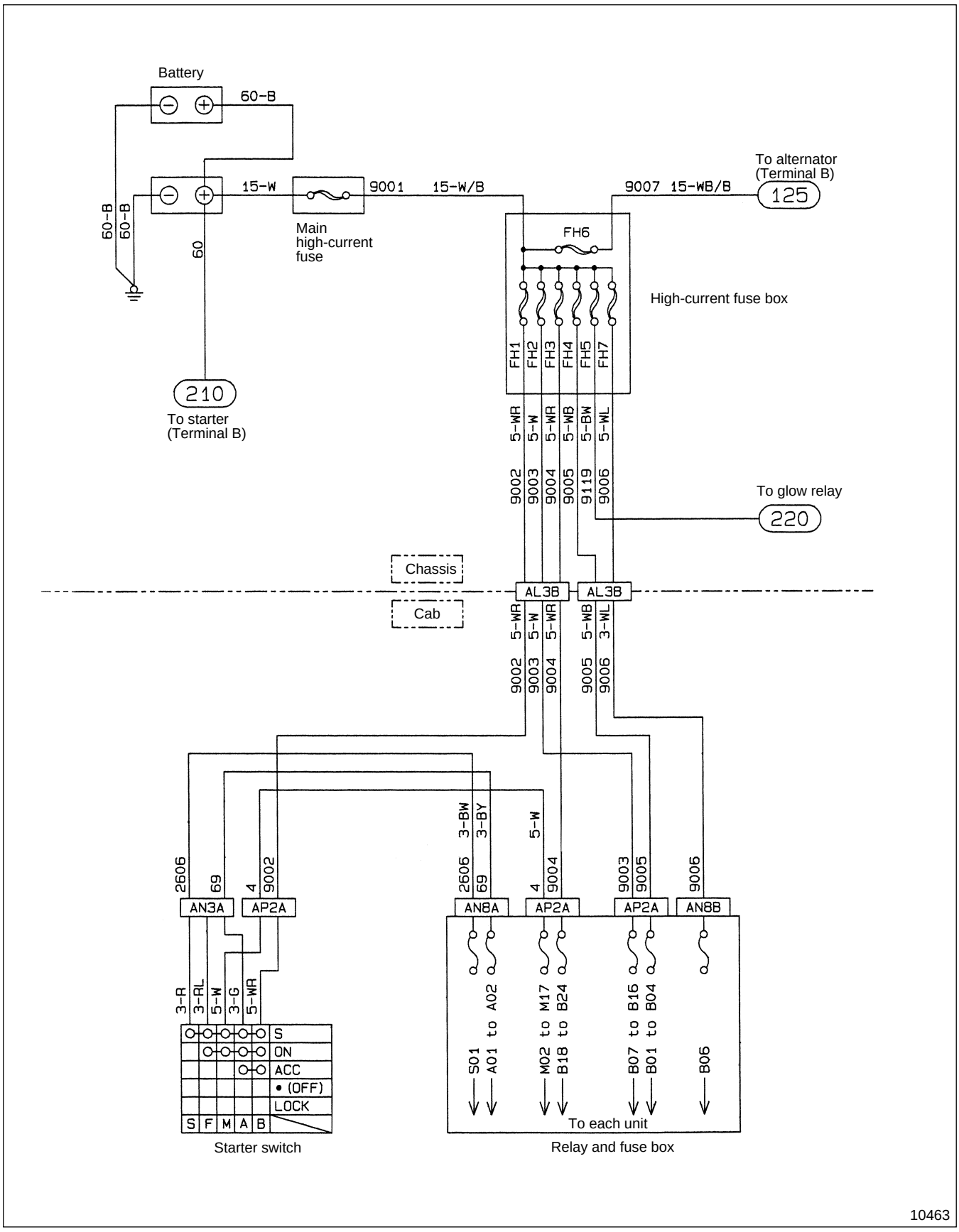

Fuses A01, A02, S01

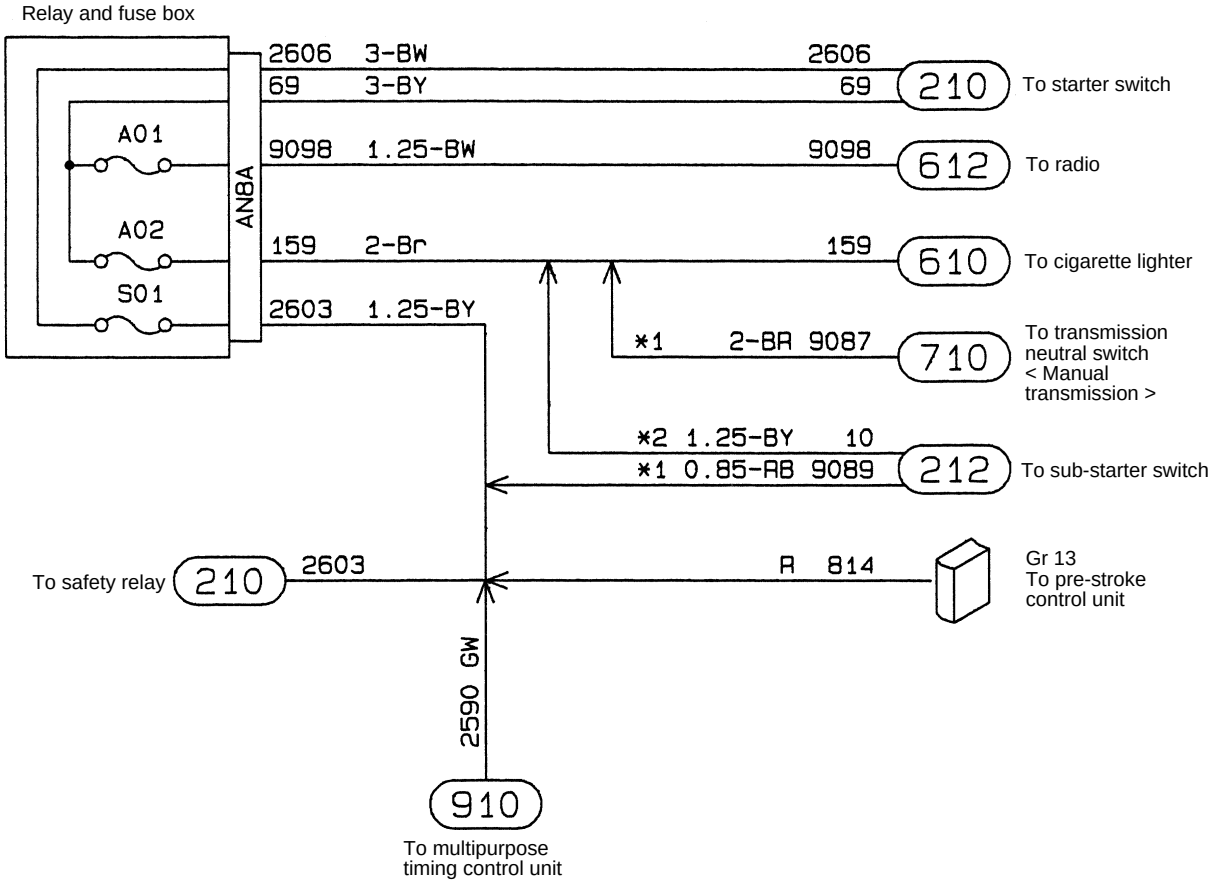

Fuses B01 to B08

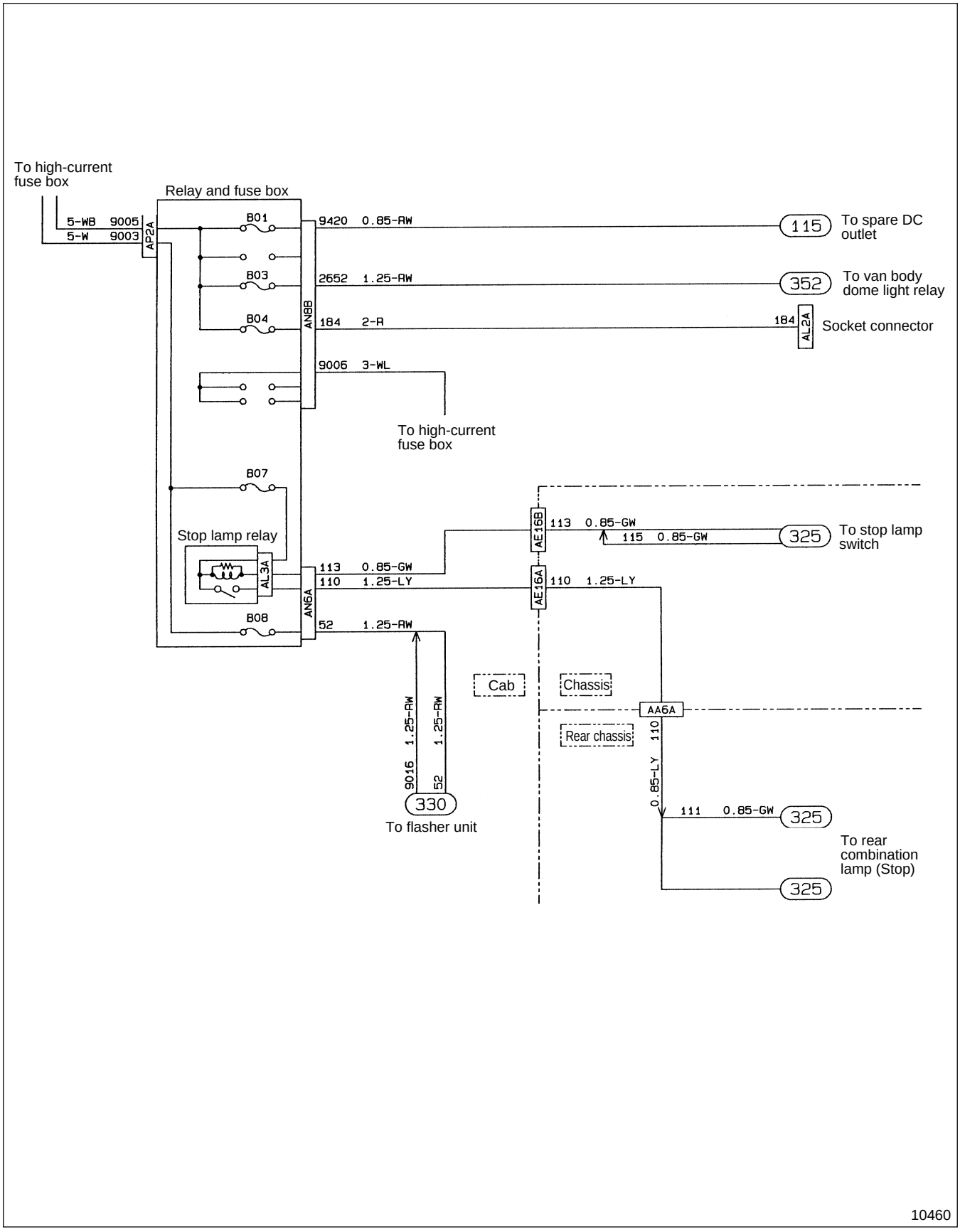

Fuse B09

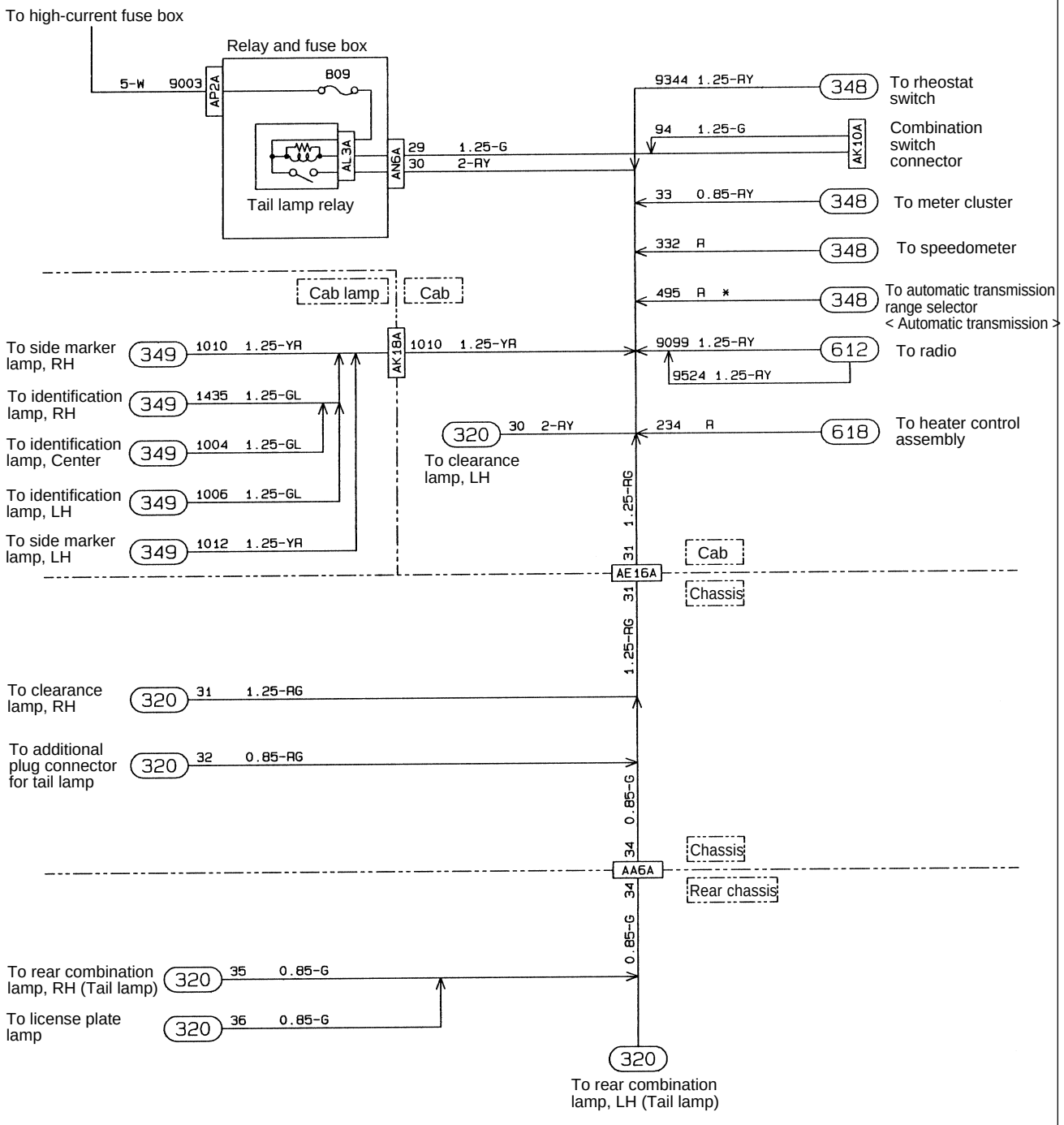
To high-current fuse box
Relay and fuse box
5-W 9003
AP2A
B09
AL3A
AN6A
29 1.25-G
30 2-RY
Tail lamp relay
9344 1.25-RY
348
To rheostat switch
94 1.25-G
AK10A
Combination switch connector
33 0.85-RY
348
To meter cluster
332 R
348
To speedometer
Cab lamp
Cab
495 R *
348
To automatic transmission range selector
< Automatic transmission >
AK18A
1010 1.25-YR
9099 1.25-RY
612
To radio
9524 1.25-RY
To side marker lamp, RH
349
1010 1.25-YR
To identification lamp, RH
349
1435 1.25-GL
To identification lamp, Center
349
1004 1.25-GL
To identification lamp, LH
349
1006 1.25-GL
To side marker lamp, LH
349
1012 1.25-YR
320
30 2-RY
To clearance lamp, LH
234 R
618
To heater control assembly
1.25-RG
31
AE16A
Cab
Chassis
To clearance lamp, RH
320
31 1.25-RG
To additional plug connector for tail lamp
320
32 0.85-RG
0.85-G
34
AA6A
Chassis
Rear chassis
To rear combination lamp, RH (Tail lamp)
320
35 0.85-G
To license plate lamp
320
36 0.85-G
320
To rear combination lamp, LH (Tail lamp)
* : Automatic transmission
10461

Fuses B10 to B24

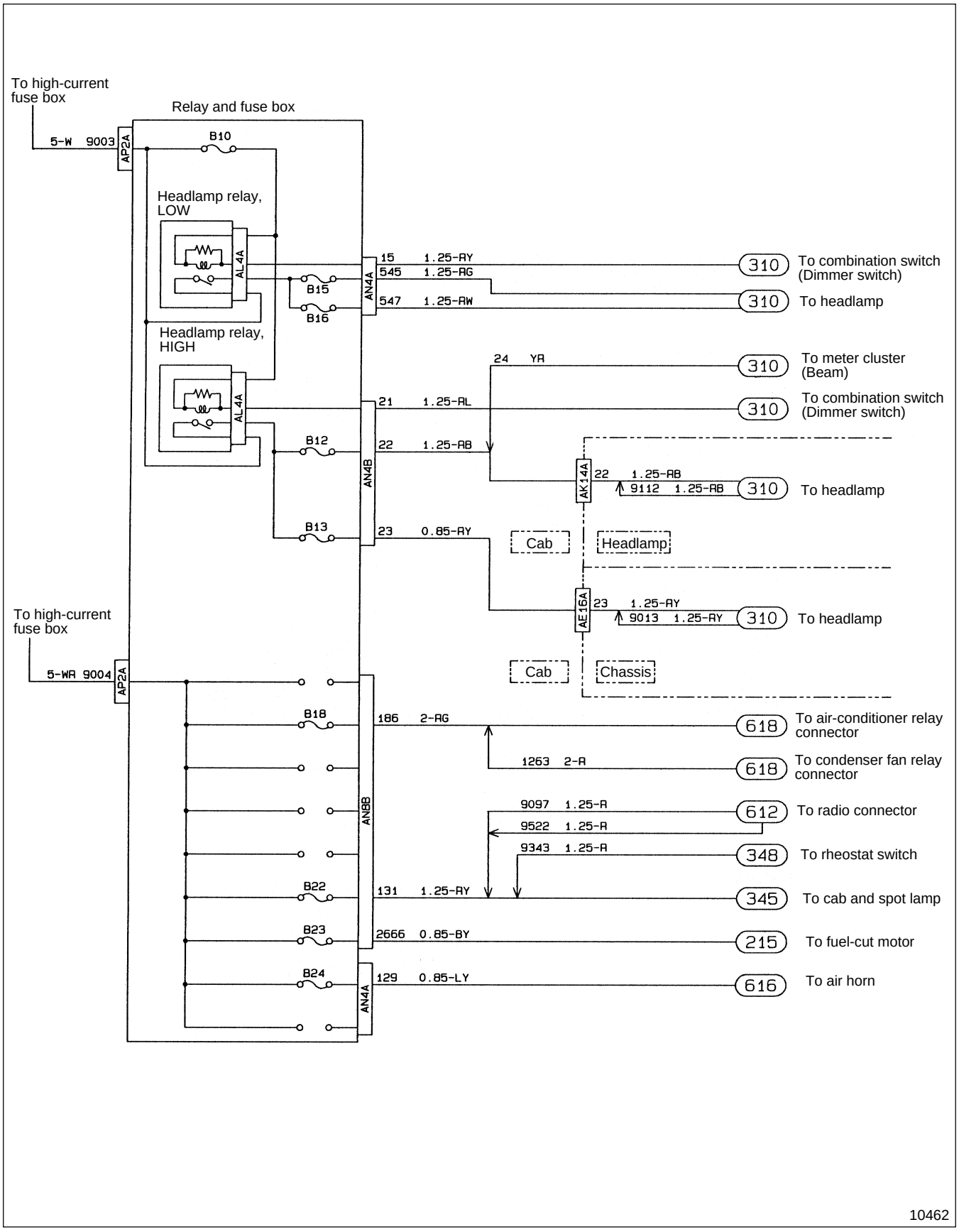

Fuses M02 to M14

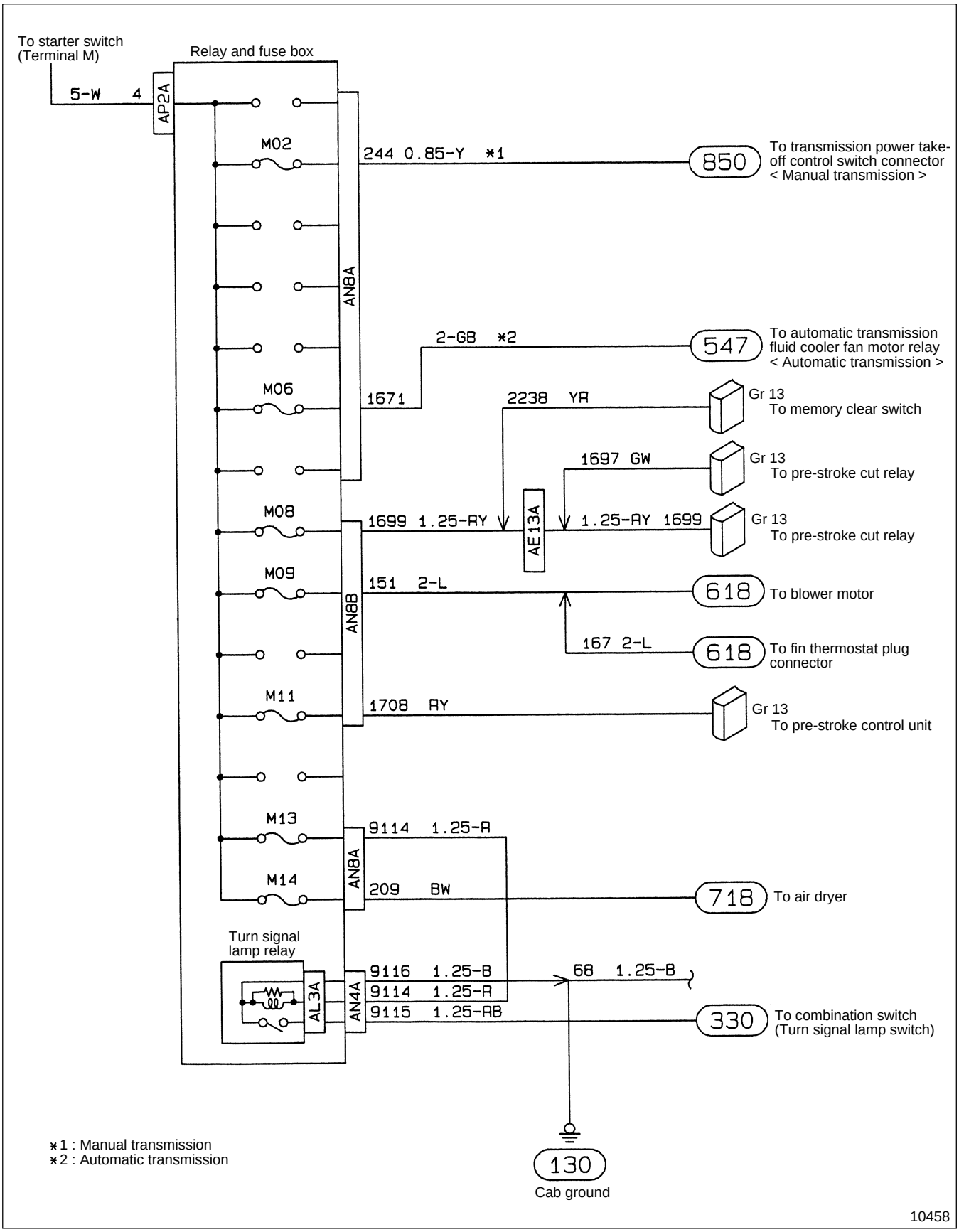

Fuse M15

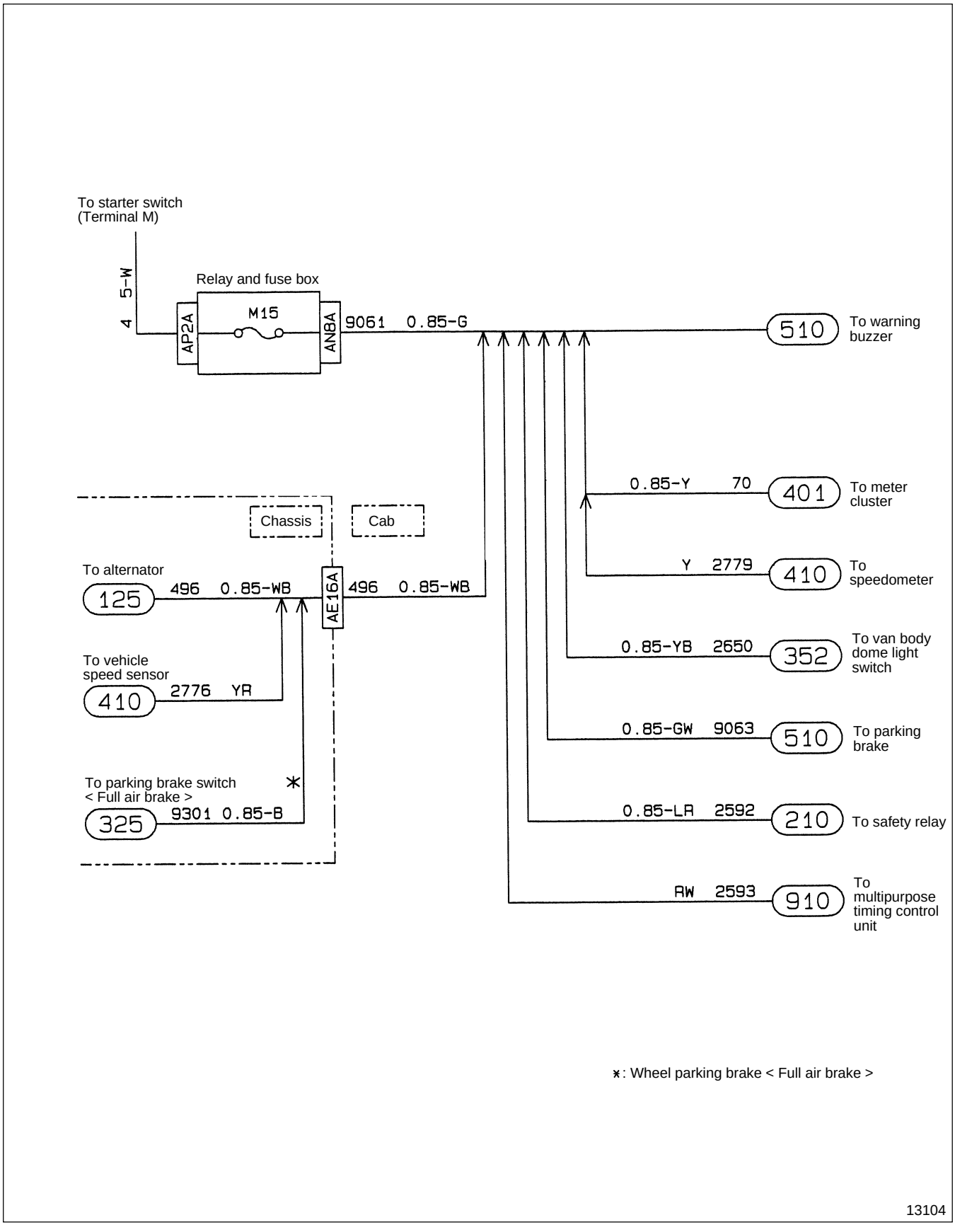
To starter switch
(Terminal M)
4 5-W
Relay and fuse box
AP2A
M15
AN8A
9061 0.85-G
510
To warning buzzer
0.85-Y 70
401
To meter cluster
Y 2779
410
To speedometer
0.85-YB 2650
352
To van body dome light switch
0.85-GW 9063
510
To parking brake
0.85-LR 2592
210
To safety relay
RW 2593
910
To multipurpose timing control unit
Chassis
Cab
To alternator
125
496 0.85-WB
AE16A
496 0.85-WB
To vehicle speed sensor
410
2776 YR
To parking brake switch
< Full air brake >
325
9301 0.85-B
*
*: Wheel parking brake < Full air brake >
13104

Fuse M16

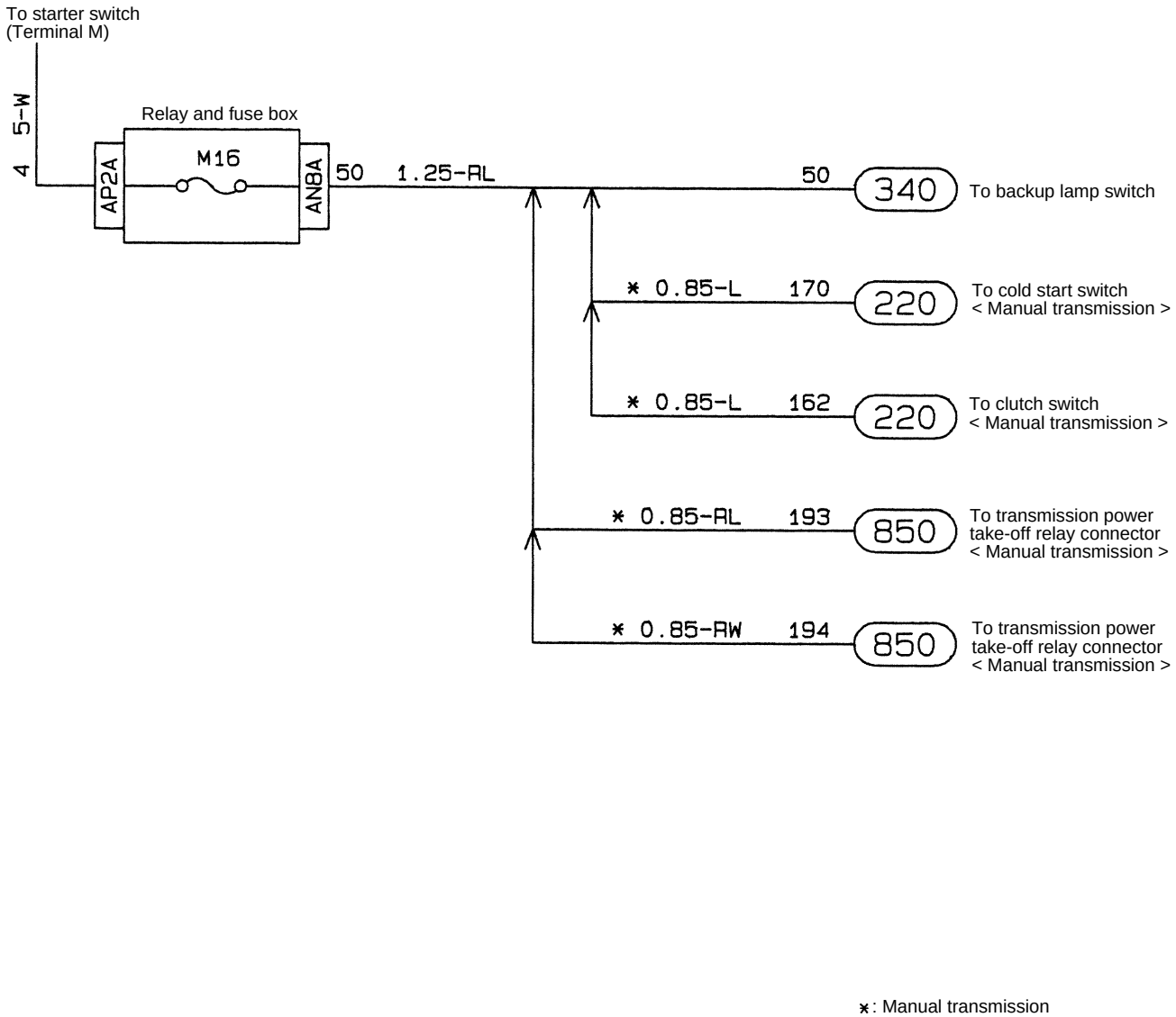
To starter switch
(Terminal M)
4 5-W
Relay and fuse box
AP2A
M16
ANBA
50 1.25-RL
50
340
To backup lamp switch
* 0.85-L 170
220
To cold start switch
< Manual transmission >
* 0.85-L 162
220
To clutch switch
< Manual transmission >
* 0.85-RL 193
850
To transmission power
take-off relay connector
< Manual transmission >
* 0.85-RW 194
850
To transmission power
take-off relay connector
< Manual transmission >
* : Manual transmission
13105

Fuse M17

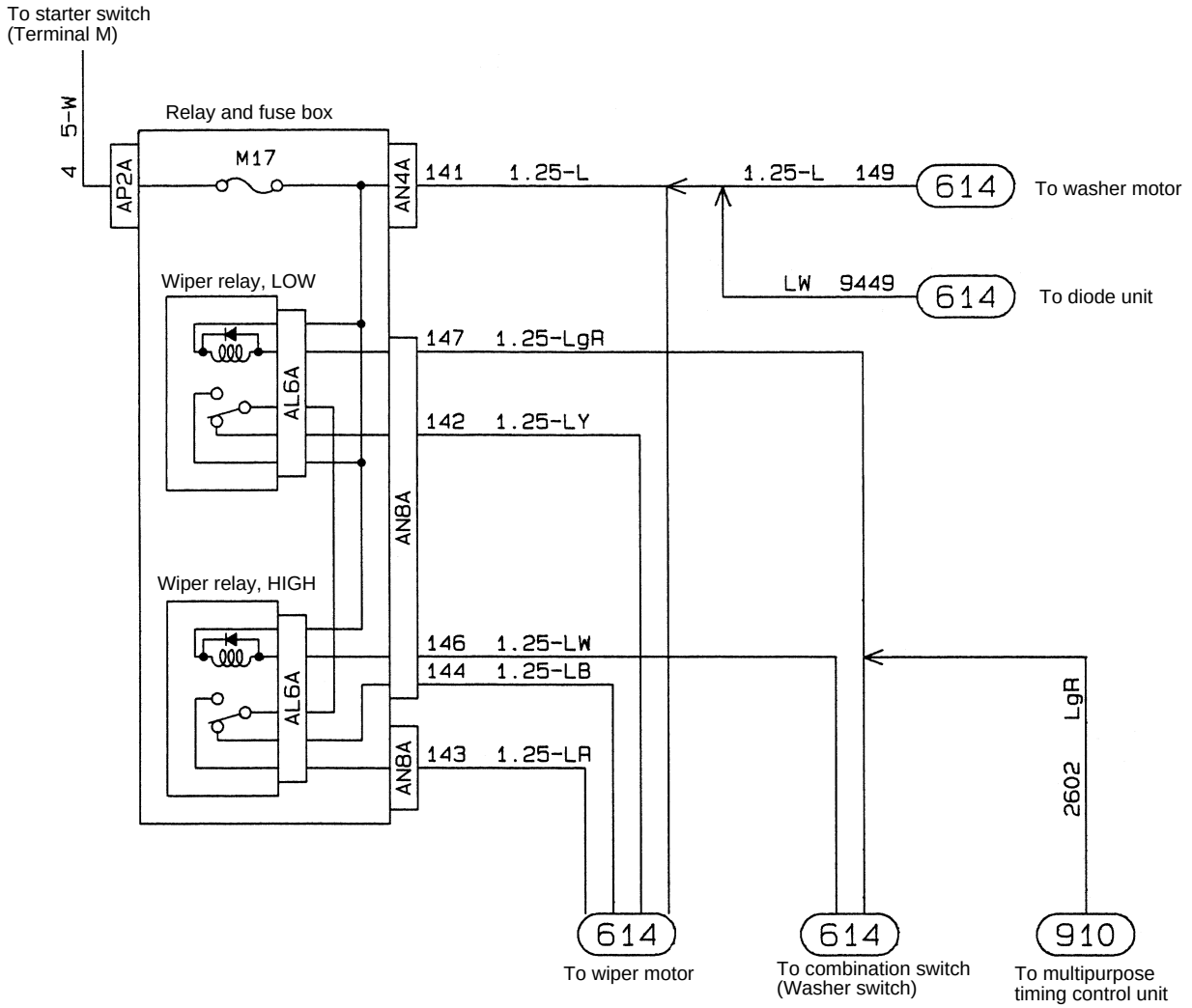

13106

M E M O

115 RESERVE POWER CIRCUIT

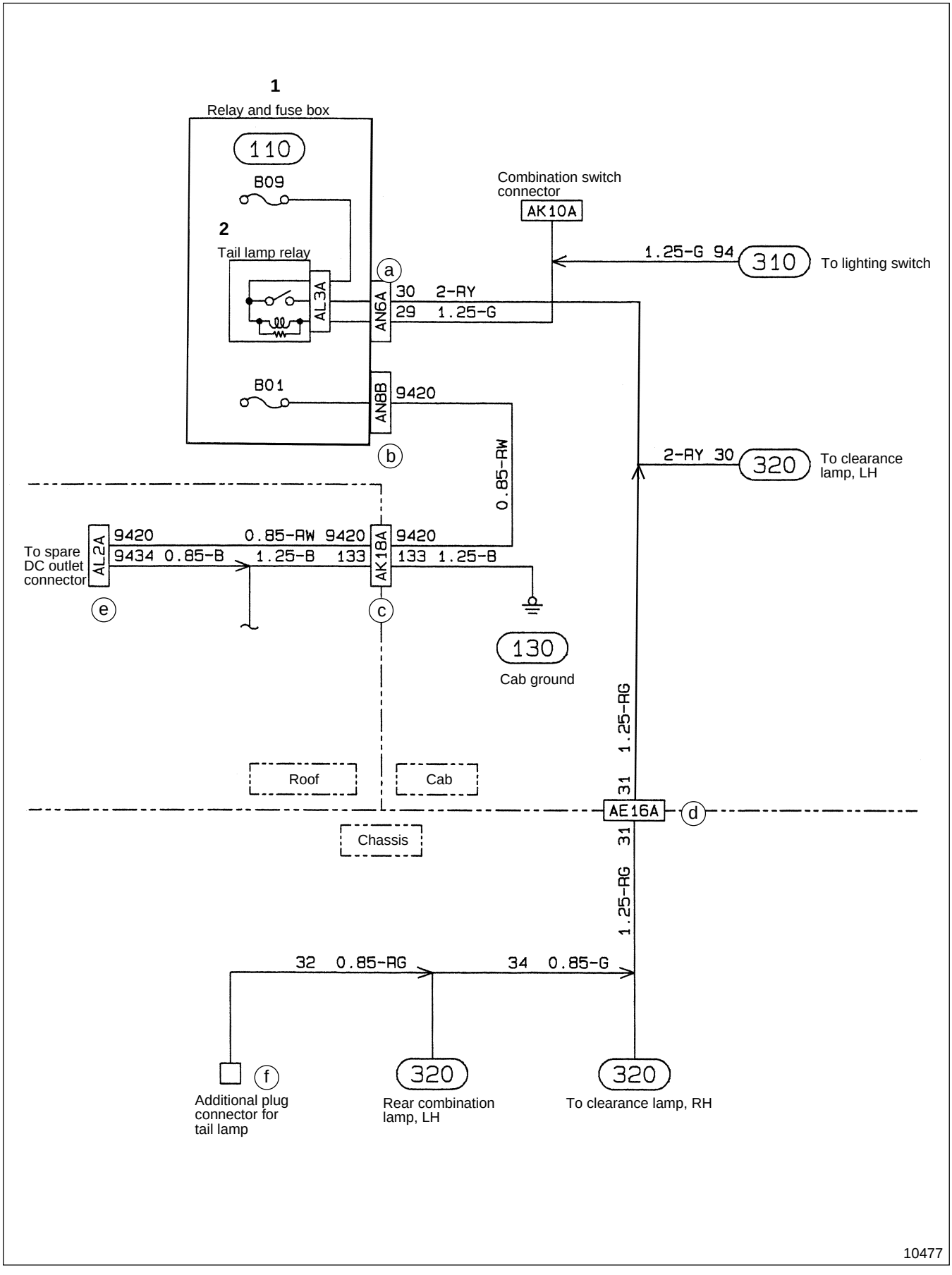

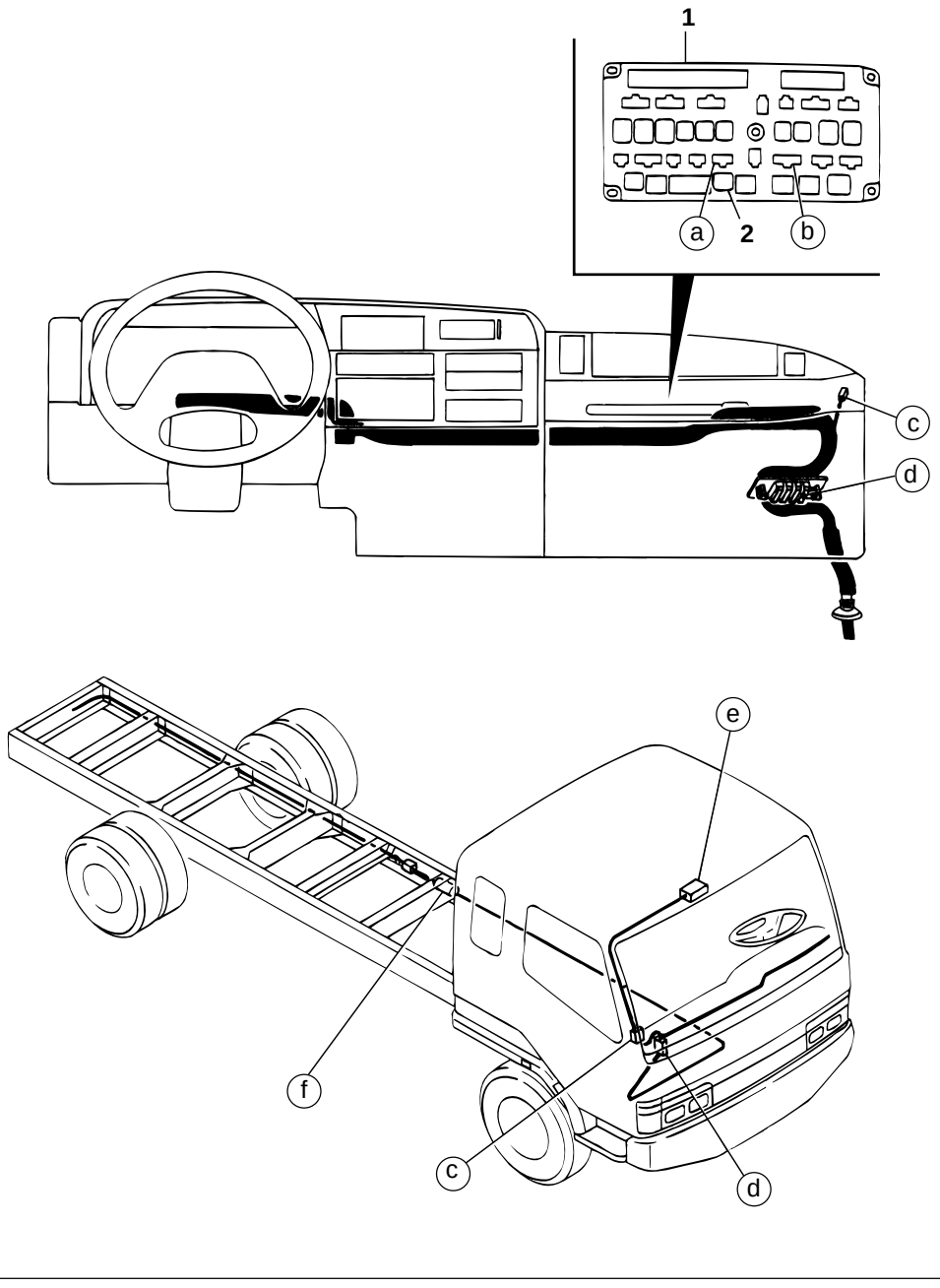

1 Relay and fuse box 104
2 Tail lamp relay 604

125 BATTERY CHARGING CIRCUIT

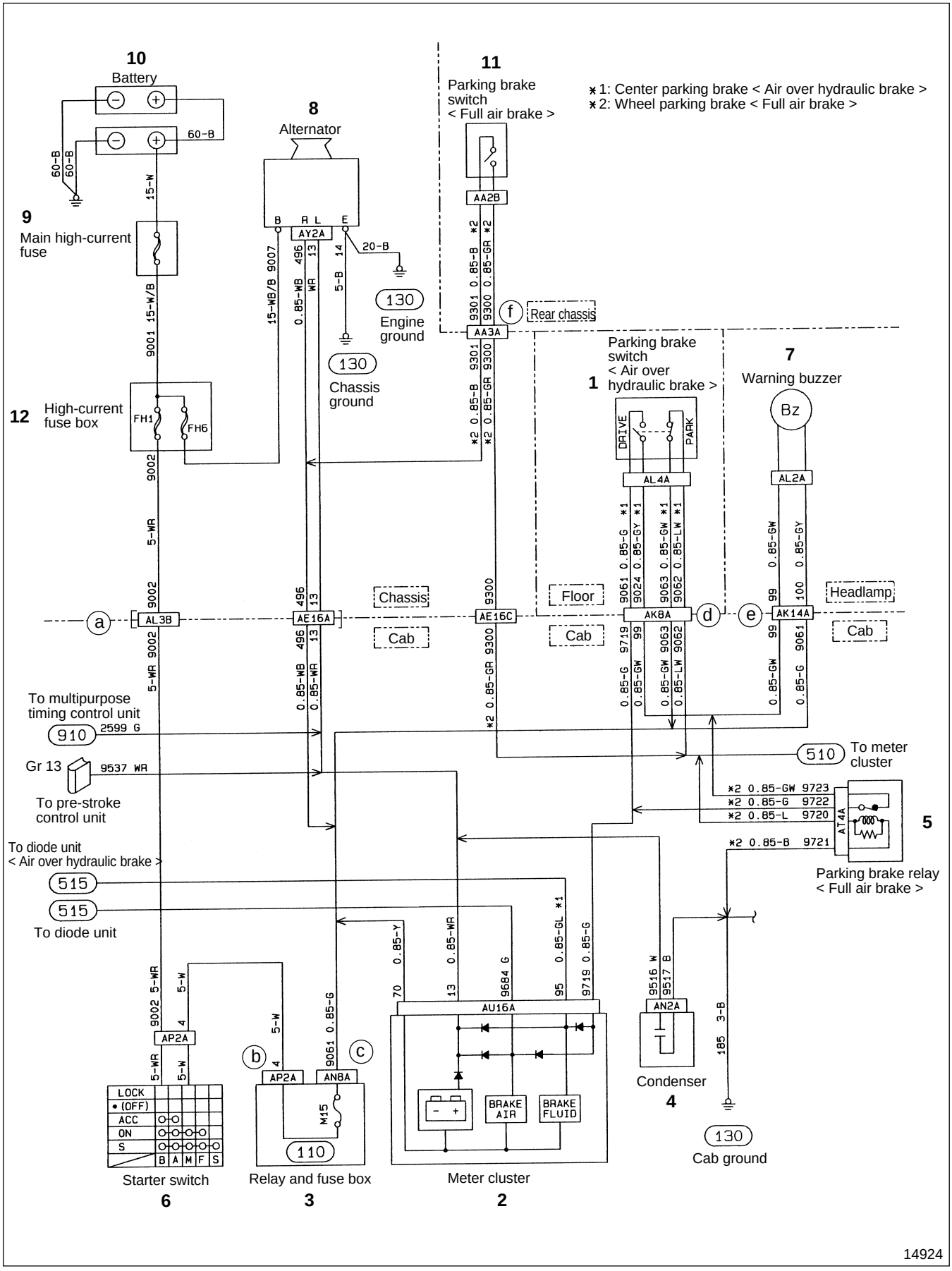

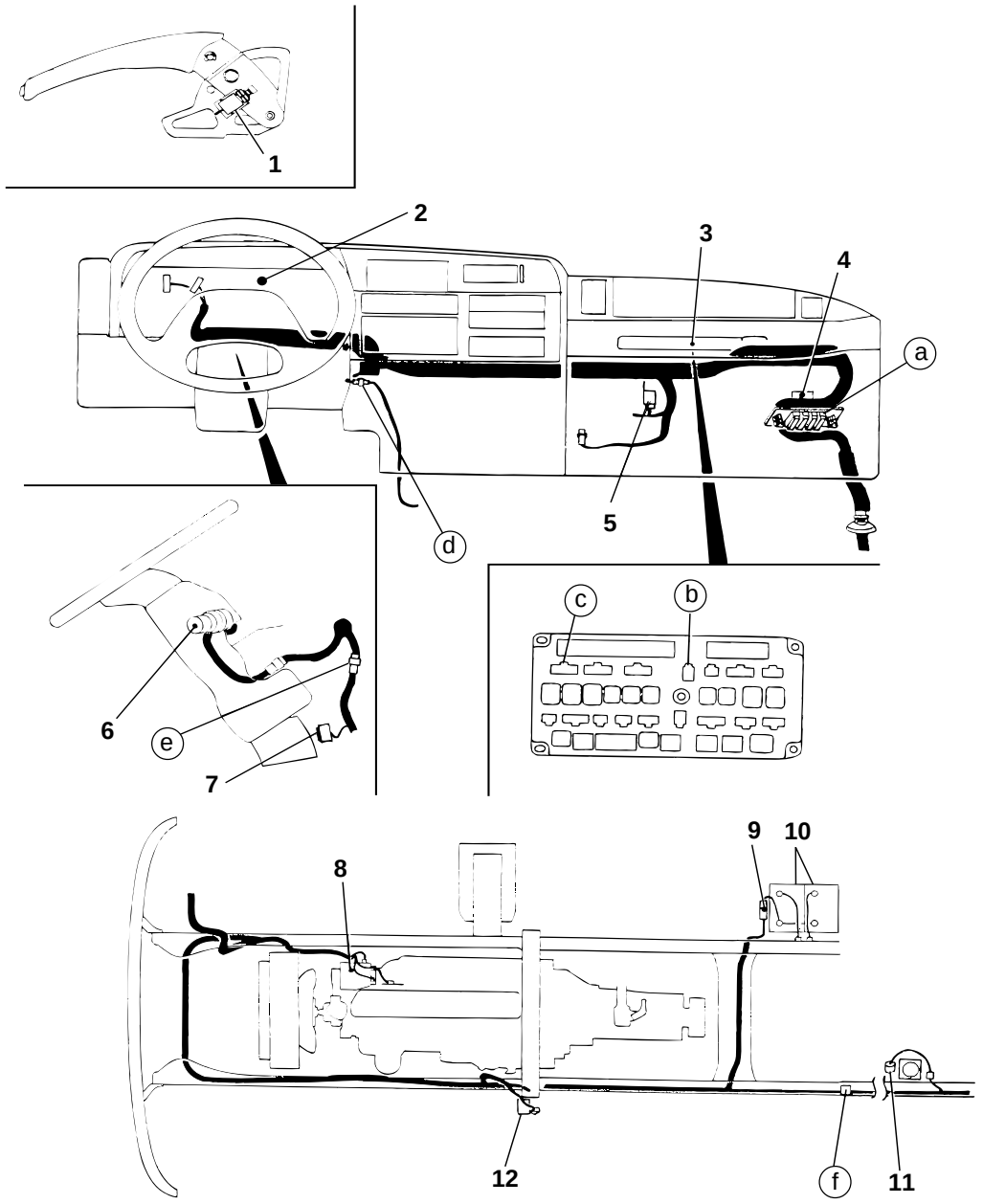

1 Parking brake switch
< Air over hydraulic brake >
2 Meter cluster 🕮 (401)
3 Relay and fuse box 🕮 (104)
4 Condenser
5 Parking brake relay < Full air brake >
6 Starter switch 🕮 (210)
7 Warning buzzer
8 Alternator 🕮 (106)
9 Main high-current fuse 🕮 (104)
10 Battery 🕮 (101)
11 Parking brake switch < Full air brake >
12 High-current fuse box 🕮 (104)

Ground Point

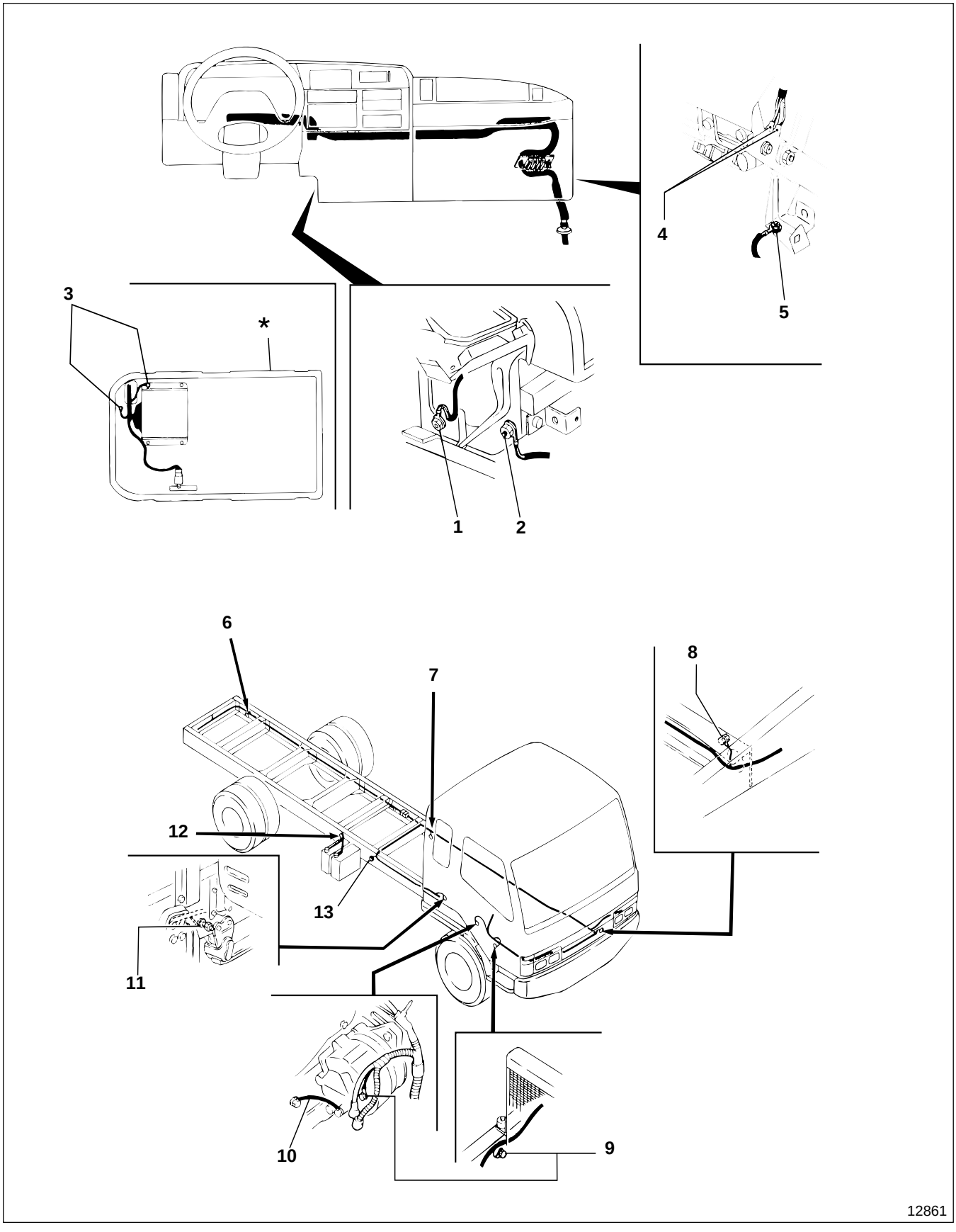

Location	Name	Circuit No.	Wire diameter-wire color	Remarks
1	Cab ground	20	1.25–B	
		185	3–B	
2	Cab ground	9106	1.25–B	
3	Cab ground	9256	0.85–B	
4	Cab ground	68	1.25–B	
		133	1.25–B	
		160	1.25–B	
5	Cab ground	210	8–B	
6	Rear chassis ground	38	0.85–B	
		39	0.85–B	
7	Chassis ground	74	B	
8	Chassis ground	19	2–B	
		210	8–B	
9	Chassis ground	14	5–B	
10	Alternator ground	—	20–B	
11	Chassis ground	6	1.25–YL	
		1575	0.85–B	
12	Battery ground	—	60–B	
13	Chassis ground	1704	0.85–BR	
		1705	B	
		9560	0.85–B	
		9561	0.85–B	

***** : Box under bed (Behind driver's seat)

Entire Ground

- This diagram indicates grounding points.
- See the following pages for branching of grounding (wiring for ☆). (In circuit No. order)

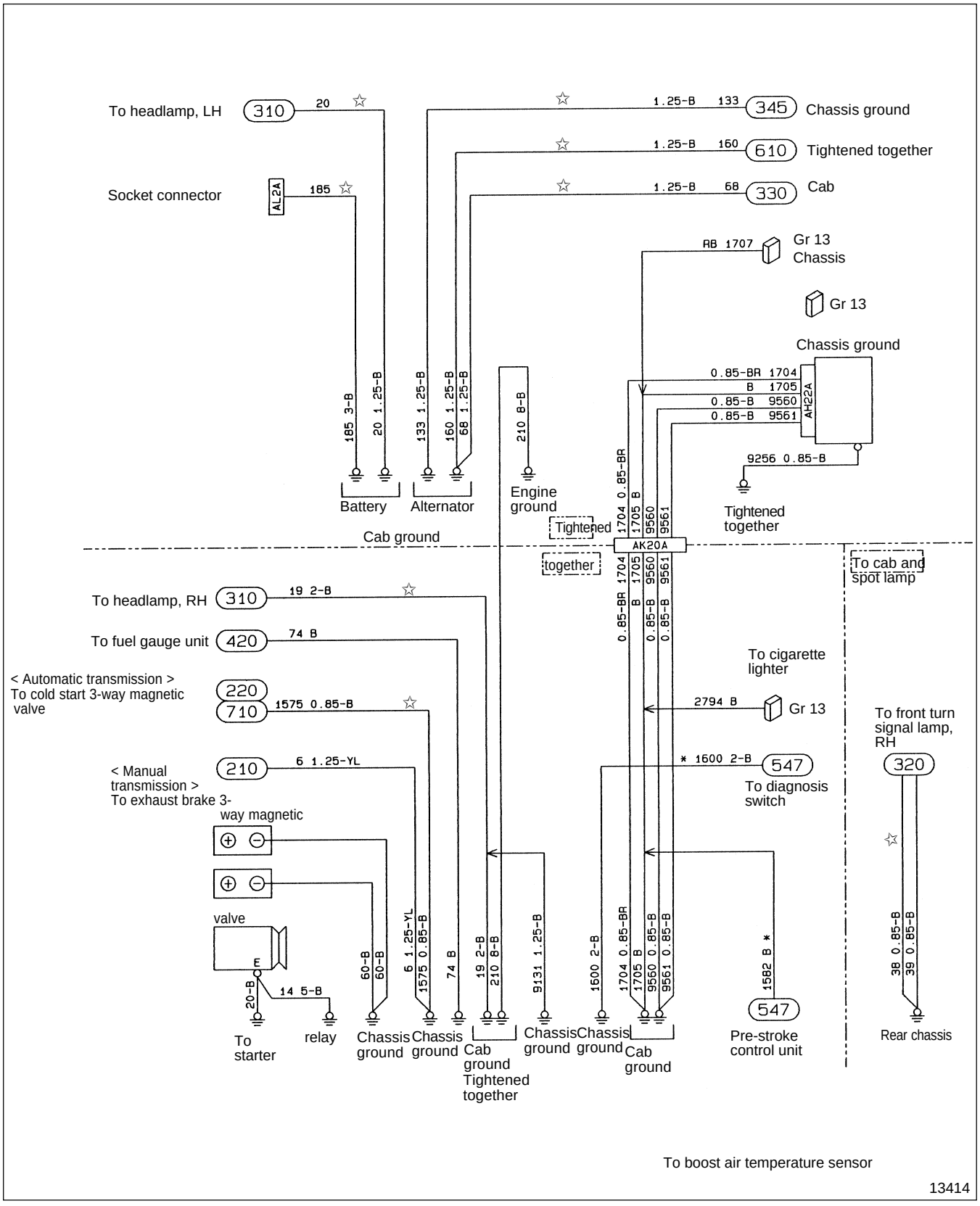

Circuit 19 Chassis Ground

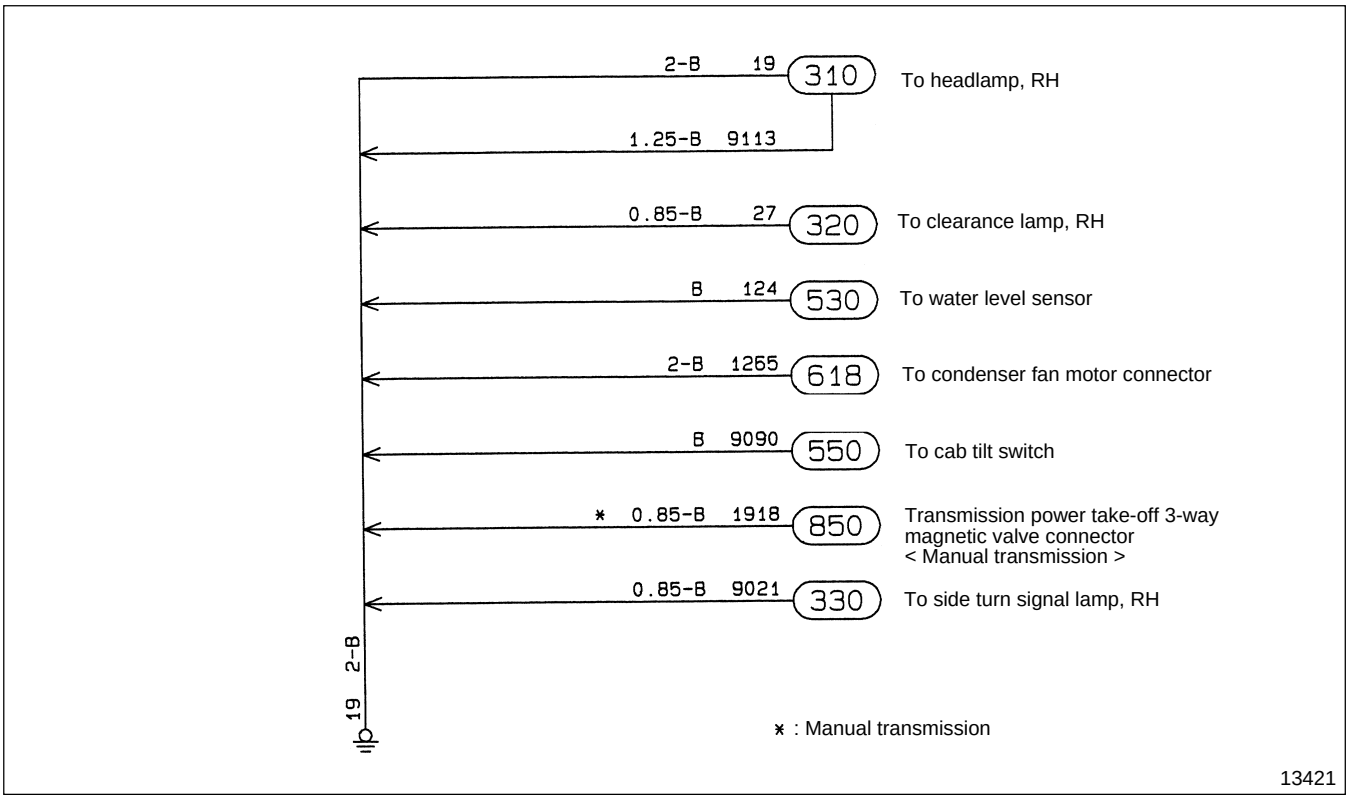

Circuit 20 Cab Ground

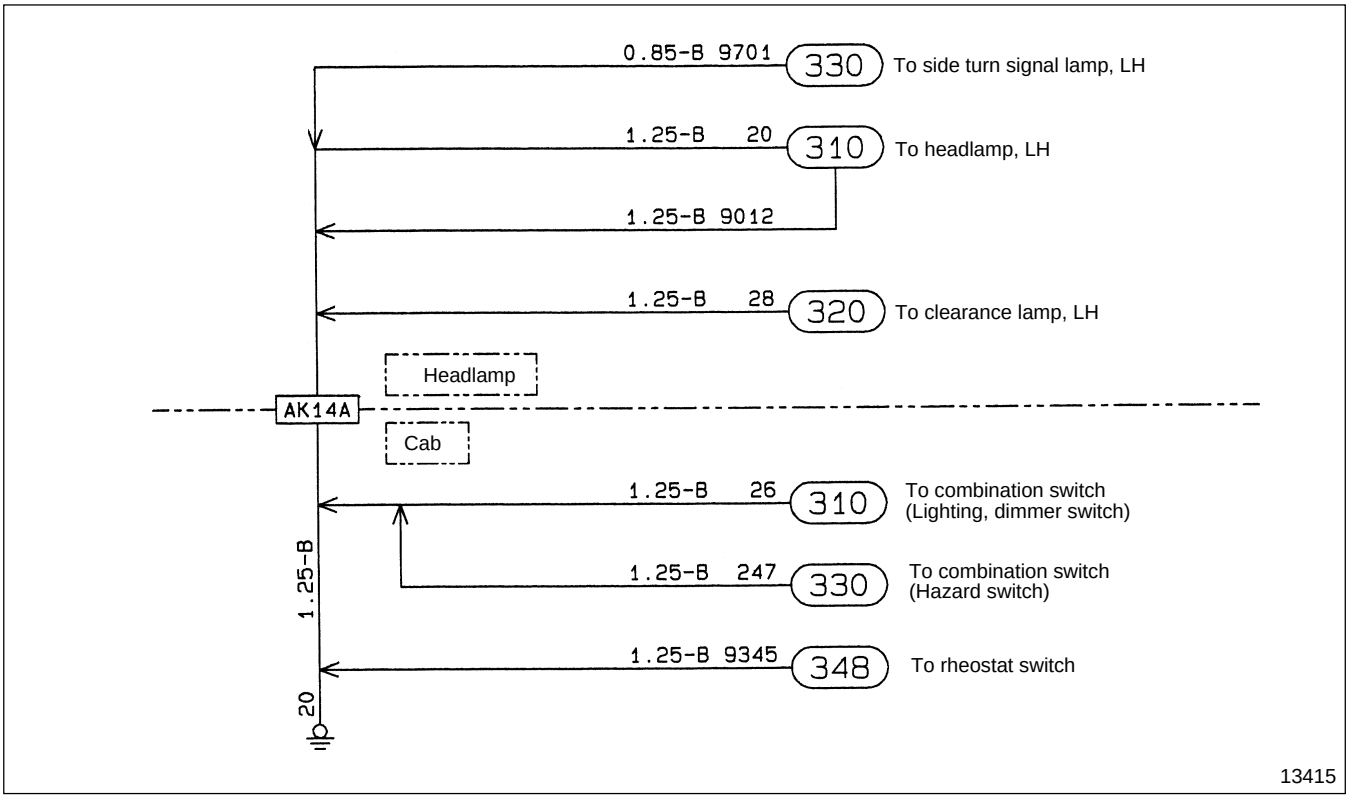

Circuit 38 Rear Chassis Ground

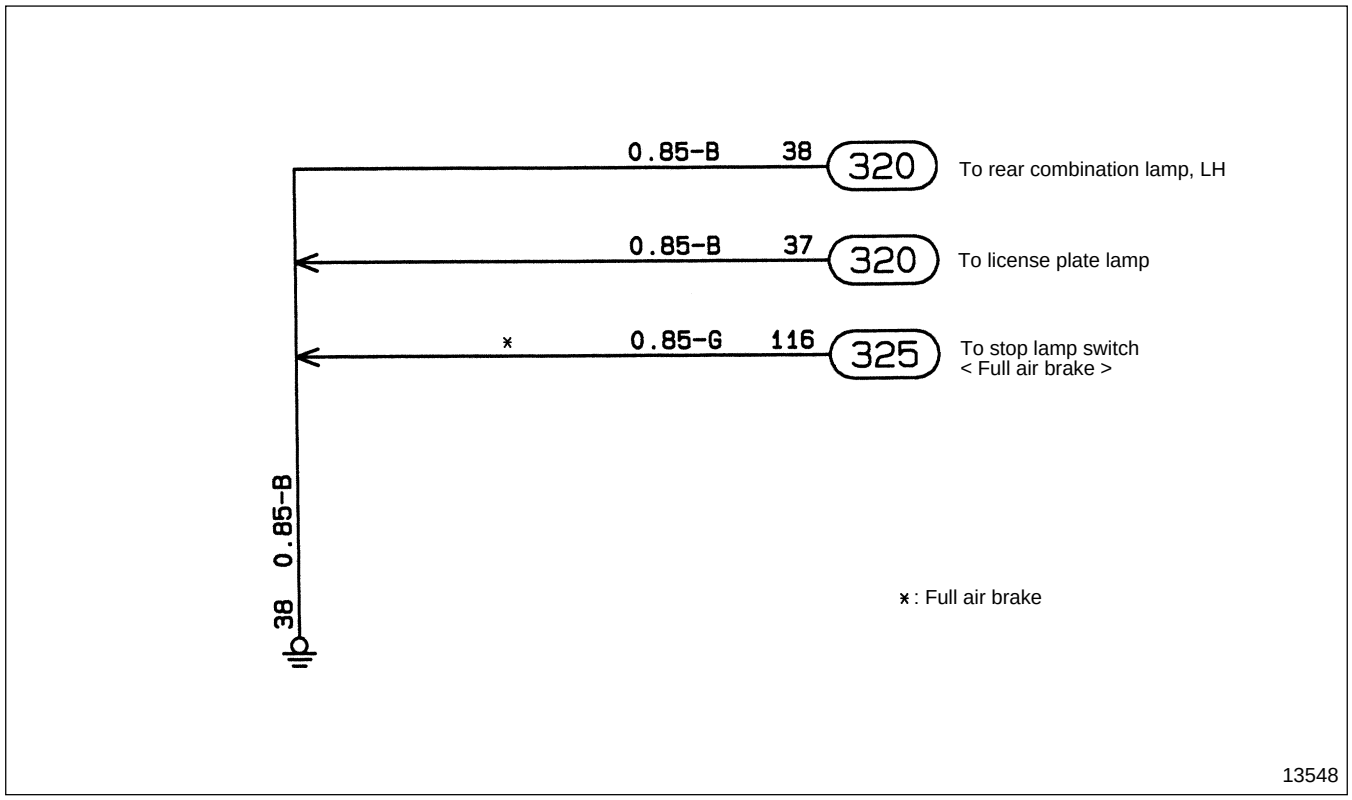

Circuit 68 Cab Ground

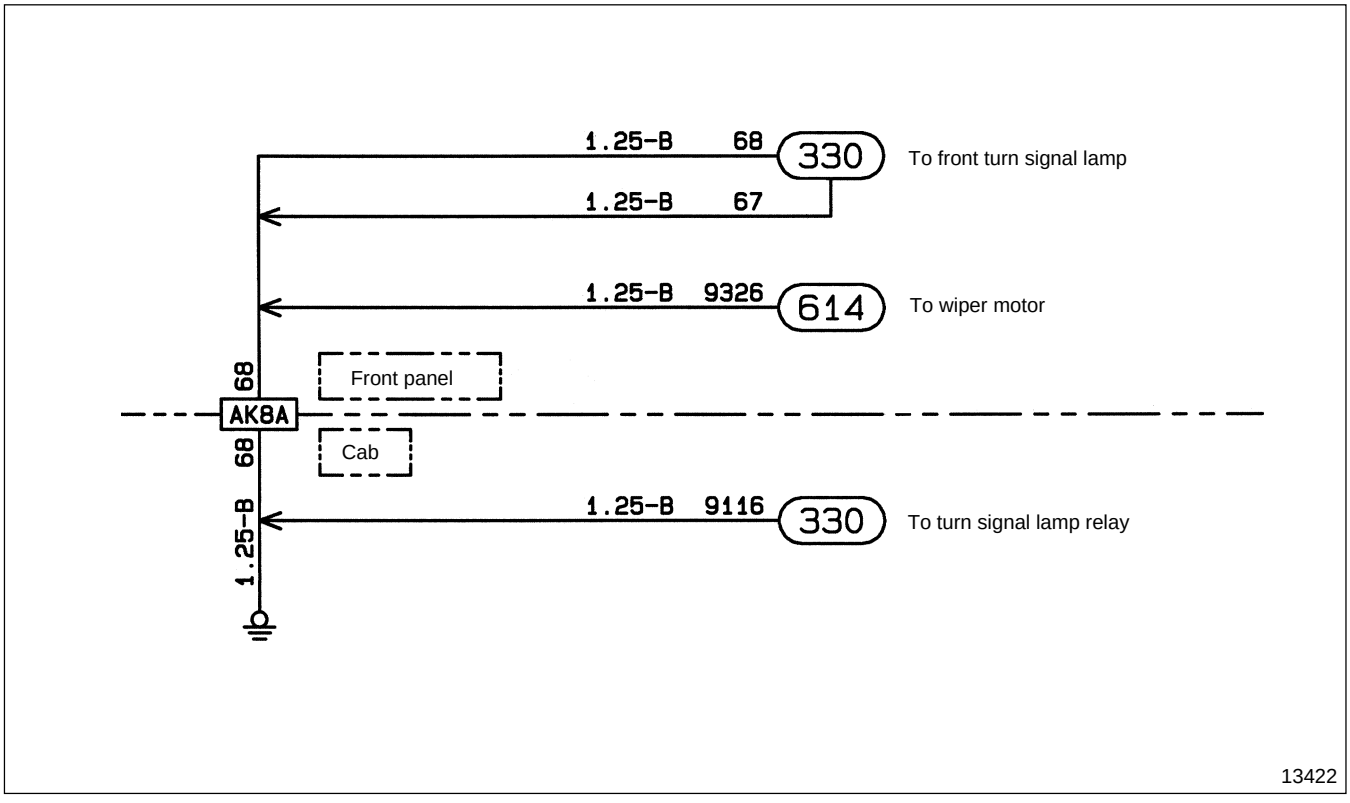

Circuit 133 Cab Ground

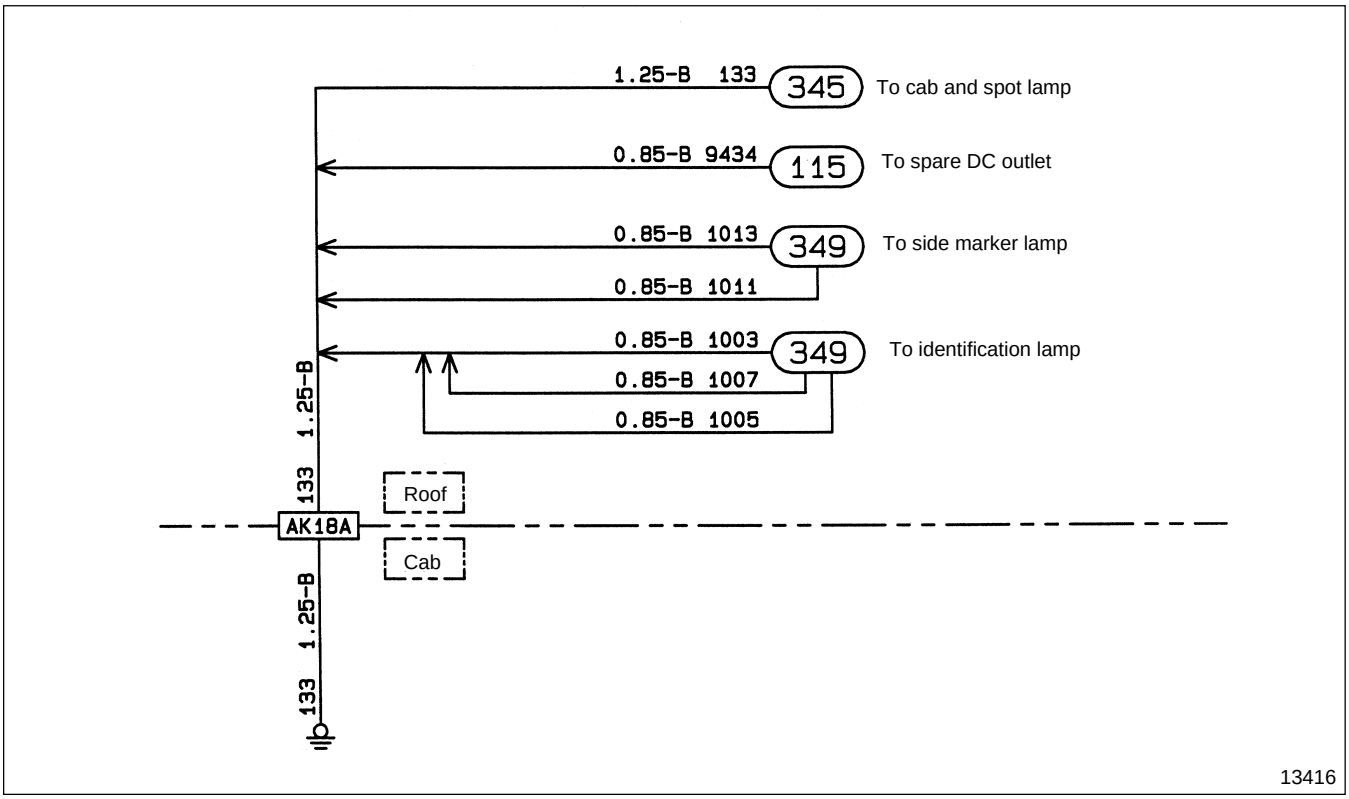

Circuit 160 Cab Ground

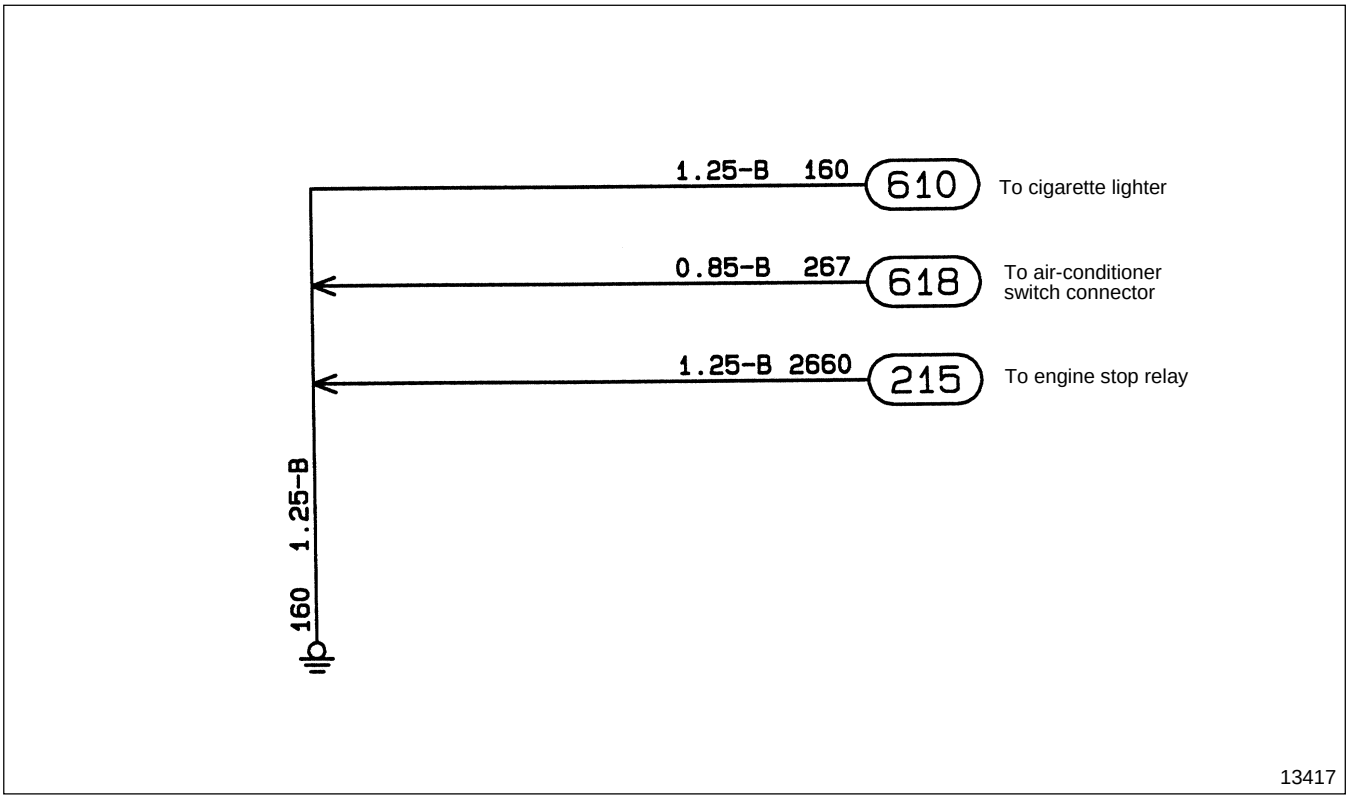

Circuit 185 Cab Ground

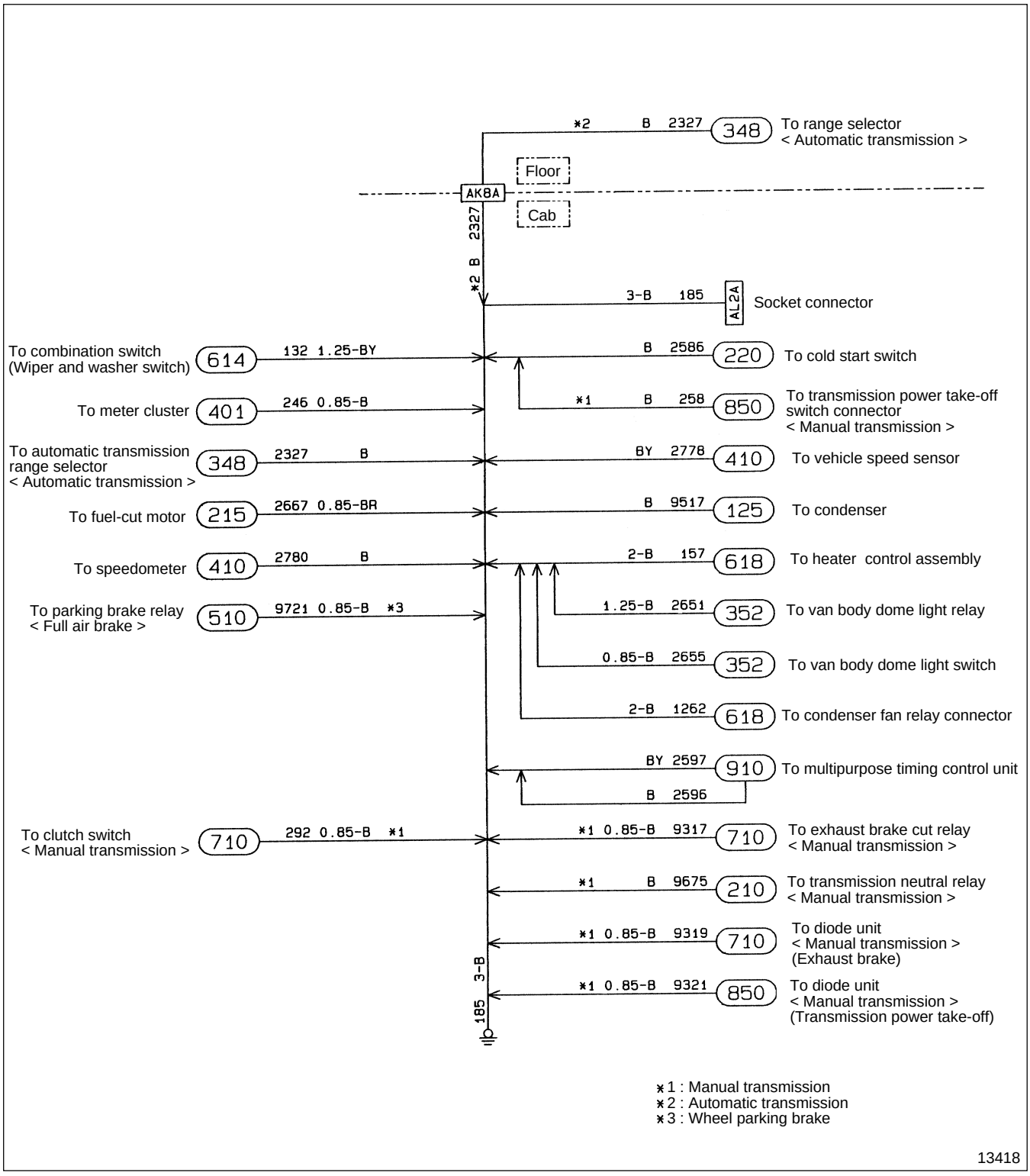

Circuit 1575 Chassis Ground

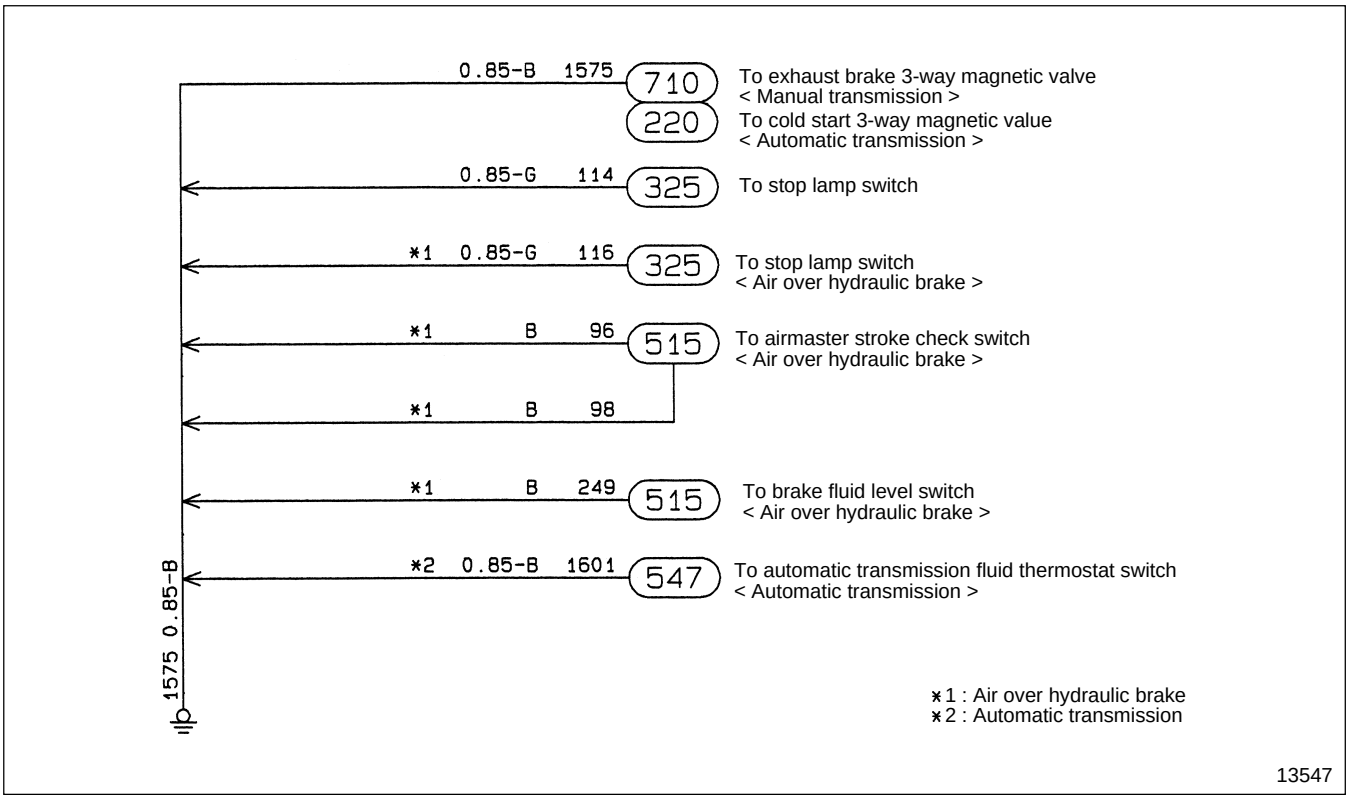

2 STARTING, PREHEATING AND STOPPING ENGINE

SPECIFICATIONS 54-2-2

STRUCTURE AND OPERATION 54-2-4

TROUBLESHOOTING 54-2-16

200 INSPECTION AND ADJUSTMENT MOUNTED IN VEHICLE
Inspection of Engine Preheating System 54-2-18

201 STARTER 54-2-19

210 ENGINE STARTING CIRCUIT 54-2-30

212 SUB-STARTER CIRCUIT 54-2-34

215 ENGINE STOPPING CIRCUIT 54-2-38

220 ENGINE PREHEATING AND COLD START CIRCUIT
< Manual Transmission > 54-2-42
< Automatic Transmission > 54-2-46

SPECIFICATIONS

Item		Specifications	
Starter	Manufacturer	MITSUBISHI ELECTRIC	
	Reduction gear system	One-step inner contact spur gear	
	Model	M5T65071	M5T65073
	Power V–kW	12–5.5	
	Magnetic switch operating voltage V	8 or less	
Starter relay	Model	U1T06280	U1T06284
	Voltage rating V–A	12–4	
	Magnet closing voltage V	8 or less	
	Magnet opening voltage V	3.5 or less	
	Allowable cutoff current A	200	
Glow plug	Model	Sheathed type	
	Voltage–amperage V–A	11–5.3	
Glow relay	Model	U1T06292	
	Voltage–amperage V–A	12–4	
	Magnet closing voltage V	8 or less	
	Magnet opening voltage V	3.5 or less	
	Allowable cutoff current A	200	
Fuel-cut motor	Minimum operating voltage V	10 or less	
	Operating amperage A	10 or less	

M E M O

Starter

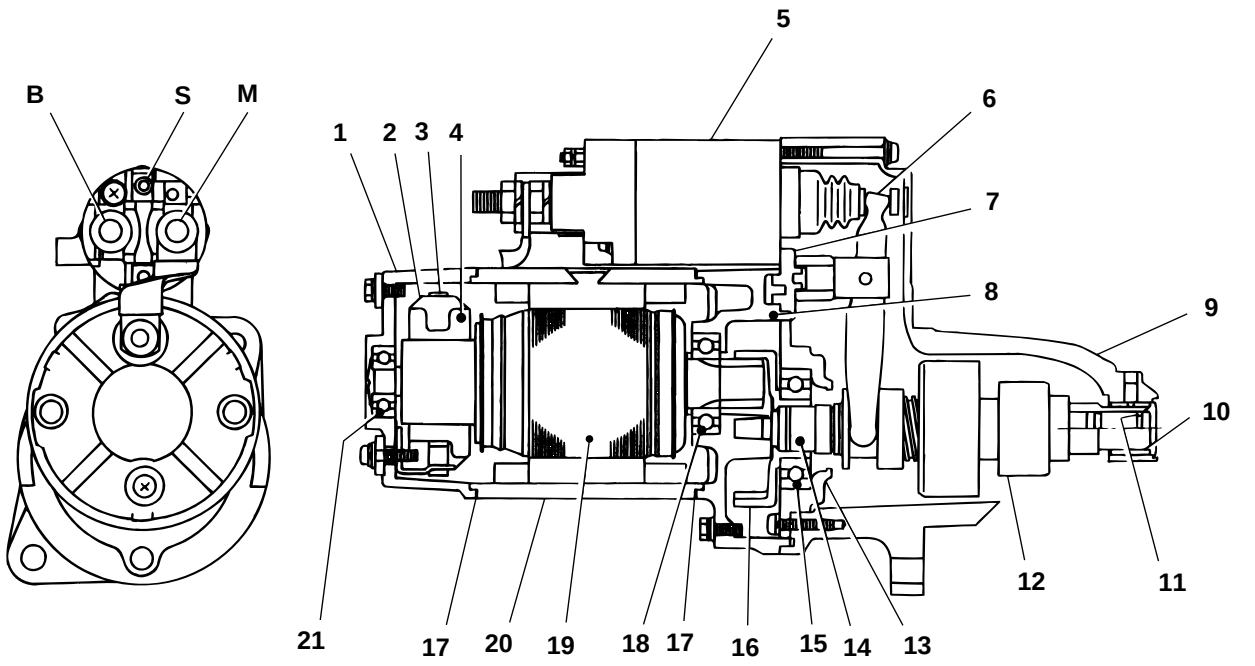

1 Rear bracket
2 Brush
3 Brush spring
4 Brush holder assembly
5 Magnetic switch
6 Lever
7 Rubber packing
8 Center bracket
9 Front bracket
10 Sleeve bearing
11 Stopper ring
12 Overrunning clutch
13 Plate
14 Gear shaft
15 Gear shaft bearing
16 Internal gear
17 Rubber packing
18 Front bearing
19 Armature
20 Yoke assembly
21 Rear bearing

B : Terminal B
M : Terminal M
S : Terminal S

Engine Starting Circuit < Manual Transmission >

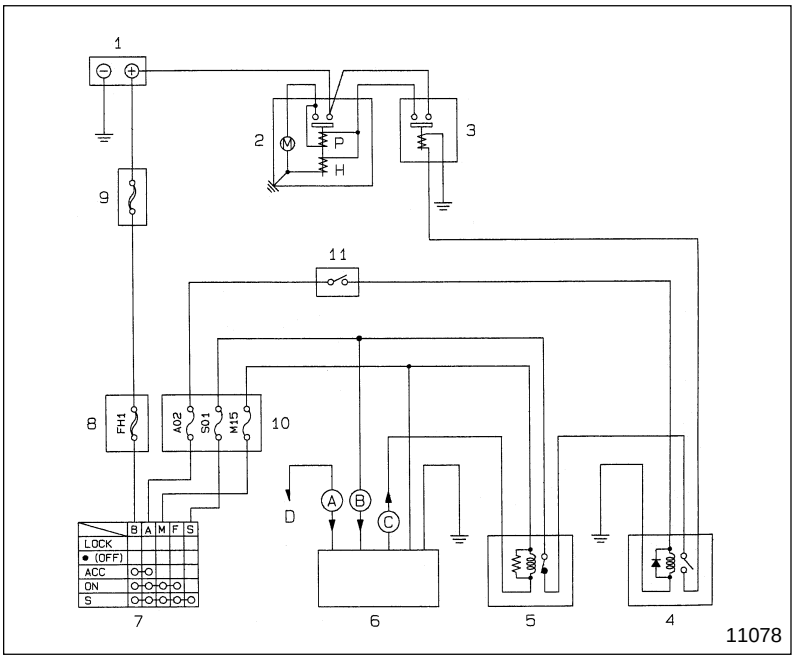

1 Battery
2 Starter
3 Starter relay
4 Transmission neutral relay
5 Safety relay
6 Multipurpose timing control unit
P54-9-2
7 Starter switch
8 High-current fuse box
9 Main high-current fuse
10 Relay and fuse box
11 Transmission neutral switch

A : Alternator L signal
B : Starter switch S signal
C : Safety relay operating signal
D : To alternator L terminal
H : Holding coil
P : Pull-in coil

- The engine starting circuit lets starter **2** rotate only when the transmission is in neutral.
- When current flows from starter switch **7** terminal S to starter relay **3** for longer than the specified period when starter **2** is rotating, multipurpose timing control unit **6** cuts off the current, preventing the starter from seizing up.

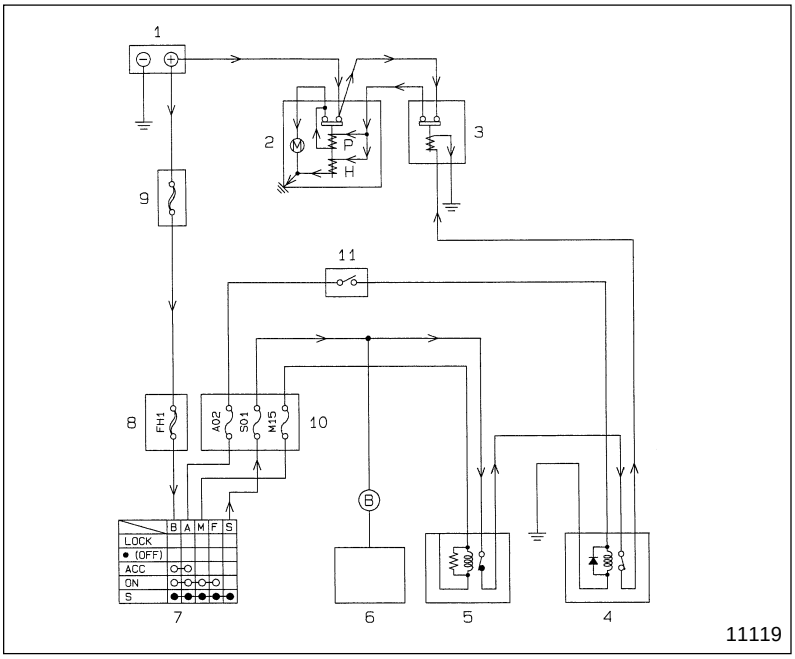

When starter operation is normal

Position of starter switch **7** : S

- 1→9→8→7→10 (S01)→5 (contact point) →4 (contact point)→3 (coil)→Ground
  Starter relay **3** is activated.
- 1→2 (contact point)→3 (contact point) →2 (P)→2 (Ⓜ) →2 (F)→Ground
  Current that has flowed through pull-in coil **P** rotates starter **2** at low revolution. When the contact point of the starter closes, the current at the pull-in coil cuts off and holding coil **H** holds the contact point.
- 1→2 (contact point)→2 (Ⓜ)→Ground
  Starter rotates at high revolution.

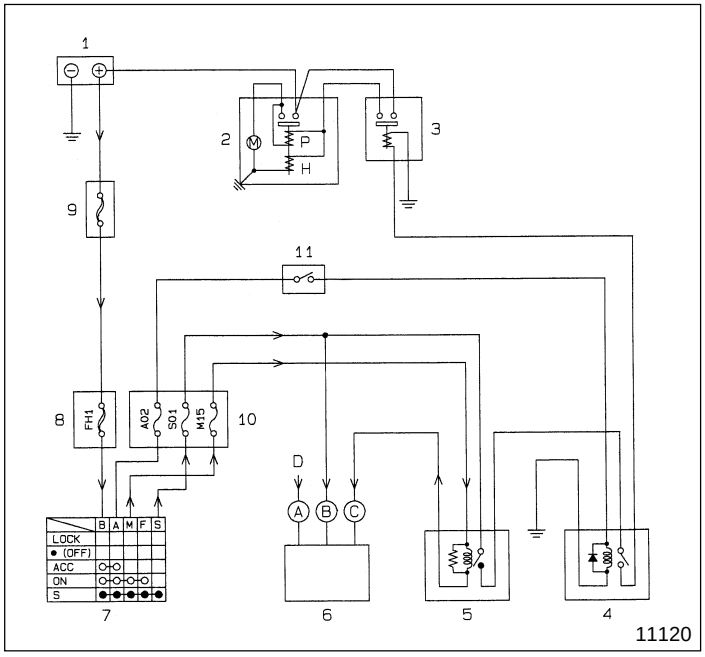

When starter rotates for a long period

Position of starter switch **7** : S

- Starter rotates at high revolution. (See previous section.)
- 1→9→8→7→10 (S01)—Ⓑ→6
  Starter switch S signal Ⓑ is transmitted to multipurpose timing control unit **6**.
- D—Ⓐ→6
  Alternator L signal Ⓐ is transmitted to multipurpose timing control unit **6** through alternator L terminal **D** by the revolution of the engine.
- When signals Ⓐ and Ⓑ are continuously transmitted to multipurpose timing control unit **6** for the specified period, the multipurpose timing control unit activates safety relay **5** by transmitting safety relay activation signal Ⓒ.
  1→9→8→7→10 (M15)→5 (coil)—Ⓒ→6
- Activation of safety relay **5** cuts off the flow of current to starter relay **3**, stopping starter **2**.

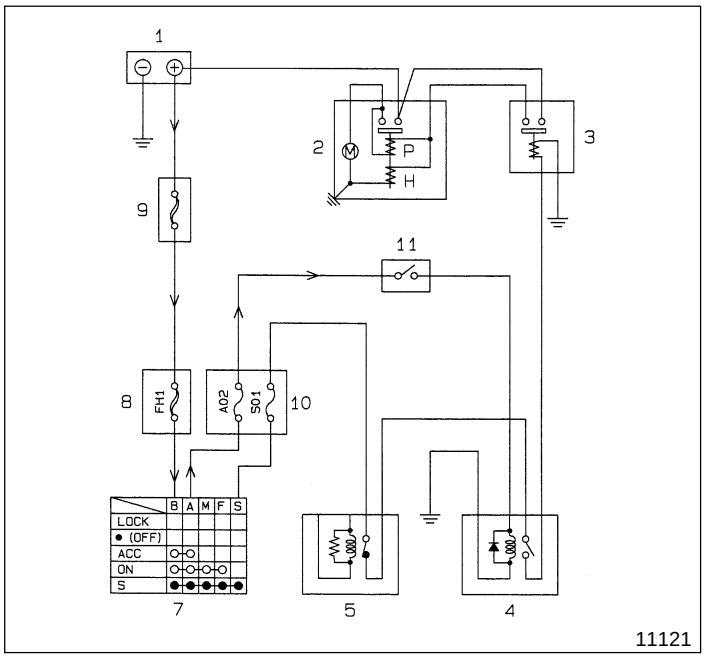

When the starter is activated when the transmission is in a position other than in neutral

Position of transmission neutral switch **11** : OFF

The flow of the current from terminal S of starter switch **7** is cut off and starter relay **3** is not activated.

Engine Starting Circuit < Automatic Transmission >

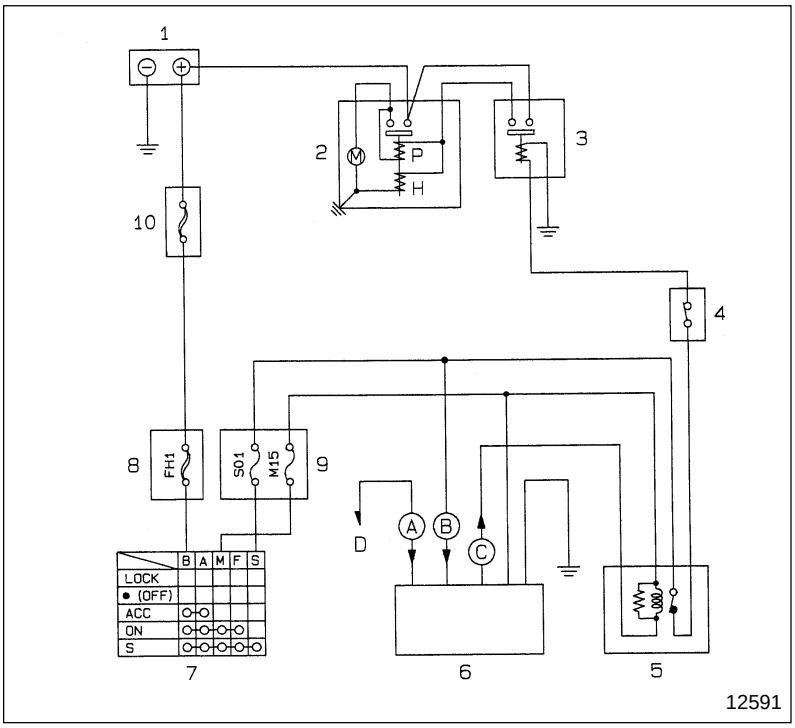

1 Battery
2 Starter
3 Starter relay
4 Transmission neutral switch
5 Safety relay
6 Multipurpose timing control unit
7 Starter switch
8 High-current fuse box
9 Relay and fuse box
10 Main high-current fuse box

A : Alternator L signal
B : Starter switch S signal
C : Safety relay operating signal
D : To alternator L terminal
H : Holding coil
P : Pull-in coil

- The engine starting circuit lets starter **2** rotate only when the transmission is in neutral.
- When current flows from starter switch **7** terminal S to starter relay **3** for longer than the specified period when starter **2** is rotating, multipurpose timing control unit **6** cuts off the current, preventing the starter from seizing up.

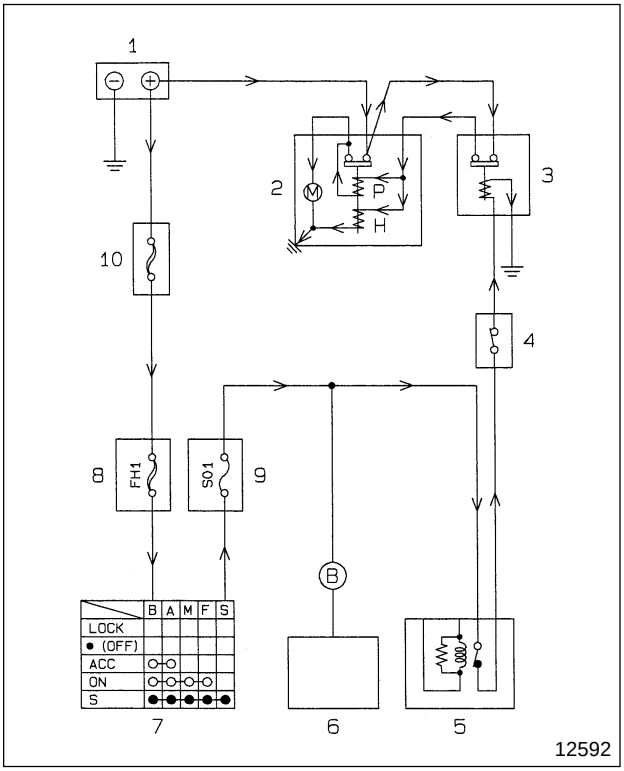

When starter operation is normal

Position of starter switch **7** : S

- 1→10→8→7→9 (S01)→5 (contact point)→4 →3 (coil)→Ground
  Starter relay **3** is activated.
- 1→2 (contact point)→3 (contact pint)→2 (P)→2 (Ⓜ)→2 (F)→Ground
  Current that has flowed through pull-in coil **P** rotates starter **2** at low revolution. When the contact point of the starter closes, the current at the pull-in coil cuts off and holding coil **H** holds the contact point.
- 1→2 (contact point)→2 (Ⓜ)→Ground
  Starter rotates at high revolution.

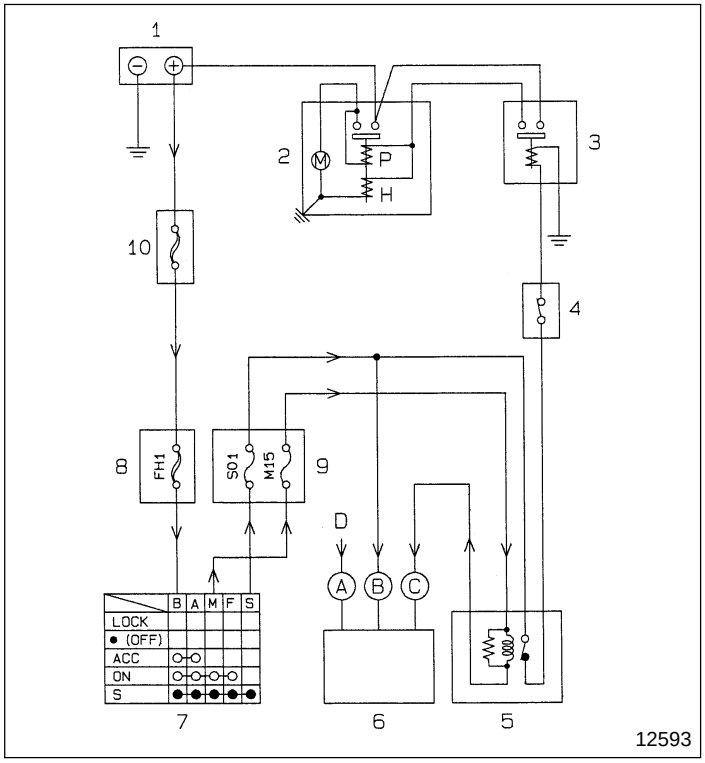

When starter rotates for a long period

Position of starter switch **7** : S

- Starter rotates at high revolution. (See previous section.)
- 1→10→8→7→9 (S01)—Ⓑ→6
  Starter switch S signal Ⓑ is transmitted to multipurpose timing control unit **6**.
- D—Ⓐ→6
  Alternator L signal Ⓐ is transmitted to multipurpose timing control unit **6** through alternator L terminal **D** by the revolution of the engine.
- When signals Ⓐ and Ⓑ are continuously transmitted to multipurpose timing control unit **6** for the specified period, the multipurpose timing control unit activates safety relay **5** by transmitting safety relay activation signal Ⓒ.
  1→10→8→7→9 (M15)→5 (coil)—Ⓒ→6
- Activation of safety relay **5** cuts off the flow of current to starter relay **3**, stopping starter **2**.

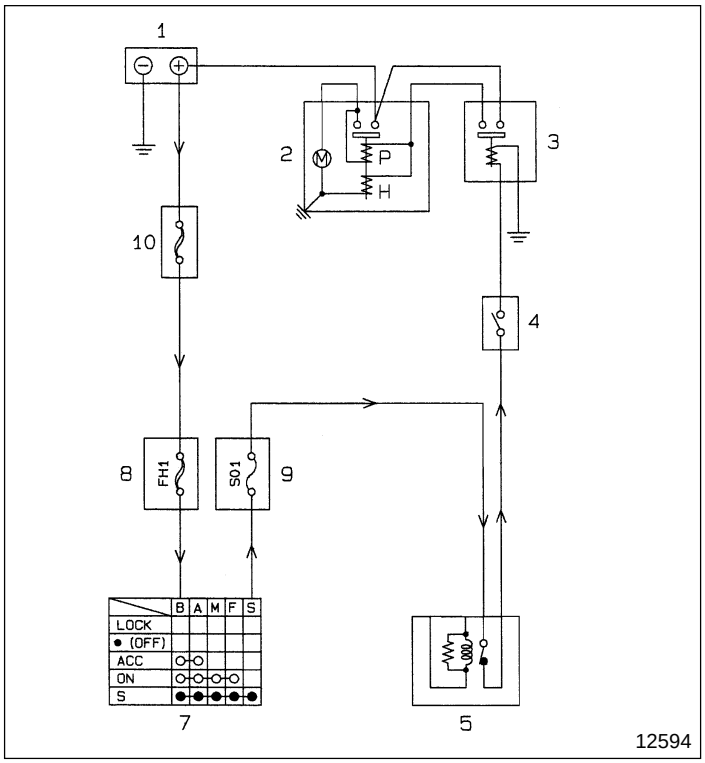

When the starter is activated when the transmission is in a position other than in neutral

Position of transmission neutral switch **4** : OFF
The flow of current from terminal S of starter switch **7** is cut off and starter relay **3** is not activated.

Sub-starter Circuit < Manual Transmission >

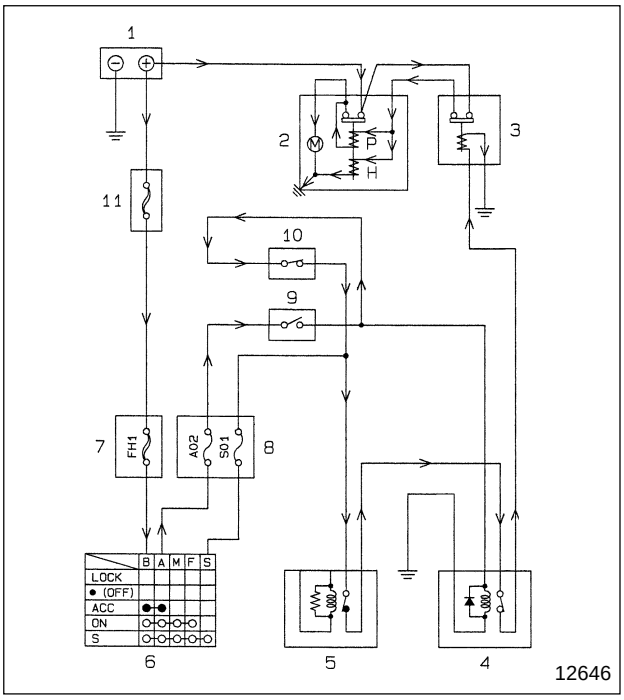

1 Battery
2 Starter
3 Starter relay
4 Transmission neutral relay
5 Safety relay
6 Starter switch
7 High-current fuse box
8 Relay and fuse box
9 Transmission neutral switch
10 Sub-starter switch
11 Main high-current fuse

Position of starter switch **6** : ACC
Position of sub-starter switch **10** : ON
1→11→7→6→8 (A02)→9→10→5 (contact point)
→4 (contact point)→3 (coil)→Ground
Starter relay **3** is activated to rotate starter. P54-2-5

Sub-starter Circuit < Automatic Transmission >

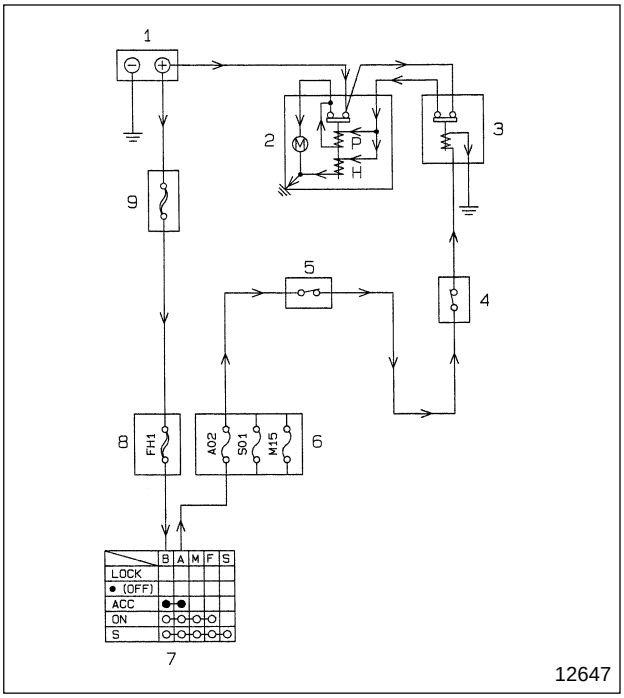

1 Battery
2 Starter
3 Starter relay
4 Transmission neutral switch
5 Sub-starter switch
6 Relay and fuse box
7 Starter switch
8 Main high-current fuse
9 High-current fuse box

Position of starter switch **7** : ACC
Position of sub-starter switch **5** : ON
1→9→8→7→6 (A02)→5→4→3 (coil)→Ground
Starter relay **3** is activated to rotate starter. P54-2-7

Engine Preheating and Cold Start Circuit

< Manual Transmission >

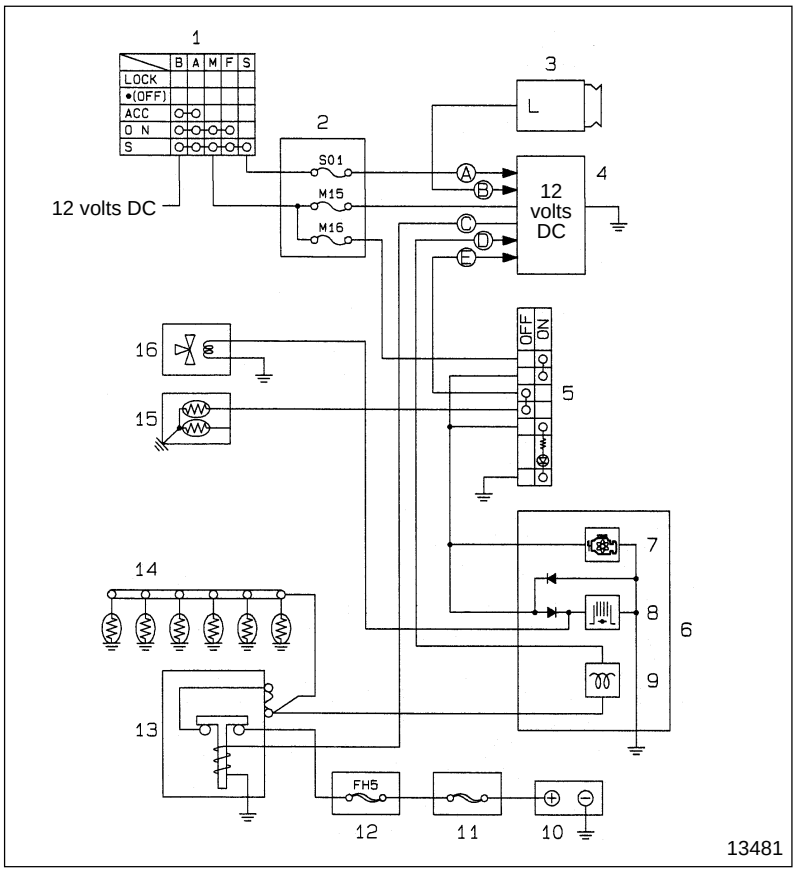

1 Starter switch
2 Fuse box
3 Alternator
4 Multipurpose timing control unit
P54-9-2
5 Cold start switch
6 Meter cluster
7 Cold start indicator lamp
8 Exhaust brake indicator lamp
9 Engine preheating indicator lamp
10 Battery
11 Main high-current fuse
12 High-current fuse box
13 Glow relay
14 Glow plug
15 Water temperature sensor
16 Exhaust brake 3-way magnetic valve

Ⓐ Engine start signal
Ⓑ Alternator charge signal
Ⓒ Glow relay activation signal
Ⓓ lighting-up signal
Ⓔ Engine coolant temperature signal

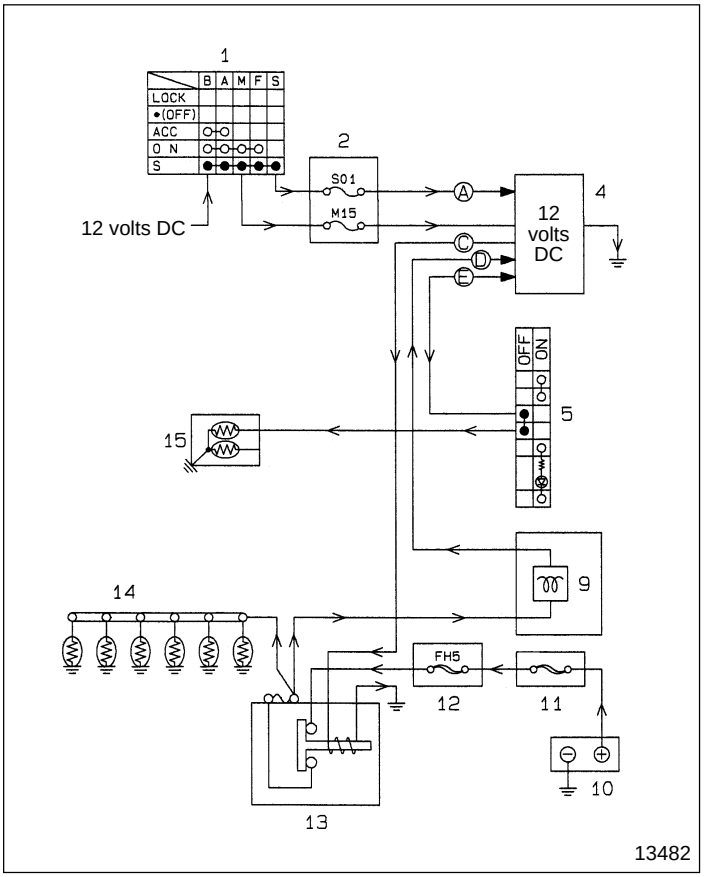

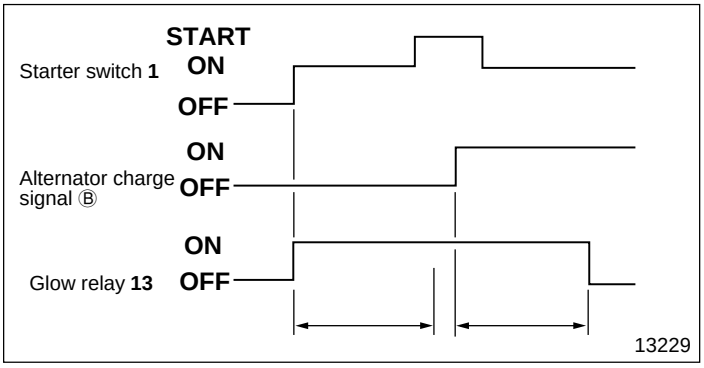

● Engine preheating circuit

This circuit improves the engine starting performance when the engine coolant temperature is low. The preheating system is controlled by multipurpose timing control unit **4**. P54-9-2

Basic preheating operation

Operation mode P54-2-10

When engine coolant temperature is low (Approximately 60°C {140°F} or less)

- Position of starter switch **1** : ON
  1→2 (M15)→4→Ground
  └Ⓔ→5→15→Ground

  Multipurpose timing control unit **4** detects the engine coolant temperature.
- When the engine coolant temperature is low, multipurpose timing control unit **4** outputs glow relay activation signal Ⓒ.
  4 —Ⓒ→13→Ground

- Glow relay **13** operates to feed power to glow plug **14** and lights up engine preheating indicator lamp **9**.
  10→11→12→13 (contact point)→14→Ground
  └→9—Ⓓ→4→Ground

When engine coolant temperature is high (Approximately 60°C {140°F} or more)

- Position of starter switch **1** : ON
  1→2 (M15)→4→Ground
  └Ⓔ→5→15→Ground

  Multipurpose timing control unit **4** detects the engine coolant temperature.
- When the engine coolant temperature is high, multipurpose timing control unit **4** does not output glow relay activation signal Ⓒ, so no preheating is performed.

Pre-glow and after-glow

There are two types of preheating: one is pre-glow, performed before starting the engine; the other is after-glow, performed after starting the engine. They are both controlled by start signal Ⓐ and alternator charge signal Ⓑ.

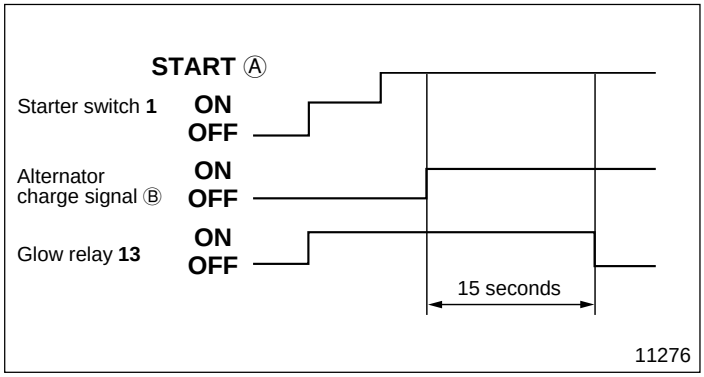

Fail-safe

- If the contacts of the glow relay driving relay in multipurpose timing control unit **4** are welded, engine preheating indicator lamp **9** blinks to alert the driver of the fault.
- When all of the following conditions are satisfied, the fail-safe function turns off glow relay **13**.
  - Coolant temperature is 60°C {140°F} or less.
  - Engine start signal Ⓐ is ON.
  - Alternator charge signal Ⓑ is ON for 15 seconds.

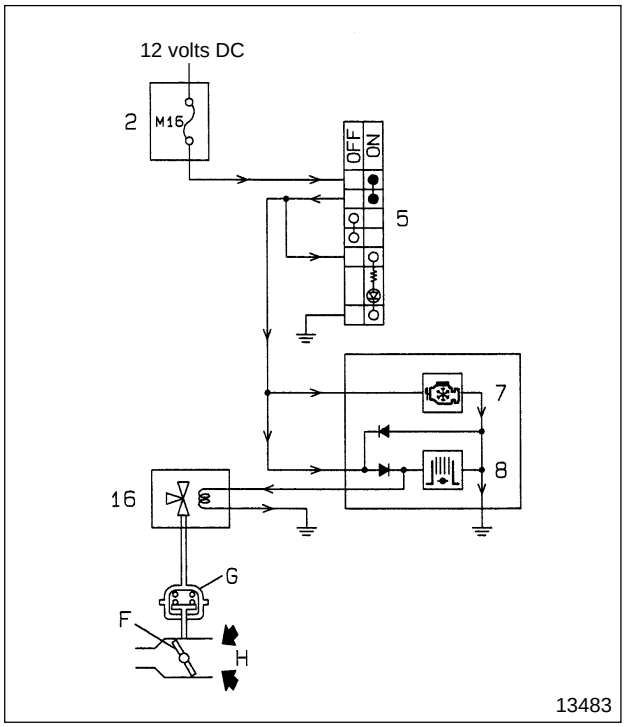

Cold start circuit

This circuit helps the engine preheating performance when the ambient temperature is low.

- Position of cold start switch **5** : ON

2→5→7
→8→Ground
→16→Ground

This circuit forces exhaust brake 3-way magnetic valve **16** to operate, closing exhaust brake butterfly valve **F**.
This decreases incoming cool air **H** from the engine exhaust system and reduces preheating time.

F : Exhaust brake butterfly valve
G : Exhaust brake unit
H : Cool air from engine exhaust system

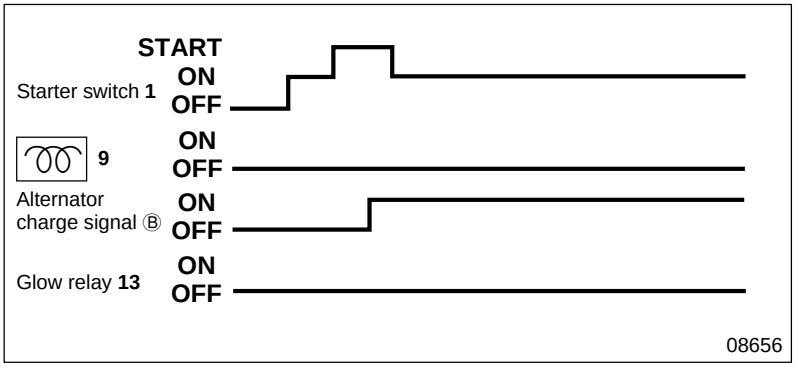

Operation mode

- Where the engine coolant temperature is 60°C {140°F} or more.

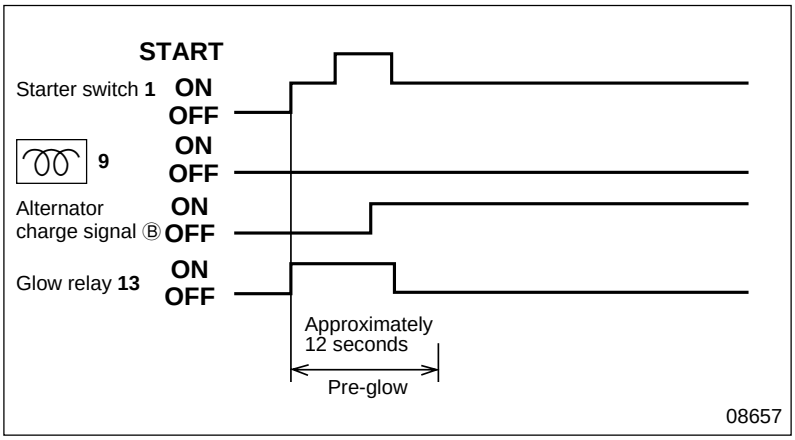

- Where the engine coolant temperature is 0 to 60°C {32 to 140°F}.

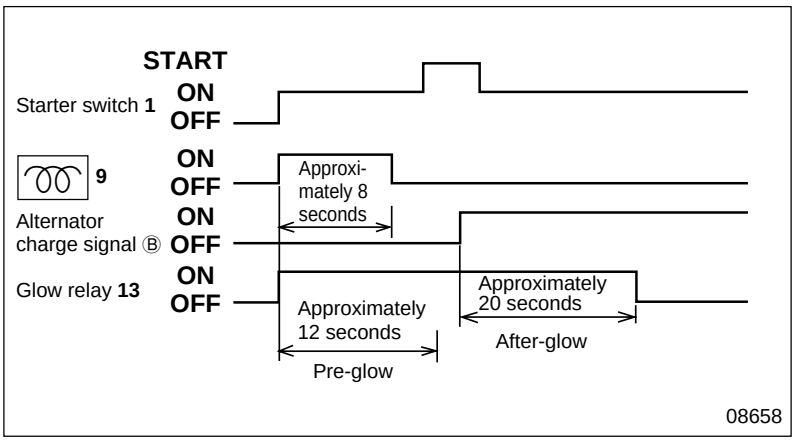

- Where the engine coolant temperature is 0°C {32°F} or less.

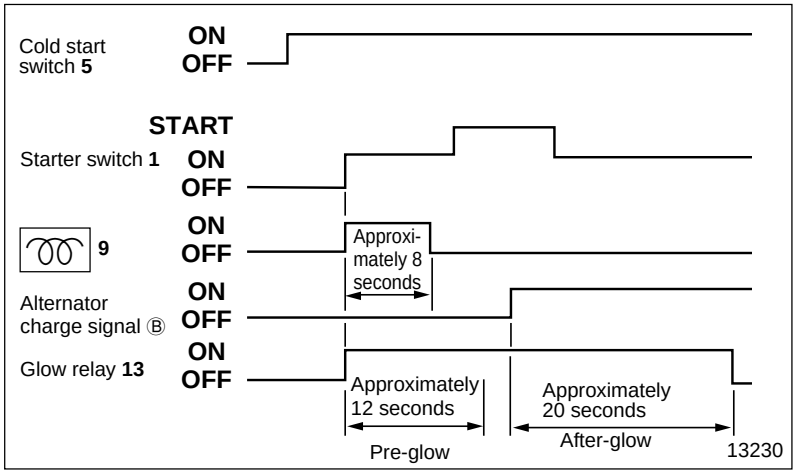

Operation mode when cold start switch is used

- When starter switch **1** is turned ON after cold start switch **5** is turned ON.

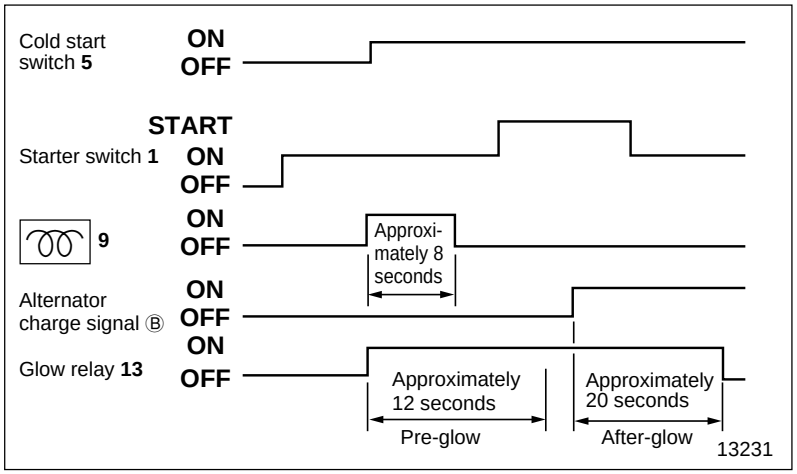

- When cold start switch **5** is turned ON after starter switch **1** is turned ON.
  (Where the engine coolant temperature is 0°C {32°F} or more.)

< Automatic Transmission >

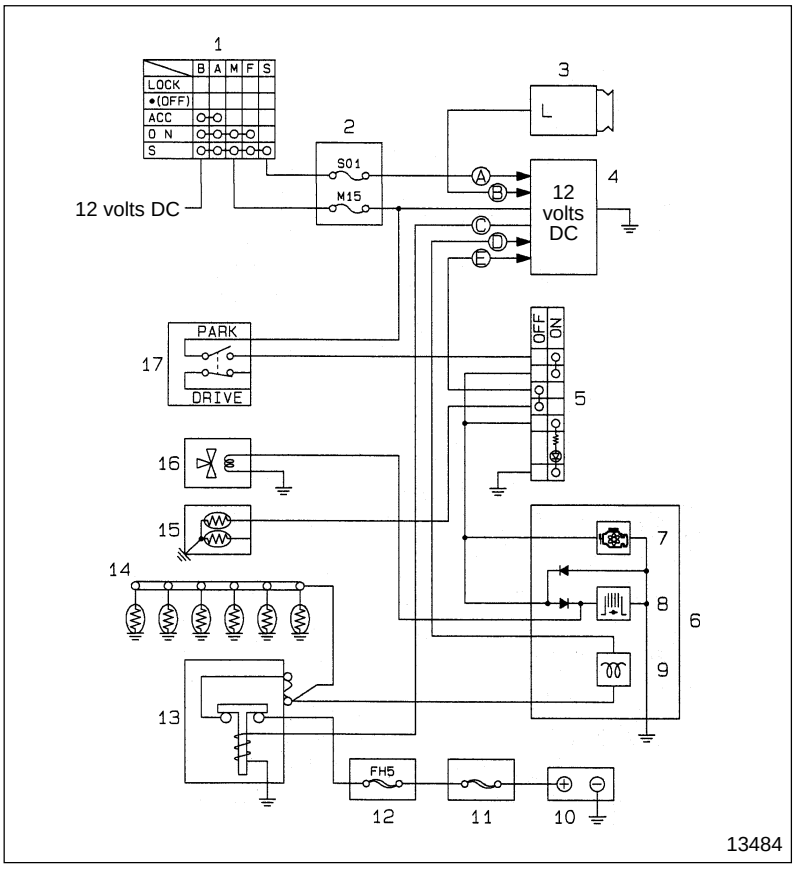

1 Starter switch
2 Fuse box
3 Alternator
4 Multipurpose timing control unit
54-9-2
5 Cold start switch
6 Meter cluster
7 Cold start indicator lamp
8 Exhaust brake indicator lamp
9 Engine preheating indicator lamp
10 Battery
11 Main high-current fuse
12 High-current fuse box
13 Glow relay
14 Glow plug
15 Water temperature sensor
16 Exhaust brake 3-way magnetic valve
17 Parking brake switch

Ⓐ Engine start signal
Ⓑ Alternator charge signal
Ⓒ Glow relay activation signal
Ⓓ lamp lighting-up signal
Ⓔ Engine coolant temperature signal

The engine preheating and cold start circuits of automatic transmission vehicles are the same as for manual transmission vehicles, except that parking brake switch **17** is installed in the cold start circuit part in automatic transmission vehicles.
54-2-10

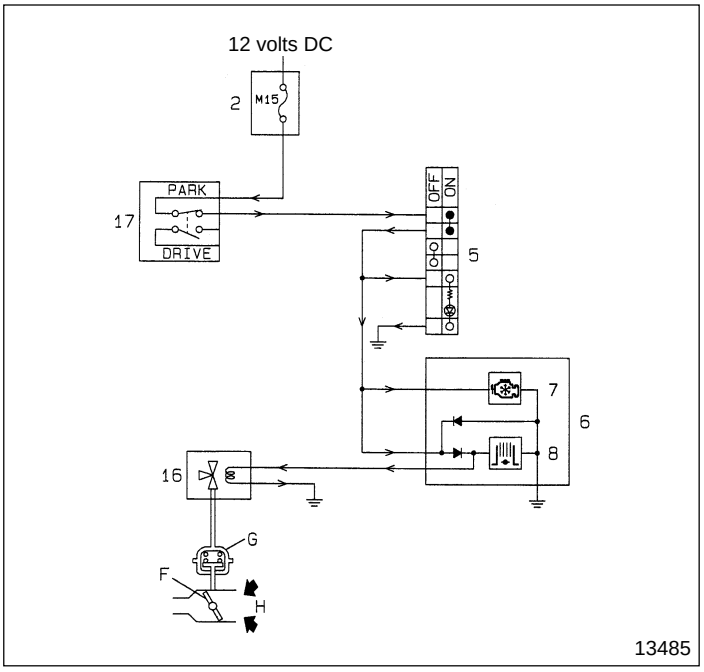

● Cold start circuit

This circuit is formed only when the parking brake is working. The current flow is as follows.
The operating mode is the same as in manual transmission vehicles. P54-2-11

- Position of starter switch 1 : ON
  2 (M15)→17 (park)→5→7→8→Ground
  →16→Ground

F : Exhaust brake butterfly valve
G : Exhaust brake unit
H : Cold air from engine exhaust system

TROUBLESHOOTING

Symptoms / Possible causes		Starter does not work	Starter works, but engine does not start: Pinion does not engage with ring gear	Starter works, but engine does not start: Pinion engages with ring gear, but does not rotate	Starter works, but engine does not start: Flywheel rotates, but engine does not start	Engine does not stop	Engine cannot be preheated	Engine hard to start	Remarks
Connector connection faulty, harness broken, grounding faulty		○			○	○	○	○	
Fuse blown		○							
Battery charge insufficient		○		○					
Starter	Magnetic switch contact point stuck or melted	○							
	Magnetic switch coil broken	○							
	Overrunning clutch malfunctioned		○						
	Pinion worn or damaged		○						
Starter relay faulty		○							
Starter switch faulty		○				○			
Flywheel ring gear worn or damaged			○						Gr 11
Fuel-cut relay faulty					○	○			
Fuel-cut motor faulty					○	○			
Engine stop cable broken or damaged					○	○			Gr 13
Engine stop cable adjusted incorrectly						○			Gr 13
Glow plug faulty							○	○	
Glow relay faulty							○	○	
Water temperature sensor faulty							○	○	
Multipurpose timing control unit faulty							○	○	
Connecting plate connection faulty							○	○	Gr 11
Transmission neutral switch faulty < Manual transmission >		○							
Transmission neutral relay faulty < Manual transmission >		○							
Sub-starter switch faulty									
Cold start switch faulty									
Exhaust brake 3-way magnetic valve faulty									
Safety relay faulty		○							

Possible causes \ Symptoms		Engine does not start although sub-starter switch is turned ON	Cold start function does not work	Remarks
Connector connection faulty, harness broken, grounding faulty		○	○	
Fuse blown		○	○	
Battery charge insufficient		○	○	
Starter	Magnetic switch contact point stuck or melted	○		
	Magnetic switch coil broken	○		
	Overrunning clutch malfunctioned			
	Pinion worn or damaged			
Starter relay faulty		○		
Starter switch faulty		○		
Flywheel ring gear worn or damaged				Gr 11
Fuel-cut relay faulty				
Fuel-cut motor faulty				
Engine stop cable broken or damaged				Gr 13
Engine stop cable adjusted incorrectly				Gr 13
Glow plug faulty				
Glow relay faulty				
Water temperature sensor faulty			○	
Multipurpose timing control unit faulty			○	
Connecting plate connection faulty				Gr 11
Transmission neutral switch faulty		○		
Transmission neutral relay faulty < Manual transmission >		○		
Sub-starter switch faulty		○		
Cold start switch faulty			○	
Exhaust brake 3-way magnetic valve faulty			○	
Safety relay faulty		○	○	

Inspection of Engine Preheating System

Service standards

Location	Maintenance item			Standard value	Limit	Remedy
—	Pre-glow time	Water temperature	60°C {140°F} or more	Does not pre-glow	—	Inspect
			0 to 60°C {32 to 140°F}	Approximately 12 seconds	—	
			0°C {32°F} or less	Approximately 12 seconds	—	
	After-glow time	Water temperature	60°C {140°F} or more	Does not after-glow	—	
			0 to 60°C {32 to 140°F}	Does not after-glow	—	
			0°C {32°F} or less	Approximately 20 seconds	—	
	Indicator lamp lighting time	Water temperature	60°C {140°F} or more	Does not light	—	
			0 to 60°C {32 to 140°F}	Does not light	—	
			0°C {32°F} or less	Approximately 8 seconds	—	

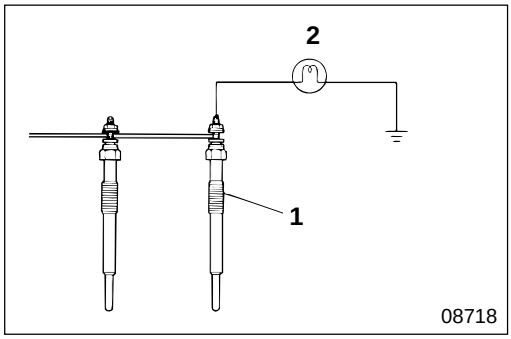

- Turn the starter switch OFF.
- Turn the cold start switch OFF.
- Connect inspection lamp **2** to glow plug **1**.

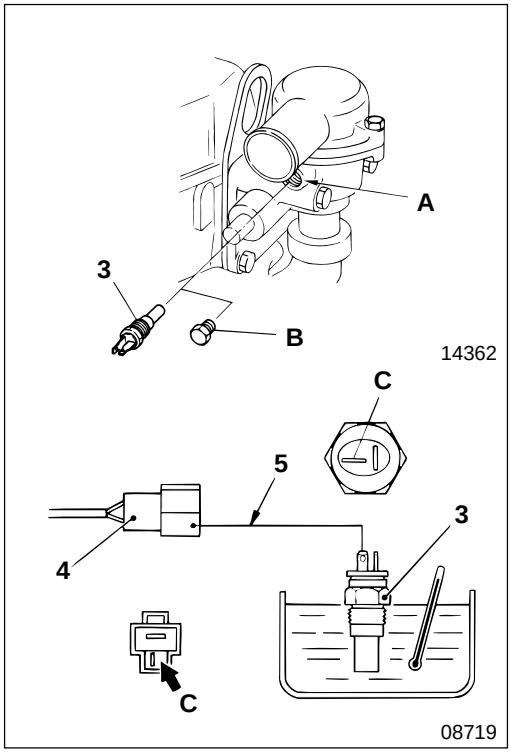

- Remove water temperature sensor **3** from the engine and plug sensor mounting part **A** with plug **B** (M16×1.5 mm).
  Removal and installation of water temperature sensor **3** Gr 14
- Connect extension harness **5** between water temperature sensor **3** and connector **4**.

NOTE

Connect extension harness 5 to terminal C of the multipurpose timing control unit.

- Put water temperature sensor **3** into a container filled with water.
- Carry out the following inspection while changing the water temperature in the container. If any fault is found, inspect each unit.

(1) Inspection of pre-glow time and indicator lamp lighting time

Turn the starter switch ON but do not start the engine. Make sure that the pre-glow time and the indicator lamp lightning time at each water temperature conform to the standard value.

- For pre-glow time inspection, measure the lighting time of inspection lamp **2**.
- For indicator lamp lightning time inspection, measure the lighting time of lamp within the meter cluster directly.

(2) Inspection of after-glow time

Start the engine and measure the lighting time of inspection lamp **2** from the point lamp within the meter cluster goes off, and make sure that the after-glow time conforms to the standard value.

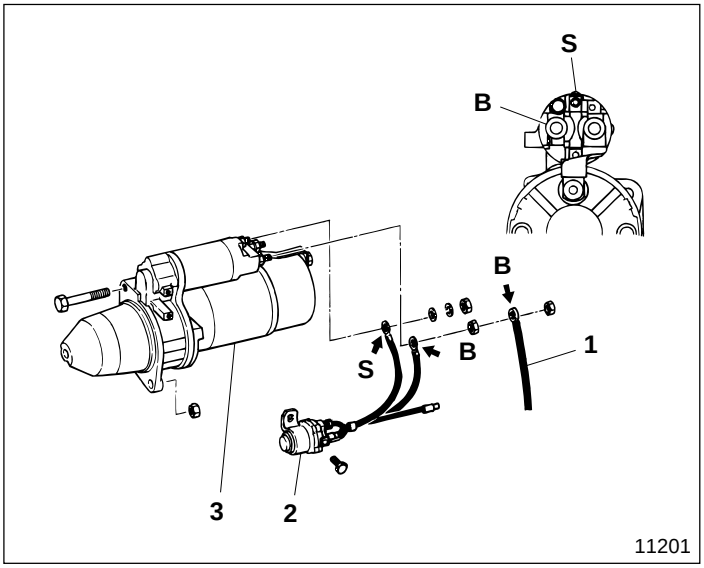

● **Removal sequence**

1 Starter cable (to battery connection)
2 Starter relay
3 Starter 📖 54-2-20

B : Terminal B
S : Terminal S

WARNING⚠

Never touch the starter with tools when you remove the harness from terminal B. This is because voltage is always supplied to it from starter cable 1, and you will short-circuit the starter. Before removing the harness from terminal B, remove the ⊖ battery terminal and tape it up to insulate it.

● **Installation sequence**

Follow the removal sequence in reverse.

Starter

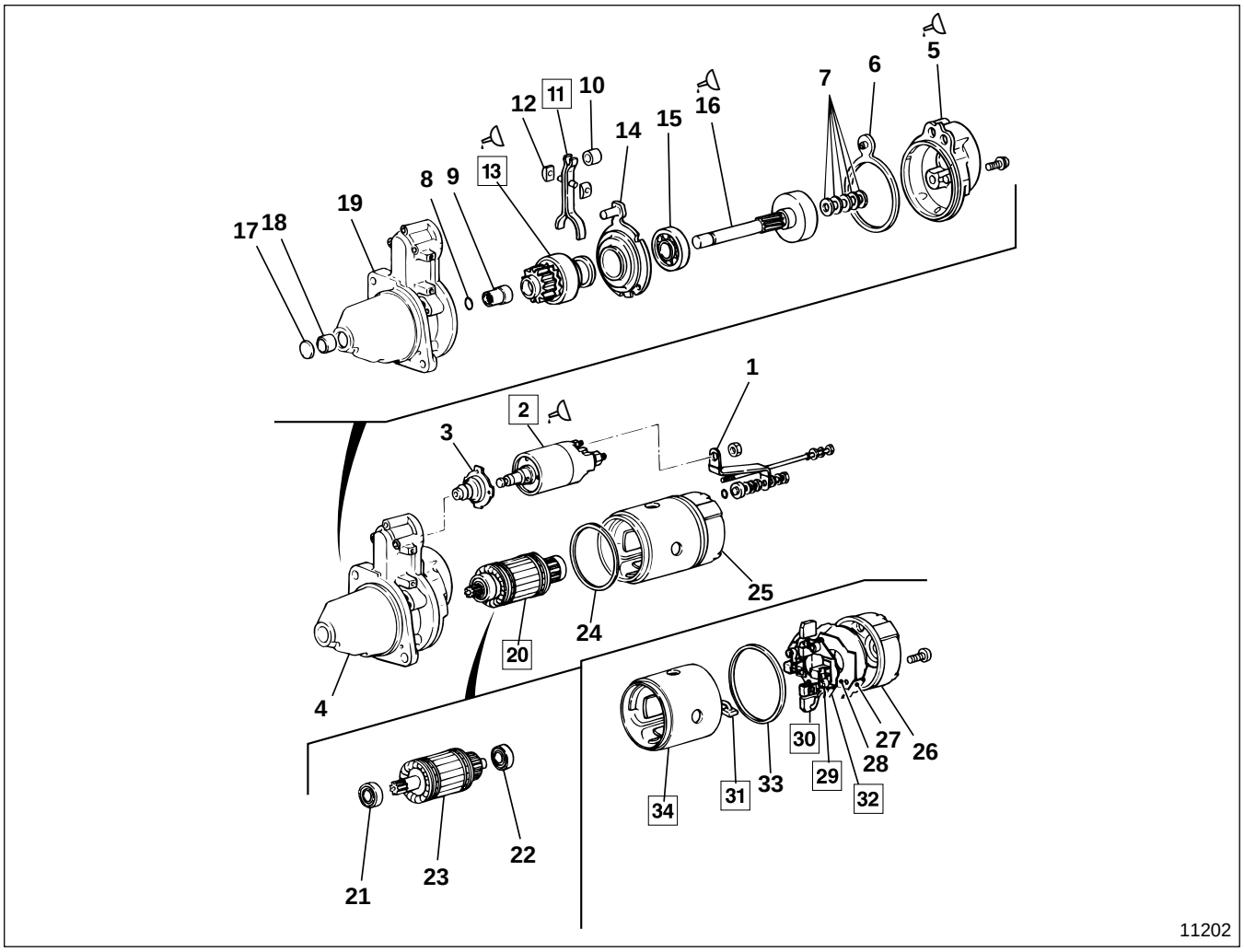

● **Inspection before disassembly**

P54-2-22

● **Disassembly sequence**

1 Connector
2 Magnetic switch
3 Cover
4 Front bracket assembly
5 Center bracket
6 Packing
7 Adjusting washer
8 Stopper ring
9 Pinion stopper
10 Stopper
11 Lever
12 Collar
13 Overrunning clutch
14 Plate
15 Gear shaft bearing
16 Gear shaft
17 Cover
18 Sleeve bearing
19 Front bracket
20 Armature assembly
21 Front bearing
22 Rear bearing
23 Armature
24 Packing
25 Yoke and rear bracket assembly
26 Rear bracket
27 Brush holder insulator
28 Brush holder plate
29 Brush spring
30 Brush ⊖
31 Brush ⊕
32 Brush holder assembly
33 Packing
34 Yoke assembly

CAUTION⚠

- **Do not remove bearings 15, 21, 22 unless they are faulty.**
- **Make sure you do not drop armature assembly 20 when you remove yoke and rear bracket assembly 25 from front bracket assembly 4.**

● **Assembly sequence**

Follow the disassembly sequence in reverse.

NOTE

After replacing magnetic switch 2 adjust the gap of the pinion

● **Inspection after assembly**

P54-2-22

Service standards

Unit : mm {in.}

Location	Maintenance item		Standard value	Limit	Remedy
—	Thrust gap of gear shaft assembly		0.1 to 0.5 {0.0039 to 0.02}	—	Adjust
—	Pinion gap		0.5 to 2.0 {0.02 to 0.079}	—	Adjust
—	No-load characteristic (11 V when current flowing)	Current	220 A or less	—	Inspect
		Number of revolutions	3200 rpm or more	—	
2	Magnetic switch operating voltage		16 V or less	—	Replace
20	Armature assembly	Outer diameter of commutator	43.2 {1.7}	42.2 {1.66}	Replace
		Deflection of commutator periphery	0 to 0.03 {0 to 0.0012}	0.1 {0.0039}	Replace
		Mica depth between segments	0.4 to 0.6 {0.016 to 0.024}	0.3 {0.012} or less	Replace
29	Pressure of brush spring		25 to 34 N {5.6 to 7.6 lbf, 2.55 to 3.45 kgf}	18 N {4 lbf, 1.8 kgf}	Replace
30, 31	Length of brush		23 {0.91}	14 {0.55}	Replace

Lubricant

Location	Points of application	Kinds	Quantity
2	Contact surface between lever and magnetic switch	Multipurpose grease [NLGI No.2 (Ca soap)]	As required
5	Gear shaft mounting surface of center bracket	Grease for heavy load at low temperature [NLGI No.2 (Li soap)]	As required
13	Friction surfaces of overrunning clutch and lever	Multipurpose grease [NLGI No.2 (Ca soap)]	As required
16	Clutch spline of gear shaft	Grease for heavy load at low temperature [NLGI No.2 (Li soap)]	As required
	Friction surfaces of gear shaft and sleeve bearing	Grease for heavy load at low temperature [NLGI No.2 (Li soap)]	As required

◆ Service procedure

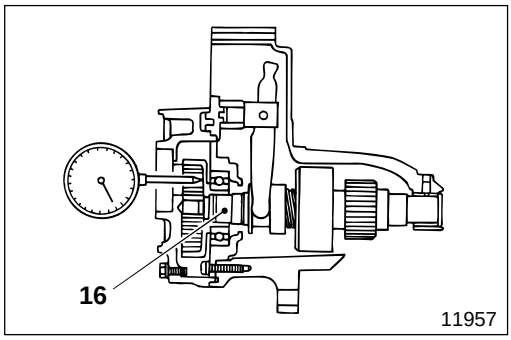

● Inspection before disassembly

Thrust gap of gear shaft
[Inspection]
- Measure the thrust gap of gear shaft **16** in the axial direction.
- If the measured value deviates from the standard value, adjust the thrust gap as follows.

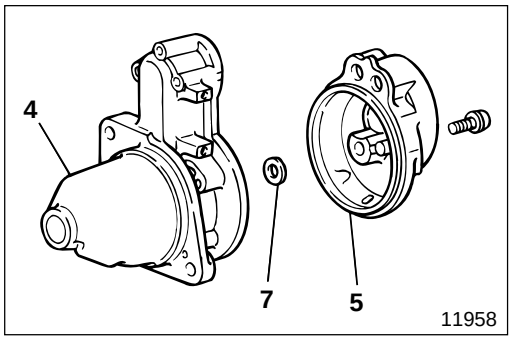

[Adjustment]
- Remove center bracket **5** from front bracket assembly **4**.
- Change the thickness of adjusting washer **7** for adjustment.
  Available adjustment washers thicknesses: 0.25, 0.5 mm {0.0098, 0.02 in.}

● Inspection after assembly

Inspections after assembling the starter should be carried out with current fed to the starter.

WARNING
- **Do not touch pinion C because it jumps out and turns when current is fed to the starter.**
- **Take care not to burn your hand, magnetic switch 2 might be hot after inspection.**

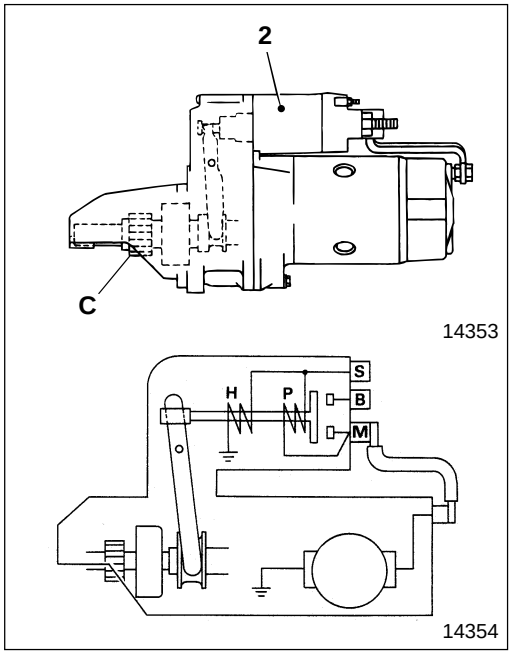

CAUTION
- **The current feeding time to the starter should be within 10 seconds at pull-in coil P side and within 30 seconds at holding coil H side. If the current feeding time exceeds these limits the coil might burn due to overheating.**
- **When current is flowing into the starter, a current of over 100 amperes is fed. When inspecting, use thick cable, such as a booster cable, and make secure connections.**

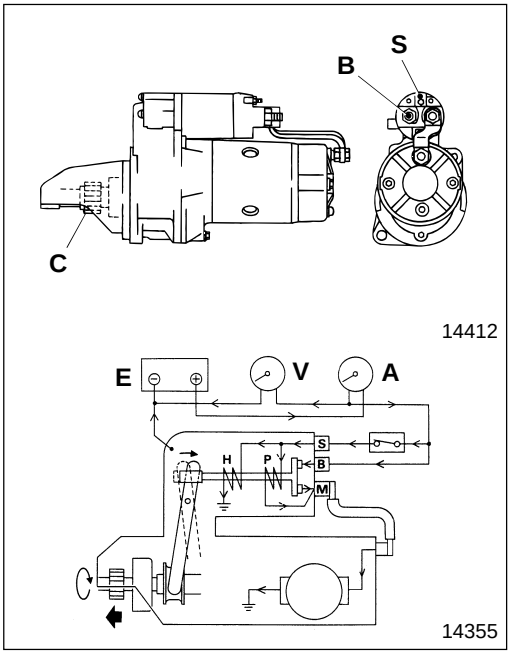

(1) Performance test

- Connect the starter as illustrated.
  A : Ammeter
  B : Terminal B of starter
  D : Switch
  E : DC power supply (12 volts)
  S : Terminal S of starter
  V : Voltmeter
- Set the voltage to 11 volts DC.

CAUTION⚠

Up to 12 volts can be loaded.

- The following work should be done with current fed to the starter. You must complete the full procedure of measuring the intensity of the current and the number of revolutions within 30 seconds.
  - Turn switch **D** ON and feed current into the starter. In this state, pinion **C** jumps out and rotates.

CAUTION⚠

When switch D is turned ON, current is fed both to pull-in coil P and holding coil H. When a large amount of current is fed into terminal M from DC power supply E, via terminal B of the starter, the current stops flowing into the pull-in coil but continues to flow into the holding coil.
To avoid burning the holding coil, be sure to carry out the performance test within 30 seconds.

  - Measure the intensity of the current and the number of revolutions of the starter. Train a strobe light on pinion **C** to measure the revolutions.
  - Turn switch **D** OFF to stop current to the starter.
- If the measured value deviates from the standard value, disassemble the starter again and inspect it.

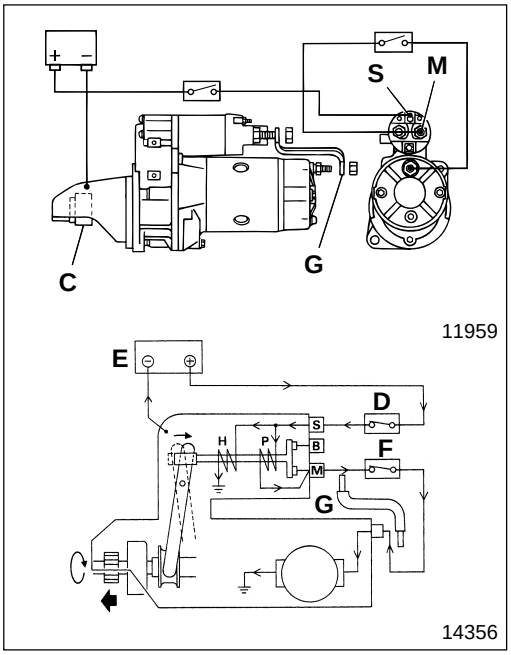

(2) Pinion gap

[Inspection]

- Connect the starter as illustrated.
  D : Switch
  E : 12 volts DC
  F : Switch
  G : Cable
  M : Terminal M of starter
  S : Terminal S of starter
- The following work should be done with current fed to the starter. You must complete the full procedure for measuring the pinion gap within 30 seconds.
  - Turn switches **D** and **F** ON and feed current to the starter. In this state, pinion **C** jumps out and rotates.

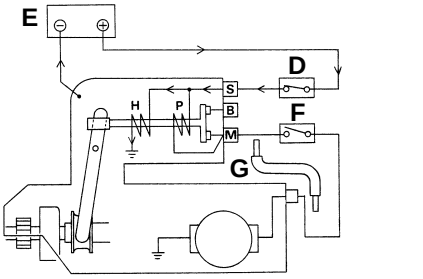

14357

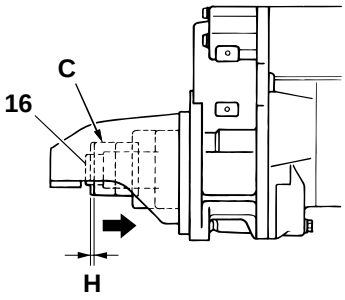

12413

- Within five seconds of pinion **C** rotating, turn switch **F** OFF to stop rotation of the pinion.

CAUTION

When switches D and F are turned ON, current is fed both to pull-in coil P and holding coil H. The circuit is wired in such a way that the voltage is not applied to terminal B of the starter, so the current continues to flow into the pull-in coil while pinion C rotates.

To avoid burning the pull-in coil, be sure to turn switch F OFF within five seconds after the pinion rotates.

  - Push the tip of gear shaft **16** lightly and measure pinion gap **H** in the axial direction.
  - Turn switch **D** OFF to stop current to the starter.
- If the measured value deviates from the standard value, this means the starter was assembled incorrectly, so disassemble and reassemble the starter.

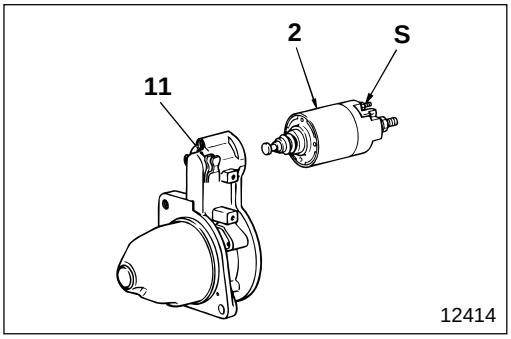

12414

2 Magnetic switch

[Installation]

Install magnetic switch **2** onto lever **11** in the direction as illustrated.

S : Terminal S

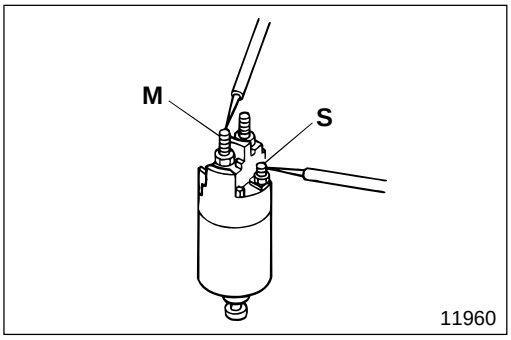

11960

[Inspection]

Carry out the inspection as follows. If any fault is found, replace magnetic switch **2**.

(1) Testing for coil discontinuity

- Check that there is continuity between terminals **S** and **M**.

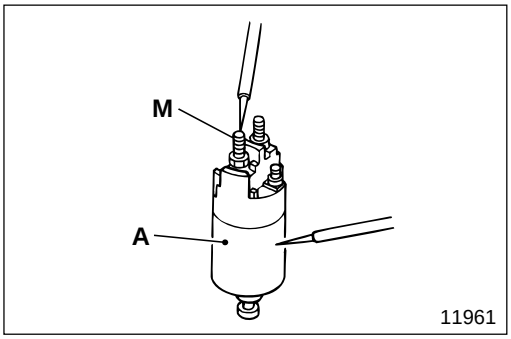

11961

- Check that there is continuity between terminal **M** and the body **A** of magnetic switch **2**.

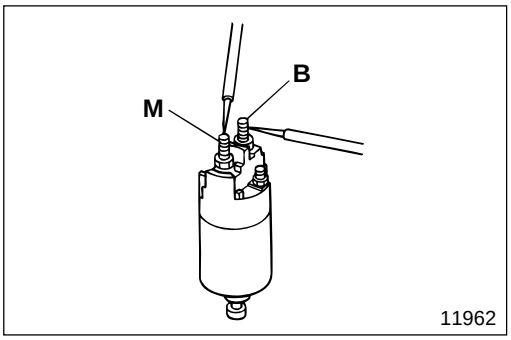

(2) Inspection of welded connections

- Check that there is no continuity between terminals **B** and **M**.

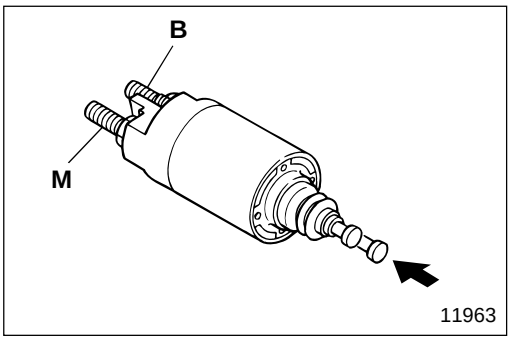

(3) Inspection of connections

- Push the tip of magnetic switch **2** to close the internal connection.
- Check that there is continuity between terminals **B** and **M**.

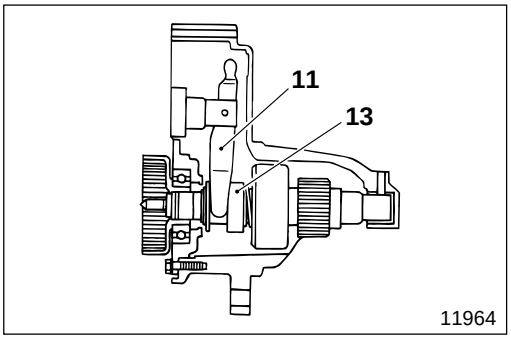

11 Installation of lever

Install lever **11** onto overrunning clutch **13** in the direction as illustrated.

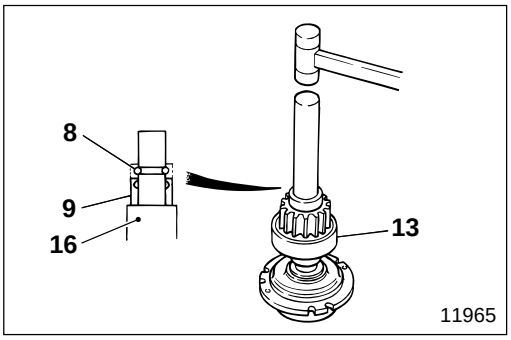

13 Overrunning clutch

[Removal]

- Apply pipe-shaped tool **A** to pinion stopper **9**.
- Hammer pipe-shaped tool **A** gently to remove stopper ring **8** from pinion stopper **9**.
- Remove pinion stopper ring **8** from gear shaft assembly **16** to withdraw pinion stopper **9**.

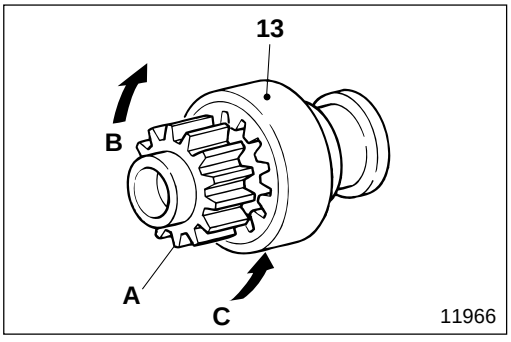

[Inspection]

- Make sure that pinion **A** of overrunning clutch **13** turns toward direction **B** but does not turn toward direction **C**.
- If any fault is found, replace overrunning clutch **13**.

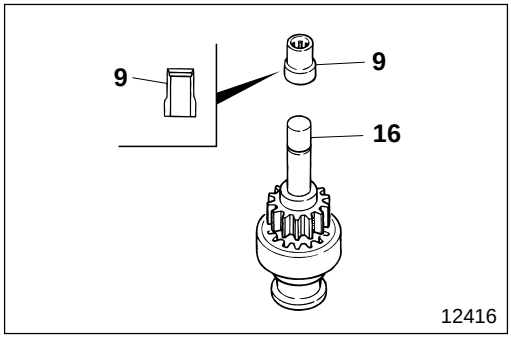

[Installation]

- Install pinion stopper **9** onto gear shaft **16** in the direction as illustrated.

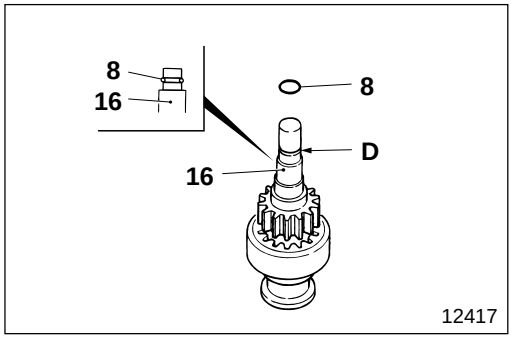

- Install stopper ring **8** onto ring groove **D** of gear shaft **16**.

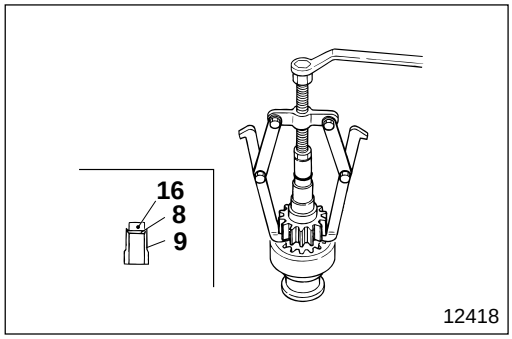

- Pull pinion gear **E** firmly and set pinion stopper **9** on stopper ring **8** securely.

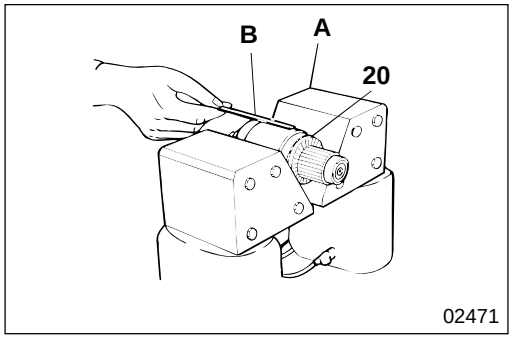

20 Inspection of armature assembly

(1) Testing for coil short-circuit

- Place iron rod **B** parallel to armature assembly **20**.
  A : Armature tester
- Rotate armature assembly **20** slowly.
- If iron rod **B** is pulled or shakes, it indicates that armature assembly **20** is short-circuited, so replace it.

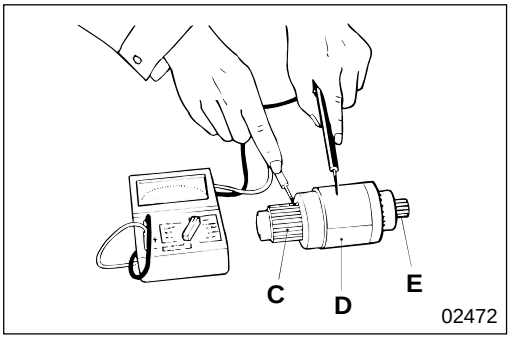

(2) Testing for coil grounding

- Check that there is no continuity between commutator **C** and core **D** (or shaft **E**).
- If there is continuity between them, they are short-circuited. Replace armature assembly **20**.

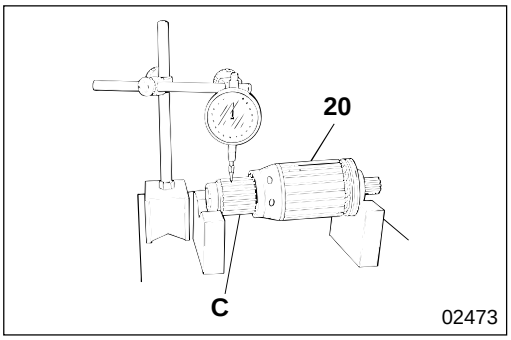

(3) Deflection of commutator

If the measured value is higher than the limit, adjust the outer diameter of commutator **C** within the limit.

(4) Rough commutator surface

- If the surface is rough or has stepped wear, polish the surface with emery paper (300 to 500 grit).
- After polishing, check deflection of commutator **C**.

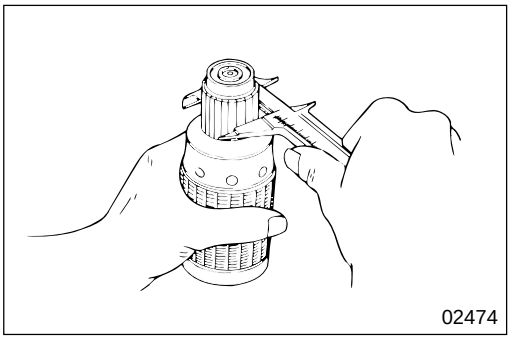

(5) Outer diameter of commutator

If the measured value is higher than the limit, replace armature assembly **20**.

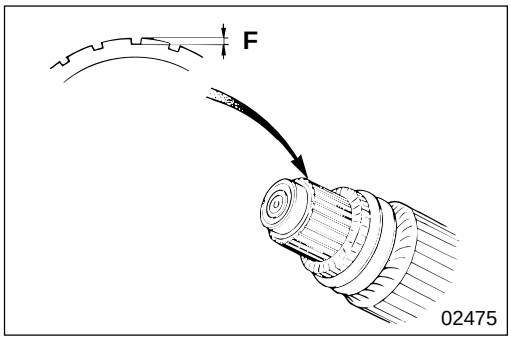

(6) Mica depth between segments

- If the measured value is lower than the limit, correct or replace armature assembly **20**.
  F : Mica depth

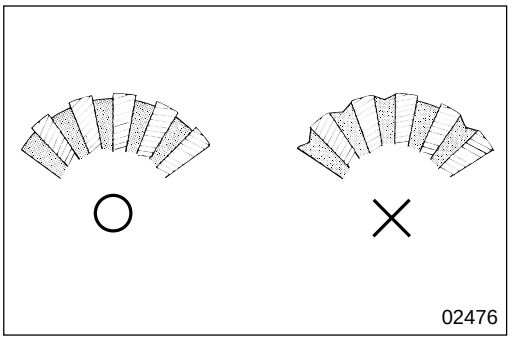

- If the mica is worn as illustrated, replace armature assembly **20**.
  ○ : Good
  × : Faulty

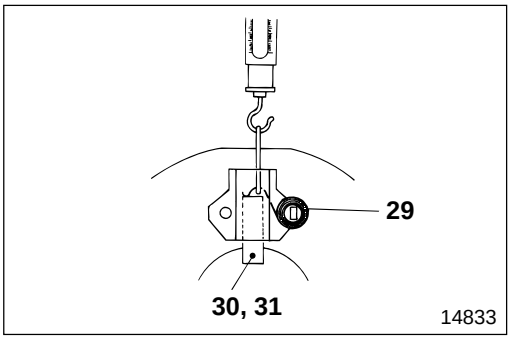

29 Inspection of brush spring

- Use new brushes **30**, **31** and measure the load when brush spring **29** is detached from the brushes.
- If the measured value is higher than the limit, replace brush spring **29**.

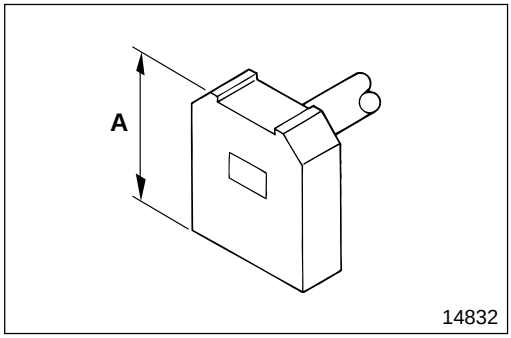

30 **31** **Inspection of brush**

(1) Length of brush

If the measured value is lower than the limit, replace brushes **30**, **31**.
A : Length of brush

(2) Contact surface with commutator

If the surface where the brushes contact the commutator is rough or is worn unevenly, polish the surface with emery paper (300 to 500 grit).

CAUTION

Make sure that the curvature of the surface is finished just like that of the commutator.

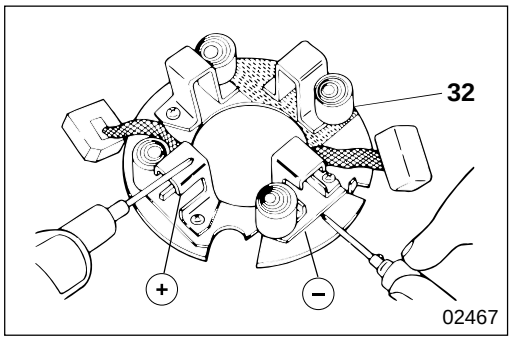

32 **Inspection of brush holder assembly**

- Check that there is no continuity between the ⊕ side of the brush holder and the ⊖ side of the holder plate.
- If there is continuity, they are grounded. Replace brush holder assembly **32**.

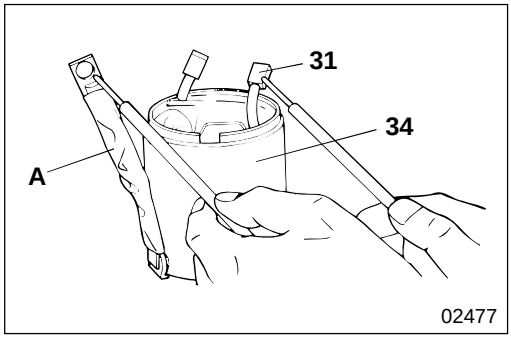

34 **Inspection of yoke assembly**

(1) Testing for coil disconnection

- Check that there is continuity between cable **A** and brush ⊕ **31**.
- If there is no continuity, they are disconnected. Replace brush ⊕ **31** or yoke assembly **34**.

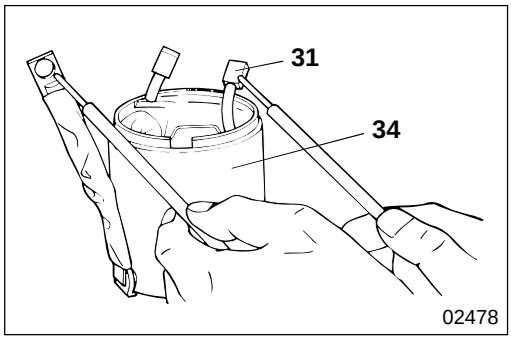

(2) Testing for coil grounding

- Check that there is no continuity between yoke assembly **34** and brush ⊕ **31**.
- If there is continuity, they are grounded. Locate the disconnection. If it is hard to repair, replace brush ⊕ **31** or yoke assembly **34**.

M E M O

210 ENGINE STARTING CIRCUIT

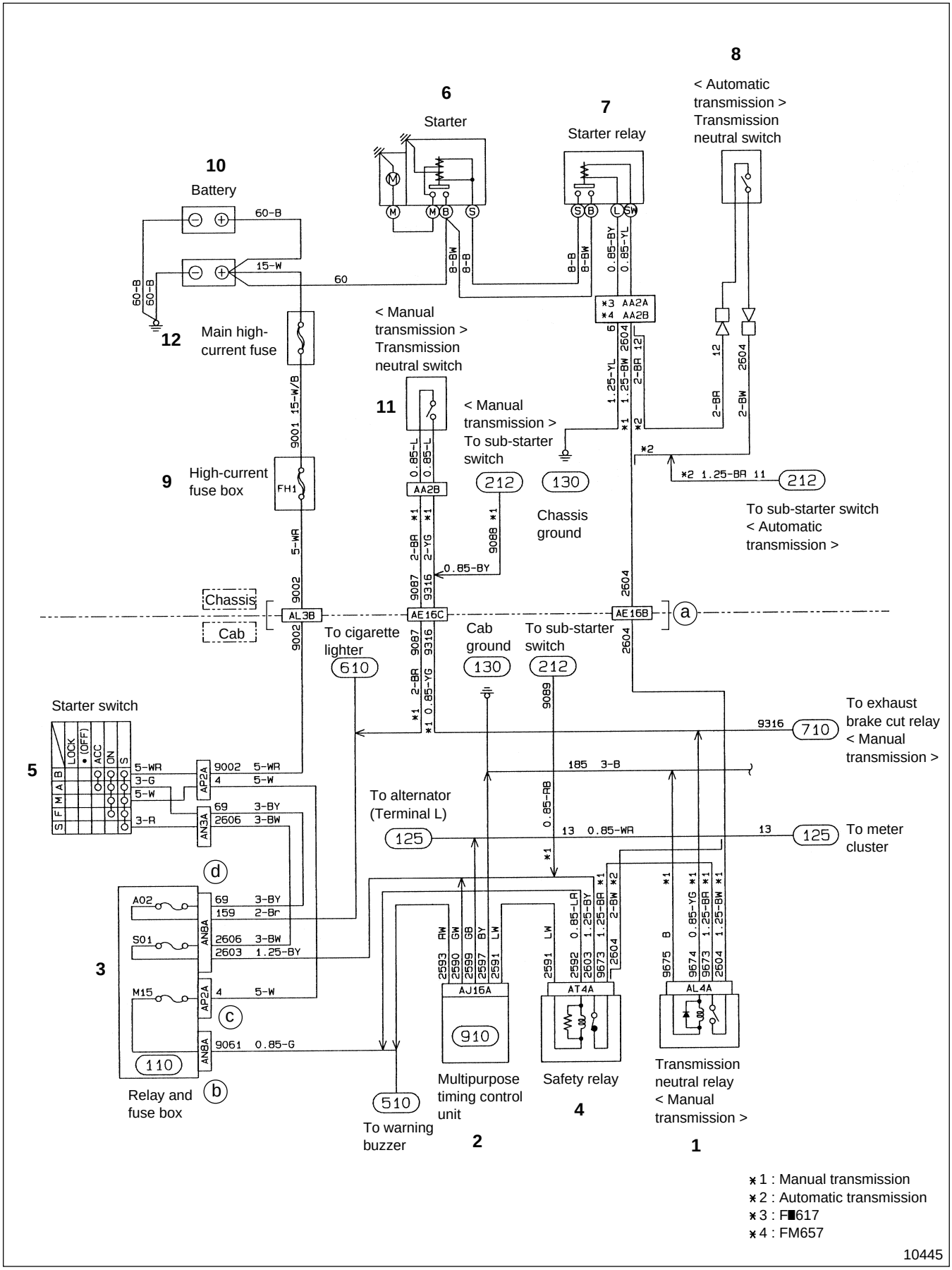

*1 : Manual transmission
*2 : Automatic transmission
*3 : F■617
*4 : FM657

10445

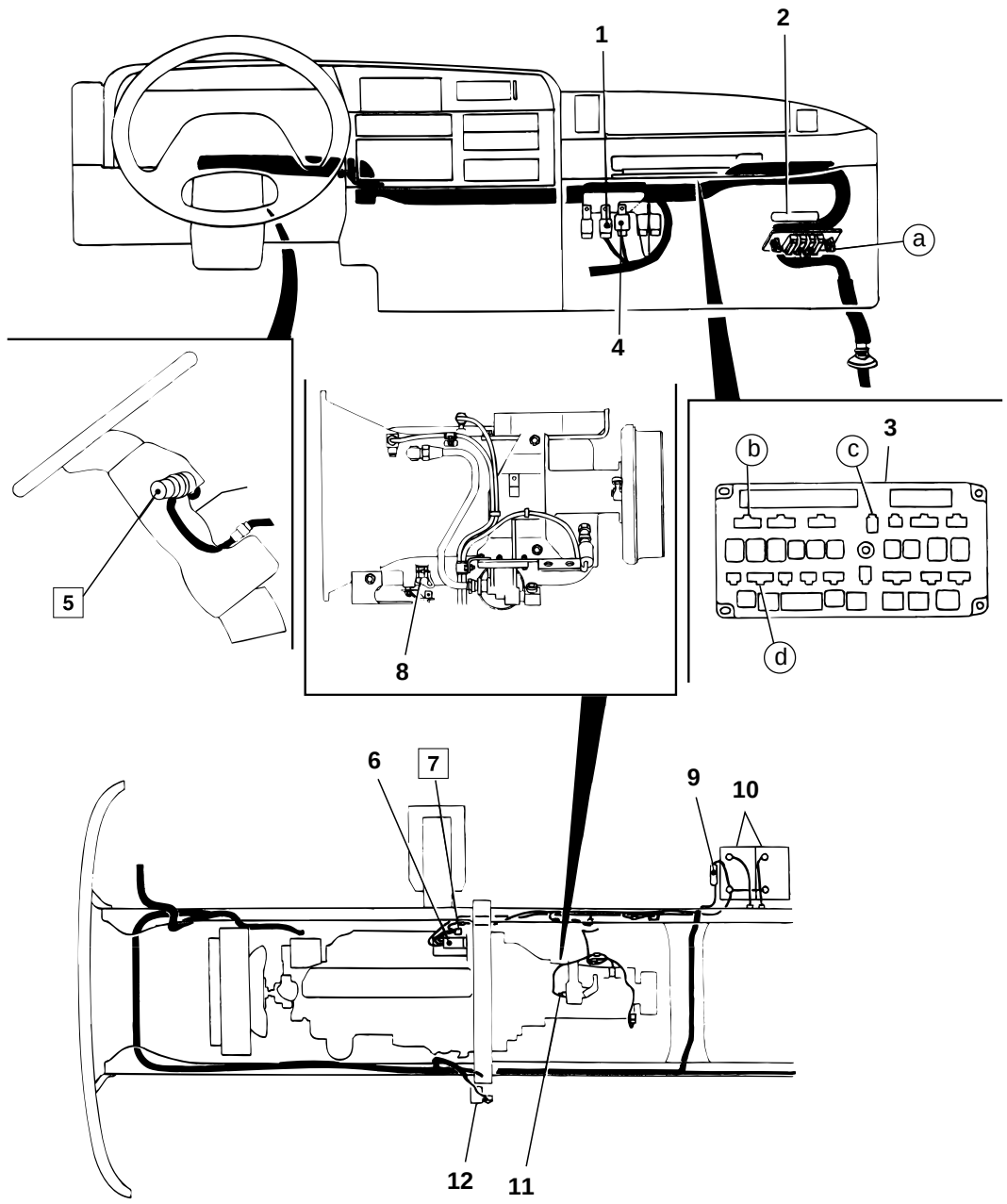

12862

1 Transmission neutral relay
< Manual transmission > 🕮 (604)
2 Multipurpose timing control unit 🕮 (604)
3 Relay and fuse box 🕮 (104)
4 Safety relay 🕮 (604)
5 Starter switch
6 Starter 🕮 (201)
7 Starter relay
8 Transmission neutral switch
< Automatic transmission > 🕮 (802)
9 High-current fuse box 🕮 (104)
10 Battery 🕮 (101)
11 Transmission neutral switch
< Manual transmission > 🕮 (802)
12 Main high-current fuse box 🕮 (104)

◆ Service procedure

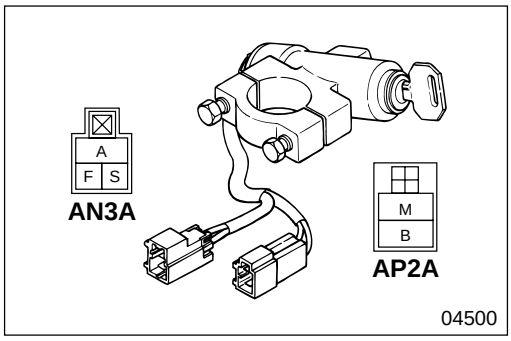

5 **Inspection of the starter switch**

- Follow the table below to inspect continuity:

	AP2A		AN3A		
	②	①	①	③	②
LOCK					
ACC	○———		○		
ON	○———	○	○———	○	
START	○———	○	○———	○———	○
	B	**M**	**A**	**F**	**S**

○——○ : There is continuity between terminals ○ and ○.

- If any fault is found, replace starter switch **5**. 📖 Gr 37

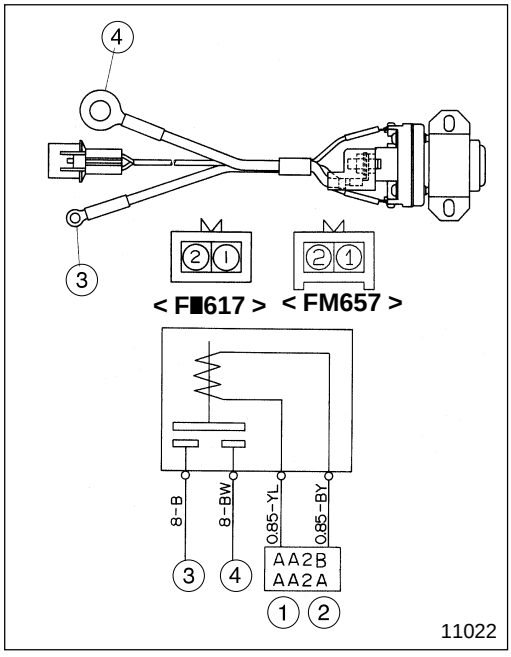

7 **Inspection of starter relay**

- Follow the table below to inspect continuity:

	③	④	①	②
No current			○ ○	
Current	○——○		⊖——⊕	

○——○ : There is continuity between terminals ○ and ○.

⊕——⊖ : Indicates that battery voltage is applied to the line between the terminals.

- If any fault is found, replace starter relay **7**. 📖 Gr 54-2-19

M E M O

212 SUB-STARTER CIRCUIT

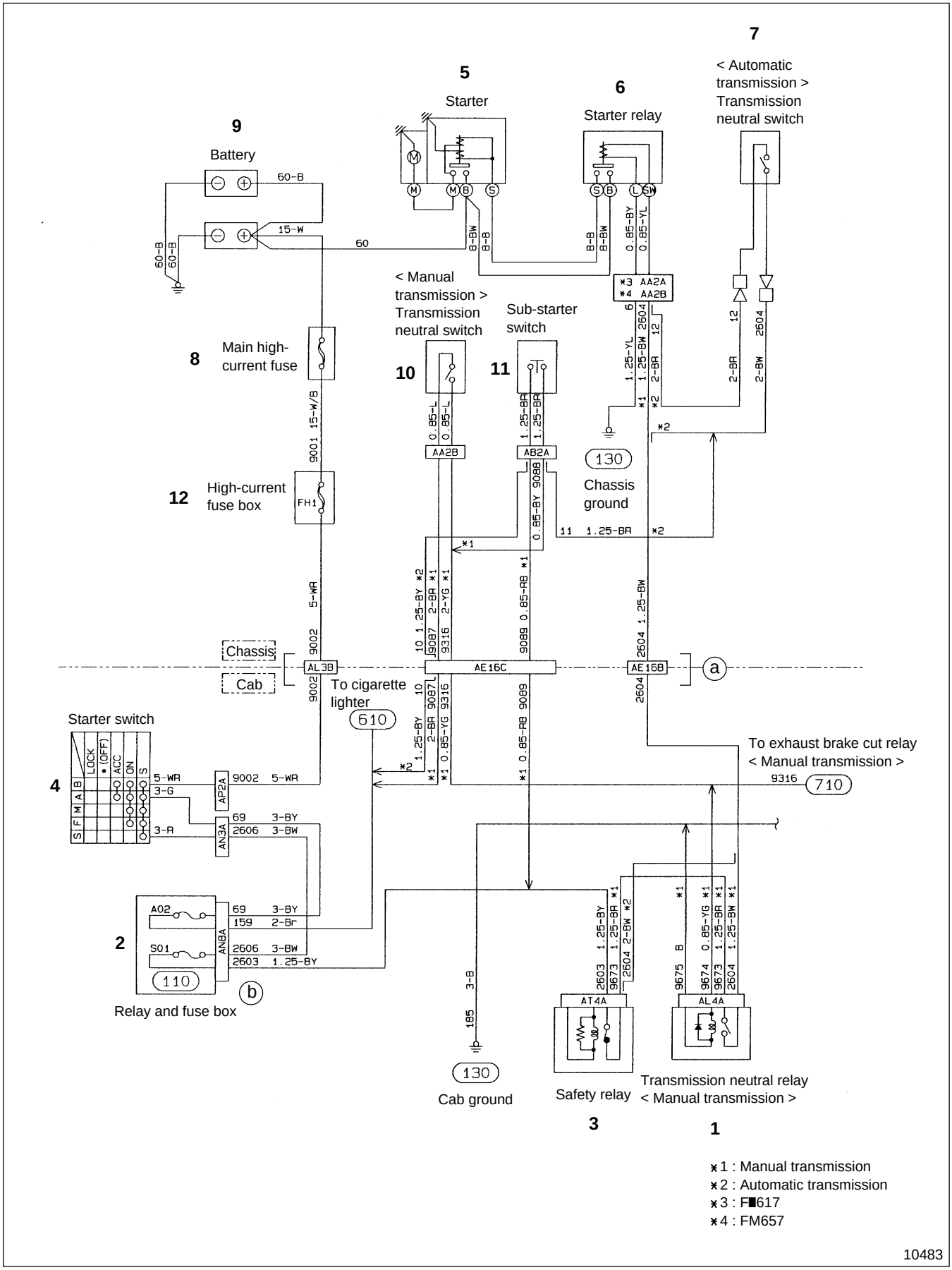

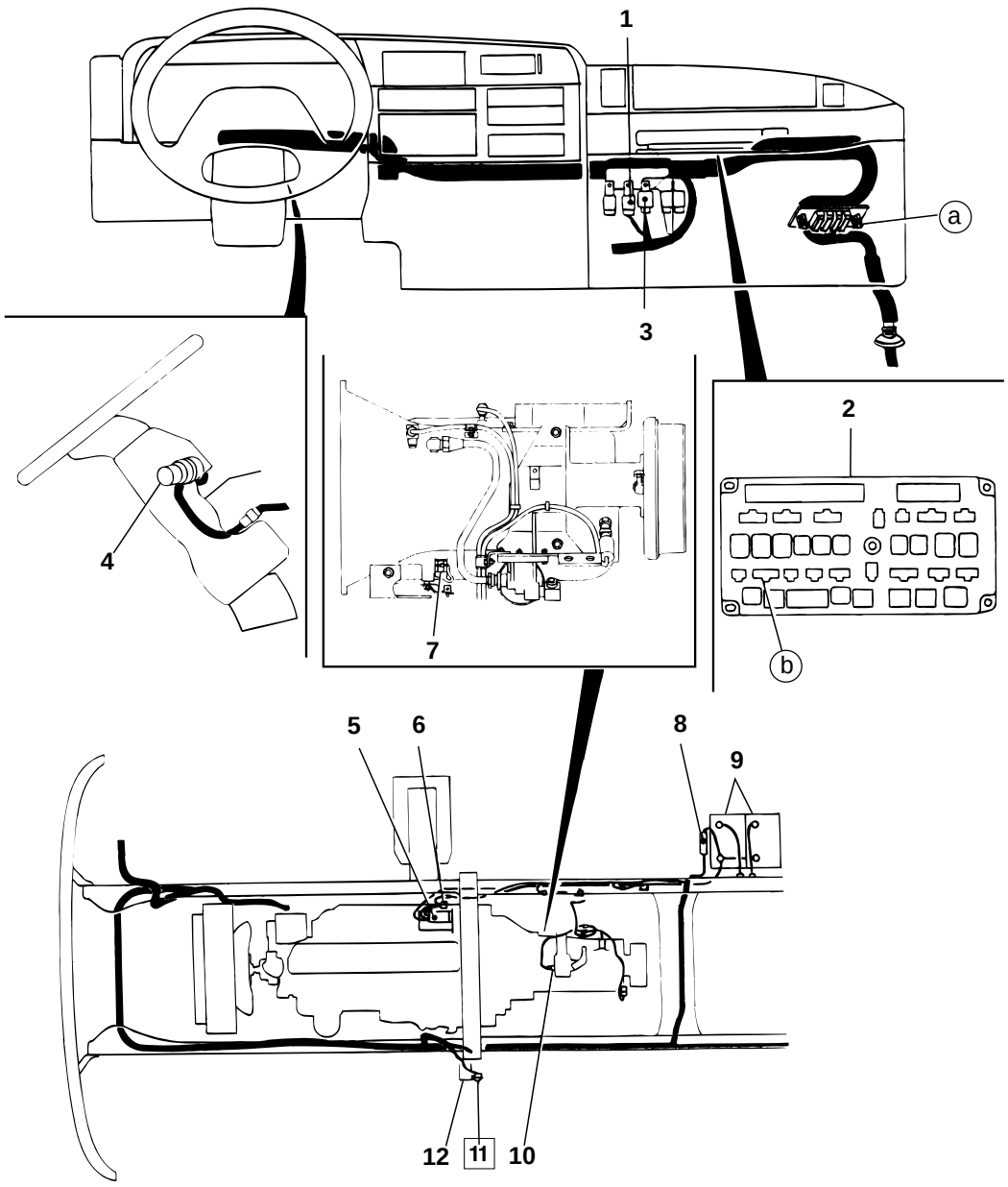

12863

1 Transmission neutral relay
< Manual transmission > 🕮 (604)
2 Relay and fuse box 🕮 (104)
3 Safety relay 🕮 (604)
4 Starter switch 🕮 (210)
5 Starter 🕮 (201)
6 Starter relay 🕮 (210)
7 Transmission neutral switch
< Automatic transmission > 🕮 (802)
8 High-current fuse box 🕮 (104)
9 Battery 🕮 (101)
10 Transmission neutral switch
< Manual transmission > 🕮 (802)
11 Sub-starter switch
12 Main high-current fuse box 🕮 (104)

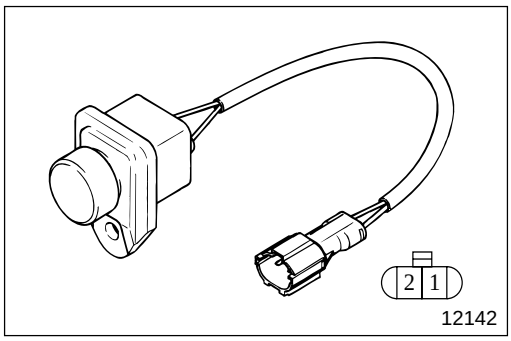

◆ Service procedure

11 **Inspection of sub-starter switch**

- Follow the table below to inspect continuity :

	①	②
ON	○—○	
OFF		

○—○ : There is continuity between terminals ○ and ○.

- If any fault is found, replace sub-starter switch **11**.

M E M O

215 ENGINE STOPPING CIRCUIT

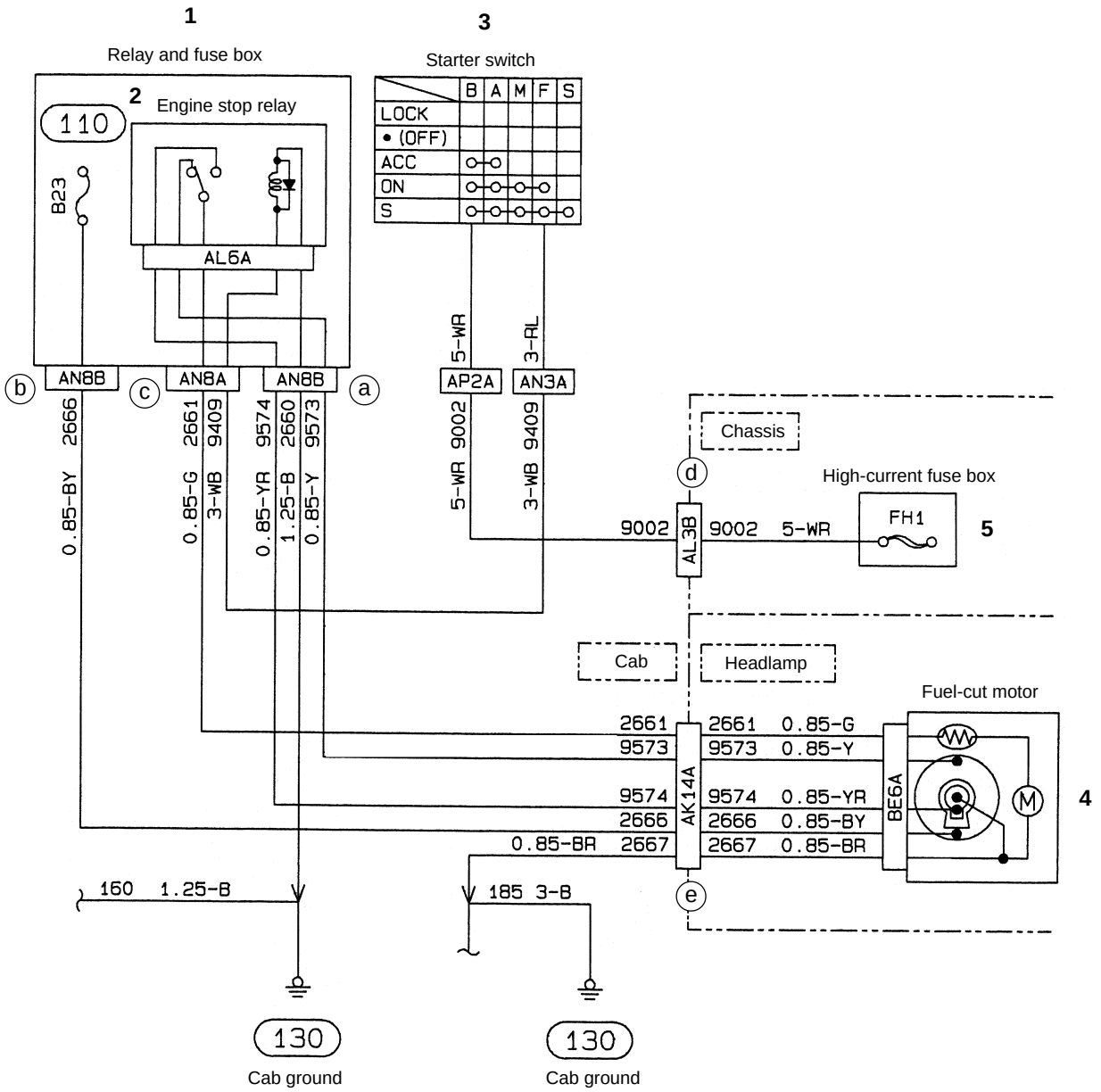

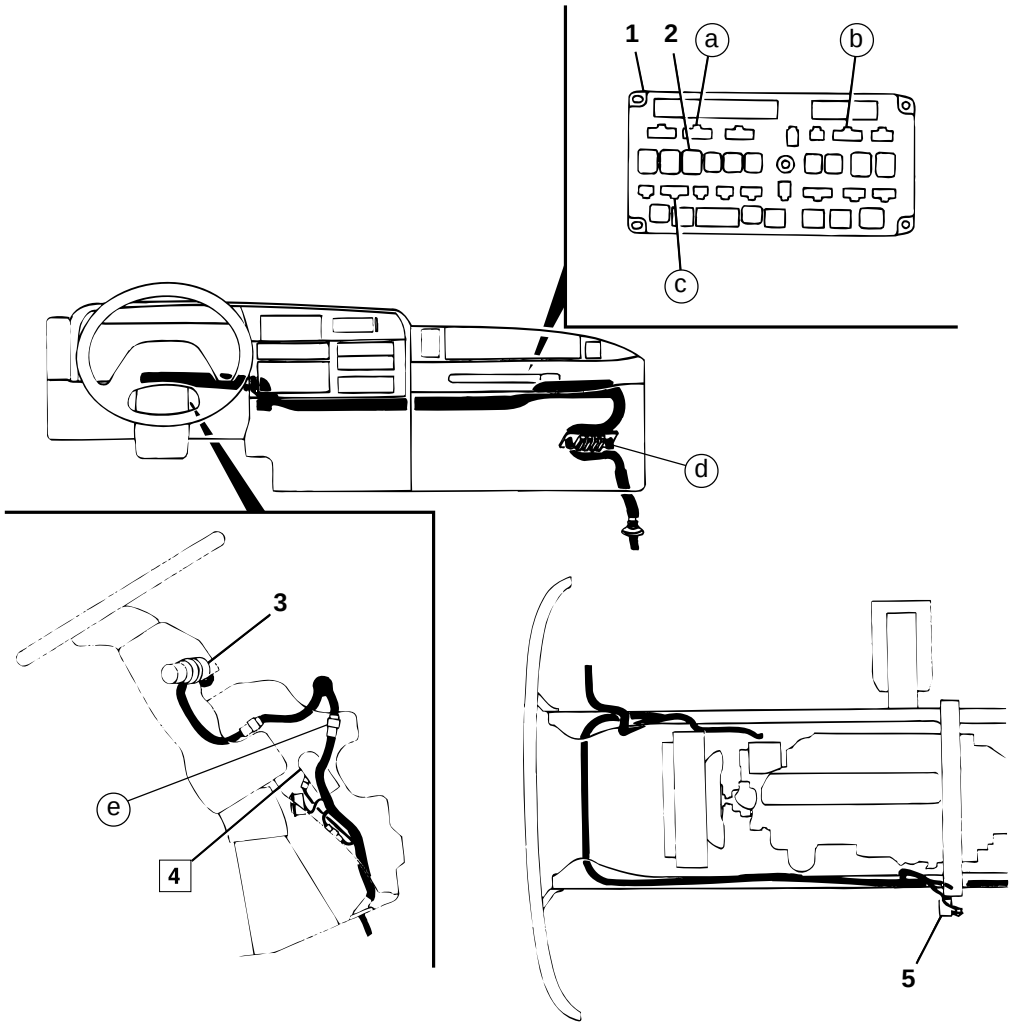

1 Relay and fuse box 104
2 Fuel-cut relay 604
3 Starter switch 210
4 Fuel-cut motor
5 Main high-current fuse 104

◆ Service procedure

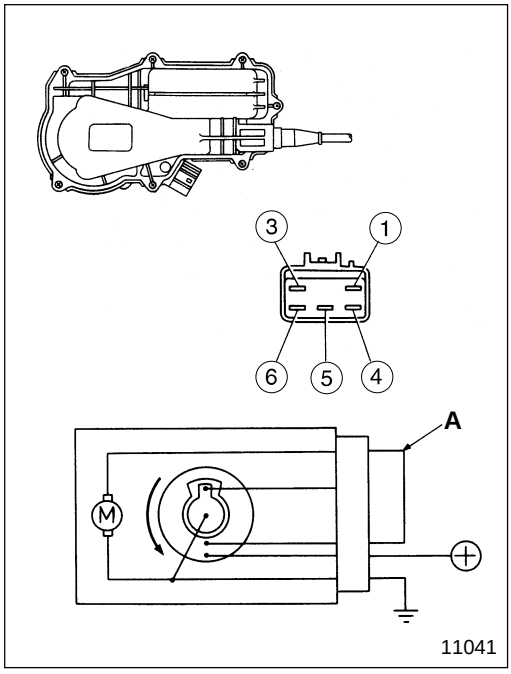

4 Inspection of fuel-cut motor

Inspect the following. If any fault is found, replace fuel-cut motor **4**.

(1) When starter switch is OFF (Fuel-cut state)

- Connect inspection harness **A** between terminals ③ and ⑤.
- Apply 12 volts DC between terminals ⑥ and ① to ensure that fuel-cut motor **4** works correctly.

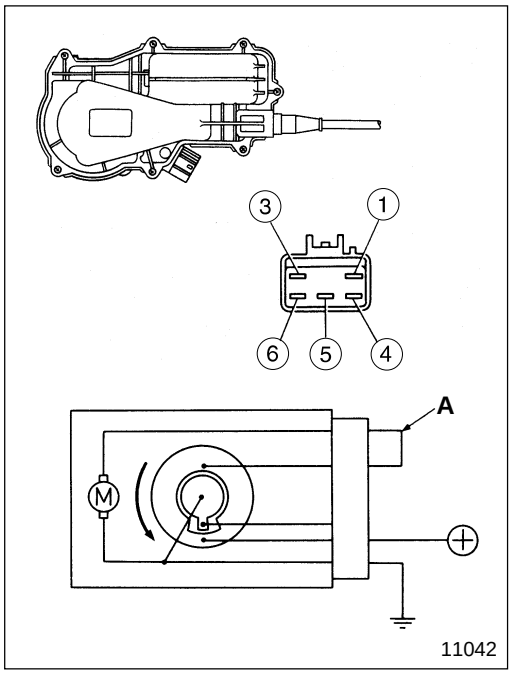

(2) When starter switch is ON (Fuel-cut reset state)

- Connect inspection harness **A** between terminals ③ and ④.
- Apply 12 volts DC between terminals ⑥ and ① to ensure that fuel-cut motor **4** works correctly.

M E M O

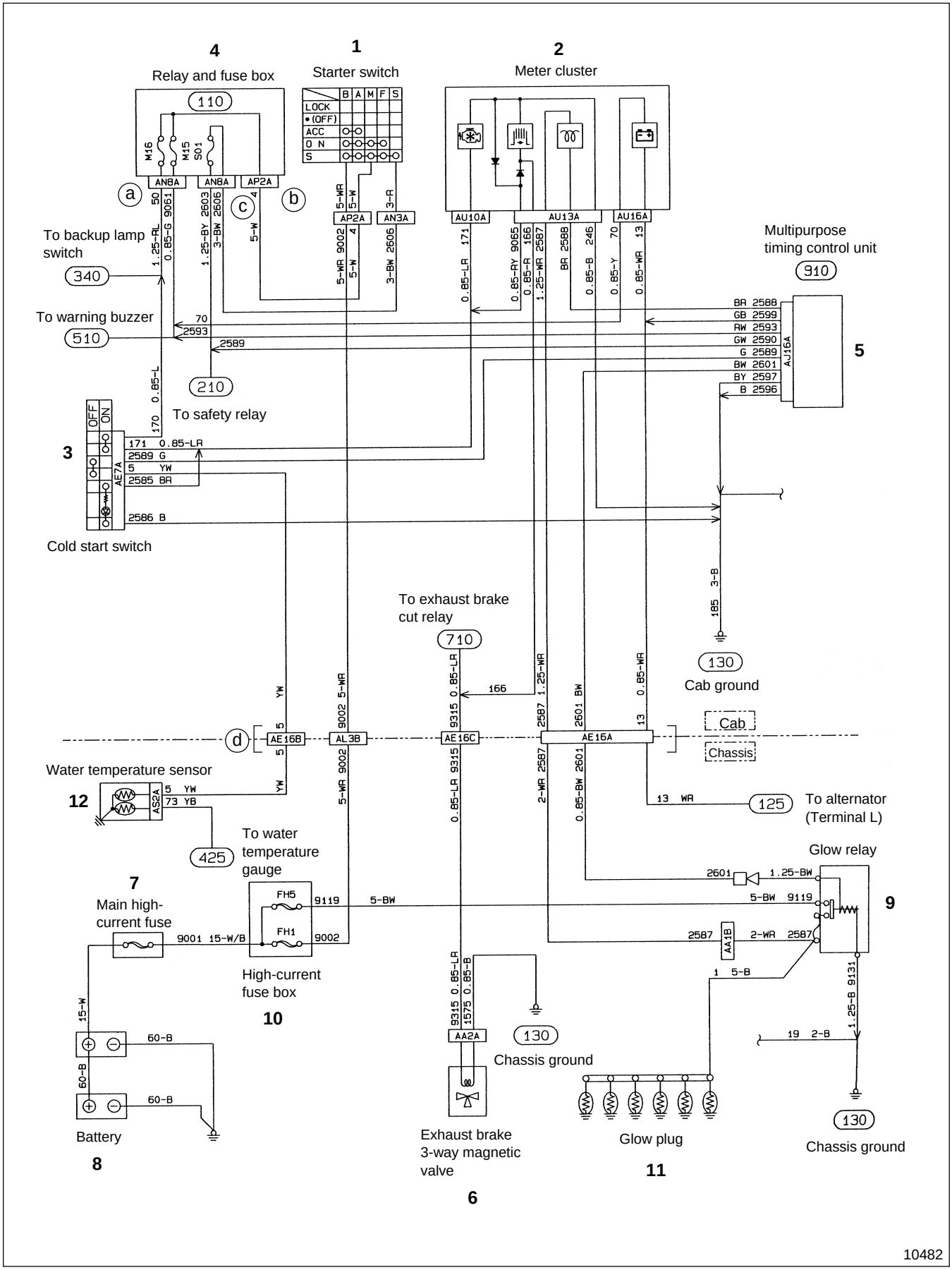
4
Relay and fuse box
1
Starter switch
2
Meter cluster
110
M16
M15
S01
AN8A
AN8A
AP2A
LOCK
(OFF)
ACC
ON
S
B A M F S
AP2A
AN3A
AU10A
AU13A
AU16A
To backup lamp switch
340
To warning buzzer
510
To safety relay
210
Multipurpose timing control unit
910
AU16A
5
3
OFF
ON
AE7A
Cold start switch
To exhaust brake cut relay
710
166
Cab ground
130
Cab
Chassis
AE16B
AL3B
AE16C
AE16A
Water temperature sensor
12
AS2A
To water temperature gauge
425
To alternator (Terminal L)
125
Glow relay
9
7
Main high-current fuse
FH5
FH1
9001 15-W/B
9002
9119
5-BW
High-current fuse box
10
AA1B
2-WR 2587
1 5-B
19 2-B
1.25-B 9131
15-W
60-B
60-B
60-B
Battery
8
AA2A
130
Chassis ground
Exhaust brake 3-way magnetic valve
6
Glow plug
11
130
Chassis ground
10482

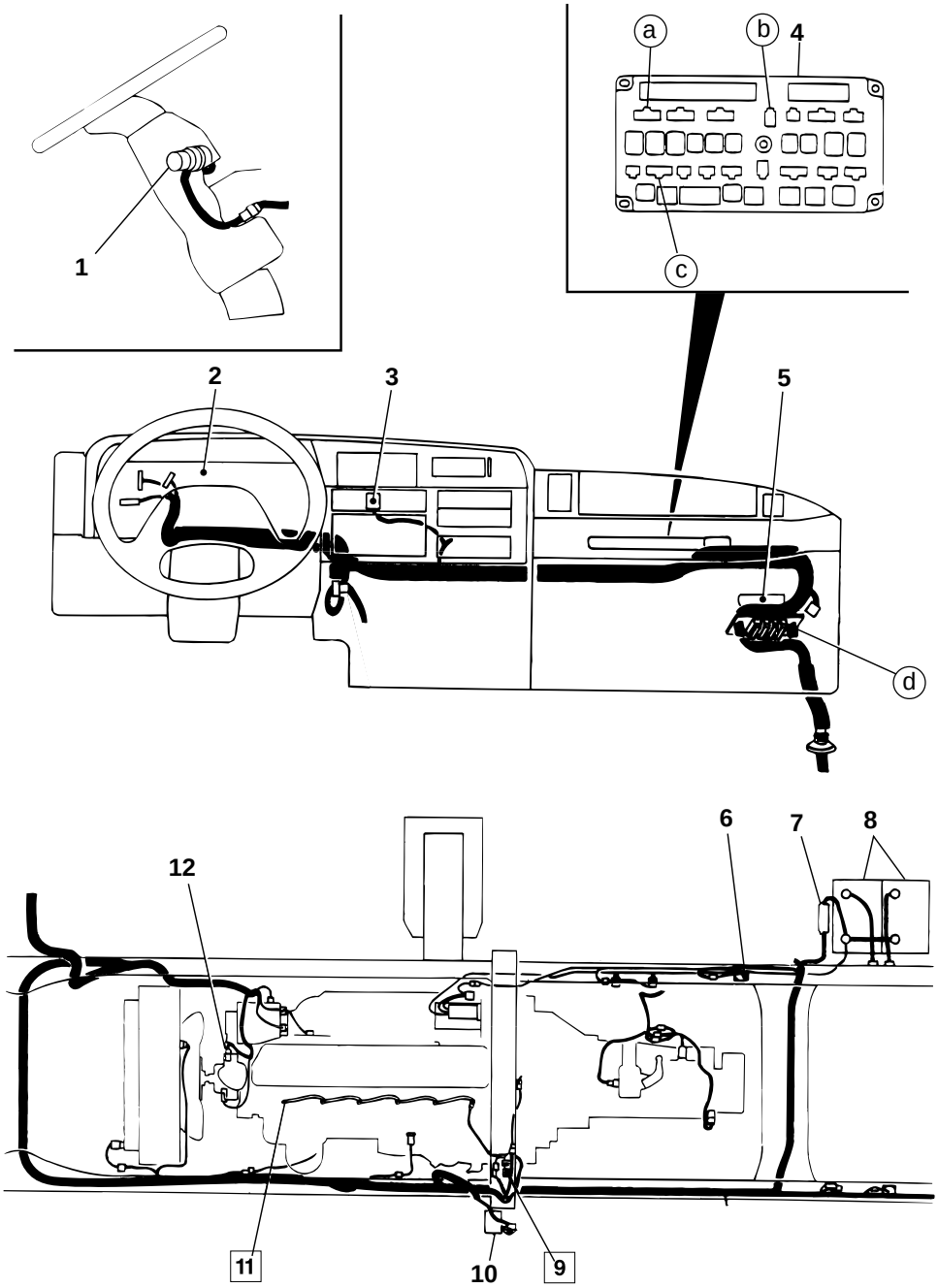

12865

1 Starter switch 🕮 (210)
2 Meter cluster 🕮 (401)
3 Cold start switch 🕮 (601)
4 Relay and fuse box 🕮 (104)
5 Multipurpose timing control unit 🕮 (604)
6 Exhaust brake 3-way magnetic valve 🕮 (701)
7 Main high-current fuse 🕮 (104)
8 Battery 🕮 (101)
9 Glow relay
10 High-current fuse box 🕮 (104)
11 Glow plug
12 Water temperature sensor 🕮 (801)

Service standards

Location	Maintenance item	Standard value	Limit	Remedy
11	Resistance of glow plug (at ambient temperature)	1.0 Ω (Reference value)	—	Replace

◆ Service procedure

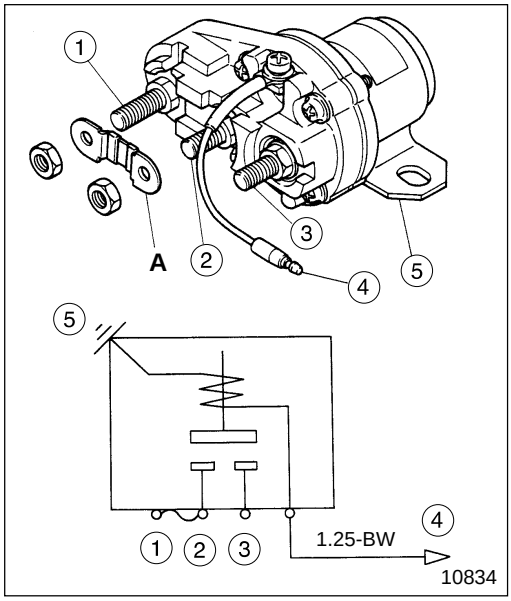

9 **Inspection of glow relay**

(1) Inspection of fuse

If any fault is found, replace fuse **A** (127 amperes).

(2) Inspection of body

- Follow the table below to inspect continuity :

	①	②	③	④	⑤
No current	○—○				
Current	○—○	○—○	○—○	⊕—⊖	

○—○ : There is continuity between terminals ○ and ○.
⊕—⊖ : Indicates that 12 volts DC is applied to the line between the terminals.
A : Fuse (127 amperes)

- If any fault is found, replace glow relay **9**.

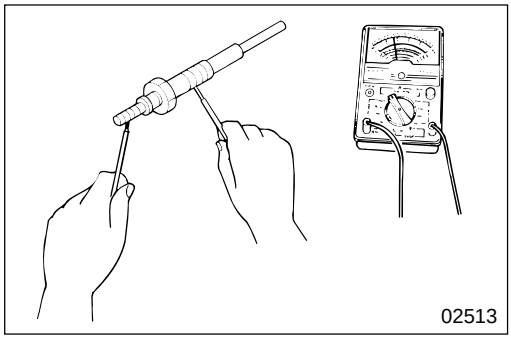

11 **Inspection of glow plug**

- Measure the resistance of glow plug **11** as illustrated.
- If the measured value deviates from the standard value, replace glow plug **11**. Gr 11

M E M O

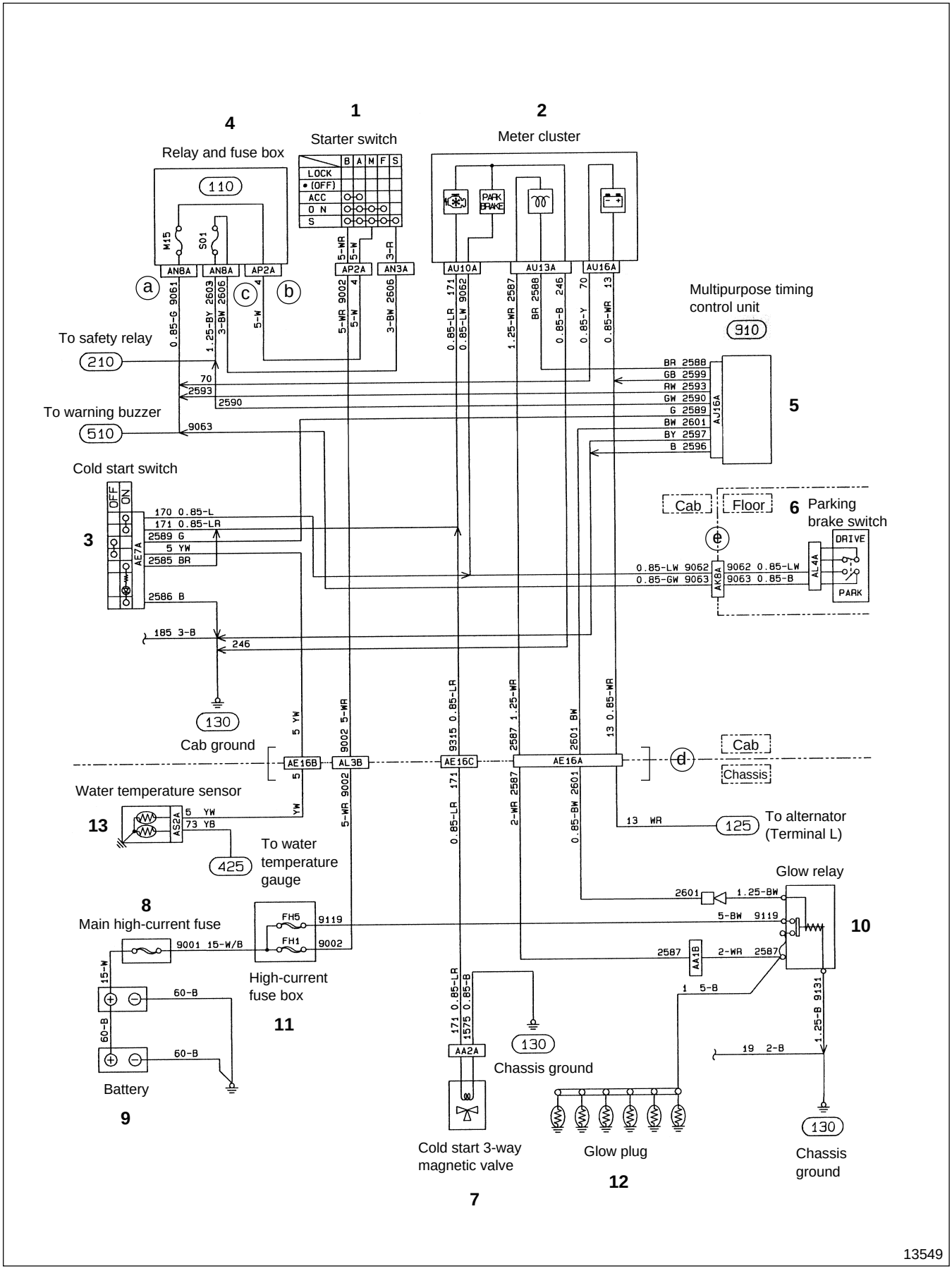
4
Relay and fuse box
110
M15
S01
AN8A
AN8A
AP2A
1
Starter switch
B A M F S
LOCK
• (OFF)
ACC
O N
S
5-WR
5-W
3-R
AP2A
AN3A
2
Meter cluster
PARK BRAKE
AU10A
AU13A
AU16A
a
b
c
d
Multipurpose timing control unit
910
To safety relay
210
To warning buzzer
510
0.85-G 9061
1.25-BY 2603
3-BW 2606
5-W
5-WR 9002
5-W
3-BW 2606
0.85-LR 171
0.85-LW 9062
1.25-WR 2587
BR 2588
0.85-B 246
0.85-Y 70
0.85-WR 13
70
2593
2590
9063
BR 2588
GB 2599
RW 2593
GW 2590
G 2589
BW 2601
BY 2597
B 2596
AJ16A
5
Cold start switch
OFF
ON
AE7A
3
170 0.85-L
171 0.85-LR
2589 G
5 YW
2585 BR
2586 B
185 3-B
246
130
Cab ground
Cab
Floor
6
Parking brake switch
DRIVE
PARK
AL4A
AK8A
0.85-LW 9062
0.85-GW 9063
9062 0.85-LW
9063 0.85-B
5 YW
9002 5-WR
9315 0.85-LR
2587 1.25-WR
2601 BW
13 0.85-WR
AE16B
AL3B
AE16C
AE16A
5
Cab
Chassis
Water temperature sensor
13
AS2A
5 YW
73 YB
To water temperature gauge
425
0.85-LR 171
2-WR 2587
0.85-BW 2601
13 WR
125
To alternator (Terminal L)
Glow relay
2601
1.25-BW
5-BW 9119
10
8
Main high-current fuse
FH5
FH1
9119
9002
9001 15-W/B
High-current fuse box
11
2587
AA1B
2-WR 2587
1 5-B
15-W
60-B
60-B
60-B
60-B
Battery
9
171 0.85-LR
1575 0.85-B
AA2A
130
Chassis ground
19 2-B
1.25-B 9131
130
Chassis ground
Cold start 3-way magnetic valve
Glow plug
12
7

13549

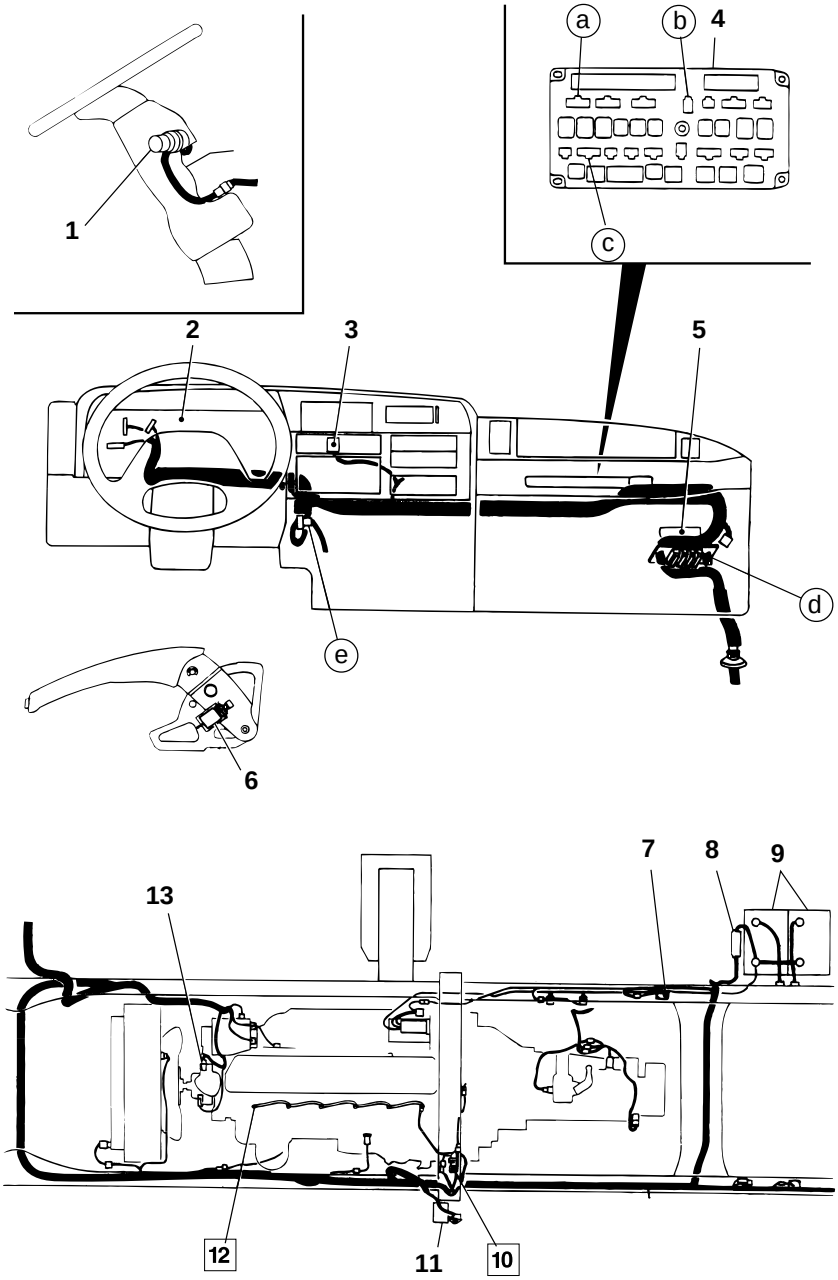

13498

1 Starter switch 🕮 (210)
2 Meter cluster 🕮 (401)
3 Cold start switch 🕮 (601)
4 Relay and fuse box 🕮 (104)
5 Multipurpose timing control unit 🕮 (604)
6 Parking brake switch 🕮 (510)
7 Cold start 3-way magnetic valve 🕮 (701)
8 Main high-current fuse 🕮 (104)
9 Battery 🕮 (101)
10 Glow relay
11 High-current fuse box 🕮 (104)
12 Glow plug
13 Water temperature sensor 🕮 (801)

Service standards

Location	Maintenance item	Standard value	Limit	Remedy
12	Resistance of glow plug (at ambient temperature)	1.0 Ω (Reference value)	—	Replace

◆ Service procedure

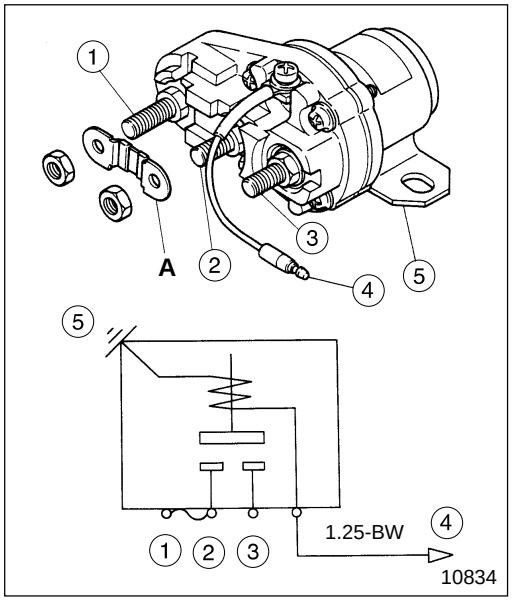

10 **Inspection of glow relay**

(1) Inspection of fuse

If any fault is found, replace fuse **A** (127 amperes).

(2) Inspection of body

- Follow the table below to inspect continuity :

	①	②	③	④	⑤
No current	○—○				
Current	○—○	○—○	○	⊕	⊖

○—○ : There is continuity between terminals ○ and ○.
⊕—⊖ : Indicates that 12 volts DC is applied to the line between the terminals.
A : Fuse (127 amperes)

- If any fault is found, replace glow relay **10**.

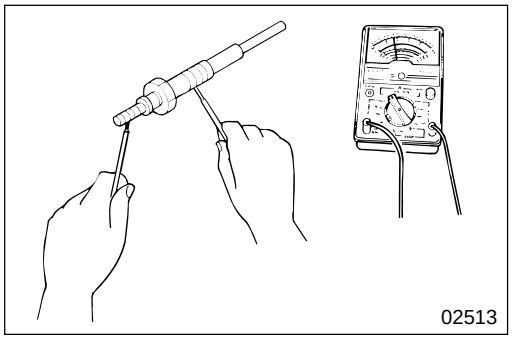

12 **Inspection of glow plug**

- Measure the resistance of glow plug **12** as illustrated.
- If the measured value deviates from the standard value, replace glow plug **12**. Gr 11

3 LIGHTING

SPECIFICATIONS 54-3-2

STRUCTURE AND OPERATION 54-3-4

TROUBLESHOOTING 54-3-6

300 INSPECTION AND ADJUSTMENT MOUNTED IN VEHICLE
Headlamp Aiming 54-3-8

310 HEADLAMP CIRCUIT 54-3-10

320 TAIL LAMP, CLEARANCE LAMP AND LICENSE PLATE LAMP CIRCUITS 54-3-12

325 STOP LAMP CIRCUIT 54-3-14

330 TURN SIGNAL LAMP AND HAZARD LAMP CIRCUITS 54-3-18

340 BACKUP LAMP CIRCUIT 54-3-20

345 CAB LAMP CIRCUIT 54-3-24

348 ILLUMINATION LAMP CIRCUIT 54-3-28

349 MARKER LAMP AND IDENTIFICATION LAMP CIRCUITS 54-3-30

352 VAN BODY DOME LIGHT CIRCUIT 54-3-32

SPECIFICATIONS

Item			Specifications
Voltage		V	12
Headlamp	Model		Sealed beam
	Type		Reflex type
	HIGH beam	W	50
	HIGH/LOW beam	W	60/40
Front turn signal lamp (also used as hazard lamp)		W	21
Clearance lamp		W	7.5
Side turn signal lamp (also used as hazard lamp)		W	10
Rear combination lamp	Stop/Tail	W	27/8
	Turn (also used as hazard lamp)	W	27
	Backup	W	27
License plate lamp		W	7.5
Cab and spot lamp	Cab	W	12
	Spot	W	8
Identification lamp		W	7.5
Clearance and side marker lamp		W	7.5
Back buzzer	Rated voltage	V	12
	Rated current	mA	50 or less
	Sound pressure	dB	85±10 (at 1 m {3.3 ft})
	Frequency Times/minute		85±15

M E M O

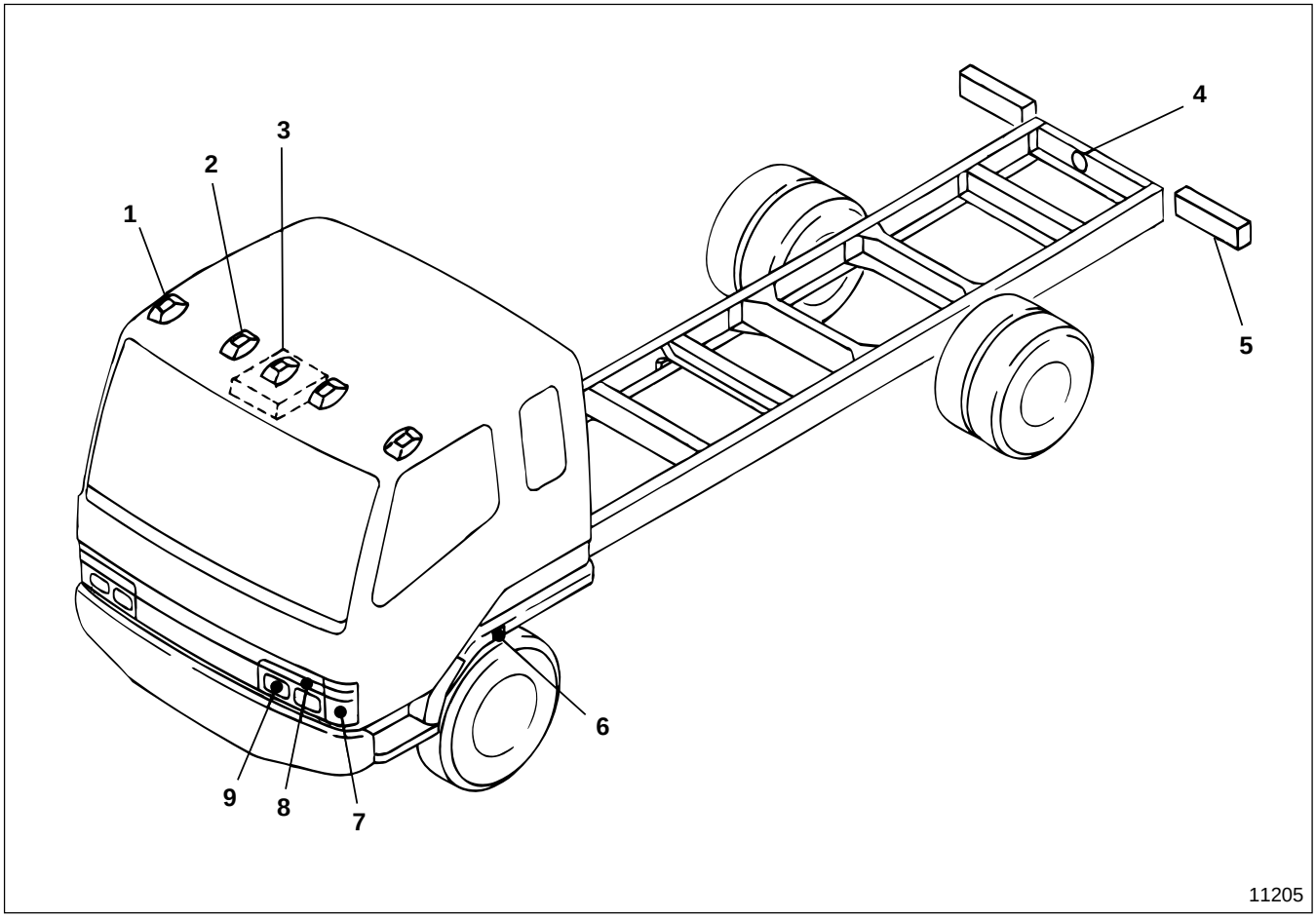

1 Clearance and side marker lamp
2 Identification lamp
3 Cab and spot lamp
4 License plate lamp
5 Rear combination lamp
6 Side turn signal lamp
7 Clearance lamp
8 Front turn signal lamp
9 Headlamp

Headlamp

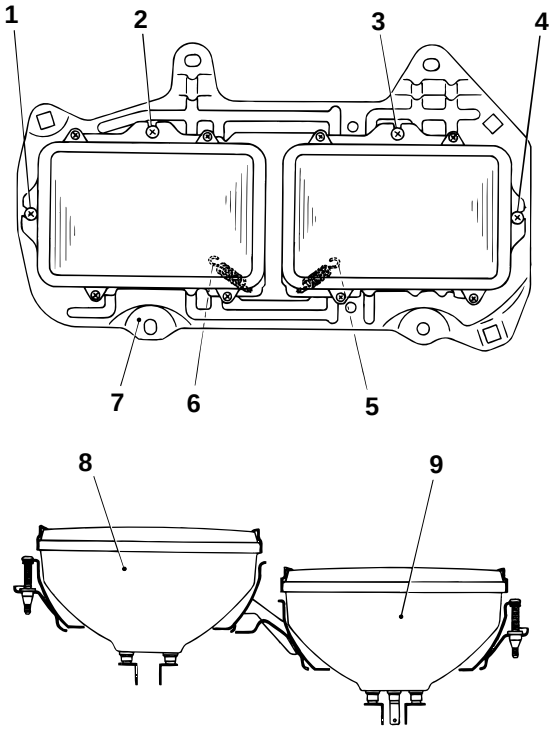

1 Screw (HIGH beam, horizontal adjustment)
2 Screw (HIGH beam, vertical adjustment)
3 Screw (HIGH/LOW beam, vertical adjustment)
4 Screw (HIGH/LOW beam, horizontal adjustment)
5 Extension spring
6 Extension spring
7 Housing
8 Sealed beam unit (HIGH beam)
9 Sealed beam unit (HIGH/LOW beam)

- The headlamp unit consists of sealed beam units **8, 9** separately installed in housing **7**. Sealed beam unit **8** is for HIGH beam, and sealed beam unit **9** is for HIGH/LOW beam.
- The headlamp aiming can be adjusted by changing the installation angle of sealed beam units **8, 9**.
- To adjust the installation angle of sealed beam unit **8**, turn screws **1, 2**. Extension spring **6** sets the angle of the sealed beam unit.
- To adjust the installation angle of sealed beam unit **9**, turn screws **3, 4**. Extension spring **5** sets the angle in the same way as for sealed beam unit **8**.

TROUBLESHOOTING

Possible causes \ Symptoms		Headlamp				Tail lamp, clearance lamp, license plate lamp, clearance and side marker lamp, identification lamp	
		Does not light	Dim	HIGH beam does not light	LOW beam does not light	Does not light	Stop lamp does not light
Connector connection faulty, harness broken, grounding faulty		○				○	○
Fuse blown		○				○	○
Battery charge insufficient			○				
Alternator output insufficient			○				
Bulb burnt-out		○				○	○
Power (wattage) of bulb is lower than specified value							
Power (wattage) of bulb is higher than specified value							
Combination switch	Lighting switch faulty	○				○	
	Dimmer switch faulty			○	○		
	Turn signal switch faulty						
	Hazard switch faulty						
Relay box	Headlamp relay (HIGH/LOW) faulty	○		○	○		
	Tail lamp relay faulty					○	
	Flasher unit faulty						
	Stop lamp relay faulty						○
Stop lamp switch faulty							○
Meter cluster faulty							
Backup lamp switch faulty							
Back buzzer faulty							
Door switch faulty							
Cab and spot lamp faulty							
Rheostat switch faulty							
Turn signal lamp relay faulty							
Tail lamp bulb burnt-out							
Van body dome light relay faulty							
Van body dome light switch faulty							

Possible causes \ Symptoms		Turn signal lamp (also used as hazard lamp)					Backup lamp does not light	Back buzzer does not sound	Cab and spot lamp does not light	Meter and heater control illumination lamps do not light	Meter and heater control illumination lamps cannot be adjusted	Van body dome light does not light
		Does not light	Does not go off	Blinks too slowly	Blinks too quickly	Blink interval uneven						
Connector connection faulty, harness broken, grounding faulty		○					○	○	○	○		○
Fuse blown		○					○		○	○		○
Battery charge insufficient			○									
Alternator output insufficient			○									
Bulb burnt-out		○			○		○		○	○		○
Power (wattage) of bulb is lower than specified value					○							
Power (wattage) of bulb is higher than specified value				○								
Combination switch	Lighting switch faulty											
	Dimmer switch faulty											
	Turn signal switch faulty	○	○									
	Hazard switch faulty	○	○									
Relay box	Headlamp relay (HIGH/LOW) faulty											
	Tail lamp relay faulty									○		
	Flasher unit faulty	○	○	○	○	○						
	Stop lamp relay faulty											
Stop lamp switch faulty												
Meter cluster faulty												
Backup lamp switch faulty							○	○				
Back buzzer faulty								○				
Door switch faulty									○			
Cab and spot lamp faulty									○			
Rheostat switch faulty										○	○	
Turn signal lamp relay faulty		○										
Tail lamp bulb burnt-out								○				
Van body dome light relay faulty												○
Van body dome light switch faulty												○

Headlamp Aiming

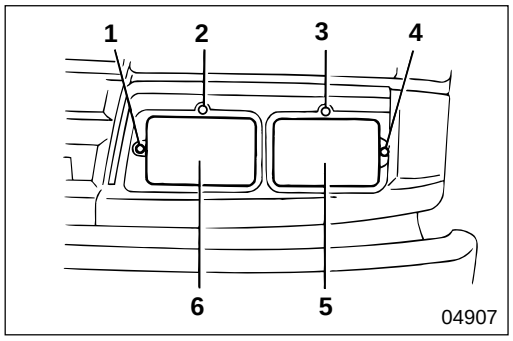

1 Screw (HIGH beam, horizontal adjustment)
2 Screw (HIGH beam, vertical adjustment)
3 Screw (HIGH/LOW beam, vertical adjustment)
4 Screw (HIGH/LOW beam, holizontal adjustment)
5 HIGH/LOW beam
6 HIGH beam

To adjust the headlamp move the optical axis of HIGH beam **6** by turning screws **1, 2**; and move the optical axis of HIGH/LOW beam **5** by turning screws **3, 4.** You need to adjust the aiming of both the HIGH and the HIGH/LOW beams on both the left and right headlamps.

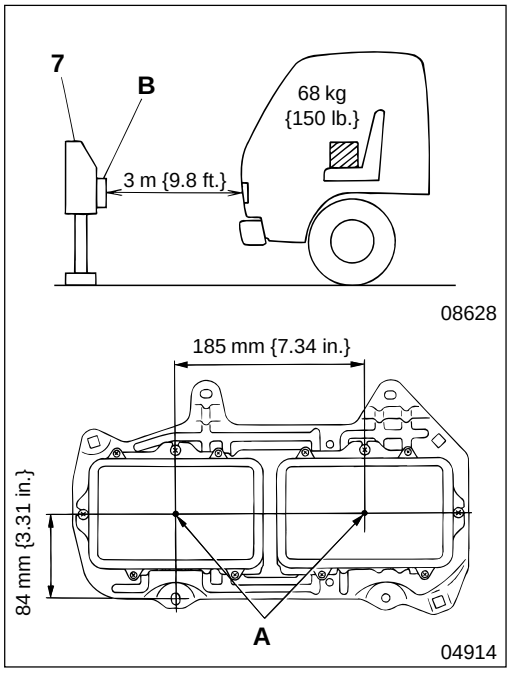

(1) Preparatory work before adjustment

- Park the vehicle on a level place.

WARNING
You must put wheel chocks securely in place.

- Unload the vehicle and make sure no one is in it.
- Inflate the tires to specified pressure. Gr 31
- Seat one person or an equivalent mass (68 kg {150 lb}) in the vehicle.
- Start the engine and check that the battery is being charged.
- Place convergent headlamp tester **7** in line with HIGH beam **6** or HIGH/LOW beam **5** of either the left or right headlamp at a distance of **3** m {9.8 ft}.
- Align the center of convergent lens **B** of convergent headlamp tester **7** with lamp center **A** of HIGH beam **6** or HIGH/LOW beam **5**. (The illustration shows a left headlamp.)
- When adjusting one headlamp, mask the other to avoid light leakage.

(2) Adjustment

WARNING
Do not mask a lit headlamp for more than 10 minutes or the heat generated might cause a fire.

CAUTION
When completing the adjustment using screws 1 to 4, the action must be finished in the tightening direction.

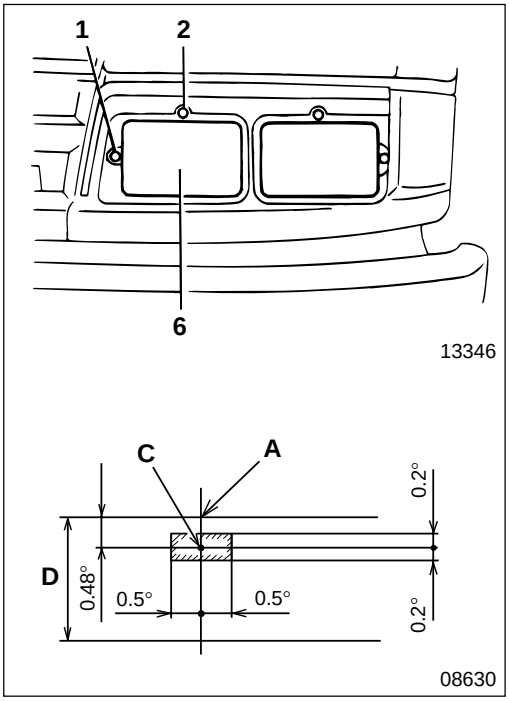

● **Adjustment of HIGH beam unit**

- Turn on HIGH beam **6**.
- Adjust as follows so that the optical axis (maximum illumination point) **C** of HIGH beam **6** is located as illustrated:
  - Vertical adjustment: Turn screw **2** to adjust.
  - Horizontal adjustment: Turn screw **1** to adjust.

  The aiming of both left and right HIGH beams **6** should be adjusted to the position as illustrated.

▭ : Tolerance of adjustment

A : Center of headlamp
D : Height from the ground to headlamp center

	Adjusting direction for optical axis			
	Upward	Downward	Leftward	Rightward
Screw 1	—	—	(Counter-clockwise)	(Clockwise)
Screw 2	(Clockwise)	(Counter-clockwise)	—	—

Turning direction of the screws in the table is as viewed from the front.

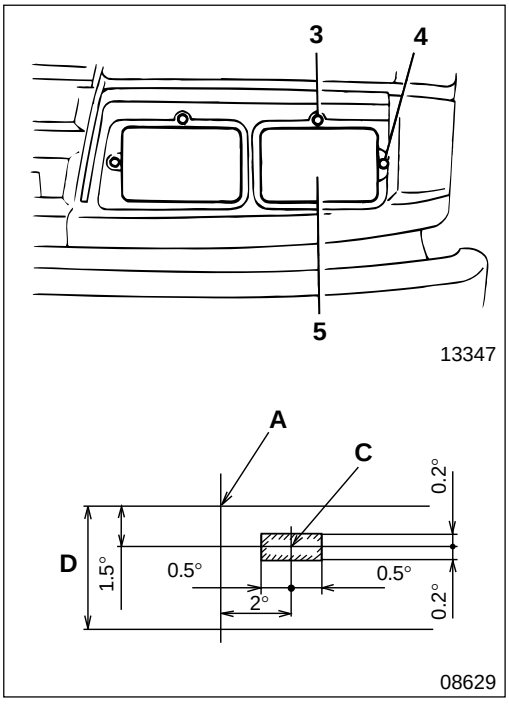

● **Adjustment of HIGH/LOW beam unit**

- Turn on the LOW beam of HIGH/LOW beam **5**.
- Adjust as follows so that the optical axis (maximum illumination point) **C** of HIGH/LOW beam is located as illustrated:
  - Vertical adjustment: Turn screw **3** to adjust.
  - Horizontal adjustment: Turn screw **4** to adjust.

  The aiming of both left and right HIGH/LOW beams **5** should be adjusted to the position as illustrated.

▭ : Tolerance of adjustment

A : Center of lamp
D : Height from the ground to headlamp center

	Adjusting direction for optical axis			
	Upward	Downward	Leftward	Rightward
Screw 3	(Clockwise)	(Counter-clockwise)	—	—
Screw 4	—	—	(Counter-clockwise)	(Clockwise)

Turning direction of the screws in the table is as viewed from the front.

310 HEADLAMP CIRCUIT

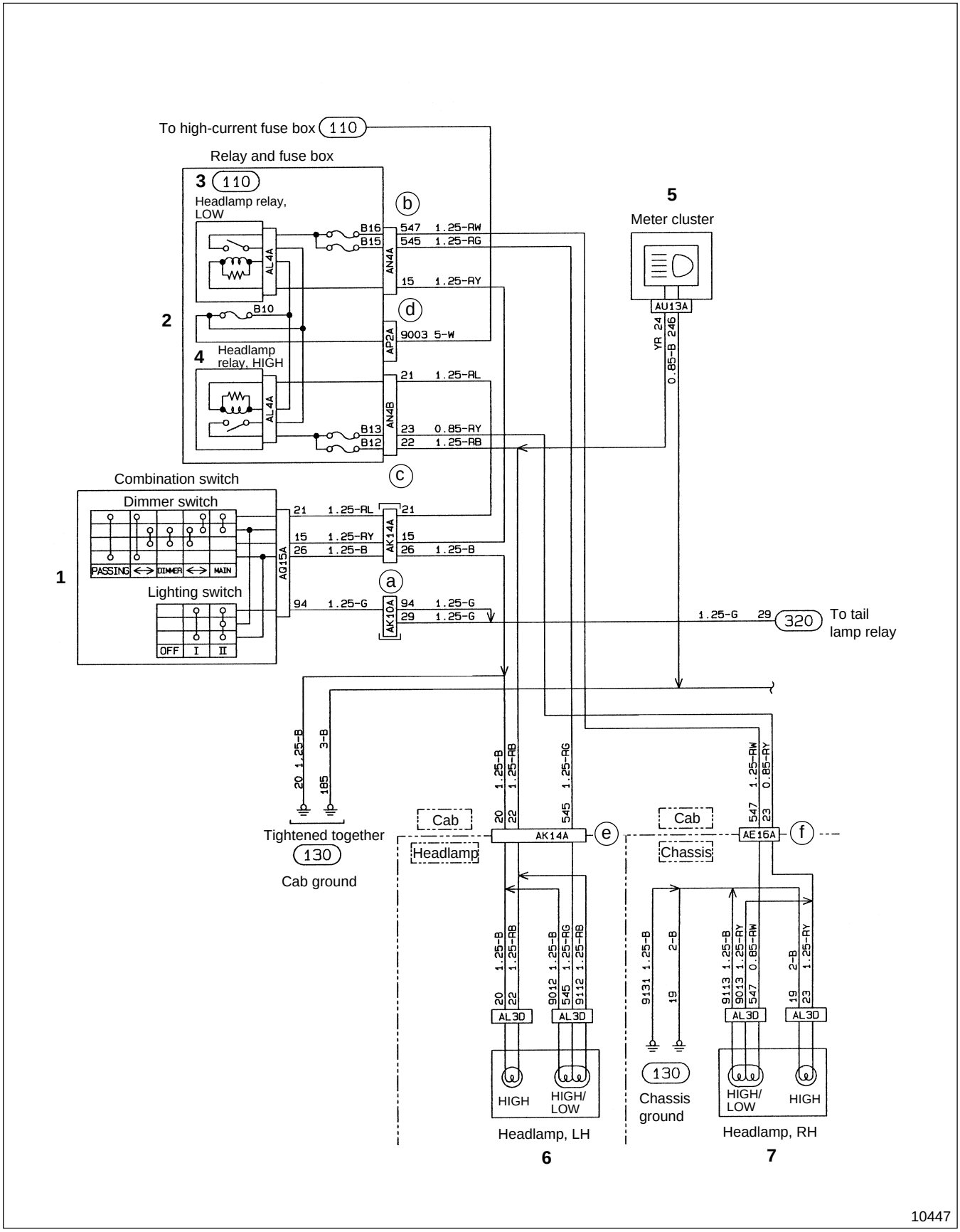

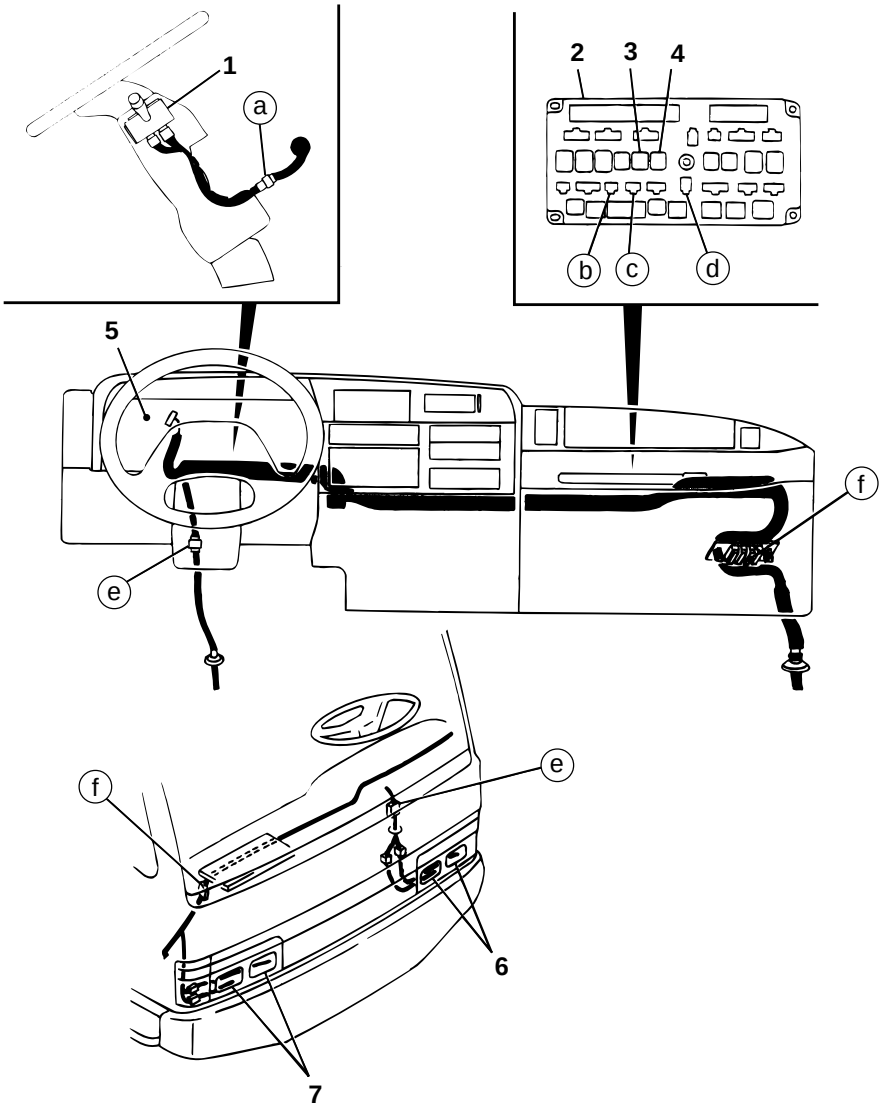

12866

1 Combination switch 601
2 Relay and fuse box 104
3 Headlamp relay (LOW) 604
4 Headlamp relay (HIGH) 604
5 Meter cluster 401
6 Headlamp, LH 300
7 Headlamp, RH 300

320 TAIL LAMP, CLEARANCE LAMP AND LICENSE PLATE LAMP CIRCUITS

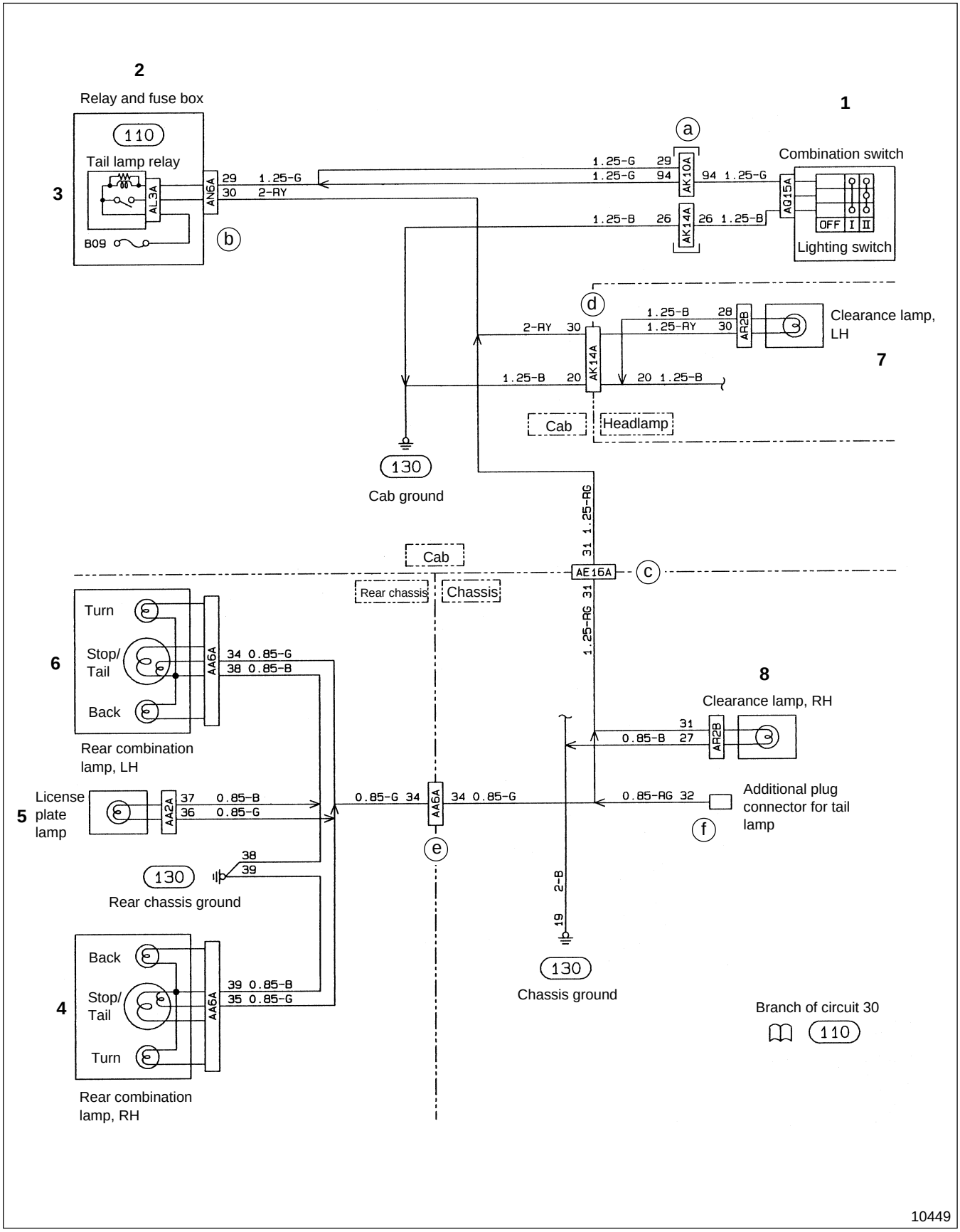

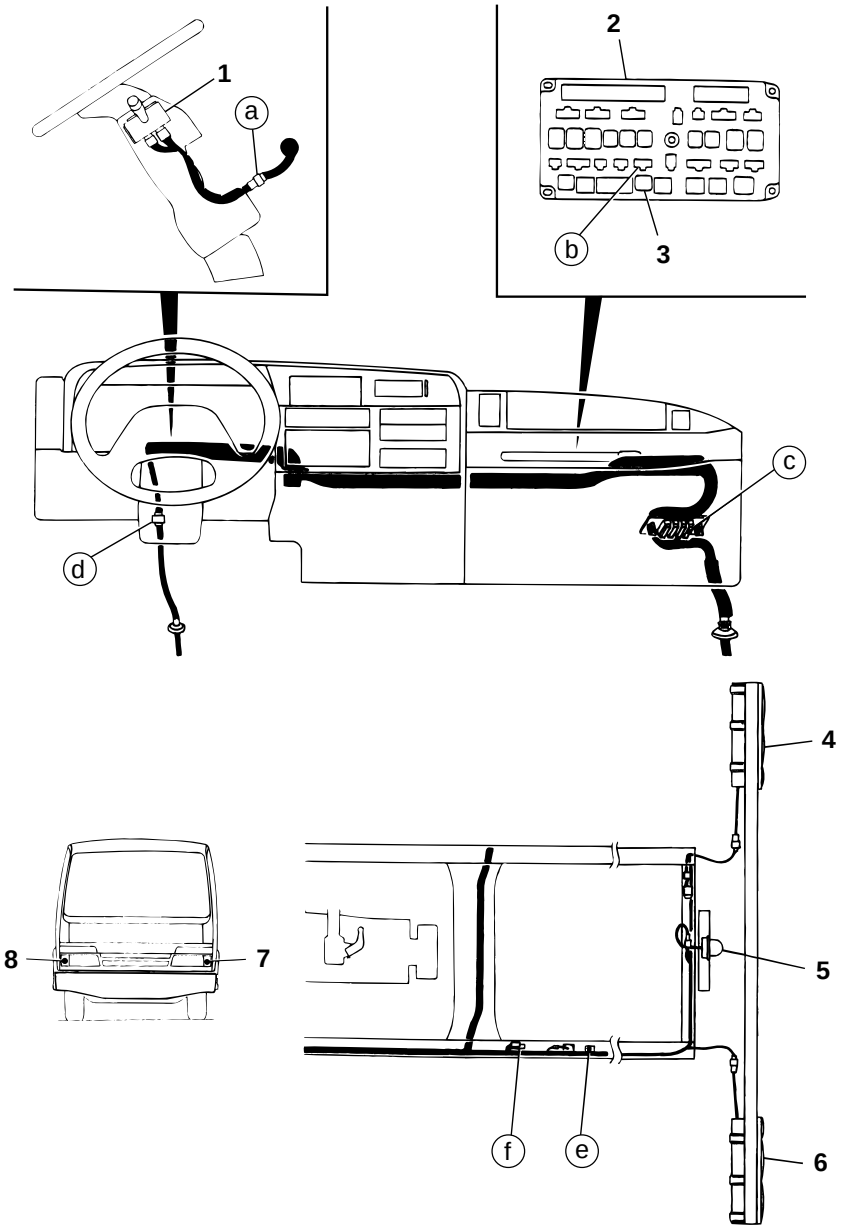

12867

1 Combination switch 601
2 Relay and fuse box 104
3 Tail lamp relay 604
4 Rear combination lamp, RH
5 License plate lamp
6 Rear combination lamp, LH
7 Clearance lamp, LH
8 Clearance lamp, RH

325 STOP LAMP CIRCUIT

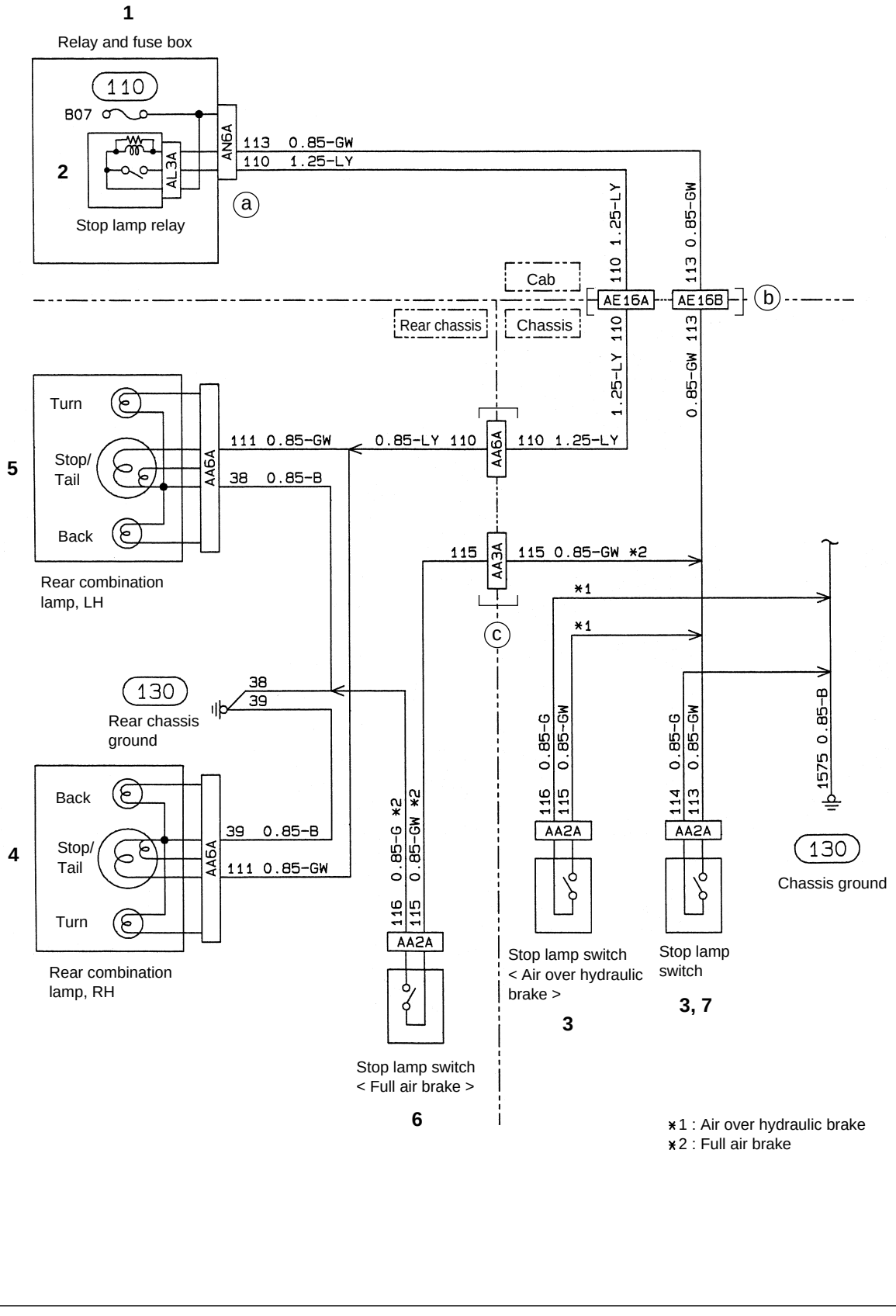

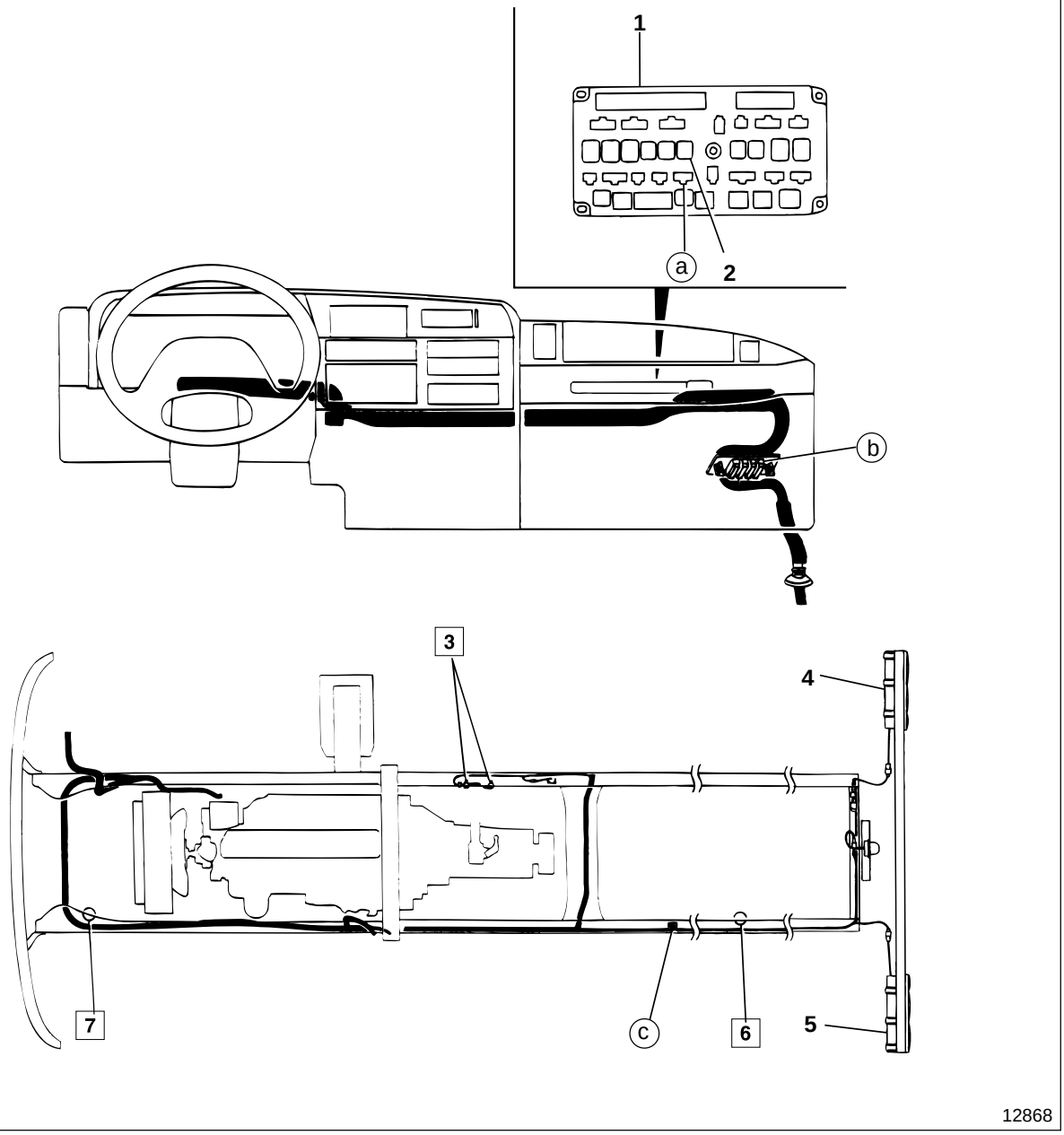

1 Relay and fuse box 📖 104
2 Stop lamp relay 📖 604
3 Stop lamp switch < Air over hydraulic brake >
4 Rear combination lamp, RH
5 Rear combination lamp, LH
6 Stop lamp switch < Full air brake >
7 Stop lamp switch < Full air brake >

Service standards

Location	Maintenance item	Standard value	Limit	Remedy
3, 6, 7	Operating pressure of stop lamp switch	29±9.8 kPa {4.3±1.4 lbf/in², 0.3±0.1 kgf/cm²}	—	Replace

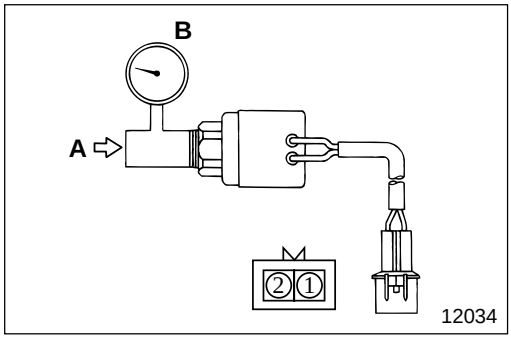

◆ Service procedure

3 6 7 Inspection of stop lamp switch

Carry out the following inspection. If any fault is found, replace stop lamp switches **3**, **6**, **7**.

- Make sure that there is no continuity between terminals ① and ② when air pressure **A** is not applied to stop lamp switches **3**, **6**, **7**.
- Apply air pressure **A** to stop lamp switches **3**, **6**, **7** gradually starting from 0 kPa {0 lbf/in², 0 kgf/cm²}.
  Measure air pressure **A** when continuity is present between terminals ① and ② to make sure that the value conforms to the standard value.
  B : Air pressure gauge

M E M O

330 TURN SIGNAL LAMP AND HAZARD LAMP CIRCUITS

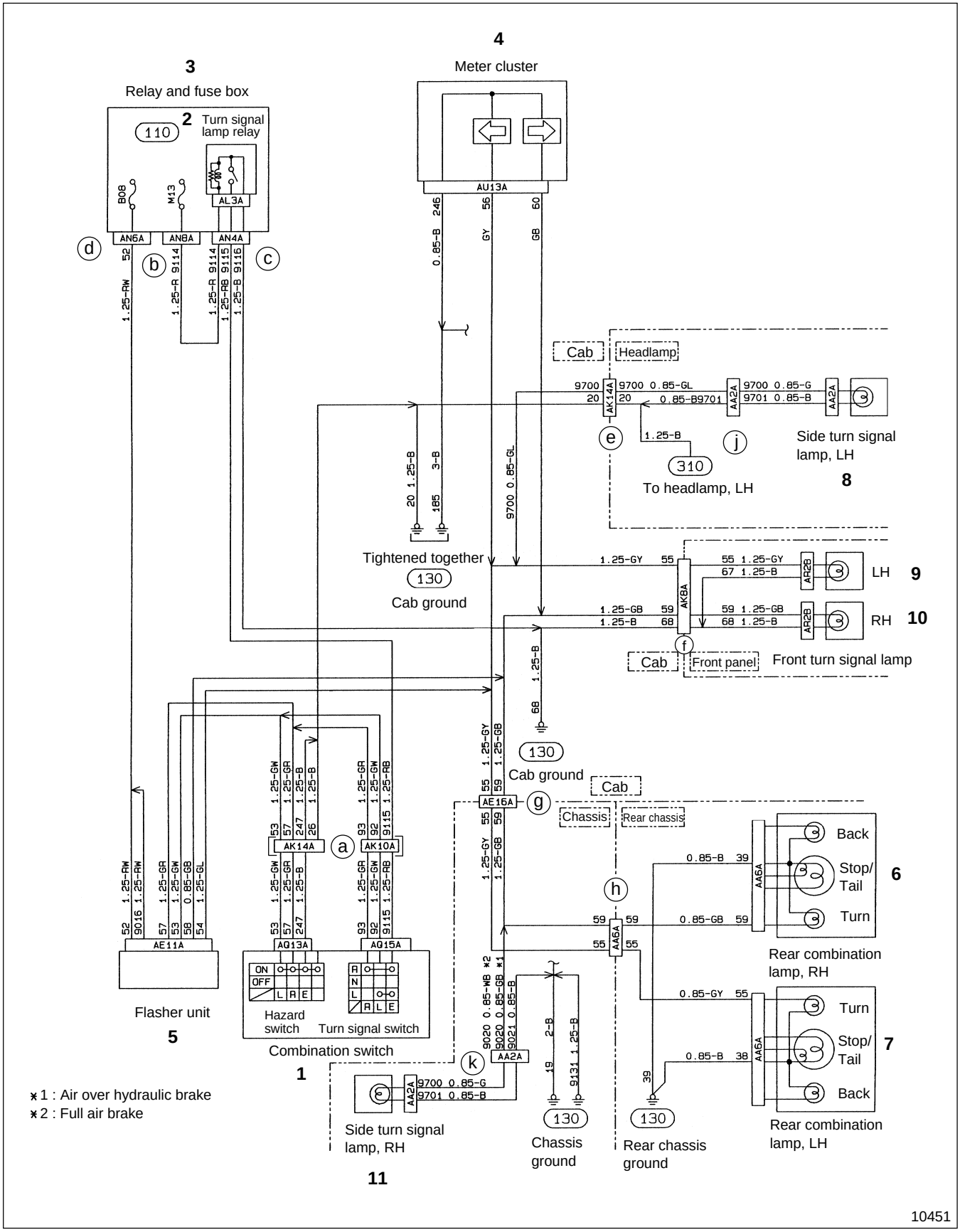

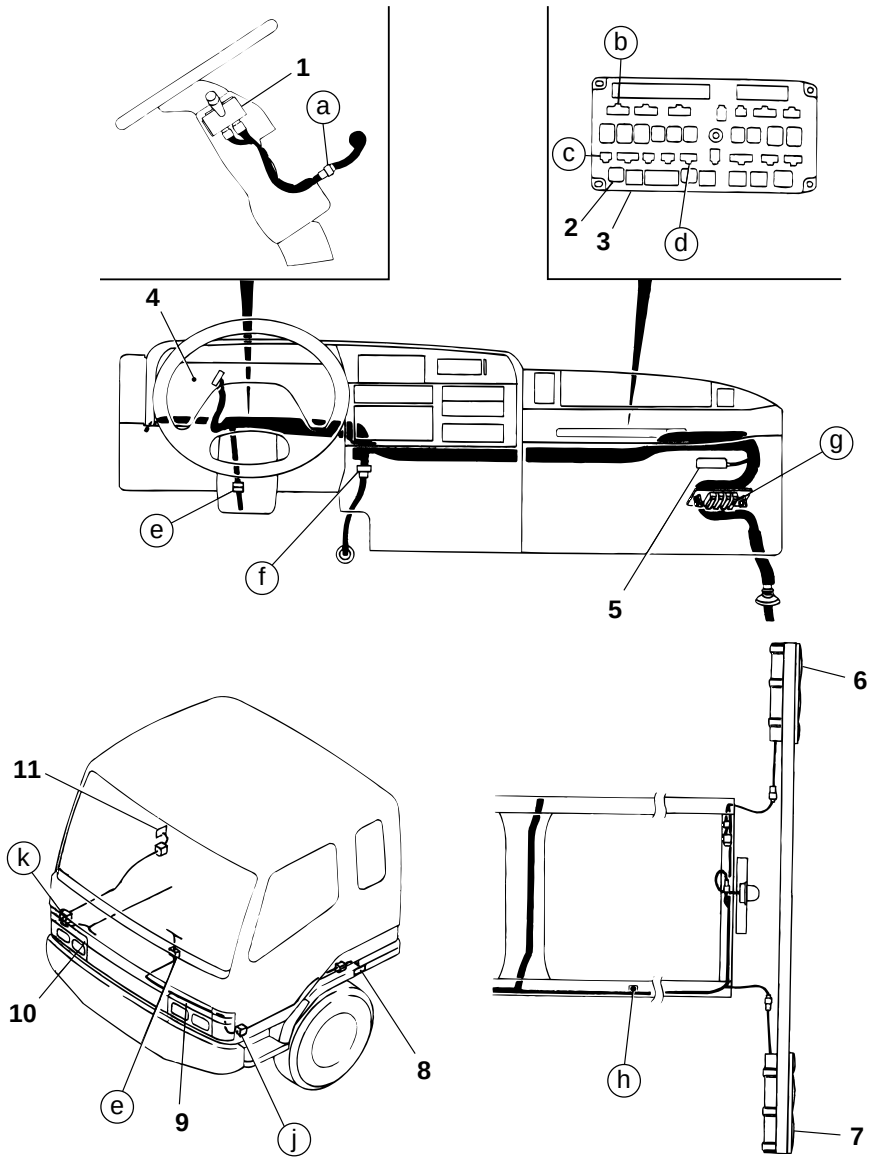

12869

1 Combination switch 601
2 Turn signal lamp relay 604
3 Relay and fuse box 104
4 Meter cluster 401
5 Flasher unit 604
6 Rear combination lamp, RH
7 Rear combination lamp, LH
8 Front turn signal lamp, LH
9 Side turn signal lamp, LH
10 Front turn signal lamp, RH
11 Side turn signal lamp, RH

340 BACKUP LAMP CIRCUIT

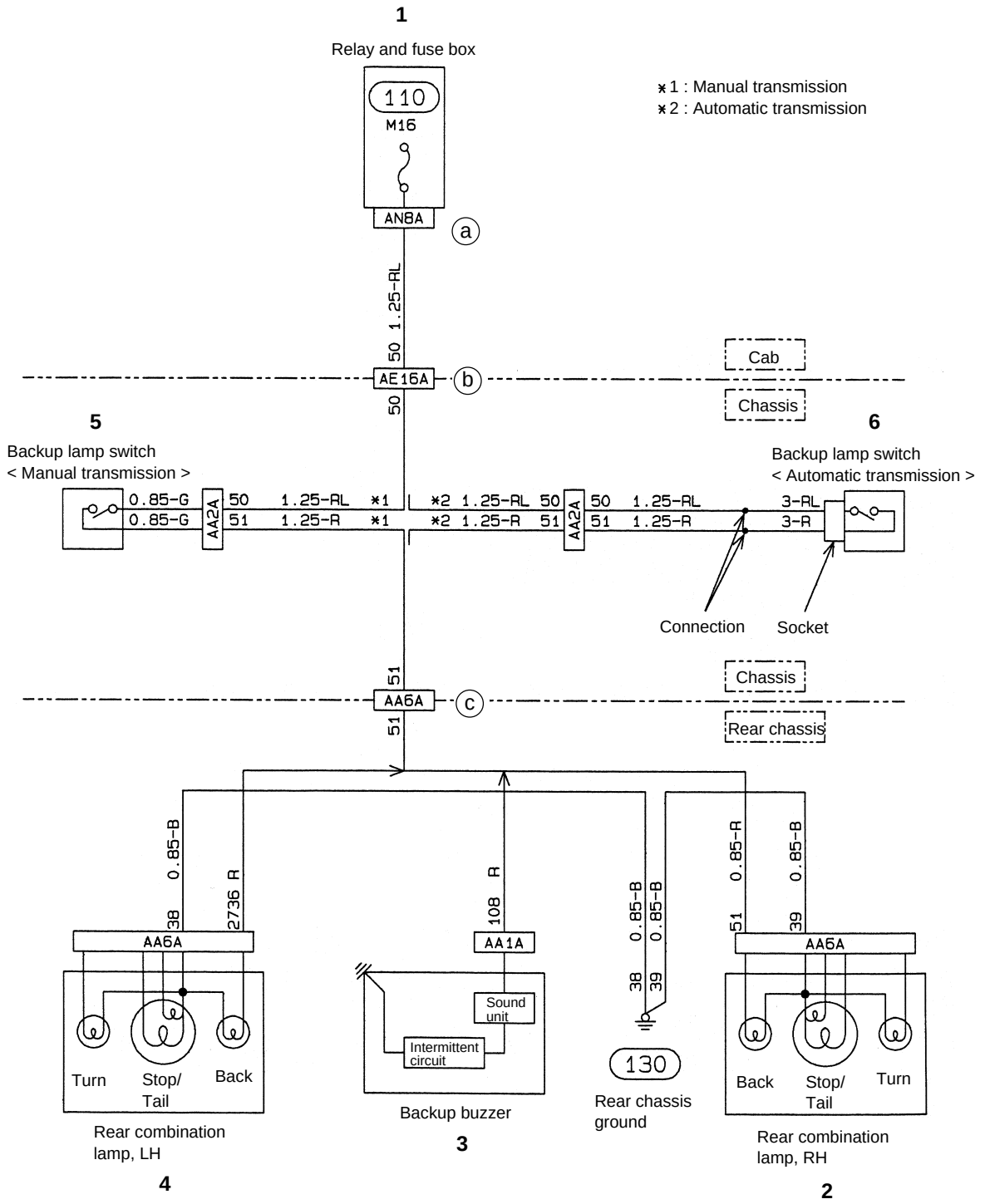

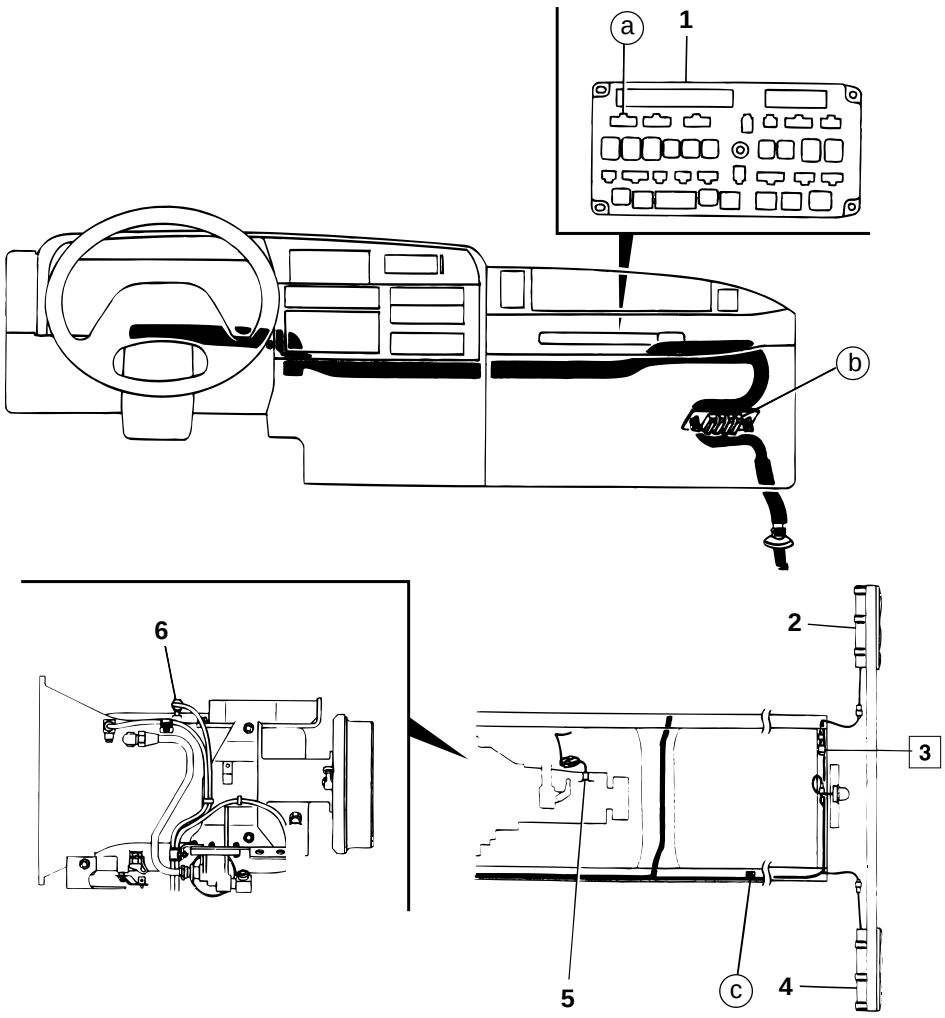

12870

1 Relay and fuse box 📖 104
2 Rear combination lamp, RH
3 Back buzzer
4 Rear combination lamp, LH
5 Backup lamp switch 📖 802
< Manual transmission >
6 Backup lamp switch 📖 802
< Automatic transmission >

◆ Service procedure

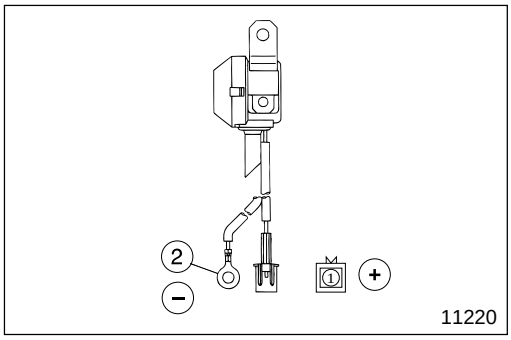

3 **Back buzzer**

[Inspection]

- Make sure that back buzzer **3** sounds intermittently when you apply 12 volts DC between terminals ① and ②.
- If any fault is found, replace back buzzer **3**.

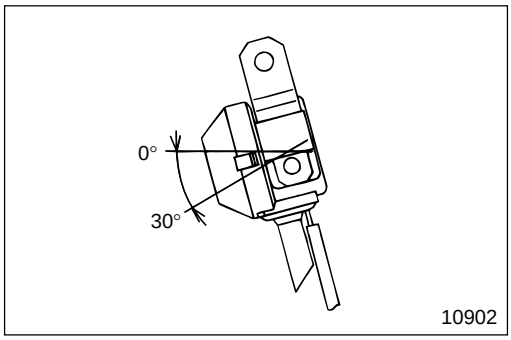

[Installation]

Install back buzzer **3** to the frame within the angle range as illustrated.

CAUTION⚠

Be careful to install back buzzer 3 within the illustrated angle range or the back buzzer will not be drained normally.

M E M O

345 CAB LAMP CIRCUIT

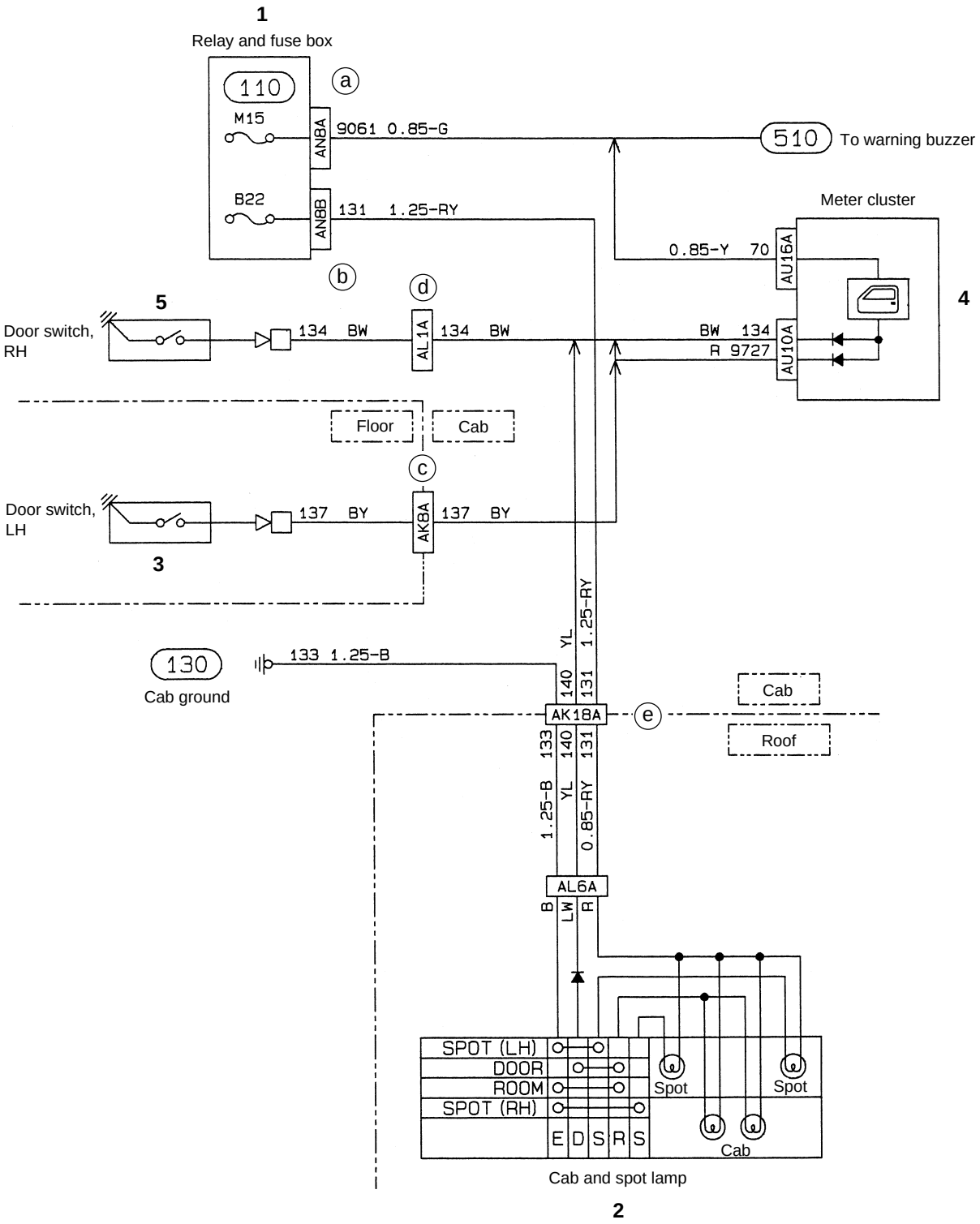

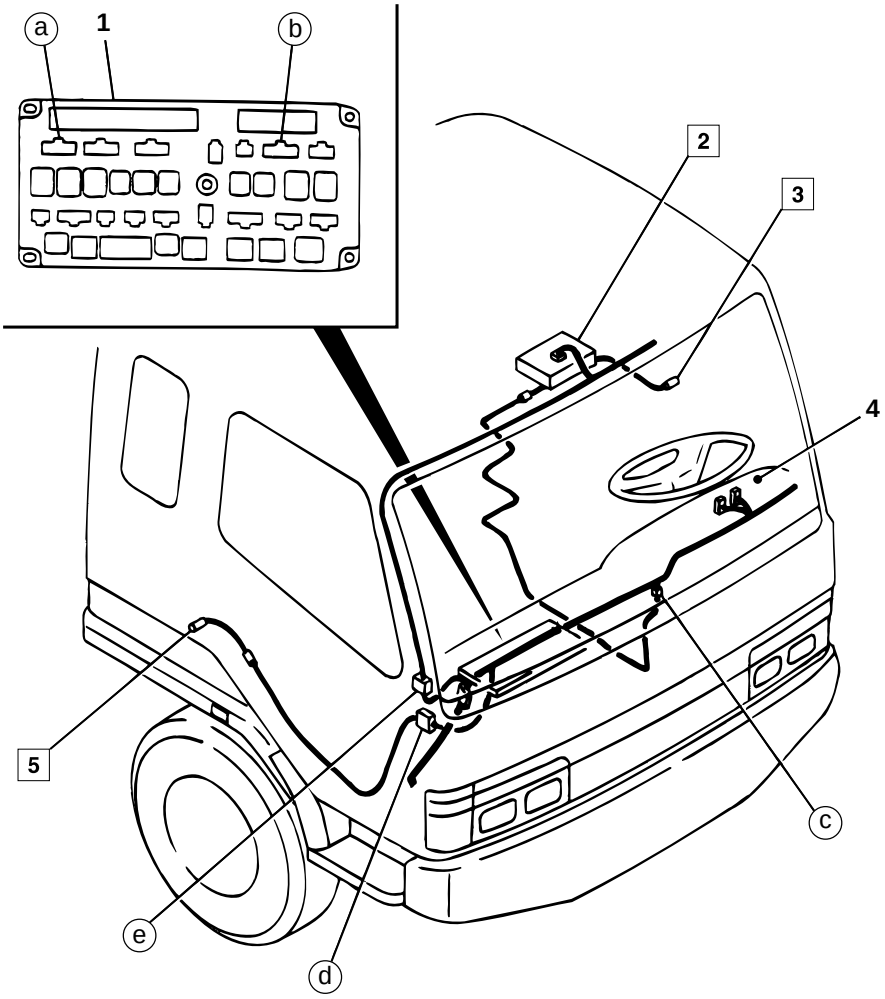

12871

1 Relay and fuse box 104
2 Cab and spot lamp
3 Door switch, LH
4 Meter cluster 401
5 Door switch, RH

◆ Service procedure

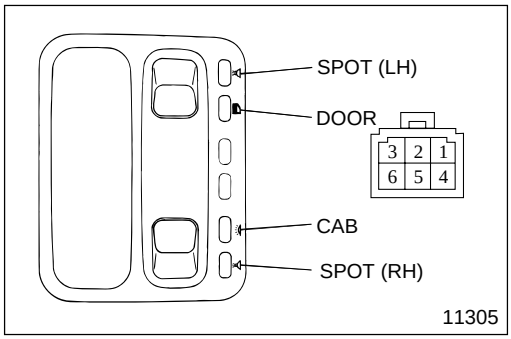

2 **Inspection of cab and spot lamp**

- Follow the table below to inspect continuity:

	①	③	⑤
OFF			
SPOT (LH)	○—○		
SPOT (RH)	○—○		
DOOR	○		○
CAB	○—○		

○—○ : There is continuity between terminals ○ and ○ (When valve is installed).

- If any fault is found, replace cab and spot lamp **2**.

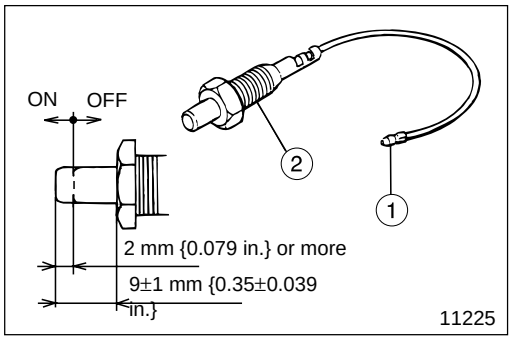

3 **5** **Inspection of door switches**

- Follow the table below to inspect continuity:

	①	②
OFF		
ON	○—○	

○—○ : There is continuity between terminals ○ and ○.

- If any fault is found, replace door switches **3**, **5**. Gr 42

M E M O

348 ILLUMINATION LAMP CIRCUIT

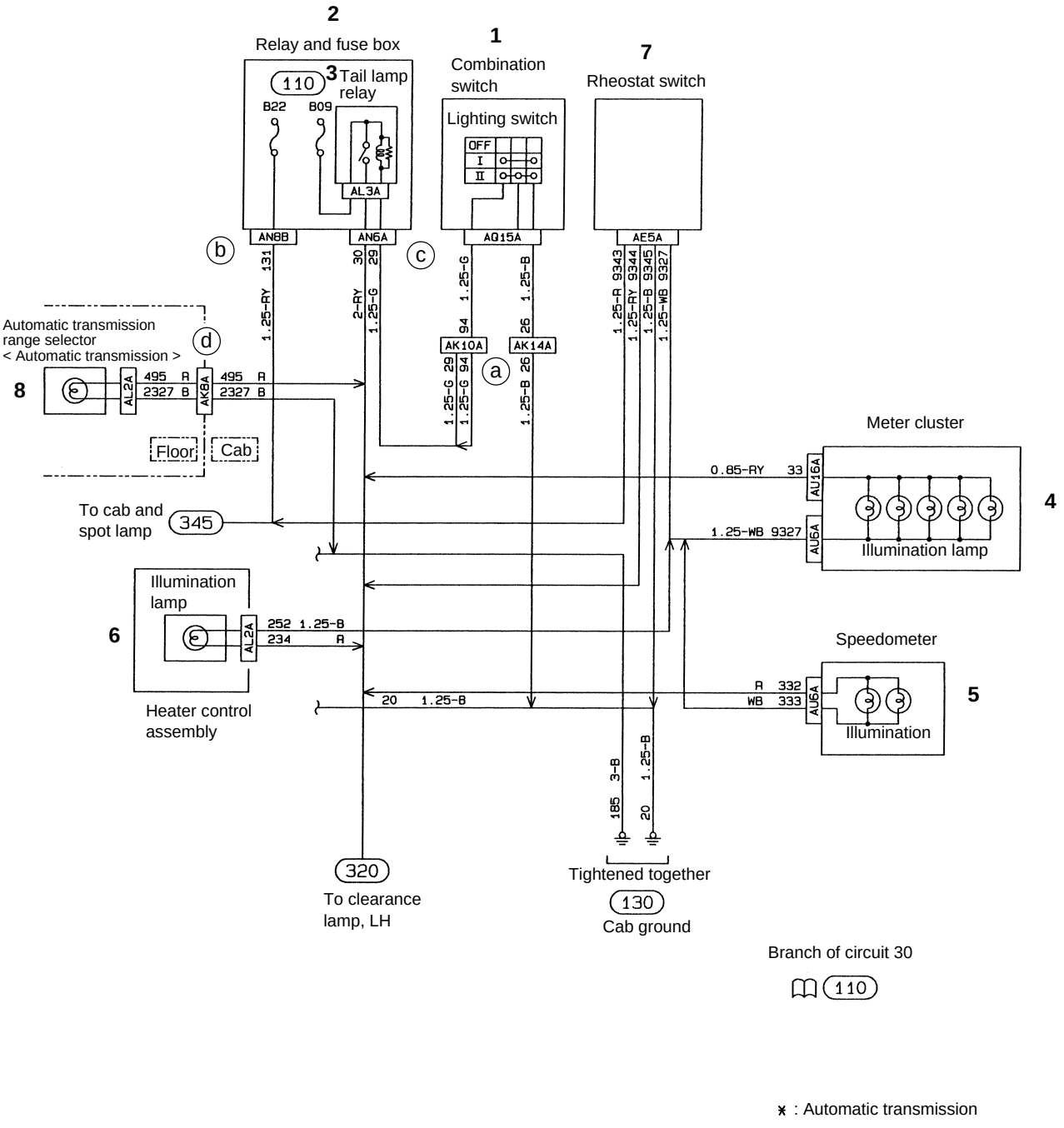

10478

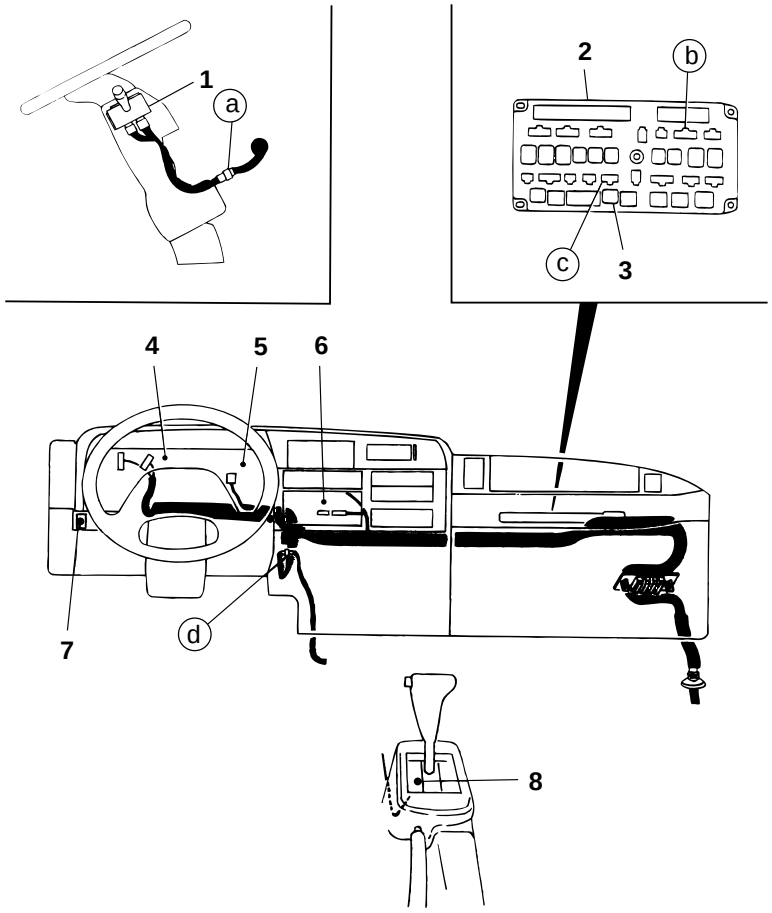

1 Combination switch 601
2 Relay and fuse box 104
3 Tail lamp relay 604
4 Meter cluster 401
5 Speedometer 401
6 Heater control assembly 618
7 Rheostat switch 601
8 Automatic transmission range selector Gr 23 < Automatic transmission >

349 MARKER LAMP AND IDENTIFICATION LAMP CIRCUITS

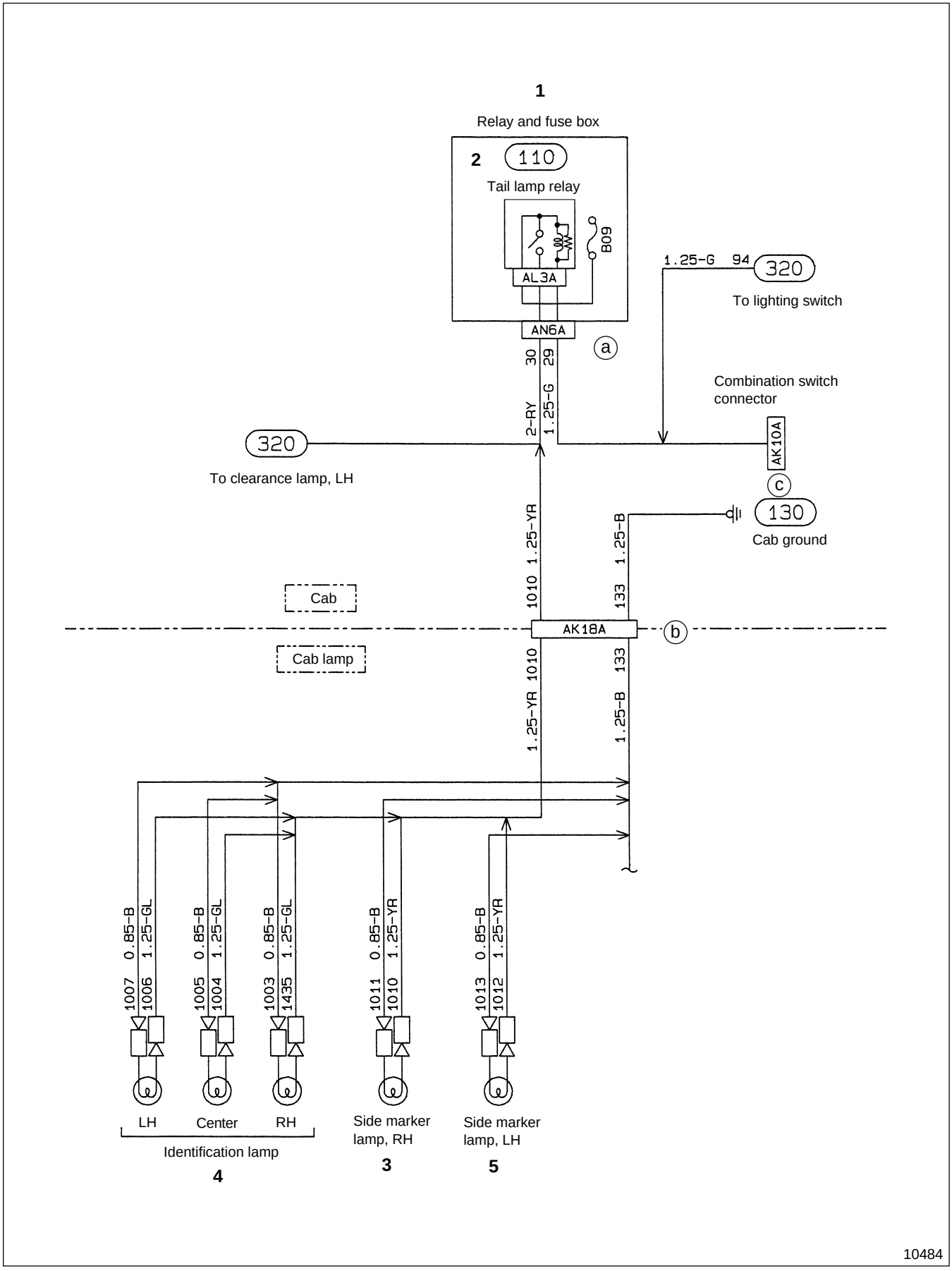

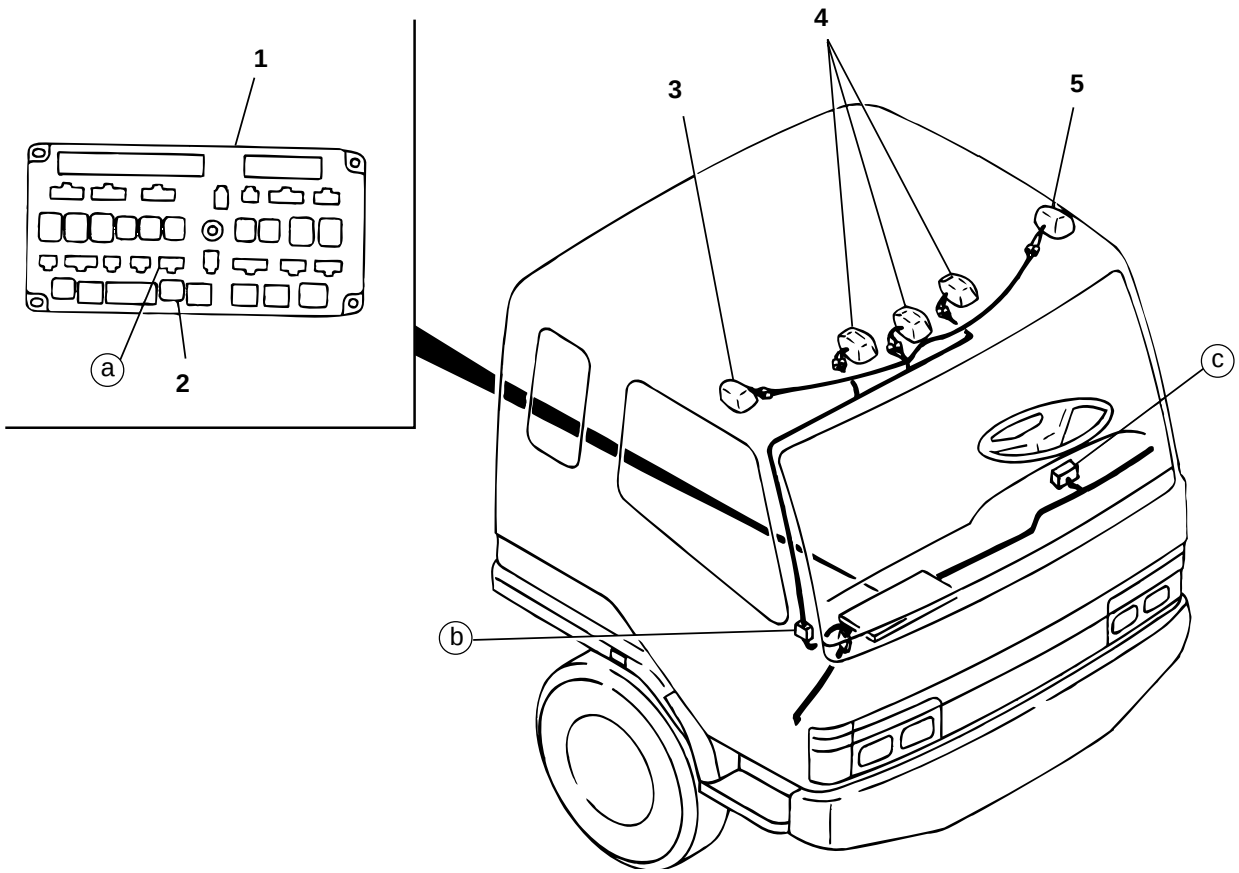

1 Relay and fuse box 📖 104
2 Tail lamp relay 📖 604
3 Clearance and side marker lamp, RH
4 Identification lamp
5 Clearance and side marker lamp, LH

352 VAN BODY DOME LIGHT CIRCUIT

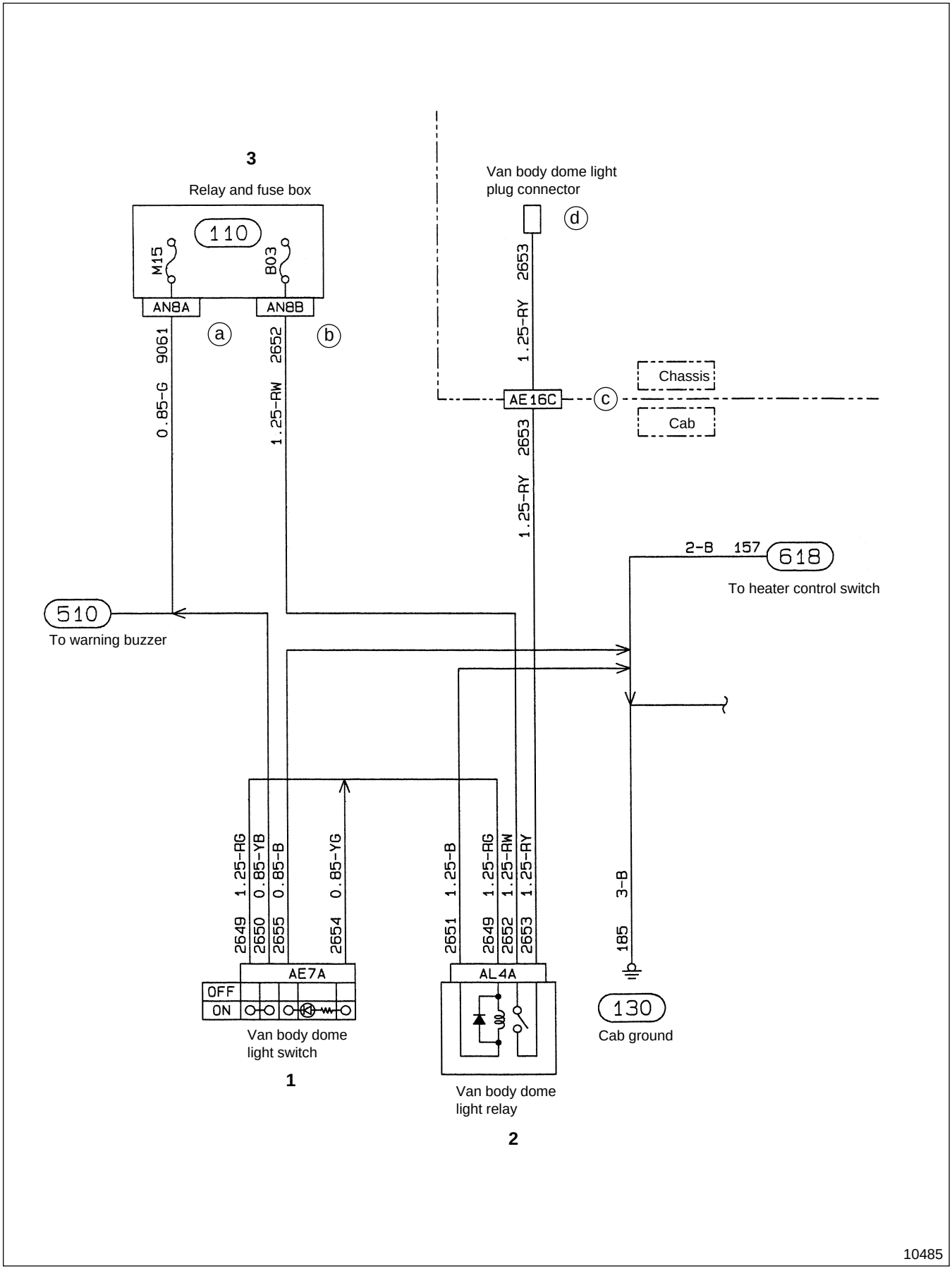

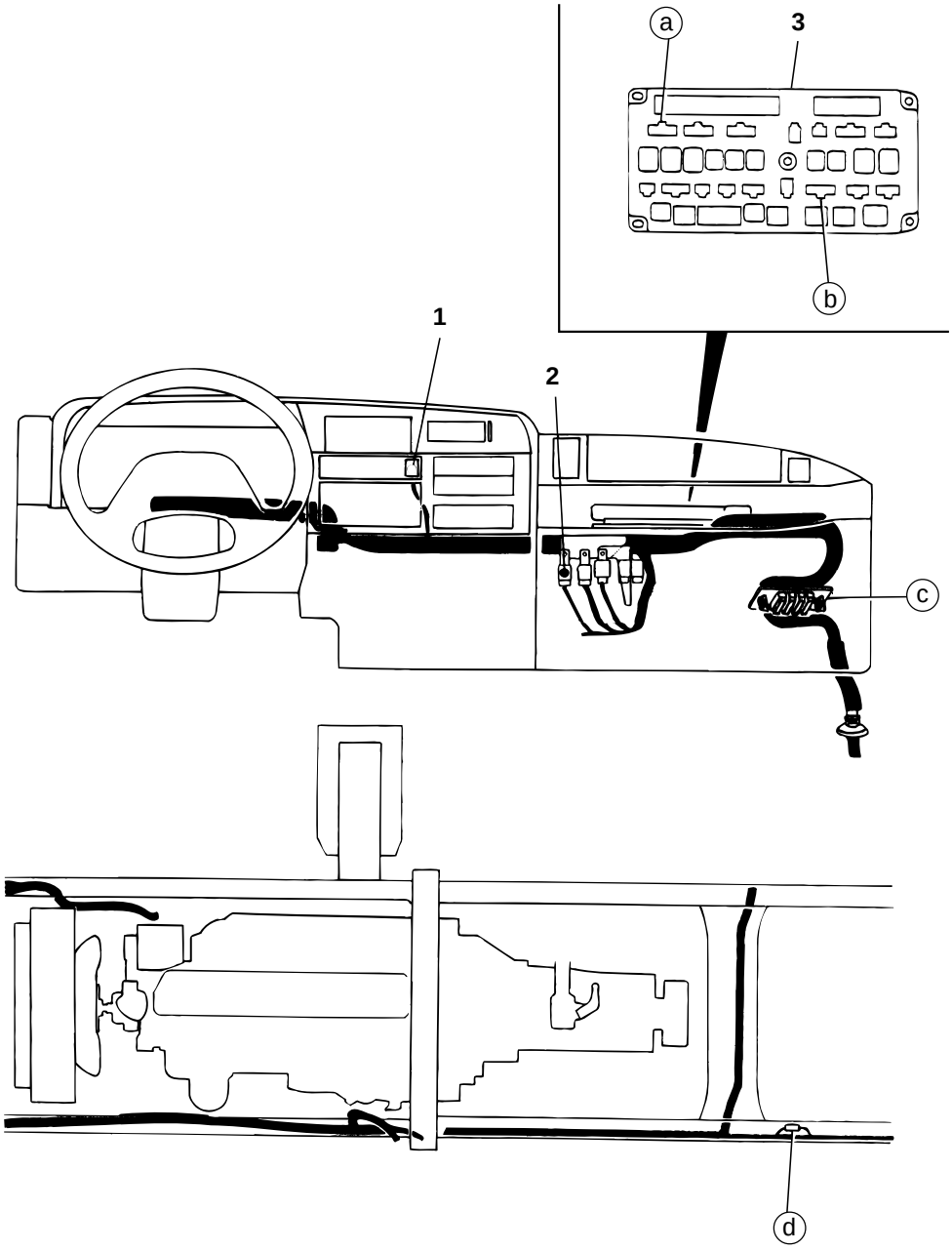

1 Van body dome light switch 601
2 Van body dome light relay 604
3 Relay and fuse box 104

4 METER

SPECIFICATIONS 54-4-2

TROUBLESHOOTING 54-4-3

401 METER CLUSTER 54-4-4

410 SPEEDOMETER AND TACHOMETER CIRCUITS 54-4-10

420 FUEL GAUGE CIRCUIT 54-4-12

425 WATER TEMPERATURE GAUGE CIRCUIT 54-4-16

SPECIFICATIONS

Item			Specifications
Meter cluster	Manufacturer		NIPPONDENSO
	Voltage	V	12
	Lighting bulb	W	3
	Indicator lamp bulb	W	1.4
	Warning lamp bulb	W	1.4
	Meter warning buzzer (Overrunning buzzer) < 10-speed transmission >	Rated current mA	50 or less (Mean value)
		Sound pressure dB	$60\ ^{+6}_{0}$ (at 1 m {3.3 ft}
Speedometer	Manufacturer		NIPPONDENSO
	Lighting bulb	W	2

Possible causes \ Symptoms		Needle does not move	Needle movement unstable	Indication error large	Meter generates noise	Remarks
Connector connection faulty, harness broken, grounding faulty		○	○			
Fuse blown		○				
Internal circuit of meter cluster faulty		○	○	○		
Printed board of meter cluster faulty		○				
Tachometer	Engine speed sensor coil broken	○				
	Engine speed sensor installed incorrectly	○	○			Gr 13
	Tachometer faulty	○	○	○	○	
Speedometer	Vehicle speed sensor faulty	○				
	Vehicle speed sensor installation faulty		○			
	Tires incorrect			○		Gr 31
	Tires worn and tire pressure incorrect			○		Gr 31
	Transmission L-joint incorrect (gear ratio different)			○		Gr 22
	Transmission speedometer gear incorrect (gear ratio different)			○		Gr 22
	Installation angle of transmission speedometer gear bush incorrect (not set at correct gear ratio point)			○		Gr 22
	Speedometer faulty	○	○	○	○	
Water temperature gauge	Water temperature sensor faulty	○		○		
	Water temperature gauge faulty	○		○		
	Thermostat does not close	○				Gr 14
Fuel gauge	Fuel gauge unit faulty	○		○		
	Fuel gauge faulty	○		○		

401 METER CLUSTER

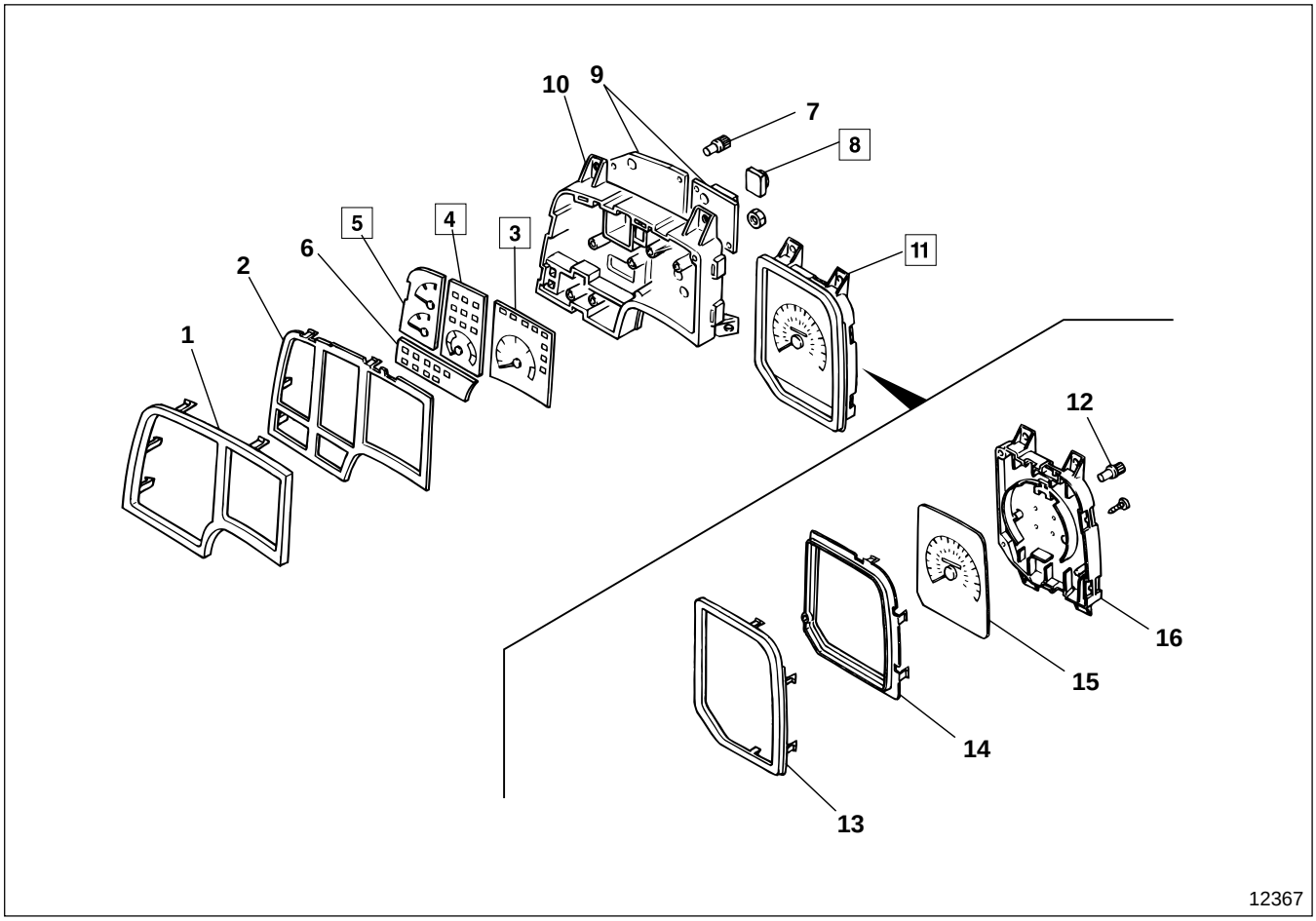

● **Disassembly sequence**

1 Front plate
2 Retainer
3 Tachometer
4 Air pressure gauge and indicator lens
5 Fuel gauge and water temperature gauge
6 Indicator lens
7 Bulb
8 Meter warning buzzer (Overrunning buzzer)
< 10-speed transmission >
9 Print panel
10 Case
11 Speedometer assembly
12 Bulb
13 Plate
14 Window plate
15 Speedometer
16 Case

● **Assembly sequence**

Follow the disassembly sequence in reverse.

Installation and removal of meter cluster and speedometer : Gr 42

Service standards

Location	Maintenance item			Standard value	Limit	Remedy
3	Indication range of tachometer 13±0.1 V 20±2°C {68±3.6°F}		At 550 rpm	550±35 rpm	—	Replace
			At 1000 rpm	1000±50 rpm		
			At 1500 rpm	1500±60 rpm		
			At 2000 rpm	2000±65 rpm		
			At 2500 rpm	2500±70 rpm		
			At 3000 rpm	3000±75 rpm		
4	Indication range of air pressure gauge		At 40 lbf/in^2	275.8±50 kPa {40±7 lbf/in^2, 2.8±0.5 kgf/cm^2}	—	Replace
			At 75.4 lbf/in^2	519.9±50 kPa {75.4±7 lbf/in^2, 5.3±0.5 kgf/cm^2}		
			At 120 lbf/in^2	827.4±50 kPa {120±7 lbf/in^2, 8.4±0.5 kgf/cm^2}		
	Tolerance of reading by two needles under the same pressure		At 519.9 kPa {75.4 lbf/in^2, 5.3 kgf/cm^2}	±50 kPa {±7 lbf/in^2, 0.5 kgf/cm^2}		
			At 827.4 kPa {120 lbf/in^2, 8.4 kgf/cm^2}	±50 kPa {±7 lbf/in^2, 0.5 kgf/cm^2}		
5	Resistance of fuel gauge	Needle position	Full	4 Ω	—	Replace
			$^1/_2$	50 Ω		
			Empty	135 Ω		
	Resistance of water temperature gauge	Needle position	65°C {149°F}	81.8 Ω		
			100°C {212°F}	26.6 Ω		
11	Indication range of speedometer 14 V 20±2°C {68±3.6°F}	Inspection using mph	At 10 mph	10±2 mph	—	Replace
			At 20 mph	$20^{+2}_{-1.5}$ mph		
			At 40 mph	$40^{+2.5}_{-1}$ mph		
			At 50 mph	50^{+3}_{0} mph		
			At 60 mph	60^{+3}_{0} mph		
		Inspection using km/h	At 20 km/h	20±3 km/h		
			At 35 km/h	$35^{+3}_{-0.5}$km/h		
			At 40 km/h	$40^{+3}_{-0.5}$km/h		
			At 60 km/h	$60^{+3.5}_{-0.5}$km/h		
			At 80 km/h	$80^{+4.5}_{-0}$km/h		
			At 100 km/h	100^{+5}_{0} km/h		

◆ Service procedure

3 Inspection of tachometer

- Measure the indication area of tachometer **3** at various revolution ranges using an engine revolution counter.
- If the measured value deviates from the standard value, carry out the following inspection. If the inspection does not indicate a fault, replace tachometer **3**.

(1) Inspection of the engine revolution sensor body 801

(2) Inspection of the installed condition of the engine revolution sensor Gr 13

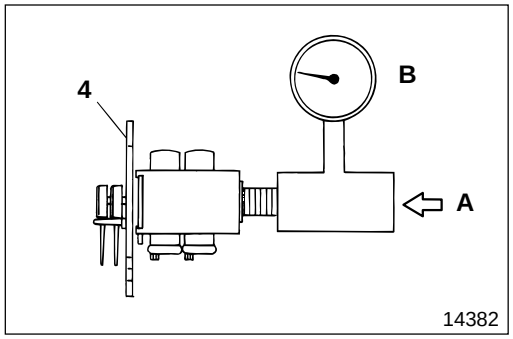

4 Inspection of air pressure gauge

- Apply air pressure **A** to air pressure gauge **4**.
  B : Air pressure gauge
- Measure the indication range of air pressure gauge **4** at standard pressure.
- If the measured value deviates from the standard value, replace air pressure gauge **4**.

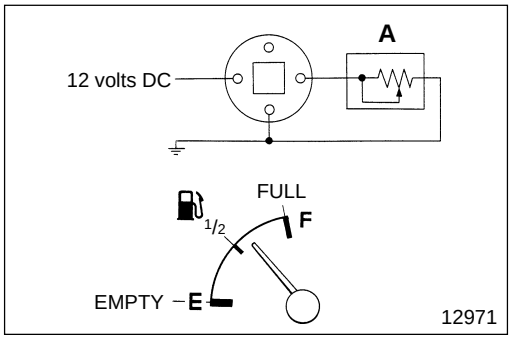

5 Inspection of fuel gauge and water temperature gauge

(1) Fuel gauge

- Connect a variable resistor to fuel gauge **5** as illustrated.
  A : Variable resistor
- Measurement order
  FULL → 1/2 → EMPTY

NOTE

The movement of the gauge needle is subject to hysteresis (oscillation). Be sure to measure following the measurement order.

- Increase the value of variable resistor **A** gradually from 0 Ω.
- Measure the resistance respectively when the needle of fuel gauge indicates FULL, 1/2 and EMPTY.
- If the measured value deviates from the standard value, replace fuel gauge and water temperature gauge **5**.

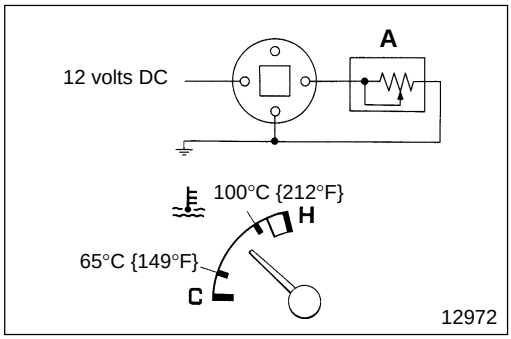

(2) Water temperature gauge

- Connect a variable resistor to water temperature gauge as illustrated.
  A : Variable resistor
- Measurement order
  Low temperature → High temperature

NOTE

The movement of the gauge needle is subject to hysteresis (oscillation). Be sure to measure following the measurement order.

- Increase the value of variable resistor **A** gradually from 0 Ω.
- Measure the resistance respectively when the needle of water temperature gauge **5** indicates 65°C {149°F} and 100°C {212°F}.
- If the measured value deviates from the standard value, replace fuel gauge and water temperature gauge **5**.

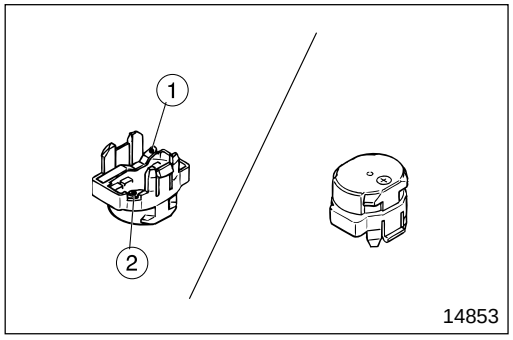

8 Inspection of meter warning buzzer

- Apply 12 volts DC between terminals ① and ② to check if meter warning buzzer **8** sounds.

CAUTION ⚠

- **Be careful not to mix up ⊕ and ⊖ when you apply voltage to meter warning buzzer 8, because this would damage the meter warning buzzer.**
- **Make sure you check ⊕ and ⊖ on the top of meter warning buzzer 8.**

- If any fault is found, replace meter warning buzzer **8**.

11 **Inspection of speedometer**

- Measure the indication area of speedometer **11** at various speed ranges using a speedometer tester.
- If the measured value deviates from the standard value, carry out the following inspection. If the inspection does not indicate a fault, replace speedometer **11**.

(1) Inspection of vehicle speed sensor body 802

(2) Inspection of installed condition of vehicle speed sensor

Gr 22 < Manual transmission >
Gr 23 < Automatic transmission >

Meter Cluster Internal Circuit

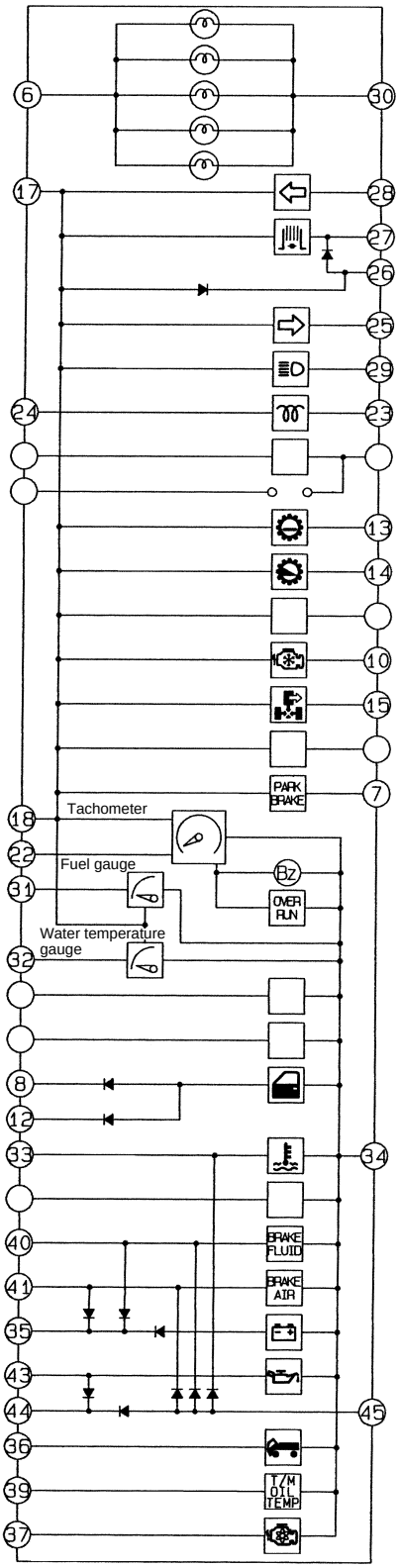

14846

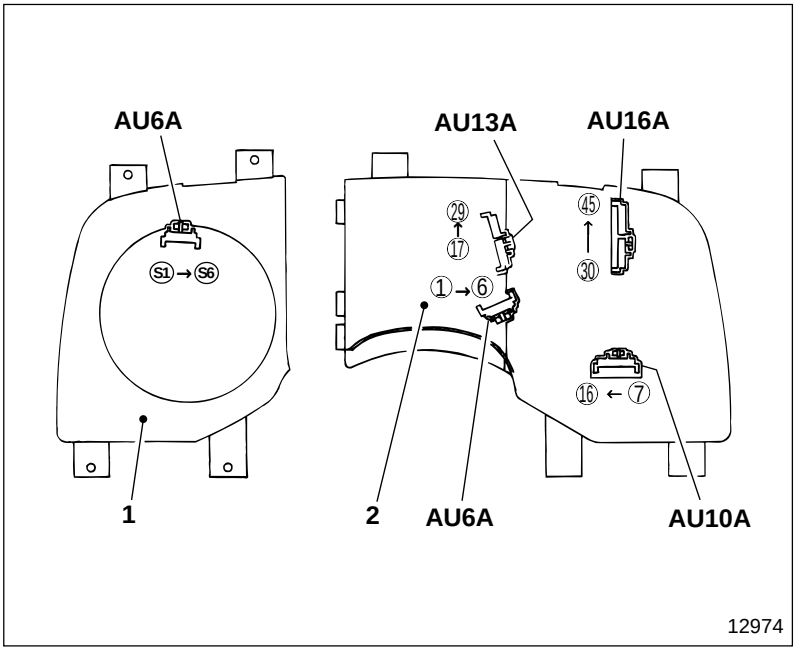

1 Speedometer assembly
2 Meter cluster assembly

Terminal No.	AU6A
1	—
2	—
3	—
4	—
5	—
6	Illumination ⊖

Terminal No.	AU10A
7	Parking brake ⊕
8	Door ⊖
9	—
10	Cold start ⊕
11	—
12	Door ⊖
13	Transmission HIGH ⊕
14	Transmission LOW ⊕
15	—
16	—

ATF : Automatic transmission fluid

Terminal No.	AU13A
17	Ground
18	Tachometer ⊖
19	—
20	—
21	—
22	Tachometer ⊕
23	Glow ⊕
24	Glow ⊖
25	Turn RH ⊕
26	Cold start ⊕
27	Exhaust brake ⊕
28	Turn LH ⊕
29	Beam ⊕

Speedometer

Terminal No.	AU6A
S1	Speed pulse ⊕
S2	Starter switch terminal M
S3	Ground
S4	Illumination ⊕
S5	Illumination ⊖
S6	—

Terminal No.	AU16A
30	Illumination ⊕
31	Fuel gauge unit ⊖
32	Water temperature unit ⊖
33	Water level, overheating
34	Starter switch terminal M
35	Alternator ⊖
36	Cab tilt ⊖
37	Pre-stroke control ⊖
38	—
39	ATF temperature ⊖
40	Brake fluid ⊖
41	Brake air ⊖
42	—
43	Engine oil bypass alarm ⊖
44	Engine oil pressure ⊖
45	Engine oil and brake ⊕

410 SPEEDOMETER AND TACHOMETER CIRCUITS

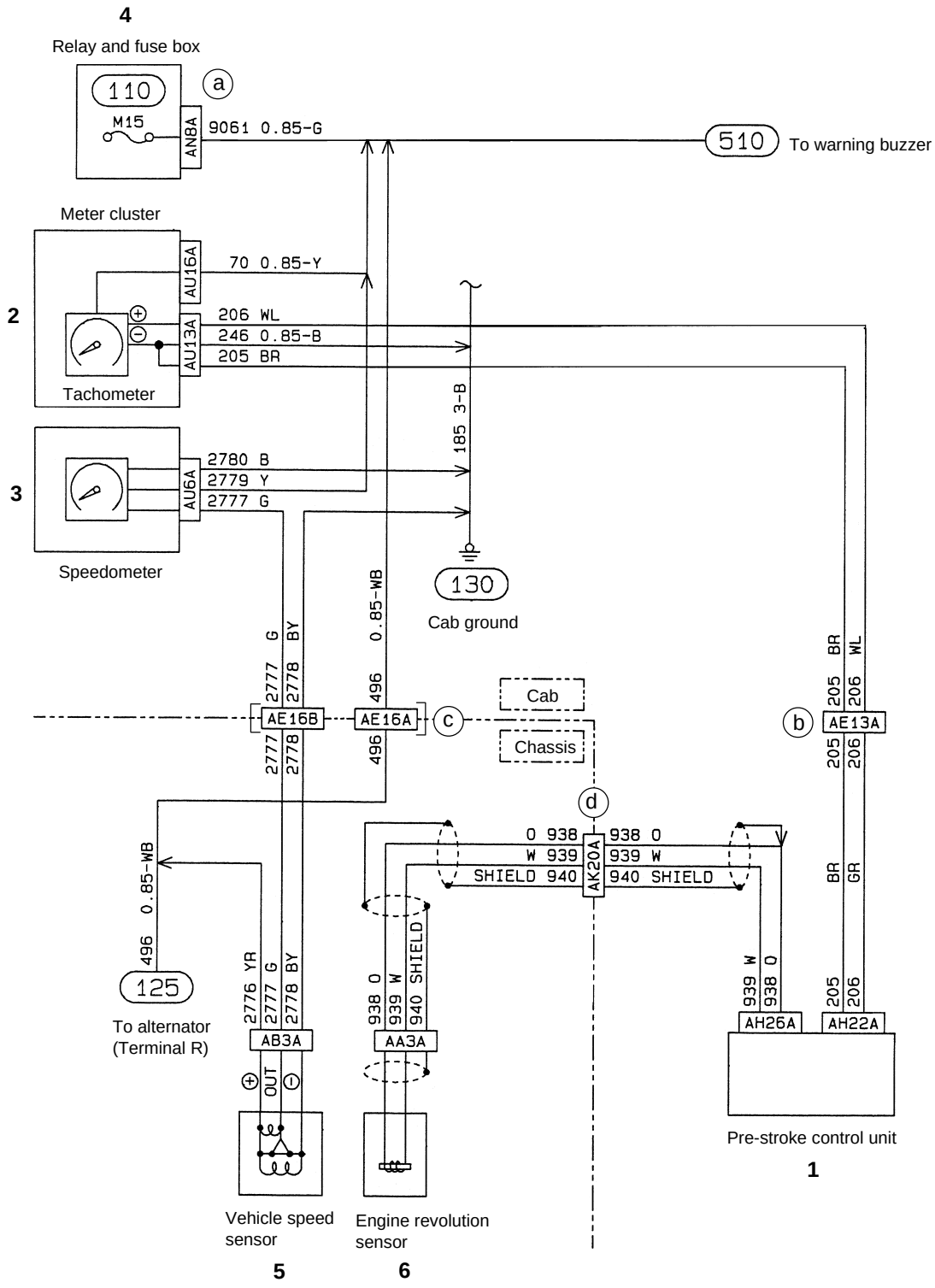

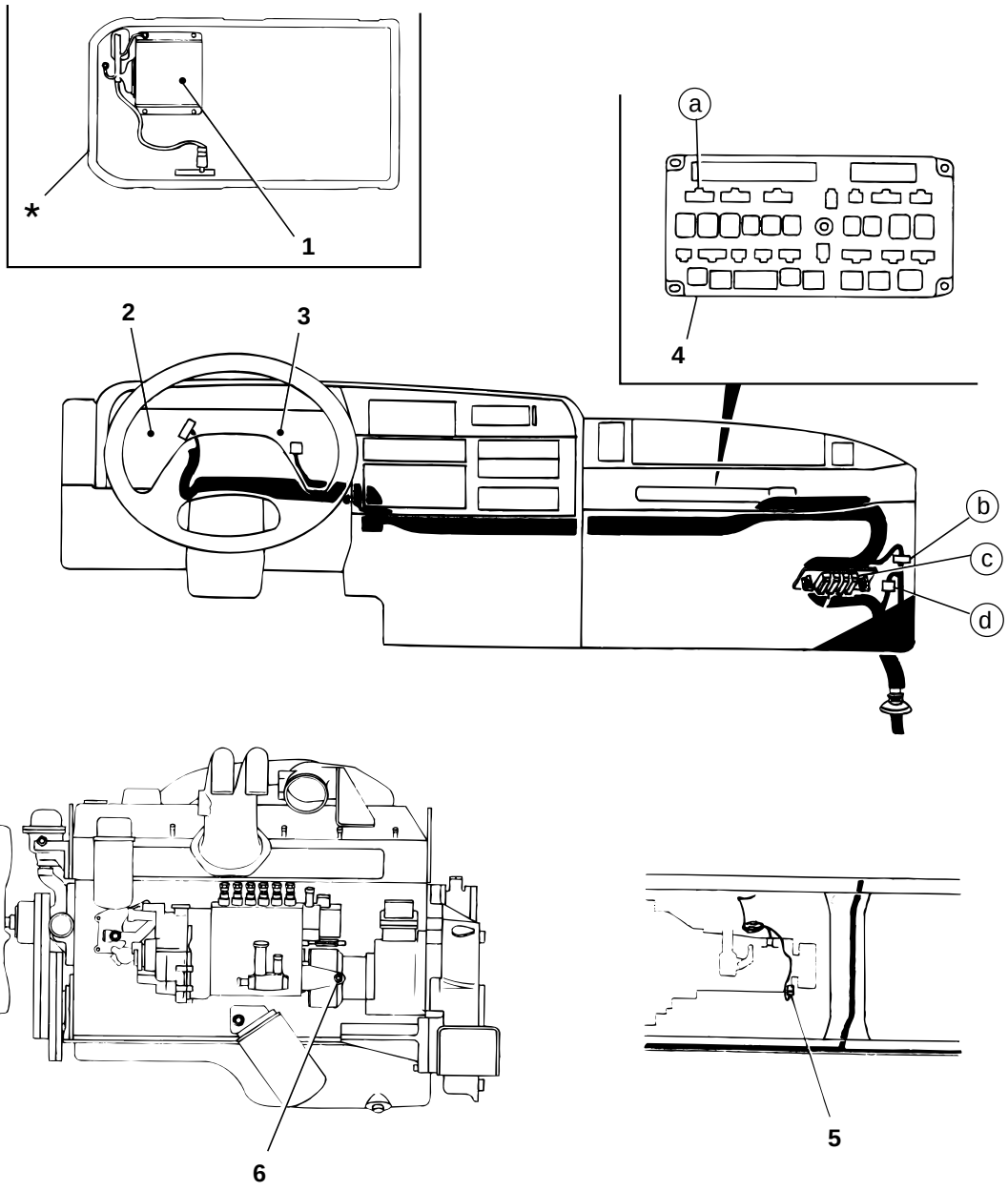

1 Pre-stroke control unit Gr 13
2 Meter cluster 401
3 Speedometer 401
4 Relay and fuse box 104
5 Vehicle speed sensor 802
6 Engine revolution sensor 801
***** : Box under bed (Behind driver's seat)

420 FUEL GAUGE CIRCUIT

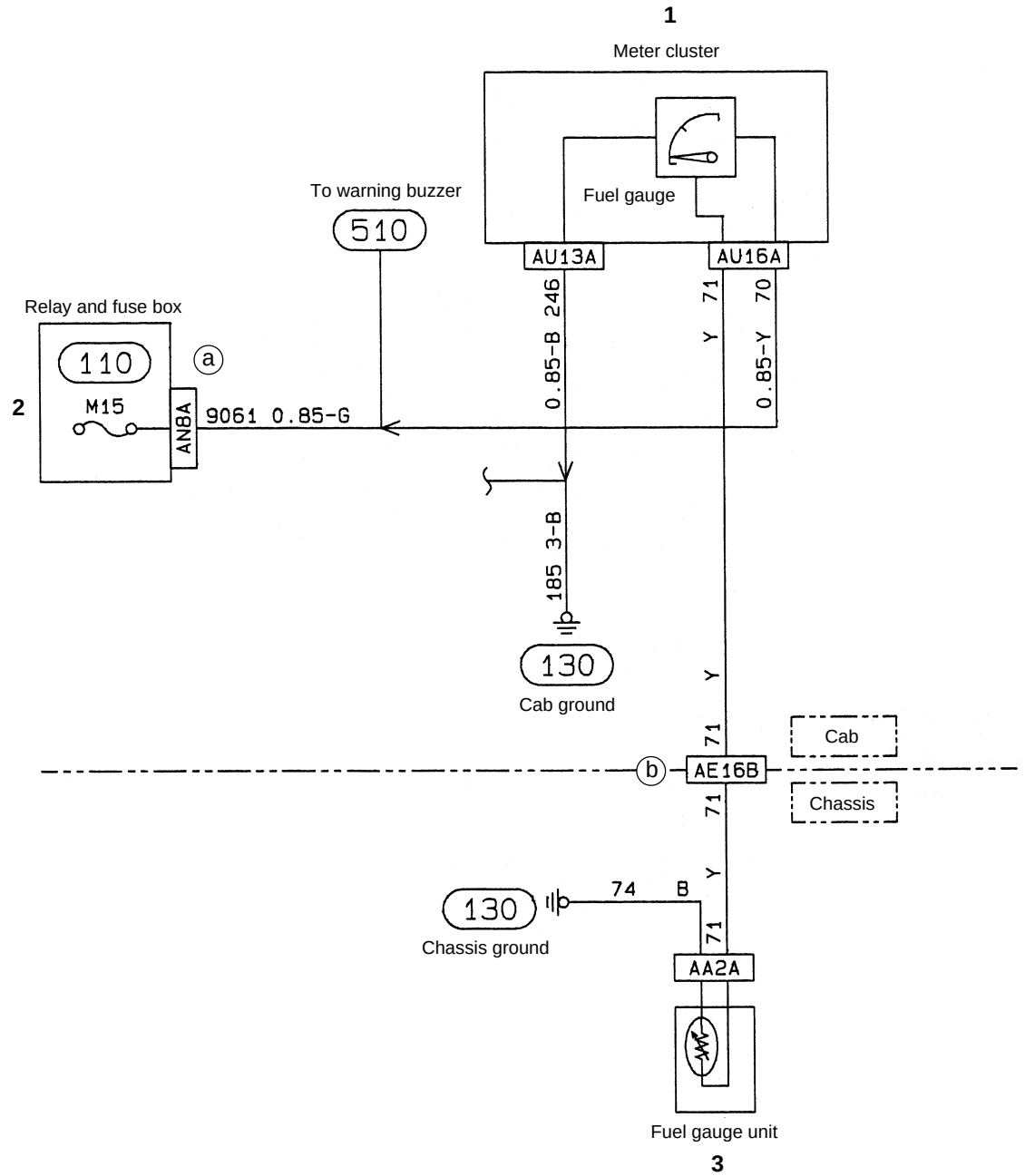

10466

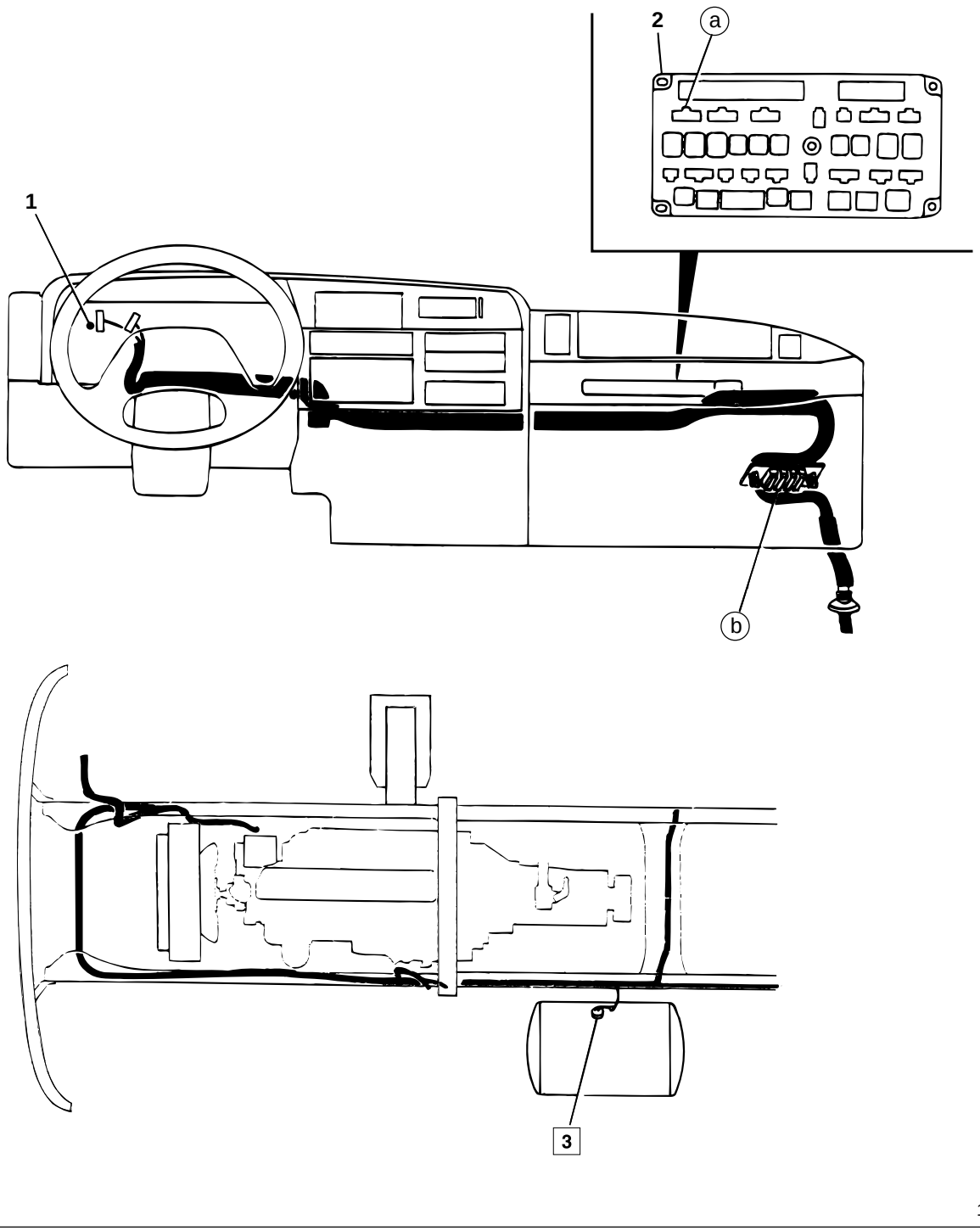

1 Meter cluster 401
2 Relay and fuse box 104
3 Fuel gauge unit

Service standards

Location	Maintenance item			Standard value	Limit	Remedy
3	Resistance of fuel gauge unit	Float arm position	EMPTY	150±10 Ω	—	Replace
			FULL	0^{+2}_{0} Ω		

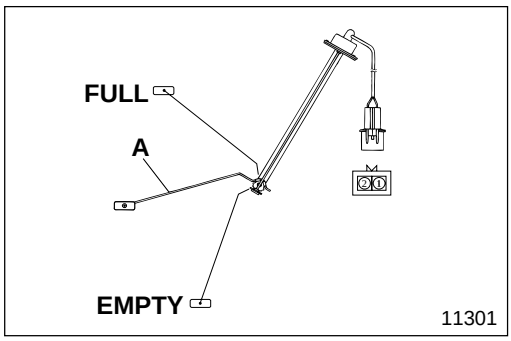

◆ Service procedure

3 **Inspection of fuel gauge unit**

- Measure the resistance between terminals ① and ② when float arm **A** makes contact with both end stoppers (**E** and **F**).
- If the measured value deviates from the standard value, replace fuel gauge unit **3**.

M E M O

425 WATER TEMPERATURE GAUGE CIRCUIT

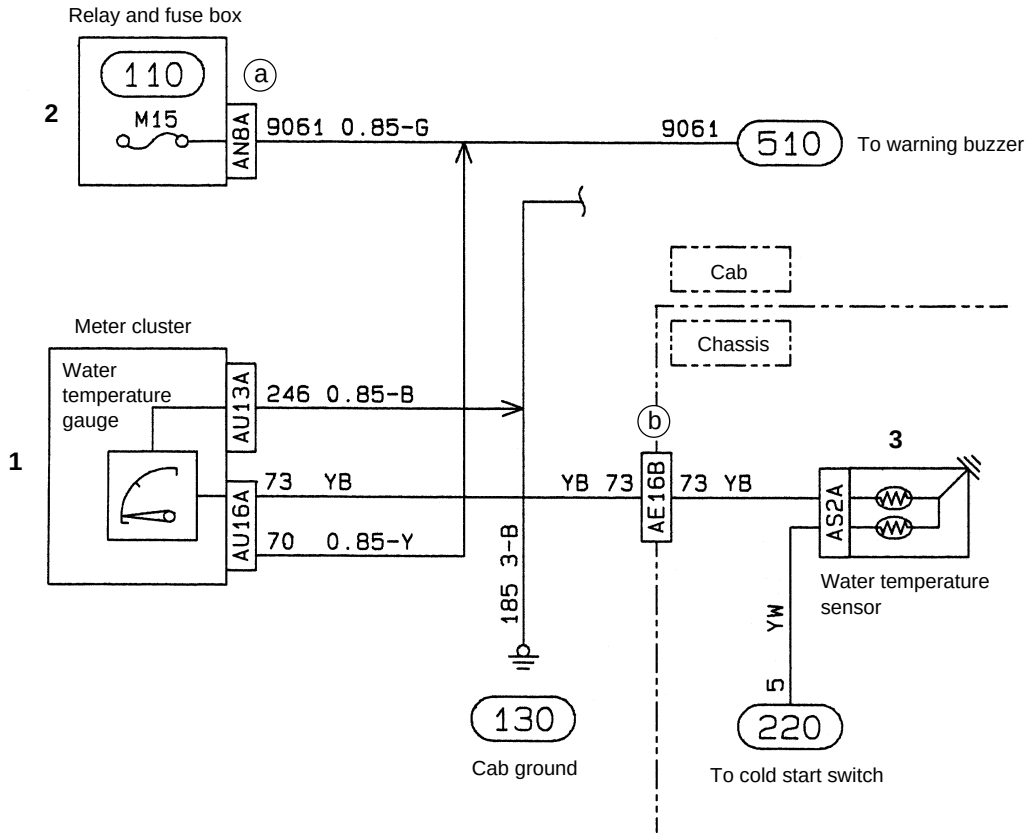

10455

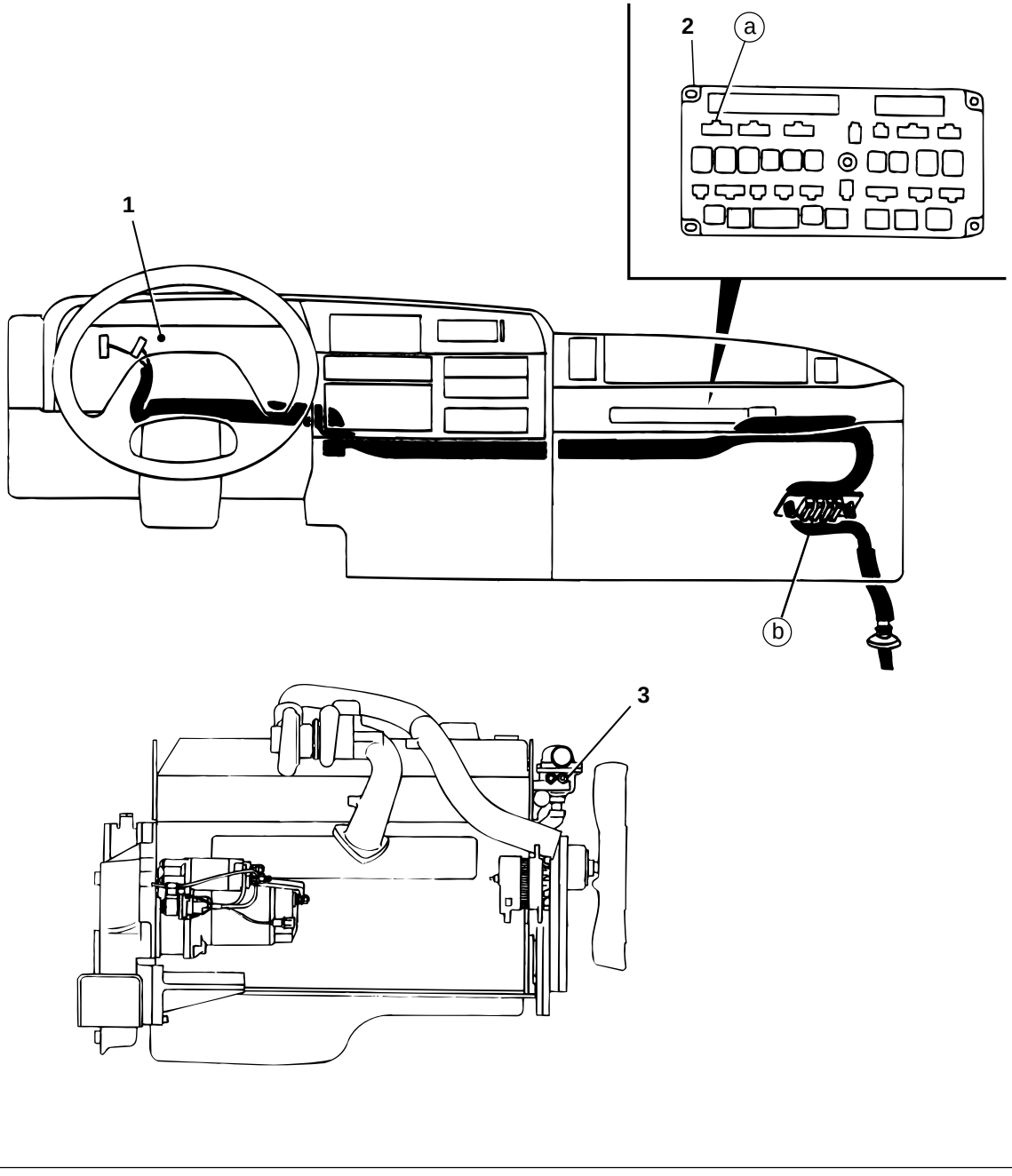

1 Meter cluster 401
2 Relay and fuse box 104
3 Water temperature sensor 801

5 INDICATOR AND WARNING

TROUBLESHOOTING 54-5-2

500 INSPECTION AND ADJUSTMENT MOUNTED IN VEHICLE
- **Inspection of Brake Fluid Level Switch < Air over hydraulic brake > 54-5-7**

510 PARKING BRAKE INDICATOR CIRCUIT [PARK BRAKE]
< Center Parking Brake > 54-5-8
< Wheel Parking Brake > 54-5-10

515 BRAKE WARNING CIRCUIT [BRAKE FLUID] [BRAKE AIR] **..... 54-5-14**

530 WATER LEVEL WARNING CIRCUIT [ ] **..... 54-5-18**

536 ENGINE OIL PRESSURE WARNING CIRCUIT [ ] **..... 54-5-22**

537 OVERHEATING WARNING CIRCUIT [ ] **..... 54-5-24**

547 AUTOMATIC TRANSMISSION FLUID TEMPERATURE WARNING CIRCUIT [T/M OIL TEMP] **..... 54-5-26**

548 TRANSMISSION HIGH/LOW INDICATOR CIRCUIT < 10-speed transmission > [ ] [ ] **..... 54-5-30**

550 CAB TILT WARNING CIRCUIT [ ] **..... 54-5-32**

For details on the following indicator and warning lamps, see the relevant sections.

 📖 125

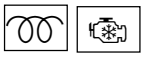 📖 220

 📖 310

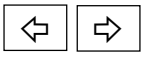 📖 330

 📖 345

 📖 710

 Gr 13

[OVER RUN] 📖 410 < 10-speed transmission >

TROUBLESHOOTING

Symptoms / Possible causes		Lamps do not light when starter switch is ON (engine not started)	PARK BRAKE < Air over hydraulic brake > Lamp does not light although parking brake lever is pulled	PARK BRAKE < Air over hydraulic brake > Lamp does not go out although parking brake lever is returned	PARK BRAKE < Full air brake > Lamp does not light although hand control valve is pulled	PARK BRAKE < Full air brake > Lamp lights although hand control valve is pushed	Remarks
Connector connection faulty, harness broken, grounding faulty		○	○		○		
Fuse blown		○	○		○		
Meter cluster	Internal circuit faulty	○	○	○	○	○	
	Bulb burnt-out	○	○		○		
Warning buzzer faulty							
Parking brake switch faulty			○	○	○	○	
Parking brake relay faulty			○	○			
Hand control valve faulty					○	○	Gr 35B
Brake fluid level switch faulty							
Low air pressure switch faulty							
Air master stroke switch faulty							
Air master faulty							Gr 35A
Cab tilt lock switch	Switch body faulty						
	Installation faulty						Gr 42
Overheating switch faulty							
Water level sensor faulty							
Multipurpose timing control unit faulty							
Engine oil pressure switch faulty							
Engine oil bypass alarm switch faulty							
Transmission HIGH/LOW detection switch (HIGH) faulty							
Transmission HIGH/LOW detection switch (LOW) faulty							

Symptoms / Possible causes		BRAKE AIR			BRAKE FLUID			Remarks
		Lamp does not light although air pressure level in air tank is low	Lamp lights although air pressure level in air tank is sufficient	Warning buzzer does not sound although air pressure level in air tank is low	< Air over hydraulic brake > Lamp does not light although brake fluid level is insufficient	Lamp lights although brake fluid level is sufficient	Warning buzzer does not sound although brake fluid level is insufficient	
Connector connection faulty, harness broken, grounding faulty		○		○	○		○	
Fuse blown		○			○			
Meter cluster	Internal circuit faulty	○	○	○	○	○	○	
	Bulb burnt-out	○			○			
Warning buzzer faulty				○			○	
Parking brake switch faulty				○			○	
Parking brake relay faulty				○				
Hand control valve faulty				○				Gr 35B
Brake fluid level switch faulty					○	○		
Low air pressure switch faulty		○	○					
Air master stroke switch faulty						○		
Air master faulty						○		Gr 35A
Cab tilt lock switch	Switch body faulty							
	Installation faulty							Gr 42
Overheating switch faulty								
Water level sensor faulty								
Multipurpose timing control unit faulty								
Engine oil pressure switch faulty								
Engine oil bypass alarm switch faulty								
Transmission HIGH/LOW detection switch (HIGH) faulty								
Transmission HIGH/LOW detection switch (LOW) faulty								

Symptoms / Possible causes		Lamp does not light although engine coolant level is insufficient	Lamp lights although engine coolant level is sufficient	Lamp does not light when overheating	Lamp lights when not overheating	< Air over hydraulic brake > Warning buzzer does not stop sounding although parking brake lever is pulled	< Full air brake > Warning buzzer does not stop sounding although hand control valve is pulled	Remarks
Connector connection faulty, harness broken, grounding faulty		○		○		○	○	
Fuse blown		○		○				
Meter cluster	Internal circuit faulty	○	○	○	○	○	○	
	Bulb burnt-out	○		○				
Warning buzzer faulty						○	○	
Parking brake switch faulty						○	○	
Parking brake relay faulty							○	
Hand control valve faulty							○	Gr 35B
Brake fluid level switch faulty								
Low air pressure switch faulty								
Air master stroke switch faulty								
Air master faulty								Gr 35A
Cab tilt lock switch	Switch body faulty							
	Installation faulty							Gr 42
Overheating switch faulty				○	○			
Water level sensor faulty		○	○					
Multipurpose timing control unit faulty		○	○					
Engine oil pressure switch faulty								
Engine oil bypass alarm switch faulty								
Transmission HIGH/LOW detection switch (HIGH) faulty								
Transmission HIGH/LOW detection switch (LOW) faulty								

Symptoms / Possible causes		Lamp does not light although engine oil hydraulic pressure is low	Lamp lights although engine oil hydraulic pressure is sufficient	< Air over hydraulic brake >	< Full air brake >	< 10-speed transmission >	Remarks
				Warning buzzer does not stop sounding although parking brake lever is pulled	Warning buzzer does not stop sounding although hand control valve is pulled	Lamp does not light when transmission is in HIGH	
Connector connection faulty, harness broken, grounding faulty		○		○	○	○	
Fuse blown		○				○	
Meter cluster	Internal circuit faulty	○	○	○	○	○	
	Bulb burnt-out	○				○	
Warning buzzer faulty				○	○		
Parking brake switch faulty				○	○		
Parking brake relay faulty					○		
Hand control valve faulty					○		Gr 35B
Brake fluid level switch faulty							
Low air pressure switch faulty							
Air master stroke switch faulty							
Air master faulty							Gr 35A
Cab tilt lock switch	Switch body faulty						
	Installation faulty						Gr 42
Overheating switch faulty							
Water level sensor faulty							
Multipurpose timing control unit faulty							
Engine oil pressure switch faulty		○	○				
Engine oil bypass alarm switch faulty		○	○				
Transmission HIGH/LOW detection switch (HIGH) faulty						○	
Transmission HIGH/LOW detection switch (LOW) faulty							

Symptoms / Possible causes		< 10-speed transmission >			Remarks
		Lamp does not light when transmission is in LOW	Lamp lights although cab is locked to rear cab mounting	Lamp does not light although cab is not locked to rear cab mounting	
Connector connection faulty, harness broken, grounding faulty		○		○	
Fuse blown		○		○	
Meter cluster	Internal circuit faulty	○	○	○	
	Bulb burnt-out	○		○	
Warning buzzer faulty					
Parking brake switch faulty					
Parking brake relay faulty					
Hand control valve faulty					Gr 35B
Brake fluid level switch faulty					
Low air pressure switch faulty					
Air master stroke switch faulty					
Air master faulty					Gr 35A
Cab tilt lock switch	Switch body faulty		○	○	
	Installation faulty		○		Gr 42
Overheating switch faulty					
Water level sensor faulty					
Multipurpose timing control unit faulty					
Engine oil pressure switch faulty					
Engine oil bypass alarm switch faulty					
Transmission HIGH/LOW detection switch (HIGH) faulty					
Transmission HIGH/LOW detection switch (LOW) faulty		○			

Inspection of Brake Fluid Level Switch < Air over hydraulic brake >

Service standards

Unit : mm {in.}

Location	Maintenance item	Standard value	Limit	Remedy
—	Warning lamp lighting position for brake fluid level switch	$57^{+3.5}_{-0.5}$ {$2.24^{+0.14}_{-0.02}$}	—	Replace

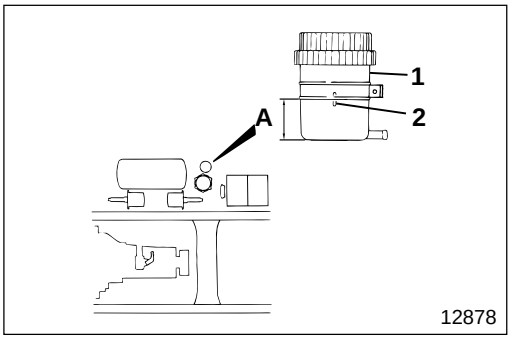

- Start engine.
- Drain the brake fluid gradually from fluid tank assembly **1**.

CAUTION

If brake fluid is spilt on any part of the vehicle, wipe it off immediately, since the solvent in the fluid can damage the paintwork.

- Measure height **A** of brake fluid level switch **2** when BRAKE FLUID warning lamp within the meter cluster lights.
- If the measured value deviates from the standard value, remove and check fluid tank assembly **1**.

Removal and installation : Gr 35A
Inspection : 515

510 PARKING BRAKE INDICATOR CIRCUIT < Center Parking Brake >

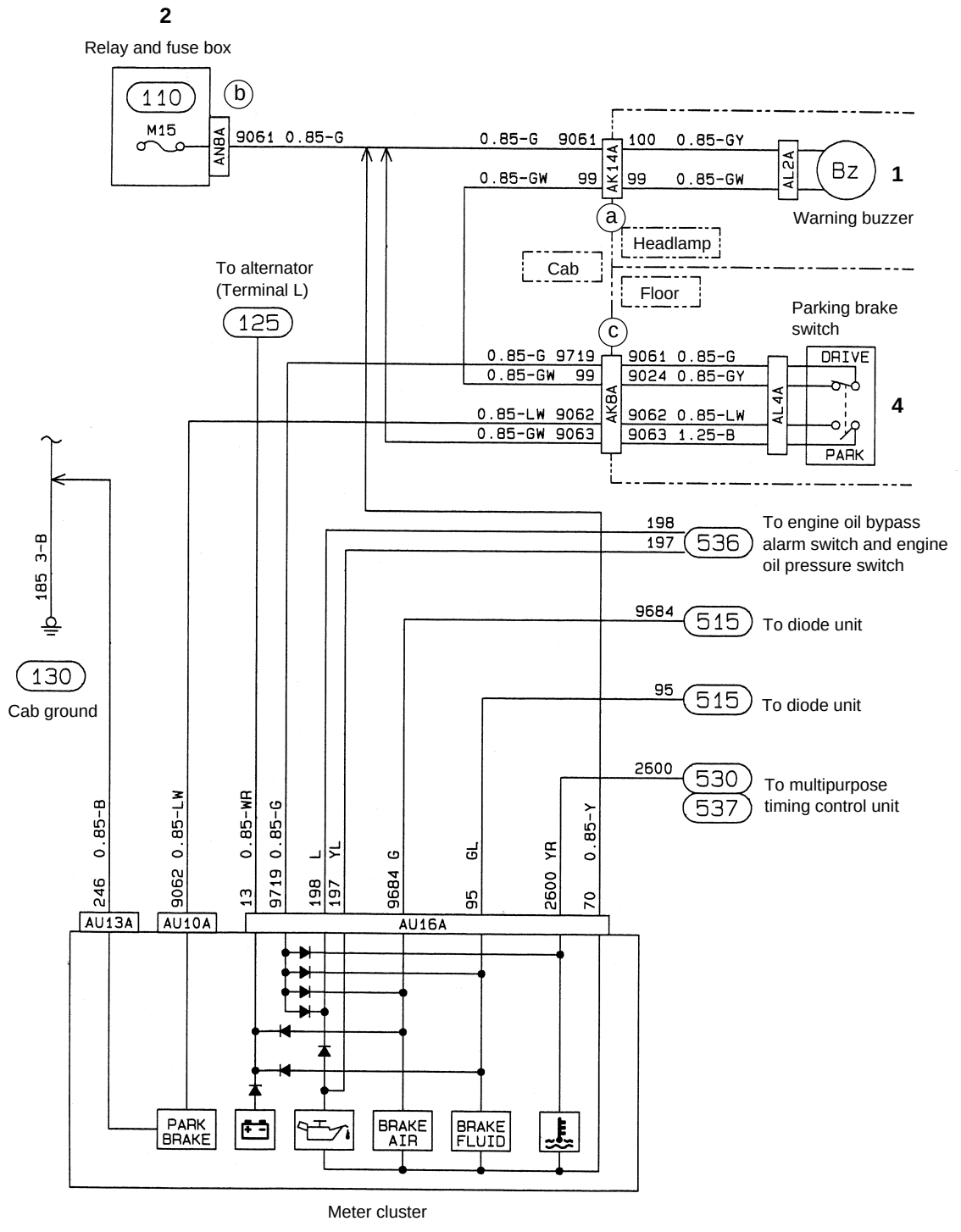

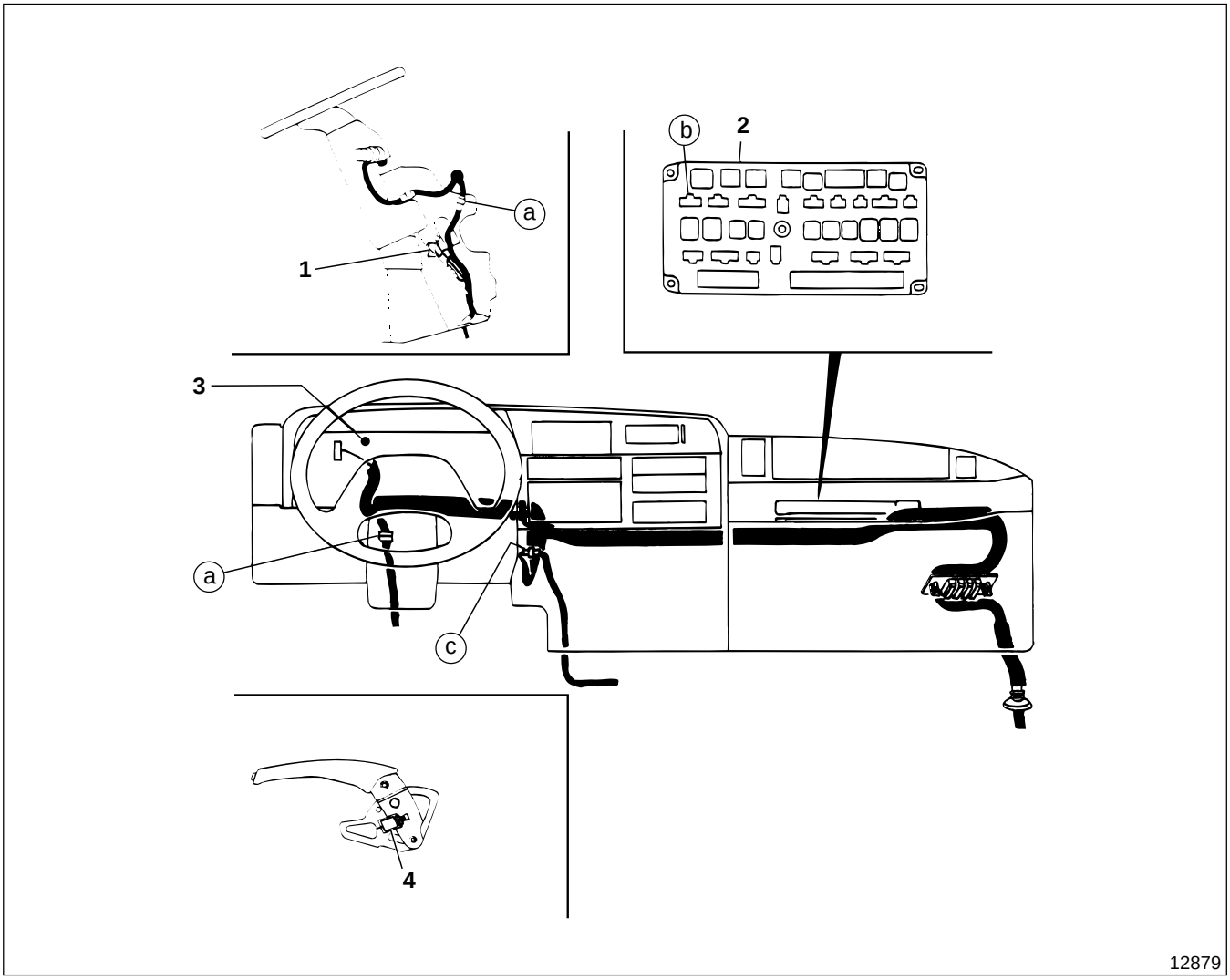

1 Warning buzzer 606
2 Relay and fuse box 104
3 Meter cluster 401
4 Parking brake switch

◆ Service procedures

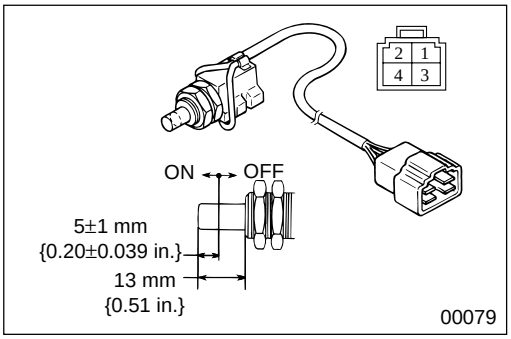

4 Inspection of parking brake switch

- Follow the table below to inspect continuity:

	①	②	③	④
ON (PARK)		○		○
OFF (DRIVE)	○		○	

○——○ : There is continuity between terminals ○ and ○.

- If any fault is found, replace parking brake switch **4**. Gr 36

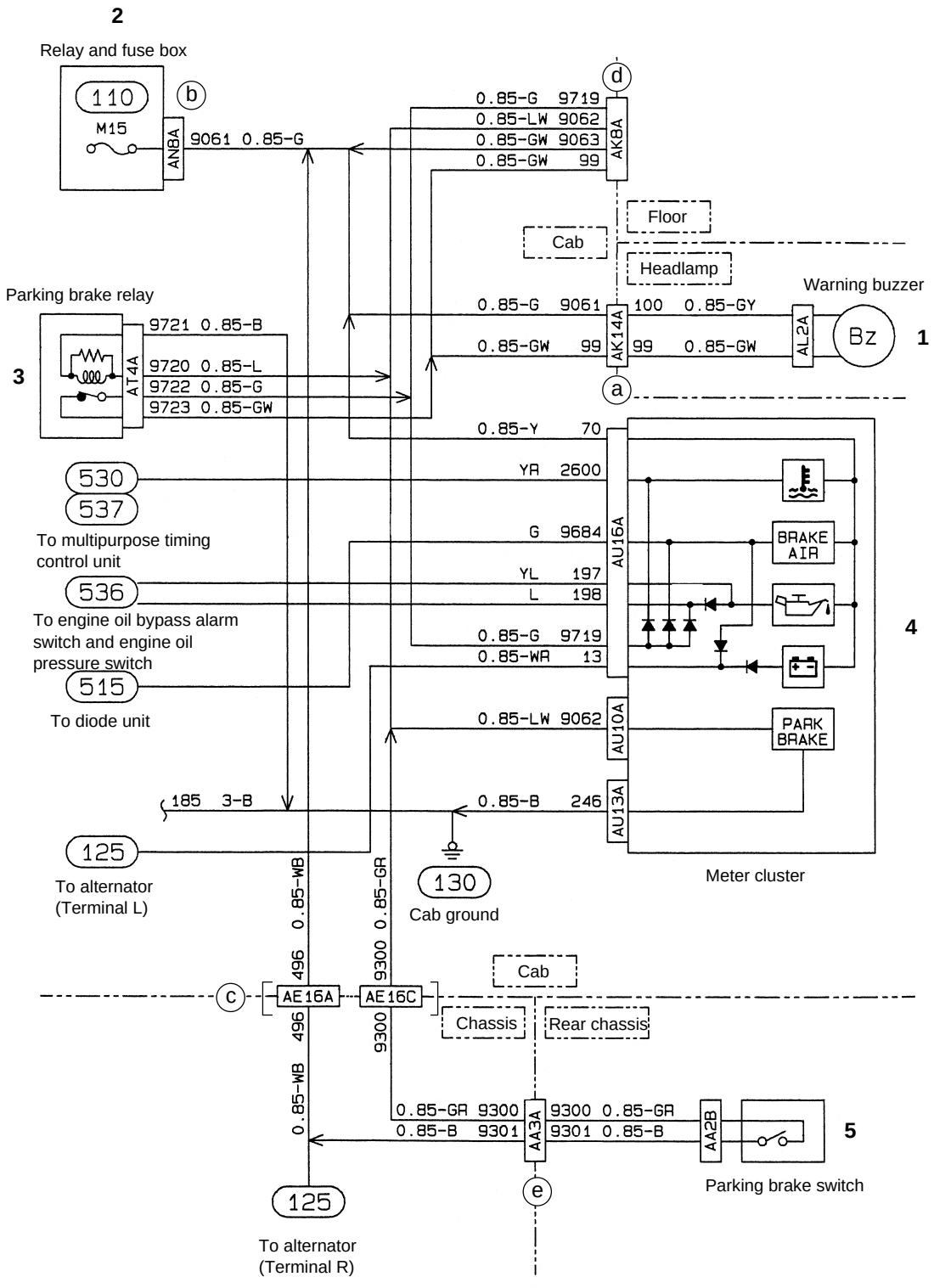
2
Relay and fuse box
110
M15
b
AN8A
9061 0.85-G
d
0.85-G 9719
0.85-LW 9062
0.85-GW 9063
0.85-GW 99
AK8A
Floor
Cab
Headlamp
Warning buzzer
Parking brake relay
3
9721 0.85-B
AT4A
9720 0.85-L
9722 0.85-G
9723 0.85-GW
0.85-G 9061
100 0.85-GY
AK14A
AL2A
Bz
1
0.85-GW 99
99 0.85-GW
a
0.85-Y 70
YR 2600
530
537
To multipurpose timing control unit
G 9684
BRAKE AIR
YL 197
L 198
536
To engine oil bypass alarm switch and engine oil pressure switch
AU16A
4
0.85-G 9719
0.85-WR 13
515
To diode unit
0.85-LW 9062
AU10A
PARK BRAKE
185 3-B
0.85-B 246
AU13A
125
To alternator (Terminal L)
130
Cab ground
Meter cluster
0.85-WB 496
0.85-GR 9300
Cab
c
AE16A
AE16C
Chassis
Rear chassis
0.85-GR 9300
0.85-B 9301
AA3A
9300 0.85-GR
9301 0.85-B
AA2B
5
e
Parking brake switch
125
To alternator (Terminal R)
10472

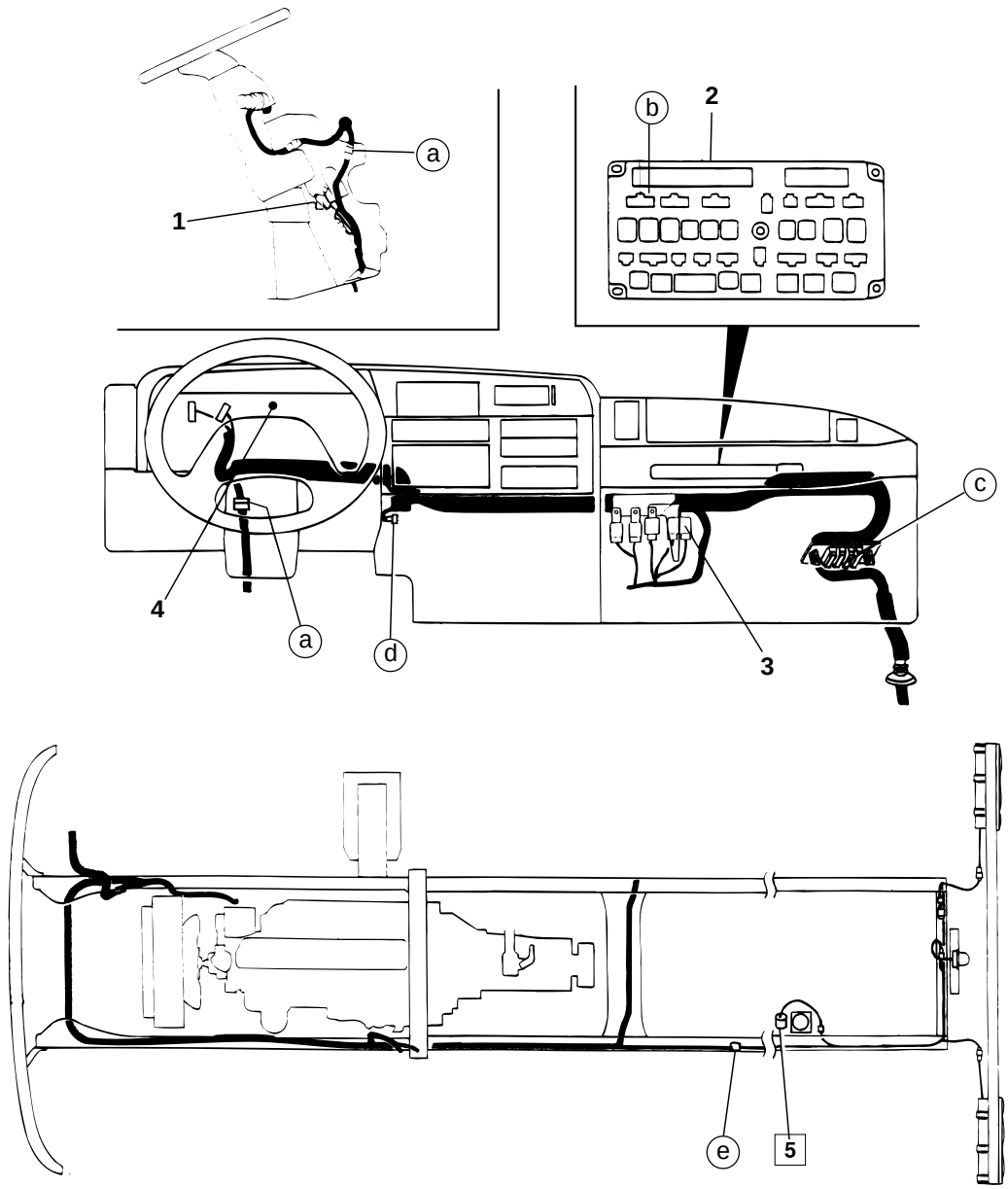

1 Warning buzzer
2 Relay and fuse box 📖 (104)
3 Parking brake relay
4 Meter cluster 📖 (401)
5 Parking brake switch

Service standards

Location	Maintenance item		Standard value	Limit	Remedy
5	Operating pressure of parking brake switch	When applying pressure	441 to 539 kPa {64 to 72 lbf/in², 4.5 to 5.5 kgf/cm²}	—	Replace
		When releasing pressure	461 to 559 kPa {67 to 81 lbf/in², 4.7 to 5.7 kgf/cm²}	—	Replace

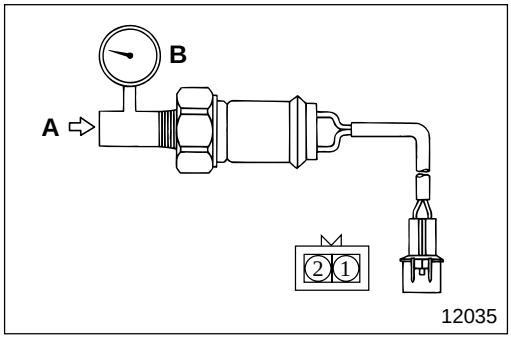

◆ Service procedure

5 **Inspection of parking brake switch**

Carry out the following inspections. If any fault is found, replace parking brake switch **5**.

- Make sure that there is continuity between terminals ① and ② when air pressure **A** is not applied to parking brake switch **5**.
- Apply air pressure **A** to parking brake switch **5** gradually starting from 0 kPa {0 lbf/in², 0 kgf/cm²}.
  Measure the air pressure when continuity is lost between terminals ① and ② to make sure that the measured value conforms to the standard value.
  B : Air pressure gauge
- When air pressure **A** of 785 kPa {115 lbf/in², 8 kgf/cm²} has been applied to parking brake switch **5**, gradually release the air pressure.
  Measure the air pressure when continuity is present between terminals ① and ②, and make sure that the measured value conforms to the standard value.

M E M O

515 BRAKE WARNING CIRCUIT

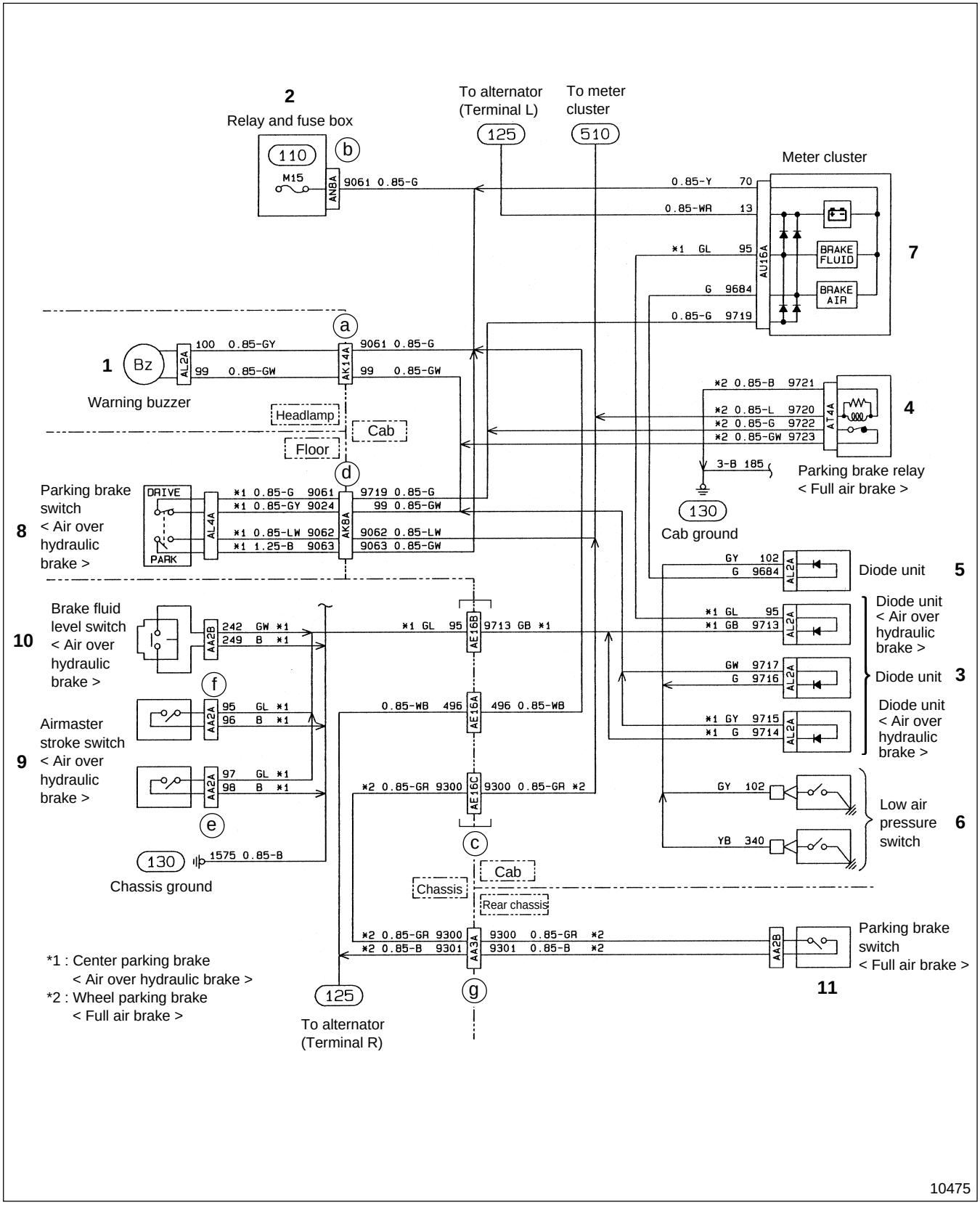

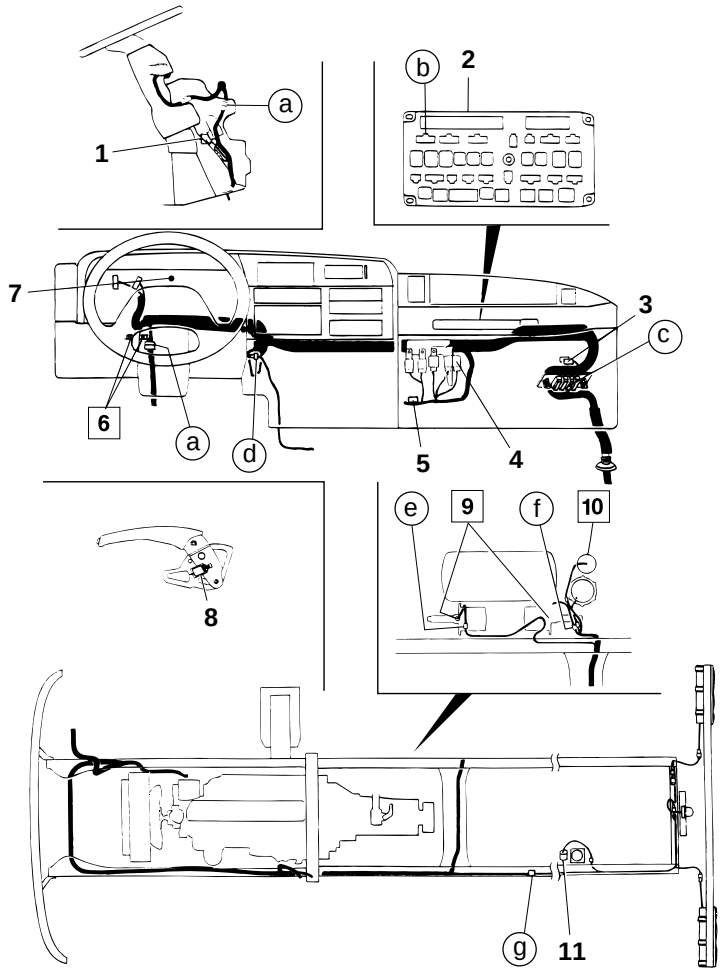

12881

1 Warning buzzer 606
2 Relay and fuse box 104
3 Diode unit
4 Parking brake relay 604
5 Diode unit
6 Low air pressure switch
7 Meter cluster 401
8 Parking brake switch 510
< Air over hydraulic brake >
9 Airmaster stroke switch < Air over hydraulic brake >
10 Brake fluid level switch < Air over hydraulic brake >
11 Parking brake switch 510
< Full air brake >

Service standards

Unit : mm {in.}

Location	Maintenance item		Standard value	Limit	Remedy
6	Operating pressure of low air pressure switch	When applying pressure	470 to 510 kPa {68 to 74 lbf/in², 4.8 to 5.2 kgf/cm²}	—	Replace
		When releasing pressure	470 to 560 kPa {68 to 81 lbf/in², 4.8 to 5.7 kgf/cm²}	—	
10	Continuity position of brake fluid level switch		$57\ ^{+3.5}_{-0.5}$ {$2.24\ ^{+0.14}_{-0.02}$} (Equivalent to 345 cm³ {21.1 cu.in., 345 cc})	—	Replace

◆ Service procedure

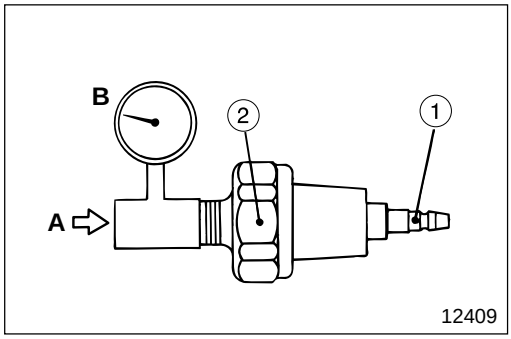

6 Inspection of low air pressure switch

Carry out the following inspection. If any fault is found, replace low air pressure switch **6**.

- Make sure that there is continuity between terminals ① and ② (Body) when air pressure **A** is not applied to low air pressure switch **6**.
- Apply air pressure **A** to low air pressure switch **6** gradually starting from 0 kPa {0 lbf/in², 0 kgf/cm²}.
  Measure the air pressure when continuity is lost between terminals ① and ② (Body) to make sure that the measured value conforms to the standard value.
  B : Air pressure gauge
- When air pressure **A** of 785 kPa {115 lbf/in², 8 kgf/cm²} has been applied to low air pressure switch **6**, gradually release the air pressure.
  Measure the air pressure when continuity is present between terminals ① and ② (Body), and make sure that the measured value conforms to the standard value.

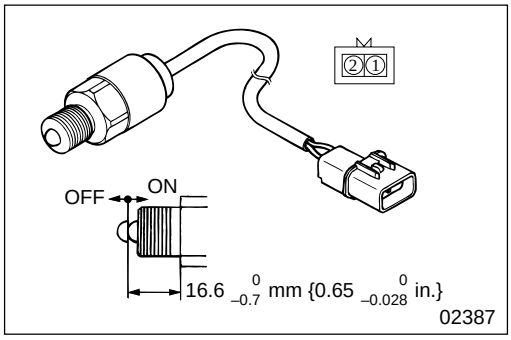

9 Inspection of air master stroke switch

- Follow the table below to inspect continuity:

	①	②
OFF		
ON	○	○

○——○ : There is continuity between terminals ○ and ○.

- If any fault is found, replace air master stroke switch **9**. Gr 35A

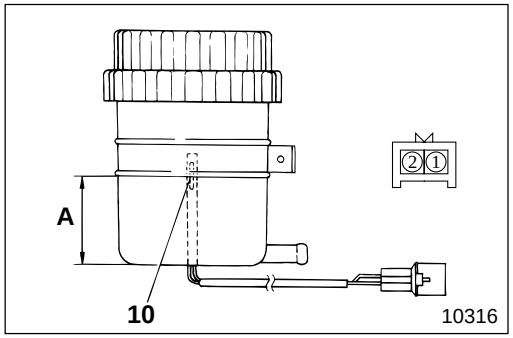

10 Inspection of brake fluid level switch

- Drain the brake fluid gradually from the brake fluid tank assembly.

CAUTION ⚠

If brake fluid is spilt on any part of the vehicle, wipe it off immediately, since the solvent in the fluid can damage the paintwork.

- Measure height **A** of brake fluid level switch **10** when continuity is present between terminals ① and ②.
- If the measured value deviates from the standard value, replace the fluid tank assembly. Gr 35A

M E M O

530 WATER LEVEL WARNING CIRCUIT

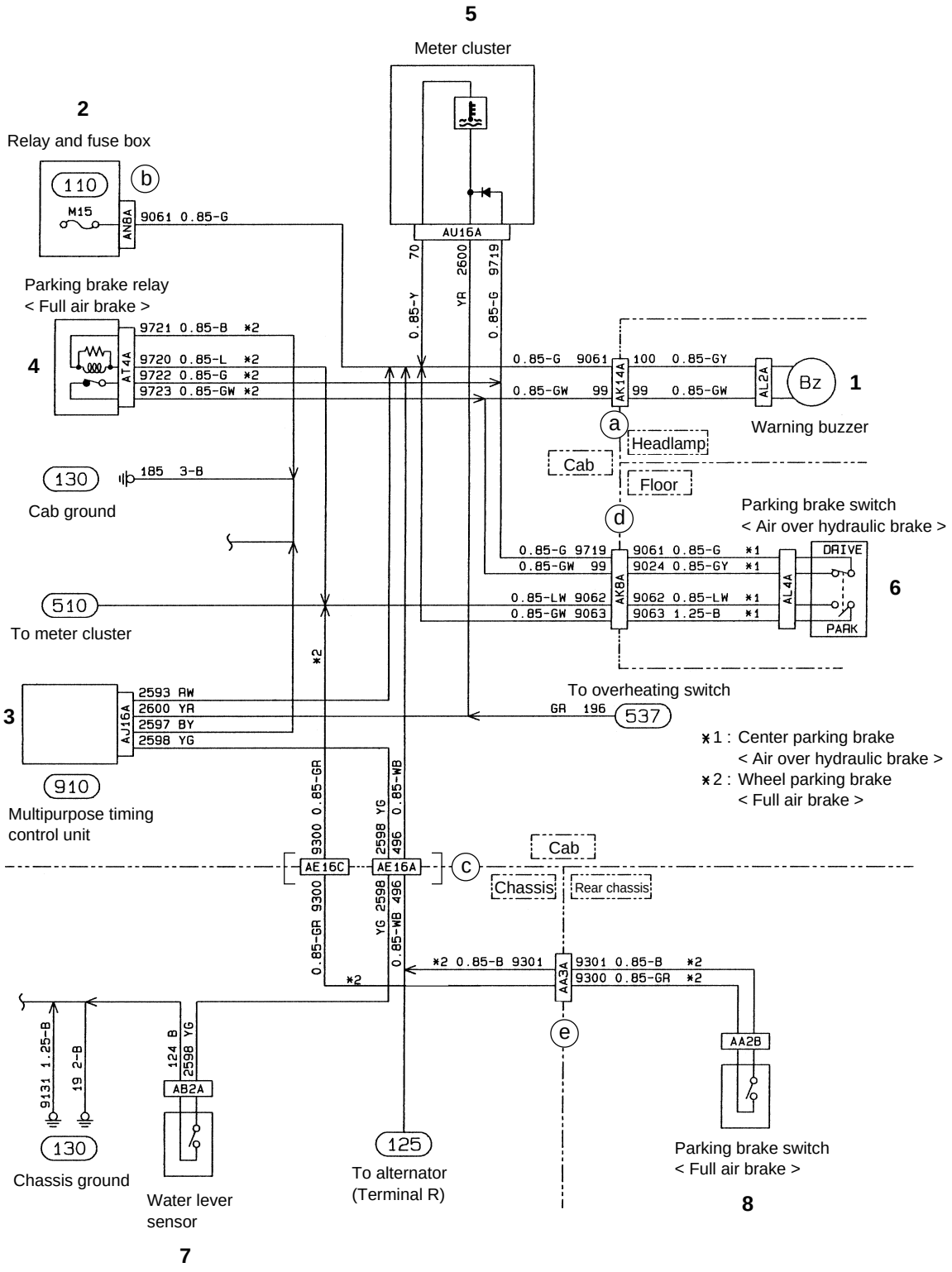

10457

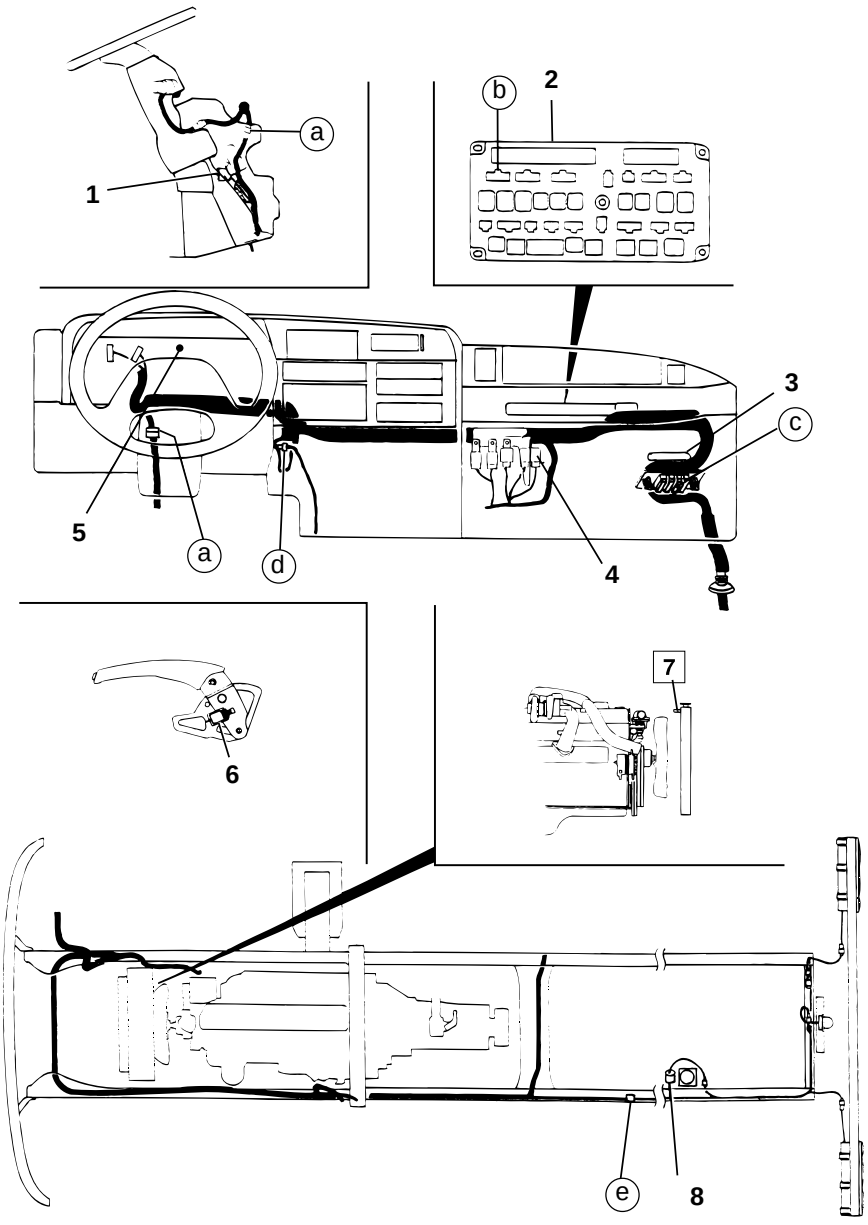

12882

1 Warning buzzer 606
2 Relay and fuse box 104
3 Multipurpose timing control unit 604
4 Parking brake relay 604
< Full air brake >
5 Meter cluster 401
6 Parking brake switch 510
< Air over hydraulic brake >
7 Water level sensor
8 Parking brake switch 510
< Full air brake >

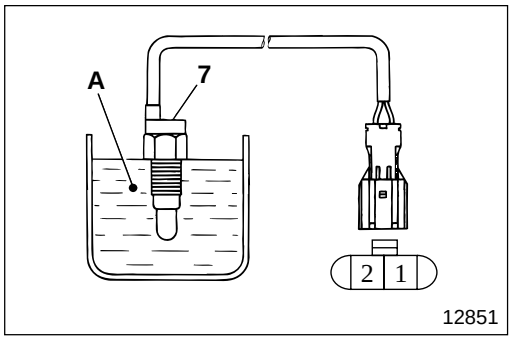

◆ Service procedure

7 **Inspection of water level sensor**

- Follow the table below to inspect continuity:

	①	②
When water level sensor is out of the water		
When water level sensor is in the water	○——○	

○——○: There is continuity between terminals ○ and ○.

- If any fault is found, replace water level sensor **7**. Gr 14

A : Engine coolant

M E M O

536 ENGINE OIL PRESSURE WARNING CIRCUIT

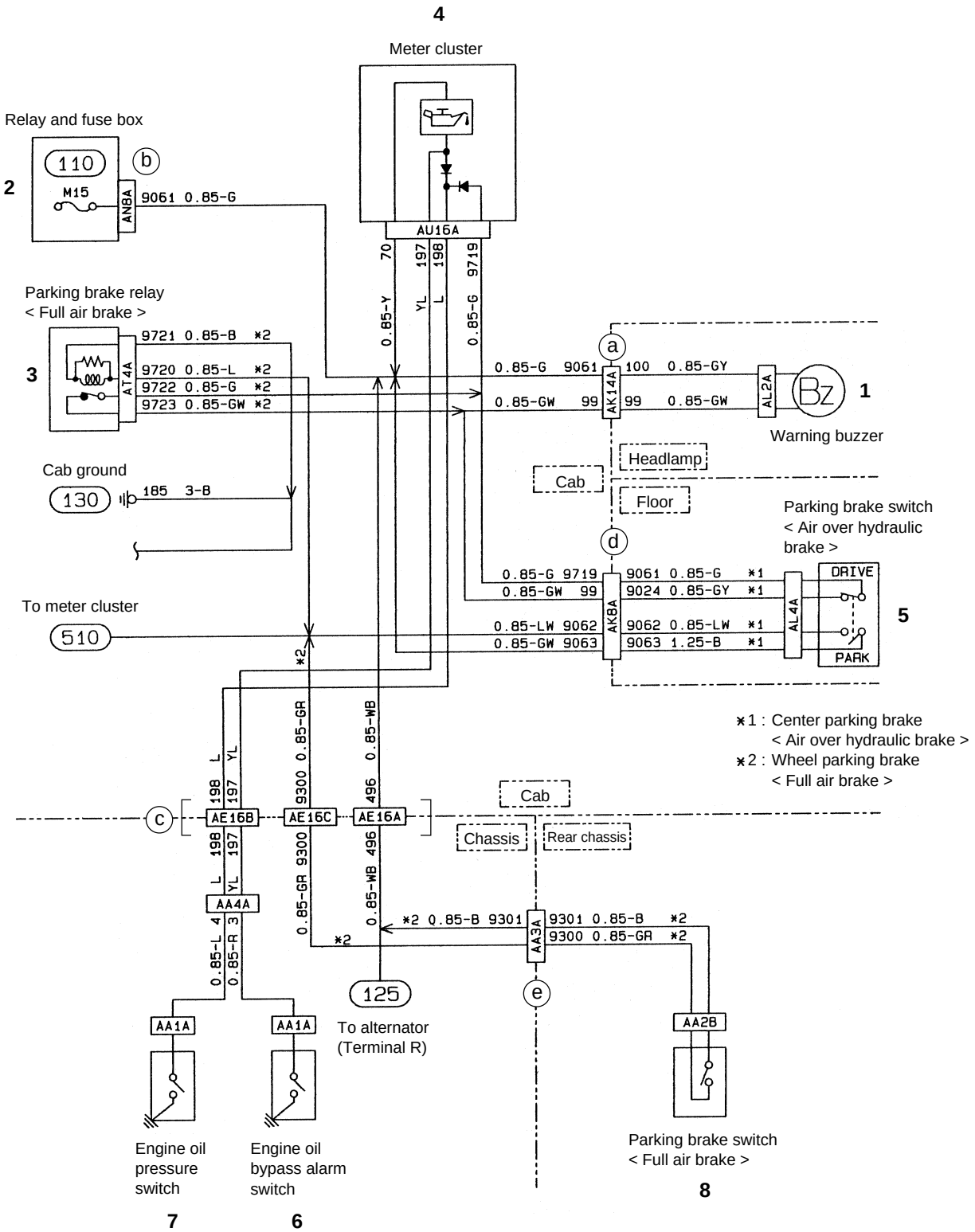

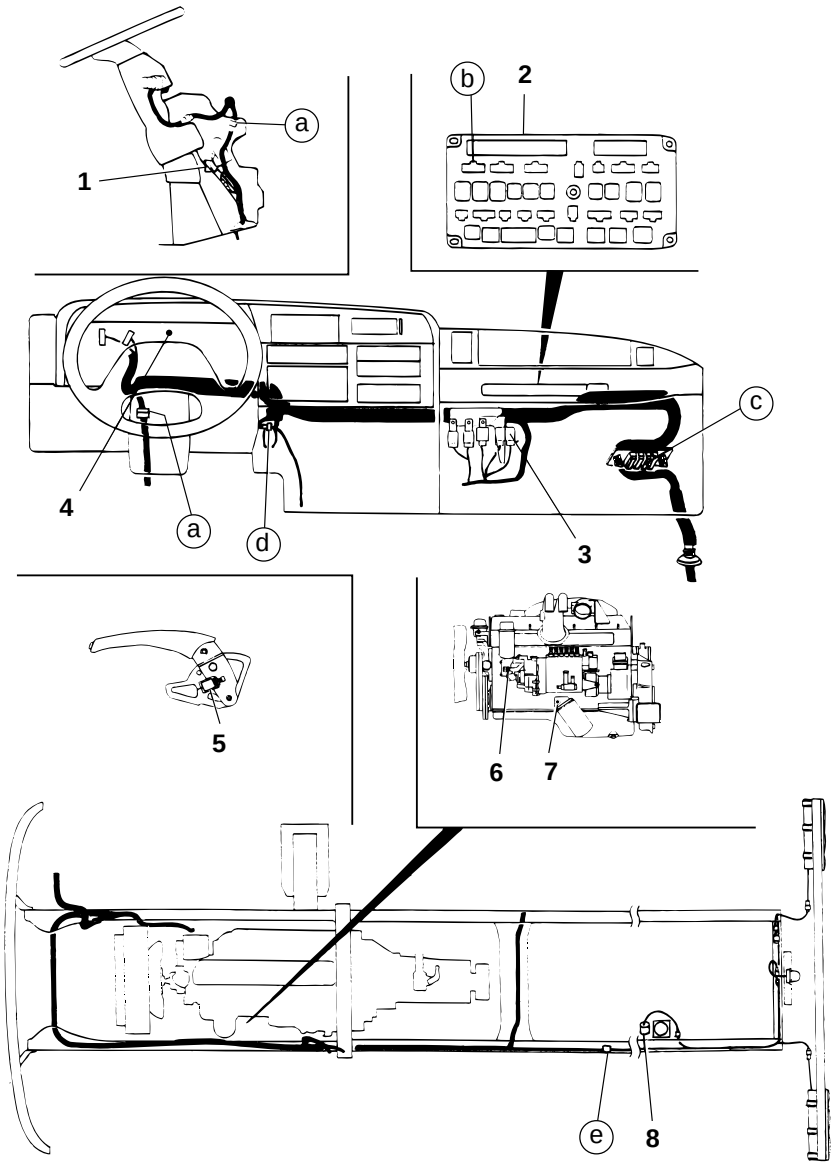

12883

1 Warning buzzer 606
2 Relay and fuse box 104
3 Parking brake relay 604
< Full air brake >
4 Meter cluster 401
5 Parking brake switch 510
< Air over hydraulic brake >
6 Engine oil bypass alarm switch 801
7 Engine oil pressure switch 801
8 Parking brake switch 510
< Full brake >

537 OVERHEATING WARNING CIRCUIT

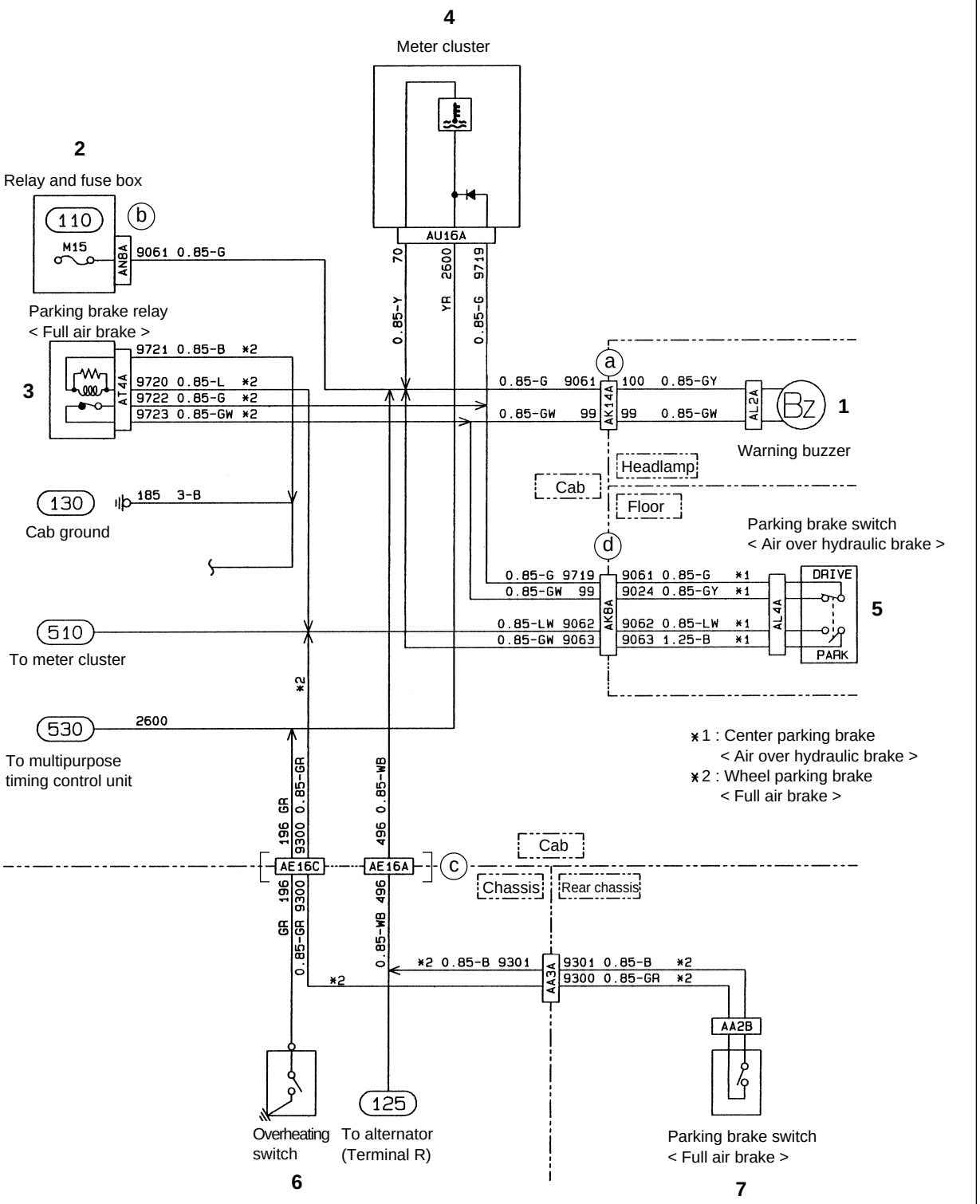

10486

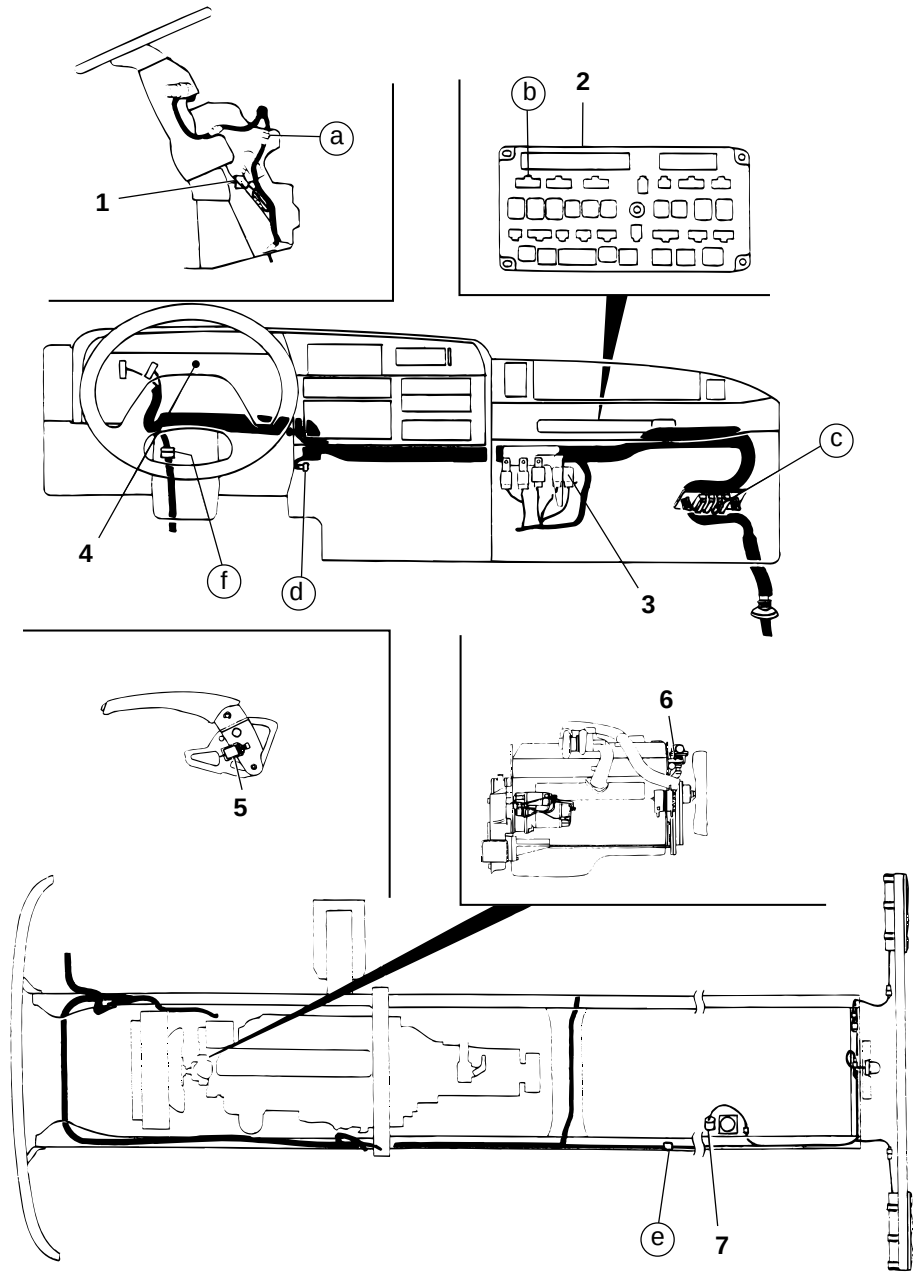

1 Warning buzzer 🕮 (606)
2 Relay and fuse box 🕮 (104)
3 Parking brake relay 🕮 (604)
< Full air brake >
4 Meter cluster 🕮 (401)
5 Parking brake switch 🕮 (510)
< Air over hydraulic brake >
6 Overheating switch 🕮 (801)
7 Parking brake switch 🕮 (510)
< Full air brake >

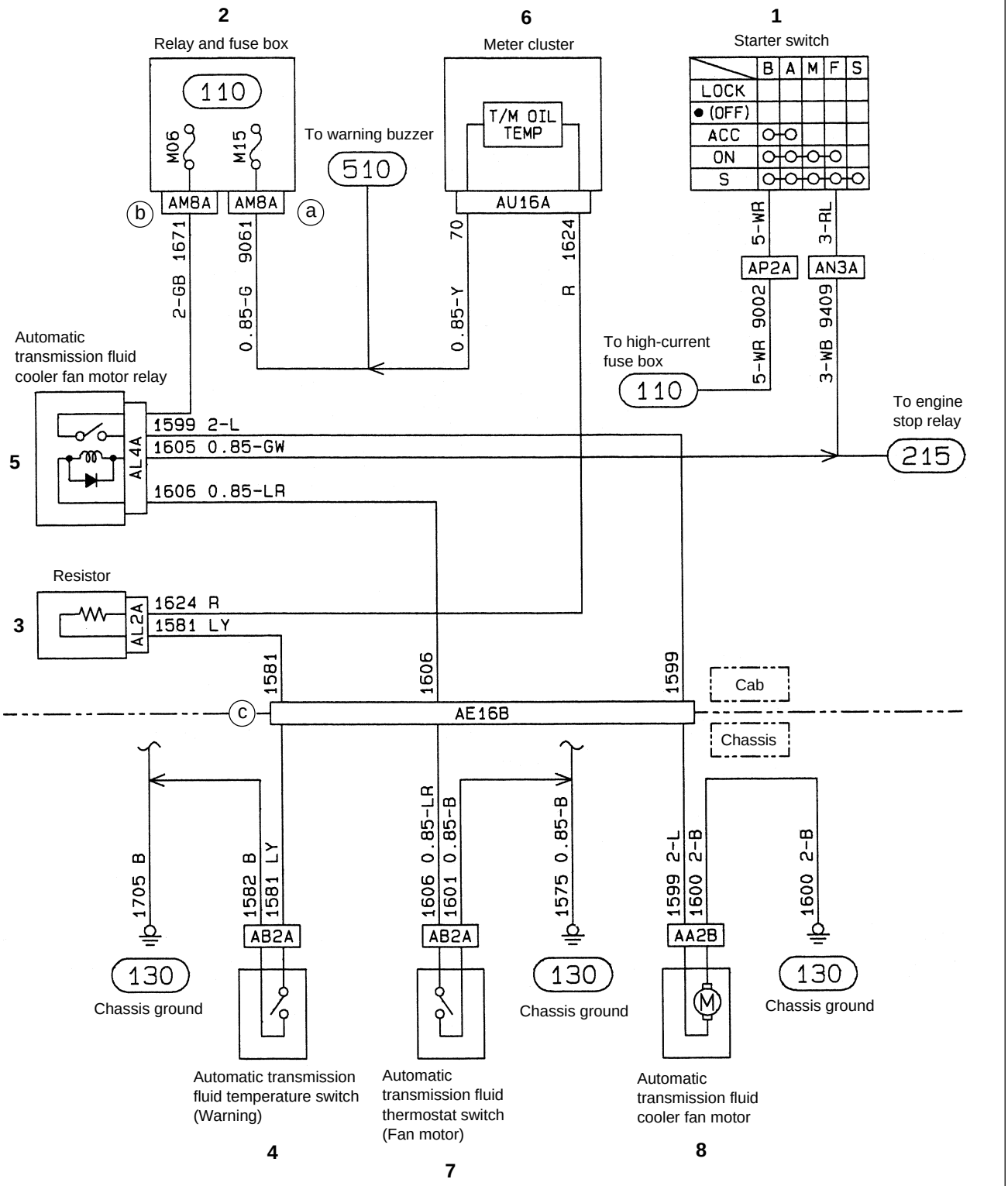
2
Relay and fuse box
110
M06
M15
AM8A
AM8A
b
a
To warning buzzer
510
6
Meter cluster
T/M OIL TEMP
AU16A
1
Starter switch
B A M F S
LOCK
(OFF)
ACC
ON
S
2-GB 1671
0.85-G 9061
0.85-Y 70
R 1624
5-WR
3-RL
AP2A
AN3A
5-WR 9002
3-WB 9409
Automatic transmission fluid cooler fan motor relay
To high-current fuse box
110
To engine stop relay
215
5
AL4A
1599 2-L
1605 0.85-GW
1606 0.85-LR
Resistor
3
AL2A
1624 R
1581 LY
1581
1606
1599
Cab
C
AE16B
Chassis
1705 B
1582 B
1581 LY
1606 0.85-LR
1601 0.85-B
1575 0.85-B
1599 2-L
1600 2-B
1600 2-B
AB2A
AB2A
AA2B
130
130
130
Chassis ground
Chassis ground
Chassis ground
M
Automatic transmission fluid temperature switch (Warning)
4
Automatic transmission fluid thermostat switch (Fan motor)
7
Automatic transmission fluid cooler fan motor
8
10487

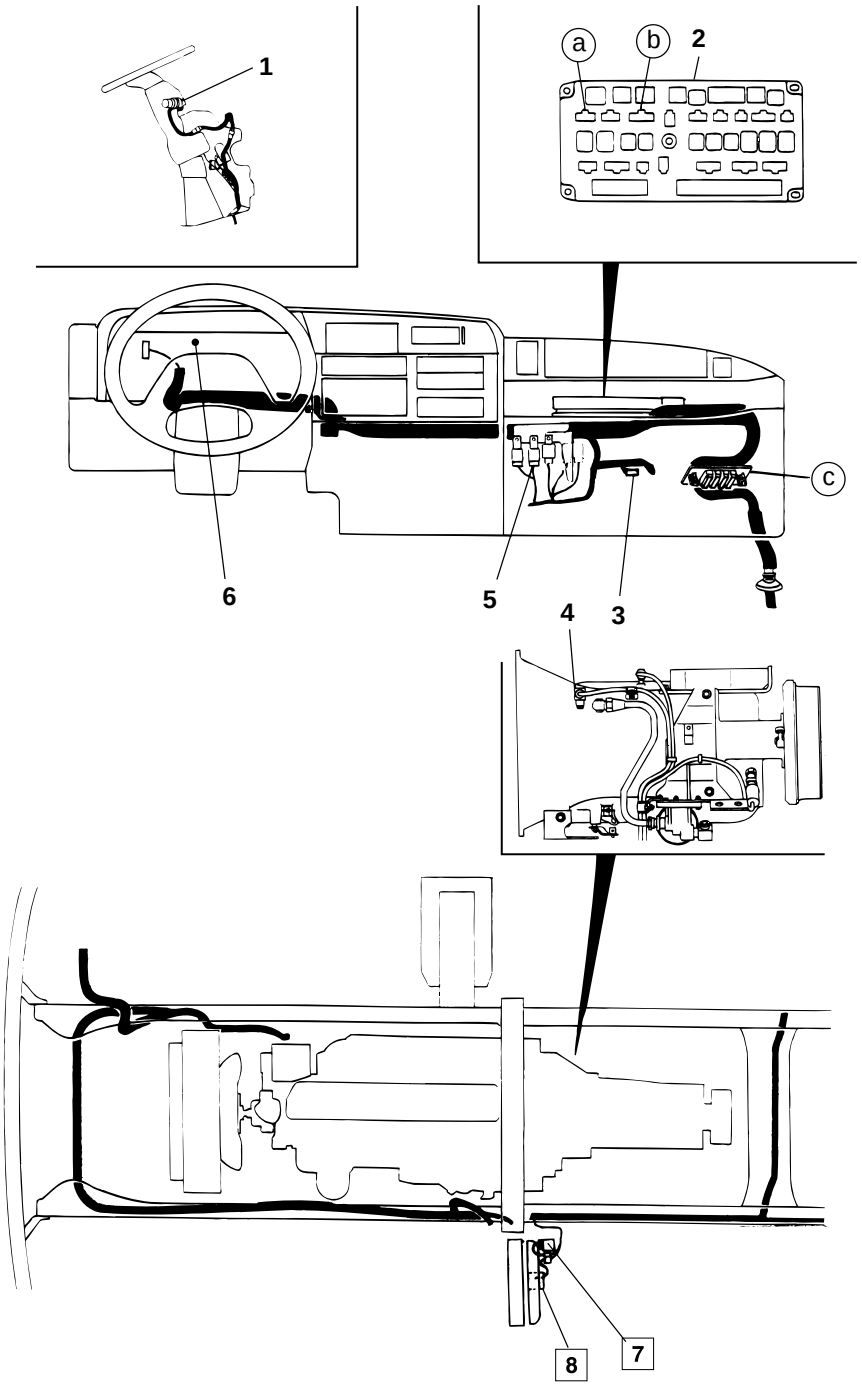

1 Starter switch 🕮 (210)
2 Relay and fuse box 🕮 (104)
3 resistor
4 Automatic transmission fluid temperature switch (Warning) 🕮 (802)
5 Automatic transmission fluid cooler fan motor relay 🕮 (604)
6 Meter cluster 🕮 (401)
7 Automatic transmission fluid thermostat switch (Fan motor)
8 Automatic transmission fluid cooler fan motor

Service standards

Location	Maintenance item		Standard value	Limit	Remedy
7	Operating temperature of automatic transmission fluid thermostat switch	When increases (OFF→ON)	97±3°C {207±5.4°F}	—	Replace
		When decreases (ON→OFF)	90°C {194°F} MIN		

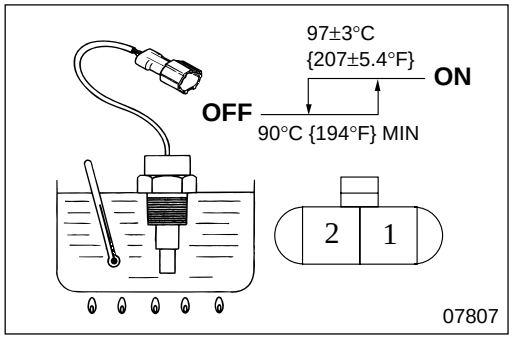

◆ Service procedure

7 **Inspection of automatic transmission fluid thermostat switch**

Carry out the following inspection. If any fault is found, replace automatic transmission fluid thermostat switch **7**. Gr 23

- Make sure that there is no continuity between terminals ① and ② at room temperature (20±5°C {68±9°F}).
- Place automatic transmission fluid thermostat switch **7** in a container filled with engine oil and raise the oil temperature while stirring the oil. Measure the temperature when there is continuity between terminals ① and ②, and make sure that the measured value conforms to the standard value.
- Lower the oil temperature and measure the temperature when continuity is lost between terminals ① and ②, and make sure that the measured value conforms to the standard value.

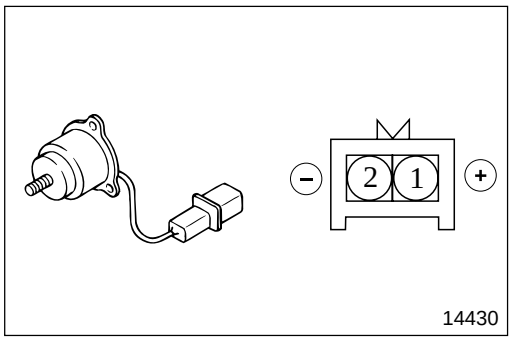

8 **Inspection of cooler fan motor assembly**

- Make sure that cooler fan motor assembly **8** activates when applying battery voltage to terminals ① and ②.
- If any fault is found, replace cooler fan motor assembly **8**.

M E M O

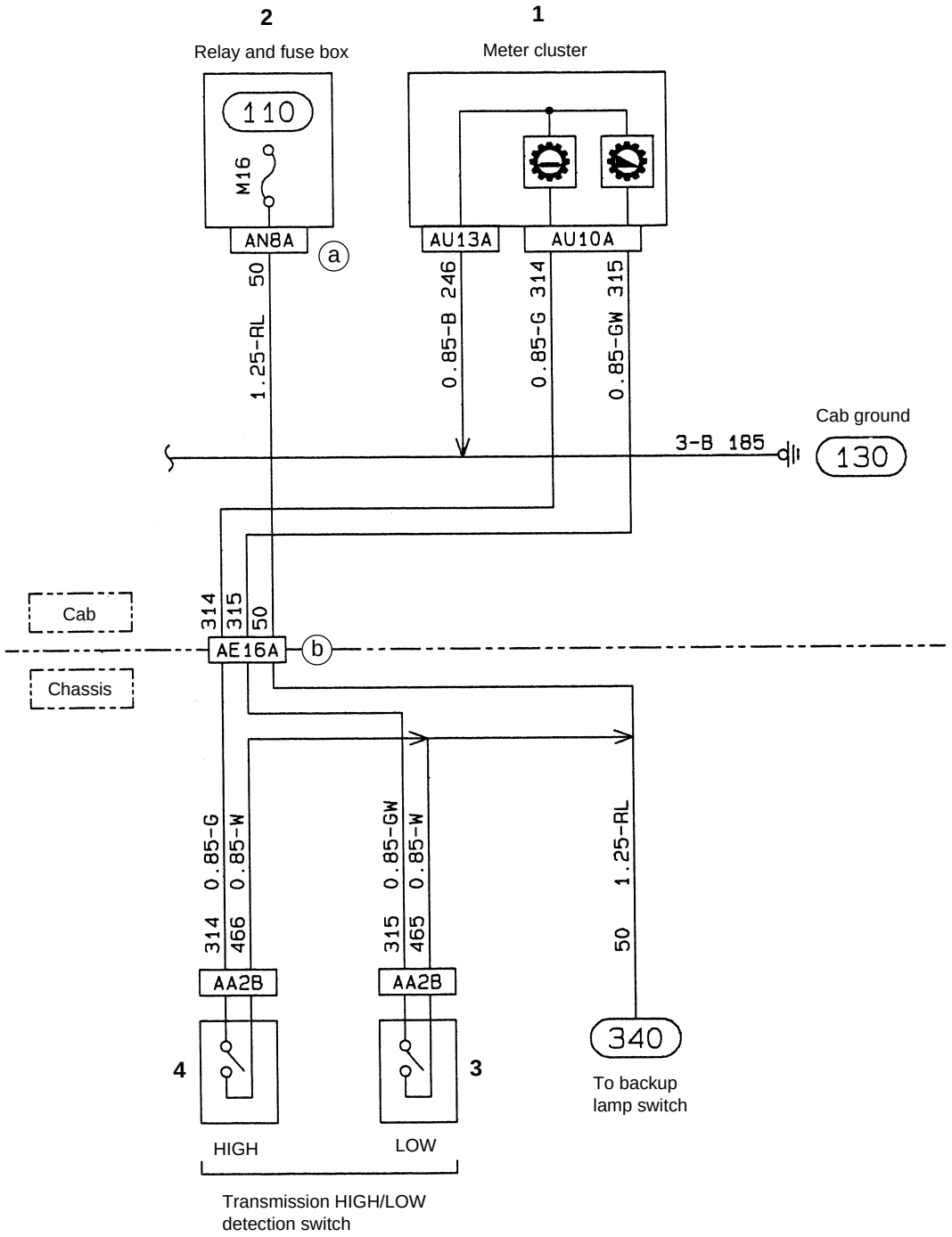
2
Relay and fuse box
1
Meter cluster
110
M16
AN8A
a
AU13A
AU10A
1.25-RL 50
0.85-B 246
0.85-G 314
0.85-GW 315
Cab ground
3-B 185
130
Cab
Chassis
314
315
50
AE16A
b
0.85-G 314
0.85-W 466
0.85-GW 315
0.85-W 465
1.25-RL 50
AA2B
AA2B
340
To backup lamp switch
4
3
HIGH
LOW
Transmission HIGH/LOW detection switch

10488

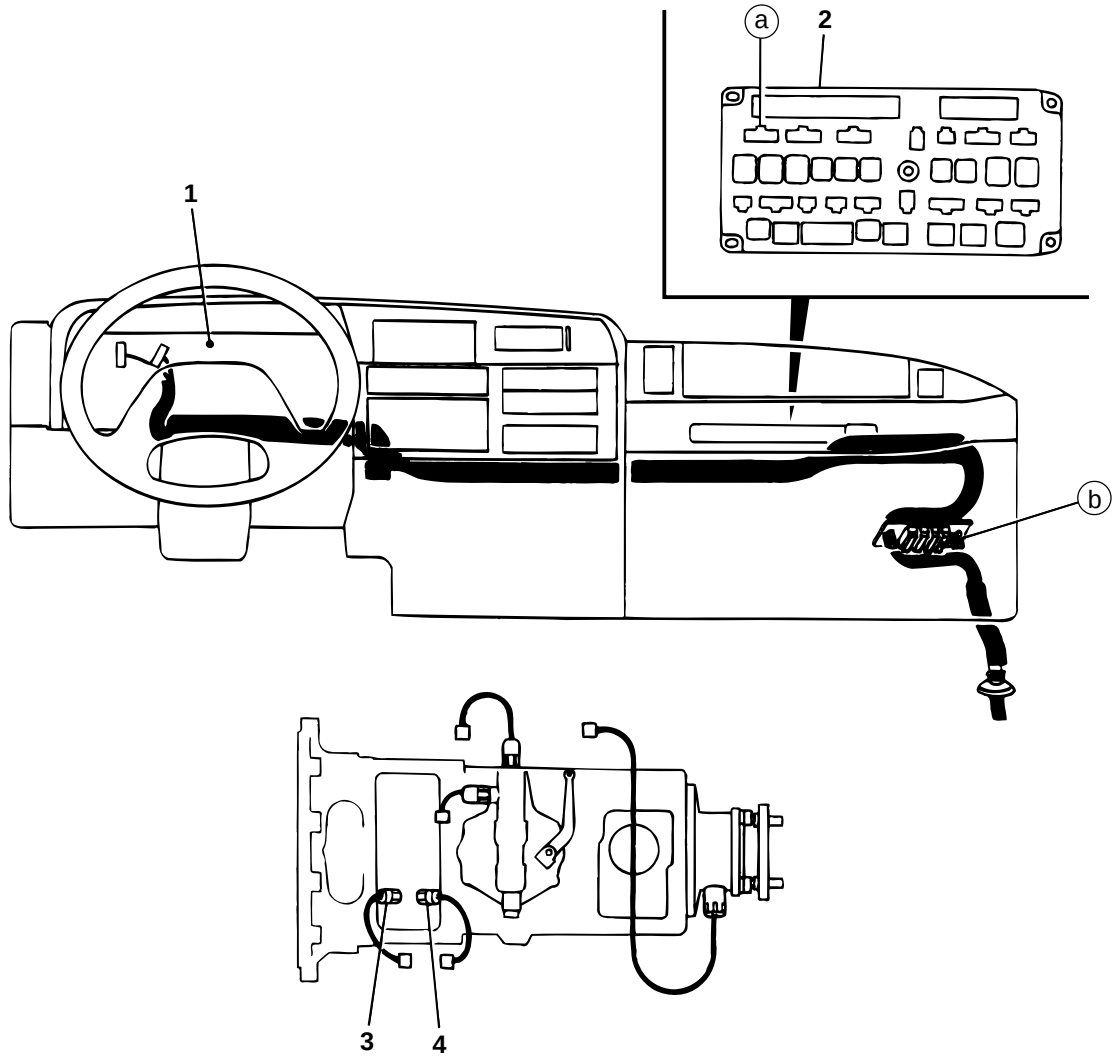

1 Meter cluster 401
2 Relay and fuse box 104
3 Transmission HIGH/LOW detection switch (LOW) 802
4 Transmission HIGH/LOW detection switch (HIGH) 802

550 CAB TILT WARNING CIRCUIT

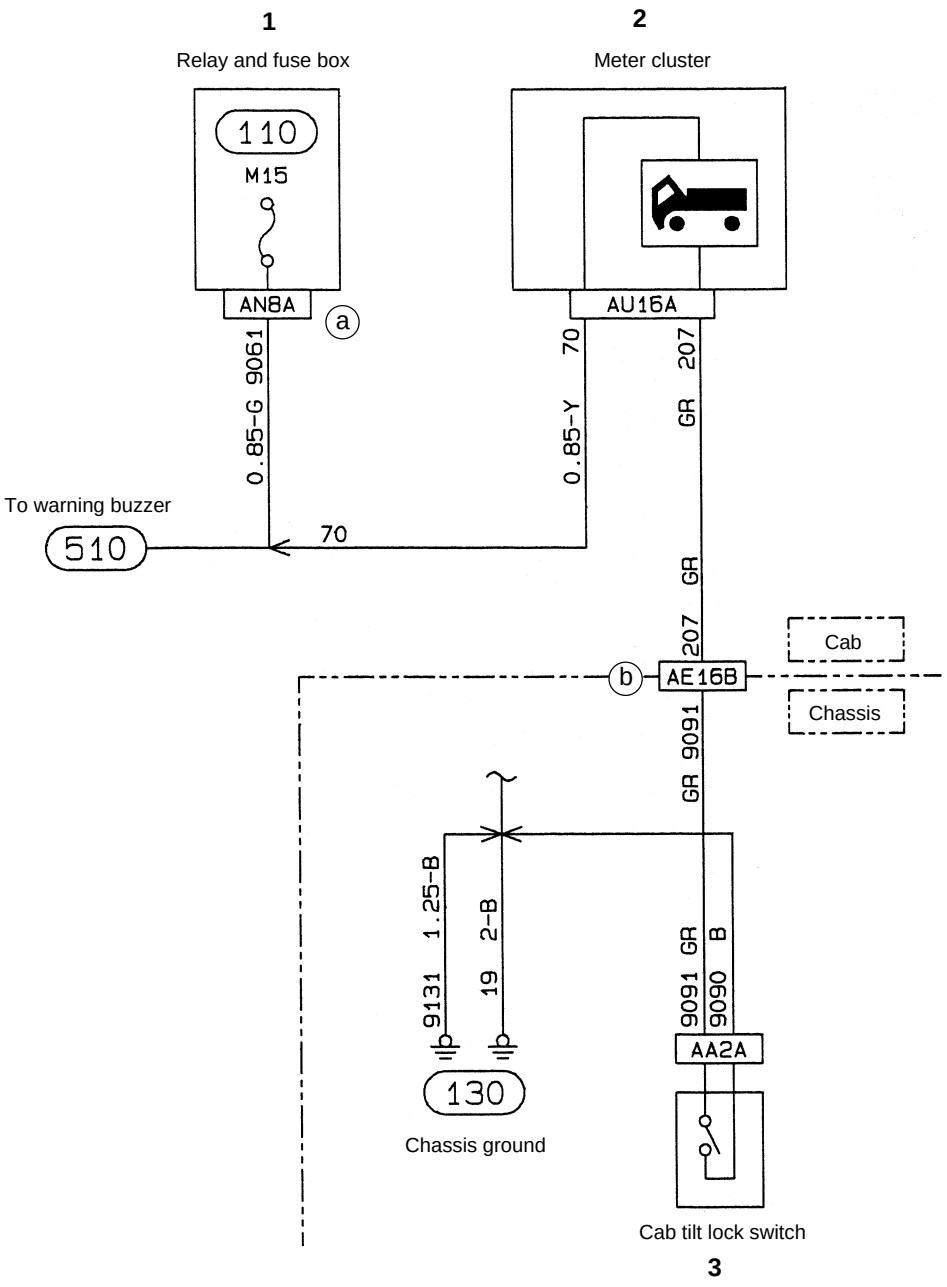

10468

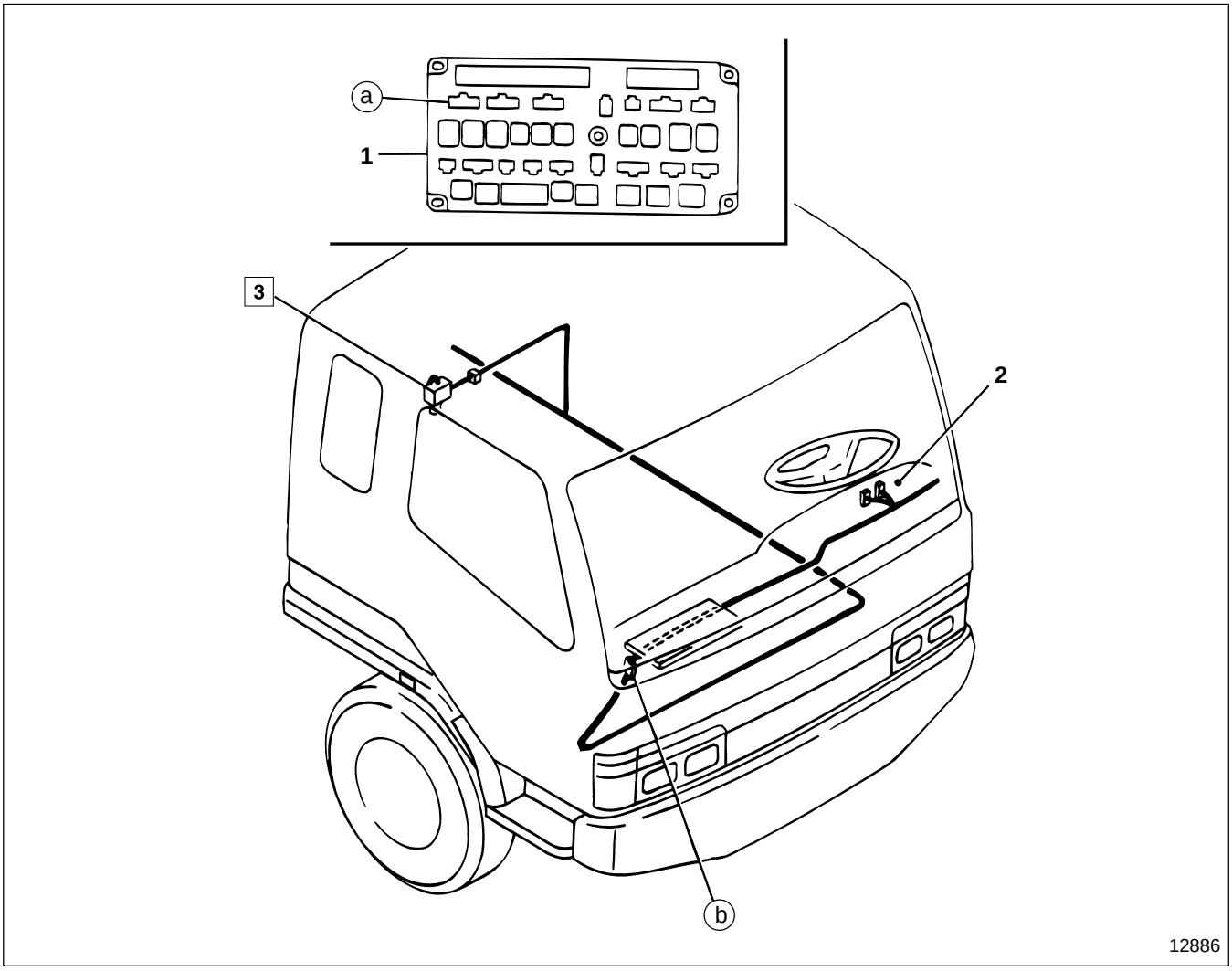

1 Relay and fuse box 📖 104
2 Meter cluster 📖 401
3 Cab tilt lock switch

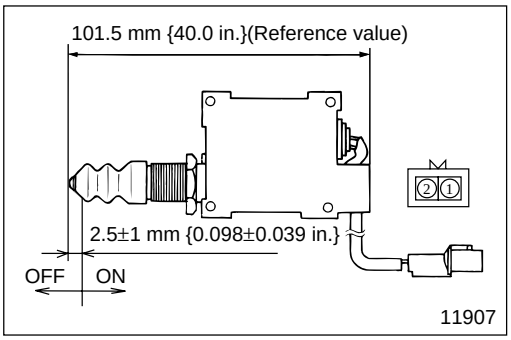

◆ Service procedure

3 **Inspection of cab tilt lock switch**

- Follow the table below to inspect continuity:

	①	②
ON	○	○
OFF		

○—○ : There is continuity between terminals ○ and ○.

- If any faut is found, replace cab tilt lock switch **3**. Gr 42

⑥ CAB SIDE ELECTRICS

SPECIFICATIONS 54-6-2

TROUBLESHOOTING 54-6-2

601 SWITCH 54-6-4

604 RELAY AND CONTROL UNIT 54-6-8

606 WARNING BUZZER 54-6-11

610 CIGARETTE LIGHTER CIRCUIT 54-6-12

612 AUDIO CIRCUIT 54-6-14

614 WIPER AND WASHER CIRCUIT 54-6-16

616 HORN CIRCUIT 54-6-20

618 HEATER CIRCUIT 54-6-22

SPECIFICATIONS/TROUBLESHOOTING

SPECIFICATIONS

Item			Specifications
Minimum operating voltage of relay		V	8 or less
Speaker	Rated input	W	12
	Maximum input	W	25
	Impedance		4±0.6
Air horn	Rated voltage	V	12
	Rated current	A	3.2 or less
	Sound pressure	dB	115^{0}_{-5} (at 2 m {6.6 ft})
Warning buzzer	Rated voltage	V	12
	Rated current	mA	150 or less
	Sound pressure	dB	75±10 (at 1 m {3.3 ft})

TROUBLESHOOTING

Symptoms / Possible causes	Cigarette lighter		Audio					Remarks
	Does not glow	Does not return	Specific frequency band does not work	Spurious noise generated	Sound quality poor	Sound from one side only	Left and right volume different	
Connector connection faulty, harness broken, grounding faulty	○			○		○		
Fuse blown	○							
Cigarette lighter faulty	○	○						
Antenna and antenna cable connection faulty				○				
Speaker faulty			○	○	○	○	○	
Left and right speaker impedance different							○	

Accessory noise generation source

Accessory	Noise	Symptoms
Alternator	Whistling	High pitch sound when accelerator pedal suddenly depressed (Stops soon after engine stopped)
Water temperature gauge	Scratching	Occurs when engine running (Continues for a while after engine stops)
Engine oil pressure switch	Rattling	Depends on engine speed (Does not occur during idling)
Fuel gauge unit	Scratching	Occurs when engine suddenly revved, while running on rough roads, or starter switch turned ON
Flasher unit	Banging	When turn signal blinks
Horn	Hissing	Occurs when horn button pressed or released
Wiper motor	Whining	Depends on windshield wiper speed
Washer motor	Whining	When windshield washer operates

Symptoms / Possible causes	Horn				Remarks
	No Sound	Continuous sound	Small sound	Sound quality poor	
Connector connection faulty, harness broken, grounding faulty	○				
Fuse blown	○				
Horn switch faulty	○	○			
Horn faulty	○		○	○	
Horn stay warped			○	○	
Battery voltage insufficient	○		○		
Air leaking from air system	○		○	○	

Installation Position

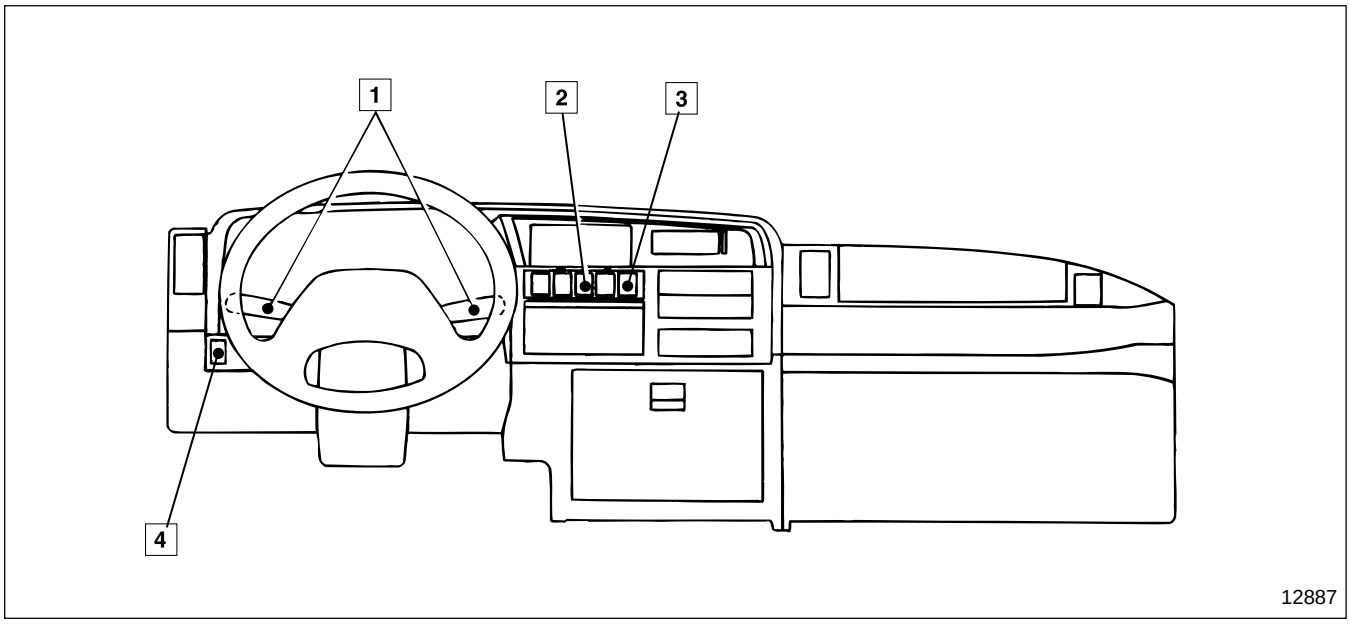

1 Combination switch
2 Cold start switch
3 Van body dome light switch
4 Rheostat switch

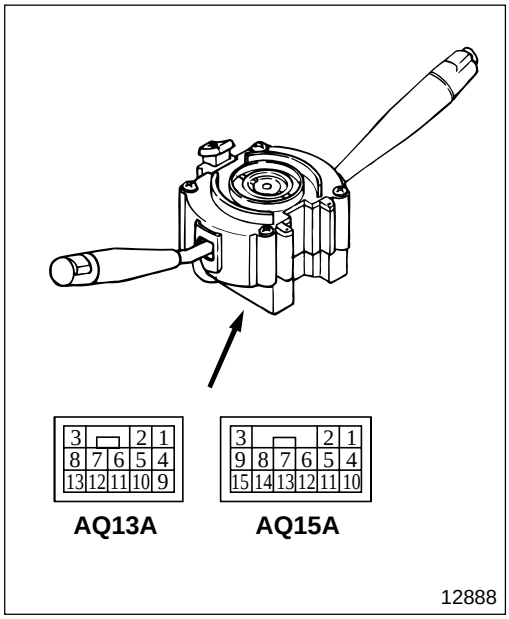

◆ Service procedure

1 **Inspection of combination switch**

- Operate combination switch **1**.
- Check for continuity between connector terminals, referring to the connector connection table.
  There is continuity between terminals ○ and ○ in the table.

- If any fault is found, replace combination switch **1**.

AQ15A Connector connection table

		①	②	③	⑤	⑥	⑦	⑧	⑨	⑬	Body ground
Lighting switch	OFF										
	I						○			○	
	II				○		○			○	
Dimmer switch	Main				○			○			
	↕				○			○			
					○	○					
	Dimmer				○	○					
	↕				○	○					
							○	○			
	Passing						○	○			
Turn signal switch	LH		○						○		
	N (neutral)										
	RH			○					○		
Horn switch	OFF										
	ON	○									○

AQ13A Connector Connection Table

		①	④	⑤	⑥	⑦	⑧	⑨	⑩	⑪	⑫	⑬
Wiper switch	OFF											
	INT (intermittent)								○			○
	LO (LOW)								○		○	
	HI (HIGH)								○	○	○	
	WASH (washer)							○	○			
Exhaust brake switch < Manual transmission >	OFF											
	ON	○	○									
Hazard switch	OFF											
	ON			○	○	○	○					

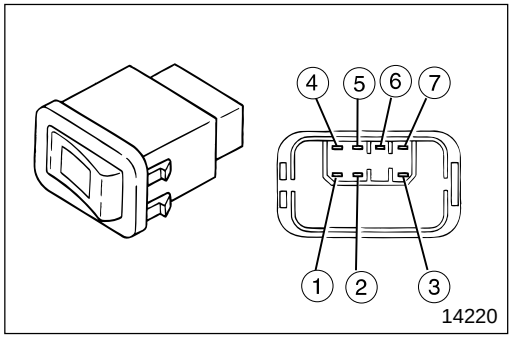

2 Inspection of cold start switch

- Follow the table below to inspect continuity:

	①	⑤	②	④	⑦	LED (Operation indication light)	③
ON	○—○				○	—⩘—⊳—	○
OFF			○—○				

○—○ : There is continuity between terminals ○ and ○.

- If any fault is found, replace cold start switch **2**.

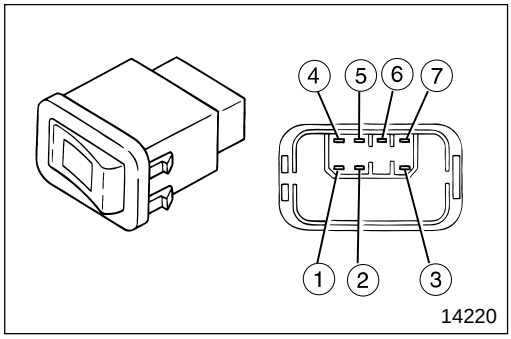

3 Inspection of van body dome light switch

- Follow the table below to inspect continuity:

	①	⑤	⑦	LED (Operation indication light)	③
ON	○—○		○	—⩘—⊳—	○
OFF					

○—○ : There is continuity between terminals ○ and ○.

- If any fault is found, replace van body dome light switch **3**.

4 Inspection of rheostat switch

- Rheostat switch **4** contains a control circuit, because of this it is difficult to inspect rheostat switch **4** independently, therefore you should inspect the rheostat switch indirectly, by inspecting the system harness and the related parts.
- If no fault is found in the related parts but the system is faulty, replace rheostat switch **4**.

M E M O

Installation Position

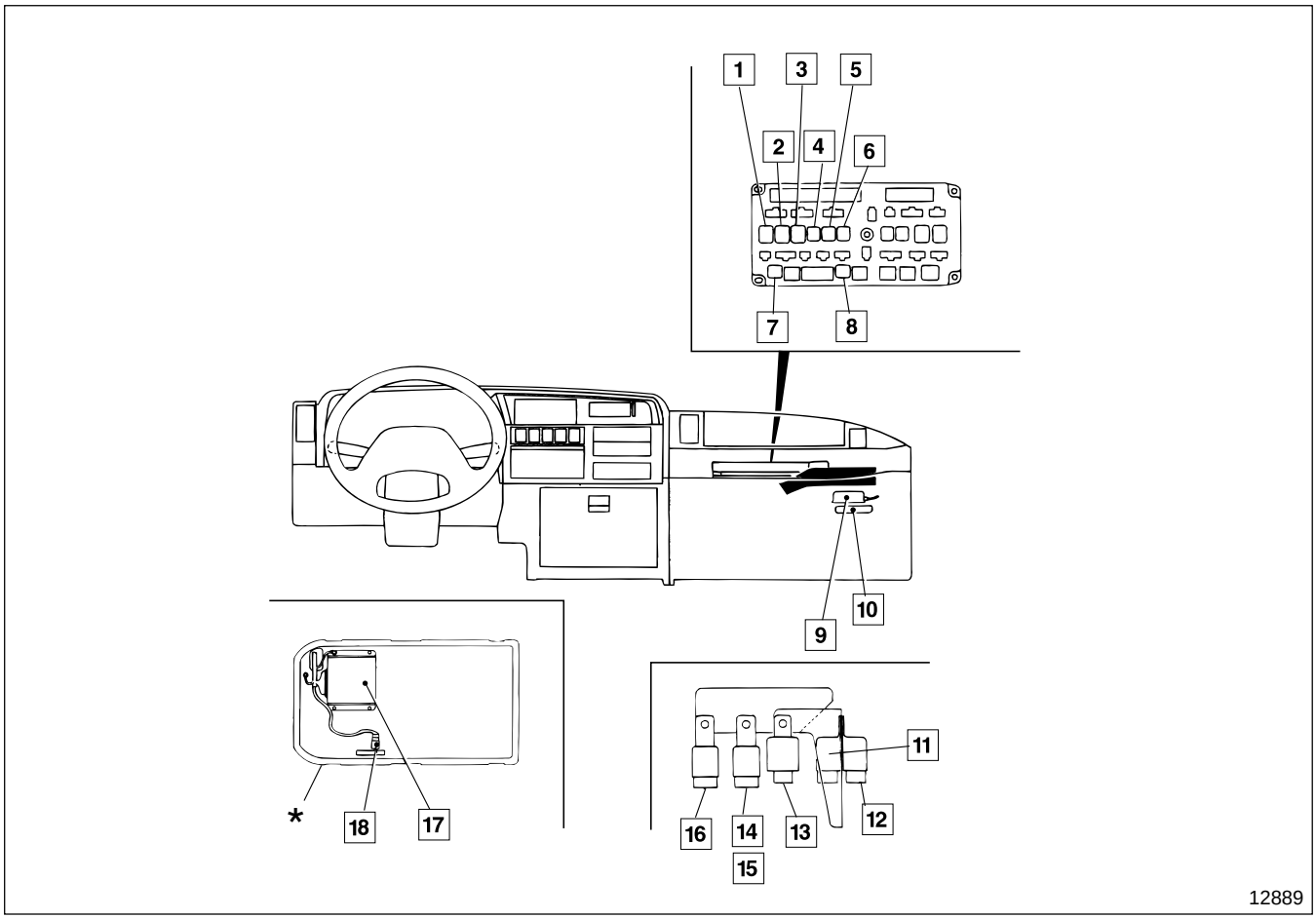

1 Wiper relay (LOW)
2 Wiper relay (HIGH)
3 Engine stop relay
4 Headlamp relay (LOW)
5 Headlamp relay (HIGH)
6 Stop lamp relay
7 Turn signal lamp relay
8 Tail lamp relay
9 Flasher unit
10 Multipurpose timing control unit
11 Exhaust brake cut relay
< Manual transmission >
12 Parking brake relay
< Full air brake >
13 Safety relay
14 Transmission neutral relay
< Manual transmission >
15 Fan motor relay
< Automatic transmission >
16 Van body dome light relay
17 Pre-stroke control unit
18 Pre-stroke cut relay

***** : Box under bed
(Behind driver's seat)

◆ Service procedure

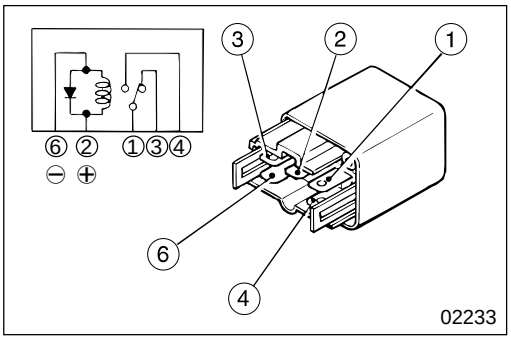

1 2 3 18 Inspection of relay (Open type 5-pin)

- Follow the table below to inspect continuity:

	①	②	③	④	⑥
No current	○	○	○		
		○			○
Current	○			○	
		⊕			⊖

○—○ : There is continuity between terminals ○ and ○.
⊕—⊖ : Indicates that 12 volts DC is applied to the line between the terminals.

- If any fault is found, replace the relay.

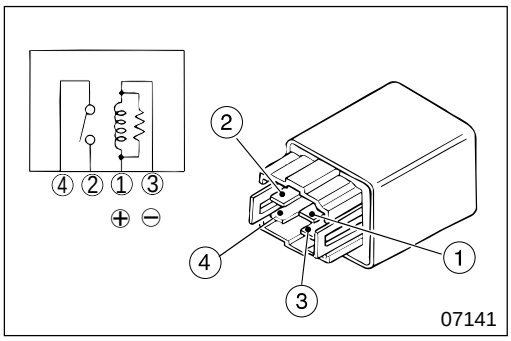

4 5 Inspection of relay (Open type 4-pin)

- Follow the table below to inspect continuity:

	①	②	③	④
No current	○		○	
Current		○		○
	⊕		⊖	

○—○ : There is continuity between terminals ○ and ○.
⊕—⊖ : Indicates that 12 volts DC is applied to the line between the terminals.

- If any fault is found, replace the relay.

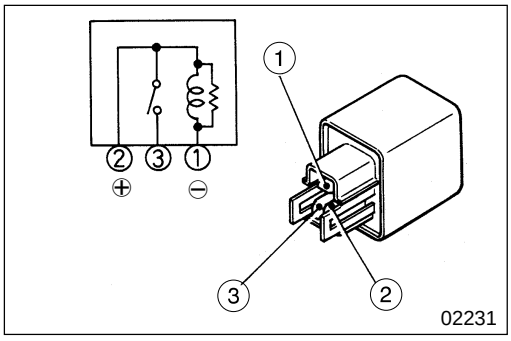

6 7 8 Inspection of relay (Open type 3-pin)

- Follow the table below to inspect continuity:

	①	②	③
No current	○	○	
Current		○	○
	⊖	⊕	

○—○ : There is continuity between terminals ○ and ○.
⊕—⊖ : Indicates that 12 volts DC is applied to the line between the terminals.

- If any fault is found, replace the relay.

9 10 17 Inspection of control unit

Since it is difficult to check each unit separately, judge the soundness of each unit indirectly by checking switches, harnesses, and related parts in the system.

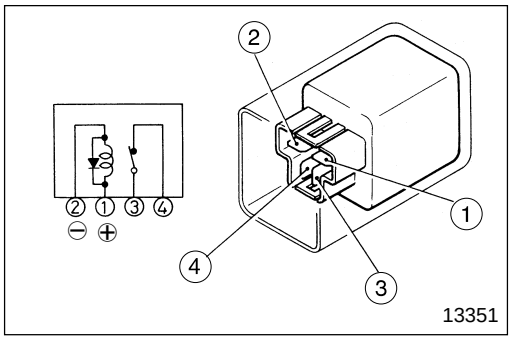

11 Inspection of relay (Close type 4-pin)

- Follow the table below to inspect continuity:

	①	②	③	④
No current	○—○		○—○	
Current	⊕—⊖		◌----◌	

○—○ : There is continuity between terminals ○ and ○.
⊕—⊖ : Indicates that 12 volts DC is applied to the line between the terminals.
◌----◌ : Indicates that the continuity between the terminals is lost.

- If any fault is found, replace the relay.

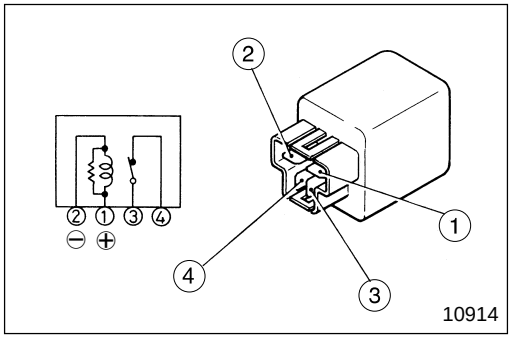

12 13 Inspection of relay (Close type 4-pin)

- Follow the table below to inspect continuity:

	①	②	③	④
No current	○—○		○—○	
Current	⊕—⊖		◌----◌	

○—○ : There is continuity between terminals ○ and ○.
⊕—⊖ : Indicates that 12 volts DC is applied to the line between the terminals.
◌----◌ : Indicates that the continuity between the terminals is lost.

- If any fault is found, replace the relay.

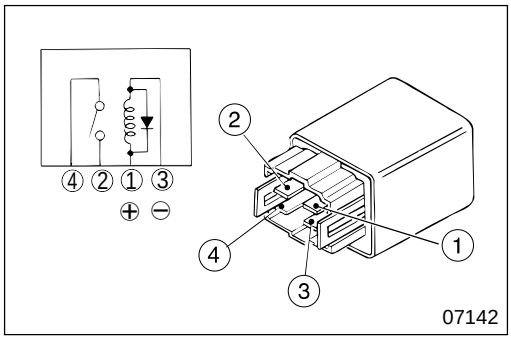

14 15 16 Inspection of relay (Open type 4-pin)

- Follow the table below to inspect continuity:

	①	②	③	④
No current	○—○			
Current	⊕—⊖	○—○		○—○

○—○ : There is continuity between terminals ○ and ○.
⊕—⊖ : Indicates that 12 volts DC is applied to the line between the terminals.

- If any fault is found, replace the relay.

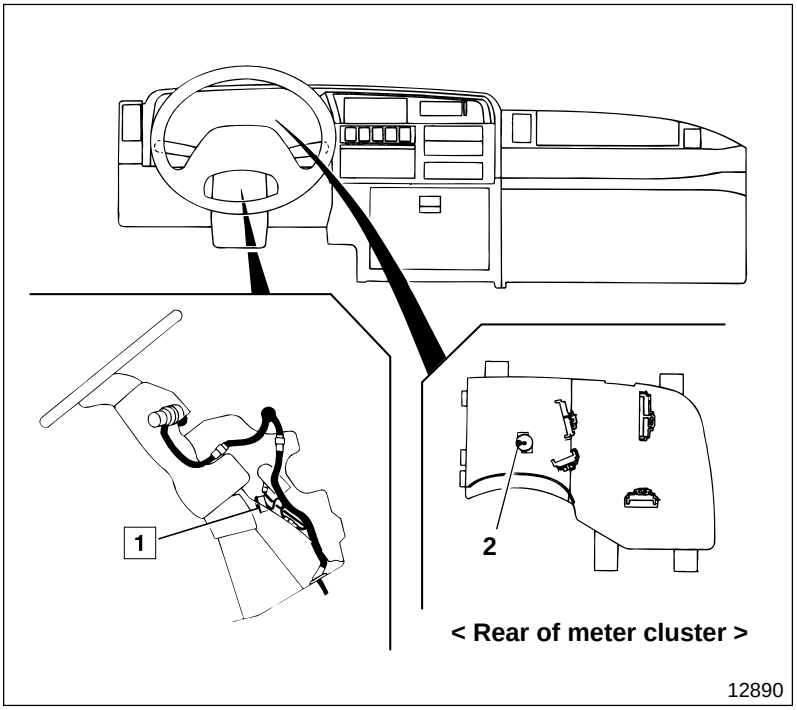

1 Warning buzzer
2 Meter warning buzzer (Overrunning buzzer) < 10-speed transmission > 401

◆ Service procedure

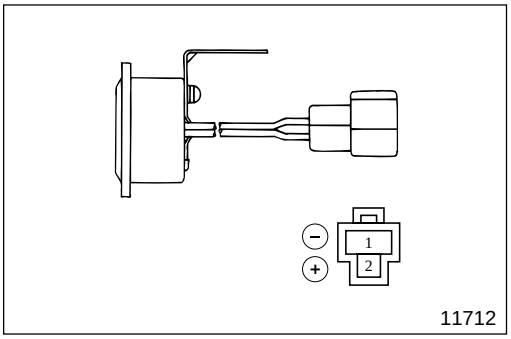

1 **Inspection of warning buzzer**

- Make sure that warning buzzer **1** sounds when you apply 12 volts DC between terminals ① and ②.
- If any fault is found, replace warning buzzer **1**.

610 CIGARETTE LIGHTER CIRCUIT

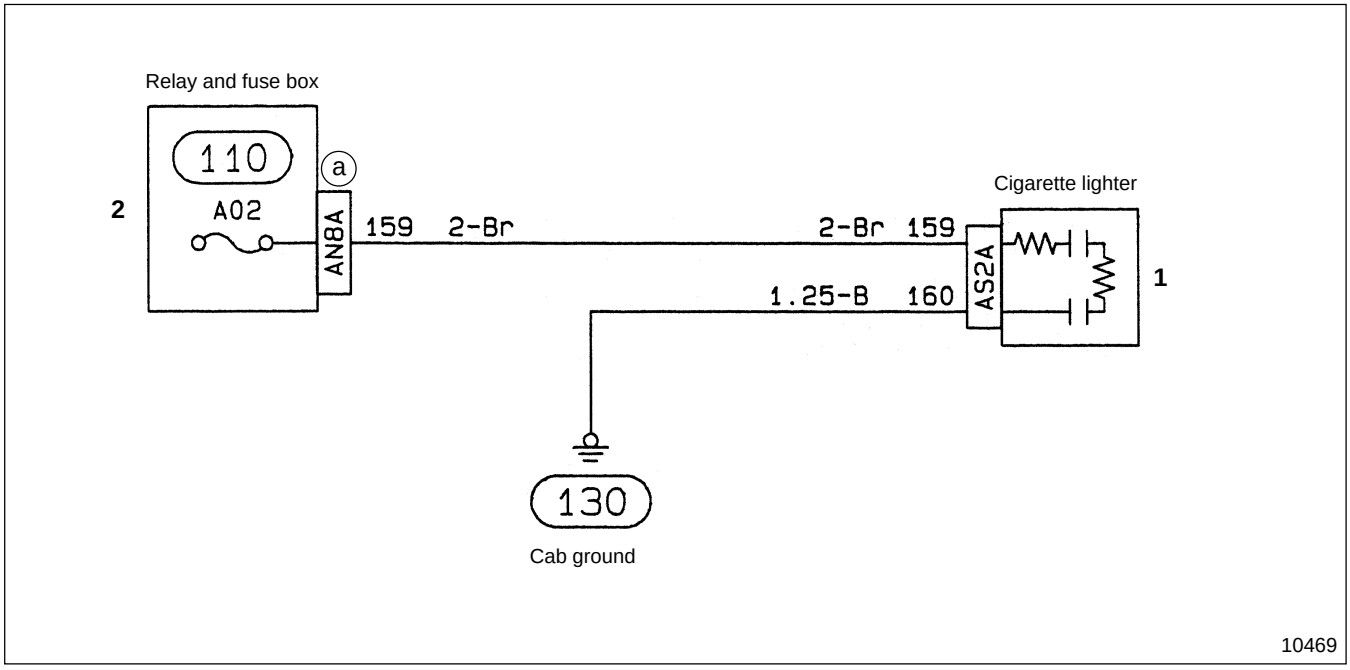

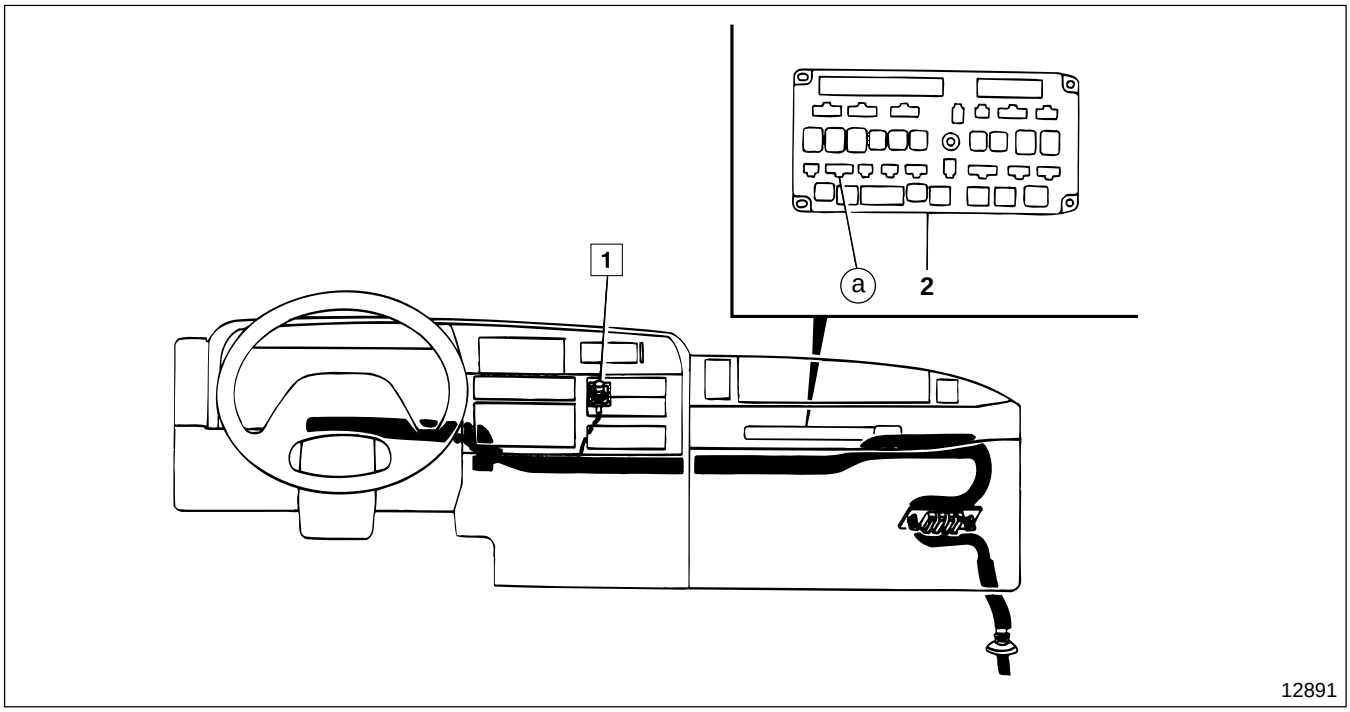

1 Cigarette lighter
2 Relay and fuse box 📖 104

Service standards

Location	Maintenance item	Standard value	Limit	Remedy
1	Cigarette lighter plug return time	15±5 seconds	—	Replace

◆ Service procedure

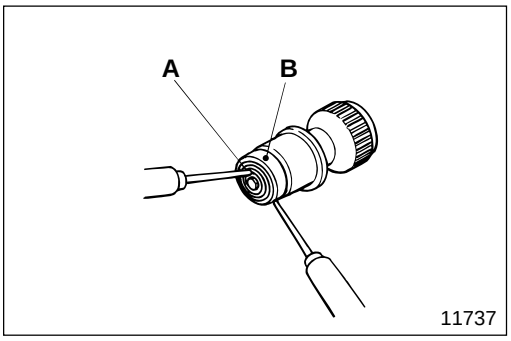

1 **Inspection of cigarette lighter**

Carry out the following inspection. If any fault is found, replace cigarette lighter **1** :

- Make sure that there is continuity between heater element **A** and body **B**.

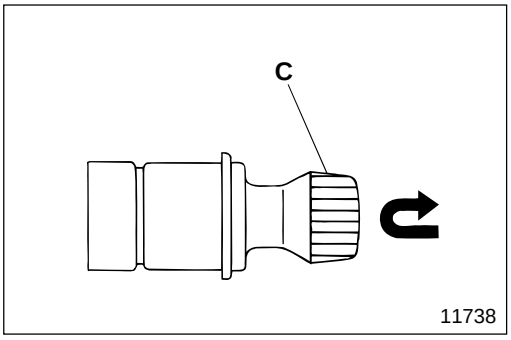

- Make sure that plug **C** returns to its original position quickly when it is pushed in.

- Turn the starter switch to ACC or ON.
- Push plug **C** into the socket of the vehicle.
- Measure the time required for pushed-in plug **C** to return to its original position.
- Make sure that heater element **A** is glowing.

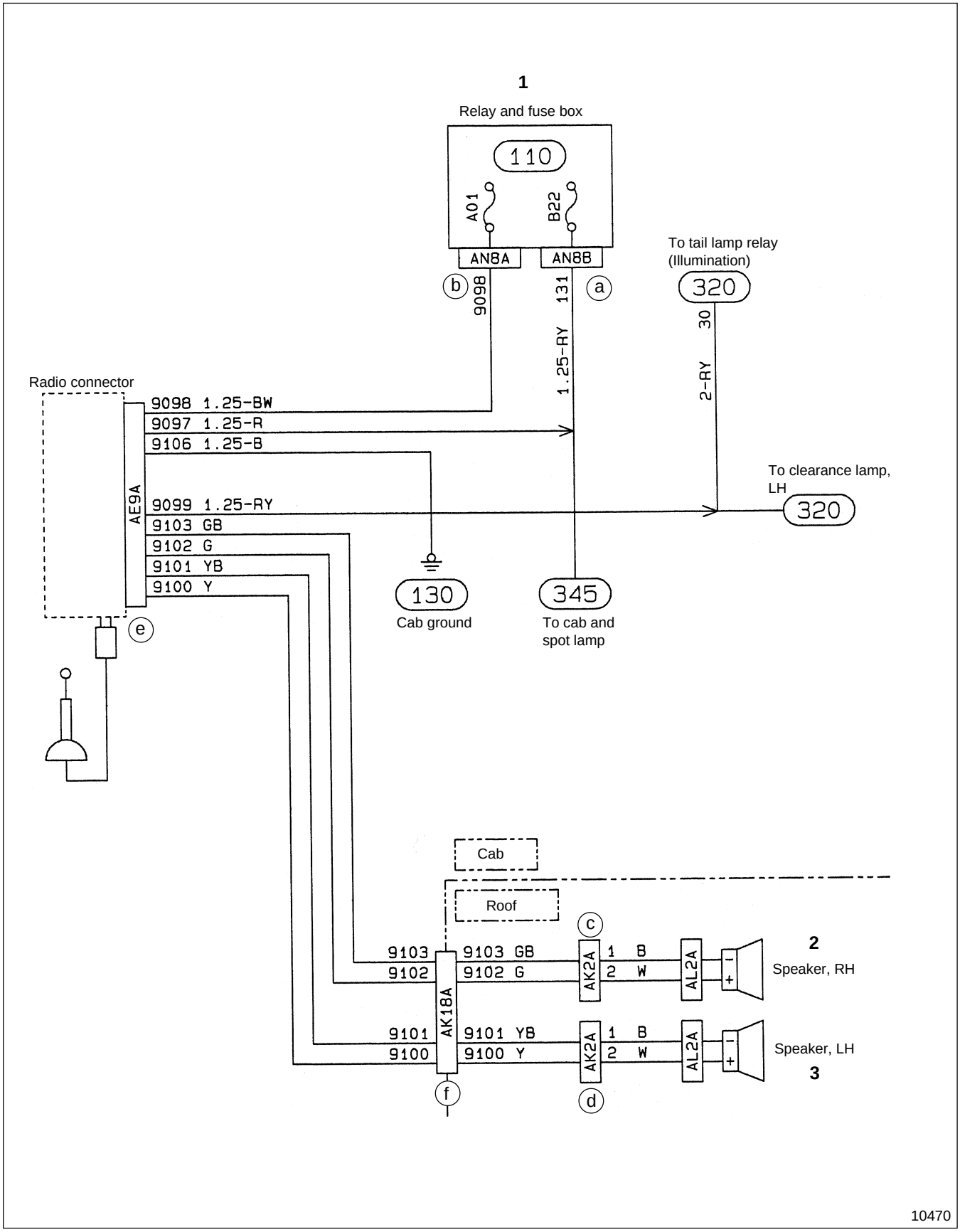
1
Relay and fuse box
110
A01
B22
AN8A
AN8B
b
a
9098
131
1.25-RY
To tail lamp relay
(Illumination)
320
30
2-RY
To clearance lamp,
LH
320
Radio connector
AE9A
9098 1.25-BW
9097 1.25-R
9106 1.25-B
9099 1.25-RY
9103 GB
9102 G
9101 YB
9100 Y
e
130
Cab ground
345
To cab and
spot lamp
Cab
Roof
c
9103
9102
9103 GB
9102 G
AK18A
AK2A
1 B
2 W
AL2A
2
Speaker, RH
9101
9100
9101 YB
9100 Y
Speaker, LH
3
f
d
10470

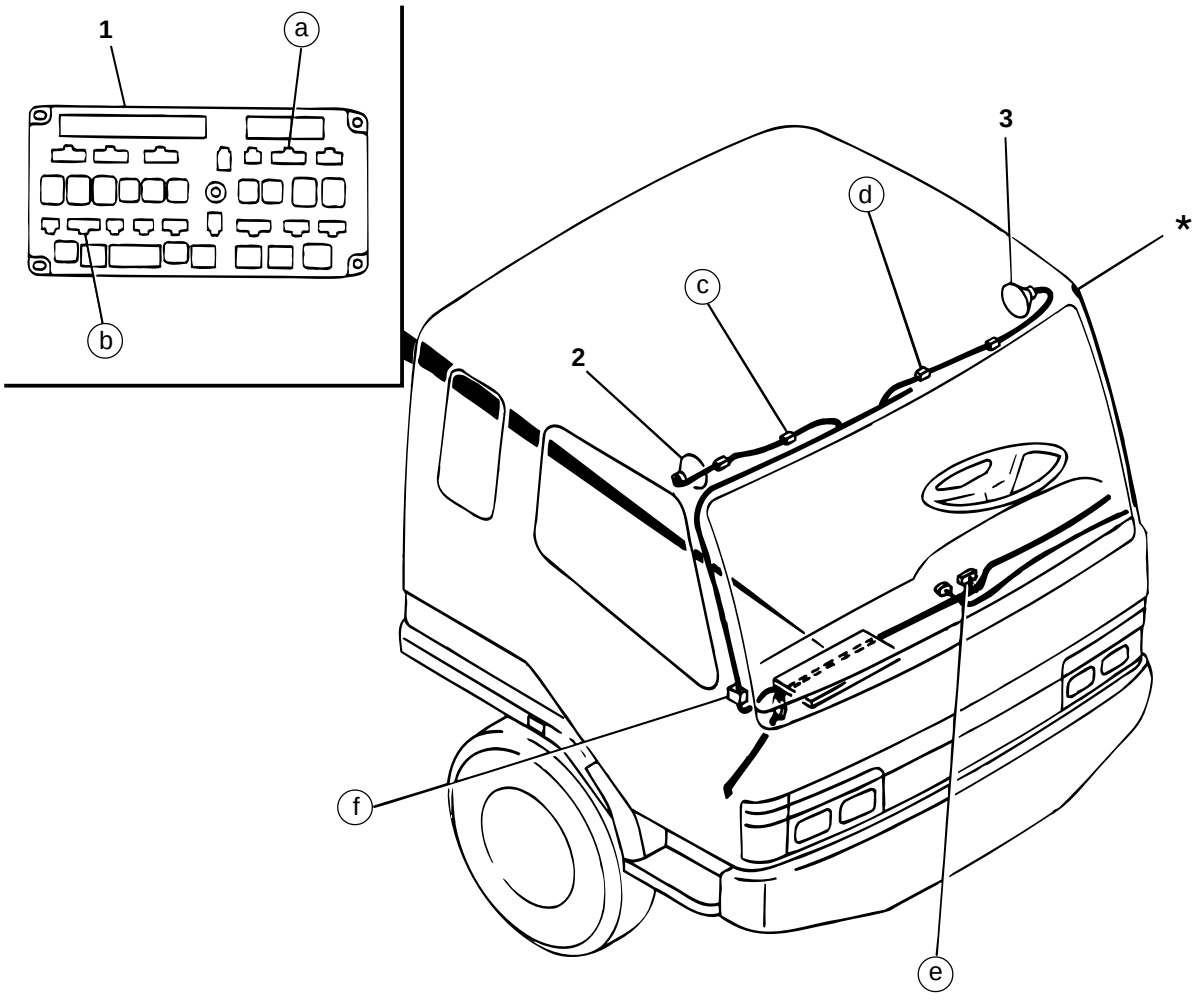

1 Relay and fuse box 104
2 Speaker, RH
3 Speaker, LH

***:** Antenna cable

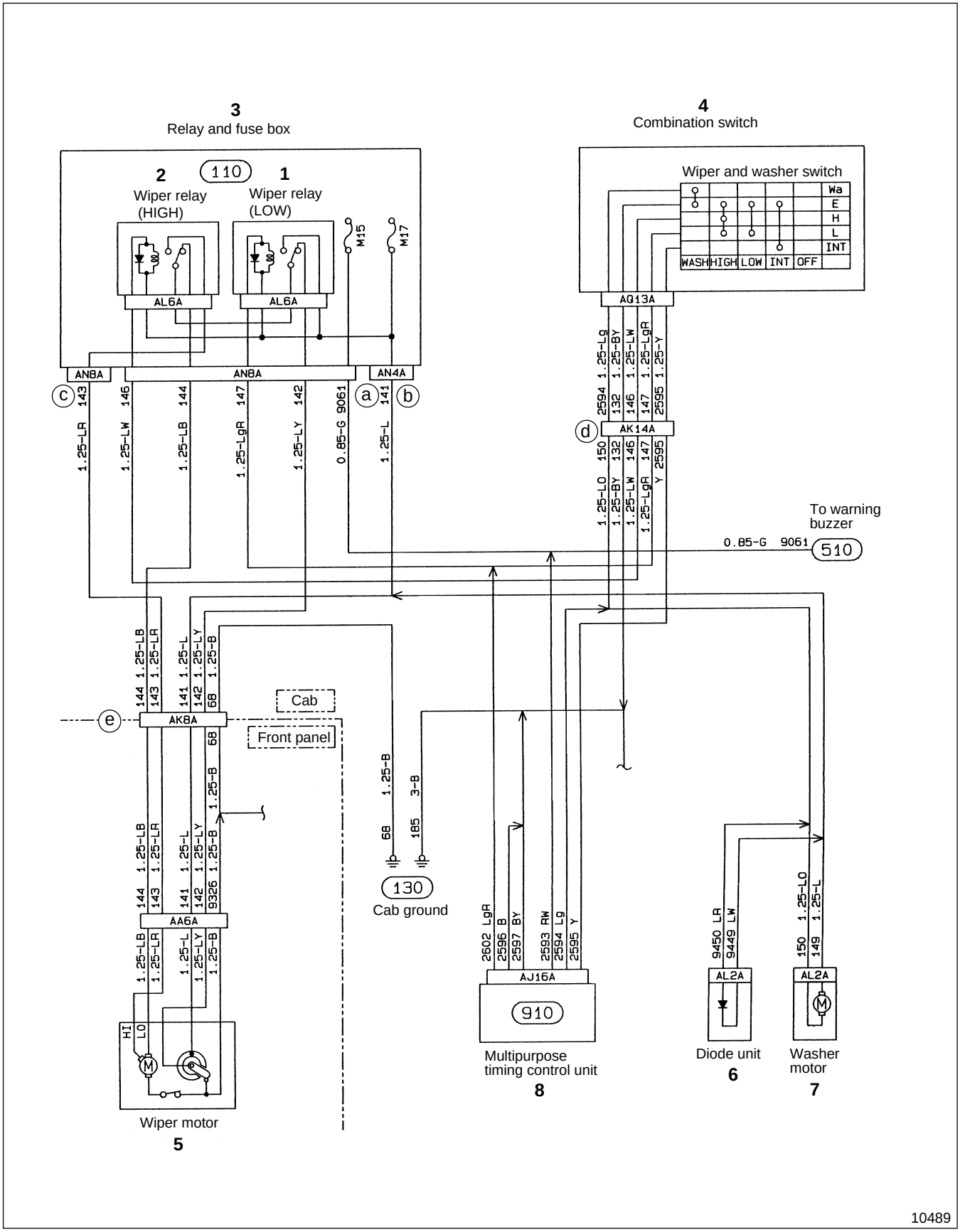
3
Relay and fuse box
4
Combination switch
2
110
1
Wiper relay (HIGH)
Wiper relay (LOW)
M15
M17
AL6A
AL6A
AN8A
AN8A
AN4A
Wiper and washer switch
Wa
E
H
L
INT
WASH HIGH LOW INT OFF
AG13A
AK14A
To warning buzzer
0.85-G 9061
510
Cab
Front panel
AK8A
AA6A
HI
LO
Wiper motor
5
130
Cab ground
AJ16A
910
Multipurpose timing control unit
8
AL2A
Diode unit
6
AL2A
Washer motor
7
10489

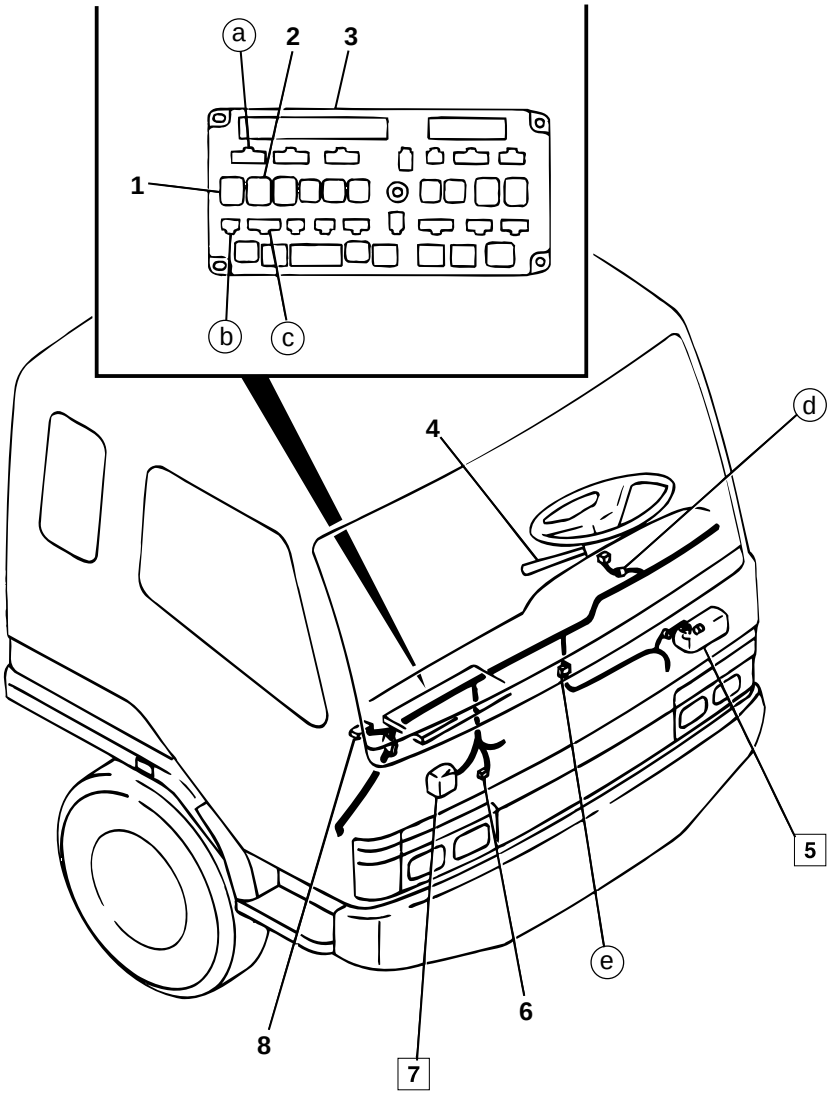

1 Wiper relay (LOW) 🕮 604
2 Wiper relay (HIGH) 🕮 604
3 Relay and fuse box 🕮 104
4 Combination switch 🕮 601
5 Wiper motor
6 Diode unit
7 Washer motor
8 Multipurpose timing control unit 🕮 604

◆ Service procedure

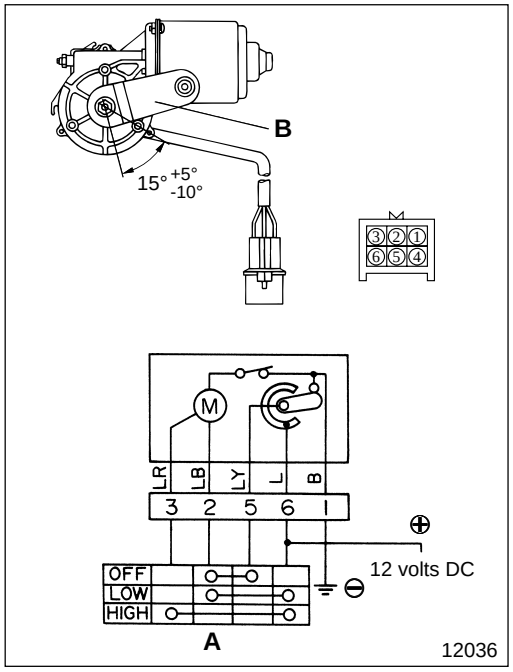

5 Inspection of wiper motor

- Connect wiper motor **5** as illustrated.
  A : Switch
- Carry out the following inspection. If any fault is found, replace wiper motor **5**. Gr 42

(1) Inspection of motor operation

- Make sure that wiper motor **5** turns at high speed when you turn switch **A** to HIGH.
- Make sure that wiper motor **5** turns at low speed when you turn switch **A** to LOW.

(2) Inspection of automatic stopping position

- Turn switch **A** to LOW to turn wiper motor **5** at low speed.
- When crank arm **B** is at any position other than the automatic stopping position (other than the illustrated angle), turn switch **A** to OFF.
- Make sure that crank arm **B** stops at the automatic stopping position (within the illustrated angle).

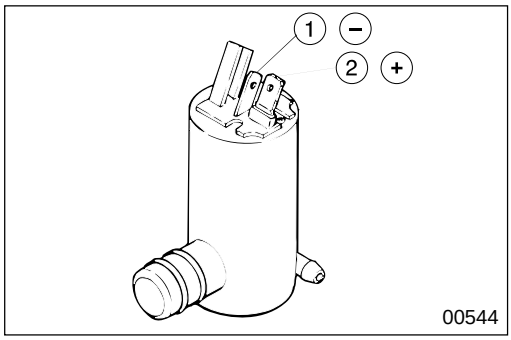

7 Inspection of washer motor

- Apply 12 volts DC between terminals ① and ② and make sure that washer motor **7** operates.
- If washer motor **7** does not operate, replace it. Gr 42

M E M O

616 HORN CIRCUIT

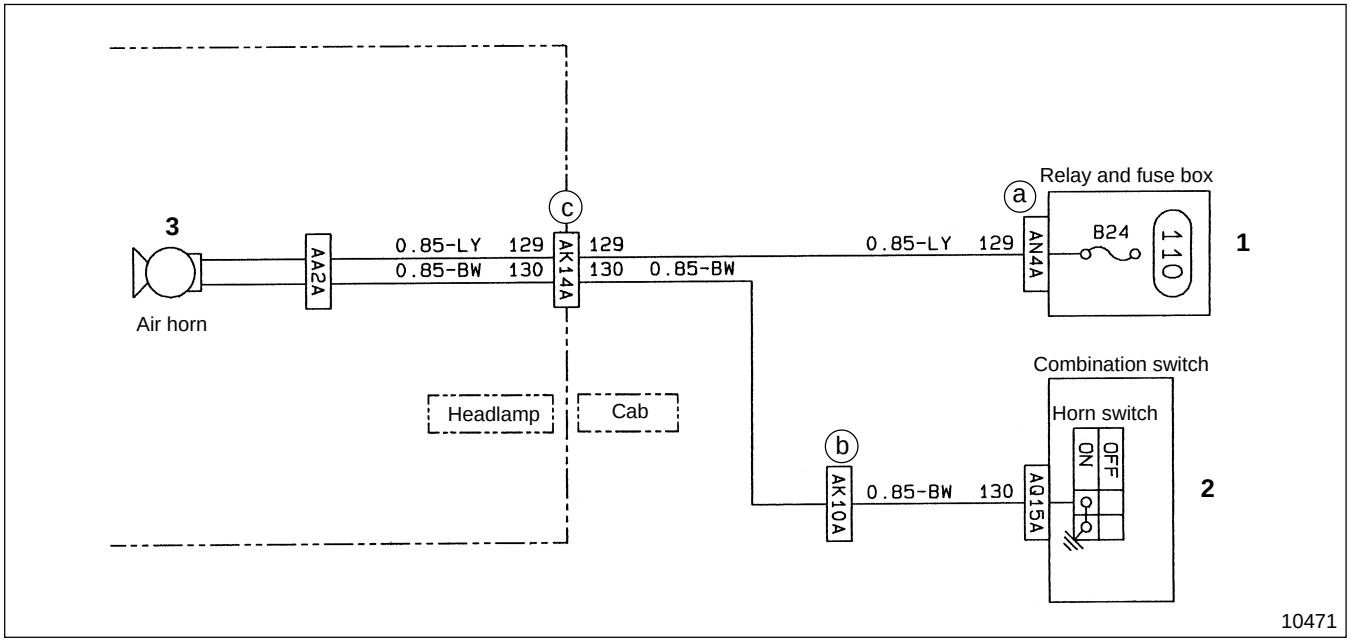

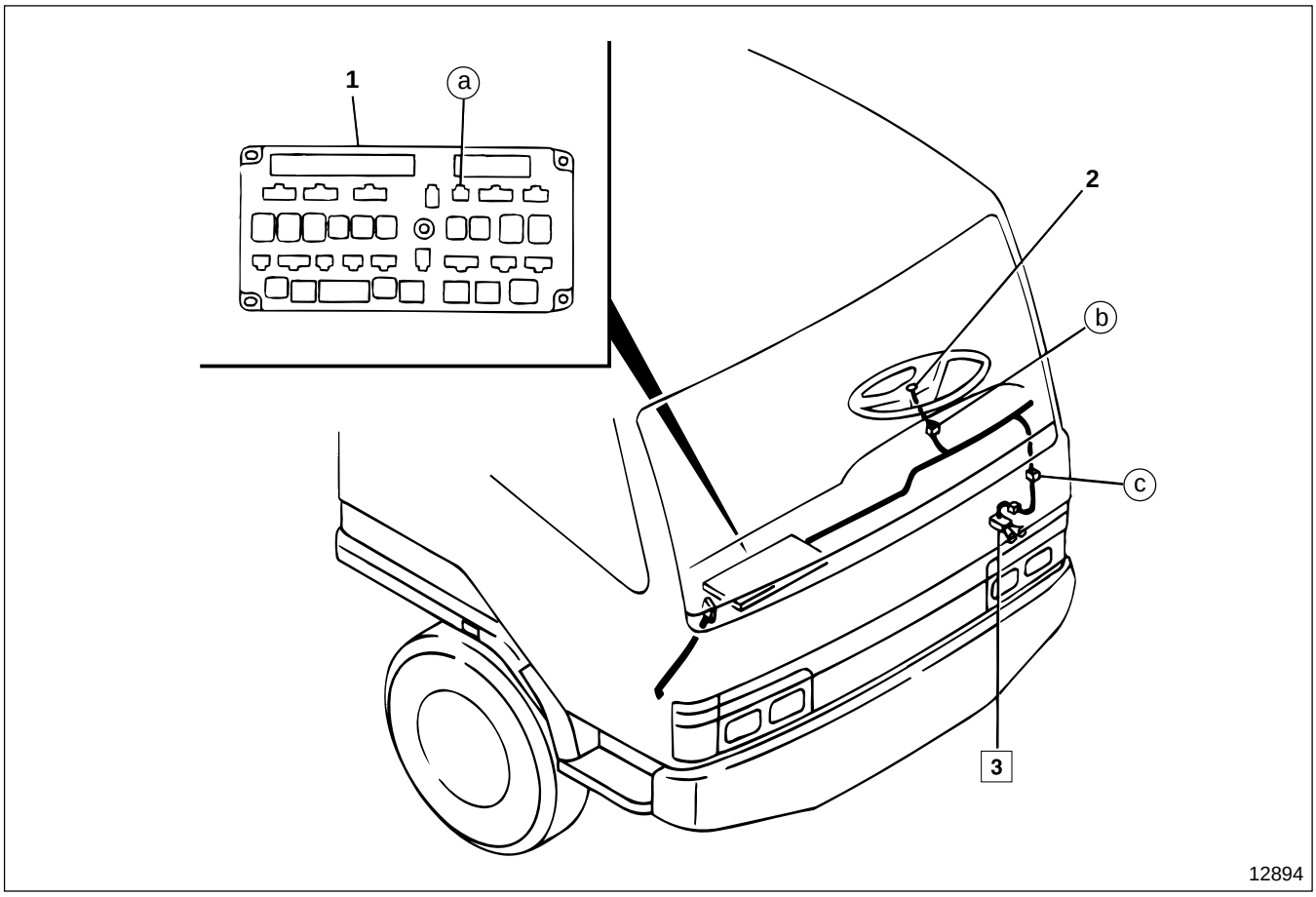

1 Relay and fuse box 📖 104
2 Combination switch 📖 601
3 Air horn

Service standards

Location	Maintenance item	Standard value	Limit	Remedy
3	Minimum operating voltage of air horn valve 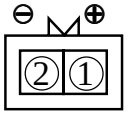 14318	10 V or less	—	Replace
	Operating pressure of horn	195 to 980 kPa {28 to 142 lbf/in², 2 to 10 kgf/cm²}	—	Replace

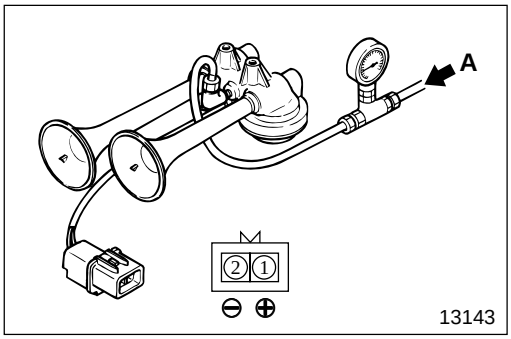

13143

◆ Service procedure

3 **Inspection of air horn**

Carry out the following inspection. If any fault is found, replace air horn **3**.

(1) Minimum operating voltage of air horn valve

- Apply air pressure **A** of 785 kPa {115 lbf/in², 8 kgf/cm²} to air horn **3**.
- Apply voltage between terminals ① and ② starting from 0 volt DC gradually.
- Measure the voltage when air horn **3** sounds.

(2) Operating pressure of horn

- Apply 12 volts DC between terminals ① and ②.
- Apply air pressure **A** to air horn **3** starting from 0 kPa {0 lbf/in², 0 kgf/cm²} gradually.
- Measure air pressure **A** when air horn **3** sounds.

618 HEATER CIRCUIT

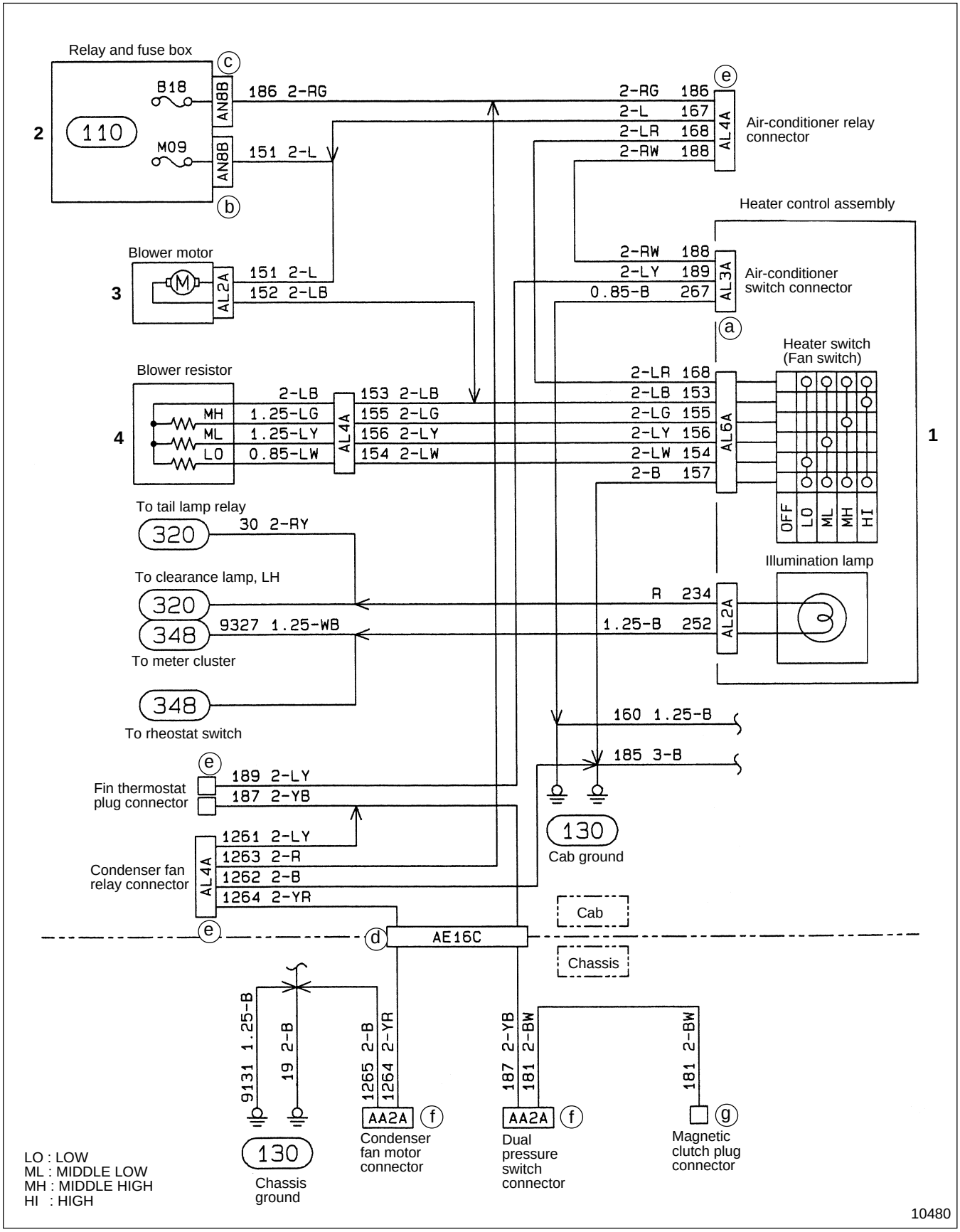

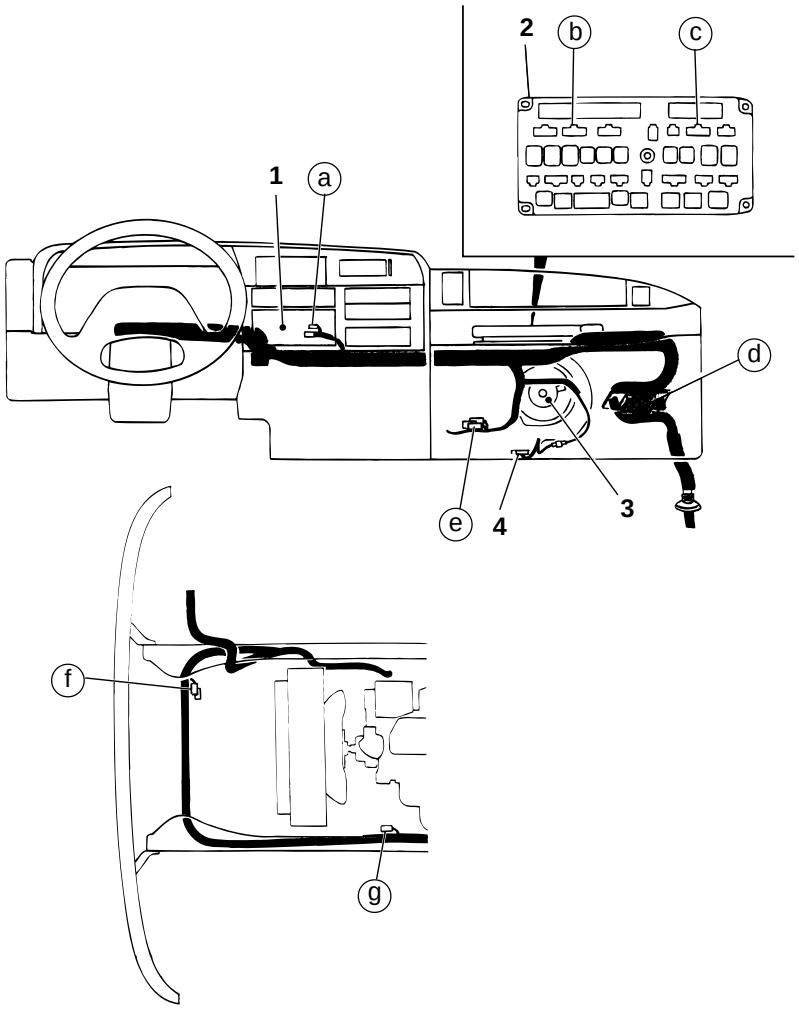

12895

1 Heater control assembly
2 Relay and fuse box 104
3 Blower motor
4 Blower resistor

Service standards

Location	Maintenance item		Standard value	Limit	Remedy
4	Resistance of blower resistor 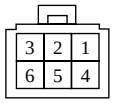 14364	③–④	0.88	—	Replace
		②–③	0.27		
		①–④	1.78		

◆ Service procedure

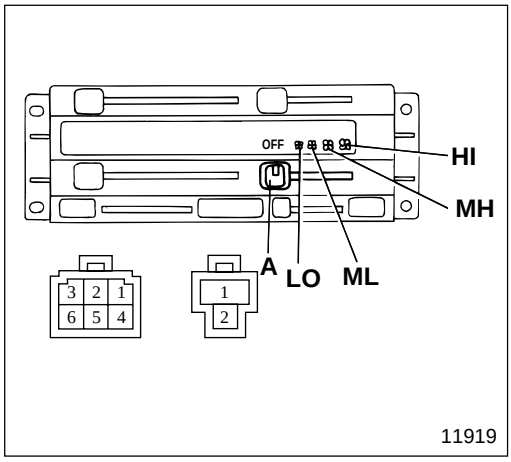

1 **Inspection of heater control assembly**

Inspection of blower switch A

- Follow the table below to inspect continuity:

	AL6A						AL2A	
	①	③	②	⑤	⑥	④	①	②
OFF							○	○
LOW	○	○				○		
MIDDLE LOW	○		○			○		
MIDDLE HIGH	○			○		○		
HIGH	○				○	○		
	C	L	ML	MH	H	E	ILL	

○—○ : There is continuity between terminals ○ and ○.

- If any fault is found, replace heater control assembly **1**.

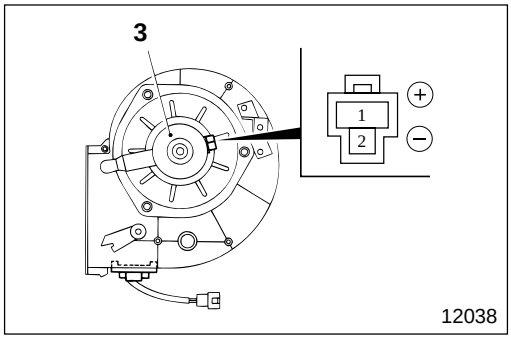

3 **Inspection of blower motor**

- Make sure that blower motor **3** operates when 12 volts DC is applied between terminals ① and ②.
- If any fault is found, replace blower motor **3**.

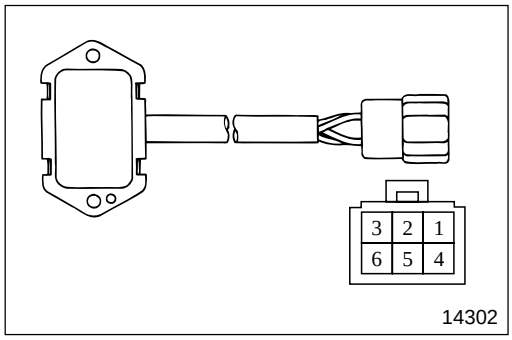

4 **Inspection of blower resister**

- Measure resistance between terminals ③ and ④ (MIDDLE LOW), ② and ④ (MIDDLE HIGH) and ① and ④ (LOW).
- If the measured value deviates from the standard value, replace blower resistor **4**.

7 CHASSIS ELECTRICS

701 **MAGNETIC VALVE** **54-7-2**

710 **EXHAUST BRAKE CIRCUIT** **54-7-4**
< Manual Transmission >

718 **AIR DRYER CIRCUIT** **54-7-8**

701 MAGNETIC VALVE

Installation Position

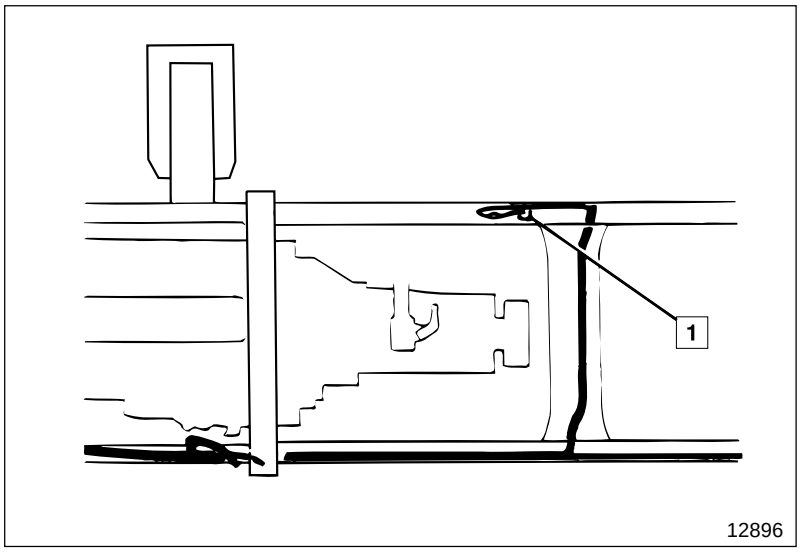

1 3-way magnetic valve

Service standards

Location	Maintenance item	Standard value	Limit	Remedy
1	Minimum operating voltage of 3-way magnetic valve 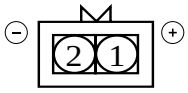 14318	10 V or less	—	Replace

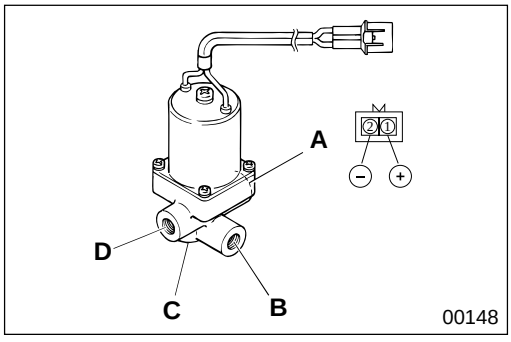

◆ Service procedure

1 **Inspection of 3-way magnetic valve**

Carry out the following inspection. If any fault is found, replace 3-way magnetic valve **1** :

Air circuit table (There is air continuity between terminals ○ and ○.)

	Input port B	Output port D	Unused A	Exhaust port C
ON	○	○		
OFF		○		○

(1) Operation inspection

- Apply voltage between terminals ① and ②, increasing gradually from 0 volt.
- Measure voltage (minimum operating voltage) when magnetic valve **1** starts operating. (You can tell if the magnetic valves are ON or OFF by listening for an operating sound.)

(2) Airtightness inspection

- When magnetic valve is ON :
  - Close output port **D**.
  - Apply **12** volts DC between terminals ① and ②.
  - Make sure that there is no air leaking from exhaust port **C** when air pressure (295 to 980 kPa {43 to 140 lbf/in^2, 3 to 10 kgf/cm^2}) is applied to input port **B**.
- When magnetic valve is OFF :
  - Make sure that there is no air leaking from exhaust port **C** or output port **D** when air pressure (295 to 980 kPa {43 to 140 lbf/in^2, 3 to 10 kgf/cm^2}) is applied to input port **B**.

710 EXHAUST BRAKE CIRCUIT < Manual Transmission >

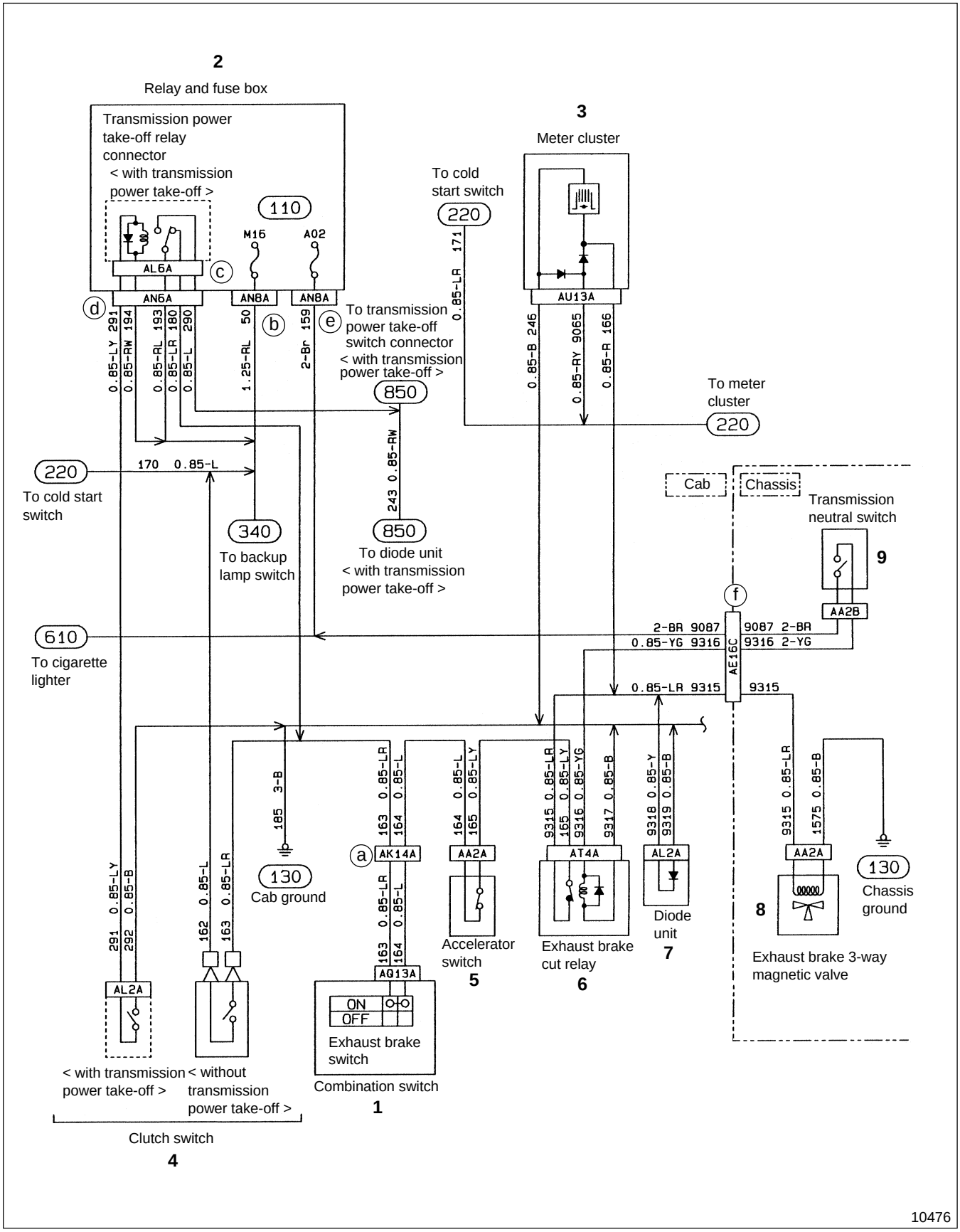

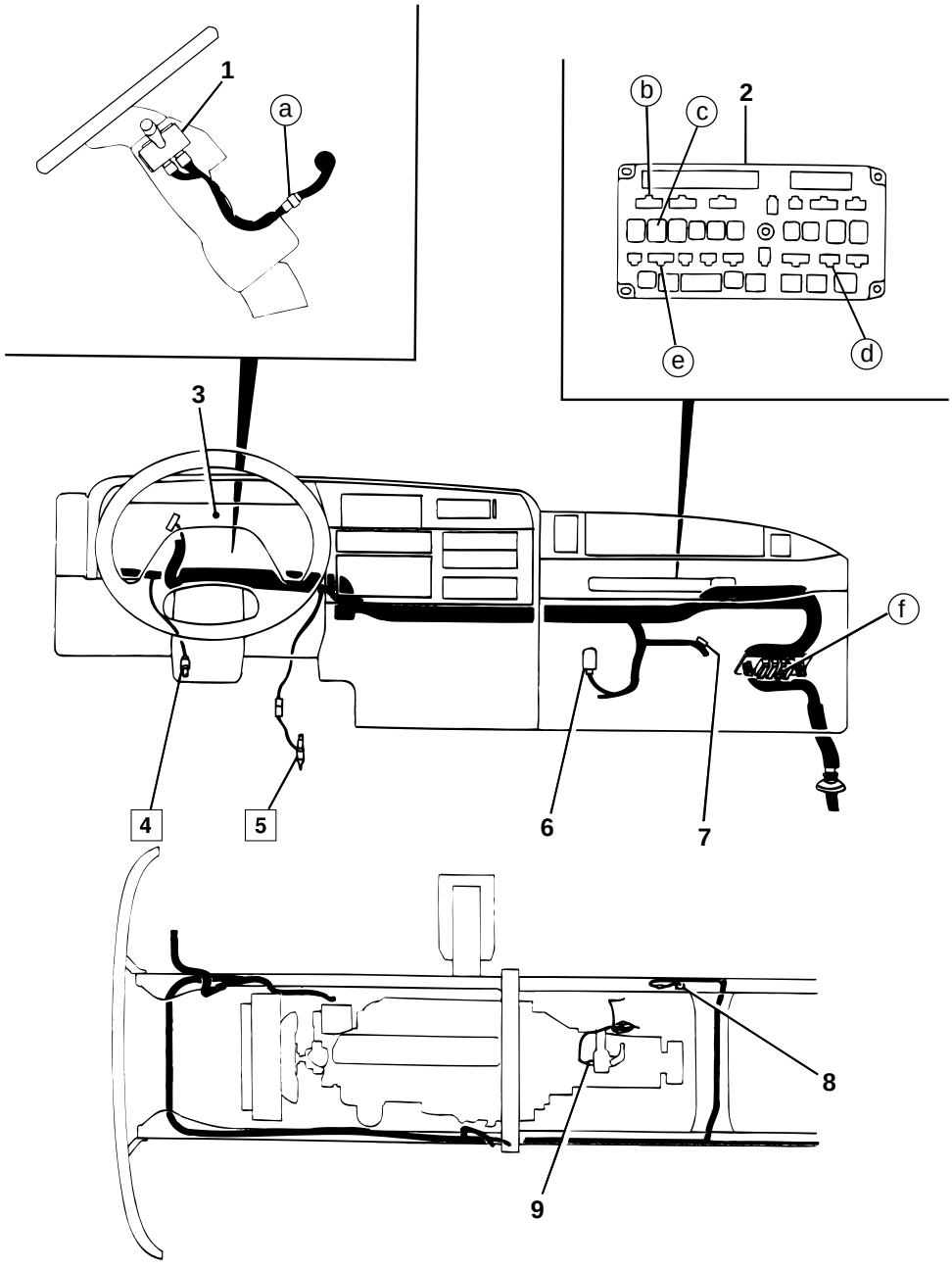

1 Combination switch 601
2 Relay and fuse box 104
3 Meter cluster 401
4 Clutch switch
5 Accelerator switch
6 Exhaust brake cut relay 604
7 Diode unit
8 Exhaust brake 3-way magnetic valve 701
9 Transmission neutral switch 802

◆ Service procedure

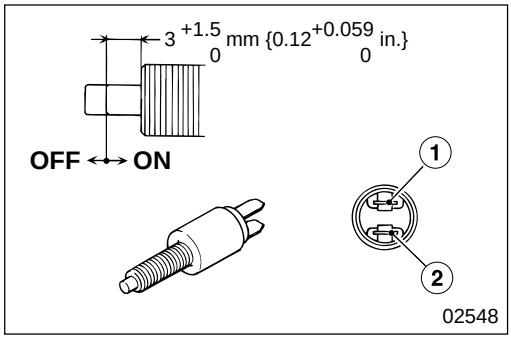

4 **Inspection of clutch switch**

- Follow the table below to inspect continuity:

	①	②
OFF		
ON	○—○	

○—○ : There is continuity between terminals ○ and ○.

- If any fault is found, replace clutch switch **4**. Gr 21

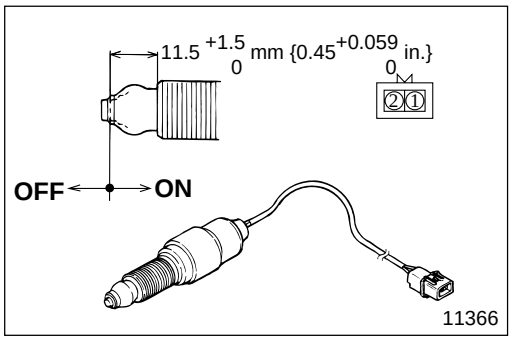

5 **Inspection of accelerator switch**

- Follow the table below to inspect continuity:

	①	②
OFF		
ON	○—○	

○—○ : There is continuity between terminals ○ and ○.

- If any fault is found, replace accelerator switch **5**. Gr 13

M E M O

718 AIR DRYER CIRCUIT

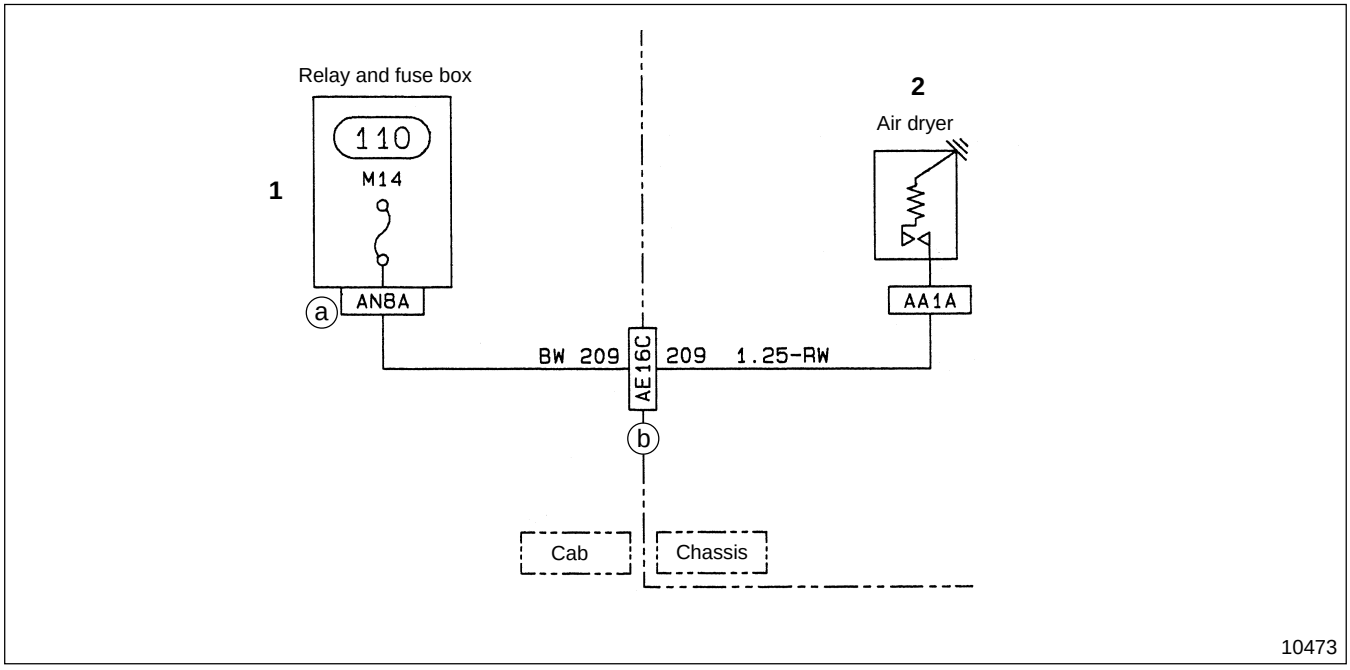

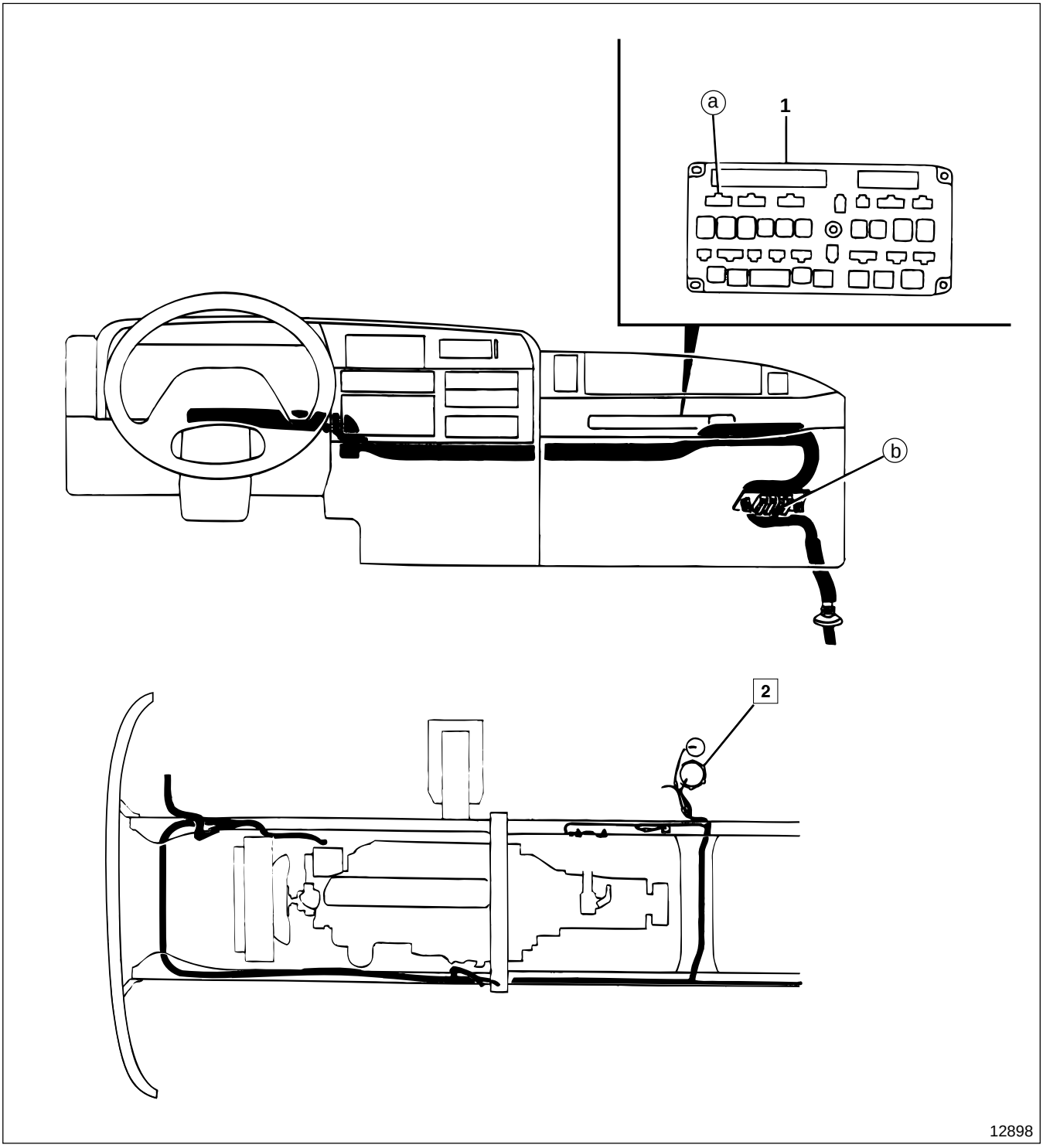

1 Relay and fuse box 104
2 Air dryer

Service standards

Location	Maintenance item	Standard value	Limit	Remedy
2	Operating temperature of complete thermostat	7±4.0°C {45±7.2°F}	—	Replace

◆ Service procedure

2 **Air dryer**

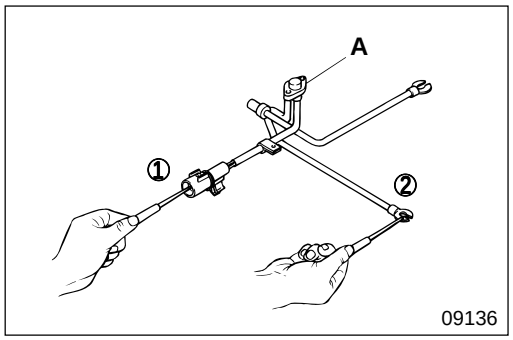

(1) Inspection of complete thermostat

Carry out the following inspection. If any fault is found, replace the complete thermostat. Gr 35

- Make sure that there is no continuity between terminals ① and ② at room temperature (20°C {68°F}).
- Cool thermostat **A** in a refrigerator, etc.
  Measure the temperature when there is continuity between terminals ① and ②, and make sure that the measured value conforms to the standard value.

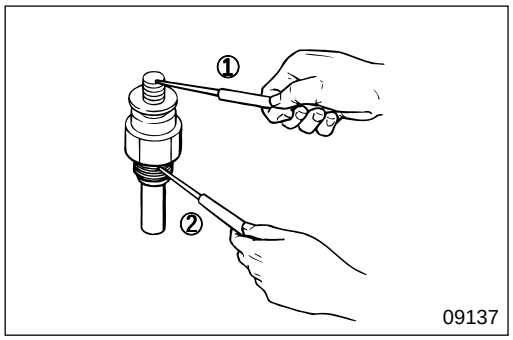

(2) Inspection of heater

- Make sure that there is continuity between terminals ① and ②.
- If any fault is found, replace the heater. Gr 35

8 ENGINE AND TRANSMISSION ELECTRICS

801 ENGINE ELECTRICS 54-8-2

802 TRANSMISSION ELECTRICS
< Manual Transmission (5-speed, 6-speed Transmission) > 54-8-6
< Manual Transmission (10-speed Transmission) > 54-8-8
< Automatic Transmission > 54-8-10

850 TRANSMISSION POWER TAKE-OFF CIRCUIT
< Option > 54-8-12

Installation Position

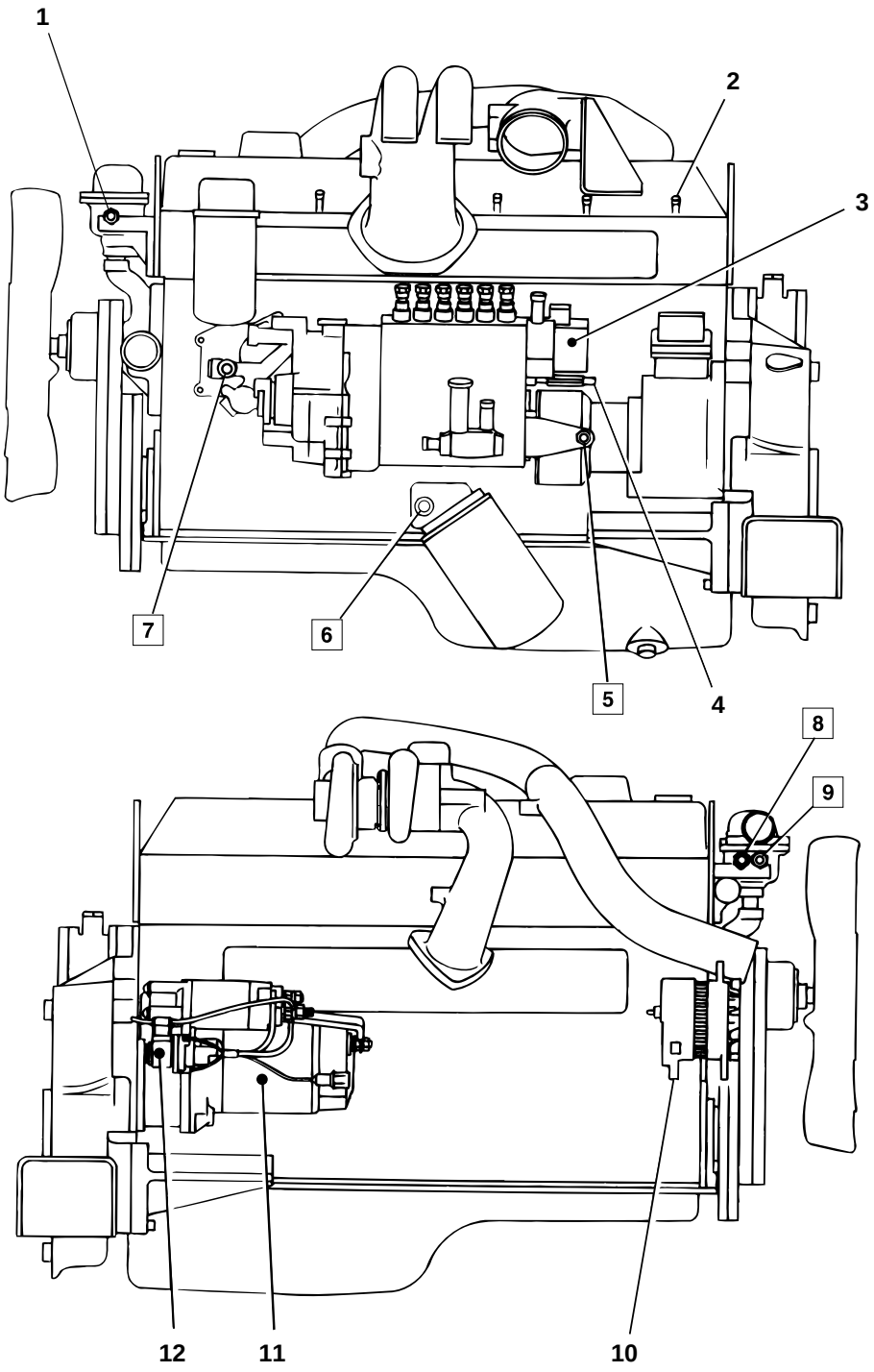

1 Water temperature sensor (Connects to pre-stroke control unit) Gr 13
2 Glow plug 220
3 Pre-stroke actuator Gr 13
4 Control rod position sensor Gr 13
5 Engine revolution sensor
6 Engine oil pressure switch
7 Engine oil bypass alarm switch
8 Overheating switch
9 Water temperature sensor (Connects to water temperature gauge and multipurpose timing control unit)
10 Alternator 106
11 Starter 201
12 Starter relay 210

Service standards

Location	Maintenance item			Standard value	Limit	Remedy
5	Resistance of engine revolution sensor (At room temperature 25°C {77°F}) 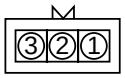 14366	①–②		2.3±0.2 k	—	Replace
6	Operating pressure of engine oil pressure switch			49±9.8 kPa {7.1±1.4 lbf/in^2, 0.5±0.1 kgf/cm^2}	—	Replace
7	Operating pressure of engine oil bypass alarm switch			200 $^{+50}_{0}$ kPa {27 $^{+7.1}_{0}$ lbf/in^2, 1.9 $^{+0.5}_{0}$ kgf/cm^2}	—	Replace
8	Operating temperature of overheating switch	When temperature increases (ON→OFF)		110±2°C {230±3.6°F}	—	Replace
		When temperature decreases (OFF→ON)		99.5 to 112.5°C {211 to 235°F}	—	
9	Resistance of water temperature sensor  14321	① – (Body) (Water temperature gauge side)	50°C {122°F}	(153.9)	—	Replace
			80°C {176°F}	51.9 $^{+4.9}_{-4.4}$		
			100°C {212°F}	27.4 $^{+1.9}_{-1.2}$		
		② – (Body) (Multipurpose timing control unit side)	20°C {68°F}	3.25±0.33 k		
			60°C {140°F}	(620)		
			80°C {176°F}	(300)		

The values in ( ) are reference values.

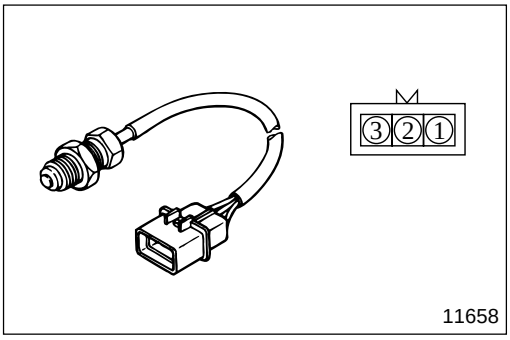

11658

◆ Service procedure

5 **Inspection of engine revolution sensor**

- Measure the resistance between terminals ① and ②.
- If the measured value deviates from the standard value, replace engine revolution sensor **5**. Gr 13

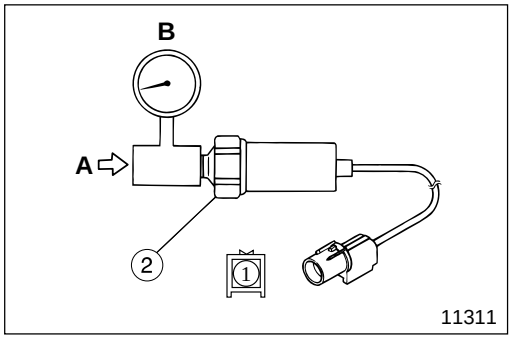

6 Inspection of engine oil pressure switch

Carry out the following inspection. If any fault is found, replace engine oil pressure switch **6**. Gr 12

- Make sure that there is continuity between terminals ① and ② (Body) when air pressure **A** is not applied to engine oil pressure switch **6**.
- Apply air pressure **A** to engine oil pressure switch **6** gradually starting from 0 kpa {0 lbf/in², 0 kgf/cm²}.
  Measure the air pressure when continuity is lost between terminals ① and ② (body), and make sure that the measured value conforms to the standard value.
  B : Air pressure gauge

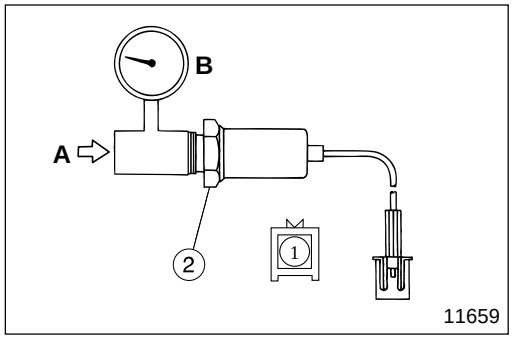

7 Inspection of engine oil bypass alarm switch

Carry out the following inspection. If any fault is found, replace engine oil bypass alarm switch **7**. Gr 12

- Make sure that there is no continuity between terminals ① and ② (Body) when air pressure **A** is not applied to engine oil bypass alarm switch **7**.
- Apply air pressure **A** to engine oil bypass alarm switch **7** gradually starting from 0 kpa {0 lbf/in², 0 kgf/cm²}.
  Measure the air pressure when continuity is present between terminals ① and ② (Body), and make sure that the measured valve conforms to the standard value.
  B : Air pressure gauge

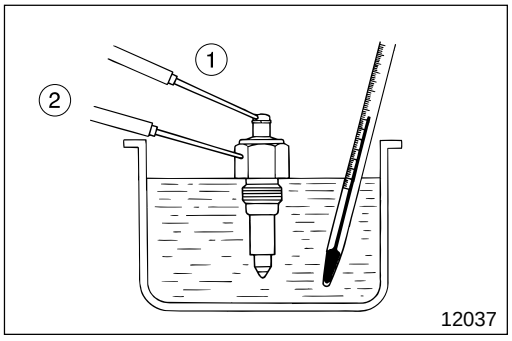

8 Inspection of overheating switch

Carry out the following inspection. If any fault is found, replace overheating switch **8**. Gr 14

- Make sure that there is no continuity between terminals ① and ② (Body) at room temperature (20°C {68°F}).
- Place overheating switch **8** in a container filled with engine oil and raise the oil temperature while stirring the oil.
  Measure the temperature when there is continuity between terminals ① and ② (Body), and make sure that the measured value conforms to the standard value.
- Lower the oil temperature and measure the temperature when continuity is lost between terminals ① and ② (Body), and make sure that the measured value conforms to the standard value.

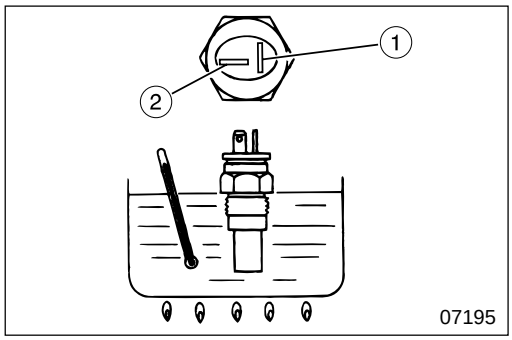

9 Inspection of water temperature sensor

- Place water temperature sensor **9** in engine oil in a container.
- Raise the oil temperature to the specified values and stir the oil.
- Measure the resistance between terminal ① and the body, and terminal ② and the body.
  Terminal ① : Water temperature gauge connection
  Terminal ② : Multipurpose timing control unit connection
- If the measured value deviates from the standard value, replace water temperature sensor **9**. Gr 14

M E M O

Installation Position

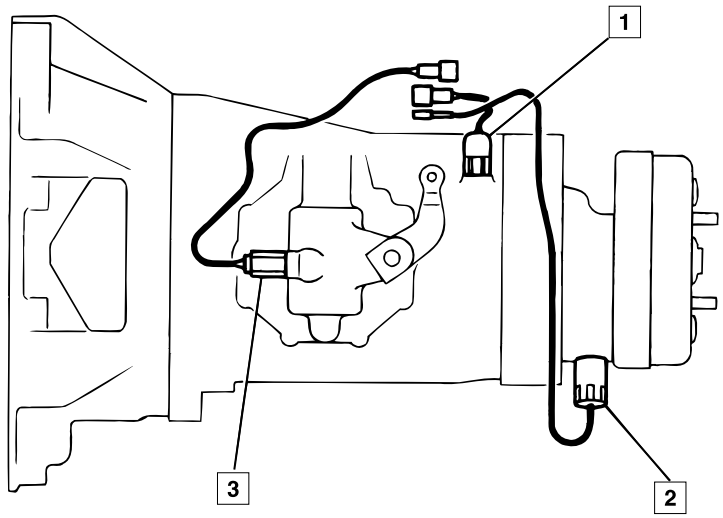

13095

1 Backup lamp switch
2 Vehicle speed sensor
3 Transmission neutral switch

Service standards

Location	Maintenance item			Standard value	Limit	Remedy
2	Pulse output voltage of vehicle speed sensor (8 pulses) 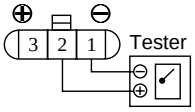 14367	①–②	Low pulse	1.5 V or less	—	Replace
			High pulse	12 V– (0.5 V or less)	—	

◆ Service procedure

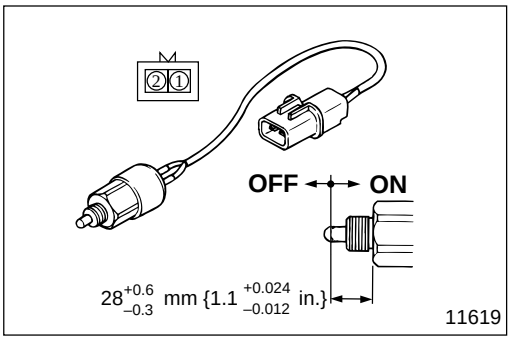

1 Inspection of backup lamp switch

- Follow the table below to inspect continuity:

	①	②
OFF		
ON	○—○	

○—○ : There is continuity between terminals ○ and ○.

- If any fault is found, replace backup lamp switch **1**. Gr 22

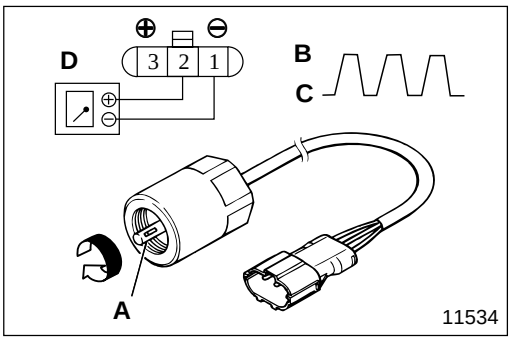

2 Inspection of vehicle speed sensor

- Apply 12 volts DC between terminals ① and ③, and rotate shaft **A** of vehicle speed sensor **2** slowly.
- At this state, measure the maximum voltage (High pulse voltage **B**) and the minimum voltage (Low pulse voltage **C**) generated between terminals ① and ②.
  D : Tester
- If the measured value deviates from the standard value, replace vehicle speed sensor **2.** Gr 22

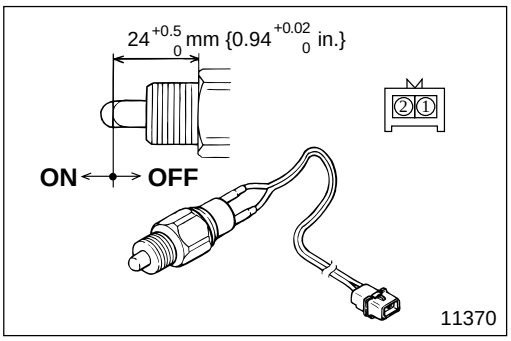

3 Inspection of transmission neutral switch

- Follow the table below to inspect continuity:

	①	②
OFF		
ON	○—○	

○—○ : There is continuity between terminals ○ and ○.

- If any fault is found, replace transmission neutral switch **3**. Gr 22

Installation Position

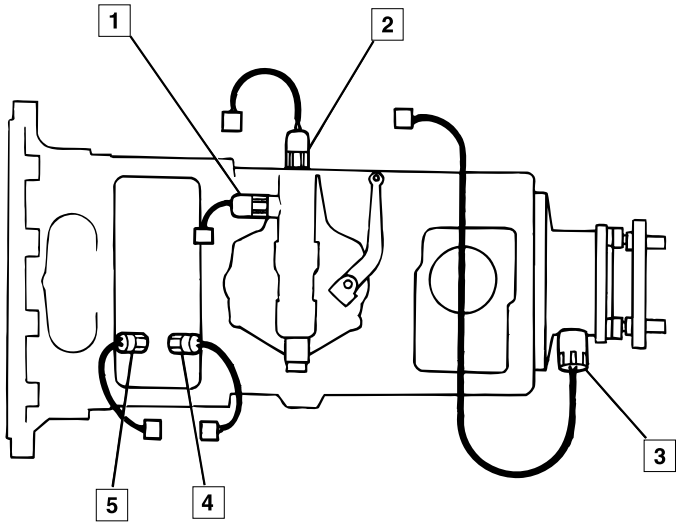

12900

1 Transmission neutral switch
2 Backup lamp switch
3 Vehicle speed sensor
4 Transmission HIGH/LOW detection switch (HIGH)
5 Transmission HIGH/LOW detection switch (LOW)

Service standards

Location	Maintenance item			Standard value	Limit	Remedy
3	Pulse output voltage of vehicle speed sensor (8 pulses) 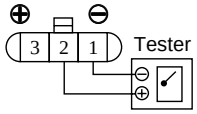 14367	①–②	Low pulse	1.5 V or less	—	Replace
			High pulse	12 V–(0.5 V or less)	—	

◆ Service procedure

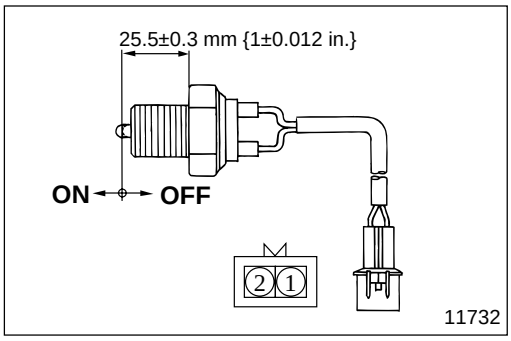

1 Inspection of transmission neutral switch

- Follow the table below to inspect continuity:

	①	②
OFF		
ON	○—○	

○—○ : There is continuity between terminals ○ and ○.

- If any fault is found, replace transmission neutral switch **1**. Gr 22

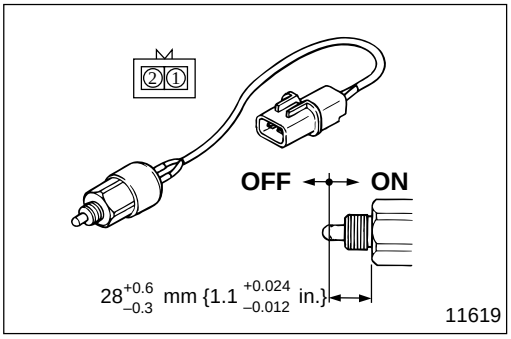

2 Inspection of backup lamp switch

- Follow the table below to inspect continuity:

	①	②
OFF		
ON	○—○	

○—○ : There is continuity between terminals ○ and ○.

- If any fault is found, replace backup lamp switch **2**. Gr 22

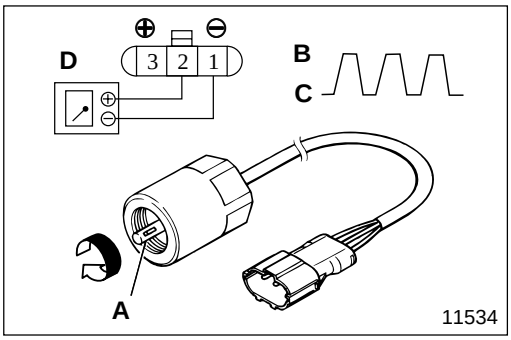

3 Inspection of vehicle speed sensor

- Apply 12 volts DC between terminals ① and ③, and rotate shaft **A** of vehicle speed sensor **3** slowly.
- At this state, measure the maximum voltage (High pulse voltage **B**) and the minimum voltage (Low pulse voltage **C**) generated between terminals ① and ②.
  D : Tester
- If the measured value deviates from the standard value, replace vehicle speed sensor **3.** Gr 22

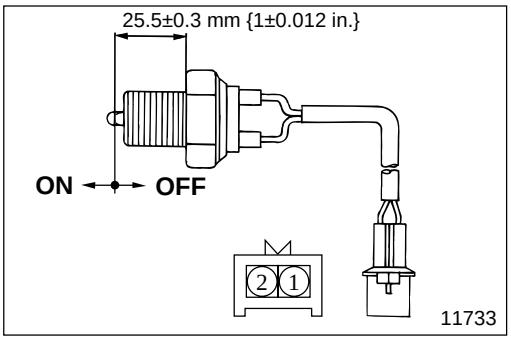

4 5 Inspection of transmission HIGH/LOW detection switch

- Follow the table below to inspect continuity:

	①	②
OFF		
ON	○—○	

○—○ : There is continuity between terminals ○ and ○.

- If any fault is found, replace transmission HIGH/LOW detection switches **4, 5**. Gr 22

Installation Position

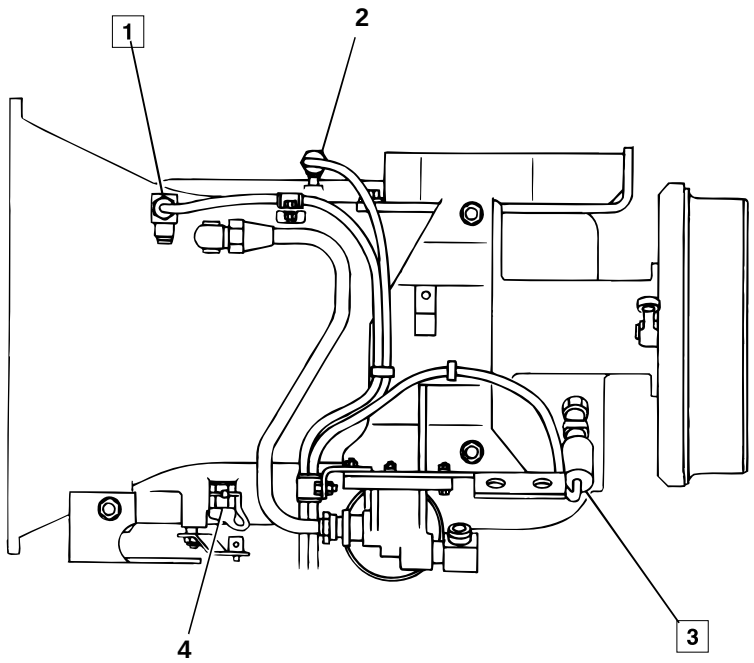

12901

1 Automatic transmission fluid temperature switch
2 Backup lamp switch Gr 23
3 Vehicle speed sensor
4 Automatic transmission neutral switch Gr 23

Service standards

Location	Maintenance item			Standard value	Limit	Remedy
1	Operating temperature of automatic transmission fluid temperature switch	When increases (OFF→ON)		140±3°C {284±5.4°F}	—	Replace
		When decreases (ON→OFF)		133°C {271°F} MIN		
3	Output voltage of vehicle speed sensor (8 pulses) 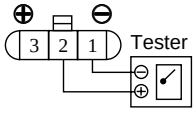 14367	①–②	Low pulse	1.5 V or less	—	Replace
			High pulse	12 V–(0.5 V or less)	—	

◆ Service procedure

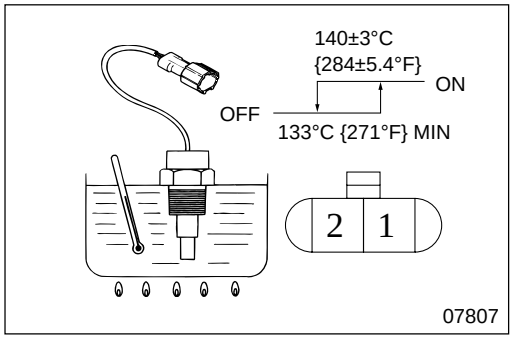

1 **Inspection of automatic transmission fluid temperature switch**

Carry out the following inspection. If any fault is found, replace automatic transmission fluid temperature switch **1**.

- Make sure that there is no continuity between terminals ① and ② at room temperature (20±5°C {68±9°F}).
- Place automatic transmission fluid temperature switch **1** in a container filled with engine oil and raise the oil temperature while stirring the oil. Measure the temperature when there is continuity between terminals ① and ②, and make sure that the measured value conforms to the standard value.
- Lower the oil temperature and measure the temperature when continuity is lost between terminals ① and ②, and make sure that the measured value conforms to the standard value.

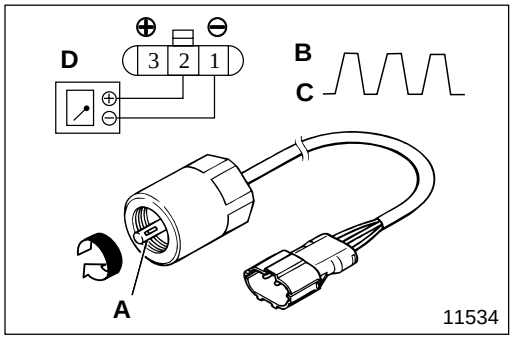

3 **Inspection of vehicle speed sensor**

- Apply 12 volts DC between terminals ① and ③, and rotate shaft **A** of vehicle speed sensor **3** slowly.
- At this state, measure the maximum voltage (High pulse voltage **B**) and the minimum voltage (Low pulse voltage **C**) generated between terminals ① and ②.
  D : Tester
- If the measured value deviates from the standard value, replace vehicle speed sensor **3**. Gr 23

850 TRANSMISSION POWER TAKE-OFF CIRCUIT < Option >

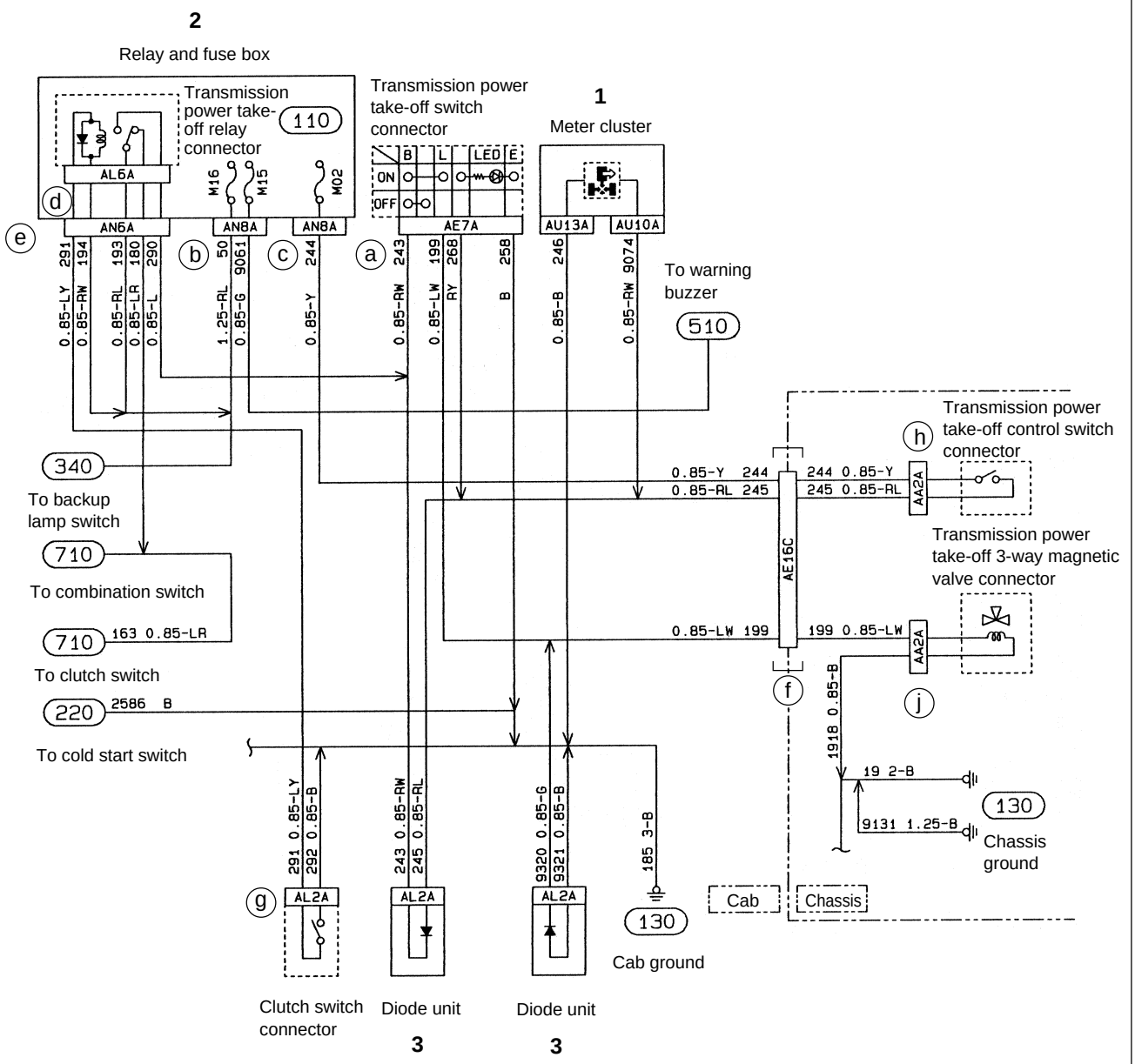

10481

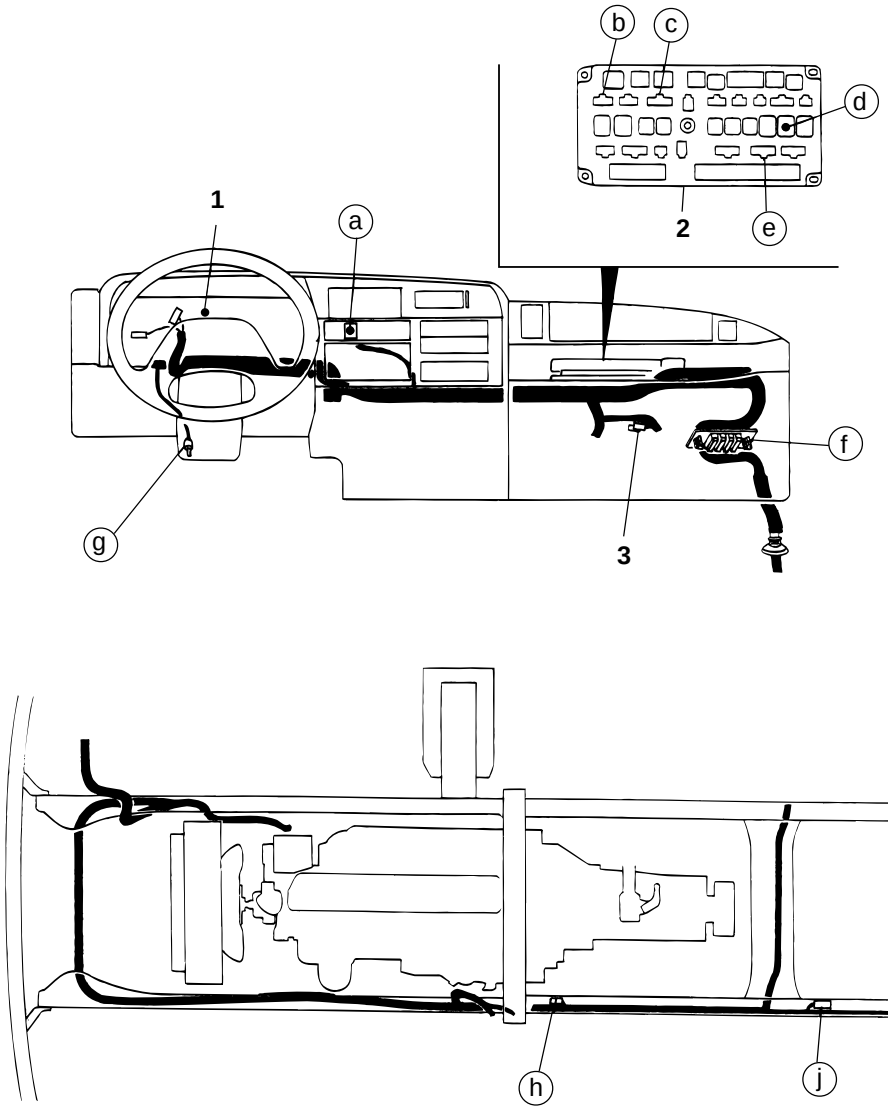

1 Meter cluster 401
2 Relay and fuse box 104
3 Diode unit

9 OTHERS

STRUCTURE AND OPERATION 54-9-2

910 MULTIPURPOSE TIMING CONTROL UNIT CIRCUIT 54-9-6

Multipurpose Timing Control Unit

- The multipurpose timing control unit controls the following functions:

Intermittent wiper operating function	Gr 42
Wiper activation function (Even if the wiper switch is OFF, this function automatically activates the wiper when the window washer works.	Gr 42
Preheating function	P 54-2-10
Starter continuity interruption function	P54-2-4
Water level warning function	Gr 14

- Sensors and switches are fitted to these systems as information sources for the multipurpose timing control unit.
- Using the information provided, circuits in the multipurpose timing control unit control the functions mentioned above.

● **Internal structure of multipurpose timing control unit**

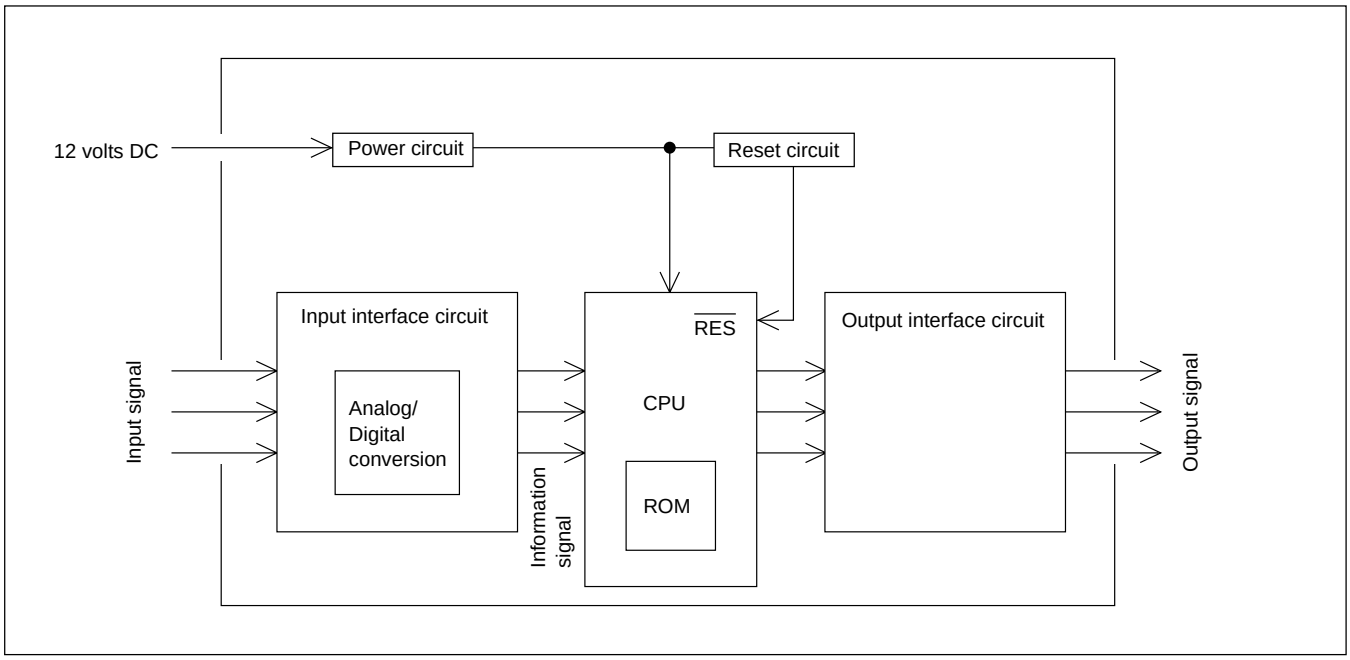

- The internal structure mainly consists of the input interface circuit, *1CPU, *2ROM, and the output interface circuit.
  - *1CPU : Central Processing Unit. Compares the input information with information stored in the memory to output commands.
  - *2ROM : Read Only Memory. Stores fixed data and programs that are not erased even after the power is turned off.
- Input signals are transmitted from information sources, such as sensors and switches, to the input interface circuit.
- The input interface circuit converts these input signals from analog signals to digital signals. This enables the CPU to calculate data and transmits them to the CPU as information signals.
- The CPU compares the information signals with the data in the ROM, calculates the signals, and sends them to the output interface circuit.
- The output interface circuit issues commands to systems, based on the above comparison and calculated results, as output signals.
- Sequential execution of the above processes allows optimum control over functions.

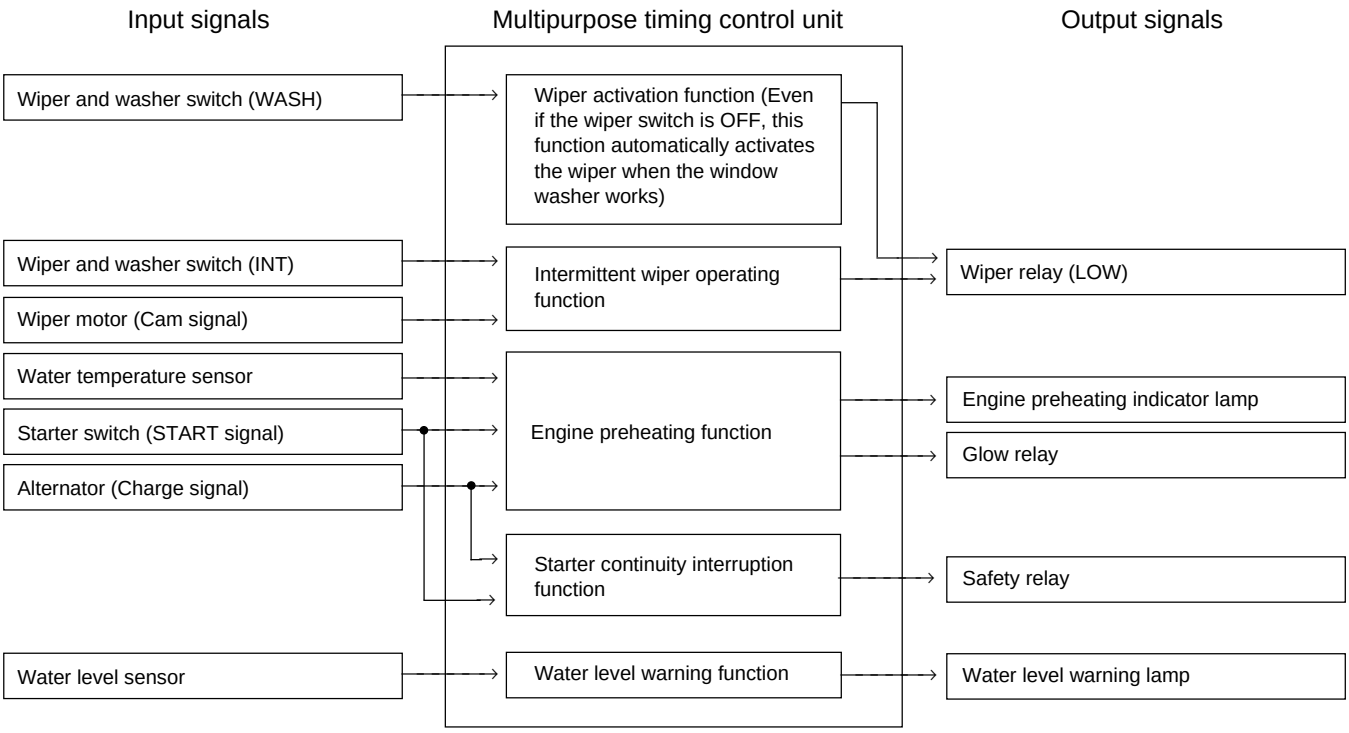

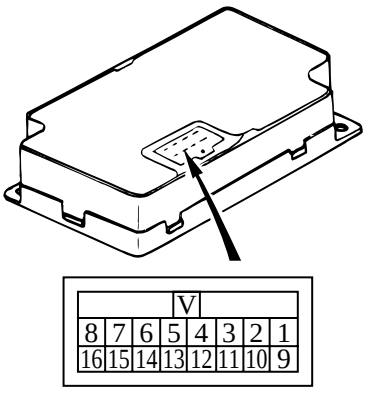

12582

Terminal No.	Connecting destinations	Terminal No.	Connecting destinations
1	Glow relay	9	Wiper relay (LOW)
2	Starter switch (ON power supply)	10	Engine preheating indicator lamp
3	Water temperature sensor	11	Safety relay
4	—	12	Water level warning lamp
5	Ground	13	Ground
6	Water level sensor	14	Alternator terminal L (Charge signal)
7	Wiper switch (Intermittent)	15	Starter switch (Start signal)
8	Washer switch	16	—

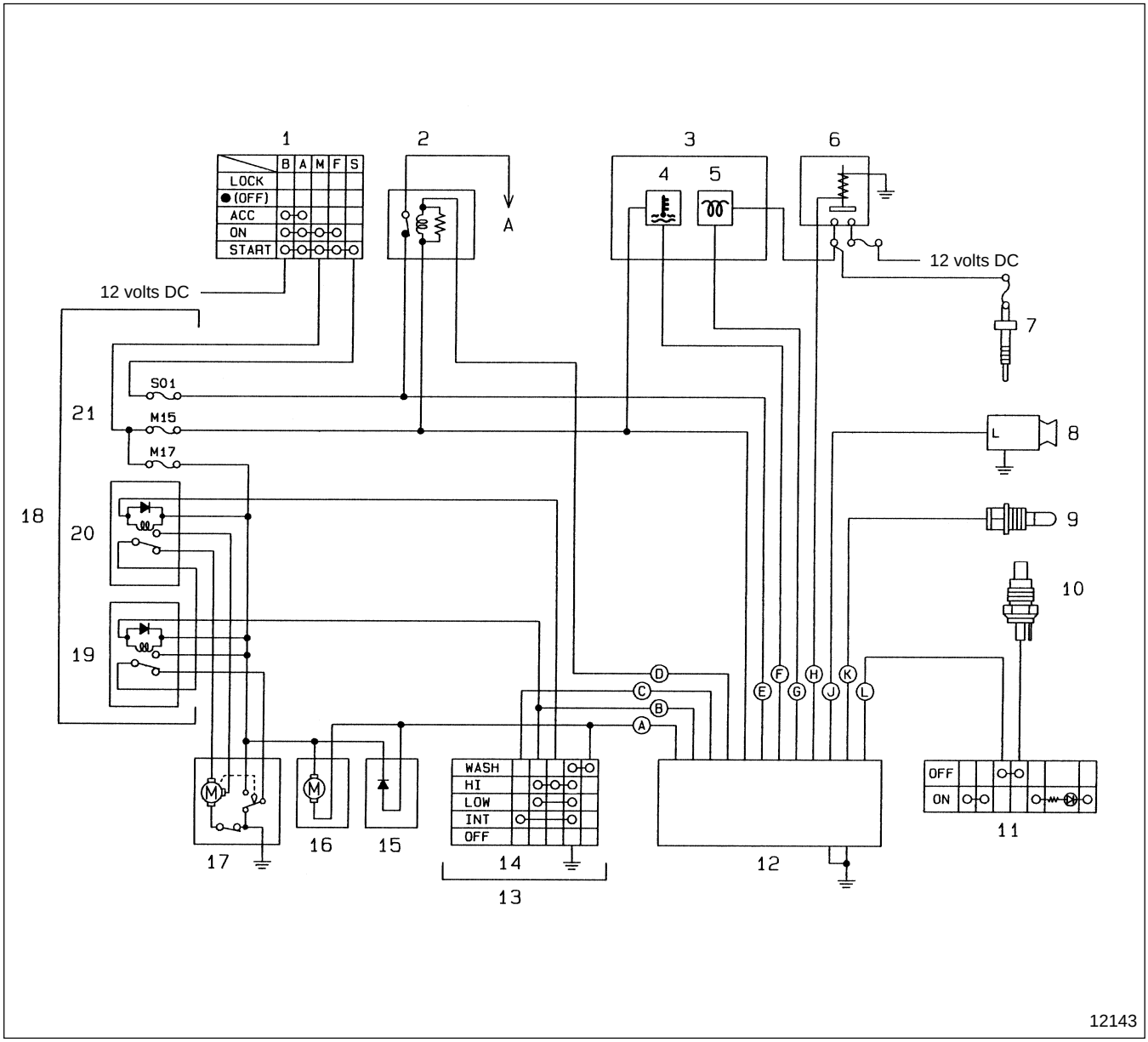
1
2
3
6
B A M F S
LOCK
(OFF)
ACC
ON
START
A
4
5
12 volts DC
12 volts DC
7
S01
21
M15
M17
8
L
18
20
9
10
19
D
C
B
A
E
F
G
H
J
K
L
WASH
HI
LOW
INT
OFF
OFF
ON
11
17
16
15
14
12
13
12143

	Main functions of sensors	Information signals
1 Starter switch	Detection of START position	Ⓔ : Start signal
2 Safety relay		Ⓓ : Safety relay activation signal
3 Starter relay		
4 Meter cluster		
5 Water level warning lamp		Ⓕ :  light-up signal
6 Engine preheating indicator lamp		Ⓖ :  light-up signal
7 Glow relay		Ⓗ : Glow relay activation signal
8 Glow plug		
9 Alternator	Output of alternator charge signal	Ⓙ : Alternator charge signal
10 Water level sensor	Detection of engine coolant level	Ⓚ : Engine coolant level signal
11 Water temperature sensor	Detection of engine coolant temperature	Ⓛ : Engine coolant temperature signal
12 Cold start switch		
13 Multipurpose timing control unit		
14 Combination switch		
15 Wiper and washer switch		Ⓒ : Intermittent wiper switch signal
16 Diode unit		
17 Washer motor		Ⓐ : Washer switch signal
18 Wiper motor		
19 Relay and fuse box		
20 Wiper relay (LOW)	Intermittent wiper operation	Ⓑ : Wiper relay activation signal
21 Wiper relay (HIGH)		
22 Fuse		
23 Warning buzzer		

910 MULTIPURPOSE TIMING CONTROL UNIT CIRCUIT

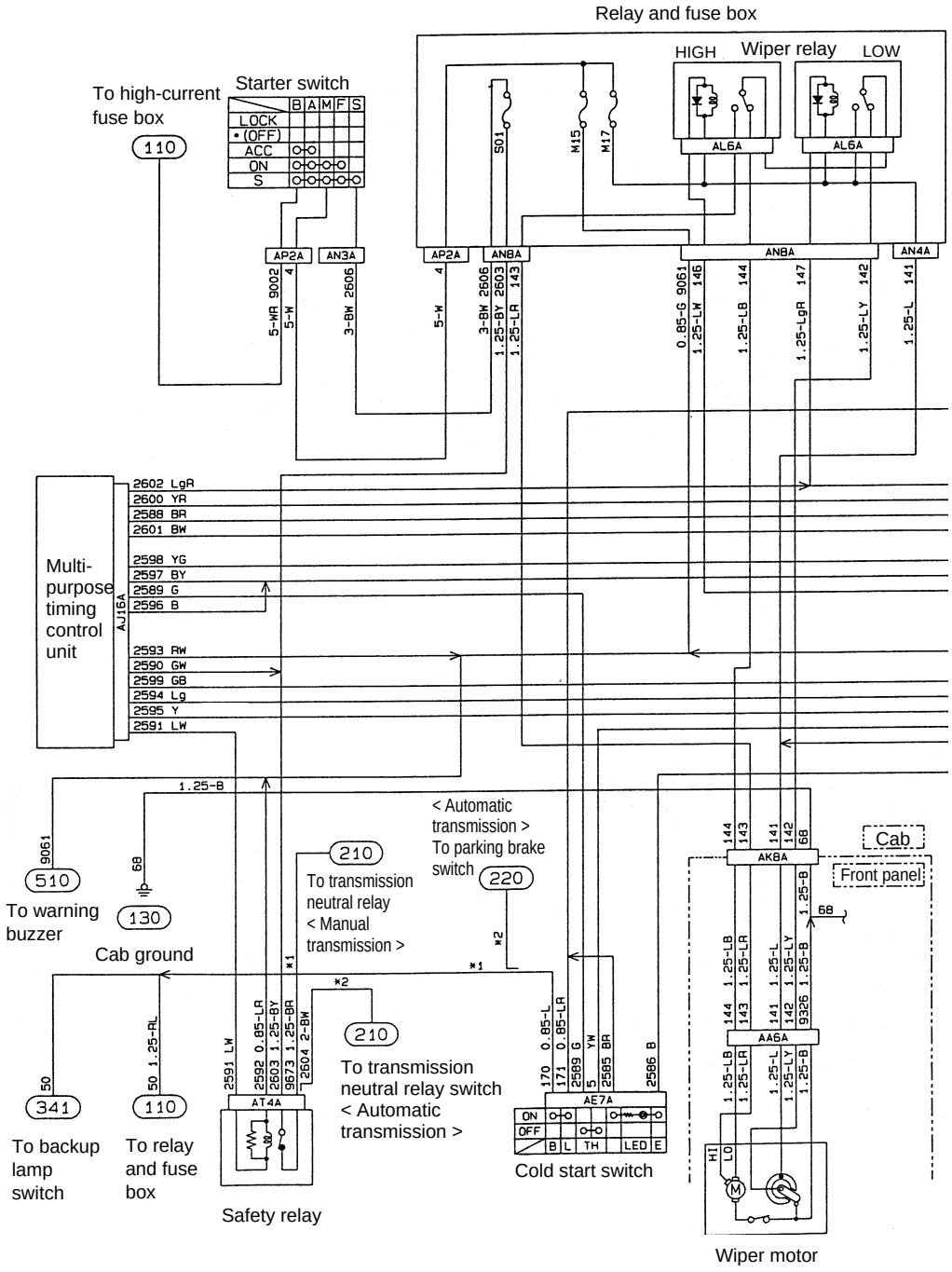

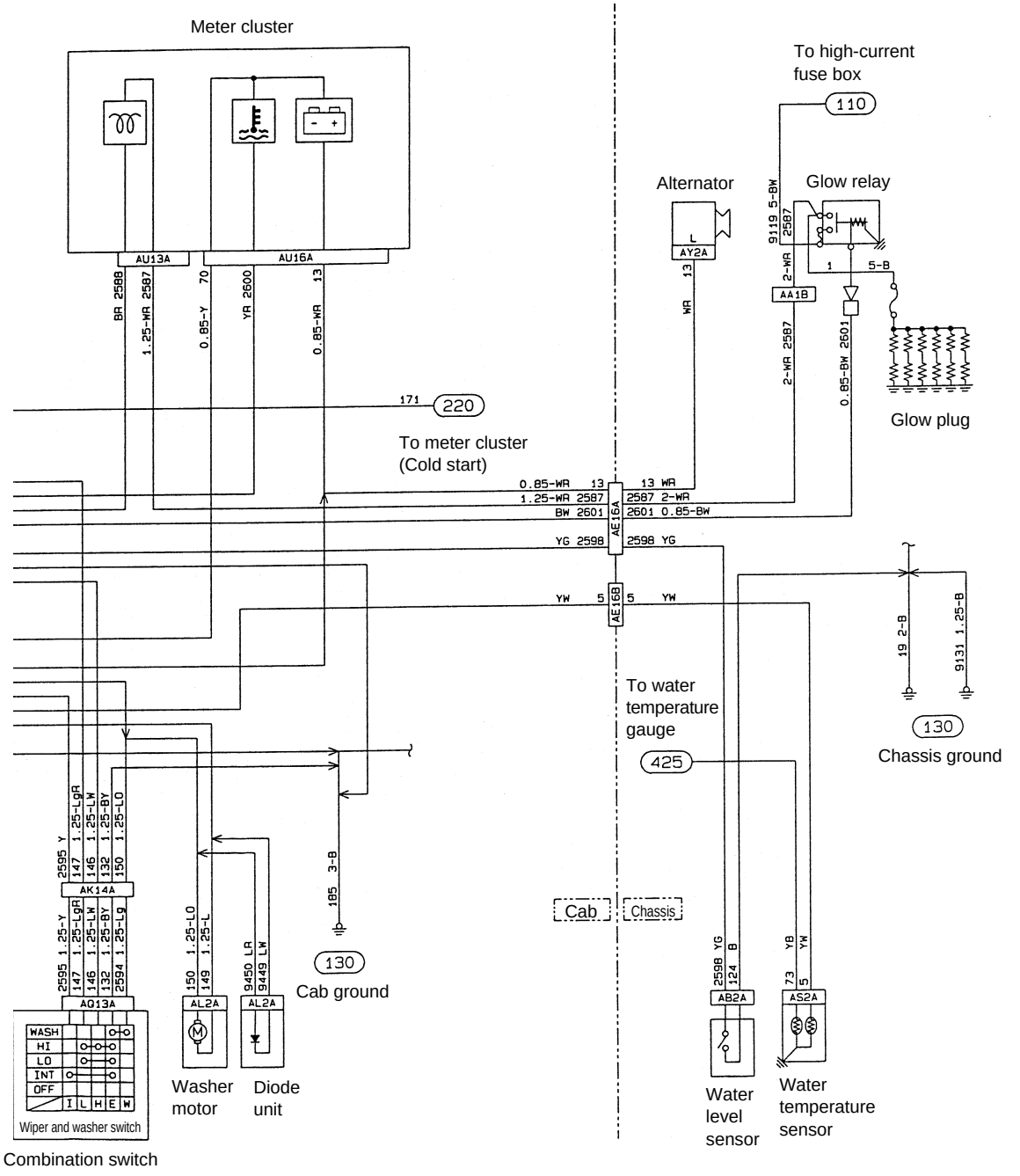

* 1 : Manual transmission
* 2 : Automatic transmission

10490

MITSUBISHI
FUSO

FK.FM
Service Manual
Group 55A - Air Conditioner
Group 55B - Heater

BACK HOME

MITSUBISHI FUSO TRUCK OF AMERICA, Inc.

MITSUBISHI
FUSO

FK.FM
Service Manual

Group 55A
Air-conditioner

Table of Contents

BACK

HOME

MITSUBISHI FUSO TRUCK OF AMERICA, Inc.

Pub No. TWME9503-55A

FOREWORD

This service manual describes the maintenance data consisting of constructive & functional outlines, inspection, and repair service of MITSUBISHI FUSO GENUINE TRUCK CAB AIR CONDITIONER.

Table of contents

1. SPECIFICATIONS 1
2. OUTLINES OF REFRIGERATION SYSTEM 2
3. CONSTRUCTION 4
4. TROUBLE SHOOTING 11
5. REMOVAL AND INSTALLATION 18
6. TREATMENT AFTER INSTALLATION 21
7. MAINTENANCE 27
8. COOLING UNIT ASSEMBLY 28
9. COMPRESSOR & CLUTCH ASSEMBLY 30

1. SPECIFICATIONS

Item			Description
Vehicle name & model			FE
*Cooling capacity (on JIS conditions)			4,200 W (3,600 kcal/h, 14,300 B.T.U/h)
Compresssor	Model		MSC90T
	Displacement		90 cc
	Maximum revolution		MAX 9,000 min^{-1} (9,000 rpm)
	Compressor oil		SUNPAG 56, 120cc (7.3 cu.in)
Magnetic clutch	Type		Dry single disc magnet
	Voltage & input		DC 12V, 38 W
Cooling unit assembly	Type		Laminated type
Controls	Air flow control		Rotary switch, Four step type
	Temperature control		Electric thermostat
Condenser	Type		Corrugated fin type
Receiver assembly			Cylinder type, approx 350 cc (21.4 cu.in)
Protective equipment	Frost prevention (thermostat)		OFF : 33 °F (0.5 °C) ON : 38 °F (3.5 °C)
	Relief valve		Open : 3.50 ~ 4.10 MPaG (508 ~ 594 Lb/in^2G, 35.7 ~ 41.8 kgf/cm^2G) Close : 2.94 MPaG (427 Lb/in^2G, 30 kgf/cm^2G)
	Dual pressure switch	Low pressure switch	OFF : 0.2 MPaG (28 Lb/in^2G, 2 kgf/cm^2G) ON : 0.225 MPaG (32 Lb/in^2G, 2.25 kgf/cm^2G)
		High pressure switch	OFF : 2.94 MPaG (418 Lb/in^2G, 30 kgf/cm^2G) ON : 2.35 MPaG (334 Lb/in^2G, 24 kgf/cm^2G)
	Fuse (Blower fan) Fuse (Magnetic clutch)		15 A 15 A
Refrigerant and quantity			HFC - 134a, 1.4 lb (650 g)

*The * marked cooling capacity is based on JIS conditions
Compressor speed : 1,800 rpm
Condensing temperature : 131 °F (55 °C)
Cooling unit inlet air dry bulb temperature : 80.6 °F (27 °C)
Cooling unit inlet air wet bulb temperature : 67.1 °F (19.5 °C)
Terminal voltage : DC 12V

2. OUTLINES OF REFRIGERATION SYSTEM

2.1 Air system

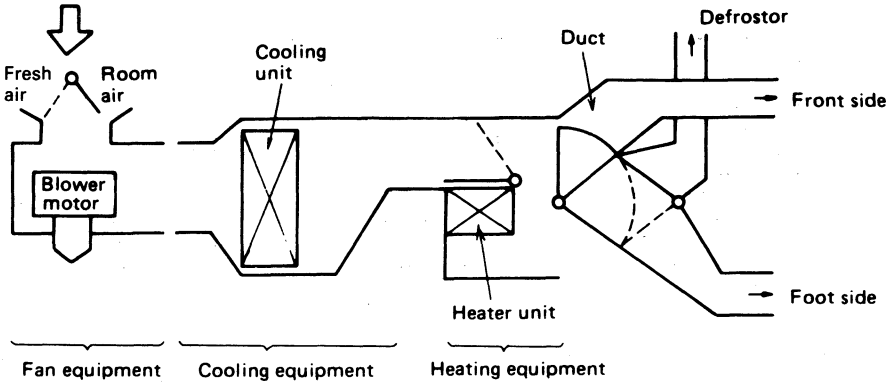

Cooling operation

Fresh air is induced to the cooling unit assembly by a blower fan, where it is cooled down and dehydrated, then discharged at the front side outlet through a duct.

Heating operation

Fresh air is induced to the heater unit by a blower fan through the cooling unit assembly, where it is heated, then discharged at the foot side outlet through a duct.

Dehumidifying operation

Fresh air is induced to the cooling by a blower fan,where it is cooled down and dehydrated,and succeedingly to the heater unit for warming, then discharged at the front side outlet through a duct.

Temperaure control

Cooled air and warmed air are mixed for temperature control of the room inside.

2.2 Refrigerating cycle

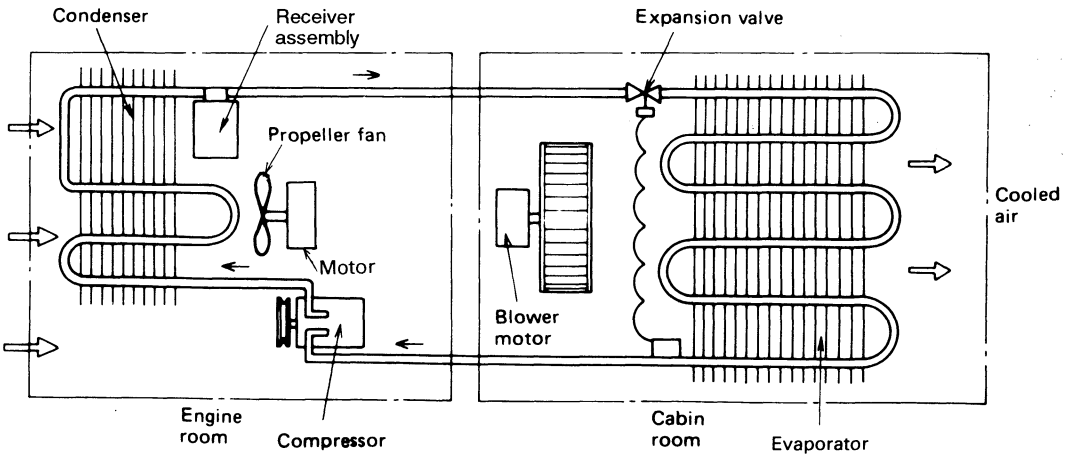

While the refrigerant, HFC-134a is cooling the air drawn into the evaporator, it evaporates and becomes a gas. This gas is compressed to high pressure and temperature in the compressor, and sent into the condenser where it is cooled and becomes liquid.

This cooling in the condenser is carried out by the open air passing through the condenser sucked by radiator fan and vehicle motion of the vehicle. The liquid refrigerant flows through the receiver assembly where water and dirt are removed, and then it enters the expansion valve. Here the liquid refrigerant is throttled and changed to a mixture of liquid and gas in low temperature and low pressure, and is sent to the evaporator.

In the evaporator, the refrigerant absorbs heat from the surroundings and becomes a gas. That is, because the evaporator itself is cooled at this time, the return air to the cooling unit is cooled, and the interior of the vehicle becomes cool. In this way the refrigerant flow makes a complete circuit.

2.3 Electrical system

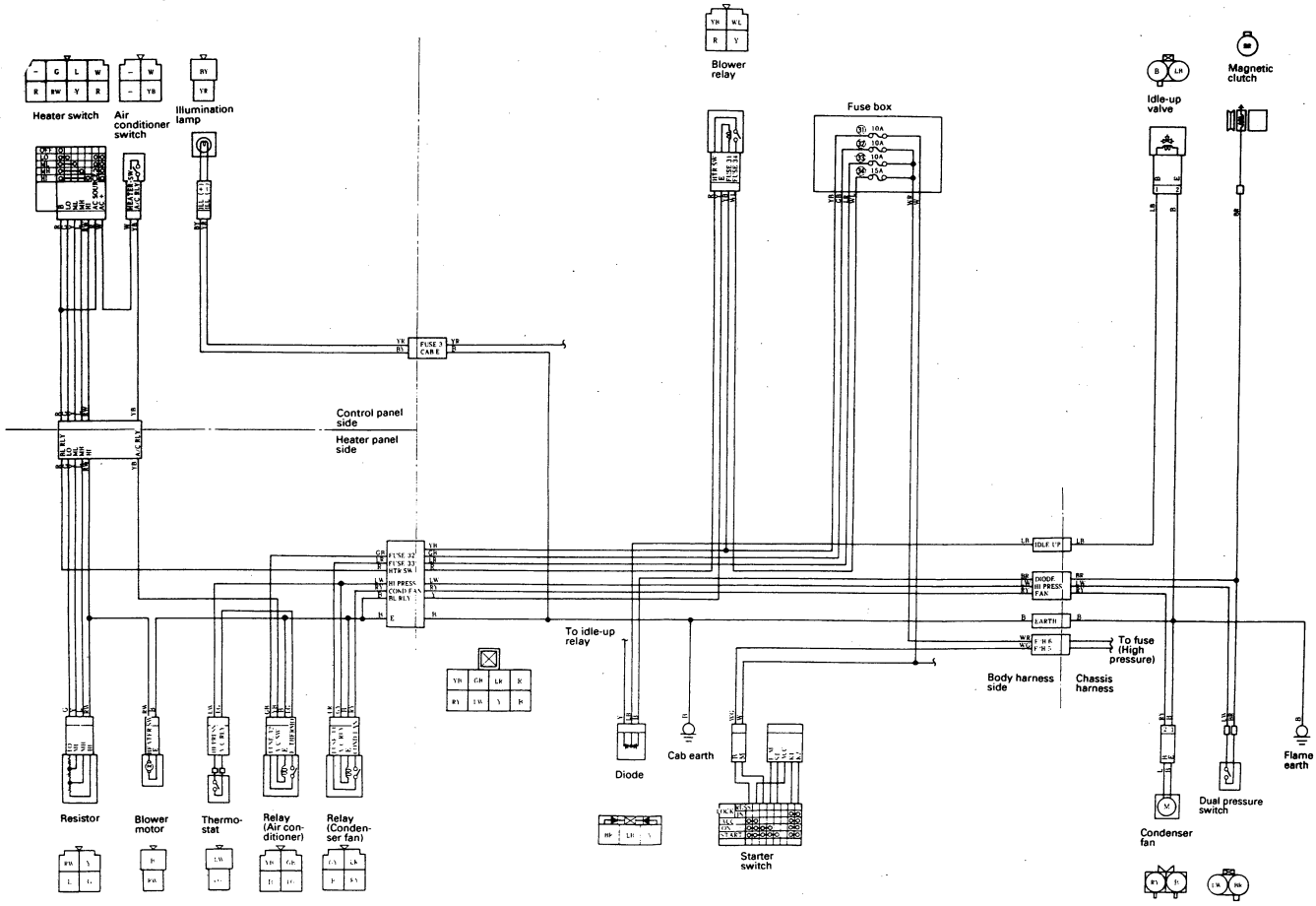

The power source is supplied from the TRUCK battery. When the blower switch is put ON, the power relay becomes ON, and electricity is connected to the magnetic clutch of the compresssor. The magnetic clutch switches ON or OFF by air conditioner switch, thermostat, and low pressure switch as the controls for operation service, or safety protection.

The cabin room air temperature is set to a preset point by adjusting the temp.control lever, and the opening degree of the air mix damper.

3. CONSTRUCTION

3.1 Engine room

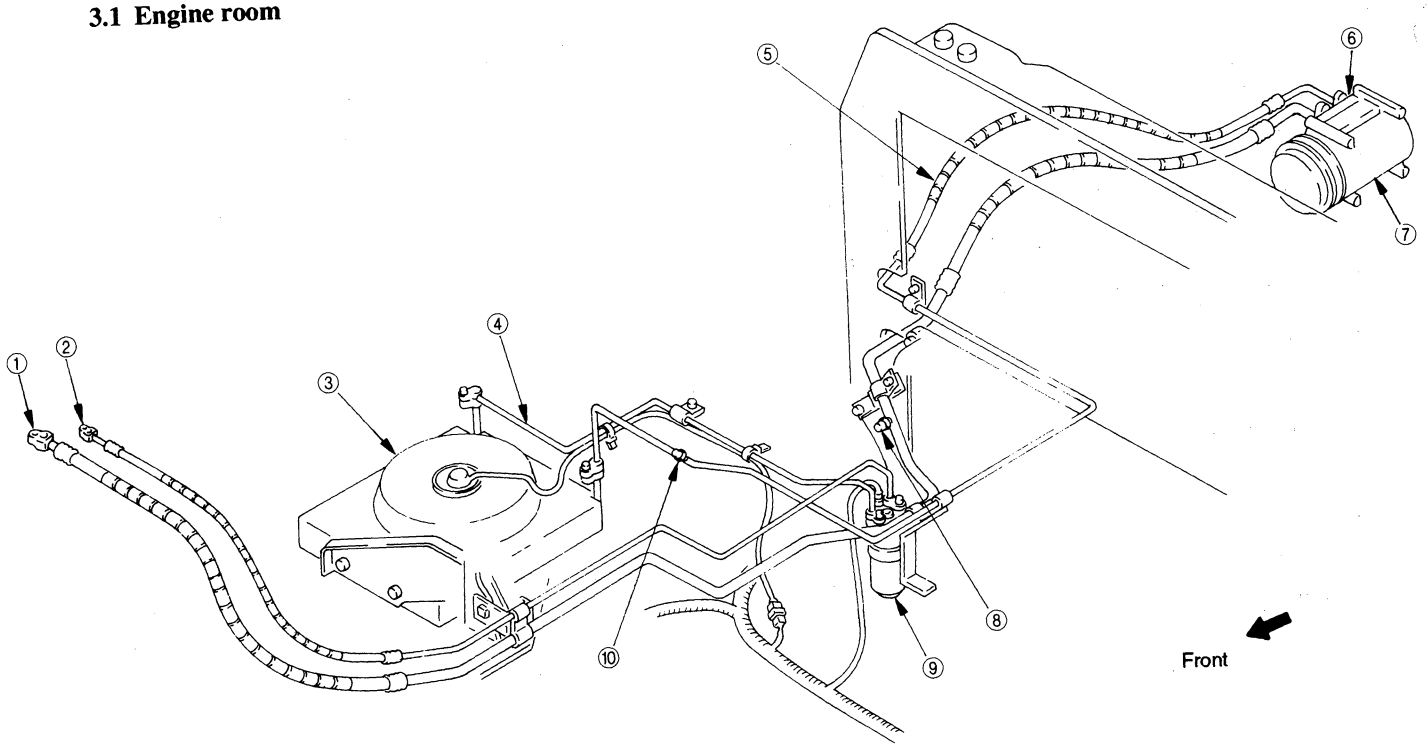

① Suction hose
② Liquid hose
③ Side condenser assembly
④ Pipe (LQ)
⑤ Discharge hose
⑥ Relief valve
⑦ Compressor & clutch assembly
⑧ Check valve (LP)
⑨ Receiver assembly
⑩ Check valve (HP)

3.2 Cabin room

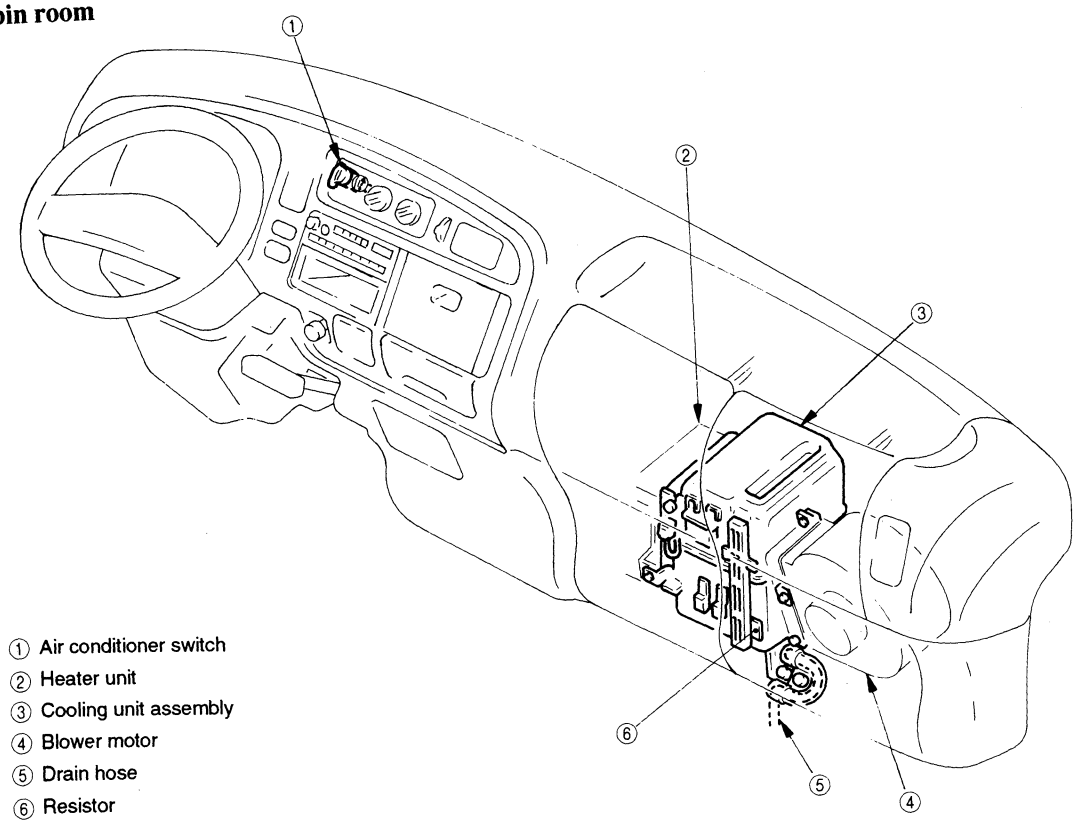

① Air conditioner switch
② Heater unit
③ Cooling unit assembly
④ Blower motor
⑤ Drain hose
⑥ Resistor

3.3 Control system

(1) Controls in panel
Do not run the air conditioner when it is child.

Air conditioner switch
By select the air conditioner switch initially in cooling or drying operation, the compressor starts running.

Fan switch
The air flow is selectable, out of the below four volume.

OFF	No air flow
○	Gentle
○	Low
○	Medium
○	High

Air outlet mode select switch
The air outlet is selected by positioning in cooling and heating operation.

- .....The conditioned air is discharged at the center and both side outlets directed by the louvers as required.
- .....The conditioned air is discharged at the center and both side and foot outlets directed by the louvers as required.
- .....The conditioned air is discharged at the foot outlets directed by the louvers as required.
- .....The conditioned air for dehumidifying is discharged at the foot outlets and to the front glass.
- .....The conditioned air for dehumidifying is discharged to the front glass.

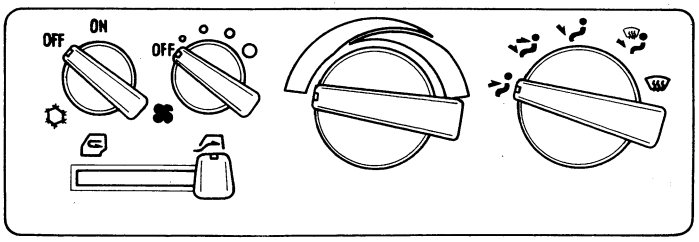

Shift lever, air sirculation
The resirculation air is selectable out of the below sirculation models.

- .....ROOM AIR CIRCULATION
- .....FRESH AIR INTAKE

Temperature control switch
The discharged air temperature is controllable by selecting the position of the control lever in cooling, heating or drying operation.

BLUE ZONE ..... For cool air blow

RED ZONE ..... For warm air blow

By turning the switch toward the BLUE and RED ZONE sides, the supply air temperature becomes more cooler and warmer respectively.

(2) Oeration control

Operation mode	Setting control lever	Air delivery	Remarks
COOL	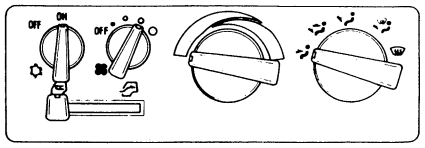	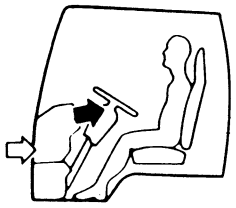	Earlier cooling service, or conditioning at dusty, polluted air prevailing places: Shift lever, air circulation 
HEAT	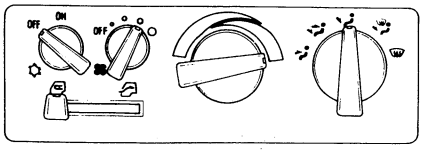	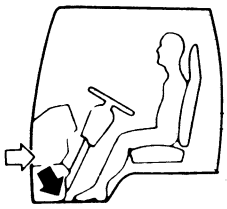	Earlier cooling service, or conditioning at dusty, polluted air prevailing places: Shift lever, air circulation Air outlet mode select switch 
DEHUMIDIFY	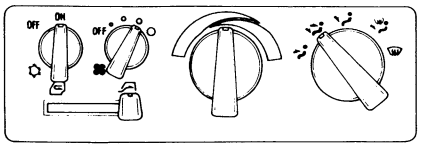	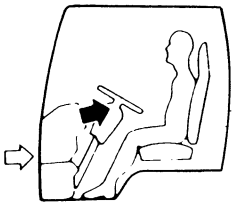	Wetty conditioning in head cooled, and foot warmed : Shift lever, air outlet Air outlet mode select switch 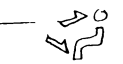
DEFROST	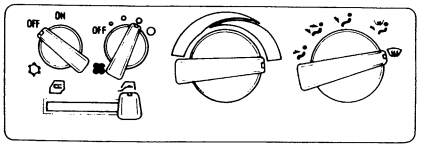	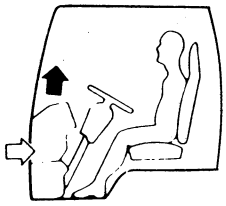	
VENTILATION	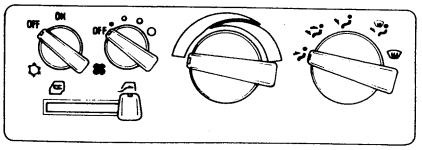	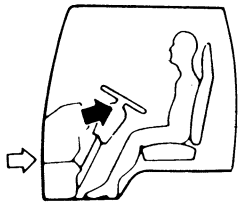	

3.4 Compressor and clutch assembly

3.4.1 Compressor

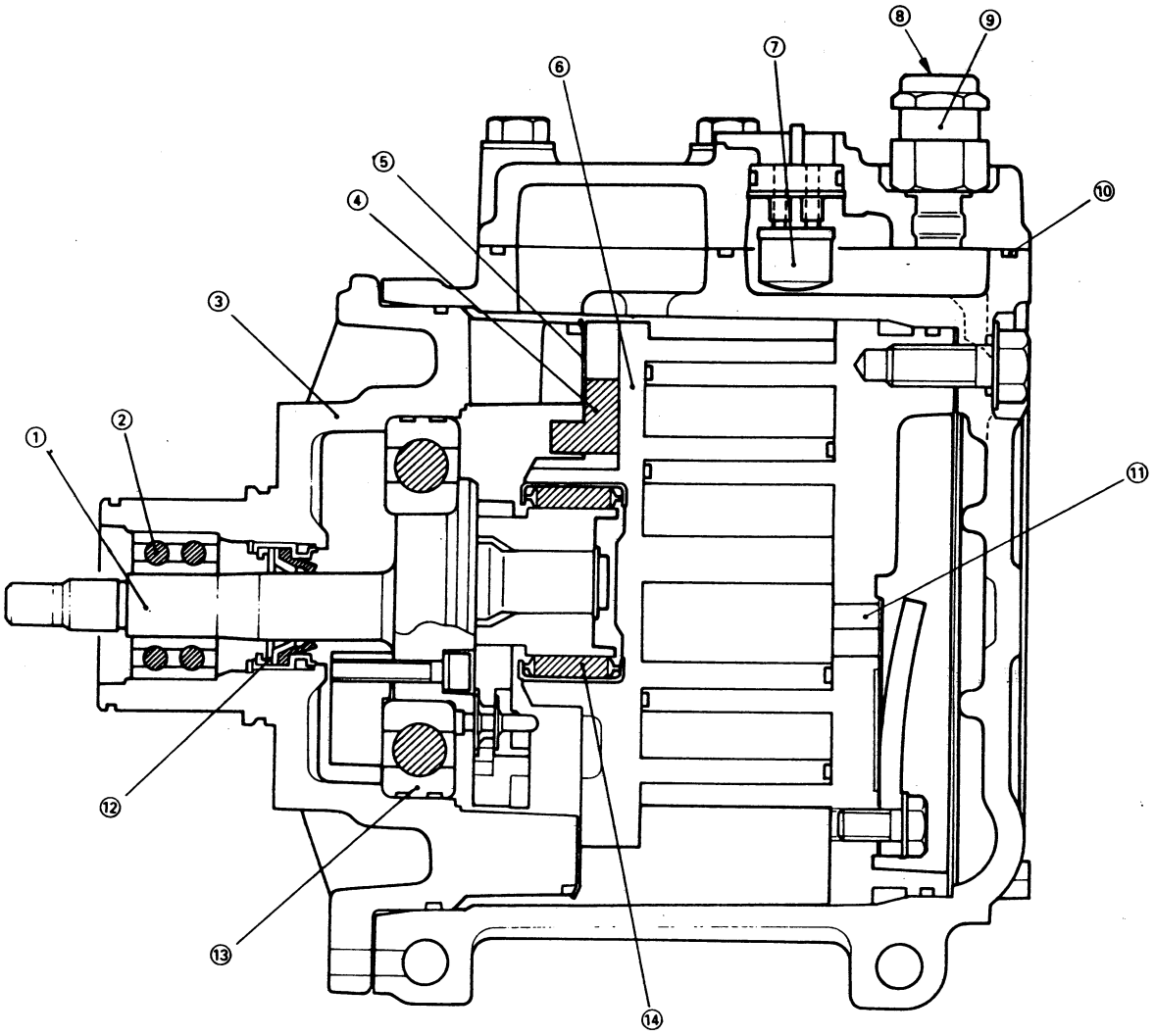

① Crankshaft
② Bearing
③ Front case assembly
④ Housing assembly
⑤ Thrust plate
⑥ Orbit scroll assembly
⑦ Thermostat
⑧ Dust seal
⑨ H/P relief valve
⑩ O ring
⑪ Port hole
⑫ Shaft seal
⑬ Bearing
⑭ Needle bearing

3.4.2 Check valve

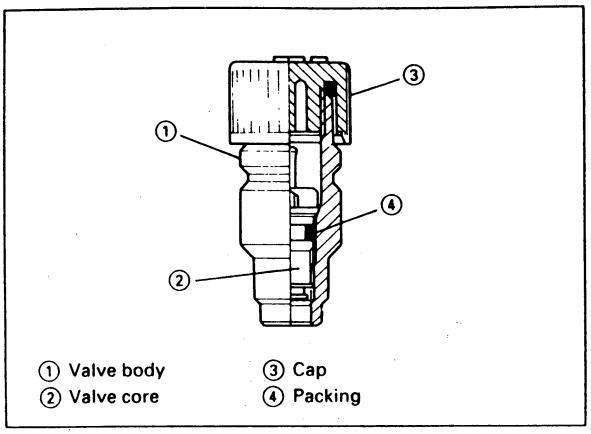

The suction hose and discharge hose are provided with check valve, and designed for gas evacuation and charging service. (shown above)

In the valves, a valve rubber tube, as in automobile tire tubes, is provided as shown in the figure.

Slackening the flare nut on the gauge manifold causes the passage to close automatically by the spring force, and tightening the flare nut causes the passage to open while pressing the compressed spring.

3.4.3 Magnetic clutch

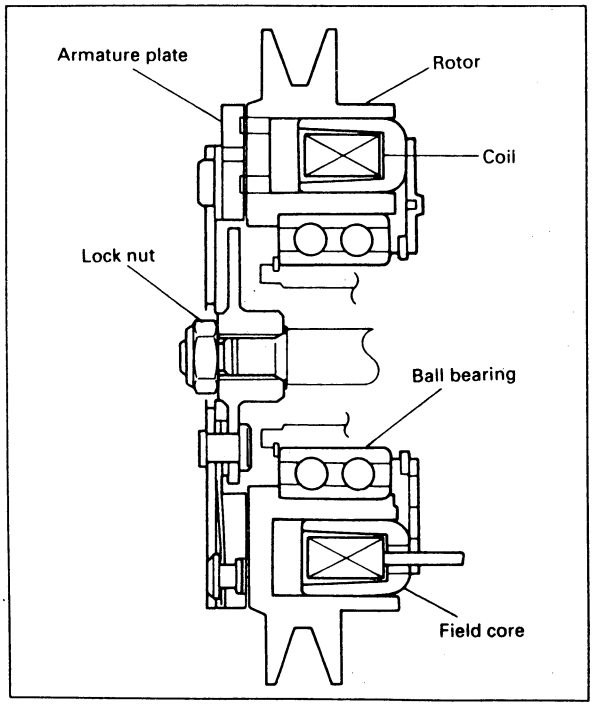

The magnetic clutch is mounted on the compressor crankshaft to start and stop the compressor.

This means that the magnetic clutch is actuated to control the compressor operation electrically by the thermostat.

3.5 Side condenser assembly

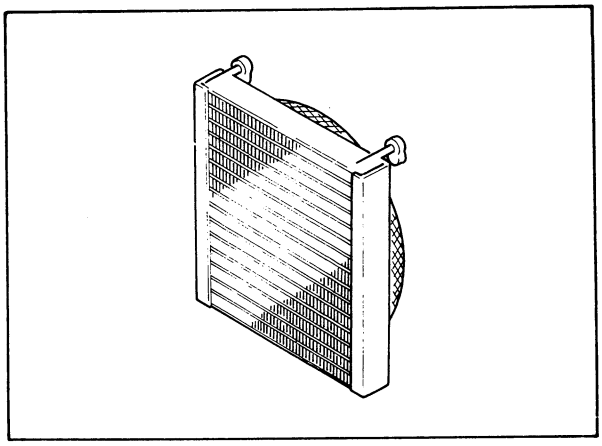

The condenser is a means to liquefy the refrigerant gas. As the condenser is cooled by the air pulled in by the condenser fan, the refrigerant in the condenser is cooled into liquid. Therefore, when any obstacle prevents the air from flowing evenly to the condenser or the air flow is short circuited, the cooling effect is reduced, with a decrease in the performance of the condenser. When the vehicle is driven at a high speed, the air flow increases resulting in an increase of the cooling effect, and performance of the condenser.

3.6 Relief valve

The relief valve is mounted to the compressor & clutch assembly. The relief valve is usually closed by spring. If pressure of refrigerant in air conditioner system is higher than spring pressure, refrigerant is discharged from relief valve. The pressure drop due to discharge refrigerant, and relief valve is closed again.

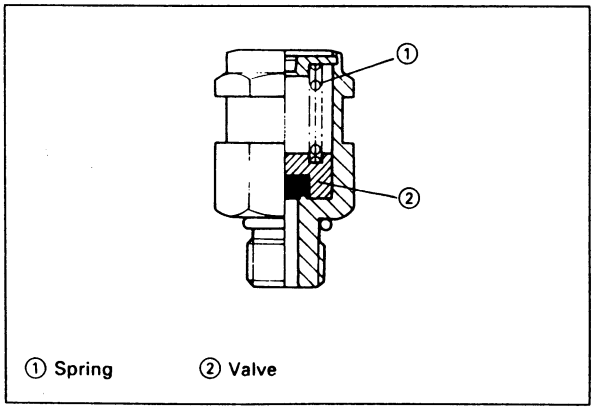

Preset : MPaG (Lb/in²G, kgf/cm²G)

Open	3.50~4.10 (508~594, 35.7~41.8)
Close	2.94 (427, 30)

3.7 Receiver assembly

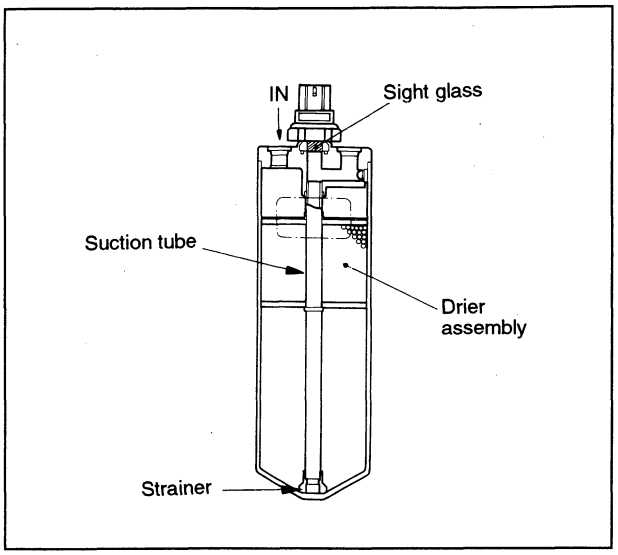

A receiver assembly is served as a refrigerant reservoir located between the condenser and the expansion valve.

The receiver assembly consists of a filter and a sight glass. The filter is used to remove dust, the drier is used to remove moisture from the refrigerant in the circuit, and the sight glass is used to check the refrigerant charge.

Any moisture in the refrigerant may not only corrode metal surfaces in the refrigerant circuit, but also cause the throttle of the expansion valve to be frosted, resulting in the interruption of refrigerant circulation.

Therefore,the receiver assembly must be handled very carefully. When storing or installing it,care should be taken to protect it from the deterioration of drying performance due to exposure to the air.

The retardation of heat exchange, or any fire around the refrigerant circuit will cause excessive pressurization or heating of the refrigerant. Should such an accident occur, the refrigerant in the circuit must be expelled to the outside to prevent the above hazards.

The sight glass is a sort of peep window used to check the refrigerant flow in the refrigerant circuit.

The sight glass appears clear when the refrigerant flow is enough, and shows bubbles flowing when the refrigerant flow is short.

3.8 Cooling unit assembly

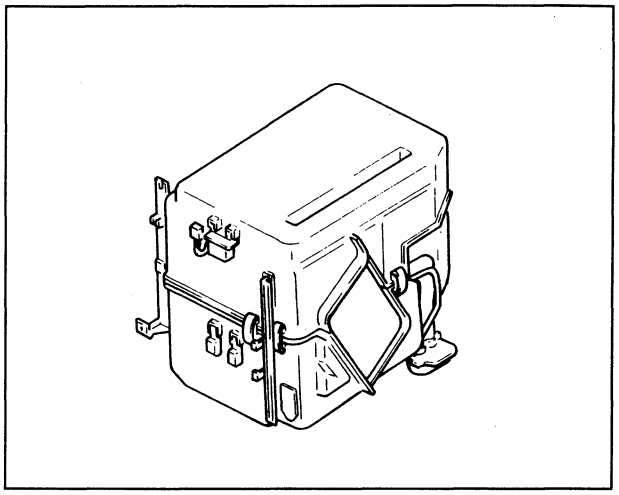

Evaporator core

The evaporator core is a type of corrugated fin and tube.

The tube is arranged in zigzag to achieve high efficiency, and to make the core system compact.

A thicker reinforced plastic plate is used as the enclosure to inclease heat and shock resistance,and to protect the core from humidity. This case is a split type, and in a simple design to facilitate installation on the floor panel and the instrument panel frame of the vehicle.

3.9 Expansion valve

The expansion valve is mounted at the inlet of the cooling unit. The liquid refrigerant from the receiver is led to it through a narrow passage (for throttle action), where-in, the liquid refrigerant is condensed with pressure dropping and at the same time the flow rate is adjusted before the refrigerant is sent to the cooling unit. The refrigeration load in the cooling unit is not constant, but usually fluctuates over a certain range. So the refrigerant flow should undergo the control in design. An automatic expansion valve performs this function automatically. The air conditioner uses a thermal type automatic expansion valve.

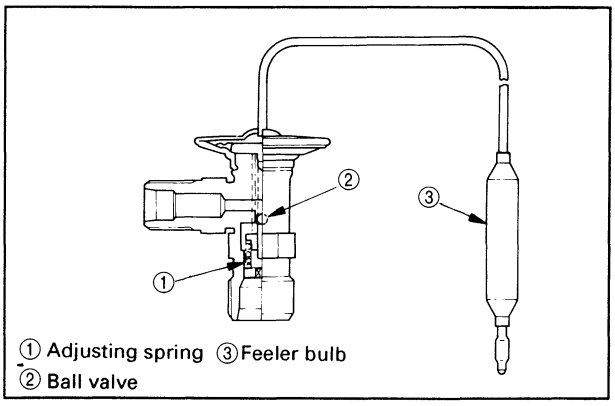

3.10 Dual pressure switch

The dual pressure switch, fixed to the receiver functions as a protector for stopping the compressor (OFF) at a preset value of pressure in the refrigerant circuit.

Preset : MPaG (Lb/in²G, kgf/cm²G)

	L.P.SW	H.P.SW
OFF	0.2 (28, 2)	2.94 (418, 30)
ON	0.225 (32, 2.25)	2.35 (334, 24)

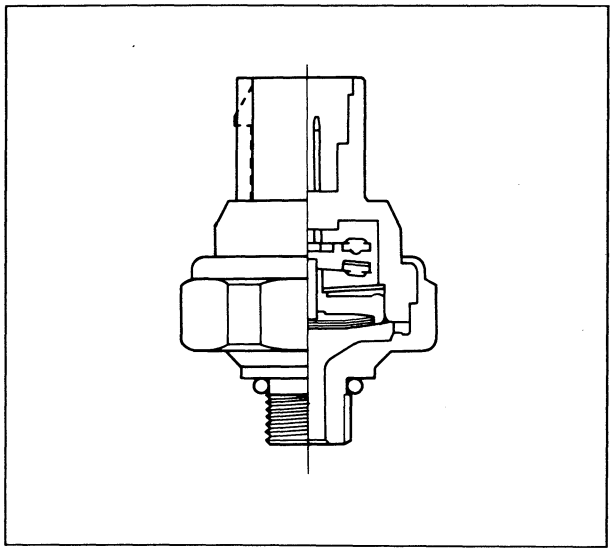

3.11 Power relay

The power relay is excited at a closed position of the micro switch and enables the magnetic clutch to be ready for engaging electrically.

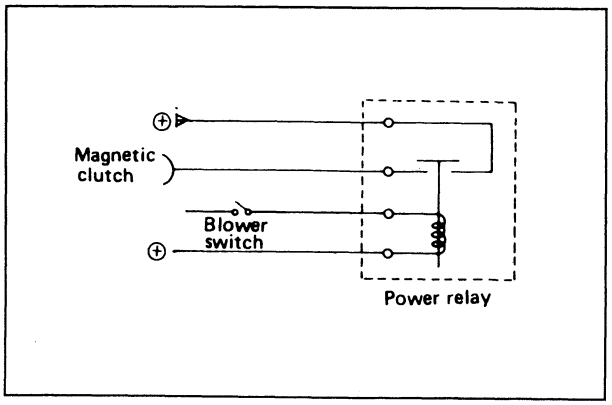

3.12 Air conditioner switch

The air conditioner switch functions as an operation controller for starting or stopping the compressor in cooling and dehumidifying

Set the it to the "ON" position, the magnetic clutch becomes engaged and the compresssor starts.

Set the it to the "OFF" position, the magnetic clutch becomes disengaged and the compresssor stops.

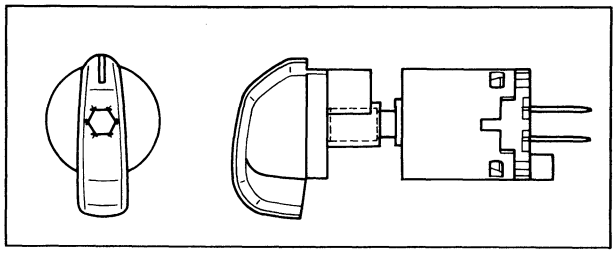

3.13 Thermostat

The thermostat is mounted on the evaporator case.

It senses the temperature of the evaporator fins, and controls the compressor operation for ON or OFF as specified below.

Preset : °F(°C)

OFF	33 (0.5)
ON	38 (3.5)

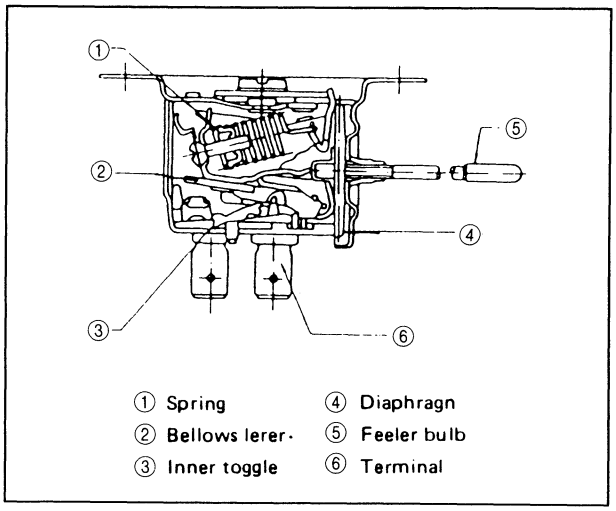

4. TROUBLE SHOOTING

4.1 General precautions

(1) When handling refrigerant (HFC-134a), the following precautions must be observed.
   a. Always wear eye protection and a pair of gloves which handling refrigerant.
   b. Be careful the liquid refrigerant dose not contact the skin.
   c. Keep the refrigerant container blow 100 degrees F (40 degrees C).
   d. Do not handle the refrigerant in an enclosed area having an open flame.The refrigerant may produce a poisonous gas.
   e. When dumping the refrigerant from the system, release it slowly so as not to expell all the compressor oil.

(2) If liquid refrigerant strikes eye or skin.
   a. Do not rub eye or skin.
   b. Splash large quantities of cool water on the eye or skin.
   c. Rush to a physician or hospital for immediate professional treatment.

4.2 Trouble cause and remedy

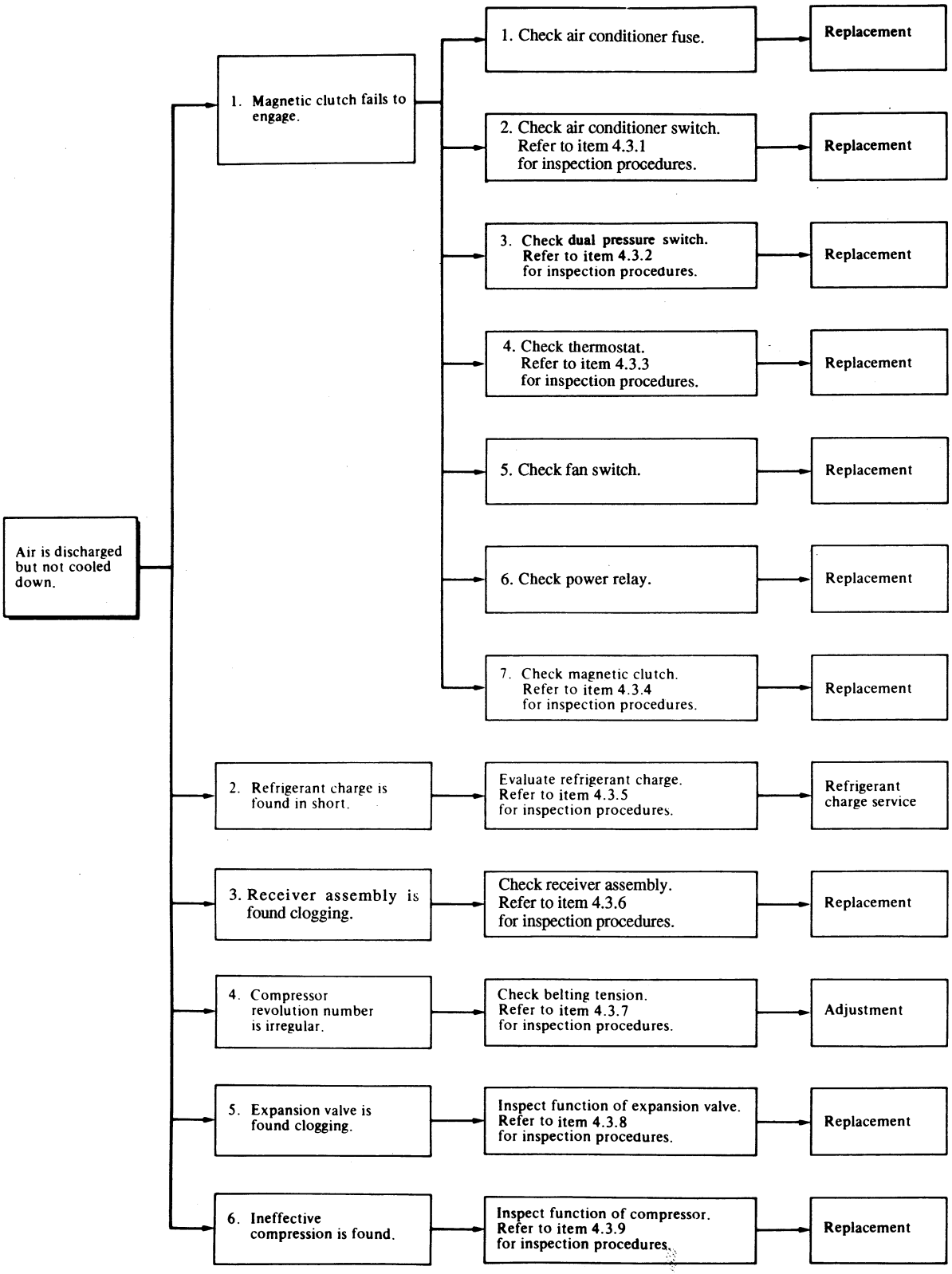

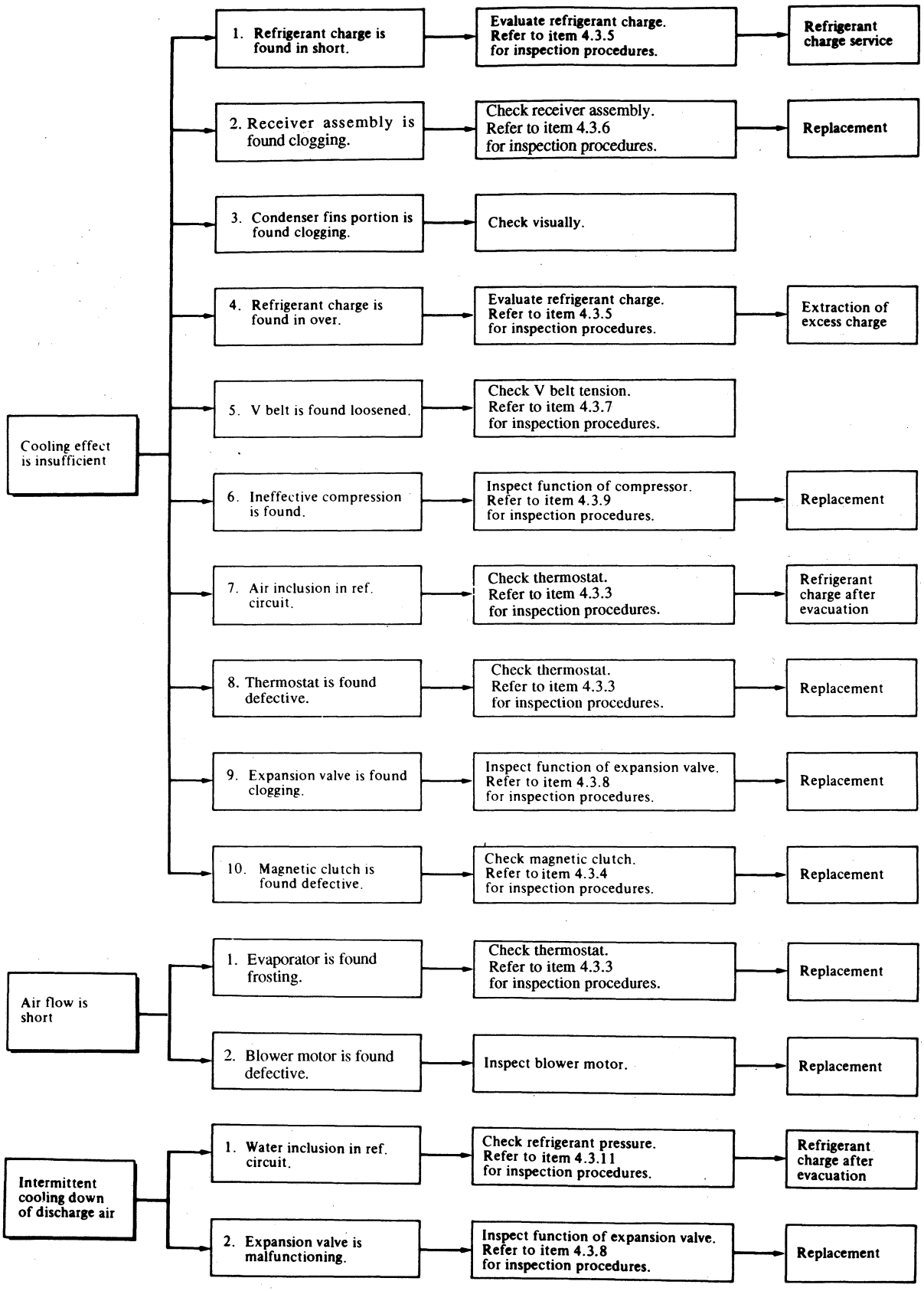
Cooling effect is insufficient
1. Refrigerant charge is found in short.
Evaluate refrigerant charge. Refer to item 4.3.5 for inspection procedures.
Refrigerant charge service
2. Receiver assembly is found clogging.
Check receiver assembly. Refer to item 4.3.6 for inspection procedures.
Replacement
3. Condenser fins portion is found clogging.
Check visually.
4. Refrigerant charge is found in over.
Evaluate refrigerant charge. Refer to item 4.3.5 for inspection procedures.
Extraction of excess charge
5. V belt is found loosened.
Check V belt tension. Refer to item 4.3.7 for inspection procedures.
6. Ineffective compression is found.
Inspect function of compressor. Refer to item 4.3.9 for inspection procedures.
Replacement
7. Air inclusion in ref. circuit.
Check thermostat. Refer to item 4.3.3 for inspection procedures.
Refrigerant charge after evacuation
8. Thermostat is found defective.
Check thermostat. Refer to item 4.3.3 for inspection procedures.
Replacement
9. Expansion valve is found clogging.
Inspect function of expansion valve. Refer to item 4.3.8 for inspection procedures.
Replacement
10. Magnetic clutch is found defective.
Check magnetic clutch. Refer to item 4.3.4 for inspection procedures.
Replacement
Air flow is short
1. Evaporator is found frosting.
Check thermostat. Refer to item 4.3.3 for inspection procedures.
Replacement
2. Blower motor is found defective.
Inspect blower motor.
Replacement
Intermittent cooling down of discharge air
1. Water inclusion in ref. circuit.
Check refrigerant pressure. Refer to item 4.3.11 for inspection procedures.
Refrigerant charge after evacuation
2. Expansion valve is malfunctioning.
Inspect function of expansion valve. Refer to item 4.3.8 for inspection procedures.
Replacement

ɛction procedures

r conditioner switch

ug the air conditioner switch.

:k the continuity between terminals of the air itioner switch with a tester.

inuity

itch position	Terminal's number	Result, in normal
OFF	①—②	No
ON	①—②	Yes

Terminal's number / h ion	1	2
OFF	○	
ON	○—○	

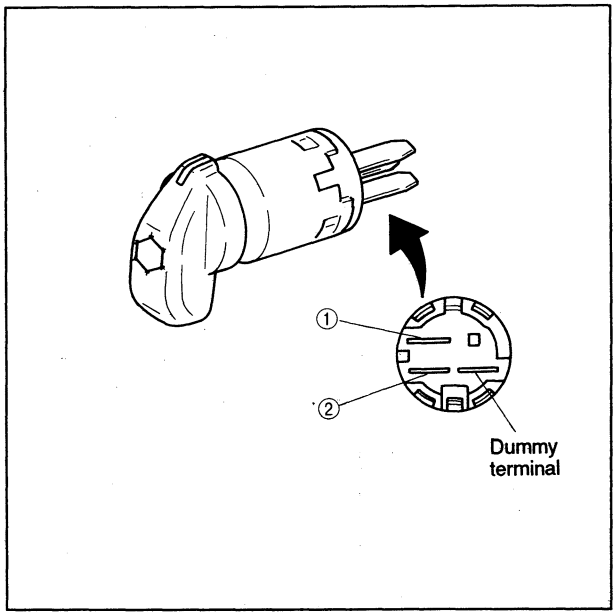

ɔual pressure switch

dual pressure switch is attached to the receiver ɔly for controlling the operation of the air oner by checking the inside pressure of the r assembly.

MPaG (Lb/in²G, kgf/cm²G)

High side	Low side
2.94 (418, 30)	0.2 (28, 2)
2.35 (334, 24)	0.225 (32, 2.25)

ıplug the connector at the receiver assembly.

ıeck the continuity between terminals of the nnector with a tester.

hen electric continuity is found, connect the nnector to the high pressure switch.

ttach the high pressure gauge and low pressure ıuge.

perate the air conditioner.

ɔver the surface of the condenser by using a piece paper.

hen the high pressure exceeds 2.94 MPaG (418 b/in²G, 30 kgf/cm²G), if the magnetic clutch is ırned off, the switch is normal.

the magnetic clutch is not turned off, replace ressure switch with new one.

heck the accuracy of the preset as below.

ı) Stop the air conditioner.

ɔ) Purge the air conditioner of refrigerant slowly starting at over 0.225 MPaG (32 Lb/in²G, 2.25kgf/cm²G).

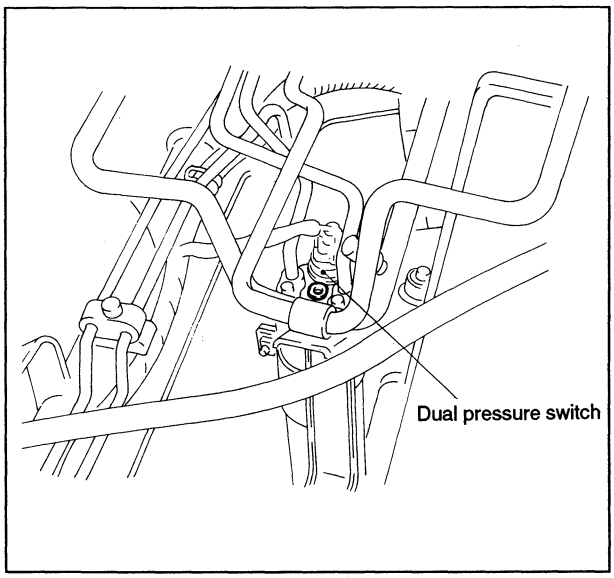

(c) At reading the pressure 0.2 MPaG (28 Lb/in²G, 2 kgf/cm²G), the switch opens.

(d) Here, stop the purging, then turn it to charging.

(e) At reading the pressure 0.225 MPaG (32 Lb/in²G, 2.25 kgf/cm²G), the switch closes.

If the dual pressure switch does not meet specifications, replace the switch.

4.3.3 Thermostat

The thermostat is mounted on the evaporator case. It controls the operation of the air conditioner by sensing the temperature of the evaporator fins.

Preset : °F (°C)

OFF	33 (0.5)
ON	38 (3.5)

(1) Check the accuracy of the preset as below.
  (a) Soak the sensor of the thermostat in ice-water of below 33 °F (0.5 °C).
  (b) Check the cotinuity between the switch terminals.
  (c) Pull the sensor out of the ice-water, and check the continuity at over 38 °F (3.5 °C) of the sensor.

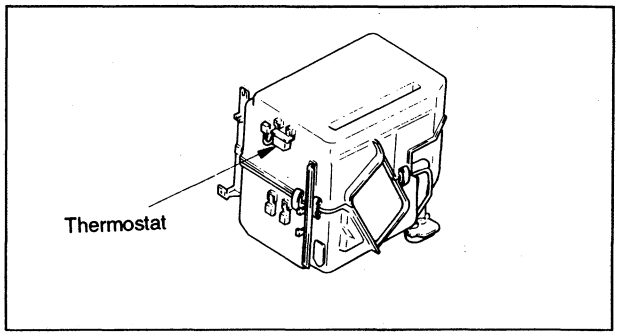

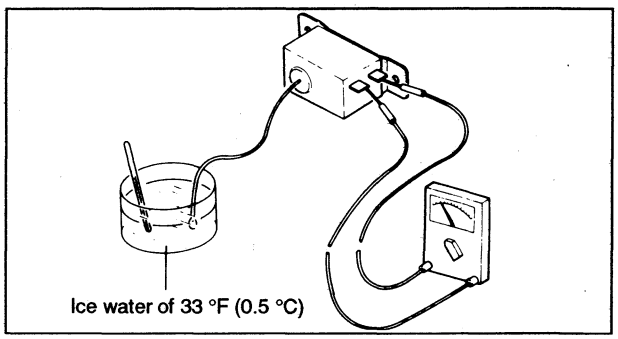

4.3.4 Magnetic clutch

(1) Disconnect the wiring to the magnetic clutch.
(2) Apply a positive side power voltage to the magnetic clutch through the wiring.
(3) In the case of regular functioning, the pulley and magnetic clutch are engaged with a clicking sound. The failing means any malfunction of the magnetic clutch.

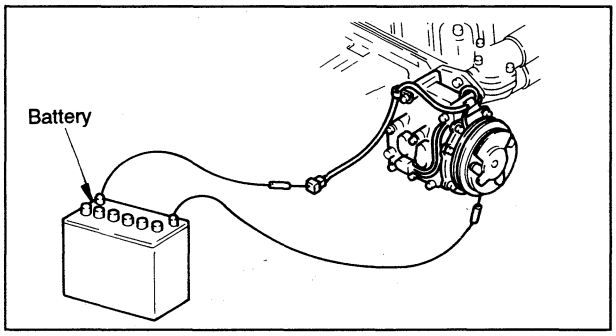

4.3.5 Refrigerant charge

(1) Set the temperature control lever at the cool position.
(2) Open doors of the room.
(3) Set the blower switch at the ON position.
(4) Adjust the engine revolution at 1500 rpm.
(5) Operate the air conditioner switch for comp. ON.
(6) Watch the sight glass of the receiver assembly at the inside of the engine room.
  (a) If judged as insufficient refrigerant charging, repair the leaks, then charge it additionally.
  (b) If judged as over charging of refrigerant, extract an excess refrigerant.
(7) Diagnosis by pressure reading
  (a) Short of refrigerant :
  Lower pressure for both L.P. and H.P. reading
  (b) Express of refrigerant :
  Higher pressure for L.P. and H.P. reading

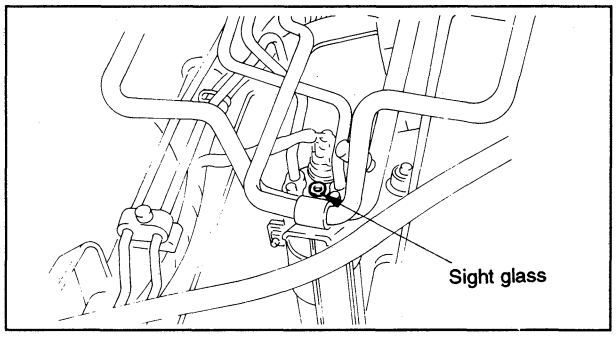

Sight glass		Remarks
Proper refrigerant level	Bubble	1. Bubble occasionally appears. 2. Bubble disappear if speed is a little increased.

Insufficient refrigerant	Bubble	Considerable bubbles appear. If the system is extremely short of refrigerant, the sight glass appear white.
Excessive refrigerant		1. No bubbles appear. 2. Slight bubbles appear if speed is decreased.

4.3.6 Receiver assembly

(1) While operating the air conditioner, touch the refrigerant piping with a hand at the inlet and outlet portions.

(a) Sensed temperature difference :

It is possible that clogging is happening at the inside, liquid receiver assembly is to be replaced with a new one.

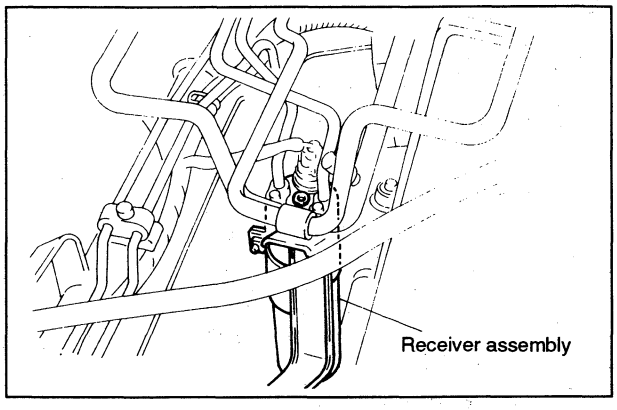

4.3.7 Belt tension

(1) Depress the V belt with a thumb at the ⬅ marked position, and adjust the stretching as below.

Stretching degree : 7 ~ 10 mm (0.28 ~ 0.40 in) (deflection)

(2) Adjustment

(a) Loosen the nut of the tension pulley.

(b) Control the belting tension by the adjusting bolt.

(c) After finishing, retighten the nut as before.

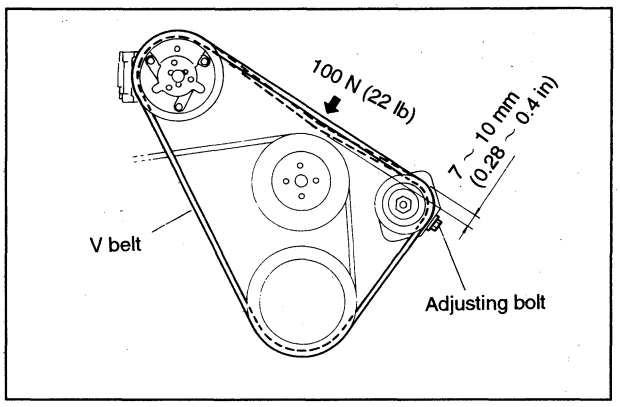

4.3.8 Expansion valve

⚠CAUTION

The test should be applied to only the case of the other components being free from troubles, and the expansion malfunctioning singly.

(1) Build up the test circuit with a gauge manifold.

(2) Soak the sensor bulb in ice water of 32 °F (0 °C), and of 50 °F (10 °C) respectively.

(3) Pressurize the H.P. side with dry nitrogen gas of 1.03MPaG (10.5 kgf/cm²G).

(4) Check the reading of the L.P. side pressure gauge for the standard range.

At 32 °F (0 °C) --- 0.127 MPaG (18.4 Lb/in²G, 1.3 kgf/cm²G)

At 50 °F (10 °C) --- 0.23 MPaG (33.4 Lb/in²G, 2.35 kgf/cm²G)

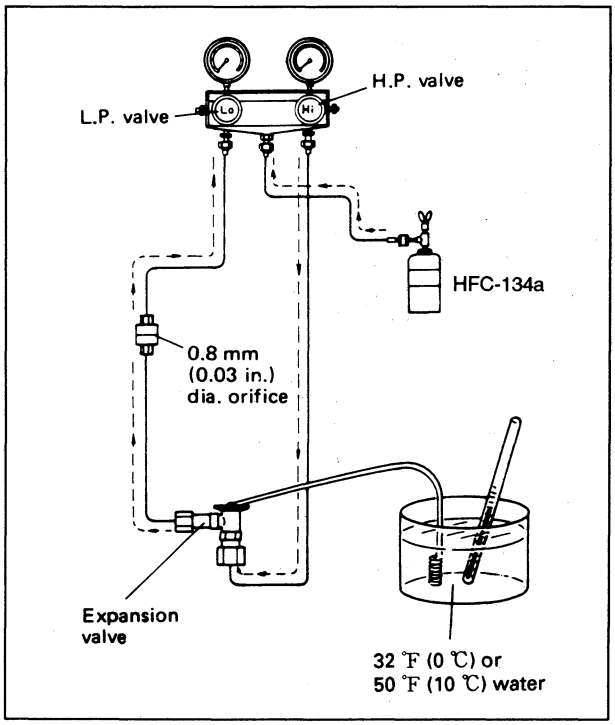

4.3.9 Pressure check

(1) Mount a low pressure gauge hose and a high pressure gauge hose on the check valve.

(2) Drive the air conditioner.

(3) Showing of higher L.P. side pressure and lower H.P. side pressure evidences ineffective compression.

Standard pressure

L.P. side pressure	About 0.26 MPaG (38.4 Lb/in²G, 2.7 kgf/cm²G)
H.P. side pressure	About 1.42 MPaG (207.6 Lb/in²G, 14.6 kgf/cm²G)

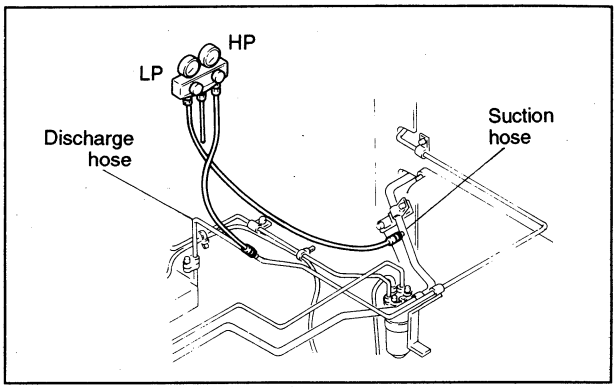

4.3.10 Air inclusion in ref.circuit

The abnormal reading of the refrigerant circuit evidences afraid air inclusion.

A little higher L.P. side pressure Noticeably higher H.P. side pressure

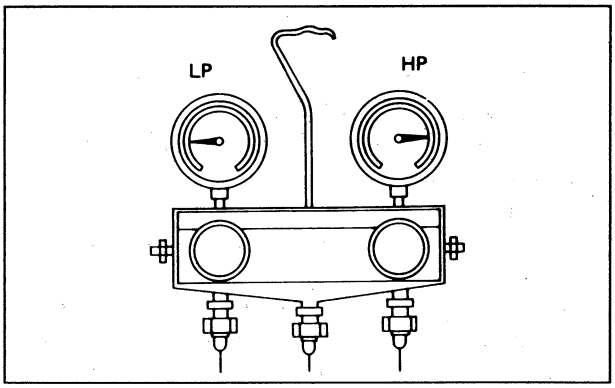

4.3.11 Moisture inclusion in ref. circuit

(1) During the operation, cooled air supply is interrupted periodically with a time interval.
This phenomenon evidences afraid water inclusion.

(2) Check the refrigerant pressure at a stop of the cooled air supply to make sure of the water inclusion.

L.P. side pressure ..... Almost vacuum
H.P. side pressure ..... Noticeably low

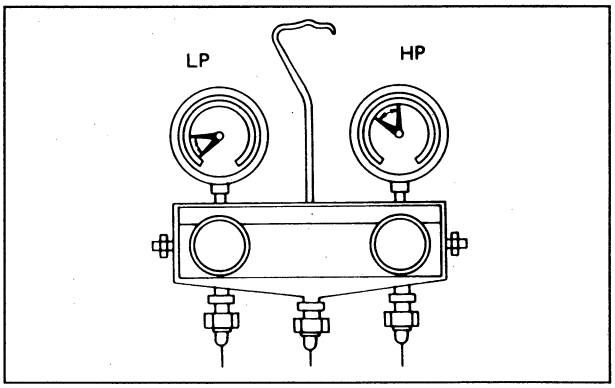

5. REMOVAL AND INSTALLATION

5.1 Precaution for removal and installation.

1. Disconnect the (-) ground cable from the battery, and place a cover on the battery.

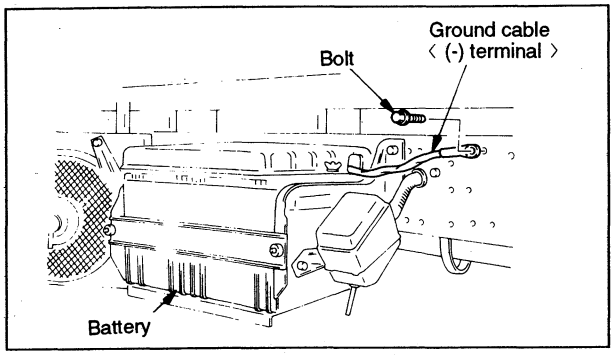

2. Make certain all the openings are covered with caps in order to prevent entry of foreign substances such as dust and dirt.
3. Never tamper with the brake and fuel systems, including the brake tubes and hoses.
4. Avoid doing the work in a dusty place or outdoors in rainy weather. If tubes or functional parts are removed, put a cap in position immediately in order to prevent entry of dust and moisture.
5. Connect the charging hose of the gauge manifold to the check valves (suction and discharge) of the suction hose and discharge hose, and recover the refrigerant by refrigerant recovery unit until its pressure is reduced to 0 kPaG (0 psiG, 0 kgf/cm^{2}G). (Make sure that there is no internal pressure in the equipment.)

   Abrupt discharging might result in the discharge of the refrigerant oil from the compressor.
6. When coupling the flared tube, coat the flared portion with the compressor oil at the inner side.
7. Make sure to use the wheel chocks.

5.2 Removal

5.2.1 Inside the engine room

(1) Compressor & clutch assembly
   (a) Withdraw the wiring of the magnetic clutch at the connector.
   (b) Remove the V belt by loosening fixature of the tension pulley.
   (c) Take of the archor bolts : M8 × 100, 3 pcs and M8 × 130, 1 pc.
   (d) Dismount the compressor.

(2) Receiver assembly
   (a) Unplug the dual pressure switch at the connector.
   (b) Separate the interconnecting refrigerant pipe of the receiver assembly.

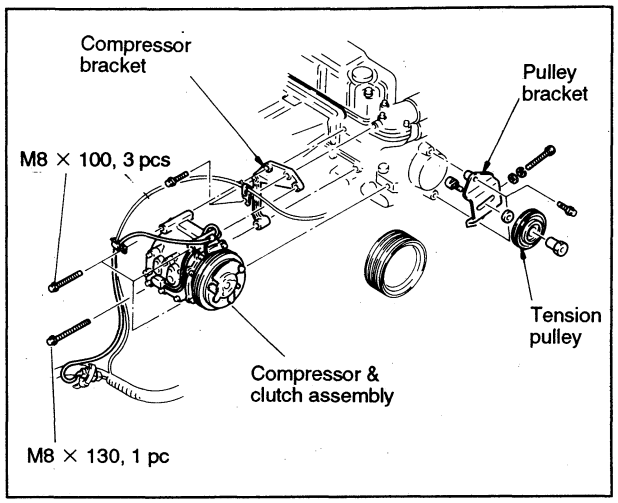

   (c) Take off the fixing bolt : M8 × 20, 2 pcs.
   (d) Dismount the receiver assembly.

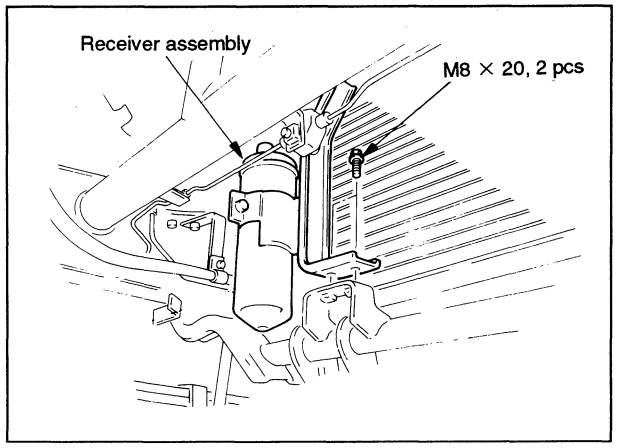

(3) Side condenser assembly
   (a) Unplug the condencer fan harness at the vehicle side harness.
   (b) Take off the fixing bolt : M8 × 20, 2 pcs and M8 × 25, 2 pcs.
   (c) Dismount the side condenser assembly (and baffle plate).

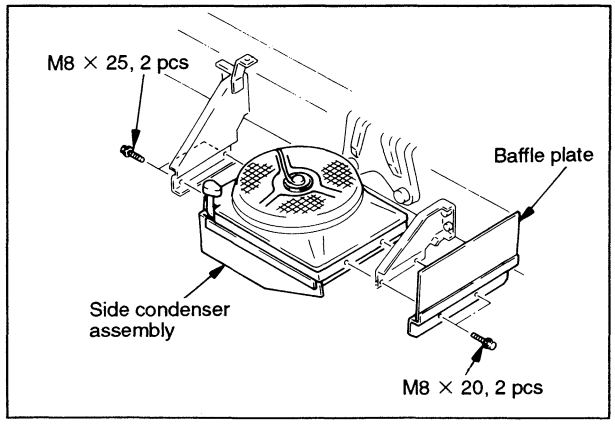

5.2.2 Cabin room

(1) Cooling unit assembly

(a) Separate the interconnecting refrigerant pipes of the cooling unit assembly.

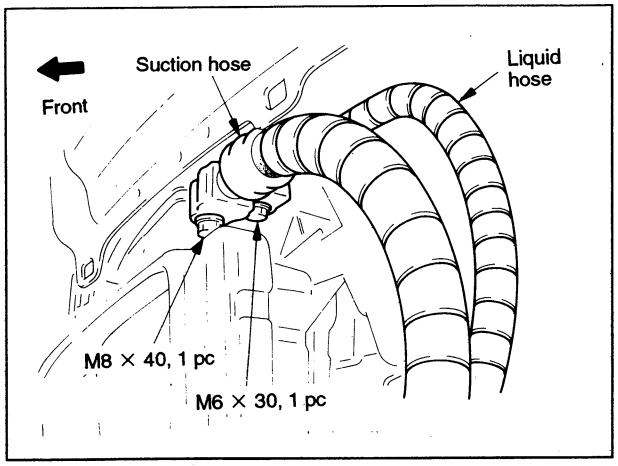

(b) Withdraw the wiring of the cooling unit assembly at the connectors.

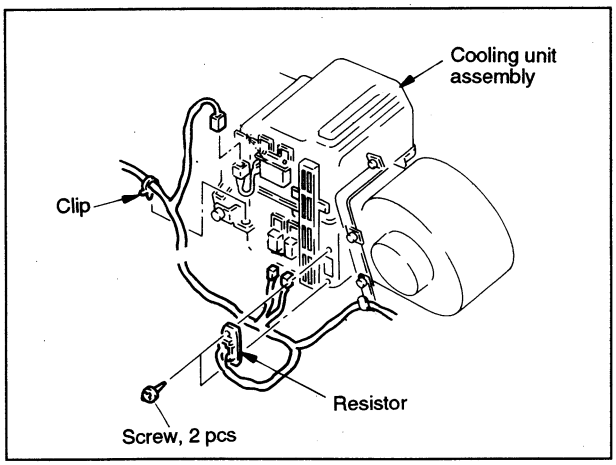

(c) Take off the fixing bolts : M8 × 20, 2 pcs.

(d) Dismount the drain hose cover.

(e) Reconnect the drain hose from the cooling unit assembly.

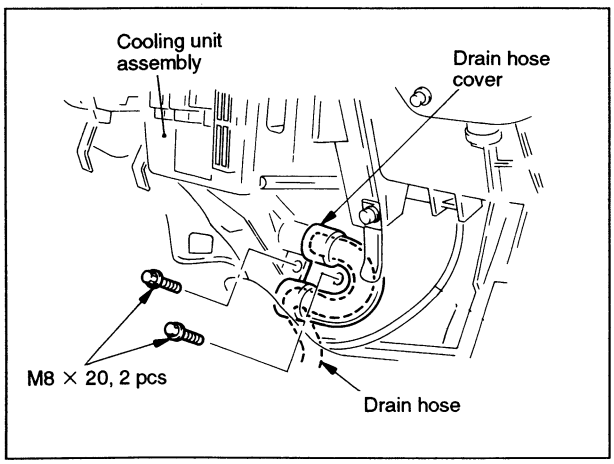

(f) Take off the fixing screws : M6 × 16, 6 pcs.

(g) Dismount the cooling unit assembly.

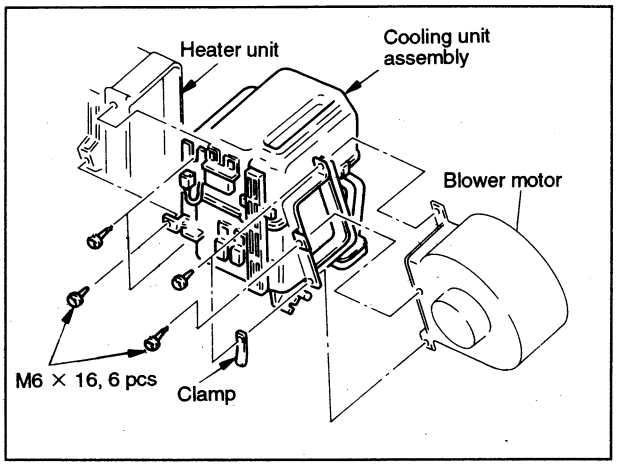

(2) Air conditioner switch

Pull out the air conditioner switch.

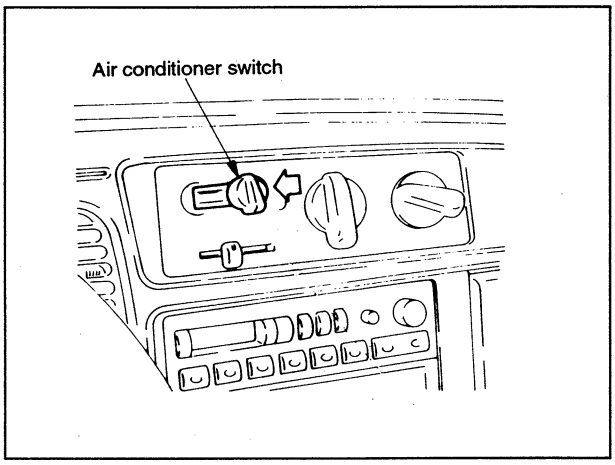

5.3 Installation

Installation is performed in the opposite sequence of removal.

○ Torques for tightening coupler of refrigerant tubing.

Nm (Lb.ft.kgm)

Compressor suction hose	29-34 (21 ~ 24, 3.0 ~ 3.5)
Compressor discharge hose	20-25 (14 ~ 18, 2.0 ~ 2.5)
Compressor inlet hose	20-25 (14 ~ 18, 2.0 ~ 2.5)
Compressor outlet hose	12-14 (8.6 ~ 10, 1.2 ~ 1.5)
Liquid receiver assembly inlet and outlet hoses	12-14 (8.6 ~ 10, 1.2 ~ 1.5)
Cooling unit inlet hose	12-14 (8.6 ~ 10, 1.2 ~ 1.5)
Cooling unit outlet hose	29-34 (21 ~ 24, 3.0 ~ 3.5)

○ Torques for tightening general bolt and nut

Nm (Lb.ft. kgm)

Nominal size	Pitch	Tightening torque		
		Head mark 4	Head mark 7	Head mark 8
M 5	0.8	3-4 (2.1 ~ 2.9, 0.3 ~ 0.4)	5-6 (3.6 ~ 4.3, 0.5 ~ 0.6)	5-7 (3.6 ~ 5, 0.5 ~ 0.7)
M 6	1.0	5-6 (3.6 ~ 4.3, 0.5 ~ 0.6)	9-11 (6.4 ~ 7.9, 0.9 ~ 1.1)	8-12 (5.7 ~ 8.6, 0.8 ~ 1.2)
M 8	1.25	12-14 (8.6 ~ 10, 1.2 ~ 1.5)	19-24 (13.6 ~ 17, 2.0 ~ 2.5)	19-29 (13.6 ~ 21, 2.0 ~ 3.0)
M10	1.25	24-29 (17 ~ 21, 2.5 ~ 3.0)	38-48 (27 ~ 34, 4.0 ~ 5.0)	43-58 (30.7 ~ 41.4, 4.5 ~ 6.0)
M10	1.5	17-26 (12 ~ 18.6, 1.8 ~ 2.7)	32-48 (23 ~ 34.3, 3.3 ~ 5.0)	41-58 (29.3 ~ 41.4, 4.3 ~ 6.0)
M12	1.25	34-43 (24.3 ~ 31, 3.5 ~ 4.5)	58-77 (41 ~ 55, 6.0 ~ 8.0)	82-106 (58.6 ~ 75.7, 8.5 ~ 11.0)
M14	1.5	72-82 (51 ~ 59, 7.5 ~ 8.5)	115-134 (82 ~ 96, 12.0 ~ 14.0)	125-173 (89.3 ~ 123.6, 13.0 ~ 18.0)

NOTE

For the cases of spring washer seated, and thread or seating surface coated with oil, the value shall be reduced down to 85 percent of the data listed.

6. TREATMENT AFTER INSTALLATION

6.1 Check and adjustment

After installation, check the following points and confirm that everything is normal, then charge the gas, and do the performance and operation tests.

(1) Check if any abnormal vehicle performance, happens or not by installing the air conditioner.

(2) Check the operation of the magnetic clutch. (with the compressor disengaged)

(3) Check if any parts left unmounted or any tool left in the vehicle.

(4) Check to ensure that the temperature control lever operates properly.

(5) Check the tension of the belt.

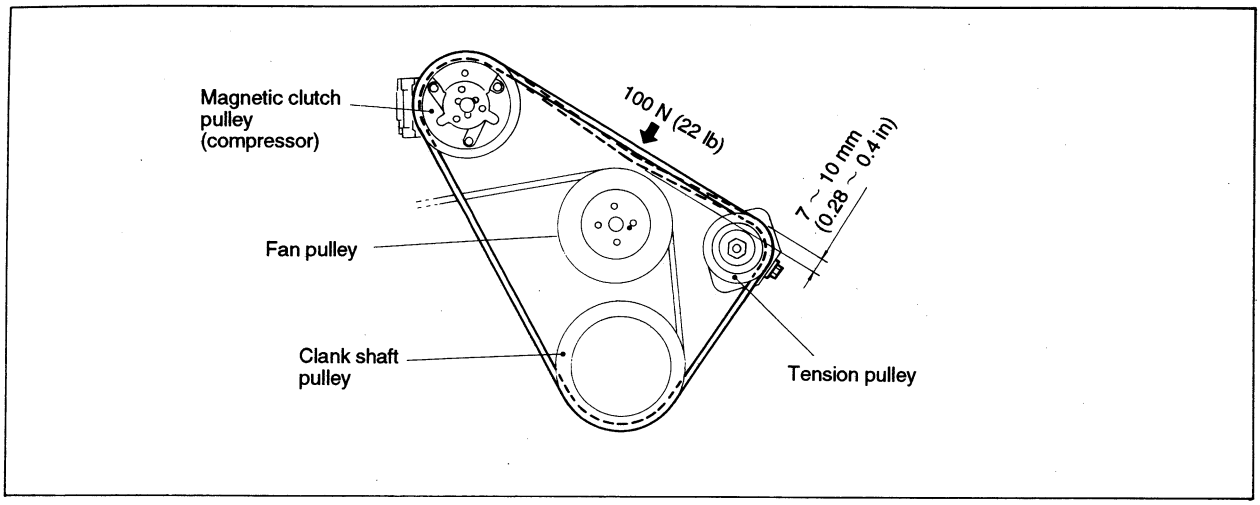

6.2 Leak test

After all the piping works are completed, conduct an leak test by the following procedure to check any leaks at the flare coupling, etc. and then evacuate the system. If this leak test is omitted and evacuation is immediately started, there is no way of detecting possible leak. If there are leaks, the specified vacuum cannot be attained. In order to save the service time be sure to conduct the leak test before evacuation.

6.2.1 Test points

(1) All pipe joint.

(2) Shaft seal and check valve on the compressor.

6.2.2. Test procedure

(1) For the gas leak test, the use of an electric gas leak detector is recommended. (HFC-134a SAE Approved)

(2) Perform the test at a place as in free from air flowing.

(3) The refrigerant is heavier than air. Leaks will concentrate at the bottom. Make certain that the testing tube is applied below the check point.

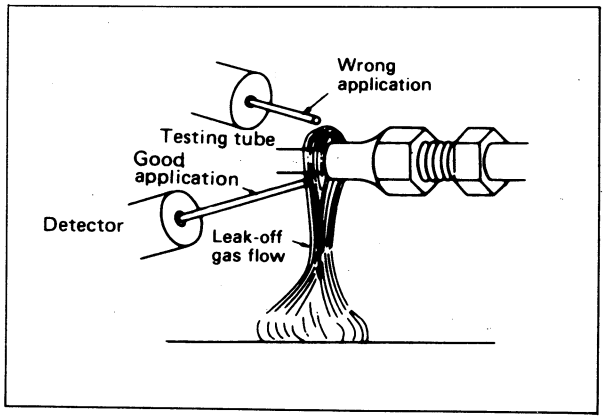

(4) The test should be performed patiently. Make certain that testing tube is moved slowly [approx. 10 mm/sec. (0.4 in./sec.)].

(5) The high pressure side refrigerant circuit should be tested for gas leaks during operation. Those areas which are dangerous or hard to test during operation (including areas around the compressor and condenser) should be tested direct after shutdown.

(6) The low pressure side refrigerant circuit should be tested during shutdown after the gas pressure has balanced.

(7) The test should be performed on the basis of the following standards:

Gas leak test standards

Test Point / Instrument	Compressor shaft seal	Other parts
Electric gas leak detector	Pointer shall not swing more than 0.1 mA at the low sensitivity.	Pointer must not swing more than 0.1 mA at the high sensitivity.
Halide torch gas leak detector	Flame colour (moss green) shall not change.	

⚠ WARNING

- **Smoking should be forbidden if a gas leak is detected.**
- **If a flame is applied to the refrigerant, toxic phosgene gas will be produced. Do not keep the detector in contact with a leaky point for a long time.**

- Leak test procedure

1. Attach refrigerant supply and gauge set as shown with all valves closed. Open refrigerant supply valve on can.
2. Loosen the center charging hose fitting at the manifold gauge end to blow any air from the hose until it hisses for a few seconds, then retighten it.
3. Open both gauge valves to partially charge the system and then close both valves.
4. The system can then be checked for leaks using an electronic leak detector.
5. If leaks are found that require the system to be opened (to repair or replace hoses, fittings, etc.), release any charge in the system.
6. After checking and repairing leaks, system must be evacuated.

6.3 System Charging

GENERAL PRECAUTIONS

⚠WARNING

When handling refrigerant (HFC-134a), the following precautions must be observed.

— Always wear eye protection and gloves while handling refrigerant.

— Be careful that liquid refrigerant does not contact the skin.

If liquid refrigerant strikes eye or skin:

- — Do not rub on skin.
- — Splash large quantities of cool water on the eye or skin.
- — Flush eyes or skin with cool water for 5 minutes.
- — Rush to a physician or hospital for immediate professional treatment.
- — Do not attempt to treat it yourself.

— Keep the refrigerant (HFC-134a) container below 104°F (40°C).

— Do not handle the refrigerant in an enclosed area having an open flame; the refrigerant may produce a poisonous gas.

— Use approved recovery equipment to recover HFC-134a refrigerant before attempting service of this or any other HFC-134a system.

— Do not attempt to leak test an HFC-134a system with high pressure air or nitrogen. Mixing HFC-134a with a concentrated quantity of air may be combustible in the presence of ignition.

6.3.1 Evacuation

INSTALLATION OF SIMPLE HFC-134a EQUIPMENT

(1) Connect the manifold gauge to the service valves.

(2) Connect the packless valve to the vacuum pump.

(3) With the charge valve handle turned back all the way, install the service can.

(4) Connect the equipment as illustrated.

⚠CAUTION

1. **Do not connect the high and low pressure sides adversely. (Connect high pressure side to the condenser and low pressure side to the cooling unit assembly)**
2. **The indications "DIS" and "SUC" on the compressor indicate high and low pressure sides respectively.**

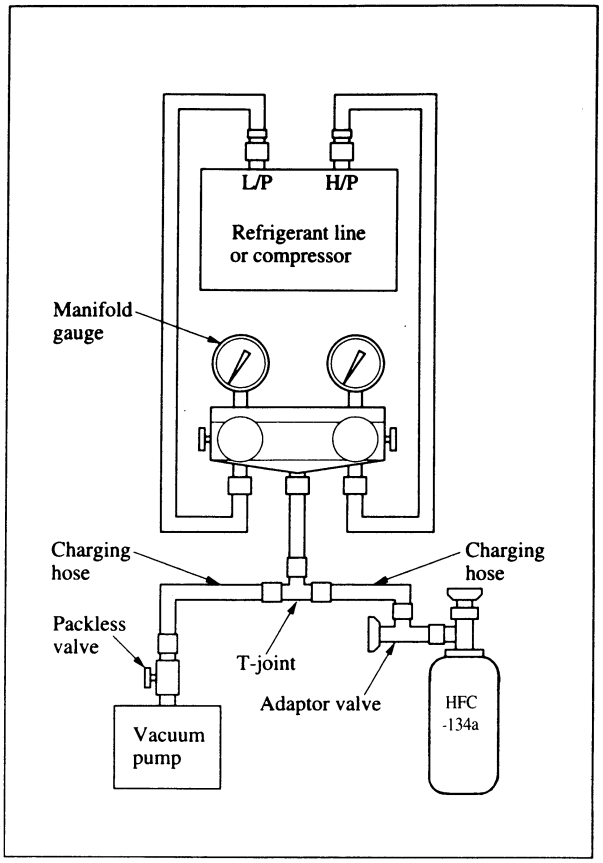

6.3.2 Evacuate the System

The refrigerant system must be evacuated before charging. Charge using HFC-134a refrigerant only. HFC-134a is available in bulk tanks. Follow the safety precautions for handling HFC-134a as listed in this section.

Follow the evacuation procedure below and at right.

This procedure assumes no HFC-134a refrigerant has been introduced into the system. If evacuating a charged system, it is necessary to recover the existing HFC-134a refrigerant before continuing with these instructions. Refer to the recovery equipment manufacturer's instructions for proper refrigerant recovery.

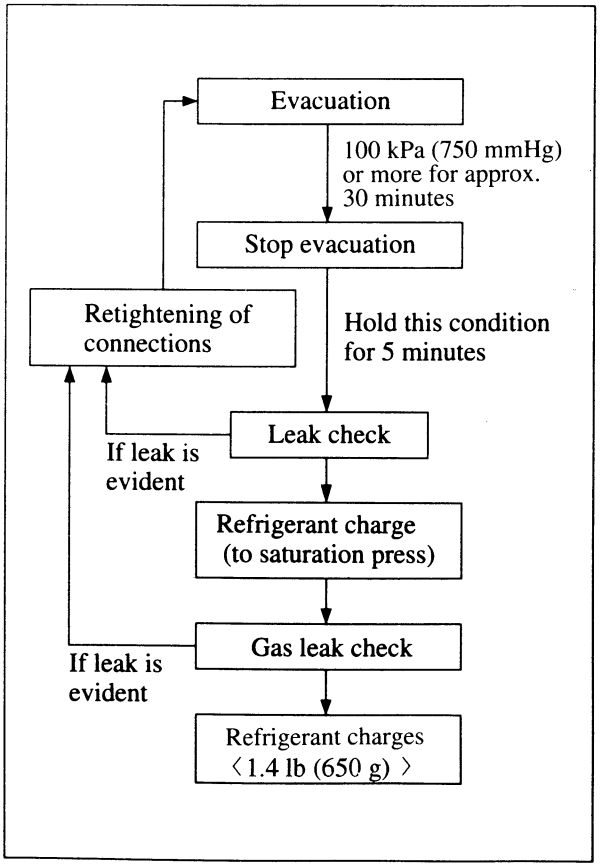

(1) Start up the vacuum pump.

⚠CAUTION

1. **Do not use the compressor for evacuation.**
2. **Do not operate the compressor in the vacuum condition; damage may occur.**

(2) Open the manifold gauge handles and the packless valve.

(3) Evacuate to a vacuum reading of 100 kPa (750 mmHg) or higher (approx. 30 minutes).

(4) Turn back the packless valve all the way and close the service valve.

(5) Stop the vacuum pump and allow to stand for 5 minutes.

(6) Check for leak. (Good if the vacuum is held.)

CHARGING WITH BULK TANK

(1) Open the charge valve to charge the system with refrigerant.

(2) When the refrigerant is no longer drawn in, turn back the high pressure side manifold gauge handle.

(3) Check for refrigerant leaks using a leak detector.

(4) Start the engine.

(5) Operate the air conditioner and set at the lowest temperature (MAX. COOL).

(6) Fix the engine speed at 1,500 rpm.

(7) Continue charging system until proper refrigerant quantity is introduced into the system.

⚠CAUTION

If the bulk tank is inverted, liquid refrigerant may be drawn into the compressor damaging it by liquid compression.

Keep the bulk tank upright to ensure that refrigerant is charged in gas state.

(8) Upon completion of charging, turn back the low pressure side manifold gauge handles.

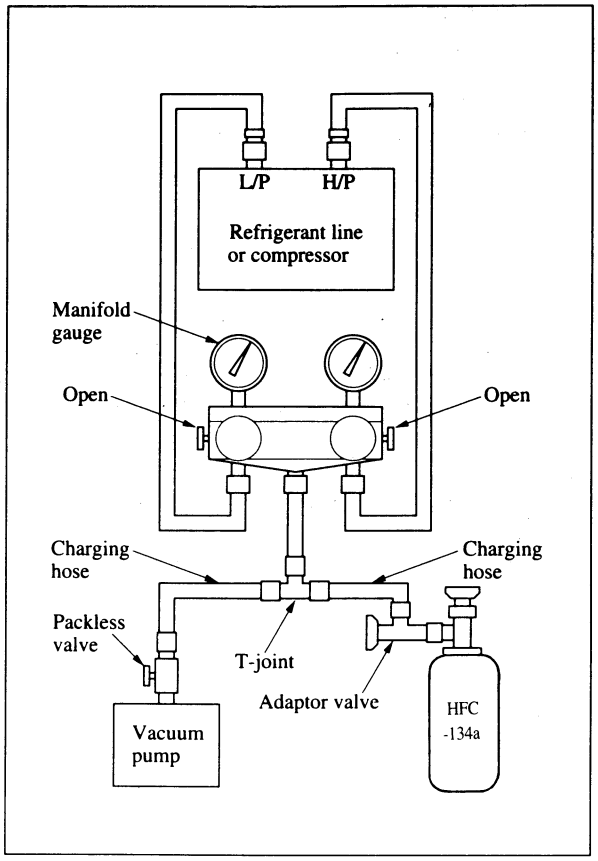

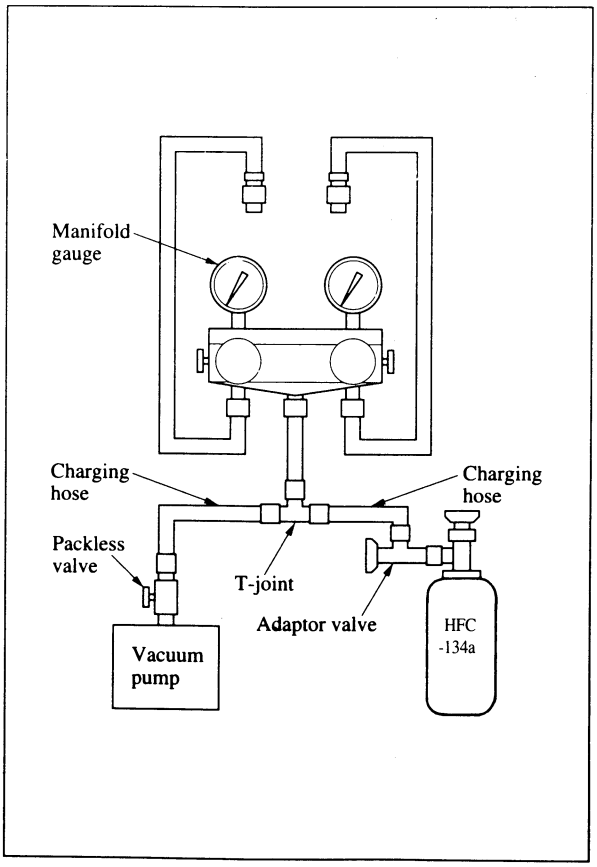

6.3.3 Removal of Charge Equipment

(1) Close the charge valve.

(2) Remove the manifold gauge from each service valve.

⚠CAUTION

Do not remove the bulk tank, T-joints and adaptor valves but keep them connected for next charge operation.

CORRECTING LOW REFRIGERANT LEVEL

Locate the source of the low refrigerant level, recover system, repair system, evacuate system, charge system, check for leaks.

⚠CAUTION

If the bulk tank is not emptied completely, keep the charge valve connected to the can for next charging.

6.3.4 Discharging System

Use the refrigerant recovery unit which can be purchased in local market to discharge refrigerant gas from the system.

⚠CAUTION

Refer to that Refrigerant Recovery Unit Instruction Manual for operation which is attached on the unit.

LIQUID CHARGE, through high side using charging station:

⚠CAUTION

Do not run engine when performing liquid charge; compressor will be damaged.

(1) After the system is evacuated, close gauge valves, connect center hose to refrigerant supply. Loosen center fitting at gauge to blow any air out of the hose and then retighten.

(2) Following charging station manufacturer's instructions charge the system until 1.4 lb (650 g) of refrigerant is pumped into the system.

(3) When system is fully charged, close high gauge valve and refrigerant supply valve, then quickly disconnect gauge hoses from service valves.

(4) After charging the system, refer to Pre-Delivery Inspection.

6.4 Performance test

6.4.1 Preparation

Reinstall all vehicle parts that were removed for installation of the air conditioner at their original positions, adjust the mounting, and test the following items.

1. Installation of grommets
   Install the specified grommets

6.4.2 Stationary performance test

1. Operating conditions
   a. Place the vehicle in the shade with doors open.
   b. Keep the return air temperature between 77 to 86°F (25 to 30°C). (Adjust by changing the opening degree of the doors).
   c. Set the fan switch to the max position.
   d. Turn the thermostat control lever to the cool position.
   e. Set the engine speeed to approx. 1,500 rpm.
   f. Set the high pressure at 1.17 to 1.37 MPa (170 to 200 Lb/in²G, 12 to 14 kgf/cm²G). (If the high side pressured does not rise up, place paper or the like in front of the condenser.)

2. Test procedure

Operate the air conditioner for more than 10 minutes under the above operating conditions in order to stabilize the high and low pressures. Then perform the test by the following procedure:

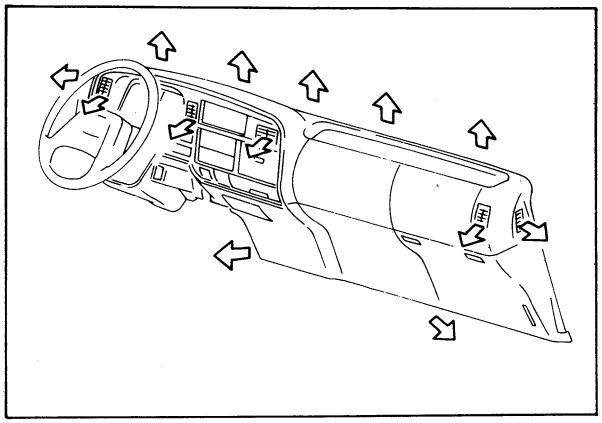

a. Measure the outlet air temperature at the inside space of the outlet grille.

b. Measure the air conditioner intake air temperature, humidity, etc., and the items shown in the Table of Measuring Items at a position free from the effects of cool outlet air.

c. The intersecting point of the plotted line perpendicular to the point which corresponds to the air conditioner intake and outlet air temperature difference and the plotted line perpendicular to the point which corresponds to the relative humidity of intake air should be between the oblique lines in bigure.

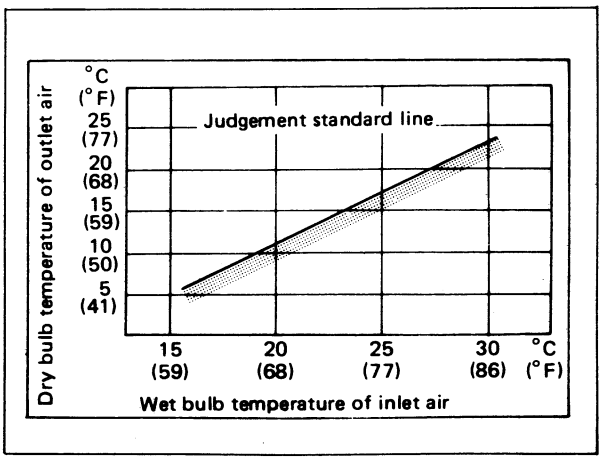

7. MAINTENANCE

No.	Check point	Service and inspection intervals				
		When used only in summer (approx. for three months)		When used in all seasons		
		At the beginning of season	At the end of season	Every 5,000 km (3,000 miles)	Every 10,000 km (6,000 miles)	Every 20,000 km (12,000 miles)
1	Check condenser and radiator fin for clogging.	○	○	○		
2	Retighten all bolts.	○			○	
3	Check for refrigerant leaks.	○			○	
4	Check refrigerant level.	○		○		
5	Check V-belt tension.	○		○		
6	Check operation of magnetic clutch.	○			○	
7	Check operation of thermostat.	○				○
8	Cooling unit assembly performance test.	○		○		
9	Compressor overhaul.		Every four years			Every 40,000 km (24,000 miles)

⚠ CAUTION

Even after the hot season is over, the air conditioner should be kept ready for operation all year round. Do not remove the V-belt or other parts.
This is because the air conditioner must be operated once a week for several minutes regardless of the season in order to prevent gas leaks caused by drying of the compressor shaft seal, and also to maintain the compressor itself in the best condition.

8. COOLING UNIT ASSEMBLY

8.1 Components

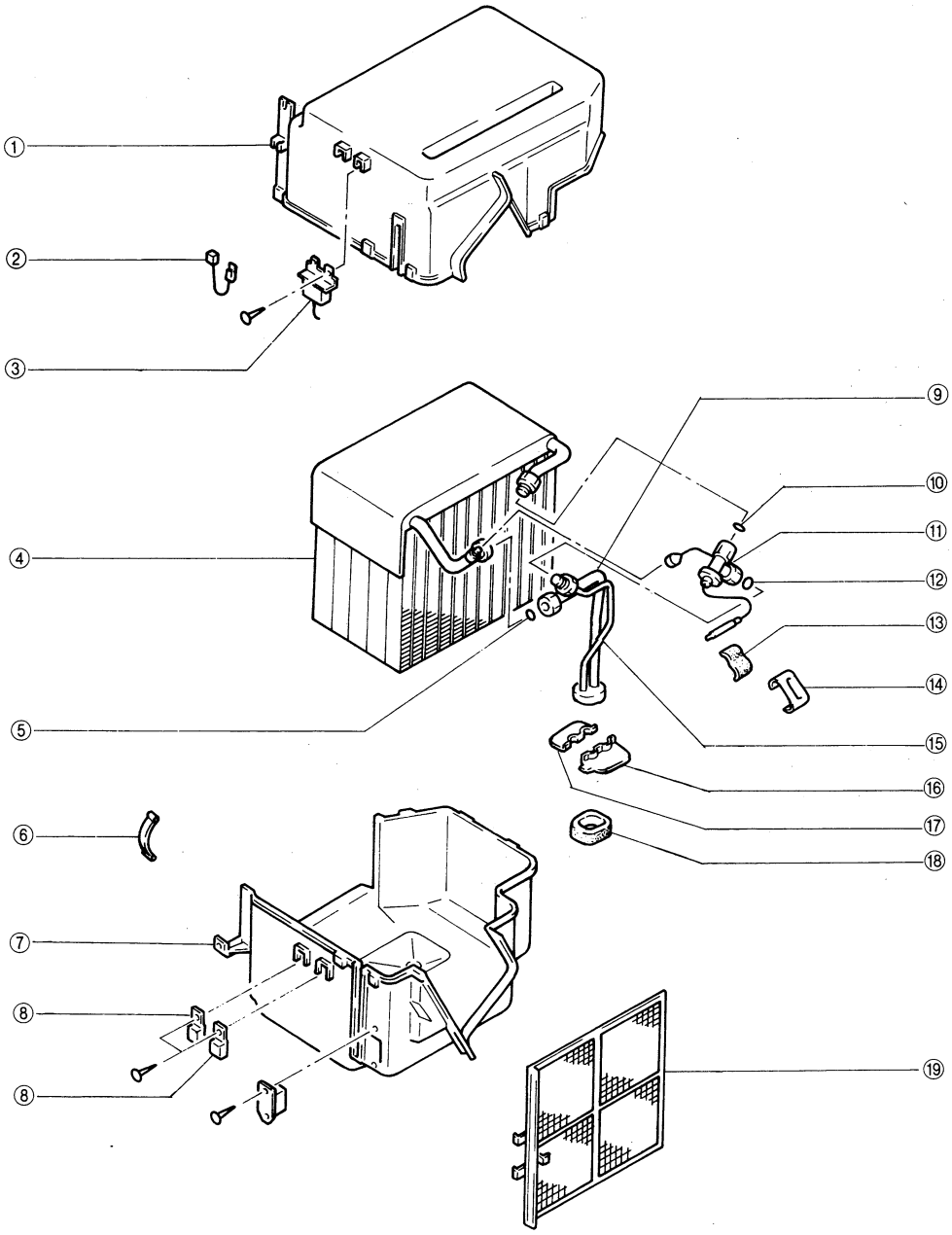

① Cooler case (upper)
② Joint harness
③ Thermostat
④ Evaporator
⑤ O-ring
⑥ Clip
⑦ Cooler case (lower)
⑧ Power relay
⑨ Pipe
⑩ O-ring
⑪ Expansion valve
⑫ O-ring
⑬ Insulation rubber
⑭ Clip
⑮ Baffle plate
⑯ Battle plate
⑰ Insulation rubber
⑱ Air filter

8.2 Cautions in disassembling

(1) Direct after disconnecting the refrigerant piping blind the opening to prevent dust and moisture etc. from entering in it.

(2) When disconnecting the expansion valve, surely apply two spanners to prevent unstable twisting from applying with the one for supporting and the other for torquing at the connection.

(3) Pipings in the cooling unit assembly should be handled gently. Particularly, the ingress and egress portions should be from any bending trouble in carrying it.

(4) If the cooling unit assembly is stored, or transported on disassembled condition, be careful not to deform the fins.

(5) When disconnecting the wirring, avoid pulling it with the insulation cover catched, but apply force by pinching the terminals or by catching the connectors.

8.3 Disassembling

(1) Remove the clips for jointings the upper & lower side cooler case with a flat type screwdriver.

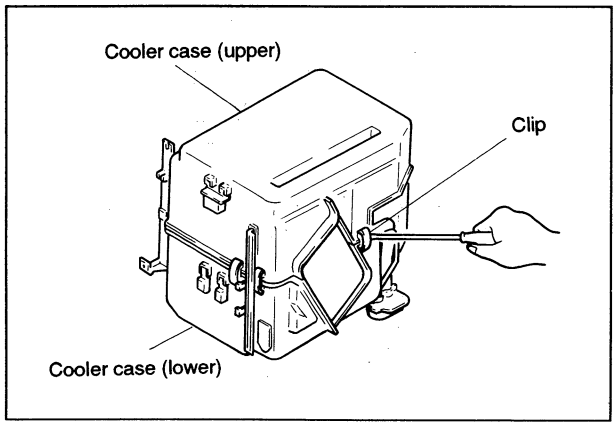

(2) Dismount the cooler case (upper).

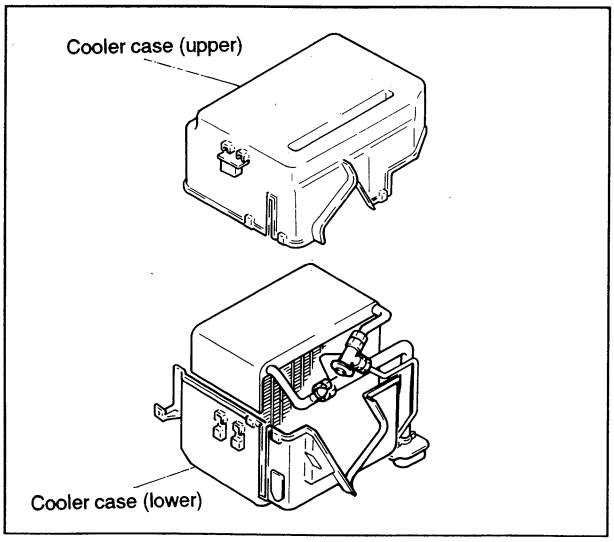

(3) Dismount the evaporator.

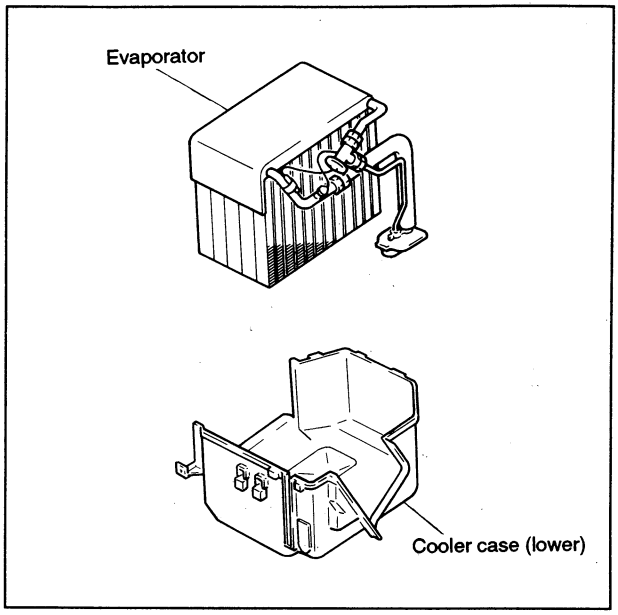

(4) Separate the expantion valve.
Dismount the feeler bulb at the suction side.

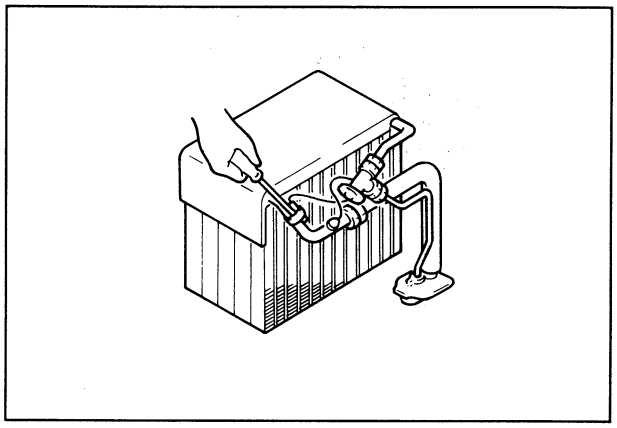

(5) Disconnect the expansion valve from the circuit.

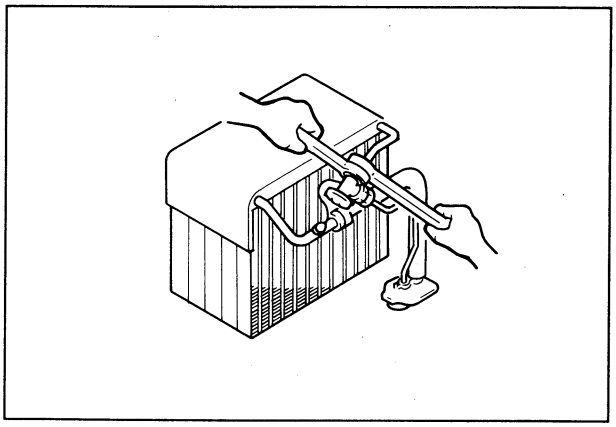

9. COMPRESSOR & CLUTCH ASSEMBLY

9.1 Disassembling the clutch.

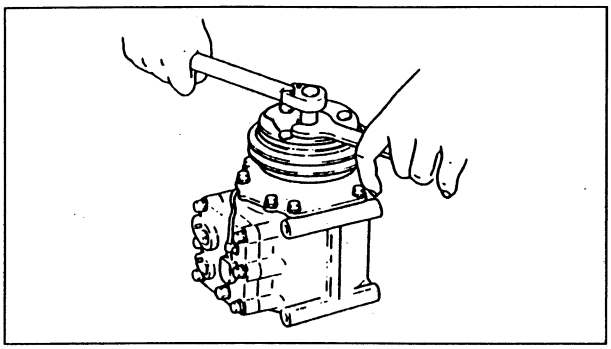

(1) Removal of armature plate.
   (a) Lock up the armature plate with a armature plate fixture and remove the lock nut.
   (b) Remove the armature plate.

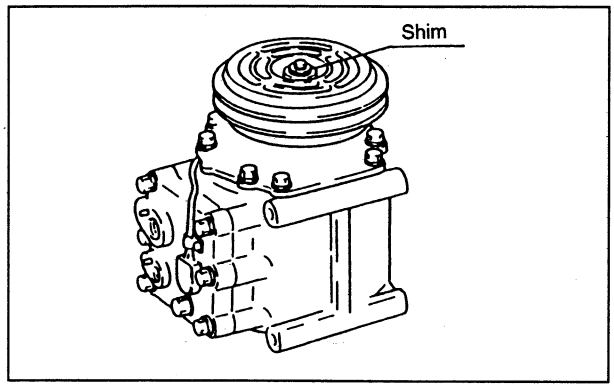

(2) Remove the shim.

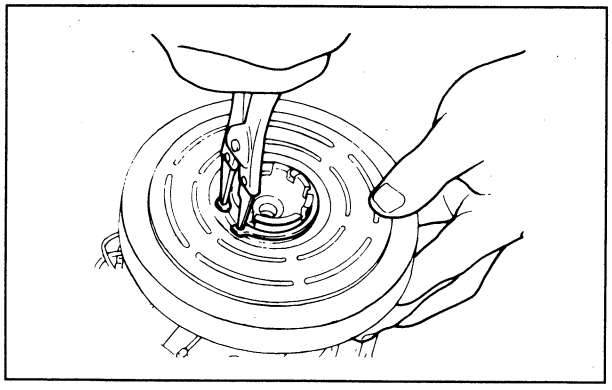

(3) Withdrawing rotor.
   (a) Remove the snap ring at the front case side with snap ring pliers.
   (b) Withdraw the rotor toward you and remove it from the front case.

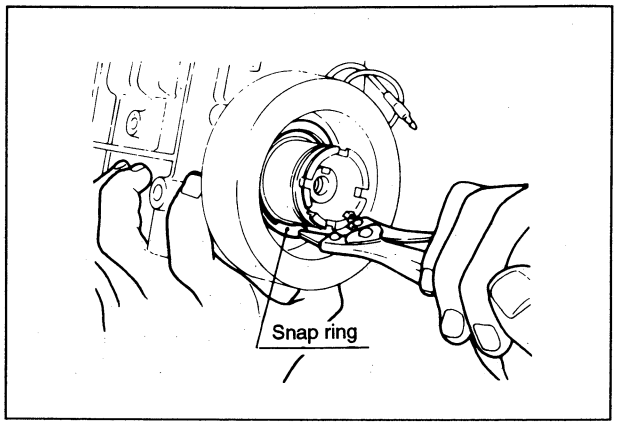

(4) Removal of field core.
   (a) Remove the snap ring for fixing the field core with snap ring pliers.

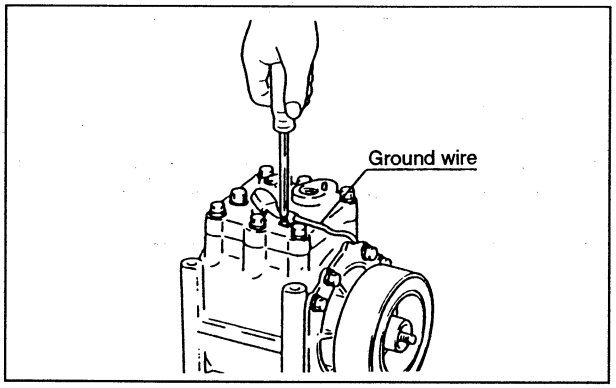

   (b) Remove the ground wire with a cross point screwdriver and withdraw the field core toward you to remove it from the crankcase.

(5) Removal of key.
   Remove the key from the shaft using the top of a flat type screwdriver.

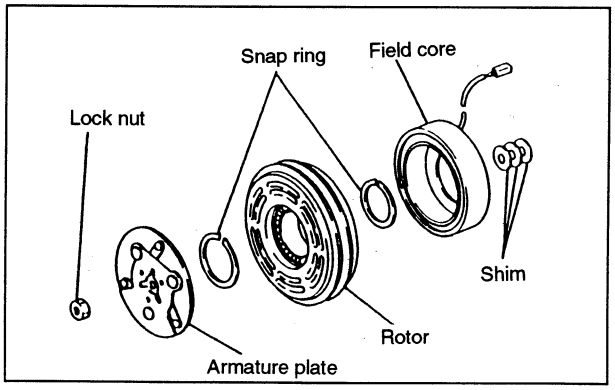

(6) Components of magnetic clutch.

9.2 Reassembly the clutch.

(1) Insert the key into the crankshaft.

(2) Insert the field core.

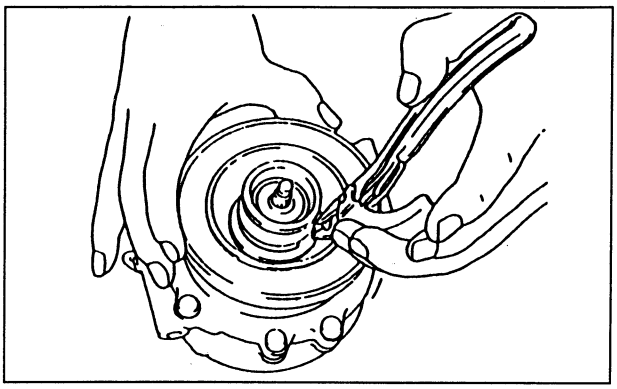

(a) Insert the field core into the front case and position it with a knock pin.

(b) Insert the snap ring for fixing field core into the groove and fix it with snap ring pliers as shown the below.

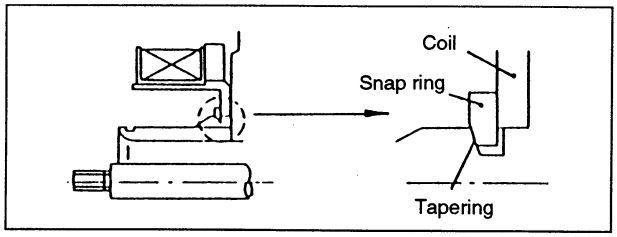

(c) Connect the ground wire.

(3) Insert the rotor into the front case.

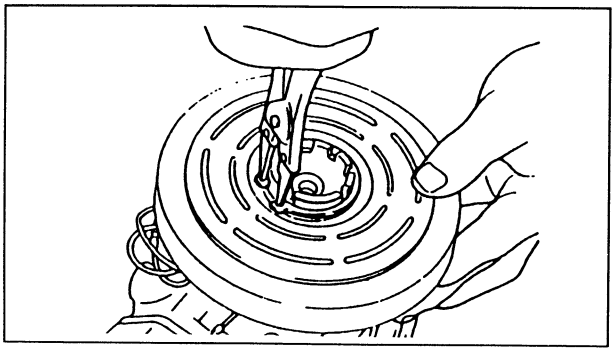

(4) Insert the snap ring for the front case side into the groove with snap ring pliers.

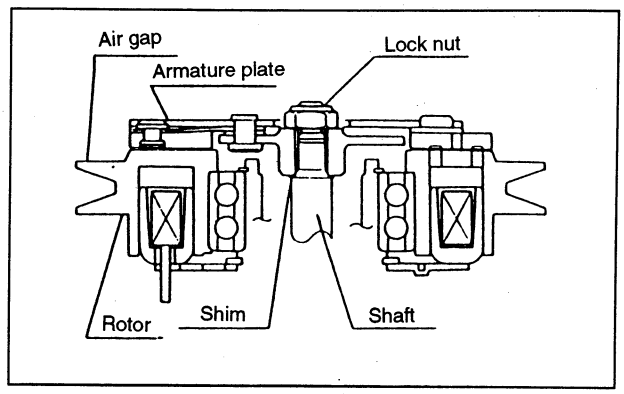

(5) Install the armature plate.

(a) Place a shim on the end of the shaft and insert the armature plate, adjusting to the key.

(b) Tighten the center bolt to the specified torque, 15.7 N.m (160 kgf.cm), with in-between plain washer.

(c) Measure the air gap.
The air gap shoud be within 0.4 to 0.65 mm (0.016 ~ 0.026 in).
Adjust it by shim if it is not within the specifications. Adjusting shim : 0.1, 0.3, 0.5, or 0.8 mm (0.004, 0.012, 0.02, or 0.03 in).

9.3 Special tool figure

The dimensions are in millimeter

(1) Armature plate fixture

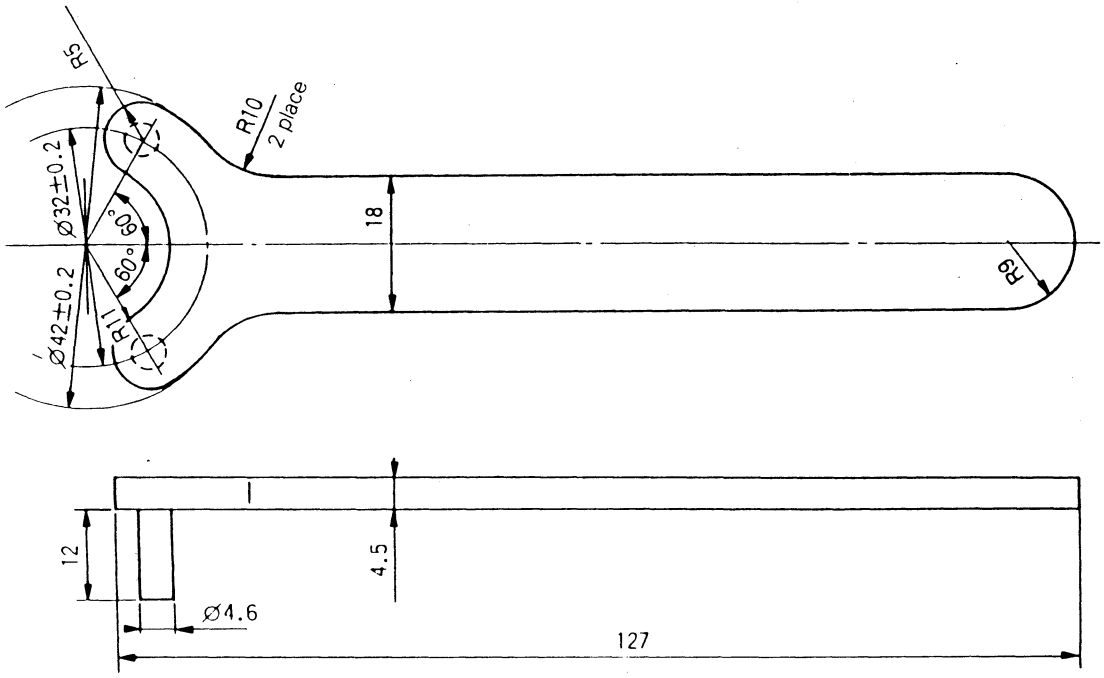

MITSUBISHI
FUSO

FK.FM
Service Manual

Group 55B
Heater

Table of Contents

BACK

HOME

MITSUBISHI FUSO TRUCK OF AMERICA, Inc.

Pub No. TWME9503-55B

GROUP 55B HEATER

SPECIFICATIONS 2
STRUCTURE AND OPERATION 2
TROUBLESHOOTING 8
HEATER HOSE 10
HEATER CONTROL 12
AIR DUCT 15
HEATER UNIT AND BLOWER 16
AIR OUTLET VENTILATION 17

SPECIFICATIONS/STRUCTURE AND OPERATION

SPECIFICATIONS

Items			Specifications
System	Type		Inside/outside air combining, hot-water type heating system
	Standard voltage	V	12
	Damper changeover system		Manual cable type
Blower assembly	Manufacturer		NIPPONDENSO
	Power consumption	W	170
	Maximum rotation	rpm	3550
Heater unit assembly	Manufacturer		NIPPONDENSO
	Temperature control system		Air mixing type
	*Heating performance kW {BTU/h, kcal/h}		*4.31{14720, 3710}

* : Heating performance is shown under the following conditions.
Temperature difference : 65°C {119°F}
Water flow : 6 L/min {0.0035 ft^3/s}
Voltage : 12 V DC

STRUCTURE AND OPERATION

Heater

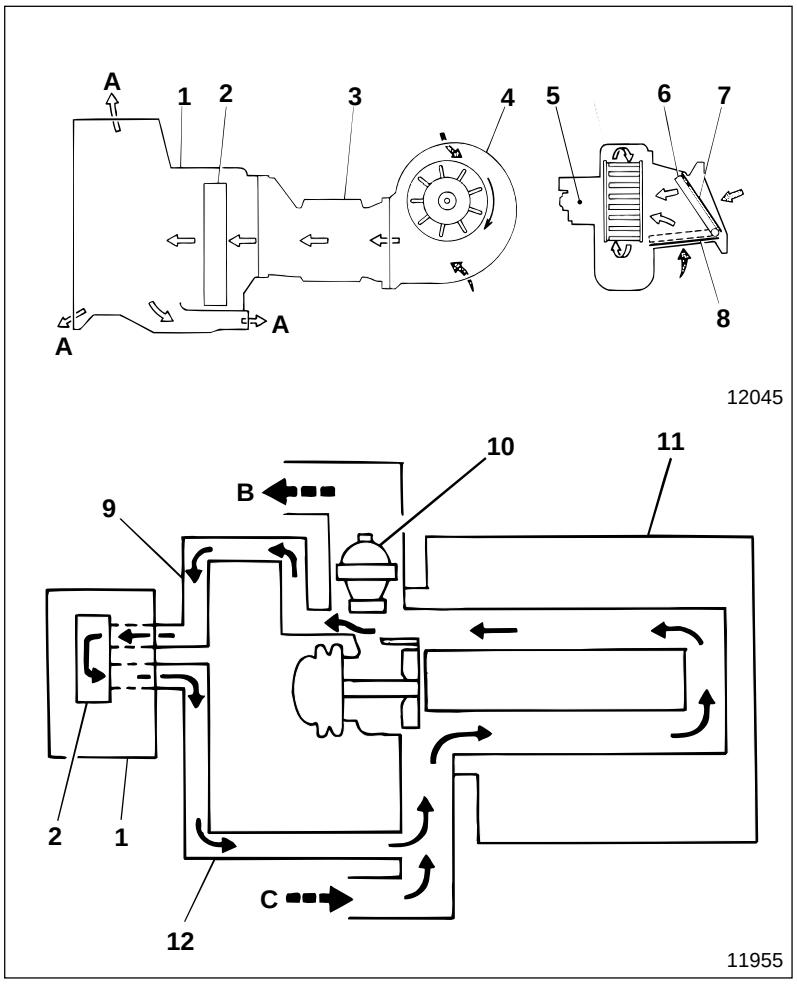

1 Heater unit
2 Heater core
3 Joint duct
4 Blower assembly
5 Blower motor
6 Damper
7 Air filter (Outside air)
8 Air filter (Inside air)
9 Heater hose (Heater in)
10 Thermostat
11 Engine
12 Heater hose (Heater out)

A : To duct
B : To radiator
C : From radiator

Outside air (Intake)

Inside air (Circulation)

Filtered air

- Warm engine coolant that has absorbed heat from engine **11** does not flow through thermostat **10** but circulates as follows:
  9→2→12→11
  ↑_____↓
- Air sent to heater unit **1** from blower assembly **4** is warmed by heater core **2** (heat exchanger). Then the ducts deliver the warmed air to the cab.

Heater Electric Circuit

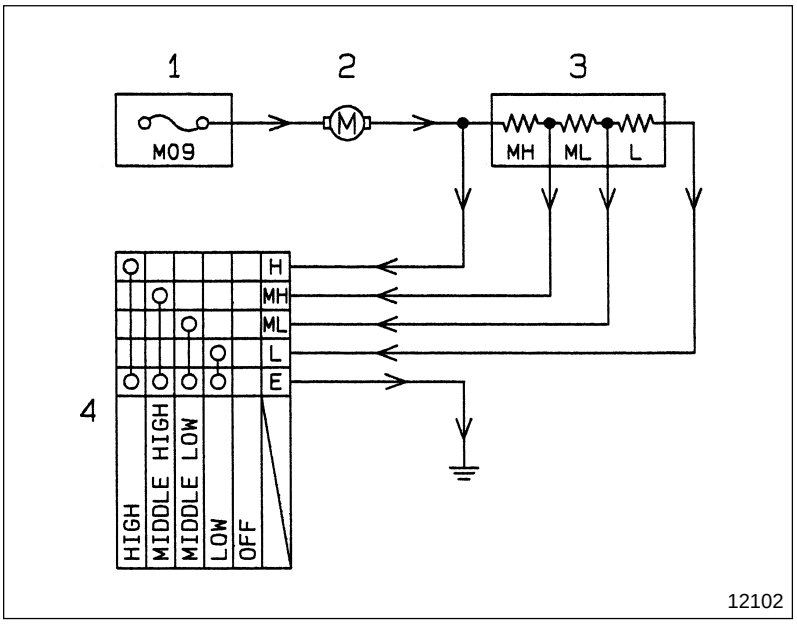

1 Relay and fuse box
2 Blower motor
3 Blower resistor
4 Fan switch (Heater switch)

- The resistance of blower resistor **3** controls blower motor **2**, which in turn controls the air flow, except when the air flow is set to H (high speed). When the air flow is set to H, the current does not flow through the blower resistor.

Fan switch 4 set to L position

- 1→2→3 (L)→4 (L)→Ground

Fan switch 4 set to H position

- 1→2→4 (H)→Ground

Fan switch 4 set to either ML or MH position

The current flows through blower resistor **3** in the same way as when set to L position, routing ML or MH respectively instead of L.

Air Duct

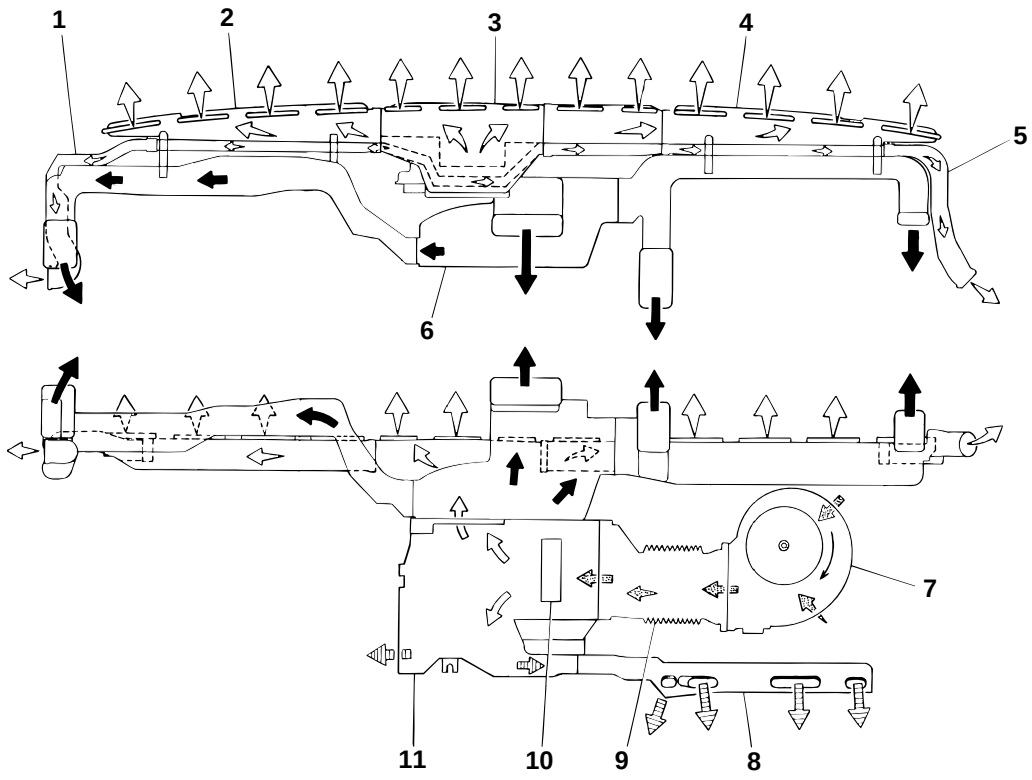

1 Defroster side duct, LH
2 Front duct, LH
3 Center duct
4 Front duct, RH
5 Defroster side duct, RH
6 Face center duct
7 Blower assembly
8 Foot duct
9 Joint duct
10 Heater core
11 Heater unit

Outside air (Intake) Inside air (Circulation) Filtered air (in heater and cooling unit)

Air (FACE) ( )Air (DEF) Air (FOOT)

Since the opening and closing of the dampers of heater unit **11** is controlled by the switching operation of the heater unit assembly, the outside air and the inside air from blower assembly **7** flow as illustrated.

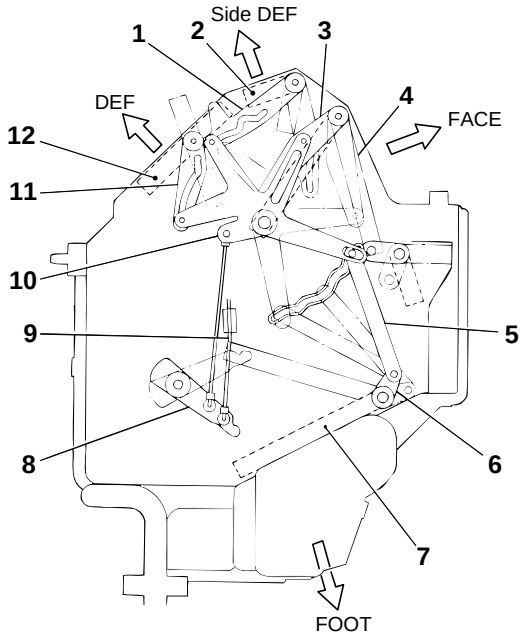

12203

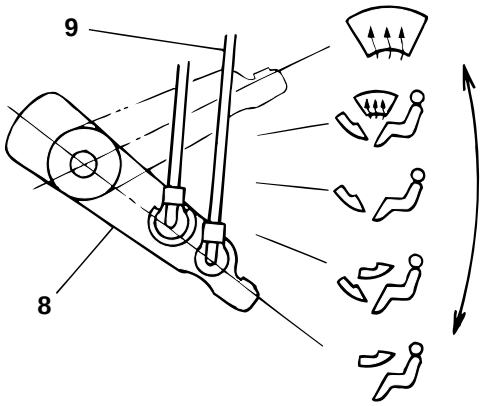

12204

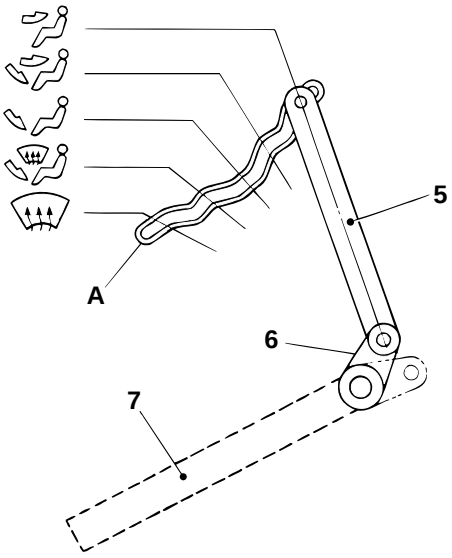

12205

● **Mode changeover system**

1 Plate
2 Damper (Side DEF)
3 Plate
4 Damper (FACE)
5 Plate
6 Plate
7 Damper (FOOT)
8 Lever (MODE-SUB)
9 Mode changeover control cable
10 Lever (MODE-MAIN)
11 Plate
12 Damper (DEF)

A : Rail

- The opening and closing of dampers **2**, **4**, **7, 12** is mechanically controlled by the movement of mode changeover control cable **9**, transmitted as follows:
  9→8→10→11→12 (DEF)
  →1→2 (Side DEF)
  →3→4 (FACE)
  →5→6→7 (FOOT)

  Plates **1, 3, 5, 6, 11** move together with lever **10**. Dampers **2, 4 , 7, 12** move together with plates 1, **3, 5, 6, 11,** but the degree of opening of the dampers is determined by the shape of the plate grooves.

- Plate **5** is connected to rail **A**. Since the plate moves along the groove of the rail, damper **7** (FOOT) can be opened and closed in combination with other modes to activate bi-level mode.

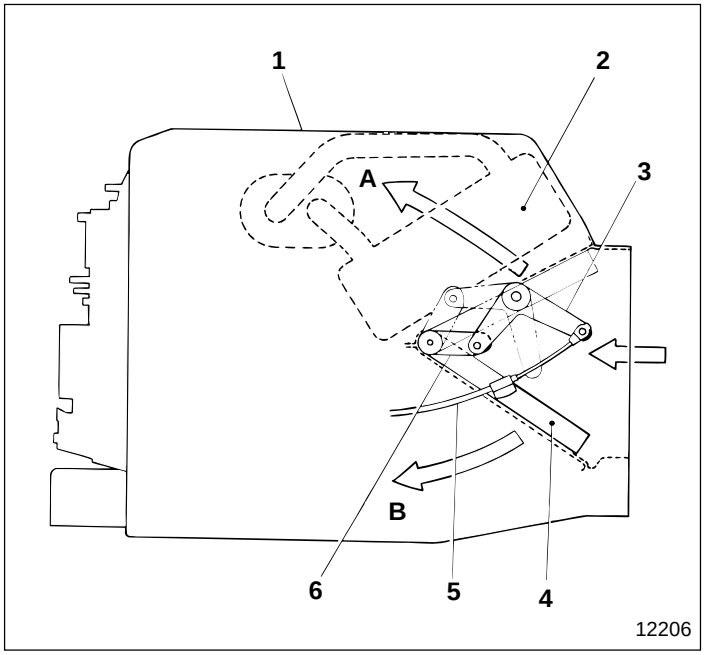

● **Air mixing control**

1 Heater unit
2 Heater core
3 Lever
4 Damper
5 Air mixing control cable
6 Plate

A : Warm air
B : Unwarmed air

- The degree of opening of damper **4** controls the flow of both air **A** that has passed through and been warmed by heater core **2**, and air **B** that has not been warmed.
- Damper **4** is mechanically operated by the movement of air mixing control cable **5**, transmitted as follows:
  5→3→6→4
  Plate **6** moves together with damper **4**.

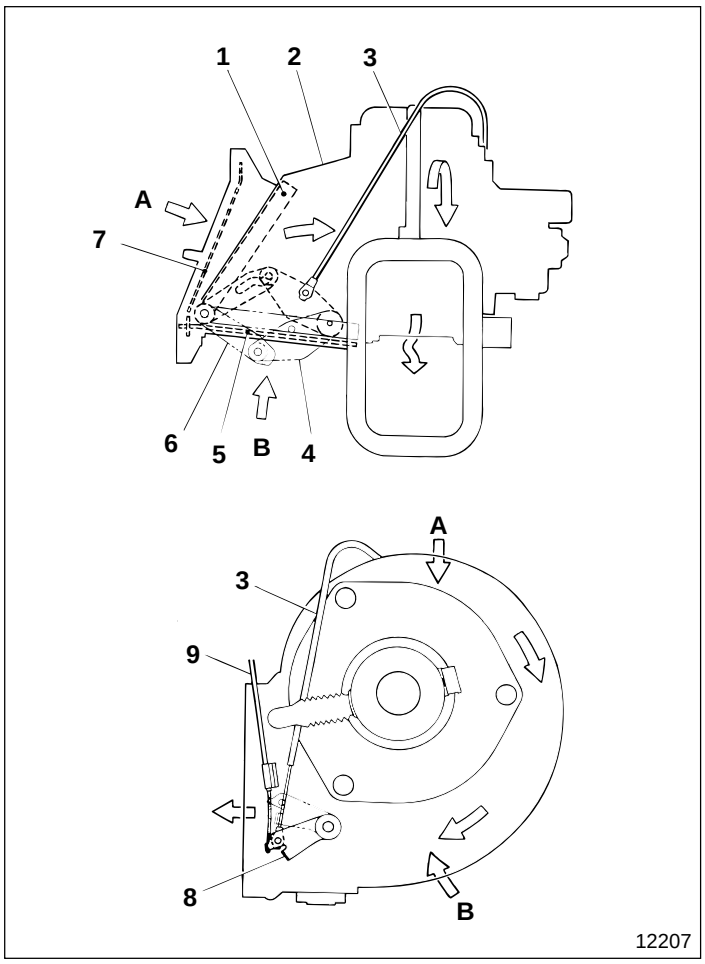

● **Air intake control**

1 Damper
2 Blower assembly
3 Control cable
4 Lever
5 Air filter (Inside air)
6 Shaft
7 Air filter (Outside air)
8 Lever
9 Air intake control cable

A : Outside air
B : Inside air

- Changeover of air intake from inside to outside is controlled by the opening and closing of damper **1**.
- Damper **1** is mechanically operated by the movement of air intake control cable **9**.
  9→8→3→4→6→1
  Shaft **6** moves together with damper **1**.

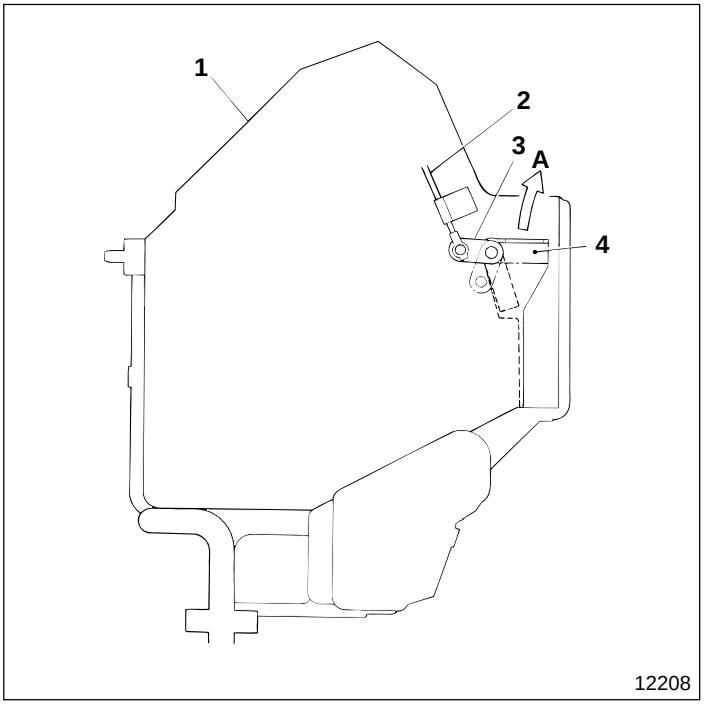

● **Air flow bypass changeover**

1 Heater unit
2 Air bypass changeover control cable
3 Plate
4 Damper

A : Air not warmed by heater unit

- Damper **4** is opened and closed to change the air flow from warm air to air that has not passed through and been warmed by the heater core.
- Damper **4** is mechanically operated by the movement of air flow bypass changeover control cable **2**, transmitted as follows:
  2→3→4
  Plate 3 moves together with damper **4**.

Ventilation System

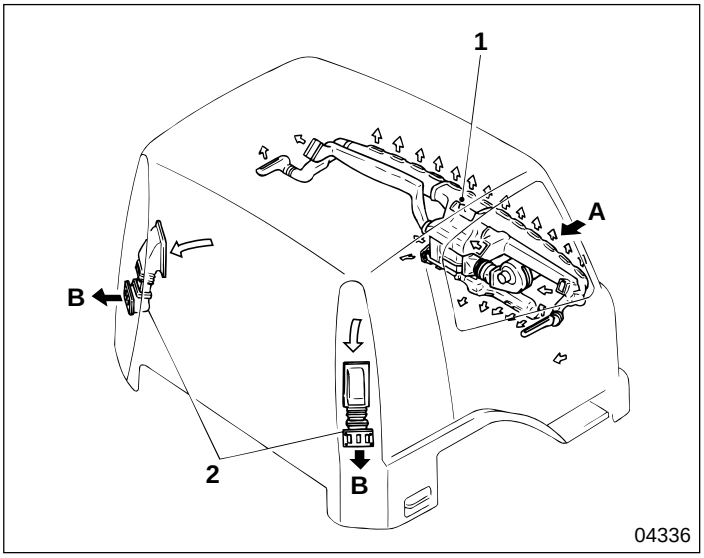

1 Heater and duct assembly
2 Air outlet ventilation

A : Incoming outside air
B : Outgoing inside air

The ventilation system replaces the air in the cabin using frontal air pressure, generated when the vehicle is in motion.

TROUBLESHOOTING

Symptoms / Possible causes	Air does not flow from vents	Heater does not work well	Airflow control setting cannot be changed	Drafts from vents	Temperature control setting cannot be adjusted	Outside/inside air control cannot be changed	Air volume from vents unstable	Control switches operation heavy	Air flow bypass cannot be changed	Remarks
Blower motor coil broken or short-circuited	○									
Blower resistor operation malfunctioning							○			
Mode damper opening and closing faulty			○	○				○		
Air mixing damper opening and closing faulty				○	○			○		
Inside/outside air changeover damper opening and closing faulty				○		○		○		
Heater control assembly faulty	○	○	○	○	○	○			○	
Thermostat does not close		○								Gr 14
Engine coolant insufficient		○								Gr 14
Connector connection faulty, harness broken or grounding faulty	○		○	○	○	○				
Fuse blown	○									
Heater pipes clogged, loose or connection faulty		○								
Duct connection faulty				○						
Heater unit clogged		○								
Control cable sliding movement faulty, installation faulty			○	○		○		○	○	
Control cable connecting lever of units bent			○	○		○		○		
Control cable connecting lever sliding parts of units worn or lubricated insufficiently			○	○		○		○		
Air flow bypass changeover damper opening and closing faulty									○	

M E M O

HEATER HOSE

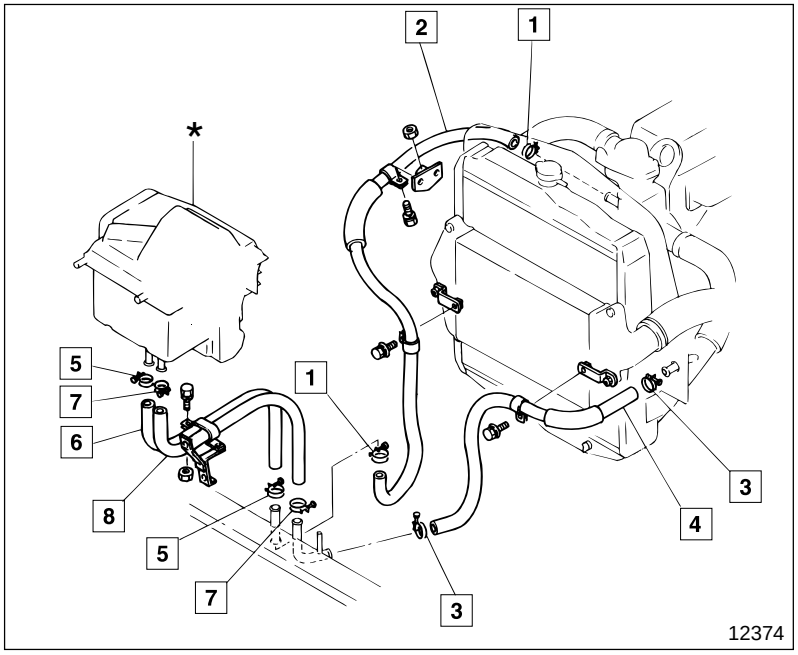

● **Disassembly sequence**

1 Hose clamp
2 Heater hose (Engine out)
3 Hose clamp
4 Heater hose (Engine in)
5 Hose clamp
6 Heater hose (Heater in)
7 Hose clamp
8 Heater hose (Heater out)

***** : Heater unit

NOTE

Drain engine coolant from radiator before removing the hoses. **Gr 14**

● **Assembly sequence**

Follow the disassembly sequence in reverse.

CAUTION ⚠

- **Be sure that hoses are inserted securely to prevent coolant leaking.**
- **Make sure not to mix up heater hoses 2, 4, 6, 8 when connecting them because mistaken connection would damage the heater unit.**

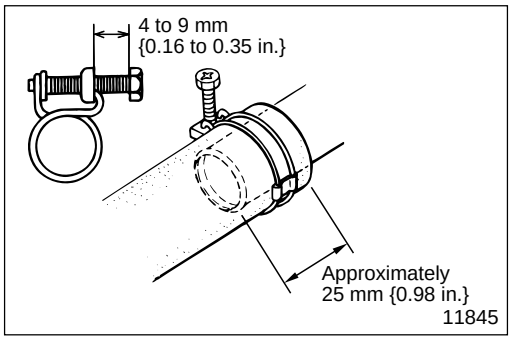

◆ Service procedure

1 **to** **8** **Installation of heater hose and hose clamp**

- Install heater hoses **2, 4, 6, 8** to conform to the dimension as illustrated.
- Tighten hose clamps **1, 3, 5, 7** to conform to the dimension as illustrated.

M E M O

HEATER CONTROL

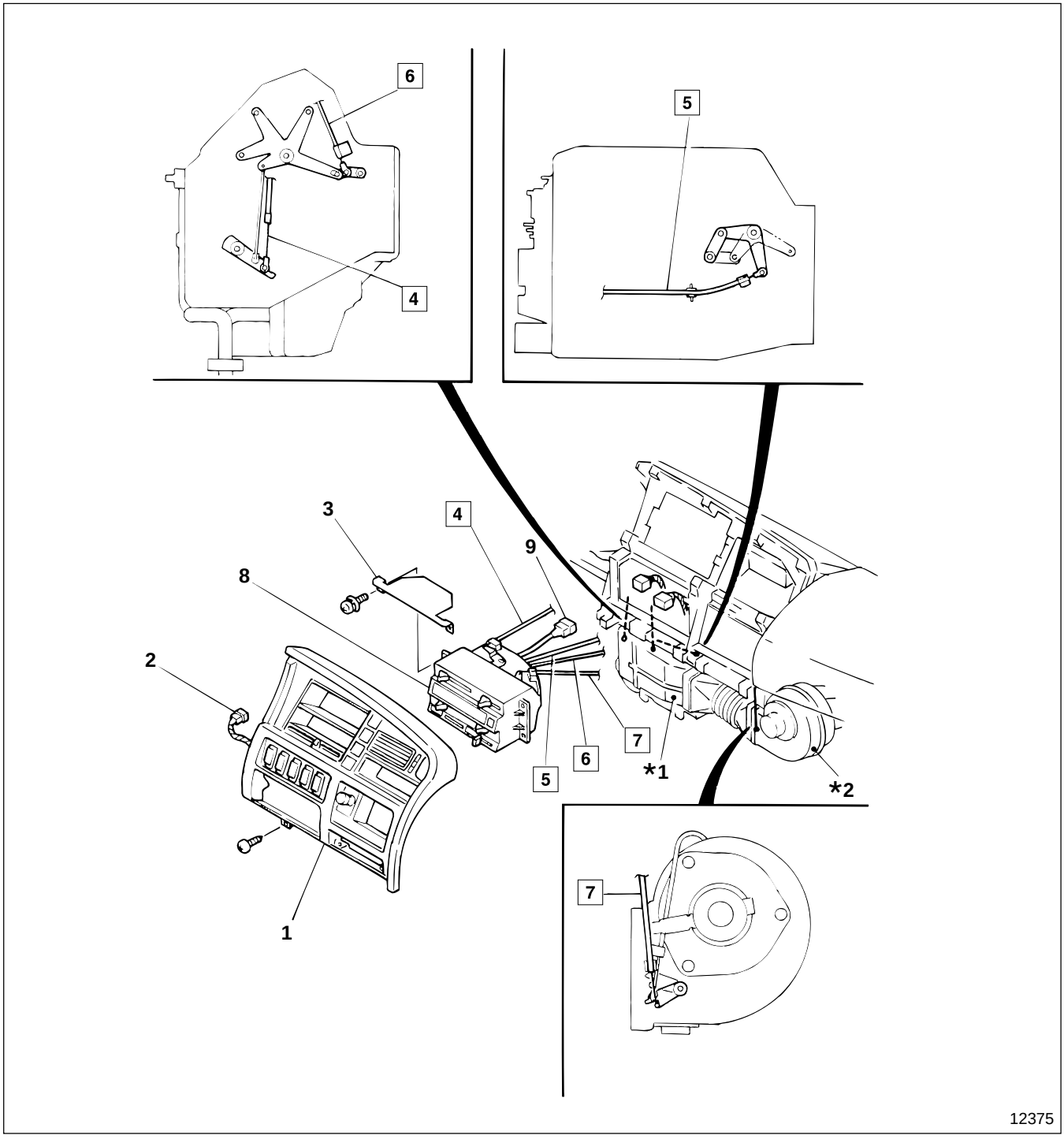

● **Disassembly sequence**

1 Center panel
2 Harness
3 Harness protector
4 Mode changeover control cable
5 Air mixing control cable
6 Air bypass changeover control cable
7 Inside/outside air changeover control cable
8 Heater control assembly 🕮 Gr 54
9 Harness

***1** : Heater unit 🕮 P55B-16
***2** : Blower assembly 🕮 P55B-16

● **Assembly sequence**

Follow the disassembly sequence in reverse.

◆ Service procedure

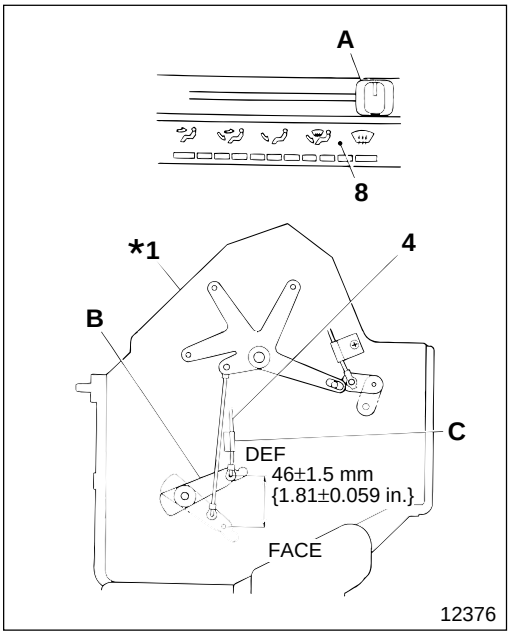

4 Installation of mode changeover control cable

- Set mode changeover lever **A** of heater control assembly **8** to (DEF).
- Set lever **B** of heater unit assembly ***1** to DEF.
- Under these conditions, install mode changeover control cable **4** onto lever **B**.
- Gently pull outer shield of mode changeover control cable **4** to DEF side (load of 4.9 N {1.1 lbf, 0.5 kgf} and fasten by locking clamp **C**.

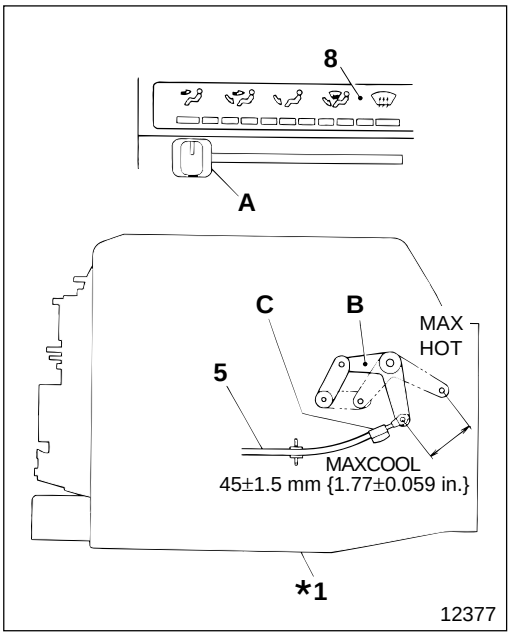

5 Installation of air mixing control cable

- Set temperature control lever **A** of heater control assembly **8** to MAX COOL.
- Set lever **B** of heater unit assembly ***1** to MAX COOL.
- Under these conditions, install air mixing control cable **5** onto lever **B**.
- Gently pull outer shield of air mixing control cable **5** to MAX COOL side (load of 4.9 N {1.1 lbf, 0.5 kgf} and fasten by locking clamp **C**.

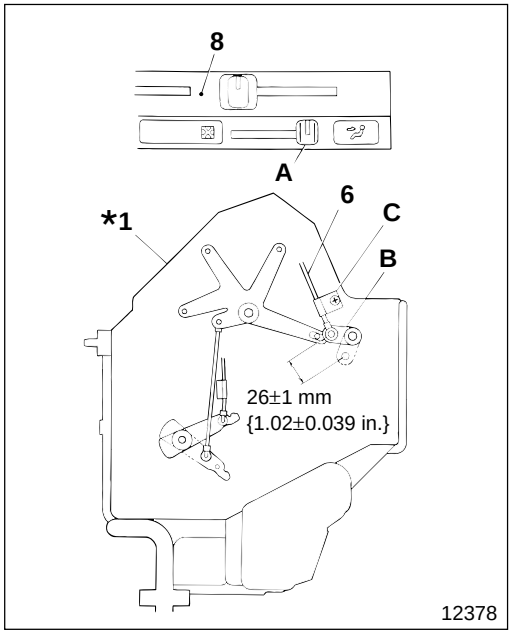

6 **Installation of air bypass changeover control cable**

- Set air bypass changeover control lever **A** of heater control assembly **8** to (OPEN).
- Set plate **B** of heater unit assembly ***1** to OPEN.
- Under these conditions, install air bypass changeover control cable **6** onto plate **B**.
- Gently pull outer shield of air bypass changeover control cable **6** to OPEN side (load of 4.9 N {1.1 lbf, 0.5 kgf} and fasten by locking clamp **C**.

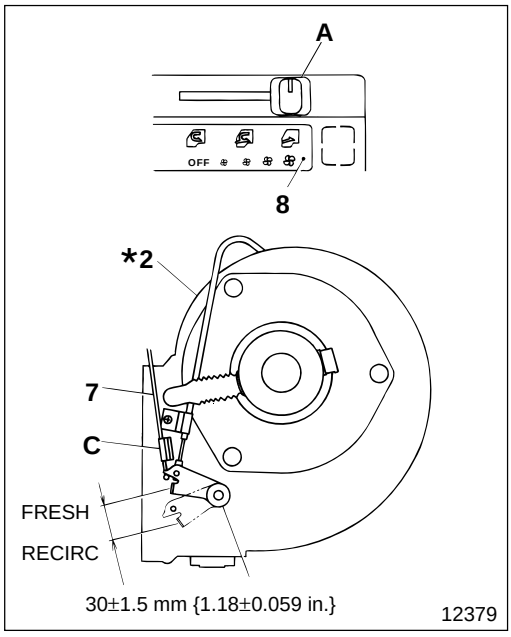

7 **Installation of inside/outside air changeover control cable**

- Set inside/outside air changeover lever **A** of heater control assembly **8** to (FRESH).
- Set lever **B** of blower assembly ***2** to FRESH.
- Under these conditions, install inside/outside air changeover control cable **7** onto lever **B**.
- Gently pull outer shield of inside/outside air changeover control cable **7** to FRESH side (load of 4.9 N {1.1 lbf, 0.5 kgf} and fasten by locking clamp **C**.

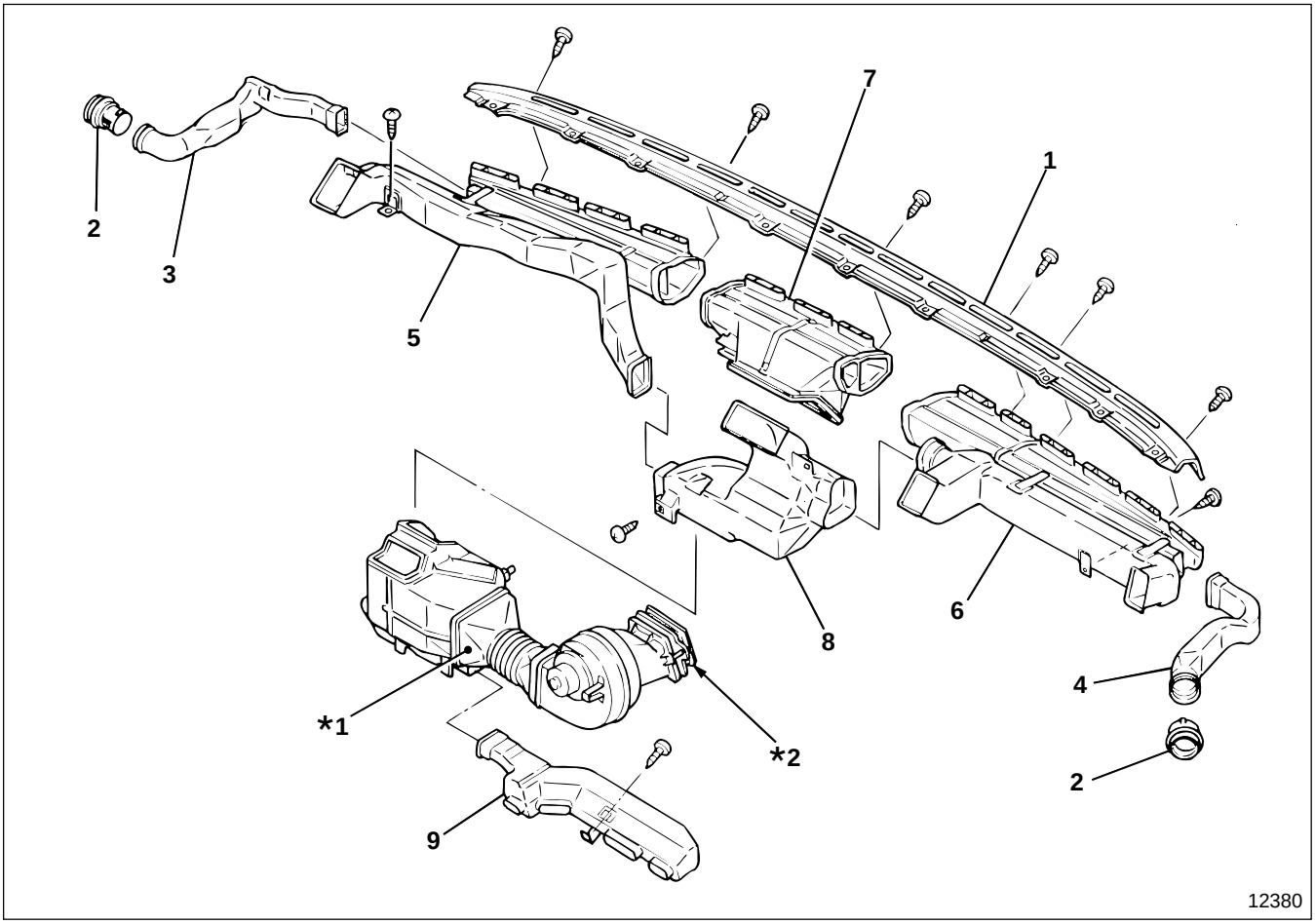

● **Disassembly sequence**

1 Duct cover 🕮 Gr 42
2 Side defroster joint
3 Side defroster duct, LH
4 Side defroster duct, RH
5 Front duct, LH
6 Front duct, RH
7 Center duct
8 Face duct
9 Foot duct

*1 : Joint duct 🕮 P55B-16
*2 : Air intake duct 🕮 P55B-16

NOTE

Remove the instrument panels, crash pads and lower panels as a unit before removing ducts. 🕮 Gr 42

● **Assembly sequence**

Follow the disassembly sequence in reverse.

HEATER UNIT AND BLOWER

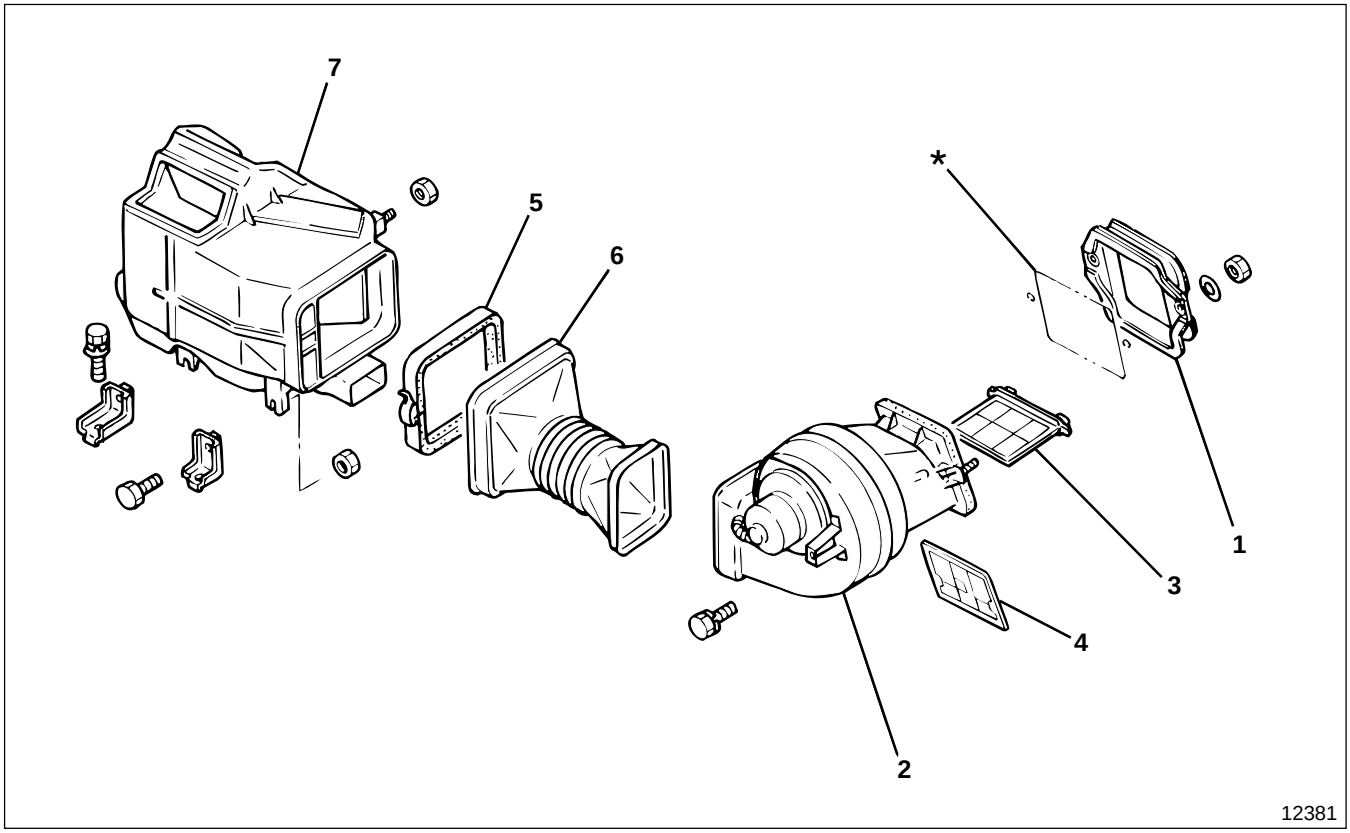

● **Disassembly sequence**

1 Air intake duct
2 Blower assembly 🕮 P55B-12, Gr 54
3 Air filter (Inside air)
4 Air filter (Outside air)
5 Band
6 Joint duct
7 Heater unit 🕮 P55B-12, Gr 54

***** : Dashboard

● **Assembly sequence**

Follow the disassembly sequence in reverse.

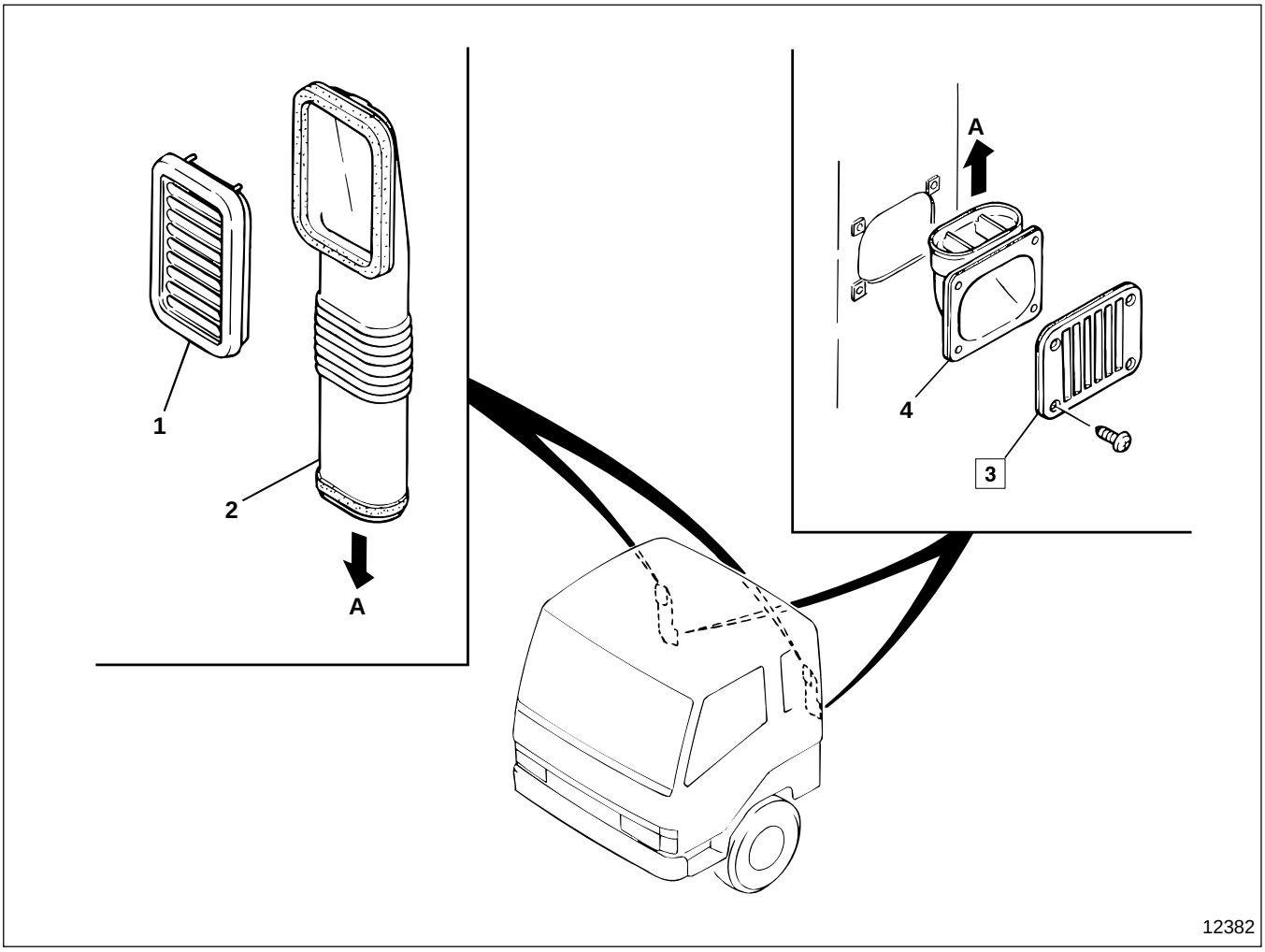

● **Disassembly sequence**

1 Inside air outlet garnishment
2 Air outlet duct (Upper)
3 Outside air outlet garnishment
4 Air outlet duct (Lower)

NOTE

Remove inside air outlet garnishment 1 and air outlet duct 2 after removing the side trim. 🕮 **Gr 42**

● **Assembly sequence**

Follow the disassembly sequence in reverse.

◆ Service procedure

3 **Installation of outside air outlet garnishment**

Install air outlet garnishment **3** in the direction as illustrated.

