https://truckmanualshub.com/

Mobile Crane LTM 1100-4.2

Max. lifting capacity: 100 t
Max. lifting height: 91 m
Max. working radius: 58 m

LIEBHERR

https://truckmanualshub.com/

Mobile crane LTM 1100-4.2
Strong and compact

https://truckmanualshub.com/

A long telescopic boom, high capacities, an extraordinary mobility as well as a comprehensive comfort and safety configuration distinguish the mobile crane LTM 1100-4.2 from Liebherr. The 100-ton crane offers state of the art technology for more convenience for the practical operation.

- **60 m long telescopic boom**
- **Capacity 10.2 t at the 60 m long telescopic boom**
- **19 m long double swing-away jib, optional hydraulically adjustable**
- **91 m hook height with telescopic boom extension and swing-away jib**
- **Great operational flexibility due to top capacities with full and partial counterweights**
- **Chassis width 2.75 m with tyres 445/95 R 25 (16.00 R 25)**
- **Active, speed depending rear axle steering**
- **Air operated disk brakes**

https://truckmanualshub.com/

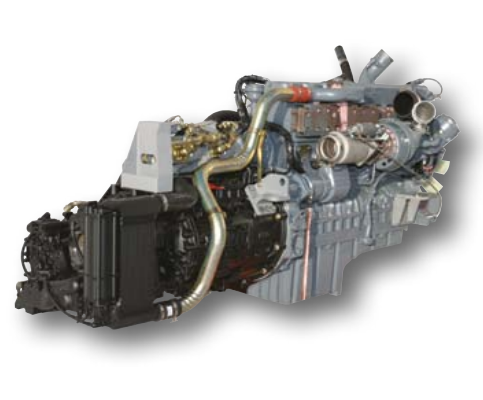

Drive train

- 6-cylinder Liebherr turbo diesel engine, 350 kW/476 HP, max. torque 2230 Nm
- Automated ZF-gearbox AS-TRONIC, 12 forward-, 2 reverse speeds
- ZF-intarder directly installed at gearbox
- 2-stage transfer gearbox, crawl speed 0.46 km/h
- Axles 2, 3 and 4 driven, optional axle 1

https://truckmanualshub.com/

Most modern chassis and drive technology

High mobility and efficiency

A high performance 6-cylinder Liebherr turbo diesel engine with 350 kW/476 HP provides for dynamic driving performance. The 12-speed ZF-gearbox with automatic gear change system AS-TRONIC grants high efficiency and best comfort.

- Reduced fuel consumption due to high number of gears and high degree of efficiency of the dry clutch
- Best manoeuvrability and minimum crawl speed by means of the 2-stage transfer gearbox
- Wear free braking by ZF intarder
- ABV - automatic blocking preventer with ASR anti-slip control
- Telma eddy current brake optional, wear free and comfortable

Compact, mobile and weight optimized

Due to its extreme compact design the LTM 1100-4.2 can also manoeuvre on the tightest job sites.

- Chassis length only 10.63 m
- Minimum turning radius only 8.33 m
- Chassis width only 2.75 m, even with tyres 445/95 R25 (16.00 R25)
- Tail swing only 4.11 m

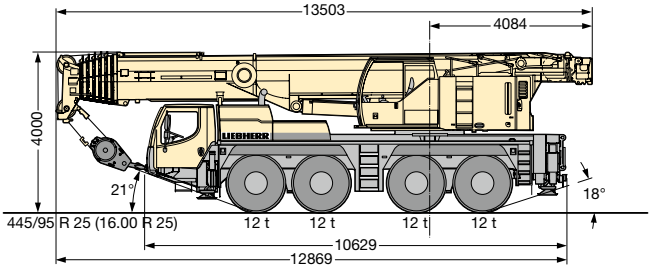

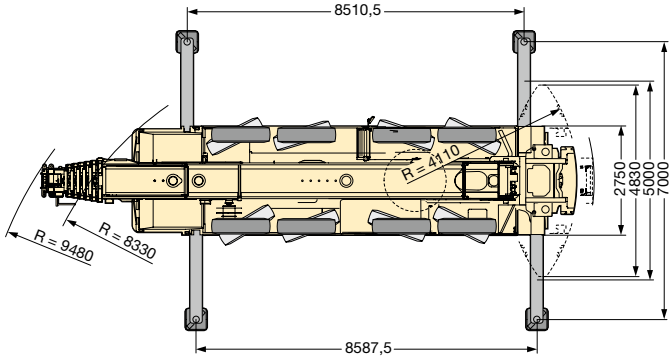

Hydro pneumatic axle suspension „Niveaumatik“

- Maintenance free suspension cylinders
- Large dimensions to cope with high axle loads
- Spring travel +150/-100 mm
- High side stability at cornering
- Choice of the driving conditions by fix programs

Air operated disk brakes

- Higher braking power, better brake control
- Improved track stability
- No brake fading at higher operation temperatures
- Higher service life
- Shorter working time for changing of the brake pads
- Braking pads with wear indicators

https://truckmanualshub.com/

5 steering programs

- Program selection by simple push button
- Clear arrangement of the control elements and displays
- Programs changeable during driving
- Crab steering controlled comfortably by the steering wheel

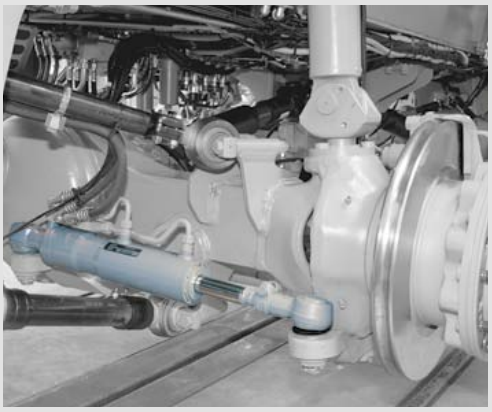

https://truckmanualshub.com/

Variable steering concept

Centring cylinder at the rear axles

- Automatic straight positioning of the rear axles in case of failure

Active rear axle steering

The rear axles are electro-hydraulically actively steered depending on the speed and the steering angle of the front axles.
5 steering programs (P) are preselectable by push button.

- Distinct reduction of the tyre wear
- Improvement of the manoeuvrability
- Stable driving performance also at high speeds
- All 4 axles steerable

High safety standards – complete know-how from Liebherr

- Centring cylinders for automatic straightening of the rear axles in case of failure
- Two independent hydraulic circuits with wheel driven and motor driven hydraulic pumps
- Two independent steering computers

P1 road steering

The axles 1 and 2 are mechanically steered by the steering wheel. The axle 4 is actively steered depending on the speed and on the steering angle of the front axle. From 30 km/h it will be adjusted to straight driving and fixed. Axle 3 is none steered for road driving.

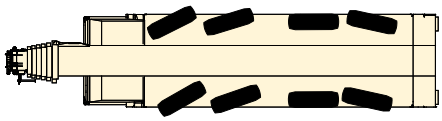

P2 all-wheel steering

The axles 3 and 4 are turned by the steering wheel depending on the steering angle of the front axle to provide for the smallest turning radius.

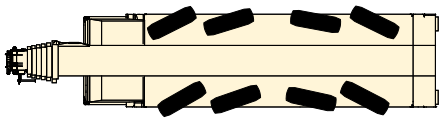

P3 crab steering

The axles 3 and 4 are turned by the steering wheel to the same direction as the steering position of axle 1 and 2.

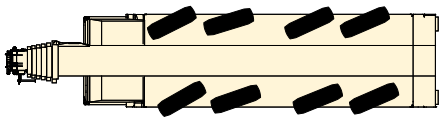

P4 reduced swing out

The axles 3 and 4 are turned depending on the wheel turn of the front axles to minimize the back swing of the rear of the chassis.

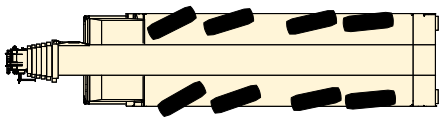

P5 independent rear axle steering

The axles 1 and 2 are steered by the steering wheel, the axles 3 and 4 are steered by push buttons independently from the steering angle of the axles 1 and 2

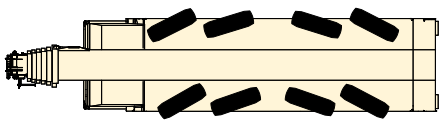

https://truckmanualshub.com/

The driver's cab

- Corrosion resistant
- Electric window lifters
- All around safety glazing
- Tinted windows
- Heatable and electrically adjustable mirrors
- Air cushioned driver's seat with lumbar support

https://truckmanualshub.com/

Comfort and functionality

Modern driving cab and crane cab

The modern driving cab as well as the backwards tiltable crane cab offer a comfortable and functional working place. The control elements and displays are arranged according to ergonometric factors. Thus a safe and wear free working is assured.

Fast and safe erection

The supporting, the counterweight assembly as well as the mounting of the additional equipment are designed for speed, safety and comfort. For the safety of the operator's pedestals, hand holds and railings are provided.

Crane supporting – fast, comfortable and safe

- BTT - Bluetooth Terminal, mobile control and display unit
- Electronic levelling display
- Fully automatic levelling by push button
- Engine-start/stop and speed regulation
- Lighting of support area with 4 integrated floodlights
- Stroke of supporting cylinders front 650 mm, rear 700 mm
- Outriggers 1-stage, fully hydraulic, low maintenance extending system

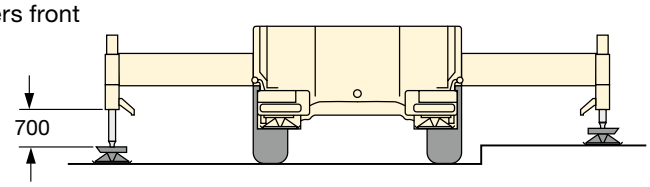

The crane cab

- Corrosion resistant
- All around safety glazing
- Tinted windows, front screen can be opened
- Skylight with bullet proof glass
- Crane driver's seat with lumbar support
- Sidewise extendable running board
- 20° tiltable to the rear

https://truckmanualshub.com/

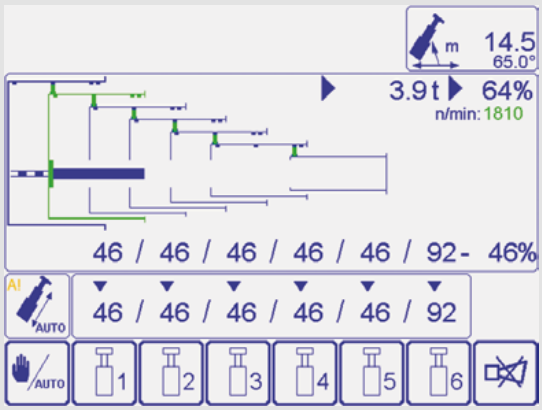

The fully automatic telescoping system „TELEMATIK“

- Improvement of capacities at long booms and large radii due to lightweight telescoping system
- 1-stage hydraulic cylinder with hydraulically operated drive pin
- Low maintenance telescoping system
- Telescoping fully automatic
- Simple operation, supervision of telescoping at the LICCON monitor

2.9 m long assembly jib

https://truckmanualshub.com/

High capacities and flexible boom system

Powerful, long telescopic boom and functional lattice extensions

The telescopic boom consists of the base section and 6 telescopic sections, which can be comfortably and automatically extended and pinned to the requested length by the thousand fold proven single cylinder telescoping system TELEMATIK.

- 60 m long telescopic boom
- 10.8 m – 19 m long double swing-away jib, attachable at 0°, 20° and 40°
- Hydraulic adjustment of the swing-away jib at full load from 0° to 40° (optional), interpolation of capacities
- Hydraulic assistance for assembly of the swing-away jib with BTT
- 2 intermediate sections 7 m each for extension of the telescopic boom for operation with swing-away jib

High capacities with full counterweight as well as with partial counterweight offer a wide application of operations

- High lateral stability due to the oval boom profile
- Optimized capacities due to the numerous extension variations
- Capacity 10.2 t at 60 m long telescopic boom

High capacities at unpinned telescopic lengths

- High telescopable capacities due to interpolation
- Separate charts for holding of the load at unpinned telescopic lengths
- Display at LICCON monitor

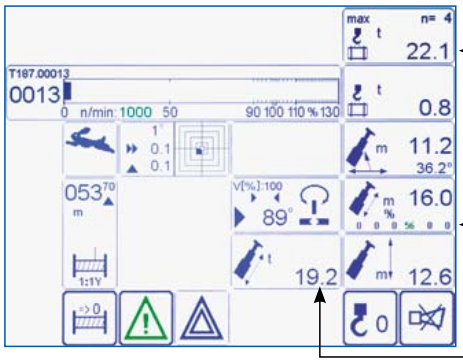

Holding capacity

Unpinned telescopic length

Telescopable capacity

Rooster sheave, foldable sidewise

Hydraulic assistance for assembly of the swing-away jib with BTT

https://truckmanualshub.com/

Hydraulic swing-away jib

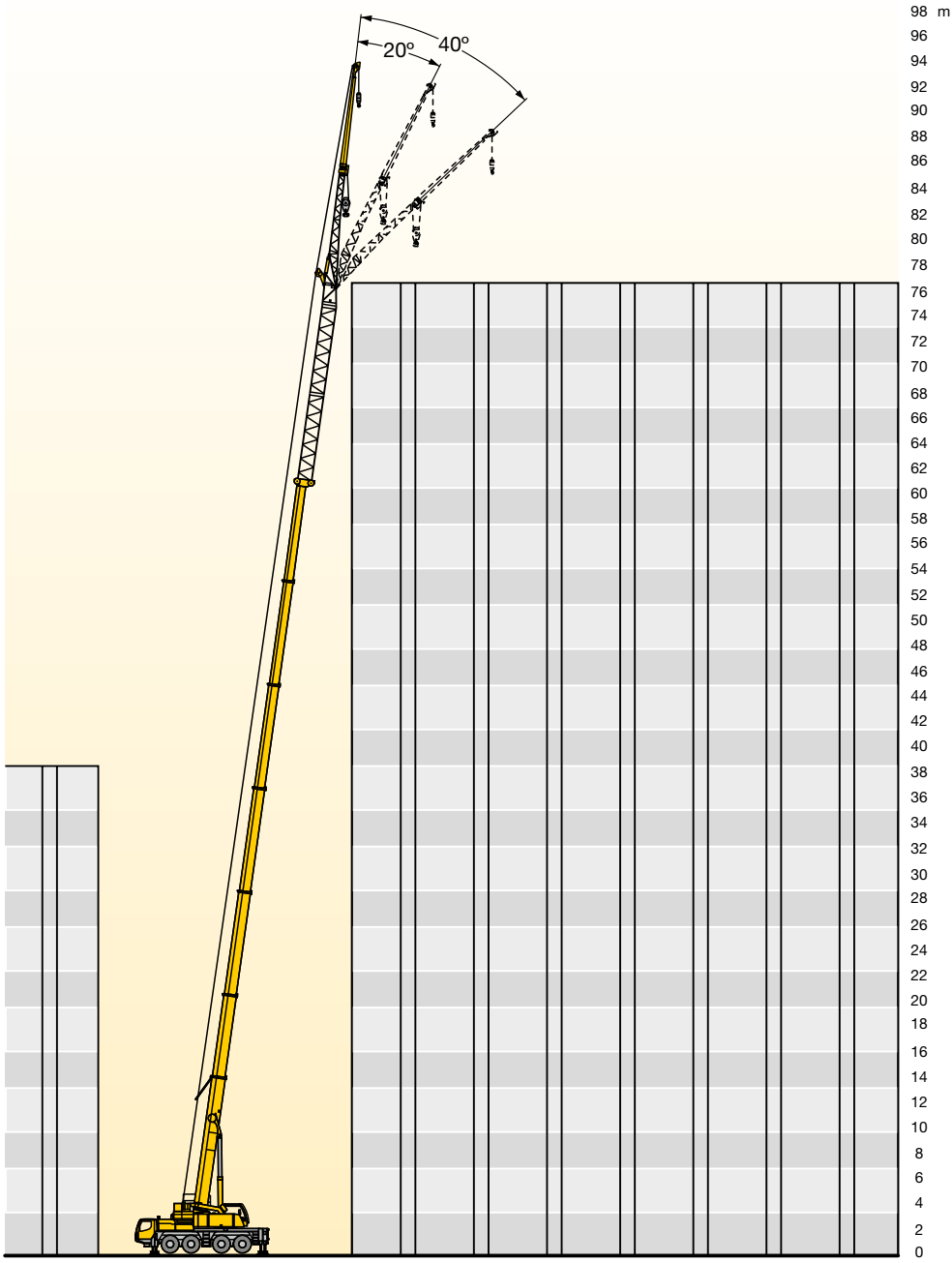

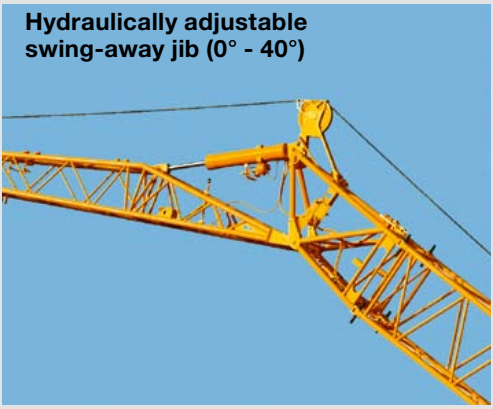
Hydraulically adjustable swing-away jib (0° - 40°)

Hose reel for hydraulic cylinder

https://truckmanualshub.com/

Variable counterweight

Mounting of counterweight – only a matter of minutes

- Multitude of counterweight variations from 2.5 t to 28.2 t
- Fast ballasting with keyhole-technology from the crane cabin
- Compact counterweight dimensions, at 17.2 t of counterweight only 2.65 m wide
- Tail swing only 4.1 m

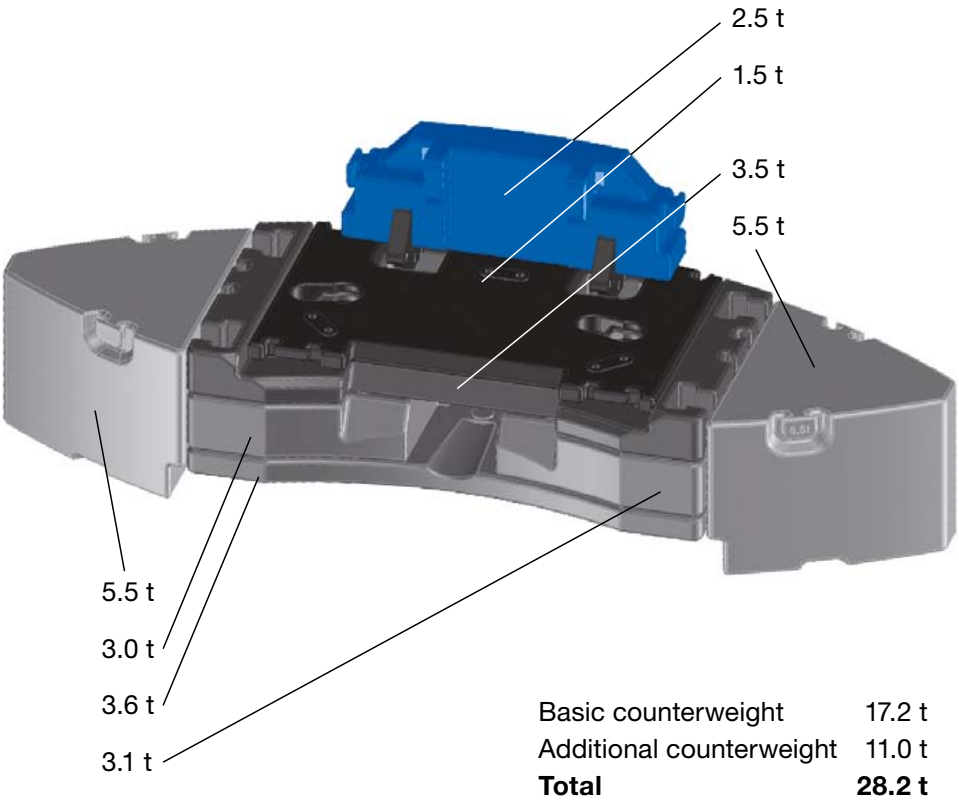

Basic counterweight	17.2 t
Additional counterweight	11.0 t
Total	**28.2 t**

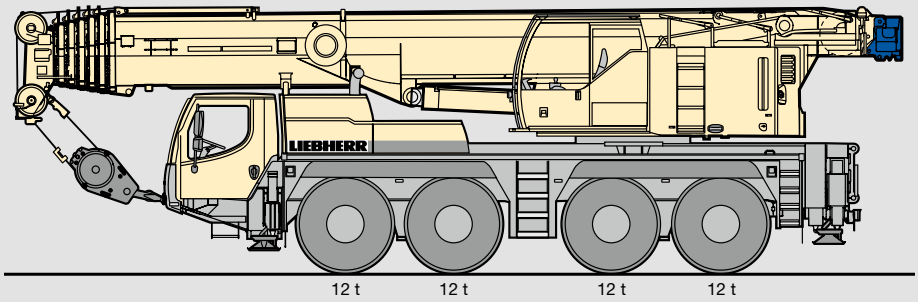

https://truckmanualshub.com/

The hoist gear

- Liebherr hoist winch with internal planetary gear and spring loaded multi disk brake
- Rope pull 77 kN at the outer layer
- Max. rope speed 115 m/min
- 2. hoist gear optional

https://truckmanualshub.com/

Powerful crane drive

With proven components

The drive components for the crane operation are designed for high performance and provide for sensitive and precise handling of the load. They are specially tuned for the crane operation and proved in severe long-term tests.

- Crane engine: 4-cylinder Liebherr turbo diesel engine, 129 kW/175 HP, max. torque 815 Nm, optimized fuel consumption by electronic engine management
- Diesel-hydraulic crane drive, open hydraulic circuits with electric „LOAD SENSING“-control, 4 working motions simultaneously possible
- Electric/electronic SPS-crane control via the LICCON-computer system
- Slewing gear reversible from open to hydraulically locked, so the slewing motion can be optimal adapted for the different operation conditions, e. g. sensitive for installation work or fast for cycle work
- In-house fabricated Liebherr winches, 77 kN rope pull at the outer layer, less reeving necessary due to high line pull

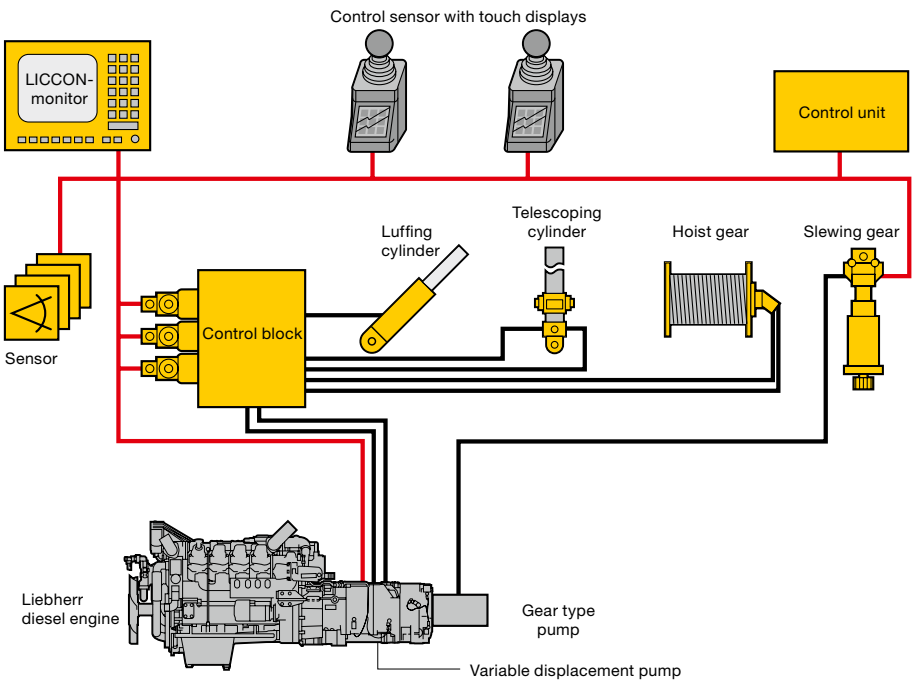

The slewing gear

- Liebherr planetary gearbox, spring loaded multi disk brake
- Reversible open or hydraulically locked as standard
- Slewing speed from 0 – 1.7 rpm infinitively variable

The central greasing

- Standard central greasing device for slewing bearing, boom bearing, luffing cylinder and winch bearing
- Even supply of grease
- Filling quantity visible at any time in transparent reservoir

https://truckmanualshub.com/

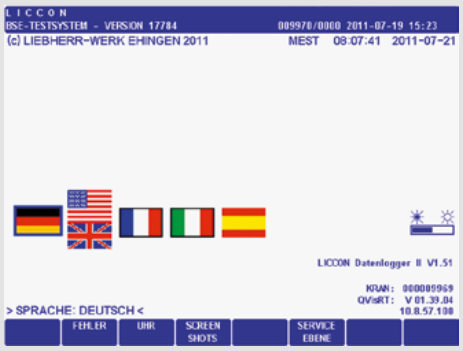

The LICCON test system

- Fast locating of failures at the computer screen without measuring equipment
- Display of failure codes and failure descriptions
- Comfortable dialog functions for supervision of all in and out terminals
- Display of functions and allocation of sensors and actors

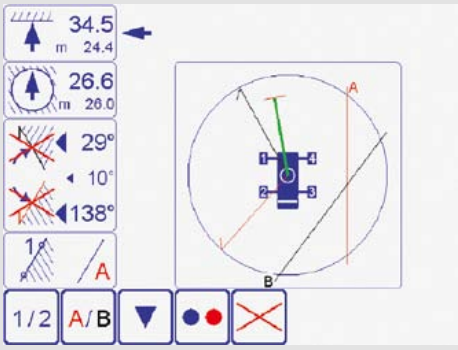

https://truckmanualshub.com/

Intelligent crane control

For functional and safe crane operation: the LICCON computer system

The soft and hardware of the mobile crane control is developed by Liebherr in-house. The centre is the LICCON computer system (Liebherr Computed Control).

- Integrated LML load moment limiter
- Key components are in-house manufactured by Liebherr
- Guaranteed spare parts availability
- Worldwide proven under the most different climate conditions
- Operator friendly

The second control generation LICCON2 is the result of a continuous development by the Liebherr specialists and enables the adaption to the constantly increasing demands of the markets due to its modern and future oriented control.

The data bus technology

Liebherr mobile cranes are completely interlaced by the data bus system. All important electric and electronic components are equipped with own micro processors and communicate with each other by only limited data cables. For the special demands of the mobile crane Liebherr has developed own data bus systems (LSB - Liebherr-System-Bus). The data bus technology improves the reliability, the comfort and the safety for road driving and crane operation:

- Higher reliability due to remarkable lesser electric cables and contacts
- Continuous self testing of the „intelligent sensors“
- Comprehensive diagnosis possibilities, fast fault finding

The LICCON working range limiting system (Option)

- Relief for the crane driver by automatic supervision of the working range boundaries like bridges, roofs etc.
- Simple programming
- Four different limiting functions:
  - Boom head height limiting
  - Radius limiting
  - Slewing angle limiting
  - Border limiting

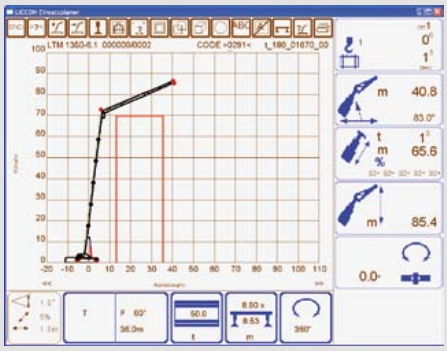

The LICCON working planner

- Computer program for planning, simulation and documentation of crane operations at the computer
- Display of all load charts belonging to a specific crane
- Automatic search of a suitable crane by input of the load case parameters load, radius and hoisting height
- Simulation of crane operations with drawing functions and display of support forces

https://truckmanualshub.com/

LICCON2 – safe and comfortable

Attaching and detaching of the hook block

The BTT – Bluetooth Terminal offers the crane driver the possibility to attach or detach the hook block at the front of the vehicle within sight, as the hoist winch and the luffing cylinder of the telescopic boom are remote controlled.

Wireless remote control

Wireless remote control (option)

All crane motions can be controlled outside of the cab.

- Higher efficiency
- Free view and closeness to the load
- Prevention of communication errors between the crane driver and the job site personnel

Crane support

By use of the BTT the mobile crane will be setup comfortably and safely. Engine start/stop and speed regulation, electronic inclination display and automatic levelling are standard. Optionally the BTT can also display the outrigger forces.

Colour monitor

The readability of the data on the monitor of the LICCON2 control system in the crane cab is enhanced by the colour display. Warnings and crane utilization are considerably better recognized.

Touch displays

Below the joy sticks integrated in the armrests the touch displays are installed, with which the various operational functions can be selected. This are beside others the drive and steering programs of the chassis, the axle suspension, the supporting of the crane, the adjustment of the working floodlights as well as heater and air condition controls.

PN 187.02.E10.2011

The pictures contain also accessories and special equipment not included in the standard scope of delivery. Subject to modification

Liebherr-Werk Ehingen GmbH
Postfach 1361, 89582 Ehingen, Germany
☎ +49 7391 502-0, Fax +49 7391 502-33 99
www.liebherr.com, E-Mail: info.lwe@liebherr.com