https://truckmanualshub.com/

MECALAC

SWING LOADER **AS 210e**

> Experience of your worksite

https://truckmanualshub.com/

SWING LOADER

AS 210e

LET'S HAVE A LOOK

- **129 kW / 175 hp at 2200 rpm**
- **Dump height 3.42 m**
- **Max. swing range of 180° (2 x 90°) with all attachments**

4.90 m turning radius measured over rear end

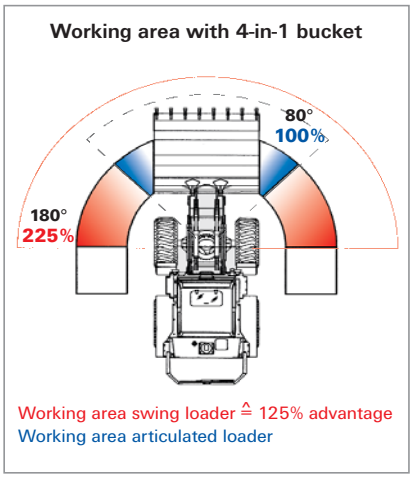

Left foot operated swing pedal avoids tiredness

Manually switchable differential lock in front axle

Low-maintenance, play-free chain operated swing system with constant turning speed and -power

Powerful Z^{PLUS}-Kinematics with precise parallel lifting and final position cushioning of the lift cylinders

Hydraulically operated quick coupler

Wide range of attachments

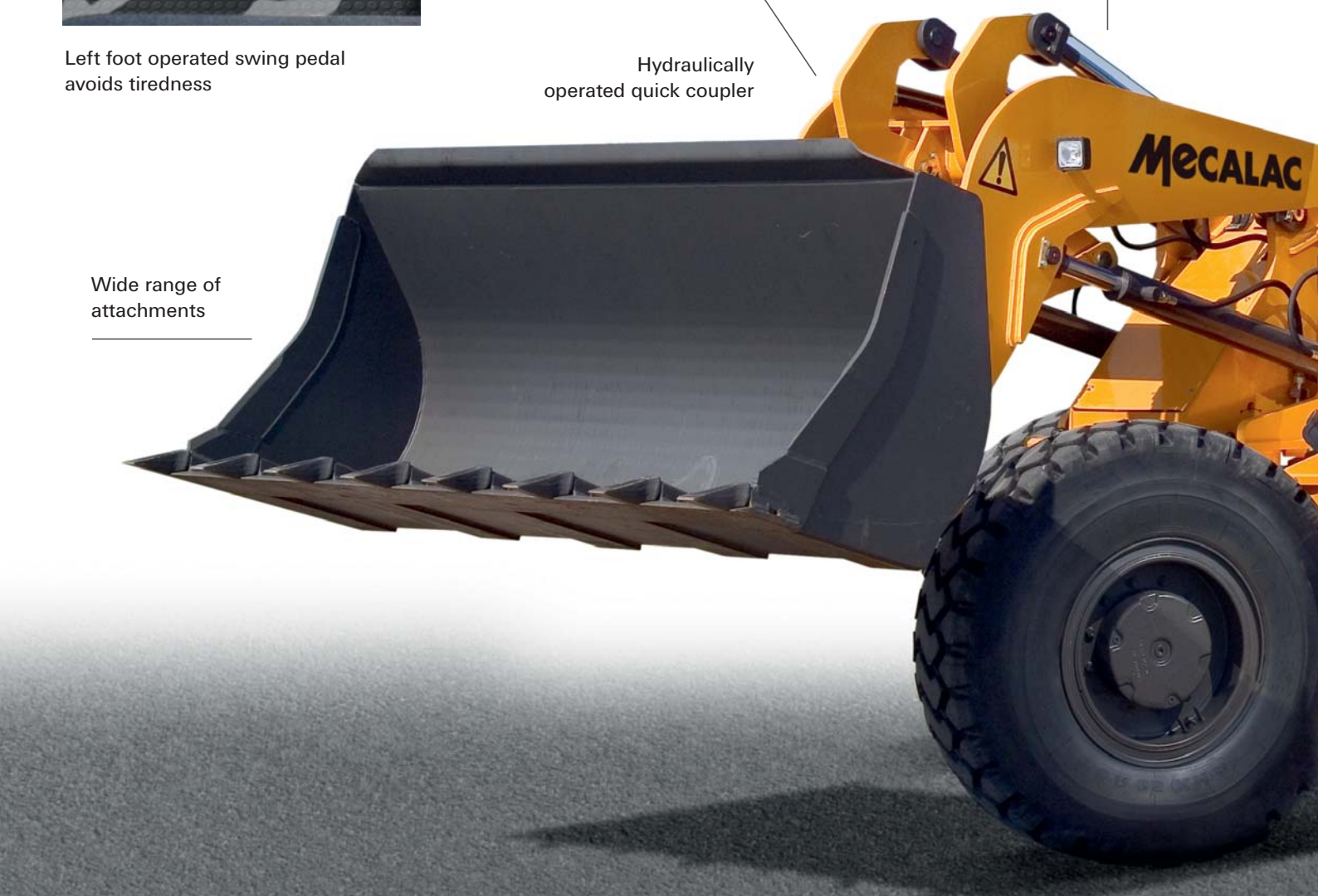

https://truckmanualshub.com/

AT YOUR ADVANTAGES

Easy, intuitive handling; nearly all operating functions are integrated in one joystick

Safe and easy access

High performance Deutz turbo diesel engine

Hydrostatic four-wheel steering

Payload dependent axle support

Low-maintenance wet lamella brakes

Rigid single-component chassis for maximum stability

https://truckmanualshub.com/

SWING LOADER

AS 210e

MANOEUVRABLE AND COMPACT

Mecalac swing loaders are compact, flexible, comfortable, secure and extremely efficient. We have always been at the forefront of innovative design and lead the market in swing shovel technology:

- Short, fast operating cycles for time-saving
- Excellent manoeuvrability particularly in confined areas
- Working in one track and shorter travel distance for minimal traffic obstruction
- Reduced soil compaction due to less operating cycles.

https://truckmanualshub.com/

LOW-MAINTENANCE AND ECONOMICAL

Multiple operations, easy to maintain and long-lasting components guarantee high profitability and are the brand character of Mecalac swing loaders:

- Many operations are possible without stabilisers even in confined spaces such as pallet lifting, excavating and materials handling
- Extensive range of attachments for almost every application
- Western European technical components
- Optimal access to all service points
- Long maintenance intervals and low maintenance costs
- The chain operated swing function has no maintenance or wear for the life of the machine. Free-play is taken up automatically.

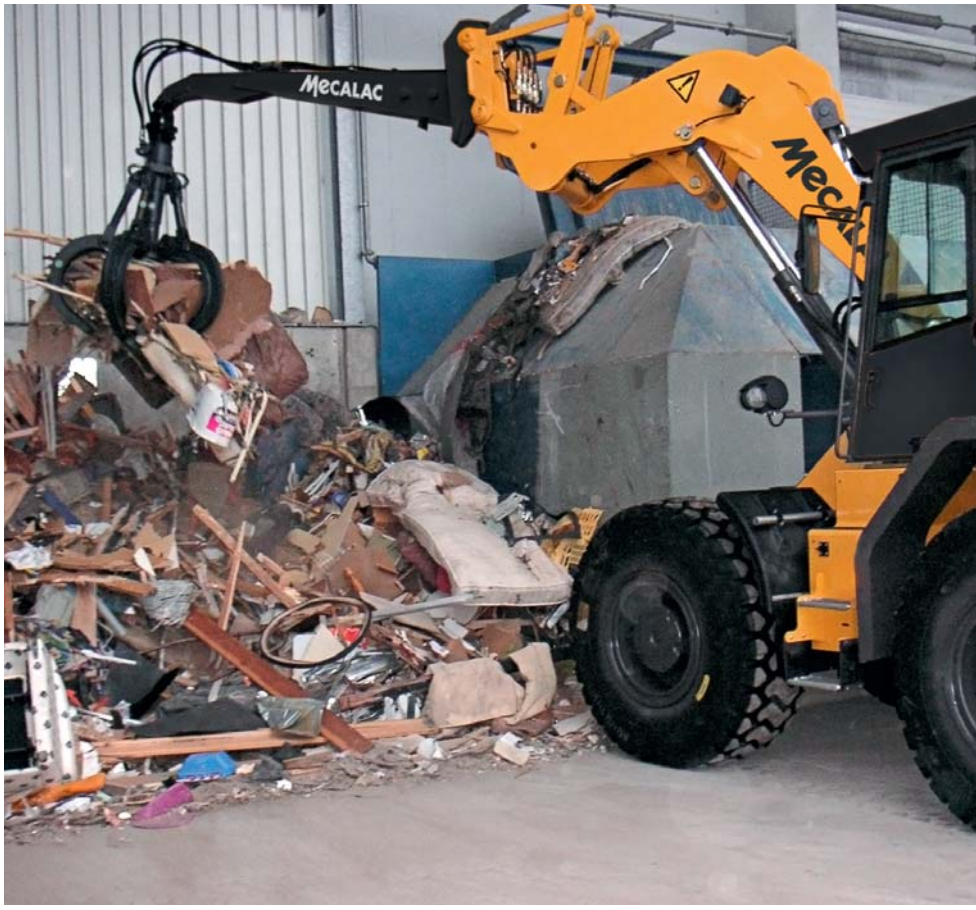

https://truckmanualshub.com/

SWING LOADER

AS 210e TECHNICAL DATA

Operation weight: 15,000 kg
Engine power: 129 kW (175 hp)
Bucket capacity: 2.1– 3.0 m³

GL ISO 9001
GL Systems Certification

- Comfortable driver's cabin with ROPS safety system
- Joystick controls
- Servo-assisted working hydraulics
- High-performance, power-controlled hydrostatic four-wheel drive
- Four-wheel steering
- Planetary axles with manually switchable differential lock in front axle (locking factor 100 %)
- Low-maintenance wet lamella brakes
- Z PLUS-Kinematics with precise parallel lifting
- Hydraulically controlled quick-coupler
- Wide range of attachments

Engine

Low-noise, water-cooled Deutz TCD 6.1 L6 turbo diesel engine. Common Rail injection system, intercooler, cooled external exhaust gas recirculation and particulate filter

Net power at	2200 rpm
acc. to ISO 14396	175 hp / 129 kW
Max. torque at	1450 rpm
acc. to ISO 14396	750 Nm
Air intake filter:	2-level dry-air filter with safety cartridge
Electrical system:	
Operating voltage:	24 Volt
Battery capacity:	2 x 88 Ah
Alternator rating:	100 A

Drive

Hydrostatic drive with automotive control, 3 stages, gear-engage under load, multifunctional lever (joystick) for drive and working hydraulics control

Axles:	planetary axles with four-wheel steering for maximum flexibility, oscillating rear axle	
Differential lock:	manually switchable differential lock in front axle locking factor 100 %	
Wheels:	tire size:	20,5-25
	optionally:	650/65 R25
Speeds:	road gear:	0-20 km/h (optionally 35 km/h)
	field gear:	0-11 km/h
Oscillation:	max. oscillation angle	+/- 10°

Brakes

Operating brakes:
1. hydraulically operated wet lamella brake in front and rear axle, acting on all 4 wheels
2. hydrostatic inching brake, acting on all 4 wheels

Parking brake:
Spring-loaded wet lamella brake in rear axle, acting on all 4 wheels

Steering

Hydrostatic four-wheel steering, can be switched to rear axle steering

max. steering angle	+/- 25°
Turning radius measured over rear end	R = 4,985 mm

Hydraulic system

Dual-circuit system with gear pumps
1. Working hydraulics circuit (lift/lower, tilt, accessories), and steering (via priority valve); three-fold control valve with primary and secondary protection
   Max. operating pressure at 2200 min^{-1}: 112 l/min and 230 bar, max. oil flow for auxiliary hydraulics: 172 l/min.
2. Circuit (swivelling) single control valve with primary and secondary protection, high pressure bypass line to working hydraulics
   Max. operating pressure at 2200 min^{-1}: 60 l/min and 210 bar

Servo-assisted hydraulic controls for 1st circuit, joystick operated
Float position for lifting cylinders

Cylinders:	2 lifting cylinders	110 ø
	2 tilting cylinders	110 ø
	2 swing cylinders	110 ø
Cycle-times:	Lifting (under load)	6.3 s
	Lowering (w/o load)	3.7 s
	Dumping (90°)	1.4 s
	Tilting (45°)	2.1 s
	Swivelling (90°)	3.5 s

Performance data

Digging depth with standard bucket:		90 mm
Bucket position:	Tilting angle	45°
	Dumping angle, top	45°
	Max. dumping angle	100°
Lifting force:		10,600 daN
Breakout force:		13,000 daN
Thrust force:		11,300 daN

Tipping load:	quick-coupler cat. V	cat. IV (option)
Standard bucket, max. turned, straight	7,800 kg	7,650 kg
Standard bucket, max. turned, 90°-swivelled	7,450 kg	7,500 kg
Payload:	quick-coupler cat. V	cat. IV (option)
on forks, max. turned, frontal, even terrain	5,300 kg	5,450 kg
on forks, max. turned, max. swivelled, even terrain	4,500 kg	4,700 kg
on forks, max. turned, frontal, even terrain*	6,400 kg	6,600 kg

Tipping load according to ISO 14397, Payload according to EN 474-3
* Transport position 300 mm above ground

Filling capacities

Engine with filter	approx.	14.0 l
Fuel tank	approx.	250.0 l
Front axle total	approx.	25.0 l
Rear axle with gearbox	approx.	25.0 l
Hydraulic system with tank	approx.	230.0 l
Distributor gear	approx.	9.5 l

Standard features

Comfortable operator's cabin with ROPS safety feature and 1 lockable door, door opens through 180° with safety restraint on machine, tinted windows, electrical wipers front and rear, front and rear screen washers, 1 internal rear-view mirror and 2 external rear-view mirrors, 1 side window opens through 180°, adjustable steering column and multi-functional lever (joystick), pilot-controlled joystick-operation, multiply adjustable driver's seat, adjusts to driver's weight, hydraulic suspension, safety belt, sun-blinds, heater and fresh air system with external filter, interior lighting, glove-boxes, intuitive modular cockpit with symbolic display components and monitoring LEDs, 24v power outlet, 2 driving lights, 2 working lights mounted on frame of bucket arm, 2 working lights mounted at front of cab roof and 2 at back of cab roof, reversing lights, indicators, rear and brake lights, electrically locking hydraulically operated quick-coupler cat. V, final position cushioning of the lift cylinders, lockable box (120 l), towing coupling, fastening point, auxiliary hydraulics 1st circuit.
Color scheme: yellow, operator's cab, axles and wheels grey

Optional equipment

35 km/h version, tires 650/65 R25, 360° warning light, reverse warning system, FOPS protecting roof, bucket protection compliant to road-safety standards, auxilliary hydraulics 2nd circuit, pipe-burst protection system, boom suspension, bio-degradable oil fill for hydraulic system, radio, lift delimiter, pressureless return line, lockable differential in rear axle, disengageable four-wheel drive, air-conditioning system, immobilizer, towing device, road safety kit, aircushioned driver's seat, automatic brake when switch in neutral position, quick-coupler cat. IV, various attachments possible such as pallet fork, load hook, excavator, grab, hydraulic breaker etc.

Emissions

Engine
Emissions according to stage III B - EU-RL 97/68
Noise emission
Sound power level (LWA)[1] dB(A)
Acoustic power level (LpA)[2] dB(A)
The exterior (1) and interior (2) noise levels correspond to the standards
Vibrations

Vibration total value[3]	< 2.5 m/s²
Effective vibration level[4]	< 0.5 m/s²

1 According to 2000/14/EG
2 According to ISO 6396
3 According to ISO/TR 25398
4 According to ISO/TR 25398

All technical data refer to the standard machine with quick-coupler cat. V if not specified differently.

https://truckmanualshub.com/

Measurements

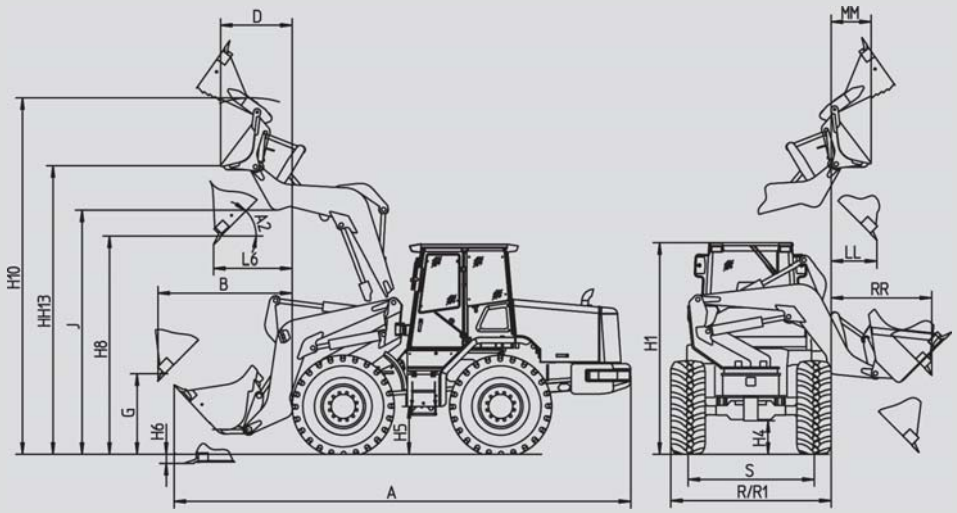

Buckets (Standard=Stand.)	Cat. V		Cat. IV (Option)	
	Stand. 2.1 m³	4-in-1 1.8 m³	Stand. 2.1 m³	4-in-1 1.8 m³
A	7155	7145	6850	6840
A2	45°	45°	50°	50°
B	2190	2360	2100	2170
D	-	1170	-	1010
G	1350	1285	1200	1135
H1	3155	3155	3155	3155
H4	500	500	500	500
H5	600	600	600	600
H6	90	90	70	70
H8	3420	3355	3120	3055
H10	5600	5575	5450	5425
HH13	-	4120	-	3965
J	3660	3660	3660	3660
LL	890	985	1010	1100
L6	1335	1425	1465	1555
MM	-	720	-	560
RR	1740	1910	1650	1720
S	2080	2080	2080	2080
R	2700	2700	2700	2700
R1	2605	2605	2605	2605

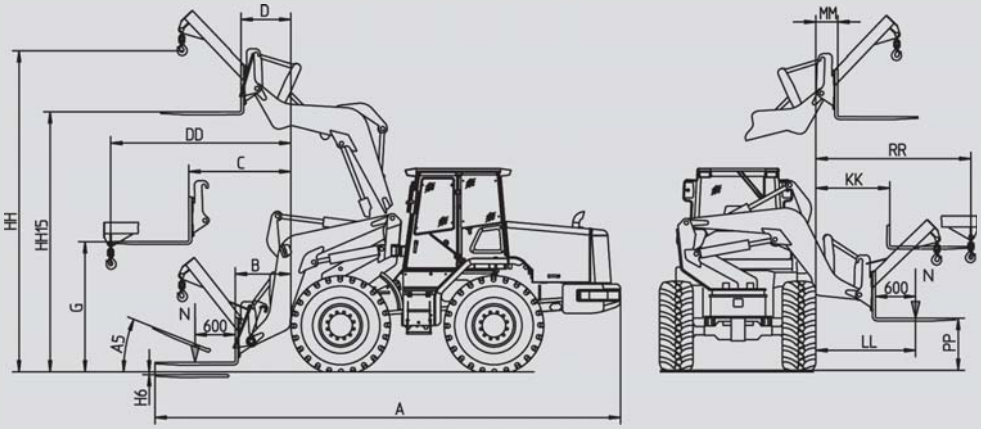

	Forks	Load hook	Forks	Load hook
	Cat. V		Cat. IV (option)	
A	7950	7385	7600	7085
A5	25°	-	25°	-
B	1095	-	900	-
C	1810	-	1560	-
D	950	-	820	-
DD	-	3480	-	3235
G	2000	-	1855	-
HH	-	5425	-	5225
H6	100	-	110	-
HH15	4100	-	3830	-
KK	1390	-	1110	-
LL	1750	-	1500	-
MM	500	-	370	-
PP	750	-	780	-
RR	-	3030	-	2785

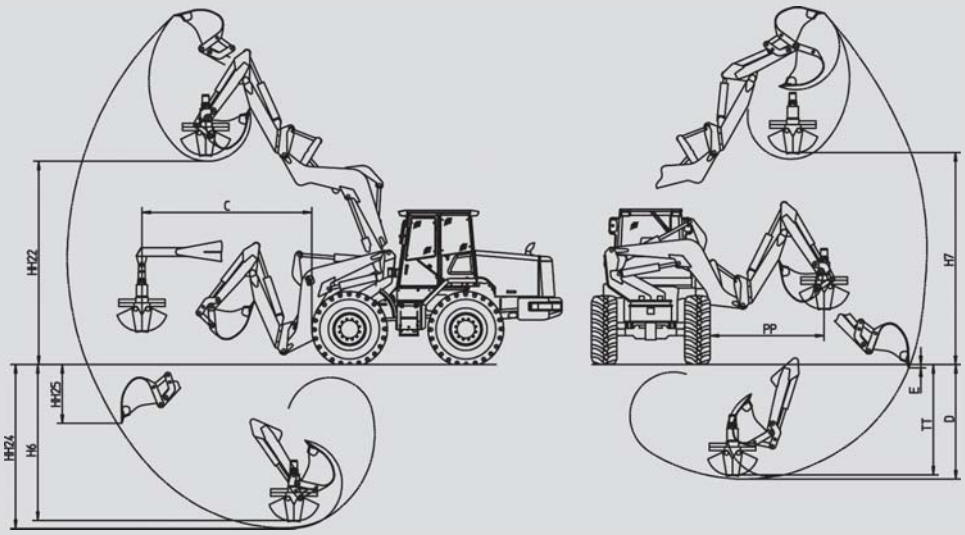

	Excavator	Grab	Excavator	Grab
	Cat. V		Cat. IV (Option)	
C	-	4065	-	3820
D	2650	-	2750	-
E	100	-	100	-
H6	-	3270	-	3350
H7	-	4100	-	3815
HH22	3900	-	3640	-
HH24	3420	-	3520	-
HH25	1420	-	1450	-
PP	-	3460	-	3370
TT	-	2500	-	2580

All data based on standard tires. All data are non-binding.
Changes are reserved without notice. The order confirmation is exclusively decisive.

https://truckmanualshub.com/

For decades we develop and produce high quality and innovative wheel loaders in Büdelsdorf in northern Germany. With our articulated loaders, four-wheel steered front loaders and four-wheel steered swing loaders, we are the world's only manufacturer to offer all steering concepts. Our four-wheel-steered swing loaders stand as the world's technologically most innovative wheel loaders.

Your Local Dealer

MECALAC

MECALAC BAUMASCHINEN GMBH · Am Friedrichsbrunnen 2 · D-24782 Büdelsdorf
Phone +49 (0) 43 31/3 51-319 · Fax +49 (0) 43 31/3 51-470 · info@mecalac.de · **www.mecalac.com**
A COMPANY OF GROUPE MECALAC S.A.

Order no. 231 33 373 · 3/2015