https://truckmanualshub.com/

28805-G01

JACOBSEN®
A Textron Company

OWNER'S MANUAL AND SERVICE GUIDE

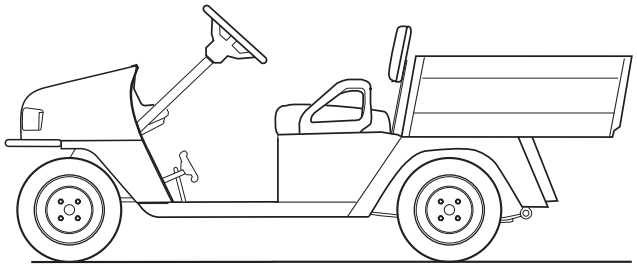

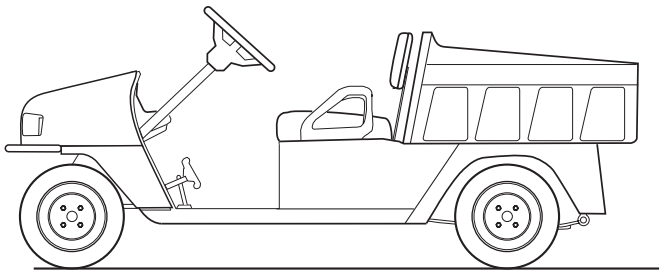

ELECTRIC POWERED UTILITY VEHICLES

ISSUED APRIL 2005

Downloaded from www.Manualslib.com manuals search engine

https://truckmanualshub.com/

SAFETY

Read and understand all labels located on the vehicle. For any questions on any of the information, contact a representative for clarification.

Always replace any damaged or missing labels.

On steep hills it is possible for vehicles to coast at greater than normal speeds encountered on a flat surface. To prevent loss of vehicle control and possible serious injury, speeds should be limited to no more than the maximum speed on level ground (See GENERAL SPECIFICATIONS). Limit speed by applying the service brake.

Catastrophic damage to the drive train components due to excessive speed may result from driving the vehicle above specified speed. Damage caused by excessive speed may cause a loss of vehicle control, is costly, is considered abuse and will not be covered under warranty.

If the vehicle is to be used in a commercial environment, signs similar to the ones illustrated should be used to warn of situations that could result in an unsafe condition.

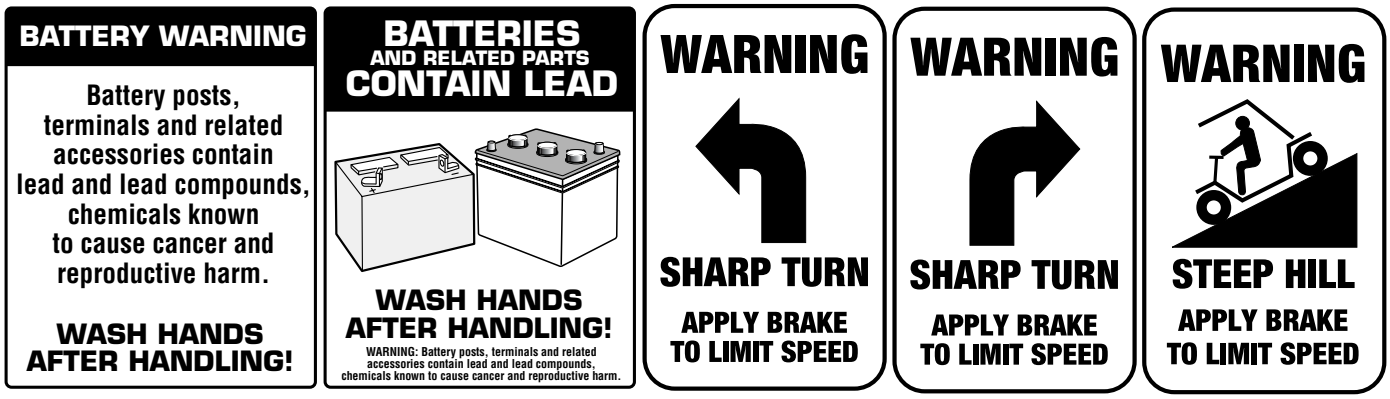

Be sure that this manual remains as part of the permanent service record should the vehicle be resold.

NOTES, CAUTIONS AND WARNINGS

Throughout this guide **NOTE, CAUTION** and **WARNING** will be used.

NOTE *A **NOTE** indicates a condition that should be observed.*

CAUTION **A CAUTION indicates a condition that may result in damage to the vehicle.**

⚠ WARNING ⚠ ***A WARNING indicates a hazardous condition that could result in severe injury or death.***

Please observe these **NOTES, CAUTIONS** and **WARNINGS;** be aware that servicing a vehicle requires mechanical skill and a regard for conditions that could be hazardous. Improper service or repair may damage the vehicle or render it unsafe.

⚠ WARNING ⚠ ***Battery posts, terminals and related accessories contain lead and lead compounds. Wash hands after handling.***

(NOTES, CAUTIONS AND WARNINGS CONTINUED ON INSIDE OF BACK COVER)

Downloaded from www.Manualslib.com manuals search engine

https://truckmanualshub.com/

OWNER'S MANUAL AND SERVICE GUIDE

ELECTRIC POWERED UTILITY VEHICLES

Hauler™ 800

Hauler™ 1000

Starting Model Year 2004

Jacobsen Turf, Commercial and Specialty Equipment reserves the right to make design changes without obligation to make these changes on units previously sold and the information contained in this manual is subject to change without notice.

Jacobsen Turf, Commercial and Specialty Equipment is not liable for errors in this manual or for incidental or consequential damages that result from the use of the material in this manual.

CUSTOMER SERVICE DEPARTMENT IN USA PHOTO CONTACT US

NORTH AMERICA:

TECHNICAL ASSISTANCE & WARRANTY PHONE: 1-800-774-3946, FAX: 1-800-448-8124

SERVICE PARTS PHONE: 1-888-GET-EZGO (1-888-438-3946), FAX: 1-800-752-6175

INTERNATIONAL:

PHONE: 010-1-706-798-4311, FAX: 010-1-706-771-4609

JACOBSEN TURF, COMMERCIAL AND SPECIALTY EQUIPMENT 1451 MARVIN GRIFFIN ROAD, AUGUSTA,

Downloaded from www.Manualslib.com manuals search engine

https://truckmanualshub.com/

GENERAL INFORMATION

This vehicle has been designed and manufactured in the United States of America (USA) as a 'World Vehicle'. The Standards and Specifications listed in the following text originate in the USA unless otherwise indicated.

The use of non Original Equipment Manufacturer (OEM) approved parts may void the warranty.

Overfilling batteries may void the warranty.

BATTERY PROLONGED STORAGE

All batteries will self discharge over time. The rate of self discharge varies depending on the ambient temperature and the age and condition of the batteries.

A fully charged battery will not freeze in winter temperatures unless the temperature falls below -75° F (-60° C).

For winter storage, the batteries must be clean, fully charged and disconnected from any source of electrical drain. The battery charger and the controller are both sources of electrical drain. Unplug the battery charger DC plug from the vehicle receptacle.

As with all electric vehicles, the batteries must be checked and recharged as required or at a minimum of 30 day intervals.

Downloaded from www.Manualslib.com manuals search engine

https://truckmanualshub.com/

TABLE OF CONTENTS

SAFETY INFORMATION ..... **VII**

BEFORE INITIAL USE **1**
Fig. 1 Initial Service Chart *1*
PORTABLE CHARGER INSTALLATION 1
Fig. 2 Proper Charger Installation *2*
Fig. 3 Charger Receptacle Location *2*
On-board Charger 2
Fig. 4 On-board Charger *2*

CONTROLS AND INDICATORS **2**
KEY/LIGHT SWITCH 3
Fig. 5 Key/Light Switch & State of Charge Meter *3*
DIRECTION SELECTOR 3
Fig. 6 Direction Selector Types *3*
STATE OF CHARGE METER 3
HOUR METER 3
ACCELERATOR PEDAL 3
Fig. 7 Accelerator and Brake Controls *3*
COMBINATION SERVICE BRAKE AND PARK BRAKE PEDAL 4
OPTIONAL FRONT DISC BRAKES 4
RUN - TOW/MAINTENANCE SWITCH (PDS VEHICLES ONLY) 4
Fig. 8 Run-Tow/Maintenance Switch *4*
HORN 4
Fig. 9 Horn Button *4*
ELECTRIC LIFT SWITCH 5

STEEL LOADBED **5**
MANUAL LIFT BED OPERATION 5
Fig. 10 Manual Bed Latch *5*
Fig. 11 Bed Prop Rod *5*
ELECTRIC LIFT BED OPERATION 5
Fig. 12 Electric Lift Switch *6*

PLASTIC LOADBED **6**
MANUAL LIFT BED OPERATION 6
Fig. 13 Manual Bed Latch *6*
TAILGATE OPERATION 6
Fig. 14 Gas Strut *7*
ELECTRIC LIFT BED OPERATION 7
Fig. 15 Electric Lift Switch *7*

OPERATING THE VEHICLE **7**
PRECISION DRIVE SYSTEM™ 8
Performance Options 8
Fig. 16 Performance Options *8*
Regenerative Braking 8
Pedal-Up Braking 8
Walk-Away Feature 9
Anti-Roll Back Feature 9
Anti-Stall Feature 9
High Pedal Disable Feature 9
Default Mode Feature 9
STARTING AND DRIVING 9
STARTING VEHICLE ON A HILL 9
COASTING 10
LABELS AND PICTOGRAMS 10
SUN TOP AND WINDSHIELD 10
TOWING A TRAILER 10

VEHICLE CLEANING AND CARE **10**
VEHICLE CLEANING 10

Downloaded from www.Manualslib.com manuals search engine

https://truckmanualshub.com/

TABLE OF CONTENTS

REPAIR **11**
LIFTING THE VEHICLE 12
Fig. 17 Lifting the Vehicle *12*
WHEELS AND TIRES 11
Tire Repair 11
Wheel Installation 12
Fig. 18 Wheel Installation *13*
LIGHT BULB REPLACEMENT 12
Fig. 19 Headlight and Turn Signal Bulb Replacement *13*
Fig. 20 Tail and Brake Light Bulb Replacement *13*
FUSE REPLACEMENT 13
TRANSPORTING VEHICLE **14**
TOWING 14
HAULING 14
SERVICE AND MAINTENANCE **14**
SERIAL NUMBER PLATE LOCATION 15
PERIODIC SERVICE SCHEDULE 16
Fig. 21 Periodic Service Schedule *16*
TIRE INSPECTION 17
BRAKES 17
Periodic Brake Test for Mechanical Brakes 17
Fig. 22 Typical Brake Performance Test *18*
HYDRAULIC FRONT DISC BRAKES 18
REAR AXLE 18
Checking the Lubricant Level 18
LUBRICATION 18
Fig. 23 Add, Check and Drain Axle Lubricant *19*
Fig. 24 Lubrication Points *19*
PDS SYSTEM TEST 19
HARDWARE 19
Fig. 26 Torque Specifications and Bolt Grades *20*
CAPACITIES AND REPLACEMENT PARTS 19
Fig. 25 Capacities and Replacement Parts *19*
BATTERIES AND CHARGING **19**
SAFETY 19
BATTERY 20
BATTERY MAINTENANCE 21
At Each Charging Cycle 21
Monthly 21
Electrolyte Level and Water 21
Fig. 27 Correct Electrolyte Level *21*
Fig. 28 Water Purity Table *22*
Fig. 29 Automatic Watering Gun *22*
Battery Cleaning 22
Battery Replacement 22
Fig. 30 Preparing Acid Neutralizing Solution *23*
Fig. 31 36V Battery Connections *23*
Fig. 32 48V Battery Connections *23*
Prolonged Storage 23
Fig. 33 Freezing Point of Electrolyte *24*
BATTERY CHARGING 24
AC Voltage 24
TROUBLESHOOTING 24
Hydrometer 25
Fig. 34 Hydrometer *25*
Using A Hydrometer 25
Fig. 35 Hydrometer Temperature Correction *26*
GENERAL SPECIFICATIONS **27**
JACOBSEN 800 28

Downloaded from www.Manualslib.com manuals search engine

https://truckmanualshub.com/

TABLE OF CONTENTS

JACOBSEN 1000 29
LIMITED WARRANTIES 33
DOMESTIC WARRANTY 34
INTERNATIONAL WARRANTY 35
DECLARATION OF CONFORMITY (EUROPE ONLY) 37
LABELS AND PICTOGRAMS ..... Appendix A

Downloaded from www.Manualslib.com manuals search engine

https://truckmanualshub.com/

TABLE OF CONTENTS

Downloaded from www.Manualslib.com manuals search engine

https://truckmanualshub.com/

SAFETY INFORMATION

This manual has been designed to assist the owner-operator in maintaining the vehicle in accordance with procedures developed by the manufacturer. Adherence to these procedures and troubleshooting tips will ensure the best possible service from the product. To reduce the chance of personal injury and/or property damage, the following instructions must be carefully observed:

CAUTION

Certain replacement parts can be used independently and/or in combination with other accessories to modify an E-Z-GO-manufactured vehicle to permit the vehicle to operate at or in excess of 20mph. When an E-Z-GO-manufactured vehicle is modified an any way by the Distributor, Dealer or customer to operate at or in excess of 20mph, UNDER FERERAL LAW the modified product will be a Low Speed Vehicle (LSV) subject to the strictures and requirements of Federal Motor Vehicle Safety Standard 571.500. In these instances, pursuant to Federal law the Distributor or Dealer MUST equip the product with headlights, rear lights, turn signals, seat belts, top, horn and all other modifications for LSV's mandated in FMVSS 571.500, and affix a Vehicle Identification Number to the product in accordance with the requirements of FMVSS 571.565. Pursuant to FMVSS 571.500, and in accordance with the State laws applicable in the places of sale and use of the product, the Distributor, Dealer or customer modifying the vehicle also will be the Final Vehicle Manufacturer for the LSV, and required to title or register the vehicle as mandated by State law.

E-Z-GO will NOT approve Distributor, Dealer or customer modifications converting E-Z-GO products into LSV's.

The Company, in addition, recommends that all E-Z-GO products sold as personal transportation vehicles BE OPERATED ONLY BY PERSONS WITH VALID DRIVERS LICENSES, AND IN ACCORDANCE WITH APPLICABLE STATE REQUIREMENTS. This restriction is important to the SAFE USE AND OPERATION of the product. On behalf of E-Z-GO, I am directing that E-Z-GO Branch personnel, Distributors and Dealers advise all customers to adhere to this SAFETY RESTRICTION, in connection with the use of all products, new and used, the Distributor or Dealer has reason to believe may be operated in personal transportation applications.

Information on FMVSS 571.500 can be obtained at Title 49 of the Code of Federal Regulations, section 571.500, or through the Internet at the website for the U.S. Department of Transportation - at Dockets and Regulation, then to Title 49 of the Code of Federal Regulations (Transportation).

GENERAL

Many vehicles are used for a variety of tasks beyond the original intended use of the vehicle; therefore it is impossible to anticipate and warn against every possible combination of circumstances that may occur. No warnings can take the place of good common sense and prudent driving practices.

Good common sense and prudent driving practices do more to prevent accidents and injury than all of the warnings and instructions combined. The manufacturer strongly suggests that the owner-operator read this entire manual paying particular attention to the CAUTIONS and WARNINGS contained therein. It is further recommended that employees and other operators be encouraged to do the same.

If you have any questions, contact your closest representative or write to the address on the back cover of this publication, Attention: Product Service Department.

The manufacturer reserves the right to make design changes without obligation to make these changes on units previously sold and the information contained in this manual is subject to change without notice.

The manufacturer is not liable for errors in this manual or for incidental or consequential damages that result from the use of the material in this manual.

Downloaded from www.Manualslib.com manuals search engine

https://truckmanualshub.com/

SAFETY INFORMATION

This vehicle conforms to the current applicable standard for safety and performance requirements.

These vehicles are designed and manufactured for off-road use. They do not conform to Federal Motor Vehicle Safety Standards and are not equipped for operation on public streets. Some communities may permit these vehicles to be operated on their streets on a limited basis and in accordance with local ordinances.

With electric powered vehicles, be sure that all electrical accessories are grounded directly to the battery (-) post. **Never use the chassis or body as a ground connection.**

Refer to GENERAL SPECIFICATIONS for vehicle seating capacity.

Never modify the vehicle in any way that will alter the weight distribution of the vehicle, decrease its stability or increase the speed beyond the factory specification. Such modifications can cause serious personal injury or death. Modifications that increase the speed and/or weight of the vehicle will extend the stopping distance and may reduce the stability of the vehicle. Do not make any such modifications or changes. The manufacturer prohibits and disclaims responsibility for any such modifications or any other alteration which would adversely affect the safety of the vehicle.

Vehicles that are capable of higher speeds must limit their speed to no more than the speed of other vehicles when used in a golf course environment. Additionally, speed should be further moderated by the environmental conditions, terrain and common sense.

GENERAL OPERATION

Always use the vehicle in a responsible manner and maintain the vehicle in safe operating condition.

Always read and observe all warnings and operation instruction labels affixed to the vehicle.

Always follow all safety rules established in the area where the vehicle is being operated.

Always reduce speed to compensate for poor terrain or conditions.

Always apply service brake to control speed on steep grades.

Always maintain adequate distance between vehicles.

Always reduce speed in wet areas.

Always use extreme caution when approaching sharp or blind turns.

Always use extreme caution when driving over loose terrain.

Always use extreme caution in areas where pedestrians are present.

MAINTENANCE

Always maintain your vehicle in accordance with the manufacturer’s periodic service schedule.

Always ensure that mechanics performing repairs are trained and qualified to do so.

Always follow the manufacturer’s directions if you do any maintenance on your vehicle. Be sure to disable the vehicle before performing any maintenance. Disabling includes removing the key from the key switch and removal of a battery wire.

Always insulate any tools used within the battery area in order to prevent sparks or battery explosion caused by shorting the battery terminals or associated wiring. Remove the batteries or cover exposed terminals with an insulating material.

Downloaded from www.Manualslib.com manuals search engine

https://truckmanualshub.com/

SAFETY INFORMATION

Always check the polarity of each battery terminal and be sure to rewire the batteries correctly.

Always use specified replacement parts. Never use replacement parts of lesser quality.

Always use recommended tools.

Always determine that tools and procedures not specifically recommended by the manufacturer will not compromise the safety of personnel nor jeopardize the safe operation of the vehicle.

Always support the vehicle using wheel chocks and safety stands. Never get under a vehicle that is supported by a jack. Lift the vehicle in accordance with the manufacturer's instructions.

Never attempt to maintain a vehicle in an area where exposed flame is present or persons are smoking.

Always be aware that a vehicle that is not performing as designed is a potential hazard and must not be operated.

The manufacturer cannot anticipate all situations, therefore people attempting to maintain or repair the vehicle must have the skill and experience to recognize and protect themselves from potential situations that could result in severe personal injury or death and damage to the vehicle. Use extreme caution and, if unsure as to the potential for injury, refer the repair or maintenance to a qualified mechanic.

Always test drive the vehicle after any repairs or maintenance. All tests must be conducted in a safe area that is free of both vehicular and pedestrian traffic.

Always replace damaged or missing warning, caution or information labels.

Always keep complete records of the maintenance history of the vehicle.

VENTILATION

Hydrogen gas is generated in the charging cycle of batteries and is explosive in concentrations as low as 4%. Because hydrogen gas is lighter than air, it will collect in the ceiling of buildings necessitating proper ventilation. Five air exchanges per hour is considered the minimum requirement.

Never charge a vehicle in an area that is subject to flame or spark. Pay particular attention to natural gas or propane gas water heaters and furnaces.

Always use a dedicated circuit for each battery charger. Do not permit other appliances to be plugged into the receptacle when the charger is in operation.

Chargers must be installed and operated in accordance with charger manufacturers recommendations or applicable electrical code (whichever is higher).

Downloaded from www.Manualslib.com manuals search engine

https://truckmanualshub.com/

SAFETY INFORMATION

Notes:

Downloaded from www.Manualslib.com manuals search engine

https://truckmanualshub.com/

SAFETY INFORMATION

Read all of manual to become thoroughly familiar with this vehicle. Pay particular attention to all Notes, Cautions and Warnings

GENERAL

The following text is provided as recommended by part II of ASME/ANSI B56.8-1988. The manufacturer strongly endorses the contents of this specification.

PART II
FOR THE USER

4 GENERAL SAFETY PRACTICES

4.1 Introduction

4.1.1 Like other machines, carriers can cause injury if improperly used or maintained. Part II contains broad safety practices applicable to carrier operations. Before operation, the user shall establish such additional specific safety practices as may reasonably be required for safe operation.

4.2 Stability

4.2.1 Experience has shown that this vehicle, which complies with this standard, is stable when properly operated and when operated in accordance with specific safety rules and practices established to meet actual operating terrain and conditions. However, improper operation, faulty maintenance, or poor housekeeping may contribute to a condition of instability and defeat the purpose of the standard. Some of the conditions which may affect stability are failure of the user to follow safety practices; also, ground and floor conditions, grade, speed, loading, the operation of the carrier with improper loads, battery weight, dynamic and static forces, and the judgement exercised by the carrier operator.

(a) The user shall train carrier operators to adhere strictly to the operating instructions stated in this Standard.

(b) The user shall survey specific operating conditions and environment, and establish and train carrier operators to comply with additional, specific safety practices.

4.3 Nameplates, Markings, Capacity, and Modifications

4.3.1 The user shall maintain in a legible condition all nameplates, warnings, and instructions which are supplied by the manufacturer.

4.3.2 The user shall not perform any modification or addition which affects capacity or safe operation, or make any change not in accordance with the owner's manual without the manufacturer's prior written authorization. Where authorized modifications have been made, the user shall ensure that capacity, operation, warning, and maintenance instruction plates, tags, or decals are changed accordingly.

4.3.3 As required under paras. 4.3.1 or 4.3.2, the manufacturer shall be contacted to secure new nameplates, warnings, or instructions which shall then be affixed in their proper place on the carrier.

4.4 Fuel Handling and Storage

4.4.1 The user shall supervise the storage and handling of liquid fuels (when used) to be certain that it is in accordance with appropriate paragraphs of ANSI/NFPA 505 and ANSI/NFPA 30.

4.4.2 Storage and handling of liquefied petroleum gas fuels shall be in accordance with appropriate paragraphs of ANSI/NFPA 505 and ANSI/NFPA 58. If such storage or handling is not in compliance with these standards, the user shall prevent the carrier from being used until such storage and handling is in compliance with these standards.

4.5 Changing and Charging Storage Batteries for Electric Personnel and Burden Carriers

4.5.1 The user shall require battery changing and charging facilities and procedures to be in accordance with appropriate paragraphs of ANSI/NFPA 505.

4.5.2 The user shall periodically inspect facilities and review procedures to be certain that appropriate paragraphs of ANSI/NFPA 505, are strictly complied with, and shall familiarize carrier operators with it.

4.6 Hazardous Locations

4.6.1 The user shall determine the hazard classification of the particular atmosphere or location in which the carrier is to be used in accordance with ANSI/NFPA 505.

4.6.2 The user shall permit in hazardous areas only those carriers approved and of the type required by ANSI/NFPA 505.

4.7 Lighting for Operating Areas

4.7.1 The user, in accordance with his responsibility to survey the environment and operating conditions, shall determine if the carrier requires lights and, if so, shall equip the carrier with appropriate lights in accordance with the manufacturer's recommendations.

Downloaded from www.Manualslib.com manuals search engine

https://truckmanualshub.com/

4.8 Control of Noxious Gases and Fumes

4.8.1 When equipment powered by internal combustion engines is used in enclosed areas, the atmosphere shall be maintained within limits specified in the American Conference of Governmental Industrial Hygienists publication, "Threshold Limit Values for Chemical Substances and Physical Agents in the Workroom Environment". This shall be accomplished by ventilation provided by the user, and/or the installation, use, and proper maintenance of emission control equipment recommended or provided by the manufacturer of the equipment.

4.9 Warning Device(s)

4.9.1 The user shall make periodic inspections of the carrier to be certain that the sound-producing and/or visual device(s) are maintained in good operating condition.

4.9.2 The user shall determine if operating conditions require the carrier to be equipped with additional sound-producing and/or visual devices and be responsible for providing and maintaining such devices, in accordance with the manufacturer's recommendations.

5 OPERATING SAFETY RULES AND PRACTICES

5.1 Personnel and Burden Carrier Operator Qualifications

5.1.1 Only persons who are trained in the proper operation of the carrier shall be authorized to operate the carrier. Operators shall be qualified as to visual, auditory, physical, and mental ability to safely operate the equipment according to Section 5 and all other applicable parts of this Standard.

5.2 Personnel and Burden Carrier Operators' Training

5.2.1 The user shall conduct an operators' training program.

5.2.2 Successful completion of the operators' training program shall be required by the user before operation of the carrier. The program shall be presented in its entirety to all new operators and not condensed for those claiming previous experience.

5.2.3 The user should include in the operators' training program the following:

(a) instructional material provided by the manufacturer;

(b) emphasis on safety of passengers, material loads, carrier operator, and other employees;

(c) general safety rules contained within this Standard and the additional specific rules determined by the user in accordance with this Standard, and why they were formulated;

(d) introduction of equipment, control locations and functions, and explanation of how they work when used properly and when used improperly, and surface conditions, grade, and other conditions of the environment in which the carrier is to be operated;

(e) operational performance tests and evaluations during, and at completion of, the program.

5.3 Personnel and Burden Carrier Operator Responsibility

5.3.1 Operators shall abide by the following safety rules and practices in paras. 5.4, 5.5, 5.6, and 5.7.

5.4 General

5.4.1 Safeguard the pedestrians at all times. Do not drive carrier in a manner that would endanger anyone.

5.4.2 Riding on the carrier by persons other than the operator is authorized only on personnel seat(s) provided by the manufacturer. All parts of the body shall remain within the plan view outline of the carrier.

5.4.3 When a carrier is to be left unattended, stop carrier, apply the parking brake, stop the engine or turn off power, turn off the control or ignition circuit, and remove the key if provided. Block the wheels if machine is on an incline.

5.4.4 A carrier is considered unattended when the operator is 25 ft. (7.6 m) or more from the carrier which remains in his view, or whenever the operator leaves the carrier and it is not within his view. When the operator is dismounted and within 25 ft. (7.6 m) of the carrier still in his view, he still must have controls neutralized, and the parking brake(s) set to prevent movement.

5.4.5 Maintain a safe distance from the edge of ramps and platforms.

5.4.6 Use only approved carriers in hazardous locations, as defined in the appropriate safety standards.

5.4.7 Report all accidents involving personnel, building structures, and equipment.

5.4.8 Operators shall not add to, or modify, the carrier.

Downloaded from www.Manualslib.com manuals search engine

https://truckmanualshub.com/

5.4.9 Carriers shall not be parked or left unattended such that they block or obstruct fire aisles, access to stairways, or fire equipment.

5.5 Traveling

5.5.1 Observe all traffic regulations, including authorized speed limits. Under normal traffic conditions keep to the right. Maintain a safe distance, based on speed of travel, from a carrier or vehicle ahead; and keep the carrier under control at all times.

5.5.2 Yield the right of way to pedestrians, ambulances, fire trucks, or other carriers or vehicles in emergency situations.

5.5.3 Do not pass another carrier or vehicle traveling in the same direction at intersections, blind spots, or at other dangerous locations.

5.5.4 Keep a clear view of the path of travel, observe other traffic and personnel, and maintain a safe clearance.

5.5.5 Slow down or stop, as conditions dictate, and activate the sound-producing warning device at cross aisles and when visibility is obstructed at other locations.

5.5.6 Ascend or descend grades slowly.

5.5.7 Avoid turning, if possible, and use extreme caution on grades, ramps, or inclines; normally travel straight up and down.

5.5.8 Under all travel conditions the carrier shall be operated at a speed that will permit it to be brought to a stop in a safe manner.

5.5.9 Make starts, stops, turns, or direction reversals in a smooth manner so as not to shift the load, endanger passengers, or overturn the carrier.

5.5.10 Do not indulge in dangerous activities, such as stunt driving or horseplay.

5.5.11 Slow down when approaching, or on, wet or slippery surfaces.

5.5.12 Do not drive carrier onto any elevator unless specifically authorized to do so. Approach elevators slowly, and then enter squarely after the elevator car is properly leveled. Once on the elevator, neutralize the controls, shut off power, and set parking brakes. It is advisable that all other personnel leave the elevator before a carrier is allowed to enter or exit.

5.5.13 Avoid running over loose objects, potholes, and bumps.

5.5.14 To negotiate turns, reduce speed to improve stability, then turn hand steering wheel or tiller in a smooth, sweeping motion.

5.6 Loading

5.6.1 Handle only stable and safely arranged loads. When handling off-center loads which cannot be centered, operate with extra caution.

5.6.2 Handle only loads within the capacity of the carrier as specified on the nameplate.

5.6.3 Handle loads exceeding the dimensions used to establish carrier capacity with extra caution. Stability and maneuverability may be adversely affected.

5.7 Operator Care of Personnel and Burden Carriers

5.7.1 At the beginning of each shift during which the carrier will be used, the operator shall check the carrier condition and inspect the tires, warning devices, lights, battery(s), speed and directional controllers, brakes, and steering mechanism. If the carrier is found to be in need of repair, or in any way unsafe, the matter shall be reported immediately to the designated authority and the carrier shall not be operated until it has been restored to safe operating condition.

5.7.2 If during operation the carrier becomes unsafe in any way, the matter shall be reported immediately to the designated authority, and the carrier shall not be operated until it has been restored to safe operating condition.

5.7.3 Do not make repairs or adjustments unless specifically authorized to do so.

5.7.4 The engine shall be stopped and the operator shall leave the carrier while refueling.

5.7.5 Spillage of oil or fuel shall be carefully and completely absorbed or evaporated and fuel tank cap replaced before starting engine.

5.7.6 Do not operate a carrier with a leak in the fuel system or battery(s).

5.7.7 Do not use open flames for checking electrolyte level in storage battery(s) or liquid level in fuel tanks.

6 MAINTENANCE PRACTICES

6.1 Introduction

6.1.1 Carriers may become hazardous if maintenance is neglected. Therefore, maintenance facilities, trained personnel, and procedures shall be provided. Such facilities may be on or off the premises.

Downloaded from www.Manualslib.com manuals search engine

https://truckmanualshub.com/

6.2 Maintenance Procedures

6.2.1 Maintenance and inspection of all carriers shall be performed in conformance with the manufacturer's recommendations and the following practices.

(a) A scheduled preventive maintenance, lubrication, and inspection system shall be followed.

(b) Only qualified and authorized personnel shall be permitted to maintain, repair, adjust, and inspect carriers.

(c) Before undertaking maintenance or repair, follow the manufacturer's recommendations for immobilizing the carrier.

(d) Block chassis before working underneath it.

(e) Before disconnecting any part of the engine fuel system of a gasoline or diesel powered carrier with gravity feed fuel systems, be sure shutoff valve is closed, and run engine until fuel system is depleted and engine stops running.

(f) Before disconnecting any part of the engine fuel system of LP gas powered carriers, close the LP gas cylinder valve and run the engine until fuel in the system is depleted and the engine stops running.

(g) Operation to check performance of the carrier shall be conducted in an authorized area where safe clearance exists.

(h) Before commencing operation of the carrier, follow the manufacturer's instructions and recommended procedures.

(i) Avoid fire hazards and have fire protection equipment present in the work area. Do not use an open flame to check level or leakage of fuel, battery electrolyte, or coolant. Do not use open pans of fuel or flammable cleaning fluids for cleaning parts.

(j) Properly ventilate the work area.

(k) Handle LP gas cylinders with care. Physical damage, such as dents, scrapes, or gouges, may dangerously weaken the tank and make it unsafe for use.

(l) Brakes, steering mechanisms, speed and directional control mechanisms, warning devices, lights, governors, guards, and safety devices shall be inspected regularly and maintained in a safe operating condition.

(m) Special carriers or devices designed and approved for hazardous area operation shall be inspected to ensure that maintenance preserves the original approved safe operating features.

(n) Fuel systems shall be checked for leaks and condition of parts. If a leak is found, action shall be taken to prevent the use of the carrier until the leak has been eliminated.

(o) The carrier manufacturer's capacity, operation, and maintenance instruction plates, tags, or decals shall be maintained in legible condition.

(p) Batteries, motors, speed and directional controllers, limit switches, protective devices, electrical conductors, and connections shall be inspected and maintained in conformance with manufacturers recommended procedures.

(q) Carriers shall be kept in a clean condition to minimize fire hazards and facilitate detection of loose or defective parts.

(r) Modifications and additions which affect capacity and safe machine operation shall not be performed by the customer or user without manufacturer's prior written authorization; where authorized modifications have been made, the user shall ensure that capacity, operation, warning, and maintenance instruction plates, tags, or decals are changed accordingly.

(s) Care shall be taken to ensure that all replacement parts are interchangeable with the original parts and of a quality at least equal to that provided in the original equipment.

END OF ASME/ANSI B56.8-1988 TEXT

Downloaded from www.Manualslib.com manuals search engine

https://truckmanualshub.com/

OPERATION AND SERVICE INFORMATION

Read all of manual to become thoroughly familiar with this vehicle. Pay particular attention to all Notes, Cautions and Warnings

Thank you for purchasing this vehicle. Before driving the vehicle, we ask you to spend some time reading this Owner's Manual and Service Guide. This guide contains the information that will assist you in maintaining this highly reliable vehicle. Some illustrations may show items that are optional for your vehicle. This guide covers the operation of several vehicles; therefore, some pictorial views may not represent your vehicle. Physical differences in controls will be illustrated.

This vehicle has been designed and manufactured as a 'World Vehicle'. Some countries have individual requirements to comply with their specifications; therefore, some sections may not apply in your country.

Most of the service procedures in this guide can be accomplished using common automotive hand tools. Contact your service representative on servicing the vehicle in accordance with the Periodic Service Schedule.

Service Parts Manuals and Technician's Repair and Service Manuals are available from a local Distributor, an authorized Branch or the Service Parts Department. When ordering parts or requesting information for your vehicle, provide vehicle model, serial number and manufacture date code.

BEFORE INITIAL USE

Read, understand and follow the safety label on the instrument panel. Be sure you understand how to operate the vehicle, its equipment and how to use it safely. Maintaining good performance depends to a large extent on the operator.

WARNING ***Hydrogen gas is generated as a natural part of the lead acid battery charging process. A 4% concentration of hydrogen gas is explosive and could cause severe injury or death. Charging must take place in an area that is adequately ventilated (minimum of 5 air exchanges per hour).***

To reduce the chance of battery explosion that could result in severe injury or death, never smoke around or charge batteries in an area that has open flame or electrical equipment that could cause an electrical arc.

Hydrogen gas is generated in the charging cycle of batteries and is explosive in concentrations as low as 4%. Because hydrogen gas is lighter than air, it will collect in the ceiling of buildings necessitating proper ventilation. Five air exchanges per hour is considered the minimum requirement.

Never charge a vehicle in an area that is subject to flame or spark. Pay particular attention to natural gas or propane water heaters and furnaces.

Before a new vehicle is put into operation, the items shown in the INITIAL SERVICE CHART must be performed (Ref. Fig. 1 on page 1).

Vehicle batteries must be fully charged before initial use.

Check for correct tire inflation. See GENERAL SPECIFICATIONS.

Determine and record braking distance required to stop vehicle for future brake performance tests.

Remove the protective clear plastic, that protect the seat bottom and back rest during shipping, before placing the vehicle in service.

ITEM	SERVICE OPERATION
Batteries	Charge batteries
Seats	Remove protective plastic covering
Brakes	Check operation and adjust if necessary
	Establish acceptable stopping distance (mechanical brakes only)
	Check hydraulic brake fluid level if equipped
Tires	Check air pressure (see SPECIFICATIONS)
Portable Charger	Remove from vehicle and properly mount

Ref Isc 5

Fig. 1 Initial Service Chart

PORTABLE CHARGER INSTALLATION

WARNING ***To reduce the possibility of overheating that may cause serious damage to the charger and create the potential for fire, do not block or obstruct the airways. Portable chargers must be mounted on a platform above the ground or in such a manner as to permit the maximum air flow underneath and around the charger.***

Portable chargers are shipped with the vehicle. Prior to vehicle or charger operation, chargers must be removed and mounted on a platform or wall above the ground to permit maximum air flow around and underneath the charger. If the charger is operated in an outdoor location,

Downloaded from www.Manualslib.com manuals search engine

https://truckmanualshub.com/

OPERATION AND SERVICE INFORMATION

Read all of manual to become thoroughly familiar with this vehicle. Pay particular attention to all Notes, Cautions and Warnings

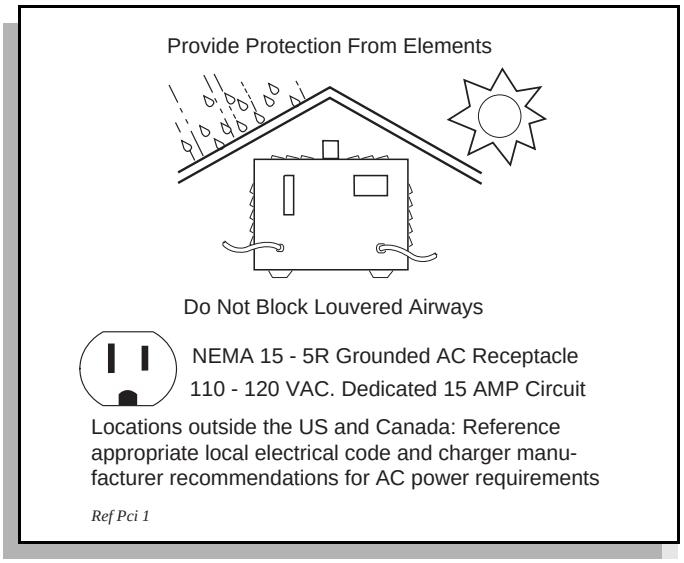

Fig. 2 Proper Charger Installation

rain and sun protection must be provided (Ref. Fig. 2 on page 2). A dedicated circuit is required for the charger. Refer to the charger manual for appropriate circuit protection. The charger may remain plugged in to the AC outlet. To charge the vehicle, refer to the instruction labels on the charger. Insert the polarized DC plug completely into the vehicle receptacle (Ref. Fig. 3 on page 2).

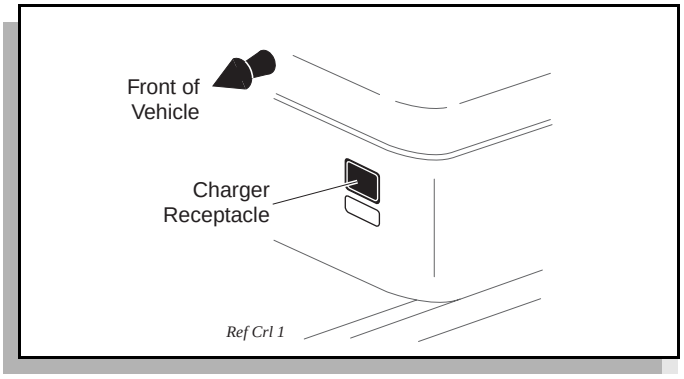

Fig. 3 Charger Receptacle Location

The charger will automatically start a few seconds after plug insertion. The charger will automatically stop when batteries are fully charged and the DC plug can be removed to permit use of the vehicle.

NOTE *Looping the DC cord through the steering wheel when charging, serves as a good reminder to store the cord out of the way when finished with charging. The DC plug can be damaged by driving over or catching the cord on the vehicle when driving away.*

WARNING ***To reduce the possibility of a physical hazard that could result in an electrical shock or electrocution, be sure that the charger plug is not damaged and is inserted into a grounded receptacle.***

The power (AC) cord is equipped with a grounded plug, do not attempt to pull out, cut or bend the ground post.

The charging (DC) cord is equipped with a polarized connector which fits into a matching receptacle on the vehicle.

The power (AC) cord is equipped with a grounded plug. Do not attempt to remove, cut or bend the ground post.

On-board Charger

The on-board charger is located under the seat on the driver side of the vehicle (Ref. Fig. 4 on page 2). It is wired directly to the batteries, only requiring it be plugged into a dedicated 15 amp AC outlet to be operational.

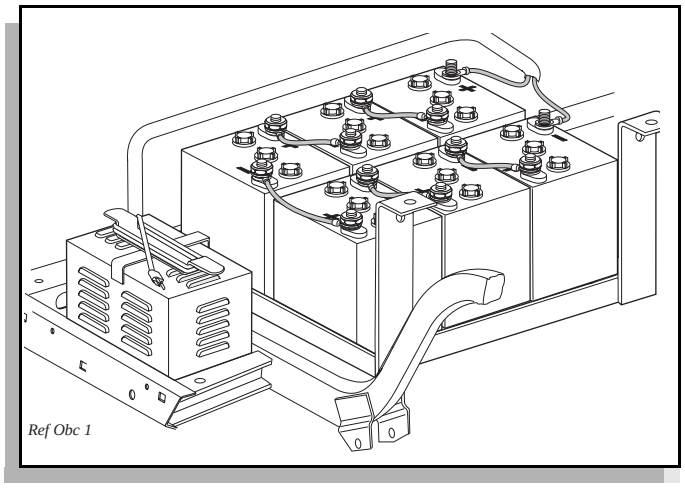

Fig. 4 On-board Charger

When charging cycle is complete, replace cord around charger handle in area provided.

NOTE *If vehicle is to be charged with a non E-Z-GO charger, refer to the instructions supplied with the charger.*

CONTROLS AND INDICATORS

Vehicle controls and indicators consist of:

- key/light switch
- direction selector
- state of charge meter

Downloaded from www.Manualslib.com manuals search engine

https://truckmanualshub.com/

- hour meter
- accelerator pedal
- combination service and park brake pedal
- horn

KEY/LIGHT SWITCH

Located on the dash panel, this switch enables the basic electrical system of the vehicle to be turned on and off by turning the key. To prevent inadvertent operation of the vehicle when left unattended, the key should be turned to the 'OFF' position and removed (Ref. Fig. 5 on page 3).

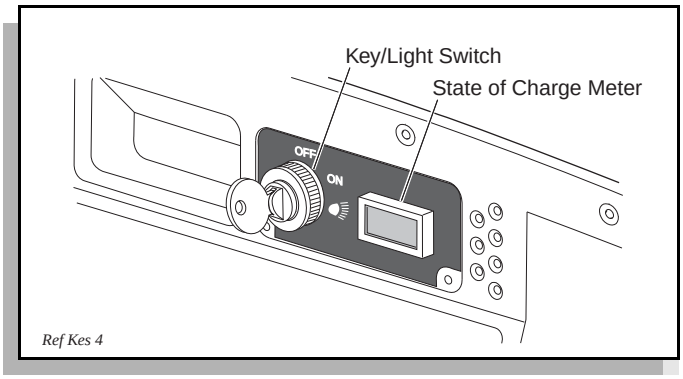

Fig. 5 Key/Light Switch & State of Charge Meter

If the vehicle is equipped with lights, the key switch has a position to operate them, indicated by the light icon.

NOTE *If the vehicle is equipped with manufacturer installed custom accessories, some accessories remain operational with the key switch in the 'OFF' position.*

DIRECTION SELECTOR

WARNING ***To prevent loss of control, do not move Precision Drive System (PDS) vehicle direction selector while the vehicle is in motion. Moving the selector will result in a sudden slowing of the vehicle and the beeping of a warning device.***

CAUTION **To reduce the possibility of component damage, the vehicle must be completely stopped before moving the direction selector.**

On PDS models, if the direction selector is shifted before the vehicle comes to a complete stop, a warning beeper will activate.

Located on the seat support panel or the dash panel, this lever or switch permits the selection of either 'F' (forward), 'R' (reverse) or neutral (the position between forward and reverse). Vehicle should be left in neutral when unattended (Ref. Fig. 6 on page 3).

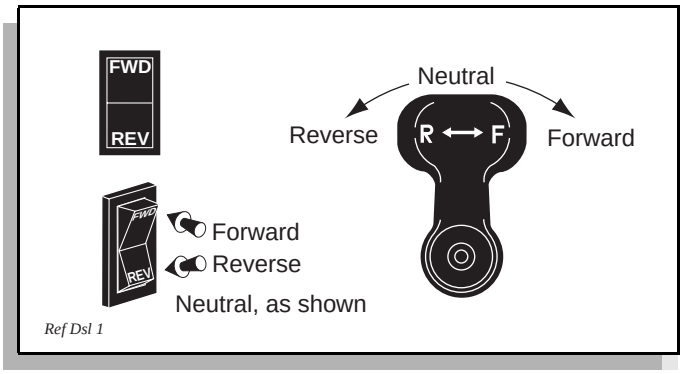

Fig. 6 Direction Selector Types

STATE OF CHARGE METER

Located in the dash, the state of charge meter indicates the amount of usable power in the batteries (Ref. Fig. 5 on page 3).

HOUR METER

The hour meter indicates total hours of operation.

ACCELERATOR PEDAL

WARNING ***Unintentional movement of the accelerator pedal will release the park brake and may cause the vehicle to move which could result in severe injury or death.***

With the key switch 'ON', depressing the accelerator pedal starts the motor. When the pedal is released, the motor will stop (Ref. Fig. 7 on page 3). To stop the vehicle more quickly, depress the service brake.

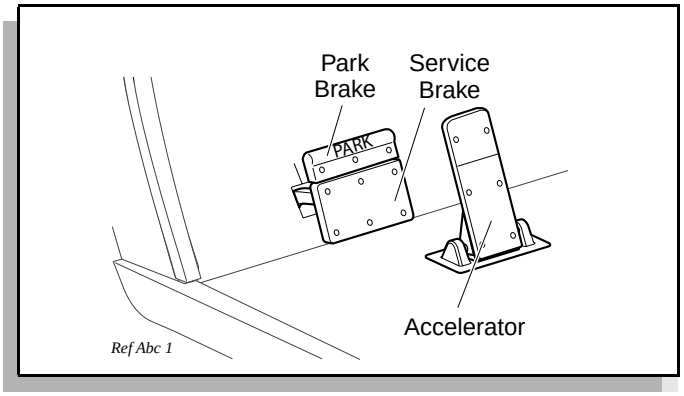

Fig. 7 Accelerator and Brake Controls

If key switch is 'ON' and park brake is set, depressing the accelerator inadvertently will release the park brake and will cause the vehicle to move which could cause severe injury or death.

Downloaded from www.Manualslib.com manuals search engine

https://truckmanualshub.com/

Depressing the accelerator pedal will release the park brake if it is engaged. This is a feature to assure the vehicle is not driven with the park brake engaged. Depressing the accelerator pedal is **not** the preferred method of releasing the park brake.

NOTE *Depressing the **lower section of the brake pedal** is the preferred method of releasing the park brake to assure the longest service life of brake components.*

COMBINATION SERVICE BRAKE AND PARK BRAKE PEDAL

The brake pedal incorporates a park brake feature (Ref. Fig. 7 on page 3). To engage, push down on the upper section of the pedal until it locks in place. The park brake will release when the service brake pedal is depressed. Use the lower section of the brake pedal to operate the service brake system.

OPTIONAL FRONT DISC BRAKES

The front disc brakes activate as the brake pedal reaches the 'park' or latch position. Depressing the brake pedal further will increase the effectiveness of the front brakes.

RUN - TOW/MAINTENANCE SWITCH (PDS VEHICLES ONLY)

WARNING ***To reduce the possibility of severe injury or death resulting from loss of vehicle control, consider the grade of the terrain the vehicle is on and set vehicle's park brake accordingly before switching the Run - Tow/Maintenance switch to the 'Tow/Maintenance' position. When in the 'Tow/Maintenance' position, the Anti-Roll Back and Walk-Away safety features of the PDS system no longer function.***

CAUTION **Before attempting to tow vehicle, move the Run-Tow/Maintenance switch to the 'Tow/Maintenance' position. Failure to do so will damage the controller or motor.**

Before disconnecting or connecting a battery, or any other wiring, move the Run-Tow/Maintenance switch to the 'Tow/Maintenance' position.

After connecting a battery, or any other wiring, wait a minimum of 30 seconds before moving the Run-Tow/Maintenance switch to the 'Run' position.

The PDS vehicle is equipped with a two position switch located under the passenger side of the seat on the controller environmental cover (Ref. Fig. 8 on page 4).

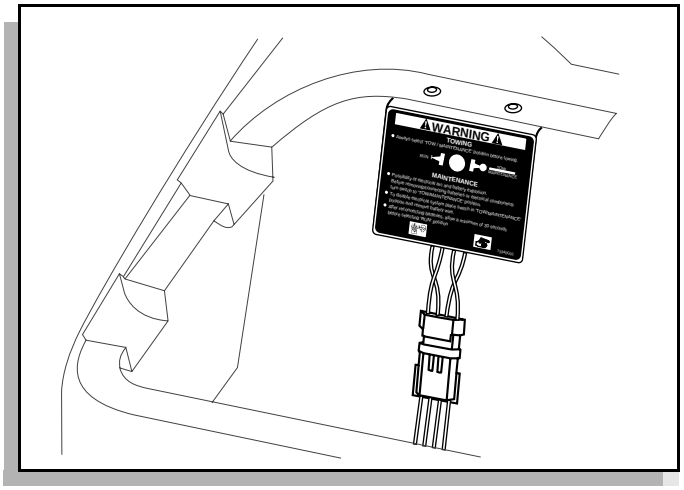

Fig. 8 Run-Tow/Maintenance Switch

With the switch in 'TOW/MAINTENANCE' position:

- the controller is deactivated
- the electronic braking system is deactivated which allows the vehicle to be towed or roll freely
- the warning beeper is deactivated

With the switch in 'RUN' position:

- the controller is activated
- the electronic braking system and warning beeper features are activated

NOTE *PDS vehicles operate only in the 'RUN' position.*

The PDS is a low power consumption unit but it will drain the vehicle batteries over a period of time. If the vehicle is to be stored for a prolonged period of time, the PDS should be disconnected from the batteries. See 'Prolonged Storage' on page 23.

HORN

The horn is operated by pushing the horn button located on the floor to the left of the brake pedal (Ref. Fig. 9 on page 4).

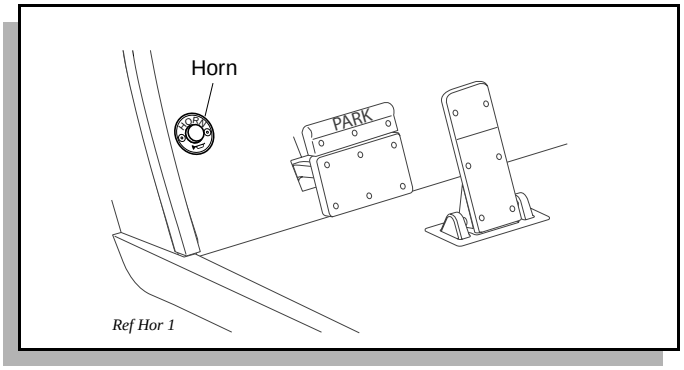

Fig. 9 Horn Button

Downloaded from www.Manualslib.com manuals search engine

https://truckmanualshub.com/

ELECTRIC LIFT SWITCH

The optional electric lift switch is located on the seat panel (Ref. Fig. 15 on page 7). See 'Electric Lift Bed Operation' for operating information.

STEEL LOADBED

WARNING ***To reduce the possibility of severe injury or death, read, understand and follow the Danger label affixed to the front of the loadbed.***

The manual lift bed is the standard bed for the vehicle. The bed may be equipped with an optional electric lift switch.

A loadbed warning label is affixed to the front of the bed. See Appendix A. For safe operation of the vehicle, this label must be understood. See the loadbed warning label for maximum load. The load must be positioned in the bed as far forward as possible, distributed in such a way that its center of gravity must not be higher than height noted on label, and secured. Failure to follow these instructions may result in severe injury, damage the vehicle and/or cause the vehicle to tip over. Use extra care when operating loaded vehicle.

Do not permit any one to ride in the bed.

Do not drive the vehicle with the loadbed raised or with the tailgate unsupported.

When using the electric lift, be sure to avoid backing up to the edge of a drop off, such as a loading dock or ravine. A misjudgment of distance or an unstable surface could result in the vehicle falling backwards.

Before operating loadbed, check to ensure no one is behind the vehicle.

WARNING ***Never fill a gas can in the bed of a vehicle. Static discharge could ignite gasoline vapor and cause an explosion.***

Always place a gas can on the ground before filling. Never fill a gas can in the bed of the vehicle. Static electricity is built up during the fueling process and could discharge causing the gasoline vapor to ignite.

MANUAL LIFT BED OPERATION

WARNING ***Exercise caution while operating the manual lift. Ensure the bed prop is in one of the slots before releasing. Severe injury could result if bed is released and traps fingers or other body parts.***

To lift the manual lift bed, pull back on the latch release handle immediately behind the driver seat (Ref. Fig. 10 on page 5). Raise the bed using the handle on the side of the bed.

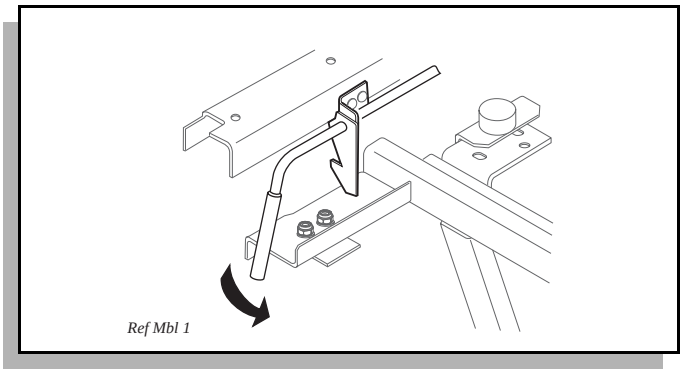

Fig. 10 Manual Bed Latch

Lift loadbed to a secure position and check stability before releasing bed handle (Ref. Fig. 11 on page 5).

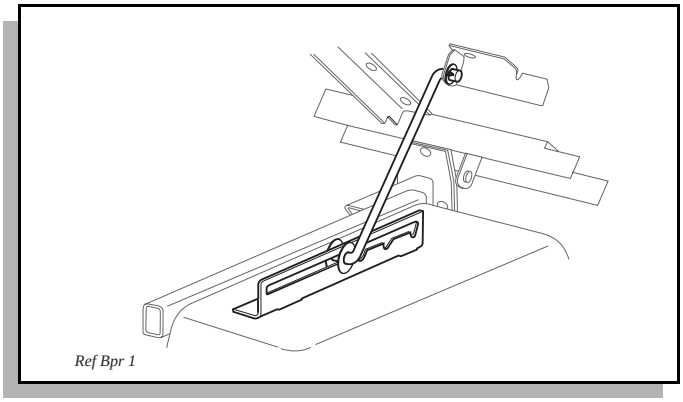

Fig. 11 Bed Prop Rod

ELECTRIC LIFT BED OPERATION

WARNING ***Exercise caution while operating the electric lift bed to ensure clothing is not snagged during lifting or lowering procedure. Severe injury could result if bed is lowered and traps fingers or other body parts.***

The electric lift toggle switch is located on the driver's side of the front seat panel (Ref. Fig. 12 on page 6). Move the toggle switch upward to raise the dump bed and downward to lower the dump bed.

Downloaded from www.Manualslib.com manuals search engine

https://truckmanualshub.com/

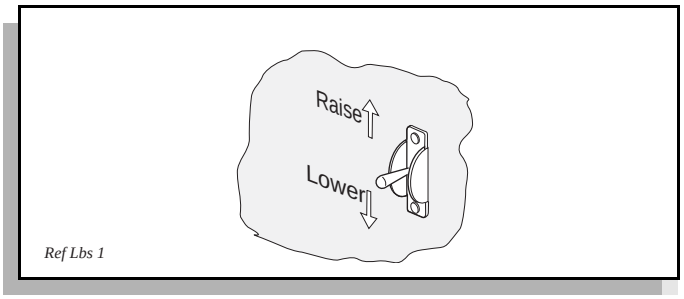

Fig. 12 Electric Lift Switch

PLASTIC LOADBED

The manual lift bed is the standard bed for the vehicle. The bed may be equipped with an optional electric lift switch.

WARNING ***Failure to follow these instructions may result in personal injury, damage the vehicle and/or cause the vehicle to tip over. Operate the vehicle with awareness of the load. Read, understand and follow the Danger label affixed to the front of the loadbed.***

Do not permit anyone to ride in the bed.

Before operating, check to ensure no one is behind the vehicle.

A loadbed warning label is affixed to the inside front of the bed (see Appendix A). This label must be understood and observed at all times for safe operation of the vehicle. See the loadbed warning label for maximum load. The load must be positioned in the bed as far forward as possible, distributed in such a way that its center of gravity must not be higher than height noted on label, and securely fastened down. Failure to follow these instructions may result in severe personal injury, damage the vehicle and/or cause the vehicle to tip over. Operate the vehicle with awareness of the load.

Do not permit anyone to ride in the bed.

Do not drive the vehicle with the loadbed raised or with the tailgate unsupported.

When using the electric lift, be sure to avoid backing up to the edge of a drop off, such as a loading dock or ravine. A misjudgment of distance or an unstable surface could result in the vehicle falling backwards.

Before operating, check to ensure no one is behind the vehicle.

WARNING ***Never fill a gas can in the bed of a vehicle. Static discharge could ignite gasoline vapor and cause an explosion.***

Always place a gas can on the ground before filling. Never fill a gas can in the bed of the vehicle. Static electricity is built up during the fueling process and could discharge causing the gasoline vapor to ignite.

MANUAL LIFT BED OPERATION

WARNING ***Exercise caution while operating the manual lift bed to ensure the bed is not released during lifting or lowering procedure. Severe injury could result if bed is released and traps fingers or other body parts.***

To lift the manual lift bed, pull back on the latch release handle immediately behind the driver seat (Ref. Fig. 13 on page 6). Raise the bed using the handle on the side of the bed.

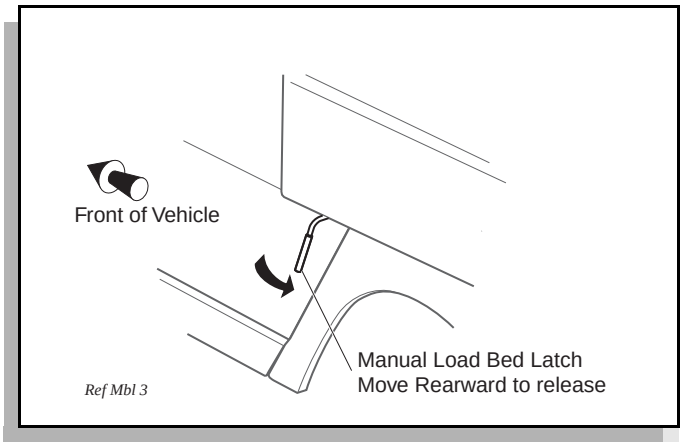

Fig. 13 Manual Bed Latch

The gas strut will assist in raising the empty loadbed and will keep the bed raised (Ref. Fig. 14 on page 7).

NOTE *Over time, the gas strut may allow the loadbed to slowly lower. If this condition is evident, replacement of gas strut is required.*

To lower the manual lift bed, grasp the bed handle and lower the bed to the rest position. **Be sure hands are not trapped by the bed.**

TAILGATE OPERATION

To open the tailgate, lift tailgate straight up with a sharp upward pull to lift out of the closed position and pivot out for open position. To remove the tailgate, remove the

Downloaded from www.Manualslib.com manuals search engine

https://truckmanualshub.com/

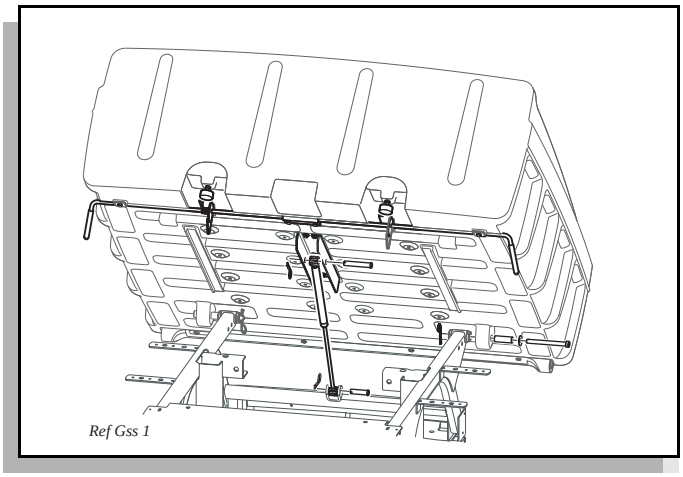

Fig. 14 Gas Strut

side cables from the loadbed and open tailgate until it is straight down, move tailgate panel straight up to remove from pins and remove from the loadbed. Reassemble in reverse order.

ELECTRIC LIFT BED OPERATION

WARNING ***Exercise caution while operating the electric lift bed to ensure clothing is not snagged during lifting or lowering procedure. Severe injury could result if bed is lowered and traps fingers or other body parts.***

The electric lift toggle switch is located on the driver side of the front seat panel (Ref. Fig. 15 on page 7). Move the toggle switch upward to raise the dump bed and downward to lower the dump bed.

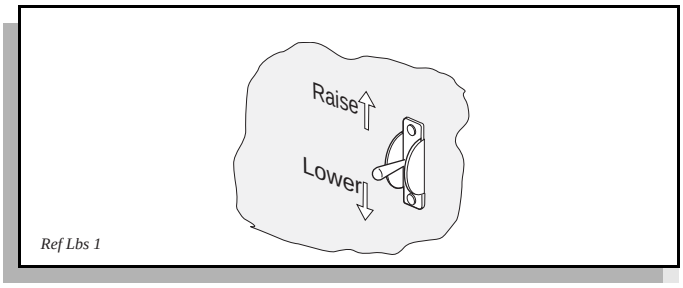

Fig. 15 Electric Lift Switch

OPERATING THE VEHICLE

CAUTION **Improper use of the vehicle or the lack of proper maintenance may result in damage or decreased performance.**

Read and understand the following warnings before attempting to operate the vehicle.

WARNING ***To reduce the possibility of severe injury or death resulting from loss of vehicle control, the following warnings must be observed:***

When driving vehicle, consider the terrain, traffic conditions and the environmental factors which effect the terrain and the ability to control the vehicle.

Use extra care and reduced speed when driving on poor surfaces, such as loose dirt, wet grass, gravel, etc.

Stay in designated areas and avoid extremely rough terrain.

Maintain a safe speed when driving down hill. Use service brake to control speed when traveling down an incline. A sudden stop or change of direction may result in loss of control.

To prevent loss of control, do not move the direction selector of a PDS vehicle while the vehicle is in motion. Moving the selector will result in a sudden slowing of the vehicle and the beeping of a warning device.

Slow down before and during turns. All turns should be made at reduced speed.

Never drive vehicle up, down, or across an incline that exceeds 14° (25% grade).

WARNING ***To reduce the possibility of severe injury or death resulting from improper vehicle operation, the following warnings must be observed:***

Refer to GENERAL SPECIFICATIONS for seating capacity.

Depressing accelerator pedal will release foot operated park brake and may cause inadvertent vehicle movement. Turn the key to the 'OFF' position whenever the vehicle is parked.

To prevent inadvertent movement when the vehicle is to be left unattended, engage the park brake, move direction selector to neutral position, turn key to 'OFF' position and remove key.

Make sure that the direction selector is in correct position before attempting to start the vehicle.

Downloaded from www.Manualslib.com manuals search engine

https://truckmanualshub.com/

Always bring the vehicle to a complete stop before shifting the direction selector.

Do not take vehicle out of 'gear' while in motion (coast).

Check the area behind the vehicle before operating in reverse.

All occupants must be seated. Keep entire body inside vehicle and hold on while vehicle is in motion

PRECISION DRIVE SYSTEM™

Precision Drive System™ (PDS) vehicles are operated in one of four modes or "performance options". All options have standard features that control, protect and diagnose the vehicle.

NOTE *PDS vehicles operate only when the Run - Tow/Maintenance switch is in the 'RUN' position. (Ref. Fig. 8 on page 4)*

Performance Options

The options are defined as follows:

Performance Option	Top Speed	Pedal-Up Braking Strength
1. No Plug	13.5 mph (22 kph)	Heavy
2. Blue Plug	13.5 mph (22 kph)	Mild
3. Yellow Plug	15 mph (24 kph)	Heavy
4. Red Plug	15 mph (24 kph)	Mild

Fig. 16 Performance Options

1. The No Plug performance option: The vehicle's top speed is sensed and regulated directly by the controller and the pedal-up braking is at the strongest level.
2. The Blue Plug performance option: The vehicle's top speed is sensed and regulated directly by the controller and the pedal-up braking feel is milder.
3. The Yellow Plug performance option: The vehicle's top speed is sensed and regulated directly by the controller and the pedal-up braking is at the strongest level.
4. The Red Plug performance option: The vehicle's top speed is sensed and regulated directly by the controller and the pedal-up braking feel is milder.

The vehicle performance option can be determined by placing the vehicle in diagnostic mode. See Technician's Repair and Service Manual. The number of beeps heard immediately after entering diagnostic mode corresponds to the above option numbers.

Regenerative Braking

WARNING ***To prevent the possibility of loss of control that could cause severe injury or death, use service brake to control speed. The PDS system is not a substitute for the service brake.***

PDS models are equipped with a regenerative motor control system.

Example: If all of the following events occur...

a) the vehicle is being driven down a slope
b) the vehicle attempts to exceed the specified top speed with the accelerator pedal depressed **or** released

the regenerative braking will limit the speed of the vehicle to the specified top speed (the warning beeper will **not** sound). When the regenerative braking system is activated by this sequence of events, the motor generates power which is returned to the batteries.

If the operator attempts to override the regenerative braking feature by moving the direction selector or key switch to another position, the warning beeper will sound and the vehicle will brake **rapidly** until it reaches the speed of approximately 2 mph (3 kph).

Pedal-Up Braking

Pedal-up braking is regenerative braking that occurs when the accelerator pedal is released while the vehicle is moving between 8 mph (13 kph) and the vehicle's top speed.

Example: If all of the following events occur...

a) the vehicle is being driven down a slope
b) the accelerator pedal is released for more than one second

the pedal-up braking will slow the vehicle (the warning beeper will **not** sound) until either the vehicle speed is reduced to 8 mph (13 kph), at which it freely coasts between 8 and 3 mph (5 kph), or the accelerator pedal is applied. When pedal-up braking system is activated by this sequence of events, the motor generates power which is returned to the batteries.

Downloaded from www.Manualslib.com manuals search engine

https://truckmanualshub.com/

Walk-Away Feature

Walk-Away limits vehicle movement without driver input, slowing the vehicle to 2 mph (3 kph) and sounding an audible alarm (reverse beeper).

Example: If all of the following events occur...

a) the vehicle has been stopped for more than 1.5 seconds
b) the accelerator pedal has been released for more than one second
c) the vehicle begins to roll above 2 mph (3 kph)

the electronic braking will limit speed to approximately 2 mph (3 kph) and the warning beeper will sound. When the accelerator pedal is depressed, the electronic braking and warning beeper will be overridden and normal vehicle operation resumes. Any unusual situation sensed by the PDS system will cause a similar response. The system functions in all key switch positions.

Anti-Roll Back Feature

Anti-Roll Back, like Walk-Away, limits backward motion of the vehicle down an incline to less than 2 mph (3 kph). See 'Walk-Away Feature' above.

Anti-Stall Feature

Anti-Stall protection prevents motor damage from stalling the vehicle against an object or on a hill.

Example: If all of the following events occur...

a) the system senses that the accelerator pedal is depressed (power applied to motor)
b) the motor is stalled long enough that any more time may cause motor damage

the PDS system will momentarily interrupt power to the motor. This brief interruption will permit the vehicle to roll backwards slightly before again stopping in the stalled condition. This process will repeat itself periodically until the vehicle is moved from the stalled condition.

Example: If all of the following events occur...

a) the system senses that the accelerator pedal is depressed (power applied to motor)
b) the brake is engaged so as to prevent vehicle motion

the PDS system will sense a stalled motor condition and remove power from the motor. When the brake pedal is released, the vehicle will roll backwards slightly before power is returned to the motor.

High Pedal Disable Feature

High pedal disable prevents undesired acceleration if the direction selector lever is changed, or the key is turned on while the accelerator is depressed.

Default Mode Feature

In the unlikely event of certain electrical system failures, the PDS controller will default to a mode that will permit the vehicle to operate, but at a very reduced speed.

This feature allows the vehicle to be driven back to its storage facility where the problem can be diagnosed.

The controller can be put in diagnostic mode by the technician and the controller will report the failure mode.

STARTING AND DRIVING

WARNING ***To reduce the possibility of roll-back which could result in severe injury or vehicle damage, do not release the service brake until motor has started.***

Remove charger plug from vehicle receptacle and properly store cable prior to moving vehicle.

To operate vehicle:

- Apply the service brake, place the key in the key switch and turn it to the 'ON' position.
- Move the direction selector to the direction desired.
- Release the park brake by depressing the service brake pedal until the park brake releases.
- Slowly depress the accelerator pedal to start the motor. Release service brake when motor starts.
- When the accelerator pedal is released, the motor stops. To stop the vehicle more quickly, depress the **service brake pedal**.

NOTE *When the direction selector is in the reverse position, a warning signal will sound to indicate that the vehicle is ready to run in reverse.*

STARTING VEHICLE ON A HILL

WARNING ***To reduce the possibility of roll-back which could result in severe injury or vehicle damage, do not release the service brake until motor has started.***

Downloaded from www.Manualslib.com manuals search engine

https://truckmanualshub.com/

OPERATION AND SERVICE INFORMATION

Read all of manual to become thoroughly familiar with this vehicle. Pay particular attention to all Notes, Cautions and Warnings

CAUTION **Do not hold vehicle on hill by using accelerator and motor. Leaving motor in a stalled condition for more than 3 - 4 seconds will cause permanent damage to motor.**

To reduce the possibility of permanent damage to the drive system, it is important to prevent excessive roll-back when starting the vehicle on a hill.

If a non PDS vehicle is held on a hill using the accelerator pedal for more than 3 - 4 seconds (depending on the grade of hill), the commutator bars within the motor will become distorted and the motor will become unacceptably noisy.

Place left foot on service brake and release the park brake. Depress accelerator with right foot and release the service brake by lifting left foot.

COASTING

WARNING ***To reduce the possibility of severe injury or death from coasting at above recommended speeds, limit speed with service brake.***

Uncontrolled coasting does not occur with PDS model vehicles because the PDS controls the top speed of the vehicle while moving down hill. However, the PDS is not a substitute for the service brake which should be used to control the speed of the vehicle.

NOTE *Some PDS models are equipped with a feature (pedal-up braking) which slows the vehicle's speed when the accelerator pedal is released.*

On steep hills, it is possible for non-PDS vehicles to coast at faster than normal speeds that may be encountered on a flat surface. To prevent loss of vehicle control, speeds should be limited to no more than the maximum speed on level ground (see vehicle specification). Limit speed by releasing the accelerator and applying service brake. Severe damage to the drive train components due to excessive speed may result from driving the vehicle above specified speed. Damage caused by excessive speed may cause a loss of control, is costly, is considered abuse and will not be covered under warranty.

LABELS AND PICTOGRAMS

Vehicles may be labeled with pictograms as a method of conveying information or warnings. Appendix A illustrates and explains pictograms that may appear on the vehicle. Not all pictograms shown in Appendix A will be found on your vehicle.

SUN TOP AND WINDSHIELD

WARNING ***The sun top does not provide protection from roll over or falling objects.***

The windshield does not provide protection from tree limbs or flying objects.

The sun top and windshield provide some protection from the elements; however, they will not keep the operator and passenger dry in a downpour. This vehicle is not equipped with seat belts and the sun top has not been designed to provide roll over protection. In addition, the sun top does not protect against falling objects nor does the windshield protect against flying objects and tree limbs. Keep arms and legs inside of vehicle while it is moving.

TOWING A TRAILER

The vehicle may be equipped with a receiver that can be fitted with a standard 1 7/8" ball. The trailer and its load must not exceed 500 lbs (227 kg) and no more than 50 lbs (23 kg) tongue weight may be attached to the hitch. Remember that the overall capacity of the vehicle, operator, passenger, contents of loadbed and accessories must be reduced to compensate for the trailer and load.

The range of motion of the trailer is limited by the ball and hitch. The trailer should not be used on rough trails or over objects such as logs, large rocks, holes, etc.

Never install baskets or extensions using a hitch receiver. Such items will change the performance characteristics of vehicle and result in unsafe handling, possible roll over or vehicle damage.

VEHICLE CLEANING AND CARE

VEHICLE CLEANING

WARNING ***To reduce the possibility of severe injury or vehicle damage, read and understand all instructions supplied by manufacturer of pressure washer.***

CAUTION **When pressure washing exterior of vehicle, do not use pressure in excess of 700 psi (4825 Kpa). To reduce the possibility of cosmetic damage, do not use any abrasive or reactive solvents to clean plastic parts.**

Downloaded from www.Manualslib.com manuals search engine

https://truckmanualshub.com/

It is important that proper techniques and cleaning materials be used. Using excessive water pressure may cause severe injury to operator or bystander, damage to seals, plastics, seat material, body finish or electrical system. Do not use pressure in excess of 700 psi (4825 Kpa) to wash exterior of vehicle.

Clean windshield with lots of water and a clean cloth. Minor scratches may be removed using a commercial plastic polish or Plexus® plastic cleaner available from the service parts department.

Normal cleaning of vinyl seats and plastic or rubber trim requires the use of a mild soap solution applied with a sponge or soft brush and wipe with a damp cloth.

Removal of oil, tar, asphalt, shoe polish, etc. will require the use of a commercially available vinyl/rubber cleaner.

The painted surfaces of the vehicle provide attractive appearance and durable protection. Frequent washing with lukewarm or cold water and mild detergent is required to preserve the painted surfaces.

Occasional cleaning and waxing with non-abrasive products designed for 'clear coat' automotive finishes will enhance the appearance and durability of the painted surfaces.

Corrosive materials used as fertilizers or for dust control can collect on the underbody of the vehicle. These materials will cause corrosion of underbody parts unless flushed occasionally with plain water. Thoroughly clean any areas where mud or other debris can collect. Sediment packed in closed areas should be loosened to ease it's removal, taking care not to chip or otherwise damage paint.

REPAIR

LIFTING THE VEHICLE

Tool List	Qty. Required
Floor jack	1
Jack stands	4
Chocks	4

Some servicing operations may require the front wheels, the rear wheels, or the entire vehicle be raised.

WARNING ***To reduce the possibility of severe injury or death from a vehicle falling from a jack:***

Be sure the vehicle is on a firm and level surface.

Never get under a vehicle while it is supported by a jack.

Use jack stands and test the stability of the vehicle on the stands.

Always place chocks in front and behind the wheels not being raised.

Use extreme care since the vehicle is extremely unstable during the lifting process.

CAUTION **When lifting vehicle, position jacks and jack stands at the areas indicated only.**

To raise the entire vehicle, install chocks in front and behind each front wheel (Ref. Fig. 17 on page 12). Center the jack under the rear frame crossmember. Raise the vehicle enough to place a jack stand under the outer ends of the rear axle.

Lower the jack and test the stability of the vehicle on the two jack stands.

Place the jack at the center of the front axle. Raise the vehicle enough to place jack stands under the frame crossmember as indicated.

Lower the jack and test the stability of the vehicle on all four jack stands.

If only the front or rear of the vehicle is to be raised, place the chocks in front and behind each wheel not being raised to stabilize the vehicle.

Lower the vehicle by reversing the lifting sequence.

WHEELS AND TIRES

Tire Repair

Tool List	Qty. Required
Lug wrench, 3/4"	1
Impact socket, 3/4", 1/2" drive	1
Impact wrench, 1/2" drive	1
Torque wrench, 1/2" drive	1

WARNING ***A tire explosion can cause severe injury or death. Never exceed inflation pressure rating on tire sidewall.***

To reduce the possibility of tire explosion, pressurize tire with small amount of air applied intermittently to seat beads. Due to the low volume of the small tires, overinflation can occur in seconds. Never exceed the tire manufacturer's recommendation when seating a bead. Protect face and eyes from escaping air when removing valve

Downloaded from www.Manualslib.com manuals search engine

https://truckmanualshub.com/

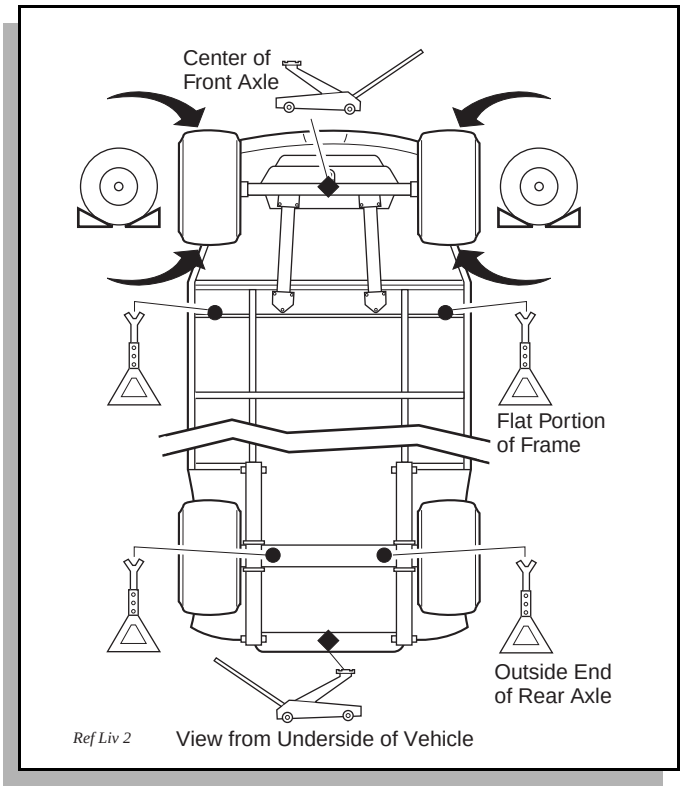

Fig. 17 Lifting the Vehicle

core.

To reduce the possibility of severe injury caused by a broken socket when removing wheels, use only sockets designed for impact wrench use.

Use caution when inflating tires. Overinflation could cause the tire to separate from the wheel or cause the tire to explode, either of which could cause severe injury.

Use caution when inflating tires. Due to the low volume of the small tires, overinflation can occur in seconds. Overinflation could cause the tire to separate from the wheel or cause the tire to explode.

Tire inflation should be determined by the condition of the terrain. See GENERAL SPECIFICATIONS section for recommended tire inflation pressure. For outdoor applications with major use on grassy areas, the following should be considered. On hard turf, it is desirable to have a **slightly** higher inflation pressure. On very soft turf, a lower pressure reduces the possibility of tires cutting into the turf. For vehicles being used on paved or hard surfaces, tire inflation pressure should be in the higher allowable range, but under no condition should inflation pressure be higher than recommended on tire sidewall. **All four tires** should have the same pressure for optimum handling characteristics. Be sure to install the valve dust cap after checking or inflating.

The vehicle is fitted with low pressure tubeless tires mounted on one piece rims; therefore, the most cost effective way to repair a puncture in the tread is to use a commercial tire plug.

NOTE *Tire plug tools and plugs are available at most automotive parts outlets and have the advantage of not requiring the tire be removed from the wheel.*

If the tire is flat, remove the wheel and inflate the tire to the maximum recommended pressure for the tire. Immerse the tire in water to locate the leak and mark with chalk. Insert tire plug in accordance with manufacturer's instructions.

WARNING ***To reduce the possibility of severe injury, be sure mounting/demounting machine is anchored to floor. Wear OSHA approved safety equipment when mounting/demounting tires.***

If the tire is to be removed or mounted, the tire changing machine manufacturer's recommendations must be followed in order to reduce possibility of severe injury.

Wheel Installation

CAUTION **To reduce the possibility of component damage, do not tighten lug nuts to more than 85 ft. lbs. (115 Nm) torque.**

NOTE *It is important to follow the 'cross sequence' pattern when installing lug nuts. This will assure even seating of the wheel against the hub.*

With the valve stem to the outside, mount the wheel onto the hub with lug nuts. Finger tighten lug nuts in a 'cross sequence' pattern (Ref. Fig. 18 on page 13). Tighten lug nuts to 50 - 85 ft. lbs. (70 - 115 Nm) torque in 20 ft. lbs. (30 Nm) increments following the 'cross sequence' pattern.

LIGHT BULB REPLACEMENT

CAUTION **To reduce the possibility of premature bulb failure, do not touch new bulbs with bare fingers. Use clean, dry tissue or paper towel to handle the glass portion of the bulb.**

For vehicles with headlights mounted in cowl, locate the two screws on backside of cowl that secure headlight (Ref. Fig. 19 on page 13). Remove screws, pull headlight out and disconnect wires. Connect wires to new head-

Downloaded from www.Manualslib.com manuals search engine

https://truckmanualshub.com/

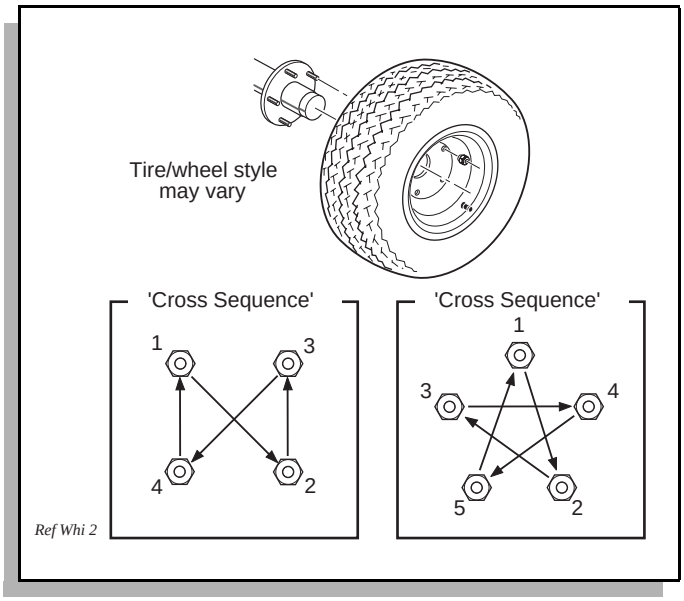

Fig. 18 Wheel Installation

light, install in cowl and secure with screws previously removed.

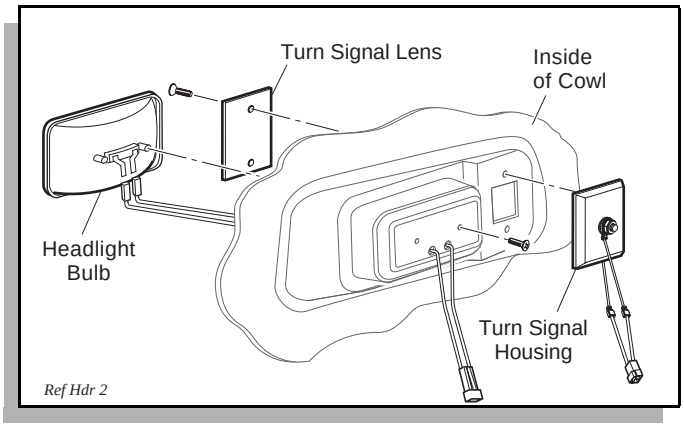

Fig. 19 Headlight and Turn Signal Bulb Replacement

To replace the turn signal light bulb, support turn signal housing from backside of cowl while removing two screws securing lens. Install new bulb and replace lens.

To replace the tail and brake light bulb, roll the rubber bezel from around the edge of the taillight and remove lens. Install replacement bulb and replace lens.

FUSE REPLACEMENT

To replace fuses, locate the fuse block under the driver side seat. Pull out old fuse and replace with a new automotive type fuse. Headlight and taillight bulbs and fuses are available from a local Distributor, an authorized Branch or the Service Parts Department.

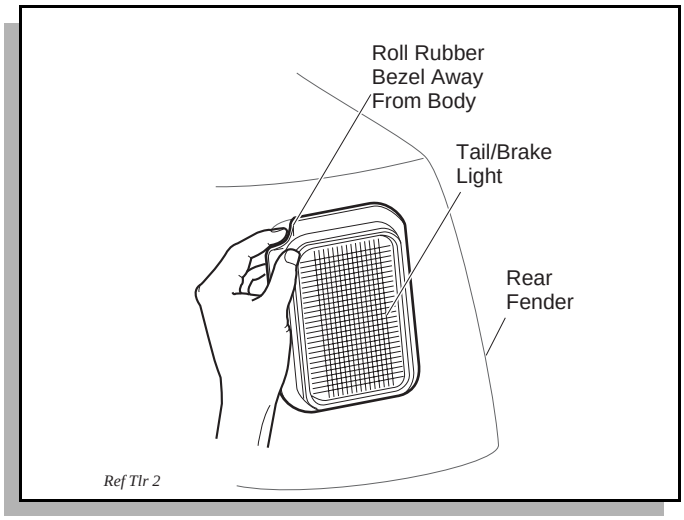

Fig. 20 Tail and Brake Light Bulb Replacement

Downloaded from www.Manualslib.com manuals search engine

https://truckmanualshub.com/

OPERATION AND SERVICE INFORMATION

Read all of manual to become thoroughly familiar with this vehicle. Pay particular attention to all Notes, Cautions and Warnings

TRANSPORTING VEHICLE

TOWING

WARNING ***This vehicle is not designed to be towed.***

It is recommended that the vehicle be moved by placing the entire vehicle on a trailer, flatbed truck or other suitable transport.

HAULING

WARNING ***To reduce the possibility of severe injury or death while transporting vehicle:***

Secure the vehicle and contents.

Never ride on vehicle being transported.

Always remove windshield before transporting.

Maximum speed with sun top installed is 50 mph (80 kph).

If the vehicle is to be transported at highway speeds, the sun top must be removed and the seat bottom secured. When transporting vehicle below highway speeds, check for tightness of hardware and cracks in sun top at mounting points. Always remove windshield when transporting. Always check that the vehicle and contents are adequately secured before transporting. The rated capacity of the trailer or truck must exceed the weight of the vehicle (see GENERAL SPECIFICATIONS for vehicle weight) and load plus 1000 lbs. (454 kg). Lock the park brake and secure the vehicle using ratchet tie downs.

SERVICE AND MAINTENANCE

WARNING ***To reduce the possibility of severe injury or death from improper servicing techniques:***

Do not attempt any type of servicing operations before reading and understanding all notes, cautions and warnings in this manual.

Any servicing requiring adjustments to be made to the powertrain while the motor is running must be made with both drive wheels raised and vehicle properly supported on jack stands.

To reduce the possibility of motor damage, never operate vehicle at full throttle for more than 4 - 5 seconds while vehicle is in a 'no load' condition.

Wear eye protection when working on the vehicle. Use extra care when working around batteries, or using solvents or compressed air.

To reduce the possibility of causing an electrical arc, which could result in a battery explosion, turn off all electrical loads from the battery before removing battery wires.

Wrap wrenches with vinyl tape to reduce the possibility of a dropped wrench 'shorting out' a battery, which could result in an explosion.

The electrolyte in a battery is an acid solution which can cause severe burns to the skin and eyes. Treat all electrolyte spills to the body and eyes with extended flushing with clear water. Contact a physician immediately.

Any electrolyte spills should be neutralized with a solution of 2 teaspoons (10 ml) sodium bicarbonate (baking soda) dissolved in 1 quart (1 liters) of water and flushed with water.

Aerosol containers of battery terminal protectant must be used with extreme care. Insulate metal container to reduce the possibility of can contacting battery terminals which could result in an explosion.

It is in the best interest of both vehicle owner and service technician, to carefully follow the procedures recommended in this manual. Preventative maintenance, applied at recommended intervals, is the best guarantee for keeping the vehicle both dependable and economical.

CAUTION **Before any electrical service is performed on PDS model vehicles, the 'Run-Tow/Maintenance' switch must be placed in the 'Tow/Maintenance' position.**

If a power wire (battery, motor or controller) is disconnected for any reason on the PDS model vehicle, the 'Run-Tow/Maintenance' switch must be left in the 'Tow/Maintenance' position for at least 30 seconds after the circuit is restored.

This vehicle will give years of satisfactory service, providing it receives regular maintenance. Refer to the Periodic Service Schedule for appropriate service intervals (Ref. Fig. 21 on page 16). Refer to Lubrication Points for appropriate lubrication locations (Ref. Fig. 24 on page 19).

Downloaded from www.Manualslib.com manuals search engine

https://truckmanualshub.com/

CAUTION **To prolong vehicle life, some maintenance items must be serviced more frequently on vehicles used under severe driving conditions such as extreme temperatures, extreme dust/debris conditions, frequent use with maximum load.**

To access powertrain for routine maintenance, lift or remove seat. For major repair, refer to appropriate Technician's Repair and Service Manual.

Some service procedures may require the vehicle to be lifted. Refer to LIFTING THE VEHICLE for proper lifting procedure and safety information.

SERIAL NUMBER PLATE LOCATION

The serial number and manufacture date code label are on the vehicle. One is placed on the body below the front, driver side of the seat. The other is located on the chassis under the seat.

Design changes take place on an ongoing basis. In order to obtain correct components for the vehicle, the manufacture date code, serial number and vehicle model must be provided when ordering service parts.

Downloaded from www.Manualslib.com manuals search engine

https://truckmanualshub.com/

OPERATION AND SERVICE INFORMATION

Read all of manual to become thoroughly familiar with this vehicle. Pay particular attention to all Notes, Cautions and Warnings

PERIODIC SERVICE SCHEDULE

✓ Check ♦ Clean, Adjust, etc. ▲ Replace

To perform service that is listed in this schedule but not described in this manual, contact a local Service Representative or see the Repair and Service Manual for this vehicle.

NOTE: *Some maintenance items must be serviced more frequently on vehicles used under severe driving conditions*

DAILY	
	BEFORE USE: ✓ Check service brake general operation ✓ Check park brake function ✓ Check warning device function in reverse ✓ Check tire condition ✓ Check overall vehicle condition ♦ Recharge batteries to full state of charge after each day's use ✓ Inspect charger connector and receptacle at each charge
WEEKLY	
TIRES	✓ Examine for cuts, excessive wear and pressure (See GENERAL SPECIFICATIONS)
WHEELS	✓ Check for bent rims, missing or loose lug nuts
MONTHLY - 20 HOURS (includes items listed in previous table & the following)	
BATTERIES	♦ Clean batteries & terminals. See BATTERY CLEANING. ✓ Check charge condition and all connections
WIRING	✓ Check all wiring for loose connections and broken/missing insulation
CHARGER / RECEPTACLE	♦ Clean connections, keep receptacles free of dirt and foreign matter
ACCELERATOR	✓ Check for smooth movement
SERVICE BRAKE (MECHANICAL BRAKES) (HYDRAULIC BRAKES)	✓ Conduct brake performance test
PARK BRAKE	✓ Check brake performance and adjust if required
DIRECTION SELECTOR	✓ Check attachment, tighten if required
STEERING ASSEMBLY	✓ Check for abnormal play, tightness of all hardware
TIE ROD/LINKAGES	✓ Check for excessive play, bent components or loose connections
PDS SYSTEM	✓ Check for PDS Controller braking force (see PDS MODEL VEHICLES in text) proper operation of system
REAR AXLE	✓ Check for leakage, add SAE 30 oil as required
QUARTERLY - 50 HOURS (includes items listed in previous tables & the following)	
FRONT AXLE	✓ Check for damage to axle and loose or missing hardware
FRONT SHOCK ABSORBERS	✓ Check for oil leakage and loose fasteners

Fig. 21 Periodic Service Schedule

Downloaded from www.Manualslib.com manuals search engine

https://truckmanualshub.com/

Read all of manual to become thoroughly familiar with this vehicle. Pay particular attention to all Notes, Cautions and Warnings

FRONT SPRINGS	✓ Check for loose hardware, cracks at attachments
FRONT WHEEL ALIGNMENT	✓ Check for unusual tire wear, align if required
PARK BRAKE	✓ Check for bent/binding linkage rod ✓ Check for damage or wear to latch arm or catch bracket ♦ Lubricate as required, use light oil. DO NOT LUBRICATE CABLES OR BRAKE LATCH
REAR SHOCK ABSORBERS	✓ Check for oil leakage, loose mounting hardware
HARDWARE AND FASTENERS	✓ Check for loose or missing hardware and components ♦ Tighten or replace missing hardware
SEMI-ANNUAL - 125 HOURS (includes items listed in previous tables & the following)	
DIRECTION SELECTOR	✓ Check for wear and smooth movement (lubricate shaft with light oil if required)
KING PINS	✓ Check for excessive play and tightness of retaining nuts
STEERING ASSEMBLY	✓ Check bellows and pinion seal for damage or grease leakage
RACK END BALL JOINT	♦ Lubricate, use wheel bearing grease
REAR AXLE	✓ Check for unusual noise and loose or missing mounting hardware
ANNUAL - 250-300 HOURS (includes items listed in previous tables & the following)	
FRONT WHEEL BEARINGS	✓ Check and adjust as required, see Technician's Repair and Service Manual
REAR AXLE	✓ Check lubricant, add lubricant (SAE 30 oil) as required
SERVICE BRAKES	♦ Clean and adjust, see Technician's Repair and Service Manual ✓ Check brake shoe linings, see Technician's Repair and Service Manual
(HYDRAULIC BRAKES)	✓ Check brake fluid

Fig. 21 Periodic Service Schedule

TIRE INSPECTION

Tire condition should be inspected per the Periodic Service Schedule (Ref. Fig. 21 on page 16). Inflation pressures should be checked when the tires are cool. Be sure to install the valve dust cap after checking or inflating.

BRAKES

⚠ WARNING ⚠ ***To reduce the possibility of severe injury or death, always evaluate pedal travel before operating a vehicle to verify some braking function is present.***

All driving brake tests must be done in a safe location with regard for the safety of all personnel.

NOTE *Over time, a subtle loss of performance may take place; therefore, it is important to establish the standard with a new vehicle.*

The Periodic Brake Performance Test should be performed regularly (Ref. Fig. 21 on page 16) as an evaluation of braking system performance. It is useful as a method of identifying subtle loss of performance over time.

Periodic Brake Test for Mechanical Brakes

The purpose of this test is to compare the braking performance of the vehicle to the braking performance of new or 'known to be good' vehicles or to an established acceptable stopping distance. Actual stopping distances will be influenced by weather conditions, terrain, road surface condition, actual vehicle weight (accessories installed) and vehicle speed. No specific braking distance can be reliably specified. The test is conducted by latching the parking brake to eliminate different pedal pressures and to include the affects of linkage misadjustment.

Downloaded from www.Manualslib.com manuals search engine

https://truckmanualshub.com/

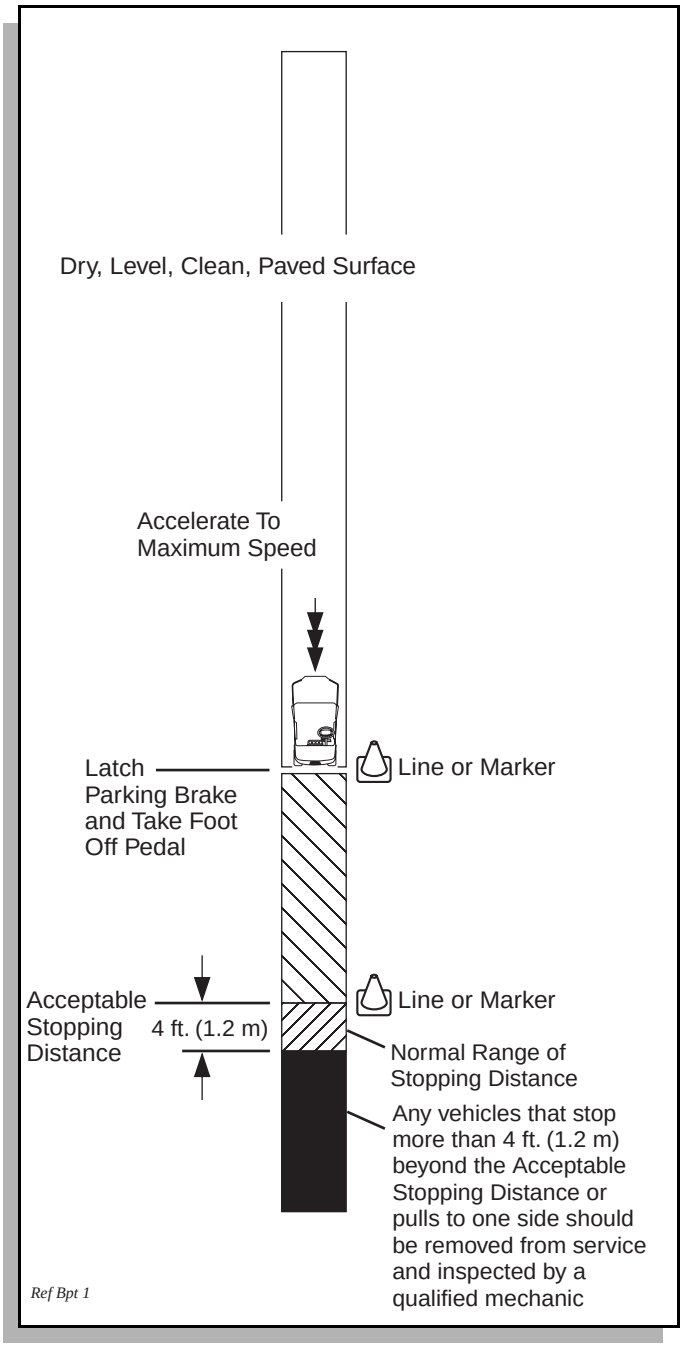

Fig. 22 Typical Brake Performance Test

Establish the acceptable stopping distance by testing a new or 'known to be good' vehicle and recording the stopping location or stopping distance. For fleets of vehicles, several vehicles should be tested when new and the range of stopping locations or distances recorded.

NOTE *Over time, a subtle loss of performance may take place; therefore, it is important to establish the standard with a new vehicle.*

Drive the vehicle at maximum speed on a flat, dry, clean, paved surface (Ref. Fig. 22 on page 18). Quickly depress the brake pedal to latch the parking brake at the line or marker in the test area and remove foot from pedal. The vehicle should stop aggressively. The wheel brakes may or may not lock. Observe the vehicle stopping location or measure the vehicle stopping distance from the point at which the brakes were latched. The vehicle should stop within the 'normal' range of stopping distances. If the vehicle stops more than 4 ft. (1.2 m) beyond the acceptable stopping distance or pulls to one side, the vehicle has failed the test and should be tested again.

If the vehicle fails the second test, it should **immediately** be removed from service. The vehicle **must** be inspected by a qualified mechanic who should refer to the TROUBLESHOOTING section in the Technicain's Repair and Service Manual.

HYDRAULIC FRONT DISC BRAKES

For vehicles equipped with hydraulic front disc brakes, check master cylinder fluid annually or if there is a decrease in braking effectiveness. Inspect components for damage or wear. It is unlikely that fluid will need to be added, unless there is a leak in the system. Raise the front of the vehicle (See raising the vehicle). Remove passenger side wheel/tire. Carefully wipe off dirt and debris from master cylinder and cap before opening. Remove the cap. Using a mechanics mirror, check to see that fluid is no more than 1/4" below top of reservoir. Add DOT 3 or 4 fluid as required.

REAR AXLE

The rear axle is provided with a lubricant level check/fill plug located on the bottom of the differential. Unless leakage is evident, the lubricant need only be replaced after five years.

Checking the Lubricant Level

Clean the area around the check/fill plug and remove plug. The correct lubricant level is just below the bottom of the threaded hole. If lubricant is low, add lubricant as required. Add lubricant slowly until lubricant starts to seep from the hole. Install the check/fill plug. In the event that the lubricant is to be replaced, vehicle must be elevated and the oil pan removed or the oil siphoned through the check/fill hole (Ref. Fig. 23 on page 19).

LUBRICATION

CAUTION **Do not use more than three (3) pumps of grease in any grease fitting at any**

Downloaded from www.Manualslib.com manuals search engine

https://truckmanualshub.com/

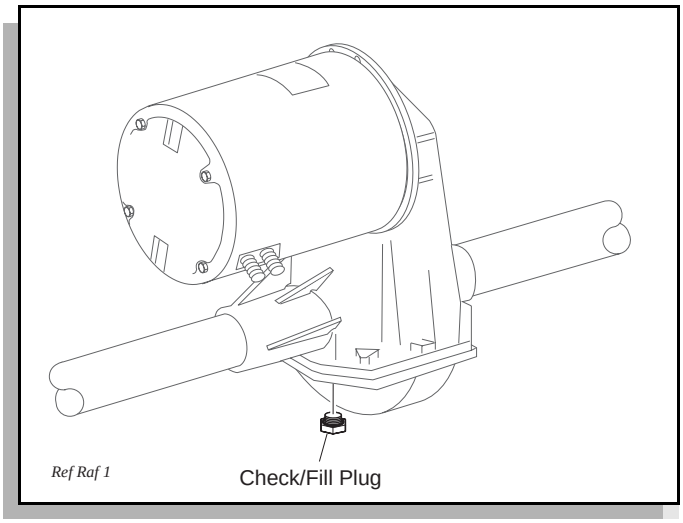

Fig. 23 Add, Check and Drain Axle Lubricant

one time. Excess grease may cause grease seals to fail or grease migration into areas that could damage components.

Putting more than three pumps of grease in a grease fitting could damage grease seals and cause premature bearing failure (Ref. Fig. 24 on page 19).

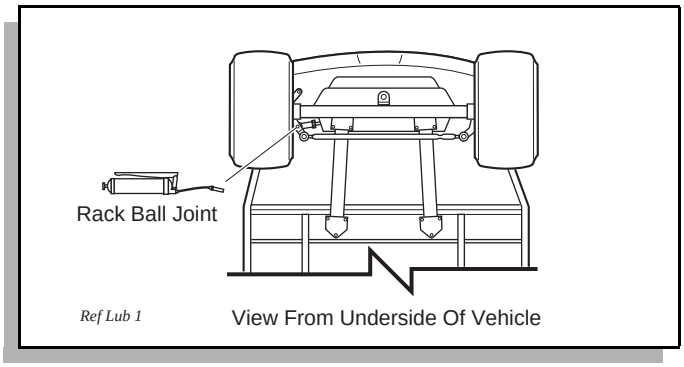

Fig. 24 Lubrication Points

PDS SYSTEM TEST

At monthly intervals, test the PDS system by allowing the vehicle to roll down an incline with the accelerator pedal released. Braking force should be felt at approximately 2 mph (3 kph) indicating that the PDS system is functioning. If vehicle speed continues to rise, apply the service brake and have vehicle inspected by a trained mechanic.

HARDWARE

Periodically, the vehicle should be inspected for loose fasteners. Fasteners should be tightened in accordance with the Torque Specifications table (Ref. Fig. 26 on page 20).

Use care when tightening fasteners and refer to the Technician's Repair and Service Manual for specific torque values.

Generally, three grades of hardware are used in the vehicle. Grade 5 hardware can be identified by the three marks on the hexagonal head and grade 8 hardware is identified by 6 marks on the head. Unmarked hardware is Grade 2 (Ref. Fig. 26 on page 20).

CAPACITIES AND REPLACEMENT PARTS

Rear Axle Oil	40 oz (1.2 liters)
Fuse	15 amp (P/N 18392-G1)
Headlight Bulb	#894 (P/N 74004-G01)
Marker Bulb	#912 (P/N 74005-G01)
Turn Signal Bulb	#921 (P/N 74006-G01)
Tail Light Bulb	#1157 (P/N 21759-G1)

Ref Cap 1

Fig. 25 Capacities and Replacement Parts

BATTERIES AND CHARGING

SAFETY

NOTE *Always observe the following warnings when working on or near batteries:*

WARNING ***To prevent battery explosion that could result in severe personal injury or death, keep all smoking materials, open flame or sparks away from the batteries.***

Hydrogen gas is formed when charging batteries. Do not charge batteries without adequate ventilation. A 4% concentration of hydrogen gas is explosive.

Be sure that the key switch is off and all electrical accessories are turned off before starting work on vehicle.

Never disconnect a circuit under load at a battery terminal.

Downloaded from www.Manualslib.com manuals search engine

https://truckmanualshub.com/

Read all of manual to become thoroughly familiar with this vehicle. Pay particular attention to all Notes, Cautions and Warnings

ALL TORQUE FIGURES ARE IN FT. LBS. (Nm)
Unless otherwise noted in text, tighten all hardware in accordance with this chart.
This chart specifies 'lubricated' torque figures. Fasteners that are plated or lubricated when installed are considered 'wet' and require approximately 80% of the torque required for 'dry' fasteners.

BOLT SIZE	1/4"	5/16"	3/8"	7/16"	1/2"	9/16"	5/8"	3/4"	7/8"	1"
Grade 2	4 (5)	8 (11)	15 (20)	24 (33)	35 (47)	55 (75)	75 (102)	130 (176)	125 (169)	190 (258)
Grade 5	6 (8)	13 (18)	23 (31)	35 (47)	55 (75)	80 (108)	110 (149)	200 (271)	320 (434)	480 (651)
Grade 8	6 (8)	18 (24)	35 (47)	55 (75)	80 (108)	110 (149)	170 (230)	280 (380)	460 (624)	680 (922)
BOLT SIZE	**M4**	**M5**	**M6**	**M8**	**M10**	**M12**	**M14**			
Class 5.8 (Grade 2) 5.8	1 (2)	2 (3)	4 (6)	10 (14)	20 (27)	35 (47)	55 (76.4)			
Class 8.8 (Grade 5) 8.8	2 (3)	4 (6)	7 (10)	18 (24)	35 (47)	61 (83)	97 (131)			
Class 10.9 (Grade 8) 10.9	3 (4)	6 (8)	10 (14)	25 (34)	49 (66)	86 (117)	136 (184)			

Ref Tsp 1

Fig. 26 Torque Specifications and Bolt Grades

Batteries are heavy. Use proper lifting techniques when moving them. Always lift the battery with a commercially available battery lifting device. Do not tip batteries when removing or installing them; spilled electrolyte can cause burns and damage.

The electrolyte in a storage battery is an acid solution which can cause severe burns to the skin and eyes. Treat all electrolyte spills to the body and eyes with extended flushing with clear water. Contact a physician immediately.

Always wear a safety shield or approved safety goggles when adding water or charging batteries.

Any electrolyte spills should be neutralized with a solution of 1/4 cup (60 ml) sodium bicarbonate (baking soda) dissolved in 1 1/2 gallons (6 liters) of water and flushed with water.

Overfilling batteries may result in electrolyte being expelled from the battery during the charge cycle. Expelled electrolyte may cause damage to the vehicle and storage facility.

Aerosol containers of battery terminal protectant must be used with extreme care. Insulate metal container to prevent can from contacting battery terminals which could result in an explosion.

Wrap wrenches with vinyl tape to prevent the possibility of a dropped wrench from 'shorting out' a battery, which could result in an explosion and severe personal injury or death.

BATTERY

A battery is defined as two dissimilar metals immersed in an acid. If the acid is absent or if the metals are not dissimilar, a battery has not been created. The batteries most commonly used in these vehicles are lead acid.

A battery does not store electricity, but is able to produce electricity as the result of a chemical reaction which releases stored chemical energy in the form of electrical energy. The chemical reaction takes place faster in warm conditions and slower in cold conditions. Temperature is important when conducting tests on a battery and test

Downloaded from www.Manualslib.com manuals search engine

https://truckmanualshub.com/

results must be corrected to compensate for temperature differences.

As a battery ages, it still performs adequately except that its **capacity** is diminished. Capacity describes the time that a battery can continue to provide its design amperes from a full charge.

A battery has a maximum life, therefore good maintenance is designed to maximize the **available** life and reduce the factors that can reduce the life of the battery.

BATTERY MAINTENANCE

Tool List	Qty. Required
Insulated wrench, 9/16"	1
Battery carrier	1
Hydrometer	1
Battery maintenance kit P/N 25587-G01	1

At Each Charging Cycle

WARNING ***To reduce the possibility of fire, never attach a battery charger to a vehicle that is to be unattended beyond the normal charging cycle. Overcharging could cause damage to the vehicle batteries and result in extreme overheating. The charger should be checked after 24 hours and unplugged after the charge cycle is complete.***

Before charging the batteries, inspect the plug of the battery charger and vehicle receptacle housing for dirt or debris.

Charge the batteries after each days use.

Monthly

- Inspect all wiring for fraying, loose terminations, corrosion or deterioration of insulation.
- Check that the electrolyte level is correct and add suitable water as required.
- Clean the batteries and wire terminations.

Electrolyte Level and Water

The correct level of the electrolyte is 1/2" (13 mm) above the plates in each cell (Ref. Fig. 27 on page 21).

This level will leave approximately 1/4" - 3/8" (6 - 10 mm) of space between the electrolyte and the vent tube. The electrolyte level is important since **any portion** of the plates exposed to air will be ruined beyond repair. Of equal importance is too much water which will result in electrolyte being forced out of the battery due to gassing

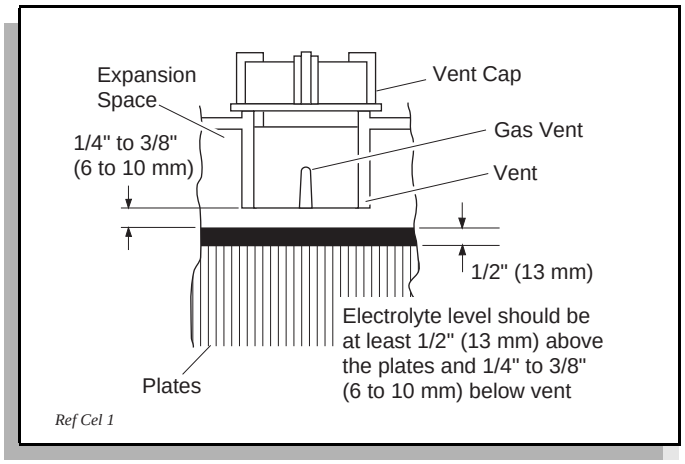

Fig. 27 Correct Electrolyte Level

and the increase in volume of the electrolyte that results from the charging cycle.

CAUTION **Do not overfill batteries. The charging cycle will expel electrolyte and result in component damage.**

A battery being charged will 'gas' with the majority of the gassing taking place at the end of the charging cycle. This gas is hydrogen which is lighter than air. Water and sulfuric acid droplets will be carried out of the battery vents by the hydrogen gas; however, this loss is minimal. If the battery electrolyte level is too high, the electrolyte will block the vent tube and the gas will **force** it out of the vent tube and battery cap. The water will evaporate but the sulfuric acid will remain where it can damage vehicle components and the storage facility floor. Sulfuric acid loss will weaken the concentration of acid within the electrolyte and reduce the life of the battery.

Over the life of the battery, a considerable amount of water is consumed. It is important that the water used be pure and free of contaminants that could reduce the life of the battery by reducing the chemical reaction. The water must be distilled or purified by an efficient filtration system. Water that is not distilled should be analyzed and if required, filtration installed to permit the water to meet the requirements of the water purity table (Ref. Fig. 28 on page 22).

Even if the water is colorless, odorless, tasteless and fit for drinking, the water should be analyzed to see that it does not exceed the impurity levels specified in the table.

Automatic watering devices such as the one included in the Battery Maintenance Kit (P/N 25587-G01) can be used with an approved water source (Ref. Fig. 29 on page 22). These watering devices are **fast and accurate**

Downloaded from www.Manualslib.com manuals search engine

https://truckmanualshub.com/

Impurity	Parts Per Million
Color	Clear
Suspended	Trace
Total Solids	100
Calcium & Magnesium Oxides	40
Iron	5
Ammonia	8
Organic & Volatile Matter	50
Nitrites	5
Nitrates	10
Chloride	5

Wpt 1S

Fig. 28 Water Purity Table

to use and maintain the correct electrolyte level within the battery cells.

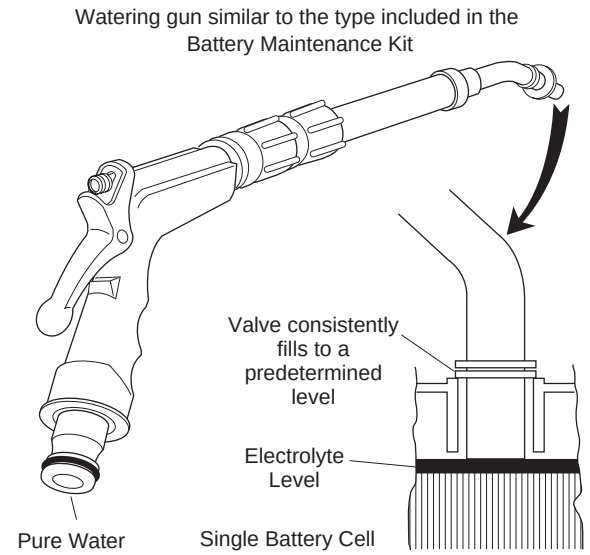

Fig. 29 Automatic Watering Gun

NOTE *The watering device should only be used if the electrolyte level is less than 1/2" (13 mm) above top of plates.*

Battery Cleaning

CAUTION **To prevent battery damage, be sure that all battery caps (if equipped) are tightly installed.**

To reduce the possibility of damage to vehicle or floor, neutralize acid before rinsing battery.

To reduce the possibility of damage to electrical components while cleaning, do not use a pressure washer.

Cleaning should take place per the Periodic Service Schedule (Ref. Fig. 21 on page 16).

When cleaning the outside of batteries and terminals, first spray with a solution of sodium bicarbonate (baking soda) and water to neutralize any acid deposits before rinsing with clear water.

Use of a water hose without first neutralizing any acid will move acid from the top of batteries to another area of the vehicle or storage facility where it will attack the metal structure or the concrete/asphalt floor. Additionally, conductive residue will remain on the batteries and contribute to their self discharge.

WARNING ***To reduce the possibility of battery explosion that could result in severe injury or death, do not use metallic spray wand to clean battery and keep all smoking materials, open flame or sparks away from the battery.***

The correct cleaning technique is to spray the top and sides of the batteries with a solution of sodium bicarbonate (baking soda) and water. This solution is best applied with a garden type sprayer equipped with a **non metallic spray wand or plastic spray bottle**. The solution should consist of the ingredients shown in the illustration (Ref. Fig. 30 on page 23). In addition, special attention should be paid to metal components adjacent to the batteries which should also be sprayed with the solution.

Allow the solution to sit for at least three minutes. Use a soft bristle brush or cloth to wipe the tops of the batteries to remove any conductive residue. Rinse the entire area with low pressure clear water. Do not use a pressure washer. All of the items required for complete battery cleaning and watering (electric vehicles only) are contained in the Battery Maintenance Kit (P/N 25587-G01).

Battery Replacement

CAUTION **Before any electrical service is performed on PDS model vehicles, the Run-Tow/Maintenance switch must be placed in the 'Tow/Maintenance' position.**

If a power wire (battery, motor or controller) is disconnected for any reason on the PDS model vehicle, the Run-Tow/Maintenance switch must be left in the 'Tow/Maintenance' position for at least 30 seconds after the circuit is restored.

Downloaded from www.Manualslib.com manuals search engine

https://truckmanualshub.com/

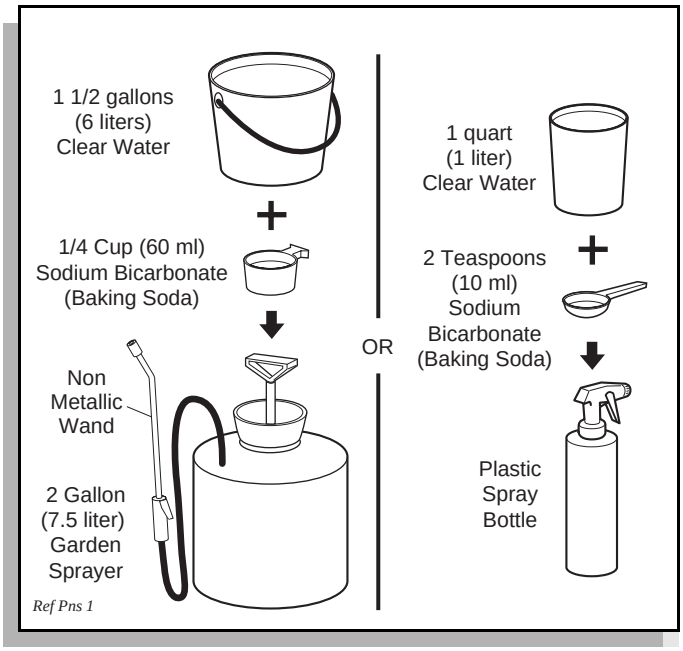

Fig. 30 Preparing Acid Neutralizing Solution

Remove battery hold downs and cables. Lift out batteries with a commercially available lifting device.

If the batteries have been cleaned and any acid in the battery rack area neutralized as recommended, no corrosion to the battery racks or surrounding area should be present. Any corrosion found should be immediately removed with a putty knife and a wire brush. The area should be washed with a solution of sodium bicarbonate (baking soda) and water and thoroughly dried before priming and painting with a corrosion resistant paint.

The batteries should be placed into the battery racks and the battery hold downs tightened to 45 - 55 in. lbs. (5 - 6 Nm) torque, to prevent movement but not tight enough to cause distortion of the battery cases.

Inspect all wires and terminals. Clean any corrosion from the battery terminals or the wire terminals with a solution of sodium bicarbonate (baking soda) and brush clean if required.

WARNING ***To prevent battery explosion that could result in severe personal injury or death, extreme care must be used with aerosol containers of battery terminal protectant. Insulate the metal container to prevent the metal can from contacting battery terminals which could result in an explosion.***

Use care to connect the battery wires as shown (Ref. Fig. 31 on page 23). Tighten the battery post hardware to 50 - 70 in. lbs. (6 - 8 Nm) torque. Protect the battery terminals and battery wire terminals with a commercially available protective coating.

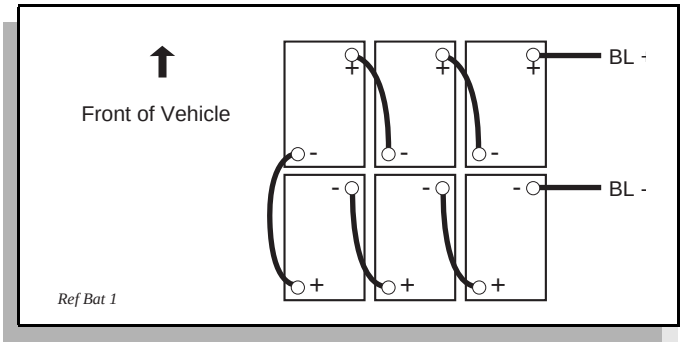

Fig. 31 36V Battery Connections

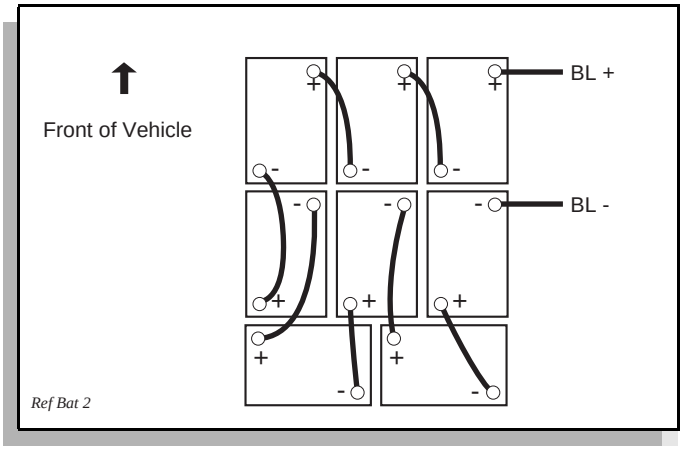

Fig. 32 48V Battery Connections

Prolonged Storage

CAUTION **Battery charger, controller and other electronic devices need to be disconnected since they will contribute to the premature discharge of batteries.**

During periods of storage, the batteries will need attention to keep them maintained and prevent discharge.

In high temperatures the chemical reaction is faster, while low temperatures cause the chemical reaction to slow down. A vehicle that is stored at 90° F (32° C) will lose .002 of specific gravity each day. If a fully charged battery has a specific gravity of 1.275, and the battery is allowed to sit unused, it will become partially discharged. When it reaches 1.240, which it will do in less than twenty days, it should be recharged. If a battery is left in a discharged state, sulfating takes place on and within the plates. This condition is not reversible and will cause permanent damage to the battery. In order to prevent damage, the battery should be recharged. A hydrometer

Downloaded from www.Manualslib.com manuals search engine

https://truckmanualshub.com/

can be used to determine the specific gravity and therefore the state of charge of a battery.

In winter conditions, the battery must be fully charged to prevent the possibility of freezing (Ref. Fig. 33 on page 24). A fully charged battery will not freeze in temperatures above -75° F (-60° C). Although the chemical reaction is slowed in cold temperatures, the battery must be stored fully charged, and disconnected from any circuit that could discharge the battery. For PDS vehicles, the controller should be disconnected from the batteries by setting the Run-Tow/Maintenance switch, located under the passenger seat, to the 'TOW/MAINTENANCE' position. For portable chargers, disconnect the charging plug from the vehicle receptacle. For on-board chargers, disconnect the charging harness from the batteries. The batteries must be cleaned and all deposits neutralized and removed from the battery case to prevent self discharge. The batteries should be tested or recharged at thirty day minimum intervals.

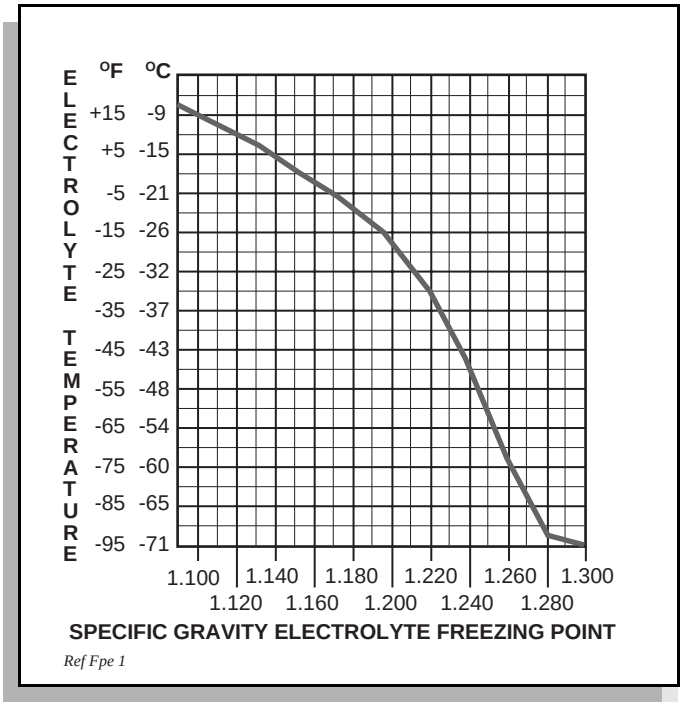

Fig. 33 Freezing Point of Electrolyte

BATTERY CHARGING

The battery charger is designed to fully charge the battery set. If the batteries are severely deep cycled, some automatic battery chargers contain an electronic module that may not activate and the battery charger will not function. Automatic chargers will determine the correct duration of charge to the battery set and will shut off when the battery set is fully charged. Always refer to the instructions of the specific charger used.

Before charging, the following should be observed:

CAUTION **Do not overfill batteries. The charging cycle will expel electrolyte and result in component damage.**

- The electrolyte level in all cells must be at the recommended level and cover the plates.
- The charging must take place in an area that is well ventilated and capable of removing the hydrogen gas that is generated by the charging process. A **minimum** of five air exchanges per hour is recommended.
- The charging connector components are in good condition and free from dirt or debris.
- The charger connector is fully inserted into the vehicle receptacle.
- The charger connector/cord set is protected from damage and is located in an area to prevent injury that may result from personnel running over or tripping over the cord set.
- The charger is automatically turned off during the connect/disconnect cycle and therefore no electrical arc is generated at the DC plug/receptacle contacts.

NOTE *In some portable chargers, there will be a rattle present in the body of the charger DC plug. This rattle is caused by an internal magnet contained within the charger plug. The magnet is part of the interlock system that prevents the vehicle from being driven when the charger plug is inserted in the vehicle charging receptacle.*

AC Voltage

Battery charger output is directly related to the input voltage. If multiple vehicles are receiving an incomplete charge in a normally adequate time period, low AC voltage could be the cause and the power company should be consulted.

TROUBLESHOOTING

In general, troubleshooting will be done for two distinct reasons. First, a battery that performs poorly and is outside of the manufacturers specification should be identified in order to replace it under the terms of the manufacturer's warranty. Different manufacturers have different requirements. Consult the battery manufacturer or a manufacturer representative for specific requirements.

Downloaded from www.Manualslib.com manuals search engine

https://truckmanualshub.com/

The second reason is to determine why a particular vehicle does not perform adequately. Performance problems may result in a vehicle that runs slowly or in a vehicle that is unable to operate for the time required.

A new battery must **mature** before it will develop its maximum capacity. Maturing may take up to 100 charge/discharge cycles. After the maturing phase, the older a battery gets, the lower the capacity. The only way to determine the capacity of a battery is to perform a load test using a discharge machine following manufacturer's recommendations.

A cost effective way to identify a poorly performing battery is to use a hydrometer to identify a battery in a set with a lower than normal specific gravity. Once the particular cell or cells that are the problem are identified, the suspect battery can be removed and replaced. At this point there is nothing that can be done to salvage the battery; however, the individual battery should be replaced with a good battery of the same brand, type and approximate age.

Hydrometer

A hydrometer (P/N 50900-G1) is used to test the state of charge of a battery cell (Ref. Fig. 34 on page 25). This is performed by measuring the density of the electrolyte, which is accomplished by measuring the specific gravity of the electrolyte. The greater the concentration of sulfuric acid, the more dense the electrolyte becomes. The higher the density, the higher the state of charge.

WARNING ***To prevent battery explosion that could result in severe personal injury or death, never insert a metal thermometer into a battery. Use a hydrometer with a built in thermometer that is designed for testing batteries.***

Specific gravity is the measurement of a liquid that is compared to a baseline. The baseline is water which is assigned a base number of 1.000. The concentration of sulfuric acid to water in a new golf car battery is 1.280 which means that the electrolyte weighs 1.280 times the weight of the same volume of water. A fully charged battery will test at 1.275 - 1.280 while a discharged battery will read in the 1.140 range.

NOTE *Do not perform a hydrometer test on a battery that has just been watered. The battery must go through at least one charge and discharge cycle in order to permit the water to adequately mix with the electrolyte.*

The temperature of the **electrolyte** is important since the hydrometer reading must be corrected to 80° F (27° C).

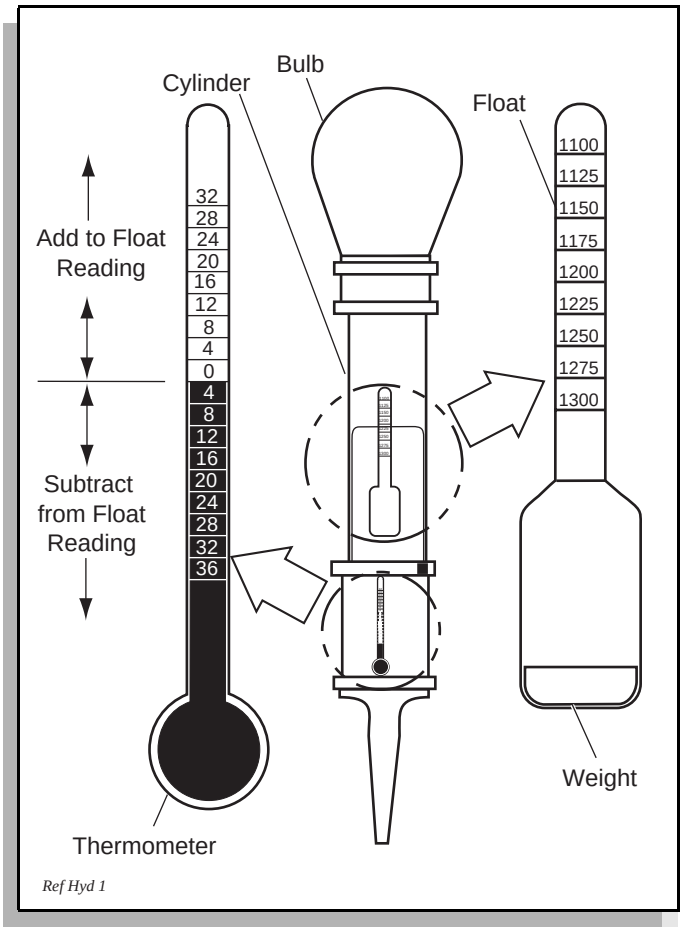

Fig. 34 Hydrometer

High quality hydrometers are equipped with an internal thermometer that will measure the temperature of the electrolyte and will include a conversion scale to correct the float reading. It is important to recognize that the electrolyte temperature is significantly different from the ambient temperature if the vehicle has been operated.

Using A Hydrometer

1. Draw electrolyte into the hydrometer several times to permit the thermometer to adjust to the electrolyte temperature and note the reading. Examine the color of the electrolyte. A brown or gray coloration indicates a problem with the battery and is a sign that the battery is nearing the end of its life.
2. Draw the minimum quantity of electrolyte into the hydrometer to permit the float to float freely without contacting the top or bottom of the cylinder.
3. Hold the hydrometer in a vertical position at eye level and note the reading where the electrolyte meets the scale on the float.

Downloaded from www.Manualslib.com manuals search engine

https://truckmanualshub.com/

4. Add or subtract four points (.004) to the reading for every 10° F (6°C) the electrolyte temperature is above or below 80° F (27° C). Adjust the reading to conform with the electrolyte temperature, e.g., if the reading indicates a specific gravity of 1.250 and the electrolyte temperature is 90° F (32° C), **add** four points (.004) to the 1.250 which gives a corrected reading of 1.254. Similarly if the temperature was 70° F (21° C), **subtract** four points (.004) from the 1.250 to give a corrected reading of 1.246 (Ref. Fig. 35 on page 26).
5. Test each cell and note the readings (corrected to 80° F or 27° C). A variation of fifty points between any two cell readings (example 1.250 - 1.200) indicates a problem with the low reading cell(s).

As a battery ages the specific gravity of the electrolyte will decrease at full charge. This is not a reason to replace the battery, providing all cells are within fifty points of each other.

Since the hydrometer test is in response to a vehicle exhibiting a performance problem, the vehicle should be recharged and the test repeated. If the results indicate a weak cell, the battery or batteries should be removed and replaced with a good battery of the same brand, type and approximate age.

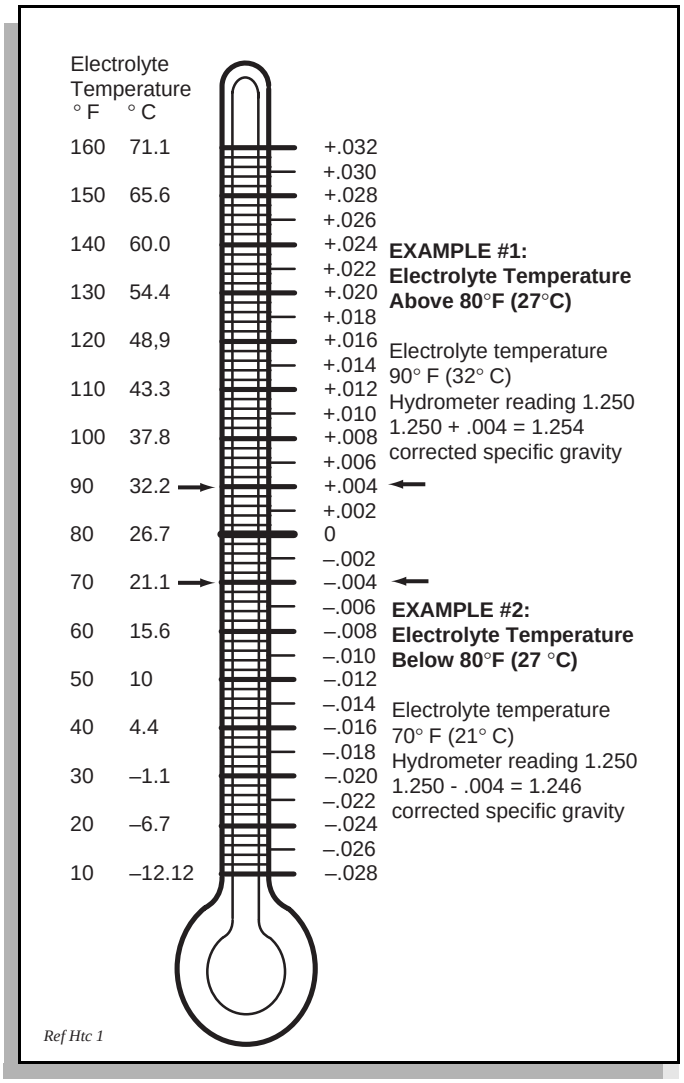

Fig. 35 Hydrometer Temperature Correction

Downloaded from www.Manualslib.com manuals search engine

https://truckmanualshub.com/

GENERAL SPECIFICATIONS

Downloaded from www.Manualslib.com manuals search engine

https://truckmanualshub.com/

GENERAL SPECIFICATIONS

Hauler™ 800

STANDARD EQUIPMENT:

WEIGHT (without batteries)	675 lbs. (306 kg)
TIRES	18 x 8.50 x 8 (4 ply rated)
TIRE PRESSURE	18 - 22 psi (120 - 150 kPa)
LOAD CAPACITY	800 lbs. (362 kg) (including operator, passenger, cargo and accessories)
GROUND CLEARANCE	4.75 in. (12 cm) at differential
MAXIMUM HEIGHT	65 in. (165 cm) with top
CHASSIS	Welded high yield strength tubular steel with powder coat paint
BODY AND FINISH	Front: Flexible, impact resistant panels. Color coat/clear coat finish Rear: Lightweight, replaceable steel panels
SAFETY	Dash mounted key switch, reverse warning indicator, ‘deadman’ accelerator control, integral handgrip on hip restraints, manual forward/reverse selector with ‘neutral’, electric horn
STEERING WHEEL	Dual handgrips
BRAKES	Dual rear wheel mechanical, self-adjusting drum brakes. Combination service / park brake with automatic parking brake release (accelerator kick-off)
FRONT SUSPENSION	Heavy duty leaf springs with hydraulic shock absorbers
REAR SUSPENSION	Heavy duty leaf springs with hydraulic shock absorbers
STEERING	Self-compensating single reduction rack and pinion
DASH PANEL	Scuff resistant with four drink holders
SEATING	Formed fabric backed vinyl covers over cushion foam. Seating for operator and one passenger
MOTOR	36 volt DC high efficiency series wound, brazed armature, solid copper windings. 2.5 hp (1.9 kw) at 2700 rpm
DRIVE TRAIN	Direct motor shaft connected to transaxle pinion shaft
ELECTRICAL SYSTEM	36 volt DC, six, 6 volt deep cycle storage batteries
SPEED CONTROL	Solid State continuously variable speed controller, 300 amp rated
TRANSAXLE	High efficiency differential with helical gears, 12.44:1 ratio
SPEED	13 mph ± .5 mph (21 kph ± .8 kph)
CHARGER	PowerWise™ portable, fully automatic For locations outside US and Canada, refer to charger manufacturer for specifications and recommendations.

Specifications subject to change without notice

Downloaded from www.Manualslib.com manuals search engine

https://truckmanualshub.com/

GENERAL SPECIFICATIONS

Hauler™ 1000

STANDARD EQUIPMENT:

WEIGHT (without batteries)	809 lbs. (374 kg)
TIRES (4 ply rated)	18 x 8.50 x 8 (4 ply rated)
TIRE PRESSURE	18 - 22 psi (120 - 150 kPa)
LOAD CAPACITY	1000 lbs. (454 kg) (including operator, passenger, cargo and accessories)
GROUND CLEARANCE	4.75 in. (12 cm) at differential
MAXIMUM HEIGHT	65 in. (165 cm) with top
CHASSIS	Welded high yield strength tubular steel with powder coat paint
BODY AND FINISH	Front: Flexible, impact resistant panels. Color coat/clear coat finish Rear: Lightweight, replaceable steel panels
SAFETY	Dash mounted key switch, reverse warning indicator, 'deadman' accelerator control, integral handgrip on hip restraints, manual forward/reverse selector with 'neutral', electric horn
STEERING WHEEL	Dual handgrips and pencil holder integrated with clipboard
BRAKES	Dual rear wheel mechanical, self-adjusting drum brakes. Combination service / park brake with automatic parking brake release (accelerator kick-off)
FRONT SUSPENSION	Heavy duty leaf springs with hydraulic shock absorbers
REAR SUSPENSION	Heavy duty leaf springs with hydraulic shock absorbers
STEERING	Self-compensating single reduction rack and pinion
DASH PANEL	Scuff resistant with four drink holders
SEATING	Formed fabric backed vinyl covers over cushion foam. Seating for operator and one passenger
MOTOR	48 volt DC high efficiency series wound, brazed armature, solid copper windings
DRIVE TRAIN	Direct motor shaft connected to transaxle pinion shaft
ELECTRICAL SYSTEM	48 volt DC, eight, 6 volt deep cycle storage batteries
SPEED CONTROL	Solid State continuously variable speed controller, 400 amp rated
TRANSAXLE	High efficiency differential with helical gears, 14.7:1 ratio
SPEED	13 ± .5 mph (21 ± .8 kph)
CHARGER	Fully automatic line compensating, 48 volt output

Specifications subject to change without notice

Downloaded from www.Manualslib.com manuals search engine

https://truckmanualshub.com/

GENERAL SPECIFICATIONS

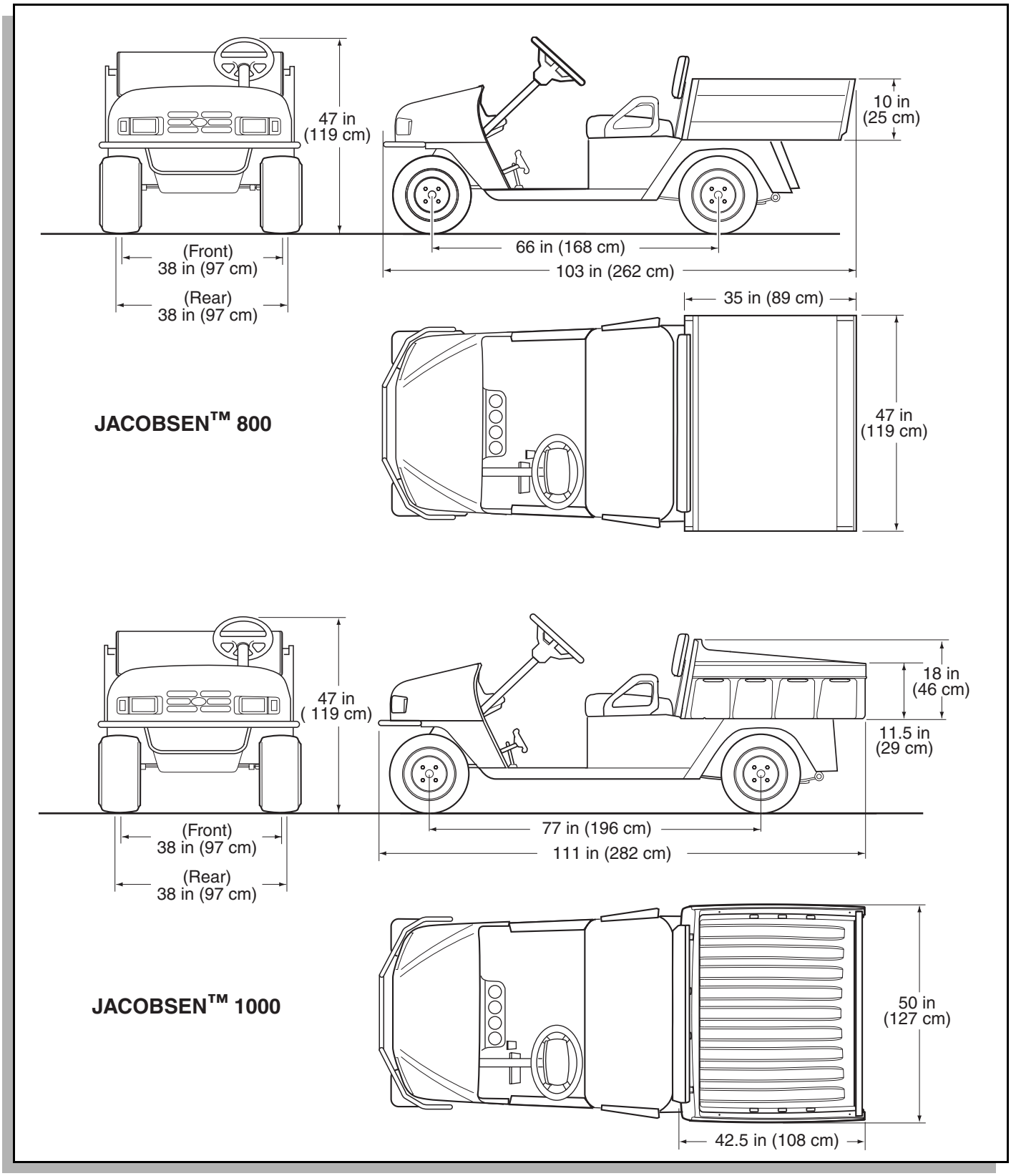

Fig. 36 Vehicle Dimensions

Downloaded from www.Manualslib.com manuals search engine

https://truckmanualshub.com/

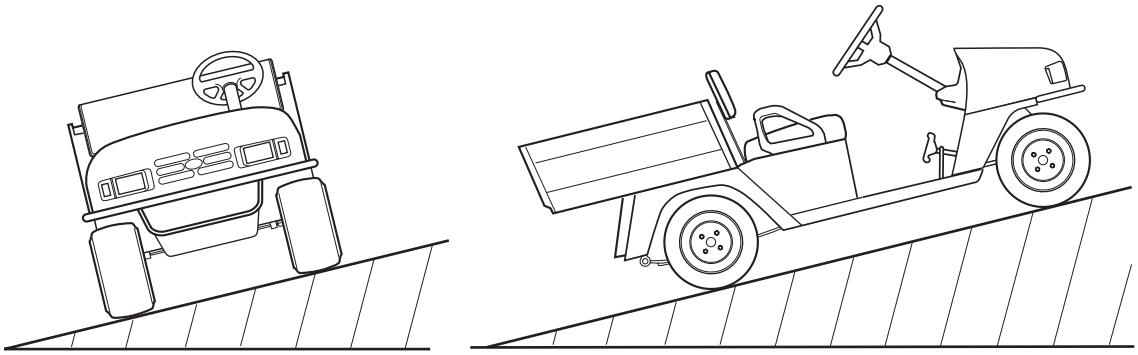

RECOMMENDED MAX SIDE TILT
25% or 14° MAX

RECOMMENDED MAX RAMP GRADE
25% or 14° MAX

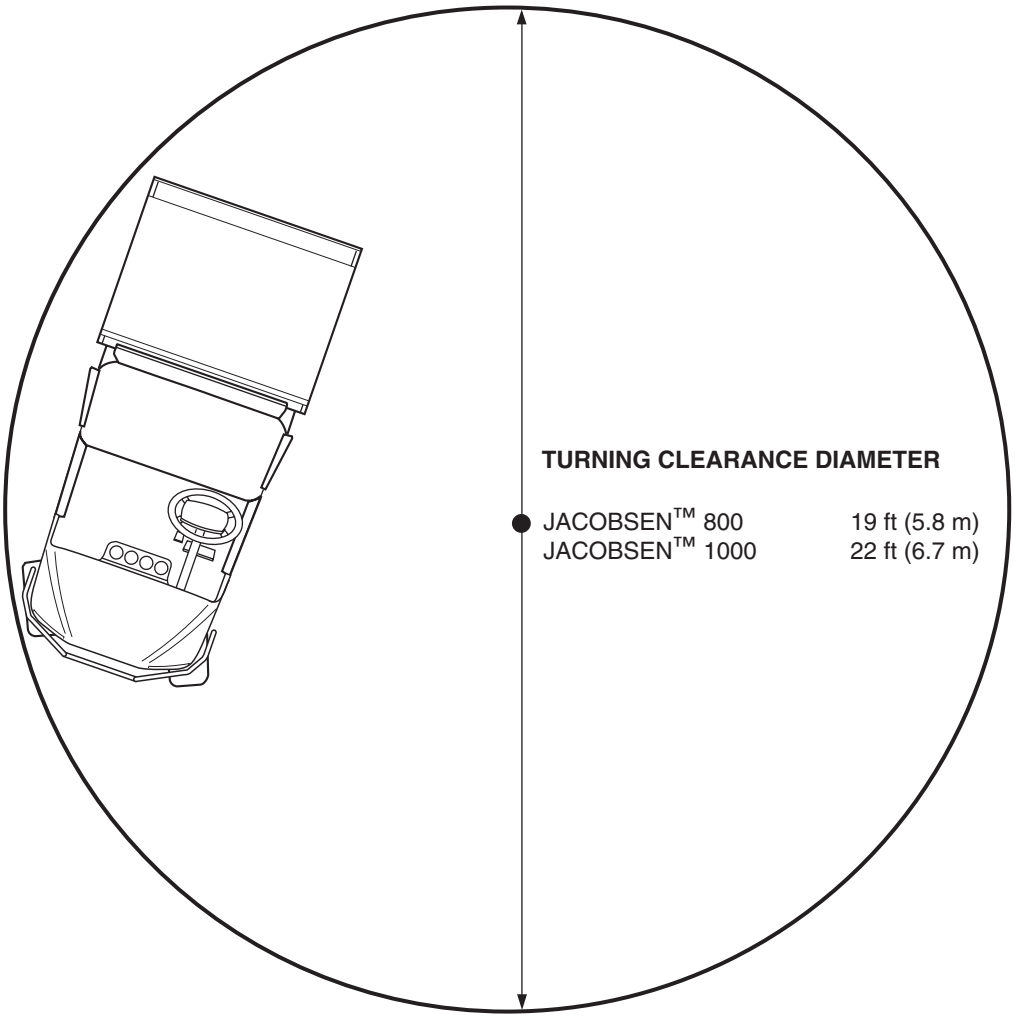

Fig. 37 Vehicle Dimensions, Incline Specifications and Turning Clearance Diameter

Downloaded from www.Manualslib.com manuals search engine

https://truckmanualshub.com/

GENERAL SPECIFICATIONS

Notes:

Downloaded from www.Manualslib.com manuals search engine

https://truckmanualshub.com/

LIMITED WARRANTIES

Downloaded from www.Manualslib.com manuals search engine

https://truckmanualshub.com/

WARRANTY

DOMESTIC WARRANTY

(U.S. AND CANADA)

To obtain a copy of the limited warranty applicable to the vehicle, call or write a local distributor, authorized Branch or the Warranty Department with vehicle serial number and manufacturer date code.

Downloaded from www.Manualslib.com manuals search engine

https://truckmanualshub.com/

2004 INTERNATIONAL WARRANTY

(ALL COUNTRIES OUTSIDE THE U.S. AND CANADA)

E-Z-GO Division of Textron, Inc. ("E-Z-GO") warrants to the Original Retail Purchaser or the Original Retail Lessee that any 2004 E-Z-GO vehicle and/or Battery Charger shall be free from any defects in material or workmanship for one year from the date of installation at the customer's location with respect to parts and labor.

EXCLUSIONS: Specifically excluded from any E-Z-GO warranty are adjustments/repairs made due to normal wear beyond the first 180 days, routine maintenance items, cosmetic deterioration, and electrical components which are susceptible to fluctuations in current beyond the control of E-Z-GO. This warranty also does not apply to Acts of God or other events over which E-Z-GO has no control. Transportation charges for warranty service, as well as freight charges to receive warranty parts are excluded from this warranty and all replaced parts shall become the property of E-Z-GO. This warranty also excludes batteries, tires, and Lester battery chargers which are warranted by their respective manufacturer.

REMEDY: The sole remedy under this warranty and E-Z-GO's only obligation in the event of a defect in the vehicle/ battery charger, is that E-Z-GO will, at its sole option, repair or replace any defective parts. This remedy precludes all other remedies including any lawsuits, claims or other proceedings alleging strict liability, negligence of contract or any cause of action. E-Z-GO reserves the right to improve or change the design of any E-Z-GO vehicle or battery charger without assuming any responsibility to modify previously manufactured vehicles or battery chargers.

DISCLAIMER: THIS WARRANTY IS MADE IN LIEU OF ALL OTHER WARRANTIES, IMPLIED OR EXPRESSED, INCLUDING ANY WARRANTY OF MERCHANTABILITY OR FITNESS FOR A PARTICULAR PURPOSE. TGTSP WILL FURTHER DISCLAIM ANY LIABILITY FOR INCIDENTAL OR CONSEQUENTIAL DAMAGES, TO INCLUDE BUT NOT BE LIMITED TO, PERSONAL INJURY OR PROPERTY DAMAGE ARISING FROM ANY DEFECT IN THE VEHICLE/BATTERY CHARGER.

No agent, employee or representative of E-Z-GO, or any person has any authority to bind E-Z-GO to any other agreement, representation, or warranty concerning the goods sold under this warranty.

WARNING: ANY MODIFICATION OR CHANGE TO THE VEHICLE OR BATTERY CHARGER WHICH ALTERS THE WEIGHT DISTRIBUTION OF THE VEHICLE, ITS STABILITY, INCREASES THE SPEED, OR ALTERS THE OUTPUT OF THE BATTERY CHARGER BEYOND THE FACTORY SPECIFICATION, CAN CAUSE PERSONAL INJURY. DO NOT MAKE ANY SUCH MODIFICATION OR CHANGE. E-Z-GO PROHIBITS, AND DISCLAIMS RESPONSIBILITY FOR, ANY SUCH MODIFICATIONS OR ANY OTHER ALTERATION WHICH WOULD ADVERSELY AFFECT THE SAFETY OF VEHICLE OR BATTERY CHARGER.

VOIDING OF WARRANTY: THIS, AND ANY OTHER WARRANTY SHALL BE VOID IF THE VEHICLE OR BATTERY CHARGER IS ABUSED OR OTHERWISE NOT USED IN ITS INTENDED MANNER; IS IN AN ACCIDENT OR COLLISION; SHOWS INDICATIONS THAT THE SPEED GOVERNOR WAS ADJUSTED OR MODIFIED ALLOWING THE VEHICLE TO OPERATE BEYOND E-Z-GO'S SPECIFICATIONS; SHOWS INDICATIONS THAT IT HAS BEEN ALTERED OR MODIFIED IN ANY WAY FROM E-Z-GO SPECIFICATIONS, INCLUDING BUT NOT LIMITED TO ALTERATIONS TO THE SPEED BRAKING SYSTEM, ELECTRICAL SYSTEM, STEERING OR OTHER OPERATING SYSTEMS OF THE VEHICLE OR; SHOWS INDICATIONS THAT ROUTINE MAINTENANCE WAS NOT PERFORMED WHEN, AND IN THE MANNER SPECIFIED IN THE E-Z-GO MAINTENANCE MANUAL. THIS WARRANTY SHALL BE VOID WITH RESPECT TO ANY DEFECT OR DAMAGE CAUSED BY, OR AS A RESULT OF, OR RELATED TO PARTS OR ACCESSORIES WHICH ARE NOT MANUFACTURED OR AUTHORIZED BY E-Z-GO, OR WERE NOT INSTALLED PER E-Z-GO'S INSTRUCTIONS, OR, FOR GASOLINE VEHICLES, THE USE OF NON-RECOMMENDED FUELS AND LUBRICANTS.

FOR FURTHER INFORMATION, CALL 1-706-798-4311 OR WRITE TO E-Z-GO Division of Textron, Inc. ATTENTION: WARRANTY DEPARTMENT, P.O. BOX 388, AUGUSTA, GEORGIA 30903-0388.

Downloaded from www.Manualslib.com manuals search engine

https://truckmanualshub.com/

WARRANTY

Notes:

Downloaded from www.Manualslib.com manuals search engine

https://truckmanualshub.com/

DECLARATION OF CONFORMITY (EUROPE ONLY)

Downloaded from www.Manualslib.com manuals search engine

https://truckmanualshub.com/

DECLARATION OF CONFORMITY

Downloaded from www.Manualslib.com manuals search engine

https://truckmanualshub.com/

DECLARATION OF CONFORMITY

NOT AVAILABLE AT TIME OF PUBLICATION

Downloaded from www.Manualslib.com manuals search engine

https://truckmanualshub.com/

DECLARATION OF CONFORMITY

Notes:

Downloaded from www.Manualslib.com manuals search engine

https://truckmanualshub.com/

LABELS AND PICTOGRAMS

Downloaded from www.Manualslib.com manuals search engine

https://truckmanualshub.com/

LABELS AND PICTOGRAMS

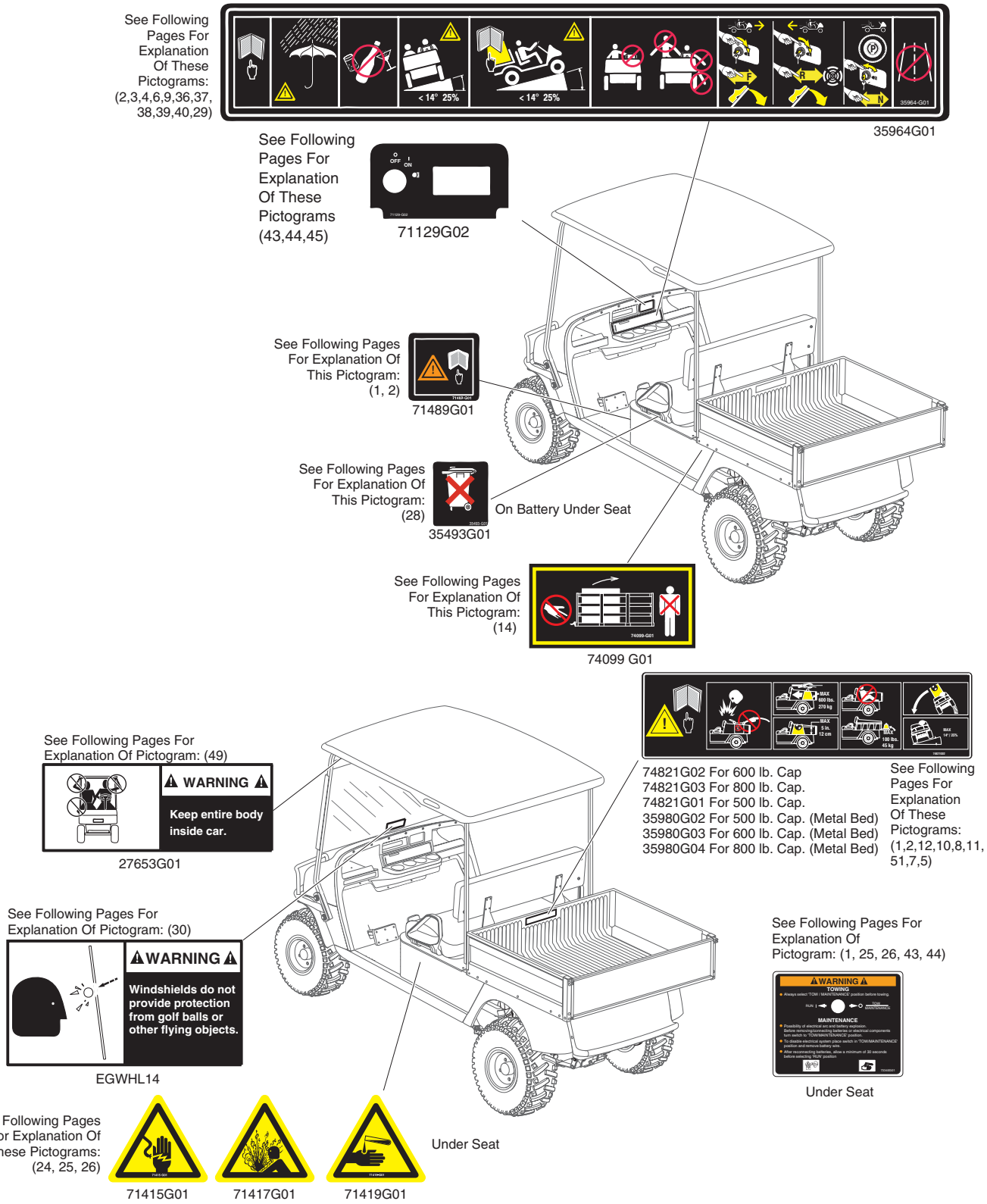

Downloaded from www.Manualslib.com manuals search engine

https://truckmanualshub.com/

LABELS AND PICTOGRAMS

1.

WARNING

2. 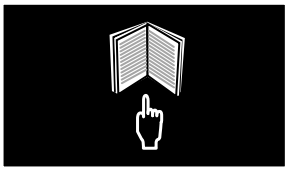

READ MANUAL

3.

WARNING
USE CAUTION IN
INCLEMENT WEATHER

4.

WARNING
DO NOT OPERATE
IF USING ALCOHOL
OR DRUGS

5.

MAXIMUM
CROSS HILL/RAMP
ANGLE AS SPECIFIED

6. 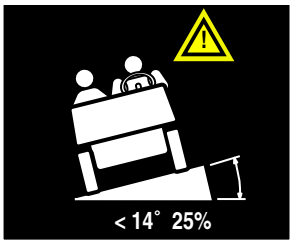

WARNING
MAXIMUM CROSS
HILL/RAMP
ANGLE AS
SPECIFIED

7. 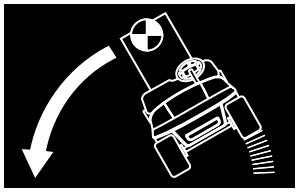

LOAD WITH
HIGH CENTER
OF GRAVITY
COULD RESULT
IN TIP OVER

8. 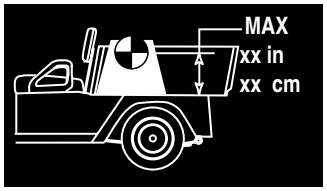

LOAD
CENTER
OF GRAVITY,
MAXIMUM
HEIGHT

9. 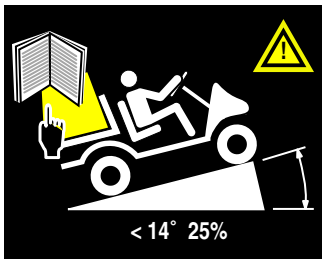

WARNING
READ MANUAL
FOR MAXIMUM
LOAD BED
CAPACITY.
MAXIMUM RAMP/HILL

10. 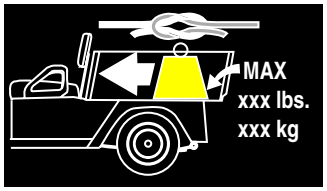

SECURE LOAD
AS FAR FORWARD
AS POSSIBLE.
MAXIMUM LOAD BED
CAPACITY

11.

DO NOT RIDE IN
LOAD BED

12.

DANGER OF EXPLOSION
DO NOT FILL GAS CAN
IN LOAD BED

13. 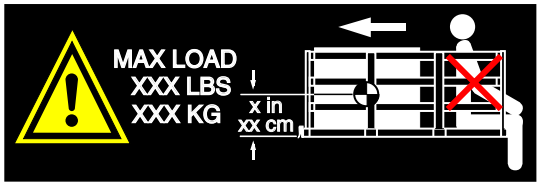

WARNING
MAXIMUM LOAD
& CENTER OF
GRAVITY.
KEEP LOAD
AS FAR
FORWARD AS
POSSIBLE.
DO NOT RIDE
IN LOAD BED

14. 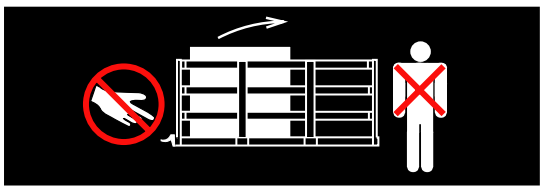

KEEP HANDS &
FINGERS AWAY
FROM DUMP BED.
DO NOT STAND
BEHIND DUMP
BED

Ref Pic 1-1

Downloaded from www.Manualslib.com manuals search engine

LABELS AND PICTOGRAMS

15.

CLEAN UP GASOLINE SPILLS WITH WATER BEFORE STARTING ENGINE

16.
UNLEADED GASOLINE

17.
DO NOT SPILL FUEL ON A HOT ENGINE

18.
GROUND FUEL PUMP

19.
LOW OIL PRESSURE

20. 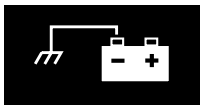
NEGATIVE GROUND BATTERY

21. 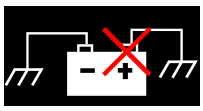
DO NOT CONNECT POSITIVE BATTERY TERMINAL TO GROUND

22.
SHORTING BATTERY TERMINALS MAY CAUSE EXPLOSION

23.
NO TAMPERING. KEEP HANDS OUT

24.
WARNING CORROSIVE

25.
WARNING EXPLOSIVE

26.
WARNING LETHAL VOLTAGE

27.
DO NOT EXPOSE TO FLAME

28.
DO NOT DISPOSE OF BATTERIES IN LANDFILL

29.
DO NOT DRIVE ON HIGHWAY

30. 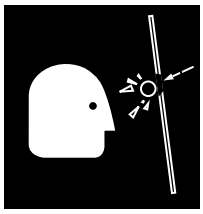
WINDSHIELDS DO NOT PROVIDE PROTECTION FROM FLYING OBJECTS

31.
BATTERIES ARE HEAVY. USE CARE LIFTING

32.
USE INSULATED TOOLS

33.
WEAR EYE PROTECTION

34.
NO SMOKING

35. 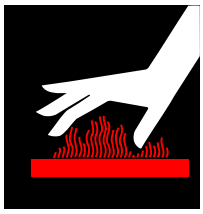
HOT SURFACE

Ref Pic 1-2

Downloaded from www.Manualslib.com manuals search engine

https://truckmanualshub.com/

36.

OPERATE FROM DRIVERS SIDE ONLY

37.

KEEP ARMS AND LEGS WITHIN VEHICLE

38. 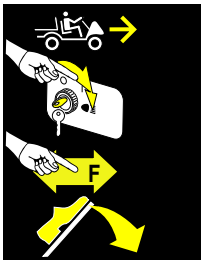

TO OPERATE VEHICLE IN FORWARD:
- ✶ TURN KEY TO ON
- ✶ MOVE DIRECTION SELECTOR TO FORWARD
- ✶ DEPRESS ACCELERATOR PEDAL AND ACCELERATE SMOOTHLY

39. 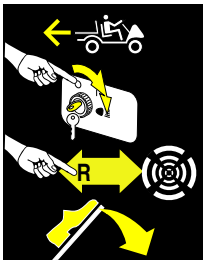

TO OPERATE VEHICLE IN REVERSE:
- ✶ TURN KEY TO ON
- ✶ MOVE DIRECTION SELECTOR TO REVERSE
- ✶ AN AUDIBLE DEVICE WILL SOUND
- ✶ DEPRESS ACCELERATOR PEDAL AND ACCELERATE SMOOTHLY

40. 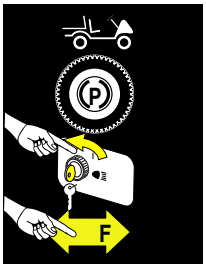

TO LEAVE A GASOLINE POWERED VEHICLE IN PARK:
- ✶ APPLY PARKING BRAKE
- ✶ TURN KEY TO OFF
- ✶ MOVE DIRECTION SELECTOR TO FORWARD

41. 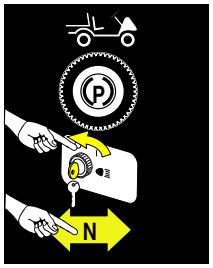

TO LEAVE AN ELECTRIC POWERED VEHICLE IN PARK:
- ✶ APPLY PARKING BRAKE
- ✶ TURN KEY TO OFF
- ✶ MOVE DIRECTION SELECTOR TO NEUTRAL

42. 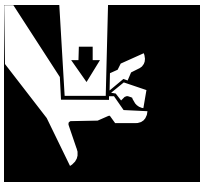

KEEP CLEAR HAND OR FINGERS CAN BE TRAPPED

43.

ON POSITION

44.

OFF POSITION

45.

HEADLIGHTS

46. 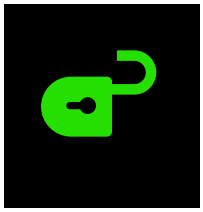

UNLOCKED

47.

LOCKED

48. 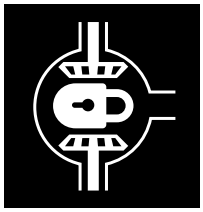

DIFFERENTIAL LOCKED

49.

WARNING
KEEP ENTIRE BODY INSIDE CAR

50. 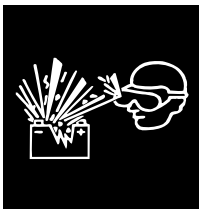

WARNING
POSSIBILE ELECTRIC ARC OR BATTERY EXPLOSION. WEAR EYE PROTECTION.

Ref Pic 1-3

Downloaded from www.Manualslib.com manuals search engine

https://truckmanualshub.com/

51. 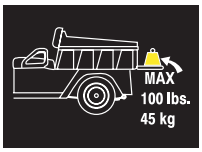

MAXIMUM
TAILGATE
LOAD

Ref Pic 1-4

Downloaded from www.Manualslib.com manuals search engine

https://truckmanualshub.com/

NOTE *Read and understand the following warnings before attempting to operate the vehicle:*

WARNING ***To prevent personal injury or death, observe the following:***

When vehicle is to be left unattended, engage parking (PARK) brake, move direction selector to neutral, turn key to 'OFF' position and remove key.

Drive vehicle only as fast as terrain and safety considerations allow. Consider the terrain and traffic conditions. Consider environmental factors which effect the terrain and the ability to control the vehicle.

Avoid driving fast down hill. Sudden stops or change of direction may result in a loss of control. Use service brake to control speed when traveling down an incline.

Use extra care and reduced speed when driving on poor surfaces, such as loose dirt, wet grass, gravel, etc.

All travel should be directly up or down hills.

Use extra care when driving the vehicle across an incline.

Stay in designated areas and avoid steep slopes. Use the parking brake whenever the vehicle is parked.

Keep feet, legs, hands and arms inside vehicle at all times.

Avoid extremely rough terrain.

Check area behind the vehicle before operating in reverse.

Make sure the direction selector is in correct position before attempting to start the vehicle.

Slow down before and during turns. All turns should be executed at reduced speed.

Always bring vehicle to a complete stop before shifting the direction selector.

See GENERAL SPECIFICATIONS for standard vehicle load and seating capacity.

NOTE *Read and understand the following text and warnings before attempting to service vehicle:*

In any product, components will eventually fail to perform properly as the result of normal use, age, wear or abuse.

It is virtually impossible to anticipate all possible component failures or the manner in which each component may fail.

Be aware that a vehicle requiring repair indicates that the vehicle is no longer functioning as designed and therefore should be considered potentially hazardous. Use extreme care when working on any vehicle. When diagnosing, removing or replacing any components that are not operating correctly, take time to consider the safety of yourself and others around you should the component move unexpectedly.

Some components are heavy, spring loaded, highly corrosive, explosive or may produce high amperage or reach high temperatures. Battery acid and hydrogen gas could result in serious bodily injury to the technician/mechanic and bystanders if not treated with the utmost caution. Be careful not to place hands, face, feet or body in a location that could expose them to injury should an unforeseen situation occur.

WARNING ***To prevent personal injury or death, observe the following:***

Before working on the vehicle, remove all jewelry (rings, watch, necklaces, etc.).

Be sure no loose clothing or hair can contact moving parts.

Use care not to touch hot objects.

Raise rear of vehicle and support on jack stands before attempting to run or adjust powertrain.

Wear eye protection when working on or around the vehicle. In particular, use care when working around batteries, using solvents or compressed air.

Hydrogen gas is formed when charging batteries. Do not charge batteries without adequate ventilation.

Do not permit open flame or anyone to smoke in an area that is being used for charging batteries. A concentration of 4% hydrogen gas or more is explosive.

Downloaded from www.Manualslib.com manuals search engine

https://truckmanualshub.com/

Jacobsen Turf, Commercial and Specialty Equipment
1451 Marvin Griffin Road, Augusta, Georgia USA 30906-3852

TO CONTACT US

North America:
Technical Assistance & Warranty Phone: 1-800-774-3946, FAX: 1-800-448-8124
Service Parts Phone: 1-888-GET-EZGO (1-888-438-3946), FAX: 1-800-752-6175

International:
Phone: 010-1-706-798-4311, FAX: 010-1-706-771-4609

Copyrighted Material
This manual may not be reproduced in whole or
in part without the express permission of
E-Z-GO Division of Textron, Inc.
Technical Communications Department

Downloaded from www.Manualslib.com manuals search engine