https://truckmanualshub.com/

STILL

# Operating Instructions

STILL
ELECTRONIC
DOCUMENTATION
SYSTEM

## Diesel forklift truck

R70-40
R70-45
R70-50

CE

Ident no. 171650 - V2 - EN

https://truckmanualshub.com/

https://truckmanualshub.com/


## 1 Foreword

**Your industrial truck** . . . 2
General . . . 2
EC declaration of conformity, EC mark of conformity . . . 2

**Information about documentation** . . . 3
Documentation scope . . . 3
Issue date and currentness of manual . . . 4
Copyright and proprietary rights . . . 4
Explanations of the signal terms used: . . . 5
Explanation of the cross-references . . . 5
Definition of directions . . . 6
Sample graphics . . . 6

**Environmental considerations** . . . 7
Packaging . . . 7
Disposal of units and batteries during repair work . . . 7

## 2 Introduction

**Use of truck** . . . 10
Proper use . . . 10
Proper towing usage . . . 10
Impermissible use . . . 10
Place of use . . . 11
Use of working platforms . . . 12

**Residual risk** . . . 13
Residual hazards, residual risks . . . 13
Special risks when using the forklift truck and attachments . . . 14
Overview of hazards and countermeasures . . . 16
Risk for employees . . . 18

## 3 Safety

**Definition of terms used for responsible persons** . . . 20
Operating company . . . 20
Specialist . . . 20
Drivers . . . 20

**Essentials for safe operation** . . . 23
Insurance coverage on company premises . . . 23
Changes and retrofitting . . . 23
Warning regarding non-original parts . . . 24
Damage, defects and misuse of safety devices . . . 24

https://truckmanualshub.com/


Tyres . . . . . 25
Medical equipment . . . . . 25

**Safety inspections** . . . . . 26
Regular safety check of the industrial trucks . . . . . 26
Checking the diesel engine emissions . . . . . 26
Trucks with particle filters . . . . . 27
Insulation test . . . . . 27

**Safety regulations when handling working materials** . . . . . 29
Permissible consumables . . . . . 29
Oils . . . . . 29
Diesel fuel . . . . . 30
Hydraulic fluid . . . . . 32
Battery acid . . . . . 33
Coolant . . . . . 33
Disposal of consumables . . . . . 34

**Emissions** . . . . . 35

## 4 Overviews

**General view** . . . . . 40

**Versions of driver's compartment** . . . . . 42
Driver's compartment, single pedal version . . . . . 42

**Operating and display elements** . . . . . 44
Display and operating unit . . . . . 44
Direction of travel/flasher/fault multi-function display . . . . . 45
Mini-console . . . . . 45

**Identification points** . . . . . 46
Overview . . . . . 46
Nameplate . . . . . 46
C. U. R. data . . . . . 47
Vehicle identification number . . . . . 47

**Accessories** . . . . . 48
Special equipment and variants . . . . . 48
Attachments . . . . . 49
Accessory overview . . . . . 49

## 5 Operation

**Checks and operations prior to start-up** . . . . . 52
Visual inspections . . . . . 52

https://truckmanualshub.com/


Open the motor hood. . . . . 53
Checking the engine oil level . . . . . 54
Filling the washer system . . . . . 55
Checking the condition of the wheels and tyres . . . . . 55
Adjusting driver's seat MSG 65/MSG 75 . . . . . 56
Adjusting the steering column . . . . . 59

**Start-up** . . . . . 60
Turning on the key switch . . . . . 60
Start the engine . . . . . 62
Operating the signal horn . . . . . 64
Restraining belt . . . . . 64
Checking function of brake system . . . . . 67
Checking function of steering system . . . . . 68
Setting the traction programs . . . . . 68

**Driving** . . . . . 69
Safety regulations when driving . . . . . 69
Behaviour in emergencies . . . . . 71
Driveways . . . . . 72
Driving (single-pedal operation with multiple lever version) . . . . . 74
Operating the service brake . . . . . 77
Operating the parking brake . . . . . 79
Steering . . . . . 80

**Lifting** . . . . . 81
Lifting system variants . . . . . 81
Lift mast versions . . . . . 81
Malfunction during a lifting operation . . . . . 82
Controls, lifting system . . . . . 84
Lifting system, multi-lever operation . . . . . 85
Fork extension . . . . . 86
Operation with reversible forks . . . . . 86
Emergency lowering . . . . . 87

**Working with loads** . . . . . 89
Safety regulations when handling loads . . . . . 89
Prior to taking up a load . . . . . 90
Carrying loading units . . . . . 91
Hazard area . . . . . 91
Transporting pallets . . . . . 92
Transport of swinging loads . . . . . 93
Taking up load . . . . . 94
Transporting loads . . . . . 97
Depositing and retrieving loading units . . . . . 100

https://truckmanualshub.com/


Driving on ascending and descending slopes . . . 101
Driving on lifts . . . 101
Driving on loading bridges . . . 102

**Working with attachments** . . . 103
Assembling attachments . . . 103
Depressurising connections for attachments . . . 104
General information on control of attachments . . . 105
Controlling attachments using multi-lever controls . . . 106
Taking up a load using attachments . . . 107

**Operation of additional equipment** . . . 108
Switching lighting on and off (special equipment) . . . 108
Switching flashing light off and on . . . 109
Switching hazard warning system off and on (special equipment) . . . 110
Switching direction indicators off and on . . . 111
Windscreen wiper/-washer . . . 111
Cab . . . 112
Heater . . . 113
Driving with cruise control . . . 113

**Trailer operation** . . . 116
Towed load . . . 116
Coupling the trailer . . . 117
Towing trailers . . . 119

**Operation of indicator and operating unit** . . . 120
Displays . . . 120
Display settings and changes . . . 120
Setting the date or time . . . 121
Resetting the daily number of kilometres and daily driving time . . . 122
Setting the language . . . 122
Fleet Manager functions . . . 123
Additional settings . . . 124

**Error messages** . . . 125
Diagram . . . 125
Error code table . . . 126
SAFETY BELT message . . . 130
Message SITZSCHALTER (SEAT SWITCH) . . . 132
AIR FILTER message . . . 135
BREMSE ANZIEHEN (APPLY HANDBRAKE!) message . . . 135
LOWER FORKS message . . . 136
REFERENCE LIFT message . . . 137
ACCELERATOR message . . . 137
BRAKE SENSOR message . . . 138

https://truckmanualshub.com/


SURVEILLANCE message . . . 138
MOT/GEN-TEMP message . . . 139
STEERING message . . . 139
OIL PRESSURE message . . . 140
COOLANT LEVEL message . . . 140
COOLANT TEMP message . . . 141
OVERHEATING message . . . 141
ABGASREINIGER (EXH. GAS PURIFIER) message . . . 142

**Operation in special operating situations** . . . 143
Transport . . . 143
Towing . . . 144
Crane loading . . . 145
Jump starting . . . 147

**Filling fuel** . . . 149
Filling up with diesel . . . 149

**Shut-down** . . . 150
Park truck secured . . . 150
Use wheel chocks . . . 151
Measures for prolonged shutdown, storage of truck . . . 151
Returning to service after storage . . . 152

## 6 Maintenance

**General maintenance information** . . . 156
Qualifications of personnel . . . 156
Information regarding performing maintenance . . . 156
Maintenance points overview . . . 158
Intervals for maintenance and inspection . . . 159
Ordering spare parts and wearing parts . . . 162
Quality and quantity of the required operating materials . . . 162
Diesel fuel . . . 163
Maintenance data table . . . 165

**Safety instructions for maintenance** . . . 167
General information . . . 167
Carrying out work on the hydraulic equipment . . . 167
Working on electrical equipment . . . 167
Safety devices . . . 167
Set values . . . 168
Raising and jacking up . . . 168
Working at the front of the forklift truck . . . 170

https://truckmanualshub.com/


**Preparation for maintenance** . . . 172
Installing and removing the floorplate . . . 172
Removing and installing the rear cover . . . 173

**Cleaning** . . . 174
Cleaning the truck . . . 174
Cleaning the electrical system . . . 175
Clean load chains . . . 175
Cleaning the windscreens . . . 176
After washing . . . 176

**Maintenance after first 50 operating hours** . . . 177
Maintenance during the breaking-in period . . . 177

**Maintenance as required** . . . 178
Cleaning the radiator, checking for leaks . . . 178
Topping up coolant and checking coolant concentration . . . 178
Drain the fuel filter of water . . . 180
Replacing the air filter insert . . . 181
Checking parking brake setting . . . 183
Servicing battery . . . 183
Maintaining hydraulic equipment . . . 186
Servicing Eberspächer particle filters . . . 187
Servicing wheels and tyres . . . 191
Lubricating joints and controls . . . 192
Maintaining the steering axle . . . 192
Servicing the mast bearing . . . 195
Load chain maintenance . . . 195
Lubricating the lift mast and roller track . . . 198
Servicing the restraining belt . . . 198
Check driver's seat . . . 200
Replacing fuses . . . 200
Attachment maintenance . . . 202

**1000-hour maintenance/annual maintenance** . . . 203
Other tasks . . . 203
Maintainance of drive axle . . . 203
Adjusting the parking brake . . . 204
Lubricating the parking brake lever bearing and ratchet . . . 204
Checking the counterweight attachment . . . 204
Changing the engine oil and filter . . . 204
Checking the ribbed V-belt . . . 206
Checking the toothed belt . . . 207
Replacing the fuel filter . . . 207
Replacing the fuel filter for Eberspächer exhaust gas cleaners . . . 208

https://truckmanualshub.com/


Checking the exhaust gas system . . . . . 208
Checking the heating system for leaks . . . . . 208
Check lift cylinders and connections for leaks. . . . . 209
Maintain lifting system . . . . . 209
Checking play between fork carriage stop and run-out stop . . . . . 211
Checking the fork arms . . . . . 211
Checking reversible fork arms . . . . . 212

**3000-hour maintenance/two-year maintenance** . . . . . 213
Work that must also be carried out . . . . . 213
Changing the gear lubricant oil . . . . . 213
Checking the wheel bearing . . . . . 214
Checking the engine mountings . . . . . 214
Replacing the toothed belt . . . . . 215

**6000-hour maintenance** . . . . . 217
Work that must also be carried out . . . . . 217
Replacing the hydraulic oil and filter . . . . . 217

**9000-hour maintenance/five-year maintenance** . . . . . 221
Work that must also be carried out . . . . . 221
Changing the coolant . . . . . 221

## 7 Technical data

**Dimensions** . . . . . 226

**VDI datasheet** . . . . . 227

**Wheels and tyres** . . . . . 230

**Fuse assignment** . . . . . 231
Fuse assignment in main fuse holder . . . . . 231
Fuse assignment special equipment . . . . . 232

## 8 Circuit diagrams

**Hydraulics** . . . . . 234
Hydraulic circuit diagram . . . . . 234

**Electrical equipment** . . . . . 236
Legend for circuit diagrams . . . . . 236

https://truckmanualshub.com/

https://truckmanualshub.com/

# 1

# Foreword

https://truckmanualshub.com/



# Your industrial truck

## General

The industrial trucks described in this user manual are built to the applicable standards and safety regulations. If your industrial truck is to be driven on public roads it must satisfy the applicable Road Traffic Act provisions for the country concerned. The vehicle excise licence must be obtained from the appropriate office.

The industrial trucks are fitted with the most up-to-date technology Now it's up to you to operate your industrial truck safely and obtain the benefits of its functional capabilities.

This user manual gives you the necessary information for this. Read it and follow these instructions before bringing your industrial trucks into use! This way you will avoid accidents, spare yourself worry and maintain the warranty.

## EC declaration of conformity, EC mark of conformity

With the EC declaration of conformity, the manufacturer confirms the compliance of the industrial truck with the standards and regulations valid at the time of marketing. The EC conformity mark is shown on the factory nameplate and indicates compliance with the above regulations.

A structural change or addition to the industrial truck on one's own authority can affect the safety in an unreliable way thus invalidating the EC declaration of conformity.

The EC declaration of conformity must be carefully stored and made available to the responsible authorities.

▷

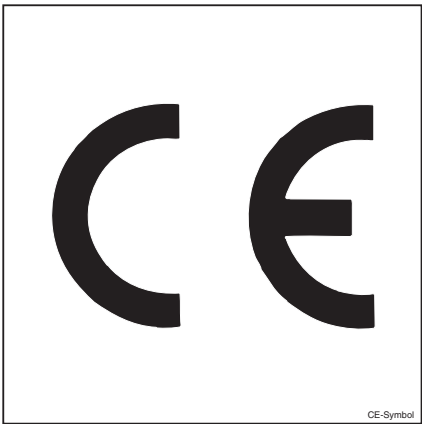


CE-Symbol

https://truckmanualshub.com/


# Information about documentation

## Documentation scope

- Operating and maintenance manual
- Operating and maintenance manual for attachments (special equipment)
- Maintenance data table
- Spare parts list
- VDMA rules for the proper use of industrial trucks
- Inspection and test log book for power-driven industrial trucks (Germany only)

This operating and maintenance manual describes all necessary measures for safe operation and correct maintenance of your industrial truck. It includes all variants available up to the time of going to press. Special designs to meet customer requirements are documented in a separate operating and maintenance manual. For further information, please contact your service centre.

Please enter the factory no. and year of manufacture from the factory nameplate in the space provided ⇒ Chapter "Nameplate", P. 4-46 below:

**Factory no. .....**

**Year of manufacture**
**.....**

Please provide these numbers for all technical questions.

An operating and maintenance manual is provided with every industrial truck. This manual must be stored carefully and must be available to the driver and operator at any time. The storage location is specified in the Overviews chapter ⇒ Chapter "Overviews", P. 39.

If the operating instructions are lost, the operator must obtain a replacement from the manufacturer immediately.

The operating and maintenance manual is included in the spare parts list and can be reordered as a spare part.

https://truckmanualshub.com/


This operating and maintenance manual must be drawn to the attention of staff responsible for the operation and maintenance of the trucks.

The operator (see ⇒ Chapter "Definition of terms used for responsible persons", P. 20) must ensure that all users have received, read and understood this manual.

Thank you for reading and complying with this manual. For further information or improvement suggestions, or if you have identified errors, please contact our service centre.

## Issue date and currentness of manual

March 2007

STILL is constantly engaged in the further development of industrial trucks. Please note that these operating instructions are subject to change and any claims based on the information and figures contained in these operating instructions cannot be asserted.

If you require technical support for your industrial truck, please contact the responsible service centre.

We hope you enjoy your driving

STILL GmbH

Berzeliusstr. 4

D-22113 Hamburg

## Copyright and proprietary rights

This manual - and any excerpts thereof - may not be reproduced, translated or tansmitted in any form to third parties without the express written permission of the manufacturer.

https://truckmanualshub.com/



## Explanations of the signal terms used:

**DANGER**

**In the case of work procedures that must be strictly adhered to in order to prevent a danger to the life or physical condition of persons.**

**WARNING**

In the case of procedures that must be strictly adhered to in order to prevent injury to persons.

**CAUTION**

In the case of procedures that must be strictly adhered to in order to prevent material damage and/or destruction.

**NOTE**

*For technical requirements that require special attention.*

**ENVIRONMENT NOTE**

*To prevent environmental damage.*

## Explanation of the cross-references

Cross-references refer to the respective chapter.

They give firstly the name of the chapter, then the chapter, and then the page in the document.

Example: ⇒ Chapter "Explanation of the cross-references", P. 1-5

https://truckmanualshub.com/



## Definition of directions

The directions forwards (1), backwards (3), right (2), left (4) give the installation locations of parts as seen from the driving position; the load is at the front.

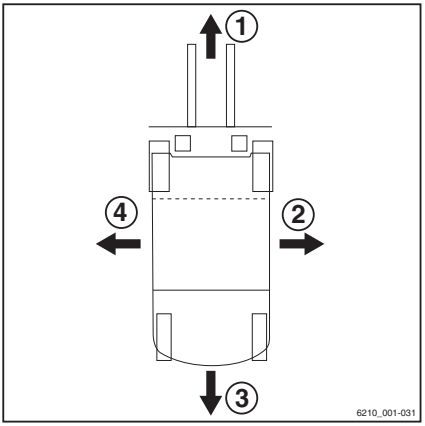


## Sample graphics

This documentation explains the (usually sequential) sequence of certain functions or operations. Schematic diagrams of a counterbalance truck are used to illustrate these sequences.

**NOTE**

*These schematic diagrams are not representative of the constructed state of the documented industrial truck. They serve only to illustrate the sequences.*

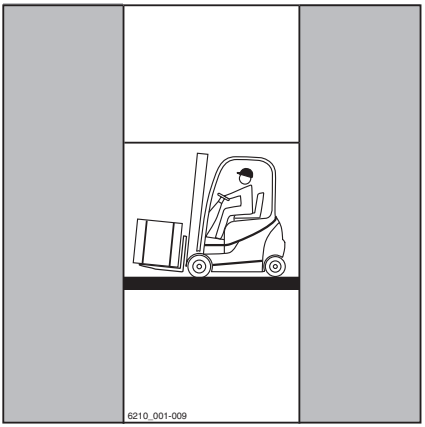

https://truckmanualshub.com/


# Environmental considerations

## Packaging

During delivery of the industrial truck, certain parts are packaged to provide protection during transport. This packaging must be removed completely prior to initial start-up.

**ENVIRONMENT NOTE**

*The packaging material must be properly disposed of after delivery of the industrial truck.*

## Disposal of units and batteries during repair work

It may be necessary to replace units as part of maintenance work. Replaced units must then be disposed of.

Your vehicle is comprised of different materials. Each of these materials must be

- disposed of,
- treated or
- recycled in accordance with regional and national regulations.

**NOTE**

*When disposing of batteries, please refer to the battery manufacturer's documentation.*

**ENVIRONMENT NOTE**

*We recommend working with a waste management company for disposal purposes.*

https://truckmanualshub.com/

https://truckmanualshub.com/

# 2

# Introduction

https://truckmanualshub.com/


# Use of truck

## Proper use

The forklift truck described in this operating manual is suitable for lifting, transporting and stacking loads.

The truck may only be used for its proper purpose, as set out and described in this operating manual.

If the truck is to be used for other purposes than those specified in the operating manual, the approval of the manufacturer and, if necessary, the responsible regulator authorities, must be obtained beforehand to prevent hazards.

The maximum load to be lifted is specified on the capacity plate (load diagram) and may not be exceeded.

## Proper towing usage

This forklift truck is suitable for the occasional towing of trailers and is equipped with a towing device for this purpose. This occasional towing may not exceed 2% of the daily operating time. If you want to use the forklift truck for more frequent towing, the manufacturer must be consulted.

The trailer operation provisions must be followed. See ⇒ Chapter "Trailer operation", P. 116.

## Impermissible use

Every hazard caused by impermissible use is the responsibility of the operator or driver and not of the manufacturer (also see in this matter ⇒ Chapter "Definition of terms used for responsible persons", P. 20).

Use for purposes other than those described in these operating instructions is prohibited.

https://truckmanualshub.com/

**WARNING**

Risk of accident!

Passengers are not allowed.

The forklift truck may not be operated in areas where is a risk of fire, explosion or corrosion, or areas that are particularly dusty.

Stacking or unstacking is not permissible on inclined surfaces or ramps.

## Place of use

The truck can be used outside and, with the correct equipment (e.g. a particulate filter), in buildings.

Use on public roads is only permitted if special equipment in accordance with StVZO (Road Traffic Licensing Regulations) is installed.

The various regulations applicable in different countries for driving the truck on public roads must be observed.

The ground must have sufficient load-bearing capacity (concrete, asphalt). It should have a rough surface. The driveways, work areas, and working widths must correspond with the specifications in the operating instructions (see ⇒ Chapter "Driveways", P. 5-72).

Driving on ascending and descending slopes is permitted if the indicated data and specifications are observed (see ⇒ Chapter "Driveways", P. 5-72).

The forklift truck is suitable for indoor and outdoor use from northern countries to the tropics (temperature range -20°C to +40°C).

This forklift truck is not designed for use in refrigerated buildings.

The operator (see ⇒ Chapter "Definition of terms used for responsible persons", P. 20) must ensure suitable fire protection in the surroundings of the truck for all applications of the truck. Depending on the application, additional fire protection must be provided on the industrial truck. In cases of doubt, contact the relevant authorities.

https://truckmanualshub.com/


## Use of working platforms

**WARNING**

The use of working platforms is governed by national law. This law must be observed. This allowed only if the law allows the use of working platforms in your country.

Consult your national authorities (in Germany the trade association) before any use.

https://truckmanualshub.com/


# Residual risk

## Residual hazards, residual risks

Despite careful working and compliance with standards and regulations, the occurrence of other risks in using the industrial truck cannot be entirely excluded.

The industrial truck and all other system components comply with current safety requirements. Nevertheless, even with proper use and adherence to all instructions indicated, some residual risk cannot be excluded.

Even beyond the narrow hazard areas of the industrial truck itself, a residual risk cannot be excluded, which means that persons in this area around the industrial truck must exercise a heightened degree of awareness, so that they can react immediately in the event of any malfunction, incident or breakdown etc.

**⚠ WARNING**

All persons that are in the vicinity of the industrial trucks must be instructed regarding these risks that arise through use of the industrial truck.

In addition, we draw attention to the safety regulations in these operating instructions.

Risks can include:

- Escape of consumables due to leaks, rupture of lines and containers etc.
- Accident risk when driving over difficult ground such as gradients, smooth or irregular surfaces or poor visibility etc.
- Falling, tripping etc. when moving on the industrial truck, especially in the wet, with leaking consumables or icy surfaces.
- The stability of the industrial truck has been tested to the latest standards. These standards only take into account the static and dynamic tipping forces that can arise during specified use in accordance with the operating rules and intended purpose. Risks that arise from improper use or incorrect operation and result in tipping forces that exceed the stability cannot be excluded in extreme cases.
- Loss of stability due to the load being unstable or the load slipping etc.

https://truckmanualshub.com/


- Fire and explosion risks due to batteries and electrical voltages.
- Human error - disregarding safety regulations.

## Special risks when using the forklift truck and attachments

The manufacturer's approval must be obtained for any unconventional use during which the driver cannot ensure proper and safe execution.

In particularly difficult cases such as the simultaneous use of two forklift trucks for transporting heavy or bulky loads, the supervisor must be present at the place of use and accept responsibility and control of this transport.

https://truckmanualshub.com/

https://truckmanualshub.com/



## Overview of hazards and counter-measures

NOTE

*This flat sheet is intended to help evaluate the hazards in your facility and applies to all drive types.*

NOTE

*Observe the national regulations for your country!*

| Hazard | Action | Check note<br>√ actioned<br>- not affected | Notes |
|---|---|---|---|
| Industrial truck equipment does not comply with local regulations. | Testing | O | If in doubt, consult competent factory inspectorate or employers' liability insurance association |
| Lack of skills and qualification of driver | Driver training (sit-on and stand-on) | O | BGG 925<br>VDI 3313 driver permit |
| Usage by unautho-rised persons | Access with key only for authorised persons | O | |
| Industrial truck not in safe operating condition | Recurrent testing and rectification of defects | O | BetrSichVO (Workplace Safety Ordinance) |
| Impaired visibility through load | Resource planning | O | BetrSichVO (Workplace Safety Ordinance) |
| Contamination of respiratory air | Assessment of diesel exhaust gases | O | TRGS 554 and BetrSichVO (Workplace Safety Ordinance) |
| | Assessment of LPG exhaust gases | O | MAK (Maximum Workplace Concentrations) list and BetrSichVO (Workplace Safety Ordinance) |

https://truckmanualshub.com/


| Hazard | Action | Check note<br>√ actioned<br>- not affected | Notes |
|---|---|---|---|
| Impermissible usage (improper usage) | Issue of operating instructions | O | BetrSichVO (Workplace Safety Ordinance) and ArbSchG (Health and Safety at Work Act) |
| | Written notice of instruction to driver | O | BetrSichVO (Workplace Safety Ordinance) and ArbSchG (Health and Safety at Work Act) |
| | Observe BetrSichVO (Workplace Safety Ordinance), operating instructions and VDMA (German Engineering Federation) rules | O | |
| When fuelling | | | |
| a) Diesel | Observe BetrSichVO (Workplace Safety Ordinance), operating instructions and VDMA (German Engineering Federation) rules | O | |
| b) LPG | Observe BGV D34, operating instructions and VDMA (German Engineering Federation) rules | O | |
| When charging traction batteries | Observe BetrSichVO (Workplace Safety Ordinance), operating instructions and VDMA (German Engineering Federation) rules | O | VDE 0510: In particular<br>- Ensure ventilation<br>- Insulation value within permissible range |
| When using battery chargers | Observe BetrSichVO, BGR 104 and the operating instructions. | O | BetrSichVO and BGR 104 |
| When parking LPG vehicles | Observe BetrSichVO, BGR 104 and the operating instructions. | O | BetrSichVO and BGR 104 |

https://truckmanualshub.com/


## Risk for employees

According to the operating safety ordinance (BetrSichVO) and German Law on Health and Safety at Work (ArbSchG) the operator (see ⇒ Chapter "Definition of terms used for responsible persons", P. 20) must ascertain and assess the hazards present at his plant. He must specify the necessary measures for health and safety for employees (BetrSichVO). The operator must thus draw up operating instructions applicable to his plant (§ 6 ArbSchG) and inform the driver accordingly. A person responsible for health and safety must be appointed.

Construction and equipment of the industrial truck correspond to the Machinery Directive 98/37/EEC and they are therefore identified with the CE symbol. They are therefore not included in the hazard assessment, and the attachments likewise on account of their own CE marking . The operator must however select the type and equipment of the industrial trucks so as to comply with the local provisions for usage.

The result must be documented (Section 6 ArbSchG). In the case of industrial truck usage involving similar hazard situations it is permitted to summarise the results . The overview provided (see ⇒ Chapter "Overview of hazards and countermeasures", P. 2-16)means we are helping you to comply with these regulations. The overview specifies key hazards which are most frequently the cause of accidents in the event of non-compliance. If other major hazards are involved at a specific plant , these must be taken into consideration additionally.

In many plants the conditions of use for industrial trucks are by and large similar so that the hazards can be summarised in one overview. Take note of information of the respective employers' liability insurance association as regards this topic.

https://truckmanualshub.com/

# 3

# Safety

https://truckmanualshub.com/


# Definition of terms used for responsible persons

## Operating company

The operating company is the natural or legal person that operates the industrial truck or in whose employment the industrial truck is used.

The operating company must ensure that the forklift truck is used only for its proper purposes and in compliance with the safety instructions in this operating and maintenance manual.

The operating company must ensure that all users understand the safety information.

The operating company is responsible for the scheduling and correct performance of regular safety checks.

We recommend that the national performance specifications are adhered to.

## Specialist

A specialist is considered to be someone whose technical training and experience have enabled them to develop an appropriate knowledge of industrial trucks and who is sufficiently familiar with the applicable national health and safety regulations, accident prevention regulations, directives and generally recognised technical conventions (standards, VDE regulations, technical regulations of other member states of the European Union or other countries that are signatories to the treaty establishing the European Economic Area) as to be able to assess the condition of industrial trucks in terms of health and safety.

## Drivers

This industrial truck may only be driven by suitable persons who are at least 18 years old, who have been trained in driving, have demonstrated their skills in driving and handling loads to the operator or an authorised representative and have been specifically instructed to drive the truck. Specific knowledge

https://truckmanualshub.com/


of the industrial truck to be operated is also required.

The training requirements under §3 of the Health and Safety at Work Act and §9 of the plant safety regulations are satisfied if the driver has been trained in accordance with the BGG (General Employers' Liability Insurance Association Act) 925. Follow the national regulations for your country.

## Rights, duties and rules of behaviour for the driver,

The driver must be trained in his rights and duties.

The driver must be granted the required rights.

The driver must wear appropriate protective equipment (protective clothing, safety shoes, safety helmet, protective goggles, gloves) for the conditions, the job and the load to be lifted. Strong footwear should be worn to ensure safe driving and braking.

The driver must be familiarised with the operating manual and it must be accessible to him at all times.

The driver must:

- have read and understood the operating manual,
- have familiarised himself with safe operation of an industrial truck,
- be physically and psychologically able to drive an industrial truck safely.

**⚠ DANGER**

**Taking drugs, alcohol or medications that affect the response of an individual limits the ability of that individual to drive an industrial truck!**

Individuals under the influence of the above-mentioned substances are not permitted to perform any work on or with an industrial truck.

## Prohibition on use by unauthorised persons

The driver is responsible for the industrial truck during working hours. He may not allow unauthorised persons to operate the truck.

https://truckmanualshub.com/


When leaving the truck, he must secure it against unauthorised use.

https://truckmanualshub.com/


# Essentials for safe operation

## Insurance coverage on company premises

In many cases, company premises are restricted public traffic areas.

NOTE

We advise checking your public liability insurance to determine whether you have insurance coverage for your industrial truck with respect to third parties in the event of damage in restricted public traffic areas.

## Changes and retrofitting

If your forklift truck is used for work not listed in the guidelines or in these instructions and must be consequently converted or retrofitted, be aware that each change to the structural state can affect the handling and the stability of the forklift truck and can result in accidents. Therefore, contact your customer service office in advance. Changes that will disadvantageously affect stability among other things may not be made without our approval.

The forklift truck can only be converted with our written approval. Approval from the responsible authority must be obtained if necessary.

We warn against the installation and use of restraint systems not approved by us.

If your forklift truck is equipped with a restraint system that is approved by the manufacturer, we nonetheless recommend using the restraining belt.

For safety reasons, it is prohibited to drill holes in the driver's overhead guard or to weld to it. In the case of welding to other locations of the forklift truck, the battery and all connections to the electronic control cards must be disconnected. Please contact your customer service office.

https://truckmanualshub.com/



**DANGER**

**Operation of the forklift truck without the overhead guard at a lift height of over 1800 mm is prohibited. This voids the CE conformity!**

## Warning regarding non-original parts

Original parts, attachments and accessories are specially designed for this vehicle. We specifically draw your attention to the fact that parts, attachments and accessories supplied by other companies have not been tested and approved by us.

**CAUTION**

Installation and/or use of such products may therefore have a negative impact on the design features of your industrial truck and thus impair active and/or passive driving safety.

We recommend that you obtain approval from us and, if necessary, from the responsible regulatory authorities, before installing such parts. The manufacturer accepts no liability for any damage caused by the use of non-original parts and accessories without our approval.

## Damage, defects and misuse of safety devices

The driver must report any damage or other defects to the truck or attachment immediately to the supervisory personnel.

Trucks and attachments that are not functional or safe to drive may not be used until they have been properly repaired.

Do not remove or deactivate safety devices and switches.

Fixed set values may only be changed with the approval of the manufacturer.

Work on the electrical system (e.g. connecting a radio, additional headlights, etc.) are only permitted with the manufacturer's written approval. All electrical system interventions must be documented.

https://truckmanualshub.com/


Even if they are removable, roof panels may not be removed as they are designed to protect against falling small objects.

## Tyres

Tyre quality affects the stability and handling of the forklift truck. Changes can only be made in consultation with the manufacturer. When changing wheels or tyres, always ensure that no tilting of the forklift truck occurs (e.g. always change right and left wheels at the same time).

## Medical equipment

When a driver is wearing medical equipment, e.g. heart pacemaker or hearing aids, the operation of this equipment may be affected. A doctor or the manufacturer of the medical equipment should be asked whether the equipment is sufficiently protected against electromagnetic interference.

https://truckmanualshub.com/



# Safety inspections

## Regular safety check of the industrial trucks ▷

### Safety check based on time and extraordinary incidents

The operator (see ⇒ Chapter "Definition of terms used for responsible persons", P. 20) must make sure that the industrial truck is checked by a specialist at least once per year or after special incidents (audit in line with accident prevention guidelines in Germany; please observe your national guidelines) (see ⇒ Chapter "Definition of terms used for responsible persons", P. 20).

A complete audit of the technical condition of the industrial truck is performed with regard to accident safety. In addition, the industrial truck must also be thoroughly checked for damage, that could have potentially been caused by improper use. An audit log must be created. The results from the audit must be retained until a further two audits have been carried out.

The schedule is indicated by a sticker on the vehicle. Use the "Test log book for power-driven industrial trucks"! Order No. 135745

Observe the guidelines for testing on your vehicles in accordance with accident prevention regulations (GERMAN ACCIDENT PREVENTION REGULATIONS FOR INDUSTRIAL TRUCKS).

The operator must ensure faults are rectified without delay. Please contact the service centre.

**NOTE**

*Observe the national regulations for your country.*

## Checking the diesel engine emissions

– Check the diesel engine emissions annually to TRGS 554.

https://truckmanualshub.com/


The emission analysis must be performed by a specialist, and documented in writing.

– Contact the customer service office.

NOTE

*Follow the national regulations for your country.*

## Trucks with particle filters

Trucks with particle filters (special equipment) may be operated in completely or partially enclosed working areas.

NOTE

*Observe the national regulations for your country!*

The operator must ensure that the following requirements are met; (see ⇒ Chapter "Definition of terms used for responsible persons", P. 20):

- Their use must be reported to the relevant health and safety authorities
- Operating instructions must be displayed in the working areas
- Employees must be informed
- The particle filter must be tested and serviced every 12 months or after every 1000 operating hours. The emission analysis must be performed by a specialist, and documented in writing.

NOTE

*Observe the other regulations under TRGS 554 and/or your national regulations.*

## Insulation test

Industrial truck insulation must have a sufficient insulation resistance. The test is only necessary in the engine-generator circuit.

https://truckmanualshub.com/


### Test the insulation resistance of the electrical system.

Have the insulation resistance of all active electrical parts tested according to DIN 57117 and DIN 43539, VDE 0117 and VDE 0510 at least once per year. Measurement voltage > nominal voltage < 500 V.

The insulation resistance is sufficient when it has a nominal voltage of at least 1000 Ohm/V against ground.

Contact STILL service personnel.

https://truckmanualshub.com/



# Safety regulations when handling working materials

## Permissible consumables

**⚠ WARNING**

Consumables can be dangerous.

Follow the safety regulations when handling these substances.

Refer to the maintenance data table for the permissible substances necessary for operation. (See ⇒ Chapter "Maintenance data table", P. 6-165).

## Oils

**⚠ WARNING**

Oils are flammable.

- Follow the statutory regulations.
- Do not allow them to get onto hot engine components.
- Do not smoke while working.

**⚠ WARNING**

Oils are toxic!

- Avoid contact and consumption.
- If vapour or fumes are inhaled, administer fresh air immediately.
- After contact with the eyes, rinse thoroughly (for at least 10 minutes) with water and then consult an ophthalmologist.
- If swallowed, do not induce vomiting. Seek medical attention.

https://truckmanualshub.com/

**⚠ WARNING**

Prolonged intensive contact with the skin can cause scouring and skin abrasion.

– Avoid contact and consumption.
– Wear protective gloves.
– Wash the skin with soap and water and use skin care products.
– Immediately change soaked clothing and shoes.

**⚠ WARNING**

Risk of slipping on spilled product, particularly when combined with water.

– Remove any spilled fluid immediately with oil binding agent and dispose of in line with the applicable regulations.

**ENVIRONMENT NOTE**

*Oils are water pollutants!*

- *Always store oil in vessels that comply with the applicable regulations.*
- *Avoid spilling.*
- *Remove any spilled fluid immediately with oil binding agent and dispose of in line with the applicable regulations.*
- *Dispose of old oils according to the applicable regulations.*

## Diesel fuel

**⚠ WARNING**

Diesel fuel is combustible.

– Observe statutory regulations.
– Do not allow them to get onto hot engine components.
– Do not smoke!

https://truckmanualshub.com/

**WARNING**

Diesel fuel is toxic!

- Avoid contact and consumption.
- If vapour or fumes are inhaled, administer fresh air immediately.
- After contact with the eyes, rinse thoroughly (for at least 10 minutes) with water and then consult an eye specialist.
- If swallowed, do not induce vomiting. Seek medical attention.

**WARNING**

Prolonged intensive contact with the skin can cause scouring and skin abrasion.

- Avoid contact and consumption.
- Wear protective gloves.
- Wash the skin with soap and water and use skin care products.
- Immediately change soaked clothing and shoes.

**WARNING**

Risk of slipping due to spilled diesel fuel, particularly in connection with water.

- Immediately remove spilled diesel fuel with an oil-binding agent and dispose of in accordance with regulations.

**ENVIRONMENT NOTE**

*Diesel fuel contaminates groundwater.*

- *Always store in regulation containers.*
- *Avoid spilling.*
- *Immediately remove spilled diesel fuel with an oil-binding agent and dispose of in accordance with regulations.*

https://truckmanualshub.com/



## Hydraulic fluid

**WARNING**

These fluids are pressurised during operation of the forklift truck and are hazardous to your health.

– Do not spill the fluids.
– Follow the statutory regulations.
– Do not allow to come into contact with hot motor parts.

**WARNING**

These fluids are pressurised during operation of the forklift truck and are hazardous to your health.

– Do not allow to come into contact with the skin.
– Avoid inhaling spray.
– Penetration of pressurised fluids into the skin is particularly dangerous if these fluids escape at high pressure due to leaks in the hydraulic system. In case of such injury, immediate medical assistance is required.
– To avoid injury, use appropriate personal protective equipment (e.g. protective gloves, industrial goggles, skin protection and skin care products).

**ENVIRONMENT NOTE**

*Hydraulic fluid is a substance hazardous to water.*

- *Always store hydraulic fluid in containers complying with the regulations.*
- *Avoid spilling.*
- *Spilt hydraulic fluid should be removed with oil-binding agents at once and disposed of according to the regulations.*
- *Dispose of old hydraulic fluid according to the regulations.*

https://truckmanualshub.com/



## Battery acid

**WARNING**

Battery acid contains dissolved sulphuric acid. This is toxic.

- Avoid contact and consumption.
- In case of injury, seek medical advice immediately.

**WARNING**

Battery acid contains dissolved sulphuric acid. This is corrosive.

- When working with battery acid, always wear protective clothing and eye protection.
- Do not allow any acid to get onto the clothing or skin or into the eyes; if this does happen, rinse immediately with plenty of clean water.
- In case of injury, seek medical advice immediately.
- Immediately rinse away spilt battery acid with plenty of water.
- Follow the statutory regulations.

**ENVIRONMENT NOTE**

- Dispose of used battery acid in line with the applicable regulations.

## Coolant

**WARNING**

Coolant and coolant additive are hazardous to health.

- Store only in original vessels, do not spill.
- Never use empty food containers, bottles or other vessels for storing coolant.
- The legal regulations must be observed.

**ENVIRONMENT NOTE**

https://truckmanualshub.com/


– Immediately remove escaped coolant with an oil binding agent and dispose of in line with the regulations.

– Dispose of used coolant in line with the regulations.

## Disposal of consumables

**ENVIRONMENT NOTE**

*Materials that have to be disposed of following maintenance, repair, and cleaning must be systematically collected and disposed of in accordance with regulations. Follow the national regulations for your country. Work may only be carried out in areas designated for the purpose. Care must be taken to minimise, as far as possible, any impact on the environment.*

- Any spillage of fluids such as hydraulic oil, brake fluid or gear lubricant oil must be immediately soaked up with an oil-binding agent.
- The regulations for disposal of used oil are applicable.
- Any spillage of battery acid must be neutralised immediately.

https://truckmanualshub.com/


# Emissions

## Noise emissions

The values were determined based on measurement procedures from the standard EN 12053 (noise measurement in industrial trucks based on EN 12001 and EN ISO 3744 and the requirements of EN ISO 4871). This machine emits the following sound pressure levels:

| continuous sound pressure level in the driver's compartment | |
|---|---|
| $L_{pAZ}$ | < 78 dB(A) |
| Uncertainty $K_{pA}$ | 4 dB(A) |

The values were determined in the test cycle on an identical machine from the weighted values for operating conditions and idling.

Time percentages:

- Lifting 18%
- Idling 58%
- Driving 24%

However, the indicated noise levels at the truck cannot be used to determine the noise emissions at workplaces according to the most recent version of **Directive 2003/10/EC** (daily personal noise pollution). If necessary, these should be determined directly at the workplace under the actual conditions there (additional noise sources, special conditions of usage, sound reflections) by the operating company; (see ⇒ Chapter "Definition of terms used for responsible persons", P. 20).

## Vibrations

The vibrations of the machine must be determined on an identical machine in accordance with the standard EN 13059 "Vibration measurements on industrial trucks".

| Weighted effective value of the acceleration the body (feet or seat surface) is subjected to | < 0.59 $m/s^2$ |
|---|---|
| Uncertainty K | 0.177 $m/s^2$ |

Tests have indicated that the amplitude of the hand and arm vibrations on the steering wheel

https://truckmanualshub.com/


or the operating elements in the truck are less than 2.5 m/s$^2$. There are therefore no measurement guidelines for these measurements. The personal vibration load on the driver over a working day shall be determined in accordance with the **Directive 2002/44/EC** by the operating company (see ⇒ Chapter "Definition of terms used for responsible persons", P. 20) at the actual place of use, in order to consider all additional influences, such as driving route, intensity of use etc.

## Exhaust gases

The engine releases exhaust gases into the environment during operation. The exhaust gases consist mainly of water vapour, carbon dioxide ($CO_2$), carbon monoxide (CO), hydrocarbons (CH), aldehydes, nitrogen oxide ($NO_X$) and soot. The components CO, CH, $NO_X$ and soot are poisonous or are health hazards, and may not be breathed at high concentrations.

## Diesel engine emissions (DME)

Diesel engine emissions are harmful to health. In particular the particulates contained in the exhaust gases can cause cancer.

**⚠ WARNING**

Danger to health!

If your truck is not equipped with a particle filter (exhaust gas purifier for diesel engines), it is not allowed to operate in completely or partially enclosed working areas.

## Heat

**⚠ WARNING**

The exhaust gases are very hot and can ignite combustible material.

The exhaust pipe should therefore be kept away from combustible materials.

https://truckmanualshub.com/



## Battery

**WARNING**

During charging, the battery releases a mixture of oxygen and hydrogen (detonating gas). This gas mixture is explosive and must not be ignited.

Suitable ventilation and keeping it away from open flames can avoid the danger of explosion. Observe the safety regulations for handling the battery.

https://truckmanualshub.com/

https://truckmanualshub.com/

# 4

# Overviews

https://truckmanualshub.com/



# General view

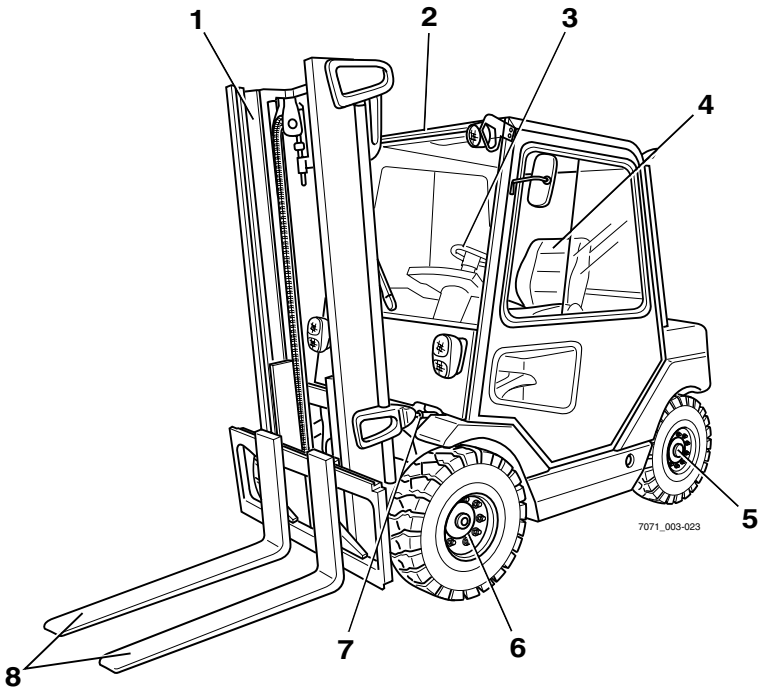


| | | | |
|---|---|---|---|
| 1 | Lift mast | 5 | Steering axle |
| 2 | Overhead guard | 6 | Drive axle |
| 3 | Steering wheel | 7 | Tilt cylinder |
| 4 | Driver's seat | 8 | Fork arms |

https://truckmanualshub.com/

https://truckmanualshub.com/



# Versions of driver's compartment

## Driver's compartment, single pedal version

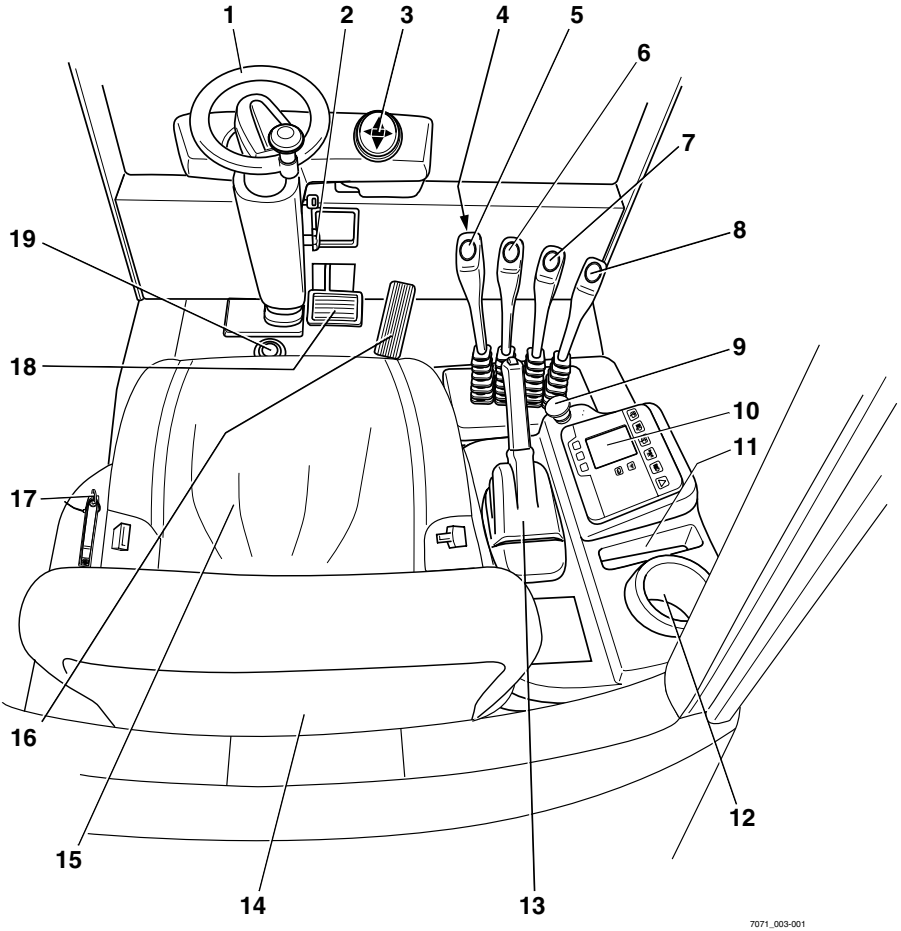

https://truckmanualshub.com/


1 Steering wheel
2 Steering column adjustment lever
3 Direction of travel/flasher/fault multi-function display
4 Travel direction switch
5 "Lift-lower" operating lever
6 "Tilt" operating lever
7 "Attachments" operating lever
8 "Attachments" operating lever
9 Emergency stop switch for Eberspächer particle filter system
10 Display and operating unit
11 Storage box
12 Bottle holder for 1 l-PET bottles
13 Parking brake lever
14 Storage compartment for user and maintenance manual
15 Driver seat
16 Accelerator pedal
17 Bonnet release
18 Brake pedal
19 Alarm horn foot switch

https://truckmanualshub.com/



# Operating and display elements

## Display and operating unit

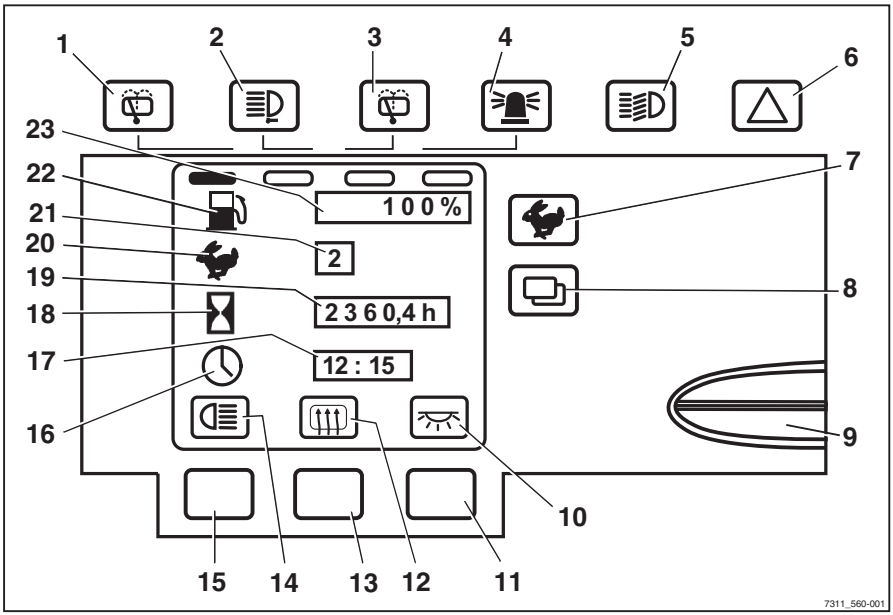


| | | | |
|---|---|---|---|
| 1 | Front windscreen wiper switch | 13 | Rear window heater switch |
| 2 | Work light switch | 14 | Rear searchlight display |
| 3 | Rear windscreen wiper switch | 15 | Rear searchlight switch |
| 4 | Flashing light switch | 16 | Time symbol |
| 5 | Lighting switch | 17 | Time |
| 6 | Switch - hazard warning lights | 18 | Operating hours symbol |
| 7 | Traction program switch | 19 | Operating hours display |
| 8 | Menu change key | 20 | Traction program symbol |
| 9 | Fleet Manager smart card reader | 21 | Current traction program |
| 10 | Interior light display | 22 | Fuel fill-up symbol |
| 11 | Interior light switch | 23 | Fuel level in % |
| 12 | Rear window heater display | | |

**NOTE**

*The displays (10, 12, 14) as well as the buttons (11, 13, 15) are assigned independently from the additional electrical special equipment.*

https://truckmanualshub.com/



## Direction of travel/flasher/fault multi-function display

The direction of travel/flasher/fault multi-function display is used to display the direction of travel. In addition, the flasher is used to indicate that messages are shown on the display and operating unit.

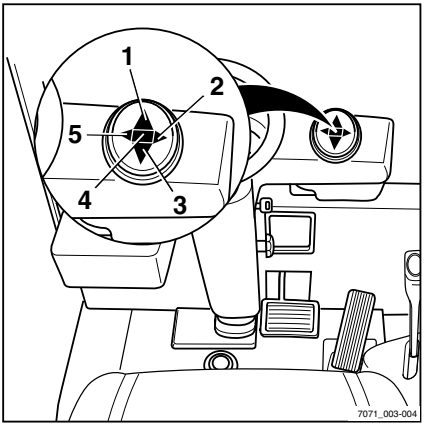


1 Forward travel display
2 Right flasher display
3 Reverse travel display
4 Message display
5 Left flasher display

## Mini-console

The mini console is located on the steering column below the steering wheel.

**NOTE**

*Switch (1) is not assigned in trucks with the travel direction switch on the "lift-lower" operating lever.*

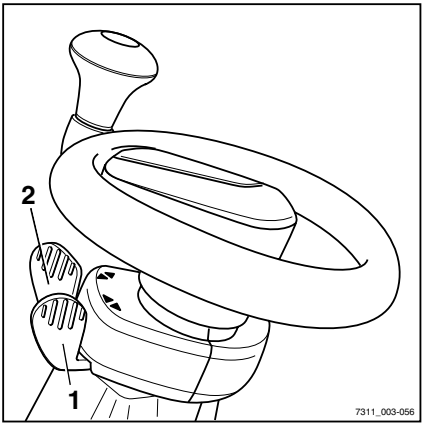


1 Travel direction switch
2 Direction indicator switch

https://truckmanualshub.com/



# Identification points

## Overview

### Warning labels

The label locations on your vehicle were not yet finalized at the time of printing. Observe the warning and information labels on your vehicle.

## Nameplate

It is possible to identify your forklift truck from the information on the nameplate.

▷

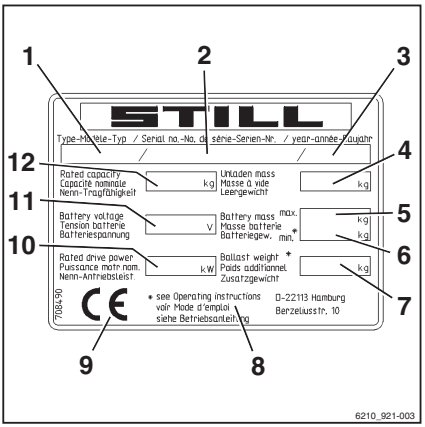


| | |
|---|---|
| 1 | Type |
| 2 | Factory no. ..... |
| 3 | Year of construction |
| 4 | Tare weight kg |
| 5 | Permissible battery weight, max. (only for electric lift trucks) |
| 6 | Permissible battery weight, min. (only for electric lift trucks) |
| 7 | Ballast weight (only for electric lift trucks) |
| 8 | Refer to the technical data listed in these operating instructions for more detailed information |
| 9 | CE mark |
| 10 | Nominal drive rating |
| 11 | Battery voltage V |
| 12 | Nominal forklift capacity kg |

https://truckmanualshub.com/



## C. U. R. data

This label provides information on the weight and the load distribution of your truck.

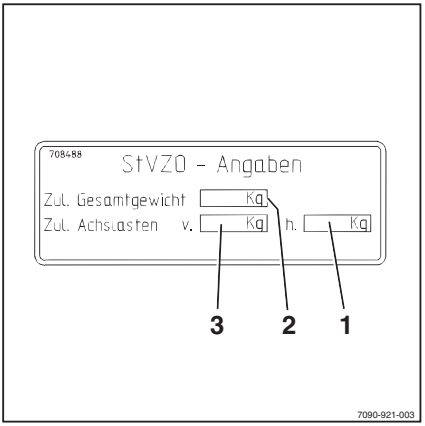


1 Admisssible rear axle load in kg
2 Admissible total weight kg
3 Admissible front axle load in kg

## Vehicle identification number

**NOTE**

*Please state this serial number when making technical inquiries.*

The serial number contains the following information:

1 Production site

2 Type

3 Variant

4 Serial number

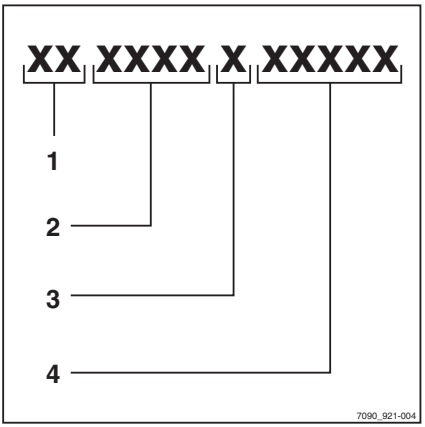

https://truckmanualshub.com/


# Accessories

## Special equipment and variants

### Driver seat

Driver's seat MSG 65:

- Textile cover, lumbar support
- Synthetic leather, lumbar support, heating, backrest extension
- Textile cover, lumbar support, heating, backrest extension

Driver's seat MSG 75:

- Synthetic leather, lumbar support, heating, backrest extension
- Textile cover, lumbar support, heating, backrest extension

### Overhead guard and cabin

- Overhead guard
- Cab weather protection
- Cabin
- Cabin with heater

### Lift mast

NOTE

*Overall height and lifting height, see ⇒ Chapter "Technical data", P. 225.*

- Tele
- Triple
- Load guard

### Electrical equipment

- Standard lighting system
- Lighting system according to StVZO (Road Traffic Licensing Regulations)
- Left/right/front/rear searchlight
- Flashing light
- Reverse light
- Dual-pedal control drive operation
- FleetManager
- Accident recorder
- Cruise control

https://truckmanualshub.com/


### Switching off

Particle filter system
- Eberspächer

## Attachments

- Fork extension
- Warning beam
- Grille
- Mandril
- Crane arm
- Snow remover
- Shovel
- Sideshift
- Clamp forks without sideshift
- Bale clamp without sideshift
- Clamp forks with sideshift
- Bale clamp with sideshift
- Fork arm adjustment

## Accessory overview

- Key for key switch (2 pieces)
- Key for cab (special equipment)
- Emergency lowering key
- Release tool for bonnet

https://truckmanualshub.com/

https://truckmanualshub.com/

# 5

# Operation

https://truckmanualshub.com/



# Checks and operations prior to start-up

## Visual inspections

**⚠ WARNING**

Damage or other defects of the forklift truck or attachment (special equipment) can result in accidents.

If damage or other defects are identified on the forklift truck or attachment (special attachment) during the following inspections, do not use the vehicle until it has be repaired properly. Do not remove or deactivate safety devices and switches. Do not change predefined set values.

**⚠ WARNING**

Risk of falling!

When working on high-level areas of the truck, do not use truck components for access or to stand on.

– Always use suitable equipment for this.

Prior to start-up, a safe operating state must be ensured:

– The retaining devices (1) of the fork arms for preventing lifting and shifting should not show any defects.

– Fork arms or other load-carrying equipment may not have any noticeable damage (e.g. bends, cracks, significant wear).

– The chains must be undamaged and evenly and adequately tensioned.

– Check the area under the forklift truck for leaking consumables.

– The guard grille (special equipment) and overhead guard must be undamaged and secure.

– Attachments (special equipment) must be properly secured and function according to their operating instructions.

– Check whether all information labels/notices are present and legible. Damaged or missing stickers must be replaced according to the overview of sticker locations ⇒ Chapter "Overview", P. 4-46.

▷

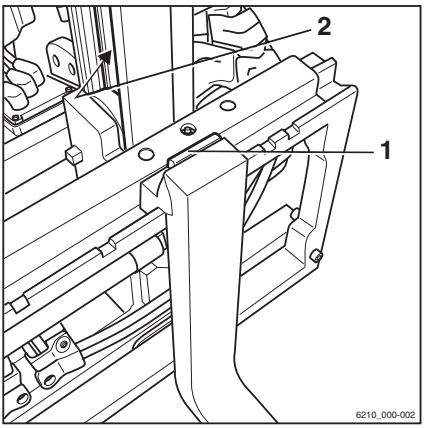

https://truckmanualshub.com/


- The roller tracks (2) must be lubricated with a visible lubricant film.
- Check the hydraulic system and hydraulic oil tank where visible for damage and leaks. Damaged hoses must be replaced.
- Check the fuel system and fuel tank where visible for damage and leaks. Damaged hoses must be replaced.
- The motor hood must be securely closed.
- Steps must be clean and free of ice.
- In the case of versions with a cabin (special equipment) all windows must be clean and free of ice. Switch on the heater (special equipment) and set the air vents so that the windows remain free of ice.
- Report defects to the supervisor.

## Open the motor hood.

▷

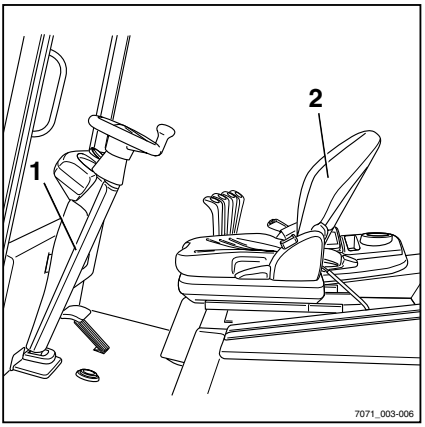


**⚠ WARNING**

Risk of injury!

Switch off the engine before opening the bonnet.

- Lock steering column (1) into the frontmost position.
- Slide the driver's seat completely forward and, in vehicles with a rear window, fold the seat back (2) forward; see ⇒ Chapter "Adjusting driver's seat MSG 65/MSG 75", P. 5-56.

https://truckmanualshub.com/



– Insert the release tool (3) and release the catch. To open it, use the release tool from the accessories.

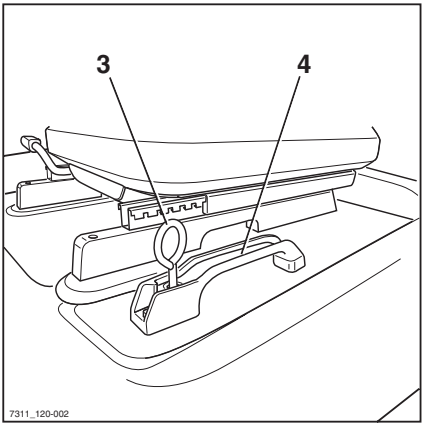


NOTE

*The catch can be secured with a lock. Release the lock beforehand.*

– Use the handle (4) next to the driver seat to open the motor hood to the rear.

**WARNING**

Risk of accident!

The release tool must always remain with the vehicle, so that in an emergency the bonnet can be opened at any time!

## Checking the engine oil level

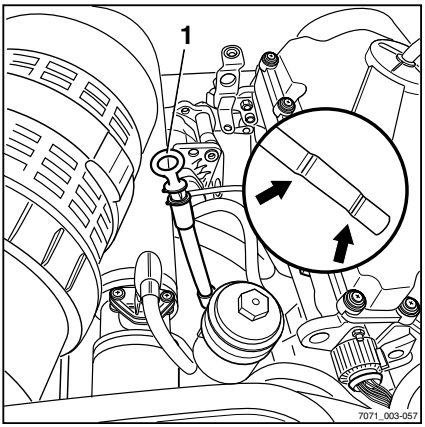


– Position truck horizontally.

– Pull out the dipstick (1) and wipe it off.

– Insert dipstick to the stop and pull out again.

The oil level must be between the marks (arrows).

– If the oil level is not up to the required level, top up the engine oil according to the data in the maintenance table, see ⇒ Chapter "Maintenance data table", P. 6-165.

https://truckmanualshub.com/



## Filling the washer system

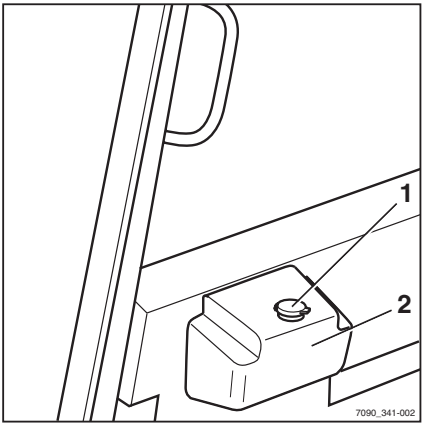


- Open the lid (1).
- Fill the washer reservoir (2) using washer fluid with anti-freeze.

**CAUTION**

If there is no anti-freeze in the washer system (special equipment), the washer system may be damaged.

- Top up the container with clean water.
- Close lid.
- Operate the washer system until washer fluid is discharged from the spray nozzles.

## Checking the condition of the wheels and tyres

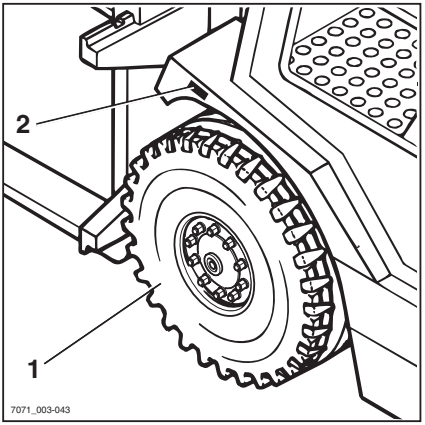


**WARNING**

Risk of accident! With uneven wear or incorrect air pressure, the stability of the forklift truck decreases and the braking distance increases.

Renew left and right worn or damaged tyres without delay.

**NOTE**

- *Only permissible tyre types may be used, see ⇒ Chapter "Wheels and tyres", P. 7-230.*

- Check tyres (1) for wear or damage.

Tyres cannot be damaged or worn. They must be worn evenly on both sides.

- Check air pressure. The air pressure given on the stickers (2) must be observed.

**NOTE**

*Note the safety principles for tyres, see ⇒ Chapter "Tyres", P. 3-25.*

https://truckmanualshub.com/



## Adjusting driver's seat MSG 65/MSG 75

**DANGER**

**Risk of accident!**

Do not adjust the seat while driving.

– Adjust the seat in such a way that you can safely reach and operate all the controls.

On some versions (special equipment), the amount of head clearance on your forklift truck may be restricted. On these versions, the distance between the head and the lower edge of the roofing sheet must be at least 40 mm.

**NOTE**

*If your truck comes with separate operating instructions for the seat, they must be followed.*

**WARNING**

Risk of injury

To obtain optimum seat cushioning, you must adjust the seat suspension to your own body weight. This helps your back and protects your health.

To prevent injury, make sure that there are no objects in the swivel area of the seat.

### Moving the driver's seat

▷

– Pull lever (1) up and move the seat.

– Release the lever.

**WARNING**

Risk of injury

– Make sure that the seat is securely engaged.

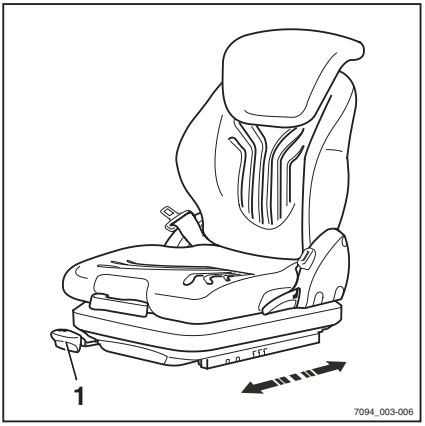

https://truckmanualshub.com/



## Adjusting the backrest

- Pull lever (2) upwards and adjust the incline of the seat back using your body weight.
- Release the lever.

**WARNING**

Risk of injury

- Make sure that the backrest is engaged.

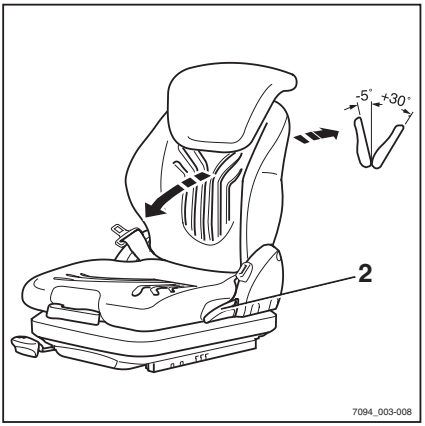


## Adjusting the seat suspension to your weight

**NOTE**

*This adjustment should only be made while the seat is loaded.*

**NOTE**

*The MSG 75 seat is equipped with an electric air suspension activated with an electric switch instead of a (3) lever.*

- Completely fold open lever (3) and adjust the driver's weight by pumping up or down.
- Return the lever (3) back to the initial central position before each new lift (audible click).

**NOTE**

*A noticeable empty lift on the operating handle shows you have reached the minimum or maximum weight setting.*

The correct driver's weight has been selected when the arrow is in the middle of the view window.

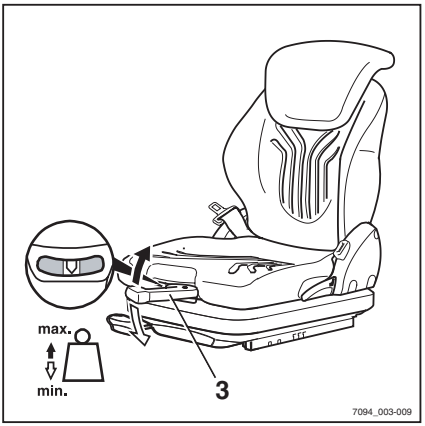

https://truckmanualshub.com/



## Adjust lumbar support (special equipment)

▷

– Adjust the lumbar support by turning the (4) hand wheel.

By turning upwards, the convexity of the upper lumbar support can be adjusted individually, and by turning downwards, the lower area can be adjusted individually.

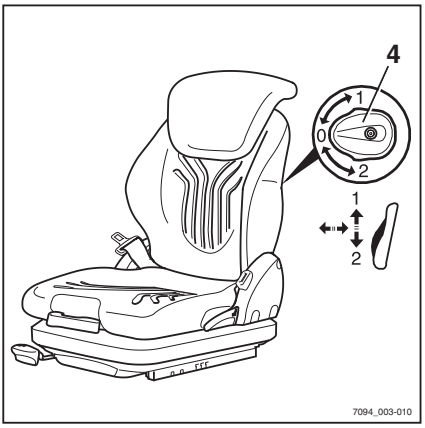


## Adjusting backrest extension (special equipment)

▷

– Adjust the seat back extension (5) by pulling it out or pushing it in to the desired position.

To remove the seat back extension, move it past the end stop by jolting it upwards.

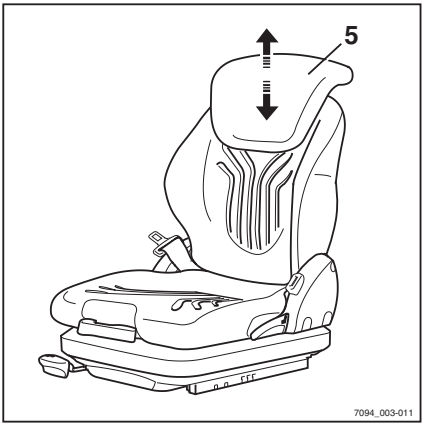

https://truckmanualshub.com/



## Switching seat heater (special equipment) on and off

▷

– Switch the seat heater on or off (6) using the switch.

## Adjusting the steering column

▷

– Loosen the button (1) of the steering column locking device.

– Position the steering column (2) and retighten the button.

**⚠ WARNING**

Risk of accident!

Ensure that the steering column is secure.

**⚠ DANGER**

**Risk of accident!**

Never adjust the steering column while driving.

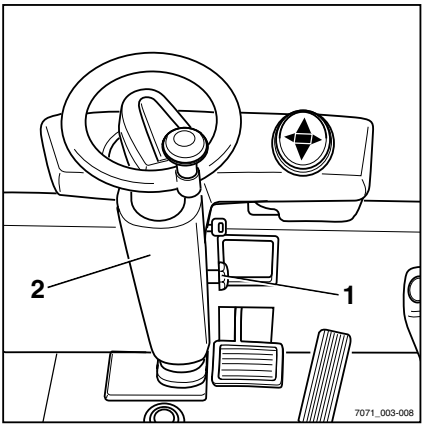

https://truckmanualshub.com/



# Start-up

## Turning on the key switch

▷

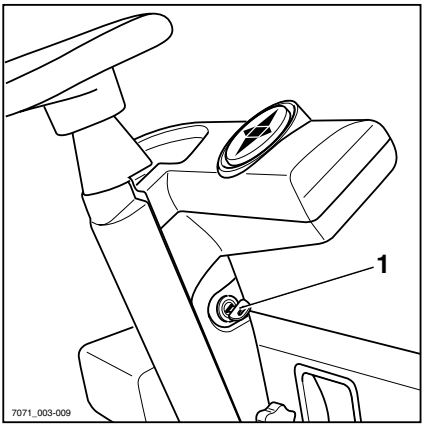


**WARNING**

Before switching on the key switch, all tests before commissioning must be performed without detecting any defects.

– Perform checks prior to start-up, see ⇒ Chapter "Checks and operations prior to start-up", P. 52.

If defects are identified, the truck may not be switched on! Please contact your supervisor or service centre.

**DANGER**

**Risk of accident!**

Only drive with the bonnet locked.

– Insert the ignition key (1) into the key switch and turn it to the right into the operating position "I".

This initiates a self-test. All lamps in the multi-function display light up briefly.

▷

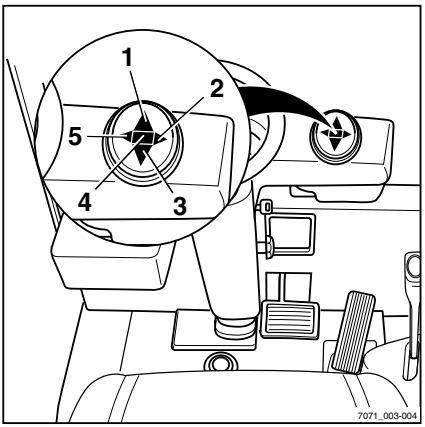

https://truckmanualshub.com/



Upon switching on the key switch, the display shows the welcome screen in the set language until the vehicle controls have completely started up. ▷

## Displays during the switching-on operation ▷

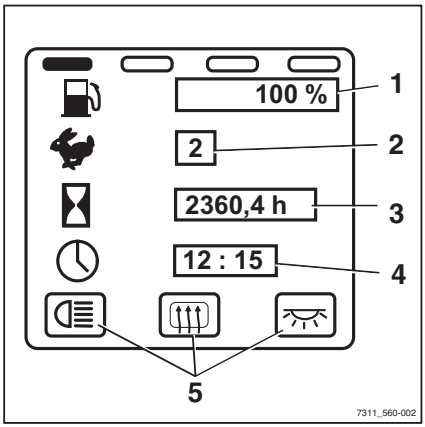


- Fuel level (1).

The fuel level can be displayed as either a percentage or bar display in the display field.

– Top up if necessary, see ⇒ Chapter "Filling fuel", P. 149.

- Traction program (2).

The current traction program appears in the display.

- Operating hours (3).

The operating hours appear on the display.

– Inform your service centre when a maintenance interval is reached.

**NOTE**

*Have all repair and maintenance work performed by your responsible service centre. Defects can only be corrected permanently in this manner.*

- Time display (4).

The time appears on the display.

https://truckmanualshub.com/



NOTE

*The three buttons (5) below are assigned independently from the additional electrical special equipment.*

NOTE

*Additional information can appear on the display.*

- *If there are fault displays, please consult the instructions in the corresponding chapter, see ⇒ Chapter "Error messages", P. 125).*

## Start the engine

– Apply the parking brake.

**WARNING**

Toxicity hazard from exhaust gases.

Do not allow engine to run in unventilated rooms.

– Insert the key (3) into the key switch and turn it to position "I".

▷

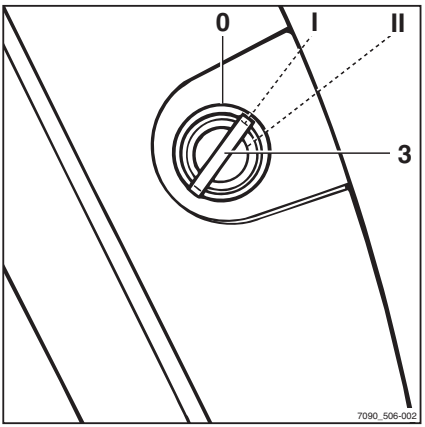

https://truckmanualshub.com/



– The display GLUEHEN (GLOW) (4) flashes to indicate that the engine has been preheated.

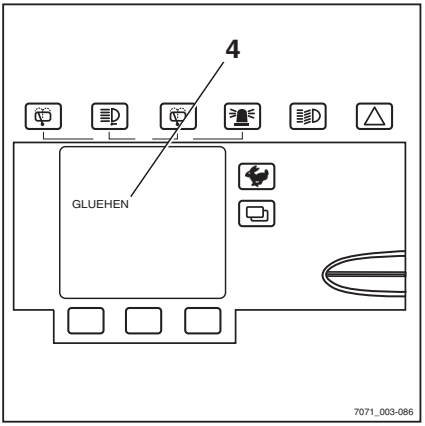


**NOTE**

*Preheating can take up to 20 seconds. If the engine is already warmed up, preheating is not performed.*

– If the display STARTEN (START) lights up, turn the key to position "II" and hold until the engine starts.

– As soon as the engine has started, release the key.

If the engine does not start after 20 seconds, end the starting operation and start again after one minute.

**CAUTION**

Risk of engine damage!

– If the message OELDRUCK (OIL PRESSURE) appears in the display after the engine has been started, turn off the engine immediately.

Refer to the information in the chapter "Fault displays".See ⇒ Chapter "Error messages", P. 125).

**NOTE**

*If the engine cannot be started due to a discharged battery, it can be jump-started; see ⇒ Chapter "Jump starting", P. 5-147.*

https://truckmanualshub.com/



## Operating the signal horn

▷

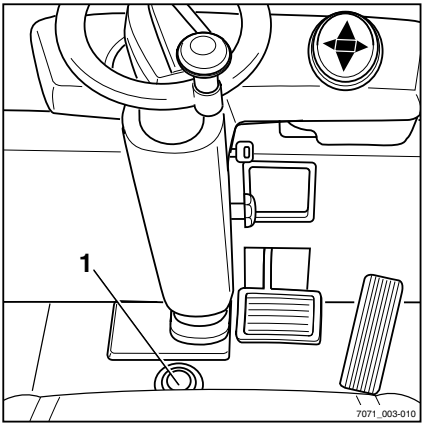


– Press the foot switch (1).

The signal horn sounds.

## Restraining belt

**DANGER**

**Driving without a seat belt is dangerous and never permitted!**

– Always fasten the seat belt before driving.

**DANGER**

**Only a full cab with closed, fixed doors or bracket doors is an operator restraint system. PVC doors are not a restraint system.**

If the doors are open or removed, you must use a different, suitable restraint system (e.g. restraining belt).

https://truckmanualshub.com/



## Fastening the restraining belt

▷

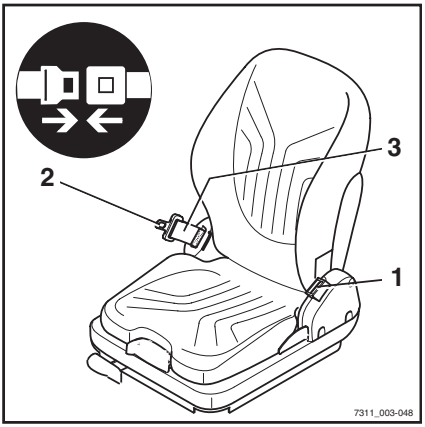


**⚠ WARNING**

Risk of accident!

- Fasten belt before any movement of the truck. The belt must not be twisted when fastening.
- Only use the belt to secure one person!
- If you notice any malfunction in the belt while fastening, have the belt repaired.

**NOTE**

*The buckle has a buckle switch (special equipment). If there is an operating error or malfunction, the message* `SICHERHEITSGURT (SAFETY BELT)` *appears in the display and operating unit (see ⇒ Chapter "SAFETY BELT message", P. 5-130).*

- Pull belt (3) out of retractor without jerking and fasten closely around the body over the thighs.

**NOTE**

*Sit back as far as possible, so that your back is against the seat back. The automatic blocking mechanism permits sufficient freedom of movement.*

- Click belt latch (2) into buckle (1).
- Check tension of the belt. It should be close to the body.

## Fastening on a steep slope

▷

The automatic blocking mechanism prevents the belt from being extended whenever the forklift truck is on a steep gradient. It is not possible to pull the belt any further out of the retractor.

- Drive off the slope carefully.
- Fasten the belt.

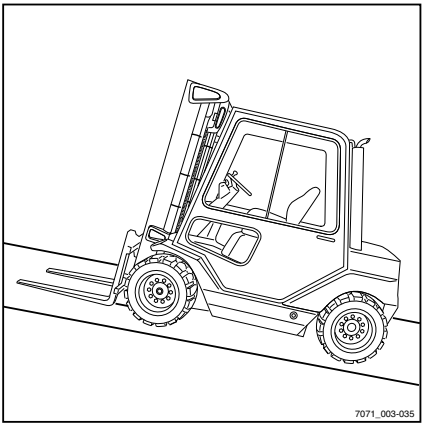

https://truckmanualshub.com/



## Releasing the restraining belt

– Press red key (4) on the buckle (1). ▷

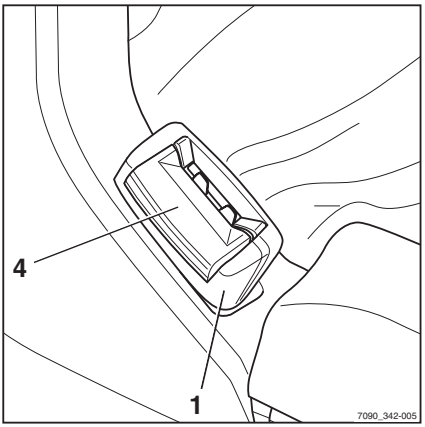


– Slowly move belt latch (2) back into belt retractor (3) by hand. ▷

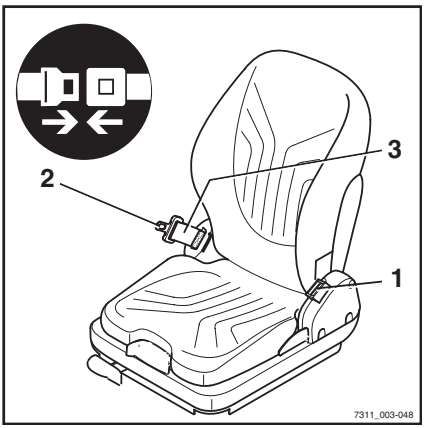


**NOTE**

*Do not allow the belt to quickly retract. The automatic blocking mechanism may be triggered if the belt latch strikes the housing. It will no longer be possible to pull the belt out again with the usual force.*

– Using increased force, pull the belt out of the belt retractor approx. 10-15 mm and release the block.

– Slowly allow belt to retract again.

– Protect belt from dirt (for example, by covering it).

## Malfunctions due to cold

– Melt ice and dry buckle or belt retractor to prevent repeated freezing.

**⚠ CAUTION**

Do not subject buckle or belt retractor to excessive heat while melting ice.

Do not use air warmer than 60 °C to melt ice!

https://truckmanualshub.com/



## Checking function of brake system

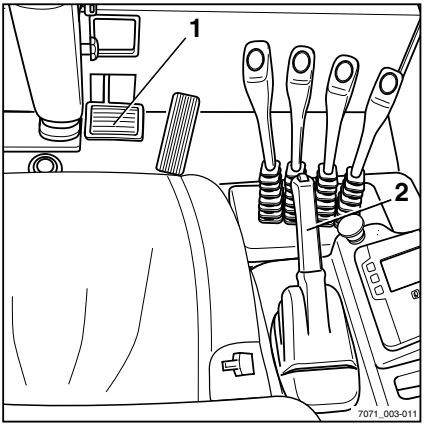


**DANGER**

**Risk of accident!**

Do not put forklift trucks with a defective brake system into service.

### Checking the foot brake

– Checking pedal clearance.

The brake must have sufficient distance from the pressure point to the pedal stop.

– Accelerate empty truck in a clear area.

– Press the brake pedal (1) firmly.

Check brake for noticeable delay.

### Checking the parking brake

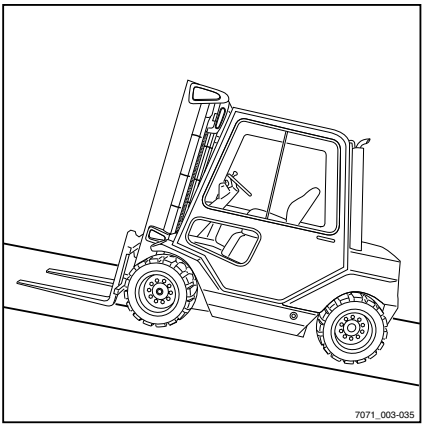


– Check operation of parking brake (2) at walking speed or on a large gradient.

**DANGER**

**Risk of accident!**

During operation, the forklift truck must never be parked on slopes. In an emergency, secure the forklift truck by inserting chocks on the downhill side.

https://truckmanualshub.com/



## Checking function of steering system ▷

– Operate steering wheel (1). The play of the steering wheel while stationary may not be more than two finger widths.

**⚠ DANGER**

**Risk of accident!**

If the hydraulics malfunction, steering is stiff.

The forklift truck may not be operated with a defective steering system.

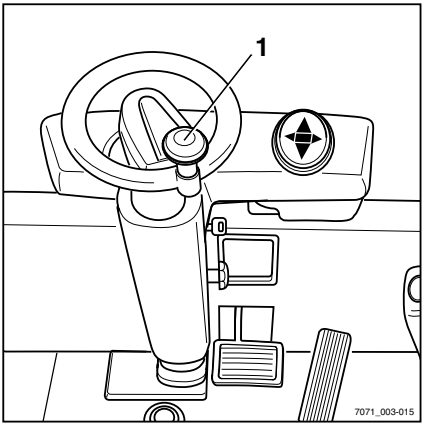


## Setting the traction programs ▷

The driving and braking response of the drive can be set on the display and operating unit.

– Press the traction programme key (1) until the number of the desired traction programme appears on the (2) display.

Traction programs 1-5 are available.

The basic principle is that the higher the traction program number is, the greater the traction dynamics.

The following settings are possible:

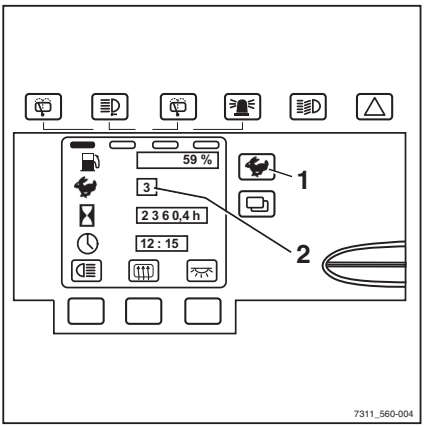


| Traction program | 1 | 2 | 3 | 4 | 5 |
|---|---|---|---|---|---|
| Speed (km/h) | 21 | 21 | 21 | 21 | 21 |
| Acceleration (%) (forward / backward) | 50 | 100 | 120 | 140 | 160 |
| Deceleration (%) (forward / backward) | 50 | 100 | 120 | 140 | 160 |
| Reversing (%) (forward / backward) | 50 | 100 | 120 | 140 | 160 |
| Brake retardation (%) (electric brake booster) | 80 | 90 | 100 | 100 | 100 |

https://truckmanualshub.com/


# Driving

## Safety regulations when driving

### Driving conduct

The driver must observe public road traffic regulations when driving on company grounds.

Driving speed must be appropriate to the local conditions.

For example, the driver must drive slowly around corners, in tight passage ways, when driving through swing-doors, at blind spots or on uneven surfaces.

The driver must always maintain a safe braking distance from vehicles and persons in front and always have the vehicle under control. Sudden stopping, quick turning and overtaking at dangerous or blind spots must be avoided.

– Initial driving practice must be performed in an empty space or on a clear driving lane.

The following are forbidden during driving:

- Allowing arms and legs to hang out
- Leaning over the outer edge of the forklift truck
- Crossing from one vehicle to another or to fixed components
- Moving the driver seat
- Adjusting the steering column
- Releasing the restraining belt
- Disabling the restraint system
- Driving with the load raised impermissibly high
- Using mobile phones or radios.

**⚠ WARNING**

Risk of accident!

Use of mobile phones or radios in the vehicle is permitted.

However, these devices must not be used while driving or manipulating loads, since this affects your concentration.

The volume of radios or hands-free systems must be adapted to local conditions and must not affect your concentration.

https://truckmanualshub.com/


**WARNING**

In areas where use of mobile phones is prohibited, use of a mobile phones or radio telephones is generally not permitted.

– Turn off the devices.

## Visibility when driving

The driver must look in the direction of travel and have a sufficient view of the driving lane.

Particularly when driving backwards, the driver must be sure that the driving lane is clear.

When transporting goods that impair visibility, the driver must drive the vehicle backwards.

If this is not possible, a second person acting as a guide must walk ahead of the vehicle.

Only drive at walking pace and always take extra care in such situations. The forklift truck must be stopped immediately if eye contact with the guide is lost.

Driving with the load raised unnecessarily high is not permitted.

Rear-view mirrors are only to be used for observing the road area behind the vehicle and not for driving backwards. If visual aids (mirror, monitor) are necessary to achieve sufficient visibility, their use most be carefully practised. When driving backwards using visual aids, extra care should be used.

When using attachments, special conditions apply, see ⇒ Chapter "Assembling attachments", P. 5-103.

In models with cabins, the windows must always be clean and free of ice.

https://truckmanualshub.com/



# Behaviour in emergencies

## Procedure if truck tips over

▷

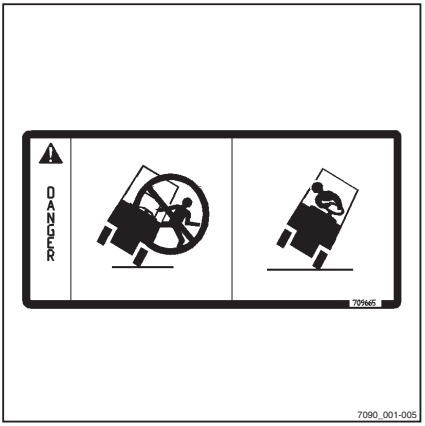


**WARNING**

Risk of injury!

Failure to comply with the limits specified in these operating instructions, e.g. driving on unacceptably steep inclines or failing to adjust speed when cornering, can cause the truck to tip over.

If the truck is threatening to tip over, you should not under any circumstances attempt to jump clear. This increases the risk of injury. Do not release your seat belt!

### The correct behaviour is as follows:

- Bend your upper body over the steering wheel.
- Hold on tight to the steering wheel with both hands and brace yourself with your feet.
- Bend your body against the direction of the fall.
- On forklift trucks with a cabin, if the door cannot be opened after tipping over; the emergency hammer (1) can be used to break the windscreen.

▷

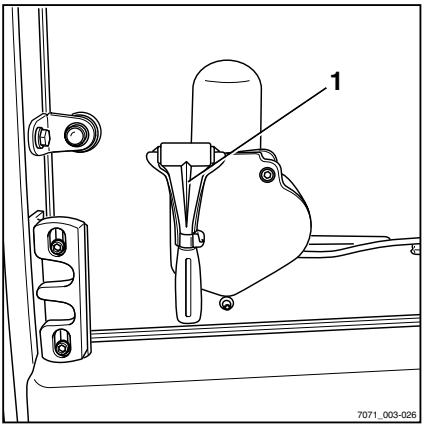


**WARNING**

Glass splinters may cause injuries.

Protect your face by turning away.

https://truckmanualshub.com/



# Driveways

## Dimensions of the driveways and aisle widths

The following dimensions and aisle width requirements apply under the specified conditions to ensure safe manoeuvring. In each case, it should be checked whether a larger aisle width is necessary, e.g. with deviating load dimensions. Within the EU, the 89/654/EEC directive (Minimum guidelines for protecting safety and health) must be maintained. The respective national guidelines apply for the areas outside of the EU.

The required aisle widths (Ast) depend on the dimensions of the load. For pallets, these are:

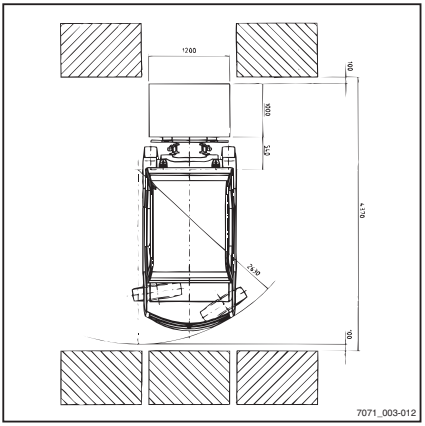


| aisle width (mm) | with pallet 1000x1200 crosswise | with pallet 800x1200 longitudinal |
|---|---|---|
| R70-40 | 4418 | 4618 |
| R70-45 | 4470 | 4670 |
| R70-50 | 4510 | 4710 |

The forklift truck may only be used on driveways that do not have curves that are too tight, have slopes that are too steep and have thoroughfares that are not too narrow or low.

## Driving on slopes

The truck may be driven on the following upwards or downwards slopes:

| Max. gradient in % | with load | without load |
|---|---|---|
| R70-40 | 22 | 34 |
| R70-45 | 20 | 33 |
| R70-50 | 18 | 32 |

The upwards and downwards slopes may not exceed the gradient listed above and should have a rough surface.

Smooth and gradual transitions should be provided at the top and bottom of the gradient

https://truckmanualshub.com/


to avoid the load from falling on the floor or the forklift truck being damaged.

## Condition of the driveways

Driveways must be made sufficiently firm, and be level and free of dirt and fallen objects. Compensation must be made for drainage channels, level crossings and similar items; and if necessary, ramps must be provided, so that trucks can drive over them with as few bumps as possible.

Ensure sufficient load-bearing capacity of manhole/drain covers and the like.

There must be sufficient clearance between the highest points of the forklift truck or the load and the fixed points of the surroundings. The height is based on the overall height of their lift mast and the dimensions of the load. Observe the technical data (see ⇒ Chapter "Technical data", P. 225).

## Rules for driveways and the working area,

Only those routes authorized for traffic by the operator (see ⇒ Chapter "Definition of terms used for responsible persons", P. 20) or his representative may be driven. The traffic routes must be free of obstacles. The load may only be set down and stored in the designated locations. The operator and his representative must ensure that unauthorised third parties keep away from the area of operation.

## Dangerous locations

Dangerous locations on the driveways must be designated by the signs typical for traffic or, if necessary, by additional warning signs.

https://truckmanualshub.com/



## Driving (single-pedal operation with multiple lever version)

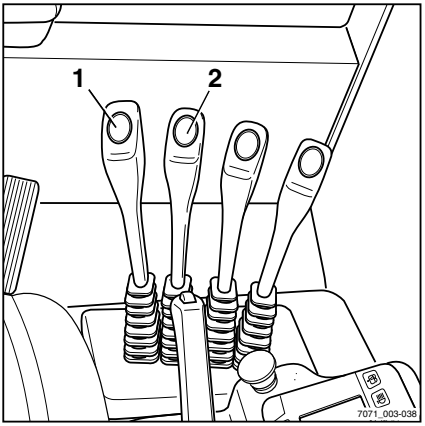


**DANGER**

**Risk of accident!**

– Only operate the forklift truck from the driver seat.

Please take note of information in the section entitled Safety Regulations when driving (see ⇒ Chapter "Safety regulations when driving", P. 5-69).

– Sit down on the driver's seat.

The driver's seat is equipped with a seat switch. If there is an operating error or malfunction, the message `SITZSCHALTER` (SEAT SWITCH) appears in the display and operating unit (see ⇒ Chapter "Message SITZSCHALTER (SEAT SWITCH)", P. 5-132).

– Fasten the safety belt.

The buckle has a buckle switch (special equipment). If there is an operating error or malfunction, the message `SICHERHEITSGURT` (SAFETY BELT) appears in the display and operating unit (see ⇒ Chapter "SAFETY BELT message", P. 5-130).

– Lift the fork carriage until the necessary floor clearance is achieved. To do this, pull back the "lift-lower" operating lever(1).

– Tilt the mast back by pulling back the (2)"tilt" operating lever.

– Do not take up a load yet!

https://truckmanualshub.com/



## Travel direction switch

The travel direction switch (5) is used to select the desired travel direction. The appropriate arrow for the selected travel direction lights up on the travel direction/flasher/fault (4) multi-function display.

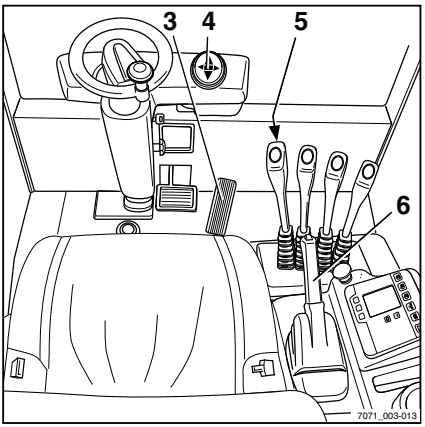


**NOTE**

*When the seat is vacated, the travel direction switch is set to neutral.*

## Forwards motion

– Release the (6) parking brake.

– Press down the lower section of the travel direction switch (5).

– The arrow for forward motion (4) lights up.

– Press accelerator pedal (3).

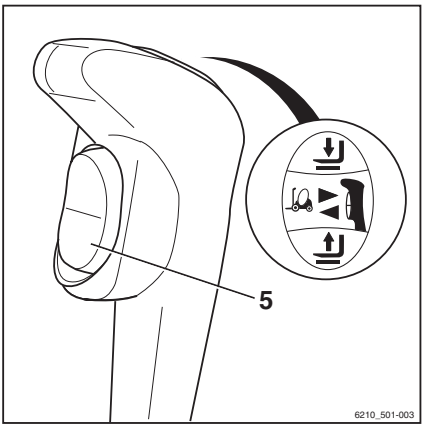


The forklift truck moves forwards. The speed is controlled by the accelerator pedal position. When releasing the accelerator pedal, the forklift truck decelerates. On a gradient the truck creeps downhill slowly after a stop.

**NOTE**

*The truck can briefly be stopped on upward or downward inclines without actuating the parking brake (6) (electric brake). The truck begins to creep downwards slowly.*

**DANGER**

**Risk of accident!**

Do not leave the vehicle.

This electric brake only functions while the key switch is switched on and the parking brake is released. Press the brake pedal!

https://truckmanualshub.com/



## Reverse motion

- Release the (6) parking brake.
- Press down the upper section of the travel direction switch (5).
- The arrow for reverse motion (4) lights up.

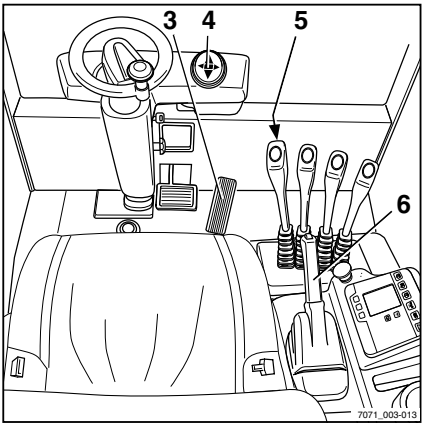


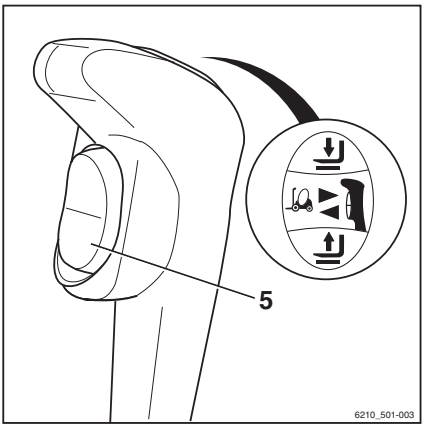


**NOTE**

*At the same time, an acoustic signal sounds (special equipment) as a warning or the back-up light as well as the front headlights light up (only if there is a lighting system (special equipment) in accordance with the Road Traffic Licensing Regulations).At the same time, an acoustic signal sounds (special equipment) as a warning or the back-up light as well as the front headlights light up (only if there is a lighting system (special equipment) in accordance with the Road Traffic Licensing Regulations).*

- Press accelerator pedal (3).

The forklift truck travels backwards. The speed is controlled by the accelerator pedal position. When releasing the accelerator pedal, the forklift truck decelerates. On a gradient the truck creeps downhill slowly after a stop.

**NOTE**

*The truck can briefly be stopped on upward or downward inclines without actuating the parking brake (6) (electric brake). The truck begins to creep downwards slowly.*

**DANGER**

**Risk of accident!**

Do not leave the vehicle.

This electric brake only functions while the key switch is switched on and the parking brake is released. Press the brake pedal!

## Change direction of travel

- Remove foot from accelerator pedal (3).
- Operate the travel direction switch (5) to select the opposite direction (top for reverse, bottom for forwards).

https://truckmanualshub.com/


– Operate the accelerator pedal again.

NOTE

*The travel direction can also be changed during travel. The foot can remain on the accelerator pedal. The vehicle is then braked and accelerated again in the opposite direction (reversing).*

### Neutral position

– To switch to neutral position, briefly tap the travel direction switch (5) for the opposite direction (top for reverse, bottom for forward).

## Operating the service brake

**DANGER**

**Risk of accident!**

Always choose a driving speed that will provide a sufficient stopping distance. Note that the pure braking distance increases as the square of the speed, and that sharp braking can cause the driving wheels to skid and the truck to tip over.

The truck's braking distance is influenced by the quality of the floor surface. A wet surface increases the braking distance. The driver must take account of this in his driving and braking style.

https://truckmanualshub.com/



- The accelerator pedal (2) should be released to slow down the vehicle.
- If the braking effect is insufficient, the foot brake (1) should be applied.

In the first section of the pedal's travel, only the electric brake takes effect; as the pedal is depressed further, the mechanical brake is activated and acts on the driving wheels.

▷

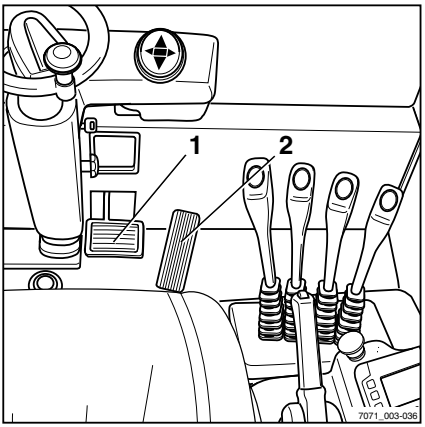


**DANGER**

**Risk of accident!**

Trucks with zero braking (special equipment) do not have an electrical braking function.

**DANGER**

**Risk of accident!**

If the service brake fails, the truck must be brought to a stop by applying the parking brake.

https://truckmanualshub.com/



## Operating the parking brake

▷

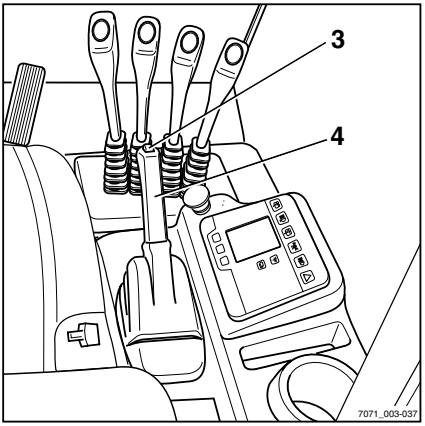


– To park the truck, pull the parking brake lever (4) up and let it engage.

**⚠ WARNING**

Risk of accident!

If the parking brake is not applied, the forklift truck can roll away.

It can no longer be driven. The travel direction/flasher/message multi-function display (2) goes out.

**⚠ DANGER**

**The truck should not be parked on a slope.**

In case of emergency, secure the truck with chocks on the downhill side.

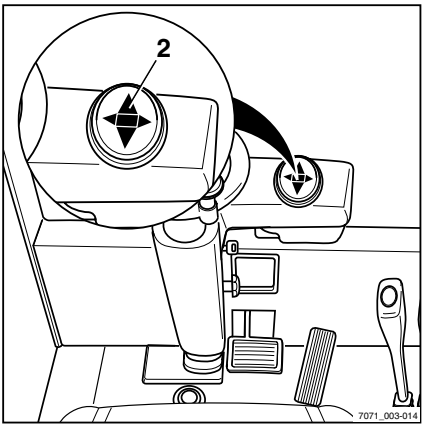


– To release the parking brake, push button (3) and lower the lever completely.

**NOTE**

*Once released, the travel direction previously selected is retained and is shown on the travel direction/flasher/message multi-function display (2).*

**NOTE**

*If you operate the accelerator pedal while the parking brake is applied, the message* `FESTSTELLBREMSE (PARKING BRAKE)` *appears on the display.*

https://truckmanualshub.com/



## Steering

– Steer the vehicle by turning the steering wheel (1) accordingly.

For turning radius information, see ⇒ Chapter "Technical data", P. 225.

**WARNING**

Risk of accident!

If the hydraulics fail, steering is tight (emergency steering property).

▷

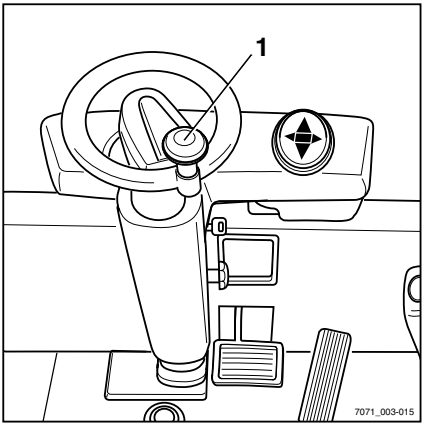

https://truckmanualshub.com/



# Lifting

## Lifting system variants

Lifting operations are largely dependent on the following factors:

- The mast with which your truck is equipped. See ⇒ Chapter "Lift mast versions", P. 5-81.
- The lifting system with which your truck is equipped. See ⇒ Chapter "Controls, lifting system", P. 5-84.

Regardless of the individual equipment of your forklift truck, the basic specifications and procedures are to be complied with. See ⇒ Chapter "Safety regulations when handling loads", P. 5-89.

## Lift mast versions

The following lift masts may be installed in your truck:

### Telescopic mast

When moving the "lift-lower" operating lever backwards, the mast rises via two outer cylinders and brings the fork carriage with it via the chains (the fork carriage rises at twice the speed of the inner mast).

**⚠ DANGER**

**Risk of accident!**

With low ceilings, be aware that the inner mast lift (1) can be higher than the fork carriage.

▷

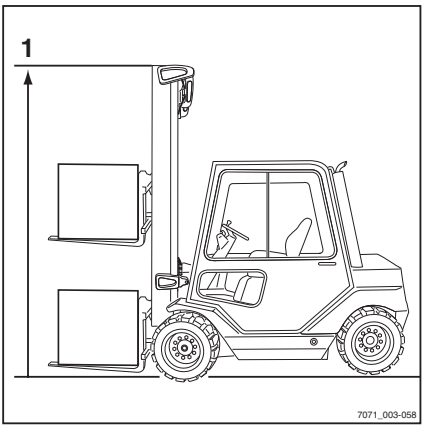

https://truckmanualshub.com/



## Triplex mast (special equipment)

When the "lift-lower" operating lever is moved backwards, the inner cylinder moves up to (3)free lift, and then the outer cylinders directly raise the inner mast up to the max. (2)height.

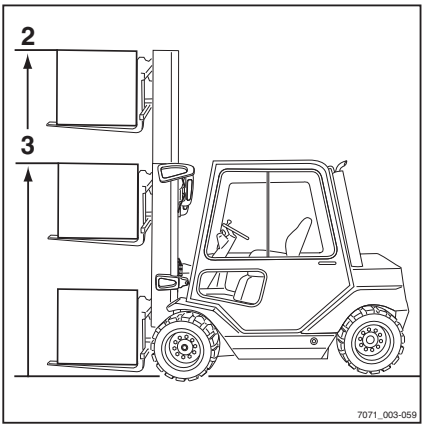


NOTE

*When raising above the free lift, the fork carriage always remains at the upper edge of the extending mast tip.*

**DANGER**

**Risk of accident!**

With low ceilings, be aware that the carried load can project over the fork carriage. The fork carriage can be higher than the load.

## Malfunction during a lifting operation

**DANGER**

**Risk of accident!**

In the case of triplex masts (special equipment), an incorrect extension sequence can occur, i. e. the inner mast extends before the fork carriage is at the end of lift 1. As a result, the overall height is exceeded and damage may occur with passageways or low ceilings.

This can occur as a result of:

- low oil temperature

NOTE

*The oil temperature can be increased by operating the mast functions several times slowly.*

- Fork carriage blocking in the inner mast.
- Lift cylinder 1 blocking.
- Chain roller lift 1 blocking.

In these cases, you must eliminate the cause of the blockage before you can continue.

– Notify the service centre.

https://truckmanualshub.com/


**DANGER**

**Risk of accident!**

When lowering, you must ensure that the chain(s) does/do not become slack. There is a danger that the load could suddenly fall.

This can occur as a result of:

- resting the fork carriage or the load on the racking.

**NOTE**

*Lift the fork carriage until the chains are taut again and lower the load at another suitable location.*

- Fork carriage rollers blocking in the lift mast due to dirt.

**NOTE**

*Lift the fork carriage until the chains are taut again. Remove the dirt before continuing.*

**WARNING**

Risk of injury!

Observe the safety regulations for working on lift masts, see ⇒ Chapter "Working at the front of the forklift truck", P. 6-170.

https://truckmanualshub.com/



## Controls, lifting system

Operation of the lifting system depends on which controls the fork lift truck is equipped with.

Possible equipment variations are as follows:

- Multi-lever controls (1) and (2).
- The following information must be observed regardless of the equipment variation:

**DANGER**

**Risk of accident!**

The lifting system must only be operated when the driver seat is occupied.

**WARNING**

Risk of injury!

The safety regulations "Before taking up a load" must be closely observed ⇒ Chapter "Prior to taking up a load", P. 5-90. Reaching or climbing into moving parts of the fork lift truck (e.g. lift mast, sideshifts, working equipment, load bearing systems etc.) is prohibited.

▷

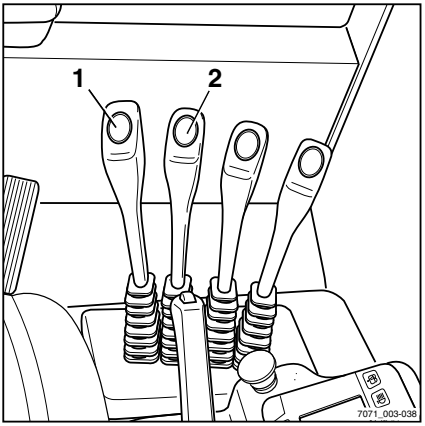

https://truckmanualshub.com/



## Lifting system, multi-lever operation ▷

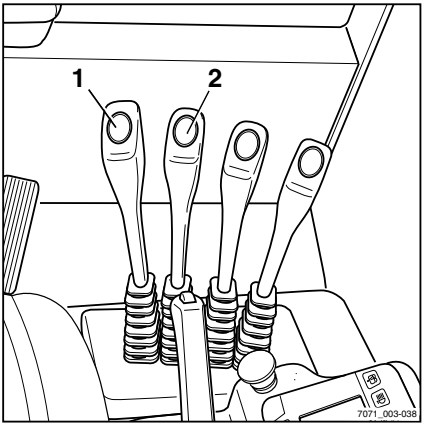


### Tilt mast

To tilt mast forward:

– Push the "tilt" operating lever (2) forwards.

To tilt mast backwards:

– Pull the "tilt" operating lever (2) backwards.

### Lift, lower fork carriage

To raise fork carriage:

– Pull back the "lift-lower" operating lever (1).

To lower the fork carriage:

– Push the "lift-lower" operating lever (1)forwards.

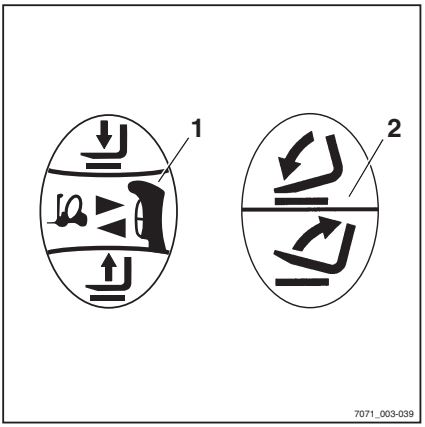


**NOTE**

*The symbols on the operating levers show the movement direction of the mast when the lever is pulled or pushed.*

https://truckmanualshub.com/



## Fork extension

▷

– Attach the fork extension (3) (special equipment) to the fork armsand secure it with socket pin (4).

**⚠ WARNING**

The fork extension affects the stability of the forklift truck.

The weight allowed according to the capacity rating plate must be accordingly reduced in relation to the actual load distance. See ⇒ Chapter "Prior to taking up a load", P. 5-90.

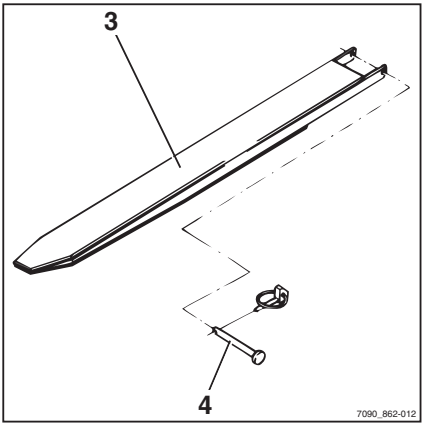


## Operation with reversible forks

### Normal operation

▷

Like a normal fork, the reversible fork arms (special equipment) can be lifted and tilted with the mast.

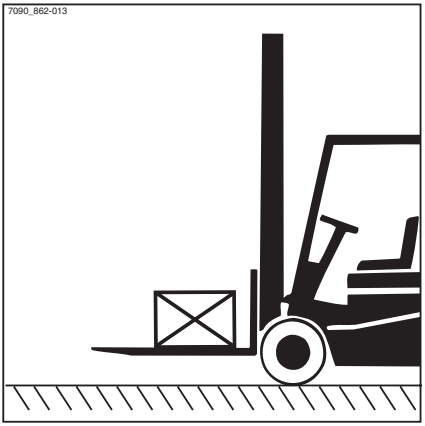

https://truckmanualshub.com/



## Reverse operation

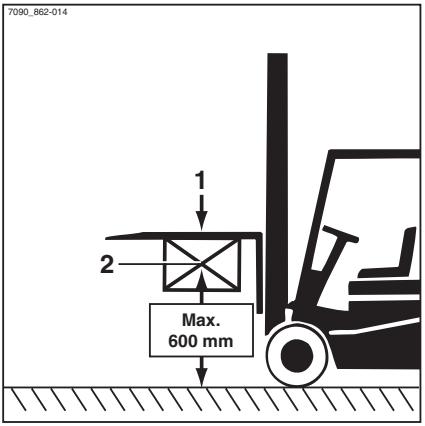


**CAUTION**

Loads cannot be lifted up on the fork arms due to the missing(1)load support.

When driving, the centre of gravity of the load may not be(2)higher than 600 mm above the ground. The fork extension (special equipment) may not be used.

**WARNING**

Risk of accident!

Reverse operation is not permitted with the standard fork arms.

**NOTE**

*Conduct annual checks for cracks on the outside of the fork bend; see ⇒ Chapter "Checking reversible fork arms", P. 6-212.*

## Emergency lowering

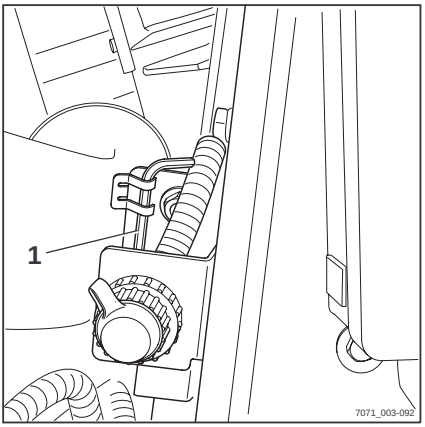


If the load cannot be lowered from a raised position due to a control failure, emergency lowering is possible.

**DANGER**

**Risk to life!**

Do not walk underneath the raised load!

**NOTE**

*A 4 mm L-wrench is located on the right side of the valve block frame for use when performing the following work (1).*

**NOTE**

*This L-wrench must remain on the vehicle.*

– Open the bonnet; see ⇒ Chapter "Open the motor hood.", P. 5-53.

– Remove the L-wrench (1).

https://truckmanualshub.com/



– Unscrew the emergency lowering screw in the control block a maximum of 1.5 revolutions (2) using the L-wrench.

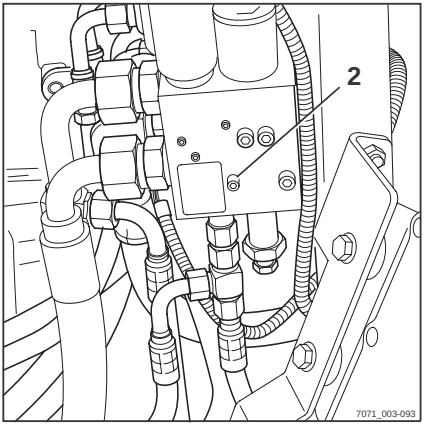


**WARNING**

The load is lowered.

The speed can be controlled by the degree to which the screw is unscrewed.

Unscrewed minimally: load is lowered slowly.

Unscrewed maximally: load is lowered quickly.

– Screw the emergency lowering screw back in (2) after the load is lowered.

**Tightening torque: max. 2.5 Nm**

– Return the L-wrench to the (1) mounting support provided.

– Close the bonnet.

https://truckmanualshub.com/



# Working with loads

## Safety regulations when handling loads

The safety regulations for handling loads are shown in the following sections.

**DANGER**

**Risk to life!**

The operating hydraulics may only be operated from the driver's compartment.

Never walk or stand underneath suspended loads or raised fork arms.

Never exceed the maximum load indicated on the capacity rating plate. Otherwise stability cannot be guaranteed!

7311_001-001

**DANGER**

**Risk of accident!**

Do not step onto the forks. Do not lift people.

Never grab or climb on moving parts of the forklift truck.

7311_001-002

**DANGER**

**Risk of accident!**

- When transporting small items, attach a safety guard (special equipment) to prevent the load from falling on the driver.

A closed roof covering (special equipment) should also be used.

https://truckmanualshub.com/



## Prior to taking up a load

### Load capacity

The load capacity specified for the forklift truck may not be exceeded. It is affected by the load centre of gravity and the lift height and possibly the tyres. Observe the capacity plate to the right of the driver's compartment. Including additional weights to increase the load capacity is forbidden.

**DANGER**

**Risk to life**

Never exceed the maximum loads indicated there! These apply for compact and homogenous loads. Otherwise the stability and strength of the fork arms and lift mast are not ensured. Improper or false operation or the boarding of persons to increase the load capacity is forbidden.

(1) Distance "C" of load centre from fork back (mm)

(2) Lift height "h" (in mm)

(3) Maximum loads "Q" (in kg)

**Example:**

Weight of the load to be lifted: 2220 kg (3)

Load distance from the fork back: 600 mm (1)

Permissible lift height: 6030 mm (2)

**WARNING**

The diagrams show examples. Only the capacity plates in the vehicle are valid!

**WARNING**

In the case of attachments (special equipment): do not exceed the permissible load of the attachments and the reduced load capacity of the combination of forklift truck and attachment. Observe the special capacity plate information specified on the forklift truck and attachment. Observe the capacity plate for attachments. The data on the plate is explained in the example above.

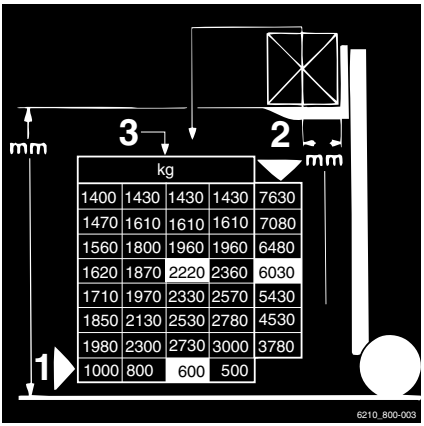


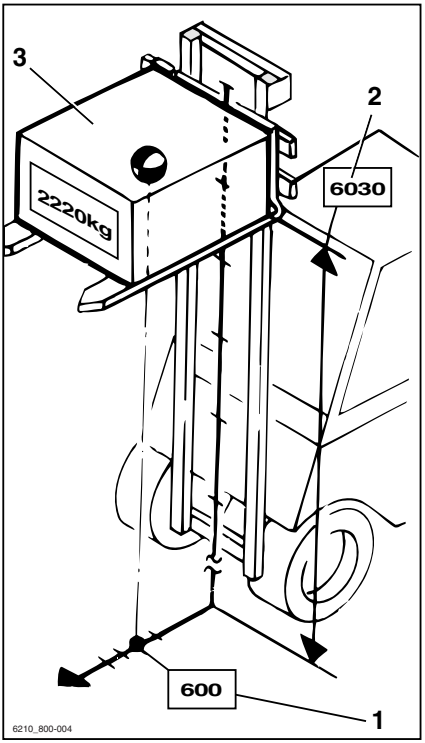

https://truckmanualshub.com/



## Carrying loading units

To ensure secure supporting of the load, it must be ensured that the fork arms are sufficiently far apart and are positioned as far as possible under the load.

If possible, the load should rest on the back of the fork.

The load may not protrude significantly beyond the fork tips and vice versa.

Loads are to be carried and transported as close to the middle as possible.

**⚠ DANGER**

**Risk of accident!**

When transporting small items, attach a safety guard (special equipment) to prevent the load from falling on the driver.

A closed roof covering (special equipment) should also be used.

Removable roof segments may not be removed.

### Setting forks

▷

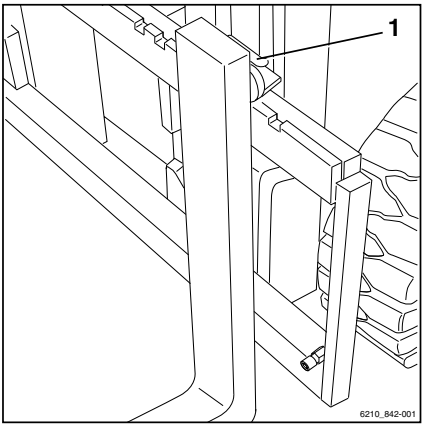


- Lift stopping lever (1) and move the fork arms to the desired position.
- Allow the stopping lever to snap back into place.

The centre of gravity of the load must be positioned between the fork arms in the middle.

- Only operate the fork arm adjustment (special equipment) when the forks are not loaded.

## Hazard area

The hazard area is the area where persons are endangered by movements of the forklift truck, its working equipment, its load-carrying equipment (e.g. attachments) or the load. Included in this area is also the area which can be affected by a falling load, or by lowering or falling working equipment.

https://truckmanualshub.com/

**WARNING**

Risk of injury

The forks must not be stepped on.

**WARNING**

Risk of injury

Do not step under the raised forks.

**WARNING**

People can be injured in the hazard area of the forklift truck.

No persons should be in the hazard area of the forklift truck, except the driver in his normal operating position. Stop work with the forklift truck immediately and secure the forklift truck against unintentional use by unauthorised persons if persons do not leave the hazard area despite being warned.

**DANGER**

**Risk to life from falling loads!**

Never walk or stand underneath overhead loads.

## Transporting pallets

Loading units (e.g. pallets) are generally to be transported individually. Simultaneous transport of several loading units is only allowed

- when instructed by the supervisor and
- when the technical requirements have been met.

The driver must ensure proper condition of the loading unit. Only safely and carefully positioned loading units may be transported.

▷

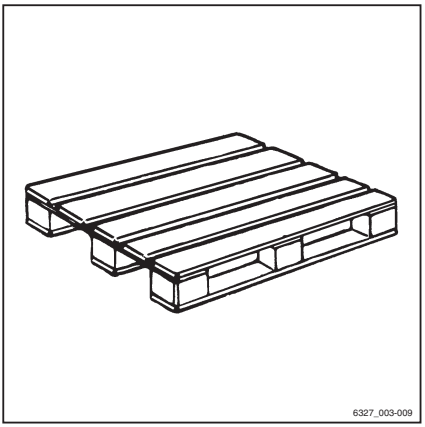

https://truckmanualshub.com/



## Transport of swinging loads

Contact your national regulatory authorities (trade associations in Germany) prior to transporting swinging loads.

National regulations may place restrictions on these operations. Please contact the authority responsible.

**DANGER**

**Swinging loads can result in the following risks:**

- Reduced braking and steering action,
- Tipping over the wheels or drive wheels,
- Tipping of the truck transverse to the direction of travel,
- Risk of crushing of guide persons,
- Reduced visibility.

**DANGER**

**Loss of stability due to slipped, unstable or, in particular, hanging loads!**

The following information should be noted when transporting hanging loads:

- Swinging of the load is to be prevented by using the proper driving speed and driving manner (careful steering, braking).
- Hanging loads can only be coupled to the industrial truck so that the load-securing device cannot shift or release unintentionally and cannot be damaged.
- Ensure that there are no persons in the direction of travel in the driving lane.
- Ensure that swinging loads do not put persons at risk.
- When transporting hanging loads, suitable devices (e.g. guy wires or hand rails) are to be made available and used by guide persons.

https://truckmanualshub.com/



**DANGER**

**Risk of accident!**

When transporting hanging loads, never abruptly perform or end driving and load movements during transport.

Never drive on slopes with a hanging load!

Containers with fluids cannot be transported as hanging loads.

## Taking up load

Only pallets that do not exceed the specified maximum size may be used. Damaged loading equipment and improperly designed loading units may not be used.

The load should be placed on the load-carrying equipment or secured thereon so that it cannot shift or fall.

The loading units should be stored so that the defined aisle width is not reduced by protruding parts.

– Approach the racking carefully, brake gently, and stop just in front of the racking. ▷

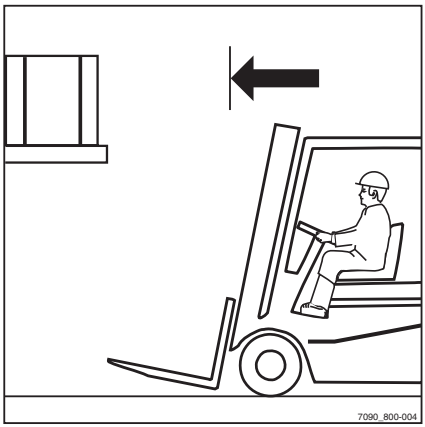

https://truckmanualshub.com/



- Position the forks.
- Position the mast so that it is vertical.
- Lift the fork carriage to the stack height.

**DANGER**

**Risk of accident!**

When the mast is tilted forward, make sure that the forklift truck does not tilt forward and that the load does not slip.

If a forklift truck with increased forward tilt (special equipment) (greater than 3°) is in use, a greater risk of slipping can be assumed during raising or lowering of the load.

- Move forward slowly.
- Do not damage the racking and load when inserting the forks!
- Insert the forks under the load as far as possible. Bring the vehicle to a standstill once the back of the fork is resting against the load. The centre of gravity of the load must be positioned between the fork arms in the middle.
- Lift the fork carriage until the load is resting entirely on the forks.

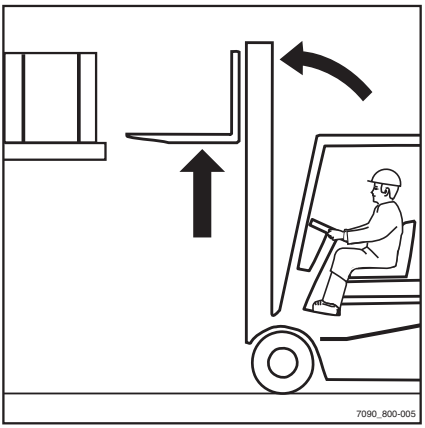

https://truckmanualshub.com/



– Drive backwards.

– Watch behind you for a clear pathway. Move backwards carefully and slowly until the load is clear of the racking. Brake gently.

▷

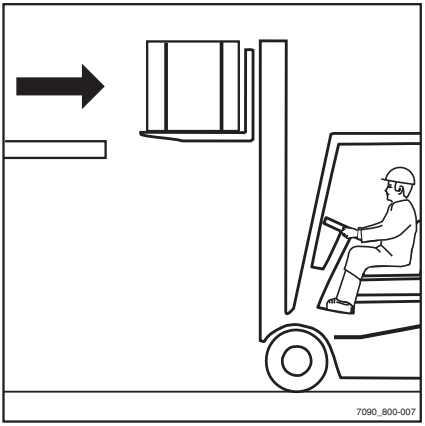


– Tilt the mast backwards.

▷

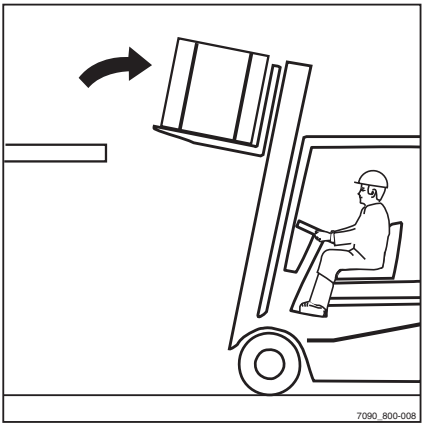

https://truckmanualshub.com/



– Lower the load while maintaining floor clearance. ▷

Now you can drive away.

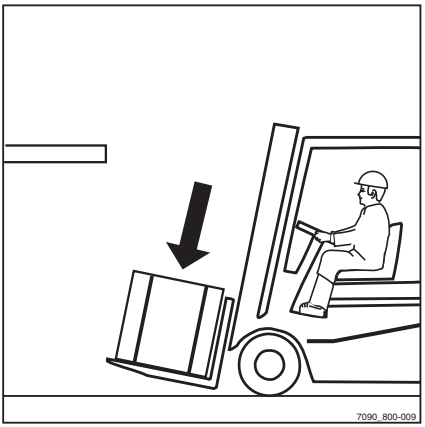


## Transporting loads ▷

**⚠ WARNING**

Risk of accident! As the height at which a load is transported increases, the stability decreases.

– Always drive with the load lowered.
– Lower the load until ground clearance is reached (not over 300 mm).

The load should not be high enough to block the front view, otherwise drive backwards. If this is not possible, a second person acting as a guide must walk beside the vehicle. Only drive at walking pace and always take extra care. The forklift truck must be stopped immediately if contact with the guide is lost.

When using attachments, special conditions apply, see ⇒ Chapter "Assembling attachments", P. 5-103.

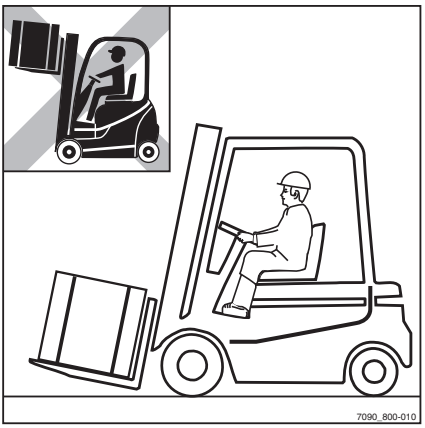


**⚠ DANGER**

**The truck can tip over or the load can fall.**

Driving with the mast tilted forward is not permitted.

https://truckmanualshub.com/



– Only drive with the mast tilted back.

▷

– Drive slowly and carefully around sharp corners!

– Always accelerate and brake gradually!

▷

**DANGER**

**Risk of accident!**

Do not start quickly, do not apply brake fully!

https://truckmanualshub.com/



– Never drive with a laterally protruding load (e.g. with a sideshift or sideshift device)! ▷

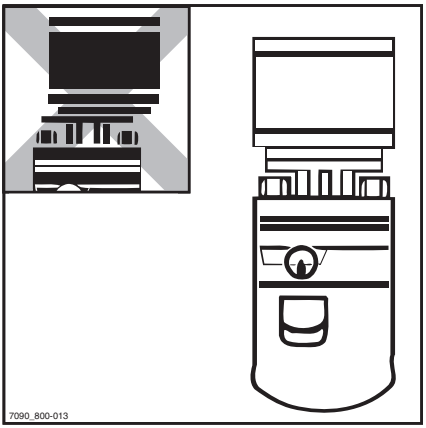

https://truckmanualshub.com/



## Depositing and retrieving loading units

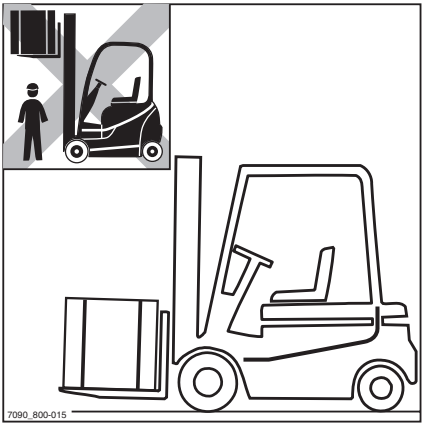

Always follow the following procedure:

- Move directly to the stack with the load lowered according to regulations.
- Set lift mast to be vertical.

**⚠ WARNING**

Risk of accident!

If your forklift truck is equipped with greater forward tilt (special equipment) (over 3°), the load can slip or the forklift truck can tip over.

- Lift the load to the stack height.

**⚠ WARNING**

Risk of accident!

Only tilt the mast with raised load-carrying equipment forward directly over the stack.

- Insert the forklift truck carefully into the stack.
- Lower the load until it rests securely on the racking.
- Look back!
- Move the forklift truck back until the fork arms can be lowered without touching the stack.
- Lower the forks until ground clearance is achieved; tilt the mast backwards, and drive away.

**⚠ WARNING**

Risk of accident!

When putting into storage, set it far enough back so that the load or the forks can be freely lowered.

https://truckmanualshub.com/



## Driving on ascending and descending slopes

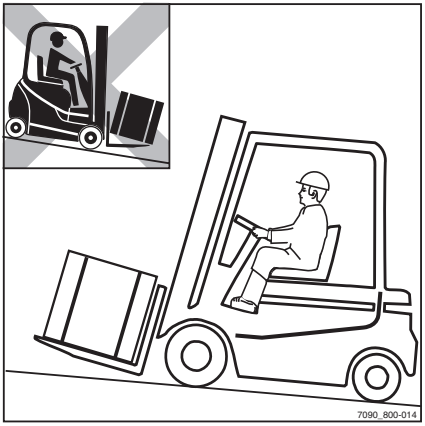


**DANGER**

**Risk to life!**

On ascending and descending slopes the load must be carried facing uphill.

Only those ascending and descending slopes which are marked as traffic routes may be used and can safely be used in accordance with the technical data for this forklift truck, see ⇒ Chapter "Technical data", P. 225.

The driver must check that the ground is clean with a good grip.

It is not permitted to perform turns on ascending slopes, to approach them diagonally or to park the truck on them.

Drive at a reduced speed on descending slopes.

Putting items into storage and removing them from storage while on an ascending or descending slope is not permitted.

The truck should not be parked on a slope.

– In case of emergency, secure the truck with chocks.

## Driving on lifts

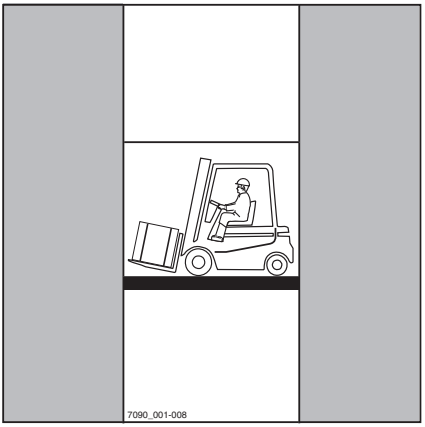


For this truck, the driver may only use lifts with a sufficient lifting capacity and for which the operator (see ⇒ Chapter "Definition of terms used for responsible persons", P. 20) has authorization for use.

– Drive the forklift truck with the load forwards into the lift without touching the shaft walls.

– Secure the truck in the lift so that no part comes into contact with the shaft wall.

The distance from the shaft wall must be at least 100 mm.

**DANGER**

**Risk of accident!**

Personnel accompanying the truck onto the lift are only allowed to occupy the lift once the forklift truck is secure and must exit the lift first after the trip.

The maximum weight of the forklift truck (tare weight with maximum load):

https://truckmanualshub.com/



| | |
|---|---|
| R70-40 | approx. 10,500 kg |
| R70-45 | approx. 11,300 kg |
| R70-50 | approx. 12,100 kg |

## Driving on loading bridges

▷

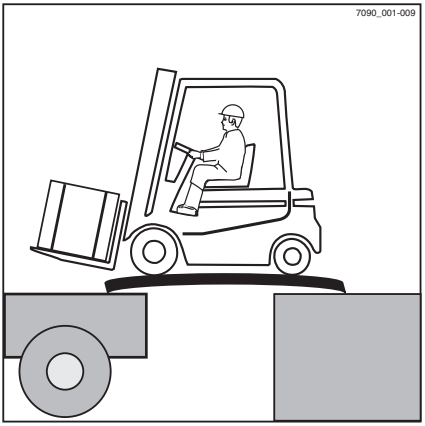


**DANGER**

**Risk of accident!**

Prior to driving on a loading bridge, the driver must ensure that it is properly attached and secured and has sufficient load-bearing capacity (truck, bridge).

The driver must drive slowly and carefully on a loading bridge.

The driver must ensure that the vehicle to be accessed is sufficiently secured against shifting and is suitable for the load of the forklift truck.

The lorry driver and the forklift truck driver must agree on the departure time.

https://truckmanualshub.com/


# Working with attachments

## Assembling attachments

If attachments are assembled at the place of use, the specifications in the operating instructions for the attachment must be followed.

Prior to being put into service for the first time, the function of the attachment and the visibility with and without a load from the driver's position must be checked by a specialist. If the visibility is deemed insufficient, visual aids such as mirrors, a camera/monitor system etc. must be used.

If an attachment is not delivered together with the forklift truck, the specifications and operating instructions of the attachment manufacturer must be followed.

Attachments must be CE-certified.

**⚠ CAUTION**

If there is no attachment-specific residual lifting capacity plate mounted on the forklift truck, the CE conformity is void.

– Order the residual lifting capacity plate (see ⇒ Chapter "Taking up a load using attachments", P. 5-107) promptly from your service centre.

**⚠ WARNING**

There is a risk of accident from a falling load!

In the case of installation of a clamp with an integrated sideshift, it must be ensured that the clamp will not open during actuation of the sideshift.

– Contact STILL service personnel prior to installation.

## Hydraulic connection

**NOTE**

*Prior to assembling attachments, the plug-in couplings must be depressurised.*

## Fastening attachments

The fastening of an attachment and the connecting of the energy supply for power-driven

https://truckmanualshub.com/


attachments must be performed only by competent persons according to the specifications of the manufacturer and the supplier of the attachment. After each assembly, the attachment must be checked for proper functioning prior to being put into operation for the first time.

### Lifting capacity with attachment

The allowable lifting capacity of the attachment and the allowable load (lifting capacity and load moment) of the forklift truck may not be exceeded in the combination of attachment and payload. The specifications of the manufacturer and supplier of the attachment must be complied with.

When determining the lifting capacity, the tare weight of the attachment and the resulting load moment must be taken into consideration.

## Depressurising connections for attachments

▷

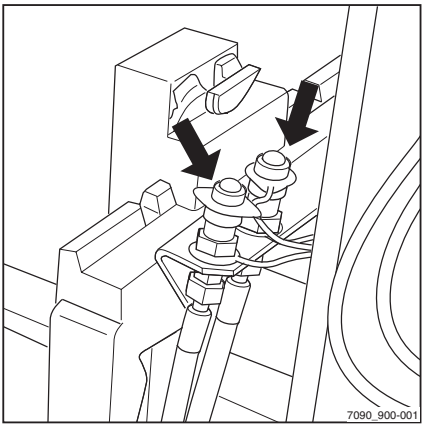


**NOTE**

*Prior to assembling attachments, the plug-in couplings (arrows) must be depressurised.*

https://truckmanualshub.com/



### Depressurising, multi-lever controls

- Lower fork carriage to the ground, tilt mast as far back as possible.
- Switch off the key switch.
- Operate all hydraulic operating levers (arrows) several times up to their end positions.

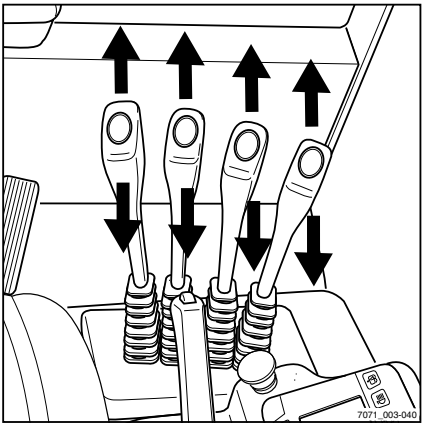


## General information on control of attachments

The control of attachments (option) depends on the type of attachment.

**WARNING**

The use of attachments can result in additional hazards such as, for example, a change in the centre of gravity, additional danger zones, etc.

Attachments may only be used for their intended purpose as described in the relevant operating instructions. The driver must be instructed in the handling of the attachments.

Loads may only be picked up and transported with attachments if they can be seized and held properly. If necessary, the loads must also be secured against sliding, rolling, falling over, swinging or falling off. Note that the stability of the truck changes if the load centre distance is changed. Please refer to the attachment load capacity plate.

**NOTE**

*Further options and functions are possible in addition to those listed below. The directions of movement are shown on the pictograms on the control levers or on the valve cover.*

https://truckmanualshub.com/



## Controlling attachments using multi-lever controls

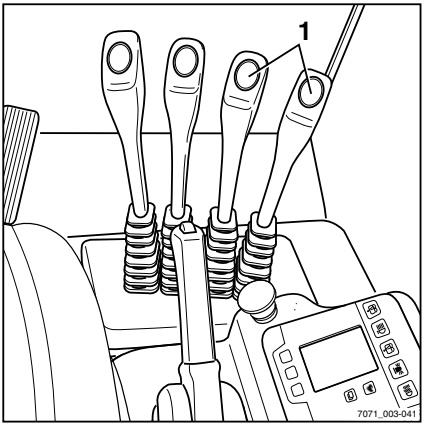


The attachments (special equipment) are controlled in this version using the operating levers (1).

The pictograms on the operating levers always show the function that is activated by that lever.

The meanings are as follows:

– Move operating lever (1) forwards:

The attachment moves in the direction shown in the upper part of the pictogram.

– Move operating lever (1) backwards:

The attachment moves in the direction shown in the lower part of the pictogram.

– Please note symbols 2 to 10!

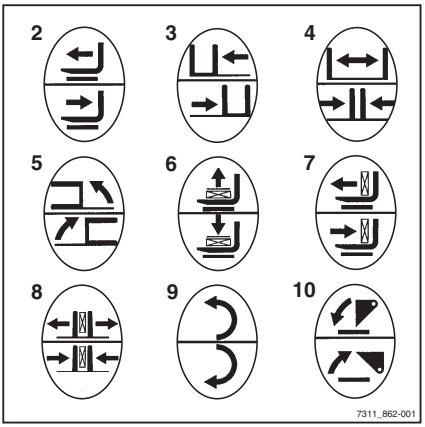


| | |
|---|---|
| 2 | Reach frame or forks forwards/backwards |
| 3 | Sideshift moves to the left/to the right. |
| 4 | Adjust fork arms: open/close |
| 5 | Tilt lift mast or forks to the left/to the right. |
| 6 | Release/clamp load retainer |
| 7 | Raise/lower load |
| 8 | Open/close clamps |
| 9 | Turn to the left/to the right |
| 10 | Tip shovel over/tip shovel back |

https://truckmanualshub.com/



## Taking up a load using attachments ▷

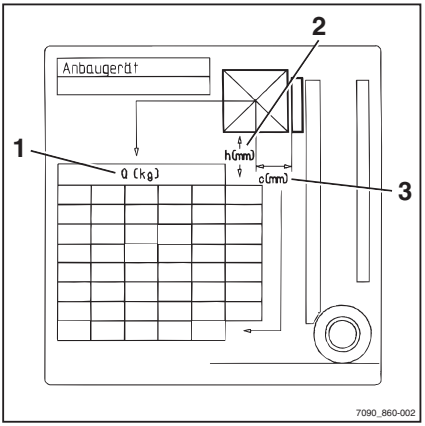


**⚠ WARNING**

Risk of accident!

Attachments may only be used for their intended purpose as described in the respective operating instructions.

Drivers must be instructed in the handling of the attachments.

**⚠ WARNING**

Risk of accident!

Loads may only be picked up and transported with attachments if they are secure. If necessary, the load must also be secured against slipping, rolling, falling, wobbling or tilting. Note that any change to the position of the centre of gravity of the load will affect the stability of the forklift truck.

Check the capacity plate for the attachments.

– There you will find the permissible values for:

- Lifting capacity Q (kg) (1)
- Lift height h (mm) (2)
- Load distance C (mm) (3)

https://truckmanualshub.com/



# Operation of additional equipment

## Switching lighting on and off (special equipment) ▷

– Press the switch (1) for the work lights.

The work lights are (3) switched on.

– Press the light switch (2).

The parking lights (4) are switched on.

– Press the light switch again (2).

The driving lights (5) are switched on.

NOTE

*Pressing the switch again switches each light back off.*

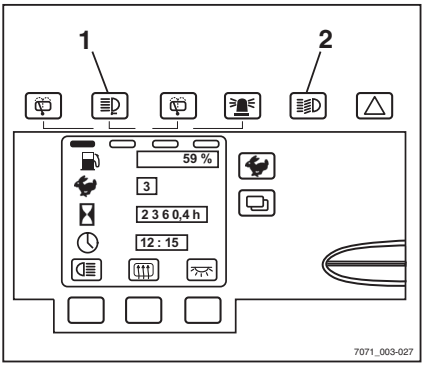


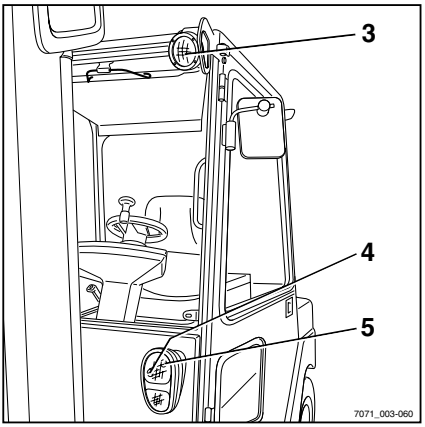


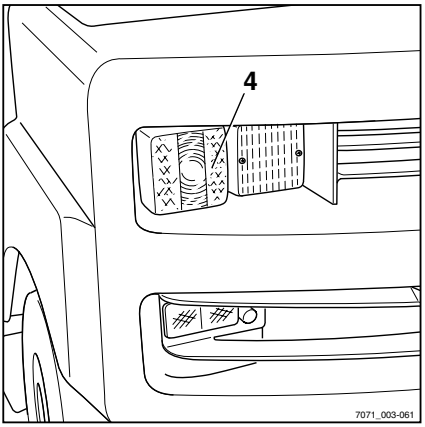

https://truckmanualshub.com/



## Switching flashing light off and on

▷

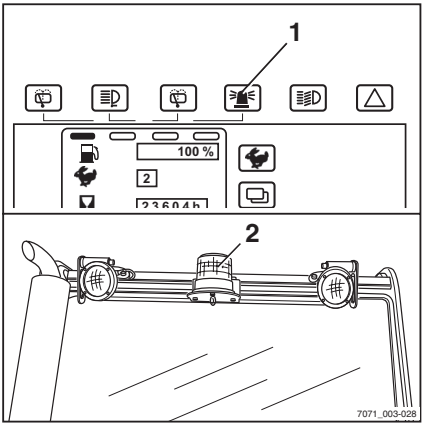


– Press the switch (1) for the flashing light.

The flashing light (2) is switched on.

**NOTE**

*Pressing the switch again switches the flashing light back off.*

https://truckmanualshub.com/



## Switching hazard warning system off and on (special equipment) ▷

– Press (1) warning light switch.

All flashing lights (3) and the two direction indicator lights (2) in the direction of travel/flasher/fault multi-function display flash.

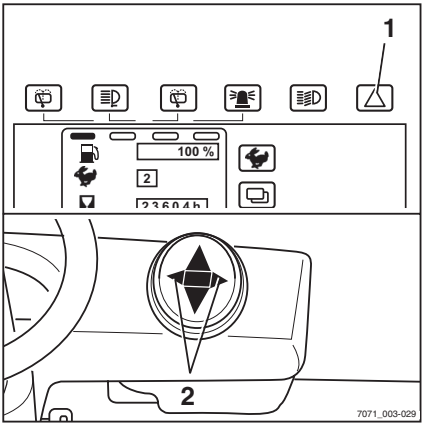


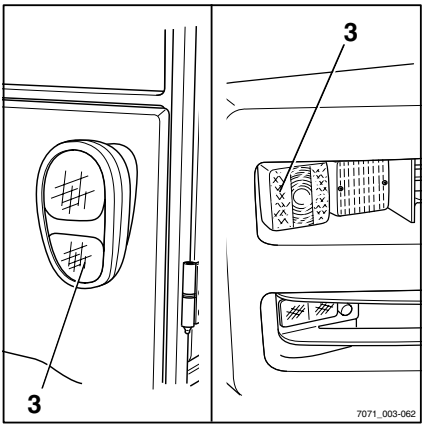


**NOTE**

*Pressing the switch again switches the hazard warning system back off.*

**NOTE**

*The hazard warning system can also be switched on without the key switch connected.*

https://truckmanualshub.com/



## Switching direction indicators off and on

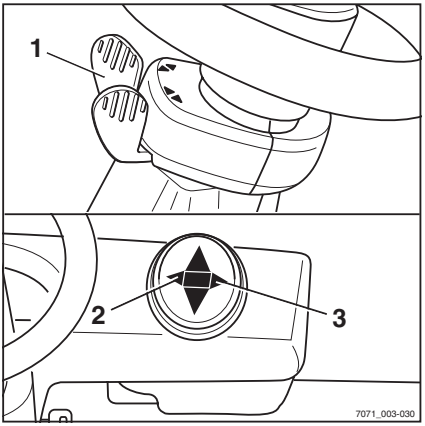


– Activate the right or left direction indicators as required using the direction indicator switch (1).

Direction indicator control lamps (2) or (3) light up.

– To indicate left: move direction indicator switch (1) to the left.

The direction indicators at the left front and rear and the direction indicator control lamp (2) at the left light up.

– To indicate right: move direction indicator switch (1) to the right.

The direction indicators at the right front and rear and the direction indicator control lamp (3) at the right light up.

**NOTE**

*To reset, move the switch half the actuation distance in the opposite direction.*

## Windscreen wiper/-washer

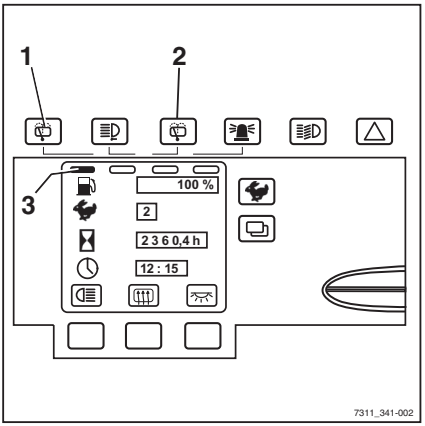


– Press the switch to activate the windscreen wiper/ washer (special equipment) (1).

– Press the switch to activate the rear windscreen wiper/ washer (special equipment) (2).

The following table shows the different displays (3) for the operating stages of the windscreen wiper / washer.

Every time the relevant button is pressed, you will move forward one stage.

| Display | Operating stage |
|---|---|
| | Wiper/Washer is "Off" |
| | Wiper is "On" |

https://truckmanualshub.com/



| Display | Operating stage |
|---|---|
| | Wiper in "Interval mode" |
| | Washer is "On"<br>NOTE: To activate the washer function, the button must be held down. |

# Cab

## Opening the cab doors

▷

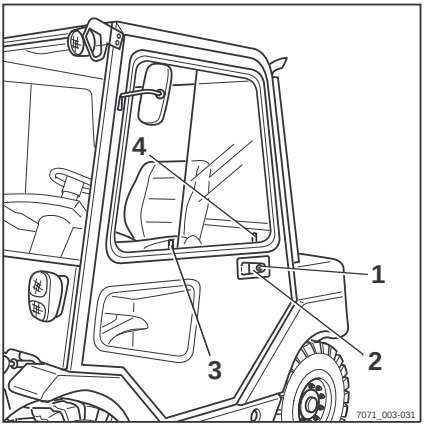


**DANGER**

**Risk of accident!**

Always keep doors closed when moving.

**DANGER**

**Only a full cab with closed, fixed doors or bracket doors is an operator restraint system. PVC doors are not a restraint system.**

If the doors are open or removed, you must use a different, suitable restraint system (e.g. restraining belt).

– Insert key in door lock (1) and turn.

– Remove key and pull on door handle (2) 5 until the lock opens.

## Opening the side windows (special equipment)

– Pull on the handle (3) and pull front side window to the rear.

– Pull on the handle (4) and pull the rear side window towards the front.

https://truckmanualshub.com/



## Heater

### Switch on blower and heater (special equipment)

**DANGER**

**Risk of explosion!**

The heater should not be operated near storage rooms or similar facilities where fuel vapours or coal, wood or grain dust could be accumulate.

Spray cans or gas cartridges should not be exposed to the flow of hot air.

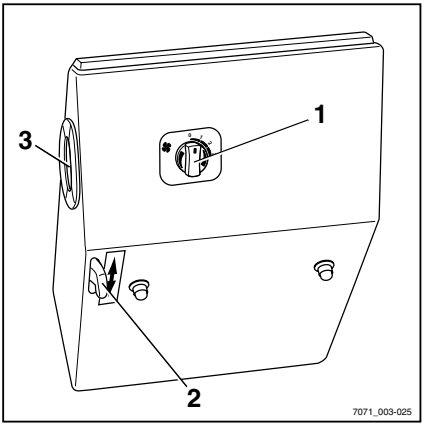


– To switch on heater, turn on blower (1) switch.

The blower runs at the speed level set at the switch.

– Set the desired temperature with the (2) lever.

The heater is in operation. The air is heated up to the heating level set at the(2)switch.

– Adjust the air flow (3) at the vent.

## Driving with cruise control

The cruise control function (special equipment) permits the driver, when travelling forwards, to press a button and save any speed of 6.0 km/h or more selected with the accelerator, then to continue driving without using the accelerator pedal.

**NOTE**

*It is not possible to use cruise control when driving in reverse.*

https://truckmanualshub.com/



## Switching on cruise control

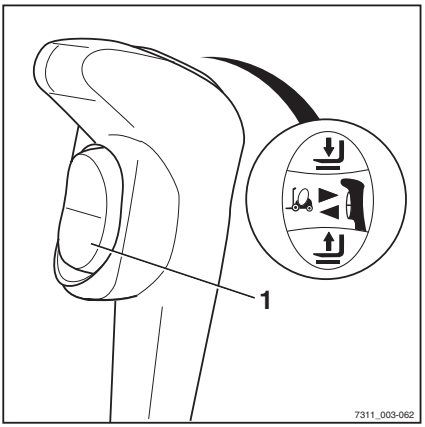


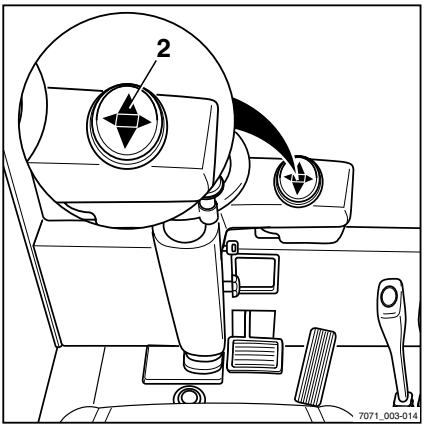


**WARNING**

Risk of accident!

When using cruise control, the special behaviour of this function and the dangers associated with it must be observed by the driver, in addition to the safety guidelines.

– Press the lower section (1) of the travel direction switch.

The forward travel direction display (2) lights continuously.

– Accelerate vehicle to the desired speed using the accelerator pedal (at least 6.0 km/h).

**WARNING**

Risk of accident!

The speed must be selected so that it is suitable for the entire distance that you intend to drive with active cruise control. This is especially true when selecting speeds around corners.

– Press the lower section of the travel direction switch again for at least one (1)second.

The selected speed is saved. The forward travel direction(2)display changes from a steady light to a flashing light.

**NOTE**

*The cruise control function cannot be activated when reversing or at a speed below 6.0 km/h.*

– Remove foot from accelerator pedal.

The vehicle will now drive at the pre-selected speed until the cruise control function is switched off.

https://truckmanualshub.com/



## Switching off cruise control

There are different ways of switching off the cruise control function.

If the cruise control function is switched off, the forward travel direction display will light up again(2)continuously.

The cruise control function can be switched off by operating

- the footbrake,
- the parking brake,
- the travel direction switch in neutral or(1)reverse,
- the accelerator pedal
- or by activating the seat switch (seat not occupied).

There are two different ways of switching it off using the accelerator pedal, depending on the individual vehicle programming:

- Type 1: Even slightly depressing the accelerator pedal switches off the cruise control function.
- Type 2: To switch off the cruise control function, the accelerator pedal must be depressed at least as far as it was when saving the speed.

**NOTE**

*The information label indicates which type of cruise control (type 1 or type 2) is programmed in your vehicle.*

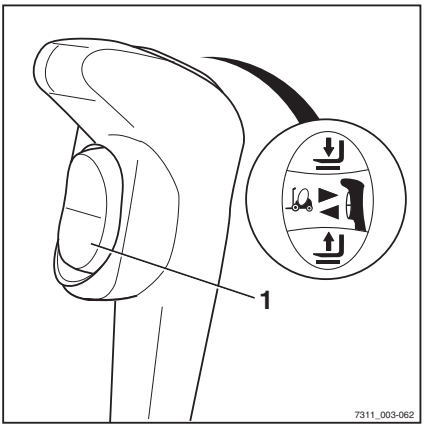


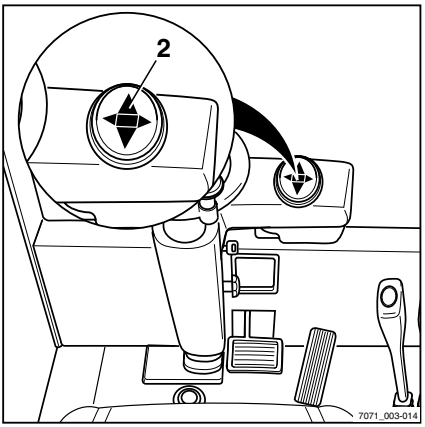

https://truckmanualshub.com/



# Trailer operation

## Towed load

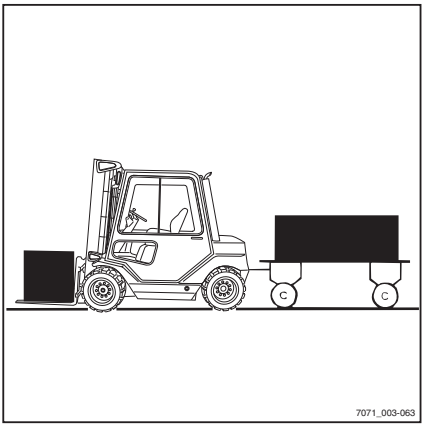


**NOTE**

*This forklift truck is suitable for the occasional towing of trailers and is equipped with a towing device for this purpose. This occasional towing may not exceed 2% of the daily operating time. If you want to use the forklift truck for more frequent towing, the manufacturer must be consulted.*

**CAUTION**

A support load is not permitted.

The maximum permissible towed load for occasional towing is the fork arm lifting capacity specified on the capacity rating plate (to the right of the driver seat). The maximum load may not be exceeded.

The permissible towed load only applies to the towbar.

If this maximum load is being towed, no load may be transported on the fork arms.

However, it is possible to transport part of the maximum load on the fork arms and at the same time tow the balance of the maximum load.

**CAUTION**

The maximum permissible load only applies for towing unbraked trailers on level surfaces (maximum gradient +/- 1%) and on firm ground.

The maximum load must be reduced if towing on slopes. Please inform the manufacturer of your conditions of use. You will then be given the appropriate data.

**CAUTION**

The maximum permissible speed when towing is 5 km/h.

Do not exceed the permissible speed.

- Do not couple the forklift truck in front of rail vehicles.
- Do not push carriages of any type.

https://truckmanualshub.com/



**⚠ WARNING**

Towing changes the vehicle handling characteristics!

When towing, operate the truck in such a way as to ensure safe transportation and braking of the towed load in all movements.

## Coupling the trailer

**⚠ WARNING**

Risk of accident!

If you briefly leave the forklift truck to couple a trailer:

- Apply the parking brake.
- Switch off the key switch and remove the key.

### Manual tow coupling

- Secure the parked trailer against unintended movement (1). Do not release the parking brake until the trailer has been coupled on.

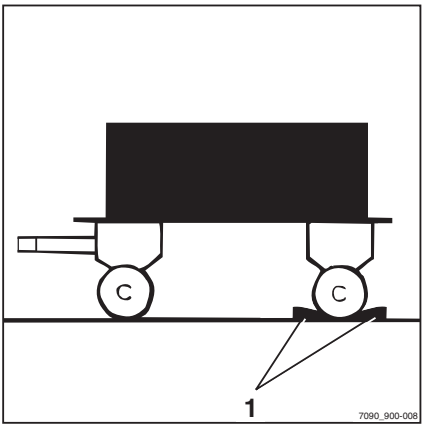

https://truckmanualshub.com/



– Insert wheel chock (special equipment)(2)⇒ Chapter "Use wheel chocks", P. 5-151).

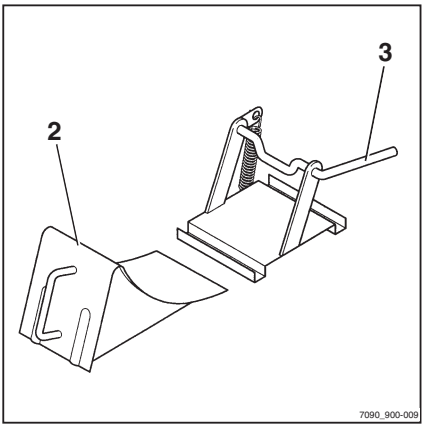


– Press down the tow bolt (4), rotate by 90° and remove.

– Insert the drawbar into the recess in the counterweight.

**DANGER**

**Only use the original tow bolt.**

Make sure that the tow bolt is engaged correctly.

– Insert the tow bolt; press it down against spring force and turn it 90° (tow bolt is then secured in this position).

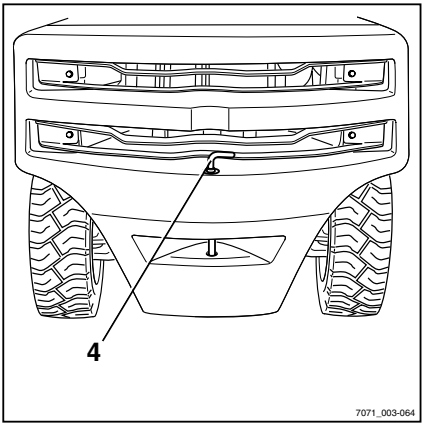

https://truckmanualshub.com/



## Towing trailers

- Before commencing towing, perform a sufficient number of test drives.
- When driving up or down inclines, take account of the dimensions of the trailer and load.
- When towing multiple trailers, ensure a sufficient minimum distance to fixed installations when turning and cornering.

The permissible length of the trailers depends on the routes to be driven and may need to be determined during the test drives.

The permissible number of trailers and - if necessary - any supplementary speed reductions for particular sections must be provided to the drivers as driving instructions.

▷

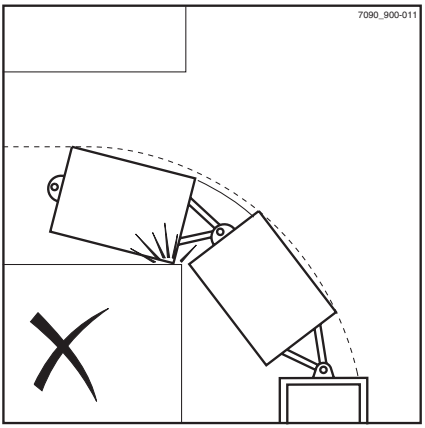

https://truckmanualshub.com/



# Operation of indicator and operating unit

## Displays

### Normal displays

▷

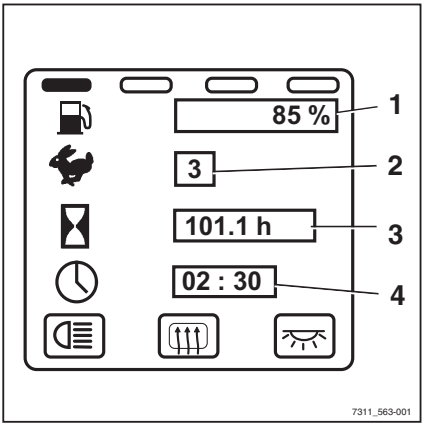


The following displays are normally visible (factory setting):

(1) Fuel level.

(2) Set traction programme PROG with the numbers 1 through 5. The traction programme can be changed, see ⇒ Chapter "Setting the traction programs", P. 5-68.

(3) Hour meter. The hour meter shows the operating time of the vehicle. It starts as soon as the ignition key is turned to the operating position.

(4) Time in hours and minutes. The time can be set.

### Additional displays

▷

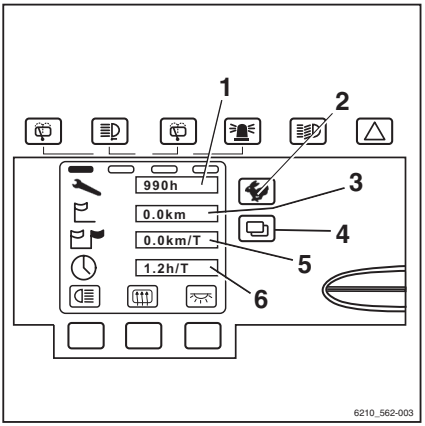


Upon pressing the menu change button (4) the following additional displays appear:

(1) `WARTUNG IN (SERVICE IN)` display

Displays the remaining time (in hours) until the next service visit according to the maintenance schedule in the maintenance manual.

– Contact your customer service office or workshop.

(3) Displays the total distance driven (in km).

(5) Displays the distance driven for the day.

(6) Displays the hours driven for the day (in hours).

## Display settings and changes

To set and change the displays, first switch to the `KONFIGURATION (CONFIGURATION)` menu :

– Switch on key switch.

https://truckmanualshub.com/



– Press the traction programme key (2) and menu change key (4) at the same time to switch to the PASSWORD menu.

– Press the return key (7) to switch to the KONFIGURATION (CONFIGURATION) menu .

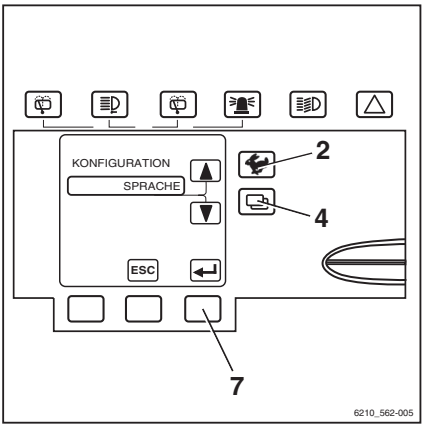


The following settings are possible:

- Set date and time, see ⇒ Chapter "Setting the date or time", P. 5-121
- Reset daily number of kilometres and daily driving time, see ⇒ Chapter "Resetting the daily number of kilometres and daily driving time", P. 5-122
- Select language, see ⇒ Chapter "Setting the language", P. 5-122
- FleetManager functions, see ⇒ Chapter "Fleet Manager functions", P. 5-123
- Other settings, see⇒ Chapter "Additional settings", P. 5-124

## Setting the date or time

– Switch to the Configuration menu; see ⇒ Chapter "Display settings and changes", P. 5-120.

– Press the traction programme button (2) or the menu selection button (4) until the UHRZEIT (TIME) option appears. Confirm your selection with the Return key (7).

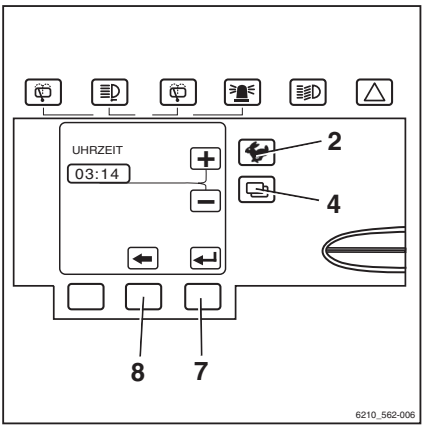


The UHRZEIT (TIME) menu appears.

– Hold down the traction program key (2) or the menu selection key (4) until the desired time appears on the display.

As the keys are held down for longer, the scrolling speed increases in three levels.

– Confirm the correct time with the Return key (7).

– Exit the menu and move up a level with the arrow key (8). The date setting appears and can be changed in a similar way.

https://truckmanualshub.com/



## Resetting the daily number of kilometres and daily driving time

The daily number of kilometres and daily driving time displays can be reset to zero.

– Switch to the Configuration menu; see ⇒ Chapter "Display settings and changes", P. 5-120.

– The values are reset by pressing RESET (RESET). ▷

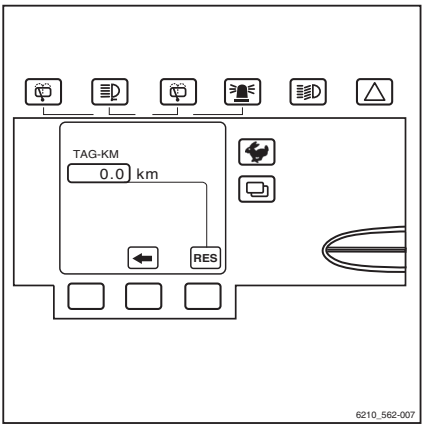


## Setting the language

The display can be shown in additional languages.

– Switch to the Configuration menu; see ⇒ Chapter "Display settings and changes", P. 5-120.

https://truckmanualshub.com/



– Press the traction program button (1) or the menu change button (2) until the desired language appears in the display.

– Confirm the selected language with the Return key (3).

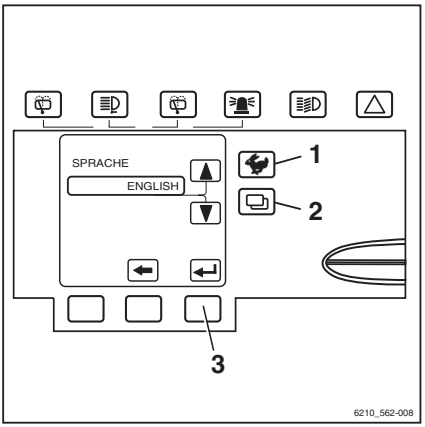


## Fleet Manager functions

Fleet Manager functions (special equipment) can be executed using the smart card (1). Ask your service centre.

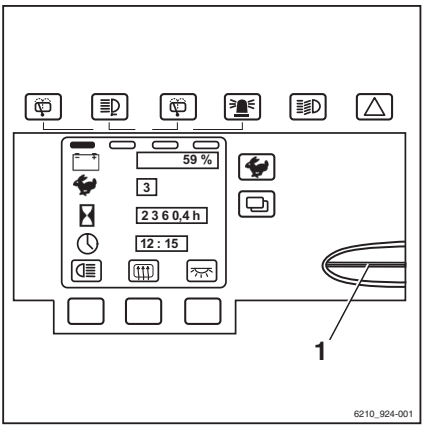

https://truckmanualshub.com/



## Accident recorder (special equipment)

The accident recorder is an auxiliary device to the Fleet Manager. An acceleration sensor (2) is installed in the truck. The acceleration sensor can record data from an accident. This data can be evaluated. Ask your service centre.

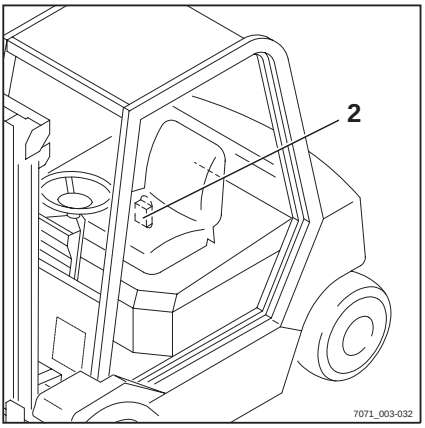


## Additional settings

Entering a password makes it possible to set additional values. Contact your customer service office about this.

https://truckmanualshub.com/



# Error messages

## Diagram

If a malfunction or a message is displayed on the display and control(1)unit, the display lights up on the combination display for direction of travel/flasher/message.

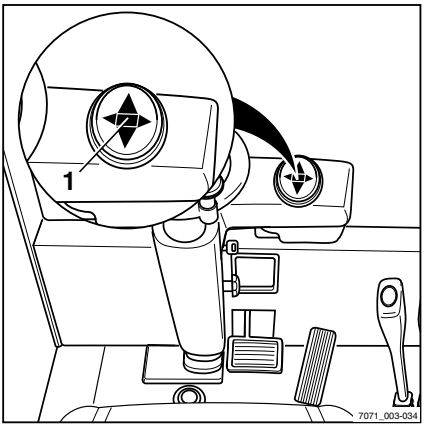


The following malfunction indications and messages can appear on the display:(2)A graphic symbol and a message describing(3)the faulty function and an error code consisting of(4)a letter and a 4-digit number.

Fault displays are always displayed on a cyclic basis for a number of seconds, depending on the fault.

If more than one fault occurs, they are shown one after the other. This is followed by a pause, with its length also depending on the type of fault. During this pause the status display of the truck is shown.

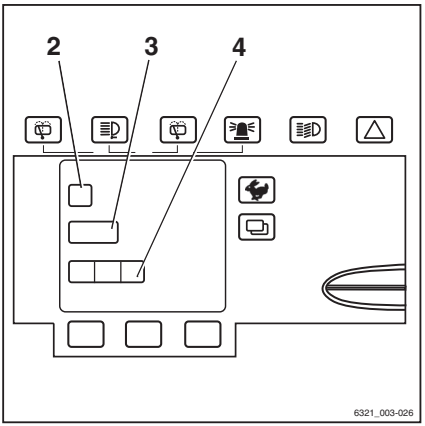

https://truckmanualshub.com/


## Error code table

The table gives you an overview of possible displays. In the "Comment" column you will find information on how to proceed should any of these messages appear.

| Message text (English) / Error code | Display animation | Comment |
|---|---|---|
| UEBERTEMPERATUR (OVERHEATING)<br>A5022 | Cyclic display every 30 sec | Traction motor(s) is/are too hot.<br>1. Phase: Regulation of acceleration and speed.<br>2. Phase: Limitation of phase current in converter (emergency driving function is retained).<br>The error code automatically disappears as soon as the temperature is lower than the limit.<br>If the error code appears often, please contact your service centre. |
| PARAMETER (PARAMETERING)<br>A1206<br>A1211 | Cyclic display every 30 sec | Traction and hydraulic drive not functioning.<br>Contact your service centre. |
| FAHRGEBER (ACCEL. SENSOR)<br>A3002<br>A3003<br>A3004<br>A3005<br>A3006<br>A3007 | Cyclic display every 30 sec | Sensor error, vehicle cannot be driven.<br>Contact your service centre. |
| FAHRGEBER (ACCEL. SENSOR)<br>A3811 | Cyclic display every 30 sec | Accelerator configuration is invalid. Vehicle cannot be driven<br>Contact your service centre. |
| BREMSGEBER (BRAKE SENSOR)<br>A3016<br>A3017 | Cyclic display every 30 sec | Sensor error, vehicle can only be driven at the emergency mode speed.<br>Contact your service centre. |
| KONFIGURATION (CONFIGURATION)<br>A2111 | Cyclic display every 30 sec | Parameterisation error or defective printed circuit board, traction and hydraulic drive not functioning.<br>Contact your service centre. |
| KONFIGURATION (CONFIGURATION)<br>A3801 | Cyclic display every 30 sec | Parameterisation error, traction and hydraulic drive not functioning.<br>Contact your service centre. |

https://truckmanualshub.com/


| Message text (English) / Error code | Display animation | Comment |
|---|---|---|
| KONFIGURATION (CONFIGURATION) A3812 | Cyclic display every 30 sec | Traction program parameters are outside the permitted range. The traction program parameters are limited internally. Contact your service centre. |
| KONFIGURATION (CONFIGURATION) A3822 | Cyclic display every 30 sec | Wrong converter, traction and hydraulic drive not functioning. Contact your service centre. |
| KONFIGURATION (CONFIGURATION) A9999 | Cyclic display every 30 sec | Software error, traction and hydraulic drive not functioning. Contact your service centre. |
| SPANNUNG (VOLT-AGE) A2237 | Cyclic display every 30 sec | Short circuit 10 V ext., traction and hydraulic drive not functioning. Contact your service centre. |
| SITZSCHALTER (SEAT SWITCH) A3027 | Cyclic display every 30 sec | Seat switch has not been operated for 8 hours. Truck is possibly still driving at a reduced speed and with reduced lifting capacity. Briefly stand up and sit down again. If this does not resolve the problem, contact the service centre. |
| LENKEN (STEERING) A3202 A3215 A3221 A3226 | Cyclic display every 30 sec | Sensor error, vehicle can be driven at emer-gency mode speed. Contact your service centre. |
| FAHRTRICHTUNG (DIRECTION SWITCH) A3020 | Cyclic display every 30 sec | Switch error, no or limited traction drive function. Contact your service centre. |
| HEBEN (LIFTING) A3102 A3103 | Cyclic display every 30 sec | Sensor error, no or restricted hydraulic drive function. Contact your service centre. |
| NEIGEN (TILTING) A3107 A3108 | Cyclic display every 30 sec | Sensor error, no or restricted hydraulic drive function. Contact your service centre. |
| ZUSATZ1 (EXT1) A3112 A3113 | Cyclic display every 30 sec | Sensor error, no or restricted hydraulic drive function. Contact your service centre. |
| ZUSATZ2 (EXT2) A3117 A3118 | Cyclic display every 30 sec | Sensor error, no or restricted hydraulic drive function. Contact your service centre. |

https://truckmanualshub.com/


| Message text (English) / Error code | Display animation | Comment |
|---|---|---|
| VERSORGUNG (POWER SUPPLY)<br>A2242<br>A2257 | Cyclic display every 30 sec | Transmitted power supply short-circuited.<br>Vehicle cannot be driven<br>Contact your service centre. |
| MONITORING<br>A2801<br>A2802<br>A2807<br>A2808<br>A2809<br>A2810<br>A2811<br>A2812<br>A2813<br>A2814<br>A2815<br>A2816 | Cyclic display every 30 sec | Traction drive is not functioning.<br>Release pedal.<br>If this error code appears sporadically, it can be tolerated. If usability is impaired, please contact your service centre. |
| MONITORING<br>A2803<br>A2806 | Cyclic display every 30 sec | Direction of travel is set to neutral.<br>Reselect direction of travel.<br>If this error code appears sporadically, it can be tolerated. If usability is impaired, please contact your service centre. |
| UEBERWACHUNG (SURVEILLANCE)<br>A2817<br>A2818 | Cyclic display every 30 sec | Vehicle is not ready for operation.<br>Turn key switch to the zero position and start again.<br>If this error code appears sporadically, it can be tolerated. If usability is impaired, please contact your service centre. |
| ANTRIEB (DRIVE)<br>A5041 | Cyclic display every 30 sec | Temperature sensor error<br>Contact your service centre. |
| OELDRUCK (OIL PRESSURE)<br>A5631 | Cyclic display every 10 sec | Engine defect (no oil pressure) or sensor defect. Engine is switched off for protection.<br>Contact your service centre. |
| COOLANT TEMP<br>A5611 | Cyclic display every 10 sec | Coolant temperature too high.<br>Cooling fan is not running.<br>Low coolant level, check coolant level and top up if necessary, see ⇒ Chapter "Topping up coolant and checking coolant concentration", P. 6-178.<br>If this does not resolve the problem, contact the service centre. |
| LUFTFILTER (AIR FILTER)<br>A5651 | Cyclic display every 30 sec | Replace/clean air filter, see ⇒ Chapter "Replacing the air filter insert", P. 6-181. |

https://truckmanualshub.com/


| Message text (English) / Error code | Display animation | Comment |
|---|---|---|
| LICHTMASCHINE (GENERATOR) A5811 | Cyclic display every 30 sec | Starter battery is not charged. Contact your service centre. |
| MOT/GEN-TEMP (MOT/GEN.-TEMP.) A5034 | Cyclic display every 30 sec | Overtemperature in traction motor or generator. Allow to cool down. If this does not resolve the problem, contact the service centre. |
| ABGASREINIGER (EXH.GAS PURIFIER) A5795 | Cyclic display every 30 sec | Regeneration interrupted. Contact your service centre. |
| ABGASREINIGER (EXH.GAS PURIFIER) A5797 A5798 | Cyclic display every 30 sec | End of regeneration. Contact your service centre. |
| ABGASREINIGER (EXH.GAS PURIFIER) A5793 A5794 A5796 | Cyclic display every 30 sec | Regeneration has not started. Contact your service centre. |
| ABGASREINIGER (EXH.GAS PURIFIER) A5891 | Cyclic display every 30 sec | No regeneration and no intermediate glow. Contact your service centre. |
| ABGASREINIGER (EXH.GAS PURIFIER) A5892 | Cyclic display every 30 sec | Participant is not logged on. Contact your service centre. |
| STEUERGERAET (CONTROL UNIT) A3305 | Cyclic display every 30 sec | The CIO does not work. Contact your service centre. |
| KUEHLMITTELSTAND (COOLANT LEVEL) A5611 | Cyclic display every 30 sec | Low coolant level, check coolant level and top up if necessary, see ⇒ Chapter "Topping up coolant and checking coolant concentration", P. 6-178. If this does not resolve the problem, contact the service centre. |

https://truckmanualshub.com/



## SAFETY BELT message

**DANGER**

**Driving without a seat belt is dangerous and never permitted!**

– Always fasten the seat belt before driving.

**NOTE**

*This mechanism (special equipment) ensures that if the seat belt is not being used or is being used incorrectly, the forklift truck will only drive slowly or (optionally) will not drive at all. Depending on the selected version, the operating hydraulic functions (lift/tilt) are either available as normal, slowed down or not available at all. This function is triggered in the following circumstances:*

### Seat belt not worn, driver's seat occupied.

– Switch on key switch.

The message SAFETY BELT appears in the display as long as you operate an operating lever, the steering wheel, or the accelerator pedal. The forklift truck drives slowly or does not drive at all; depending on the selected version, the working functions are either available as normal, slowed down or not available at all.

– Fit the seat belt in line with the instructions and fasten it.

The forklift truck can again be operated without restriction.

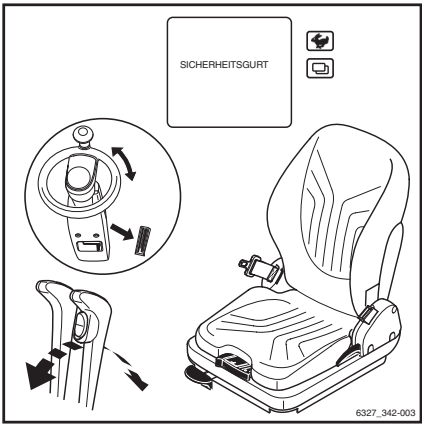

https://truckmanualshub.com/



### The seat belt is constantly fastened and the driver's seat is then occupied.

– Switch on key switch.

The message SAFETY BELT appears in the display if you operate an operating lever or the accelerator pedal. The forklift truck drives slowly or does not drive at all; depending on the selected version, the working functions are either available as normal, slowed down or not available at all.

– Remove the seat belt from the buckle, fit the belt in line with the instructions and fasten it again.

The forklift truck can again be operated without restriction.

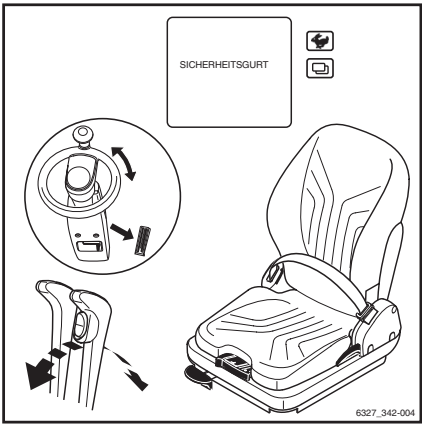


### The seat belt is not fastened until after the key switch has been switched on.

– Switch on key switch.

The message SAFETY BELT appears in the display if you operate an operating lever or the accelerator pedal. The forklift truck drives slowly or does not drive at all; depending on the selected version, the working functions are either available as normal, slowed down or not available at all.

– Remove the seat belt from the buckle, fit the belt in line with the instructions and fasten it again.

The forklift truck can again be operated without restriction.

https://truckmanualshub.com/



### The seat belt is unfastened while driving

– If you release the belt while driving, the message `SAFETY BELT` appears in the display.

The truck maintains or brakes to a slow speed.

**DANGER**

**This function does not release you from your duty of care, to adjust the speed of the forklift truck to the driving situation.**

The increased safety provided by this function may not be misused in order to take safety risks.

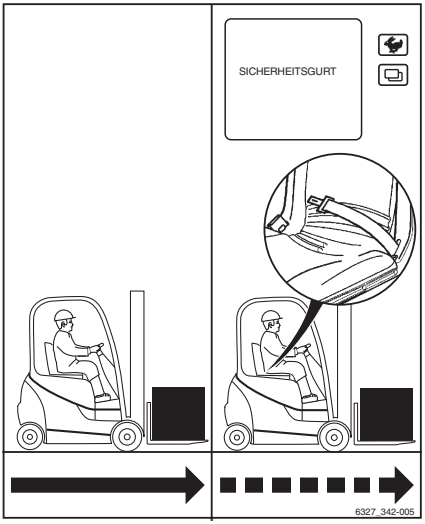


– Fit the seat belt in line with the instructions and fasten it.

The forklift truck can again be operated without restriction.

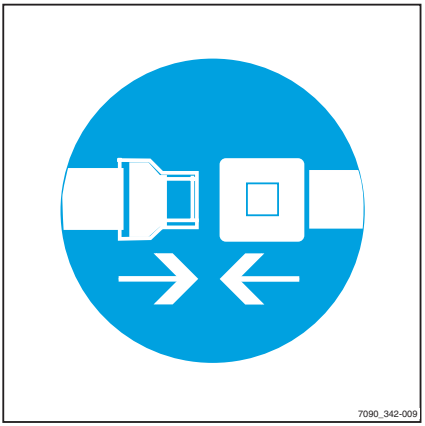


## Message SITZSCHALTER (SEAT SWITCH)

**NOTE**

*The truck is equipped with a seat switch. If the message* `SITZSCHALTER (SEAT SWITCH)` *appears on the display, the truck will only move slowly or (optionally) not at all. Depending on the selected version, the operating hydraulic functions (lift/tilt) are either*

https://truckmanualshub.com/



*available as normal, slowed down or not available at all. This function is triggered in the following circumstances:*

### The seat switch is not actuated, while the accelerator pedal or the steering wheel is actuated. ▷

The key switch is switched on.

The seat is not occupied while the accelerator pedal or the steering wheel is operated. The message `SITZSCHALTER (SEAT SWITCH)` appears in the display. The forklift truck cannot move.

– Sit on the driver seat and fasten the belt.

The forklift truck can be driven again without restriction.

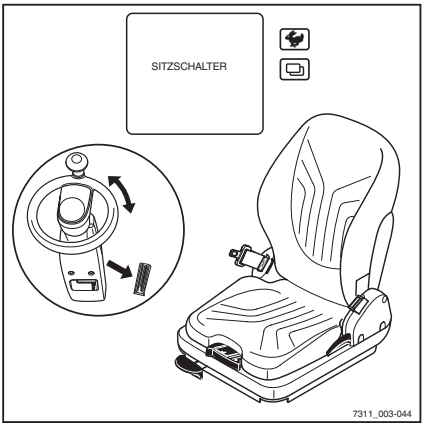


### The seat switch is not actuated, while the operating lever is actuated ▷

The key switch is switched on.

You are not sitting on the seat, while actuating an operating lever. The message `SITZSCHALTER (SEAT SWITCH)` appears in the display. The work functions can be executed normally, only slowly, or not at all depending on the version.

– Sit on the driver seat and fasten the belt.

The work functions can be operated without restriction again.

https://truckmanualshub.com/



## Exceeding the shift time

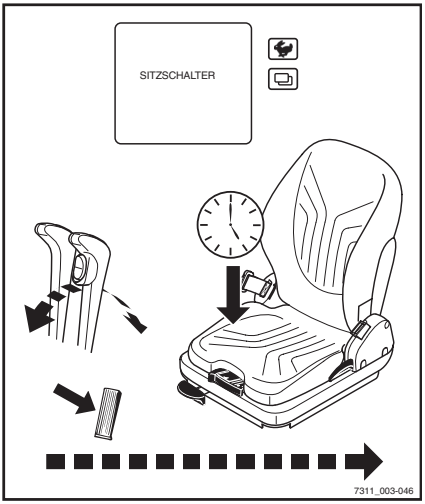


**NOTE**

*The shift time is adjustable.*

When the key switch is switched on after sitting steadily for the set time, the message `SITZSCHALTER (SEAT SWITCH)` appears on the display. This also occurs when an operating lever or the accelerator pedal is operated. The forklift truck will only move slowly; the work functions can be executed normally, only slowly, or not at all depending on the selected version.

– Stand up briefly from the seat and then sit back down.

The forklift truck can again be operated without restriction.

## Exceeding the operation time

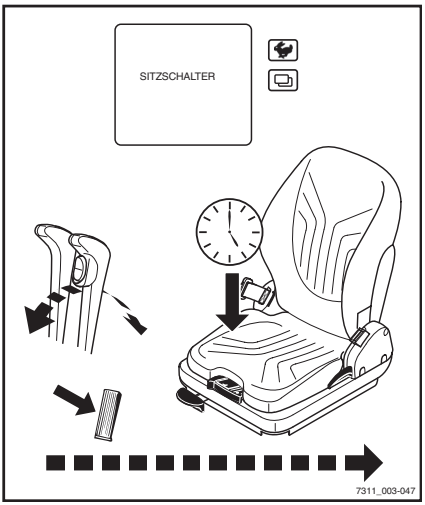


**NOTE**

*The operation time is adjustable.*

If, while the key switch is switched on and the parking brake is released, the driver's seat is occupied longer than the set operation time and the accelerator pedal or an operating lever was not operated during this time, the message `SITZSCHALTER (SEAT SWITCH)` appears in the display. The forklift truck can move only slowly; the work functions can be executed normally, only slowly, or not at all depending on the version.

– Stand up briefly from the seat and then sit back down.

The forklift truck can again be operated without restriction.

https://truckmanualshub.com/



## AIR FILTER message

If the AIR FILTER message appears on the indicator and operating unit, the air filter insert must be replaced, see ⇒ Chapter "Replacing the air filter insert", P. 6-181.

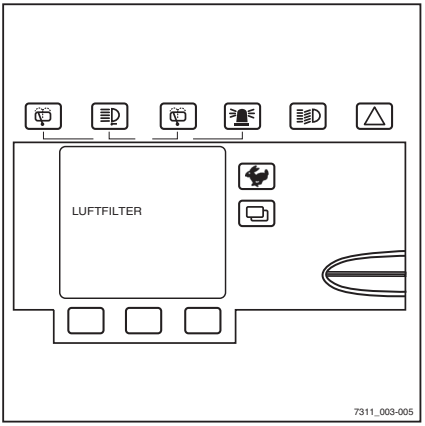


## BREMSE ANZIEHEN (APPLY HANDBRAKE!) message

**DANGER**

**Risk of accident!**

Parking the forklift truck without the brake being securely applied is dangerous and is not permitted. The increased safety provided by this function may not be misused in order to take safety risks.

### Parking brake is not applied

If you park the vehicle without applying the parking brake and leave the driver's seat, the message BREMSE ANZIEHEN (APPLY HANDBRAKE!) appears, and an optional signal tone sounds.

– Apply the parking brake (1).

The display BREMSE ANZIEHEN (APPLY HANDBRAKE!) disappears.

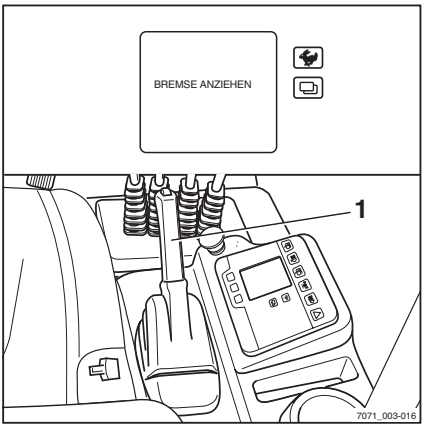

https://truckmanualshub.com/



### The truck moves slowly despite the parking brake being applied

If you park the forklift truck without applying the parking brake sufficiently securely, the forklift truck will slowly roll away. The display BREMSE ANZIEHEN (APPLY HANDBRAKE!) appears and an optional signal tone sounds.

– Apply the parking brake (1) securely so that the forklift truck no longer rolls away.

The display BREMSE ANZIEHEN (APPLY HANDBRAKE!) disappears.

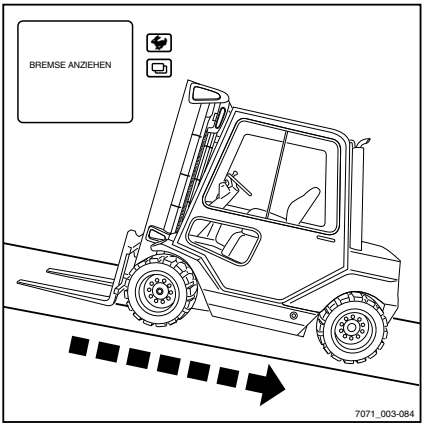


## LOWER FORKS message

**DANGER**

**Risk of accident!**

Parking the forklift truck with the load lifted is dangerous and is not permitted under any circumstances. The increased safety provided by this function may not be misused in order to take safety risks.

### Forks are not lowered

The forks are above the height sensor. You switch off the key switch and vacate the seat. In the display, the message LOWER FORKS appears (special equipment), and an optional signal tone sounds.

– Lower the forks to the bottom using the lift-lower operating lever.

The message LOWER FORKS disappears.

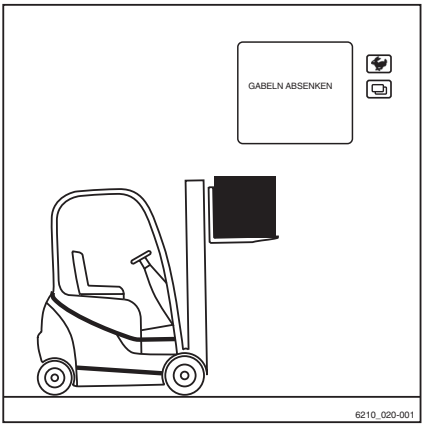

https://truckmanualshub.com/



## REFERENCE LIFT message

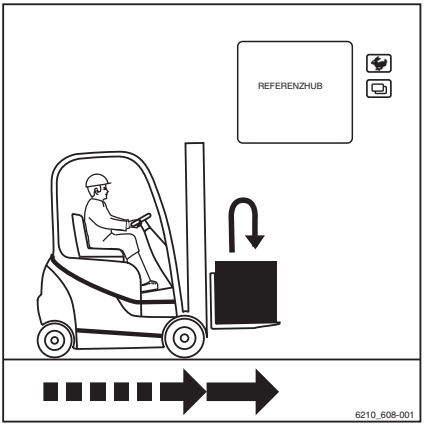


**NOTE**

*If you have shut down the control unit and lower the load with the lift-lower operating lever, the following happens when you restart:*

You switch on the key switch. In the display, the message `REFERENCE CYCLE` (special equipment) or no display appears. The forklift truck will now only drive at a reduced speed. You now have to perform a test lift (reference cycle) using the lifting system:

- Lift the forks up until the message disappears or, if it was not previously displayed, until it appears and then disappears again.
- Then lower the forks again.

The truck can now be driven again with no speed limitation.

## ACCELERATOR message

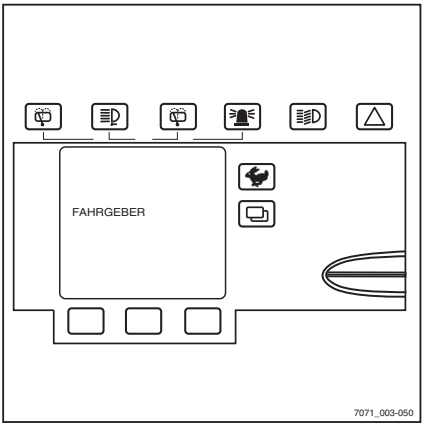


If the `ACCELERATOR` message appears on the indicator and operating unit, the vehicle will remain stationary. The accelerator must be checked.

- Contact the customer service office.

https://truckmanualshub.com/



## BRAKE SENSOR message

If the BRAKE SENSOR message appears, the maximum driving speed is reduced. The brake sensor in the brake pedal must be checked.

– Contact the customer service office.

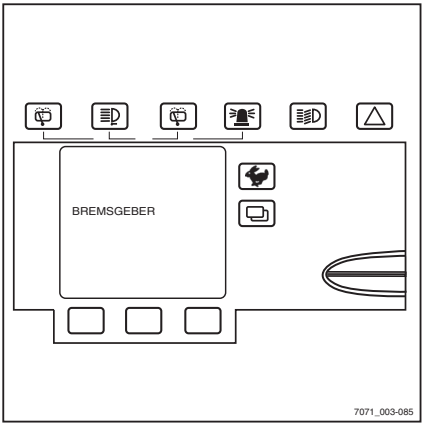


## SURVEILLANCE message

If the SURVEILLANCE message appears, a fault has occurred in the process monitoring.

This shuts off the traction drive.

– Place the key switch in the "0" position and then back in the "1" position. Start the engine; see ⇒ Chapter "Start the engine", P. 5-62.

– Release the accelerator pedal.

– Select the direction of travel again.

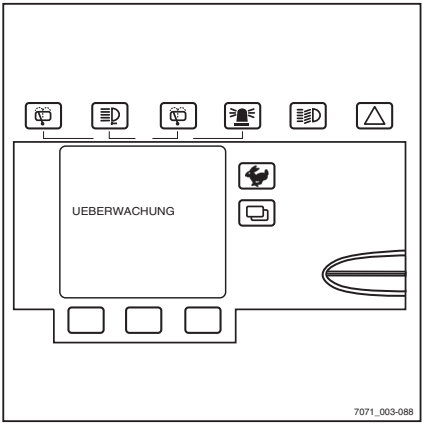


**NOTE**

*If this fault occurs sporadically, it can be tolerated. If the truck's functionality is impaired, contact your service centre.*

https://truckmanualshub.com/



## MOT/GEN-TEMP message

If the MOT/GEN-TEMP message appears, the traction motor or the generator is overheated, or a cable is broken.

– Interrupt work, allow to cool off. Do not switch off key switch.

**NOTE**

*If the truck's functionality is impaired, contact your service centre.*

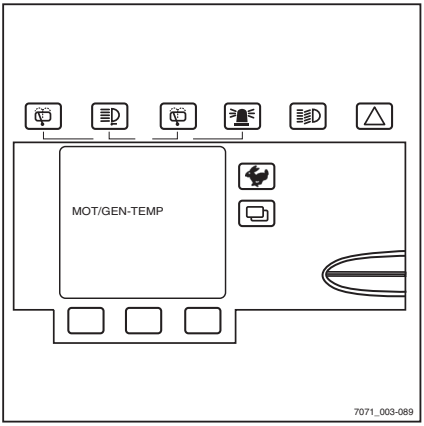


## STEERING message

If the STEERING message appears on the display and operating unit, the vehicle only moves at crawling speed. The accelerator must be checked.

– Contact the customer service office.

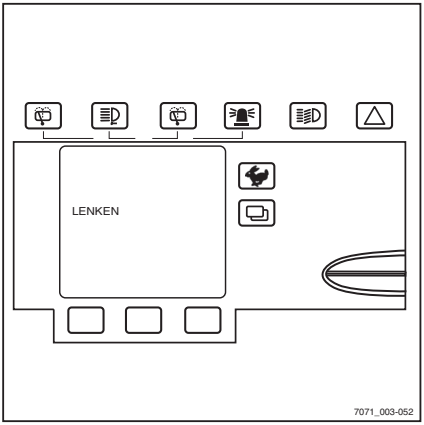

https://truckmanualshub.com/



## OIL PRESSURE message

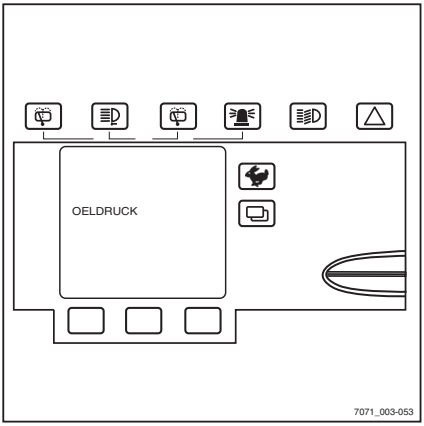


**CAUTION**

Risk of engine damage!

If the OIL PRESSURE message appears, shut off the engine immediately.

If the OiL PRESSURE message appears, the oil pressure in the engine is too low.

The message can have different causes:

- The engine has overheated
- Insufficient oil
- The oil is insufficiently viscous
- Engine damage

– Checking engine oil level, see ⇒ Chapter "Checking the engine oil level", P. 5-54.

– If necessary, renew engine oil.

– Contact the customer service office.

## COOLANT LEVEL message

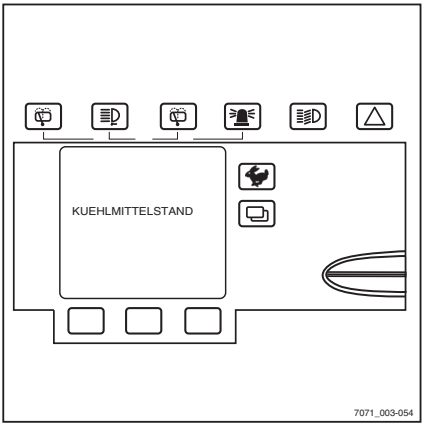


If the COOLANT LEVEL message appears, the coolant level is too low.

– Checking coolant level, see ⇒ Chapter "Topping up coolant and checking coolant concentration", P. 6-178.

**CAUTION**

Risk of engine damage!

If the coolant level is low, this indicates a leak in the cooling system.

– Check for leaks in the cooling system; see ⇒ Chapter "Cleaning the radiator, checking for leaks", P. 6-178.

https://truckmanualshub.com/



## COOLANT TEMP message

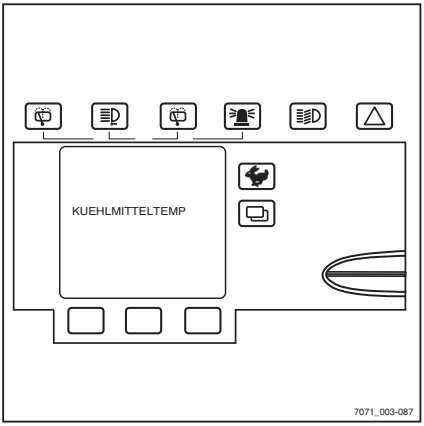


if the COOLANT TEMP message appears, the coolant temperature is too high.

The message can have different causes:

- insufficient coolant in the cooling system; check coolant level, see ⇒ Chapter "Topping up coolant and checking coolant concentration", P. 6-178
- Functional fault at the electrical fan
- Defective thermostat
- Radiator clogged, see ⇒ Chapter "Cleaning the radiator, checking for leaks", P. 6-178

## OVERHEATING message

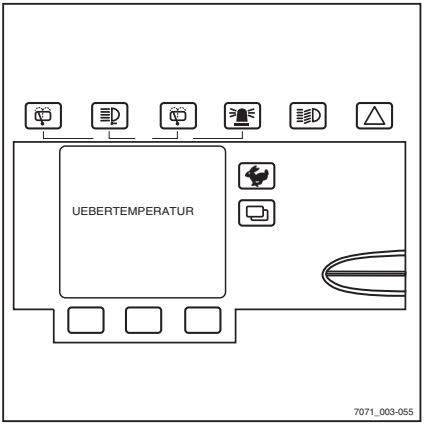


If the OVERHEATING message appears, the traction motors are overheated. Vehicle speed and acceleration are reduced.

– Allow the vehicle to cool down.

– If the condition persists, contact your service centre.

https://truckmanualshub.com/



## ABGASREINIGER (EXH. GAS PURIFIER) message

If the ABGASREINIGER (EXH. GAS PURIFIER) message appears, the particle filter is full.

– Service the Eberspächer particle filter, see ⇒ Chapter "Servicing Eberspächer particle filters", P. 6-187.

▷

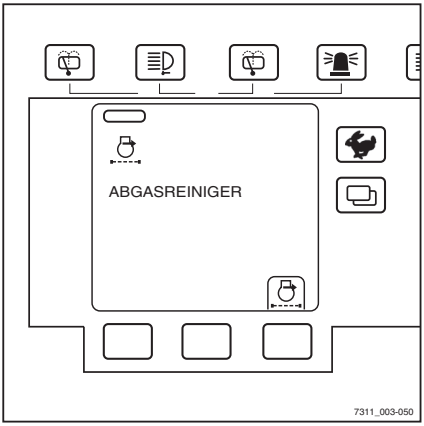

https://truckmanualshub.com/



# Operation in special operating situations

## Transport

When driving the forklift truck onto the transport means, pay attention to the following:

- The load capacity of the transport means, ramps, and loading bridges must be greater than the loading weight of the forklift truck.
- Maintain a safe distance from edges, loading bridges, ramps, working platforms, and the like.
- Make sure the tail end doesn't veer out.
- Make sure that the tail end doesn't veer out from the loading bridge in the direction of the edge when turning the steering wheel while driving forward. This can cause the forklift truck to crash.
- Lower the forks completely.
- Always disconnect the battery plug during transport.
- Apply the parking brake, and remove the key.

## Wedging

– Use two wedges to secure each of the front and back wheels against rolling and use wooden blocks to secure the sides against shifting .

**⚠ CAUTION**

The wooden blocks must be secured (e.g. with nails).

▷

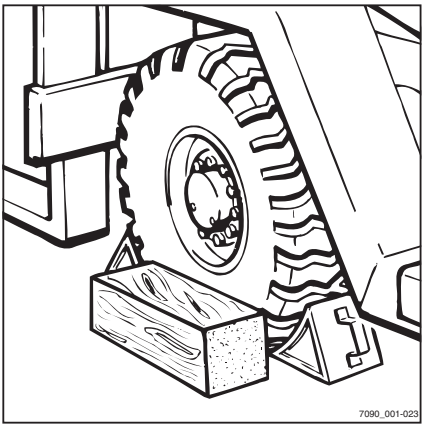

https://truckmanualshub.com/



## Securing

– Secure the ropes to the mast in the front and to the towing devices in the back.

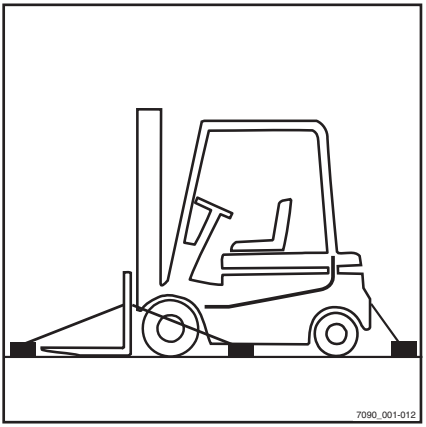


## Towing

If the brake for the towed forklift truck is no longer functional, the forklift truck can only be towed with a fixed connection (towing bar).

To tow the forklift, a towing vehicle with sufficient tractive power and braking force for the unbraked towed load is required.

– Set down load and lower fork arms almost to the floor.

– Switch off the engine.

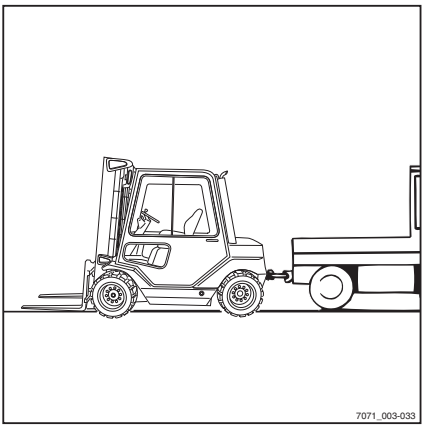


**⚠ CAUTION**

As a result of the design of the drive, the engine cannot be started by pushing or towing the truck.

Don’t start vehicle by pushing or pulling!

**⚠ CAUTION**

Steering is stiff! There is no power steering if the hydraulics are not active!

The maximum vehicle towing speed is walking speed.

– After towing, secure truck from rolling away (e.g. by placing chocks).

– Apply the parking brake.

https://truckmanualshub.com/



## Crane loading

Crane loading is only intended for transporting the complete truck, including the lift mast, for its commissioning. For use situations that require frequent loading or that are not presented here, please contact the manufacturer with regard to special equipment variants.

Only those persons with sufficient experience of suitable slings and lifting gear may load up forklift trucks.

### Determining loading weight

- Park truck securely.
- Determine the loading weight of the truck.
- Read the following weights on the factory nameplate, and if necessary, the factory nameplate of the attachment, and perform the addition:

Tare weight (1) + ballast weight (3) (if present) + tare weight of the attachment (if present) = laden weight.

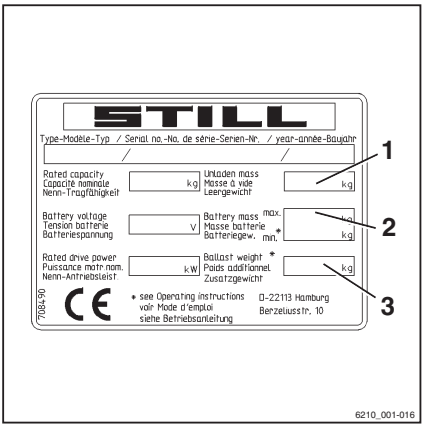


### Attaching lifting slings

**CAUTION**

Failure to follow these instructions could result in damaged components.

Use textile slings and, if necessary, edge protectors or similar protective equipment to prevent damage to the truck.

Only use hoists and slings with adequate lifting capacity for the determined loading weight.

**DANGER**

**Risk of accident!**

Only use the designated attachment points on your truck!

Make sure that lifting gear such as hooks, shackles, belts and similar items are stressed only in the load direction indicated.

The lifting gear must not be damaged by truck parts.

- Loop the slings to the right and the left around the main traverse (1) on the outer mast of the lift mast.

https://truckmanualshub.com/



NOTE

*The attachment points are indicated by a hook symbol.*

**DANGER**

**Only use the designated attachment points on your truck! Make sure that harness parts such as hooks, shackles, belts and similar items are stressed only in the load direction indicated. The lifting gear must not be damaged by truck parts.**

– Loop the slings to the right and the left around the main traverse (1) on the outer mast of the lift mast. ▷

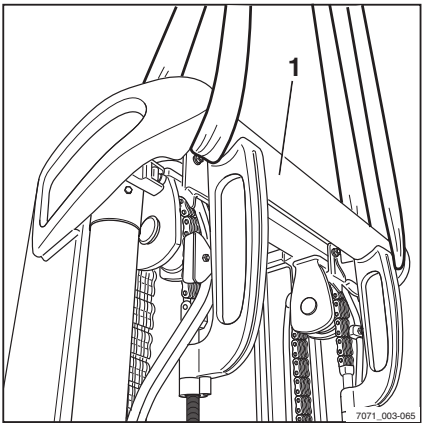


– Loop the slings (2) around the counterweight between the counterweight and the steering axle. ▷

– Determine the centre of gravity for your truck.

The centre of gravity is indicated by the "S" symbol in the operating manual in the Technical Data section, see ⇒ Chapter "Dimensions", P. 7-226.

– Set the length of the slings so that the crane hook (3) is vertically above the centre of gravity of the forklift truck.

This ensures that the forklift truck hangs level when lifting it.

– Hang the slings from the crane hook and engage the (4) locking device.

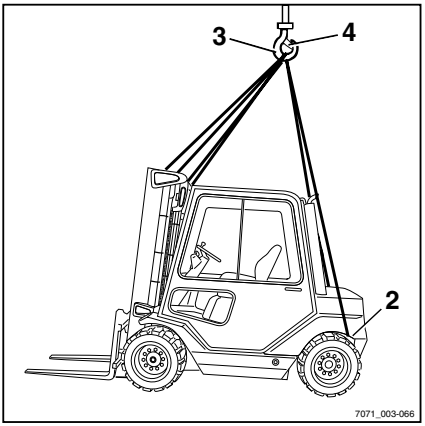

https://truckmanualshub.com/



**CAUTION**

Failure to follow these instructions could result in damaged components.

The slings must be attached so that the lifting forces do not act on truck attachments or parts of the overhead guard or the cab. If attachments are in the way (e.g. lights, rear window, trademark emblem etc.), these must be removed before loading.

## Loading truck

– Carefully lift the truck and set it down at the intended location.

**DANGER**

**Risk to life!**

Never walk or stand underneath suspended loads.

Do not allow the forklift truck to bump into anything whilst it is suspended, or allow it to move in an uncontrolled way. If necessary, hold the truck using guide ropes.

## Jump starting

**NOTE**

*A power source with 12 V (e.g. second forklift truck of same type) must be available.*

– Open the bonnet; see ⇒ Chapter "Open the motor hood.", P. 5-53.

– Allow the engine in the vehicle providing the current to run.

– Connect the positive cable (2) to the positive terminal on the dead battery first and then connect it to the positive terminal of the current-providing battery.

– Connect the negative cable (1) to the negative terminal of the current-providing battery first and then connect it to the negative terminal of the dead battery.

– Start the engine, see ⇒ Chapter "Start the engine", P. 5-62.

– Once the engine is running, remove the jumper cables in exactly the reverse order.

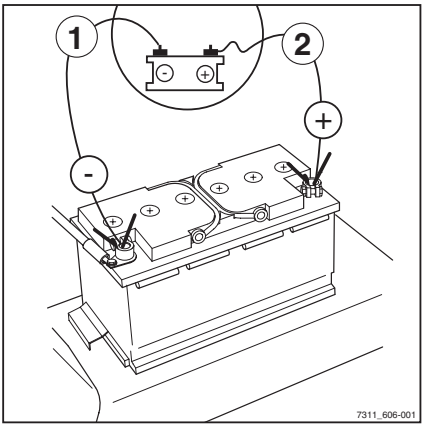

https://truckmanualshub.com/


– Close the bonnet.

https://truckmanualshub.com/



# Filling fuel

## Filling up with diesel

The fuel reserve is displayed by the flashing percent indicator for the fuel level (1) on the display and operating unit.

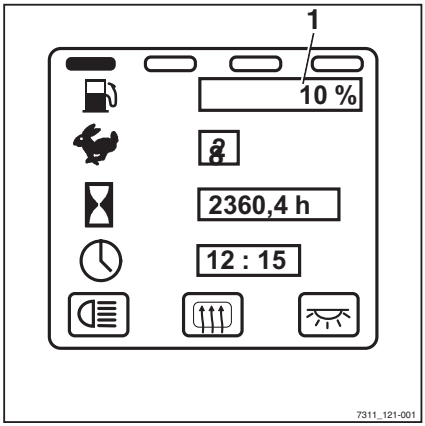

**DANGER**

**Risk of fire!**

- Turn off the engine before filling up.
- Do not smoke or use naked flames when filling up.
- Legal regulations relating to the handling of diesel fuel must be observed.
- Observe the safety regulations for handling diesel fuel, see ⇒ Chapter "Diesel fuel", P. 3-30.

**CAUTION**

The truck may only be operated with diesel fuel according to DIN EN 590 .

Use of fuel additives supporting soot burn-off is not permitted.

Starting aids (such as "Startpilot" among others) must not be used.

At low temperatures, winter diesel must be used, see ⇒ Chapter "Diesel fuel", P. 6-163.

- Open the locking cap (2) of the fuel tank and fill up with clean diesel fuel.

For the fill quantity, see ⇒ Chapter "Maintenance data table", P. 6-165.

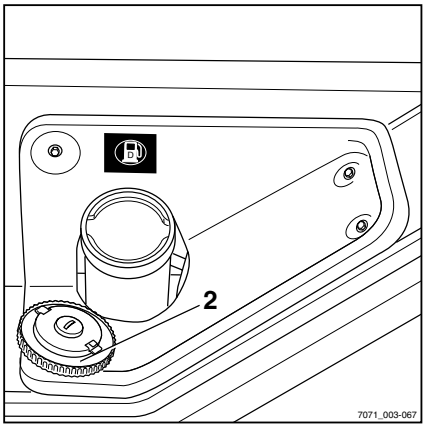

https://truckmanualshub.com/



# Shut-down

## Park truck secured

▷

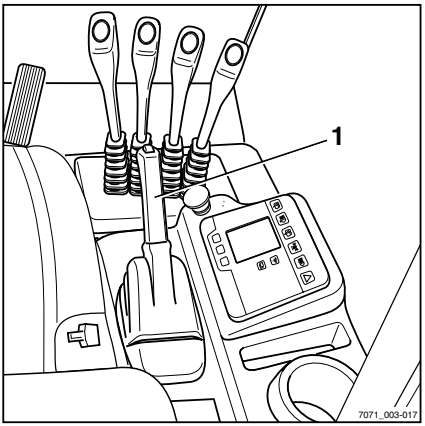


**DANGER**

**Risk of accident!**

The truck should not be parked on a slope.

– In case of emergency, secure the truck with chocks.

**WARNING**

Risk of accident!

– Before leaving truck, fully lower load.

– Apply the parking brake (1).

– Lower the forks to the ground and tilt the fork tips sufficiently forward, until they touch the ground.

– Turn the ignition key to the left and remove it.

**NOTE**

*Without explicit instructions, the ignition key or Fleet Manager card (special equipment) should not be made available to other persons.*

**NOTE**

*Avoid parking the vehicle for long periods at temperatures lower than 0°C, because the hydraulic fluids will be very viscous and the functions will be tight.*

https://truckmanualshub.com/



## Use wheel chocks

The wheel chock (special equipment) serves, among other things, to prevent the forklift truck from rolling away on a slope.

**WARNING**

Risk of accident!

– If the vehicle is parked with a chock, the load is to be lowered onto the ground.

– Lift handle (3) on the mounting support.

– Remove wheel chock (4) from the mounting support.

– Place wheel chock on the side facing downhill behind a wheel of the front axle.

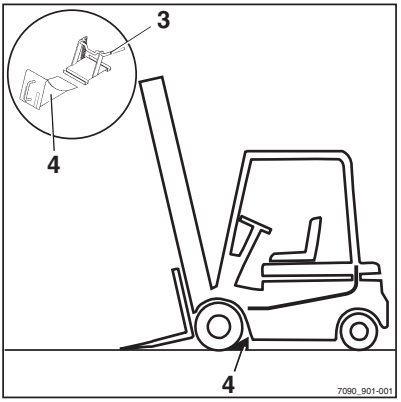


**NOTE**

*After using the wheel chock, reinsert into the mounting support and fold the handle (3) back downwards.*

## Measures for prolonged shutdown, storage of truck

If the truck is to be stored for a prolonged time, the following measures must be taken to protect against corrosion. If the truck is to be shut down for more than two months, it must be parked in a clean and dry area. The area should also be well ventilated and frost free. The following additional measures must be taken:

### Measures before shutdown

– Clean forklift truck thoroughly.

– Lift fork carriage to full extent several times.

– Tilt the mast forwards and backwards several times and, if fitted, move attachments repeatedly.

– To relieve the strain on the load chains, lower forks onto a suitable supporting surface e. g. a pallet.

– Check hydraulic oil level and top up if required.

https://truckmanualshub.com/


- Apply oil or grease thinly to all uninsulated moving parts.
- Lubricate the forklift truck.
- Fill the fuel tank.
- Oil joints and controls.
- Check the condition and acid density of the battery and maintain the battery as specified by the manufacturer. (Follow the instructions provided by the battery manufacturer.) Only store completely charged batteries.
- Apply a suitable contact spray to all exposed electrical contacts .
- Preserve the engine as specified by the manufacturer.

**⚠ CAUTION**

Jack up the truck so that all wheels are clear of the ground. This prevents permanent deformation of the tyres.

- Cover the truck with a cotton sheet and protect against dust.

**⚠ CAUTION**

We do not recommend using a plastic sheet as this promotes the formation of condensation.

If the truck is to be shut down for even longer periods, contact your service centre for additional recommended measures.

## Returning to service after storage

If the truck has been in storage for longer than six months, it must be carefully checked before being put back into service. As in the UVV (accident prevention) inspection or the annual inspection, this check should also include all safety items for the truck.

- Clean the forklift truck thoroughly.
- Oil joints and controls.
- Check battery condition and acid density; recharge if necessary.

https://truckmanualshub.com/


– Restore engine to normal condition according to regulations of engine manufacturer.
– Check hydraulic oil for condensed water; change if necessary.
– Perform maintenance as before initial start-up.
– Put the truck into service.

Check during start-up in particular:

- drive, control, steering
- brakes (service brake, parking brake)
- lifting system (load-carrying equipment, load chains, fastening)

https://truckmanualshub.com/

https://truckmanualshub.com/

# 6

# Maintenance

https://truckmanualshub.com/


# General maintenance information

## Qualifications of personnel

Only qualified and authorised personnel are allowed to perform maintenance work The annual check must be conducted by a specialist. The specialist's evaluation must be unaffected by operational and economic conditions and be conducted solely from a safety standpoint. The specialist must have sufficient knowledge and experience to be able to assess the condition of a forklift truck and the effectiveness of the protective equipment according to technical conventions and the principles for testing forklift trucks.

### Maintenance work for which no special qualifications are necessary

Simple maintenance work, e.g. checking the hydraulic oil level or checking the fluid level in the battery, may be performed by untrained personnel. This does not require training as described above. Refer to this operating manual for further information.

## Information regarding performing maintenance

This section contains all information to determine when your truck must be serviced. Be sure to perform maintenance according to the maintenance overview programme; this is essential to obtain the full availability, productivity and working life from your truck, and is a pre-condition for any warranty claims.

https://truckmanualshub.com/



## Time of maintenance

Maintenance on the truck must be performed based on the operating hours meter. The maintenance overview programme indicates which maintenance work is due.

The maintenance overview programme includes instructions for performing maintenance.

All lubrication and service intervals must be reduced appropriately for dusty conditions, large temperature fluctuations or intensive use.

**CAUTION**

Risk of component damage!

If technical values in this manual vary from those listed in the enclosed operating instructions for the engine, the values in this manual have priority.

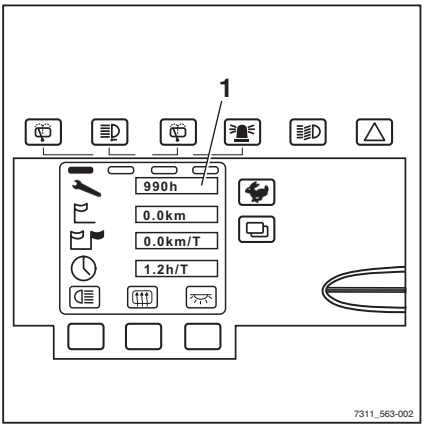


## Maintenance and lubrication

1. During the initial operating period (designated by numbers in bold with a star (*))
2. According to the hour meter (bold numbers)

After **6000** operating hours, for example, the following must be performed: maintenance and lubrication "after 1000 and 3000 operating hours".

| | | | | | | | | |
|---|---|---|---|---|---|---|---|---|
| **50*** | | | | | | | | |
| **1000** | **2000** | **3000** | **4000** | **5000** | **6000** | **7000** | **8000** | **9000** |
| 1000 | 1000 | 3000<br>1000 | 1000 | 1000 | 6000<br>3000<br>1000 | 1000 | 1000 | 9000<br>3000<br>1000 |

After **9000** operating hours, continue as above — instead of 1000 then 10,000 operating hours.

https://truckmanualshub.com/



## Maintenance points overview

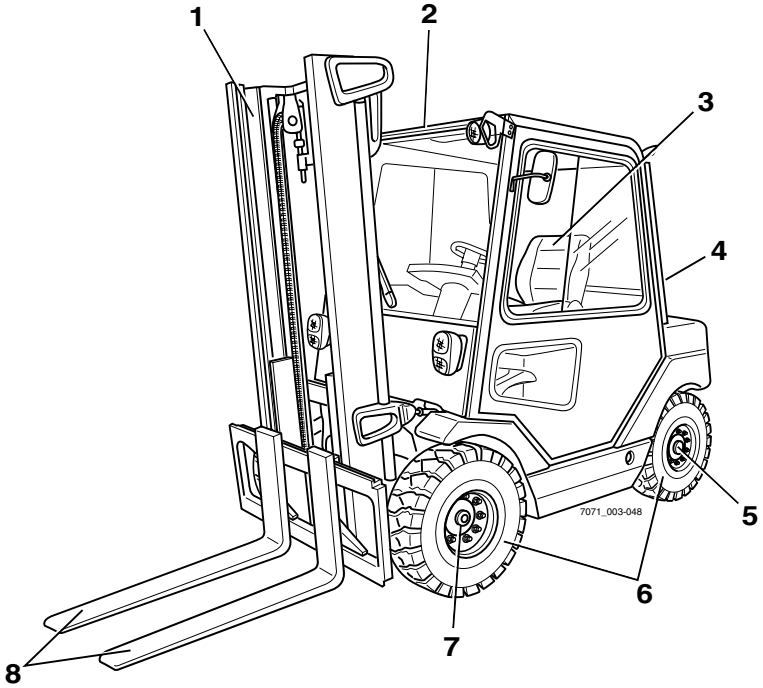

https://truckmanualshub.com/


## Intervals for maintenance and inspection

The work shall be performed by your service centre according to the maintenance intervals listed below.

### Maintenance after 50 operating hours

| Position | Maintenance work |
|---|---|
| - | Maintenance during the break-in period; see ⇒ Chapter "Maintenance during the breaking-in period", P. 6-177 |

### Maintenance as required

| Position | Maintenance work |
|---|---|
| - | Clean truck, see ⇒ Chapter "Cleaning", P. 174 |
| - | Clean radiator, checking seal, see ⇒ Chapter "Cleaning the radiator, checking for leaks", P. 6-178 |
| - | Topping up coolant and checking concentration of coolant additive, see ⇒ Chapter "Topping up coolant and checking coolant concentration", P. 6-178 |
| - | Drain water out of the fuel filter, see ⇒ Chapter "Drain the fuel filter of water", P. 6-180 |
| - | Replace air filter insert, see ⇒ Chapter "Replacing the air filter insert", P. 6-181 |
| - | Check parking brake setting, see ⇒ Chapter "Checking parking brake setting", P. 6-183 |
| - | Service battery, see ⇒ Chapter "Servicing battery", P. 6-183 |
| - | Service hydraulic equipment, see ⇒ Chapter "Maintaining hydraulic equipment", P. 6-186 |
| - | Servicing Eberspächer particle filter, see ⇒ Chapter "Servicing Eberspächer particle filters", P. 6-187 |
| 6 | Service wheels and tyres, see ⇒ Chapter "Servicing wheels and tyres", P. 6-191 |
| - | Joints and controls, see ⇒ Chapter "Lubricating joints and controls", P. 6-192 |
| 5 | Service steering axle, see ⇒ Chapter "Maintaining the steering axle", P. 6-192 |
| 1 | Service mast bearings, see ⇒ Chapter "Servicing the mast bearing", P. 6-195 |

https://truckmanualshub.com/


| Position | Maintenance work |
|---|---|
| 1 | Service load chains, see ⇒ Chapter "Load chain maintenance", P. 6-195 |
| 1 | Lubricate lift mast and roller track, see ⇒ Chapter "Lubricating the lift mast and roller track", P. 6-198 |
| 3 | Service restraining belt, see ⇒ Chapter "Servicing the restraining belt ", P. 6-198 |
| 3 | Check driver's seat, see ⇒ Chapter "Check driver's seat", P. 6-200 |
| - | Replace fuses, see ⇒ Chapter "Replacing fuses", P. 6-200 |
| - | Service attachments, see ⇒ Chapter "Attachment maintenance", P. 6-202 |

## 1000 hour maintenance/annual maintenance

| Position | Maintenance work |
|---|---|
| 7 | Servicing drive axle, see ⇒ Chapter "Maintainance of drive axle", P. 6-203 |
| - | Adjusting parking brake switch, see ⇒ Chapter "Adjusting the parking brake", P. 6-204 |
| - | Lubricating parking brake lever bearing and ratchet, see ⇒ Chapter "Lubricating the parking brake lever bearing and ratchet", P. 6-204 |
| - | Check the counterweight fastening, see ⇒ Chapter "Checking the counterweight attachment", P. 6-204 |
| - | Replace engine oil and filter, see ⇒ Chapter "Changing the engine oil and filter", P. 6-204 |
| - | Checking the ribbed V-belt, see ⇒ Chapter "Checking the ribbed V-belt", P. 6-206 |
| - | Check toothed belt, see ⇒ Chapter "Checking the toothed belt ", P. 6-207 |
| - | Replace fuel filter, see ⇒ Chapter "Replacing the fuel filter", P. 6-207 |
| - | Replace fuel filter for the Eberspächer exhaust cleaner, see ⇒ Chapter "Replacing the fuel filter for Eberspächer exhaust gas cleaners", P. 6-208 |
| 4 | Check exhaust system; see ⇒ Chapter "Checking the exhaust gas system", P. 6-208 |
| - | Check the heating system for leaks, see ⇒ Chapter "Checking the heating system for leaks", P. 6-208 |
| 1 | Check lift cylinders and connections for leaks, see ⇒ Chapter "Check lift cylinders and connections for leaks.", P. 6-209 |

https://truckmanualshub.com/


| Position | Maintenance work |
|---|---|
| 1 | Service lifting system, see ⇒ Chapter "Maintain lifting system", P. 6-209 |
| 1 | Check play between fork carriage stop and run-out stop, see ⇒ Chapter "Checking play between fork carriage stop and run-out stop", P. 6-211 |
| 8 | Check fork arms, see ⇒ Chapter "Checking the fork arms", P. 6-211 |
| - | Check reversible fork arms, see ⇒ Chapter "Checking reversible fork arms", P. 6-212 |

## 3000-hour maintenance/two-year maintenance

| Position | Maintenance work |
|---|---|
| - | Carry out all work from the 1000 hours maintenance/annual maintenance |
| 7 | Replace gear lubricant oil, see ⇒ Chapter "Changing the gear lubricant oil", P. 6-213 |
| - | Check wheel bearings, see ⇒ Chapter "Checking the wheel bearing ", P. 6-214 |
| - | Check engine bearing, see ⇒ Chapter "Checking the engine mountings", P. 6-214 |
| - | Replace toothed belt, see ⇒ Chapter "Replacing the toothed belt", P. 6-215 |

## 6000-hour maintenance

| Position | Maintenance work |
|---|---|
| - | Carry out all work from the 1000 hours maintenance/annual maintenance |
| - | Carry out all work from the 3000 hours maintenance/two-year maintenance |
| - | Replace hydraulic oil and filter, see ⇒ Chapter "Replacing the hydraulic oil and filter", P. 6-217 |

## 9000 hour maintenance/five-year maintenance

| Position | Maintenance work |
|---|---|
| - | Carry out all work from the 1000 hours maintenance/annual maintenance |

https://truckmanualshub.com/



| Position | Maintenance work |
|---|---|
| - | Carry out all work from the 3000 hours maintenance/two-year maintenance |
| - | Replace coolant; see ⇒ Chapter "Changing the coolant", P. 6-221 |

## Ordering spare parts and wearing parts

Spare parts are provided by our spare parts service department. The information required for ordering spare parts is shown in the spare parts list.

Only use spare parts as per the manufacturer's instructions. The use of unapproved spare parts can result in an increased risk of accidents due to insufficient quality or incorrect assignment.

Anyone using unapproved spare parts shall assume unlimited liability in the event of damage or harm.

▷

## Quality and quantity of the required operating materials

Only the operating materials specified in the maintenance data table may be used.

Consult the maintenance data table for the consumables and lubricants needed for maintenance. See ⇒ Chapter "Maintenance data table", P. 6-165.

Different quality oil and grease types may not be mixed. This negatively affects the lubricity. If a change between different manufacturers cannot be avoided: remove the old oil particularly thoroughly.

https://truckmanualshub.com/


Before performing greasing, filter changes or any intervention in the hydraulic system, carefully clean the area around the part involved.

When topping up consumables, use clean containers only!

## Diesel fuel

Use distillate fuels without residual oils.

The following limits are specified:

- Density ≤ 900 kg/m$^3$
- Cetane number ≥ 49

No special engine equipment is required for pure distillate fuels.

- Low-sulphur diesel fuels with a sulphur content of < 0.05 % can be used. An adequate lubricity, however, must be ensured through the use of additives. It is the responsibility of the fuel manufacturer to ensure this.

### Winter operation with diesel fuel

Winter operation places special demands on the cold characteristics. Suitable fuels are available for this season (winter diesel fuel), see the specifications. If only summer diesel fuel is available at low ambient temperatures, petroleum can be added to the diesel fuel according to the opposite diagram to ensure its flowability. Only make the mixture in the tank: First fill the necessary quantity of petroleum, then add diesel fuel.

I = Summer diesel fuel

II = Winter diesel fuel

A = Ambient temperature

B = Proportion of petroleum

▷

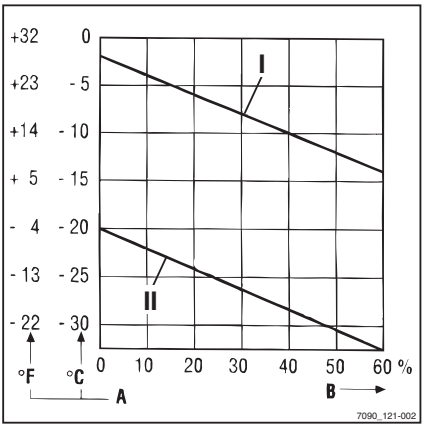

https://truckmanualshub.com/


**WARNING**

It is not permitted to add regular grade petrol according to the laws governing safety .

For arctic climates diesel fuels are available for an ambient temperature of -44°C.

The addition of flow improvers to diesel fuel is possible. The fuel supplier should be consulted as regards efficiency and compatibility .

– Only mix in fuel tank. Do not use petrol.

| Outside temperature °C | Summer diesel % | Winter diesel % | Petroleum % | |
|---|---|---|---|---|
| 0 to -10 | 60 | 100 | 40- | - |
| -10 to -15 | 40- | 100 | 60 | - |
| -15 to -20 | - | 100 | - | - |
| -20 to -25 | - | 75 | - | 25 |
| -25 to -30 | - | 50 | - | 50 |
| -30 to -35 | - | 40- | - | 60 |

https://truckmanualshub.com/


## Maintenance data table

| Units | Operating materials | Specification | Dimension |
|---|---|---|---|
| General lubrication points | Grease | DIN 51825-KPF2 N-20 penetration class 2, lithium-saponified, ID no. 141001 (400g cartridge) | as required |
| Battery | Distilled water | | as required |
| - Insulation resistance | | | min. 1000 Ohm against ground |
| Controls/joints | Grease | DIN 51825-KP2 K-20 penetration class 2, lithium-saponified ID no. 163488 (225 g tube) | as required |
| | Oil | SAE 80 MIL-L2105 API-GL4 | as required |
| Hydraulic system | Hydraulic oil | HVLP68 DIN 51524 Part 3 | approx. 48 l |
| | Hydraulic oil for the foodstuffs industry (special equipment) | USDA H1 DIN 51524 | approx. 48 l |
| Tyres | | | |
| - Pneumatic tyres | - | | Air pressure: see information on truck Min. profile height: 1.6 mm |
| - Superelastic tyres | Wear limit: | | To wear mark |
| Wheel mounting nuts | | | |
| - Drive axle | Torque wrench | | M20x1.5: 640 Nm |
| - Steering axle | Torque wrench | | M20x1.5: 600 Nm |
| Carraro drive axle EC50i | | | |
| - Gear wheel | Mineral oil | ARAL HGS FLUID 127830 | Right-hand side: 1.1 l Left-hand side: 0.65 l |
| Lift mast | Super-pressure adhesive lubricant | ID no. 147873 | as required |
| - Stop | - | | Clearance: min. 2 mm |
| - Mast bearing screws | Torque wrench | | M16x80 10.9: 290 Nm |

https://truckmanualshub.com/


| Units | Operating materials | Specification | Dimension |
|---|---|---|---|
| Load chains | Chain spray | ID no. 141001<br>ID no. 156428 | as required |
| - Setting | | | Distance from the support roller under the inside mast to the top edge: 15 mm |
| Steering axle | | | |
| - Axle stub nuts | Torque wrench | | 310 Nm |
| - Wheel hub fastening | Torque wrench | | 470 Nm |
| Cooling system | Coolant/water | G12 plus<br>TL-VW 774 F | approx. 11.5 l |
| Fuel tank | Diesel | - | approx. 58 l |
| Switching off | Engine oil | VW 507.00 | With filter change 4.5 l |
| Air filter | | | |
| - Dry air filter | Filter flushing agent | - | as required |

https://truckmanualshub.com/


# Safety instructions for maintenance

## General information

To prevent accidents during maintenance and repair work, all necessary safety measures must be taken, e.g.:

- Ensure that unintentional movement or undesired start-up of the forklift truck is prevented (apply the parking brake, jack up the forklift truck).
- Secure against lowering when working under raised load-carrying equipment.
- Secure the mast against unintentional tilting.

## Carrying out work on the hydraulic equipment

Hydraulic equipment must be depressurised prior to all work. See ⇒ Chapter "Depressurising connections for attachments", P. 5-104.

## Working on electrical equipment

Work may only be performed on electrical equipment of the forklift truck in a voltage-free state. Only trained and commissioned persons may perform functional tests, checks, and settings on parts under voltage while taking the suitable precautionary measures. Rings, metal bracelets, etc. must be removed prior to working on electrical components.

To prevent damage to e-systems with electronic components, such as an electronic driving regulator or lift control, these components must be removed from the forklift truck prior to the start of electric welding.

Work on the electrical system (e.g. connecting a radio, additional headlights, etc.) must be approved by us.

## Safety devices

After maintenance and repairs, all safety devices must be reinstalled and checked for proper functioning.

https://truckmanualshub.com/


## Set values

The device-dependent set values must be observed when making repairs and replacing hydraulic and electrical components. These are listed in the appropriate sections.

## Raising and jacking up

**DANGER**

**Risk of accident!**

To lift the truck, the components and the attachments, the lifting mechanism may only be applied at the designated points. When jacking up the equipment, appropriate measures must be taken (chocks, wooden blocks) to prevent rolling or tipping.

The truck has to be jacked up for various maintenance tasks. Always ensure that:

- that only jacks with sufficient lifting capacity are used,
- that the truck is only jacked up on level ground, and is secured against rolling and sinking.

**WARNING**

Risk of accident!

Apply the parking brake and turn off engine when jacking up the truck.

**WARNING**

Risk of injury!

– Jack up the truck sufficiently high that shoes cannot get trapped under a turning wheel.

https://truckmanualshub.com/



## Jack up at the frame.

- Place jack sideways under the chassis at the designated position.
- Jack up the truck until the rear wheels are no longer in contact with the ground.
- Secure the truck.

**NOTE**

*If the front of the truck must be lifted, the jack must be applied at the lift mast.*

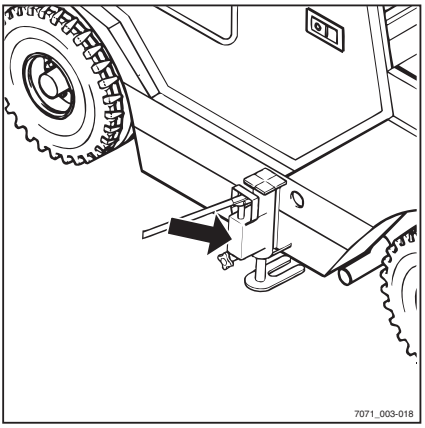


## Jacking up at the lift mast

- Lift the fork carriage and secure against accidental lowering.

**WARNING**

Risk of injury!

Observe the safety regulations for working on lift masts, see ⇒ Chapter "Working at the front of the forklift truck", P. 6-170.

- Apply the jack at the mast.
- Jack up the truck until the wheels are no longer in contact with the ground.
- Secure the truck.

**WARNING**

Risk of injury!

Do not jack up truck by rear weight.

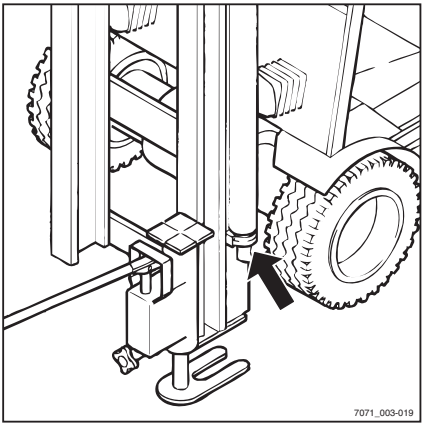

https://truckmanualshub.com/



## Working at the front of the forklift truck

▷

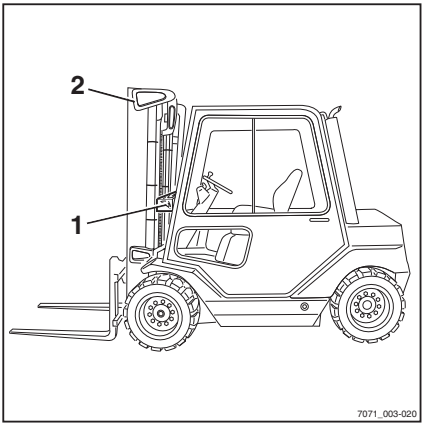


**⚠ WARNING**

Risk of accident!

If the lift mast or fork carriage is raised, no work must be performed on the lift mast or at the front of the forklift truck without observing the following safety measures!

### Removing the lift mast

**⚠ CAUTION**

Attach the lifting gear to the top of the bridge piece (2) on the outer mast of the lift mast.

This work must only be performed by a service technician.

### Securing lift mast against tilting back

The lift mast must be secured against unintentional tilting by clamping a suitable wooden beam (120 x 120 x 1100 long) (1) to it.

### Securing the telescopic lift mast

▷

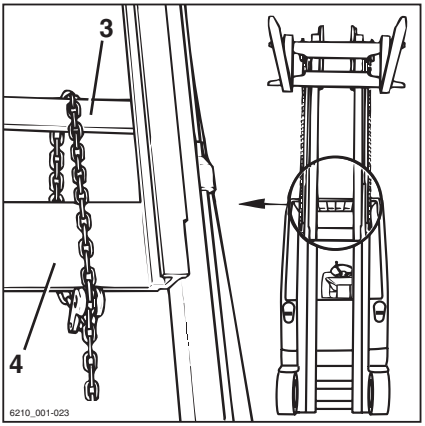


**⚠ CAUTION**

In order to secure the telescopic lift mast, select a chain with sufficient load bearing capacity for the respective lift mast.

Note the maximum lift height.

- Extend the lift mast.
- Route the chain along the cross traverse of the outer mast (3) and connect under the cross traverse of the inside mast (4).
- Lower inside mast until the chain is impacted.

https://truckmanualshub.com/



## Securing the triple lift mast

**CAUTION**

In order to secure the triple lift mast, select a chain with sufficient load bearing capacity for the respective lift mast.

Note the maximum lift height.

- Extend the lift mast.
- Route the chain along the cross traverse of the outer mast (7) and connect under the cross traverse of the central mast (8).
- Lower lift mast until the chain is impacted.
- Lower fork carriage down to the stop.

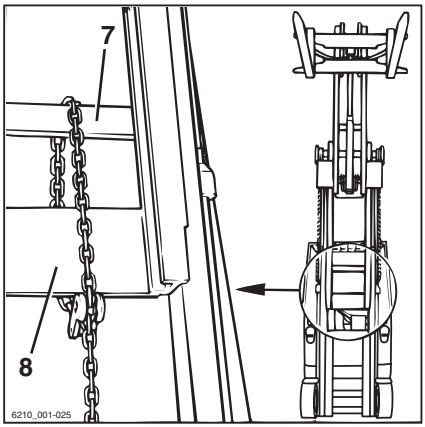

https://truckmanualshub.com/



# Preparation for maintenance

## Installing and removing the floorplate ▷

– Open the bonnet; see ⇒ Chapter "Open the motor hood.", P. 5-53.

– Lift floorplate by using (1) the handle.

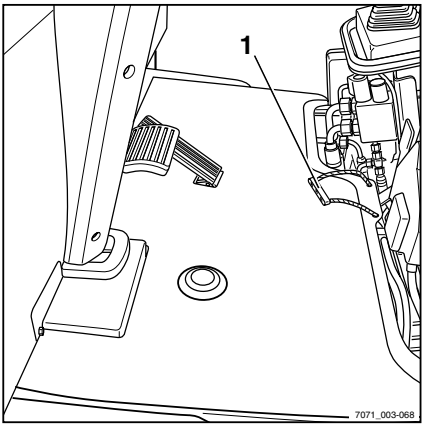


– Separate connector on the accelerator (2) pedal. ▷

– Lift floorplate and place in a safe location.

Installation is carried out in reverse order.

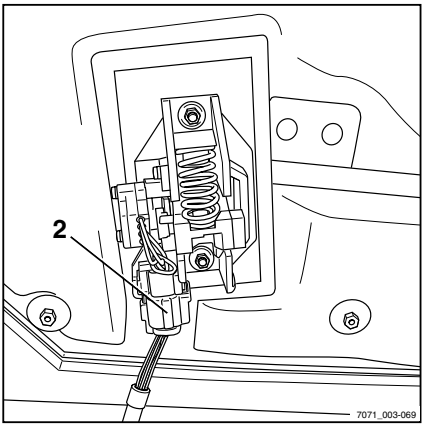

https://truckmanualshub.com/



## Removing and installing the rear cover

– Undo three screws (1).

– Lift up cover (2) and remove.

Installation is carried out in reverse order.

▷

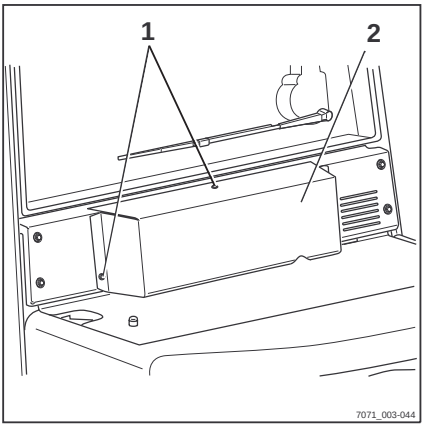

https://truckmanualshub.com/



# Cleaning

## Cleaning the truck

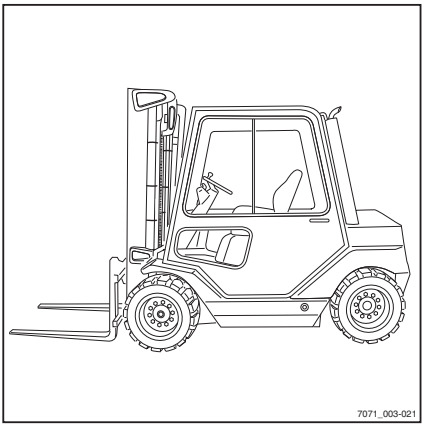


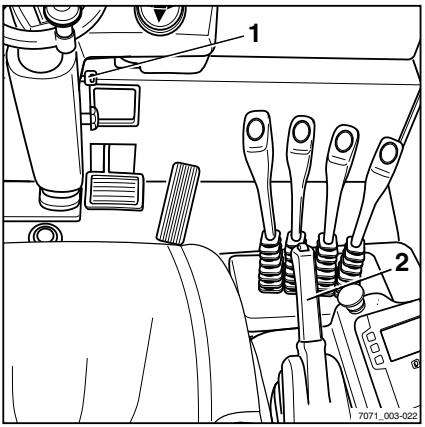


**⚠ CAUTION**

The engine must be switched off during washing.

– Switch off key switch and remove key.

### Instructions for washing

– Always park vehicle according to regulations.

– Apply the parking brake (2).

– Switch off the key switch (1) and remove the key.

### Washing outside of truck

**⚠ WARNING**

Risk of fire!

Do not clean with combustible liquids.

– Deposits/accumulations of combustible materials, especially on or in the vicinity of parts with high temperatures (e.g. exhaust pipes) must be removed regularly.

**⚠ WARNING**

If the forklift truck is to be cleaned with hot-water devices, all sensitive - particularly electric - components must be carefully covered.

Note the manufacturer's guidelines for working with cleaning agents.

– Clean the vehicle on the outside with water-soluble cleaning agents and water (water jet, sponge, cloth).

– Pay particular attention to all walk-in areas, the oil filling openings and their surroundings, as well as the lubricating nipples before lubricating.

Please note: The more often the truck is cleaned, the more frequently it must be lubricated.

https://truckmanualshub.com/



**⚠ CAUTION**

Failure to follow these instructions could result in damaged components.

Steam jet cleaners may be used with max. 50 bar at 85°C at a distance of at least 20 cm.

Do not directly spray electric motors and other electrical components or their covers.

Do not aim the cleaning jet directly at stickers or notices.

Plastic parts, particularly on the console, may only be cleaned with plastics cleaners (display windows could become cloudy).

## Cleaning the electrical system

**⚠ CAUTION**

Cleaning electrical system parts with water can damage the electrical system.

Cleaning electrical system parts with water is forbidden!

Only use a dry cleaning agent according to the manufacturer's specifications.

Do not remove covers etc.

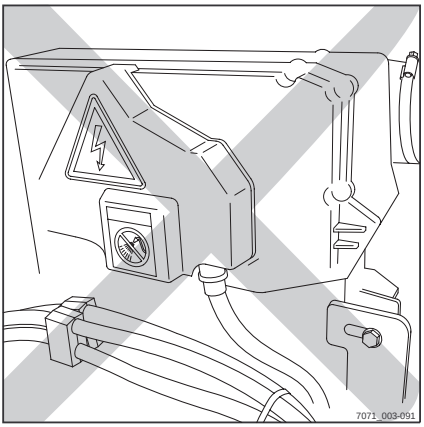


– Clean and dry electrical system parts with weakly compressed air and a metal-free brush.

## Clean load chains

**⚠ WARNING**

Risk of accident!

Load chains are safety elements.

The use of cold/chemical cleaners or fluids that are corrosive or contain acid or chlorine can damage the chains and is forbidden!

– Place a collection vessel under the lift mast.

– Use paraffin derivatives such as benzene for cleaning (take note of the manufacturer's safety information.)

– When cleaning with a steam jet, do not use additives.

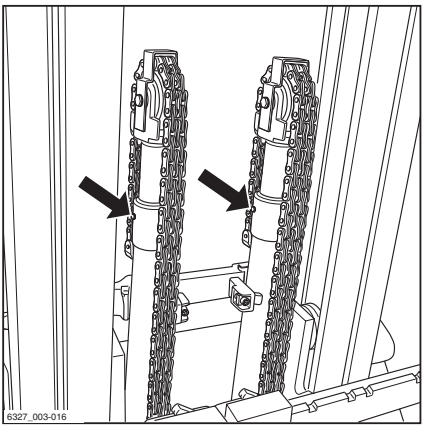

https://truckmanualshub.com/



– After cleaning, immediately apply compressed air to chain to remove any water remaining in the chain joints. Move the chain several times during this process.

– Immediately spray the chain with chain spray according to the maintenance data table (see ⇒ Chapter "Maintenance data table", P. 6-165) while moving the chain.

## Cleaning the windscreens

On trucks with cabs (special equipment), the glass windscreens (1) must always be kept free of dirt and ice in order to ensure clear vision.

– Cleaning the windscreens.

**NOTE**

*The windscreens can be cleaned using a conventional glass cleaner.*

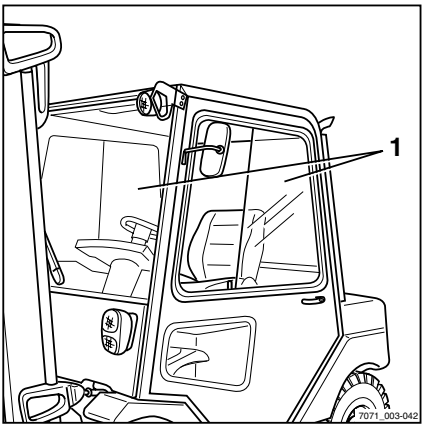


## After washing

– Carefully dry truck (e.g. with compressed air).

– Sit on the driver's seat and start up the vehicle in line with the regulations.

**CAUTION**

Risk of short circuit!

– If any moisture has penetrated into the motors despite the precautionary measures taken, first dry them using compressed air.

– The truck must then be started up to prevent possible corrosion damage.

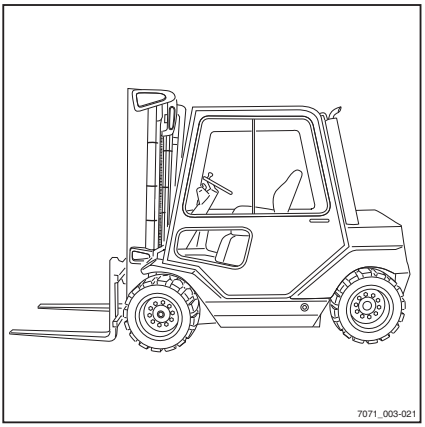

https://truckmanualshub.com/


# Maintenance after first 50 operating hours

## Maintenance during the breaking-in period

- Checking the ribbed V-belt condition and tension, see ⇒ Chapter "Checking the ribbed V-belt", P. 6-206.
- Checking the exhaust system, see ⇒ Chapter "Checking the exhaust gas system", P. 6-208.

https://truckmanualshub.com/



# Maintenance as required

## Cleaning the radiator, checking for leaks

- Only clean the radiator (1) with the engine switched off.
- Clean radiator matrix with a suitable brush and blow out with compressed air (max. 2 bar).
- Check radiator and coolant hoses for leaks and retighten clamps, if necessary.

**CAUTION**

Risk of engine damage!

Check whether the leakage has been stopped and contact your service centre, if necessary.

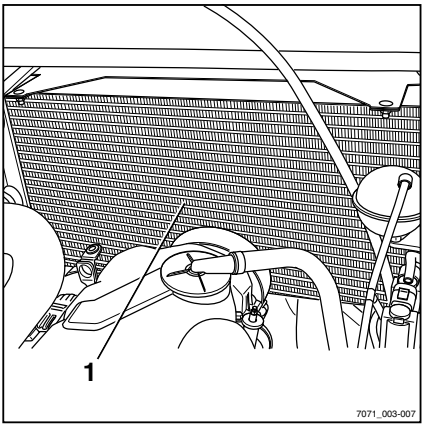


## Topping up coolant and checking coolant concentration

- Remove the rear cover, see ⇒ Chapter "Removing and installing the rear cover", P. 6-173.

**CAUTION**

Risk of engine damage!

If the coolant level is low, this indicates a leak in the cooling system.

- Check for leaks in the cooling system; see ⇒ Chapter "Cleaning the radiator, checking for leaks", P. 6-178.

**WARNING**

Risk of scalding!

Only open the lid of the expansion tank when the engine has cooled down.

- Open the lid slowly (1) and allow the pressure to drop.
- Unscrew further and remove the lid.

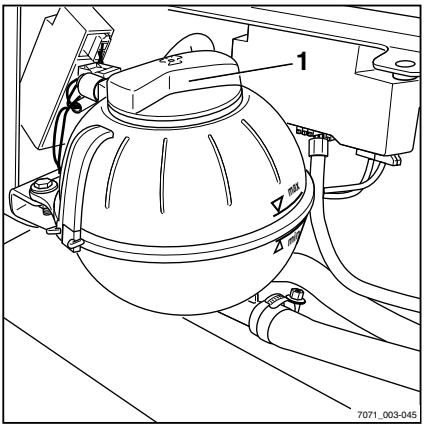

https://truckmanualshub.com/


**WARNING**

Coolant and coolant additives are hazardous to your health.

Please observe safety regulations when working with coolant, see ⇒ Chapter "Coolant", P. 3-33.

– Check the coolant concentration.

## Coolant concentration

**CAUTION**

Risk of corrosion!

The percentage of coolant additive must always be at least 40%, even if the frost protection is not needed in warmer climates.

If greater frost protection is required for climatic reasons, the percentage of the coolant additive can be increased to up to 60%.

The percentage of the coolant additive must not exceed 60%, otherwise the frost protection is reduced. In addition, the cooling effect is also reduced.

Only use clean softened water in the coolant.

| Frost protection up to °C | Water percentage % | Coolant additive percentage % |
|---|---|---|
| -25 | 60 | 40 |
| -30 | 55 | 45 |
| -35 | 50 | 50 |
| -40 | 40 | 60 |

Fill quantity in the cooling system, see ⇒ Chapter "Maintenance data table", P. 6-165.

**CAUTION**

Coolant additive with a different specification must not be mixed in!

– For topping up, use coolant as per the maintenance data table; see ⇒ Chapter "Maintenance data table", P. 6-165.

Only use coolant according to the manufacturer's instructions.

https://truckmanualshub.com/



– Screw the lid back on again (1) tightly.
– Re-attach the rear cover.

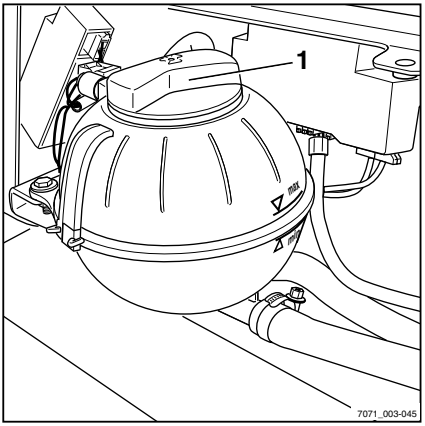


## Drain the fuel filter of water

**WARNING**

Consumables are toxic.

Note safety regulations for working with diesel fuel; see ⇒ Chapter "Diesel fuel", P. 3-30.

– Open the bonnet; see ⇒ Chapter "Open the motor hood.", P. 5-53.
– Hold suitable collection vessel underneath the drainage screw (1).
– Open the drainage screw (1) on the filter and drain off fuel (approx. 100 $cm^3$ ) until cleaner fuel escapes.
– Manually retighten drainage screw (1).
– Close the bonnet.

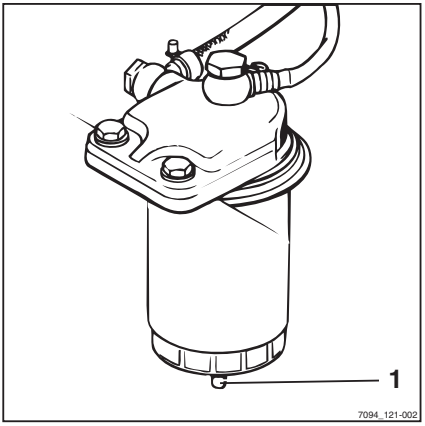


**NOTE**

*The draining of water is particularly important for operating in the tropics and depending on the quality of fuel used.*

https://truckmanualshub.com/



## Replacing the air filter insert

NOTE

*Exchanging the air filter insert is necessary only when the* `AIR FILTER` *message appears on the display and operating unit, or every two years.*

– Open the bonnet; see ⇒ Chapter "Open the motor hood.", P. 5-53.

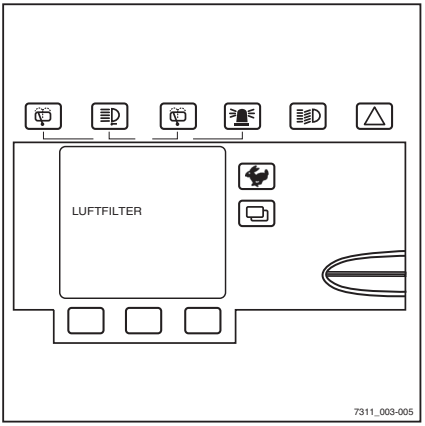


– Release the three clips (4) on the air filter.
– Take off the air filter cover (5).

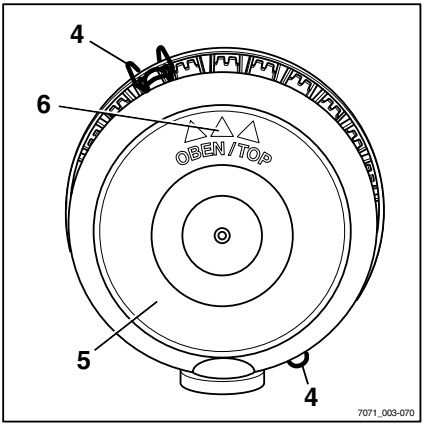

https://truckmanualshub.com/



– Remove (7) and replace the main cartridge. ▷

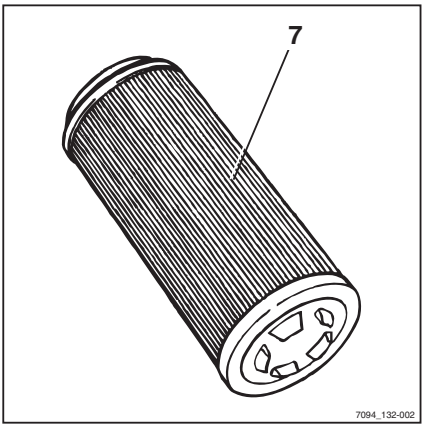


**⚠ CAUTION**

Risk of engine damage!

The safety cartridge must remain in the air filter housing until all residual dirt has been removed from the housing so that no dirt enters the induction system!

– Blow out the air filter housing with compressed air.

– Remove the (8) safety cartridge, check it for contamination, and replace it if necessary. ▷

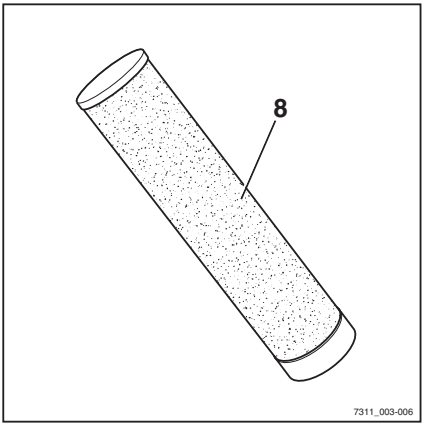


– Insert the safety (8) cartridge.

– Insert a new main (7) cartridge.

https://truckmanualshub.com/


– Insert the air filter (5) with the mark (6) facing upwards. ▷
– Secure the three clips (4) on the air filter.
– Close the motor hood.

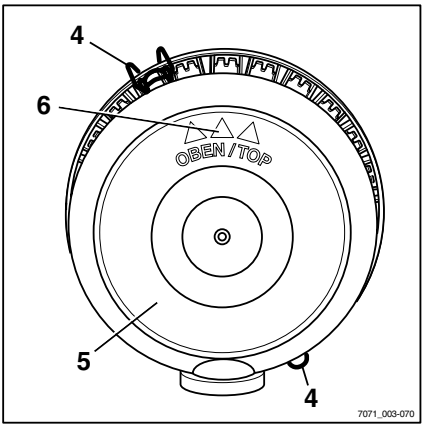


## Checking parking brake setting

NOTE

*Only reset the brake cable if it has become elongated.*

– Open the bonnet; see ⇒ Chapter "Open the motor hood.", P. 5-53.
– Disassemble base plate; see ⇒ Chapter "Installing and removing the floorplate", P. 6-172

NOTE

*The adjustment instructions were not yet available at the time of printing. Please contact your service centre.*

## Servicing battery

NOTE

*Battery servicing is carried out in accordance with the battery manufacturer's operating manual.*

https://truckmanualshub.com/



**WARNING**

There is a risk of damage, short circuit and explosion.

Do not place any metal objects or tools on the battery. Keep away open flames; no smoking.

## Checking the battery charge status

– Open the bonnet, see ⇒ Chapter "Open the motor hood.", P. 5-53.

– With maintenance-free batteries, check the charge state at the inspection window:

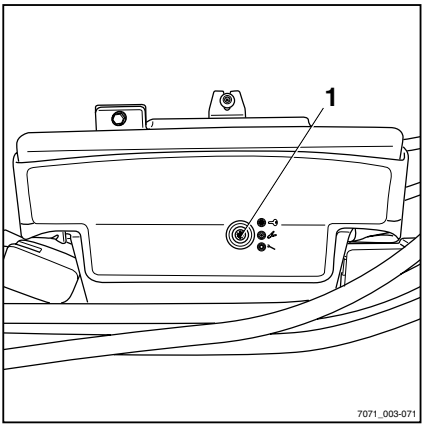


- **Green:** The battery is optimally charged.
- **Black:** The charge state is no longer optimal. The battery should be recharged. After recharging, the indicator changes back to green.
- **Transparent-(light-coloured):** The charge state is no longer adequate for reliable starting. It is necessary to replace the battery.

## Charging the battery

– With batteries that are not maintenance-free, check the level of the battery acid.

**WARNING**

The electrolyte (dilute sulphuric acid) is poisonous and caustic.

Follow the safety regulations when handling battery acid ⇒ Chapter "Battery acid", P. 3-33.

The battery acid must be up to the lower edge of the insert in the battery housing or up to 5 mm above the upper edge of the plates. Observe the manufacturer's specifications!

**CAUTION**

The battery can be damaged!

Only fill up missing fluid with distilled water.

https://truckmanualshub.com/



– Unscrew the battery cell covers and check the acid density with an acid siphon.

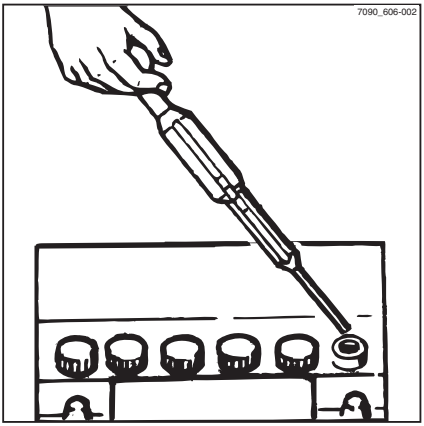


The density of the acid must achieve the value in the table. The listed density of the acid refers to 27 °C acid temperature.

| Density of acid | empty | full |
|---|---|---|
| normal | 1.13 | 1.28 |
| droplets | 1.08 | 1.23 |

**WARNING**

Risk of explosion! Charging releases gases that are explosive.

While charging, the surfaces of the battery cells must be exposed to ensure sufficient ventilation.

The charging area must be properly ventilated.

Keep the bonnet open during charging; avoid spark formation near the battery.

– Immediately charge empty batteries until they are full again.

The charging current shall not exceed 1/10 of capacity.

The cell lid of the battery must be kept dry and clean.

Any spillage of battery acid must be neutralised immediately.

Terminals and lugs must be clean, lightly coated with terminal grease and tightly screwed.

– After charging, screw the battery cell covers back on.

– Close the bonnet.

https://truckmanualshub.com/



# Maintaining hydraulic equipment

**⚠ WARNING**

Hydraulic oils are hazardous to your health and are under pressure during operation.

Note safety regulations for working with hydraulic oils; see ⇒ Chapter "Hydraulic fluid", P. 3-32.

## Check hydraulic oil level

▷

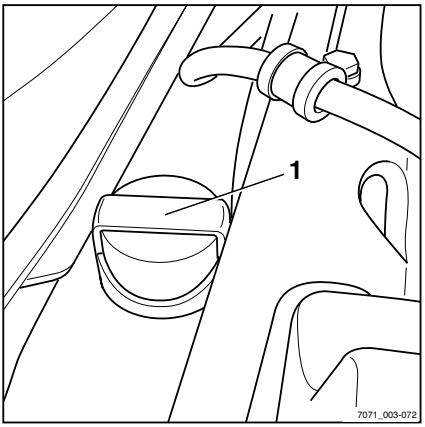


- Position truck horizontally.
- Tilt lift mast forward.
- Lower forks; if there are attachments (special equipment), retract the working cylinder.
- Switch off the engine.
- Open the bonnet; see ⇒ Chapter "Open the motor hood.", P. 5-53.
- Disassemble base plate; see ⇒ Chapter "Installing and removing the floorplate", P. 6-172.
- Unscrew (1) the dipstick and pull it out.
- Check oil level. The oil level must be at least up to the mark (2) on the dipstick.
- If the oil level is not up to the required level, the hydraulic oil must be topped up according to the maintenance data table (see ⇒ Chapter "Maintenance data table", P. 6-165) using the filler neck until the mark is reached.
- Reinsert (1) the dipstick and tighten it.

▷

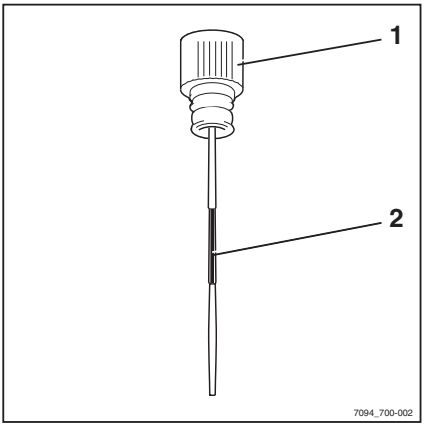


## Checking hydraulic equipment for leaks

- Check pipe and hose screw connections for leaks (traces of oil).

Hose lines must replaced if:

- the outer layer is damaged or embrittled with cracks
- they are leaking
- Unnatural deformations (e.g. bubble formation or buckling
- fitting is detached from hose
- heavy damage to or corrosion of the fitting

https://truckmanualshub.com/



Pipes must be replaced in case of:

- Abrasion with loss of material
- unnatural deformations and visible signs of bending stress
- they are leaking

## Servicing Eberspächer particle filters ▷

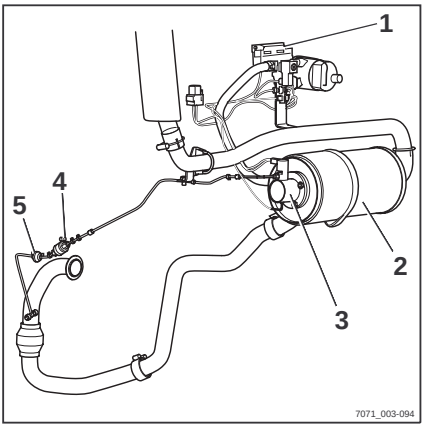


The particle filter system filters soot particles from the exhaust gases of the diesel engine.

The collected soot is burned in the filter.

The particle filter system consists of:

- Particle filter (2) with burner (3) and fuel supply (4, 5).
- Control unit (1)
- Operating device integrated in the display and operating unit (6)

The soot particulates are collected in the particle filter (2).

During engine operation, the glow plug is actuated for around one minute approx. every two hours.

After an engine operating time of approx. 7.5 hours, the message `Abgasreiniger` (EXH. GAS PURIFIER) appears in the display and operating unit. The particulate filter must be regenerated.

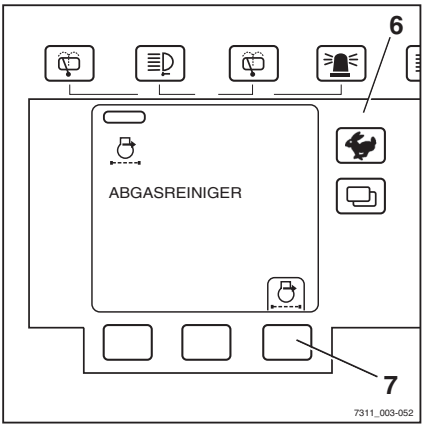


**NOTE**

*If it is temporarily not possible to perform regeneration, you can continue to drive the vehicle for approx. another half hour.*

### Regenerating the particle filter

– Drive to a suitable parking space.

**WARNING**

Risk of fire!

The parking space may not be in a hazardous materials area, since hot combustion gases exit the exhaust pipe during regeneration.

https://truckmanualshub.com/



NOTE

*Combustion may cause bad odours if fuel containing sulphur was used for operating the engine.*

NOTE

*It is not possible to start the engine during regeneration.*

The regeneration must be started manually with the engine switched off and the ignition switched on.

A safety circuit prevents regeneration when the engine is running as the particle filter system might be destroyed.

– Switch off the engine and switch on the ignition again.

– Press the start button (7).

After pressing the start button, the regeneration process is completed automatically.

▷

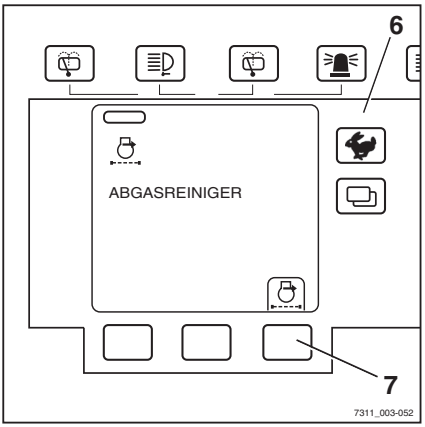

https://truckmanualshub.com/



The message BITTE WARTEN (PLEASE WAIT) (8) appears in the display for the entire regeneration process.

After approx. 25 minutes, the regeneration is complete. The display BITTE WARTEN (PLEASE WAIT) (8) goes out. The filter is free of soot again.

If the burner flame goes out during the regeneration process, the control unit will automatically attempt to start up again.

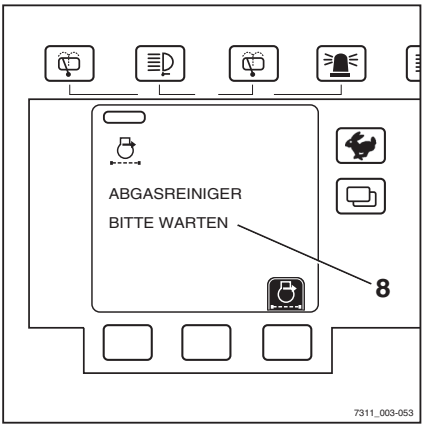


Faults in the regeneration process are shown by the message ABGASREINIGER (EXH. GAS PURIFIER) (9). The faults must be corrected by the service centre.

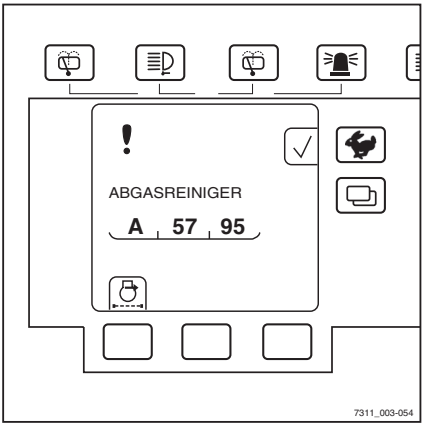

https://truckmanualshub.com/



## Emergency stop during the regeneration process ▷

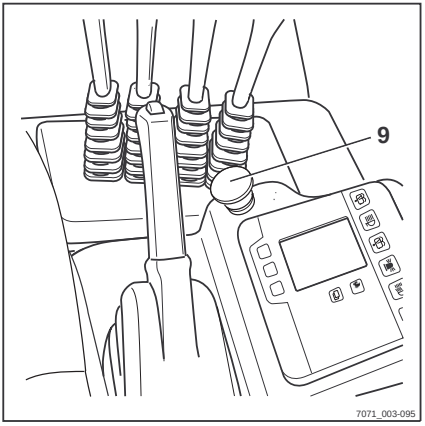


**⚠ WARNING**

Risk of fire!

If smoke starts to develop during the regeneration process, press the emergency stop switch immediately. By pressing the emergency stop switch, the diesel supply is cut off and regeneration is interrupted.

https://truckmanualshub.com/



## Servicing wheels and tyres

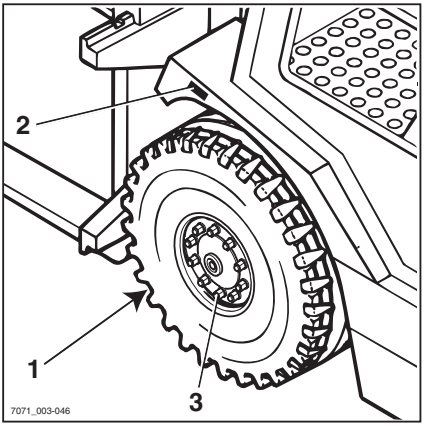


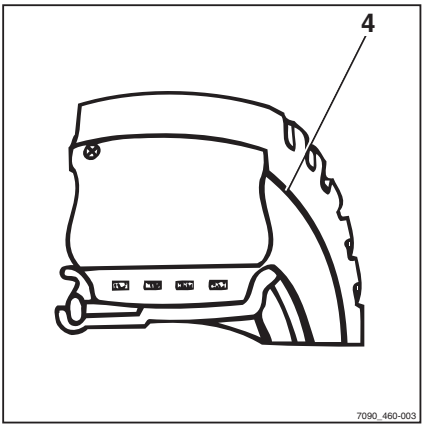


**⚠ WARNING**

Risk of accident! With uneven wear or incorrect air pressure, the stability of the forklift truck decreases and the braking distance increases.

– Replace worn or damaged tyres on the right and left.

### Checking air pressure

– Check and correct the air pressure at all four wheels.

**NOTE**

*The correct air pressure for pneumatic tyres (special equipment) is based on the type of tyres used. Observe the information on the stickers (2) on your vehicle.*

### Checking condition and wear of the tyres

**⚠ WARNING**

Tyre quality affects the stability and handling of the forklift truck.

Changes can only be made in consultation with the manufacturer.

When changing wheels or tyres, always ensure that this does not cause the forklift truck to tilt to one side (e.g. always change right and left wheels at the same time).

**NOTE**

*The wear of the tyres on an axle must be approximately the same.*

- *The minimum tread depth (1) for pneumatic tyres must be **min. 1.6 mm** in every area of the tread.*
- *Super-Elastic tyres (special equipment) can be worn down to the wear mark (4).*

– Measure the tread depth at all four wheels.

– Remove any foreign matter that may have become lodged in the tyre tread.

https://truckmanualshub.com/


## Checking wheel fastenings

– Check the wheel fastening bolts (3) for tightness and re-tighten as necessary, for tightening torque values see ⇒ Chapter "Maintenance data table", P. 6-165. ▷

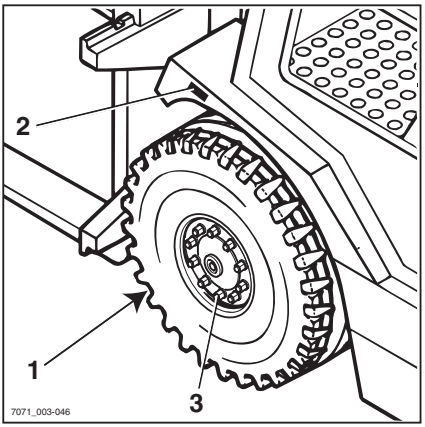


## Lubricating joints and controls

– Oil or grease other bearings and joints according to the maintenance data table. See ⇒ Chapter "Maintenance data table", P. 6-165.

- Driver's seat guide
- Cab door hinges (lubricate grease nipples with grease)
- Engine bonnet hinges (lubricate grease nipples with grease)
- Control linkage for valves

## Maintaining the steering axle

### Checking the steering axle

– Check rubber elements of the axle tumbler bearing for condition and wear.

https://truckmanualshub.com/



– Check the stub axle bearing (1) and tie rod joint (2) for play and wear. ▷

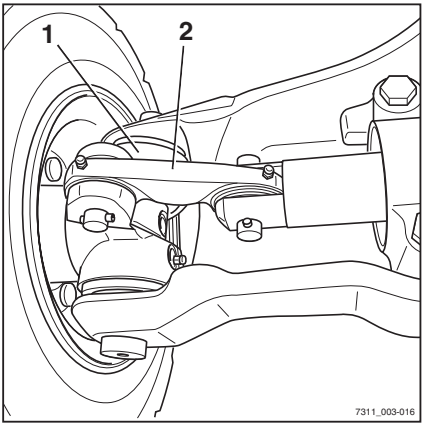


– Check the steering cylinder (4) for leaktightness (traces of oil). ▷

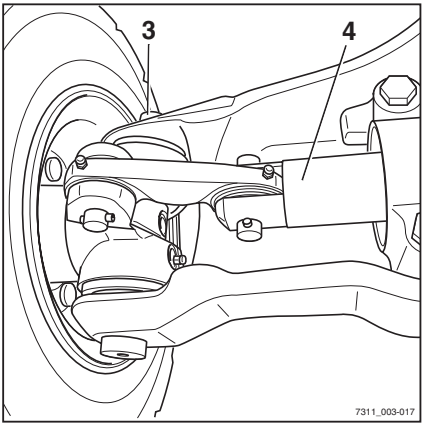


**NOTE**

*In the case of excessive play or of wear, have your service centre replace the appropriate parts.*

https://truckmanualshub.com/



## Lubricating the steering axle

– Use grease to lubricate the lubricating nipples (5) at the stub axle bearing and steering lever bearings (see ⇒ Chapter "Maintenance data table", P. 6-165). Operate steering during the lubrication process.

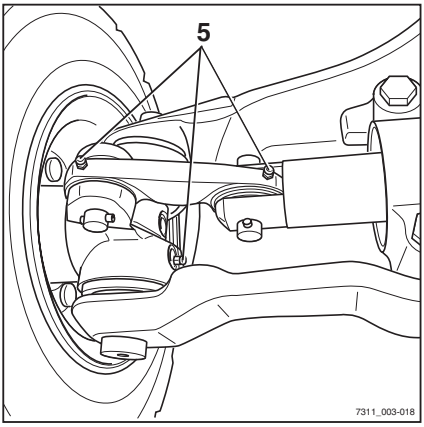


**NOTE**

*Please note: The more often the truck is cleaned, the more frequently it must be lubricated.*

## Checking the hoses for leaktightness

– Retighten leaky connections.

**NOTE**

*Have your service centre replace defective lines.*

– After repairs, force out trapped air by repeatedly turning the steering wheel from stop to stop.

## Checking the tightening torque of the stub axle nuts

– Set steering to end stop.

– Use the torque wrench to check the tightening torque (see ⇒ Chapter "Maintenance data table", P. 6-165) of the stub axle nut (3).

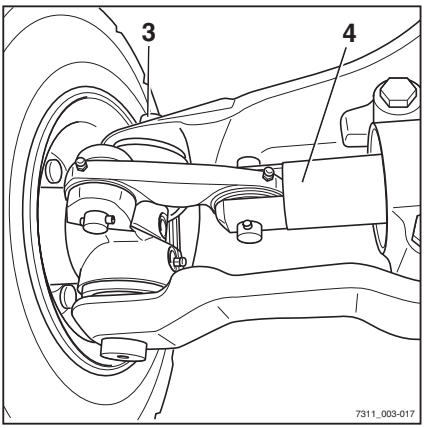

https://truckmanualshub.com/


## Servicing the mast bearing

### Mast bearing screws: Check the tightening torque ▷

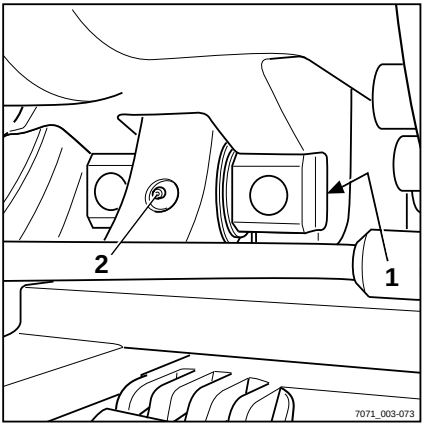


– Lift the fork carriage and secure against accidental lowering.

**⚠ WARNING**

Risk of injury!

Observe the safety regulations for working on lift masts, see ⇒ Chapter "Working at the front of the forklift truck", P. 6-170.

– Check tightening torque (see ⇒ Chapter "Maintenance data table", P. 6-165) of the mast bearing screws (1) with a wrench torque.

### Lubricating the mast bearing

– Lubricate the mast bearings with grease at the lubricating nipples (2) on the left and right (see ⇒ Chapter "Maintenance data table", P. 6-165).

## Load chain maintenance

### Testing the condition and wear of lift chains, lubricating

– Checking the condition of the load chains and checking for wear.

The load chains must be checked for the following external damage:

- broken fishplates
- broken bolts
- loose, twisted bolts
- surface rust
- stiff joints
- Wear and tear, damage to the clamping screw and end link.

https://truckmanualshub.com/



## Maintenance as required

**WARNING**

If the chain is damaged before reaching the permissible elongation, the load chain may break.

If any of the above-mentioned damage has occurred, the load chain must be replaced without delay.

- Spray the load chains with chain spray according to the maintenance data table, see ⇒ Chapter "Maintenance data table", P. 6-165.
- Checking the load chain tension.

**CAUTION**

Never compensate tyre wear by adjusting lift chain tension!

Only retighten the load chains after elongation due to wear. The chains should be replaced once elongation reaches 3%.

**CAUTION**

If the load chains can no longer be retightened, the chains must be replaced completely, along with all associated connecting parts.

Please contact your service centre.

**NOTE**

*After adjusting the load chains, the clearance between the fork carriage stop and run-out stop must be checked, see ⇒ Chapter "Checking play between fork carriage stop and run-out stop", P. 6-211.*

https://truckmanualshub.com/



## Setting the load chains Tele mast

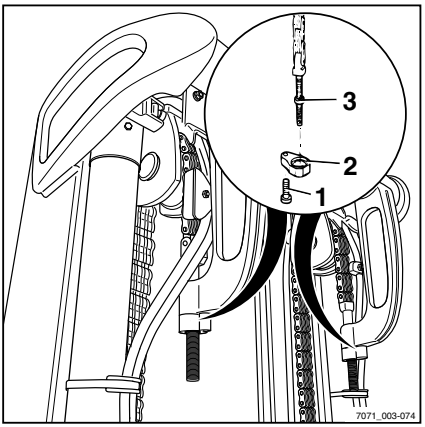


- Unscrew the cap screw (1) and remove the safety (2) cap.
- With the lift cylinders fully extended, retighten the load chains at the tensioning nuts (3) until the centre of the middle fork carriage support roller is 15 mm below the upper edge of the inner mast.

Stop always between lift cylinder and piston.

- Replace the (2) safety cap.
- Apply Loctite to the cap screw (1) and tighten.

## Setting the load chains triplex mast

- Fully lower the fork carriage.

Mast uprights must be flush at the top. If not:

- Unscrew the cap screw (1) and remove the safety (2) cap.
- Retighten the load chains at the bail nuts (3) on the outer mast.
- Replace the (2) safety cap.
- Apply Loctite to the cap screw (1) and tighten.
- Unscrew the cap screw (4) and remove the safety (6) cap.
- With the lift cylinders fully extended, retighten the middle load chains at the tensioning nuts (5) until the centre of the middle fork carriage support roller is 15 mm below the upper edge of the inner mast.

Stop always between lift cylinder and piston.

- Replace the (6) safety cap.
- Apply Loctite to the cap screw (4) and tighten.

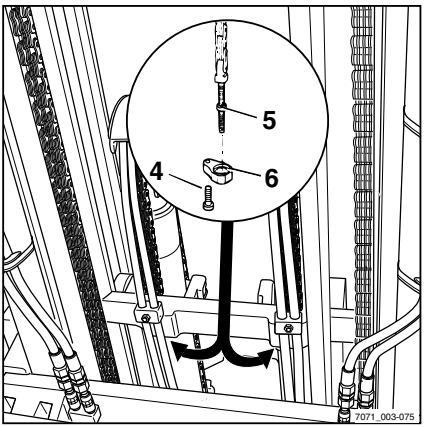

https://truckmanualshub.com/



## Lubricating the lift mast and roller track

▷

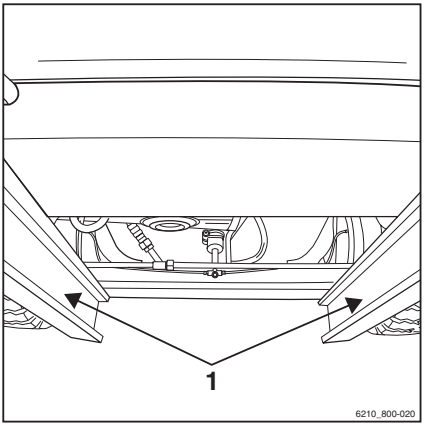


- Remove dirt and lubricant residue from the roller track.
- Lubricate the roller tracks (1) of the outside, middle, and inside mast with a super-pressure adhesion lubricant to reduce wear. See ⇒ Chapter "Maintenance data table", P. 6-165.

**NOTE**

*Spray the roller track evenly from a distance of approx. 15-20 cm. Wait approx. 15 minutes until the equipment is ready to use again.*

## Servicing the restraining belt

**DANGER**

**Malfunctions result in an increased risk.**

Do not use the forklift truck with a defective restraining belt. Have the belt replaced immediately.

Only have a defective belt replaced by your customer service office.

Only use genuine spare parts for repairs.

Do not make any changes to the belt.

**NOTE**

*Conduct the following checks regularly (monthly). In the case of significant strain, a daily check is necessary.*

https://truckmanualshub.com/


## Checking the restraining belt

– Remove the belt (3) and check it for wear. The belt may not be frayed or cut. The stitching may not be loose.

– Check that the belt is not dirty.

– Check whether parts are worn or damaged, including the attachment points.

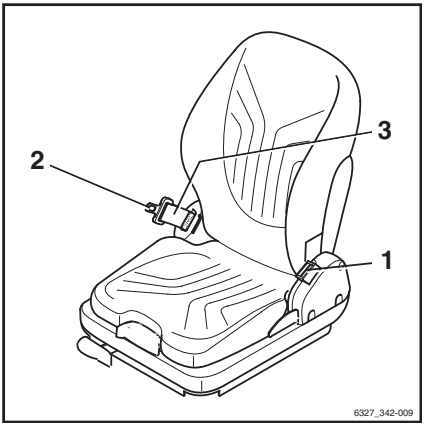


– Check the buckle (1) for proper locking. When the belt latch (2) is inserted, the belt must be held securely. The belt latch (2) must release when the red button (4) is pushed.

– The automatic blocking mechanism must be tested at least once a year:

- Park the forklift truck on level ground.
- Pull out the belt with a jerk. The automatic blocking mechanism must block extension of the belt.
- Tilt the seat at least 30°, to do this tilt the bonnet.
- Slowly extend the belt. The automatic blocking mechanism must block extension of the belt.

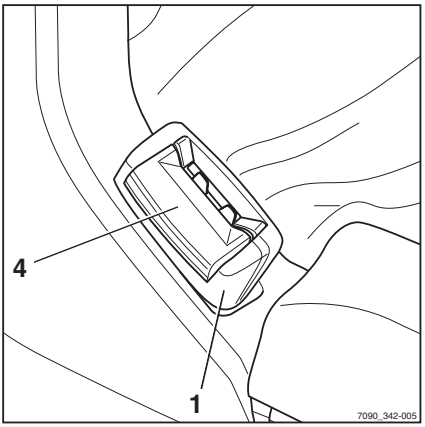


## Cleaning the belt

– Clean the belt as needed (brush is sufficient).

## Replacement after accident

As a rule, the restraining belt must be replaced after an accident.

https://truckmanualshub.com/



## Check driver's seat

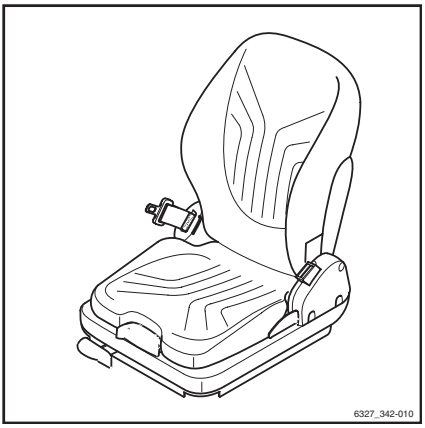


**WARNING**

Risk of injury!

– After an accident have the driver's seat checked with attached restraining belt and fastening .

– Check controls for proper functioning.

– Check condition of seat (e.g. for wear to upholstery) and reliable fastening to hood.

**WARNING**

Risk of injury!

– Have the seat repaired by Technical Service if damage is observed during checking.

## Replacing fuses

**DANGER**

**Risk of fire! Using the wrong fuses can result in lack of protection against short circuits.**

Only use fuses with the prescribed nominal current.

### Main fuse carrier

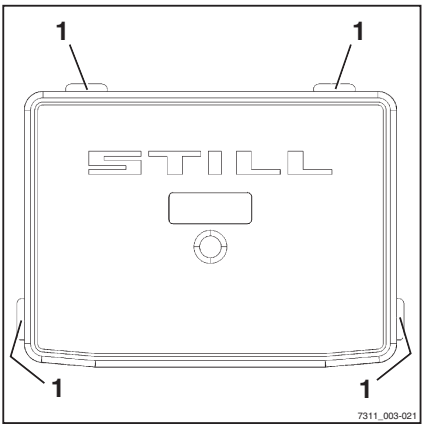


– Open the motor hood, see ⇒ Chapter "Open the motor hood.", P. 5-53.

**NOTE**

*The main fuse carrier is positioned to the right of the valve block.*

– Open the cover fastenings (1) and remove the cover.

– Replace the defective fuse, fuse assignment see ⇒ Chapter "Fuse assignment in main fuse holder", P. 7-231.

– Push down the cover until the cover fastenings (1) snap back into place.

– Close the motor hood.

https://truckmanualshub.com/



## Additional equipment for fuse carrier

– Undo the fixing screws (2) of the front cover and remove the cover (3).

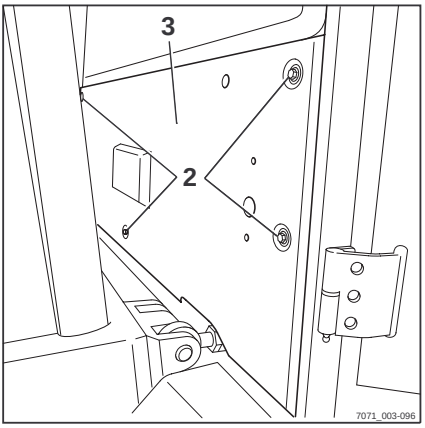


**NOTE**

*The fuse carrier additional equipment is positioned on the right-hand side on the outside.*

– Open the cover fastenings (4) and remove the cover.

– Replace the defective fuse, fuse assignment see ⇒ Chapter "Fuse assignment special equipment", P. 7-232.

– Push down the cover until the cover fastenings (4) snap back into place.

– Refit the cover (3) and tighten the fixing screws (2).

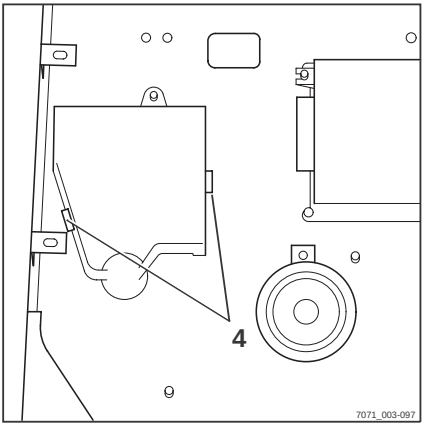

https://truckmanualshub.com/



## Attachment maintenance

– Lubricate the slide rails of attachments (special equipment), such as a sideshift or clamp according to the maintenance data table. See ⇒ Chapter "Maintenance data table", P. 6-165appears on the display.

The diagram shows a clamp.

▷

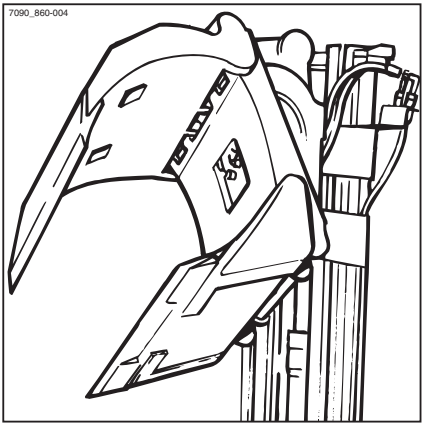


NOTE

*Observe the manufacturer's maintenance specifications.*

https://truckmanualshub.com/


# 1000-hour maintenance/annual maintenance

## Other tasks

– Carry out the services of the maintenance as required, see ⇒ Chapter "Maintenance as required", P. 178.

## Maintainance of drive axle

### Drive axle, checking oil level

**⚠ WARNING**

Consumables are toxic!

Observe the safety regulations for handling brake fluid,see ⇒ Chapter "Oils", P. 3-29.

– Park the forklift on a level surface.

– Unscrew the checking (1)screw.

The oil level must reach the lower edge of the bore.

– Unscrew the filling plug, if necessary, (2) and fill with oil as per the maintenance data table; see ⇒ Chapter "Maintenance data table", P. 6-165 until it escapes from the hole for the checking screw (1).

– Renew the sealing ring on the oil drain plug (1).

– Tighten the oil checking screw (1) with a torque of 10 Nm.

– Renew the sealing ring on the oil drain plug (2).

– Tighten the oil drain plug (2) with a torque of 24 Nm.

– Check the oil level at both wheel drives.

▷

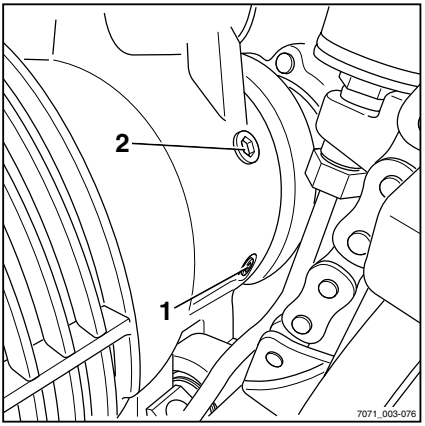


### Checking the drive axle for leaks

– Inspect the power unit for leaks (traces of oil).

https://truckmanualshub.com/



## Adjusting the parking brake

- Open the bonnet; see ⇒ Chapter "Open the motor hood.", P. 5-53.
- Adjust the parking brake switch (2) so that traction drive is switched off (1) when the parking brake control cable is pulled.
- Close the motor hood.

▷

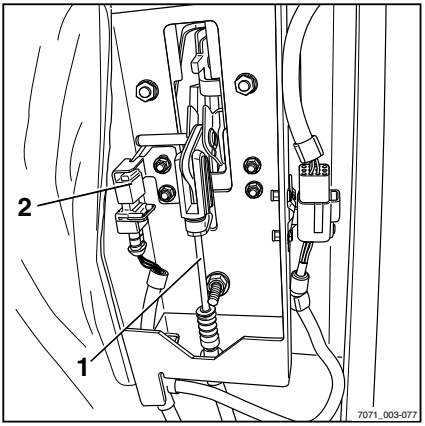


## Lubricating the parking brake lever bearing and ratchet

- Lightly lubricate the parking brake lever bearing and ratchet according to the maintenance data table . See ⇒ Chapter "Maintenance data table", P. 6-165appears on the display.

## Checking the counterweight attachment

- Check the mounting screws of the counterweight on the frame to make sure they are secure.

## Changing the engine oil and filter

- Open the motor hood, see ⇒ Chapter "Open the motor hood.", P. 5-53.

**⚠ WARNING**

Consumables are toxic!

Observe the safety regulations for handling engine oil, see ⇒ Chapter "Oils", P. 3-29.

https://truckmanualshub.com/



**NOTE**

*Change oil only when motor is at operating state temperature.*

- Open the floor opening in the chassis.
- Place a suitable collection vessel under the drain plug (1).
- Unscrew the drain plug (1) and allow the oil to drain off completely.
- Replace the sealing ring (2).
- Tighten the drain plug to 30 Nm.

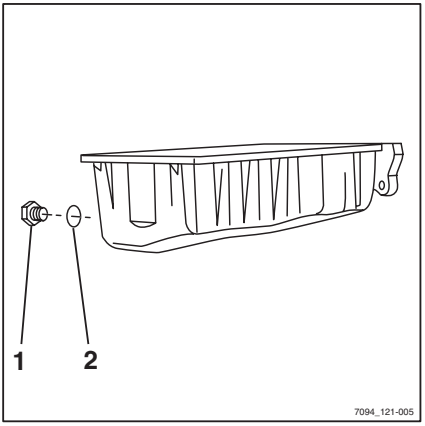


- Unscrew the oil filter lid (3).
- Replace the oil filter insert (5).
- Replace the O-rings (4).
- Screw on the oil filter cover (3) and hand-tighten.

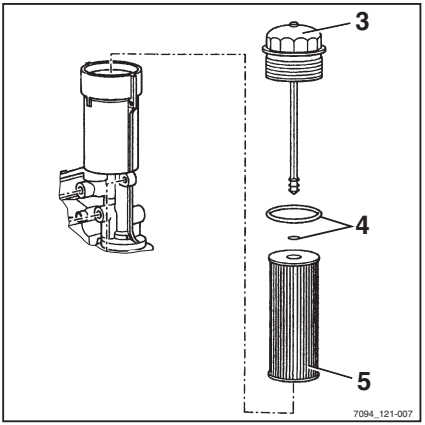

https://truckmanualshub.com/


- Unscrew the oil filter cover (6) and fill with new engine oil according to the maintenance table, see ⇒ Chapter "Maintenance data table", P. 6-165.
- Start the engine, allow to run for a short while and turn off again.
- Check the engine oil level, see ⇒ Chapter "Checking the engine oil level", P. 5-54.
- Close the motor hood.

▷

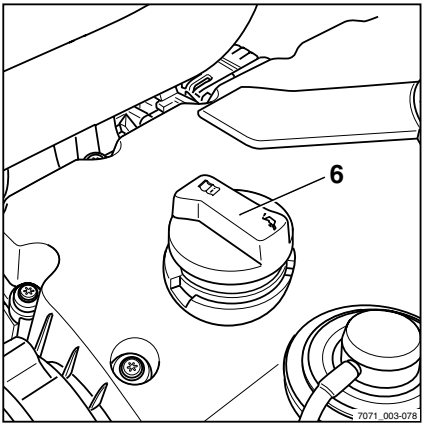


## Checking the ribbed V-belt

▷

NOTE

*If damage is found, the ribbed V-belt has to be replaced to prevent failures or functional errors.*

- Manually turn the engine and check the ribbed V-belt (1) for:

- Support tears (tear, core breaks, cross-sectional breaks)
- Layer separation (cover layer, anchor bars)
- Broken support
- Frayed anchor bars
- Flank wear (material wastage, frayed flanks, flank hardening, surface tears)

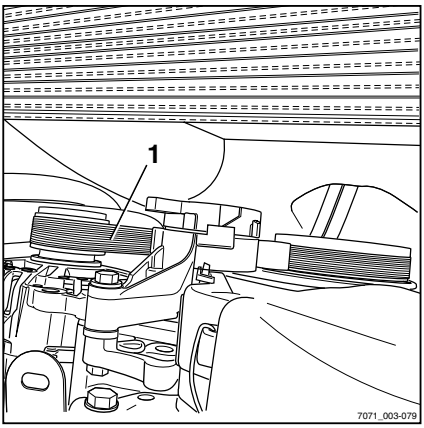

https://truckmanualshub.com/



## Checking the toothed belt

▷

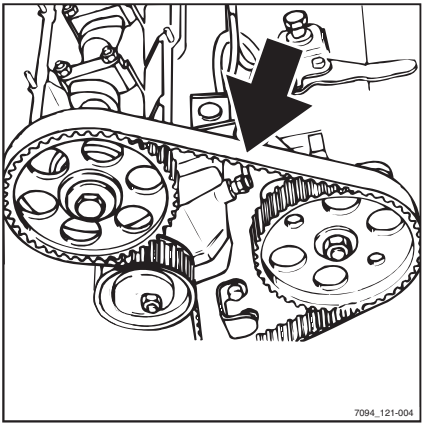


**⚠ CAUTION**

The engine can be seriously damaged in the event of non-compliance!

If damage is detected, the toothed belt must be replaced.

- Remove the toothed belt cover.
- Manually crank the engine and check the toothed belt for damage.

**NOTE**

*A special tool is required for replacing the toothed belt. Contact STILL service personnel if necessary.*

- Reattach the tooth belt cover.

## Replacing the fuel filter

**⚠ WARNING**

Working materials are toxic.

Observe the safety regulations when handling Diesel fuel, see ⇒ Chapter "Diesel fuel", P. 3-30.

- Open the bonnet, see ⇒ Chapter "Open the motor hood.", P. 5-53.
- Hold a suitable collection vessel under the fuel filter (1).
- Unscrew the fuel filter (1).

▷

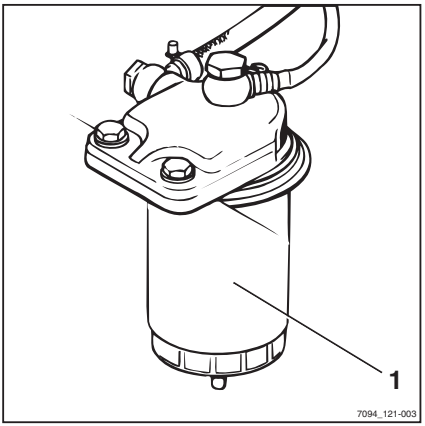


**NOTE**

*A second fuel filter (special equipment) can be installed. The water must be drained from both filters.*

- Wet the sealing surface of the new fuel filter with Diesel fuel and tighten the filter by hand.
- Start the engine, see ⇒ Chapter "Start the engine", P. 5-62.
- Check the fuel filter for leaks.

https://truckmanualshub.com/



– Close the bonnet.

## Replacing the fuel filter for Eberspächer exhaust gas cleaners

**WARNING**

Consumables are toxic!

Note safety regulations for working with diesel fuel; see ⇒ Chapter "Diesel fuel", P. 3-30.

– Remove and replace the fuel filter (2) for the exhaust gas cleaner by releasing the clips (1).

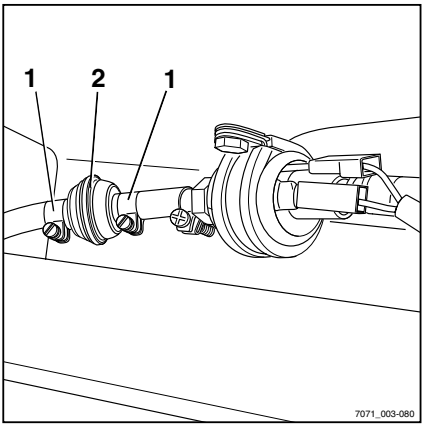


## Checking the exhaust gas system

– Inspect the exhaust gas system for external damage, secure fit, and leaks.

## Checking the heating system for leaks

– Use a testing device to check the cooling and heating system (special equipment) for leaks.

**NOTE**

*A special tool is necessary for the test. Contact STILL service personnel.*

https://truckmanualshub.com/



## Check lift cylinders and connections for leaks.

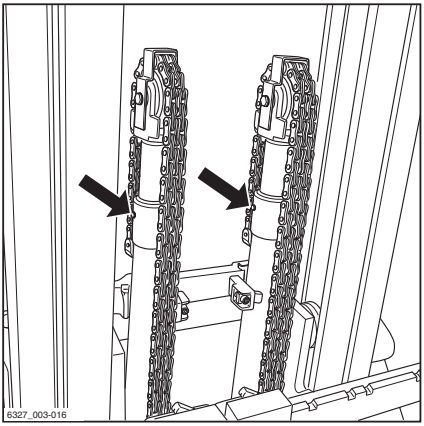


– Lift the fork carriage and secure against accidental lowering.

**WARNING**

Risk of injury!

Observe the safety regulations for working on lift masts, see ⇒ Chapter "Working at the front of the forklift truck", P. 6-170.

– Check hydraulic connections and lift cylinders for leaks (visual inspection).

– Tighten leaking screw joints, repair leaking hydraulic cylinders.

## Maintain lifting system

– Check bearings for wear and clearance.

– Check chain roller bearings, support roller bearings on lift mast and fork carriage for clearance, condition and secure positioning.

– Bearings are lubricated for life, and are maintenance-free. Replace in the event of damage, excessive clearance or stiffness.

**WARNING**

Risk to stability!

No deliberate change in the tilt angle is permitted.

Readjustment after replacement or repair of tilt cylinders only permitted by your service centre!

https://truckmanualshub.com/



## Check lateral clearance (Y)

▷

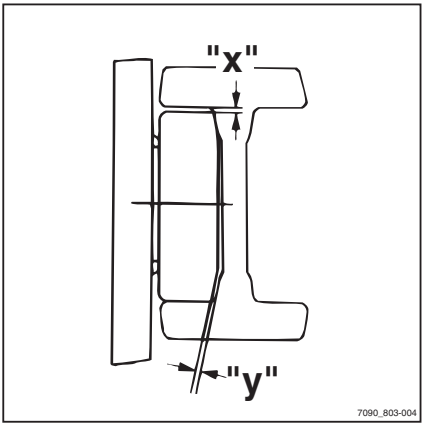


- Cant fork carriage in mast guide.
- Measure clearance between mast cross-piece and support roller with feeler gauge.

Permissible lateral clearance (Y):

**min. 0.1 mm**

**max. 0.3 mm** (at narrowest point)

**max. 1.1 mm** (at any other point)

## Check bearing clearance (X)

NOTE

*Before this check, make sure that the lateral clearance (Y) complies with the specified tolerances.*

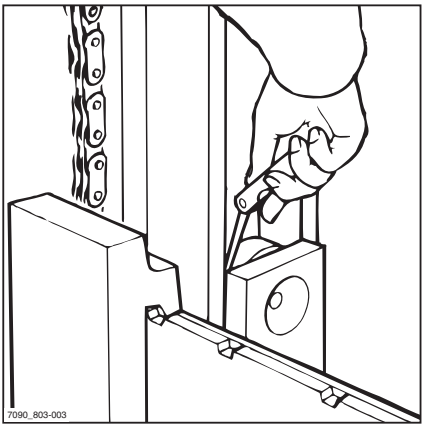


- Park vehicle on a flat surface and lift fork carriage.
- Position parallel base at tips of fork arms.
- Lower fork carriage onto this base.
- Measure clearance between support roller and lift mast bearing surface with feeler gauge.

**Bearing clearance (X): max. 0.6 mm**

https://truckmanualshub.com/



## Checking play between fork carriage stop and run-out stop ▷

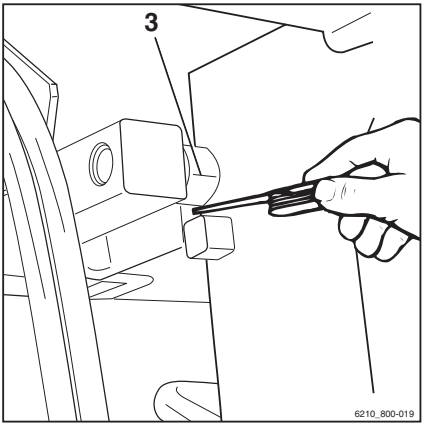


NOTE

*Perform the check after adjustments to the load chains. See ⇒ Chapter "Load chain maintenance", P. 6-195.*

– Extend the fork carriage completely to the stop in the lift cylinder.

– Use the feeler gauge to check the clearance between the fork carriage stop and roller of the run-out stop (3).

**Clearance: at least 2 mm**

## Checking the fork arms ▷

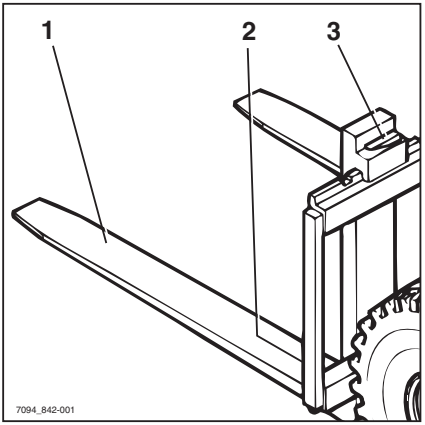


– Check the fork arms (1) for visible deformations. The wear may not exceed 10% of the original strength.

**CAUTION**

Worn fork arms must always be repaired as a pair.

– Check the fork latch (3) function.

– A locking screw (2) against falling out must be available.

https://truckmanualshub.com/



## Checking reversible fork arms

▷

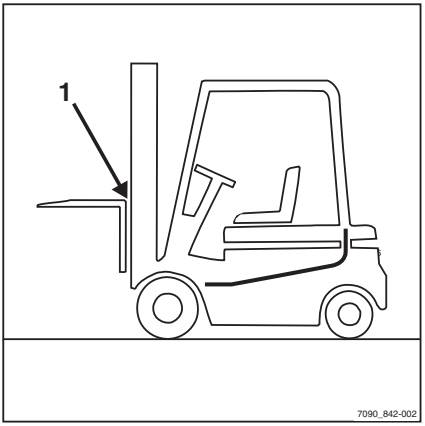


NOTE

*This check is only required for reversible fork arms (special equipment).*

– Check the outside of the fork bend (1) for cracks. Please contact the service centre.

https://truckmanualshub.com/


# 3000-hour maintenance/two-year maintenance

## Work that must also be carried out

- Carry out maintenance work as necessary, see ⇒ Chapter "Maintenance as required", P. 178.
- Carry out 1000 hour maintenance, see ⇒ Chapter "1000-hour maintenance/annual maintenance", P. 203.

## Changing the gear lubricant oil

**⚠ WARNING**

Consumables are toxic!

Observe the safety regulations for handling gear lubricant oil, see ⇒ Chapter "Oils", P. 3-29.

- Park the forklift on a level surface.
- Raise the truck on blocks, see ⇒ Chapter "Raising and jacking up", P. 6-168.
- Remove the wheels from the drive axle.
- Place a suitable collection vessel under the oil drain plug (5).
- Unscrew the oil drain plug (5) and allow the oil to drain out completely.

**ENVIRONMENT NOTE**

*Dispose of used oil according to applicable regulations.*

- Replace the sealing ring on the oil drain plug (5).
- Tighten the oil drain plug (5) to a torque of 24 Nm.

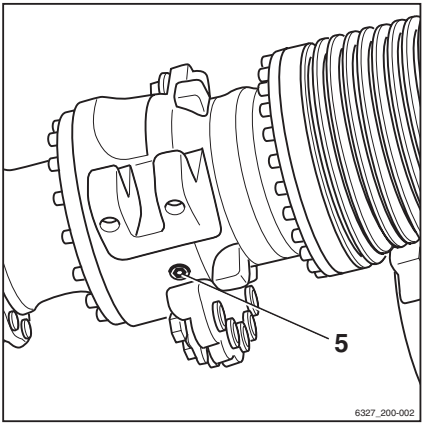

https://truckmanualshub.com/


- Unscrew the checking (1)screw.
- Unscrew the filling plug (2) and fill with oil as per the maintenance data table (see ⇒ Chapter "Maintenance data table", P. 6-165) until it escapes from the hole for the checking screw (1).
- Replace the sealing ring on the oil drain plug (1).
- Tighten the oil drain plug (1) to a torque of 10 Nm.
- Replace the sealing ring on the oil drain plug (2).
- Tighten the oil drain plug (2) to a torque of 24 Nm.
- Change the gear lubricant oil of both wheel drives.
- Re-fit the wheels to the drive axle; for tightening values see ⇒ Chapter "Maintenance data table", P. 6-165.

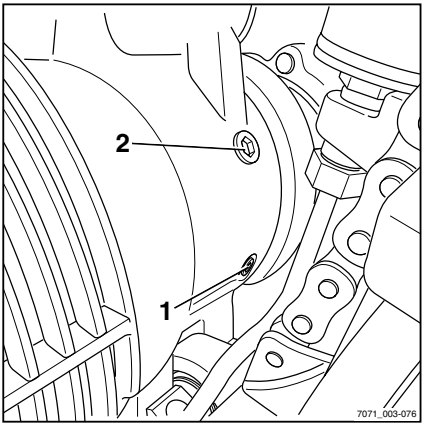


## Checking the wheel bearing

- Check the wheel bearing for excessive play, stiffness, damage, and wear.

Have STILL service personnel replace parts in the event of play or wear.

## Checking the engine mountings

- Check all engine mountings for security and wear, and replace them if necessary.

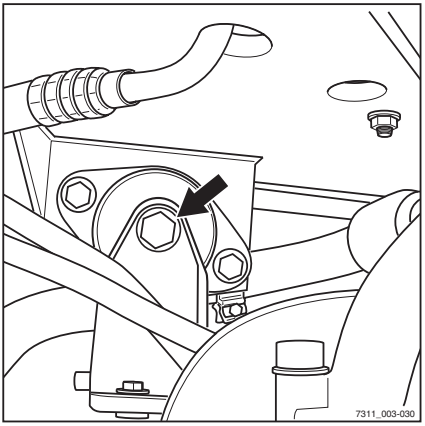

https://truckmanualshub.com/



## Replacing the toothed belt

– Replace the toothed belt of the engine.

NOTE

*This requires a special tool. Contact STILL service personnel.*

▷

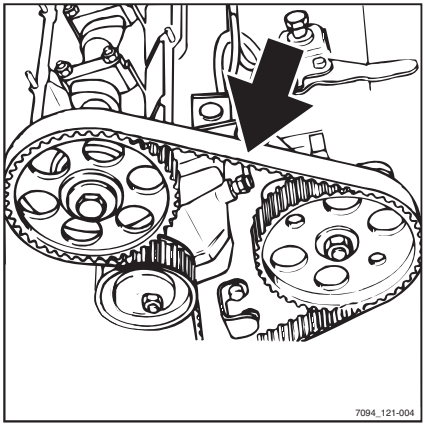

https://truckmanualshub.com/

https://truckmanualshub.com/


# 6000-hour maintenance

## Work that must also be carried out

- Carry out maintenance work as necessary, see ⇒ Chapter "Maintenance as required", P. 178.
- Carry out 1000 hour maintenance, see ⇒ Chapter "1000-hour maintenance/annual maintenance", P. 203.
- Carry out 3000 hour maintenance, see ⇒ Chapter "3000-hour maintenance/two-year maintenance", P. 213.

## Replacing the hydraulic oil and filter

**⚠ WARNING**

Hydraulic oils are hazardous to your health and are under pressure during operation.

Note safety regulations for working with hydraulic oils; see ⇒ Chapter "Hydraulic fluid", P. 3-32.

### Replacing the hydraulic oil and filter

- Position forklift truck on level ground.
- Tilt mast back.
- Lower forks; if there are attachments, run in working cylinder.
- Switch off the engine.
- Open the bonnet; see ⇒ Chapter "Open the motor hood.", P. 5-53.

https://truckmanualshub.com/



– Unscrew the (1) hydraulic oil filter cover. ▷

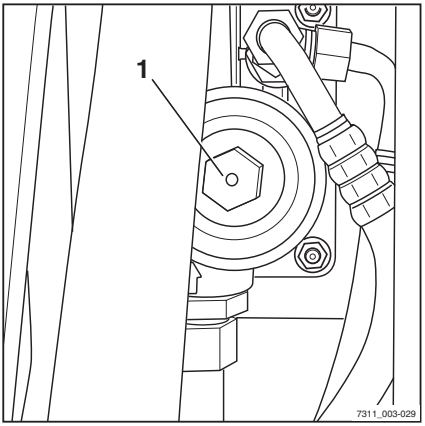


– Unscrew the hydraulic oil drain plug (2) under the hydraulic oil tank; direct the hydraulic oil into a collection vessel. ▷

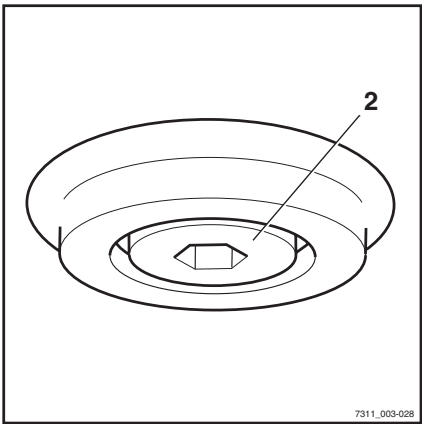


**ENVIRONMENT NOTE**

*Dispose of used oil according to applicable regulations.*

– Screw in drain plug (2) with a new seal and tighten.

– Remove the old filter insert from the filter cover and(1)dispose of it.

– Install a new filter insert.

– Fasten (1) the filter cover.

**Tightening torque: 30 Nm**

https://truckmanualshub.com/


- Unscrew (1) the dipstick 1 and remove it.
- Pour new hydraulic oil according to the maintenance data table into the dipstick opening, see ⇒ Chapter "Maintenance data table", P. 6-165.
- Reinsert (1) the dipstick and tighten it.

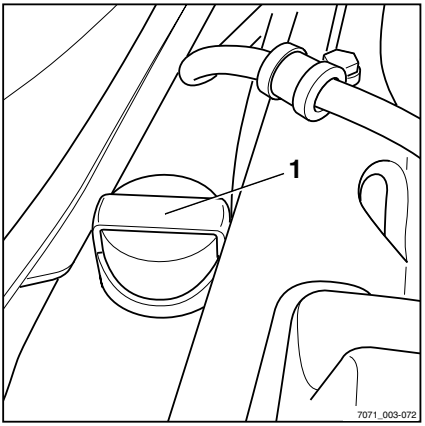

https://truckmanualshub.com/



## Bleeding lift cylinders

Tele-Mast design:

– Loosen the hexagonal head screw (4) in the lift cylinder head a half to one turn

Hi-Lo mast and triple mast:

– Loosen the hexagonal (5) head screw on the cylinder head of the middle cylinder and the hexagonal head screws (4) on the lift cylinder heads of the outer cylinder by half to one full rotation.

**NOTE**

*Do not unscrew too far!*

– Load the fork arms and actuate the "lift-lower" operating lever carefully until oil escapes from the bleeder screws without bubbles.

– Retighten bleeder screws.

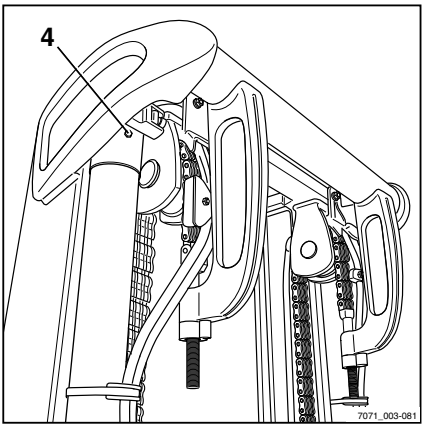


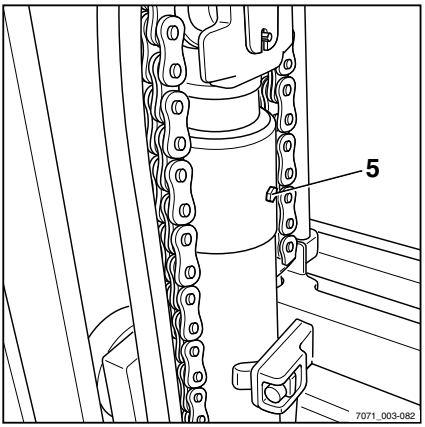


## Venting the tilt cylinder

– Tilt the mast forwards and backwards several times until it is up against the stop.

The tilt cylinders bleed themselves automatically.

## Bleeding the steering system

– Turn the steering wheel several times from stop to stop.

The steering system bleeds itself automatically.

https://truckmanualshub.com/


# 9000-hour maintenance/five-year maintenance

## Work that must also be carried out

- Carry out maintenance work as necessary, see ⇒ Chapter "Maintenance as required", P. 178.
- Carry out 1000 hour maintenance, see ⇒ Chapter "1000-hour maintenance/annual maintenance", P. 203.
- Carry out 3000 hour maintenance, see ⇒ Chapter "3000-hour maintenance/two-year maintenance", P. 213.

## Changing the coolant

**⚠ WARNING**

Coolant and coolant additive are hazardous to your health.

Please observe safety regulations when working with coolant, see ⇒ Chapter "Coolant", P. 3-33.

### Draining the coolant

- Remove covering from the back, see ⇒ Chapter "Removing and installing the rear cover", P. 6-173.

**⚠ WARNING**

Risk of scalding!

Only open the lid of the expansion tank when the engine has cooled down.

https://truckmanualshub.com/



- Open the lid slowly (1) and allow the pressure to drop.
- Open the bonnet; see ⇒ Chapter "Open the motor hood.", P. 5-53.
- Place a sufficiently large collection vessel under the engine.

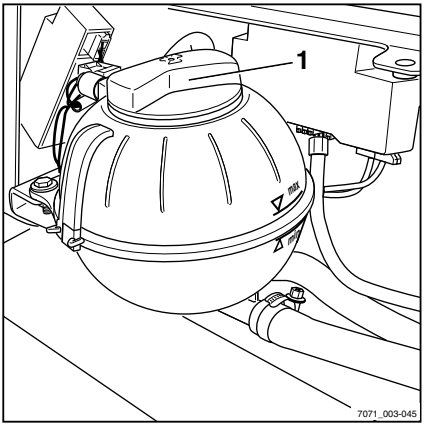


- Open the clip (3) and remove the hose.
- In addition to draining the coolant from the engine, remove the connection spigot together with the coolant regulator (arrowed).

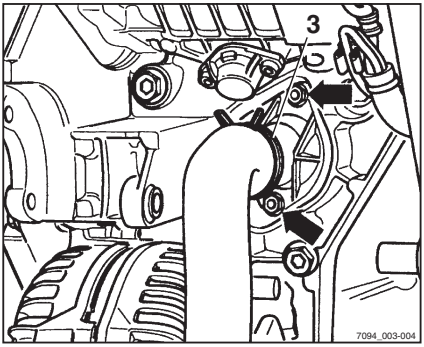


**ENVIRONMENT NOTE**

*Dispose of the coolant properly.*

## Topping up the coolant

- Rotate the coolant regulator (7) 90° anti-clockwise and remove it from the (5) connection spigot.
- Replace the sealing ring (6) and wet it with coolant.
- Insert the coolant regulator (7) into the connection spigot (5) and rotate it 90° clockwise.
- Re-fit the connection spigot (5) with the coolant regulator (7) into the engine block.
- Tighten the securing bolts (4) with a torque of 15 Nm.

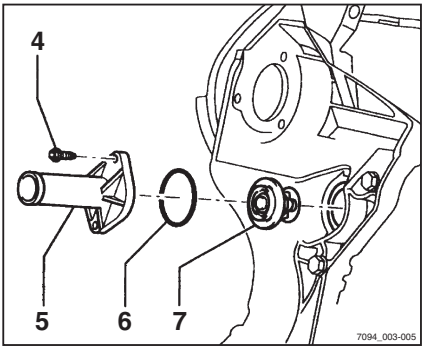

https://truckmanualshub.com/


– Re-attach the coolant hose to the connection spigot (5). Check that the clip is properly seated.

**NOTE**

*Only use coolant additive according to the manufacturer's guidelines.*

– Refill with coolant; for mixture ratio see ⇒ Chapter "Topping up coolant and checking coolant concentration", P. 6-178.

**CAUTION**

Coolant additive with a different specification must not be mixed in!

– Use coolant additive and anti-corrosion agent as shown in the maintenance data table, see ⇒ Chapter "Maintenance data table", P. 6-165.

– Screw the lid back on again (1) tightly.

– Start the engine; see ⇒ Chapter "Start the engine", P. 5-62.

– Run the engine at approx. 1500 rpmfor a maximum of two minutes.

– Check the coolant level again.

– Close the engine hood.

– Re-attach the rear cover.

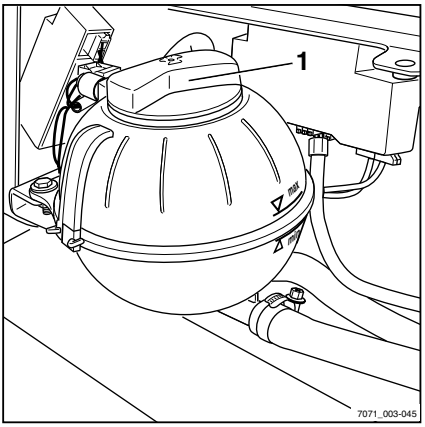

https://truckmanualshub.com/

https://truckmanualshub.com/

# 7

# Technical data

https://truckmanualshub.com/



# Dimensions

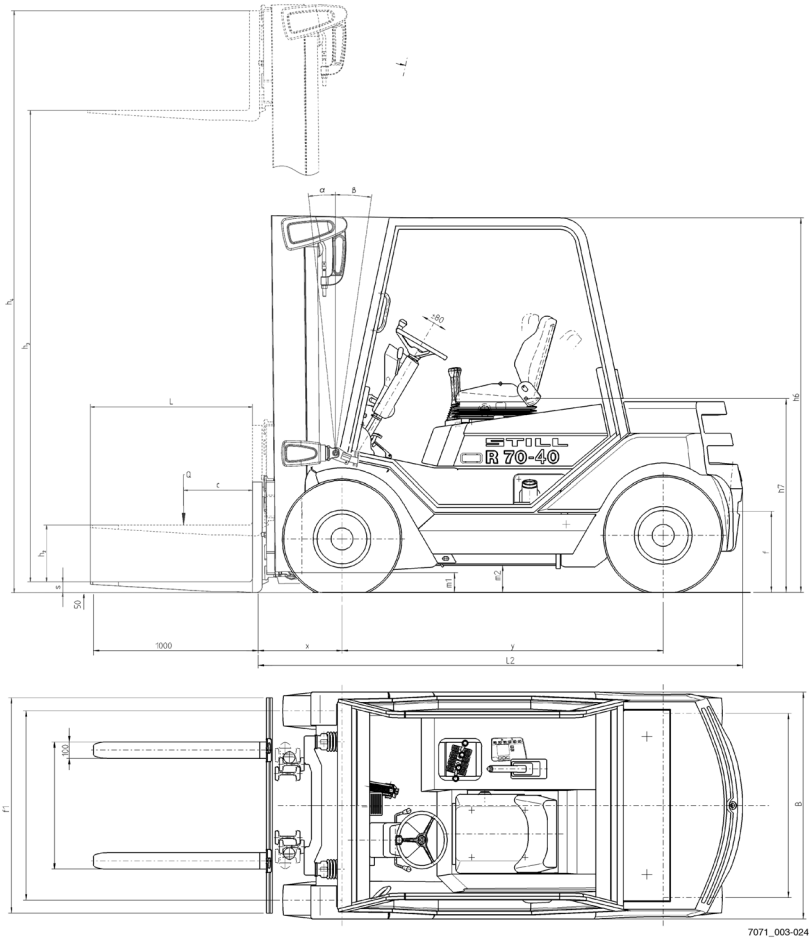


The customer-specific dimensions for dimensions $h_1$, $h_3$, $h_4$, $h_6$ and $b_1$ can be found in your order acknowledgement.

**Centre of gravity S (distance from front axle)**

| | |
|---|---|
| R70-40 | 1123 mm |
| R70-45 | 1139 mm |
| R70-50 | 1159 mm |

https://truckmanualshub.com/


# VDI datasheet

NOTE

*Provisional values valid for the standard device. Variants may deviate from them.*

## Characteristics

| | | R70-40 | R70-45 | R70-50 |
|---|---|---|---|---|
| Manufacturer | | STILL | STILL | STILL |
| Drive: electric, diesel, petrol, LPG, mains electric | | Diesel | Diesel | Diesel |
| Operation: manual, accompanied, stand, seated, order picking | | Seat | Seat | Seat |
| Capacity/load | Q (kg) | 4000 | 4500 | 4999 |
| Load centre of gravity | c (mm) | 500 | 500 | 500 |
| Load distance | x (mm) | 540 | 540 | 540 |
| Wheelbase | y (mm) | 2005 | 2005 | 2005 |

## Weight

| | | R70-40 | R70-45 | R70-50 |
|---|---|---|---|---|
| Tare weight | kg | 5800 | 6086 | 6395 |
| Axle weight with front/rear load | kg | 8627/1173 | 9462/1124 | 10290/1105 |
| Axle weight without front/rear load | kg | 2552/3248 | 2628/3458 | 2697/3698 |

## Wheels, frame

| | | R70-40 | R70-45 | R70-50 |
|---|---|---|---|---|
| Tyres: superelastic (SE), solid rubber (V), pneumatic (L) | | SE | SE | SE |
| Front wheel size | | 250-15 | 28x12.5-15 | 28x12.5-15 |
| Rear wheel size | | 250-15 | 250-15 | 250-15 |
| Wheels, number front/rear (x = driven) | | 2x/2 | 2x/2 | 2x/2 |
| Track width: front | b 10 (mm) | 1136 | 1210 | 1210 |
| Track width: rear | b 11 (mm) | 1120 | 1120 | 1120 |

https://truckmanualshub.com/


## Basic dimensions

| | | R70-40 | R70-45 | R70-50 |
|---|---|---|---|---|
| Tilt lift mast/fork carriage forwards/backwards | Degree | 6/8 | 6/8 | 6/8 |
| Height with lift mast retracted | h1(mm) | 2400 | 2400 | 2400 |
| Free lift | h2 (mm) | 160 | 160 | 160 |
| Lift height | h3(mm) | 3180 | 3180 | 3180 |
| Height with lift mast extended | h4(mm) | 4187 | 4187 | 4187 |
| Height to top of overhead guard | h6 (mm) | 2300 | 2300 | 2300 |
| Sitting height | h7(mm) | 1176 | 1176 | 1176 |
| Coupling height | h10 (mm) | 493 | 493 | 493 |
| Total length | l1 (mm) | 4027 | 4085 | 4130 |
| Length including fork back | l2 (mm) | 3027 | 3085 | 3130 |
| Maximum length | b1 | 1380 | 1506 | 1506 |
| Fork arm dimensions | s/e/l (mm | 50/120/1000 | 50/120/1000 | 50/150/1000 |
| Fork carriage according to ISO 2328 Class/Form A, B | | Category III/Form A | Category III/Form A | Category III/Form A |
| Fork carriage width | b3 (mm) | 1310 | 1310 | 1410 |
| Floor clearing with load under lift mast | m1 (mm) | 140 | 140 | 140 |
| Ground clearance centre of wheelbase | m2 (mm) | 165 | 165 | 165 |
| Working width for pallet 1000 x 1200 transverse | Ast (mm) | 4418 | 4470 | 4510 |
| Working width for pallet 800 x 1200 longitudinal | Ast (mm) | 4618 | 4670 | 4710 |
| Turning radius | Wa (mm) | 2678 | 2730 | 2770 |
| Smallest pivot point distance | b13 (mm) | 680 | 680 | 680 |

## Performance data

| | | R70-40 | R70-45 | R70-50 |
|---|---|---|---|---|
| Truck speed with/without load | km/h | 21/21 | 21/21 | 21/21 |
| Lifting speed with/without load min. fan speed | m/s | 0.56/0.60 | 0.54/0.58 | 0.47/0.51 |

https://truckmanualshub.com/


| | | R70-40 | R70-45 | R70-50 |
|---|---|---|---|---|
| Lowering speed with/without load | m/s | 0.56/0.55 | 0.54/0.51 | 0.54/0.51 |
| Pulling force with/without load | N | 22150/19000 | 22000/19550 | 21870/20040 |
| Climbing capability with/without load | % | 22/34 | 20/33 | 18/32 |
| Acceleration time with/without load | S. | 5.3/4.9 | 5.3/4.9 | 5.3/4.9 |
| Service brake | S. | Mechanical | Mechanical | Mechanical |

## Switching off

| | | R70-40 | R70-45 | R70-50 |
|---|---|---|---|---|
| Engine manufacturer/model | | VW/CBJ | VW/CBJ | VW/CBJ |
| Engine output as per ISO 1585 | kW | 55 | 55 | 55 |
| Rated rpm | 1/min | 2400 | 2400 | 2400 |
| Maximum torque | Nm | 247 | 247 | 247 |
| Number of cylinders/cubic capacity | $cm^3$ | 4/2000 | 4/2000 | 4/2000 |
| Fuel consumption according to VDI cycle | l/h | - | - | - |

## Miscellaneous

| | | R70-40 | R70-45 | R70-50 |
|---|---|---|---|---|
| Type of traction control | | Stilltronic | Stilltronic | Stilltronic |
| Working pressure for equipment | bar | 250 | 230 | 250 |
| Oil volume for attachments | l/min | - | - | - |
| Noise level in driver's ear | dB (A) | 78 | 78 | 78 |
| Tow coupling, type/model | | Bolt | Bolt | Bolt |

https://truckmanualshub.com/


# Wheels and tyres

## Permissible types of tyres

Only the tyre types listed can be used. We recommend consulting our customer service office before refitting.

### Tyres for R70-40

| Comment | Tyre pressure (bar) | Tyres | | Track (mm) | | Mast type (height in mm) | |
|---|---|---|---|---|---|---|---|
| | front/rear | front | rear | front | rear | Tele | Triple |
| **Superelastic SIT tyres** | | | | | | | |
| Standard | - | 250-15 | 250-15 | 1136 | 1120 | up to 3250 | up to 3200 |
| Twin | - | 7.00-15 | 250-15 | 1364 | 1120 | up to 3250 | up to 3200 |
| Continen-tal | - | 250-15 | 250-15 | 1136 | 1120 | up to 3250 | up to 3200 |
| **Pneumatic tyres** | | | | | | | |
| | | 250-15 | 250-15 | 1136 | 1120 | up to 3250 | up to 3200 |
| Twin XZM | 10/10 | 7.00-15 | 250-15 | 1364 | 1120 | up to 3250 | up to 3200 |
| Michelin XZM | 10/10 | 250-15 | 250-15 | 1136 | 1120 | up to 3000 | up to 2300 |

### Tyres for R70-45, R70-50

| Com-ment | Tyre pressure (bar) | Tyres | | Track (mm) | | Mast type (height in mm) | |
|---|---|---|---|---|---|---|---|
| | front/rear | front | rear | front | rear | Tele | Triple |
| **Superelastic SIT tyres** | | | | | | | |
| Standard | - | 28x12.5-15 | 250-15 | 1210 | 1120 | up to 3250 | up to 3200 |
| Twin | - | 7.00-15 | 250-15 | 1364 | 1120 | up to 3250 | up to 3200 |

https://truckmanualshub.com/



# Fuse assignment

## Fuse assignment in main fuse holder

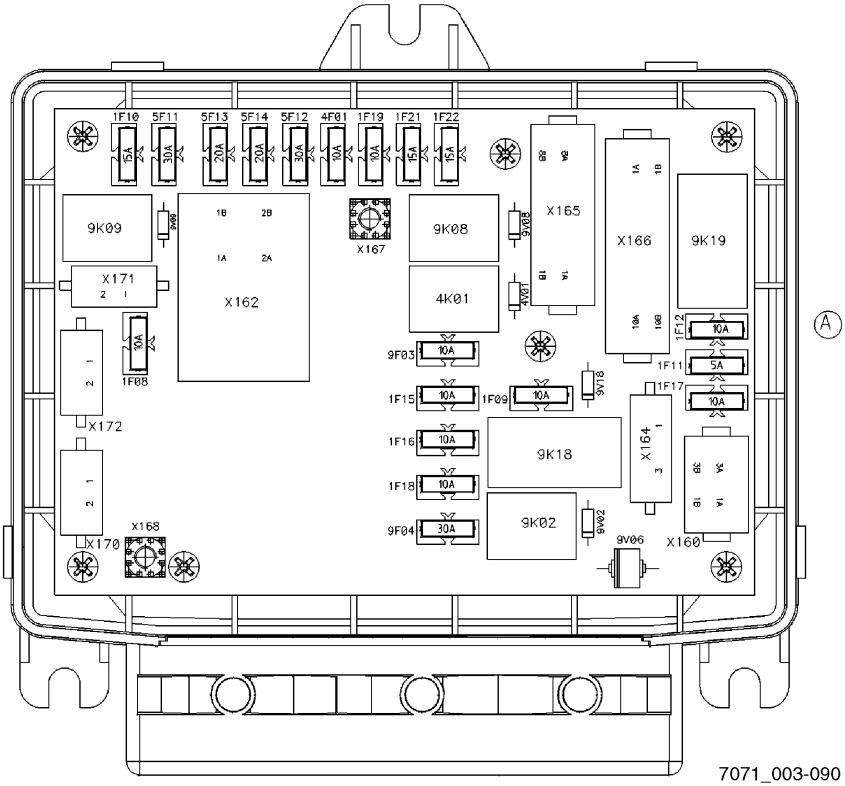


7071_003-090

| | |
|---|---|
| 1F08 | Fuse 10 A |
| 1F09 | Fuse 10 A |
| 1F10 | Fuse 15 A |
| 1F11 | Fuse 5 A |
| 1F12 | Fuse 10 A |
| 1F15 | Fuse 10 A |
| 1F16 | Fuse 10 A |
| 1F17 | Fuse 10 A |
| 1F18 | Fuse 10 A |
| 1F19 | Fuse 10 A |
| 1F21 | Fuse 15 A |
| 1F22 | Fuse 15 A |
| 4F01 | Fuse 10 A |
| 5F12 | Fuse 30 A |
| 5F11 | Fuse 30 A |
| 5F13 | Fuse 20 A |
| 5F14 | Fuse 20 A |
| 9F03 | Fuse 10 A |
| 9F04 | Fuse 30 A |

https://truckmanualshub.com/



NOTE

*Depending on equipment, not all fuses will be present in your truck.*

## Fuse assignment special equipment ▷

NOTE

*Depending on equipment, not all fuses will be present in your truck.*

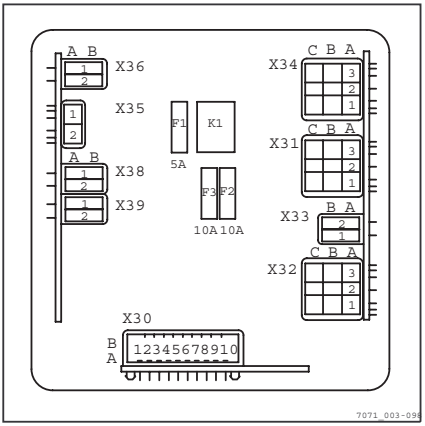


| | |
|---|---|
| F1 | Fuse 5 A |
| F2 | Fuse 10 A |
| F3 | Fuse 10 A |

https://truckmanualshub.com/

# 8

# Circuit diagrams

https://truckmanualshub.com/



# Hydraulics

## Hydraulic circuit diagram

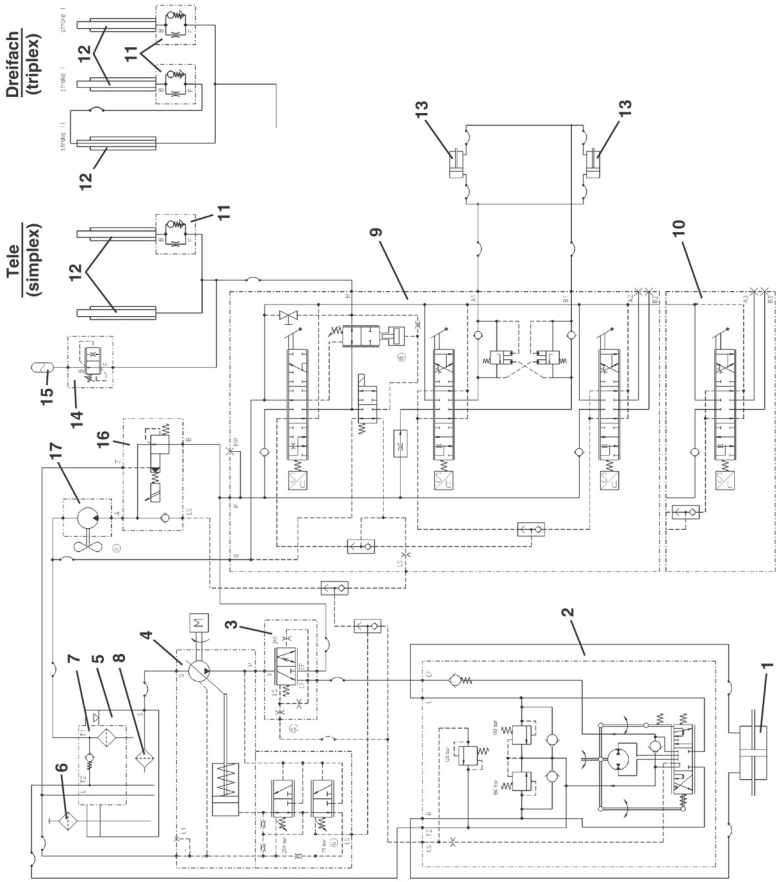

https://truckmanualshub.com/


| | |
|---|---|
| 1 | Steering cylinder |
| 2 | Steering unit |
| 3 | Priority valve |
| 4 | Variable pump |
| 5 | Hydraulic oil tank |
| 6 | Breather plug |
| 7 | Return line filter |
| 8 | Suction screen |
| 9 | 3-way directional control valve block |
| 10 | 4-way directional control valve block |
| 11 | Burst pipe protection |
| 12 | Lift cylinders |
| 13 | Tilt cylinder |
| 14 | Lowering brake |
| 15 | Accumulator tank |
| 16 | Pressure reducing valve with housing |
| 17 | Fan motor |

https://truckmanualshub.com/


# Electrical equipment

## Legend for circuit diagrams

NOTE

*This legend applies to all possible equipment variants. Not all components/assemblies listed here have to be installed in your industrial truck.*

### General operating materials

| | |
|---|---|
| A1 | Load balancing printed circuit board |
| A2 | Charge controller |
| A3 | Throttle valve controller printed circuit board |
| A4 | Traction control unit |
| A5 | Contactor stand |
| A6 | Fan motor printed circuit board |
| A7 | Control fuse printed circuit board |
| A8 | Special function printed circuit board |
| A9 | Digital truck central control unit |
| A10 | Steering column printed circuit board |
| A11 | Field regulator |
| A12 | Protective circuit printed circuit board |
| A13 | Fuses/protective circuits printed circuit board |
| F1 | Fuse (main fuse) |
| F2 | Fuse (control fuse) |
| F3 | Fuse (control fuse) |
| F4 | Fuse (control fuse) |
| F5 | Fuse (control fuse) |
| F6 | Fuse (control fuse) |
| F7 | Fuse (control fuse) |
| F8 | Fuse (control fuse) |
| F9 | Fuse (control fuse) |
| F10 | Fuse (control fuse) |
| F11 | Fuse for A2 |
| G1 | Battery |
| G2 | Battery |
| G3 | Battery |
| H1 | Indicator light for S1 |
| H2 | Engine/generator temperature light |
| H3 | Neutral position indicator light |
| H4 | General temperature indicator light |
| K1 | Relay |
| K2 | Relay |
| R1 | Resistor for A1 |
| R2 | Resistor |
| R3 | Temperature sensor |
| S1 | Key switch |
| S2 | Battery - main switch |
| U1 | Voltage transformer |
| U2 | Voltage transformer |
| U3 | Filter part |
| U4 | Impedance converter |
| U5 | not used |
| U6 | AC-AC voltage transformer |
| U7 | Overcurrent protector |

https://truckmanualshub.com/


| | |
|---|---|
| X1 | Battery plug female half |
| X2 | Battery plug male half |
| X3 | Connector plug for 1A1 |
| X4 | Connector plug for 2A1 |
| X5 | Connector plug for 1A2 |
| X6 | Connector plug for 1A4 |
| X7 | Connector plug for 6A1 |
| X8 | Terminal rail for G1 |
| X9 | Connector plug for 6A3 - standard discharge indicator |
| X10 | Connector plug for 6A3 - discharge indicator with switch-off |
| X11 | Connector plug for A9 |
| X12 | 4-way traction motor connector plug |
| X13 | 6-way traction motor connector plug |
| X14 | 4-way pump motor connector plug |
| X15 | 6-way pump motor connector plug |
| X16 | Accelerator connector plug |
| X17 | Field connections for A9 |
| X18 | CAN bus plug for A9 |
| X19 | CAN bus plug for A9 |
| X99 | not used |
| Z1 | Protective circuit |

## Traction drives

| | |
|---|---|
| 1A1 | Traction control printed circuit board |
| 1A2 | Output stage |
| 1A3 | Biasing current excitation printed circuit board |
| 1A4 | Field control printed circuit board |
| 1A5 | Retardation printed circuit board |
| 1A6 | Current sensor printed circuit board |
| 1A7 | Start V-engine printed circuit board |
| 1A10 | Impulse control system |
| 1B1 | Accelerator |
| 1B2 | Brake transmitter |
| 1B3 | 2-pedal potentiometer |
| 1B4 | 2-pedal potentiometer |
| 1C1 | Quenching capacitor |
| 1F1 | Fuse for 1M1 |
| 1F2 | Fuse for 1M2 |
| 1F3 | Fuse |
| 1F11 | Fuse |
| 1F12 | Fuse |
| 1F13 | Fuse |
| 1G1 | Generator |
| 1K1 | Main contactor |
| 1K2 | Braking contactor |
| 1K3 | not used |
| 1K4 | Auxiliary contactor |
| 1K5 | Safety relay for 1K1 |
| 1K6 | Relay for S1 |
| 1K7 | Relay for ignition |
| 1K8 | Safety relay monitoring |
| 1K9 | Bridge contactor |
| 1K10 | not used |
| 1K11 | Forwards motion contactor |
| 1K12 | Reverse motion contactor |

https://truckmanualshub.com/


| | |
|---|---|
| 1K21 | Forwards motion contactor |
| 1K22 | Reverse motion contactor |
| 1K23 | Relay for forwards motion switch-off |
| 1L1 | Charge reversal throttle |
| 1L2 | Throttle |
| 1L3 | Throttle |
| 1M1 | Right traction motor |
| 1M2 | Left traction motor (or 1 motor drive) |
| 1R1 | Series resistor for 1A1 |
| 1R2 | Rotational angle detector (accelera-tor) |
| 1R3 | Resistor for monitoring |
| 1R4 | Resistor for monitoring |
| 1R5 | Resistor |
| 1R6 | Potentiometer for speed restriction |
| 1R7 | not used |
| 1R8 | not used |
| 1R9 | not used |
| 1R10 | Excitation resistor for electric braking |
| 1R11 | Resistor for 2nd braking stage |
| 1R12 | Brake resistor |
| 1R13 | Brake resistor |
| 1R14 | Stabilising resistor |
| 1R15 | not used |
| 1R16 | Resistor |
| 1R17 | Temperature sensor |
| 1R18 | Excitation resistor for electric braking |
| 1S1 | Forwards travel direction switch |
| 1S2 | Backwards travel direction switch |
| 1S3 | Parking brake switch |
| 1S4 | Parking brake switch |
| 1S5 | Cornering switch |
| 1S6 | Cornering switch |
| 1S7 | Cornering switch |
| 1S8 | Cornering switch |
| 1S9 | Traction safety switch |
| 1S10 | Reversing button |
| 1S11 | Safety switch for 1S10 |
| 1S12 | Brake switch |
| 1S13 | Switch for 2nd braking stage |
| 1S14 | Step switch |
| 1S15 | Travel direction zero position switch |
| 1S16 | Accelerator switch |
| 1T1 | Charging current switch |
| 1U1 | Traction current actual-value sensor |
| 1V1 | Main thyristor traction control |
| 1V2 | Gate turn-off thyristor traction control |
| 1V3 | Charge reversal thyristor traction control |
| 1V4 | Free-wheeling diode traction control |
| 1V5 | Brake diode |
| 1V6 | Brake diode |
| 1V7 | Brake diode |
| 1V8 | Charge reversal diode |
| 1V9 | Charging diode |
| 1V10 | Diode |
| 1V11 | Diode |
| 1V12 | Diode |
| 1V13 | Diode |

https://truckmanualshub.com/


| | |
|---|---|
| 1V14 | Diode |
| 1Z1 | Protective circuit for 1V1 |
| 1Z2 | Protective circuit for 1V2 |
| 1Z3 | Protective circuit for 1V3 |
| 1Z4 | Protective circuit for 1V4 |
| 1Z5 | Protective circuit for 1V5 |
| 1Z6 | Protective circuit for 1V6 |
| 1Z7 | Protective circuit for 1V7 |
| 1Z8 | Protective circuit for 1V8 |
| 1Z9 | Protective circuit for 1V9 |
| 1Z11 | Protective circuit for 1K11 |
| 1Z12 | Protective circuit for 1K12 |
| 1Z13 | Protective circuit for 1K1 |
| 1Z14 | Protective circuit for 1K2 |
| 1Z20 | Protective circuit printed circuit board |
| 1Z21 | Protective circuit for 1K21 |
| 1Z22 | Protective circuit for 1K22 |
| 1Z23 | Protective circuit |
| 1Z24 | Protective circuit |
| 1Z25 | Protective circuit |
| 1Z26 | Protective circuit |
| 1Z27 | Protective circuit |
| 1Z28 | Protective circuit |
| 1Z29 | Protective circuit |
| 1Z30 | Protective circuit |

## Hydraulic drives for moving load

| | |
|---|---|
| 2A1 | Pump control printed circuit board |
| 2A6 | Current sensor printed circuit board |
| 2A7 | Proportional technology control unit |

| | |
|---|---|
| 2B1 | Lift sensor |
| 2B2 | Tilt sensor |
| 2B3 | Auxiliary hydraulic sensor 1 |
| 2B4 | Auxiliary hydraulic sensor 2 |
| 2B5 | Auxiliary hydraulic sensor 3 |
| 2B6 | Retarder |
| 2C1 | Quenching capacitor |
| 2F1 | Fuse for 2M1 |
| 2F2 | Fuse for 2M2 |
| 2F11 | Fuse |
| 2F12 | Fuse control circuit |
| 2K1 | Pump contactor |
| 2L1 | Charge reversal throttle |
| 2L2 | Throttle |
| 2L3 | Throttle |
| 2M1 | Pump motor |
| 2M2 | Pump motor |
| 2R1 | Series resistor for 2A1 |
| 2R2 | Lift rotational angle detector |
| 2R17 | Temperature sensor |
| 2S1 | Lift switch |
| 2S2 | Tilt switch |
| 2S3 | Auxiliary hydraulic switch 1 |
| 2S4 | Auxiliary hydraulic switch 2 |
| 2S5 | Lift end limit switch |

https://truckmanualshub.com/


| | |
|---|---|
| 2S6 | Lift end limit switch |
| 2S7 | Lift end limit switch |
| 2S8 | Lift end limit switch |
| 2T1 | Charging current transformer |
| 2U1 | Pump current actual-value sensor |
| 2V1 | Main thyristor pump control |
| 2V2 | Gate turn-off thyristor pump control |
| 2V3 | Charge reversal thyristor pump control |
| 2V4 | Free-wheeling diode pump control |
| 2X1 | 42-way SAAB connector plug |
| 2X2 | Hydraulic control unit CAN bus plug |
| 2X3 | Hydraulic control unit CAN bus plug |
| 2Y1 | Directional control solenoid valve (lift) |
| 2Y2 | Directional control solenoid valve (lower) |
| 2Y3 | Directional control solenoid valve (tilt) |
| 2Y4 | Directional control solenoid valve (tilt) |
| 2Y5 | Auxiliary hydr. directional control solenoid valve 1 |
| 2Y6 | Auxiliary hydr. directional control solenoid valve 1 |
| 2Y7 | Auxiliary hydr. directional control solenoid valve 2 |
| 2Y8 | Auxiliary hydr. directional control solenoid valve 2 |
| 2Y9 | Release valve |
| 2Y10 | Valve on fork carriage |
| 2Z1 | Protective circuit for 2V1 |
| 2Z2 | Protective circuit for 2V2 |
| 2Z3 | Protective circuit for 2V3 |
| 2Z4 | Protective circuit for 2V4 |

## Auxiliary drives

| | |
|---|---|
| 3A1 | Power-assisted steering control unit |
| 3A2 | Control motor injection pump printed circuit board |
| 3B1 | Steering transmitter |
| 3C1 | Quenching capacitor |
| 3F1 | Fuse for 3M1 |
| 3F2 | Fuse for 3M2 |
| 3K1 | Steering motor contactor |
| 3K2 | Compressor contactor |
| 3M1 | Power-assisted steering motor |
| 3M2 | Compressor motor |
| 3M3 | Control motor injection pump |
| 3S1 | Air supply switch |

## Signal devices

| | |
|---|---|
| 4A1 | not used |
| 4F1 | Fuse |
| 4F2 | Fuse |
| 4H1 | Alarm horn |
| 4H2 | Buzzer |

https://truckmanualshub.com/


4K1 Horn relay

4S1 Horn button

4V1 Diode for 9H2

4Z1 Protective circuit for 4H1 (capacitor)

4Z2 Protective circuit for 4H1 (diode)

## Lighting

5C1 Capacitor

5E1 Right headlight

5E2 Left headlight

5E3 Right rear light

5E4 Left rear light

5E5 Right side light

5E6 Left side light

5E7 Right stop light

5E8 Left stop light

5E9 not used

5E10 Front left direction indicator

5E11 Front right direction indicator

5E12 Rear left direction indicator

5E13 Rear right direction indicator

5E14 Left licence plate light

5E15 Right licence plate light

5E16 Reverse light

5E17 Right searchlight

5E18 Left searchlight

5E19 Interior lighting

5E20 Left rotating signal beacon

5E21 Right rotating signal beacon

5E22 Middle rotating signal beacon

5E23 Rotating signal beacon

5E24 Left reverse light

5E25 Right reverse light

5E26 Left corner marker light

5E27 Right corner marker light

5E28 Rear searchlight

5E29 Rear searchlight

5E30 Middle front searchlight

5F1 Fuse for right headlight

5F2 Fuse for left headlight

5F3 Fuse for right parking light

5F4 Fuse for left parking light

5F5 Fuse for searchlight

5F6 Fuse for brake light/wiper/rotating signal beacon

5F11 Fuse

5F12 Fuse

5F13 Fuse

5F14 Fuse

5F15 Fuse

5F16 Fuse

5H1 Direction indicator light

5H2 Vehicle direction indicator light

5H3 Trailer direction indicator light

5H4 Trailer direction indicator light

5H5 Right corner marker light

5H6 Left corner marker light

https://truckmanualshub.com/


| | |
|---|---|
| 5H7 | Lighting indicator light |
| 5H8 | Lighting indicator light |
| 5K1 | Direction hazard warning light sensor |
| 5K2 | Relay for reverse light |
| 5K3 | Relay for trailer socket |
| 5K4 | Relay for trailer socket |
| 5K5 | Relay for trailer socket |
| 5K6 | Pulse generator for reverse light |
| 5K7 | Relay for reverse light |
| 5K8 | Relay for stop light |
| 5K9 | Relay for front searchlight |
| 5L1 | Throttle |
| 5R1 | Series resistor for 5K2 |
| 5S1 | Light switch |
| 5S2 | Warning light switch |
| 5S3 | Direction indicator switch |
| 5S4 | Left searchlight switch |
| 5S5 | Right searchlight switch |
| 5S6 | Rotating signal beacon switch |
| 5S7 | Brake light switch |
| 5S8 | Reversing light switch |
| 5S9 | Rear searchlight switch |
| 5S10 | Brake light switch |
| 5V1 | Diode |
| 5V2 | Diode |
| 5V3 | Diode |

## Measurement and display devices

| | |
|---|---|
| 6A1 | Carbon brush monitor printed circuit board |
| 6A2 | Carbon brush monitor printed circuit board |
| 6A3 | Discharge indicator printed circuit board |
| 6A4 | Impulse transmitter printed circuit board |
| 6A5 | Start delay printed circuit board |
| 6A6 | Carbon brush monitor printed circuit board |
| 6B1 | Oil temperature sensor |
| 6B2 | Coolant temperature sensor |
| 6B3 | Fuel level sensor |
| 6B4 | Glow plug indicator sensor |
| 6B5 | Jetronik sensor |
| 6B6 | Jetronik air-flow sensor |
| 6B7 | Tachometer generator |
| 6B8 | Lambda sensor |
| 6B9 | Speed sensor |
| 6B10 | Tachometer generator |
| 6B11 | Coolant temperature sensor |
| 6B12 | Coolant level sensor |
| 6B13 | Lambda sensor |
| 6B14 | Coolant temperature sensor (rev. air duct) |
| 6B15 | Impulse transmitter for 6P4 |
| 6B16 | Start volume transmitter |
| 6B17 | Speed sensor for 1M1 |
| 6B18 | Carbon brush monitor for M2 |
| 6B19 | Carbon brush monitor for G1 |
| 6F1 | Fuse for indicator lights |

https://truckmanualshub.com/


| | |
|---|---|
| 6H1 | Coolant temperature light |
| 6H2 | Oil pressure warning light |
| 6H3 | Fuel level lamp |
| 6H4 | Glow filter indicator light |
| 6H5 | Air filter indicator light |
| 6H6 | Carbon brush indicator light for 1M1 |
| 6H7 | Carbon brush indicator light for 1M2 |
| 6H8 | Carbon brush indicator light for 2M1 |
| 6H9 | Carbon brush indicator light for 3M1 |
| 6H10 | General carbon brush indicator light |
| 6H11 | Brake fluid indicator light |
| 6H12 | Start indicator light |
| 6H13 | Catalytic converter indicator light |
| 6H14 | Motor blower indicator light |
| 6H15 | Engine temperature indicator light |
| 6H16 | Soot filter indicator light (gn) |
| 6H17 | Soot filter indicator light (rd) |
| 6H18 | Indicator light at 6 km/h |
| 6H19 | Mast vertical position indicator |

| | |
|---|---|
| 6K1 | Relay for oil pressure |
| 6K2 | Relay for oil pressure |
| 6K3 | Relay for coolant light |
| 6K4 | Relay for coolant light |
| 6K5 | Relay for hour meter |

| | |
|---|---|
| 6P1 | Operating hour meter |
| 6P2 | Operating hour meter |
| 6P3 | Discharge indicator |
| 6P4 | Milometer |
| 6P5 | Coolant temperature indicator |
| 6P6 | Oil temperature indicator |
| 6P7 | Oil pressure indicator |
| 6P8 | Fuel level indicator |
| 6P9 | Wheel base indicator |
| 6P10 | Speed indicator |
| 6P11 | Ammeter indicator |
| 6P12 | Discharge indicator/hour meter |
| 6P13 | Carbon brush wear indicator |

| | |
|---|---|
| 6S1 | Oil pressure warning switch |
| 6S2 | Air filter indicator switch |
| 6S3 | Oil pressure switch |
| 6S4 | Brake fluid switch |
| 6S5 | Motor blower monitoring switch |
| 6S6 | Engine temperature switch |
| 6S7 | Soot filter indicator switch |
| 6S8 | Reset switch for carbon brush wear indicator |
| 6S9 | Oil filter switch |

## Special functions

| | |
|---|---|
| 7A1 | Printed circuit board for parking brake signal transmitter |
| 7B1 | Lift mast sensor |
| 7F1 | Fuse |
| 7F2 | Fuse |
| 7H1 | Indicator light for 1S3 |
| 7H2 | Warning signal transmitter |
| 7K1 | Relay for warning signal |

https://truckmanualshub.com/


| | |
|---|---|
| 7K2 | Emergency cut-off contactor |
| 7K5 | Dead man relay (lift) |
| 7K6 | Dead man relay (traction) |
| 7K7 | Relay for seat contact |
| 7S1 | Seat contact switch |
| 7S2 | Emergency switch |
| 7S3 | Battery locking switch |
| 7S4 | Temperature switch |
| 7S5 | Temperature switch |
| 7S6 | Temperature switch |
| 7S7 | Temperature switch |
| 7S8 | Temperature switch |
| 7S9 | Temperature switch |
| 7S10 | Temperature time switch |
| 7S11 | External start switch |
| 7S12 | Warning signal switch |
| 7S13 | Dead-man switch |
| 7S14 | Emergency start switch |
| 7S15 | Switch for solenoid valve |
| 7V8 | Diode for solenoid valve |
| 7X1 | Pilot contact |
| 7X11 | Connector for external start |
| 7Y8 | Left solenoid valve (fork carriage) |
| 7Y9 | Right solenoid valve (fork carriage) |

## Automated functions

not assigned

## Miscellaneous

| | |
|---|---|
| 9A1 | Control unit for ignition |
| 9A2 | Shut-down solenoid printed circuit board |
| 9A3 | Jetronik control unit |
| 9A4 | Generator start/carbon brush monitor printed circuit board |
| 9A5 | Lambda control system control unit |
| 9A6 | Protective circuit printed circuit board |
| 9A7 | 2-pedal printed circuit board with shut-down device |
| 9A8 | 2-pedal printed circuit board with fuse |
| 9A9 | Soot burner control |
| 9A10 | Control unit heater |
| 9B1 | Thermocouple for soot burner |
| 9B2 | Temperature switch for heater |
| 9C1 | Capacitor |
| 9E1 | Spark plug |
| 9E2 | Spark plug |
| 9E3 | Spark plug |
| 9E4 | Spark plug |
| 9E5 | Spark plug |
| 9E6 | Spark plug |
| 9E7 | Spark plug |
| 9E8 | Spark plug |
| 9E9 | Ignition distributor |
| 9E10 | Heater blower |
| 9E11 | Defroster blower |
| 9E12 | Seat heater |
| 9E13 | Sheathed-element heater plug |
| 9E14 | Sheathed-element heater plug |

https://truckmanualshub.com/


| | |
|---|---|
| 9E15 | Sheathed-element heater plug |
| 9E16 | Sheathed-element heater plug |
| 9E17 | Sheathed-element heater plug |
| 9E18 | Auxiliary heater |
| 9E19 | Passenger seat heater |
| 9E20 | Defroster blower |
| 9E21 | Cigar lighter |
| 9E22 | Sheathed-element heater plug for soot burner |
| 9F1 | Fuse for lambda control system |
| 9F2 | Fuse for ignition |
| 9F3 | Fuse for charge controller |
| 9F4 | Fuse for starter |
| 9F5 | Fuse for 9E10 |
| 9F6 | Fuse for sheathed-element heater plugs |
| 9F7 | Fuse for seat heater |
| 9F8 | Fuse for radio |
| 9F9 | not used |
| 9F10 | not used |
| 9F11 | not used |
| 9F12 | Fuse for 12-volt starter |
| 9F13 | Fuse for soot burner |
| 9F14 | Fuse for soot burner |
| 9F15 | Fuse for soot burner |
| 9F16 | Fuse for 9K26 |
| 9F17 | Fuse for defroster |
| 9G2 | Generator |
| 9H1 | Indicator light for 9S3 |
| 9H2 | Generator indicator light |
| 9H4 | Indicator light for 9S4 |
| 9H5 | GREEN soot burner indicator |
| 9H6 | RED soot burner alarm |
| 9H7 | Soot burner diagnostic LED |
| 9H8 | Soot burner signal transmitter |
| 9K1 | External start contactor |
| 9K2 | Relay for 9M1 |
| 9K3 | Glow plug relay |
| 9K4 | Relay for ignition |
| 9K5 | Starter lockout relay |
| 9K6 | Starter lockout relay |
| 9K7 | Relay for 9E11 |
| 9K8 | Auxiliary relay for diesel mode |
| 9K9 | Auxiliary relay for diesel mode |
| 9K10 | Charging contactor |
| 9K11 | Auxiliary relay for diesel mode |
| 9K12 | Auxiliary relay for diesel mode |
| 9K13 | Auxiliary relay for 1A2 |
| 9K14 | Auxiliary relay for 1S9 |
| 9K15 | Relay for 9E20 |
| 9K16 | Relay for 9Y5 |
| 9K17 | Relay for 9M5/9M6 |
| 9K18 | Relay for S1 |
| 9K19 | Relay for 9Y4 |
| 9K20 | Relay for 9Y4 |
| 9K21 | Relay for soot burner operating indicator |
| 9K22 | Relay for soot burner operating indicator |
| 9K23 | Relay for soot burner lock |
| 9K24 | Relay for soot burner starter lockout |
| 9K25 | Current regulator for sheathed-element heater plug |

https://truckmanualshub.com/


9K26 Relay for 9H8
9K27 Relay for 9Y8

9L1 Throttle for charge controller

9M1 Starter
9M2 Wiper motor
9M3 Rear windscreen wiper motor
9M4 Defroster blower motor
9M5 Fan motor
9M6 Fan motor
9M7 Injection pump motor
9M8 Fuel pump
9M9 Control motor for lambda sensor
9M10 Windscreen washer motor
9M11 Rear window washer motor
9M12 Roof wiper motor
9M13 Blower for soot burner
9M14 not used
9M15 not used
9M16 Secondary fan elec. machine
9M17 ASM circulating pump

9R1 Rotational angle detector for control motor
9R2 Series resistor for external start system
9R3 Heater resistor
9R4 Heater resistor
9R5 Series resistor
9R6 Varistor
9R7 Series resistor
9R8 Series resistor for sheathed-element heater plug
9R9 Series resistor for sheathed-element heater plug
9R10 Series resistor for sheathed-element heater plug
9R11 Series resistor
9R12 Series resistor
9R13 Resistor
9R15 Series resistor for sheathed-element heater plug/soot burner

9S1 Wiper switch
9S2 Rear windscreen wiper switch
9S3 Switch for 9E10
9S4 Switch for seat heater
9S5 Switch for automatic charging
9S6 Temperature switch
9S7 Switch for 9E11
9S8 Left door contact switch
9S9 Right door contact switch
9S10 Switch for 9E20
9S11 Switch for soot filter
9S12 Bonnet switch
9S13 Switch for 9M12
9S14 Soot burner starting switch
9S15 Soot burner emergency cut-off

9T1 Ignition coil

9V1 Diode
9V2 Diode
9V3 Diode

9W1 Steering column slip ring

https://truckmanualshub.com/


| | |
|---|---|
| 9Y1 | Cold-start valve |
| 9Y2 | Idle stop valve |
| 9Y3 | Throttle valve solenoid |
| 9Y4 | Solenoid valve for gas tank |
| 9Y5 | Shut-down solenoid |
| 9Y6 | Actuator solenoid for automatic battery charging unit |
| 9Y7 | Start valve for catalytic converter |
| 9Y8 | Soot burner fuel injector |
| 9Z1 | Protective circuit for thermostatic switch |
| 9Z2 | Protective circuit for fan 9M5/9M6 |

https://truckmanualshub.com/

https://truckmanualshub.com/


## A


ABGASREINIGER (EXH. GAS PURIFIER) message . . . . . 142
ACCELERATOR message . . . . . 137
Accessories
Overview . . . . . 49
Accident recorder . . . . . 124
Adjusting the steering column . . . . . 59
After washing . . . . . 176
AIR FILTER message . . . . . 135
Assembling attachments . . . . . 103
Attachment
maintenance . . . . . 202
Attachments . . . . . 103 – 104
Control in general . . . . . 105
Controlling using multi-lever controls . . . . . 106
Fastening . . . . . 103
Overview . . . . . 49
Special risks . . . . . 14
Taking up a load . . . . . 107


## B


Battery
charging . . . . . 184
Checking the charge state . . . . . 184
Disposal . . . . . 7
Maintenance . . . . . 183
Battery acid . . . . . 33
BRAKE SENSOR message . . . . . 138


## C


C. U. R. data . . . . . 47
Cab . . . . . 112
Cab doors . . . . . 112
Carrying loading units . . . . . 91
Carrying out work on the hydraulic equipment . . . . . 167
Change direction of travel
Single-pedal operation with multiple lever version . . . . . 76
Changes to the forklift truck . . . . . 23
Check coolant concentration . . . . . 178
Check driver's seat . . . . . 200
Check lift cylinders and connections for leaks. . . . . 209
Checking
the toothed belt . . . . . 207
Checking play between fork carriage stop and run-out stop . . . . . 211
Checking the counterweight attachment . . . . . 204
Checking the engine mountings . . . . . 214
Checking the engine oil level . . . . . 54
Checking the exhaust gas system . . . . . 208
Checking the fork arms . . . . . 211
Checking the heating system for leaks . 208
Checking the wheel bearing . . . . . 214
Checking wheel fastenings . . . . . 192
Cleaning the electrical system . . . . . 175
Cleaning the truck . . . . . 174
Condition of the driveways . . . . . 73
Connections for attachments
Depressurising . . . . . 104
Consumables . . . . . 29
Battery acid safety instructions . . . . . 33
Coolant safety instructions . . . . . 33
Disposal . . . . . 34
Safety precautions for diesel fuel . . . . 30
Coolant . . . . . 33, 178
changing . . . . . 221
topping up . . . . . 178
COOLANT LEVEL message . . . . . 140
COOLANT TEMP message . . . . . 141
Copyright and proprietary rights . . . . . 4
Coupling
the trailer . . . . . 117
Crane lifting
Attaching lifting slings . . . . . 145
Determining loading weight . . . . . 145
Loading truck . . . . . 147
Crane loading . . . . . 145
Cross-references . . . . . 5
Cruise control . . . . . 113

https://truckmanualshub.com/



Currentness of manual . . . . . 4

## D

Damage . . . . . 24
Dangerous locations . . . . . 73
Defects . . . . . 24
Definition of directions . . . . . 6
Depositing and retrieving loading units . 100
Depressurising
  Multi-lever operation . . . . . 105
Diagram of functional sequences . . . . . 6
Diesel engine emissions
  checking . . . . . 26
Diesel fuel . . . . . 30, 163
  filling up . . . . . 149
  Winter operation . . . . . 163
Dimension of driveways . . . . . 72
Dimensions . . . . . 226
Direction indicators . . . . . 111
Direction of travel/flasher/fault multi-function display . . . . . 45
Display and operating unit . . . . . 44
  Additional displays . . . . . 120
  Additional settings . . . . . 124
  Display settings and changes . . . . . 120
  Displays . . . . . 120
  Fleet Manager functions . . . . . 123
  Normal displays . . . . . 120
  Resetting the daily number of kilometres and daily driving time . 122
  Setting the language . . . . . 122
Disposal
  Battery . . . . . 7
  Units . . . . . 7
Documentation scope . . . . . 3
Drive axle
  check for leaks . . . . . 203
  Check oil level . . . . . 203
  Maintenance . . . . . 203
Driver's compartment
  Single pedal version . . . . . 42
Driver's seat MSG 65/MSG 75
  Adjust lumbar support . . . . . 58
  Adjusting . . . . . 56
  Adjusting backrest extension . . . . . 58
  Adjusting the backrest . . . . . 57
  Adjusting the seat suspension to your weight . . . . . 57
  Moving . . . . . 56
  Switching seat heater on and off . . . . 59
Drivers . . . . . 20
Driveways . . . . . 72 – 73
Driving
  on ascending and descending slopes . . . . . 101
  Single-pedal operation with multiple lever version . . . . . 74
Driving on lifts . . . . . 101
Driving on loading bridges . . . . . 102
Driving on slopes . . . . . 72
Driving with cruise control . . . . . 113

## E

Eberspächer exhaust gas cleaners
  Replacing the fuel filter . . . . . 208
Eberspächer particle filters
  servicing . . . . . 187
EC declaration of conformity . . . . . 2
EC mark of conformity . . . . . 2
Emergencies . . . . . 71
Emergency lowering . . . . . 87
Emissions . . . . . 35
  Battery . . . . . 37
  Diesel engine emissions (DME) . . . . . 36
  Exhaust gases . . . . . 36
  Heat . . . . . 36
  Noise emissions . . . . . 35
  Vibrations . . . . . 35
Engine oil
  changing . . . . . 204
Engine oil filter
  changing . . . . . 204
Error code table . . . . . 126

https://truckmanualshub.com/


Error messages
Diagram . . . . . 125

## F

Filling the washer system . . . . . 55
Flashing light . . . . . 109
Fleet Manager functions . . . . . 123
Floorplate . . . . . 172
Fork extension . . . . . 86
Forwards motion
Single-pedal operation with multiple lever version . . . . . 75
Fuel filter
Drain water . . . . . 180
Functional sequences . . . . . 6
Fuse assignment
Additional equipment . . . . . 232
Main fuse holder . . . . . 231

## G

Gear lubricant oil
changing . . . . . 213
General . . . . . 2

## H

Hazard area . . . . . 91
Hazard warning system . . . . . 110
Hazards and countermeasures . . . . . 16
Heater . . . . . 113
Hydraulic circuit diagram . . . . . 234
Hydraulic fluid . . . . . 32
Hydraulic system
Bleeding lift cylinders . . . . . 220
Changing the hydraulic oil filter . . . . 217
Check oil level . . . . . 186
Checking for leaks . . . . . 186
Maintenance . . . . . 186
Replace hydraulic oil . . . . . 217
Venting the tilt cylinder . . . . . 220

## I

Impermissible use . . . . . 10
Indicator and operating unit
Setting the date or time . . . . . 121
Information regarding performing maintenance . . . . . 156 – 157
Instructions for washing . . . . . 174
Insulation test . . . . . 27
Insurance coverage on company premises . . . . . 23
Intervals for maintenance and inspection . . . . . 159
Issue date of manual . . . . . 4

## J

Jump starting . . . . . 147

## L

Label locations
Overview . . . . . 46
Lift mast
Lubricating the roller track . . . . . 198
Lift mast versions . . . . . 81
Lifting system
Controls . . . . . 84
Maintenance . . . . . 209
Multi-lever operation . . . . . 85
Lifting system variants . . . . . 81
Lighting . . . . . 108
Load
taking up . . . . . 94
Load chains
checking . . . . . 195
Cleaning . . . . . 175
Lubrication . . . . . 195
Maintenance . . . . . 195
Loads
transport . . . . . 97
Lubricating joints and controls . . . . . 192
Lubricating the parking brake lever bearing and ratchet . . . . . 204

## M

Maintenance and lubrication . . . . . 157
Maintenance data table . . . . . 165

https://truckmanualshub.com/


Maintenance during the breaking-in period . . . . . 177
Maintenance plan . . . . . 159
Maintenance points overview . . . . . 158
Maintenance work for which no special qualifications are necessary . . . . 156
Malfunction during a lifting operation . . . . 82
Mast bearings
Checking tightening torque . . . . . 195
Lubrication . . . . . 195
Maintenance . . . . . 195
Measures for prolonged shutdown, storage of truck . . . . . 151
Medical equipment . . . . . 25
Message
BREMSE ANZIEHEN (APPLY HANDBRAKE!) . . . . . 135
LOWER FORKS . . . . . 136
REFERENCE LIFT . . . . . 137
SAFETY BELT . . . . . 130
SITZSCHALTER (SEAT SWITCH) . 132
Mini-console . . . . . 45
Misuse of safety devices . . . . . 24
MOT/GEN-TEMP message . . . . . 139
Multi-lever operation
Lift, lower fork carriage . . . . . 85
Tilt mast . . . . . 85

## N

Nameplate . . . . . 46
Neutral position
Single-pedal operation with multiple lever version . . . . . 77

## O

OIL PRESSURE message . . . . . 140
Oils . . . . . 29
Open the motor hood. . . . . 53
Operating company . . . . . 20
Operating materials . . . . . 165
Quality and quantity . . . . . 162
Operating the service brake . . . . . 77
Operating the signal horn . . . . . 64
OVERHEATING message . . . . . 141

## P

Packaging . . . . . 7
Park truck secured . . . . . 150
Parking brake
Adjusting the switch . . . . . 204
Check adjustment . . . . . 183
Particle filter
Operational requirements . . . . . 27
Place of use . . . . . 11
Prior to taking up a load . . . . . 90
Prohibition on use by unauthorised persons . . . . . 21
Proper use . . . . . 10

## Q

Qualifications of personnel . . . . . 156

## R

Radiator
Checking for leaks . . . . . 178
cleaning . . . . . 178
Raising and jacking up . . . . . 168
Re placing the air filter insert . . . . . 181
Rear cover . . . . . 173
Removing the lift mast . . . . . 170
Replacing
the fuel filter . . . . . 207
the toothed belt . . . . . 215
Replacing fuses . . . . . 200
Resetting the daily number of kilometres and daily driving time . . . . . 122
Residual hazards, residual risks . . . . . 13
Restraining belt . . . . . 64
Fastening . . . . . 65
Fastening on a steep slope . . . . . 65
Malfunctions due to cold . . . . . 66
releasing . . . . . 66
Retrofitting . . . . . 23
Returning to service after storage . . . . . 152

https://truckmanualshub.com/


Reverse motion
Single-pedal operation with multiple lever version . . . . . 76
Reversible fork arms
checking . . . . . 212
Reversible forks . . . . . 86
Ribbed V-belt
Checking condition and tension . . . . 206
Rights, duties and rules of behaviour for the driver, . . . . . 21
Risk for employees . . . . . 18
Rules for driveways and the working area, . . . . . 73

## S

Safety check . . . . . 26
Safety devices . . . . . 167
Safety instructions for maintenance
Raising and jacking up . . . . . 168
Working at the front of the forklift truck . . . . . 170
Safety instructions for working on the lift mast
Removing the lift mast . . . . . 170
Securing lift mast against tilting back . . . . . 170
Securing the telescopic lift mast . . . . 170
Securing the triple lift mast . . . . . 171
Safety regulations for maintenance
Carrying out work on the hydraulic equipment . . . . . 167
General information . . . . . 167
Safety devices . . . . . 167
Working on electrical equipment . . . 167
Safety regulations for servicing
Set values . . . . . 168
Safety regulations when driving . . . . . 69
Safety regulations when handling loads . 89
Sample graphics . . . . . 6
Securing . . . . . 144
Securing lift mast against tilting back . . . 170
Securing the telescopic lift mast . . . . . 170
Securing the triple lift mast . . . . . 171
Service intervals . . . . . 159
Servicing restraining belt
Replacement after accident . . . . . 199
Servicing the restraining belt . . . . . 198
Checking the restraining belt . . . . . 199
Cleaning the belt . . . . . 199
Set values . . . . . 168
Setting forks . . . . . 91
Setting the date . . . . . 121
Setting the language . . . . . 122
Setting the load chains
Tele mast . . . . . 197
Triplex mast . . . . . 197
Setting the time . . . . . 121
Setting the traction programs . . . . . 68
Shutdown . . . . . 151
Side windows . . . . . 112
Signal terms . . . . . 5
Spare Parts . . . . . 162
Special equipment . . . . . 48
Special risks . . . . . 14
Specialist . . . . . 20
Start the engine . . . . . 62
Steering . . . . . 80
Steering axle
Checking . . . . . 192
Checking the hoses for leaktightness . . . . . 194
Lubrication . . . . . 194
Maintenance . . . . . 192
STEERING message . . . . . 139
Steering system
Checking function . . . . . 68
Storage . . . . . 152
Stub axle nuts
Checking tightening torque . . . . . 194
SURVEILLANCE message . . . . . 138

## T

Technical data
Dimensions . . . . . 226
Time of maintenance . . . . . 157

https://truckmanualshub.com/



Tow coupling
manual . . . . . 117
Towed load . . . . . 116
Towing . . . . . 144
Proper usage . . . . . 10
Trailer
Towing . . . . . 119
Transport . . . . . 143
Transport of swinging loads . . . . . 93
Transporting pallets . . . . . 92
Travel direction switch
Single-pedal operation with multiple lever version . . . . . 75
Turning on the key switch . . . . . 60
Tyres
Safety principles . . . . . 25

## U

Use of working platforms . . . . . 12
Use wheel chocks . . . . . 151

## V

Variants . . . . . 48
VDI datasheet . . . . . 227
Vehicle identification number . . . . . 47
Visual inspections . . . . . 52

## W

Warning regarding non-original parts . . . 24
Washing outside of truck . . . . . 174
Wearing parts . . . . . 162
Wedging . . . . . 143
Wheels and tyres
Checking air pressure . . . . . 191
Checking condition and wear of the tyres . . . . . 191
Checking wheel fastenings . . . . . 192
Maintenance . . . . . 191
Technical data . . . . . 230
Testing the condition . . . . . 55
Windscreen wiper/-washer . . . . . 111
Working at the front of the forklift truck . . 170
Working materials
Safety information Oils . . . . . 29
Safety precautions for hydraulic fluid . 32
Working on electrical equipment . . . . . 167

https://truckmanualshub.com/

https://truckmanualshub.com/

Still GmbH
Berzeliusstrasse 10
D-22113 Hamburg

Ident no. 171650 - V2 EN