https://truckmanualshub.com/

PDS30
Electric Stacker
Operation Manual

WARNING Read and observe all warnings on this unit before operating it

WARNING **DO NOT** operate this equipment unless all factory installed guards and shields are properly secured in place

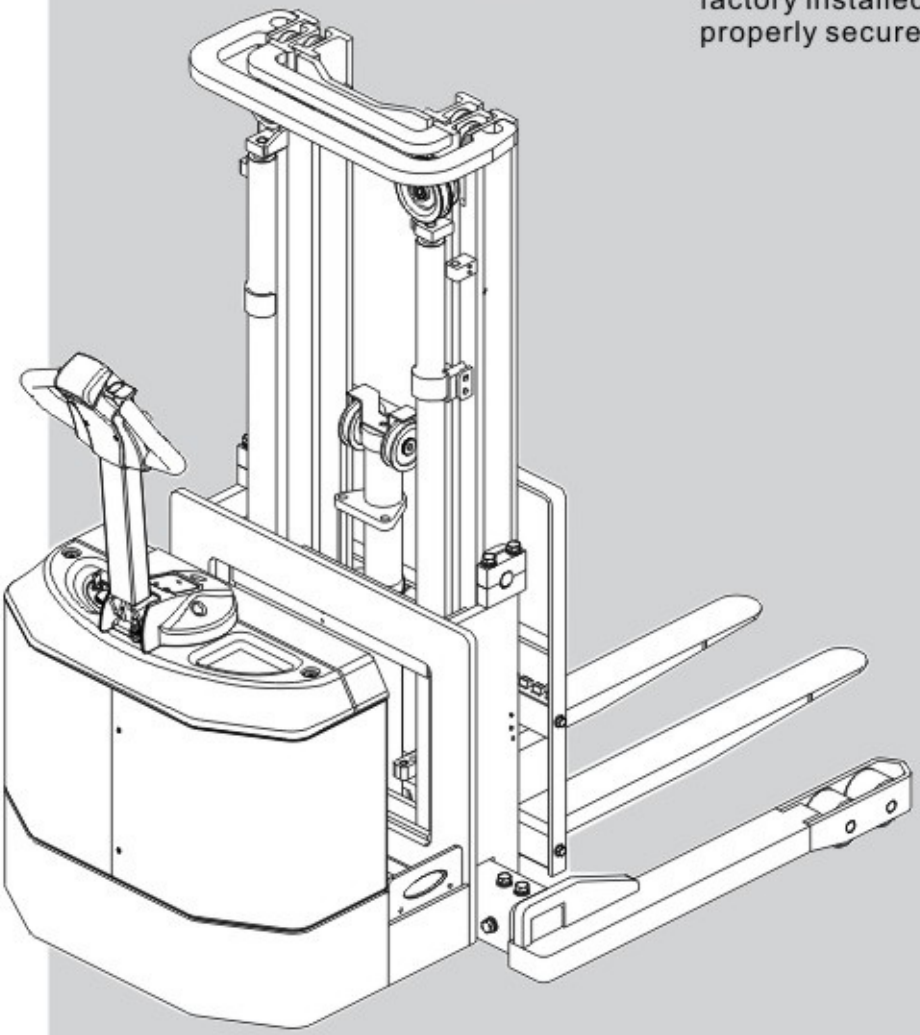

CE CERTIFICATE

EP EQUIPMENT CO.,LTD.
XIAQUAN,DIPU,ANJI,ZHEJIANG CHINA

https://truckmanualshub.com/

Catalogue

Correct use and application of the truck..... 4
A. Truck description
1 Description of application..... 1
2 Assembly groups..... 2
3 Technical data..... 3
3.1 Performance data..... 3
3.2 Dimensions..... 3
3.3 Conditions for application..... 5
4 Truck identification label..... 5
B Operation
1 Safety regulations for the operation of the floor conveyor..... 6
2 Description of controls and indicating instruments..... 7
3 Putting vehicle in operation..... 8
4 Workking with the truck..... 9
4.1 Safety regulations for operating mode drive..... 9
4.2 Driving,steering,braking..... 10
4.3 Picking up or lowering load units..... 12
5 Safe parking of the truck..... 12
6 Indicating assembly..... 13
6.1 Battery discharge indicator..... 13
6.2 The hours of operation that truck has already performed（2）.....14
6.3 Switching-on test..... 14
7 Fault location..... 14
C. Battery-servicing,recharging,replacing
1 Safety regulations governing the handling of lead-acid batteries..... 15
2 Battery types..... 16
3 Charging the battery..... 16
4 Battery storage..... 16
5 Removing and installing the battery..... 17
D. Maintenance of the truck
1 Operational safety and protection of the environment.....19
2 Safety regulations for repair..... 19
3 Maintenance and service..... 20
4 Maintenance checklist..... 21
5 Lubrication schedule..... 24
5.1 Operation material..... 25
6 Notes on maintenance..... 25
6.1 Preperation of the truck for servicing and maintenance operation.....25
6.2 Removing rolling cover and upper cover.....25
6.3 Removing the hood of the driving equipment..... 26
6.4 Exchanging the driving wheels..... 26
6.5 Check hydraulic oil level..... 26

https://truckmanualshub.com/

6.6 Check the transmission oil level..... 26
6.7 Flushing and exchanging the coarse sieve..... 27
6.8 Checking the electric fuses..... 28
6.9 Recommission the truck..... 28
7 Taking the floor conveyor out of service..... 29
7.1 Operations to be performed prior to decommissioning..... 29
7.2 Measures to be taken during decommissioning..... 29
7.3 Recommissioning the truck..... 29
8 Safety checks to be performed at regular intervals and following any unusual incidents..... 30
9 Final de-commissioning,disposal..... 30

Correct use and application of the truck

The “Guidelines for the Correct Use and Application of Industrial Trucks” (VDMA) are included in the scope of delivery for this truck. The guidelines are part of these operating instructions and must always be heeded. National regulations are fully applicable.

The fork-lift truck described in these operating instructions is a truck that is suitable for lifting and transporting loads. It must be used, operated and maintained according to the information in these operating instructions. Any other uses are outside the design envelope and can lead to injury to persons or damage to equipment and property.Above all, overloading caused by excessively heavy or unbalanced loads must be avoided. The max. admissible load to be picked up is indicated on the identification plate or load diagram label shown on the truck. The fork-lift truck must not be operated in spaces subject to fire or explosion hazards, or in spaces where corrosive or very dusty atmospheres prevail.

Duties of the user: A “user” within the meaning of these operating instructions is defined as any natural or legal person who either uses the fork-lift truck himself, or on whose behalf it is used. In special cases (e.g. leasing or renting), the user is considered the person, who, in accordance with existing contractual agreements between the owner and the user of the fork-lift truck, is charged with the observance of the operating duties.

The user must ensure that the truck is not abused and only used within its design limits and that all danger to life and limb of the operator, or third parties, is avoided. In addition to this, it must be ensured that the relevant accident prevention regulations and other safety-related provisions, as well as the operating, servicing and maintenance guidelines, are observed. The user must also ensure that all persons operating the truck have read and understood these operating instructions.

If these operating instructions are not observed the warranty becomes void. The same applies if improper works are carried out at the device by the customer and/or third parties without permission of our Customer Service.

Mounting of attachments: The mounting or installation of any attachments which will interfere with, or supplement, the functions of the truck is permitted only after written approval by the manufacturer has been obtained.If necessary the approval of local authorities has to be obtained. Any approval obtained from local authorities does not, however, make the approval by the manufacturer unnecessary.

https://truckmanualshub.com/

A. Truck description

1 Description of application

The truck is a four-wheel electric lift truck with control shaft and controlled drive wheel.

It is conceived for lifting and transporting palleted goods on level ground.

The nominal load capacity can be found on the identification label.

The load capacity in relation to lifting height and load centre distance is specified on the load capacity label.

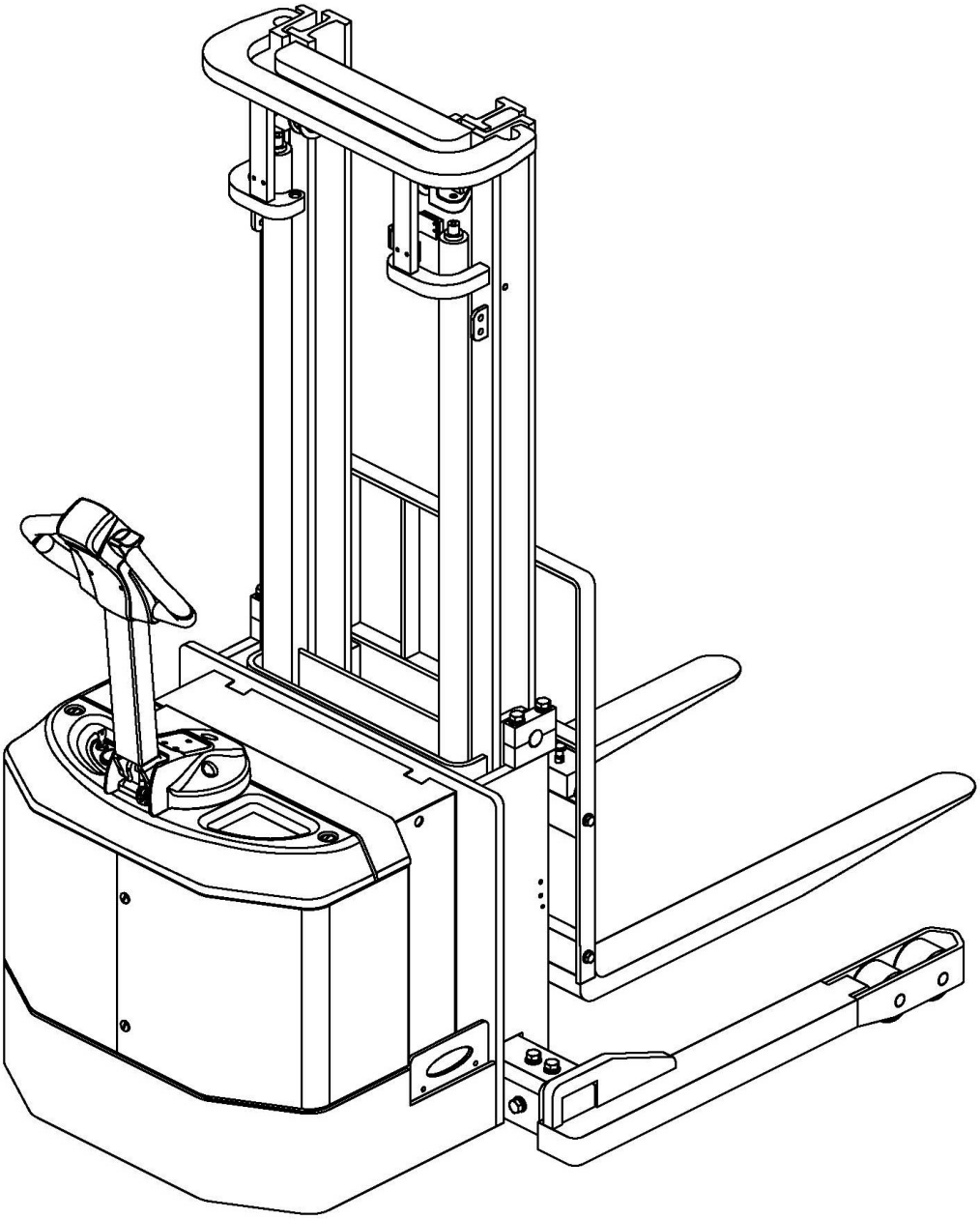

https://truckmanualshub.com/

2 Assembly groups

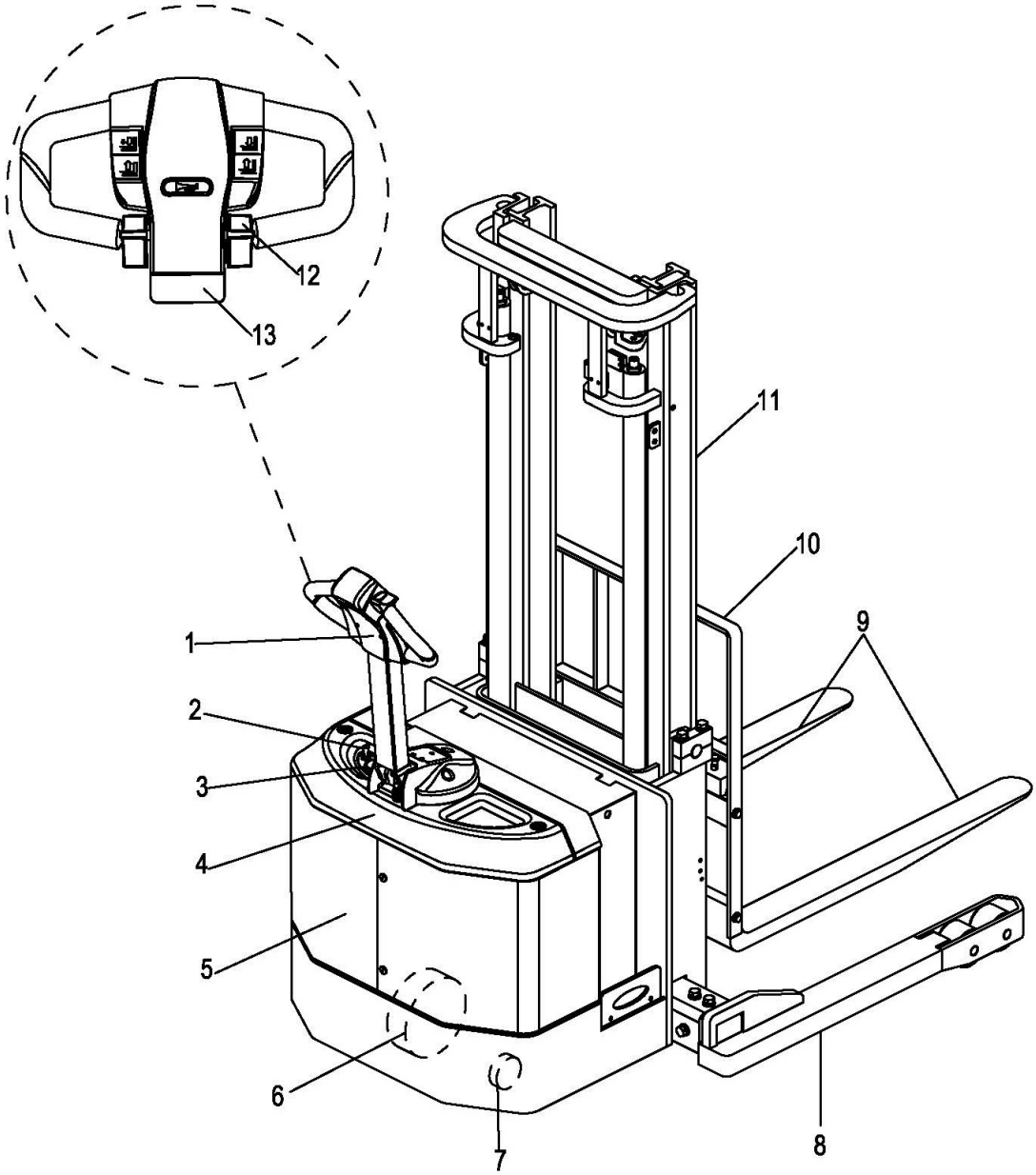

Number	Description	No.	Description
1	Control shaft with control shaft head Drive wheel	8	Wheel arm Protective pane
2	Key switch	9	Lifting device
3	Combined instrument (battery discharge monitor and operating hour meter)	10	Load protection screen
4	Up Cover	11	Hoist frame
5	Down Cover	12	Driving regulator
6	Driving Wheel	13	Collision-guard button
7	Supporting Wheel		

3 Technical data

Sepecification of technical datas are according the VDI 2198 . Technical modifications and supplements are reserved.

3.1 Performance data

	Description	PDS30	PDS40	
Q	Load capacity	3000	4000	lb
	Travel speed with / without load	3.11/3.42	3.42/3.73	mp/h
	Lifting speed with / without load	20.1/36	25.4/46	fpm
	Lowering speed with / without load	52/34	52/40	fpm
	Gradeability full load /no load	6/10	6/10	%

3.2 Dimensions

	Name		PDS30	PDS40	
h3	Lift		127.4	102.4/124.4/140	in
h2	Free Lift		6	6	in
h1	Collapsed Height		83	72/83/90.7	in
h4	Extended Height		h3+36	140/162.4/177.7	in
h14	Tiller Arm in Driver		40.3/57	39/ 59	in
h8	Outrigger Height		4	4	in
h13	Lowerd Fork Height		3	3	in
	Power Unit Height		36.3	36.3	in
	Fork Lengths		42	42	in
	Fork Dimensions		3.9×1.6	3.9×1.8	in
b5	Width Across Forks		10-31.5	10-30.7	in
	Head Length		36	36	in
y	Wheelbase		52	81.6	in
L1	Overall Lenghth		75.8	57.4	in
b4	Inside Straddle		42-50	42	in
	Overall Width	Front	33.46	33.46	in
		Rear	B4+8	1270	in
b3	Fork Carriage Width		32	50	in
RWa	Turning Radius		60.8	65	in
	Battery Compartment		9.1×32	31.9×13.2	in

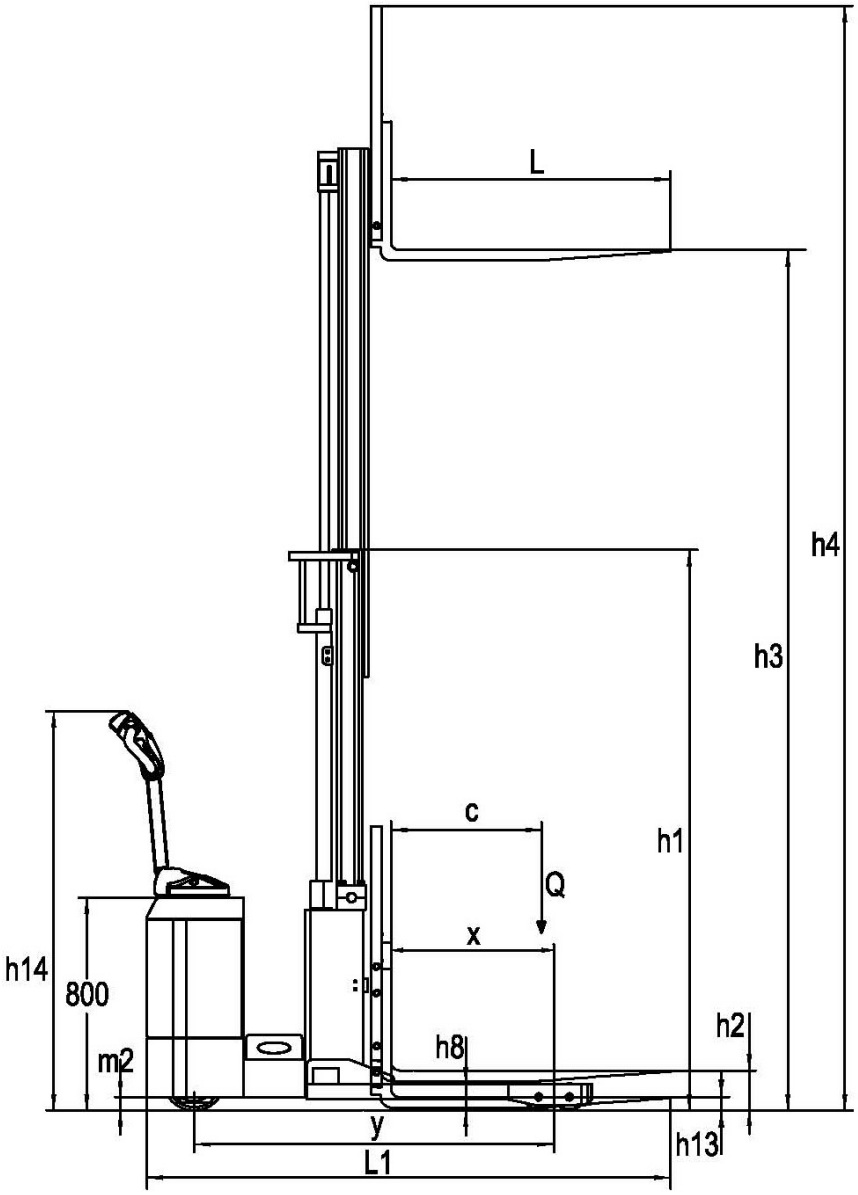
L
h4
h3
h1
c
Q
x
h14
800
h2
h8
m2
y
h13
L1

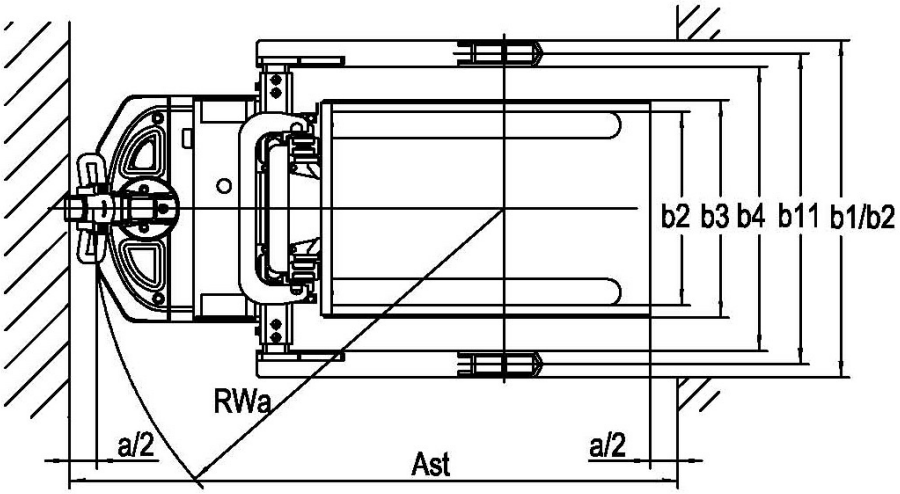
b2 b3 b4 b11 b1/b2
RWa
a/2
Ast
a/2

3.3 Conditions for application

Ambient temperature:
- during operation: 5 C to 40 C

Industrial trucks must be specially equipped and approved for continuous use in environments with temperatures below 5 °C or in cold stores respectively with extreme temperatures or humidity changes.

4 Truck identification label

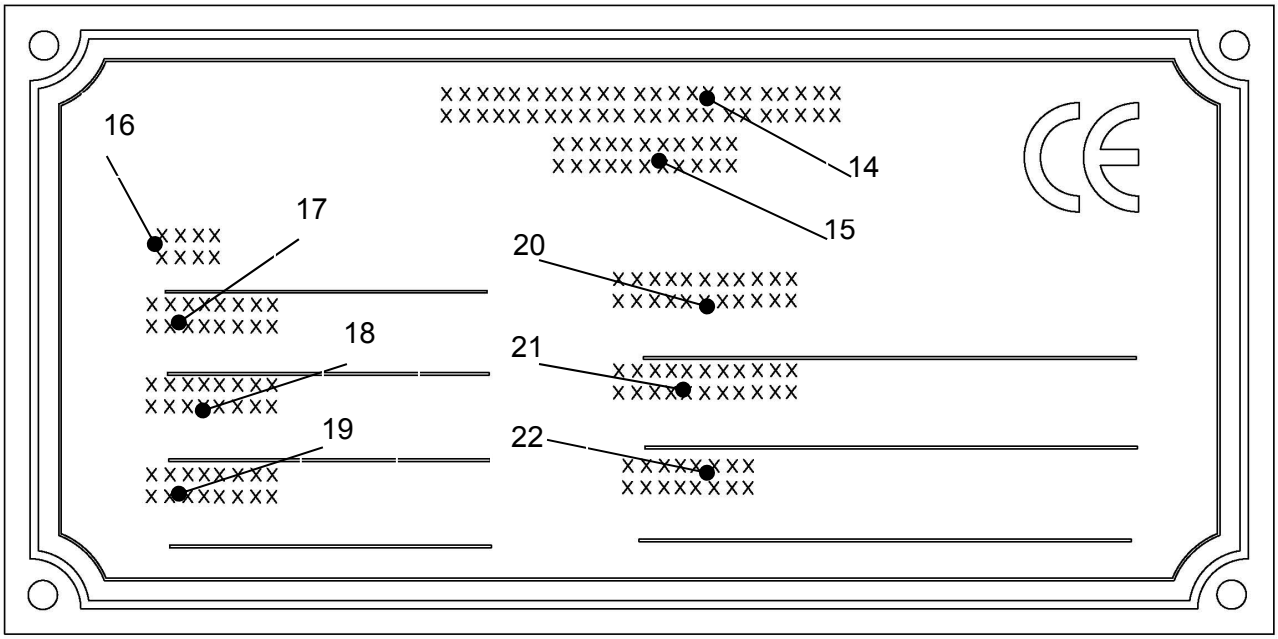

Number	Description	Number	Description
14	Manufacturer	19	length of the forks（mm）
15	Type name	20	Battery capacity recommended（Ah）
16	Type	21	Empty weight without battery（kg）
17	Rated capacity (kg)	22	Serial No.
18	width of the forks(mm)		

In the event of queries relating to the truck or spare part orders, please state the serial no. (22) of the truck.

B Operation

1 Safety regulations for the operation of the floor conveyor

Driving licence:： The floor conveyor must only be operated by persons who have been adequately trained and have proved to the persons in charge or their representatives the ability to handle the truck correctly and who have been explicitly entrusted with the operation of the truck.

Rights, obligations and behavioural rules for the driver: The driver must have been informed about his rights and duties, must have been trained in the operation of the truck and must be familiar with these operating instructions. All necessary rights must be granted to him.If the floor conveyor is to be accompanied by a second person, it is required to wear protective shoes.

Operation through unauthorised persons is prohibited: The driver is responsible for his truck during working time. He must forbid unauthorised persons to drive or operate the truck. Persons may neither be transported nor lifted.
Damages and defects: Damages or defects noted on the truck or on the attachments must immediately be brought to the notice of the person in charge. Trucks that cannot be safely operated (e.g. due to worn tires or defective brakes) must not be used until they have been properly repaired.

Repairs: Without specific training and express authorisation the driver is not allowed to perform any repairs or modifications on the truck. Under no circumstances must the driver change the setting of switches or safety installations, or render them ineffective

Danger zone: The danger zone is that area in which persons are endangered by driving or lifting movements of the floor conveyor, its load lifting devices (e.g. fork tines or attachments) or the load. Also the area in which the load may fall down or in which a operating device may be lowered or fall down belongs to this area. Unauthorised persons must be told to leave the danger area. The driver must give a warning signal, whenever a situation presenting danger to persons might develop.The truck must immediately be brought to a standstill, if persons, although asked, do not leave the danger area.

Safety devices and warning labels: The safety devices, warning labels and warning notes described in the present operating instructions must always be heeded.

https://truckmanualshub.com/

2 Description of controls and indicating instruments

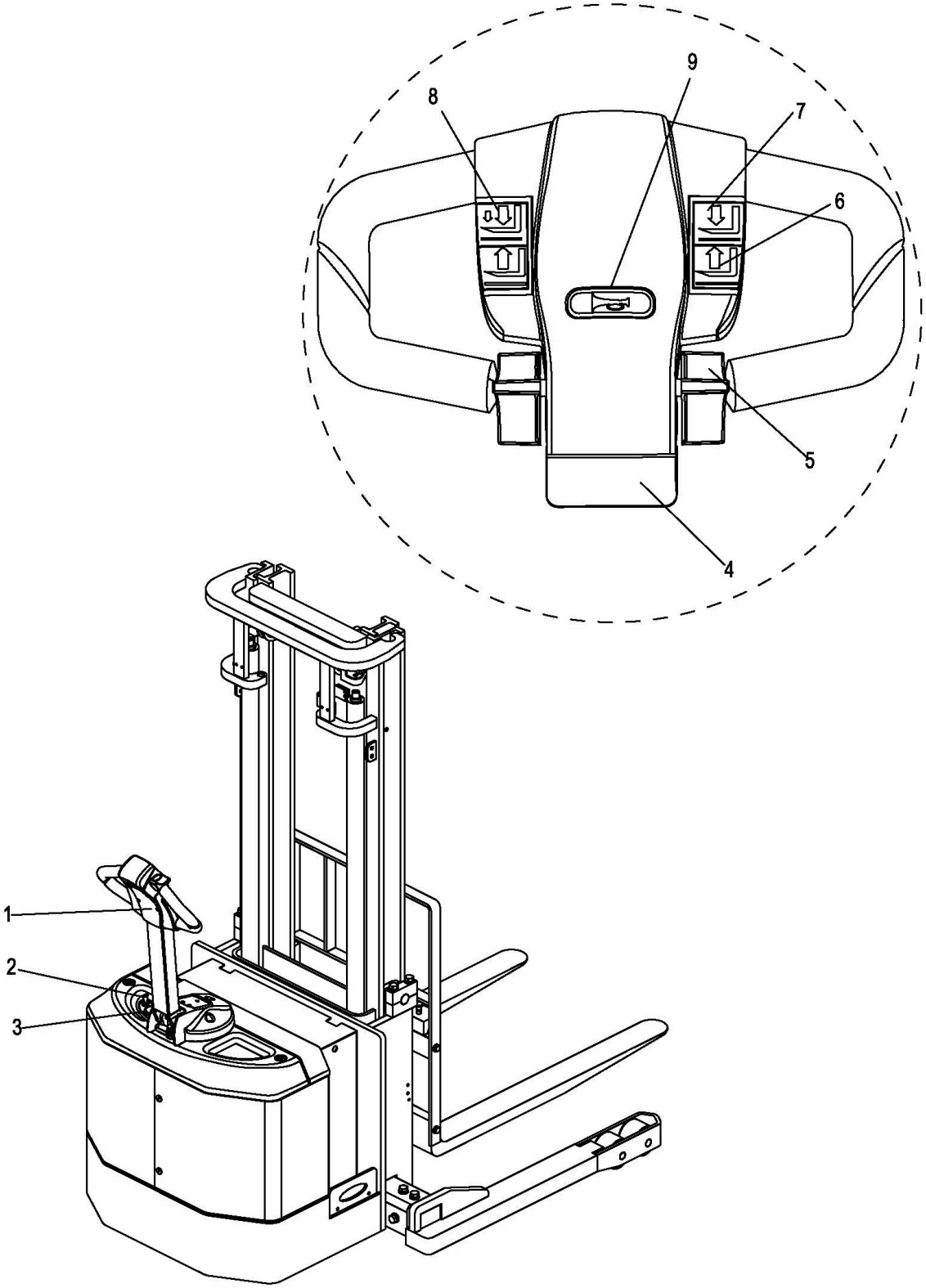

No.	Controls or indicating instrument	Function
1	Control shaft	Steering and bracking the truck
2	Key switch	Switches the control current on and off.When the key is removed from the key switch, the truck cannot be operated by unauthorised persons.
3	Coulometer	Indicates the remaining capacity of the battery and the hours of operation that truckhas already performed
4	Collision-guard button	Truck drives away from the operator and stops.
5	Driving regulator	Controls the driving speed and direction
6	Button-Lifting	Lifting Fork
7	Button -Lowering	Slow lowering fork
8	Button -Lowering	Quick lowering fork
9	Button- warning signal	Trigger warning signal.

3 Putting vehicle in operation

Before starting or operating the truck, or before lifting any loads, the driver has to make sure that nobody is within the danger area.

Checks and actions before routine start-up

Visual inspection for damages of the whole truck (especially tyres and load carrying devices).

Visual inspection of battery fixing and cable connections.

Starting up the truck

Pull out master switch (2).

Put key into the key switch (2) and turn right until stop to position "I".

The combined instrument (3) indicates the available battery capacity.

Check function of horn (9).

Check control shaft (1) for braking and driving function (see section 4.2).

The truck is now ready for operation.

4 Workking with the truck

4.1 Safety regulations for operating mode drive

Routes and working areas ： Only such lanes and routes that are specially allocated for truck traffic may be used. Unauthorised third parties must stay away from the working area. Loads may only be stored at places specially provided for this purpose.

Driving the vehicle： The driver must choose a driving speed suitable for the local conditions.The truck must be driven at slow speed when negotiating bended or narrow passages,when passing through swing doors and at blind spots. The driver must always keep an adequate braking distance between his truck and the vehicle in front and he must be in control of the floor conveyor at all times. Sudden stopping (except in emergencies), rapid U-turns and overtaking at dangerous or blind spots is not permitted.Leaning or gripping out of the working and operating range is prohibited.

Visibility during driving:The driver must look into the driving direction and have a sufficient overview of the driving route. If load units are transported which are obstructing the driver's view,the floor conveyor is to be driven with the load poiting to the back.If this is not possible,a second person must give suitable warnings.

Driving on slopes:Driving on slopes or descents is only permitted,if they are defined as traffic routes and if the surface is clean and suitable for driving.In addition,these routes must conform to the regulations for safe driving as defined in the technical truck specifications. Loads must always be carried at that end of the truck facing uphill. U-turns,cutting obliquely over slopes or inclines and parking of the truck on slopes or inclines is not permitted.Inclines must only be negotiated at slow speed with the driver ready to brake at any moment.

Driving in lifts or on loading platforms:Lifts and loading platforms must only be used,if they are of adequate load bearing capacity,if suitable and if authorized by the user of the truck for truck traffic .The truck must enter lifts with the load in front and must take up a position which does not allow it to come into contact with the walls of the lift shaft.Persons riding in lift together with the truck must only enter the lift after the truck has come safely to a standstill,and must leave the lift before the truck.

Requirements for the load to be transported:Only loads that have been securely fastened according to the regulations may be transported.

Never transport loads that have been stacked higher than the top of the fork carrier or the load backrest.

4.2 Driving,steering,braking

Note ： It is not admissible to stay on the vehicle during driving.

Emergency stop

When the control shaft is released,the truck is compulsory braked (emergency stop)-the control shaft automatically swivels into the upper braking range(B).

If the control shaft swivels only slowly into the braking position,it is required to perform troubleshooting measures.For example, the return spring must be exchanged!

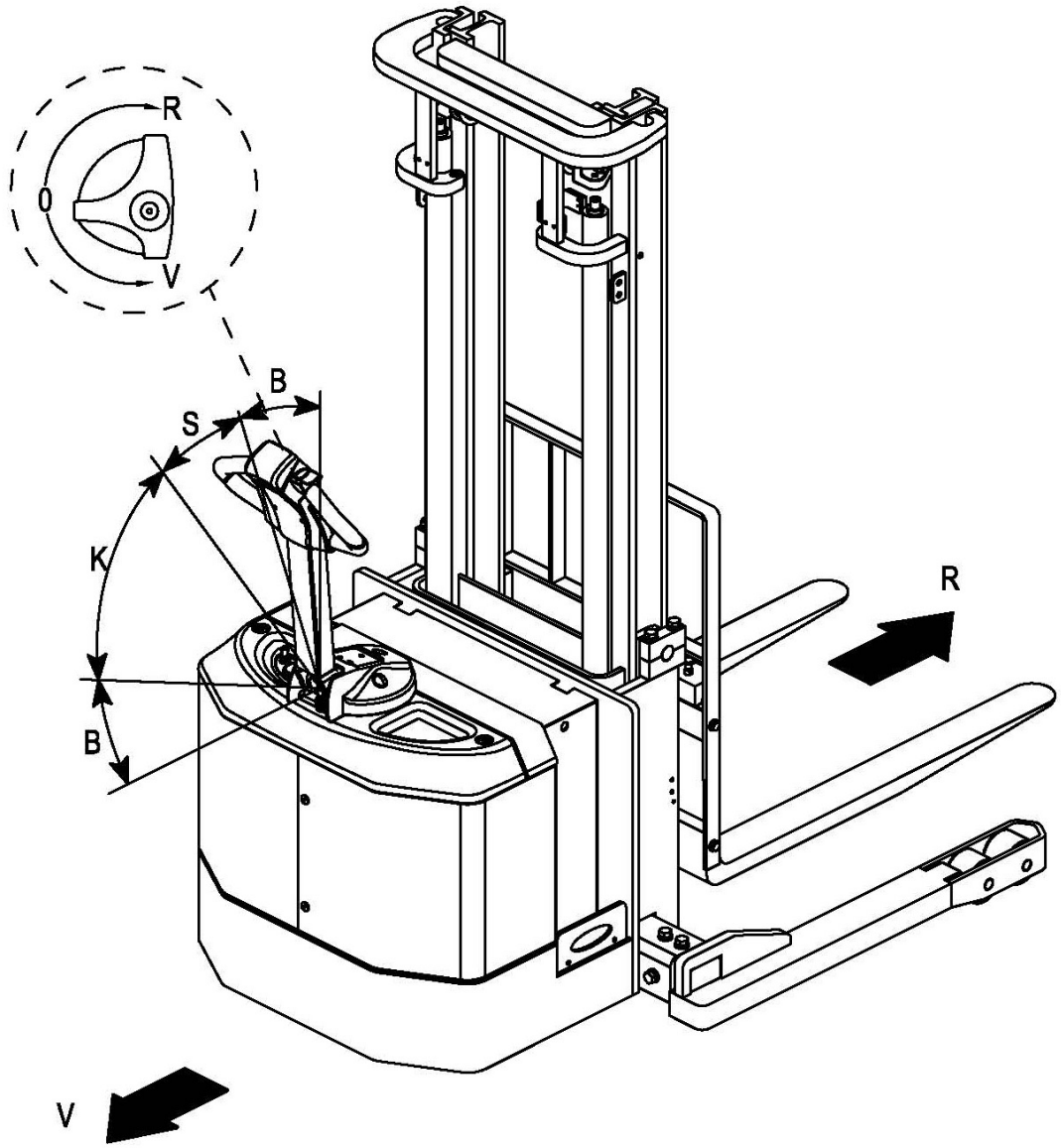

Driving

Note ： Don’t drive the truck unless the hoods are closed and locked in the stipulated manner.

Driving in low speed

Push the control shaft into the slow speed range(S)and set the driving switch to the desired driving direction(front or back).The bigger angle it swivels,the higher speed will it get.

Driving in high speed

Push the control shaft into the quick speed range(k)and set the driving switch to the desired driving direction(front or back). The bigger angle it swivels,the higher speed will it get.

It will get different speed though the switch swivels the same angle in the different range,the speed in the quick range(K) is quicker than in the slow range(S).

Steering

– Turn the control shaft to the left or right(1)。

Braking

The braking effect of the truck is mainly depending on the road surface. This must be taken into account by the driver for his driving behavior.

Braking with the dynamic：

–Swivel control shaft (1) upwards or downwards into one of the braking ranges(B).
It’s the roll-off brake,if it’s deactivated,the mechanical brake is
available.

Braking with the counterflow brake：

– Turn driving switch (5) into the opposite driving direction until the truck comes to a opposite direction.

Driving on slopes

The load must be transported pointing towards the mountain!
Securing the truck against "rolling downhill":

If the driving switch is set to zero, the service brake is automatically triggered when the truck starts to roll downhill (the control system detects the unintended movement of the truck). The driving switch can be used to release the service brake and to select the desired driving speed and direction.

4.3 Picking up or lowering load units

Before a load unit is picked up, the driver has to make sure that it is properly palletized and does not exceed the permitted bearing capacity of the truck.

Drive the truck with the fork tines as far as possible below the load unit.

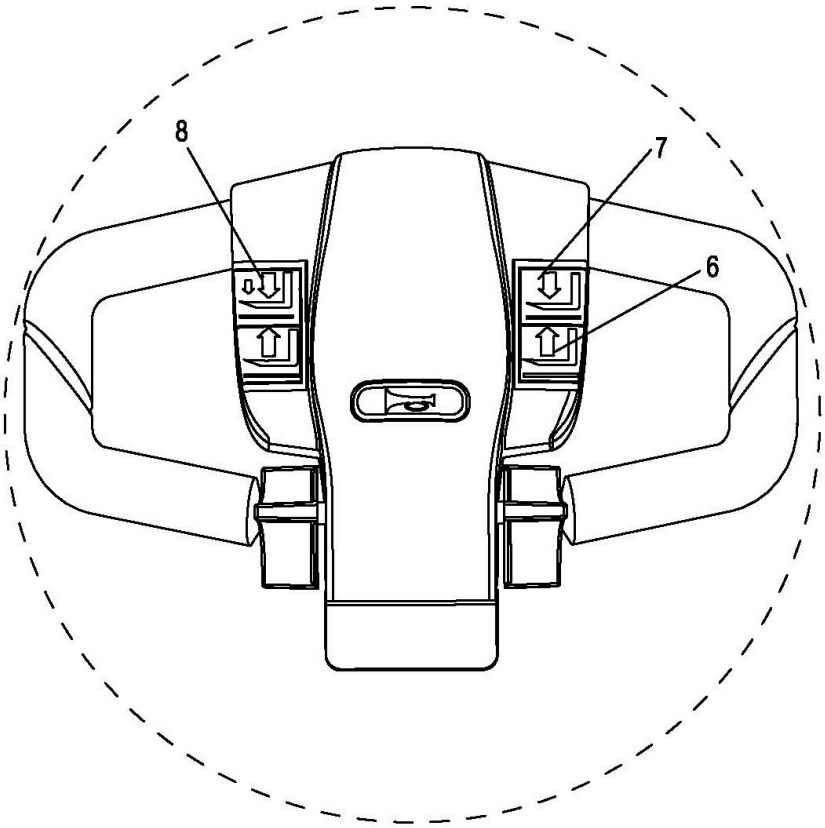

Lifting

– Press the "Lift the lifting device" button (7) until the desired height has been reached.

Lowering

– Press the "Lower the lifting device" button (8) until the desired height has been reached.

Avoid any abrupt lowering of the load unit !

5 Safe parking of the truck

If the truck is left unattended, even for only short periods of time, it must be rendered safe.

Do not park the truck on slopes! The lifting device must always be completely lowered.

– Lowering the lifting device.

– Set key switch (3) to "0" position and remove the key.

6 Indicating assembly

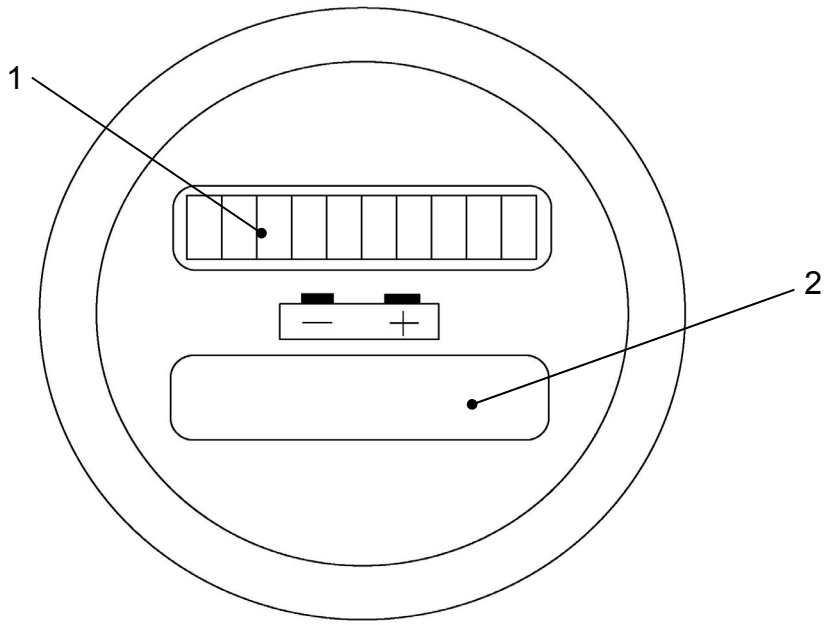

“1”-LED, Indicating the remaining capacity of the battery.
“2”-the hours of operation that truck has already performed.

6.1 Battery discharge indicator

The indicator will display the charging capacity of the battery when the key switch is turned on.

Different color of the LED (1) indicated the range of remaining capacity of the battery:

LED’color		reference percent
green	remaining battery capacity for standard batteries	70-100%
orange	remaining battery capacity for standard batteries	30-60%
red and winking	remaining battery capacity for standard batteries	0-20%

When discharging battery capacity of 70% is reached for standard,the color turns red and winking with the “remaining capacity” icon going out.

When discharging battery capacity of 80% is reached for standard,both lights winks with the “RUN OUT”icon going out,the lifting function is switched off,recharging the battery is recommended.

6.2 The hours of operation that truck has already performed（2）

Indicate range:0.0~99999.0(h).

The operating hour meter is integrated in the battery discharge indicator and displays the overall operating time of all driving and lifting movements

6.3 Switching-on test

When switch on the following will be indicated ：

- Operation hours
- Discharging status
-

7 Fault location

This chapter helps the operator to locate and fix simple malfunctions or the results of operating errors him- or herself. The order of the work stated in the table must be observed for fault location.

Fault	Possible cause	Remedy
Truck does not move	—Battery connector not connected —Key switch set to “0“ position —Battery voltage too low —Faulty fuse —In recharging mode —Control shaft not swivelled into driving range.	—Check the battery connector and reconnect it, if necessary — Set the key switch to position“1”. — Check the charging status of the battery and recharge,if necessary. —Check fuses F1 and 1F1. —Stop recharging the truck. — Swivel control shaft into driving range(F).
Load cannot be lifted	— Battery voltage lower than 20%/40% of its capacity. —Hydraulic oil level too low —Load too high	—Recharge the battery. —Check hydraulic oil level. —Pay attention to the maximum bearing capacity (see identification label).

If it is not possible to rectify the fault by performing the indicated "remedial actions",please contact the Customer Service, as more intricate faults can only be rectified by specially trained and qualified service personnel.

C. Battery-servicing,recharging,replacing

1 Safety regulations governing the handling of lead-acid batteries

Before works are performed on the batteries, the truck must be parked and sufficiently secured(see chapter B)

Servicing staff： Recharging, servicing and replacing of batteries must only be performed by qualified personnel. The instructions contained in this operating manual, and the instructions as prepared by the battery supplier and as available at the battery recharging station must be observed, when performing the above operations.

Fire protection measures: Smoking and naked flames are not permitted when handling batteries. No inflammable substances or spark-generating materials must be present or stored within a distance of 2 meters of the truck parked for battery recharging.The location must be well ventilated. Fire fighting equipment must be kept ready.

Servicing of batteries: The battery cell screw caps must be kept dry and clean. Terminals and cable shoes must be clean, lightly greased with pole grease and must be securely tightened. Batteries with non-insulated poles must be covered with an antislip insulating jacket.

Disposal of the battery: Batteries must only be disposed of as stipulated in the national environmental protection regulations or waste disposal provisions. The manufacturer’s specifications for the disposal must be heeded.

Batteries contain dissolved acid, which is toxic and caustic. For this reason protective clothing and goggles must be worn whenever work is undertaken on batteries. Avoid physical contact with battery acid.

If clothing, skin or eyes have accidentally come into contact with battery acid, liberally flush the affected parts with clean water. Consult a doctor, when skin or eyes have come into contact with battery acid. Spilled battery acid must be immediately neutralised.

Only batteries with closed battery trough may be used.

Battery weight and dimensions have considerable influence on the safety of truck operation. A change of battery equipment is only permitted with approval of the manufacturer.

2 Battery types

The battery weights are specified on identification label of the battery.

When changing / assembling the battery, make sure that it is properly fixed in the battery compartment the truck.

3 Charging the battery

For recharging the battery, the truck has to parked in-doors in a sufficiently ventilated environment.During the recharging operation the tops of the battery cells must be exposed to ensure adequate ventilation. Metal objects must not be placed on the battery. Prior to starting the recharging operation, check all cable connections and plugged connections for visible damage

The safety instructions provided by the battery supplier and battery charger supplier must be strictly observed.

- Connect the charging cable (2) of the battery recharging station with the battery connector (1) and switch on the battery charger.

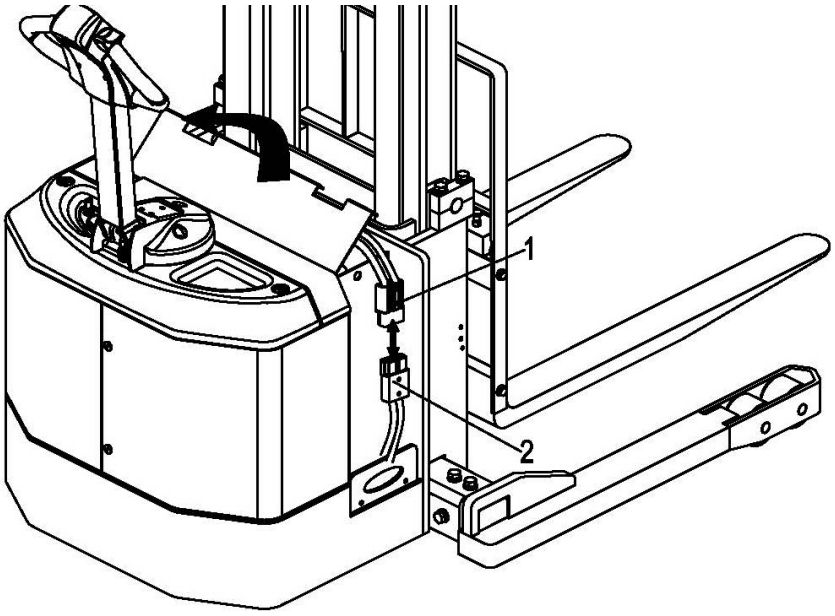

4 Battery storage

Equalising charge to battery before storage.

In storage，a monthly equalising charge .

5 Removing and installing the battery

①Remove battery by lifting it upwards

The truck must stand horizontally. Batteries with exposed terminals or connectors must be covered with a rubber mat to prevent short-circuits. Place battey connector and battery cable in such a way that they do not get caught within the truck interior when the battery is pulled out.When changing the battery with the aid of a lifting gear, ensure that the lifting gear is of adequate capacity (the battery weight is indicated on the battery identification plate at the battery trough). The battery must be lifted vertically to prevent crushing of the battery trough. The hooks are to be attached to the battery hoisting ears (3) that they cannot fall onto the battery cells when the hoisting gear is released.

– Attach hoisting gear to the hoisting ear(3) ,lift out the battery.
- When replacing batteries, ensure that a battery of the same type is fitted. Supplementary weights may not be removed or changed in their position.
- The re-assembly can be performed by reversing the above actions; pay attention to the correct mounting position and battery connection.

②Removing battery from the flank

The truck must stand horizontally. Batteries with exposed terminals or connectors must be covered with a rubber mat to prevent short-circuits. Place battey connector and battery cable in such a way that they do not get caught within the truck interior when the battery is pulled out.

-Remove the board of the flank before pulling out the battery,re-assemble it by reversing the above actions.

-After reinstallation of the battery, visually check all leads and connectors for damage.

-Before commissioning the truck, the battery hood must be properly closed without touching the truck interior.

https://truckmanualshub.com/

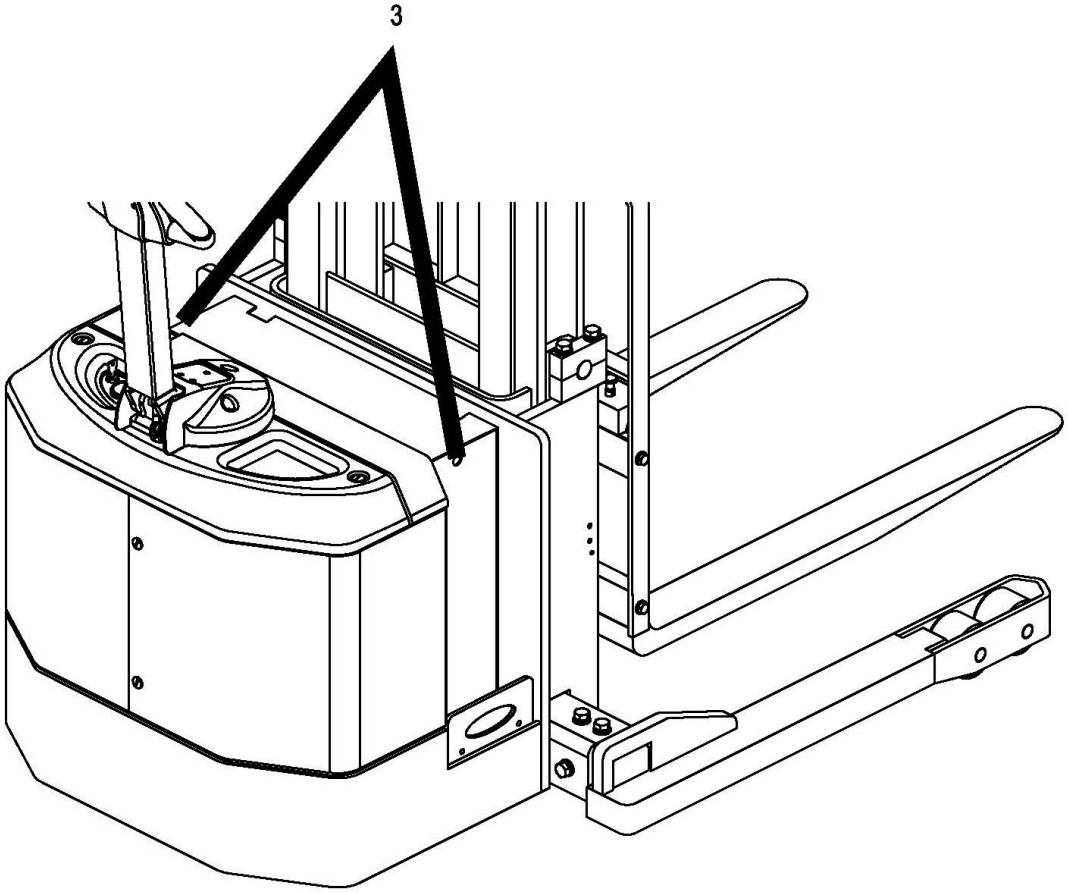

D. Maintenance of the truck

1 Operational safety and protection of the environment

The checks and maintenance work listed in this chapter have to be performed according to the intervals of the maintenance checklists.

Modifications of truck assemblies, especially of the safety installations, are not permitted.On no account must the operational speeds of the truck be changed.

Only original spare parts have been passed by our quality assurance service. In order to ensure safe and reliable operation only original spare parts of the manufacturer must be used. Old parts and changed consumption type materials must be disposed of in accordance with the applicable environmental protection regulations.The Oil Change Service of the manufacturer is available for oil changes.
Upon completion of any checks and servicing activities, the operations contained in the section "Recommissioning" must be performed.

2 Safety regulations for repair

Servicing and maintenance personnel: Maintenance and repair of the floor conveyors may only be performed by expert personnel of the manufacturer. The Service Organisation of the manufacturer has service engineers available that have been specifically trained for these tasks. We therefore advise to conclude a maintenance contract with the manufacturer's Service Base responsible for the area.

Lifting and jacking up: When a fork-lift truck is to be lifted, the lifting gear must only be secured to the points specially provided for this purpose. When the truck is to be jacked up, suitable measures must be taken to prevent the truck from slipping or tipping over (use of chocks, wooden blocks). Work underneath raised forks must only be carried out, when the fork is immobilised and supported by a chain of adequate strength.

Cleaning operations: No inflammable liquids must be used when cleaning the industrial truck. Prior to performing cleaning operations all appropriate safety measures must be taken to avoid sparking (e.g. due to short circuits). The battery connector must be disconnected. Electric and electronic components must be cleaned with lowpressure air or suction air and a non-conducting, antistatic brush.

If the truck is to be cleaned using water of a steam jet, all electric and electronic assemblies have to be carefully covered beforehand, as humidity will cause malfunctions.

Steam-cleaning is not permitted.

Upon the completion of cleaning work the operations detailed in section "Recommissioning" have to be performed.

Working on the electrical installation: All work on the electrical installation must be carried out only by electrotechnically skilled personnel. Before commencing any work on the electric system, all measures required to prevent electric shocks have to be taken. For battery-operated floor conveyors, the truck must also be depowered by removing the battery connector.
Welding operations: To prevent any damage to electric or electronic components,these have to be removed from the fork-lift truck before any welding operations are undertaken.
Settings: The vehicle settings must be observed when carrying out repairs and changing hydraulic / electric / electronic components.

Tire equipment: The quality of the tires greatly affects the stability and the driving behaviour of the fork-lift truck.In order to according to the data required
on the type-list,only original tire of the manufacturer could be used to replace the old ones. When replacing wheels or tires, it must be ensured that the truck remains level (tires and wheels must always be replaced in pairs, i.e. left and right together).

Lift chains: The lift chains wear rapidly if not lubricated. The intervals stated in the service checklist apply for use in normal environment. For applications in aggravated conditions (dust, temperature), frequent re-lubrication must be performed. Use the correct chain spray oil as prescribed. If grease is only externally applied, no sufficient lubrication can be realised.

3 Maintenance and service

Thorough and expert servicing is one of the most important preconditions for safe operation of the fork-lift truck. The neglect of regular servicing intervals can lead to fork-lift failure and constitutes a potential hazard to personnel and operation.

The indicated servicing intervals are based on single-shift operation under normal operating conditions.For applications in dusty environments, or involving large temperature fluctuations or multiple-shift operation, the servicing intervals must be shortened accordingly.

The following servicing checklist indicates the operations to be performed and the respective intervals to be observed. The following maintenance intervals are defined:

W = Every 50 operating hours, at least, however, once a week
A = Every 500 operating hours
B = Every 1000 operating hours, or at least annually
C = Every 2000 operating hours, or at least annually

The W maintenance intervals must be carried out by the operator / customer.

After operating for about 100 hours,the operators have to check the nuts and bolts if they are loosened and tighten them if required.

4 Maintenance checklist

			Maintenance intervals			
			Standard =★ Cold-storage depot = ☆	W	A	B	C
Chassis/ Design:	1.1	Check all load bearing elements for damage			★	
	1.2	Check all bolted connections			★	
Drive unit	2.1	Check the transmission for noises and leakage			★	
	2.2	Check the transmission oil level			★	
	2.3	Change the gear oil			☆	★
Drive Wheels: (1120-200001-00)	3.1	Check for wear and damage	★			
	3.2	Check seating and attachment	☆		★	
Steering:	4.1	Check the steering clearance			★	
Brake (1120-210000-00) **system:**	5.1	Check for correct function and adjustment	☆		★	
	5.2	Check the return spring for repositioning function and damage			★	
	5.3	Check the brake linings for wear			★	
	5.4	Check the brake linkage; adjust and grease,if necessary	☆		★	
Hoist frame:	6.1	Visual check of rollers, slide pieces and stops	☆		★	
	6.2	Check fork tines and fork carrier for wear and damage	☆		★	
	6.3	Check secure attachment of hoist frame			★	
	6.4	Check lift chains and chain guide for wear, adjust and grease them.			★	

	6.5	Check the lateral clearance of the mast profiles and whether they are parallel to each other				★
	6.6	Check safety devices for proper attachment and damages	☆		★	
Lifting device:	7.1	Check function, wear and tear and adjustment			★	
	7.2	Visual check of rollers, slide pieces and stops	☆		★	
	7.3	Check fork tines and fork carrier for wear and damage	☆		★	
Hydr. system:	8.1	Check function	☆		★	
	8.2	Check all connections for leakage and damage	☆		★	
	8.3	Check hydraulic cylinders for leakage, damage and secure attachment	☆		★	
	8.4	Check the oil level	☆		★	
	8.5	Change hydraulic oil			☆	★
	8.6	Change filter			★	
	8.7	Check the pressure relief valves for correct functioning			☆	★
Electr. system:	9.1	Check function, wear and tear and adjustment			★	
	9.2	Visual check of rollers, slide pieces and stops			★	
	9.3	Check fork tines and fork carrier for wear and damage				★
	9.4	Check switches and trip cams for proper functioning and seating			★	
	9.5	Check contactors, replace wearing parts, if necessary			★	
	9.6	Check functioning of warning devices and safety circuits	☆		★	
Electric motors:	10.1	Check wear of carbon brushes			★	
	10.2	Check the motor for secure			★	

		attachment				
	10.3	Suck out engine block, check wear of collector		☆	★	
Battery:	11.1	Check acid density, acid level and cell voltage	☆		★	
	11.2	Check the terminals for secure attachment and apply pole grease	☆		★	
	11.3	Clean battery connections, check for tight fit	☆		★	★
	11.4	Check the battery cables for damage and replace, if necessary			★	
Lubrication service:	12.1	Grease truck according to lubrication schedule	☆		★	
General measurements:	13.1	Check electrical system for short to ground				★
	13.2	Check driving speed and braking distance				★
	13.3	Check lifting and lowering speed				★
	13.4	Check safety facilities and switch-off devices			★	
Demonstration:	14.1	Perform a trial run under a nominal load			★	
	14.2	Demonstrate the truck to a person charged with inspection upon completion of the maintenance of the truck	☆		★	

https://truckmanualshub.com/

5 Lubrication schedule

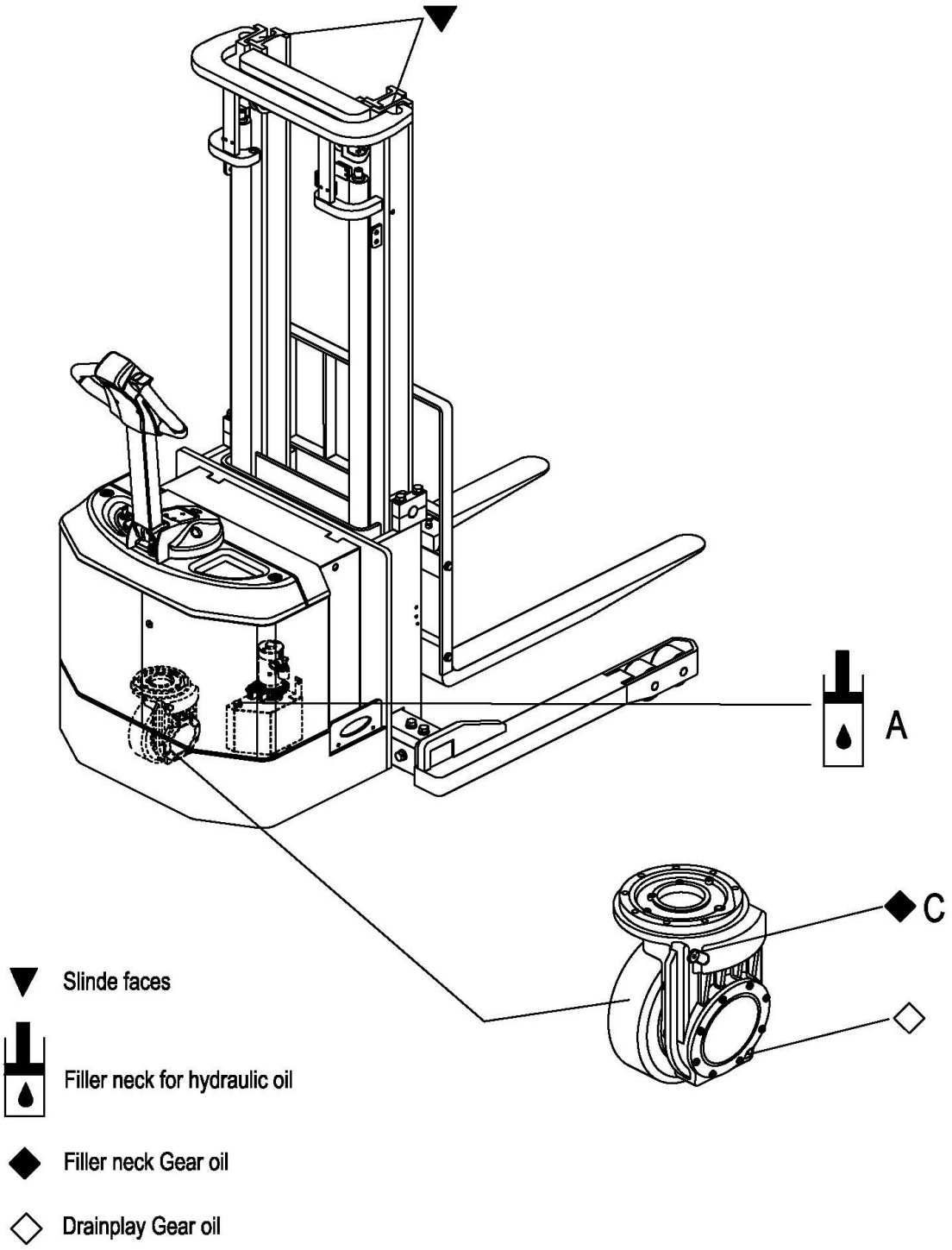

5.1 Operation material

Handling operating material: Consumption type material must always be handled properly. Manufacturer's instructions to be observed.

Improper handling endangers health, life and environment. Operating material must only be stored in containers conforming to specification. They might be inflammable and must not come into contact with hot components or open fire.

When filling in consumption type materials, use clean containers only. It is prohibited to mix consumption type materials of different grades or qualities, except if mixing is expressively prescribed in these operating instructions. (This instruction may only be ignored, if another mixing ratio is explicitly prescribed in this manual.)

Avoid any spilling. Spilled liquid must be removed immediately using a suitable binding agent, and the mixture of consumption type material and binding agent is to be disposed of according to the regulations.

Code	Description	Used for
A	HM46#	Hydraulic system
B	Grease， Polylub GA 352P	Lubrication service
C	GL-85W-90	transmission

6 Notes on maintenance

6.1 Preperation of the truck for servicing and maintenance operation

All required safety measures must be taken to prevent any accidents in the course of the servicing and maintenance operations. The following preparatory operations must be performed:

Disconnect the battery connector to prevent accidental or unauthorised truck operation.

When work has to be performed under the jacked-up truck, suitable measures must be taken to prevent any dropping, tilting or slipping of the truck.

6.2 Removing rolling cover and upper cover

Twist off the three screws.
Removing tne rolling cover carefully(2).
Twist off the two screws.
Removing the upper cover(1).

6.3 Removing the hood of the driving equipment

Removing the two screws in front.
Opening the down-cover carefully(3).

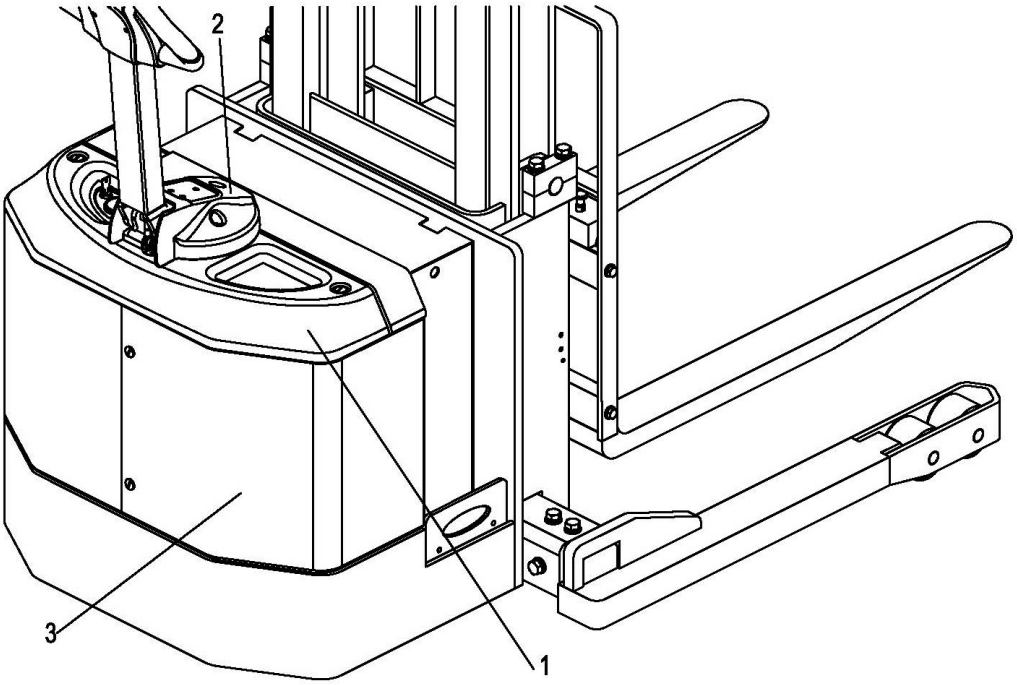

6.4 Exchanging the driving wheels

The driving wheels must only be exchanged by the maintainer authorized.

6.5 Check hydraulic oil level

Prepare the truck for servicing and maintenance oeration（see section6.1）
Removing the hood(see section 6.3).
Check the hydraulic oil level of the hydraulic tank.
There are markings on the hydraulic tank (5). The oil level must be chekked with the lifting device being lowered.
If required, top up with hydraulic oil with the required characteristics（see section 5）
Mouting is performed in reverse order.

6.6 Check the transmission oil level

Prepare the truck for servicing and maintenance operations(refer to Section 6.1)
Removing the hood(see section 6.3).
Turn the control shaft to the switch-off position on the right side
Check gear-oil level,oil level must reach the checking screw.(see section 5)
If required,top up with gear oil with the required characteristics.(see section 5)
Mounting is performed in reverse order

6.7 Flushing and exchanging the coarse sieve

Preparation of the truck for servicing and maintenance operations（see section6.1）.
Opening the down-cover (see section 6.3).
Pull off the Pump & Motor and remove the coarse sieve. Insert a new coarse sieve.
Mounting is performed in reverse order.

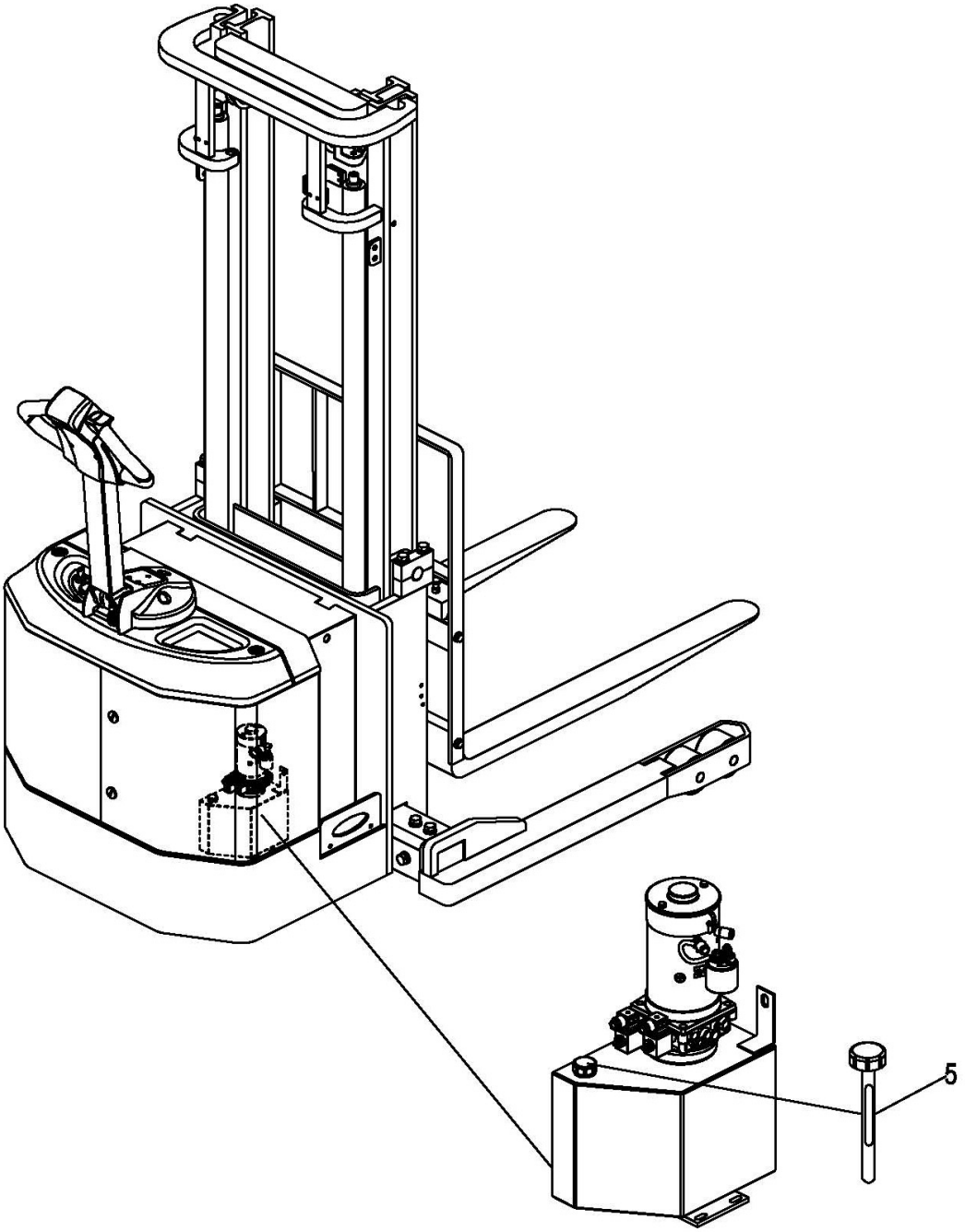

6.8 Checking the electric fuses

Preparation of the truck for servicing and maintenance operations.(see section 6.1)
Removing the hood(see section 6.2).
Referring to the table,check all fuses for correct rating and replace,
where required.

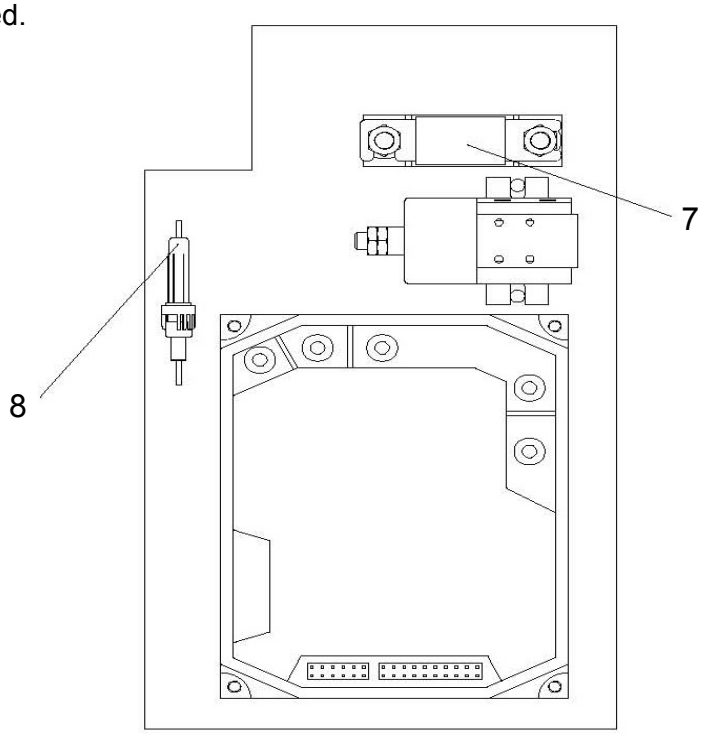

num	Protection of：	Value
7	Traction/ lifting motor Fuse	200A
8	Control system Fuse	10A

6.9 Recommission the truck

Recommissioning of the truck following the performance of cleaning or maintenance work is permitted only after the following operations have been performed:
Check the annunciator for proper functioning.
Check the main switch(Emergency-STOP)for correct function.
Check the brake for correct function.
Lubricate the truck according to lubrication schedule.

7 Taking the floor conveyor out of service

If the floor conveyor is to be taken out of service for more than two months, it must be parked in a frost-free and dry location and all required measures are to be taken before,during and following decommisioning.During decommissioning the truck must be jacked up ensuring that the wheels are
clear of the ground. Only this measure will ensure that wheels and wheel bearings do not suffer damage.If the floor conveyor is to be taken out of service for periods exceeding six months, the service of the manufacturer must be contacted for further measures to be taken.

7.1 Operations to be performed prior to decommissioning

Thoroughly clean the truck.
Check the brakes.
Check the hydraulic oil level and refill,if required.(refer to this chapter)
Apply a thin film of oil or grease to all parts not protected by a paint coating.
Grease the truck as detailed in the lubrication chart(refer to this chapter)
Recharge the battery.(refer to chapter C)
Disconnect and clean the battery. Apply pole grease to the battery terminals.
In addition to this,all instructions as givien by the supplier have to be observed.
Spray all exposed electrical contacts with a suitable contact spray.

7.2 Measures to be taken during decommissioning

Every 2 months：
Recharge the battery(see chapter C).

Regular recharging of the battery is very important. Otherwise, excessive depletion of the battery would occur caused by self-discharging, which will result in the destruction of the battery caused by sulfatisation.

7.3 Recommissioning the truck

Thoroughly clean the truck.
Grease the truck as detailed in the lubrication chart (see this chapter).
Clean the battery. Grease the terminal screws using pole grease and reconnect the battery.
Recharge the battery (see chapter C).
Check if the transmission oil contains condensed water and change, if required.
Check if the hydraulic oil contains condensed water and change, if required.
Start up the truck (see chapter B).
For battery-driven trucks:

If switching troubles are experienced in the electric system, spray the exposed contacts with contact spray and remove any oxide layer on the contacts of the control equipment by operating it several times.

Upon recommissioning of the truck perform several brake tests immediately.

8 Safety checks to be performed at regular intervals and following any unusual incidents

Carry out a safety check in accordance with national regulations.
EP has a special safety department with trained personnel to carry out such checks.

The truck must be inspected at least annually (refer to national regulations) or after any unusual event by a qualified inspector. The inspector shall assess the condition of the truck from purely a safety viewpoint, without regard to operational or economic circumstances. The inspector shall be sufficiently instructed and experienced to be able to assess the condition of the truck and the effectiveness of the safety mechanisms based on the technical regulations and principles governing the inspection of stacker.

A thorough test of the truck must be undertaken with regard to its technical condition from a safety aspect. The truck must also be examined for damage caused by possible improper use. A test report shall be provided. The test results must be kept for at least the next inspection.

The owner is responsible for ensuring that faults are immediately rectified.

A test plate is attached to the truck as proof that it has passed the safety inspection.This plate indicates the due date for the next inspection.

9 Final de-commissioning,disposal

Final, proper decommissioning or disposal of the truck must be performed in accordance with the regulations of the country of application. In particular, regulations governing the disposal of batteries, fuels and electronic and electrical systems must be observed.