https://truckmanualshub.com/

Husqvarna®

YTH21K46

Owner's Manual / 96043008500 / 2009-08

532 43 05-77

https://truckmanualshub.com/

SAFETY RULES

Safe Operation Practices for Ride-On Mowers

DANGER: THIS CUTTING MACHINE IS CAPABLE OF AMPUTATING HANDS AND FEET AND THROWING OBJECTS. FAILURE TO OBSERVE THE FOLLOWING SAFETY INSTRUCTIONS COULD RESULT IN SERIOUS INJURY OR DEATH.

WARNING: In order to prevent accidental starting when setting up, transporting, adjusting or making repairs, always disconnect spark plug wire and place wire where it cannot contact spark plug.

WARNING: Do not coast down a hill in neutral, you may lose control of the tractor.

WARNING: Tow only the attachments that are recommended by and comply with specifications of the manufacturer of your tractor. Use common sense when towing. Operate only at the lowest possible speed when on a slope. Too heavy of a load, while on a slope, is dangerous. Tires can lose traction with the ground and cause you to lose control of your tractor.

WARNING

Engine exhaust, some of its constituents, and certain vehicle components contain or emit chemicals known to the State of California to cause cancer and birth defects or other reproductive harm.

WARNING

Battery posts, terminals and related accessories contain lead and lead compounds, chemicals known to the State of California to cause cancer and birth defects or other reproductive harm. Wash hands after handling.

I. GENERAL OPERATION

- Read, understand, and follow all instructions on the machine and in the manual before starting.
- Do not put hands or feet near rotating parts or under the machine. Keep clear of the discharge opening at all times.
- Only allow responsible adults, who are familiar with the instructions, to operate the machine.
- Clear the area of objects such as rocks, toys, wire, etc., which could be picked up and thrown by the blades.
- Be sure the area is clear of bystanders before operating. Stop machine if anyone enters the area.
- Never carry passengers.
- Do not mow in reverse unless absolutely necessary. Always look down and behind before and while backing.
- Never direct discharged material toward anyone. Avoid discharging material against a wall or obstruction. Material may ricochet back toward the operator. Stop the blades when crossing gravel surfaces.
- Do not operate machine without the entire grass catcher, discharge guard, or other safety devices in place and working.
- Slow down before turning.
- Never leave a running machine unattended. Always turn off blades, set parking brake, stop engine, and remove keys before dismounting.
- Disengage blades when not mowing. Shut off engine and wait for all parts to come to a complete stop before cleaning the machine, removing the grass catcher, or unclogging the discharge guard.
- Operate machine only in daylight or good artificial light.
- Do not operate the machine while under the influence of alcohol or drugs.
- Watch for traffic when operating near or crossing roadways.
- Use extra care when loading or unloading the machine into a trailer or truck.
- Always wear eye protection when operating machine.
- Data indicates that operators, age 60 years and above, are involved in a large percentage of riding mower-related injuries. These operators should evaluate their ability to operate the riding mower safely enough to protect themselves and others from serious injury.
- Follow the manufacturer's recommendation for wheel weights or counterweights.
- Keep machine free of grass , leaves or other debris build-up which can touch hot exhaust / engine parts and burn. Do not allow the mower deck to plow leaves or other debris which can cause build-up to occur. Clean any oil or fuel spillage before operating or storing the machine. Allow machine to cool before storage.

II. SLOPE OPERATION

Slopes are a major factor related to loss of control and tip-over accidents, which can result in severe injury or death. Operation on all slopes requires extra caution. If you cannot back up the slope or if you feel uneasy on it, do not mow it.

- Mow up and down slopes, not across.
- Watch for holes, ruts, bumps, rocks, or other hidden objects. Uneven terrain could overturn the machine. Tall grass can hide obstacles.
- Choose a low ground speed so that you will not have to stop or shift while on the slope.
- Do not mow on wet grass. Tires may lose traction. Always keep the machine in gear when going down slopes. Do not shift to neutral and coast downhill.
- Avoid starting, stopping, or turning on a slope. If the tires lose traction, disengage the blades and proceed slowly straight down the slope.
- Keep all movement on the slopes slow and gradual. Do not make sudden changes in speed or direction, which could cause the machine to roll over.
- Use extra care while operating machine with grass catchers or other attachments; they can affect the stability of the machine. Do no use on steep slopes.
- Do not try to stabilize the machine by putting your foot on the ground.
- Do not mow near drop-offs, ditches, or embankments. The machine could suddenly roll over if a wheel is over the edge or if the edge caves in.

https://truckmanualshub.com/

SAFETY RULES

Safe Operation Practices for Ride-On Mowers

III. CHILDREN

Tragic accidents can occur if the operator is not alert to the presence of children. Children are often attracted to the machine and the mowing activity. Never assume that children will remain where you last saw them.

- Keep children out of the mowing area and in the watchful care of a responsible adult other than the operator.
- Be alert and turn machine off if a child enters the area.
- Before and while backing, look behind and down for small children.
- Never carry children, even with the blades shut off. They may fall off and be seriously injured or interfere with safe machine operation. Children who have been given rides in the past may suddenly appear in the mowing area for another ride and be run over or backed over by the machine.
- Never allow children to operate the machine.
- Use extra care when approaching blind corners, shrubs, trees, or other objects that may block your view of a child.

IV. TOWING

- Tow only with a machine that has a hitch designed for towing. Do not attach towed equipment except at the hitch point.
- Follow the manufacturer's recommendation for weight limits for towed equipment and towing on slopes.
- Never allow children or others in or on towed equipment.
- On slopes, the weight of the towed equipment may cause loss of traction and loss of control.
- Travel slowly and allow extra distance to stop.

V. SERVICE

SAFE HANDLING OF GASOLINE

To avoid personal injury or property damage, use extreme care in handling gasoline. Gasoline is extremely flammable and the vapors are explosive.

- Extinguish all cigarettes, cigars, pipes, and other sources of ignition.
- Use only approved gasoline container.
- Never remove gas cap or add fuel with the engine running. Allow engine to cool before refueling.
- Never fuel the machine indoors.
- Never store the machine or fuel container where there is an open flame, spark, or pilot light such as on a water heater or other appliances.
- Never fill containers inside a vehicle or on a truck or trailer bed with plastic liner. Always place containers on the ground away from your vehicle when filling.
- Remove gas-powered equipment from the truck or trailer and refuel it on the ground. If this is not possible, then refuel such equipment with a portable container, rather than from a gasoline dispenser nozzle.
- Keep the nozzle in contact with the rim of the fuel tank or container opening at all times until fueling is complete. Do not use a nozzle lock-open device.
- If fuel is spilled on clothing, change clothing immediately.
- Never overfill fuel tank. Replace gas cap and tighten securely.

GENERAL SERVICE

- Never operate machine in a closed area.
- Keep all nuts and bolts tight to be sure the equipment is in safe working condition.
- Never tamper with safety devices. Check their proper operation regularly.
- Keep machine free of grass, leaves, or other debris build-up. Clean oil or fuel spillage and remove any fuel-soaked debris. Allow machine to cool before storing.
- If you strike a foreign object, stop and inspect the machine. Repair, if necessary, before restarting.
- Never make any adjustments or repairs with the engine running.
- Check grass catcher components and the discharge guard frequently and replace with manufacturer's recommended parts, when necessary.
- Mower blades are sharp. Wrap the blade or wear gloves, and use extra caution when servicing them.
- Check brake operation frequently. Adjust and service as required.
- Maintain or replace safety and instruction labels, as necessary.

- Be sure the area is clear of bystanders before operating. Stop machine if anyone enters the area.
- Never carry passengers.
- Do not mow in reverse unless absolutely necessary. Always look down and behind before and while backing.
- Never carry children, even with the blades shut off. They may fall off and be seriously injured or interfere with safe machine operation. Children who have been given rides in the past may suddenly appear in the mowing area for another ride and be run over or backed over by the machine.
- Keep children out of the mowing area and in the watchful care of a responsible adult other than the operator.
- Be alert and turn machine off if a child enters the area.
- Before and while backing, look behind and down for small children.
- Mow up and down slopes (15° Max), not across.
- Choose a low ground speed so that you will not have to stop or shift while on the slope.
- Avoid starting, stopping, or turning on a slope. If the tires lose traction, disengage the blades and proceed slowly straight down the slope.
- If machine stops while going uphill, disengage blades, shift into reverse and back down slowly.
- Do not turn on slopes unless necessary, and then, turn slowly and gradually downhill, if possible.

https://truckmanualshub.com/

PRODUCT SPECIFICATIONS

Gasoline Capacity and type:	2.50 Gallons Unleaded Regular
Oil Type (API-SG-SL):	SAE 10W30 (above 32°F) SAE 5W-30 (below 32°F)
Oil Capacity:	w/Filter: 51 oz. w/o Filter: 35 oz.
Spark Plug:	Champion RC12YC (Gap: .030")
Ground Speed (MPH):	Forward: 0 - 5.2 Reverse: 0 - 2.9
Charging System:	15 AMPS @ 3600 RPM
Battery:	AMP/HR: 28 MIN. CCA: 230 Case Size: U1R
Blade Bolt Torque:	45-55 FT. LBS.

CONGRATULATIONS on your purchase of a new tractor. It has been designed, engineered and manufactured to give you the best possible dependability and performance.

Should you experience any problem you cannot easily remedy, please contact your nearest authorized servicecenter/department We have competent, well-trained technicians and the proper tools to service or repair this tractor.

Please read and retain this manual. The instructions will enable you to assemble and maintain your tractor properly. Always observe the “SAFETY RULES”.

CUSTOMER RESPONSIBILITIES

- Read and observe the safety rules.
- Follow a regular schedule in maintaining, caring for and using your tractor.
- Follow the instructions under “Maintenance” and “Storage” sections of this owner’s manual.

WARNING: This tractor is equipped with an internal combustion engine and should not be used on or near any unimproved forest-covered, brush-covered or grass-covered land unless the engine’s exhaust system is equipped with a spark arrester meeting applicable local or state laws (if any). If a spark arrester is used, it should be maintained in effective working order by the operator.

In the state of California the above is required by law (Section 4442 of the California Public Resources Code). Other states may have similar laws. Federal laws apply on federal lands.

A spark arrester for the muffler is available through your nearest authorized service center/department (See REPAIR PARTS section of this manual).

TABLE OF CONTENTS

SAFETY RULES 2-3
PRODUCT SPECIFICATIONS 4
CUSTOMER RESPONSIBILITIES 4
ASSEMBLY 5-6
OPERATION 7-13
MAINTENANCE SCHEDULE 14
MAINTENANCE 14-17
SERVICE AND ADJUSTMENTS 18-23
STORAGE 24
TROUBLESHOOTING 25-26
REPAIR PARTS 27-42

https://truckmanualshub.com/

UNASSEMBLED PARTS

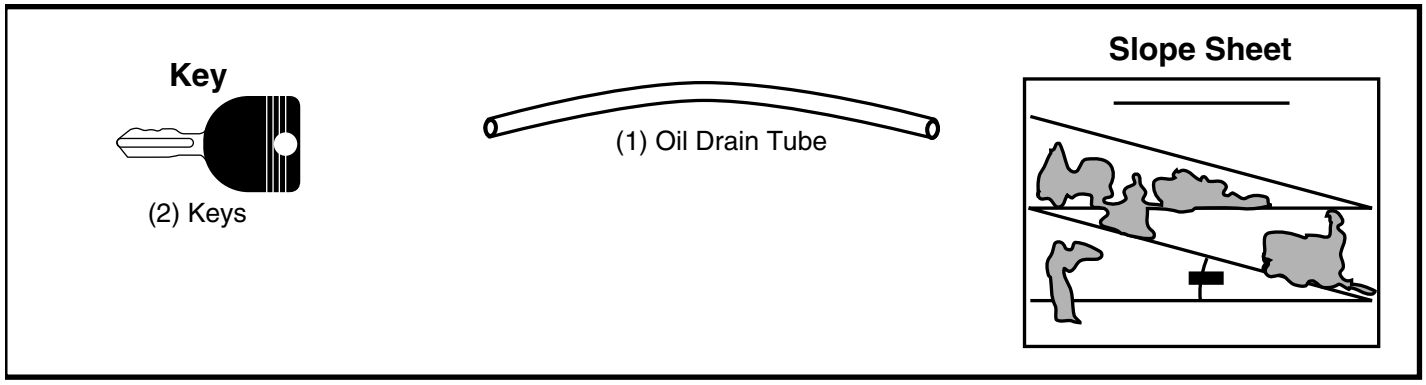

ASSEMBLY

Your new tractor has been assembled at the factory with the exception of those parts left unassembled for shipping purposes.

TOOLS REQUIRED FOR ASSEMBLY

A socket wrench set will make assembly easier. Standard wrench sizes are listed.

(1)	1/2" wrench	Tire pressure gauge	
(2)	7/16" wrenches	Utility knife	Pliers

When right or left hand is mentioned in this manual, it means when you are in the operating position (seated behind the steering wheel).

TO REMOVE TRACTOR FROM CARTON

UNPACK CARTON

- Remove all accessible loose parts and parts cartons from carton .
- Cut along dotted lines on all four panels of carton. Remove end panels and lay side panels flat.
- Check for any additional loose parts or cartons and remove.

BEFORE REMOVING TRACTOR FROM SKID

TO CHECK BATTERY (See Fig. 1)

- Lift seat to raised position.

NOTE: If this battery is put into service after month and year indicated on label (label is located between terminals) charge battery for minimum of one hour at 6-10 amps. (See "BATTERY" in Maintenance section of this manual for charging instructions).

- For battery and battery cable installation see "REPLACING BATTERY" in the "Service and Adjustments" section in this manual.

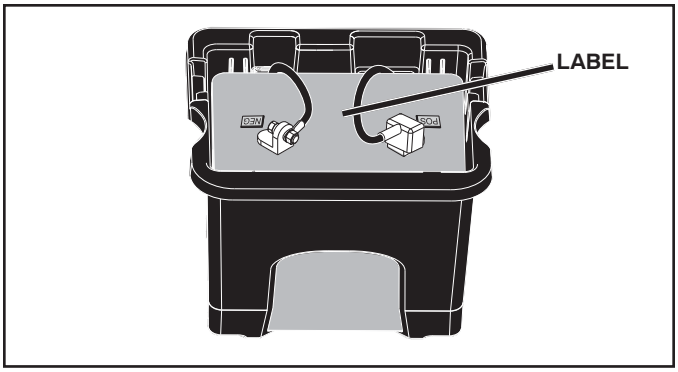

Fig. 1

ADJUST SEAT (See Fig. 2)

- Sit in seat.
- Lift up adjustment lever (A) and slide seat until a comfortable position is reached which allows you to press clutch/brake pedal all the way down.
- Release lever to lock seat in position.

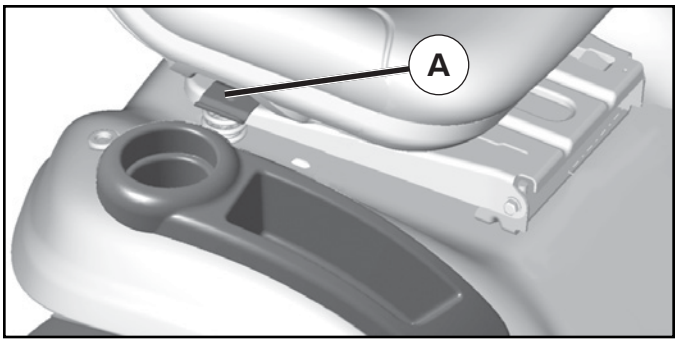

Fig. 2

https://truckmanualshub.com/

ASSEMBLY

NOTE: You may now roll your tractor off the skid. Follow the instructions below to remove the tractor from the skid.

WARNING: Before starting, read, understand and follow all instructions in the Operation section of this manual. Be sure tractor is in a well-ventilated area. Be sure the area in front of tractor is clear of other people and objects.

TO ROLL TRACTOR OFF SKID (See Operation section for location and function of controls)

- Raise attachment lift lever to its highest position.
- Release parking brake by depressing clutch/brake pedal.
- Place freewheel control in "transmission disengaged" position (See “TO TRANSPORT” in the Operation section of this manual).
- Roll tractor forward off skid.
- Remove banding holding the deflector shield up against tractor.

Continue with the instructions that follow.

CHECK TIRE PRESSURE

The tires on your tractor were overinflated at the factory for shipping purposes. Correct tire pressure is important for best cutting performance.

- Reduce tire pressure to PSI shown on tires.

CHECK DECK LEVELNESS

For best cutting results, mower housing should be properly leveled. See “TO LEVEL MOWER HOUSING” in the Service and Adjustments section of this manual.

CHECK FOR PROPER POSITION OF ALL BELTS

See the figures that are shown for replacing motion and mower blade drive belts in the Service and Adjustments section of this manual. Verify that the belts are routed correctly.

CHECK BRAKE SYSTEM

After you learn how to operate your tractor, check to see that the brake is operating properly. See “TO CHECK BRAKE” in the Service and Adjustments section of this manual.

✓ *CHECKLIST*

BEFORE YOU OPERATE YOUR NEW TRACTOR, WE WISH TO ASSURE THAT YOU RECEIVE THE BEST PERFORMANCE AND SATISFACTION FROM THIS QUALITY PRODUCT.

PLEASE REVIEW THE FOLLOWING CHECKLIST:

- ✓ All assembly instructions have been completed.
- ✓ No remaining loose parts in carton.
- ✓ Battery is properly prepared and charged.
- ✓ Seat is adjusted comfortably and tightened securely.
- ✓ All tires are properly inflated. (For shipping purposes, the tires were overinflated at the factory).
- ✓ Be sure mower deck is properly leveled side-to-side/ front-to-rear for best cutting results. (Tires must be properly inflated for leveling).
- ✓ Check mower and drive belts. Be sure they are routed properly around pulleys and inside all belt keepers.
- ✓ Check wiring. See that all connections are still secure and wires are properly clamped.
- ✓ Before driving tractor, be sure freewheel control is in “transmission engaged” position (see “TO TRANSPORT” in the Operation section of this manual).

WHILE LEARNING HOW TO USE YOUR TRACTOR, PAY EXTRA ATTENTION TO THE FOLLOWING IMPORTANT ITEMS:

- ✓ Engine oil is at proper level.
- ✓ Fuel tank is filled with fresh, clean, regular unleaded gasoline.
- ✓ Become familiar with all controls, their location and function. Operate them before you start the engine.
- ✓ Be sure brake system is in safe operating condition.
- ✓ Be sure Operator Presence System and Reverse Operation System (ROS) are working properly (See the Operation and Maintenance sections in this manual).
- ✓ It is important to purge the transmission before operating your tractor for the first time. Follow proper starting and transmission purging instructions (See “TO START ENGINE” and “PURGE TRANSMISSION” in the Operation section of this manual).

https://truckmanualshub.com/

OPERATION

These symbols may appear on your tractor or in literature supplied with the product. Learn and understand their meaning.

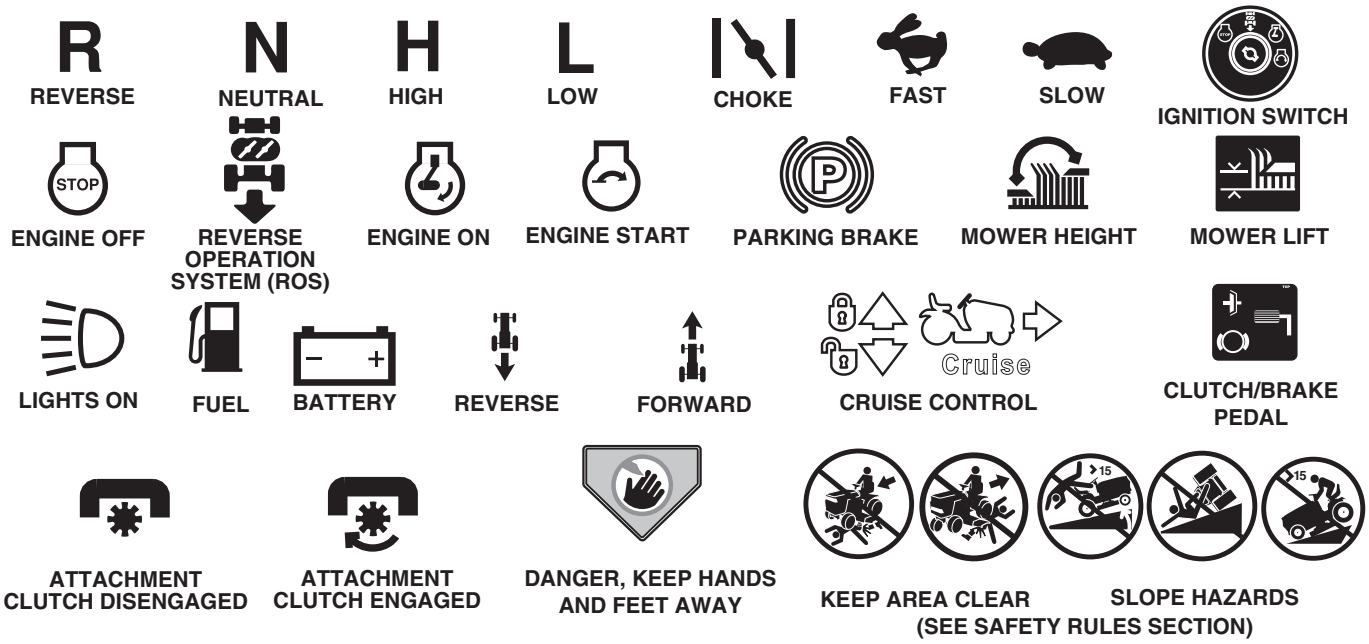

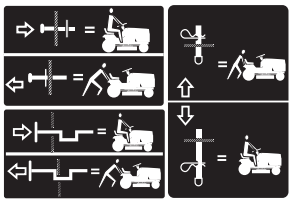

FREE WHEEL
(Automatic Models only)

Failure to follow instructions could result in serious injury or death. The safety alert symbol is used to identify safety information about hazards which can result in death, serious injury and/or property damage.

DANGER indicates a hazard which, if not avoided, **will result in death or serious injury.**

WARNING indicates a hazard which, if not avoided, **could result in death or serious injury.**

CAUTION indicates a hazard which, if not avoided, **might result in minor or moderate injury.**

CAUTION when used **without** the alert symbol, indicates a situation that **could result in damage to the tractor and/or engine.**

HOT SURFACES indicates a hazard which, if not avoided, **could result in death, serious injury and/or property damage.**

FIRE indicates a hazard which, if not avoided, **could result in death, serious injury and/or property damage.**

https://truckmanualshub.com/

OPERATION

KNOW YOUR TRACTOR

READ THIS OWNER'S MANUAL AND SAFETY RULES BEFORE OPERATING YOUR TRACTOR

Compare the illustrations with your tractor to familiarize yourself with the locations of various controls and adjustments. Save this manual for future reference.

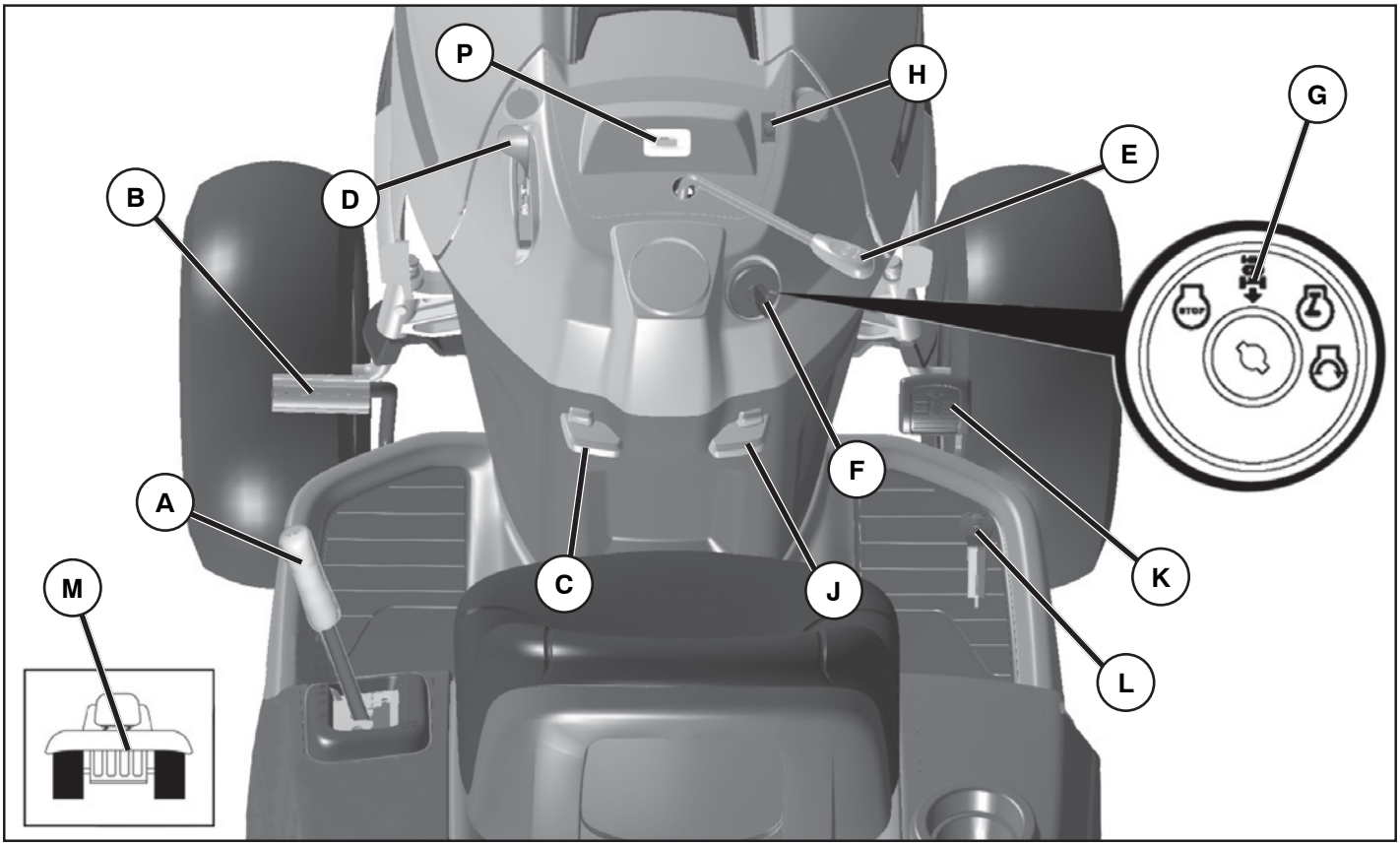

Fig. 3

Our tractors conform to the applicable safety standards of the American National Standards Institute.

(A) ATTACHMENT LIFT LEVER - Used to raise and lower the mower or other attachments mounted to your tractor.

(B) BRAKE PEDAL - Used for braking the tractor and starting the engine.

(C) PARKING BRAKE - Locks clutch/brake pedal into the brake position.

(D) THROTTLE/CHOKE CONTROL - Used for starting and controlling engine speed.

(E) ATTACHMENT CLUTCH LEVER - Used to engage the mower blades, or other attachments mounted to your tractor.

(F) IGNITION SWITCH - Used for starting and stopping the engine.

(G) REVERSE OPERATION SYSTEM (ROS) "ON" POSITION - Allows operation of mower or other powered attachment while in reverse.

(H) LIGHT SWITCH - Turns the headlights on and off.

(J) CRUISE CONTROL LEVER - Used to set forward movement of tractor at desired speed without holding the forward drive pedal.

(K) FORWARD DRIVE PEDAL - Used for forward movement of tractor.

(L) REVERSE DRIVE PEDAL - Used for reverse movement of tractor.

(M) FREEWHEEL CONTROL - Disengages transmission for pushing or slowly towing the tractor with the engine off.

(P) SERVICE REMINDER / HOUR METER - Indicates when service is required for the engine and mower.

https://truckmanualshub.com/

OPERATION

The operation of any tractor can result in foreign objects thrown into the eyes, which can result in severe eye damage. Always wear safety glasses or eye shields while operating your tractor or performing any adjustments or repairs. We recommend standard safety glasses or a wide vision safety mask worn over spectacles.

HOW TO USE YOUR TRACTOR

TO SET PARKING BRAKE (See Fig. 4)

Your tractor is equipped with an operator presence sensing switch. When engine is running, any attempt by the operator to leave the seat without first setting the parking brake will shut off the engine.

- Depress brake pedal (B) all the way down and hold.
- Pull parking brake lever (C) up and hold, release pressure from brake pedal (B), then release parking brake lever. Pedal should remain in brake position. Make sure parking brake will hold tractor secure.

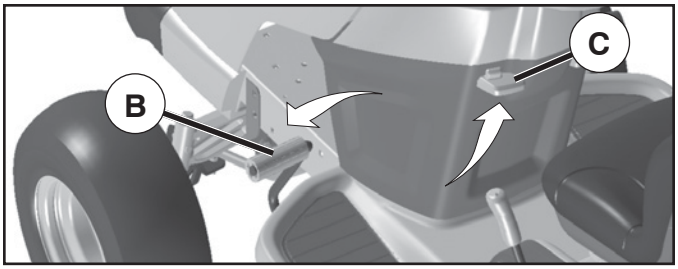

Fig. 4

STOPPING (See Fig. 5)

MOWER BLADES -

- To stop mower blades, place attachment clutch control in the “DISENGAGED” position ( ).

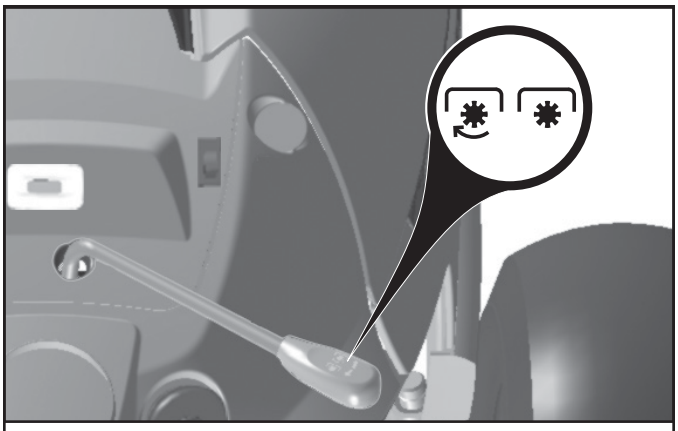

( ) ATTACHMENT CLUTCH LEVER “DISENGAGED”

( ) ATTACHMENT CLUTCH LEVER “ENGAGED”

Fig. 5

GROUND DRIVE -

- To stop ground drive, depress brake pedal into full “BRAKE” position.

IMPORTANT: FORWARD AND REVERSE DRIVE PEDALS RETURN TO NEUTRAL POSITION WHEN NOT DEPRESSED.

ENGINE -

- Move throttle control (D) between half and full speed (fast) position.

NOTE: Failure to move throttle control between half and full speed (fast) position, before stopping may cause engine to “backfire”.

- Turn ignition key (F) to “STOP” position and remove key. Always remove key when leaving tractor to prevent unauthorized use.
- Never use the choke to stop the engine.

IMPORTANT: LEAVING THE IGNITION SWITCH IN ANY POSITION OTHER THAN "STOP" WILL CAUSE THE BATTERY TO BE DISCHARGED, (DEAD).

NOTE: Under certain conditions when tractor is standing idle with the engine running, hot engine exhaust gases may cause “browning” of grass. To eliminate this possibility, always stop engine when stopping tractor on grass areas.

CAUTION: Always stop tractor completely, as described above, and set parking brake before leaving the operator's position.

TO USE THROTTLE CONTROL (D) (See Fig. 6)

Always operate engine at full speed (fast).

- Operating engine at less than full speed (fast) reduces the engine's operating efficiency.
- Full speed (fast) offers the best mower performance.

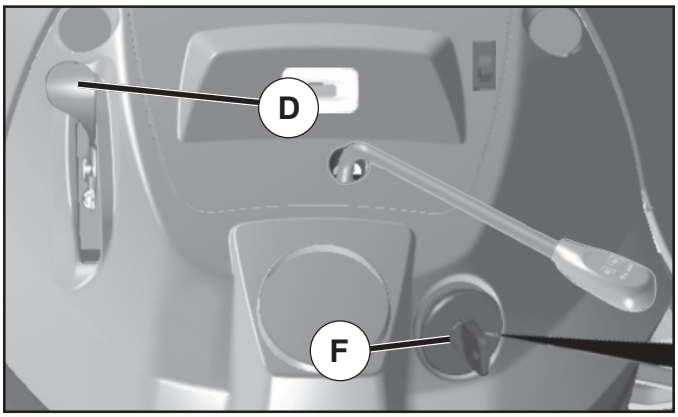

Fig. 6

TO MOVE FORWARD AND BACKWARD (See Fig. 7)

The direction and speed of movement is controlled by the forward and reverse drive pedals.

- Start tractor and release parking brake.
- Slowly depress forward (K) or reverse (L) drive pedal to begin movement. Ground speed increases the further down the pedal is depressed.

https://truckmanualshub.com/

OPERATION

TO USE CRUISE CONTROL (J) (See Fig. 7)

The cruise control feature can be used for forward travel only.

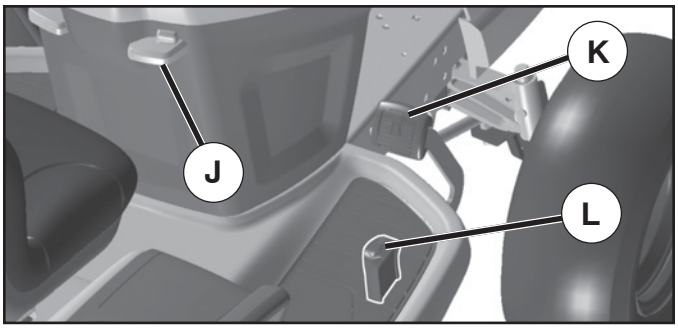

Fig. 7

SYSTEM CHARACTERISTICS

The cruise control should only be used while mowing or transporting on relatively smooth, straight surfaces. Other conditions such as trimming at slow speeds may cause the cruise control to disengage. Do not use the cruise control on slopes, rough terrian or while trimmimg or turning.

- With forward drive pedal depressed to desired speed, pull cruise control lever (J) up and hold while lifting your foot off the pedal, then release the lever.

To disengage the cruise control, depress the brake pedal or tap on forward drive pedal.

TO ADJUST MOWER CUTTING HEIGHT (See Fig. 8)

The position of the attachment lift lever (A) determines the cutting height.

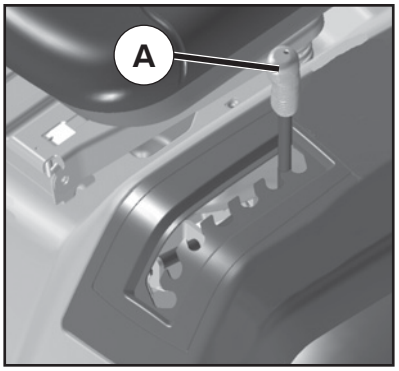

Fig. 8

- Put attachment lift lever in desired cutting height slot.

The cutting height range is approximately 1" to 4". The heights are measured from the ground to the blade tip with the engine not running. These heights are approximate and may vary depending upon soil conditions, height of grass and types of grass being mowed.

- The average lawn should be cut to approximately 2-1/2 " during the cool season and to over 3"during hot months. For healthier and better looking lawns, mow often and after moderate growth.
- For best cutting performance, grass over 6" in height should be mowed twice. Make the first cut relatively high; the second to desired height.

TO ADJUST GAUGE WHEELS (See Fig. 9)

Gauge wheels are properly adjusted when they are slightly off the ground when mower is at the desired cutting height in operating position. Gauge wheels then keep the deck in proper position to help prevent scalping in most terrain conditions.

NOTE: Adjust gauge wheels with tractor on a flat level surface.

- Adjust mower to desired cutting height (See “TO ADJUST MOWER CUTTING HEIGHT” in this section of manual).
- With mower in desired height of cut position, gauge wheels should be assembled so they are slightly off the ground. Install gauge wheel in appropriate hole. Tighten securely.
- Repeat for all, installing gauge wheel in same adjustment hole.

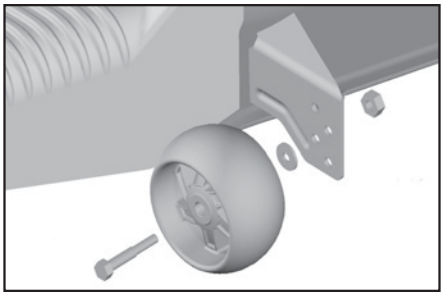

Fig. 9

TO OPERATE MOWER

Your tractor is equipped with an operator presence sensing switch. Any attempt by the operator to leave the seat with the engine running and the attachment clutch engaged will shut off the engine. You must remain fully and centrally positioned in the seat to prevent the engine from hesitating or cutting off when operating your equipment on rough, rolling terrain or hills.

- Select desired height of cut (see "TO ADJUST MOWER CUTTING HEIGHT")
- Start mower blades by engaging attachment clutch control.

TO STOP MOWER BLADES

- Disengage attachment clutch control.

CAUTION: Do not operate the mower without either the entire grass catcher, on mowers so equipped, or the deflector shield (S) in place (See Fig. 10).

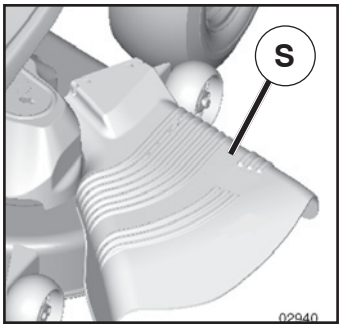

Fig. 10

https://truckmanualshub.com/

OPERATION

REVERSE OPERATION SYSTEM (ROS)

Your tractor is equipped with a Reverse Operation System (ROS). Any attempt by the operator to travel in the reverse direction with the attachment clutch engaged will shut off the engine unless ignition key is placed in the ROS "ON" position.

WARNING: Backing up with the attachment clutch engaged while mowing is strongly discouraged. Turning the ROS "ON", to allow reverse operation with the attachment clutch engaged, should only be done when the operator decides it is necessary to reposition the machine with the attachment engaged. **Do not mow in reverse unless absolutely necessary**.

USING THE REVERSE OPERATION SYSTEM -

Only use if you are certain no children or other bystanders will enter the mowing area.

- Depress brake pedal all the way down.
- With engine running, turn ignition key counterclockwise to ROS "ON" position.
- Look down and behind before and while backing.
- Slowly depress reverse drive pedal to start movement.
- When use of the ROS is no longer needed, turn the ignition key clockwise to engine "ON" position.

ROS "ON" POSITION **ENGINE "ON" POSITION (NORMAL OPERATING)**

TO OPERATE ON HILLS

CAUTION: Do not drive up or down hills with slopes greater than 15° and do not drive across any slope.

- Choose the slowest speed before starting up or down hills.
- Avoid stopping or changing speed on hills.
- If stopping is absolutely necessary, push brake pedal quickly to brake position and engage parking brake.
- To restart movement, slowly release parking brake and brake pedal.
- Slowly depress appropriate drive pedal to slowest setting.
- Make all turns slowly.

TO TRANSPORT (See Figs. 3 and 11)

When pushing or towing your tractor, be sure to disengage transmission by placing freewheel control in freewheeling position. Free wheel control is located at the rear drawbar of tractor.

- Raise attachment lift to highest position with attachment lift control.
- Pull freewheel control out and down into the slot and release so it is held in the disengaged position.
- Do not push or tow tractor at more than two (2) MPH.
- To reengage transmission, reverse above procedure.

NOTE: To protect hood from damage when transporting your tractor on a truck or a trailer, be sure hood is closed and secured to tractor. Use an appropriate means of tying hood to tractor (rope, cord, etc.).

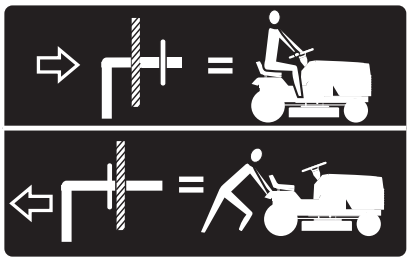

Fig. 11

TOWING CARTS AND OTHER ATTACHMENTS

Tow only the attachments that are recommended by and comply with specifications of the manufacturer of your tractor. Use common sense when towing. Too heavy of a load, while on a slope, is dangerous. Tires can lose traction with the ground and cause you to lose control of your tractor.

SERVICE REMINDER/HOUR METER

Service reminder shows the total number of hours the engine has run and flashes to indicate that the engine or mower needs servicing. When service is required, the service reminder will flash for two hours. To service engine and mower, see the Maintenance section of this manual.

NOTE: Service reminder runs when the ignition key is in any position but "STOP". For accurate reading, be sure key remains in the "STOP" position when engine is not running.

https://truckmanualshub.com/

OPERATION

BEFORE STARTING THE ENGINE

CHECK ENGINE OIL LEVEL

The engine in your tractor has been shipped, from the factory, already filled with summer weight oil.

- Check engine oil with tractor on level ground.
- Remove oil fill cap/dipstick and wipe clean, reinsert the dipstick and screw cap tight, wait for a few seconds, remove and read oil level. If necessary, add oil until "FULL" mark on dipstick is reached. Do not overfill.
- For cold weather operation you should change oil for easier starting (See "OIL VISCOSITY CHART" in the Maintenance section of this manual).
- To change engine oil, see the Maintenance section in this manual.

ADD GASOLINE

- Fill fuel tank to bottom of filler neck. Do not overfill. Use fresh, clean, regular unleaded gasoline with a minimum of 87 octane. (Use of leaded gasoline will increase carbon and lead oxide deposits and reduce valve life). Do not mix oil with gasoline. Purchase fuel in quantities that can be used within 30 days to assure fuel freshness.

CAUTION: Wipe off any spilled oil or fuel. Do not store, spill or use gasoline near an open flame.

IMPORTANT: WHEN OPERATING IN TEMPERATURES BELOW 32°F(0°C), USE FRESH, CLEAN WINTER GRADE GASOLINE TO HELP ENSURE GOOD COLD WEATHER STARTING.

CAUTION: Alcohol blended fuels (called gasohol or using ethanol or methanol) can attract moisture which leads to separation and formation of acids during storage. Acidic gas can damage the fuel system of an engine while in storage. To avoid engine problems, the fuel system should be emptied before storage of 30 days or longer. Drain the gas tank, start the engine and let it run until the fuel lines and carburetor are empty. Use fresh fuel next season. See Storage Instructions for additional information. Never use engine or carburetor cleaner products in the fuel tank or permanent damage may occur.

TO START ENGINE (See Fig. 3)

When starting the engine for the first time or if the engine has run out of fuel, it will take extra cranking time to move fuel from the tank to the engine.

- Be sure freewheel control is in the transmission engaged position.
- Sit on seat in operating position, depress brake pedal and set parking brake.
- Move attachment clutch to "DISENGAGED" position.
- Move throttle control to choke position.

NOTE: Before starting, read the warm and cold starting procedures below.

- Insert key into ignition and turn key clockwise to "START" position and release key as soon as engine starts. Do not run starter continuously for more than fifteen seconds per minute. If the engine does not start after several attempts, move throttle control to fast position, wait a few minutes and try again. If engine still does not start, move the throttle control back to the choke position and retry.

WARM WEATHER STARTING (50°F/10°C and above)

- When engine starts, move the throttle control to the fast position.
- The attachments and ground drive can now be used. If the engine does not accept the load, restart the engine and allow it to warm up for one minute using the choke as described above.

COLD WEATHER STARTING (50°F/10°C and below)

- When engine starts, allow engine to run with the throttle control in the choke position until the engine runs roughly, then move throttle control to fast position. This may require an engine warm-up period from several seconds to several minutes, depending on the temperature.

AUTOMATIC TRANSMISSION WARM UP

- Before driving the unit in cold weather, the transmission should be warmed up as follows:
  - Be sure the tractor is on level ground.
  - Release the parking brake and let the brake slowly return to operating position.
  - Allow one minute for transmission to warm up. This can be done during the engine warm up period.
- The attachments can also be used during the engine warm-up period after the transmission has been warmed up.

NOTE: If at a high altitude (above 3000 feet) or in cold temperatures (below 32°F/0°C) the carburetor fuel mixture may need to be adjusted for best engine performance. See "TO ADJUST CARBURETOR" in the Service and Adjustments section of this manual.

https://truckmanualshub.com/

OPERATION

PURGE TRANSMISSION

CAUTION: Never engage or disengage freewheel lever while the engine is running.

To ensure proper operation and performance, it is recommended that the transmission be purged before operating tractor for the first time. This procedure will remove any trapped air inside the transmission which may have developed during shipping of your tractor.

IMPORTANT: SHOULD YOUR TRANSMISSION REQUIRE REMOVAL FOR SERVICE OR REPLACEMENT, IT SHOULD BE PURGED AFTER REINSTALLATION BEFORE OPERATING THE TRACTOR.

- Place tractor safely on level surface with engine off and parking brake set.
- Disengage transmission by placing freewheel control in freewheeling position (See “TO TRANSPORT” in this section of manual).
- Sitting in the tractor seat, start engine. After the engine is running, move throttle control to slow position. Disengage parking brake
- Depress forward drive pedal to full forward position, hold for five (5) seconds and release pedal. Depress reverse drive pedal to full reverse position, hold for five (5) seconds and release pedal. Repeat this procedure three (3) times.

NOTE: During this procedure there will be no movement of drive wheels. The air is being removed from hydraulic drive system.

- Shut- off engine and set parking brake.
- Engage transmission by placing freewheel control in engaged position (See “TO TRANSPORT” in this section of manual).
- Sitting in the tractor seat, start engine. After the engine is running, move throttle control to half (1/2) speed. Disengage parking brake.
- Drive tractor forward for approximately five feet then backwards for five feet. Repeat this driving procedure three times.

Your transmission is now purged and now ready for normal operation.

MOWING TIPS

- Mower should be properly leveled for best mowing performance. See “TO LEVEL MOWER HOUSING” in the Service and Adjustments section of this manual.
- The left hand side of mower should be used for trimming.
- Drive so that clippings are discharged onto the area that has been cut. Have the cut area to the right of the machine. This will result in a more even distribution of clippings and more uniform cutting.
- When mowing large areas, start by turning to the right so that clippings will discharge away from shrubs, fences, driveways, etc. After one or two rounds, mow in the opposite direction making left hand turns until finished (See Fig. 12).

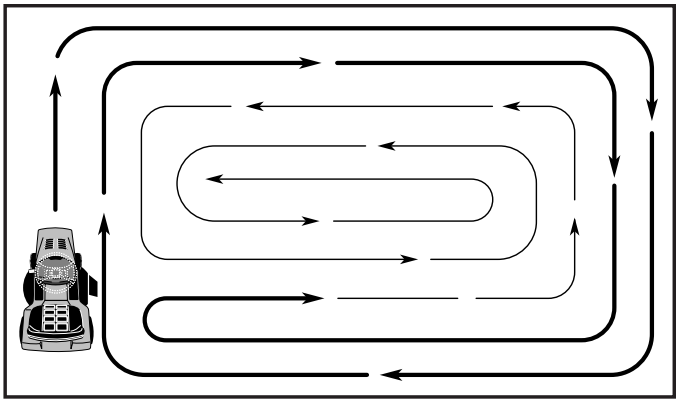

Fig. 12

- If grass is extremely tall, it should be mowed twice to reduce load and possible fire hazard from dried clippings. Make first cut relatively high; the second to the desired height.
- Do not mow grass when it is wet. Wet grass will plug mower and leave undesirable clumps. Allow grass to dry before mowing.
- **Always operate engine at full throttle when mowing** to assure better mowing performance and proper discharge of material. Regulate ground speed by selecting a low enough gear to give the mower cutting performance as well as the quality of cut desired.
- When operating attachments, select a ground speed that will suit the terrain and give best performance of the attachment being used.

https://truckmanualshub.com/

MAINTENANCE

	MAINTENANCE SCHEDULE	BEFORE EACH USE	EVERY 8 HOURS	EVERY 25 HOURS	EVERY 50 HOURS	EVERY 100 HOURS	EVERY SEASON	BEFORE STORAGE
TRACTOR	Check Brake Operation	✔	✔					
	Check Tire Pressure	✔	✔					
	Check Operator Presence & ROS Systems	✔						
	Check for Loose Fasteners	✔				✔		✔
	Check/Replace Mower Blades			✔ 3				
	Lubrication Chart			✔				✔
	Check Battery Level			✔ 4				
	Clean Battery and Terminals			✔				✔
	Clean Debris Off Steering Plate			✔ 5				
	Check Transaxle Cooling			✔				
	Check Mower Levelness				✔			
	Check V-Belts					✔		
ENGINE	Check Engine Oil Level	✔	✔					
	Change Engine Oil (with oil filter)				✔ 1,2			✔
	Change Engine Oil (without oil filter)			✔ 1,2				✔
	Clean Air Filter			✔ 2				
	Clean Air Screen			✔ 2				
	Inspect Muffler/Spark Arrester				✔			
	Replace Oil Filter (If equipped)					✔ 1, 2		
	Clean Engine Cooling Fins					✔ 2		
	Replace Spark Plug					✔	✔	
	Replace Air Filter Paper Cartridge					✔ 2		
	Replace Fuel Filter						✔	

1 - Change more often when operating under a heavy load or in high ambient temperatures.
2 - Service more often when operating in dirty or dusty conditions.
3 - Replace blades more often when mowing in sandy soil.
4 - Not required if equipped with maintenance-free battery.
5 - See Cleaning in Maintenance Section.

GENERAL RECOMMENDATIONS

The warranty on this tractor does not cover items that have been subjected to operator abuse or negligence. To receive full value from the warranty, operator must maintain tractor as instructed in this manual.

Some adjustments will need to be made periodically to properly maintain your tractor.

At least once a season, check to see if you should make any of the adjustments described in the Service and Adjustments section of this manual.

- At least once a year you should replace the spark plug, clean or replace air filter, and check blades and belts for wear. A new spark plug and clean air filter assure proper air-fuel mixture and help your engine run better and last longer.

BEFORE EACH USE

- Check engine oil level.
- Check brake operation.
- Check tire pressure.
- Check operator presence and ROS systems for proper operation.
- Check for loose fasteners.

LUBRICATION CHART

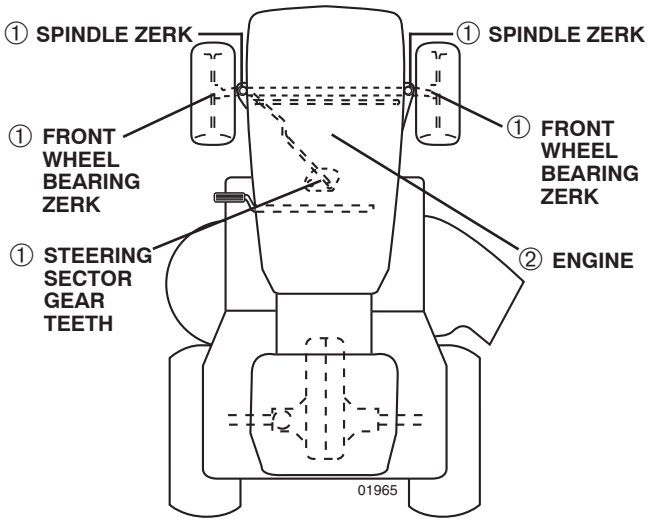

① General Purpose Grease

② Refer to Maintenance “ENGINE” Section

IMPORTANT: DO NOT OIL OR GREASE THE PIVOT POINTS WHICH HAVE SPECIAL NYLON BEARINGS. VISCOUS LUBRICANTS WILL ATTRACT DUST AND DIRT THAT WILL SHORTEN THE LIFE OF THE SELF-LUBRICATING BEARINGS. IF YOU FEEL THEY MUST BE LUBRICATED, USE ONLY A DRY, POWDERED GRAPHITE TYPE LUBRICANT SPARINGLY.

https://truckmanualshub.com/

MAINTENANCE

TRACTOR

Always observe safety rules when performing any maintenance.

BRAKE OPERATION

If tractor requires more than five (5) feet to stop at highest speed in highest gear on a level, dry concrete or paved surface, then brake must be checked and adjusted. (See “TO CHECK BRAKE” in the Service and Adjustments section of this manual).

TIRES

- Maintain proper air pressure in all tires (See the sides of tires for proper PSI).
- Keep tires free of gasoline, oil, or insect control chemicals which can harm rubber.
- Avoid stumps, stones, deep ruts, sharp objects and other hazards that may cause tire damage.

NOTE: To seal tire punctures and prevent flat tires due to slow leaks, tire sealant may be purchased from your local parts dealer. Tire sealant also prevents tire dry rot and corrosion.

OPERATOR PRESENCE SYSTEM AND REVERSE OPERATION SYSTEM (ROS) (See Fig. 13)

Be sure operator presence and reverse operation systems are working properly. If your tractor does not function as described, repair the problem immediately.

- The engine should not start unless the brake pedal is fully depressed, and the attachment clutch control is in the disengaged position.

CHECK OPERATOR PRESENCE SYSTEM

- When the engine is running, any attempt by the operator to leave the seat without first setting the parking brake should shut off the engine.
- When the engine is running and the attachment clutch is engaged, any attempt by the operator to leave the seat should shut off the engine.
- The attachment clutch should never operate unless the operator is in the seat.

CHECK REVERSE OPERATION (ROS) SYSTEM

- When the engine is running with the ignition switch in the engine "ON" position and the attachment clutch engaged, any attempt by the operator to shift into reverse should shut off the engine.
- When the engine is running with the ignition switch in the ROS "ON" position and the attachment clutch engaged, any attempt by the operator to shift into reverse should NOT shut off the engine.

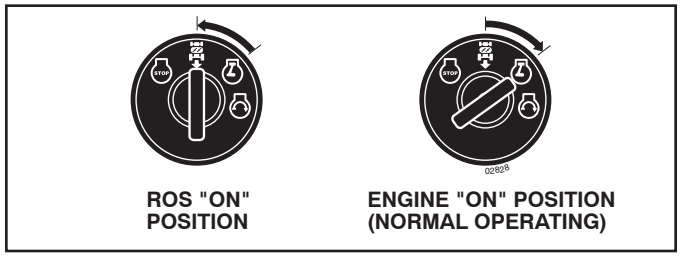

Fig. 13

BLADE CARE

For best results mower blades must be kept sharp. Replace bent or damaged blades.

CAUTION: Use only a replacement blade approved by the manufacturer of your tractor. Using a blade not approved by the manufacturer of your tractor is hazardous, could damage your tractor and void your warranty.

BLADE REMOVAL (See Fig. 14)

- Raise mower to highest position to allow access to blades.

NOTE: Protect your hands with gloves and/or wrap blade with heavy cloth.

- Remove blade bolt by turning counterclockwise.
- Install new or resharpened blade with stamped "THIS SIDE UP" facing deck and mandrel assembly.

IMPORTANT: TO ENSURE PROPER ASSEMBLY, CENTER HOLE IN BLADE MUST ALIGN WITH STAR ON MANDREL ASSEMBLY.

- Install and tighten blade bolt securely (45-55 Ft. Lbs. torque).

IMPORTANT: SPECIAL BLADE BOLT HEAT TREATED.

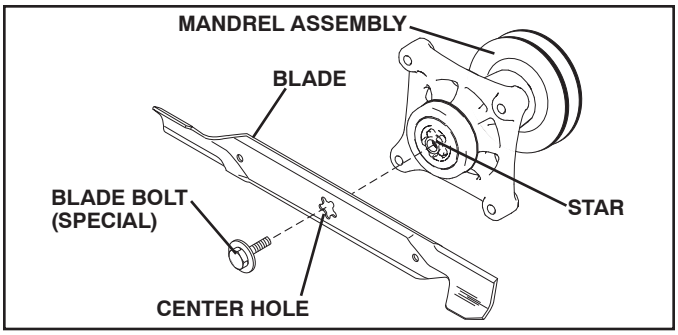

Fig. 14

BATTERY

Your tractor has a battery charging system which is sufficient for normal use. However, periodic charging of the battery with an automotive charger will extend its life.

- Keep battery and terminals clean.
- Keep battery bolts tight.
- Keep small vent holes open.
- Recharge at 6-10 amperes for 1 hour.

NOTE: The original equipment battery on your tractor is maintenance free. Do not attempt to open or remove caps or covers. Adding or checking level of electrolyte is not necessary.

TO CLEAN BATTERY AND TERMINALS

Corrosion and dirt on the battery and terminals can cause the battery to “leak” power.

- Raise seat.
- Disconnect BLACK battery cable first then RED battery cable and remove battery from tractor.
- Rinse the battery with plain water and dry.
- Clean terminals and battery cable ends with wire brush until bright.
- Coat terminals with grease or petroleum jelly.
- Reinstall battery (See “REPLACING BATTERY" in the SERVICE AND ADJUSTMENTS section of this manual).

https://truckmanualshub.com/

MAINTENANCE

V-BELTS

Check V-belts for deterioration and wear after 100 hours of operation and replace if necessary. The belts are not adjustable. Replace belts if they begin to slip from wear.

TRANSAXLE COOLING

The transmission fan and cooling fins should be kept clean to assure proper cooling.

Do not attempt to clean fan or transmission while engine is running or while the transmission is hot. To prevent possible damage to seals, do not use high pressure water or steam to clean transaxle.

- Inspect cooling fan to be sure fan blades are intact and clean.
- Inspect cooling fins for dirt, grass clippings and other materials. To prevent damage to seals, do not use compressed air or high pressure sprayer to clean cooling fins.

TRANSAXLE PUMP FLUID

The transaxle was sealed at the factory and fluid maintenance is not required for the life of the transaxle. Should the transaxle ever leak or require servicing, contact your nearest authorized service center/department.

ENGINE

LUBRICATION

Only use high quality detergent oil rated with API service classification SG-SL. Select the oil's SAE viscosity grade according to your expected operating temperature.

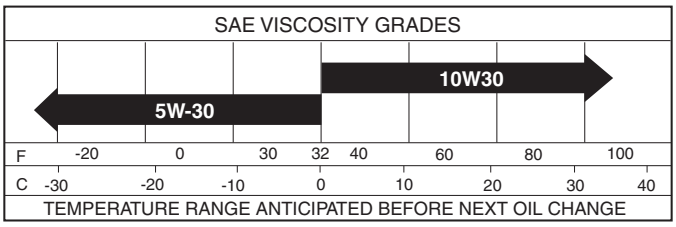

Fig. 15

Change the oil after every 50 hours of operation or at least once a year if the tractor is not used for 50 hours in one year.

Check the crankcase oil level before starting the engine and after each eight (8) hours of operation.

TO CHANGE ENGINE OIL (See Fig. 16)

Determine temperature range expected before oil change. All oil must meet API service classification SG-SL.

- Be sure tractor is on level surface.
- Oil will drain more freely when warm.
- Catch oil in a suitable container.
- Remove oil fill cap/dipstick. Be careful not to allow dirt to enter the engine when changing oil.
- Remove yellow cap from end of drain valve and install the drain tube onto the fitting.
- Unlock drain valve by pushing inward and turning counterclockwise.
- To open, pull out on the drain valve.

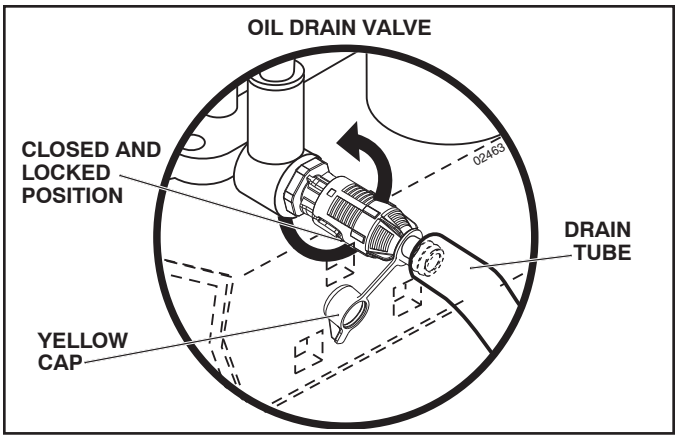

Fig. 16

- After oil has drained completely, close and lock the drain valve by pushing inward and turning clockwise until the pin is in the locked position as shown.
- Remove the drain tube and replace the cap onto to the bottom fitting of the drain valve.
- Refill engine with oil through oil fill dipstick tube. Pour slowly. Do not overfill. For approximate capacity see "PRODUCT SPECIFICATIONS" section of this manual.
- Use gauge on oil fill cap/dipstick for checking level. For accurate reading, insert dipstick into the tube and push down firmly into place before removing. Keep oil up to, but not over, the "FULL" line on dipstick. Push dipstick down firmly into the tube when finished.

ENGINE OIL FILTER

Replace the engine oil filter every season or every other oil change if the tractor is used more than 100 hours in one year.

AIR FILTER

Your engine will not run properly using a dirty air filter. Service air cleaner more often under dusty conditions.

CLEAN AIR SCREEN

Air screen must be kept free of dirt and chaff to prevent engine damage from overheating. Clean with a wire brush or compressed air to remove dirt and stubborn dried gum fibers.

ENGINE COOLING SYSTEM

To ensure proper cooling, make sure the grass screen, cooling fins, and other external surfaces of the engine are kept clean at all times.

Every 100 hours of operation (more often under extremely dusty, dirty conditions), remove the blower housing and other cooling shrouds. Clean the cooling fins and external surfaces as necessary. Ensure the cooling shrouds are reinstalled.

NOTE: Operating the engine with a blocked grass screen, dirty or plugged cooling fins, and/or cooling shrouds removed will cause engine damage due to overheating.

SPARK PLUGS

Replace spark plugs at the beginning of each mowing season or after every 100 hours of operation, whichever occurs first. Spark plug type and gap setting are shown in "PRODUCT SPECIFICATIONS" section of this manual.

https://truckmanualshub.com/

MAINTENANCE

MUFFLER

Inspect and replace corroded muffler and spark arrester (if equipped) as it could create a fire hazard and/or damage.

IN-LINE FUEL FILTER (See Fig. 17)

The fuel filter should be replaced once each season. If fuel filter becomes clogged, obstructing fuel flow to carburetor, replacement is required.

- With engine cool, remove filter and plug fuel line sections.
- Place new fuel filter in position in fuel line with arrow pointing towards carburetor.
- Be sure there are no fuel line leaks and clamps are properly positioned.
- Immediately wipe up any spilled gasoline.

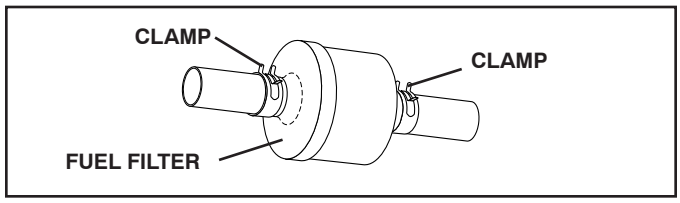

Fig. 17

CLEANING

- Clean engine, battery, seat, finish, etc. of all foreign matter.
- Clean debris from steering plate. Debris can restrict clutch/brake pedal shaft movement, causing belt slip and loss of drive.

CAUTION: Avoid all pinch points and movable parts (See Fig. 29)

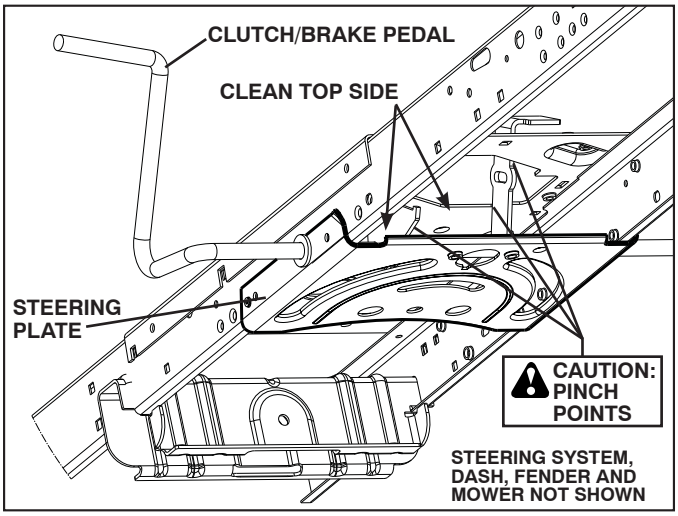

Fig. 18

- Keep finished surfaces and wheels free of all gasoline, oil, etc.
- Protect painted surfaces with automotive type wax.

We do not recommend using a garden hose or pressure washer to clean your tractor unless the engine and transmission are covered to keep water out. Water in engine or transmission will shorten the useful life of your tractor. Use compressed air or a leaf blower to remove grass, leaves and trash from tractor and mower.

DECK WASHOUT PORT (See Fig. 30)

Your tractor's deck is equipped with a washout port on its surface as part of its deck wash system. It should be utilized after each use.

1. Drive the tractor to a level, clear spot on your lawn, near enough to a water spigot for your garden hose to reach.

IMPORTANT: Make certain the tractor's discharge chute is directed AWAY from your house, garage, parked cars, etc. Remove bagger chute or mulch cover if attached.

2. Make sure the attachment clutch control is in the "DISENGAGED" position, set the parking brake, and stop the engine.
3. Thread the nozzle adapter (packaged with your tractor's Operator's Manual) onto the end of your garden hose.
4. Pull back the lock collar of the nozzle adapter and push the adapter onto the deck washout port at the left end of the mower deck. Release the lock collar to lock the adapter on the nozzle.

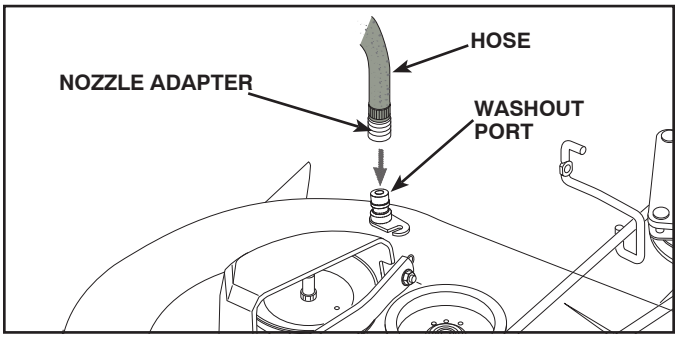

Fig. 19

IMPORTANT: Tug hose ensuring connection is secure.

5. Turn the water on.
6. While sitting in the operator's position on the tractor, re-start the engine and place the throttle lever in the Fast "🐇" position.

IMPORTANT: Recheck the area making certain the area is clear.

7. Move the tractor's attachment clutch control to the "ENGAGED" position. Remain in the operator's position with the cutting deck engaged until the deck is cleaned.
8. Move the tractor's attachment clutch control to the "DISENGAGED" position. Turn the ignition key to the STOP position to turn the tractor's engine off. Turn the water off.
9. Pull back the lock collar of the nozzle adapter to disconnect the adapter from the nozzle washout port.
10. Move the tractor to a dry area, preferably a concrete or paved area. Place the attachment clutch control in the "ENGAGED" position to remove excess water and to help dry before putting the tractor away.

WARNING: A broken or missing washout fitting could expose you or others to thrown objects from contact with the blade.

- **Replace broken or missing washout fitting immediately, prior to using mower again.**
- **Plug any holes in mower with bolts and locknuts.**

https://truckmanualshub.com/

SERVICE AND ADJUSTMENTS

WARNING: TO AVOID SERIOUS INJURY, BEFORE PERFORMING ANY SERVICE OR ADJUSTMENTS:
- **Depress brake pedal fully and set parking brake.**
- **Place attachment clutch in "DISENGAGED" position.**
- **Turn ignition key to "STOP" and remove key.**
- **Make sure the blades and all moving parts have completely stopped.**
- **Disconnect spark plug wire from spark plug and place wire where it cannot come in contact with plug.**

TO REMOVE MOWER (See Fig. 20)

- Place attachment clutch in "DISENGAGED" position.
- Lower attachment lift lever to its lowest position.
- Roll belt off engine pulley (M) and belt keepers (G).
- Remove retainer spring (K), slide collar (L) off and push housing guide (P) out of bracket.
- Remove clutch cable spring (Q) from idler arm (R).
- Disconnect front link (E) from mower - remove retainer spring and washer.
- Go to either side of mower and disconnect mower suspension arm (A) from chassis pin (B) and rear lift link (C) from rear mower bracket (D) - remove retainer springs and washers.

CAUTION: AFTER REAR LIFT LINKS ARE DISCONNECTED, THE ATTACHMENT LIFT LEVER WILL BE SPRING LOADED. HAVE A TIGHT GRIP ON LIFT LEVER WHEN CHANGING POSITION OF THE LEVER.

- Slide mower out from under right side of tractor.

IMPORTANT: IF AN ATTACHMENT OTHER THAN THE MOWER IS TO BE MOUNTED ON THE TRACTOR, REMOVE THE FRONT LINK (E) AND REAR LIFT LINKS (C) FROM TRACTOR AND HOOK THE CLUTCH SPRING (Q) INTO THE CABLE GUIDE ON FRONT EDGE OF LOWER DASH.

TO INSTALL MOWER (See Fig. 20-25)

Be sure tractor is on level surface and engage parking brake.

- Lower attachment lift lever to its lowest position.

CAUTION: LIFT LEVER IS SPRING LOADED. HAVE A TIGHT GRIP ON LIFT LEVER, LOWER IT SLOWLY AND ENGAGE IN LOWEST POSITION.

NOTE: Be sure mower side suspension arms (A) are pointing forward before sliding mower under tractor.

- Slide mower under tractor until it is centered under tractor.

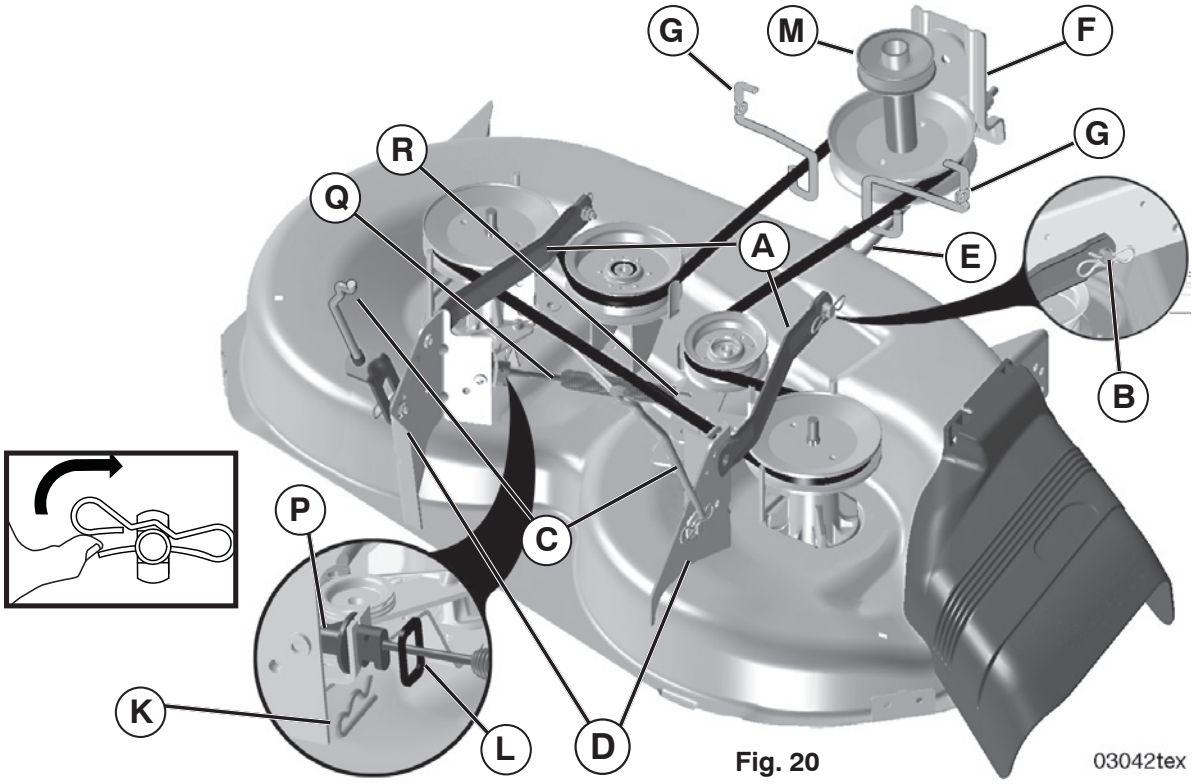

Fig. 20

https://truckmanualshub.com/

SERVICE AND ADJUSTMENTS

- ATTACH MOWER SIDE SUSPENSION ARMS (A) TO CHASSIS - Position hole in arm over pin (B) on outside of tractor chassis and secure with retainer spring.
- Repeat on opposite side of tractor.

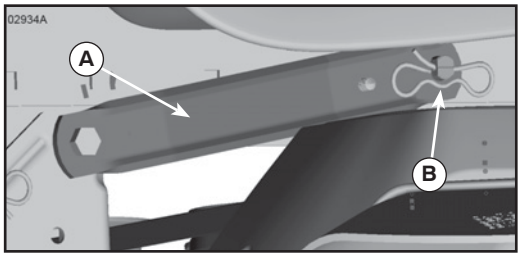

Fig. 21

- ATTACH REAR LIFT LINKS (C) - Lift rear corner of mower and position slot in link assembly over pin (D) on rear mower bracket and secure with washer and retainer spring.

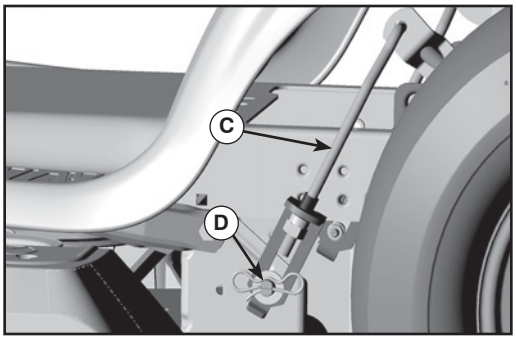

Fig. 22

- ATTACH FRONT LINK (E) - Work from left side of tractor. Insert rod end of link assembly through front hole in tractor front suspension bracket (F).
- Insert end of link (E) into hole in front mower bracket and secure with washer and retainer spring (J).

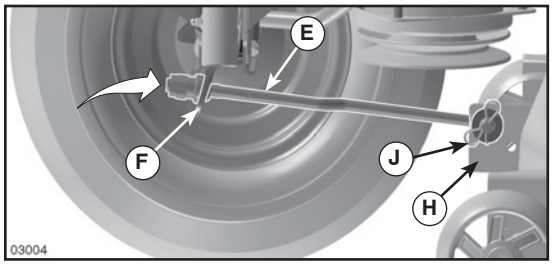

Fig. 23

- Hook end of clutch cable spring (Q) into hole in idler arm (R).
- Push clutch cable housing guide (P) into bracket, slide collar (L) onto guide and secure with retainer spring (K).
- Install belt on engine pulley (M), in belt keepers (G).

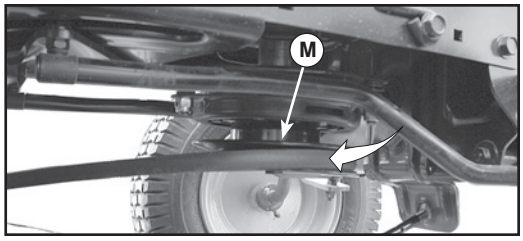

Fig. 24

IMPORTANT: CHECK BELT FOR PROPER ROUTING IN ALL MOWER PULLEY GROOVES.

- Raise attachment lift lever to highest position.
- If necessary, adjust gauge wheels before operating mower as shown in the Operation section of this manual.

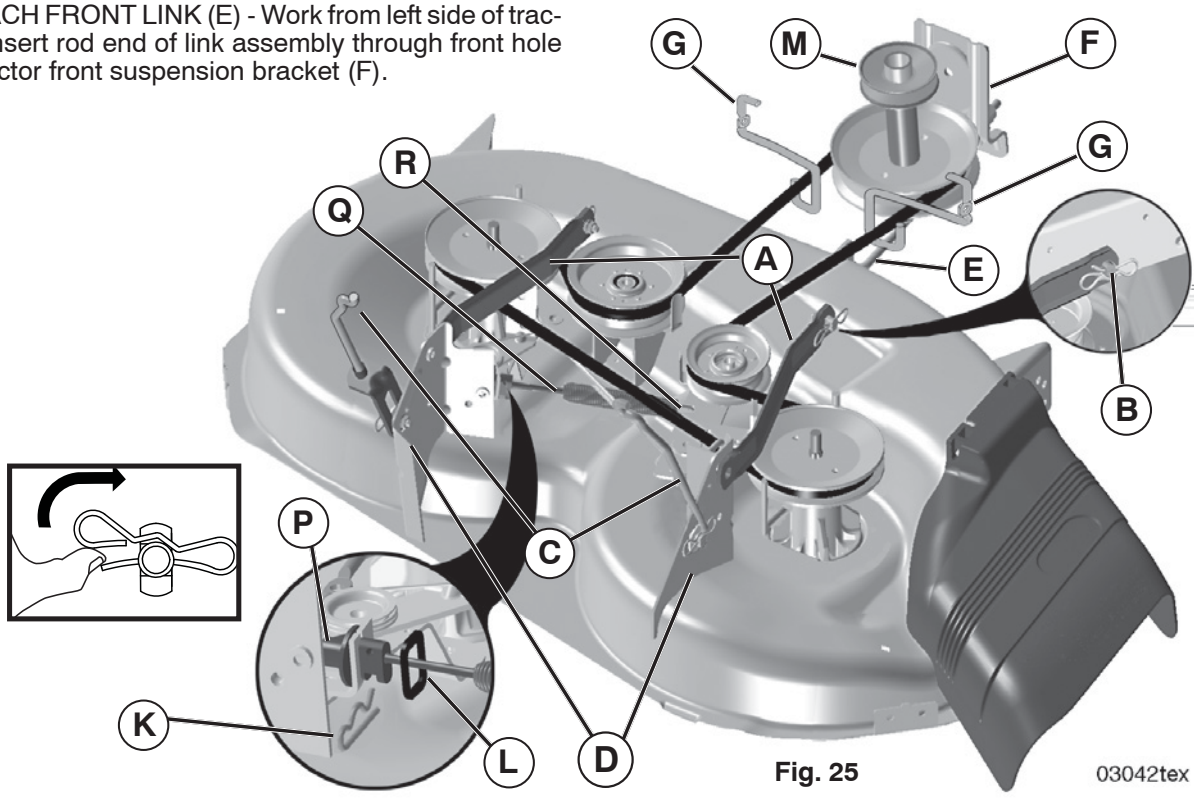

Fig. 25

https://truckmanualshub.com/

SERVICE AND ADJUSTMENTS

TO LEVEL MOWER

Make sure tires are properly inflated to the PSI shown on tires. If tires are over or under inflated, it may affect the appearance of your lawn and lead you to think the mower is not adjusted properly.

VISUAL SIDE-TO-SIDE ADJUSTMENT (See Fig. 26)

- With all tires properly inflated and if your lawn appears unevenly cut, determine which side of mower is cutting lower.
- With a 3/4" or adjustable wrench, turn lift link adjustment nut (A) to the left to lower LH side of mower, or, to the right to raise LH side of mower.

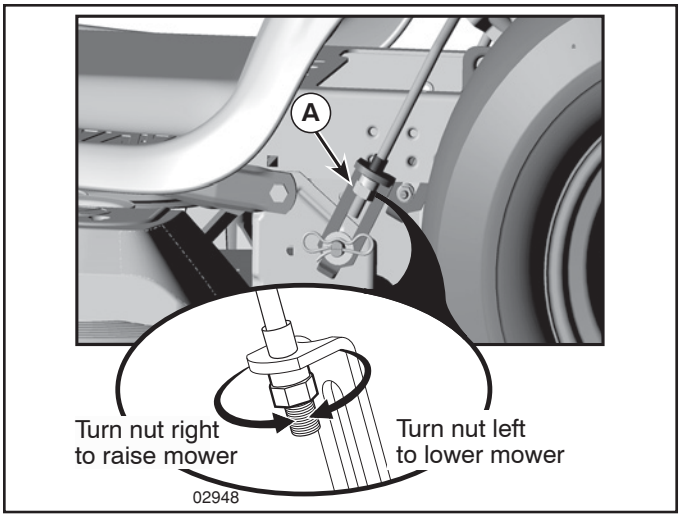

Fig. 26

NOTE: Each full turn of adjustment nut will change mower height about 3/16".

- Test your adjustment by mowing some uncut grass and visually checking the appearance. Readjust, if necessary, until you are satisfied with the results.

PRECISION SIDE-TO-SIDE ADJUSTMENT (See Fig. 27)

- With all tires properly inflated, park tractor on level ground or driveway.

CAUTION: Blades are sharp. Protect your hands with gloves and/or wrap blade with heavy cloth.

- Raise mower to its highest position.
- At both sides of mower, position blade at side and measure the distance (A) from bottom edge of blade to the ground. The distance should be the same on both sides.

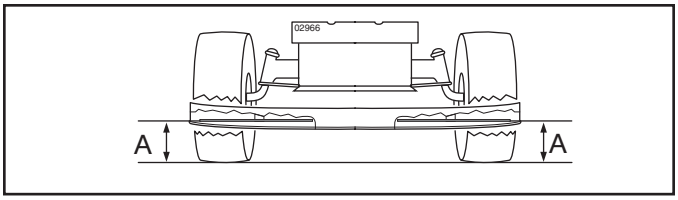

Fig. 27

- If adjustment is necessary, see step in Visual Adjustment instructions above.
- Recheck measurements, adjust if necessary until both sides are equal.

FRONT-TO-BACK ADJUSTMENT (See Figs. 28 & 29)

IMPORTANT: Deck must be level side-to-side.

To obtain the best cutting results, the mower blades should be adjusted so the front tip is 1/8" to 1/2" lower than the rear tip when the mower is in its highest position.

CAUTION: Blades are sharp. Protect your hands with gloves and/or wrap blade with heavy cloth.

- Raise mower to highest position.
- Position blade so the tip is pointing straight forward. Measure distance (B) to the ground at front and rear tip of the blade.

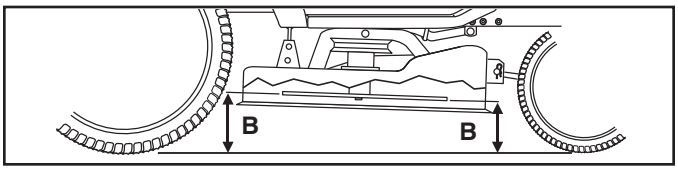

Fig. 28

- If front tip of blade is not 1/8" to 1/2" lower than the rear tip, go to the front of tractor.
- With an 11/16" or adjustable wrench, loosen jam nut A several turns to clear adjustment nut B.
- With a 3/4" or adjustable wrench, turn front link adjustment nut (B) clockwise (tighten) to raise the front of mower, or, counterclockwise (loosen) to lower the front mower.

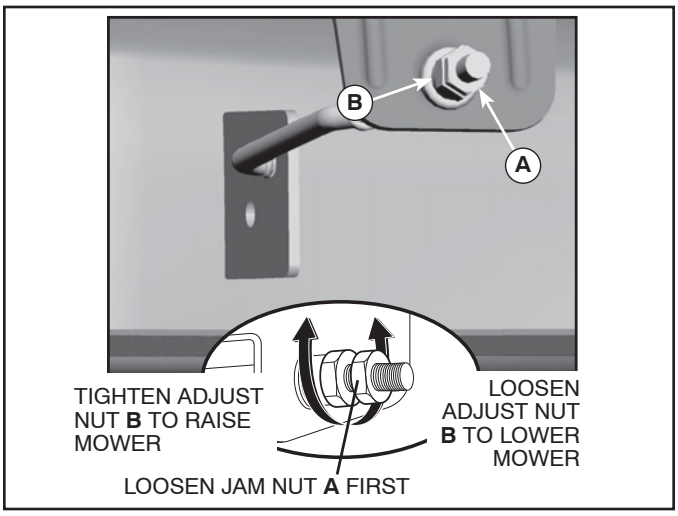

Fig. 29

NOTE: Each full turn of the adjustment nut will change mower height about 1/8".

- Recheck measurements, adjust if necessary until front tip of blade is 1/8" to 1/2" lower than the rear tip.
- Hold adjustment nut in position with wrench and tighten jam nut securely against adjustment nut.

https://truckmanualshub.com/

TO REPLACE MOWER BLADE DRIVE BELT (See Fig. 30)

The mower blade drive belt may be replaced without tools. Park the tractor on level surface. Engage parking brake.

BELT REMOVAL -

- Remove mower from tractor (See “TO REMOVE MOWER” in this section of manual).
- Work belt off both mandrel pulleys and idler pulleys.
- Pull belt away from mower.

BELT INSTALLATION -

- Work belt around both mandrel pulleys and idler pulleys.
- Make sure belt is in all pulley grooves and inside all belt guides.
- Install mower (See "TO INSTALL MOWER" in this section of manual).

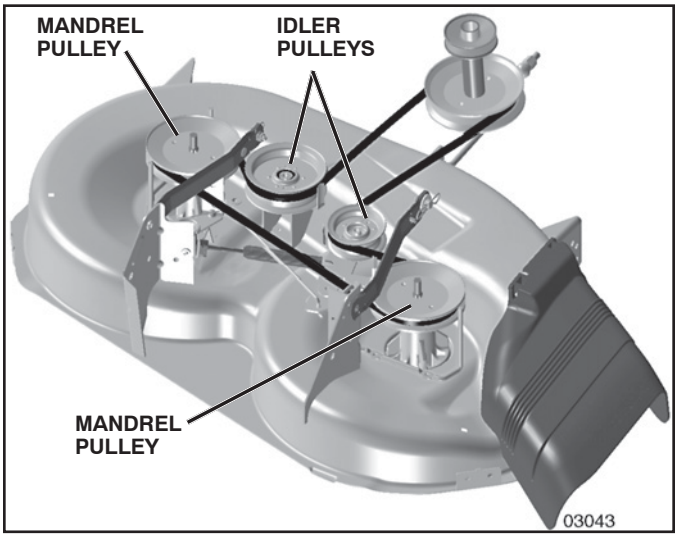

Fig. 30

TO CHECK BRAKE

If tractor requires more than five (5) feet to stop at highest speed in highest gear on a level, dry concrete or paved surface, then brake must be serviced.

You may also check brake by:

- Park tractor on a level, dry concrete or paved surface, depress brake pedal all the way down and engage parking brake.
- Disengage transmission by placing freewheel control in “transmission disengaged” position. Pull freewheel control out and into the slot and release so it is held in the disengaged position.

The rear wheels must lock and skid when you try to manually push the tractor forward. If the rear wheels rotate, then the brake needs to be serviced. Contact a qualified service center.

TO REPLACE MOTION DRIVE BELT (See Fig. 31)

Park the tractor on level surface. Engage parking brake. For assistance, there is a belt installation guide decal on bottom side of left footrest.

BELT REMOVAL -

- Remove mower (See “TO REMOVE MOWER” section in this manual).

NOTE: Observe entire motion drive belt and position of all belt guides and keepers.

- Remove belt from stationary idler (A) and clutching idler (B).
- Remove belt from centerspan idler (C).
- Pull belt slack toward rear of tractor. Carefully remove belt upwards from transmission input pulley and over cooling fan blades (D).
- Remove belt downward from engine pulley (E).
- Slide belt toward rear of tractor, off the steering plate (F) and remove from tractor.

BELT INSTALLATION -

- Install new belt from tractor rear to front, over the steering plate (F) and above clutch brake pedal shaft (G).
- Pull belt toward front of tractor and roll belt onto engine pulley (E).
- Pull belt toward rear of tractor. Carefully work belt down around transmission cooling fan and onto the input pulley (D). Be sure belt is inside the belt keeper.
- Install belt on centerspan idler (C).
- Install belt through stationary idler (A) and clutching idler (B).
- Make sure belt is in all pulley grooves and inside all belt guides and keepers.
- Install mower (See “TO INSTALL MOWER” section in this manual).

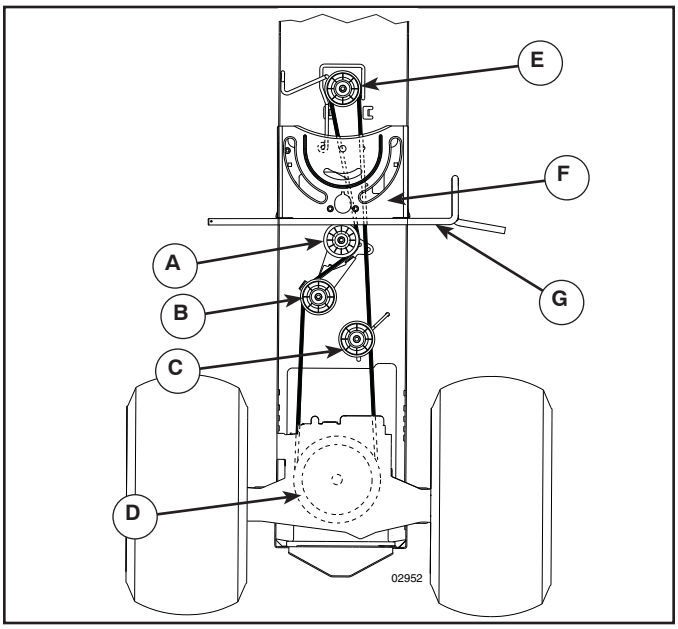

Fig. 31

https://truckmanualshub.com/

SERVICE AND ADJUSTMENTS

TO REMOVE WHEEL (See Fig. 32)

- Block up axle securely.
- Remove axle cover, retaining ring and washers to allow wheel removal (rear wheel contains a square key - Do not lose).
- Repair tire and reassemble.
- On rear wheels only: align grooves in rear wheel hub and axle. Insert square key.
- Replace washers and snap retaining ring securely in axle groove.
- Replace axle cover.

NOTE: To seal tire punctures and prevent flat tires due to slow leaks, tire sealant may be purchased from your local parts dealer. Tire sealant also prevents tire dry rot and corrosion.

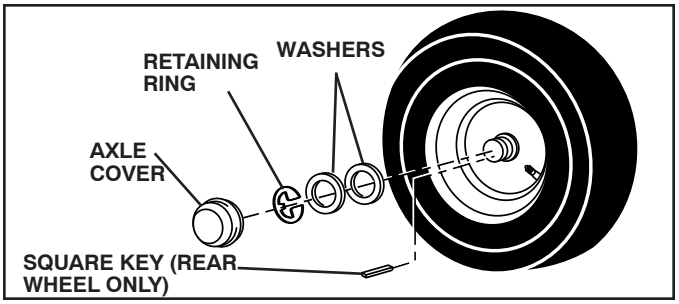

Fig. 32

FRONT WHEEL TOE-IN/CAMBER

Your new tractor front wheel toe-in and camber is set at the factory and is normal. The front wheel toe-in and camber are not adjustable. If damage has occurred to affect the factory set front wheel toe-in or camber, contact a qualified service center.

TO START ENGINE WITH A WEAK BATTERY (See Fig. 33)

WARNING: Lead-acid batteries generate explosive gases. Keep sparks, flame and smoking materials away from batteries. Always wear eye protection when around batteries.

If your battery is too weak to start the engine, it should be recharged. (See "BATTERY" in the MAINTENANCE section of this manual).

If “jumper cables” are used for emergency starting, follow this procedure:

IMPORTANT: YOUR TRACTOR IS EQUIPPED WITH A 12 VOLT SYSTEM. THE OTHER VEHICLE MUST ALSO BE A 12 VOLT SYSTEM. DO NOT USE YOUR TRACTOR BATTERY TO START OTHER VEHICLES.

TO ATTACH JUMPER CABLES -

- Connect one end of the RED cable to the POSITIVE (+) terminal of each battery(A-B), taking care not to short against tractor chassis.
- Connect one end of the BLACK cable to the NEGATIVE (-) terminal (C) of fully charged battery.
- Connect the other end of the BLACK cable (D) to good chassis ground, away from fuel tank and battery.

TO REMOVE CABLES, REVERSE ORDER -

- BLACK cable first from chassis and then from the fully charged battery.
- RED cable last from both batteries.

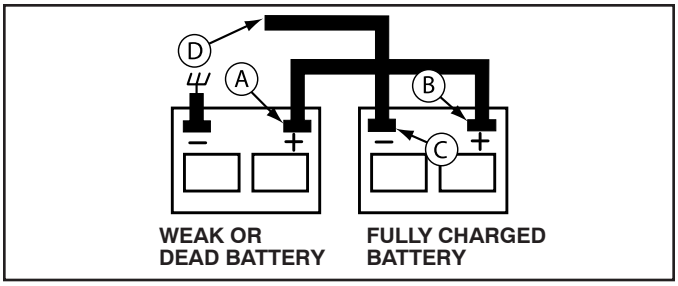

Fig. 33

REPLACING BATTERY (See Fig. 34)

WARNING: Do not short battery terminals by allowing a wrench or any other object to contact both terminals at the same time. Before connecting battery, remove metal bracelets, wristwatch bands, rings, etc. Positive terminal must be connected first to prevent sparking from accidental grounding.

- Lift seat pan to raised position.
- Disconnect BLACK battery cable first then RED battery cable and carefully remove battery from tractor.
- Install new battery with terminals in same position as old battery.
- First connect RED battery cable to positive (+) terminal with bolt and nut as shown. Tighten securely. Slide terminal cover over terminal.
- Connect BLACK grounding cable to negative (-) terminal with remaining bolt and nut. Tighten securely.
- Lower seat pan.

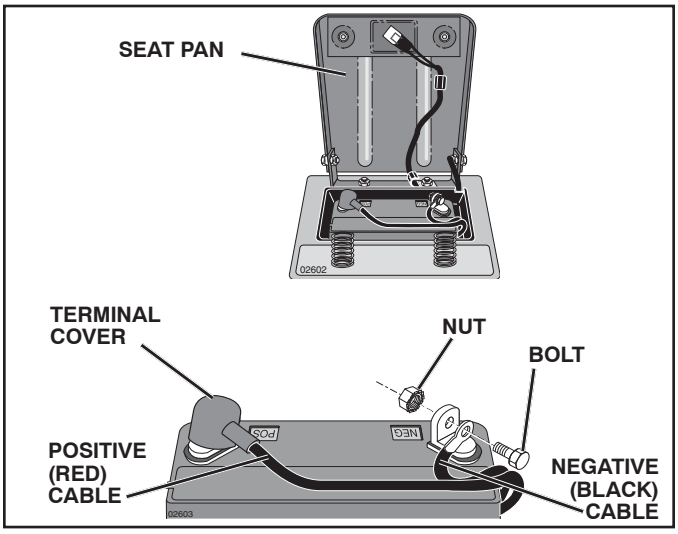

Fig. 34

https://truckmanualshub.com/

SERVICE AND ADJUSTMENTS

TO REPLACE HEADLIGHT BULB

- Raise hood.
- Pull bulb holder out of the hole in the backside of the grill.
- Replace bulb in holder and push bulb holder securely back into the hole in the backside of the grill.
- Close hood.

INTERLOCKS AND RELAYS

Loose or damaged wiring may cause your tractor to run poorly, stop running, or prevent it from starting.

- Check wiring. See electrical wiring diagram in the Repair Parts section.

TO REPLACE FUSE

Replace with 20 amp automotive-type plug-in fuse. The fuse holder is located behind the dash.

TO REMOVE HOOD AND GRILL ASSEMBLY (See Fig. 35)

- Raise hood.
- Unsnap headlight wire connector.
- Stand in front of tractor. Grasp hood at sides, tilt toward engine and lift off of tractor.
- To replace, reverse above procedure.

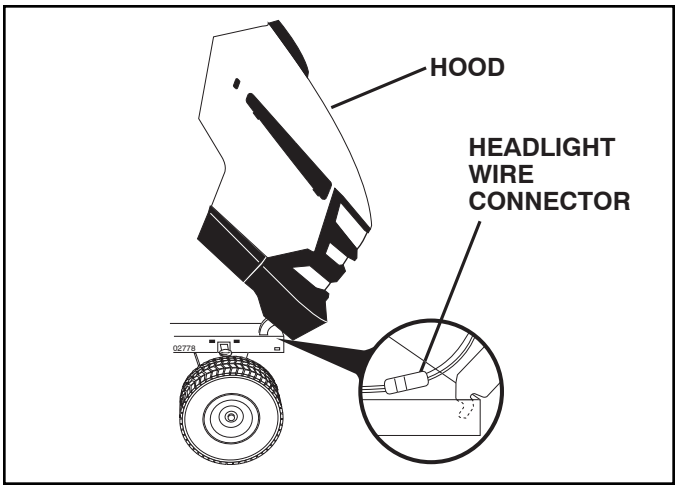

Fig. 35

TRANSMISSION

REMOVAL/REPLACEMENT

Should your transmission require removal for service or replacement, it should be purged after reinstallation and before operating the tractor. See "PURGE TRANSMISSION" in the Operation section of this manual.

ENGINE

TO ADJUST THROTTLE CONTROL CABLE

The throttle control has been preset at the factory and adjustment should not be necessary. If adjustment is necessary, see engine manual.

TO ADJUST CHOKE CONTROL

The choke control has been preset at the factory and adjustment should not be necessary. If adjustment is necessary, see engne manual.

TO ADJUST CARBURETOR

Your carburetor is not adjustable. If your engine does not operate properly due to suspected carburetor problems, take your tractor to an authorized service center for repair and/or adjustment.

https://truckmanualshub.com/

STORAGE

Immediately prepare your tractor for storage at the end of the season or if the tractor will not be used for 30 days or more.

WARNING: Never store the tractor with gasoline in the tank inside a building where fumes may reach an open flame or spark. Allow the engine to cool before storing in any enclosure.

TRACTOR

Remove mower from tractor for winter storage. When mower is to be stored for a period of time, clean it thoroughly, remove all dirt, grease, leaves, etc. Store in a clean, dry area.

- Clean entire tractor (See "CLEANING" in the Maintenance section of this manual).
- Inspect and replace belts, if necessary (See belt replacement instructions in the Service and Adjustments section of this manual).
- Lubricate as shown in the Maintenance section of this manual.
- Be sure that all nuts, bolts and screws are securely fastened. Inspect moving parts for damage, breakage and wear. Replace if necessary.
- Touch up all rusted or chipped paint surfaces; sand lightly before painting.

BATTERY

- Fully charge the battery for storage.
- After a period of time in storage, battery may require recharging.
- To help prevent corrosion and power leakage during long periods of storage, battery cables should be disconnected and battery cleaned thoroughly (see "TO CLEAN BATTERY AND TERMINALS" in the Maintenance section of this manual).
- After cleaning, leave cables disconnected and place cables where they cannot come in contact with battery terminals.
- If battery is removed from tractor for storage, do not store battery directly on concrete or damp surfaces.

ENGINE

FUEL SYSTEM

IMPORTANT: IT IS IMPORTANT TO PREVENT GUM DEPOSITS FROM FORMING IN ESSENTIAL FUEL SYSTEM PARTS SUCH AS CARBURETOR, FUEL FILTER, FUEL HOSE, OR TANK DURING STORAGE. ALSO, EXPERIENCE INDICATES THAT ALCOHOL BLENDED FUELS (CALLED GASOHOL OR USING ETHANOL OR METHANOL) CAN ATTRACT MOISTURE WHICH LEADS TO SEPARATION AND FORMATION OF ACIDS DURING STORAGE. ACIDIC GAS CAN DAMAGE THE FUEL SYSTEM OF AN ENGINE WHILE IN STORAGE.

- Empty the fuel tank by starting the engine and let it run until the fuel lines and carburetor are empty.
- Never use engine or carburetor cleaner products in the fuel tank or permanent damage may occur.
- Use fresh fuel next season.

NOTE: Fuel stabilizer is an acceptable alternative in minimizing the formation of fuel gum deposits during storage. Add stabilizer to gasoline in fuel tank or storage container. Always follow the mix ratio found on stabilizer container. Run engine at least 10 minutes after adding stabilizer to allow the stabilizer to reach the carburetor. Do not empty the gas tank and carburetor if using fuel stabilizer.

ENGINE OIL

Drain oil (with engine warm) and replace with clean engine oil. (See "ENGINE" in the Maintenance section of this manual).

CYLINDER(S)

- Remove spark plug(s).
- Pour one ounce of oil through spark plug hole(s) into cylinder(s).
- Turn ignition key to "START" position for a few seconds to distribute oil.
- Replace with new spark plug(s).

OTHER

- Do not store gasoline from one season to another.
- Replace your gasoline can if your can starts to rust. Rust and/or dirt in your gasoline will cause problems.
- If possible, store your tractor indoors and cover it to give protection from dust and dirt.
- Cover your tractor with a suitable protective cover that does not retain moisture. Do not use plastic. Plastic cannot breathe which allows condensation to form and will cause your tractor to rust.

IMPORTANT: NEVER COVER TRACTOR WHILE ENGINE AND EXHAUST AREAS ARE STILL WARM.

https://truckmanualshub.com/

TROUBLESHOOTING

PROBLEM	CAUSE	CORRECTION
Will not start	1. Out of fuel.	1. Fill fuel tank.
	2. Engine not “CHOKED” properly.	2. See “TO START ENGINE” in Operation section.
	3. Engine flooded.	3. Wait several minutes before attempting to start.
	4. Bad spark plug.	4. Replace spark plug.
	5. Dirty air filter.	5. Clean/replace air filter.
	6. Dirty fuel filter.	6. Replace fuel filter.
	7. Water in fuel.	7. Empty fuel tank and carburetor, refill tank with fresh gasoline and replace fuel filter.
	8. Loose or damaged wiring.	8. Check all wiring.
	9. Carburetor out of adjustment.	9. See “To Adjust Carburetor” in Service Adjustments section.
	10. Engine valves out of adjustment.	10. Contact an authorized service center/department.
Hard to start	1. Dirty air filter.	1. Clean/replace air filter.
	2. Bad spark plug.	2. Replace spark plug.
	3. Weak or dead battery.	3. Recharge or replace battery.
	4. Dirty fuel filter.	4. Replace fuel filter.
	5. Stale or dirty fuel.	5. Empty fuel tank and refill tank with fresh, clean gas.
	6. Loose or damaged wiring.	6. Check all wiring.
	7. Carburetor out of adjustment.	7. See “To Adjust Carburetor” in Service Adjustments section.
	8. Engine valves out of adjustment.	8. Contact an authorized service center/department.
Engine will not turn over	1. Brake pedal not depressed.	1. Depress brake pedal.
	2. Attachment clutch is engaged.	2. Disengage attachment clutch.
	3. Weak or dead battery.	3. Recharge or replace battery.
	4. Blown fuse.	4. Replace fuse.
	5. Corroded battery terminals.	5. Clean battery terminals.
	6. Loose or damaged wiring.	6. Check all wiring.
	7. Faulty ignition switch.	7. Check/replace ignition switch.
	8. Faulty solenoid or starter.	8. Check/replace solenoid or starter.
	9. Faulty operator presence switch(es).	9. Contact an authorized service center/department.
Engine clicks but will not start	1. Weak or dead battery.	1. Recharge or replace battery.
	2. Corroded battery terminals.	2. Clean battery terminals.
	3. Loose or damaged wiring.	3. Check all wiring.
	4. Faulty solenoid or starter.	4. Check/replace solenoid or starter.
Loss of power	1. Cutting too much grass/too fast.	1. Raise cutting height/reduce speed.
	2. Throttle in “CHOKE” position.	2. Adjust throttle control.
	3. Build-up of grass, leaves, trash under mower.	3. Clean underside of mower housing.
	4. Dirty air filter.	4. Clean/replace air filter.
	5. Low oil level/dirty oil.	5. Check oil level/change oil.
	6. Faulty spark plug.	6. Clean and regap or change spark plug.
	7. Dirty fuel filter.	7. Replace fuel filter.
	8. Stale or dirty fuel.	8. Empty fuel tank and refill tank with fresh, clean gas.
	9. Water in fuel.	9. Empty fuel tank and carburetor, refill tank with fresh gasoline and replace fuel filter.
	10. Spark plug wire loose.	10. Connect and tighten spark plug wire.
	11. Dirty engine air screen/fins.	11. Clean engine air screen/fins.
	12. Dirty/clogged muffler.	12. Clean/replace muffler.
	13. Loose or damaged wiring.	13. Check all wiring.
	14. Carburetor out of adjustment.	14. See “To Adjust Carburetor” in Service Adjustments
	15. Engine valves out of adjustment.	15. Contact an authorized service center/department.
Excessive vibration	1. Worn, bent or loose blade.	1. Replace blade. Tighten blade bolt.
	2. Bent blade mandrel.	2. Replace blade mandrel.
	3. Loose/damaged part(s).	3. Tighten loose part(s). Replace damaged parts.

https://truckmanualshub.com/

TROUBLESHOOTING

PROBLEM	CAUSE	CORRECTION
Engine continues to run when operator leaves seat with attachment clutch engaged	1. Faulty operator-safety presence control system.	1. Check wiring, switches and connections. If not corrected, contact an authorized service center/ department.
Poor cut - uneven	1. Worn, bent or loose blade. 2. Mower deck not level. 3. Buildup of grass, leaves, trash under mower. 4. Bent blade mandrel. 5. Clogged mower deck vent holes from buildup of grass, leaves, and trash around mandrels.	1. Replace blade. Tighten blade bolt. 2. Level mower deck. 3. Clean underside of mower housing. 4. Replace blade mandrel. 5. Clean around mandrels to open vent holes.
Mower blades will not rotate	1. Obstruction in clutch mechanism. 2. Worn/damaged mower drive belt. 3. Frozen idler pulley. 4. Frozen blade mandrel.	1. Remove obstruction. 2. Replace mower drive belt. 3. Replace idler pulley. 4. Replace blade mandrel.
Poor grass discharge	1. Engine speed too slow. 2. Travel speed too fast. 3. Wet grass. 4. Mower deck not level. 5. Low/uneven tire air pressure. 6. Worn, bent or loose blade. 7. Buildup of grass, leaves, trash under mower. 8. Mower drive belt worn. 9. Blades improperly installed. 10. Improper blades used. 11. Clogged mower deck vent holes from buildup of grass, leaves, trash around mandrels.	1. Place throttle control in “FAST” position. 2. Shift to slower speed. 3. Allow grass to dry before mowing. 4. Level mower deck. 5. Check tires for proper air pressure. 6. Replace blade. Tighten blade bolt. 7. Clean underside of mower housing. 8. Replace mower drive belt. 9. Reinstall blades sharp edge down. 10. Replace with blades listed in parts manual. 11. Clean around mandrels to open vent holes.
Headlight(s) not working (if so equipped)	1. Switch is “OFF”. 2. Bulb(s) or lamp(s) burned out. 3. Faulty light switch. 4. Loose or damaged wiring. 5. Blown fuse.	1. Turn switch “ON”. 2. Replace bulb(s) or lamp(s). 3. Check/replace light switch. 4. Check wiring and connections. 5. Replace fuse.
Battery will not charge	1. Bad battery cell(s). 2. Poor cable connections. 3. Faulty regulator (if so equipped). 4. Faulty alternator.	1. Replace battery. 2. Check/clean all connections. 3. Replace regulator. 4. Replace alternator.
Loss of drive	1. Freewheel control in “disengaged” position. 2. Debris on steering plate (if equipped). 3. Motion drive belt worn, damaged, or broken. 4. Air trapped in transmission during shipment or servicing. 5. Axle key missing.	1. Place freewheel control in “engaged” position. 2. See "CLEANING" in the maintenance section. 3. Replace motion drive belt. 4. Purge transmission. 5. Install axle key at rear wheel. See "TO REMOVE WHEEL" in the Service and Adjustments section.
Engine "back-fires” when turning engine “OFF”	1. Engine throttle control not set between half and full speed (fast) position before stopping engine.	1. Move throttle control between half and full speed (fast) position before stopping engine.
Engine dies when tractor is shifted into reverse	1. Reverse operation system (ROS) is not "ON" while mower or other attachment is engaged.	1. Turn ignition key to ROS "ON" position. See Operation section.

https://truckmanualshub.com/

TRACTOR - - MODEL NUMBER YTH21K46 (96043008500), PRODUCT NO. 960 43 00-85

SCHEMATIC

SCH10

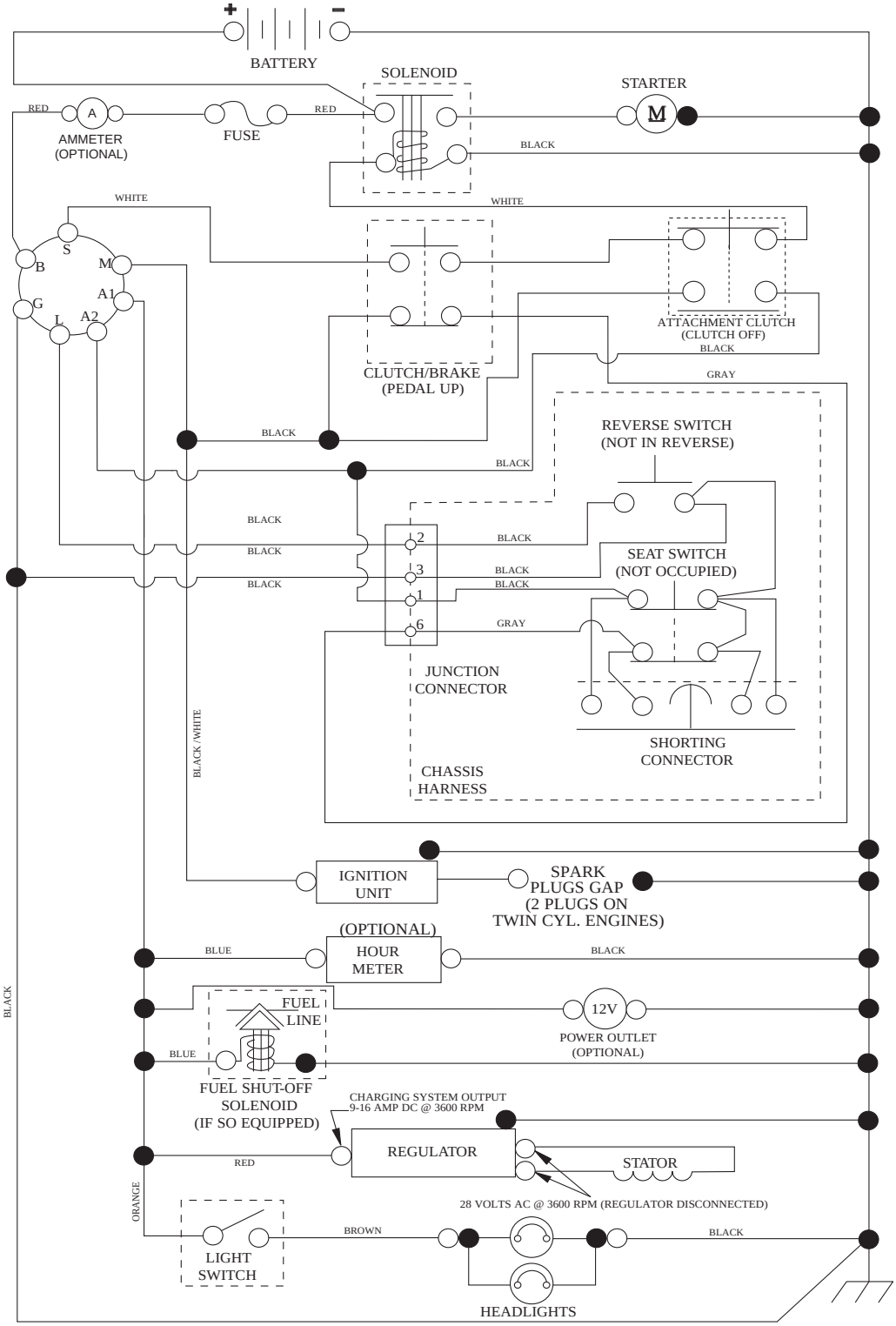

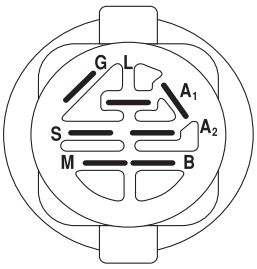

IGNITION SWITCH

POSITION	CIRCUIT	"MAKE"
OFF	M+G+A1	
RUN/OVERRIDE	B+A1	
RUN	B+A1	L+A2
START	B + S + A1	

03107

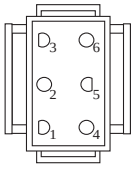

CHASSIS HARNESS CONNECTOR (MATING SIDE)

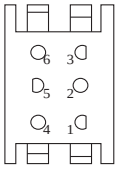

DASH HARNESS CONNECTOR (MATING SIDE)

WIRING INSULATED CLIPS

NOTE: IF WIRING INSULATED CLIPS WERE REMOVED FOR SERVICING OF UNIT, THEY SHOULD BE RE-INSTALLED TO PROPERLY SECURE YOUR WIRING.

NON-REMOVABLE CONNECTIONS

REMOVABLE CONNECTIONS

https://truckmanualshub.com/

TRACTOR - - MODEL NUMBER YTH21K46 (96043008500), PRODUCT NO. 960 43 00-85

ELECTRICAL

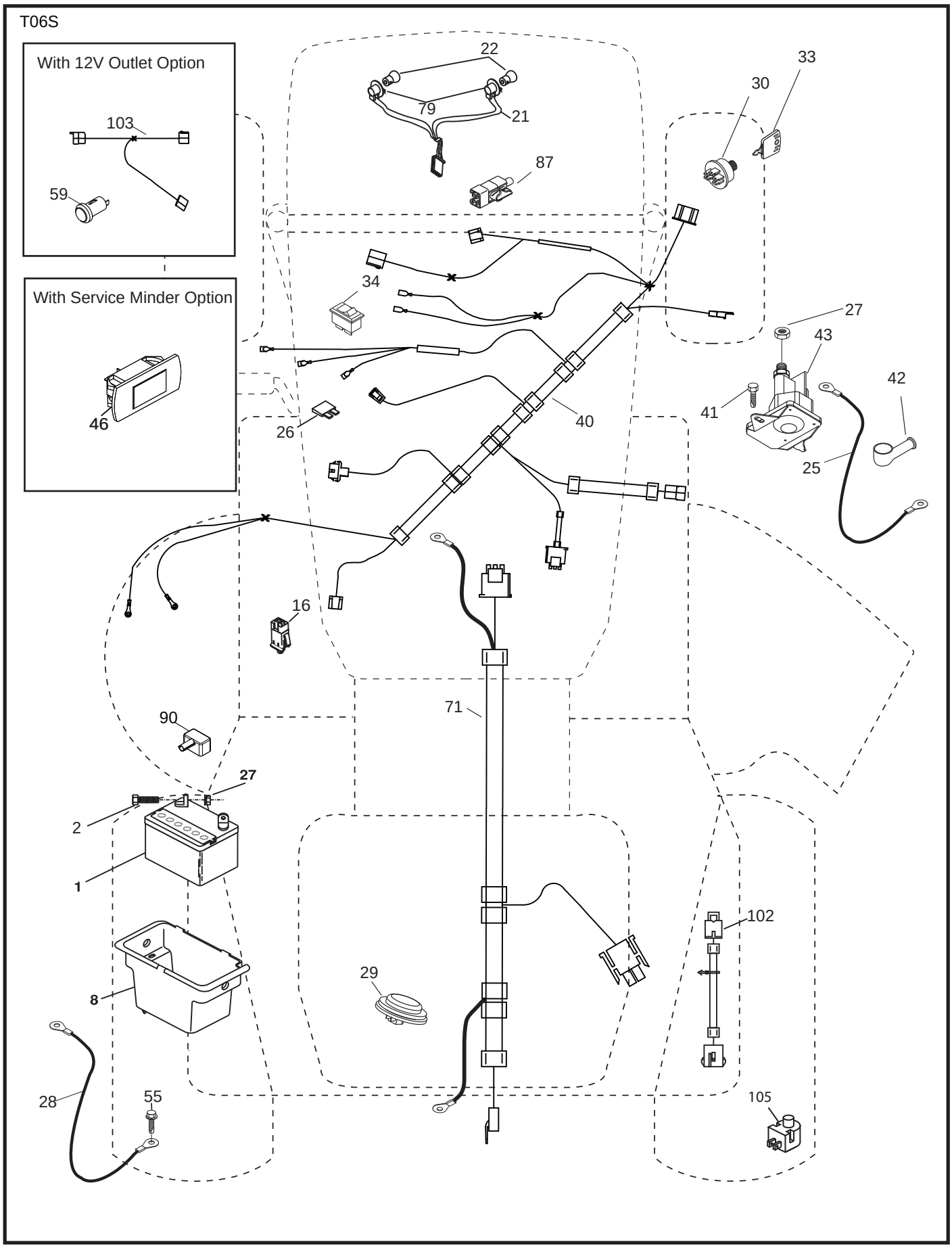

https://truckmanualshub.com/

ELECTRICAL

KEY NO.	PART NO.	DESCRIPTION
1	532 16 34-65	Battery
2	874 76 04-12	Bolt Hex Head 1/4-20 x 3/4
8	532 19 32-28	Box Battery
16	532 17 61-38	Switch Interlock Push-In
21	532 18 37-59	Harness Socket Light w/4152J
22	532 00 41-52	Bulb Light
25	532 41 28-95	Cable Starter
26	532 17 51-58	Fuse
27	873 51 04-00	Nut Keps Hex 1/4-20 unc
28	532 19 88-85	Cable, Ground
29	532 40 15-45	Switch, Seat
30	532 19 33-50	Switch, Ign
33	532 41 19-33	Key/Chain
34	532 11 07-12	Switch Light/Reset
40	532 40 10-98	Harness Ign. Dash
41	817 72 04-08	Screw Thd Cut 1/4-20 x 1/2
42	532 13 15-63	Cover, Terminal
43	532 19 25-07	Solenoid
46	532 40 17-63	Gauge Serviceminder Hrmtr
55	817 06 05-12	Screw Thdrol 5/16-18 x 3/4 TYTT
71	532 40 04-49	Harness Ign.
79	532 17 52-42	Socket Asm. Bulb
87	532 19 78-02	Switch Interlock
90	532 40 07-25	Cover Terminal
102	532 40 44-54	Harness Pigtail
105	532 40 75-68	Switch Reverse

NOTE: All component dimensions given in U.S. inches
1 inch = 25.4 mm

https://truckmanualshub.com/

TRACTOR - - MODEL NUMBER YTH21K46 (96043008500), PRODUCT NO. 960 43 00-85

CHASSIS

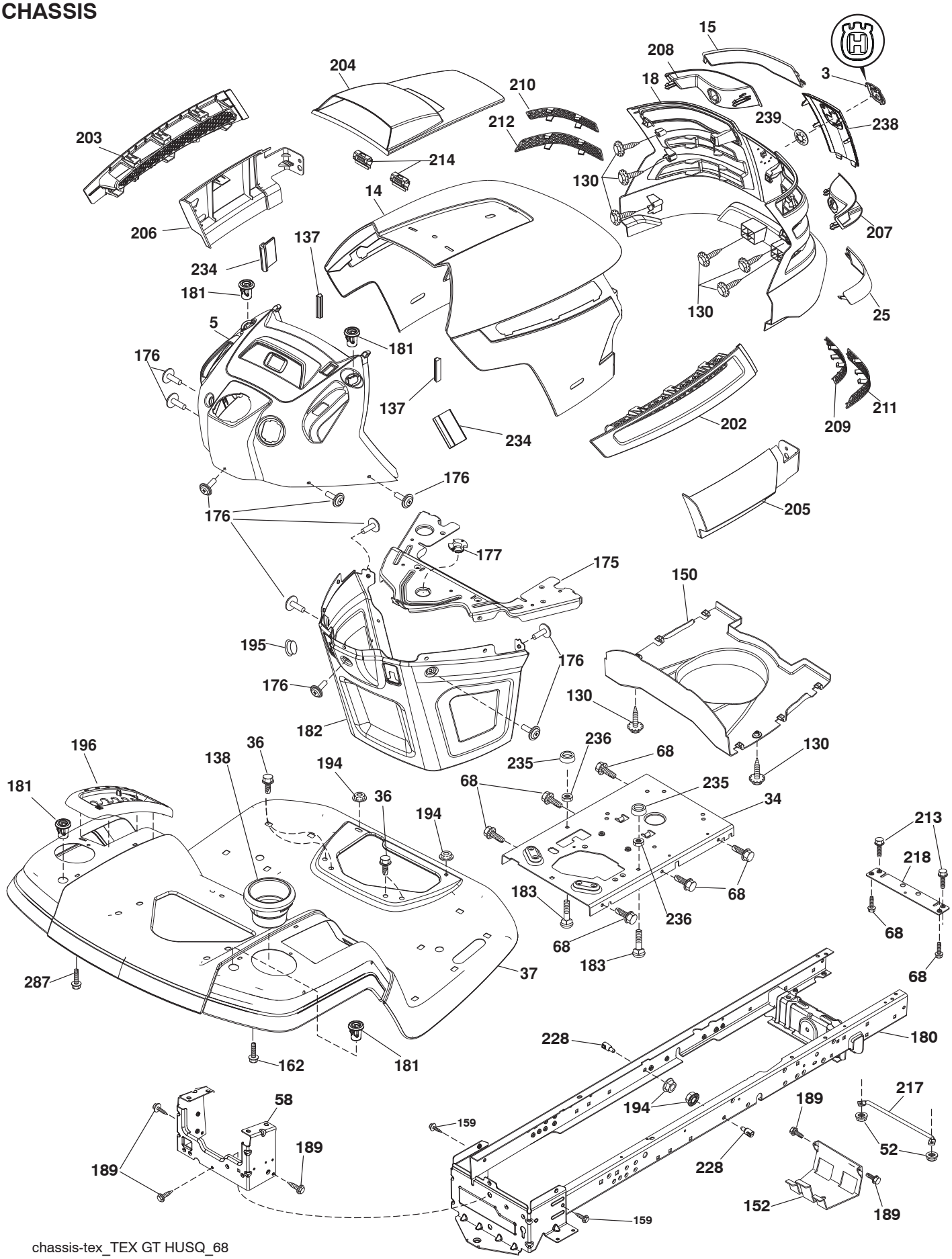

chassis-tex_TEX GT HUSQ_68

https://truckmanualshub.com/

TRACTOR - - MODEL NUMBER YTH21K46 (96043008500), PRODUCT NO. 960 43 00-85

CHASSIS

KEY NO.	PART NO.	DESCRIPTION
3	532 40 50-12	Logo
5	532 40 87-03	Dash
14	532 41 10-46	Hood
15	532 19 89-07	Lens LH
18	532 40 86-07	Grille/Lens Asm.
25	532 19 89-06	Lens RH
34	532 19 61-25	Plate Engine
36	817 06 05-12	Screw 5/16-18 x 3/4
37	532 41 87-14	Fender
52	873 68 05-00	Nut Lock 5/16-18
58	532 41 22-80	Drawbar Upper 2PC Sml. Fender
68	817 49 05-08	Screw Thdrol 5/16-18 x 1/2
130	532 41 63-58	Screw #10 x 0.750
137	532 40 75-90	Bumper Dash
138	532 40 29-54	Cupholder
150	532 19 85-13	Air Duct
152	532 19 95-35	Shield Browning
159	817 00 06-12	Screw Hexwsh Thrd 3/8-16 x 3/4
162	532 14 24-32	Screw
175	532 19 63-04	Crossmember
176	532 40 07-76	Screw 10-24 x 5/8
177	532 19 52-27	Bushing Steering
180	532 41 50-63	Chassis
181	532 40 30-25	Bushing Mtg. Fender Crgo
182	532 40 68-59	Dash Lower
183	874 78 05-20	Bolt Fin Hex 5/16-18 unc x 1-1/4
189	817 00 05-12	Screw 5/16-18 x 3/4
194	873 90 05-00	Nut Lock Hex Flange 5/16-18
195	532 40 41-37	Plug Hole Dash Lower
196	532 41 45-80	Console Asm. Deck Lift
202	532 40 30-48	Vent Side Hood RH
203	532 40 30-76	Vent Side Hood LH
204	532 41 66-13	Vent Top Hood
205	532 40 17-09	Skirt Hood Side RH
206	532 40 17-11	Skirt Hood Side LH
207	532 19 71-98	Bezel RH
208	532 19 71-99	Bezel LH
209	532 19 91-30	Insert Hex Top RH
210	532 19 91-31	Insert Hex Top LH
211	532 19 91-32	Insert Hex Bottom RH
212	532 19 91-33	Insert Hex Bottom LH
213	874 76 05-12	Bolt 5/16-18 x 3/4
214	532 19 91-45	Clip Retainer Tinner
217	532 40 91-67	Rod Pivot
218	532 19 63-95	X-Piece Hood Stop
228	532 19 51-61	Stud Fastner
234	532 40 47-42	Bumper Hood
235	532 40 61-29	Spacer Fender
236	873 93 05-00	Nut Lock 5/16-18 unc
238	532 40 86-06	Trim
239	532 11 04-52	Nut, Push
287	817 60 04-06	Screw 1/4-20 x 3/8

NOTE: All component dimensions given in U.S. inches
1 inch = 25.4 mm

https://truckmanualshub.com/

TRACTOR - - MODEL NUMBER YTH21K46 (96043008500), PRODUCT NO. 960 43 00-85

DRIVE

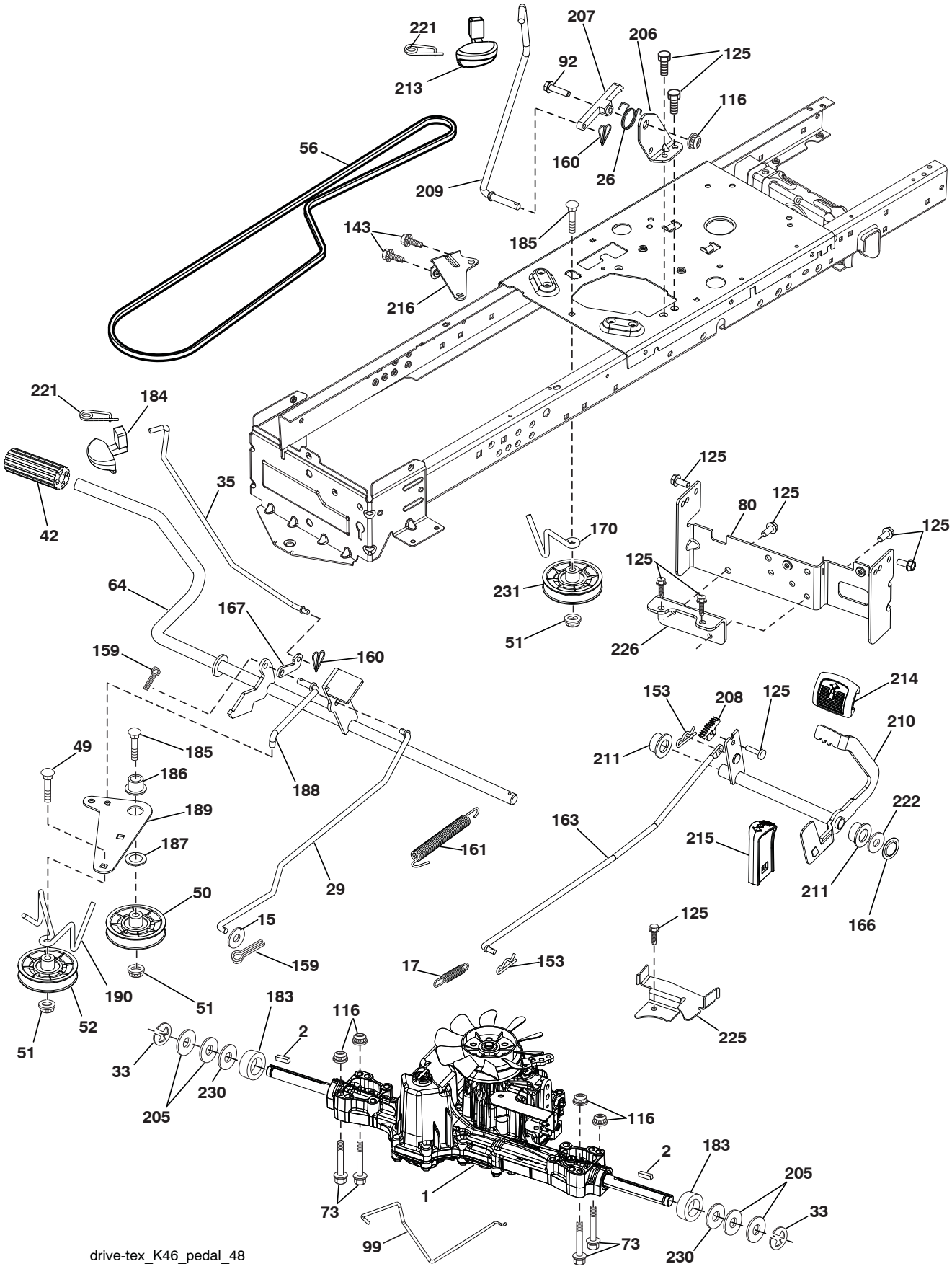

https://truckmanualshub.com/

TRACTOR - - MODEL NUMBER YTH21K46 (96043008500), PRODUCT NO. 960 43 00-85

DRIVE

KEY NO.	PART NO.	DESCRIPTION
1	532 42 61-20	Transaxle, Tufftorq K46BT
2	532 12 35-83	Key Square
15	819 13 13-16	Washer 13/32 x 13/16 x 16 Ga.
17	532 41 36-78	Spring, Brake
26	532 19 96-79	Spring Return Cruise
29	532 40 38-06	Rod, Brake
33	812 00 00-01	Ring E
35	532 19 95-91	Rod, Brake, Park
42	532 12 48-72	Cover, Foot Pedal
49	872 11 06-14	Bolt
50	532 19 43-27	Pulley Idler Flat
51	873 90 06-00	Lock Nut 3/8-16
52	532 19 43-26	Idler V-Groove 910" Offset
56	532 13 09-69	V-Belt, Drive
64	532 19 78-65	Shaft Asm. Pedal Brake Control
73	874 49 05-44	Bolt Hex 5/16-18 Gr. 5
80	532 41 00-24	Strap Torque
92	874 76 05-20	Bolt Fin Hex 5/16-18 unc x 1.25
99	532 41 57-42	Rod Spring Bypass
116	873 90 05-00	Nut Lock Hex Flange 5/16-18
125	817 00 05-12	Screw 5/16-18 x 3/4
143	817 49 05-08	Screw 5/16-18 x 1/2
153	532 12 47-88	Retainer Spring 1"
159	876 02 04-12	Pin Cotter 1/8 x 3/4
160	532 16 94-84	Retainer Clip
161	532 10 57-09	Spring, Return, Clutch
163	532 40 10-34	Rod Control
166	532 42 83-05	Nut Push
167	532 40 52-57	Latch Brake Parking
170	532 41 34-30	Keeper V-Idler
183	532 13 70-57	Spacer Axle
184	532 40 31-18	Handle Parking Brake
185	872 11 06-22	Bolt
186	532 19 43-21	Spacer Retainer
187	819 13 32-10	Washer
188	532 19 43-23	Link Clutch Ground Drive
189	532 19 43-17	Bellcrank Ground Drive
190	532 19 43-18	Keeper Bellcrank Ground Drive
205	532 12 17-48	Washer 25/32 x 1-5/8 x 16 Ga.
206	532 19 78-67	Bracket Mount Latch Cruise
207	532 19 78-68	Latch Control Cruise
208	532 19 78-69	Gear Sector Control Cruise
209	532 19 95-92	Rod Control Cruise
210	532 40 09-80	Rocker Asm. Pedal Control
211	532 12 01-83	Bearing Nylon
213	532 40 31-19	Knob Control Cruise
214	532 42 12-63	Pedal Forward Pad
215	532 40 17-23	Pedal Reverse
216	532 19 61-31	Bracket Pulley Idler
221	532 40 31-87	Retainer Spring Clip Handle
222	879 21 20-10	Washer 21/32 x 1-1/4 10 Ga.
225	532 40 33-19	Keeper Belt Transaxle
226	532 40 15-64	Bracket Mount Torque
230	532 18 89-67	Washer Harden .793 x 1.637 x 060
231	532 40 72-87	Idler V-Groove 1.688" Offset

NOTE: All component dimensions given in U.S. inches
1 inch = 25.4 mm

https://truckmanualshub.com/

TRACTOR - - MODEL NUMBER YTH21K46 (96043008500), PRODUCT NO. 960 43 00-85

ENGINE

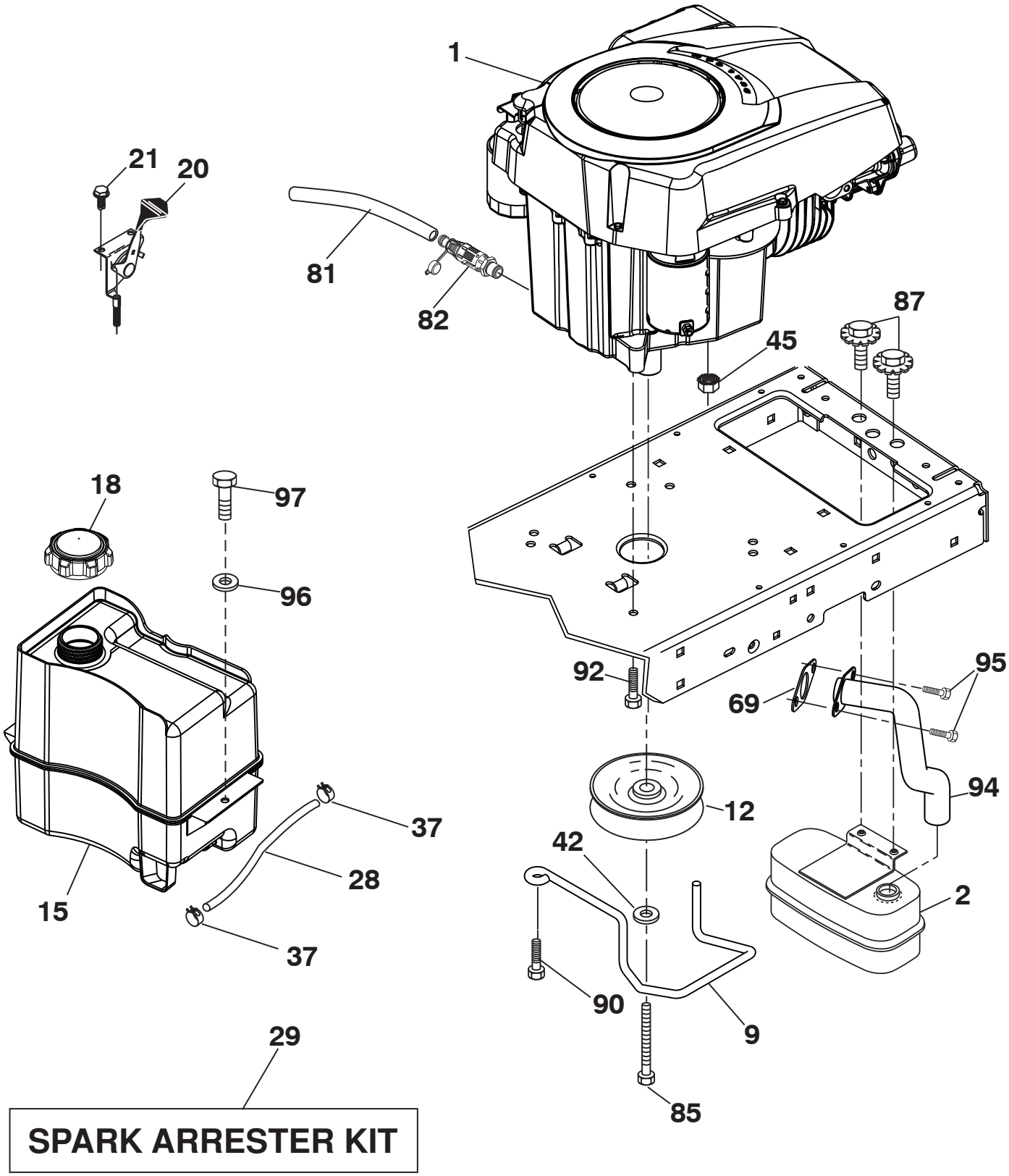

engine-tex_Kohl_20

https://truckmanualshub.com/

TRACTOR - - MODEL NUMBER YTH21K46 (96043008500), PRODUCT NO. 960 43 00-85

ENGINE

KEY NO.	PART NO.	DESCRIPTION
1	- - - - - -	Engine Kohler Model No. SV610-0212
2	532 18 86-55	Muffler
9	532 19 43-20	Keeper Belt Engine
12	532 40 54-72	Pulley Engine
15	532 40 74-89	Tank Fuel
18	532 42 51-62	Cap Asm
20	532 40 15-08	Control Throttle
21	532 41 63-58	Screw # 10 x 0.750
28	532 40 11-37	Fuel Line
29	532 13 71-80	Spark Arrester Kit
37	532 12 34-87	Clamp Hose
42	810 04 07-00	Washer Lock 7/16
45	873 51 04-00	Nut Keps Hex 1/4-20 unc
69	532 18 59-09	Gasket
81	532 14 84-56	Tube Drain Oil Easy
82	532 42 82-87	Valve Oil Drain
85	532 17 39-37	Bolt Hex 7/16-20 x 4 x Gr. 5-1.5 Thr
87	537 17 18-77	Bolt 5/16-18 unc x 3/4 w/Sems
90	817 00 06-16	Screw 3/8-16 x 1
92	817 12 06-16	Screw 3/8-16 x 1
94	532 18 86-54	Tube Exhaust
95	532 19 23-34	Screw Socket Hd. 5/16-18 x .75
96	819 09 14-16	Washer 9/32 x 7/8 x 16 Ga.
97	817 67 04-12	Screw 1/4-20 x 3/4

NOTE: All component dimensions given in U.S. inches.
1 inch = 25.4 mm

For engine service and replacement parts, call the toll free number for your engine manufacturer listed below:

Kohler Co. 1-800-544-2444

https://truckmanualshub.com/

TRACTOR - - MODEL NUMBER YTH21K46 (96043008500), PRODUCT NO. 960 43 00-85

STEERING ASSEMBLY

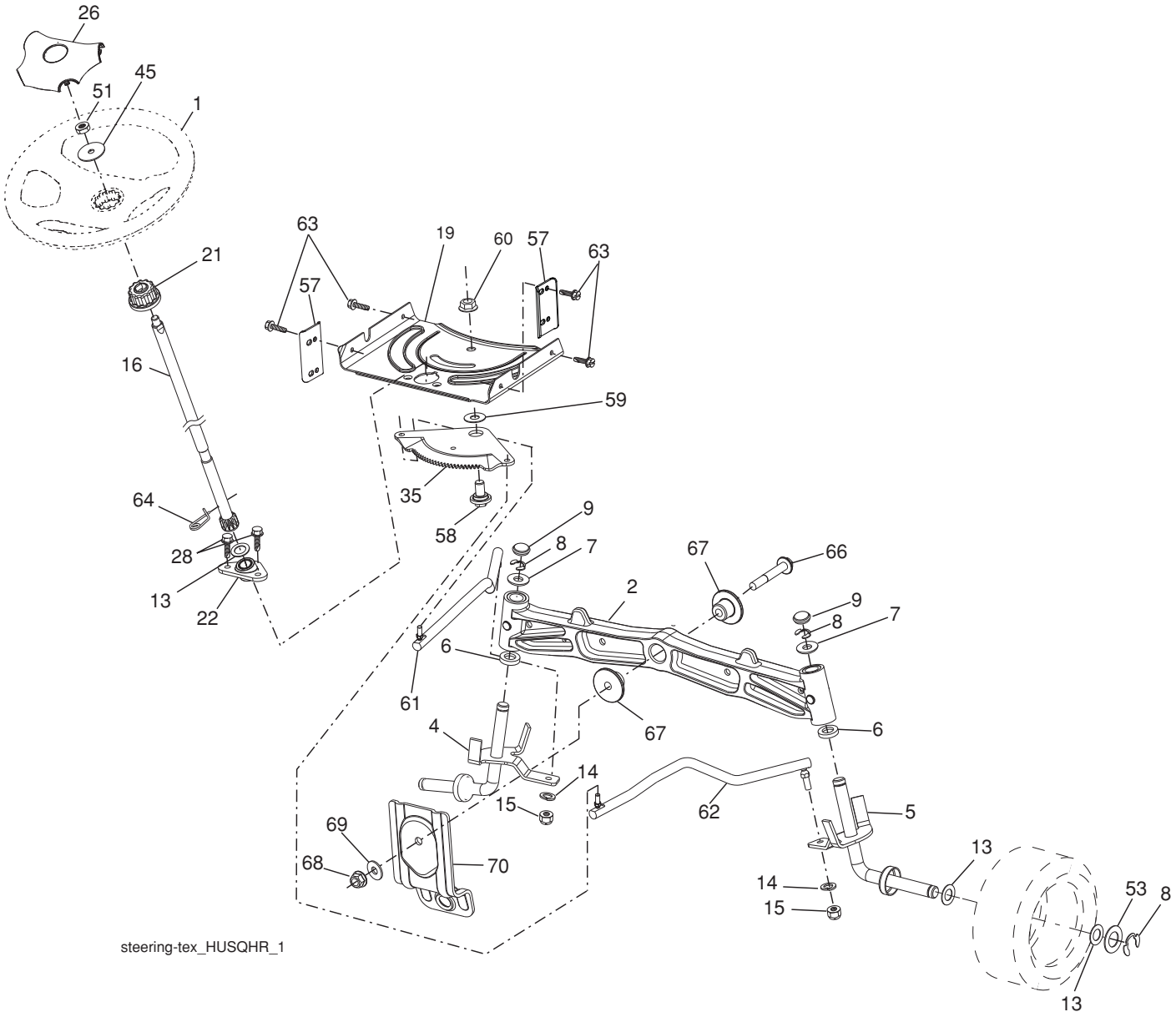

https://truckmanualshub.com/

TRACTOR - - MODEL NUMBER YTH21K46 (96043008500), PRODUCT NO. 960 43 00-85

STEERING ASSEMBLY

KEY NO.	PART NO.	DESCRIPTION
1	532 41 64-80	Wheel, Steering
2	532 19 59-68	Axle Cast Iron
4	532 40 30-87	Spindle Asm., LH
5	532 40 30-88	Spindle Asm., RH
6	532 12 49-31	Washer, Thrust
7	532 12 17-48	Washer 25/32 x 1-5/8 x 16 Ga.
8	812 00 00-29	Ring, Klip #T5304-75
9	532 12 12-32	Cap, Spindle
13	532 12 17-49	Washer 25/32 x 1-1/4 x 16 Ga.
14	810 04 06-00	Washer, Lock Hvy Hlcl Spr 3/8
15	873 54 06-00	Nut, Crown Lock 3/8-24 unf
16	532 40 82-19	Shaft Steering
19	532 19 47-29	Plate Steering
21	532 18 67-37	Adapter, Wheel Steering
22	532 42 05-37	Steering Support Lower
26	532 41 59-87	Insert, Wheel Steering
28	817 00 06-12	Screw 3/8-16 x 3/4
35	532 19 47-32	Gear, Sector Plate
45	819 18 38-12	Washer 9/16 ID x 2-3/8 OD 12 Ga.
51	873 94 08-00	Nut Hex Jam Toplock 1/2-20 unf
53	532 18 89-67	Washer Hardened .793 x 1.637 x .060
57	532 40 74-65	Bracket Upstop
58	532 19 47-47	Bolt Shoulder Sector Pivot CFM
59	532 19 47-48	Washer Thrust Sector Steering
60	873 97 10-00	Nut Flange Lock 5/8-11
61	532 19 47-40	Draglink, LH
62	532 19 47-41	Draglink, RH
63	817 00 05-12	Screw 5/16-18 x 3/4
64	532 19 98-49	Retainer Clip Spring Steering
66	871 02 07-48	Bolt Hex Fghd 7/16-14 x 3 Serr
67	532 19 47-37	Bushing PM Front Axle
68	873 90 07-00	Nut Lock Flange 7/16-14 Gr. 5
69	532 19 91-62	Washer 1.5 x .505 x .118
70	532 19 61-97	Bracket Deck Susp. Front

NOTE: All component dimensions given in U.S. inches
1 inch = 25.4 mm

https://truckmanualshub.com/

TRACTOR - - MODEL NUMBER YTH21K46 (96043008500), PRODUCT NO. 960 43 00-85

MOWER DECK

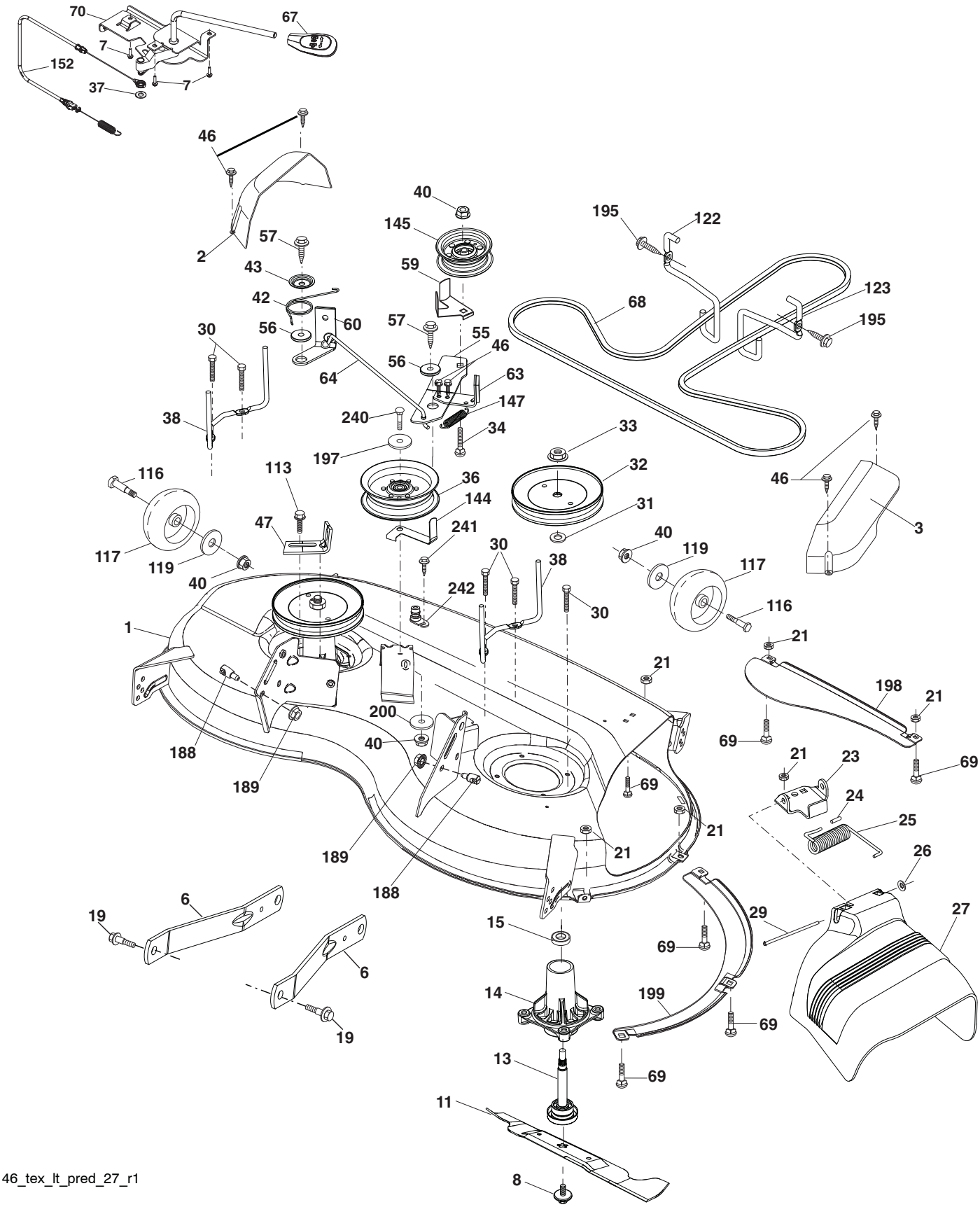

https://truckmanualshub.com/

TRACTOR - - MODEL NUMBER YTH21K46 (96043008500), PRODUCT NO. 960 43 00-85

MOWER DECK

KEY NO.	PART NO.	DESCRIPTION
1	532 41 08-63	Mower Housing
2	532 40 55-06	Cover Mandrel RH
3	532 40 55-07	Cover Mandrel LH
6	532 19 51-86	Arm Suspension
7	532 41 63-58	Screw # 10 x 0.750
8	532 19 30-03	Bolt/Washer asm 7/16-20 unf
11	532 40 53-80	Blade Mower Hi Lift
13	532 19 28-72	Shaft Assembly, Mandrel
14	532 18 72-81	Housing, Mandrel
15	532 11 04-85	Bearing, Ball, Mandrel
19	532 19 65-39	Bolt, Shoulder
21	873 68 05-00	Nut
23	532 19 25-57	Bracket, Deflector
24	532 10 53-04	Cap, Sleeve
25	532 19 70-26	Spring, Torsion, Deflector
26	532 11 04-52	Nut, Push
27	532 40 53-57	Shield, Deflector
29	532 13 14-91	Rod, Hinge
30	532 17 39-84	Screw Thdrol Rolling Wsh Hd
31	532 18 76-90	Washer, Spacer
32	532 19 74-73	Pulley, Mandrel
33	532 40 02-34	Nut, Toplock, Flanged
34	872 11 06-12	Bolt Carr Sh. 3/8-16 x 1-1/2 Gr. 5
36	532 19 73-79	Pulley, Idler, Flat
37	819 13 13-16	Washer 13/32 x 13/16 x 16 Ga.
38	532 19 91-89	Keeper Belt LH Mandrel
40	873 90 06-00	Nut, Lock Flg. 3/8-16 unc
42	532 19 84-10	Spring Torsion Brake
43	532 19 72-56	Spring Torsion Retainer
46	532 13 77-29	Screw
47	532 19 72-50	Bracket Clutch Cable
55	532 19 72-49	Arm, Idler
56	532 19 90-92	Spacer, Retainer
57	817 00 06-16	Screw Hexwsh Thd 3/8-16 x 1
59	532 14 10-43	Guard, Tuv Idler (94)
60	532 19 94-71	Arm Brake Mower LH
63	532 19 94-77	Arm Brake Mower
64	532 40 51-38	Linkage Brake
67	532 40 30-12	Handle, Clutch Cable
68	532 40 51-43	V-Belt
69	872 14 05-05	Bolt
70	532 40 65-63	Clutch Asm. Cable
113	817 00 05-10	Screw 5/16-18
116	532 19 34-06	Bolt, Shoulder
117	532 17 48-73	Wheel, Gauge
119	819 13 20-12	Washer 13/32 x 1-1/4 x 12 Ga.
122	532 19 72-58	Keeper Belt Eng. LH
123	532 19 72-59	Keeper Belt Eng. RH
144	532 19 92-04	Keeper Belt
145	532 19 31-97	Pulley Idler
147	532 40 18-72	Spring Return
152	532 40 83-19	Cable Clutch Manual w/Spr.
188	532 19 51-61	Stud Fastener
189	873 90 05-00	Nut Lock Hex Flange
195	817 00 06-12	Screw 3/8-16 x 3/4
197	819 13 13-12	Washer 13/32 x 13/16 x 12 Ga.
198	532 40 31-49	Baffle Center Front
199	532 40 31-50	Baffle Front RH
200	532 41 35-24	Washer 13/32 x 1 x 1/2 11 Ga.
240	874 52 06-36	Bolt 3/8-16 unc x 2-1/4 Gr. 5
241	532 15 29-27	Screw
242	532 41 55-98	Washout Port
- -	532 41 64-05	Quick Connect Coupling
- -	532 19 28-70	Mandrel Assembly (Includes housing, shaft assembly, and bearing only - pulley/nut/washer and blade bolt/washers not included)
- -	532 40 84-78	Replacement Mower, Complete

NOTE: All component dimensions given in U.S. inches
1 inch = 25.4 mm

https://truckmanualshub.com/

TRACTOR - - MODEL NUMBER YTH21K46 (96043008500), PRODUCT NO. 960 43 00-85

DECALS

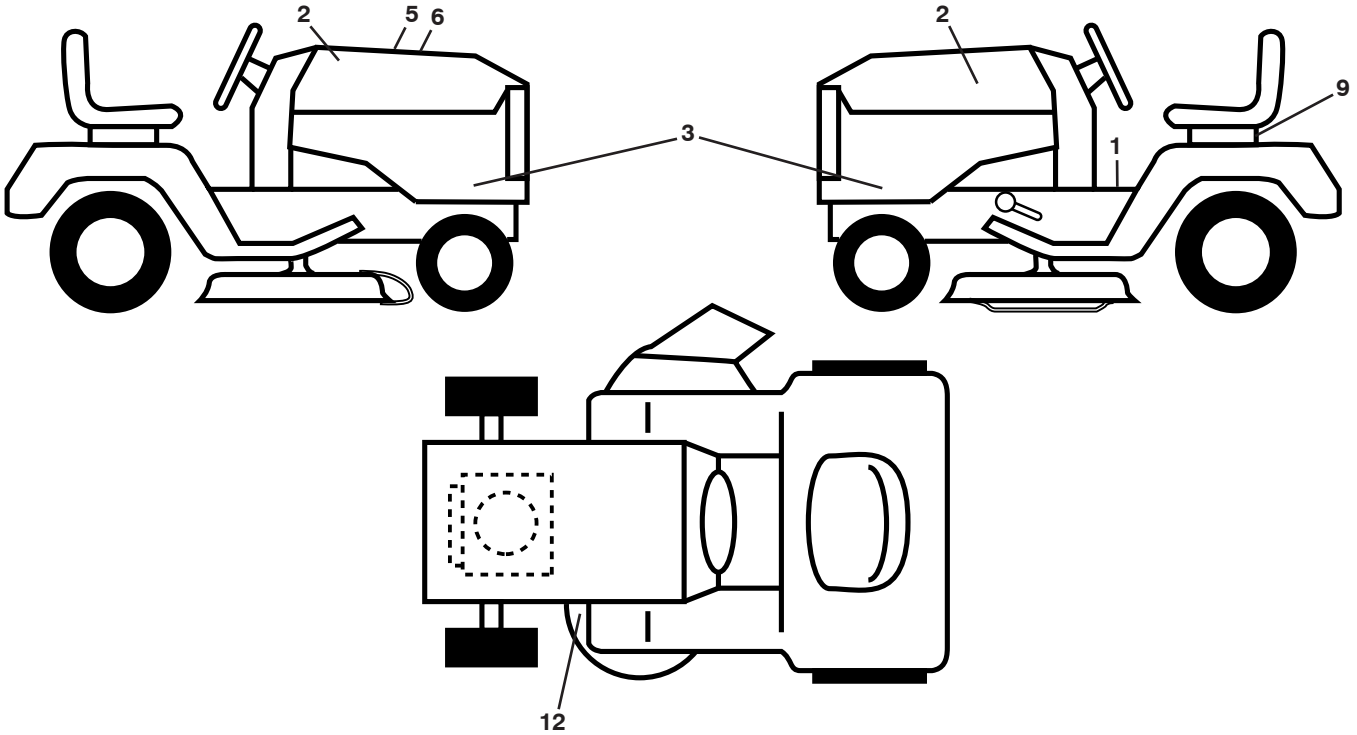

KEY NO.	PART NO.	DESCRIPTION
1	532 41 16-58	Decal, Fender Warning
2	532 42 47-89	Decal, Hood
3	532 43 01-17	Decal, Hood Panel SD
5	532 42 38-29	Decal, Customer Respons.
6	532 43 05-22	Decal, Replacement
9	532 14 50-05	Decal, Battery Dnge/Poi
12	532 16 03-96	Decal, Mower V-Belt Schematic
- -	532 16 69-60	Decal, Bypass
- -	532 41 08-05	Pad, Footrest, LH
- -	532 41 08-06	Pad, Footrest, RH

WHEELS AND TIRES

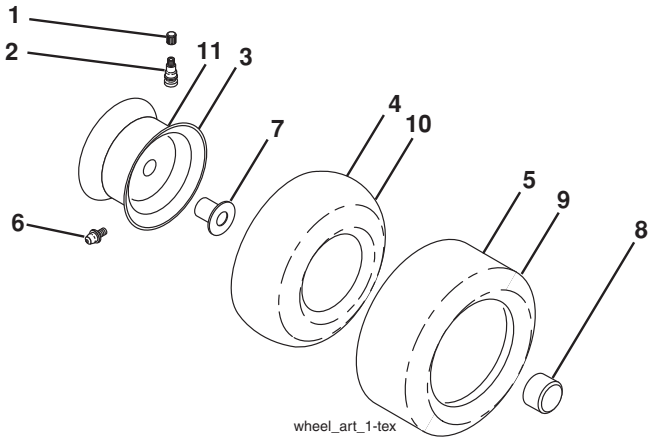

KEY NO.	PART NO.	DESCRIPTION
1	532 05 91-92	Cap Valve Tire
2	532 06 51-39	Stem Valve
3	532 13 83-36	Rim Front
4	532 05 99-04	Tube Front (Service Item Only)
5	532 10 62-22	Tire Front 15 x 6.0-6
6	532 12 49-57	Fitting Grease (Front Wheel Only)
7	532 12 49-59	Bearing Flange (Front Wheel Only)
8	532 17 50-39	Cap Axle Blk 1 50 x 1 00
9	532 42 05-31	Tire R 18 x 9.5-8 Turf Saver LT
10	532 12 49-26	Tube Rear (Service Item Only)
11	532 13 83-37	Rim Asm 8" Rear
- -	532 14 43-34	Sealant, Tire (10 oz. Tube)

NOTE: All component dimensions given in U.S. inches
1 inch = 25.4 mm

https://truckmanualshub.com/

TRACTOR - - MODEL NUMBER YTH21K46 (96043008500), PRODUCT NO. 960 43 00-85

SEAT ASSEMBLY

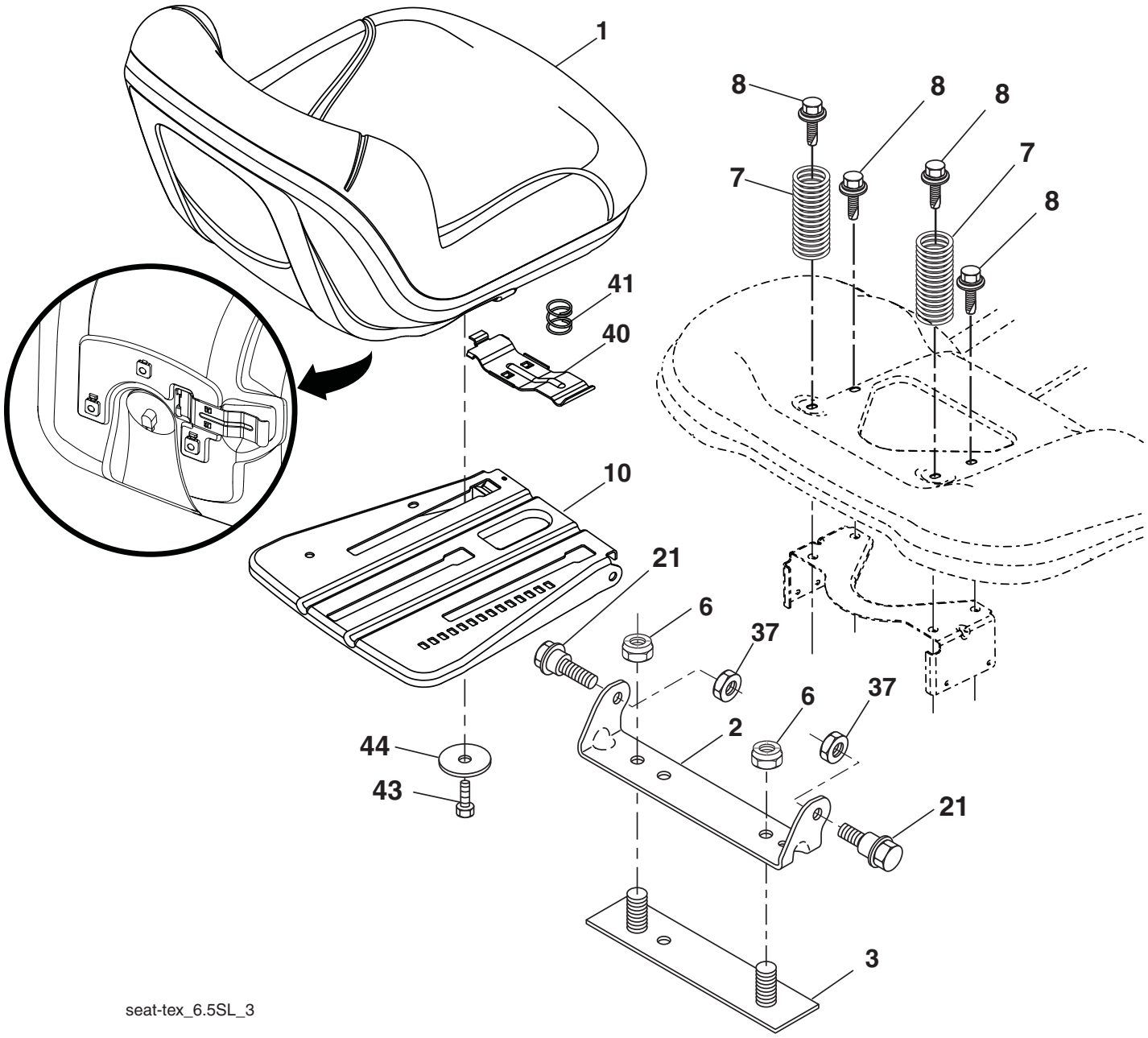

KEY NO.	PART NO.	DESCRIPTION
1	532 42 40-68	Seat
2	532 18 01-66	Bracket Pivot Fender
3	532 14 06-75	Strap, Asm Fender
6	873 80 06-00	Nut, Lock w/Ins. 3/8-16 unc
7	532 12 41-81	Spring, Seat Cprsn
8	532 17 18-77	Bolt 5/16-18 unc x 3/4 w/Sems
10	532 19 69-77	Pan, Seat
21	532 17 18-52	Bolt, Shoulder 5/16-18

KEY NO.	PART NO.	DESCRIPTION
37	873 80 05-00	Nut, Lock 5/16-18 unc
40	532 19 76-61	Handle Slide Seat
41	532 19 82-00	Spring Latch Seat
43	874 76 06-12	Bolt Fin Hex 3/8-16 unc x 3/4
44	819 13 38-12	Washer 13/32 x 2-3/8 x 12 Ga.

NOTE: All component dimensions given in U.S. inches
1 inch = 25.4 mm

https://truckmanualshub.com/

TRACTOR - - MODEL NUMBER YTH21K46 (96043008500), PRODUCT NO. 960 43 00-85

MOWER LIFT

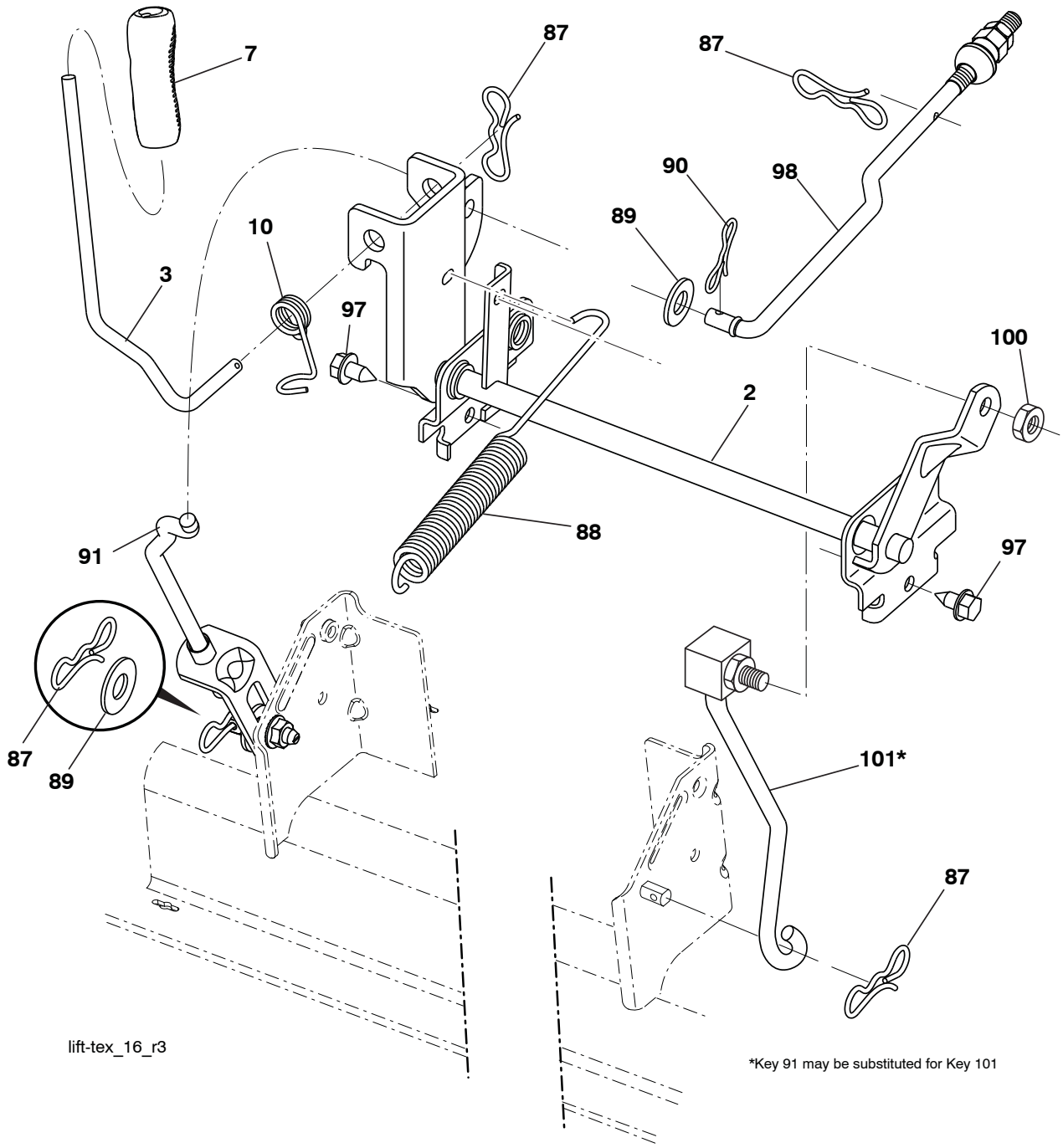

KEY NO.	PART NO.	DESCRIPTION
2	532 42 20-27	Shaft Asm., Lift
3	532 19 52-31	Lever Asm., Lift RH
7	532 41 15-55	Grip, Lever
10	532 19 63-14	Spring Torsion
87	532 19 42-09	Pin Cotter 7/16 Bow Tie Lock
88	532 41 07-10	Spring Lift Assist
89	819 19 19-12	Washer Clear Zinc
90	532 19 42-08	Pin Cotter 5/16 Bow Tie Lock
91	532 19 51-81	Link Lift Susp Mower Rear

KEY NO.	PART NO.	DESCRIPTION
97	817 00 06-12	Screw 3/8-16 x .75 Smgml Tap/R.Z
98	532 19 52-70	Link Lift Susp. Front Mower
100	873 93 06-00	Nut Center Lock 3/8-16 unc
101	532 40 70-03	Link Asm Lift Fixed

NOTE: All component dimensions given in U.S. inches
1 inch = 25.4 mm

https://truckmanualshub.com/

SUGGESTED GUIDE FOR SIGHTING SLOPES FOR SAFE OPERATION

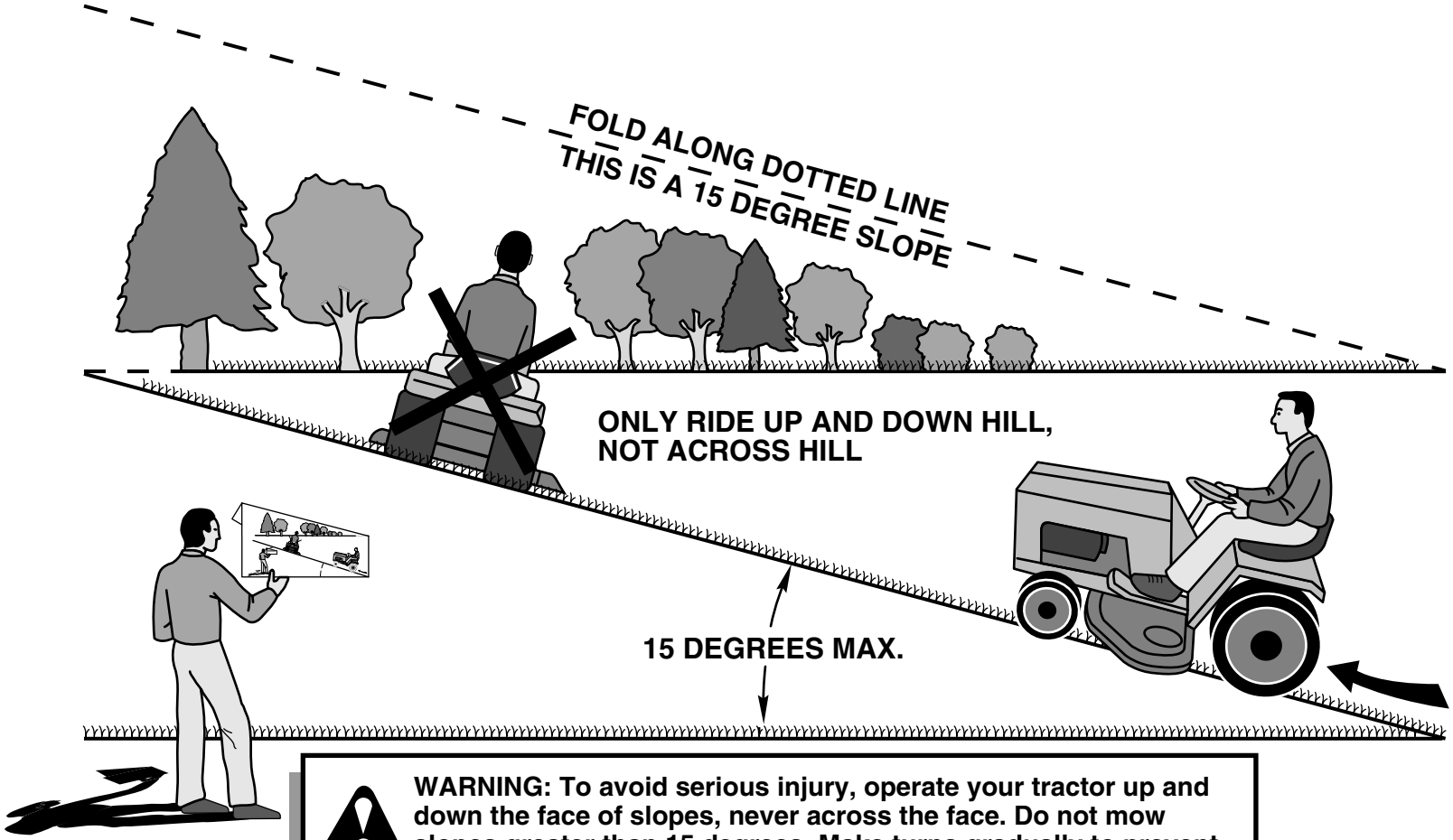

WARNING: To avoid serious injury, operate your tractor up and down the face of slopes, never across the face. Do not mow slopes greater than 15 degrees. Make turns gradually to prevent tipping or loss of control. Exercise extreme caution when changing direction on slopes.

1. Fold this page along dotted line indicated above.
2. Hold page before you so that its left edge is vertically parallel to a tree trunk or other upright structure.
3. Sight across the fold in the direction of hill slope you want to measure.
4. Compare the angle of the fold with the slope of the hill.

https://truckmanualshub.com/

08.27.09 AP

Husqvarna®

Printed in the U.S.A.