https://truckmanualshub.com/

SELLICK SLP Series

The Sellick SLP Series rough terrain forklift

Compact

Durable

Low Profile

https://truckmanualshub.com/

Standard specifications

The low profile rough terrain SLP Series forklift is ideally suited for work in tight spaces. Featuring a proven drivetrain, tight turning radius, and ROPS/FOPS overhead guard, this forklift is an exceptional performer on any surface.

Engine

KOHLER KDI 2504 TCR Tier 4 engine does not require exhaust aftertreatment. Diesel Particulate Filter (DPF) and Diesel Exhaust Fluid (DEF) are not required reducing operating costs. Engine is equipped with fuel/water separator with hand primer, dual element air filter, air pre-cleaner, cold weather starting aid & vertical exhaust.

Transmission

Four-speed power reversing synchroshuttle transmission with torque converter and integral parking brake. 4-speed fully automatic transmission standard on 4WD models.

Axles

High load capacity drive & steer axles provide less wear and low maintenance. Limited slip differential provides increased traction.

Brake system

Enclosed multi-disc, oil-immersed service brakes with mechanically-operated, lever applied, parking brake.

Steering

Load sense power steering.

Instruments

Full instrument package includes warning indicator lights & gauges.

Mast assemblies

Sellick SEE-THRU® all-roller mast design. A wide range of two or three-stage available with maximum lift height up to 22 ft. Mast sideshift: 6'' total.

Standard equipment

- Suspension seat w/seatbelt*
- 2 front & 2 rear halogen worklights
- LED brake & amber flashing lights
- Neutral safety start
- Tilt steering wheel
- Horn & backup alarm

*Suspension seat standard on 85" platform only

Optional equipment

- Fully enclosed cab with heat
- Hydraulic fork positioning
- AM/FM/MP3
- Cold weather package
- Solid cushion tires

SLP SERIES

TECHNICAL SPECIFICATIONS

Lift capacities of 5,000, 6,000 or 8,000 @ 24" load centre

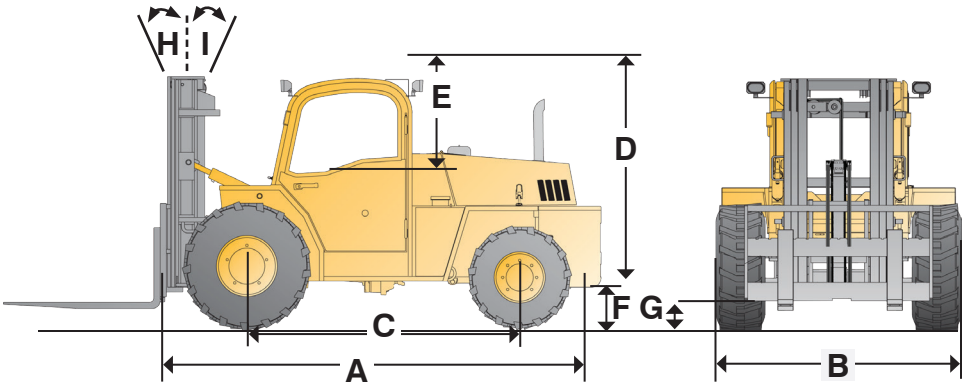

Model	Ref	SLP50	SLP60	SLP80
Lift capacities @ 24 inch load centre		5,000 lbs	6,000 lbs	8,000 lbs
Total weight (w/2 stage mast)		11,000 lbs	12,600 lbs	13,700 lbs
Overall length (without forks)	A	147"/3,734 mm	147"/3,734 mm	152'/ 3,861 mm
Overall width	B	78''/1,981 mm		
Wheelbase	C	93''/2,362 mm		
Height to top of overhead guard	D	75"/1,905 mm 85"/2,159 mm		
Distance from seat to OHG	E	40''/1,016 mm (75" OHG) 45"/1,143 mm (85" OHG)		
Outside turning radius		in 2WD mode: 178''/4,521 mm; in 4WD mode: 196''/4,978 mm		
Frame underclearance	F	11''/279 mm		
Mast underclearance	G	12''/304 mm		
Mast sideshift		6''/152 mm		
Mast tilt - forward	H	20°		
Mast tilt - rearward	I	10°		
Gradeability		25%		
Tire size		Drive: 15-19.5-12 ply Steer: 12-16.5-10 ply		
Engine manufacturer & model		KOHLER KDI 2504 TCR - Tier 4 Final		
Cylinders		4		
Engine output (gross power)		74 hp @ 2,600 rpm		
Peak torque		221 ft·lbs @ 1,500 rpm		
Travel speed		15(24) mph (km/h)		

Because of our constant dedication to product improvement, all specifications are subject to change without notice.

All Sellick forklifts meet or exceed all ANSI B56.6 safety standards.

SELLICK

Sellick Equipment Limited
P.O. Box 1000/2131 Roseborough Rd
Harrow, Ontario, Canada • N0R 1G0
519-738-2255 • sellick@mnsi.net
www.sellickequipment.com

Sold & serviced by: