Operation & Maintenance Manual

UEAM004000

PC290LC-7K
PC290NLC-7K

HYDRAULIC EXCAVATOR

SERIAL NUMBER

PC290LC-7K - K40395 and up

PC290NLC-7K - K40395 and up

WARNING

Unsafe use of this machine may cause serious injury or death. Operators and maintenance personnel must read this manual before operating or maintaining this machine. This manual should be kept inside the cab for reference and periodically reviewed by all personel who will come into contact with the machine.

KOMATSU

FOREWORD

FOREWORD

This manual provides rules and guidelines which will help you use this machine safely and effectively. The precautions in this manual must be followed at all times while operating or performing maintenance . Most accidents are caused by the failure to follow fundamental safety rules for the operation and maintenance of machines. Accidents can be prevented by knowing beforehand conditions that may cause a hazard when performing operation and maintenance.

⚠ WARNING

Operators and maintenance personnel must always do as follows before beginning operation or maintenance.

- **Always be sure to read and understand this manual thoroughly before performing operation and maintenance.**
- **Read the safety messages given in this manual and the safety labels affixed to the machine thoroughly and be sure that you understand them fully.**

Keep this manual in the storage location for the Operation and Maintenance Manual given below, and have all personnel read it periodically.

If this manual has been lost or has become dirty and cannot be read, request a replacement manual immediately from Komatsu or your Komatsu distributor.

If you sell the machine, be sure to give this manual to the new owners together with the machine.

Komatsu delivers machines that comply with all applicable regulations and standards of the country to which it has been shipped. If this machine has been purchased in another country or purchased from someone in another country, it may lack certain safety devices and specifications that are necessary for use in your country. If there is any question about whether your product complies with the applicable standards and regulations of your country, consult Komatsu or your Komatsu distributor before operating the machine.

Storage location for the Operation and Maintenance Manual:

Storage box on the left side of the operator's seat.

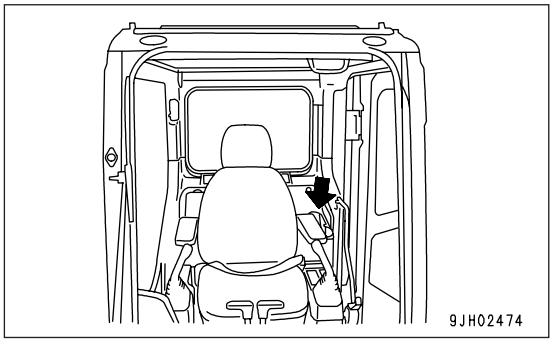

SAFETY INFORMATION

To enable you to use this machine safely, safety precautions and labels are given in this manual and affixed to the machine to give explanations of situations involving potential hazards and of the methods of avoiding such situations.

Signal words
The following signal words are used to inform you that there is a potentially hazardous situation that may lead to personal injury or damage.

In this manual and on machine labels, the following signal words are used to express the potential level of hazard.

DANGER	Indicates an imminently hazardous situation which, if not avoided, will result in death or serious injury.
WARNING	Indicates a potentially hazardous situation which, if not avoided, could result in death or serious injury.
CAUTION	Indicates a potentially hazardous situation which, if not avoided, may result in minor or moderate injury. This word is used also to alert against unsafe practices that may cause property damage.

Example of safety message using signal word

WARNING

To avoid hitting unlocked operation levers, lower equipment to ground and move SAFETY LOCK LEVER (located near seat) to LOCK position before getting up from the operator's seat.
Sudden and unwanted machine movement can cause serious injury or death.

Other signal words
In addition to the above, the following signal words are used to indicate precautions that should be followed to protect the machine or to give information that is useful to know.

NOTICE	This word is used for precautions that must be taken to avoid actions which could shorten the life of the machine.
REMARKS	This word is used for information that is useful to know.

Safety labels
Safety labels are affixed to the machine to inform the operator or maintenance worker on the spot when carrying out operation or maintenance of the machine that may involve hazard.

This machine uses "Safety labels using words" and "Safety labels using pictograms" to indicate safety procedures.

Safety labels using labels

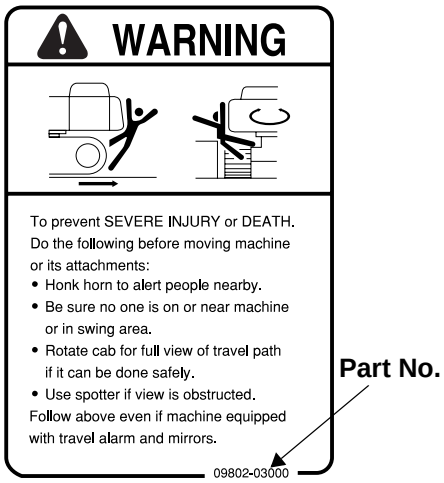

Safety labels using pictogram
Safety pictograms use a picture to express a level of hazardous condition equivalent to the signal word. These safety pictograms use pictures in order to let the operator or maintenance worker understand the level and type of hazardous condition at all times. Safety pictograms show the type of hazardous condition at the top or left side, and the method of avoiding the hazardous condition at the bottom or right side. In addition, the type of hazardous condition is displayed inside a triangle and the method of avoiding the hazardous condition is shown inside a circle.

Komatsu cannot predict every circumstance that might involve a potential hazard in operation and maintenance. Therefore, the safety messages in this manual and on the machine may not include all possible safety precautions. If any procedures or actions not specifically recommended or allowed in this manual are used, it is your responsibility to take the necessary steps to ensure safety.

In no event should you engage in prohibited uses or actions described in this manual.

The explanations, values, and illustrations in this manual were prepared based on the latest information available at that time. Continuing improvements in the design of this machine can lead to changes in detail which may not be reflected in this manual. Consult Komatsu or your Komatsu distributor for the latest available information of your machine or for questions regarding information in this manual.

The numbers in circles in the illustrations correspond to the numbers in ( ) in the text. (For example: ① → (1))

NOISE

q Sound pressure level at the operator's station, measured according to ISO6396 (Dynamic test method,simulated working cycle).

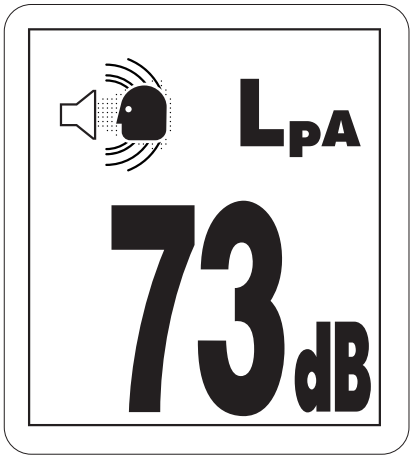

q Sound power level emmited. This is the guaranteed value as specified in the European directive 2000/14/EC

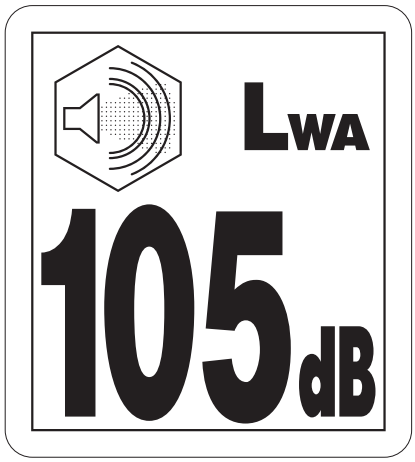

VIBRATION

The weighted root mean square acceleration value to which the operator's arms are subjected does not exceed 2.5 m/s²

The weighted root mean square acceleration value to which the operator's body is subjected does not exceed 0.5 m/s²

These results were obtained by accelerometers during trench digging.

INTRODUCTION

This Komatsu HYDRAULIC EXCAVATOR is designed to be used mainly for the following works:

q Digging work

q Leveling work

q Ditching work

q Loading work

q Demolition work

See the section "RECOMMENDED APPLICATIONS (PAGE 165)" for further details.

DIRECTIONS OF MACHINE

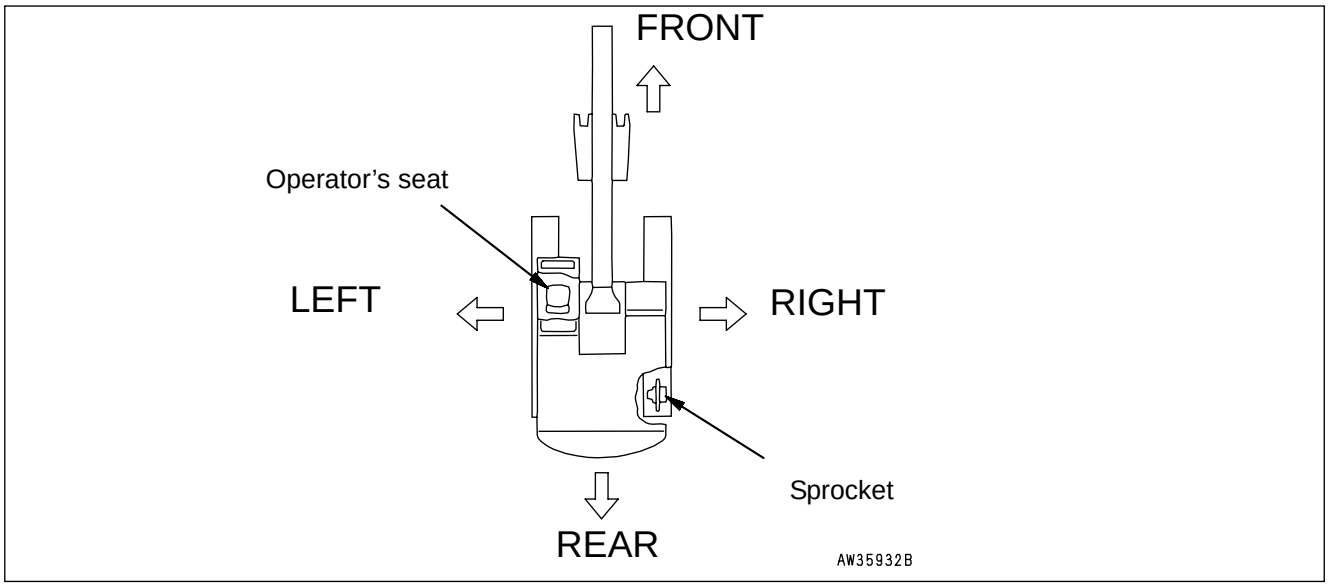

In this manual, the terms front, rear, left, and right refer to the travel direction as seen from the operator's cab when the operator's cab is facing the front and the sprocket is at the rear of the machine.

BREAKING-IN THE NEW MACHINE

NOTICE
Your Komatsu machinehas been thoroughly adjusted and tested before shipment from factory. However, operating the machine under full load before breaking the machine in can adversly affect the performance and shorten the machine life.
Be sure to break in the machine for initial 100 hours (as indicated on service meter).
Make sure that you fully understand the content of this manual, and pay careful attention to the following points when breaking in the machine.

PRODUCT INFORMATION

When requesting service or ordering replacement parts, please inform your Komatsu distributor of the following items.

MACHINE SERIAL NUMBER PLATE AND ITS LOCATION

On the bottom right of the operator's cab

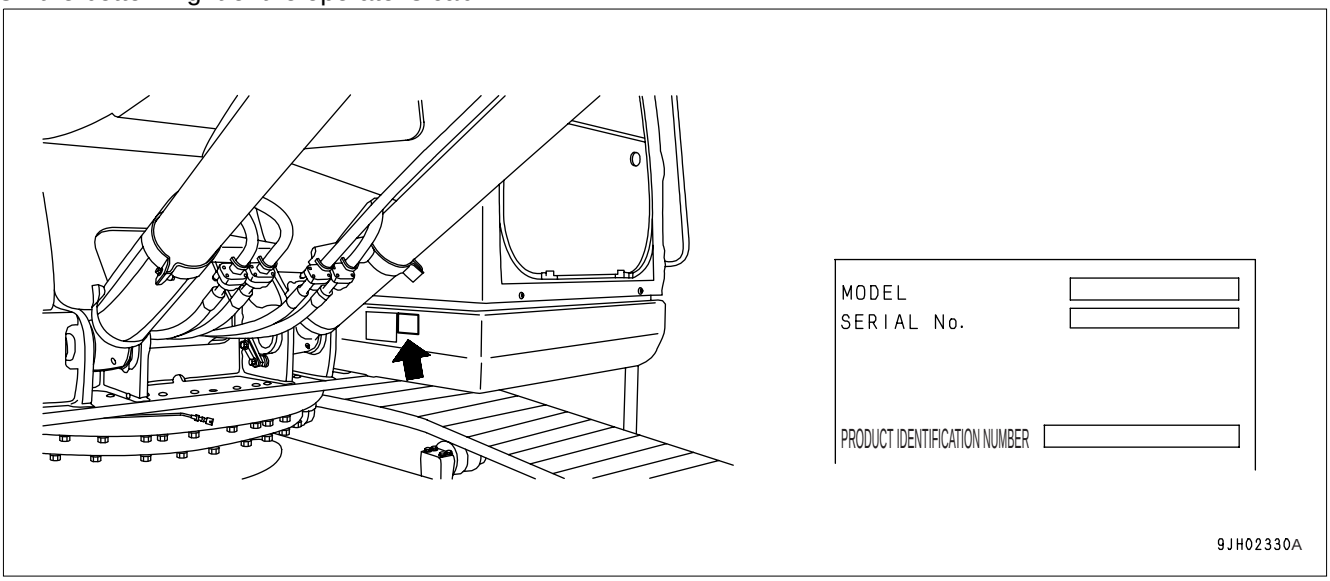

ENGINE SERIAL NUMBER PLATE AND ITS LOCATION

On the top of the No.1 cylinder head cover (The EPA auxiliary nameplate is on the top of the No. 5 cylinder head cover.)

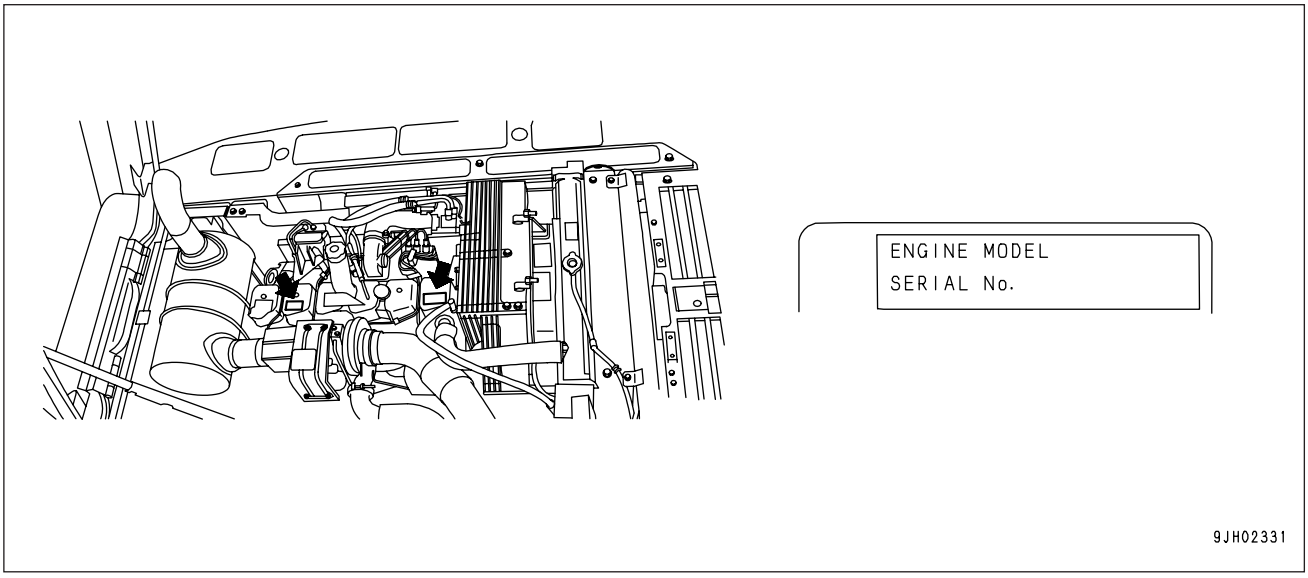

EPA: Environmental Protection Agency, U.S.A.

SERVICE METER LOCATION

On top of the machine monitor

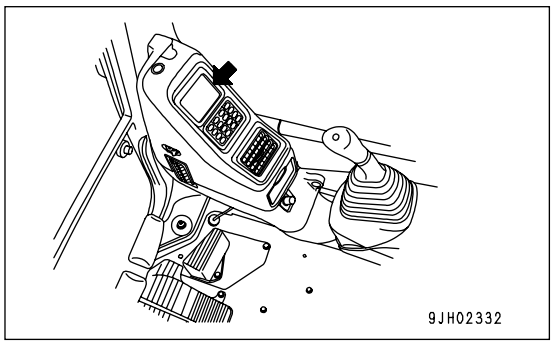

TABLE TO ENTER SERIAL NO. AND DISTRIBUTOR

Machine serial No.	
Engine serial No.	
Product Identification Number	
Manufacturers name:	KOMATSU UK Ltd.
Address:	Durham Road Birtley Chester-Le street County Durham DH32QX United Kingdom
Distributor Address	
Phone	

MACHINE SERIAL PLATE

Valid until 31 December 2003

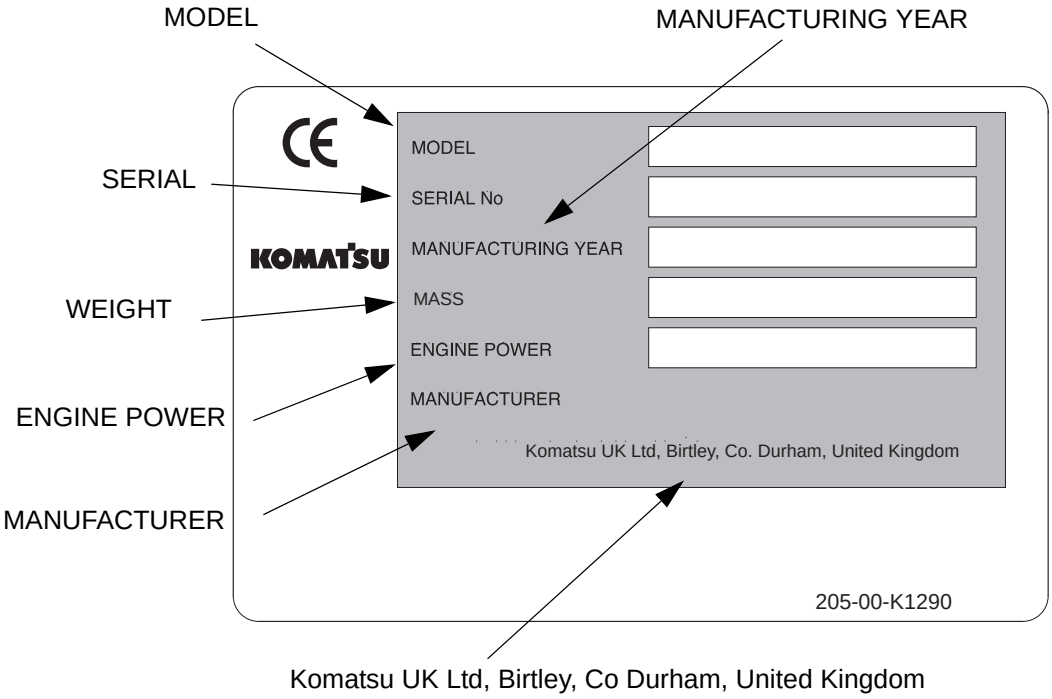

Valid as of 1 January 2004

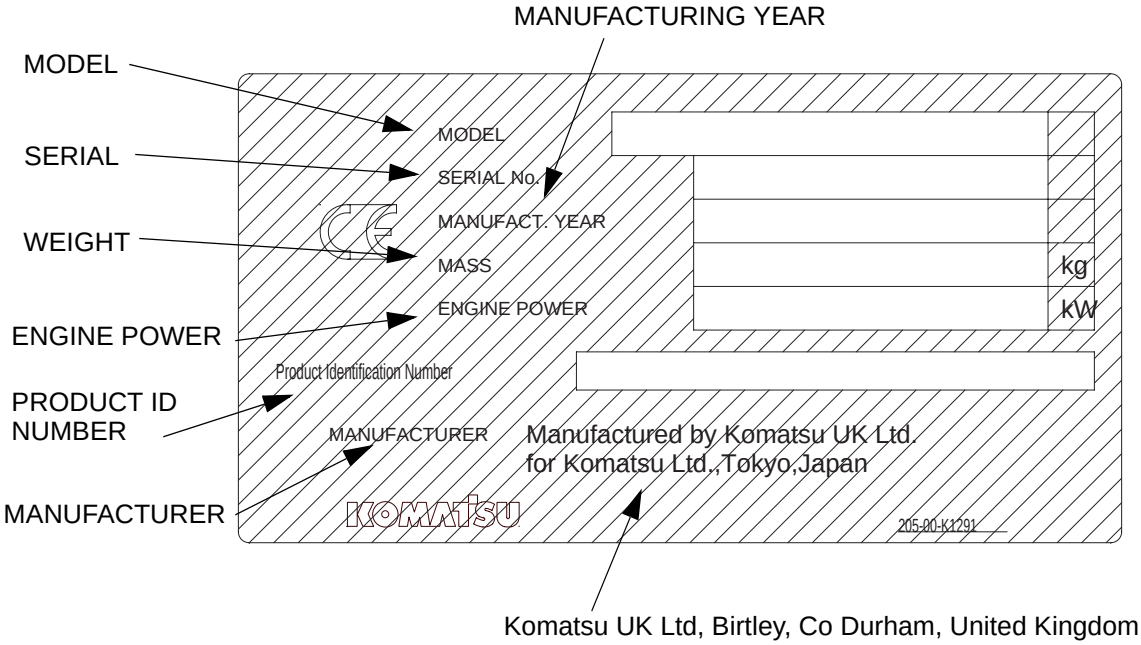

CONTENTS

FOREWORD 2

SAFETY INFORMATION 3
NOISE 5
VIBRATION 5

INTRODUCTION 6
DIRECTIONS OF MACHINE 6
BREAKING-IN THE NEW MACHINE 6

PRODUCT INFORMATION 7
MACHINE SERIAL NUMBER PLATE AND ITS LOCATION 7
ENGINE SERIAL NUMBER PLATE AND ITS LOCATION 7
SERVICE METER LOCATION 8
TABLE TO ENTER SERIAL NO. AND DISTRIBUTOR 8
..... 9

SAFETY INFORMATION 16

POSITION FOR ATTACHING SAFETY LABELS 18
POSITION FOR ATTACHING SAFETY LABELS 18
SAFETY LABELS 19

SAFETY INFORMATION 26

SAFETY MACHINE OPERATION 35
STARTING ENGINE 35
OPERATION 37
TRANSPORTATION 43
BATTERY 44
TOWING 46
LIFTING OBJECTS WITH BUCKET 47

SAFETY MAINTENANCE INFORMATION 48

GENERAL VIEW 58
GENERAL VIEW OF MACHINE 58
GENERAL VIEW CONTROLS AND GAUGES 59

EXPLANATION OF COMPONENTS 60
MACHINE MONITOR 60
BASIC CHECK ITEMS 63
CONTROL LEVERS, PEDALS 91
CEILING WINDOW 94
FRONT WINDOW 95
EMERGENCY EXIT FROM OPERATOR'S CAB 100
DOOR LOCK 100
CAP, COVER WITH LOCK 101

HOT AND COOL BOX 102
CAB RADIO 102
ASHTRAY 103
HANDLING AIR CONDITIONER 104
VENT SELECTOR SWITCH 106
CAR RADIO 117
FUSE 119
FUSIBLE LINK 120
CONTROLLER (COMPUTER) 121
TOOLBOX 121
GREASE GUN HOLDER 121
REFUELLING PUMP 122
HANDLING THE ACCUMULATOR 122

MACHINE OPERATIONS AND CONTROLS 124
BEFORE STARTING ENGINE 124
STARTING ENGINE 137
AFTER STARTING ENGINE 141
IN COLD AREAS (AUTOMATIC WARMING-UP OPERATION) 145
STOPPING THE ENGINE 149
CHECK AFTER SHUTTING OFF ENGINE 149
MACHINE OPERATION 150
STEERING THE MACHINE 154
SWINGING 156
WORK EQUIPMENT CONTROLS AND OPERATIONS 157
OPERATING WORKING MODE 158
PROHIBITED OPERATIONS 159
GENERAL OPERATION INFORMATION 161
TRAVELLING ON SLOPES 162
ESCAPE FROM MUD 164
RECOMMENDED APPLICATIONS 165
REPLACEMENT AND INVERSION OF BUCKET 167
PARKING MACHINE 170
CHECK AFTER FINISHING WORK 171
LOCKING 172

TRANSPORTATION 173
TRANSPORTATION PROCEDURE 173
LOADING AND UNLOADING WITH TRAILER 174
LIFTING MACHINE 181

COLD WEATHER OPERATION 183
COLD WEATHER OPERATION INFORMATION 183
AFTER DAILY WORK COMPLETION 185
AFTER COLD WEATHER SEASON 186

LONG TERM STORAGE 187
BEFORE STORAGE 187
DURING STORAGE 187

AFTER STORAGE 188

TROUBLESHOOTING 189
AFTER RUNNING OUT OF FUEL 189
PHENOMENA THAT ARE NOT FAILURES 189
TOWING THE MACHINE 190
LIGHTWEIGHT TOWING HOOK 190
PRECAUTIONS ON PARTICULAR JOBSITES 191
DISCHARGED BATTERY 192
OTHER TROUBLE 196

MAINTENANCE INFORMATION 204

LUBRICANTS, COOLANT AND FILTERS 207
HANDLING OIL, FUEL, COOLANT, AND PERFORMING OIL CLINIC 207
EXPLANATION OF LUBRICATION CHART DECAL 211
ELECTRIC SYSTEM MAINTENANCE 212
HANDLING HYDRAULIC SYSTEM 213

WEAR PARTS LIST 214

USE OF FUEL, COOLANT AND LUBRICANTS ACCORDING TO AMBIENT TEMPERATURE 215
PROPER SELECTION OF FUEL, COOLANT AND LUBRICANTS 215

TIGHTENING TORQUE SPECIFICATIONS 218
TIGHTENING TORQUE LIST 218

PERIODIC REPLACEMENT OF SAFETY CRITICAL PARTS 219
SAFETY CRITICAL PARTS 219

MAINTENANCE SCHEDULE 220
MAINTENANCE SCHEDULE CHART 220
MAINTENANCE INTERVAL FOR HYDRAULIC BREAKER 223

MAINTENANCE PROCEDURE 224
EVERY 10 HOURS MAINTENANCE (FOR THE FIRST 50 HOURS) 224
INITIAL 250 HOURS MAINTENANCE (ONLY AFTER THE FIRST 250 HOURS) 224
WHEN REQUIRED 225
CHECK BEFORE STARTING 247
EVERY 100 HOURS MAINTENANCE 248
EVERY 250 HOURS MAINTENANCE 249
EVERY 500 HOURS MAINTENANCE 256
EVERY 1000 HOURS MAINTENANCE 264
EVERY 2000 HOURS MAINTENANCE 267
EVERY 4000 HOURS MAINTENENCE 269
EVERY 5000 HOURS MAINTENANCE 270

SPECIFICATIONS 272
WORKING RANGE 2 PIECE BOOM 274
EXPLANATION OF LIFTING CAPACITY CHART 275
EXPLANATION OF LIFTING CAPACITY CHART (PC290LC,NLC-7K 2 PIECE BOOM) 278

GENERAL PRECAUTIONS 282
PRECAUTIONS RELATED TO SAFETY 282
PRECAUTIONS WHEN INSTALLING ATTACHMENTS 284

HANDLING BUCKET WITH HOOK 285
CHECKING FOR DAMAGE TO BUCKET WITH HOOK 285
PROHIBITED OPERATIONS 285

MACHINES READY FOR ATTACHMENTS 286
EXPLANATION OF COMPONENTS 286
HYDRAULIC CIRCUIT 289
ATTACHMENT MOUNTING/DISMOUNTING PROCEDURE 292
OPERATION 294
LONG-TERM STORAGE 296
SPECIFICATIONS 296

ATTACHMENT GUIDE 297
COMBINATIONS OF WORK EQUIPMENT 297
SELECTION OF TRACK SHOES 299
SELECTION OF BUCKET TEETH 300
STANDARDS FOR SELECTING VERTICAL PIN TYPE AND HORIZONTAL PIN TYPE TEETH 300
HANDLING OF RUBBER PAD SHOE AND ROAD LINER 301
HANDLING TRAPEZOIDAL BUCKET 303
HANDLING EXTENSION ARM 304
HANDLING CLAMSHELL BUCKET 305

RECOMMENDED ATTACHMENT OPERATIONS 306
HYDRAULIC BREAKER 306

2-PC BOOM 311
FEATURES OF 2-PIECE BOOM & ARM 311
OPERATION 312
TRANSPORTATION 315

SAFETY

⚠ WARNING

Please read and make sure that you fully understand precautions described in this manual and the safety labels on the machine. When operating or servicing the machine, always follow these precautions strictly.

SAFETY INFORMATION

SAFETY INFORMATION 16

POSITION FOR ATTACHING SAFETY LABELS 18
- POSITION FOR ATTACHING SAFETY LABELS 18
- SAFETY LABELS 19

SAFETY INFORMATION 26
- SAFETY RULES 26
- IF ABNORMALITIES ARE FOUND 26
- WORKING WEAR AND PERSONAL PROTECTIVE ITEMS 26
- FIRE EXTINGUISHER AND FIRST AID KIT 26
- SAFETY EQUIPMENT 27
- KEEP MACHINE CLEAN 27
- KEEP OPERATOR'S COMPARTMENT CLEAN 27
- LEAVING OPERATOR'S SEAT WITH LOCK 27
- HANDRAILS AND STEPS 28
- MOUNTING AND DISMOUNTING 29
- NO PERSONS ON ATTACHMENTS 29
- BURN PREVENTION 29
- FIRE PREVENTION AND EXPLOSION PREVENTION 30
- ACTION IF FIRE OCCURS 31
- WINDSHIELD WASHER FLUID 31
- FALLING OBJECTS, FLYING OBJECTS AND INTRUDING OBJECTS PREVENTION 31
- ATTACHMENT INSTALLATION 31
- ATTACHMENT COMBINATIONS 32
- CAB WIDOW GLASSES 32
- UNAUTHORIZED MODIFICATIONS 32
- SAFETY AT JOBSITE 32
- WORKING ON LOOSE GROUND 32
- DISTANCE TO HIGH VOLTAGE CABLES 33
- ENSURE GOOD VISIBILITY 33
- VENTILATION FOR ENCLOSED AREA 34
- SIGNALMAN'S SIGNAL AND SIGNS 34
- EMERGENCY EXIT FROM OPERATOR'S CAB 34
- ELECTROMAGNETIC INTERFERENCE 34
- ASBESTOS DUST HAZARD PREVENTION 34

SAFETY MACHINE OPERATION 35
- STARTING ENGINE 35
  - CHECKS BEFORE STARTING ENGINE 35
  - SAFETY RULES FOR STARTING ENGINE 36
  - STARTING ENGINE IN COLD WEATHER 36
- OPERATION 37
  - CHECKS AFTER STARTING ENGINE 37
  - SAFETY RULES FOR CHANGING MACHINE DIRECTIONS 37
  - SAFETY RULES FOR TRAVELLING 38
  - TRAVELLING ON SLOPES 39
  - OPERATIONS ON SLOPES 40
  - PROHIBITED OPERATIONS 40
  - OPERATIONS ON SNOW 41
  - PARKING MACHINE 42
- TRANSPORTATION 43

SHIPPING THE MACHINE 43
BATTERY 44
BATTERY HAZARD PREVENTION 44
STARTING ENGINE WITH BOOSTER CABLES 45
TOWING 46
SAFETY RULES FOR TOWING 46
LIFTING OBJECTS WITH BUCKET 47
SAFETY RULES FOR LIFTING OBJECTS 47

SAFETY MAINTENANCE INFORMATION 48
WARNING TAG 48
KEEP WORK PLACE CLEAN AND TIDY 48
APPOINT LEADER WHEN WORKING WITH OTHERS 48
STOP ENGINE BEFORE CARRYING OUT MAINTENANCE 49
TWO WORKERS FOR MAINTENANCE WHEN ENGINE IS RUNNING 50
PROPER TOOLS 50
ACCUMULATOR 51
PERSONNEL 51
ATTACHMENTS 51
WORK UNDER THE MACHINE 51
NOISE 52
WHEN USING HAMMER 52
WELDING WORKS 52
REMOVING BATTERY TERMINALS 52
SAFETY FIRST WHEN USING HIGH-PRESSURE GREASE TO ADJUST TRACK TENSION 53
DO NOT DISASSEMBLE RECOIL SPRINGS 53
SAFETY RULES FOR HIGH-PRESSURE OIL 53
SAFETY HANDLING HIGH-PRESSURE HOSES 54
WASTE MATERIALS 54
AIR CONDITIONER MAINTENANCE 54
COMPRESSED AIR 54
PERIODIC REPLACEMENT OF SAFETY CRITICAL PARTS 55

POSITION FOR ATTACHING SAFETY LABELS

The following warning signs and safety labels are used on this machine.

Be sure that you fully understand the correct position and content of labels.

To ensure that the content of labels can be read properly. Be sure that they are in the correct place and always keep them clean. When cleaning them, do not use organic solvents or gasoline, there may cause the labels to peel off.

There are also other labels in addition to the warning signs and safety labels. Handle those labels in the same way.

If the labels are damaged, lost, or cannot be read properly, replace them with new ones. For details of the part numbers for the labels, see this manual or the actual label, and place an order with Komatsu distributor.

POSITION FOR ATTACHING SAFETY LABELS

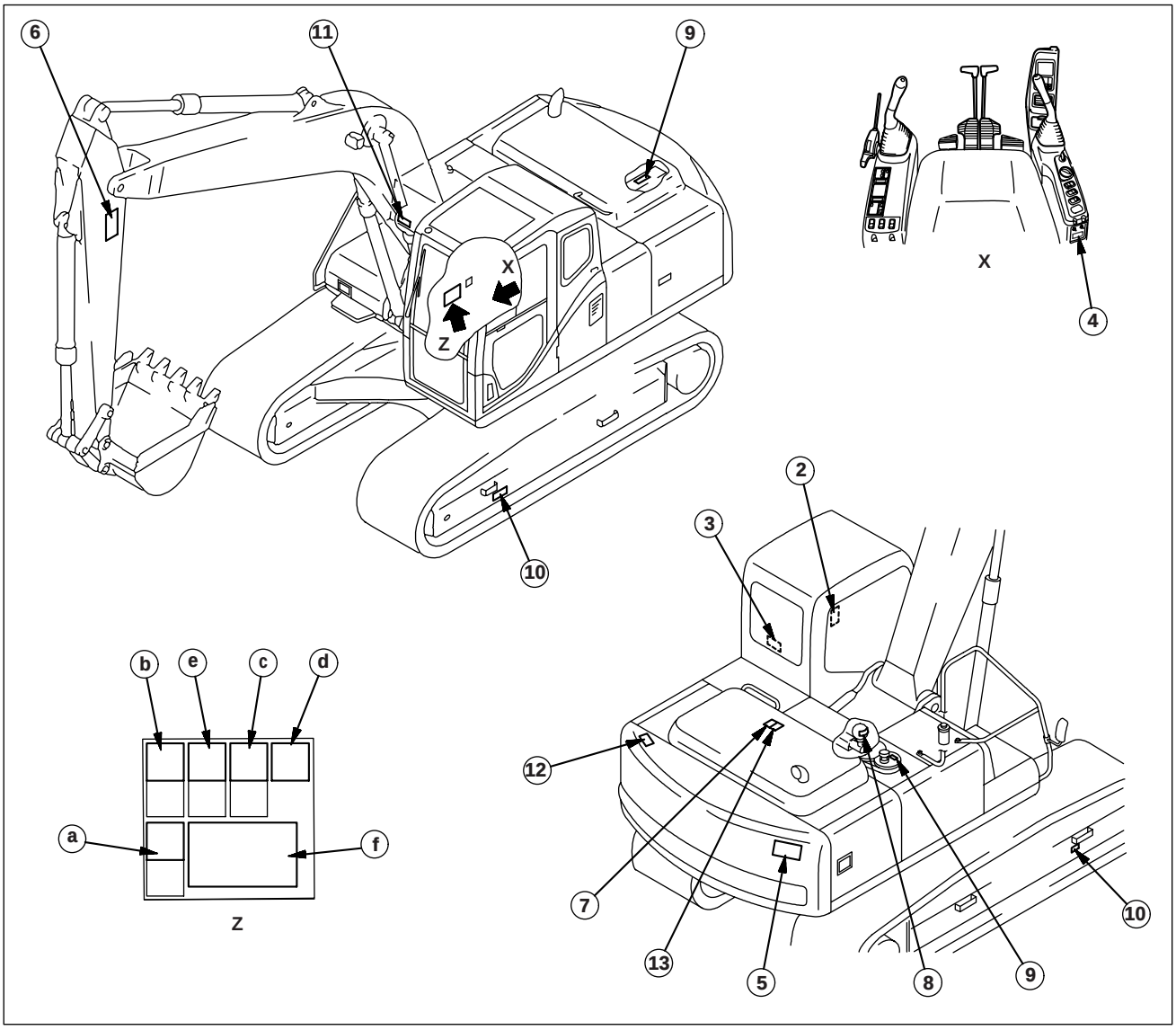

SAFETY LABELS

1. (207-00-K1951)

q Warnings for operation, inspection and maintenance

q Improper operation and maintenance can cause serious injury or death.

q Read the manual and labels before operation and maintenance.
Follow instructions and warnings in manual and in labels on machine.

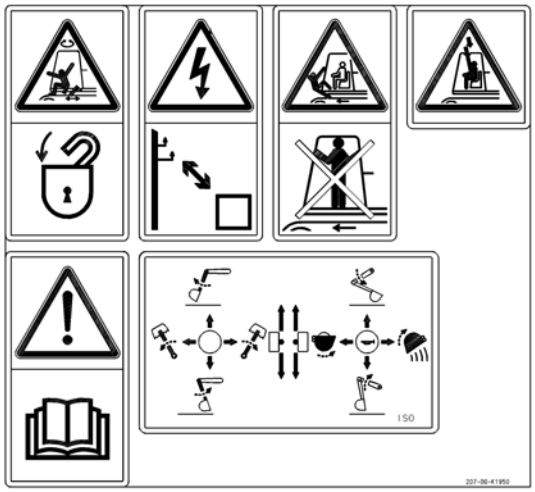

q a. Keep the manual in machine cab near operator.
If this manual is lost, please contact your Komatsu distributor for a replacement.

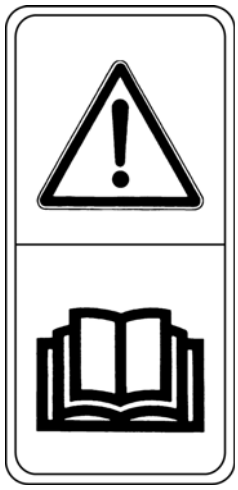

q b. Always apply lock when leaving operator's seat.

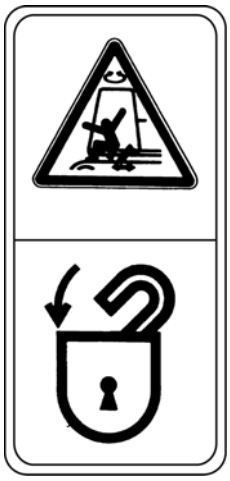

q c. WARNING - No passengers
No passengers allowed to ride on machine while it is moving

q d. WARNING - DANGER OF FALLING OBJECTS
Do not operate where a danger of falling objects exists.
Consult your dealer for fitting of FOPS protection

q e. HAZARDOUS - Voltage hazard
Serious injury or death can occur if machine or attachments are not kept safe distance away from electric lines

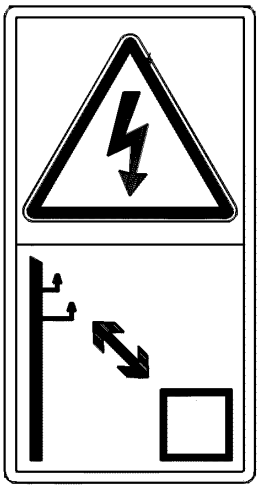

q f. Control levers operational function diagram.

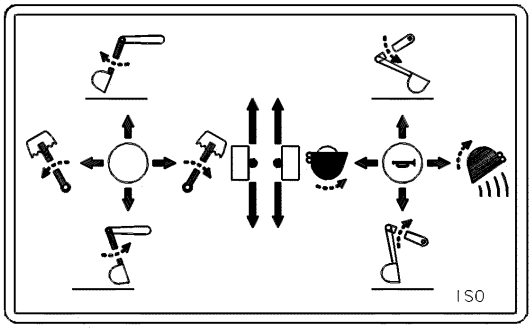

2. (09083-A0481)

q Warning when opening front window

q When raising window, lock it in place with lock pins on both sides.

q Falling window can cause injury.

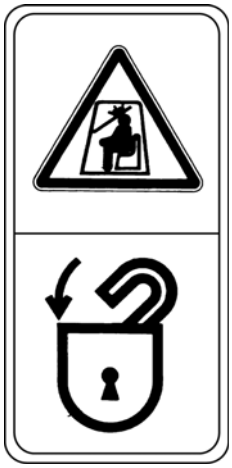

3. (20Y-00-K2220)

q Emergency exit

q Read operation manual before operation

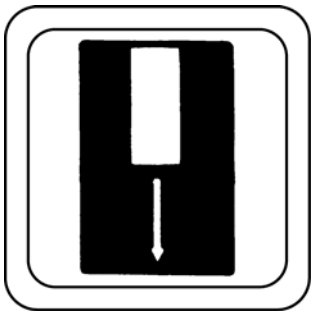

4. (206-00-K1010)

q Pump Control override switch and swing lock override switch

q Read the operation manual before operation

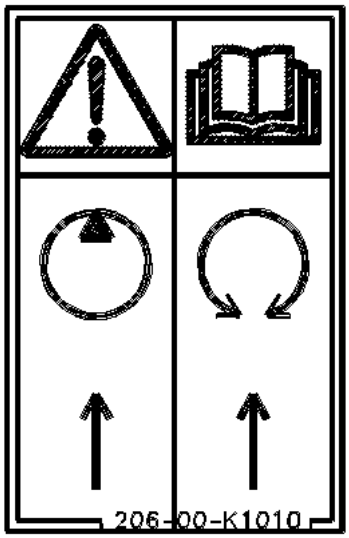

5. (20E-00-K1150)

Keeping out of moving area

To prevent SEVERE INJURY or DEATH do the following before moving machine or its attachments:

q Sound horn to alert people nearby.

q Be sure no one is on or near machine or in the swing area.

q Rotate cab for full view of travel path if it can be done safely.

q Use spotter if view is obstructed.

Always follow the above

6. (20E-00-K1140)
Keeping out of working range area.

q Make sure no one is in the work equipment swing area.

7. (09667-A0481)
q Do not open cover while engine is running.

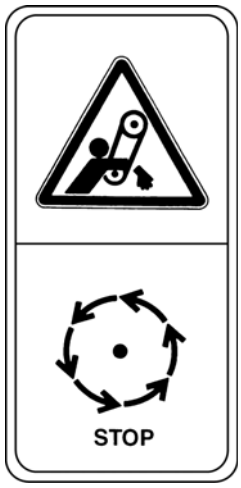

8. (09659A057B) Warnings for handling the accumulator
Explosion hazard

q Keep away from flame.

q Do not weld or drill.

q Read operation manual before operation.

9. (09653-A0481)

Warning for high temperature coolant and oil.

Hot water and oil hazard

To prevent hot water and oil from spurting out:

q Turn engine off.

q Allow water to cool.

q Slowly loosen cap to relieve pressure before removing.

Read operation manual before operation.

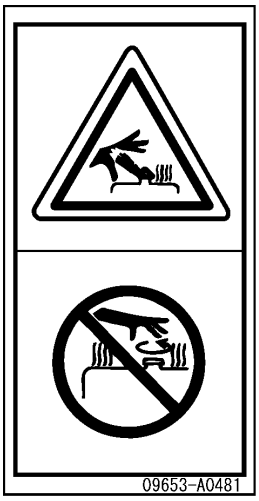

10. (09657-A0881)

q Precautions when adjusting track tension

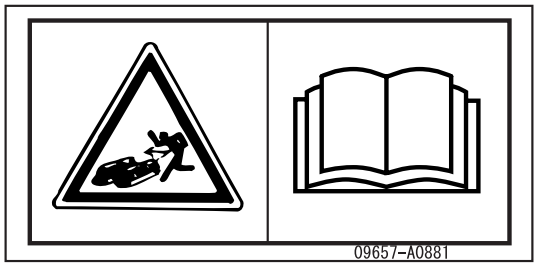

11. (09808-A0881)

q Precautions when handling cable

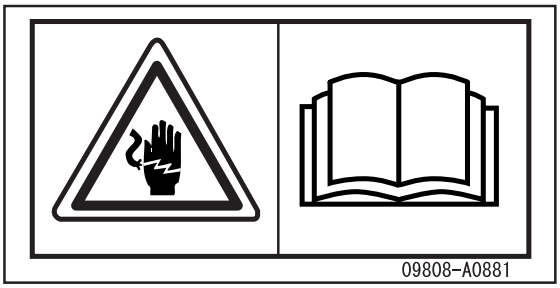

12. (09805-A0881)

q Warning for falling from upper-structure.

q Keep away from sides of machine.

q Keep of counterweight.

q Do not ride on machine when it is moving

13. (09805-C0481)

q Roll-over precautions

q Sign indicates a hazard of falling.

q Do not stand on this place here.

SAFETY INFORMATION

SAFETY RULES

- q Only trained and authorized personnel can operate and maintain the machine.
- q Follow all safety rules, precautions and instructions when operating or performing maintenance on the machine.
- q If you are under the influence of alcohol or medication, your ability to safely operate or repair your machine may be severely impaired putting yourself and everyone else on your jobsite in danger.
- q When working with another operator or with a person on worksite traffic duty, be sure that all personnel understand all hand signals that are to be used.

IF ABNORMALITIES ARE FOUND

If you find any abnormality in the machine during operation or maintenance (noise, vibration, smell, incorrect gauges, smoke, oil leakage, etc., or any abnormal display on the warning devices or monitor), report to the person in charge and have the necessary action taken. Do not operate the machine until the abnormality has been corrected.

WORKING WEAR AND PERSONAL PROTECTIVE ITEMS

- q Do not wear loose clothing or accessories. There is a danger that they may catch on control levers or other protruding parts.
- q If you have long hair and it hangs out from your hard hat, there is a danger that it may get caught up in the machine. Tie your hair up and be careful not to let it get caught.
- q Always wear a hard hat and safety shoes. If the nature of the work requires it, wear safety glasses, mask, gloves, ear plugs, and safety belt when operating or maintaining the machine.
- q Check that all protective equipment functions properly before using it.

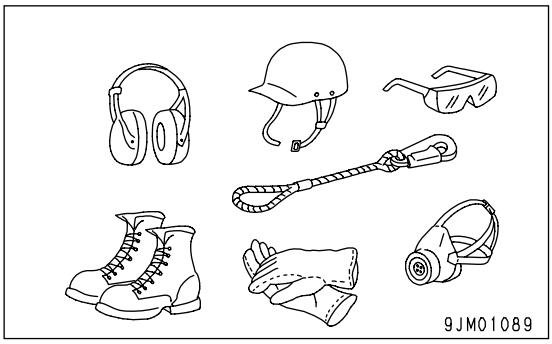

FIRE EXTINGUISHER AND FIRST AID KIT

Always follow the precautions below to prepare for action if any injury or fire should occur.

- q Make sure that fire extinguishers have been provided and read the labels to ensure that you know how to use them in emergencies.
- q Carry out periodic inspection and maintenance to ensure that the fire extinguisher is up to date and usable.
- q Store a first aid kit on board. Carry out periodic checks and add to the contents if necessary.

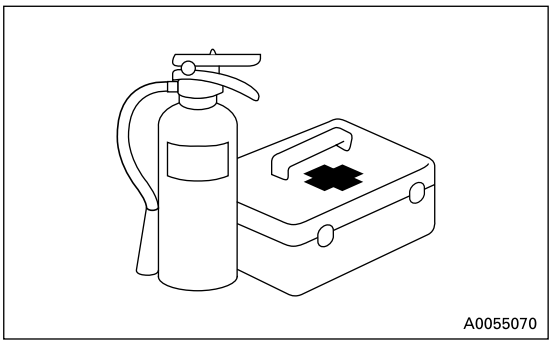

SAFETY EQUIPMENT

- q Make sure that all guards and covers are in their proper position. Have guards and covers repaired immediately if they are damaged.
- q Understand the safety features and their use.
- q Never remove or disable any safety features. Keep them in good operating condition.

KEEP MACHINE CLEAN

- q If water gets into the electrical system, it creates a hazard which can cause malfunctions or faulty operation. Do not use water or steam to wash the electrical system (sensors, connectors).
- q If inspection and maintenance are carried out when the machine is still dirty with mud or oil, there is a danger that you will slip and fall, or that dirt or mud will get into your eyes. Always keep the machine clean.

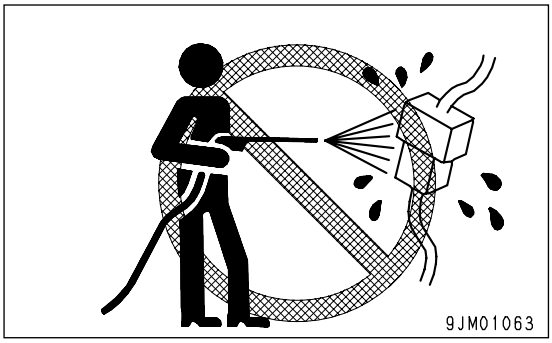

KEEP OPERATOR'S COMPARTMENT CLEAN

- q When entering the operator's compartment, remove all mud and oil from the soles of your shoes. If you operate the pedal with mud or oil affixed to your shoes, your foot may slip and may cause a serious accident.
- q Do not leave parts or tools lying around the operator's compartment.
- q Do not stick suction pads to the window glass. Suction pads act as a lens and may cause fire.
- q Do not use cellular telephones inside the operator's compartment when driving or operating the machine.
- q Never bring any dangerous objects such as flammable or explosive items into the operator's cab.

LEAVING OPERATOR'S SEAT WITH LOCK

- q Before getting up from the operator's seat (such as when opening or closing the front window or roof window, or when removing or installing the bottom window, or when adjusting the operator's seat), lower the work equipment completely to the ground, set safety lock lever (1) securely to the LOCK position, then stop the engine. If you accidentally touch the levers when they are not locked, there is a danger that the machine may suddenly move and cause serious injury or property damage.

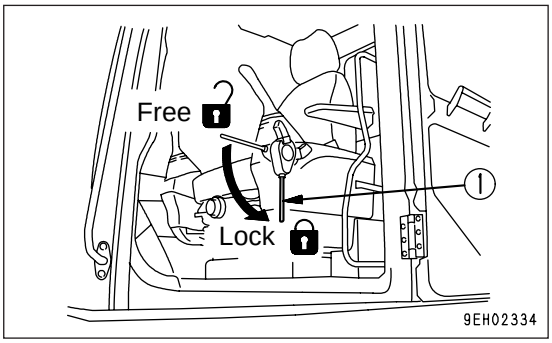

q When leaving the machine, always lower the work equipment completely to the ground, set safety lock lever (1) securely to the LOCK position, then stop the engine. Use the key to lock all the equipment. Always remove the key, take it with you, and keep it in the specified place.

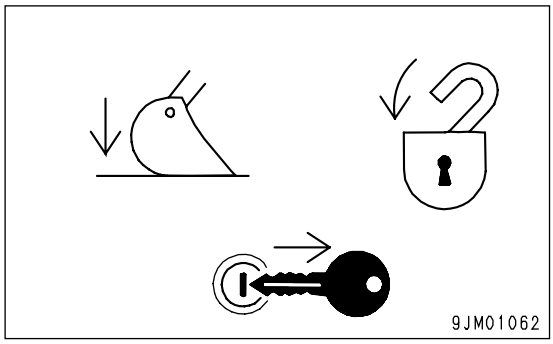

HANDRAILS AND STEPS

To prevent personal injury caused by slipping or falling off the machine, do as follows.

q Use the handrails and steps marked by arrows in the diagram on the right when getting on or off the machine.

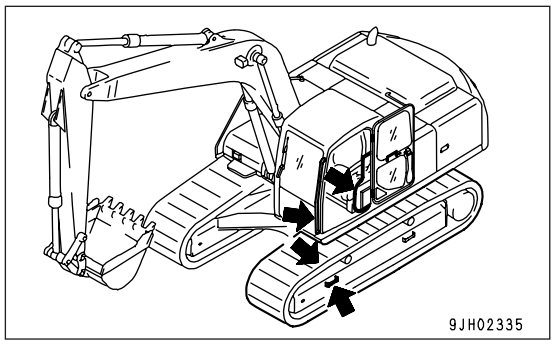

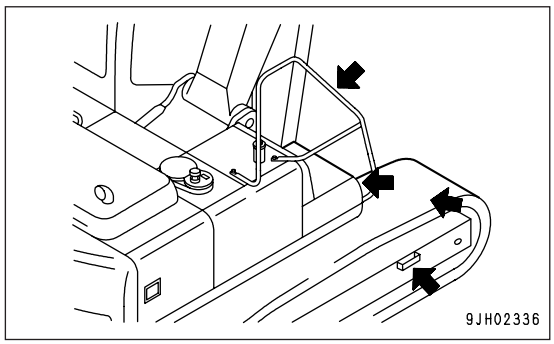

q To ensure safety, face the machine and maintain three-point contact (both feet and one hand, or both hands and one foot) with the handrails and steps (including the track shoe) to ensure that you support yourself.

q Do not grip the control levers when getting on or off the machine.

q Never climb on the engine hood or covers where there are no non-slip pads.

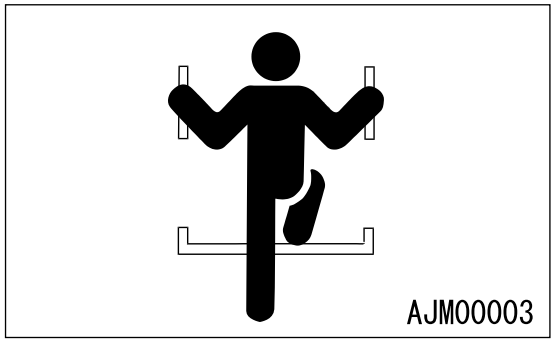

q Before getting on or off the machine, check the handrails and steps (including the track shoe). If there is any oil, grease, or mud on the handrails or steps (including the track shoe), wipe it off immediately. Always keep these parts clean. Repair any damage and tighten any loose bolts.

q Do not get on or off the machine while holding tools in your hand.

MOUNTING AND DISMOUNTING

- q Never jump on or off the machine. Never get on or off a moving machine.
- q If the machine starts to move when there is no operator on the machine, do not jump on to the machine and try to stop it.

NO PERSONS ON ATTACHMENTS

Never let anyone ride on the bucket, grapple, clamshell, or other attachments. There is danger of falling and suffering serious injury.

BURN PREVENTION

Hot coolant

- q To prevent burns from hot water or steam spurting out when checking or draining the coolant, wait for the water to cool to a temperature where it is possible to touch the radiator cap by hand before starting the operation. Even when the coolant has cooled down, loosen the cap slowly to relieve the pressure inside the radiator before removing the cap.

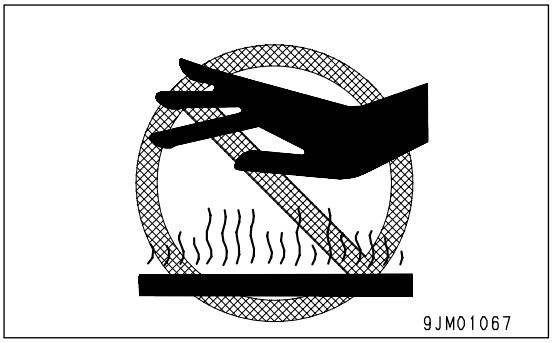

Hot oil

- q To prevent burns from oil spurting out or from contact with hot parts when checking or draining the oil, wait for the oil to cool to a temperature where it is possible to touch the cap or plug by hand before starting the operation. Even when the oil has cooled down, loosen the cap or plug slowly to relieve the internal pressure before removing the cap or plug.

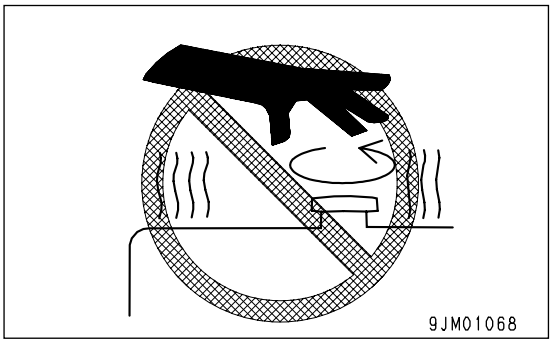

FIRE PREVENTION AND EXPLOSION PREVENTION

q **Fire caused by fuel or oil**

Fuel, oil, antifreeze, and window washer liquid are particularly flammable and can be hazardous. To prevent fire, observe the following:

A0055020

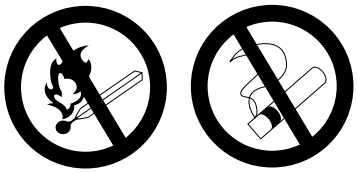

A0055040

- Q Do not smoke or use any flame near fuel or oil.
- Q Stop the engine before refueling.
- Q Do not leave the machine unattended while adding fuel or oil.
- Q Tighten all fuel and oil caps securely.
- Q Do not spill fuel on overheated surfaces or on parts of the electrical system.
- Q Use well-ventilated areas for adding or storing oil and fuel.
- Q Keep oil and fuel in the determined place and do not allow unauthorized persons to enter.
- Q After adding fuel or oil, wipe up any spilled fuel or oil.
- Q When grinding or welding on the chassis, move any flammable materials to a safe place before starting.
- q When washing parts with oil, use a non-flammable oil. Diesel oil and gasoline may catch fire, do not use them.
- q Put greasy rags and other flammable materials into a safe container to maintain safety at the work place.
- q Do not weld or use a cutting torch to cut any pipes or tubes that contain flammable liquids.

q **Fire caused by accumulation of flammable material.**

- q Remove any dry leaves, chips, pieces of paper, dust, or any other flammable materials accumulated or affixed around the engine, exhaust manifold, muffler, or battery, inside or under any covers.

q **Fire coming from electric wiring**

Short circuits in the electrical system can cause fire.

- q Always keep electric wiring connections clean and securely tightened.
- q Check the wiring every day for looseness or damage. Tighten any loose connectors or wiring clamps. Repair or replace any damaged wiring.

q **Fire coming from hydraulic line**

Check that all the hose and tube clamps, guards, and cushions are securely fixed in position.

If they are loose, they may vibrate during operation and rub against other parts. This may lead to damage to the hoses, and cause high-pressure oil to spurt out, leading to fire damage or serious injury.

q **Explosion caused by lighting equipment**

- q When checking fuel, oil, battery electrolyte, window washer fluid, or coolant, always use lights with anti-explosion specifications. If such lighting equipment is not used, there is danger of explosion that may cause serious injury.
- q When taking the electrical power for the lights from the machine, follow the instructions in this manual.

ACTION IF FIRE OCCURS

If a fire occurs, escape from the machine as follows.

- q Turn the starting switch OFF and stop the engine.
- q Use the handrails and steps to get off the machine.

WINDSHIELD WASHER FLUID

Use an ethyl alcohol base washer liquid. Methyl alcohol base washer liquid may irritate your eyes, so do not use it.

FALLING OBJECTS, FLYING OBJECTS AND INTRUDING OBJECTS PREVENTION

On jobsites where there is a danger of falling objects, flying objects, or intruding objects which may hit or enter the operator's cab, consider the operating conditions and install the necessary guards to protect the operator.

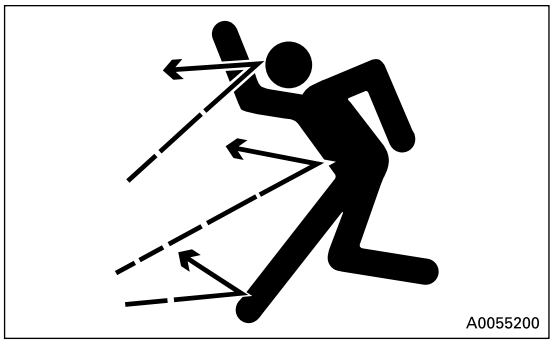

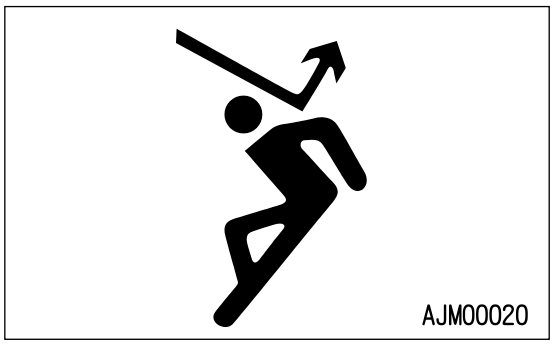

- q When carrying out demolition or breaker operations, install a front guard and use a laminated coating sheet on the front glass.
- q When working in mines or quarries where there is a hazard of falling rock, install FOPS (Falling Objects Protective Structure) and a front guard, and use a laminated coating sheet on the front glass.
- q When carrying out the above operations, close the front window. In addition, ensure that bystanders are a safe distance away and are not in danger of falling or flying objects.
- q The above recommendations assume that the conditions are for standard operations, but it may be necessary to add additional guards according to the operating conditions on the jobsite.
  Contact your Komatsu distributor for advice.

ATTACHMENT INSTALLATION

- q When installing optional parts or attachments, there may be problems with safety or legal restrictions, so please contact your Komatsu distributor for advice.
- q Any injuries, accidents, or product failures resulting from the use of unauthorized attachments or parts will not be the responsibility of Komatsu.
- q When installing and using optional attachments, read the instruction manual for that attachment, and the general information related to attachments in this manual.

ATTACHMENT COMBINATIONS

Depending on the type or combination of work equipment, there is a danger that the work equipment may hit the cab or other parts of the machine. Before using unfamiliar work equipment, check if there is any danger of interference, and operate with caution.

CAB WIDOW GLASSES

If the cab glass on the work equipment side is broken, there is a danger that the work equipment may contact the operator's body directly. Stop operation immediately and replace the glass.

UNAUTHORIZED MODIFICATIONS

Any modification made without authorization from Komatsu can create hazards. Before making a modification, consult your Komatsu distributor.

- Komatsu will not be responsible for any injuries, accidents, or product failures resulting from modifications made without authorization from Komatsu.

SAFETY AT JOBSITE

Before starting operations, thoroughly check the area for any unusual conditions that could be dangerous.

- When carrying out operations near combustible materials such as thatched roofs, dry leaves or dry grass, there is a danger of fire, so be careful when operating.
- Check the terrain and condition of the ground at the worksite. Determine the safest method of operation. Do not carry out operations at places where there is a danger of landslides or falling rocks.
- If water lines, gas lines, or high-voltage electrical lines may be buried under the worksite, contact each utility and identify their locations. Be careful not to sever or damage any of these lines.
- Take necessary measures to prevent any unauthorized person from entering the operating area.
- When traveling or operating in shallow water or on soft ground, check the shape and condition of the bedrock, and the depth and speed of flow of the water before starting operations.

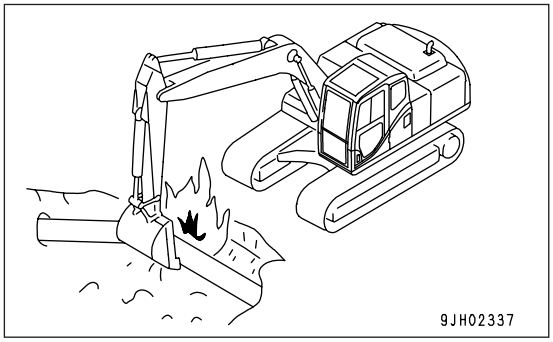

WORKING ON LOOSE GROUND

- Avoid traveling or operating your machine too close to the edge of cliffs, overhangs, and deep ditches. The ground may be weak in such areas. If the ground should collapse under the weight or vibration of the machine, there is a danger that the machine may fall or tip over. Remember that the soil after heavy rain or blasting or after earthquakes is weak in these areas.
- When working on embankments or near excavated ditches, there is a danger that the weight and vibration of the machine will cause the soil to collapse. Before starting operations, take steps to ensure that the ground is safe and to prevent the machine from rolling over or falling.

DISTANCE TO HIGH VOLTAGE CABLES

Do not travel or operate the machine near electric cables. There is a danger of electric shock, which may cause serious injury or property damage. On jobsites where the machine may go close to electric cables, do as follows.

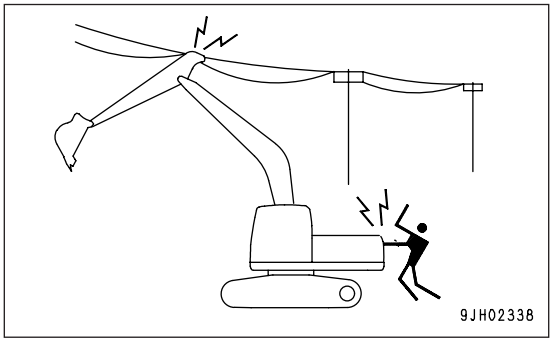

- q Before starting work near electric cables, inform the local power company of the work to be performed, and ask them to take any necessary action.

- q Even going close to high-voltage cables can cause electric shock, which may cause serious burns or even death. Maintain a safe distance (see the table on the right) between the machine and the electric cable. Check with the local power company about safe operating procedure before starting operations.

- q To prepare for any possible emergencies, wear rubber shoes and gloves. Lay a rubber sheet on top of the seat, and be careful not to touch the chassis with any exposed part of your body.

- q Use a signalman to give warning if the machine approaches too close to the electric cables.

- q When carrying out operations near high voltage cables, do not let anyone come close to the machine.

- q If the machine should come too close or touch the electric cable, to prevent electric shock, the operator should not leave the operator's compartment until it has been confirmed that the electricity has been shut off.
  Also, do not let anyone come close to the machine.

	Voltage	Min. safety distance
Low voltage	100V 200V	2m
	6,600V	2m
Very high voltage	22,000V	3m
	66,000V	4m
	154,000V	5m
	187,000V	6m
	275,000V	7m
	500,000V	11m

ENSURE GOOD VISIBILITY

- q Check for any persons or obstacles in the area around the machine and check the conditions of the jobsite to ensure that operations and travel can be carried out safely. Always do as follows.
  - q When working in dark places, turn on the working lamp and front lamps installed on the machine. Set up additional lighting in the work area if necessary.
  - q Stop operations if the visibility is poor, due to mist, snow, rain, or dust.

VENTILATION FOR ENCLOSED AREA

If it is necessary to start the engine within an enclosed area, or when handling fuel, flushing oil, or paint, open the doors and windows to ensure that adequate ventilation is provided to prevent gas poisoning.

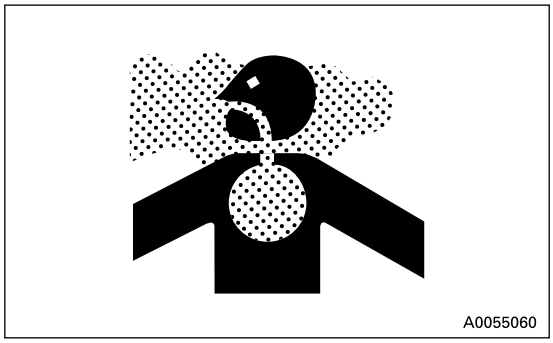

SIGNALMAN'S SIGNAL AND SIGNS

- q Set up signs to inform of road shoulders and soft ground. If the visibility is not good, position a signalman if necessary. Operators should pay careful attention to the signs and follow the instructions from the signalman.
- q Only one signalman should give signals.
- q Make sure that all workers understand the meaning of all signals and signs before starting work.

EMERGENCY EXIT FROM OPERATOR'S CAB

- q If it becomes impossible to open the cab door for any reason, open the rear window and use it as an emergency escape. For details, see "EMERGENCY EXIT FROM OPERATOR'S CAB (PAGE 100)" in this manual.

ELECTROMAGNETIC INTERFERENCE

When this machine is operating close to a source of high electromagnetic interference, such as a radar station, some abnormal phenomena may be observed.

- The display on the monitor panel may behave erratically
- The warning buzzer may sound.

These effects do not signify a malfunction and the machine will return to normal as soon the source of interference is removed.

ASBESTOS DUST HAZARD PREVENTION

Asbestos dust in the air can cause lung cancer if it is inhaled. There is danger of inhaling asbestos when working on jobsites handling demolition work or work handling industrial waste. Always observe the following.

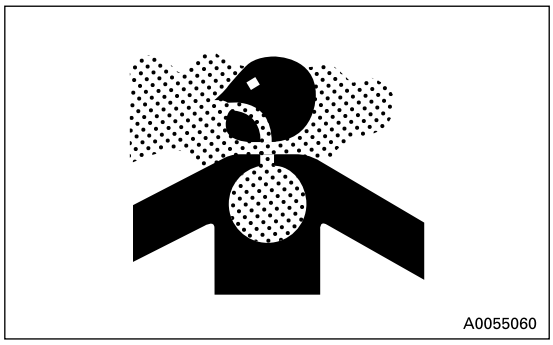

- q Spray water to keep down the dust when cleaning. Do not use compressed air for cleaning.
- q If there is danger that there may be asbestos dust in the air, always operate the machine from an upwind position. All workers should use an approved respirator.
- q Do not allow other persons to approach during the operation.
- q Always observe the rules and regulations for the work site and environmental standards.

This machine does not use asbestos, but there is a danger that imitation parts may contain asbestos, so always use genuine Komatsu parts.

SAFETY MACHINE OPERATION

STARTING ENGINE

If there is a warning tag hanging from the work equipment control lever, do not start the engine or touch the levers.

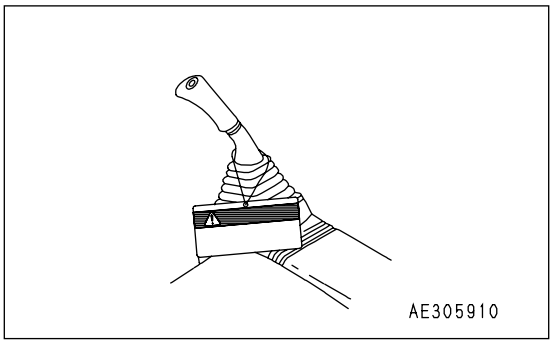

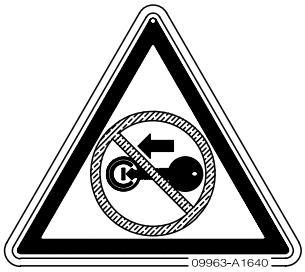

CHECKS BEFORE STARTING ENGINE

Carry out the following checks before starting the engine at the beginning of the day's work.

- q Remove all dirt from the surface of the window glass to ensure good visibility.
- q Remove all dirt from the surface of the lens of the front lamps and working lamps, and check that they light up correctly.
- q Check the coolant level, fuel level, and oil level in engine oil pan, check for clogging of the air cleaner, and check for damage to the electric wiring.
- q Adjust the operator's seat to a position where it is easy to carry out operations, and check that there is no damage or wear to the seat belt or mounting clamps.
- q Check that the gauges work properly, check the angle of the lights and working lamps, and check that the control levers are all at the neutral position.
- q Before starting the engine, check that the safety lock lever is at the LOCK position.
- q Adjust the mirrors so that the rear of the machine can be seen clearly from the operator's seat.
  When adjusting, see "ADJUSTMENT OF MIRRORS (PAGE 132)".
- q Check that there are no persons or obstacles above, below, or in the area around the machine.

SAFETY RULES FOR STARTING ENGINE

- When starting the engine, sound the horn as a warning.
- Start and operate the machine only while seated.
- Do not allow anyone except the operator to ride on the machine.
- Do not short circuit the starting motor circuit to start the engine. It is not only dangerous, but it will also cause damage to the equipment.

STARTING ENGINE IN COLD WEATHER

- Carry out the warming-up operation thoroughly. If the machine is not thoroughly warmed up before the control levers are operated, the reaction of the machine will be slow, and this may lead to unexpected accidents.
- If the battery electrolyte is frozen, do not charge the battery or start the engine with a different power source. There is a danger that this will ignite the battery.
  Before charging or starting the engine with a different power source, melt the battery electrolyte and check for frost and leakage of battery electrolyte before starting.

OPERATION

CHECKS AFTER STARTING ENGINE

When carrying out the checks, move the machine to a wide area where there are no obstructions, and operate it slowly. Do not allow anyone near the machine.

- q Always fasten your seat belt.
- q Check that the movement of the machine matches the display on the control pattern card. If it does not match, replace it immediately with the correct control pattern card.
- q Check the operation of the gauges and equipment, and check the operation of the bucket, arm, boom, travel system, swing system, and steering system.
- q Check for any abnormality in the sound of the machine, vibration, heat, smell, or gauges; check also that there is no leakage of oil or fuel.
- q If any abnormality is found, carry out repairs immediately.

SAFETY RULES FOR CHANGING MACHINE DIRECTIONS

- q Position the upper structure so that the sprocket is at the rear of the operator's cab before traveling.
  If the sprocket is at the front of the operator's cab, the direction of operations is reversed (for example, forward becomes reverse, and left becomes right).
- q Before travelling, check again that there is no one in the surrounding area, and that there are no obstacles.
- q Before travelling, sound the horn to warn people in the area.
- q Operate the machine only when seated.
- q Do not allow anyone except the operator to ride on the machine.
- q Check that the travel alarm (if equipped) works properly.
- q Always lock the door and windows of the operator's compartment in position (open or closed).
  On jobsites where there is a danger of flying objects or of objects entering the operator's compartment, check that the door and windows are securely closed.
- q If there is an area to the rear of the machine which cannot be seen, position a signal person. Take special care not to hit other machines or people when turning or swinging the machine.

Be sure to carry out the above precautions even when the machine is equipped with mirrors.

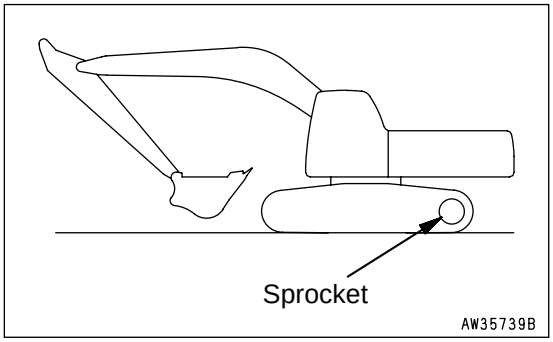

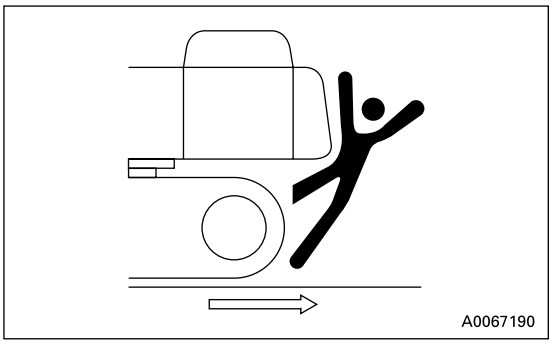

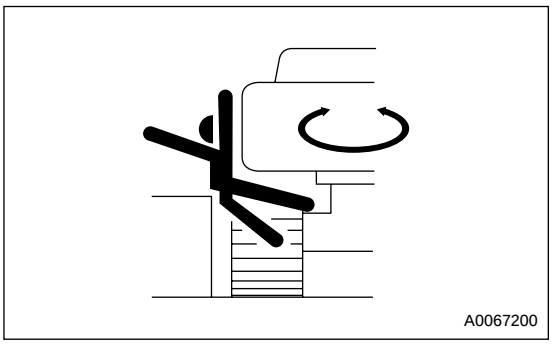

SAFETY RULES FOR TRAVELLING

q During operation, to prevent the machine from overturning due to overloading and to avoid damage to the work equipment, do not exceed the maximum permitted load or performance of the machine.

q When travelling on level ground, pull in the work equipment and keep it at a height of 40 to 50 cm from the ground.

Travel posture

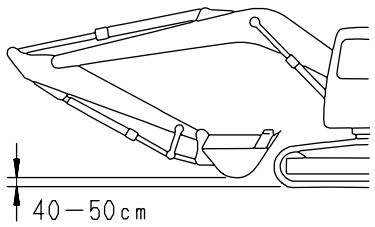

q When travelling on rough ground, travel at low speed and do not operate the steering suddenly. There is danger that the machine may turn over, work equipment may hit the ground and cause the machine to lose its balance, or may damage the machine or other structures in the area.

q When travelling on rough ground or steep slopes, if the machine is equipped with auto-deceleration, turn the auto-deceleration switch OFF (cancel). If the auto-deceleration is ON, the engine speed may rise and the travel speed may suddenly increase.

q Avoid travelling over obstacles whenever possible. If the machine has to travel over an obstacle, keep the work equipment close to the ground and travel at low speed. Never travel over obstacles which make the machine tilt strongly to one side.

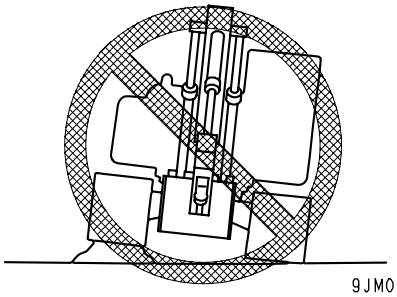

q When travelling or carrying out operations, keep a safe distance from people, structures, or other machines to avoid coming into contact with them.

q When passing over bridges or structures, first check that the structure is strong enough to support the weight of the machine.
When travelling on public roads, first check with the relevant authorities and follow their instructions.

q When operating in tunnels, under bridges, under electric wires, or other places where the height is limited, operate slowly and be extremely careful not to let the work equipment hit anything.

TRAVELLING ON SLOPES

To prevent the machine from tipping over or slipping to the side, do as follows.

q When travelling on slopes, keep the work equipment approximately 20 to 30 cm above the ground. In case of emergency, quickly lower the work equipment to the ground to immediately help stop the machine.

q When travelling up slopes, set the operator's cab facing uphill, when travel down slopes, set the operator's cab facing downhill.
Always check the firmness of the ground under the front of the machine when travelling.

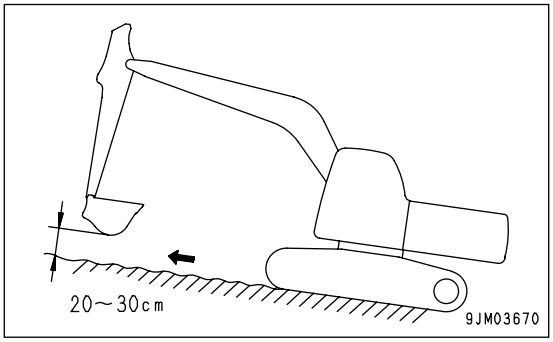

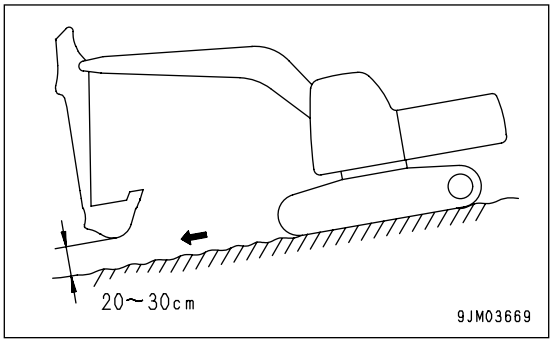

q When travelling up a steep slope, extend the work equipment to the front to improve balance. Keep the work equipment approximately 20 to 30 cm above the ground, and travel at low speed.

q When travelling downhill, lower the engine speed, keep the travel lever close to the neutral position, and travel at low speed.

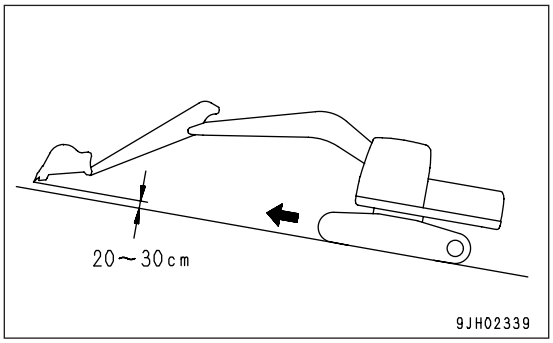

q Always travel straight up or down a slope. Travelling at an angle or across the slope is extremely dangerous.

q Do not turn on slopes or travel across slopes. Always go down to a flat place to change the position of the machine, then travel up the slope again.

q Travel on grass, fallen leaves, or wet steel plates with low speed. Even with slight slopes there is a danger that the machine may slip.

q If the engine stops when the machine is travelling on a slope, move the control levers immediately to the neutral position and start the engine again.

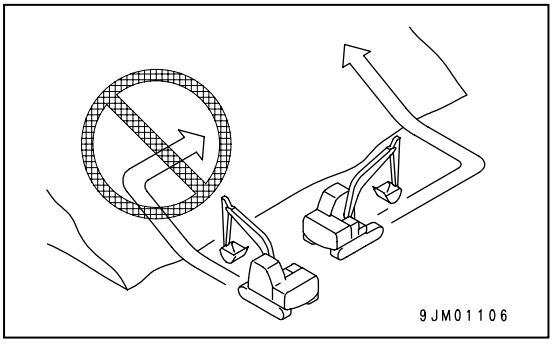

OPERATIONS ON SLOPES

q When working on slopes, there is a danger that the machine may lose its balance and turn over when the swing or work equipment are operated. This may lead to serious injury or property damage. Always provide a stable place when carrying out these operations, and operate carefully.

q Do not swing the work equipment from the uphill side to the downhill side when the bucket is loaded. This operation is dangerous, and may cause the machine to tip over.

q If the machine has to be used on a slope, pile the soil to make a platform that will keep the machine as horizontal as possible.

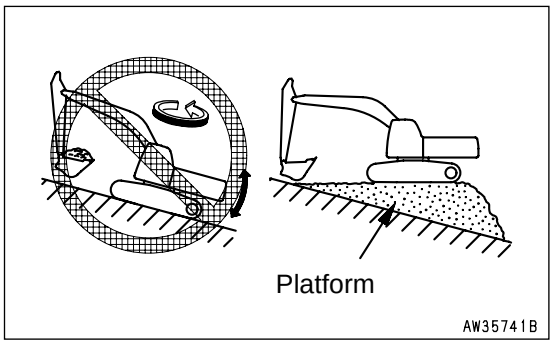

PROHIBITED OPERATIONS

q Never dig the face under an overhang. There is a danger that rocks may fall or that the overhang may collapse and fall on top of the machine.

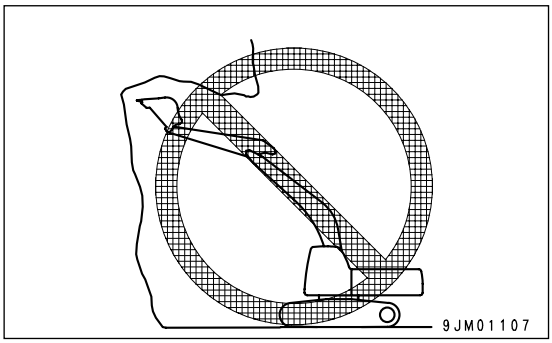

q Do not excavate too deeply under the front of the machine. The ground under the machine may collapse and cause the machine to fall.

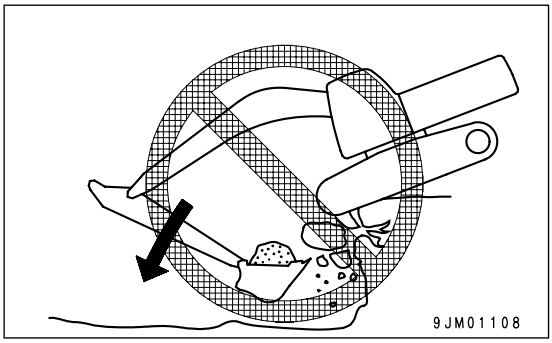

q To make it easier to escape if there is any problem, set the tracks at right angles to the road shoulder or cliff with the sprocket at the rear when carrying out digging operations.

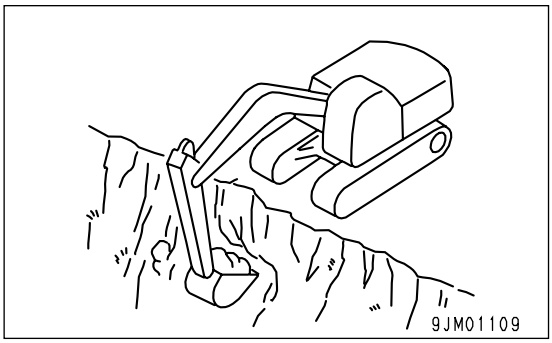

q Do not carry out demolition work under the machine. There is a danger that the machine may become unstable and tip over.

q When working on or from the top of buildings or other structures, check the strength of the structure before starting operations.
There is a danger of the building collapsing and causing serious injury or damage.

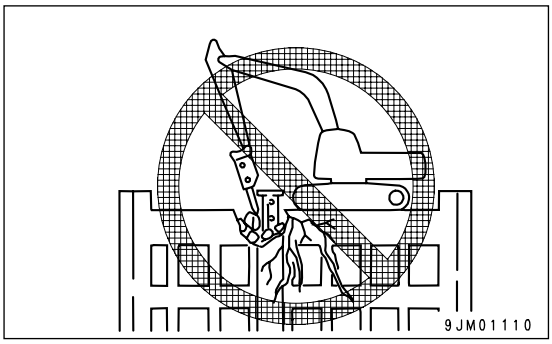

q When carrying out demolition work, do not carry out demolition above your head. There is a danger of broken parts falling, or of the building collapsing and causing serious injury or property damage.

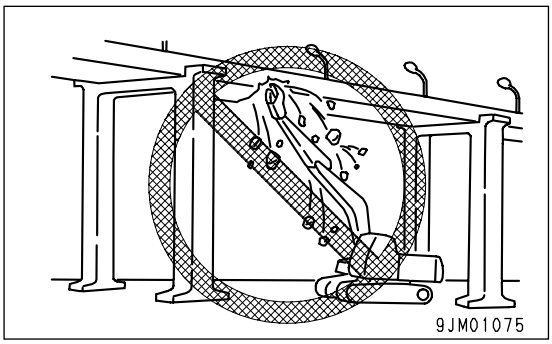

q Do not use the impact force of the work equipment for breaking work. There is a danger of personal injury or property damage being caused by flying pieces of broken material or damage to the work equipment.

q Generally speaking, the machine is more likely to overturn when the work equipment is at the side than when it is at the front or rear.

q When using a breaker or other heavy work equipment, there is a danger that the machine will lose its balance and tip over. When operating on flat ground as well as on slopes.

q Do not suddenly lower, swing, or stop the work equipment.

q Do not suddenly extend or retract the boom cylinder. There is a danger that impact will cause the machine to tip over.

q Do not pass the bucket over the head of other workers, over the operator's seat, or over dump trucks or other hauling equipment. The load may spill or the bucket may hit the dump truck and cause serious injury or property damage.

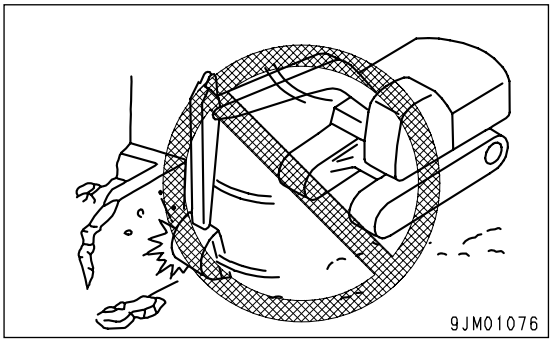

OPERATIONS ON SNOW

q Snow-covered or frozen surfaces are slippery. Be extremely careful when traveling or operating the machine. Do not operate the levers suddenly. Even a slight slope may cause the machine to slip, so be particularly careful when working on slopes.

q With frozen ground surfaces, the ground becomes soft when the temperature rises, and this may cause the machine to tip over.

q If the machine enters deep snow, there is a danger that it may tip over or become buried in the snow. Be careful not to leave the road shoulder or to get trapped in a snow drift.

q When clearing snow, the road shoulder and objects placed beside the road are buried in the snow and cannot be seen. There is a danger of the machine tipping over or hitting covered objects, so always carry out operations carefully.

PARKING MACHINE

q Park the machine on firm, level ground.

q Select a place where there is no danger of falling rocks or landslides, or of flooding if the land is low.

q Lower the work equipment completely to the ground.

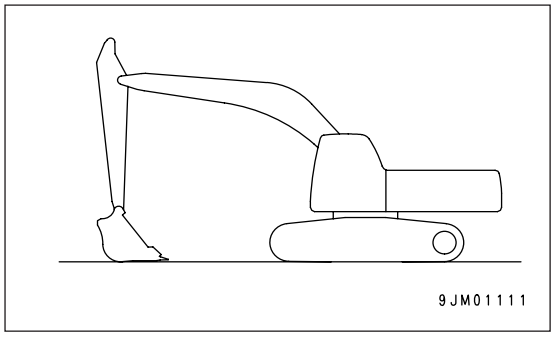

q When leaving the machine, set safety lock lever (1) to the LOCK position, then stop the engine.

q Always close the operator's cab door, and use the key to lock all the equipment in order to prevent any unauthorized person from moving the machine. Always remove the key, take it with you, and leave it in the specified place.

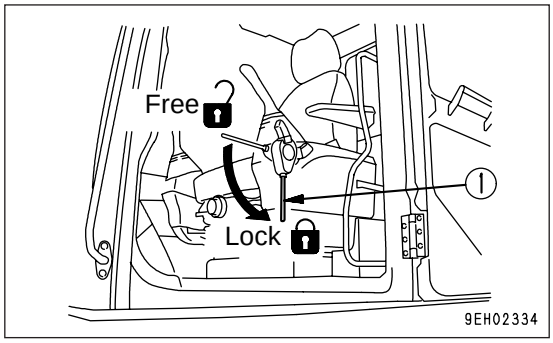

q If it is necessary to park the machine on a slope, always do as follows.

- Q Set the bucket on the downhill side, then dig it into the ground.
- Q Put blocks under the tracks to prevent the machine from moving.

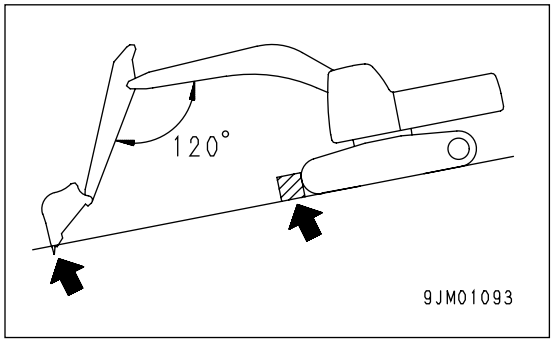

TRANSPORTATION

The machine can be divided into parts for transportation, so when transporting the machine, please contact your Komatsu distributor to have the work carried out.

SHIPPING THE MACHINE

When shipping the machine on a trailer, do as follows.

- Investigate all state and local laws governing the weight, width, and length of a load. If necessary, disassemble the work equipment. The width, height and weight of the load differ according to the work equipment, so take this into account when determining the shipping route.
- When passing over bridges or structures on private land, check first that the structure is strong enough to support the weight of the machine. When traveling on public roads, check first with the relevant authorities and follow their instructions.
- For details of the shipping procedure, see"TRANSPORTATION (PAGE 173)" in the OPERATION section.

BATTERY

BATTERY HAZARD PREVENTION

Battery electrolyte contains sulfuric acid, and batteries generate flammable hydrogen gas, which may explode.

Mistaken handling can lead to serious injury or fire. For this reason, always observe the following precautions.

- Do not use or charge the battery if the battery electrolyte level is below the LOWER LEVEL line. This may cause an explosion. Check the battery electrolyte level periodically and add distilled water to bring the electrolyte level to the UPPER LEVEL line.
- When working with batteries, wear safety glasses and rubber gloves.
- Never smoke or use any flame near the battery.

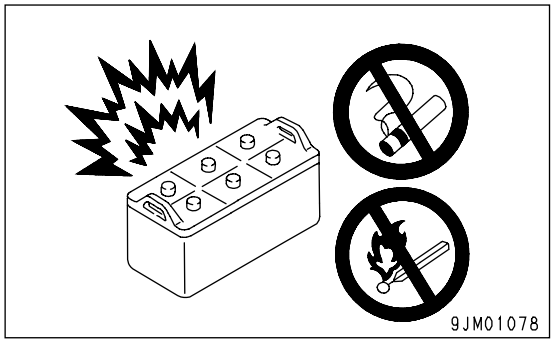

- If you spill acid on your clothes or skin, immediately flush the area with large amounts of water.
- If acid gets into your eyes, flush them immediately with large quantities of water and seek medical attention.

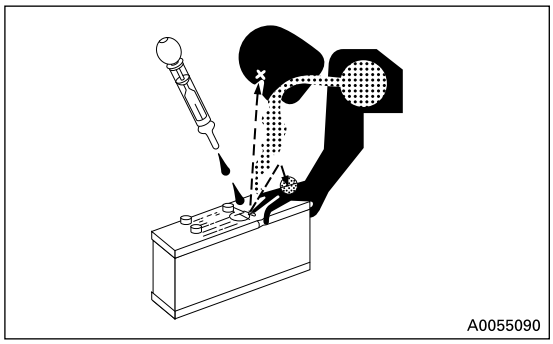

- Before working with batteries, turn the starting switch to the OFF position.

Because there is a danger that sparks will be generated, always do as follows.

- Do not let tools or other metal objects make any contact between the battery terminals. Do not leave tools or other metal objects lying around near the battery.
- Always disconnect the negative (-) terminal (ground side) first when removing the battery; when installing the battery, connect the positive (+) terminal first, and connect the ground last. Tighten the battery terminals securely.
- Flammable hydrogen gas is generated when the battery is charged, so remove the battery from the chassis, take it to a well-ventilated place, and remove the battery caps before charging it.
- Tighten the battery caps securely.
- Install the battery securely to the determined place.

STARTING ENGINE WITH BOOSTER CABLES

If any mistake is made in the method of connecting the booster cables, it may cause the battery to explode, so always do as follows.

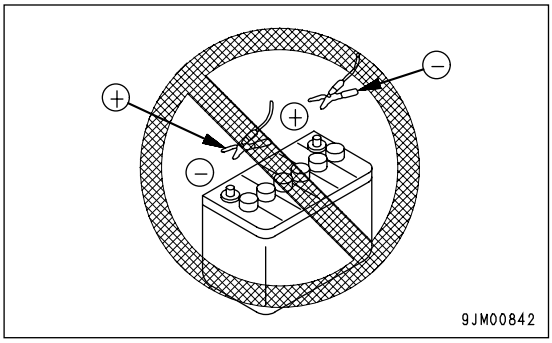

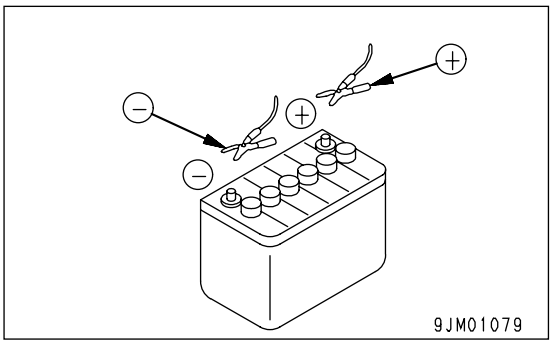

- When starting with a booster cable, carry out the starting operation with two workers (one worker sitting in the operator's seat and the other working with the battery).
- When starting from another machine, do not allow the two machines to touch.
- When connecting the booster cables, turn the starting switch OFF for both the normal machine and problem machine. There is a danger that the machine will move when the power is connected.
- Be sure to connect the positive (+) cable first when installing the booster cables. Disconnect the ground or negative (-) cable (ground side) first when removing them.
- When removing the booster cables, be careful not to let the booster cable clips touch each other or to let the clips touch the machine.
- Always wear safety goggles and rubber gloves when starting the engine with booster cables.
- When connecting a normal machine to a problem machine with booster cables, always use a normal machine with the same battery voltage as the problem machine.
- For details of the starting procedure when using booster cables, see "STARTING ENGINE WITH BOOSTER CABLES (PAGE 194)" in the OPERATION section.

TOWING

SAFETY RULES FOR TOWING

Serious injury or death could result if a disabled machine is towed incorrectly or if there is a mistake in the selection or inspection of the wire rope.

For towing, see "TOWING THE MACHINE (PAGE 190)".

- q Always wear leather gloves when handling wire rope.
- q Fix the wire rope to the truck frame.
- q During the towing operation, never stand between the towing machine and the machine being towed.
- q Never tow a machine on a slope.

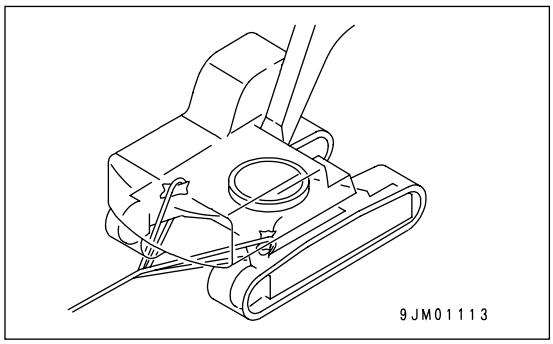

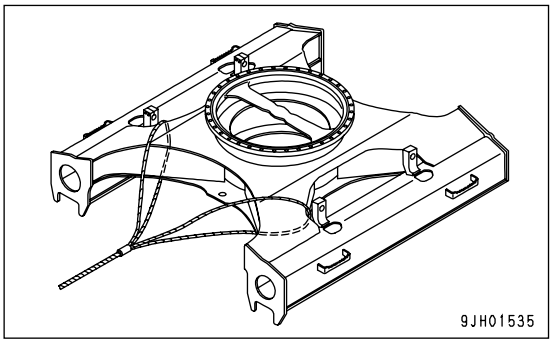

- q Never use a wire rope which has cut strands (A), reduced diameter (B), or kinks (C). There is danger that the rope may break during the towing operation.

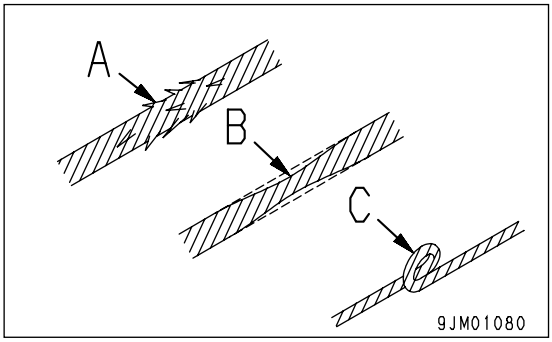

LIFTING OBJECTS WITH BUCKET

SAFETY RULES FOR LIFTING OBJECTS

q Do not carry out lifting work on slopes, soft ground, or other places where the machine is not stable.

q Use wire rope that conforms to the specified standard.

q Do not exceed the specified lifting load.
For details of the maximum lifting load permitted for this machine, see "HANDLING BUCKET WITH HOOK (PAGE 285)"

q It is dangerous if the load hits any worker or structure. Always check carefully that the surrounding area is safe before swinging or turning the machine.

q Do not start, swing, or stop the machine suddenly. There is a danger that the lifted load will swing.

q Do not pull the load to the side or in towards the machine.

q Do not leave the operator's seat when there is a raised load.

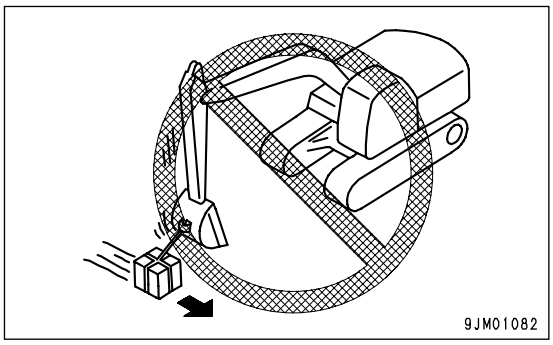

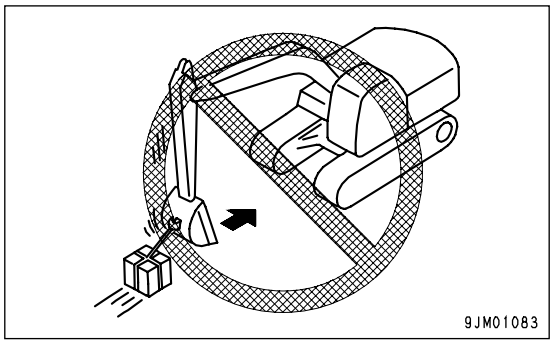

SAFETY MAINTENANCE INFORMATION

WARNING TAG

q Always attach the "DO NOT OPERATE" warning tag to the work equipment control lever in the operator's cab to alert others that you are performing service or maintenance on the machine.
Attach additional warning tags around the machine if necessary.
Warning tag Part No. 09963-A1640
Keep this warning tag in the tool box while it is not used. If there is no tool box on board, keep the tag in the operation manual pocket.

q If others start the engine, or touch or operate the work equipment control lever while you are performing service or maintenance, you could suffer serious injury or property damage.

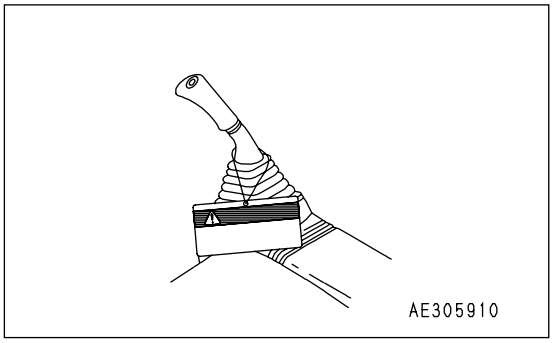

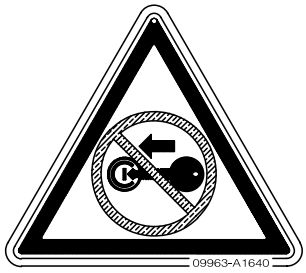

KEEP WORK PLACE CLEAN AND TIDY

q Do not leave hammers or other tools lying around in the work place. Wipe up all grease, oil, or other substances that will cause you to slip. Always keep the work place clean and tidy to enable you to carry out operations safely.
If the work place is not kept clean and tidy, there is the danger that you will trip, slip, or fall over and injure yourself.

APPOINT LEADER WHEN WORKING WITH OTHERS

q When repairing the machine or when removing and installing the work equipment, appoint a leader and follow his instructions during the operation.
When working with others, misunderstandings between workers can lead to serious accidents.

STOP ENGINE BEFORE CARRYING OUT MAINTENANCE

q Stop the machine on firm, level ground.

q Select a place where there is no danger of falling rocks, landslides, or flooding.

q Lower the work equipment completely to the ground and stop the engine.

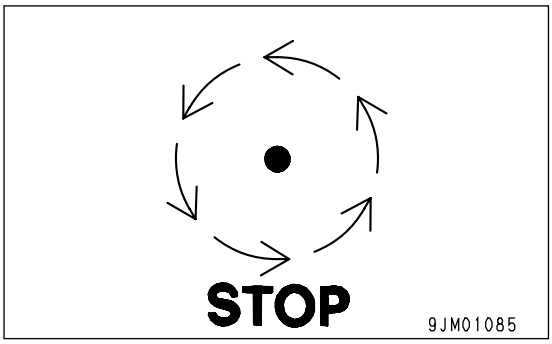

q Turn the starting switch to the ON position. Operate the work equipment control lever back and forth, left and right at the full stroke 2 to 3 times to eliminate the remaining internal pressure in the hydraulic circuit, and then push up safety lock lever (1) to the LOCK position.

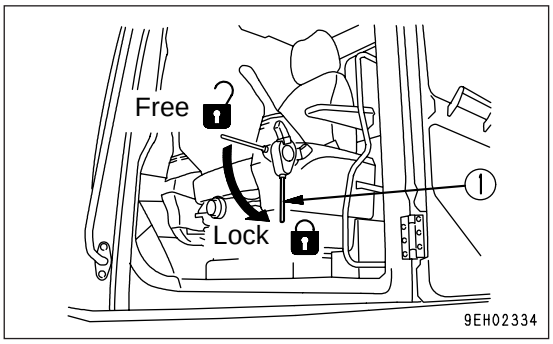

q Put blocks under the track to prevent the machine from moving.

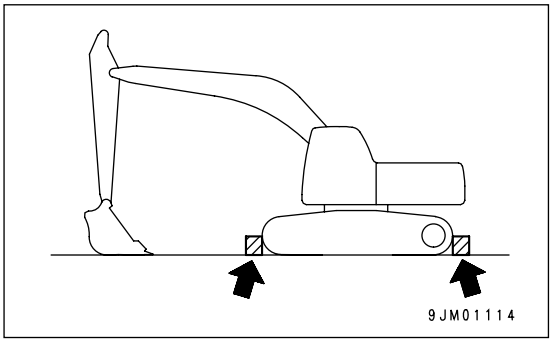

TWO WORKERS FOR MAINTENANCE WHEN ENGINE IS RUNNING

To prevent injury, do not carry out maintenance with the engine running. If maintenance must be carried out with the engine running, carry out the operation with at least two workers and do as follows.

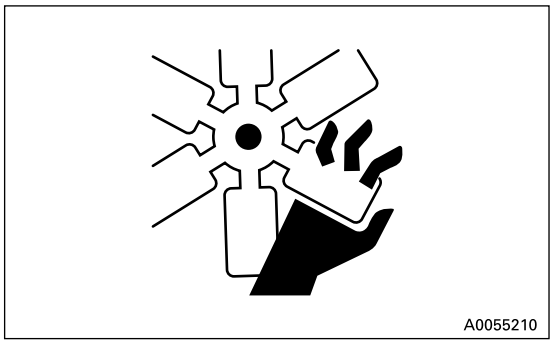

- One worker must always sit in the operator's seat and be ready to stop the engine at any time. All workers must maintain contact with the other workers.

- Set safety lock lever (1) to the LOCK position.

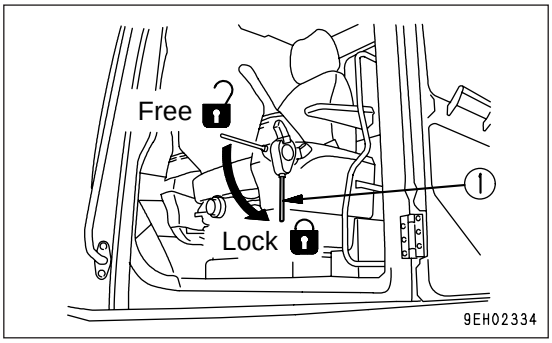

- When carrying out operations near the fan, fan belt, or other rotating parts, there is a danger of being caught in the parts, so be extremely careful.
- Do not touch any control levers. If any control lever must be operated, always give a signal to the other workers to warn them to move to a safe place.
- Never drop or insert tools or other objects into the fan or fan belt.
  Parts may break or be sent flying.

PROPER TOOLS

Use only tools suited to the task and be sure to use the tools correctly. Using damaged, low quality, faulty, makeshift tools or improper use of the tools could cause serious personal injury.

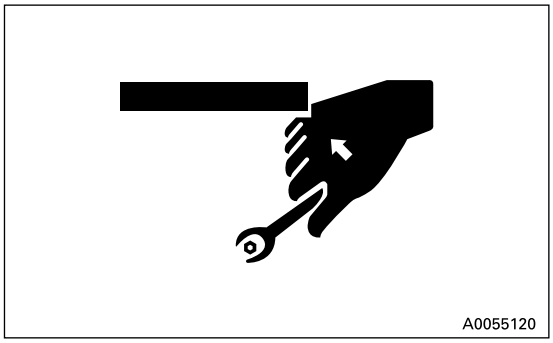

ACCUMULATOR

The accumulator is charged with high-pressure nitrogen gas.

When handling the accumulator, careless procedure may cause an explosion which could lead to serious injury or property damage. For this reason, always observe the following precautions.

- q Do not disassemble the accumulator.
- q Do not bring it near flame or dispose of it in fire.
- q Do not make holes in it, weld it, or use a cutting torch on it.
- q Do not hit or roll the accumulator, or subject it to any impact.
- q When disposing of the accumulator, the gas must be released.
  Please contact your Komatsu distributor to have this work performed.

PERSONNEL

Only authorized personnel can service and repair the machine. Do not allow unauthorized personnel into the area.

If necessary, employ an observer.

ATTACHMENTS

- q Appoint a leader before starting removal or installation operations for attachments.
- q Place attachments that have been removed from the machine in a stable condition so that they do not fall. And take steps to prevent unauthorized persons from entering the storage area.

WORK UNDER THE MACHINE

- q If it is necessary to go under the work equipment or the machine to carry out service and maintenance, support the work equipment and machine securely with blocks and stands strong enough to support the weight of the work equipment and machine.
- q It is extremely dangerous to work under the machine if the track shoes are off the ground and the machine is supported only by the work equipment. If the control levers are touched by mistake, or there is damage to the hydraulic line, the work equipment or the machine may suddenly descend. This is extremely dangerous. Never work under the machine if the machine is not properly supported by blocks or stands.

NOISE

If the noise from the machine is too loud, it may cause temporary or permanent hearing problems.

When carrying out maintenance of the engine and you are exposed to noise for long periods of time, wear ear covers or ear plugs while working.

WHEN USING HAMMER

When using a hammer, pins may fly out or metal particles may be scattered. This may lead to serious injury. Always do as follows.

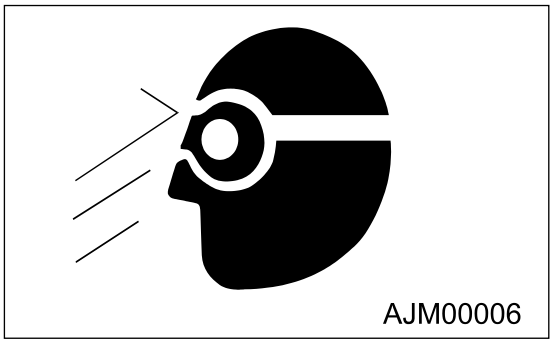

- If hard metal parts such as pins, bucket teeth, cutting edges, or bearings are hit with a hammer, there is a danger that pieces might be scattered and cause injury. Always wear safety goggles and gloves.
- When hitting pins or bucket teeth, there is a danger that broken pieces might be sent flying and injure people in the surrounding area. Always check that there is no one in the surrounding area.
- If pins are hit with strong force, there is a hazard that the pin may fly out and injure people in the surrounding area.

WELDING WORKS

Welding operations must always be carried out by a qualified welder and in a place equipped with proper equipment. There is a danger of fire or electrocution when welding, so never allow any unqualified personnel to carry out welding.

REMOVING BATTERY TERMINALS

When repairing the electrical system or when carrying out electrical welding, remove the negative (-) terminal of the battery to prevent the flow of current.

SAFETY FIRST WHEN USING HIGH-PRESSURE GREASE TO ADJUST TRACK TENSION

q Grease is pumped into the track tension adjustment system under high pressure.
If the specified procedure for maintenance is not followed when making adjustment, grease drain plug (1) may fly out and cause serious injury or property damage.

q When loosening grease drain plug (1) to loosen the track tension, never loosen it more than one turn. Loosen the grease drain plug slowly.

q Never put your face, hands, feet, or any other part of your body close to the grease drain plug (1).

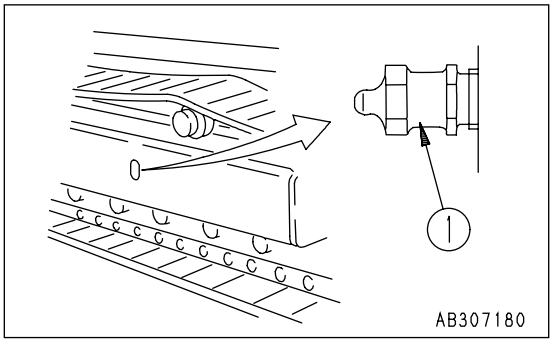

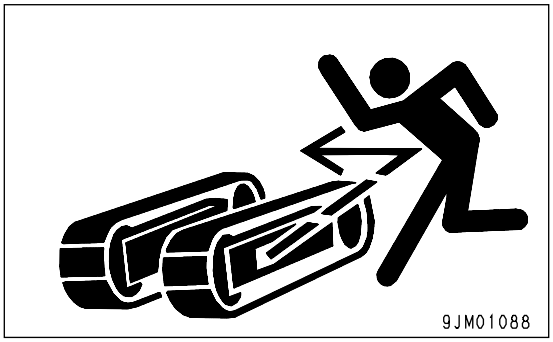

DO NOT DISASSEMBLE RECOIL SPRINGS

The recoil spring assembly is used to reduce the impact on the idler. It contains a spring under high pressure, so if it is disassembled by mistake, the spring will fly out and cause serious injury or even death. Never disassemble the recoil spring.

SAFETY RULES FOR HIGH-PRESSURE OIL

The hydraulic system is always under internal pressure. When inspecting or replacing piping or hoses, always check that the pressure in the hydraulic circuit has been released. If the circuit is still under pressure, it will lead to serious injury or property damage, so always do as follows.

q Do not carry out inspection or replacement work when the hydraulic system is under pressure.

q If there is any leakage from the piping or hoses, the surrounding area will be wet, so check for cracks in the piping and hoses and for swelling in the hoses.
When inspecting, wear safety glasses and leather gloves.

q There is a danger that high-pressure oil leaking from small holes may penetrate your skin or cause blindness if it contacts your eyes directly. If you are hit by a jet of high-pressure oil and suffer injury to your skin or eyes, wash the place with clean water, and consult a doctor immediately for medical attention.

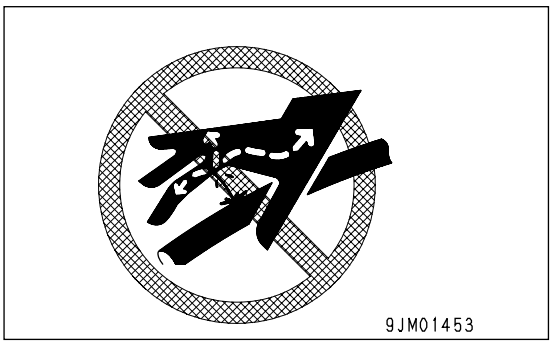

SAFETY HANDLING HIGH-PRESSURE HOSES

q If oil or fuel leaks from high-pressure hoses, it may cause fire or defective operation, which may lead to serious injury or property damage. If any loose bolts are found, stop work and tighten them to the specified torque. If any damaged hoses are found, stop operations immediately and contact your Komatsu distributor for repairs.

Replace the hose if any of the following problems are found.

q Damaged or leaking hydraulic fitting.

q Frayed or cut covering or exposed reinforcement layer of wire.

q Covering swollen in places.

q Twisted or crushed movable portion.

q Foreign material embedded in covering.

WASTE MATERIALS

To prevent pollution, pay careful attention to the method of disposing of waste materials.

q Always put oil drained from your machine in containers. Never drain oil directly onto the ground or dump it into the sewage system, rivers, the sea, or lakes.

q Obey appropriate laws and regulations when disposing of harmful agents such as oil, fuel, coolant, solvent, filters, and batteries.

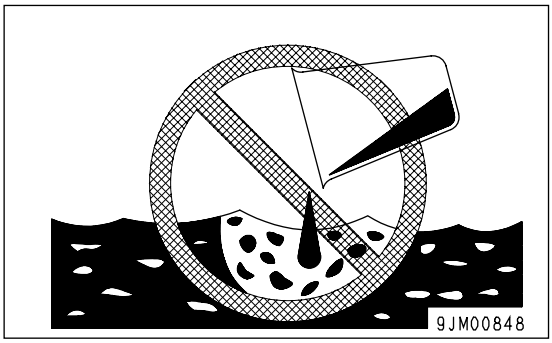

AIR CONDITIONER MAINTENANCE

If air conditioner refrigerant gets into your eyes, it may cause blindness; if it touches your skin, it may cause frost-bite.

Never touch refrigerant.

COMPRESSED AIR

q When cleaning with compressed air, there is a danger of serious injury or property damage caused by flying particles.

q When using compressed air to clean elements or the radiator, always wear safety goggles, dust mask, gloves, and other protective equipment.

PERIODIC REPLACEMENT OF SAFETY CRITICAL PARTS

- In order for the machine to be operated safely for a long time, it is necessary to add oil and to carry out service and maintenance at periodic intervals. In order to further increase safety, components with a strong relationship to safety, such as hoses and seat belts, must be replaced at periodic intervals.
  Replacement of safety critical parts: See "SAFETY CRITICAL PARTS (PAGE 219)".

- The material of these components naturally changes over time, and repeated use causes deterioration, wear, and fatigue. As a result, there is a danger that these components may fail and cause serious injury or property damage. It is difficult to judge the remaining life of these components from external inspection or the feeling when operating, so always replace them at the specified interval.

- Replace or repair safety critical parts if any defect is found, even when they have not reached the time specified interval.

MEMO

OPERATION

⚠ WARNING

Please read and make sure that you understand the safety volume before reading this section.

GENERAL VIEW

GENERAL VIEW OF MACHINE

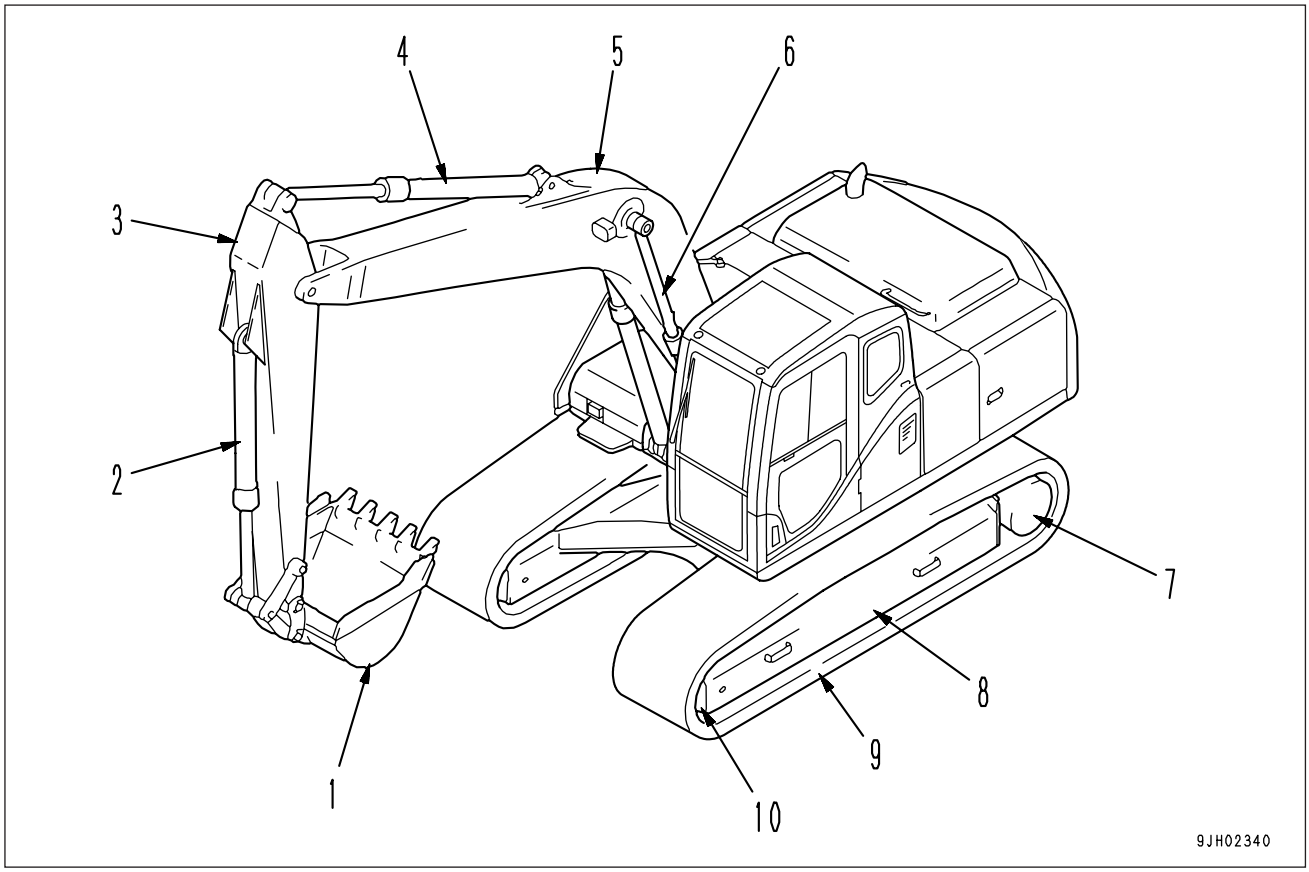

(1) Bucket	(6) Boom cylinder
(2) Bucket cylinder	(7) Sprocket
(3) Arm	(8) Track frame
(4) Arm cylinder	(9) Track shoe
(5) Boom	(10) Idler

GENERAL VIEW CONTROLS AND GAUGES

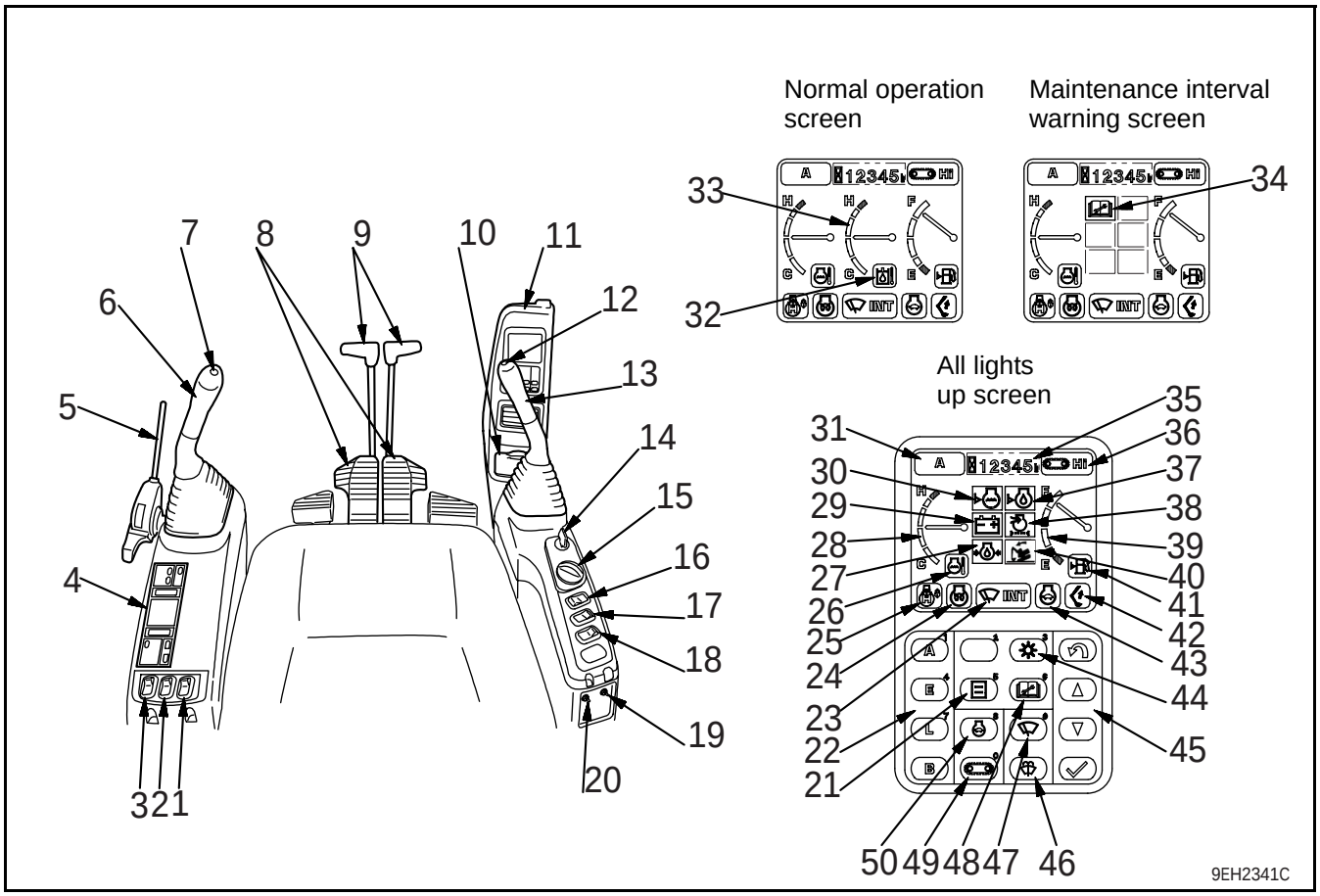

(1) Lower wiper	(26) Engine coolant temperature monitor
(2) Revolving warning lamp (if equipped)	(27) Engine oil pressure monitor
(3) Heated seat	(28) Engine coolant temperature gauge
(4) Air conditioner control panel	(29) Charge monitor
(5) Safety lock levers	(30) Radiator water level monitor
(6) Left work equipment control lever	(31) Working mode monitor
(7) Knob switch (2 spare switches)	(32) Hydraulic oil temperature monitor
(8) Travel pedal	(33) Hydraulic oil temperature gauge
(9) Travel levers	(34) Maintenance monitor
(10) Cigarette lighter	(35) Service meter
(11) Machine monitor	(36) Travel speed monitor
(12) Horn switch (2 spare switches)	(37) Engine oil level monitor
(13) Right work equipment control lever	(38) Air cleaner clogging monitor
(14) Starting switch	(39) Fuel gauge
(15) Fuel control dial	(40) Overload caution monitor
(16) Lamp switch	(41) Fuel level monitor
(17) Alarm buzzer stop switch	(42) One touch power up monitor
(18) Swing lock switch	(43) Auto-deceleration monitor
(19) Swing brake cancel switch	(44) Display control switch
(20) Emergency pump drive switch	(45) Input control switch
(21) Select switch	(46) Window washer switch
(22) Working mode selector switch	(47) Wiper switch
(23) Wiper monitor	(48) Maintenance switch
(24) Engine pre-heating monitor	(49) Travel speed selector switch
(25) Swing lock monitor	(50) Auto-deceleration switch

EXPLANATION OF COMPONENTS

The following is an explanation of the devices needed for operating the machine.

To carry out suitable operations correctly and safely, it is important to understand fully the methods of operating the equipment and the meanings of the displays.

MACHINE MONITOR

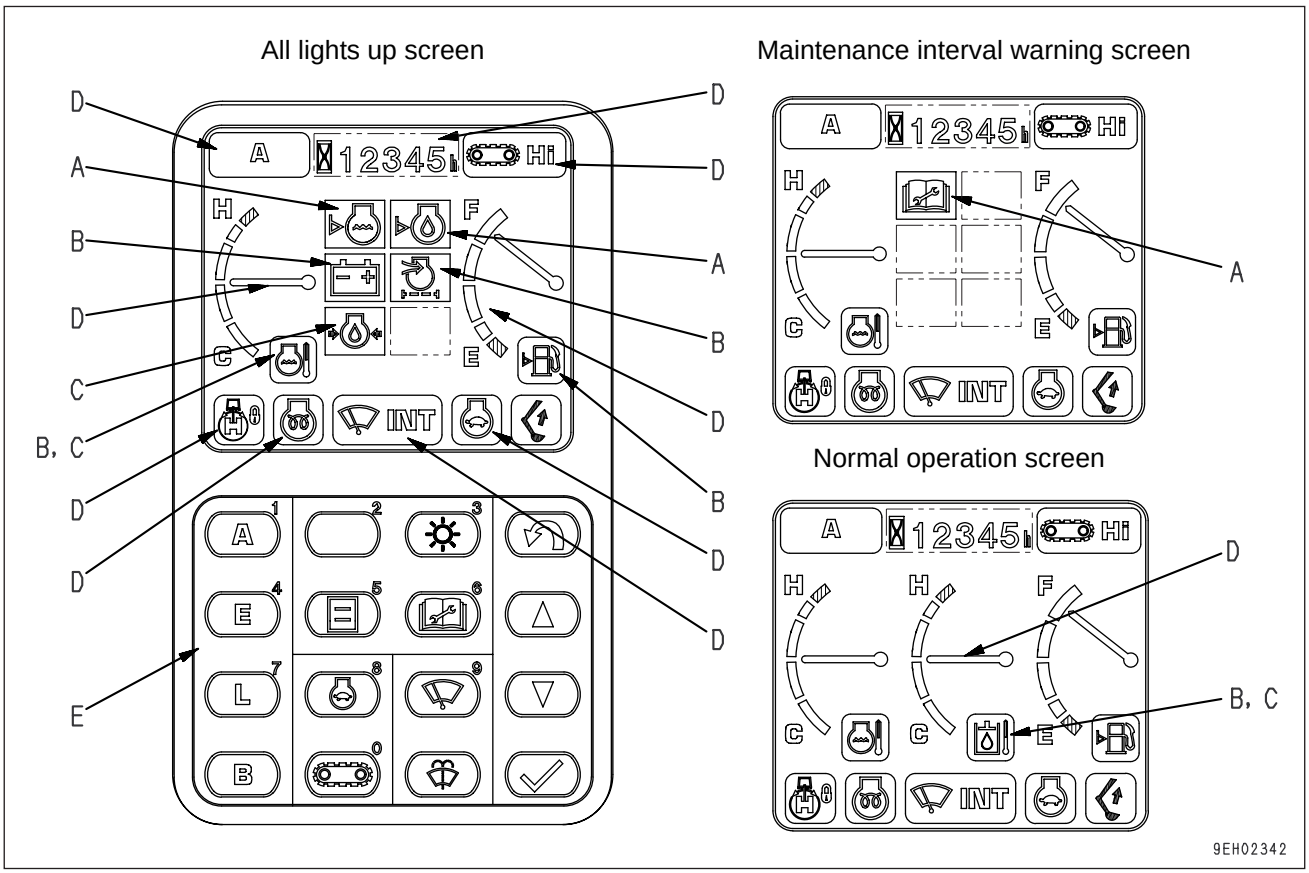

A: Basic check Items	D: Meter Display Portion, Pilot Display Portion
B: Caution Items	E: Monitor Switches
C: Emergency Stop Items	

BASIC OPERATION OF MACHINE MONITOR

If there is abnormality when starting engine

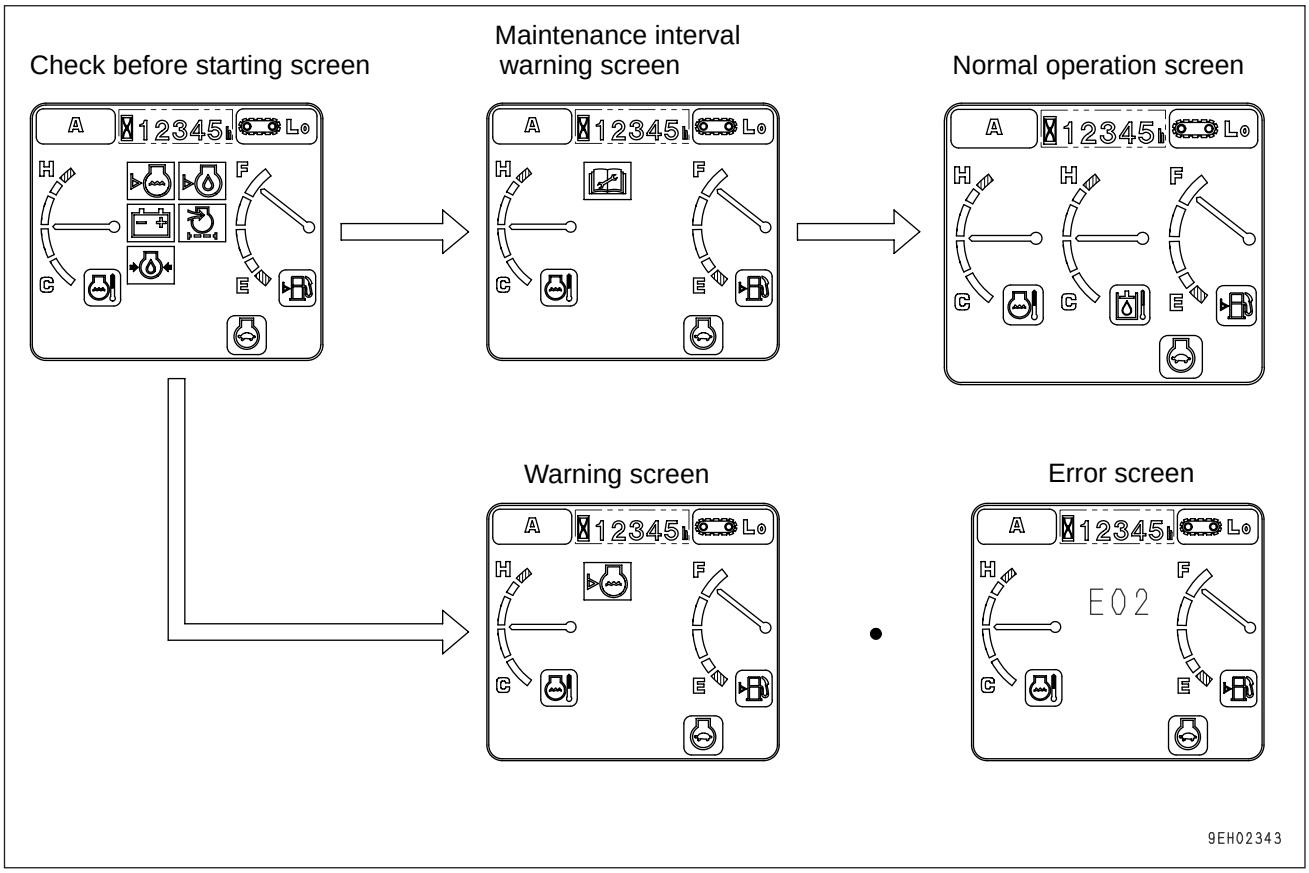

- If there is any abnormality when starting the engine, the check before starting screen changes to the maintenance interval warning screen, warning screen, or error screen.
- After displaying the check before starting screen for 2 seconds, the screen changes to the maintenance interval warning screen.
- After displaying the maintenance interval warning screen for 30 seconds, the screen returns to the normal screen.
- After displaying the check before starting screen for 2 seconds, the screen changes to the warning screen or error screen.

If any abnormality occurs during operation

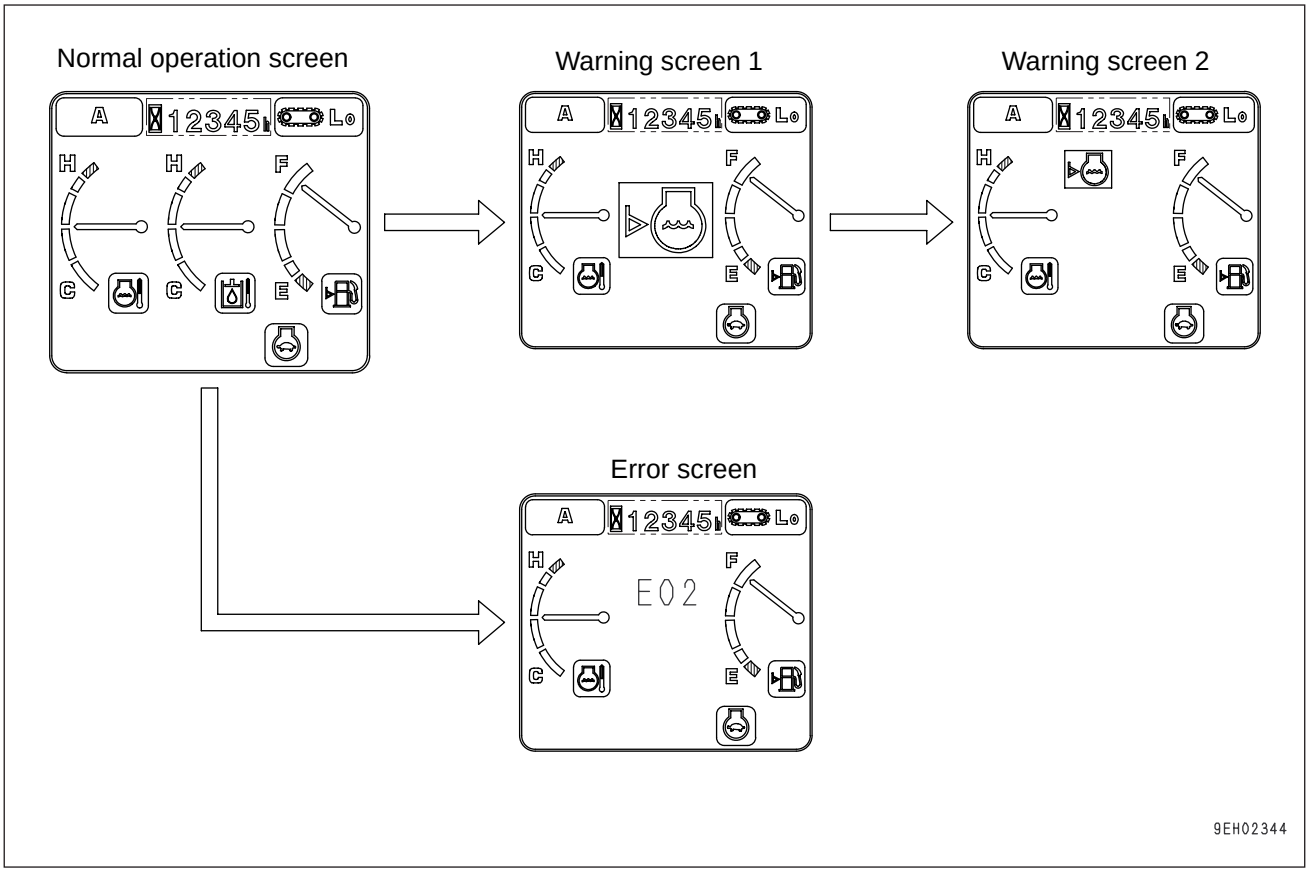

q If any abnormality occurs during operation, the normal operation screen changes to warning screen (1) or the error screen.
q After displaying warning screen (1) for 2 seconds, the screen automatically changes to warning screen (2).

BASIC CHECK ITEMS

⚠ WARNING

These monitors are not a guarantee of the condition of the machine. Do not simply rely on the monitors when carrying out checks before starting (daily checks). Always get off the machine and check each item directly.

This displays the basic items that must be checked before starting the engine. If there is any abnormality, the monitor for the location of the abnormality will light up.

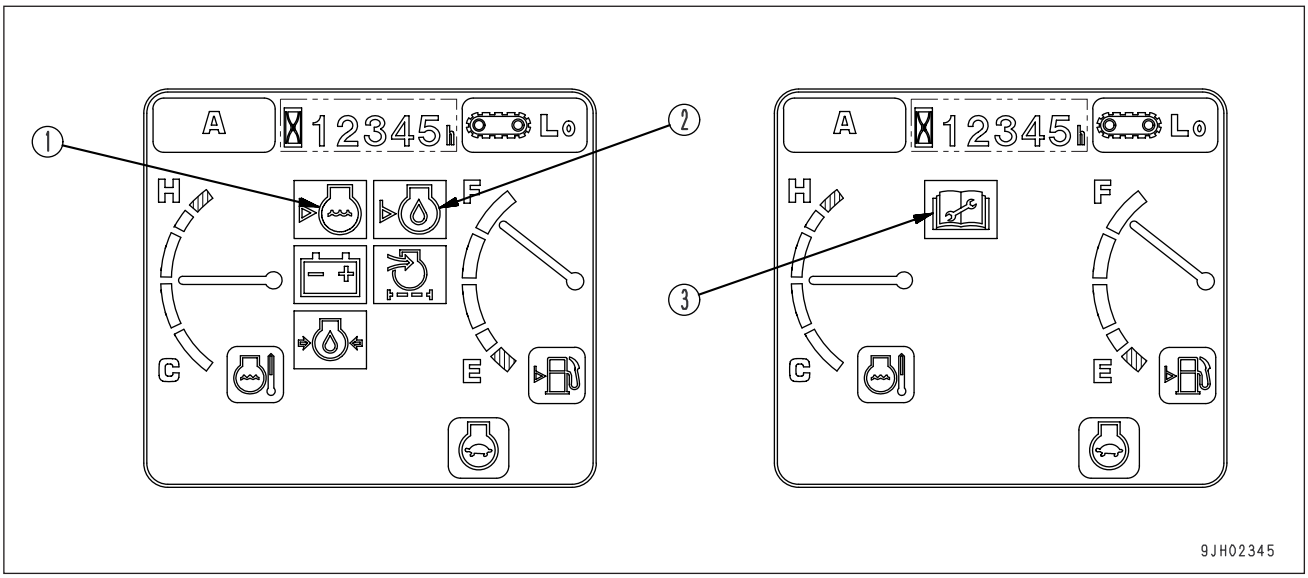

RADIATOR WATER LEVEL MONITOR

(1) Radiator water level monitor	(3) Maintenance monitor
(2) Engine oil level monitor	

This monitor (1) warns the operator that there has been a drop in the radiator water level. If the radiator water level is low, the lamp lights up red, so check the water level in the radiator and the sub-tank, and add water.

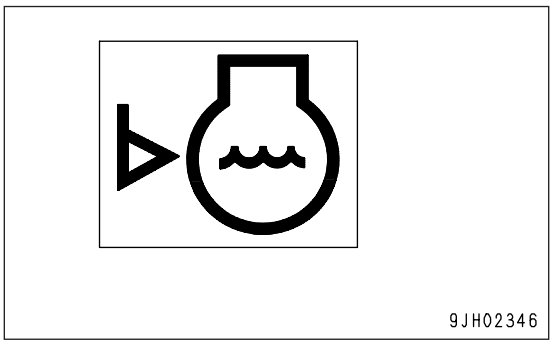

ENGINE OIL LEVEL MONITOR

This monitor (2) warns the operator that there has been a drop in the oil level in the engine oil pan. If the oil level in the engine oil pan is low, the lamp lights up red, so check the oil level in the engine oil pan, and add oil.

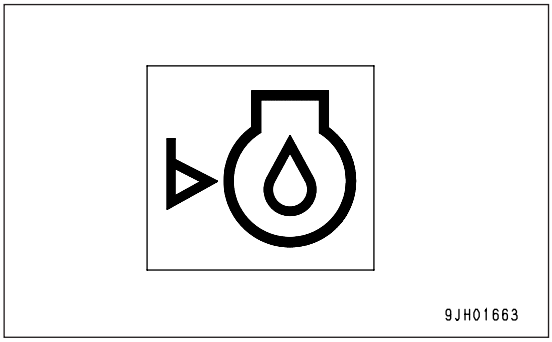

MAINTENANCE INTERVAL MONITOR

This monitor (3) lights up to warn the operator that the set time has passed since the maintenance was last carried out.
This monitor screen goes out after 30 seconds and returns to the normal operation screen.

q For details of the method of checking the maintenance interval, see "MAINTENANCE SWITCH (PAGE 79)".

If it is desired to change the setting of the maintenance interval, please consult your Komatsu distributor.

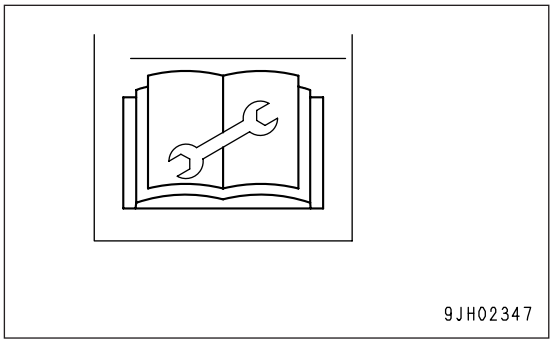

CAUTION ITEMS

⚠ CAUTION

If the warning monitor lights up red, stop operations as soon as possible and carry out inspection and maintenance at the applicable location. If the warning is ignored, it may lead to failure.

These are items that should be observed while the engine is running. If any abnormality occurs, the screen displays the item that needs immediate action.
If there is an abnormality, the monitor for the abnormal location lights up red.

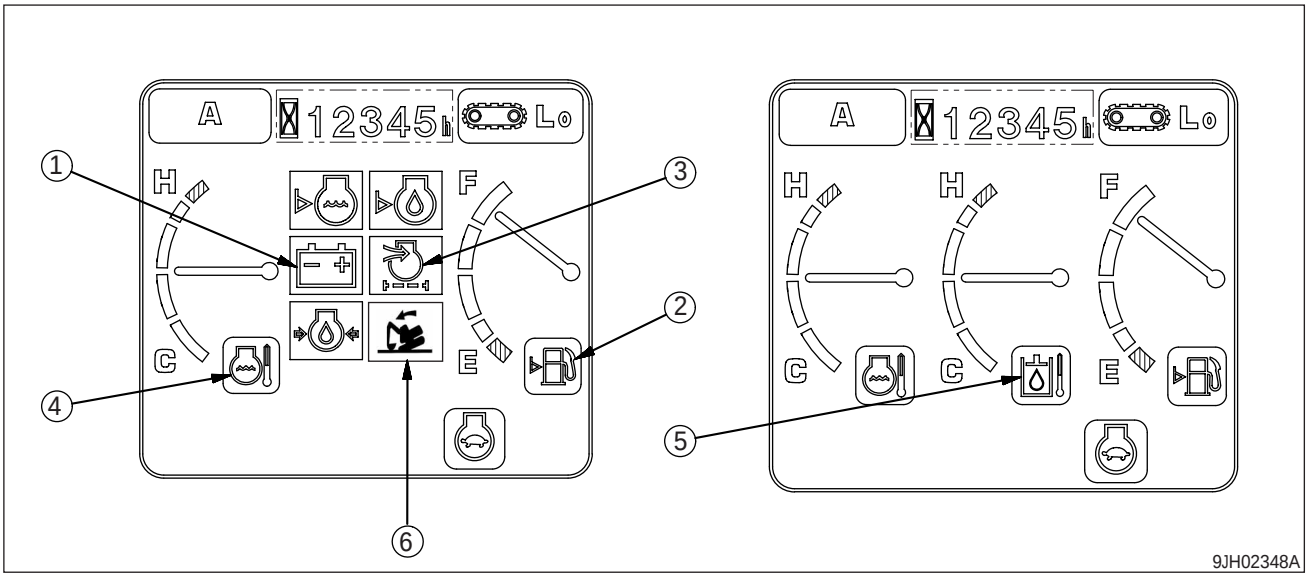

(1) Charge level monitor	(4) Engine water temperature monitor
(2) Fuel level monitor	(5) Hydraulic oil temperature monitor
(3) Air cleaner clogging monitor	(6) Overload caution monitor

CHARGE MONITOR

This monitor (1) warns the operator that there is an abnormality in the charging system when the engine is running. If the battery is not being charged properly while the engine is running, it lights up red.

If it lights up red, check for looseness of the V-belt. If any abnormality is found, take the necessary action. For details, see "OTHER TROUBLE (PAGE 196)".

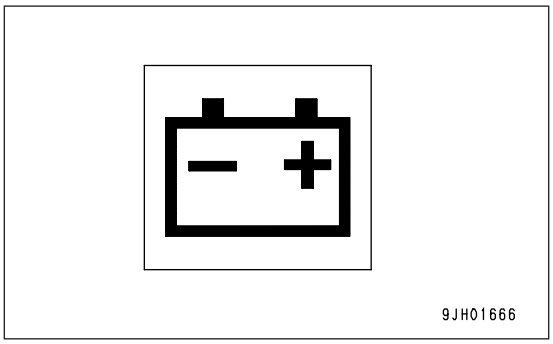

REMARK

- While the starting switch is ON, the lamp will remain lit and will go off once the engine is started.
- When the engine is started or stopped with the starting switch at the ON position, the lamp may light up and the buzzer may sound momentarily, but this does not indicate any abnormality.

FUEL LEVEL MONITOR

This monitor (2) lights up to warn the operator that the level in the fuel tank is low.

If the remaining amount of fuel goes down to 41 liters, the light changes from green to red, so add fuel as soon as possible.

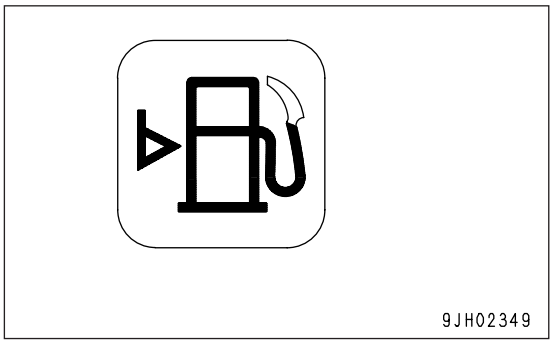

AIR CLEANER CLOGGING MONITOR

This monitor (3) warns the operator that the air cleaner is clogged.

If it lights up red, stop the engine and inspect and clean the air cleaner.

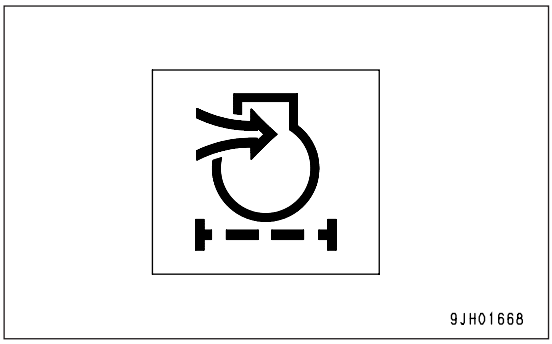

ENGINE WATER TEMPERATURE MONITOR

If this monitor (4) lights up white in low temperatures, carry out the warming-up operation. For details, see "WARMING-UP OPERATION (PAGE 142)".

Continue the warming-up operation until monitor (4) changes to green.

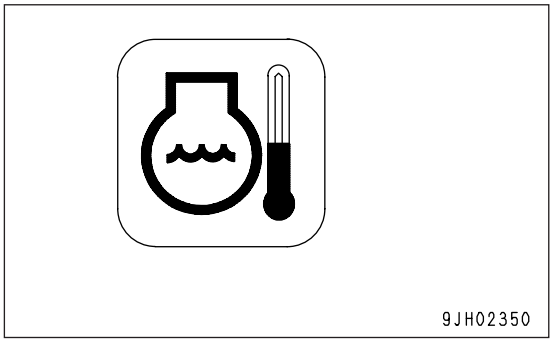

HYDRAULIC OIL TEMPERATURE MONITOR

If this monitor (5) lights up white in low temperatures, carry out the warming-up operation. For details, see "WARMING-UP OPERATION (PAGE 142)".

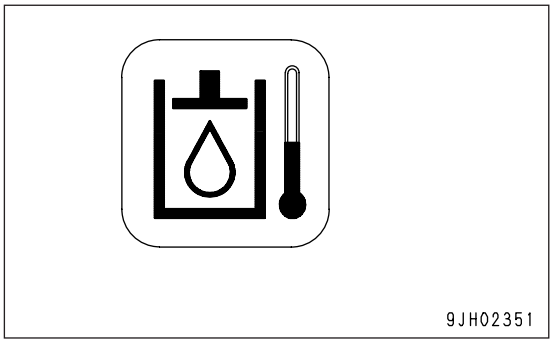

OVERLOAD CAUTION (When lifting)

This monitor (6) warns that the machine is close to tipping due to the load (an audible warning is also given), if the warning is given lower the load. Refer the lifting capacity chart for safe load.

EMERGENCY STOP ITEMS

⚠ CAUTION

If the monitor lights up red, stop the engine immediately or run it at low idle, then check the applicable location and carry out the necessary action.

These are items that should be observed while the engine is running. If there is an abnormality, the monitor for the abnormal location lights up red and the buzzer sounds, so carry out action immediately.

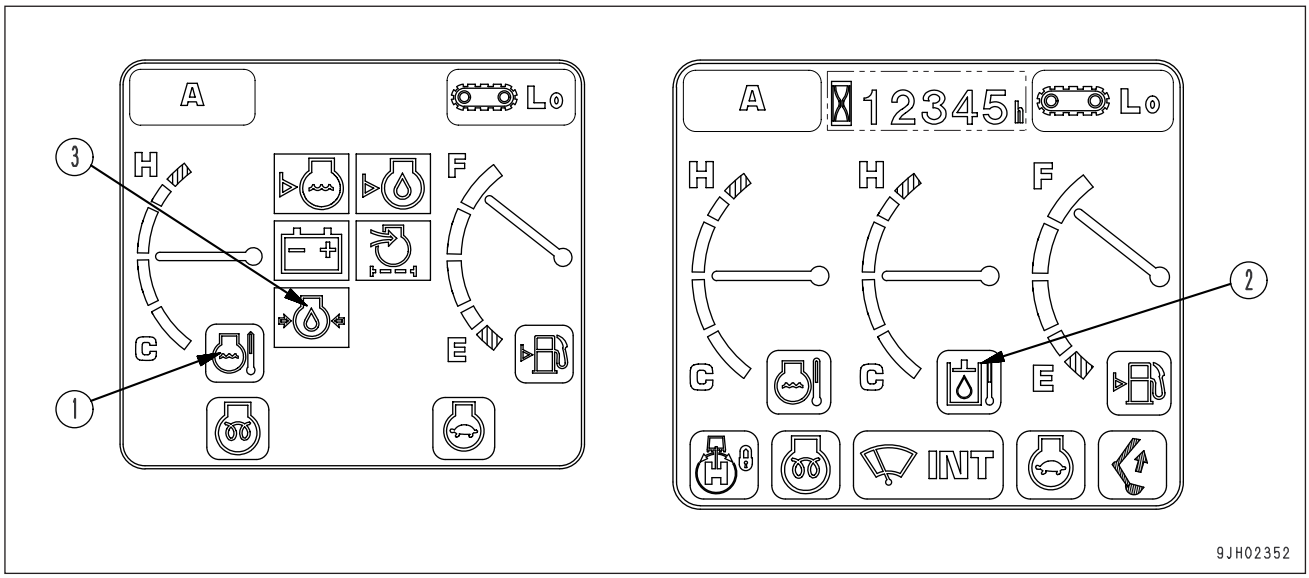

(1) Engine water temperature monitor	(3) Engine oil pressure monitor
(2) Hydraulic oil temperature monitor	

ENGINE WATER TEMPERATURE MONITOR

This monitor (1) warns the operator that the engine water temperature has risen.

If the engine water temperature becomes abnormally high, the monitor lights up red, the overheat prevention system is automatically actuated, and the engine speed goes down.

Stop operations and run the engine at low idle until monitor (1) changes to green.

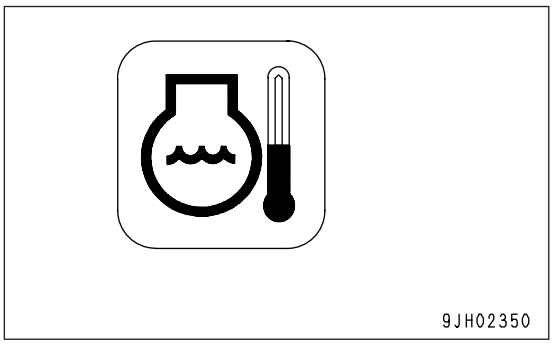

HYDRAULIC OIL TEMPERATURE MONITOR

This monitor (2) warns the operator that the hydraulic oil temperature has risen. If it lights up red during operations, run the engine at low idle or stop the engine and wait until the oil temperature goes down and the monitor changes to green.

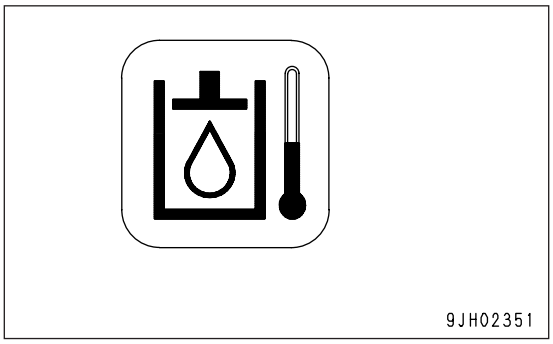

ENGINE OIL PRESSURE MONITOR

This monitor (3) lights up red if the engine lubrication oil pressure goes below the normal level. If it lights up red, stop the engine, and check the lubrication system and the level of oil in the oil pan.

REMARK
When the starting switch is ON, this lamp remains lighted up, and after the engine starts, it goes out. When the engine starts, the buzzer sounds momentarily, but this is not an abnormality.

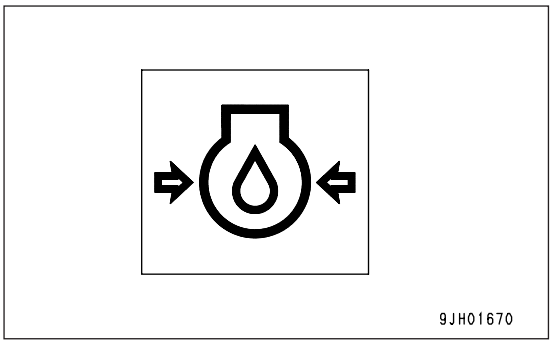

REMARK
The color when the monitor lights up for the basic check items, caution items, and emergency stop items is as follows.

Type of monitor	Color when monitor lights up		
	When normal	When abnormal	At low temperature
Radiator water level monitor	OFF	Red	–
Engine oil level monitor	OFF	Red	–
Maintenance interval monitor	OFF	Red	–
Charge monitor	OFF	Red	–
Fuel level monitor	Green	Red	–
Air cleaner clogging monitor	OFF	Red	–
Engine water temperature monitor	Green	Red	White
Hydraulic oil temperature monitor	Green	Red	White
Engine oil pressure monitor	OFF	Red	–
Overload caution monitor	OFF	Red	–

METER DISPLAY PORTION

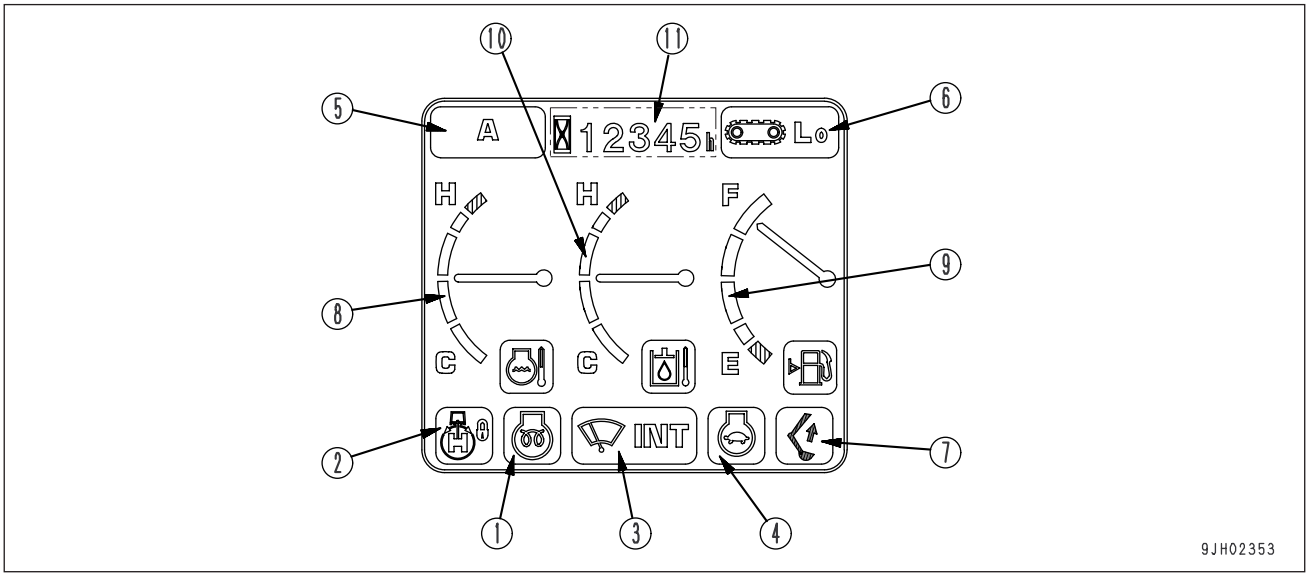

(1) Engine Pre-heating Monitor	(7) One touch power up monitor
(2) Swing Lock Monitor	(8) Engine water temperature gauge
(3) Wiper monitor	(9) Fuel Gauge
(4) Auto-deceleration monitor	(10)Hydraulic oil temperature gauge
(5) Working mode monitor	(11) Service Meter
(6) Travel speed monitor	

PILOT DISPLAY

When the starting switch is ON, the pilot display lights up when the display items are functioning.

ENGINE PRE-HEATING MONITOR

This monitor lamp (1) indicates the pre-heating time required when starting the engine at an ambient temperature below 0°C.

The monitor lamp lights when the starting switch is turned to the HEAT position and flashes after about 30 seconds to show that the pre-heating is completed. (The monitor lamp will go off after about 10 seconds.)

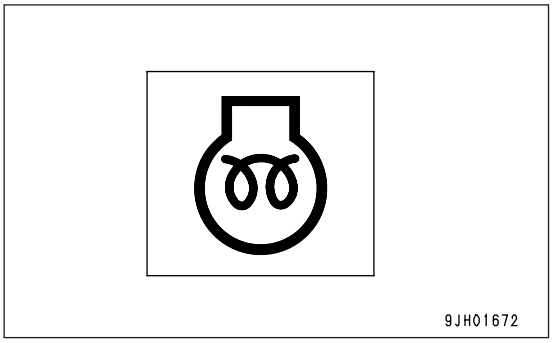

SWING LOCK MONITOR

This monitor (2) informs the operator that the swing lock is being actuated.

Actuated: Lights up

When the swing lock switch is turned ON (ACTUATED), the monitor lamp lights up.
This monitor flashes when the swing holding brake cancel switch is turned on.

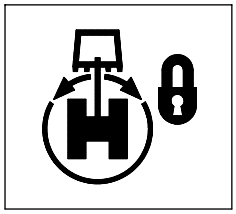

9JH01673

REMARK

The swing motor is equipped with a disc brake that mechanically stops the rotation. When the swing lock monitor lamp is lit up, the brake remains applied.

WIPER MONITOR

This monitor (3) indicates the operating status of the wiper.

The monitor display (when the wiper switch is operated) is as follows.

When ON lights up: Wiper moves continuously
When INT lights up: Wiper moves intermittently
OFF : Wiper stops

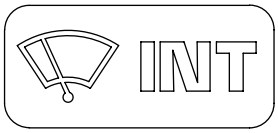

9JH02354

AUTO-DECELERATION MONITOR

This monitor (4) shows if the auto-deceleration function is being actuated.

The monitor display when the auto-deceleration switch is operated is as follows.

Auto-deceleration monitor ON : Auto-deceleration actuated
Auto-deceleration monitor OFF : Auto-deceleration canceled

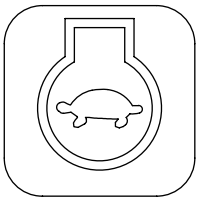

9JH02355

WORKING MODE MONITOR

This monitor (5) displays the set working mode.

The monitor display when the working mode switch is operated is as follows.

A : A mode (for heavy-load operations)
E : E mode (for operations with emphasis on fuel economy)
L : L mode (for lifting operations)
B : B mode (for breaker operations)

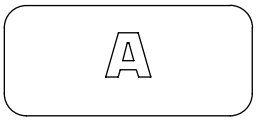

9JH02356

TRAVEL SPEED MONITOR

This monitor (6) displays the set mode for the travel speed.

When the travel speed selector switch is operated the monitor displays one of the following selections.

Lo : Low speed
Mi : Medium speed
Hi : High speed

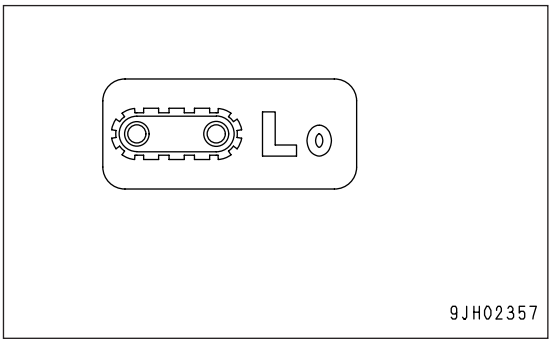

POWER MAX MONITOR

This monitor (7) shows if the power max function is being actuated.

The monitor display (when the knob switch on the left control lever is operated) is as follows.

Monitor lights up: Digging power is increased while knob switch is kept pressed.

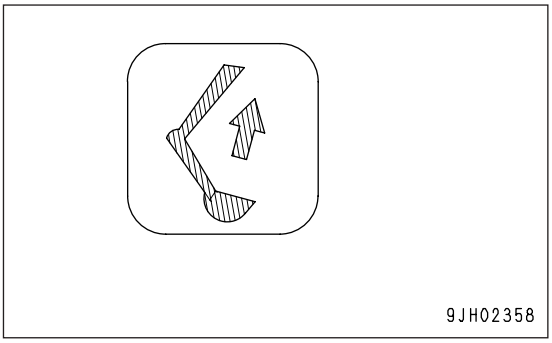

REMARK

The digging power is increased while the knob switch is being pressed only for working modes A and E. Note that even if the knob switch is kept pressed, the increase in power ends after 8.5 seconds.

Monitor goes out : Power max function stopped

METERS

ENGINE WATER TEMPERATURE GAUGE

This meter (8) indicates the engine cooling water temperature.

During normal operations, the indicator should be in the black range. If the indicator enters the red range during operations, the overheat prevention system is actuated.

The overheat prevention system acts as follows.

Red range position (A) :
Engine water temperature monitor (1) lights up red
Red range position (B) :
Engine speed is reduced to low idle, engine water temperature monitor lamp (C) lights up red, and the alarm buzzer sounds at the same time.

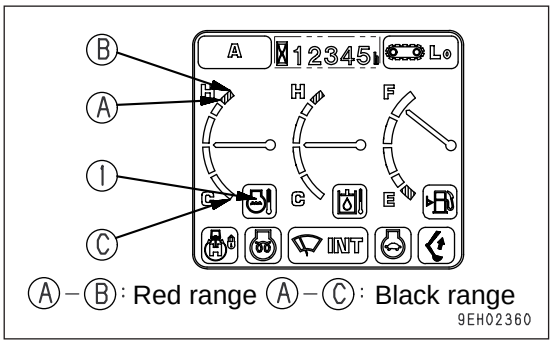

The overheat prevention system remains actuated until the indicator returns to the black range.

When the engine is started, if the indicator is at position (C), engine water temperature monitor (1) lights up white.

In this case, carry out the warming-up operation. For details, see "WARMING-UP OPERATION (PAGE 142)".

FUEL GAUGE

This meter (9) displays the level of fuel in the fuel tank.

During operations, the indicator should be in the black range.

If the indicator enters red range (A) during operations, there are less than 100 liters of fuel remaining in the tank, so check and add fuel.

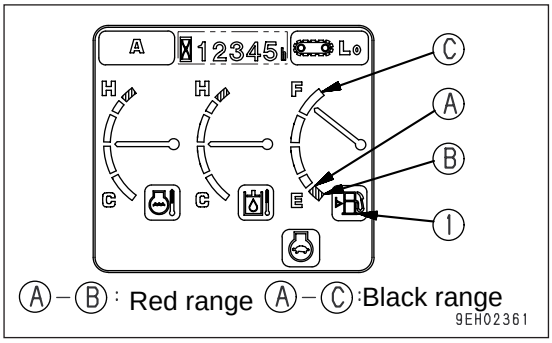

REMARK

If the indicator enters red range (B), there are less than 41 liters of fuel remaining.

When the indicator is in the red range (A) to (B), fuel level monitor (1) lights up red.

The correct fuel may not be displayed for a short time when the starting switch is turned ON, but this is not an abnormality.

HYDRAULIC OIL TEMPERATURE GAUGE

This meter (10) displays the hydraulic oil temperature.

During operations, the indicator should be in the black range.

If the indicator enters red range (A) during operations, the hydraulic oil temperature has gone above 102°C. Stop the engine or run it at low idle and wait for the hydraulic oil temperature to go down.

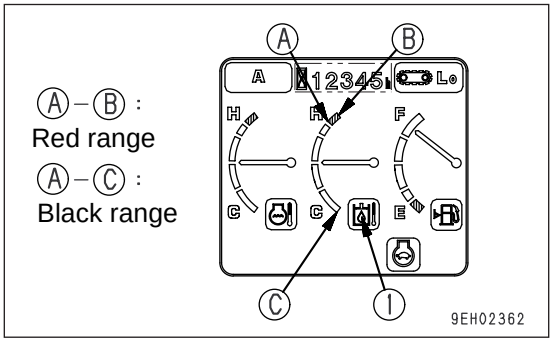

REMARK

When the indicator is in the red range (A) to (B), the hydraulic oil temperature is as follows.

Red range position (A) : More than 102°C
Red range position (B) : More than 105°C

When the indicator is in the red range (A) to (B), hydraulic oil temperature monitor (1) lights up red.

If the indicator is at position (C) when the engine is started, the hydraulic oil temperature is more than 25°C, and hydraulic oil temperature monitor (1) lights up white. In this case, carry out the warming-up operation. For details, see "WARMING-UP OPERATION (PAGE 142)".

SERVICE METER

This monitor (11) displays the total time that the machine has been operated.

Use the time display to set the maintenance interval. When the starting switch is ON, the service meter advances even if the machine is not moving.

The service meter advances by 1 for every hour of operation, regardless of the engine speed.

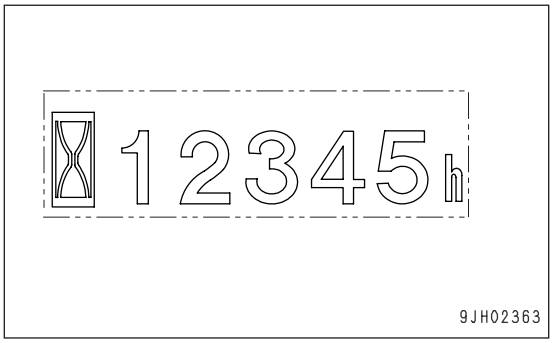

MONITOR SWITCHES

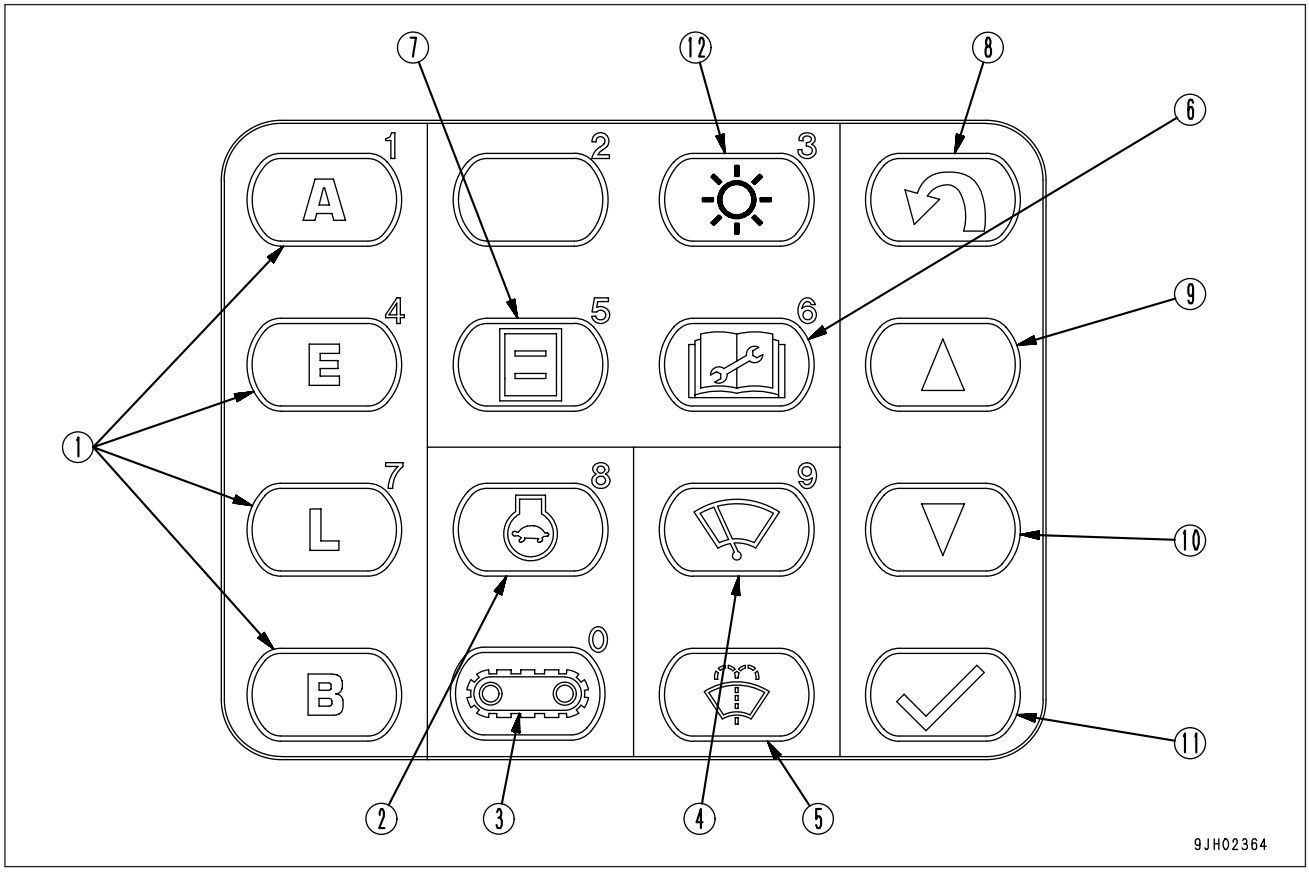

(1) Working mode selector switch (basic switch)	(7) Select switch
(2) Auto-deceleration switch (selection switch)	(8) Back switch
(3) Travel speed switch	(9) Up switch
(4) Wiper switch	(10) Down switch
(5) Window washer switch	(11) Input confirmation switch
(6) Maintenance switch	

WORKING MODE SELECTOR SWITCH (BASIC SWITCH)

This switch (1) is used to set the power and movement of the work equipment.

Operations can be carried out more easily by selecting the mode to match the type of operation.

A mode : For heavy-load operations
E mode : For operations with emphasis on fuel economy
L mode : For lifting operations
B mode : For breaker operations

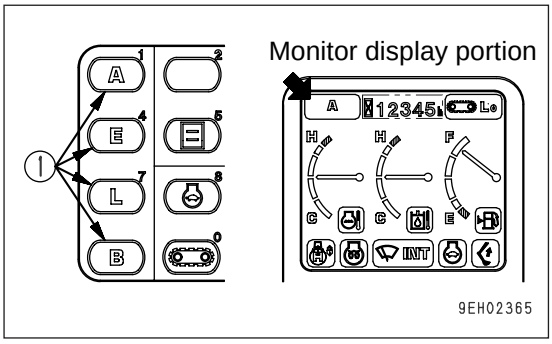

q When the engine is started, the working mode is set automatically to A mode. When the switch is pressed, other modes are selectable. The display on the monitor display portion changes for each mode.
q If it is desired to have the working mode set to start automatically in E, L, or B mode (default options setting), please ask your Komatsu distributor to change the setting.

REMARK
When the mode selector switch is pressed, the mode is displayed in the center of the monitor display, and the screen returns to the normal screen after 2 seconds. (The diagram on the right is an example of the display for the E mode.)

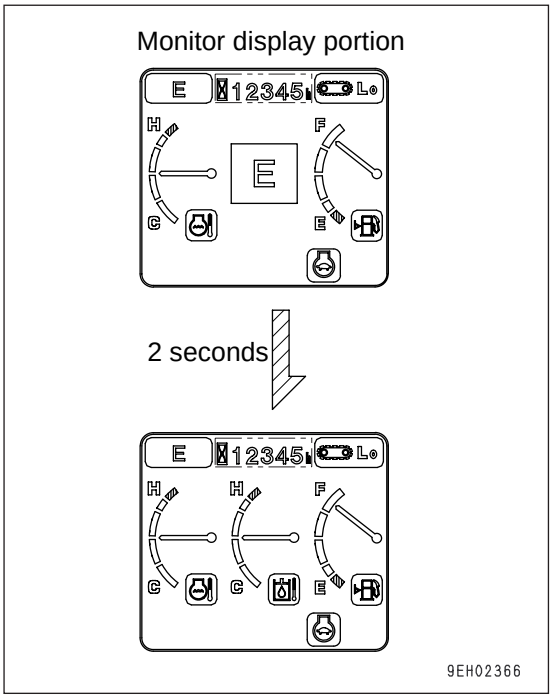

NOTICE
When using the breaker, do not use A mode. There is danger that the breaker may be damaged.

AUTO-DECELERATION SWITCH

When this auto-deceleration switch button (2) is depressed, the auto-deceleration is actuated, if the control levers are in the neutral position, the engine speed is automatically lowered to reduce fuel consumption.

Monitor display ON : Auto-deceleration actuated
Monitor display OFF : Auto-deceleration canceled

Each time that the switch is pressed, the auto-deceleration switches between actuated and canceled.

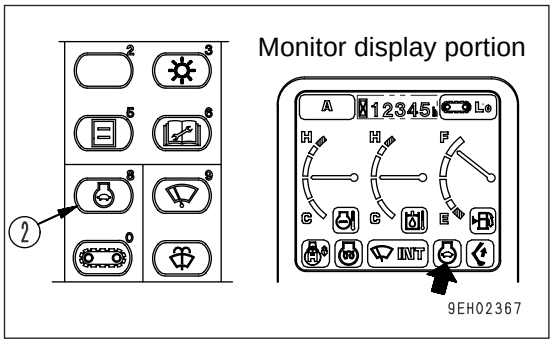

REMARK
When the auto-deceleration switch is pressed and the auto-deceleration is actuated, the mode is displayed in the center of the monitor display, and the screen returns to the normal screen after 2 seconds.

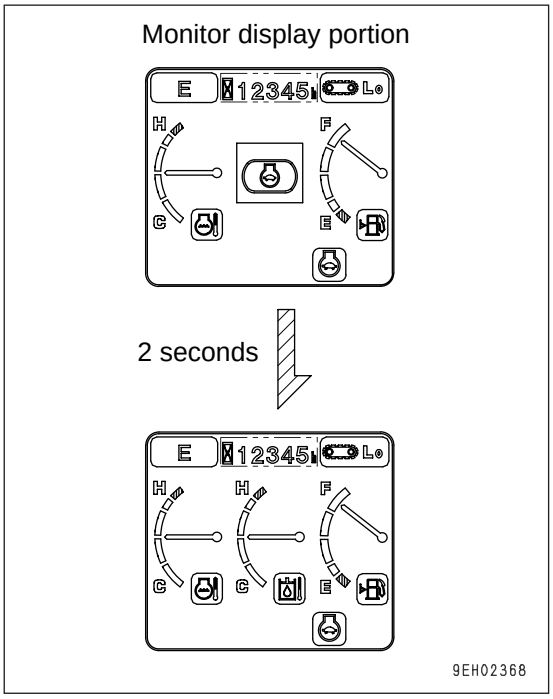

TRAVEL SPEED SELECTOR SWITCH

⚠ WARNING

- **When loading or unloading from a trailer, always travel at low speed. Never operate the travel speed selector switch during the loading or unloading operation.**
- **If the travel speed is switched between high and low when the machine is traveling, the machine may deviate to one side, even when traveling in a straight line. Stop the machine before switching the travel speed.**

This switch (3) is used to set the travel speed to 3 stages.

Lo lights up : Low-speed travel
Mi lights up : Medium-speed travel
Hi lights up : Hi-speed travel

When the engine is started, the speed is automatically set to Lo.

Each time that the switch is pressed, the display changes Lo → Mi → Hi → Lo in turn.

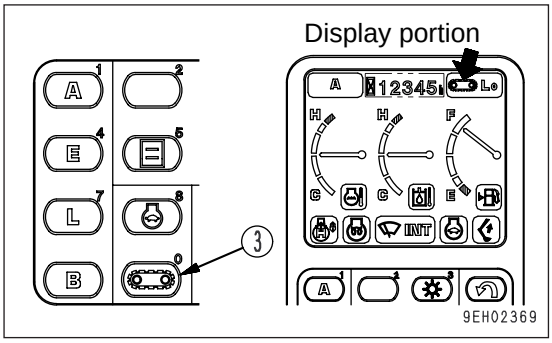

When traveling in high speed (Hi) or medium speed (Mi), if travel power is needed, such as when traveling on soft ground or on slopes, the speed automatically switches to low speed (Lo), so there is no need to operate the switch. The monitor display stays at Hi or Mi.

REMARK
Each time that the travel speed selector switch is operated, the mode is displayed in the center of the monitor display, and the screen returns to the normal screen after 2 seconds.

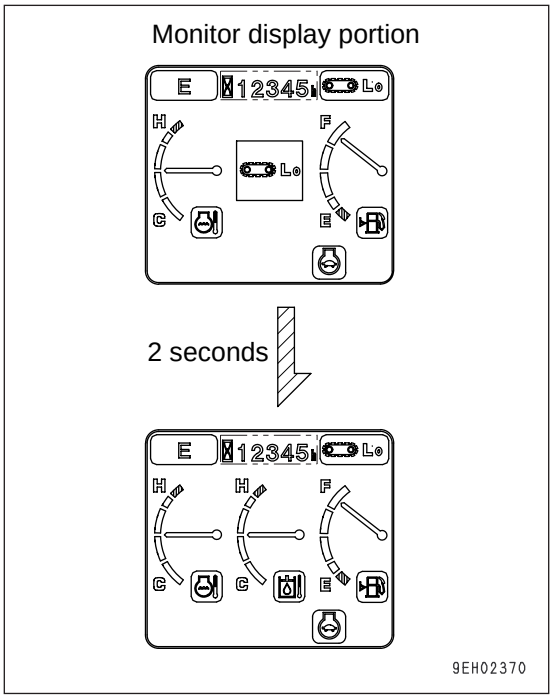

WIPER SWITCH

This switch (4) operates the wiper for the front glass.

Each time the switch is pressed, it changes ON → INT → stop (OFF).

Monitor display ON lighted up: Wiper moves continuously
Monitor display INT lighted up: Wiper moves intermittently
Monitor display OFF : Wiper stops

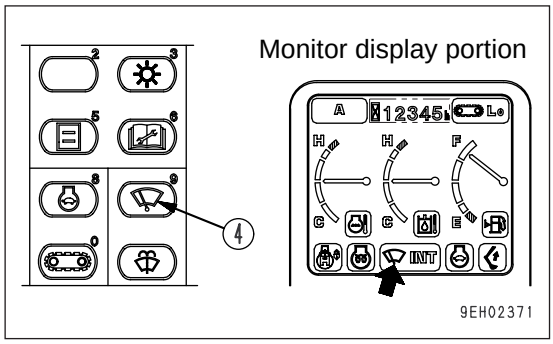

REMARK
Each time the wiper switch is operated, the mode is displayed in the center of the monitor display. The screen returns to the normal screen after 2 seconds.

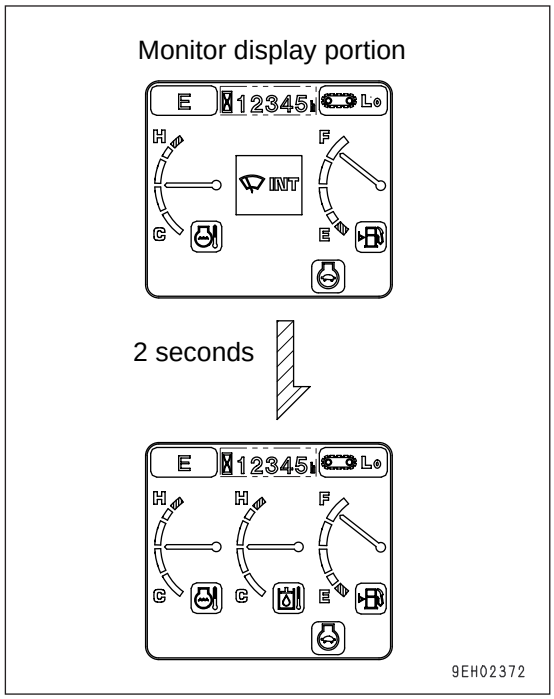

WINDOW WASHER SWITCH

When this switch (5) is kept continuously pressed, window washer fluid is sprayed out on the front glass. When the switch is released, the spray stops.

q If switch (5) is kept pressed when the wiper is stopped, the window washer fluid will spray out, and at the same time, the wiper will be actuated continuously. When switch (5) is released, the wiper will continue to operate continuously for 2 cycles, and will then stop.

● If the wiper is moving intermittently and switch (5) is kept pressed continuously, the window washer fluid will spray out, and at the same time, the wiper will be actuated continuously. When switch (5) is released, the wiper will continue to operate continuously for 2 cycles, and will then return to intermittent operation.

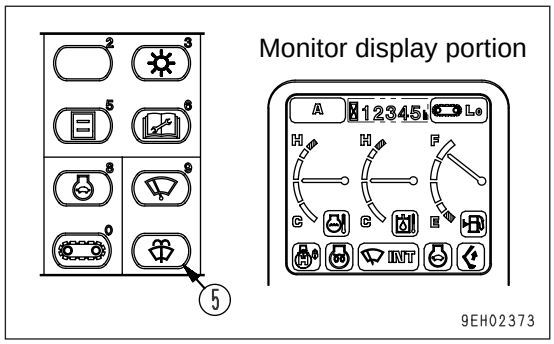

MAINTENANCE SWITCH

q This switch (6) is used to check the time remaining to maintenance.

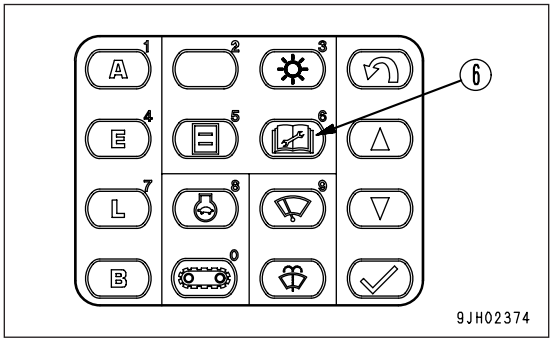

q When this switch (6) is pressed, the screen on the monitor display changes to the maintenance screen shown in the diagram on the right.

The time remaining to maintenance is indicated by the color of each monitor display. After confirming the maintenance time, carry out the maintenance.

White display : More than 30 hours remaining to maintenance
Yellow display : Less than 30 hours remaining to maintenance
Red display : Maintenance time has already passed

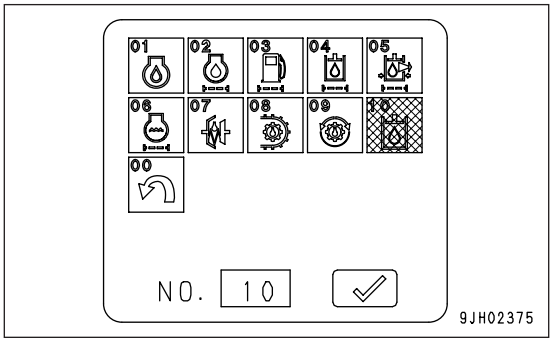

NOTICE

1. **If the monitor display changes to the maintenance warning screen when the engine is started or when the machine is being operated, stop operations immediately. When this happens, the monitor corresponding to the maintenance warning screen will light up red.**
2. **Press switch (6) to display the maintenance screen and check that there is no abnormality in any other monitor.**
3. **If another monitor is lit up red on the maintenance screen, carry out maintenance for that item also.**

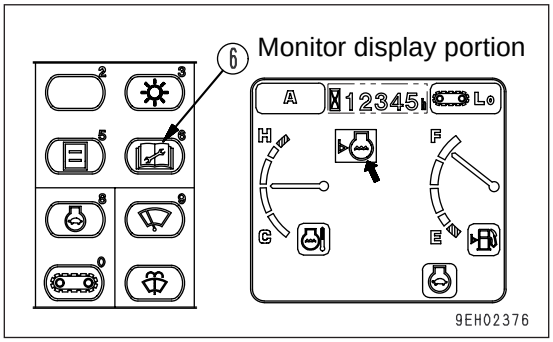

q The maintenance display items are as follows.

Monitor No.	Maintenance item	Default set screen (H)
01	Change engine oil	500
02	Replace engine oil filter	500
03	Replace fuel filter	500
04	Replace hydraulic oil filter	1000
05	Replace hydraulic tank breather	500
06	Replace corrosion resistor (option for overseas)	1000
07	Check damper case oil level, add oil	1000
08	Change final drive case oil	2000
09	Change swing machinery case oil	1000
10	Change hydraulic oil	5000

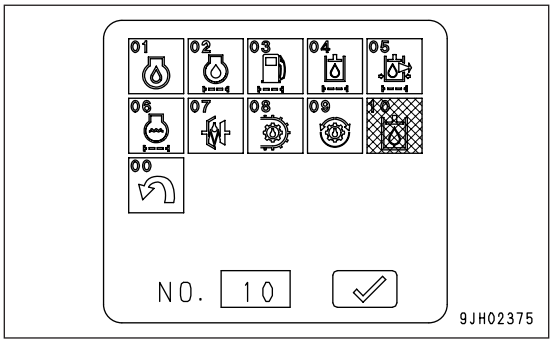

If it is desired to change the setting for the maintenance interval, please contact your Komatsu distributor.

q The method of checking the time remaining to maintenance is as follows.

1. Look at the maintenance screen, press up switch (9) or down switch (10) on the monitor switch portion, and select the item.
   (The color of the monitor for the selected item is inverted to black.)

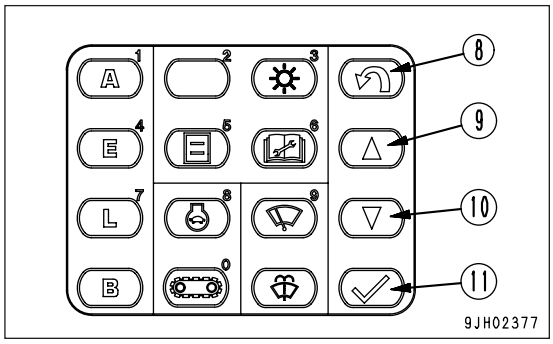

2. After selecting the monitor item, press input confirmation switch (11). The display screen will switch to the time remaining to maintenance.
   (Press back switch (8) to return to the previous screen.)

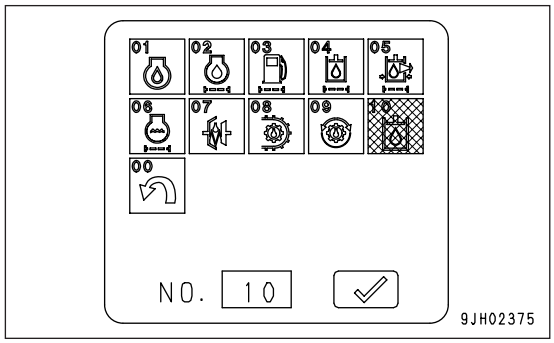

3. Check the time remaining to maintenance.
   (a) : Time remaining to maintenance
   (b) : Default setting for maintenance interval

   When only checking the time remaining to maintenance, press back switch (8) twice.
   The screen will return to the normal operation monitor screen.
   When canceling the time remaining to maintenance and returning to the default time setting, press input confirmation switch (11). The screen will switch to the default setting screen.

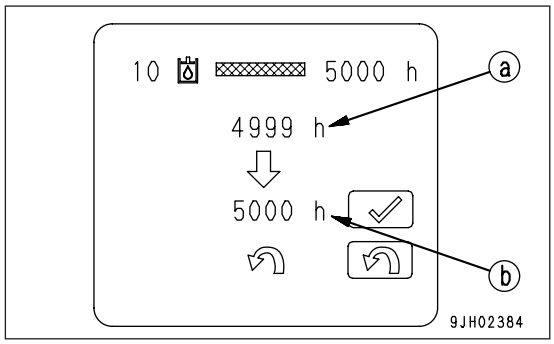

4. After checking the time on the default setting screen, press input confirmation switch (11).
   The screen will return to the maintenance screen.
   (Press back switch (8) to return to the previous screen.)

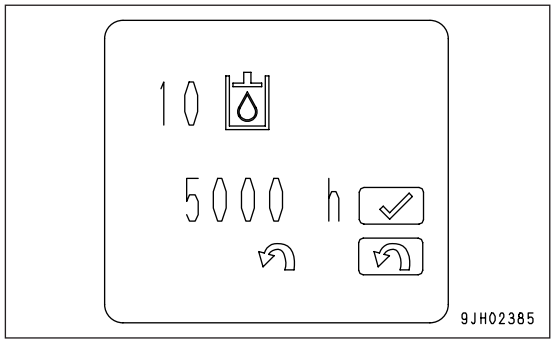

SELECT SWITCH

This switch (7) is used to select the hydraulic flow setting in each of the working modes A, E, and B.

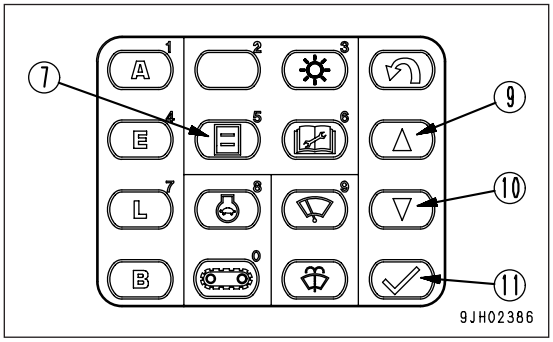

q When the working mode is A or E

1. Press select switch (7) and the normal screen on the monitor display changes to the flow setting screen shown in the diagram on the right.

2. Press up switch (9) or down switch (10) to adjust to the desired flow.
   Each segment on the scale is approx. 30 liters/min.

3. After completing the flow setting, press input confirmation switch (11).
   The monitor display will return to the normal screen.

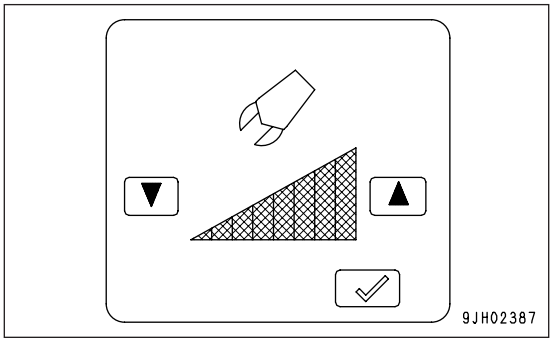

REMARK
The flow can be adjusted for the attachment installed.

q When the working mode is B mode

1. Press select switch (7) and the normal screen on the monitor display changes to the flow setting screen shown in the diagram on the right.

2. Press up switch (9) or down switch (10) to adjust to the desired flow.

3. After completing the flow setting, press input confirmation switch (11).

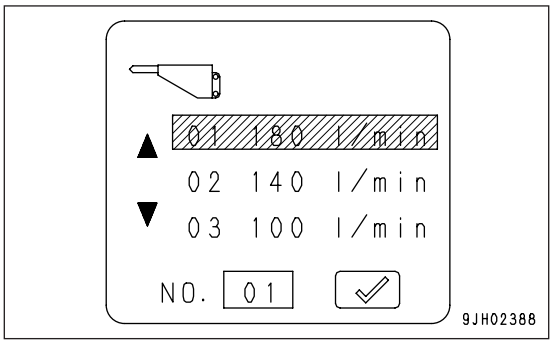

4. With the operation in Step (3), the flow setting screen changes to the fine flow adjustment screen shown in the diagram on the right.

5. Press up switch (9) or down switch (10) to adjust to the desired flow.
   Each segment on the scale is approx. 10 liters/min.

6. After completing the flow setting, press input confirmation switch (11).
   The monitor display will return to the normal screen.

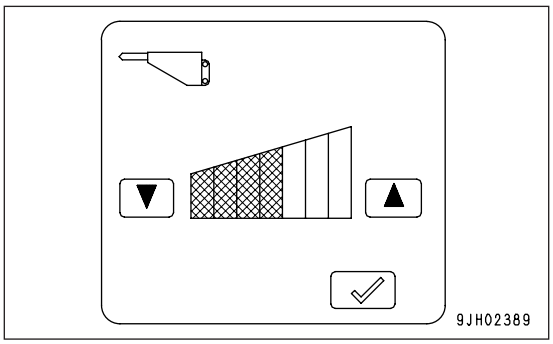

BACK SWITCH

Press this switch (8) when in the maintenance mode, brightness/contrast adjustment mode, or select mode. The screen will return to the previous screen on the monitor display.

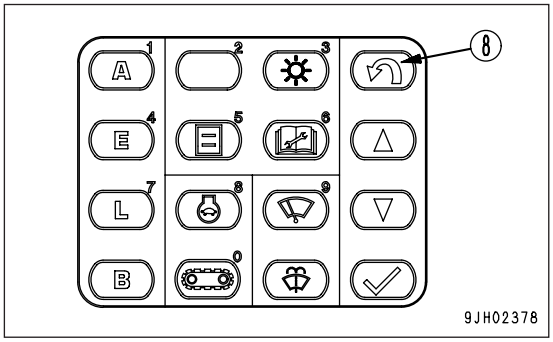

UP SWITCH, DOWN SWITCH

Press up switch (9) or down switch (10) when in the maintenance mode, brightness/contrast adjustment mode, or select mode to move the cursor on the monitor display (colors of selected monitor are inverted) up, down, left, or right.

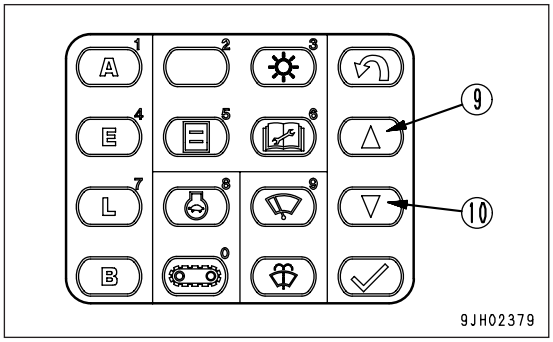

INPUT CONFIRMATION SWITCH

Press this switch (11) to confirm the selected mode when in the maintenance mode, brightness/contrast adjustment mode, or select mode.

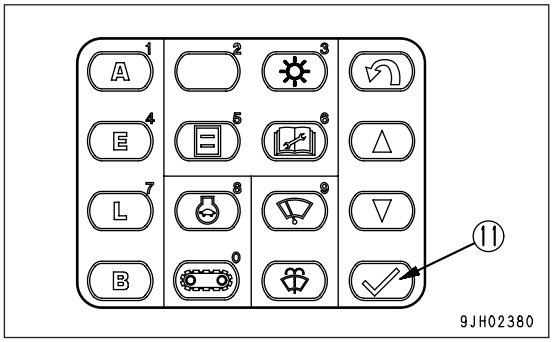

LIQUID CRYSTAL MONITOR ADJUSTMENT SWITCH

Press this switch (12) to adjust the brightness and contrast of the monitor display screen.

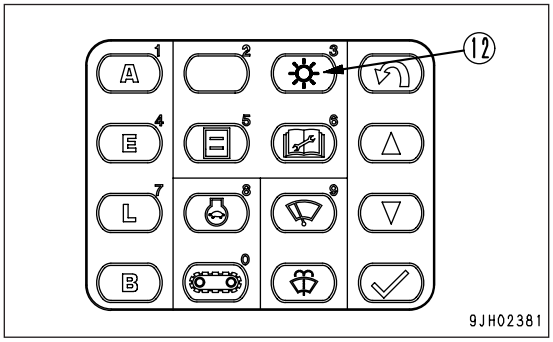

Adjusting brightness and contrast

1. When monitor adjustment switch (12) is pressed, the monitor display screen changes to the brightness/contrast screen shown in the diagram on the right.

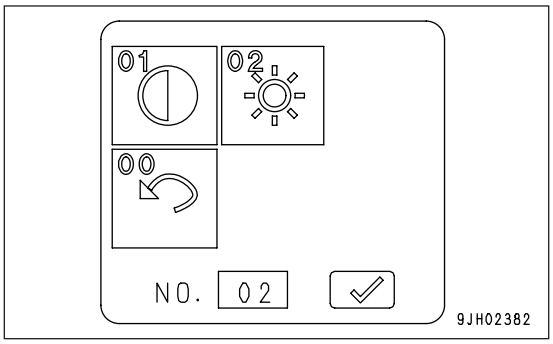

q Adjusting brightness

2. Use the brightness/contrast screen and press up switch (9) or down switch (10) to select the brightness monitor. (The selected monitor is inverted to black.)

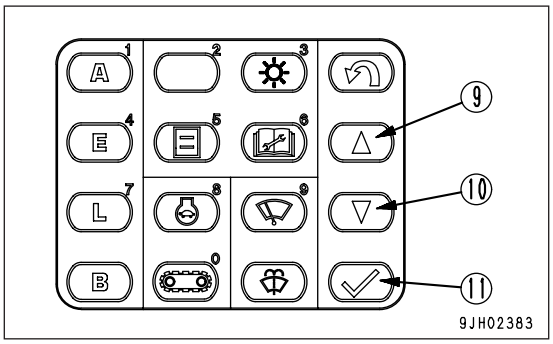

3. When the screen changes to the brightness adjustment screen, press up switch (9) or down switch (10) to adjust the brightness.

4. After completing adjustment of the brightness, press input confirmation switch (11).

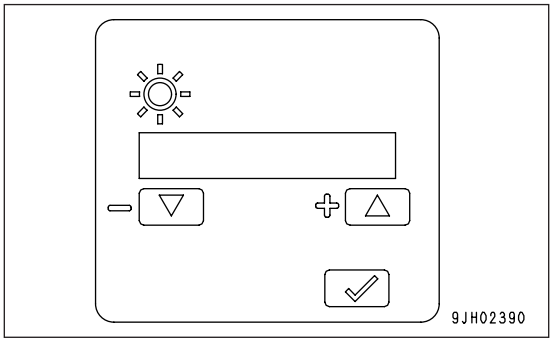

q Adjusting contrast

2. Use the brightness/contrast screen and press up switch (9) or down switch (10) to select the contrast monitor. (The selected monitor is inverted to black.)

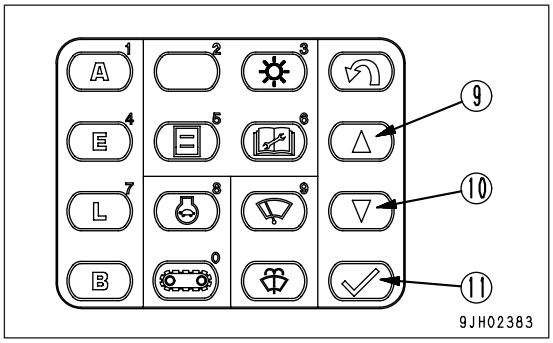

3. When the screen changes to the contrast adjustment screen, press up switch (9) or down switch (10) to adjust the contrast.

4. After completing adjustment of the contrast, press input confirmation switch (11).

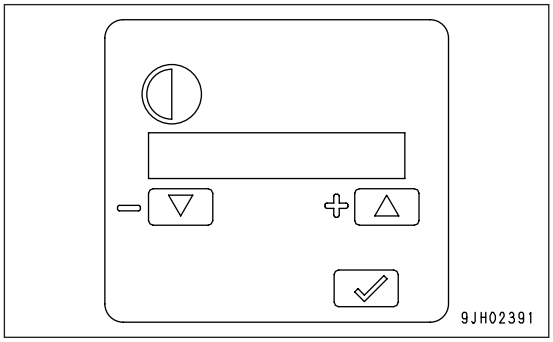

SWITCHES

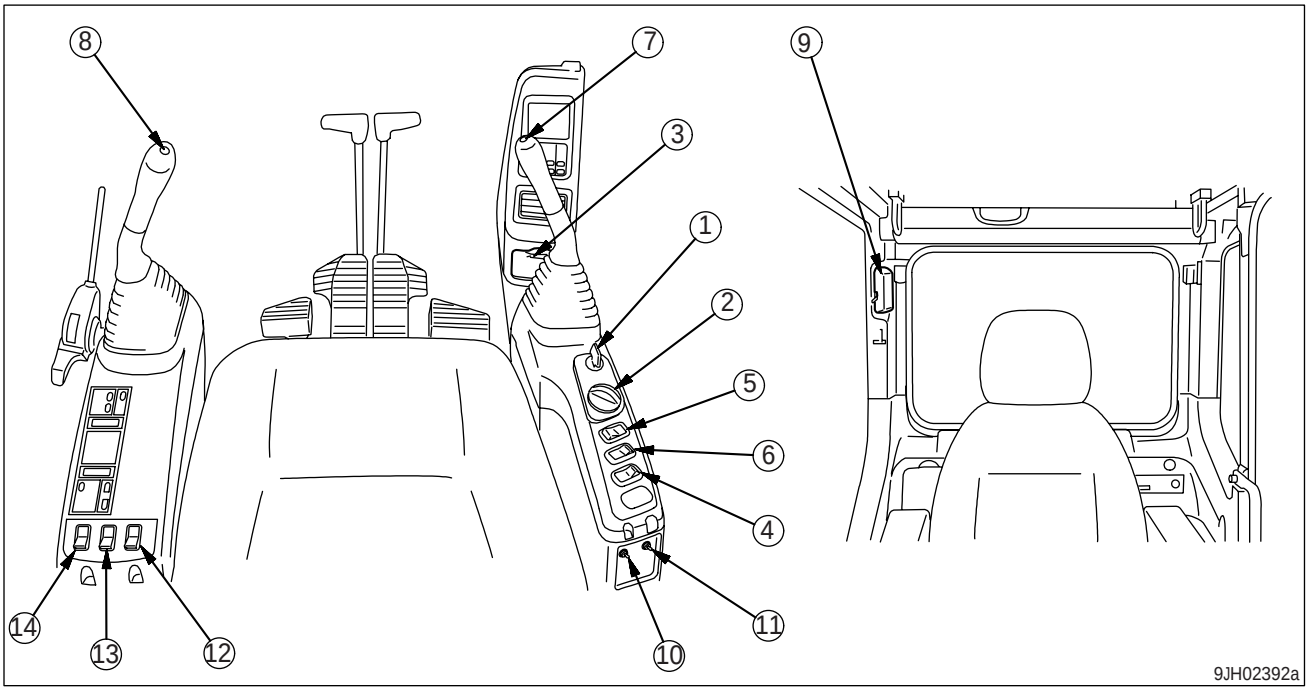

(1) Starting switch	(8) Knob switch (2 spare switches)
(2) Fuel control dial	(9) Room lamp switch
(3) Cigarette lighter	(10) Emergency pump drive switch
(4) Swing lock switch	(11) Swing brake cancel switch
(5) Lamp switch	(12) Lower wiper switch.
(6) Alarm buzzer stop switch	(13) Revolving warning lamp switch
(7) Horn switch (2 spare switches)	(14) Heated seat switch

STARTING SWITCH

This switch (1) is used to start or stop the engine.

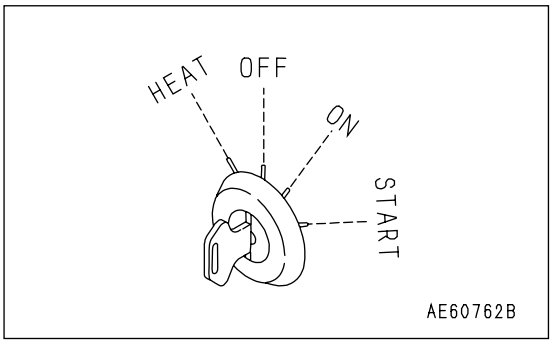

OFF position
The key can be inserted or withdrawn. The switches for the electric system except the room lamp, are all turned off and the engine is stopped.

ON position
Electric current flows in the charging and lamp circuits. Keep the starting switch key at the ON position while the engine is running.

START position
This is the engine-start position. Keep the key at this position during cranking. Immediately after starting the engine, release the key. It will automatically return to the ON position.

HEAT (preheat) position
When starting the engine in winter, set the key to this position. When the key is set to the HEAT position, the pre-heating monitor lights up. Keep the key at this position until the monitor lamp flashes. Immediately after the pre-heating monitor flashes, release the key. The key automatically returns to the OFF position. Then, start the engine by turning the key to the START position.

FUEL CONTROL DIAL

This dial (2) is used to control the engine speed and output.

(a) Low idling position: The dial is turned to the left (counterclockwise)
(b) High idling position: The dial is turned to the right (clockwise)

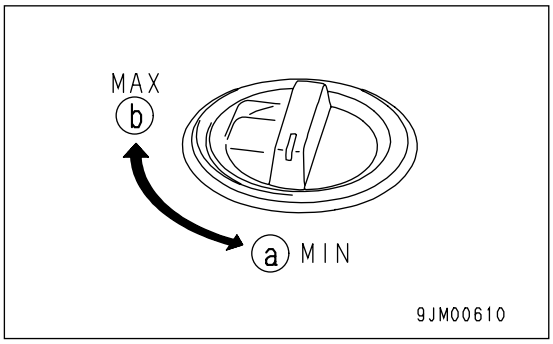

CIGARETTE LIGHTER

This switch (3) is used when lighting cigarettes.

When the cigarette lighter is pushed in, it will return to its original position after several seconds. Pull it out to use it.

If the cigarette lighter is removed, it can be used as the power source for the yellow hazard lamp. The capacity of the cigarette lighter is 85 W (24 V x 3.5 A).

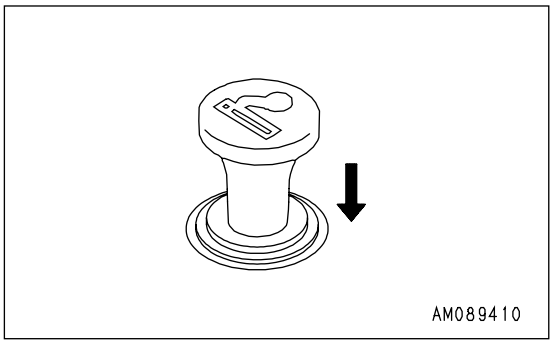

SWING LOCK SWITCH

⚠ WARNING

- **When traveling or when not using the swing operation, apply the swing lock.**
- **On slopes, even when the swing lock switch is at the ON position, the weight of the work equipment may cause the upper structure to swing if the swing control lever is operated in the downhill direction.**

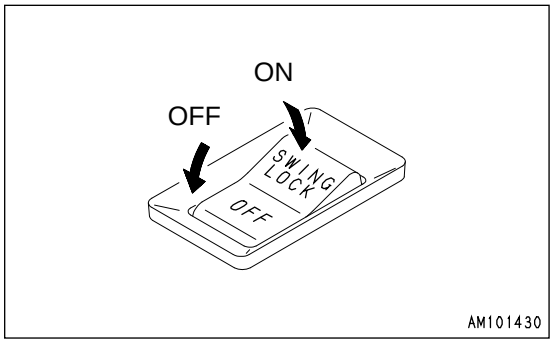

This switch (4) is used to lock the upper structure so that it cannot swing.

ON position (actuated): The swing lock is always applied, and the upper structure will not swing even if the swing is operated. In this condition, the swing lock lamp lights up.

OFF position (canceled): The swing lock is applied only when all the control levers of the work equipment are at neutral; when any one of the control levers is operated, it is cancelled.
The swing lock is actuated approx. 5 seconds after all the control levers are placed in the neutral position.

LAMP SWITCH

This switch (5) is used to light up the front lamps, working lamp, additional lamp at the top front of the cab, rear lamp, and monitor lighting.

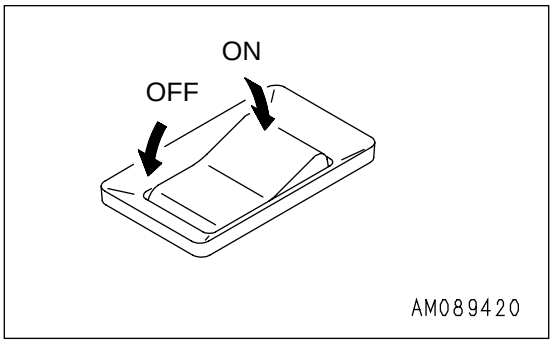

ALARM BUZZER STOP SWITCH

This switch (6) is used (when the engine is running) to stop the alarm buzzer when it has sounded to warn of an abnormality in a warning item.

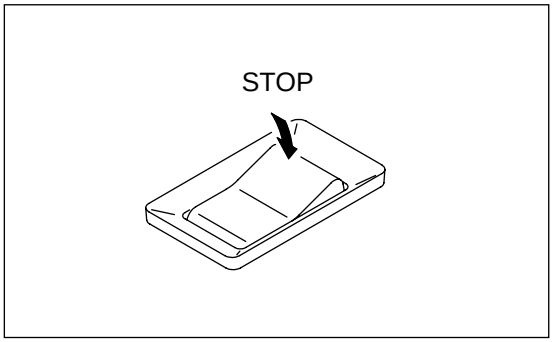

HORN SWITCH

When the button (7) the top left hand button on the right work equipment control lever is pressed, the horn will sound. Two spare buttons are for the installation of additional features, contact local distributor for enquiries.

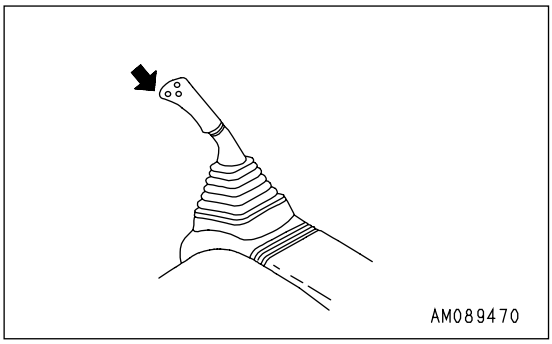

KNOB SWITCH

Knob switch (8) the top right hand button on the left work equipment control lever is used to actuate the power max.

Press once (single click) and keep the switch pressed. The one-touch power max. function is actuated for a maximum of 8.5 seconds in A and E mode. Two spare buttons are for the installation of additional features, contact local distributor for enquiries.

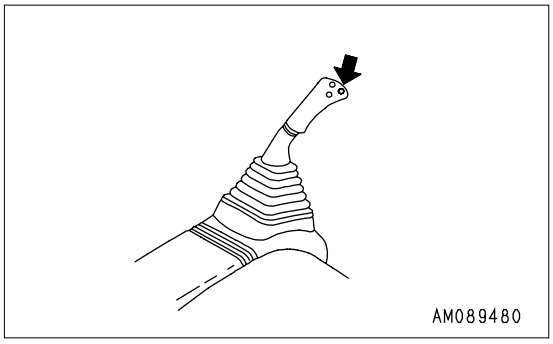

ROOM LAMP SWITCH

NOTICE
Be sure to switch the lamp to the OFF position after use.
If the switch is left at the ON position, the battery will run down.

This switch (9) is used to light up the room lamp.

ON position: Lights up
OFF position: Goes out

It will also light up even when the engine is not running.

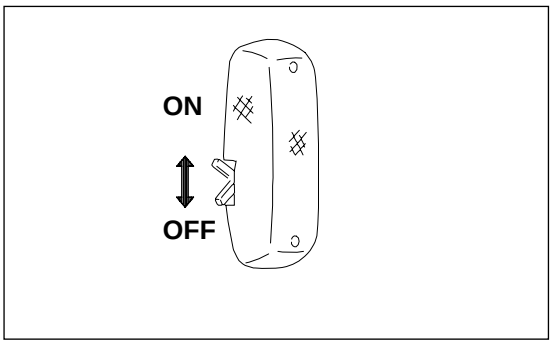

EMERGENCY PUMP DRIVE SWITCH

NOTICE
This switch is installed to make it possible to carry out operation temporarily if any abnormality should occur in the pump control system. It is not intended for permanent use. Repair the cause of the abnormality immediately.

This switch (10) is used to make it possible to carry out operations temporarily if any abnormality should occur in the pump control system (when the display shows E02).

When normal: Move switch down
When abnormal: Move switch up

If the display shows E02, move the switch up to make it possible to carry out work.

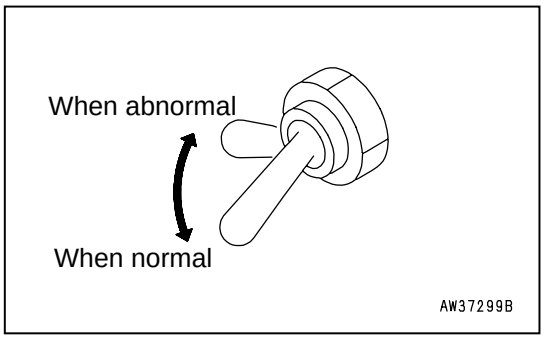

SWING BRAKE CANCEL SWITCH

NOTICE
This switch is installed to make it possible to carry out operation temporarily if any abnormality should occur in the swing brake system. It is not intended for permanent use. Repair the cause of the abnormality immediately.

This switch (11) is used to make it possible to carry out operations temporarily if any abnormality should occur in the swing brake system (when the display shows E03).

When normal: Move switch down
When abnormal: Move switch up

If the display shows E03, move the switch up to make it possible to carry out work.

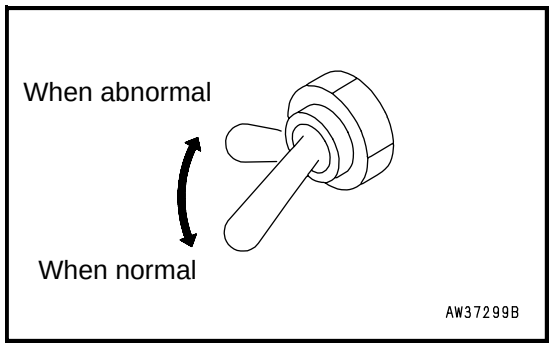

LOWER WIPER SWITCH

(if equipped)

This switch (12) activates the front lower wiper.

OFF : wiper stops
ON : wiper moves continuously
NB. Do not operate with front lower screen removed.

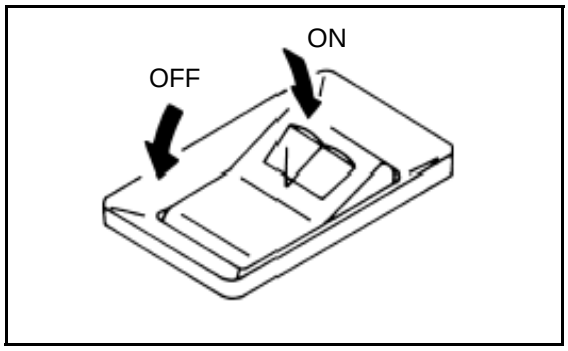

REVOLVING WARNING LAMP SWITCH

(if equipped)

This switch (13) is used to light up the yellow rotating lamp on top of the cab.

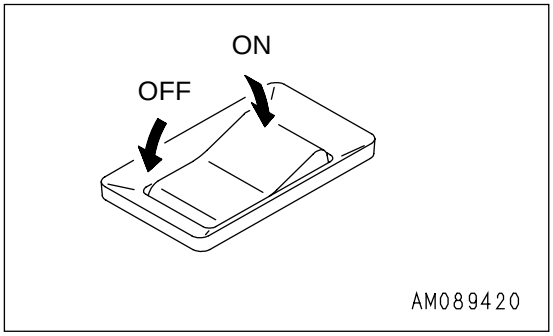

HEATED OPERATOR SEAT SWITCH

(if equipped)

This switch (14) is used to switch on the heated seat.

OFF : seat not heated

ON : seat heated

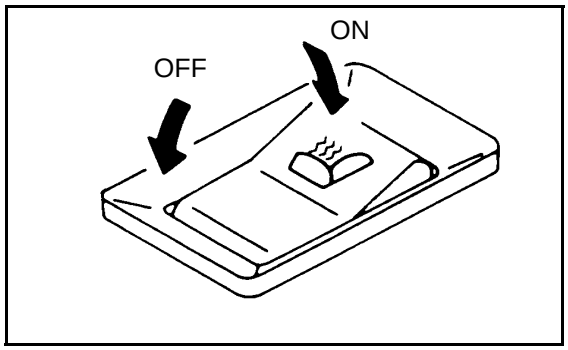

CONTROL LEVERS, PEDALS

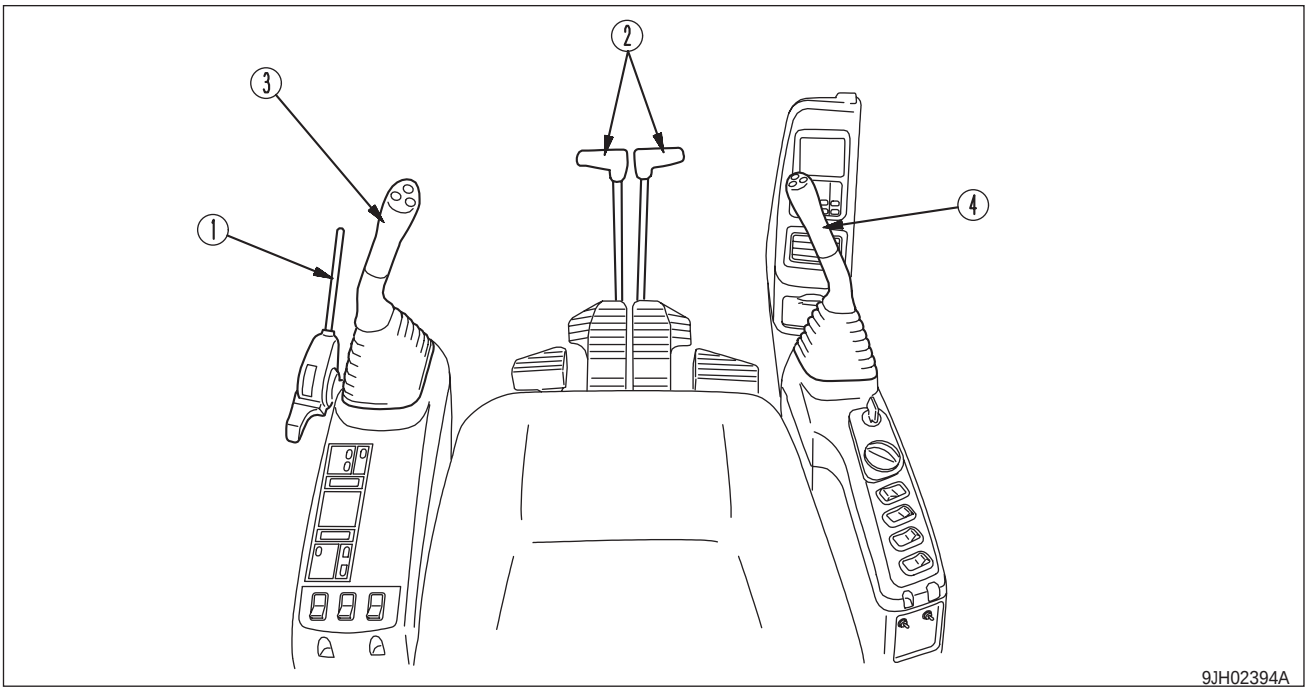

(1) Safety lock lever	(3) Left work equipment control lever
(2) Travel levers (Machines with travel pedal)	(4) Right work equipment control lever

SAFETY LOCK LEVER

⚠ WARNING

- **When leaving the operator's compartment, set the safety lock lever securely to the LOCK position. If the safety lock lever is not at the LOCK position and the control levers are touched by mistake, it may lead to serious personal injury.**
- **If the safety lock lever is not placed securely at the LOCK position, the control lever may move and cause a serious accident or injury. Check that the condition of the lever is as shown in the diagram.**
- **When pulling the safety lock lever up, be careful not to touch the work equipment control lever.**
- **When pushing the safety lock lever down, be careful not to touch the work equipment control lever.**

Lever (1) is a device, which locks the work, swing, and travel equipment, and attachment (if equipped) control levers.

Pull the lever up to apply the lock.

This lock lever is a hydraulic lock, so even if it is in the lock position, the work equipment control lever and travel lever will move, but the work equipment, travel motor, and swing motor will not work.

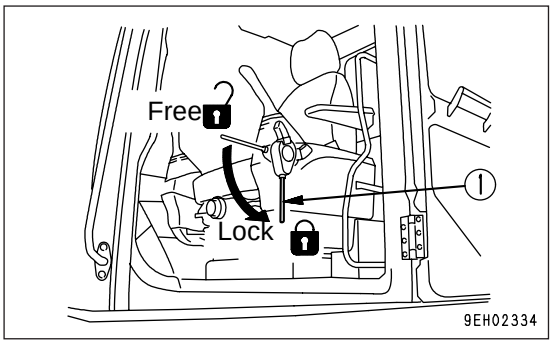

TRAVEL LEVERS

⚠ WARNING

- **Do not put your foot on the pedal unless the machine is traveling. If you leave your foot on the pedal and press it by mistake, the machine will move suddenly, and this may lead to a serious accident.**
- **With the track frame facing to the rear, the machine will move in the reverse direction by forward traveling and in the forward direction by reverse traveling.**
  When the travel lever is used, check to see if the track frame is facing forward or backward. (If the sprocket is located to the rear, the track frame is facing forward.)
- **Be extremely careful when using the pedal for operations and travel.**

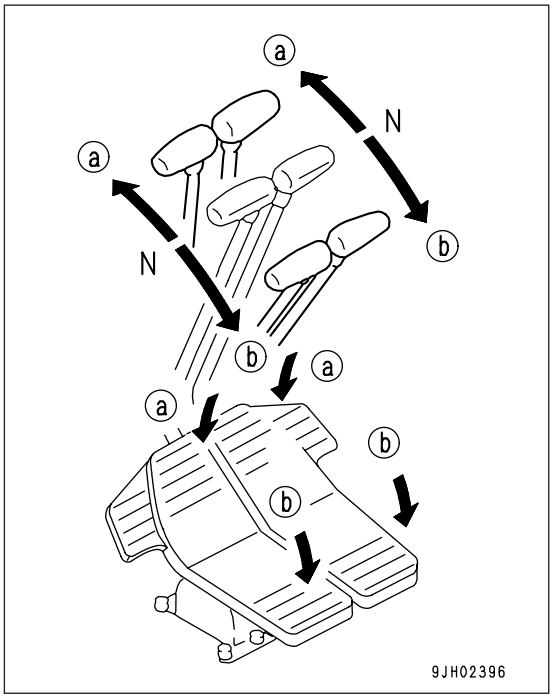

This lever (2) is used to switch the direction of travel of the machine. ( ) shows the operation of the pedal.

(a) FORWARD:
The lever is pushed forward
(The pedal is angled forward)

(b) REVERSE:
The lever is pulled back
(The pedal is angled back)

N (Neutral): The machine stops

( ): This indicates operation of the pedal.

REMARK

- Machines equipped with travel alarm (If equipped)
  If the lever is shifted to the advance or reverse position from the neutral position, the alarm sounds to warn that the machine is starting to advance.
- The travel lever can use the auto-deceleration mechanism to change the engine speed as follows.
- When the travel lever and work equipment control levers are at the neutral position, even if the fuel control dial is above mid-range speed, the engine speed will go down to a mid-range speed. If one of these levers is operated, the engine speed will rise to the speed set by the fuel control dial.
- If all the control levers are at the neutral position, the engine speed goes down approx. 100 rpm, then after approx. 4 seconds, the engine speed goes down to the deceleration speed (approx. 1400 rpm).

WORK EQUIPMENT CONTROL LEVER

(with auto-deceleration device)

This Left work equipment control lever (3) is used to operate the arm and upper structure.

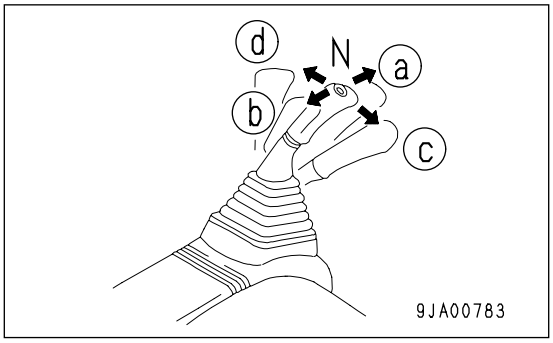

Arm operation / Swing operation

(a) Arm OUT
(b) Arm IN
(c) Swing to right
(d) Swing to left

N (Neutral): The upper structure and arm are held in position and do not move.

This Right work equipment control lever (4) is used to operate the boom and bucket.

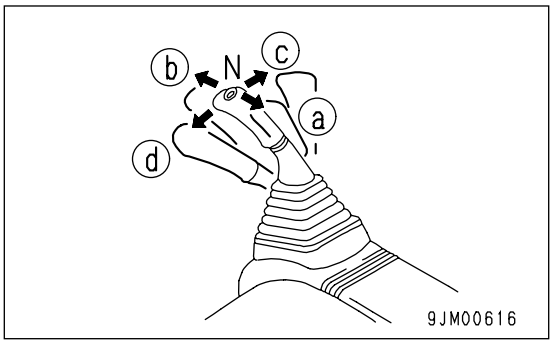

Boom operation / Bucket operation

(a) RAISE
(b) LOWER
(c) DUMP
(d) CURL

N (Neutral): The boom and bucket are held in position and do not move.

REMARK

- The engine speed for all control levers (travel, work equipment, attachment) is changed as follows by the auto-deceleration mechanism.
- When the travel lever and work equipment control levers are at the neutral position, even if the fuel control dial is above midrange speed, the engine speed will go down to a midrange speed. If one of these levers is operated, the engine speed will rise to the speed set by the fuel control dial.
- If all the control levers are at the neutral position, the engine speed goes down approx. 100 rpm, then after approx. 4 seconds, the engine speed goes down to the deceleration speed (approx. 1400 rpm).

CEILING WINDOW

⚠ WARNING

- **When leaving the operator's compartment, set the safety lock lever securely to the LOCK position.**
- **If the control levers are not locked, and they are touched by mistake, a serious accident may occur.**

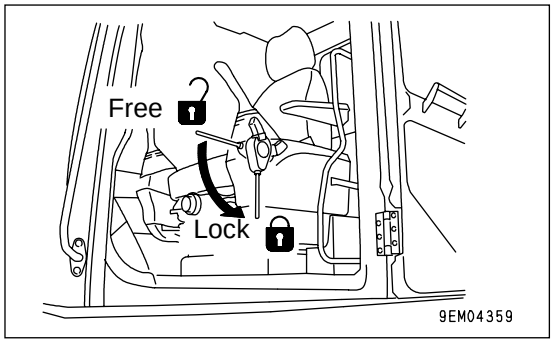

When opening

1. Lock the safety lock lever securely.
2. To open the ceiling window pull lock knob (A) located on front side. Grasp grip (B) and push up on the ceiling window to open it.

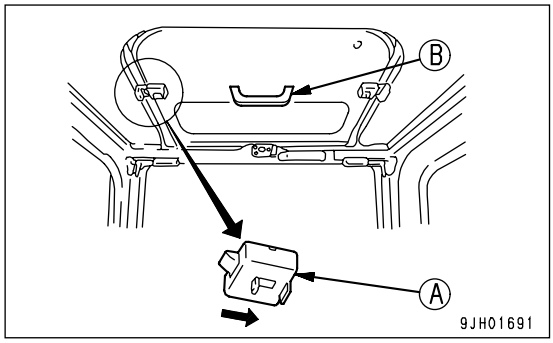

When closing

Close the ceiling window by grasping grip (B) and lock it with lock knob (A). If the window cannot be locked, open and close the ceiling window again.

FRONT WINDOW

⚠ WARNING

- **When opening or closing the ceiling window, front window, bottom window, or door, always set the safety lock lever to the LOCK position.**
  If the control levers are not locked and they are touched by accident, a serious accident may occur.
- **When opening or closing the window at the front of the cab, stop the machine on horizontal ground, lower the work equipment completely to the ground, stop the engine, then carry out the operation.**
- **When opening the front window, hold the grip securely with both hands, pull up, and do not let go until the automatic lock catch is locked.**
- **When closing the front window, the window will move quicker under its own weight. Hold the grips securely with both hands when closing it.**

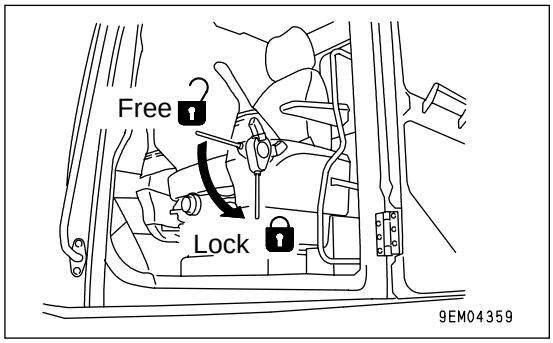

It is possible to store (pull up) the front window (top) in the roof of the operator's compartment.

When opening

1. Place the work equipment on flat ground and stop the engine.
2. Securely lock the safety lock lever.
3. Check that the wiper blade is stored in the right stay.

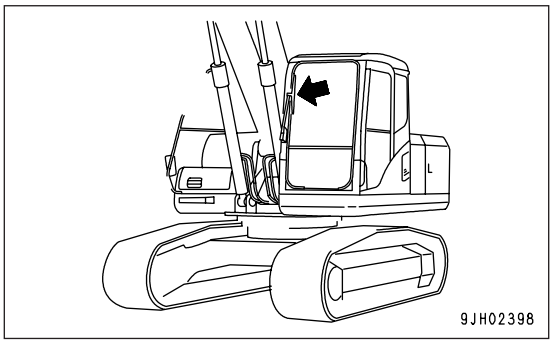

4. Grip knobs (A) at the top, bottom, left, and right of the front window, and pull lock lever (B) to release the lock at the top of the front window. The top of the front window will come out.

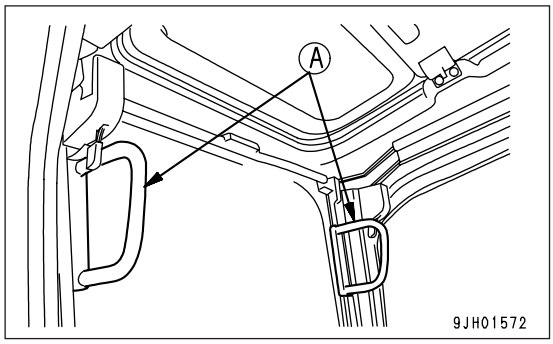

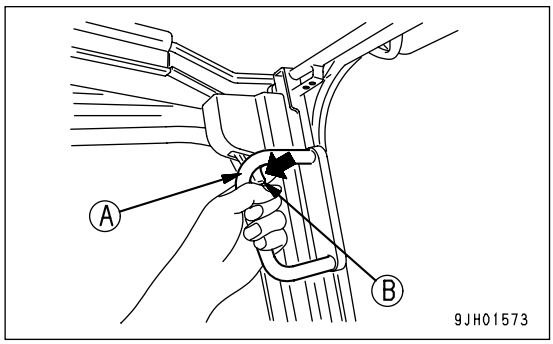

5. Hold lower knob (C) with your left hand from inside the operator's cab, and with your right hand, grip top knob (D), pull it up, and firmly push it against lock catch (E) at the rear of the cab to securely lock the window.

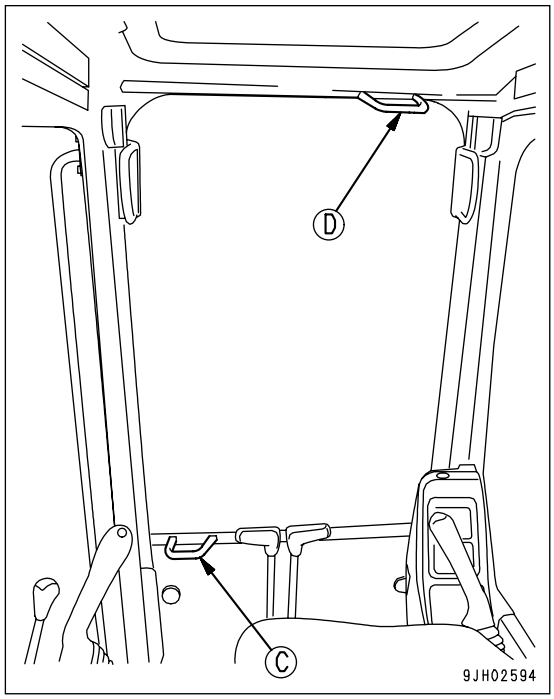

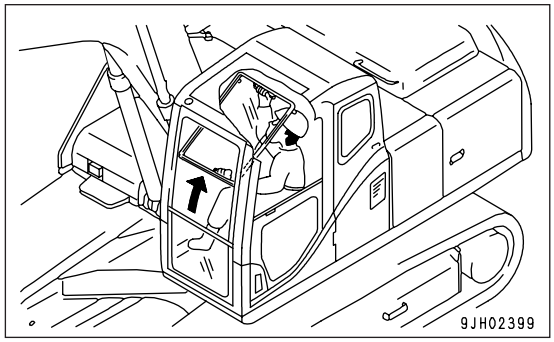

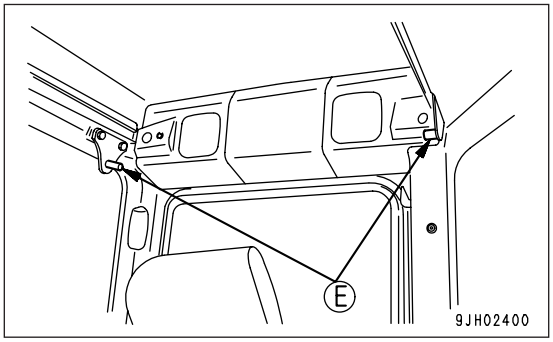

6. Check that lock lever (B) is secured at the LOCK position.

   q The lock is engaged if the arrow on lock case (F) lines up with the arrow on lock lever (B). Check it visually.

   q If the arrow on lock case (F) does not line up with the arrow on lock lever (B), the lock is not properly engaged. Repeat the operation in Step 5 to engage the lock.

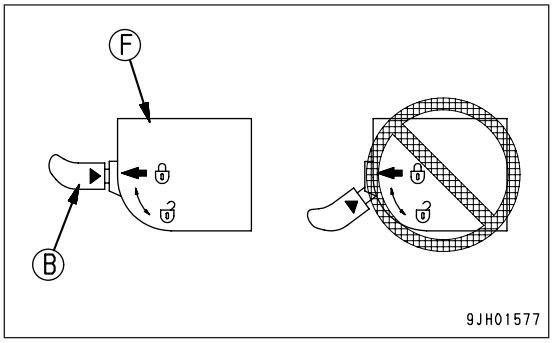

When closing

⚠ WARNING

When closing the window, lower it slowly and be careful not to get your hand caught.

1. Place the work equipment on flat ground and stop the engine.
2. Securely lock the safety lock lever.

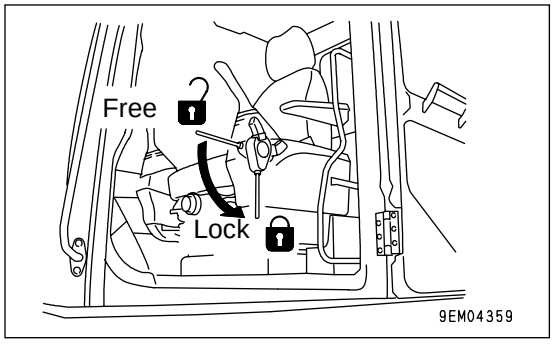

3. Grip left and right knobs (A), and pull down lock lever (B) to release the lock.

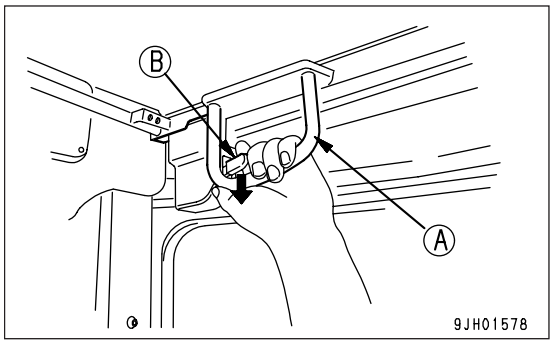

4. Grip knob (C) at the bottom of the front window with your left hand and knob (D) at the top with your right hand, push the window to the front, then lower it slowly.

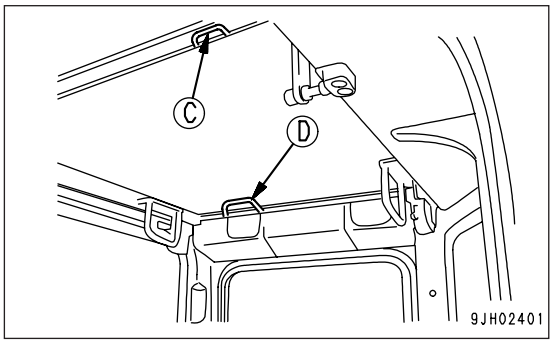

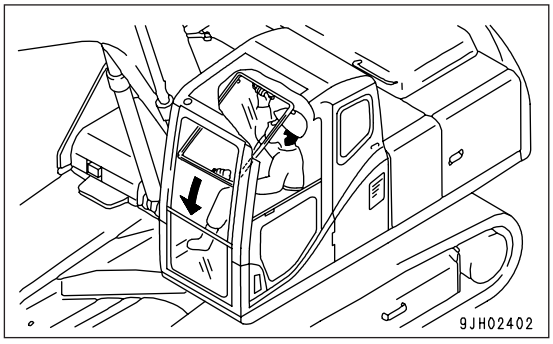

5. When the bottom of the window reaches the top of the bottom window, push the top of the window to the front to push it against left and right lock catches (G) and engage the locks.

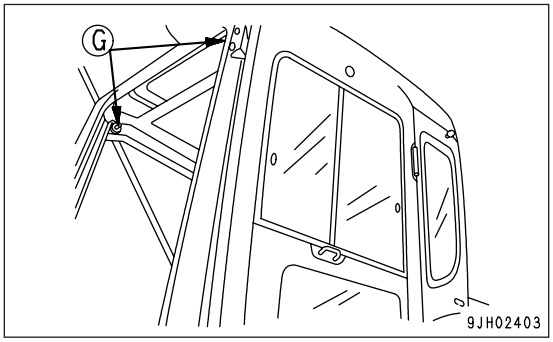

6. Check that lock lever (B) is secured at the LOCK position.

   q The lock is engaged if the arrow on lock case (F) lines up with the arrow on lock lever (B). Check it visually.

   q If the arrow on lock case (F) does not line up with the arrow on lock lever (B), the lock is not engaged. Repeat the operation in Step 5 to engage the lock.

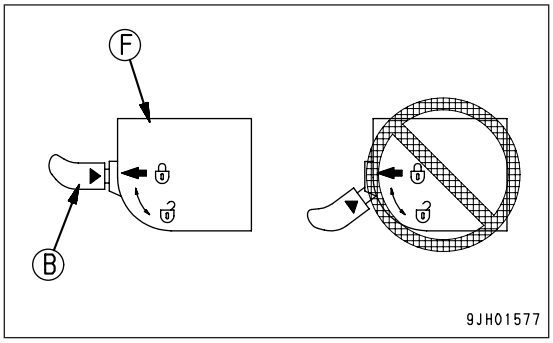

Removing front bottom window

1. Open the front window, then hold grip (A), pull up, and remove the bottom window.

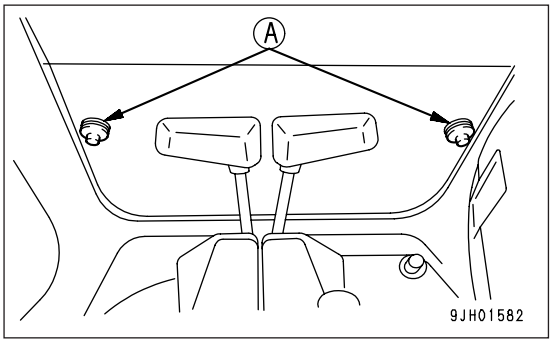

2. After removing the bottom window, store it at the rear of the operator's cab and lock it securely with left and right locks (B).
   Q When removing, always hold the glass with one hand and release the lock with the other hand.

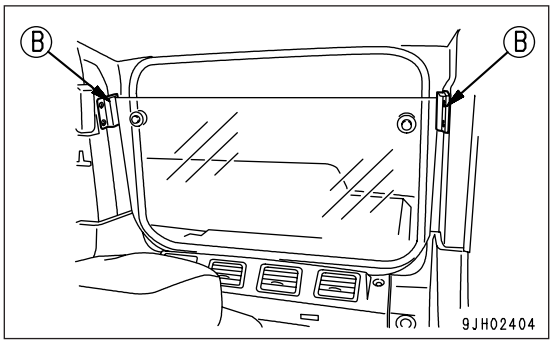

EMERGENCY EXIT FROM OPERATOR'S CAB

q If for some reason, the cab door does not open, open the rear window and use it as an emergency escape exit.

q Remove the rear window as follows.

1. Pull ring (1) and completely remove seal (2) from the rubber core.
2. When the corner of the front window glass is pushed strongly, it can be removed to the outside.
   Q Do not remove the rear window except when using it as an emergency exit.

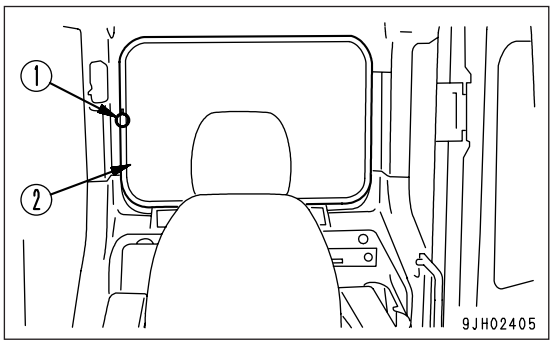

DOOR LOCK

Use the door lock to fix the door in position after opening it.

1. Push the door against catch (1) to secure it in the open position.
2. To release the lock, press knob (2) down at the left side of the operator's seat to release the catch.
3. When securing the door, secure it firmly to the catch.

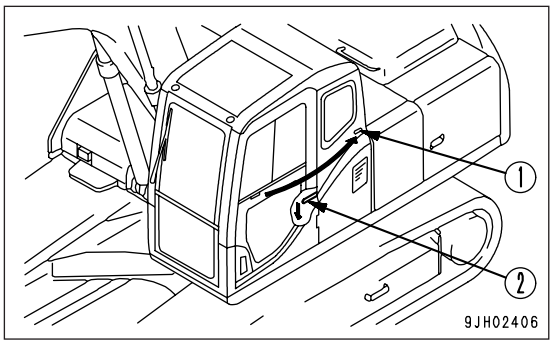

CAP, COVER WITH LOCK

Locks are installed on the fuel tank filler, hydraulic tank filler, operator's cab, engine hood, battery box cover, right side door of the machine, and left side door of the machine. Use the starting key to open and close the caps, doors and covers.

Insert the key as far as it will go, then turn it. If the key is turned before it is inserted fully, it may break.

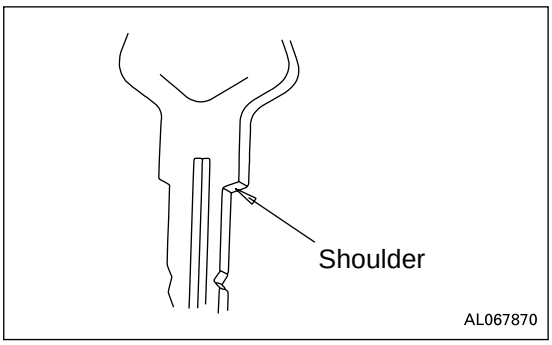

METHOD OF OPENING AND CLOSING CAP WITH LOCK

When opening

1. Insert the key into the key slot.
2. Turn the starting switch key counterclockwise, align the key slot and counter mark on the cap, then open the cap.

REMARK

- Type A is used for the fuel tank cap. Type B is used for the hydraulic tank cap.
- With type A, the cap is locked if it rotates freely. When it rotates, the cap does not come off from the tank.
  Turn the starting switch key counterclockwise, align the groove in the rotor with the counter mark on the cap, then turn the cap slowly, and when a click is heard, the lock is released and the cap can be opened.

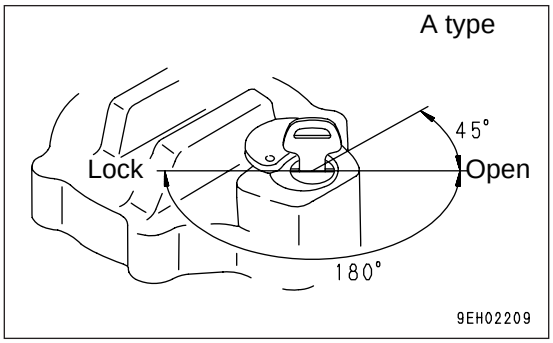

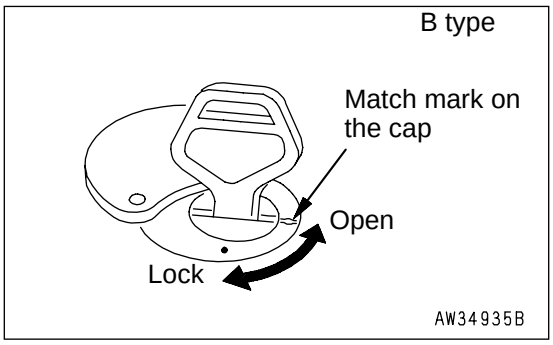

When locking

1. Screw in the cap, then insert the key in the key slot.
2. Turn the starting switch key clockwise, then remove the key.

METHOD OF OPENING AND CLOSING COVER WITH LOCK

To open the cover (locked cover)

1. Insert the key into the key slot.
2. Turn the key counterclockwise and open the cover by pulling the cover grip.

To lock the cover

1. Close the cover and insert the key into the key slot.
2. Turn the key clockwise and take the key out.

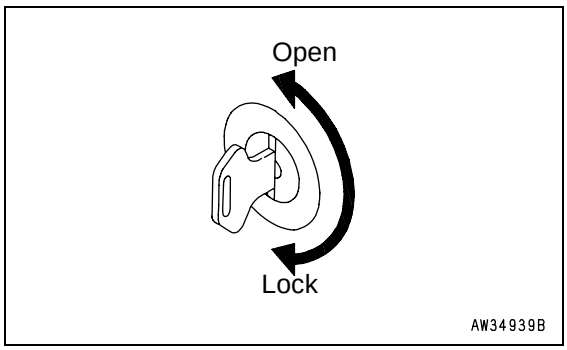

HOT AND COOL BOX

The box is at the rear right of the operator's seat. It is interconnected with the air conditioner: it warms when the heater is being used and cools when the air conditioner is being used.

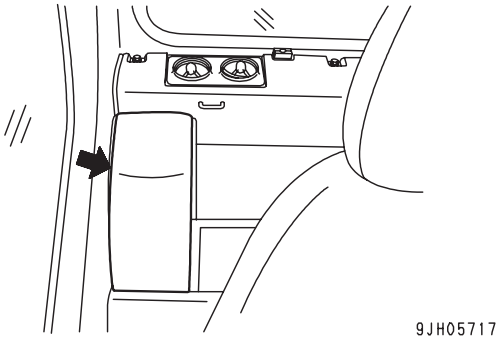

CAB RADIO

Refer to the separate operations manual for radio cassette.

NOTE: Ensure radio switched off when leaving the machine for long periods to prevent draining of battery charge.

MAGAZINE BOX

(with cup holder)

This is on the left side of the operator's seat.

Keep the Operation and Maintenance Manual in this box so that it can be taken out and read whenever necessary.

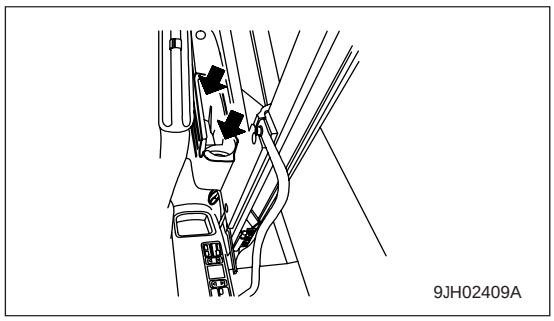

ASHTRAY

This is under the machine monitor at the front right of the operator's compartment.

Always make sure that you extinguish your cigarette, then put it in the ashtray and close the lid.

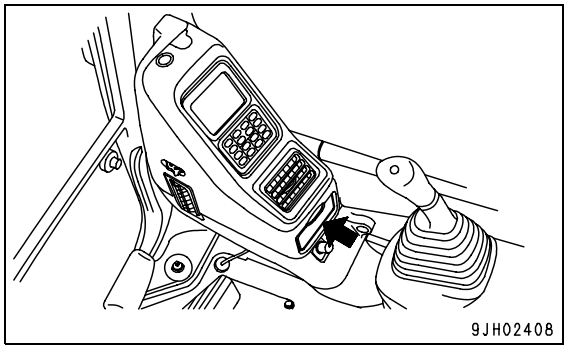

HANDLING AIR CONDITIONER

GENERAL LOCATIONS OF CONTROL PANEL

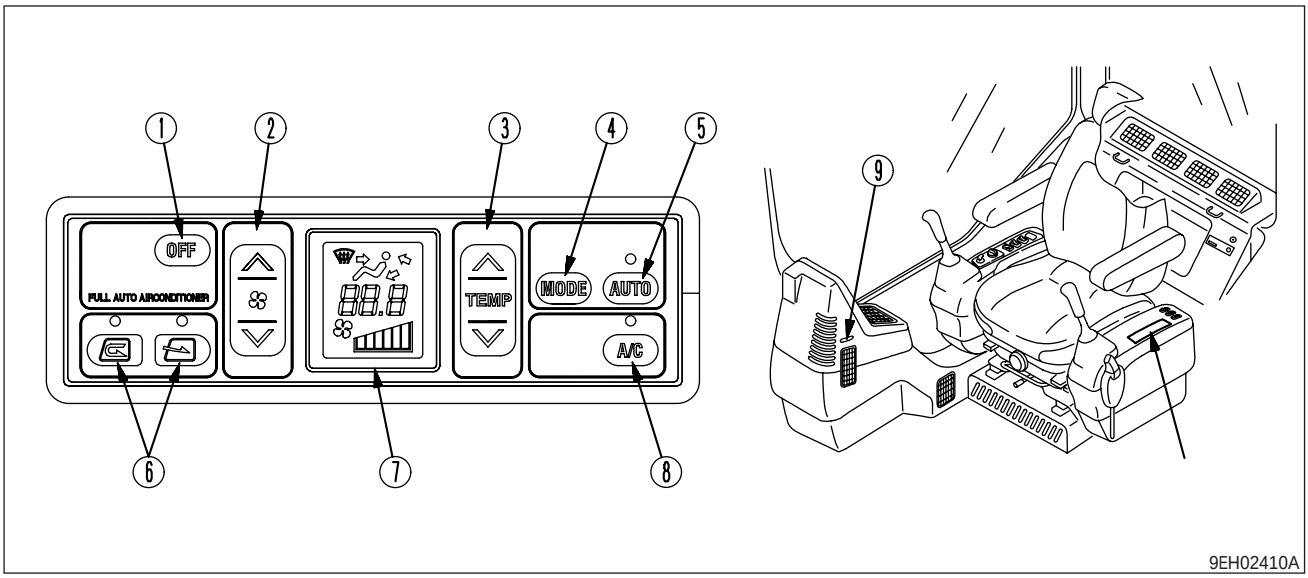

(1) OFF switch	(6) FRESH/RECIRC selector switch
(2) Fan switch	(7) Display monitor
(3) Temperature control switch	(8) Air conditioner switch
(4) Vent selector switch	(9) Defroster selector lever
(5) Auto switch	

OFF SWITCH

This switch (1) is used to stop the fan and air conditioner.

q When OFF switch (1) is pressed, the set temperature and air flow display on display monitor (7) and the lamps above auto switch (5) and air conditioner switch (8) go out, and operation stops.

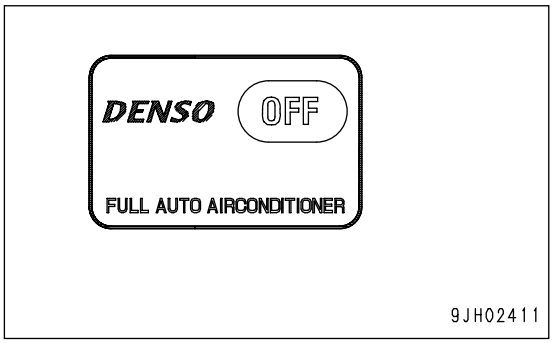

REMARK
When switch (1) is turned to the off position, light above the FRESH / RECIRC selector seitch (6) does not go out, this is normal.

FAN SWITCH

This switch (2) is used to adjust the air flow.

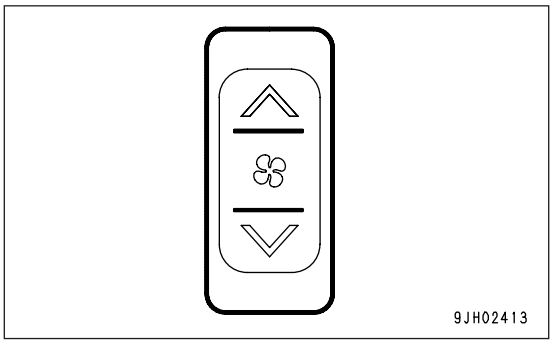

The air flow can be adjusted to six levels.

q Press the ∧ switch to increase the air flow; press the ∨ switch to reduce the air flow.

q During auto operation, the air flow is automatically adjusted.

Monitor display and air flow	
Liquid crystal display	Air flow
	Air flow "low"
	Air flow "medium 1"
	Air flow "medium 2"
	Air flow "medium 3"
	Air flow "medium 4"
	Air flow "high"

TEMPERATURE SET SWITCH

This switch (3) is used to control the temperature inside the cab. The temperature can be set between 18°C and 32°C.

q Press the ∧ switch to raise the set temperature; press the ∨ switch to lower the set temperature.

q The temperature is generally set at 25°C.

q The temperature can be set in stages of 0.5°C.

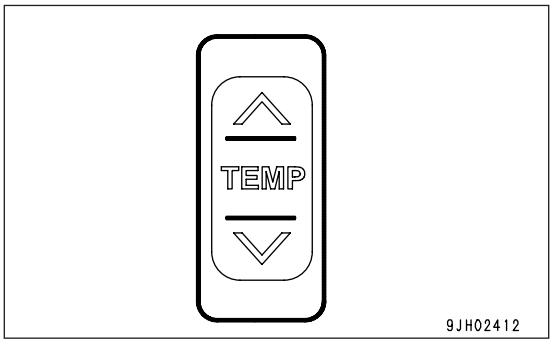

<Monitor display and the function>

Monitor display (°C)	Set temperature
18.0	Max. cooling
18.5 to 31.5	Adjusts temperature inside cab to set temperature
32.0	Max. heating

REMARK
If mode is set to auto, and the temperature setting is set between 18°C and 32°C, then the air flow from the fan is always set to HIGH, and does not change even when set temperature is acheived.

VENT SELECTOR SWITCH

This switch (4) is used to select the vents.

q When switch (4) is pressed, the display on monitor display (7) switches and air blows out from the vents displayed.

q If AUTO operation is selected, the vents are selected automatically.

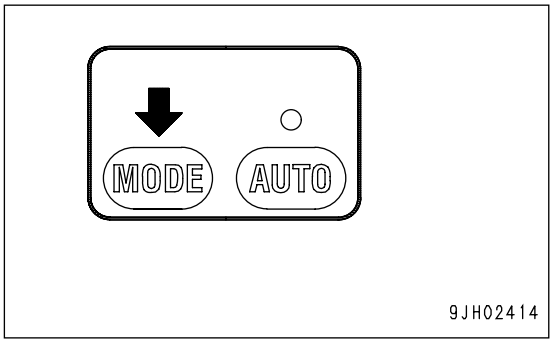

(A): Rear vents (4 places)
(B1): Face vent (1 place)
(B2): Front window vent (1 place)
(C): Foot vent (1 place)
(D): Front window vent (1 place)

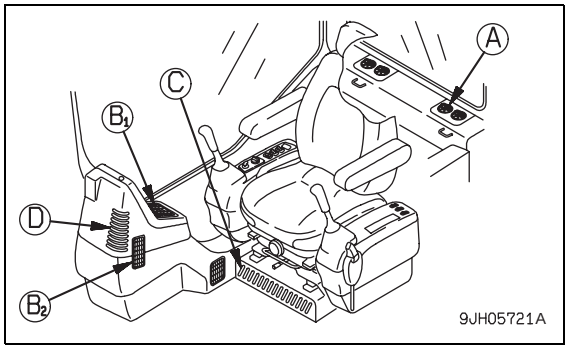

Liquid crystal display	Vent mode	Vent				Remarks
		(A)	(B)	(C)	(D)	
	Front and rear vents (including defroster vent)	O	O	O		-
	Front and rear vents (including defroster vent)	O	O			-
	Foot vent		O			-
	Foot, foot vents (including defroster vent)			O	O	Cannot be selected for automatic operation
	Front vents (including defroster vent)				O	Cannot be selected for automatic operation

Note 1:Air blows out from vents marked O

AUTO SWITCH

With this switch (5), the air flow, vents, and air source (RECIRC/FRESH) are automatically selected according to the set temperature.

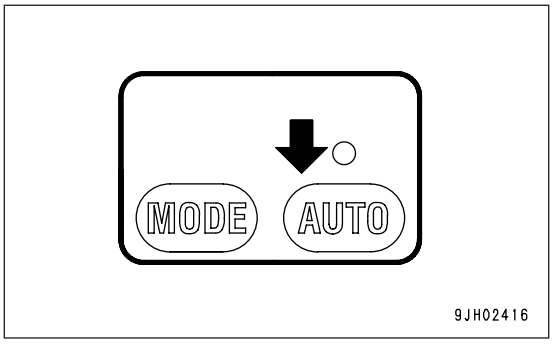

- When auto switch (5) is pressed, the lamp at the top of the auto switch lights up.
- Normally, press this switch, then use temperature control switch (3) to set the temperature, and run the air conditioner under automatic control.
- When the control is switched from automatic operation to manual operation, it is then possible to operate the switch to change the air flow, vents, and air source (RECIRC/FRESH). When the manual control is used, the lamp at the top of the auto switch goes out.

RECIRC/FRESH SELECTOR SWITCH

This switch (6) is used to switch the air source between recirculation of the air inside the cab and intake of air from the outside.

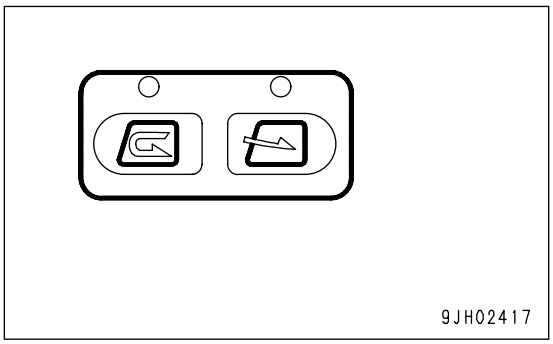

- When switch (6) is pressed, the lamp at the top of the selector switch lights up to show that air is being blown out.

q During automatic operation, the selection of inside air (RECIRC) and outside air (FRESH) is carried out automatically.

RECIRC	The outside air is shut off and only the air inside the cab is circulated. Use this position to carry out rapid cooling of the cab or when the outside air is dirty.
FRESH	Outside air is taken into the cab. Use this position to take in fresh air or when carrying out demisting.

DISPLAY MONITOR

This display monitor displays the status of temperature setting (a), air flow (b), and vents (c).

q When OFF switch (1) is pressed, the display of temperature setting (a) and air flow (b) goes out, and operation stops.

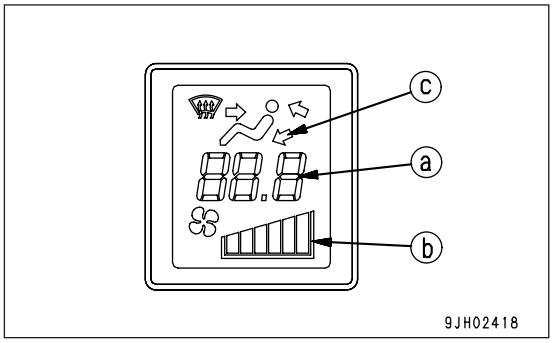

AIR CONDITIONER SWITCH

This switch (8) is used to turn the air conditioner (cooling, dehumidifying, heating) ON or OFF.

q When the fan is actuated (the display monitor shows (b)) and air conditioner switch (8) is pressed, the air conditioner is switched ON, the lamp at the top of the air conditioner switch lights up, and the air conditioner starts. When it is pressed again to the OFF position, the lamp at the top of the air conditioner switch goes out.

q The air conditioner cannot be operated while the fan is stopped.

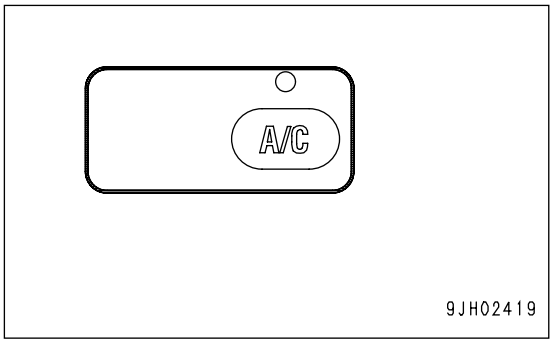

SUNLIGHT SENSOR

This sensor (9) automatically adjusts the flow of air from the vents to match the strength of the sun's rays. In addition, it automatically detects changes in the temperature inside the cab caused by changes in the strength of the sun's rays beforehand and automatically adjusts the temperature.

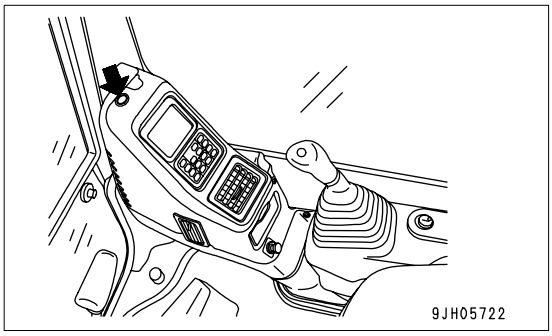

METHOD OF OPERATION

The air conditioner can be operated automatically or manually. Select the method of operation as desired.

AUTOMATIC OPERATION

1. Turn auto switch (5) ON.
   - The lamp at the top of switch (5) lights up.
   - The set temperature (a) and air flow (b) are displayed on the monitor.

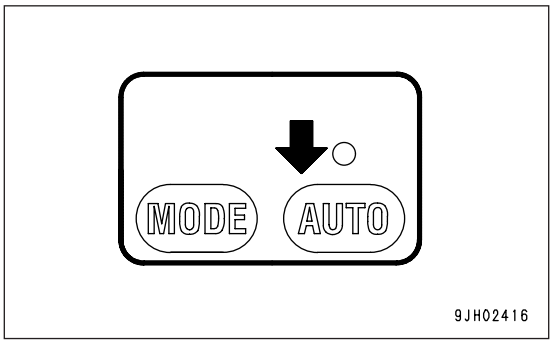

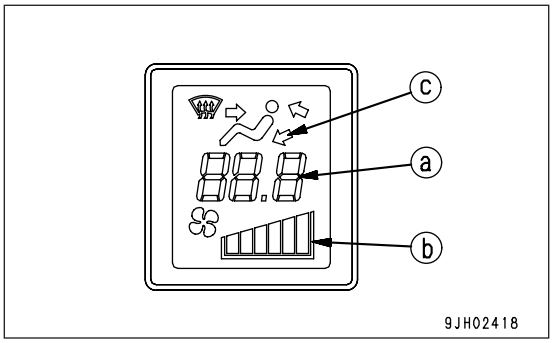

2. Use temperature set switch (3) to set to the desired temperature. The air flow, combination of vents, and selection of fresh or recirculated air is automatically selected according to the set temperature, and the air conditioner is operated automatically to provide the set temperature.

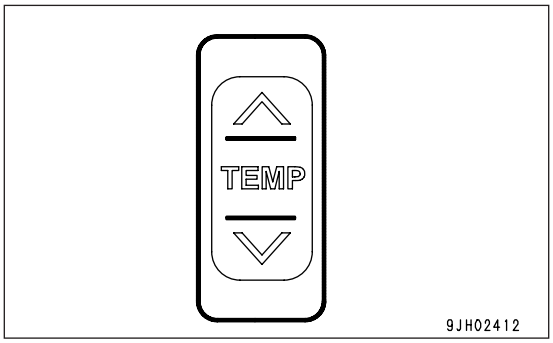

REMARK

When vent display monitor (c) displays (d) or (e), and the engine water temperature is low, the air flow is automatically limited to prevent cold air from blowing out.

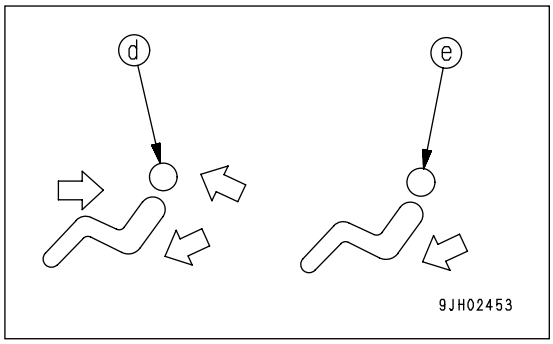

STOPPING AUTOMATIC OPERATION

Press OFF switch (1). The displays for temperature setting (a) and air flow (b) on the display monitor, and the lamps above auto switch (5) and air conditioner switch (8) go out, and the operation stops.

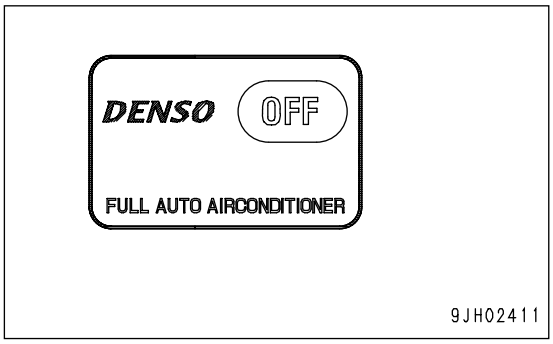

MANUAL OPERATION

1. Press fan switch (2) and adjust the air flow. When doing this, check that temperature setting (a) and air flow (b) are displayed on the display monitor.

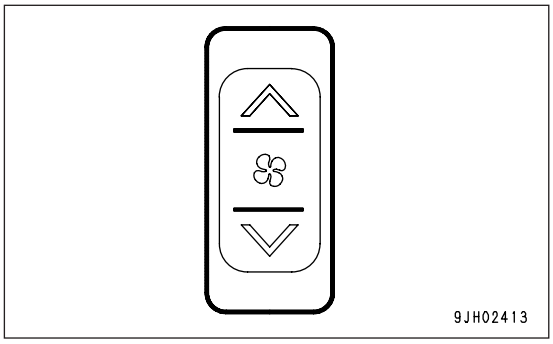

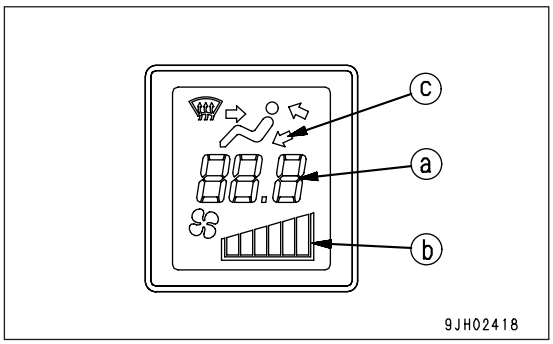

2. Turn air conditioner switch (8) ON. Check that the lamp at the top of the air conditioner switch lights up.

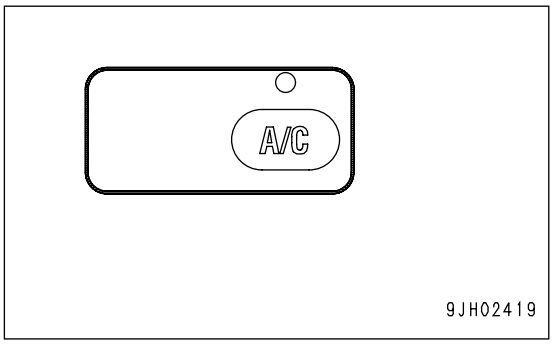

3. Press the temperature setting switch and adjust the temperature inside the cab.

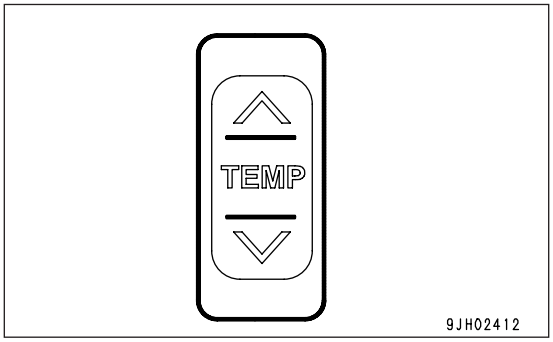

4. Press vent selector switch (4) and select the desired vents.
When this is done, the display for vent (c) of the display monitor changes according to the selection.

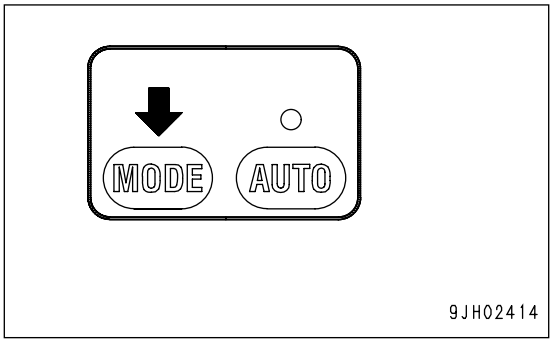

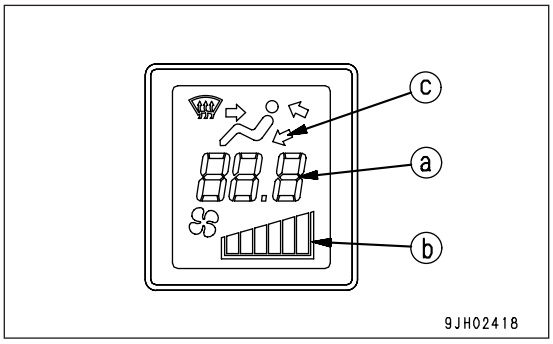

5. Press RECIRC/FRESH selector switch (6) and select recirculation of the air inside the cab (RECIRC) or intake of fresh air from outside (FRESH).

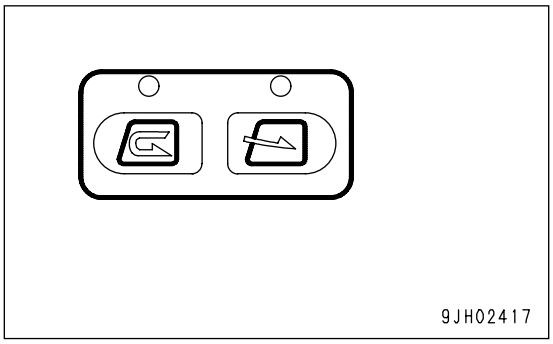

STOPPING MANUAL OPERATION

Press OFF switch (1). The displays for temperature setting (a) and air flow (b) on the display monitor, and the lamps above auto switch (5) and air conditioner switch (8) go out, and the operation stops.

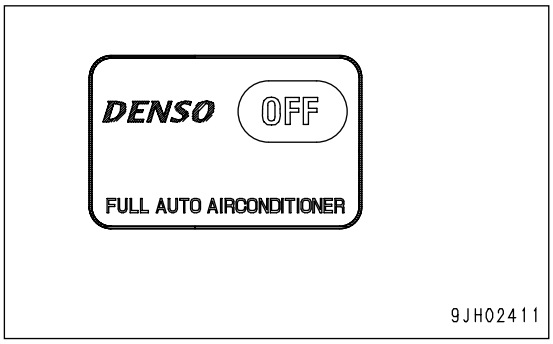

OPERATION WITH COLD AIR TO FACE AND WARM AIR TO FEET

To operate with cold air blowing to the face and warm air blowing to the feet, set as follows.

1. Press fan switch (2) and adjust the air flow. When doing this, check that temperature setting (a) and air flow (b) are displayed on the display monitor.

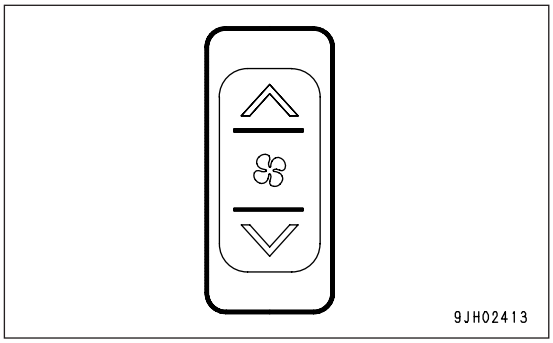

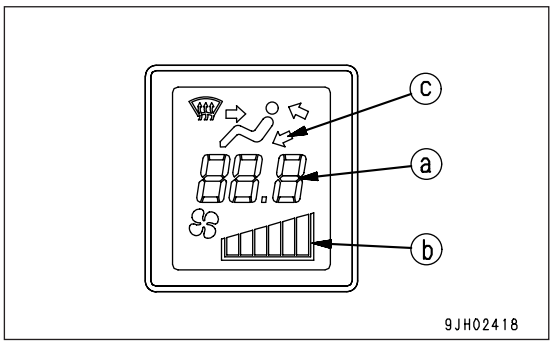

2. Press vent selector switch (4) and set the vent display on the display monitor (c) to the display shown in the diagram on the right.

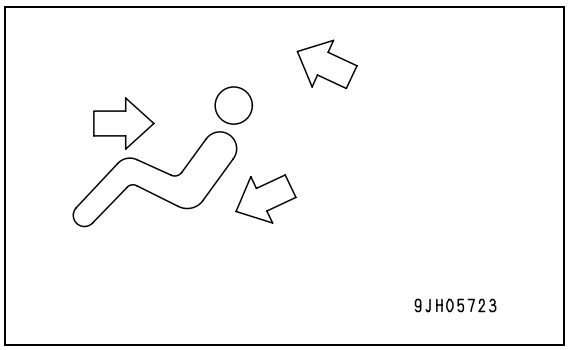

3. Turn air conditioner switch (8) ON. When this is done, the lamp above the air conditioner switch lights up.

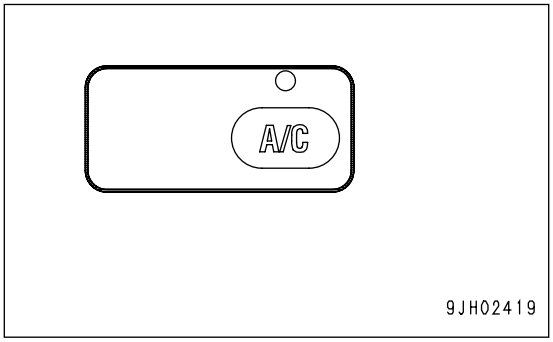

4. Adjust fan switch (2), temperature setting switch (3) and FRESH/RECIRC selector switch (6) to the desired positions.

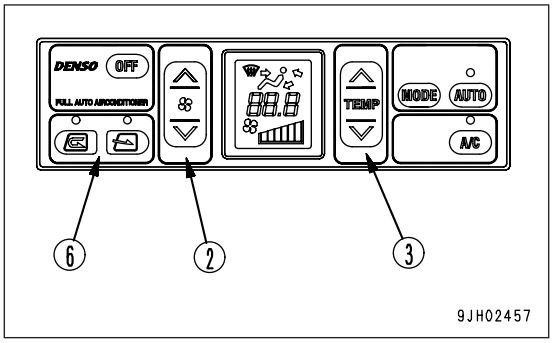

DEFROSTER OPERATION

1. Press fan switch (2) and adjust the air flow. When doing this, check that temperature setting (a) and air flow (b) are displayed on the display monitor.

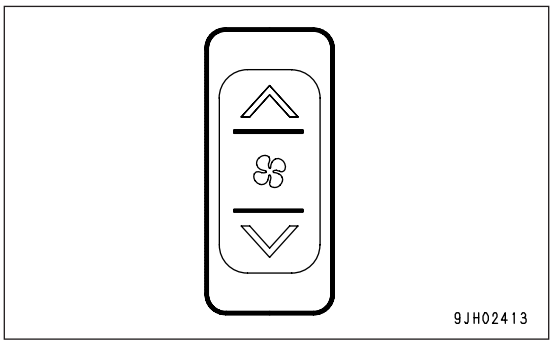

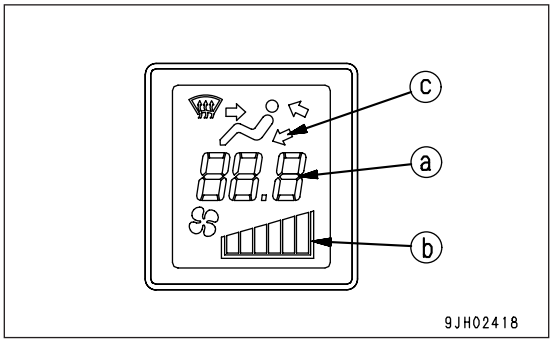

2. Press vent selector switch (4) and set the vent display on the display monitor to the display shown in (f) or (g) in the diagram on the right.

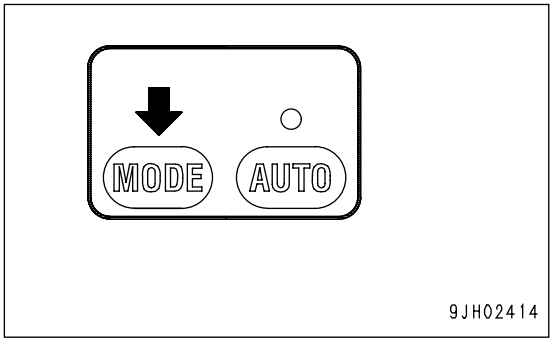

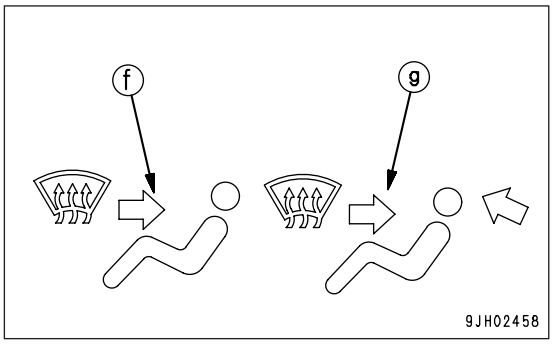

3. Press FRESH/RECIRC selector switch (6) and set it to take in fresh air.

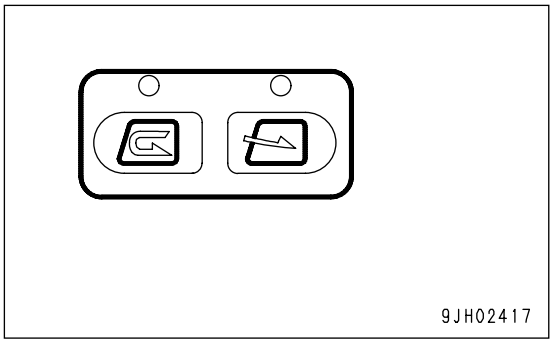

4. Press temperature setting switch (3) and set the set temperature display on the display monitor to the maximum heating temperature of 32°C.

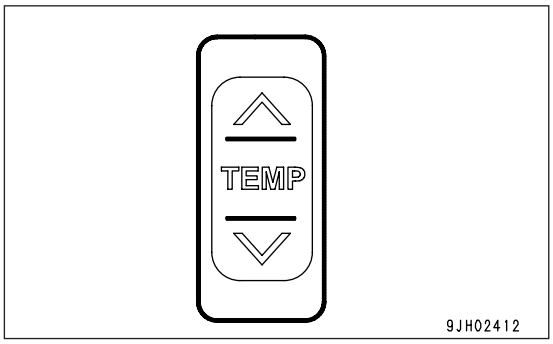

5. Adjust vents (A), (B), and (D2) so that the air blows onto the window glass.
(Vents (C) and (D1) are fixed and cannot be adjusted.)

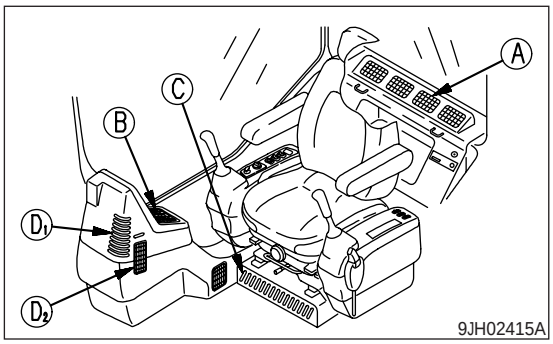

When operating in the rainy season or when it is desired to remove the mist from the window glass or to dehumidify the air, turn air conditioner switch (8) ON.

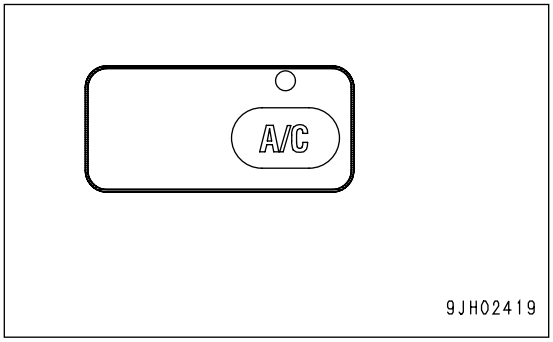

PRECAUTIONS WHEN USING AIR CONDITIONER

NOTICE

1. **When running the air conditioner, always start with the engine running at low speed. Never start the air conditioner when the engine is running at high speed. It will cause failure of the air conditioner.**
2. **If water gets into the control panel or sunlight sensor, it may lead to unexpected failure, so be careful not to let water get on these parts. In addition, never bring any flame near these parts.**
3. **For the auto function of the air conditioner to work properly, always keep the sunlight sensor clean and do not leave anything around the sunlight sensor that may interfere with its sensor function.**

Ventilate the cab from time to time when using the cooler.

q If you smoke when the cooler is on, the smoke may start to hurt your eyes, so open the window and turn the lever to Fresh for a while to remove the smoke while continuing the cooling.

When running the air conditioner for a long time, turn the lever to the FRESH position once an hour to carry out ventilation and cooling.

Be careful not to make the temperature in the cab too low.

When the cooler is on, set the temperature so that it feels slightly cool when entering the cab (5 - 6ºC) lower than the outside temperature). This temperature difference is considered to be the most suitable for your health. Adjust the temperature properly.

CHECK, MAINTAIN MACHINE EQUIPPED WITH AIR CONDITIONER

When carrying out inspection of a machine equipped with an air conditioner, see the "MAINTENANCE SCHEDULE (PAGE 220)" and carry out inspection according to the table.

OTHER FUNCTIONS

SELF-DIAGNOSTIC FUNCTION

It is possible to carry out troubleshooting of the various sensors and equipment used on the air conditioner.

1. Turn the starting switch key to the ON (B) position.
2. Press OFF switch (1). The temperature setting and air flow display on the liquid crystal display portion go out and operation stops.
3. If the "∧" and "∨" parts of temperature setting switch (3) are kept pressed at the same time for at least 3 seconds, the troubleshooting mode is displayed on the liquid crystal display.

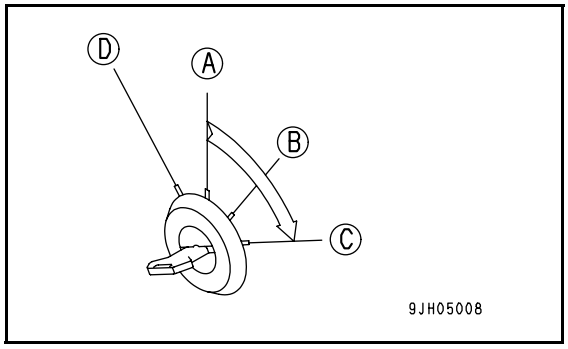

<Monitor display and failure mode>

Display	Failure mode
E--	No failure
E11	Disconnection in recirculated air sensor
E12	Short circuit in recirculated air sensor
E15	Disconnection in water temperature sensor
E16	Short circuit in water temperature sensor
E18	Short circuit in sunlight sensor
E43	Abnormality in vent damper
E44	Abnormality in air mix damper
E45	Abnormality in FRESH/RECIRC air damper

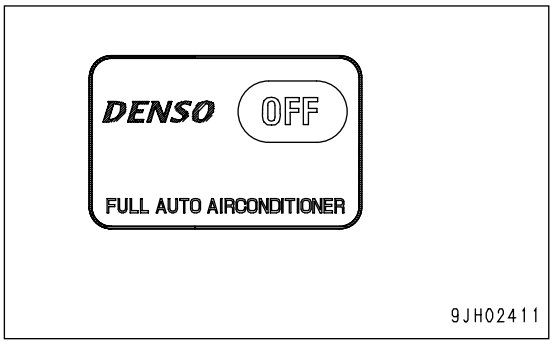

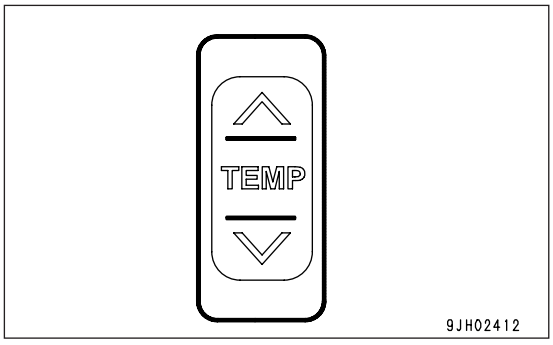

q When more than one failure is detected, press the "∧" or "∨" portion of temperature setting switch (3) to display the failures in turn.

q After completing the troubleshooting, press OFF switch (1) again to return to the normal display.

If any abnormality is detected by the self-diagnostic function, ask your Komatsu distributor to carry out inspection and repair.

SWITCH SET TEMPERATURE DISPLAY BETWEEN °F AND °C

It is possible to switch the set temperature display between °F and °C.

If the "∧" and "∨" portions of temperature setting switch (3) are pressed at the same time for more than 5 seconds while the fan is running, the temperature display will switch between °F and °C.
(Note that the unit is not displayed.)

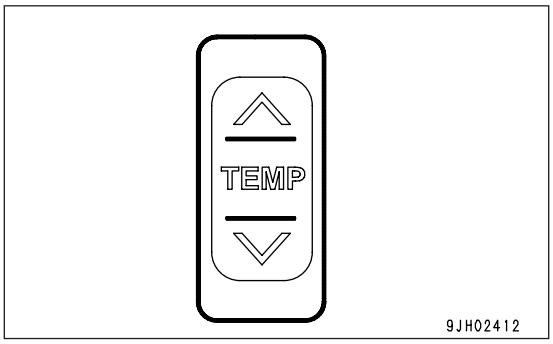

	Liquid crystal display range
°C	18.0 to 32.0
°F	63 to 91

CAR RADIO

ANTENNA

NOTICE
Before transporting the machine or putting it inside a building, store the antenna to prevent any interference.

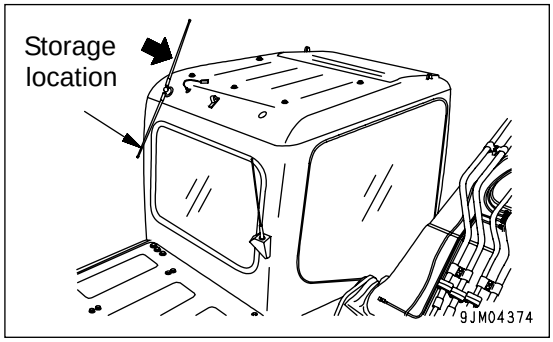

PRECAUTIONS WHEN USING

- To ensure safety, always keep the sound to a level where it is possible to hear outside sounds during operation.
- If water gets into the speaker case or radio, it may lead to an unexpected failure, so be careful not to get water on the equipment.
- Do not wipe the scales or buttons with benzene, thinner, or any other solvent. Wipe with a soft dry cloth. Use a cloth soaked in alcohol if the equipment is extremely dirty.
- When the battery is replaced, the settings for the preset buttons are all cleared, so set them again.

POWER PICK-UP PORT

24V power source

NOTICE
Do not use this as the power source for 12V equipment. It will cause damage to the equipment.

If the cigarette lighter is removed, it can be used as a power source. The capacity of the cigarette lighter is 85W (24V x 3.5A).

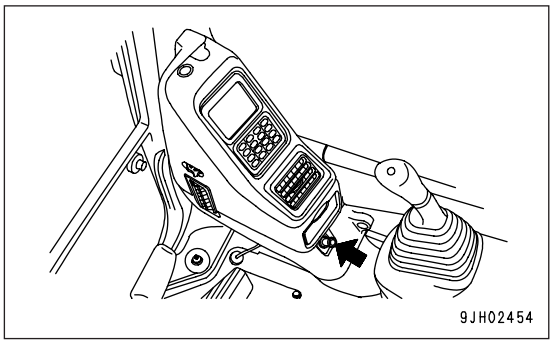

12V power source
(if equipped)

Only use power source when engine is running, failure to do so will result in the battery discharging.

This power source can be used up to a capacity of 60W (12V x 5A).

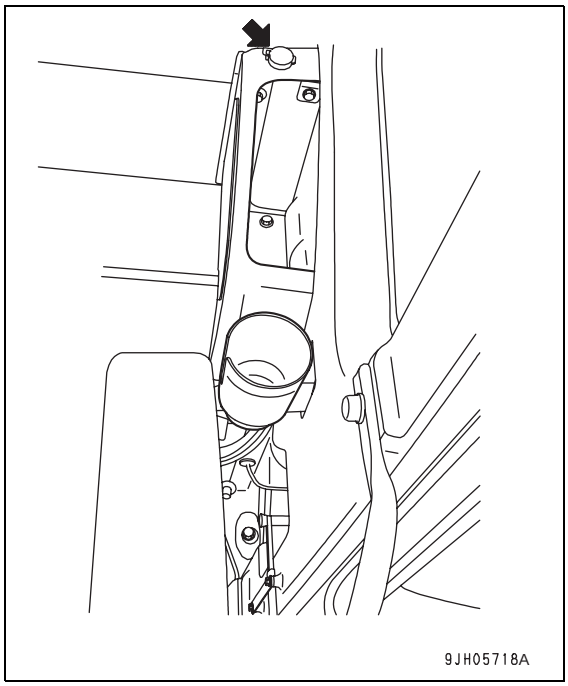

FUSE

NOTICE

Before replacing a fuse, be sure to turn off the starting switch.

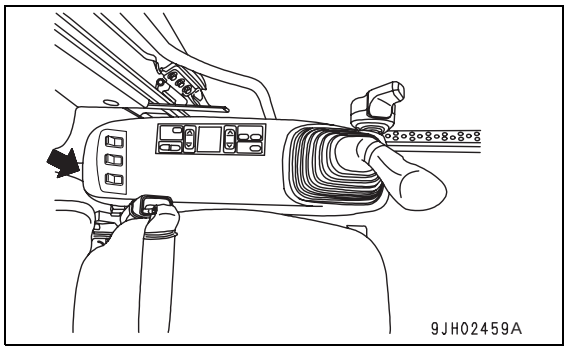

The fuses protect the electrical equipment and wiring from burning out.

If the fuse becomes corroded, or white powder can be seen, or the fuse is loose in the fuse holder, replace the fuse.

Replace the fuse with another of the same capacity.

FUSE CAPACITIES AND CIRCUIT NAMES

	Fuse capacity	Name of circuit
(1)	10 A	Controller
(2)	20 A	Electromagnetic valve
(3)	10 A	PPC hydraulic lock solenoid
(4)	10 A	Window washer, cigarette lighter
(5)	10 A	Horn
(6)	10 A	12V power source (if equipped)
(7)	10 A	Rotating lamp, arm solenoid
(8)	25 A	Light relay
(9)	10 A	Radio, speaker, left knob switch
(10)	10 A	Spare
(11)	25 A	Air conditioner unit
(12)	20 A	Monitor, wiper monitor
(13)	20 A	Light, light relay drive
(14)	10 A	Optional power source (1)
(15)	10 A	Optional power source (2), travel alarm, 12V power port
(16)	10 A	Radio backup
(17)	20 A	Monitor (normal power source)
(18)	10 A	Starting switch
(19)	10 A	Room lamp
(20)	10 A	Spare

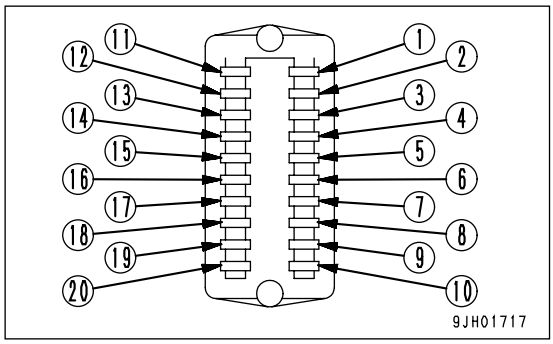

FUSIBLE LINK

If the starting motor does not start even when the starting switch is turned to the ON position, wire-shaped fusible link (1) (2 places) has probably melted, so open the battery box cover on the right side of the machine, check the fusible link, and replace if necessary.

REMARK
A fusible link refers to the large-sized fuse wiring installed in the high current flow portion of the circuit to protect electrical components and wiring from burning, in the same way as an ordinary fuse.

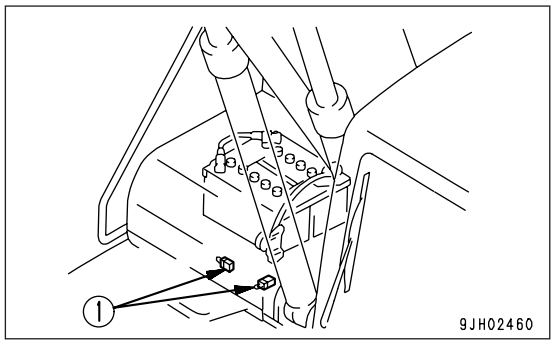

CONTROLLER (COMPUTER)

An engine throttle and pump controller is installed.

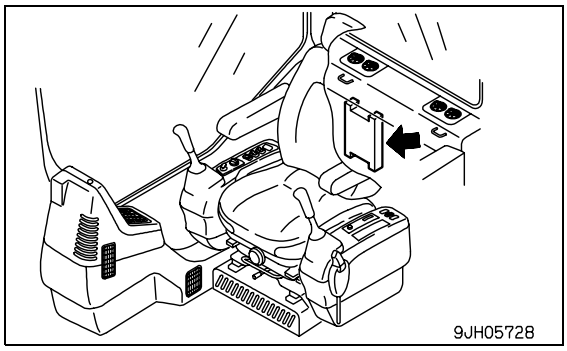

NOTICE

- **Be careful not to get water, mud, or juice on the controller. This will cause failure.**
- **If any abnormality occurs in the controller, do not disassemble it yourself. Contact your Komatsu distributor for repairs.**

TOOLBOX

Keep the tools in this toolbox.

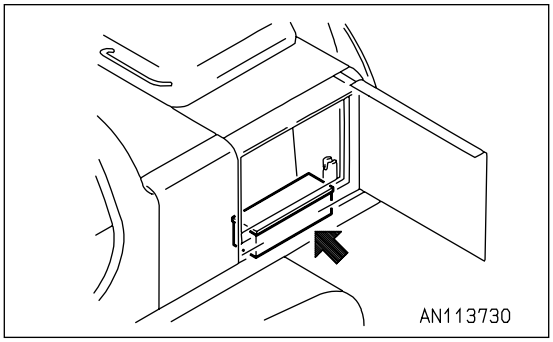

GREASE GUN HOLDER

This is inside the door at the rear left of the machine. When not using the grease gun, store it in its holder.

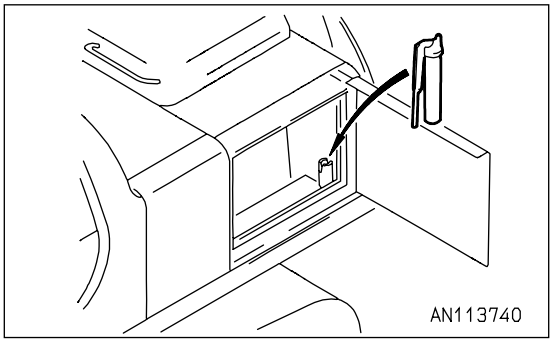

REFUELLING PUMP

⚠ WARNING

Do not bring fire or sparks near the fuel.

1. When the machine is operated on sites with no fuel container and pump, the machine may be refuelled using the refuelling pump (if fitted) from fuel barrels.
   The refuelling pump is located in the pump compartment at the rear right hand side of the machine.

2. Place the fuel hose (2), which is stored in tray (3) into the fuel barrel placed next to the machine.

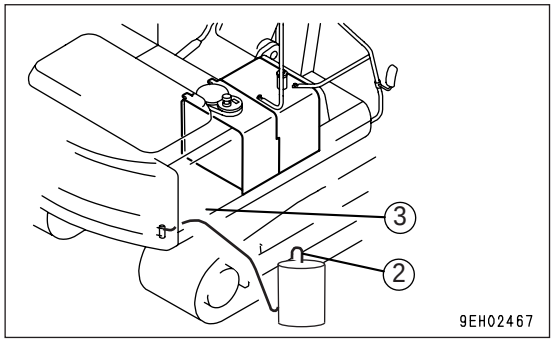

3. Switch on refuelling pump using switch (1) on the pump assembly when adding fuel, never let the fuel overflow. This may cause a fires.

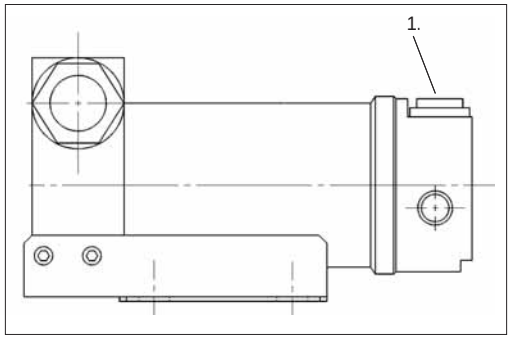

NOTICE

- **This pump is protected by a fuse (5). If pump fails to function check fuse (10A).**
- **Ensure strainer on hose end is clean.**

HANDLING THE ACCUMULATOR

⚠ WARNING

The accumulator is charged with high-pressure nitrogen gas, so mistaken operation may cause an explosion which will lead to serious injury or damage. When handling the accumulator, always do as follows.

- q **The pressure in the control circuit cannot be completely removed. When removing the hydraulic equipment, do not stand in a position where the oil spurting out can strike you. Loosen the bolts slowly.**
- q **Do not disassemble the accumulator.**
- q **Do not bring it near flame or dispose of it in fire.**
- q **Do not make holes in it or weld it.**
- q **Do not hit it, roll it, or subject it to any impact.**
- q **When disposing of the accumulator, the gas must be released. Please contact your Komatsu distributor to have this work carried out.**

The machine is equipped with an accumulator in the control circuit. The accumulator in the control circuit is a device to store pressure. When this accumulator is installed, it is possible to operate the control circuit for a short time even after the engine is stopped. Therefore, it is possible to lower the work equipment under its own weight by operating the control lever in the direction to lower the work equipment.

The accumulator is installed in the position shown in the diagram on the right.

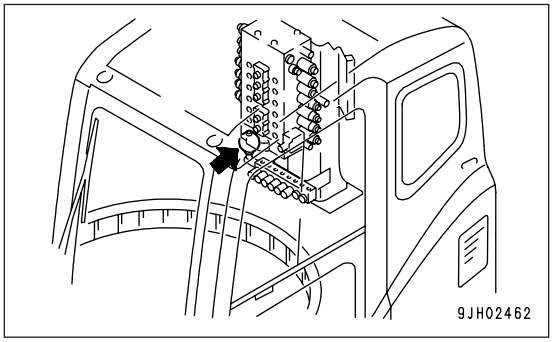

RELEASING PRESSURE IN CONTROL CIRCUIT ON MACHINE EQUIPPED WITH ACCUMULATOR

1. Lower the work equipment to the ground, then close the crusher or other attachment.
2. Stop the engine.
3. Turn the key in the starting switch to the ON position again to let electric current flow in the circuits.
4. Set the safety lock lever to the FREE position, then operate the work equipment control levers and attachment control pedal (if equipped) backwards and forwards, and to the right and left to the full stroke to release the pressure in the control circuit.
5. Set the safety lock lever to the LOCK position to lock the control levers and attachment control pedal. Note that the pressure is not completely removed, so when removing accumulator (1) in the control circuit and accumulator (2) in the valve return circuit, loosen the bolts slowly and do not stand where the oil can strike you if it spurts out.

MACHINE OPERATIONS AND CONTROLS

BEFORE STARTING ENGINE

WALK-AROUND CHECKS

Before starting the engine, look around the machine and under the machine to check for loose nuts or bolts, or leakage of oil, fuel, or coolant, and check the condition of the work equipment and hydraulic system. Check for loose wiring, play, and accumulation of dust at places which reach high temperatures.

⚠ WARNING

Remove any flammable materials from around the battery or engine muffler, or other high temperature engine parts. Leakage of fuel or oil will cause the machine to catch fire. Check carefully, and be sure to repair any abnormalities, or please contact your Komatsu distributor.

Always check the items in this section before starting the engine each day.

1. Check for damage, wear, play in work equipment, cylinders, linkage, hoses

   Check that there are no cracks, excessive wear, or play in the work equipment, cylinders, linkage, or hoses. If any abnormality is found, repair it.

2. Remove dirt and dust from around engine, battery, radiator

   Check if there is any dirt or dust accumulated around the engine or radiator. Check also if there is any flammable material (dead leaves, twigs, grass, etc.) accumulated around the battery or high temperature engine parts, such as the engine muffler or turbocharger. Remove all such dirt or flammable material.

3. Check for leakage of water or oil around engine

   Check that there is no leakage of oil from the engine or leakage of water from the cooling system. If any abnormality is found, repair it.

4. Check for oil leakage from hydraulic equipment, hydraulic tank, hoses, joints

   Check that there is no oil leakage. If any abnormality is found, repair the place where the oil is leaking.

5. Check the undercarriage (track, sprocket, idler, guard) for damage, wear, loose bolts, or leakage of oil from rollers

6. Check for damage to the handrail, loose bolts

   Repair any damage and tighten any loose bolts.

7. Check for damage to gauges, monitor, loose bolts

   Check that there is no damage to the gauges and monitor in the operator's cab. If any abnormality is found, replace the parts. Clean off any dirt on the surface.

8. Clean rear view mirror, check for damage

   Check that there is no damage to the rear view mirror. If it is damaged, replace it with a new mirror. Clean the surface of the mirror and adjust the angle so that the view to the rear can be seen from the operator’s seat.

9. Seat belt and mounting clamps

   Check that there is no abnormality in the seat belt or mounting clamps. If there is any damage, replace with new parts.

10. Check bucket with hook (if equipped) for damage.

    Check the hook, catcher and hook foot for damage. If damage is found, contact your Komatsu distributor for repair.

CHECKS BEFORE STARTING

Always check the items in this section before starting the engine.

CHECK COOLANT LEVEL, ADD WATER

⚠ WARNING

- **Do not open the radiator cap unless necessary. When checking the coolant, wait for the engine to cool down and check the sub tank.**
- **Immediately after the engine is stopped, the coolant is at a high temperature and the radiator is under high internal pressure.**
  If the cap is removed to drain the coolant in this condition, there is a danger of burns. Wait for the temperature to go down, then turn the cap slowly to release the pressure before removing it.

1. Open the door at the rear left of the machine, and check if the cooling water in sub-tank (1) (shown in the diagram on the right) is between the FULL and LOW marks. If the water level is low, add water to the FULL level through the filler port of sub-tank (1).
2. After adding water, tighten the caps securely.
3. If the sub tank is empty, there is probably leakage of water.
   After inspecting, repair any abnormality immediately. If there is no abnormality, check the water level in the radiator. If the water level is low, add water to the radiator, then fill the reserve tank (1).

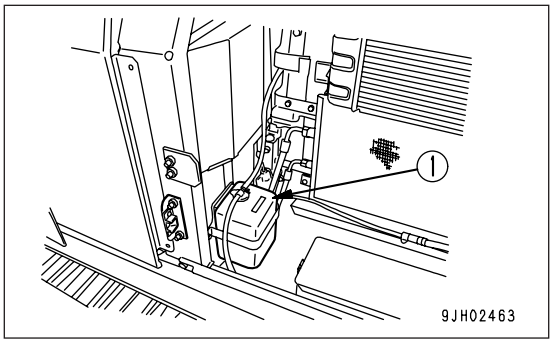

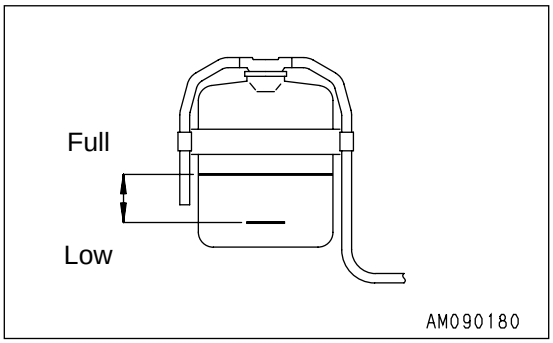

CHECK OIL LEVEL IN ENGINE OIL PAN, ADD OIL

⚠ WARNING

The parts and oil are at high temperature after the engine is stopped, and may cause serious burns. Wait for the temperature to go down before starting the operation.

1. Open the engine hood on the machine.
2. Remove dipstick (G) and wipe the oil off with a cloth.
3. Insert dipstick (G) fully into the oil filler pipe, then take it out again.

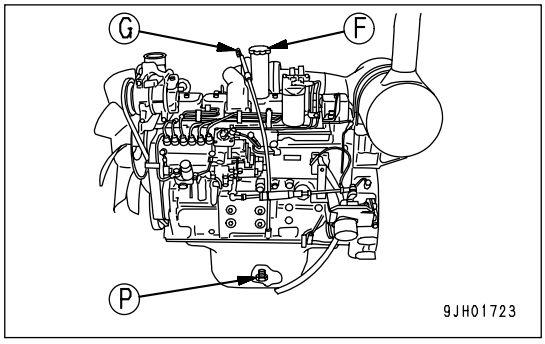

4. The oil level should be between the H and L marks on dipstick (G).
   If the oil level is below the L mark, add engine oil through oil filler (F).
5. If the oil is above the H line, open drain valve (P) at the bottom of the engine oil pan, drain the excess engine oil, then check the oil level again.
6. If the oil level is correct, tighten the oil filler cap securely and close the engine hood.

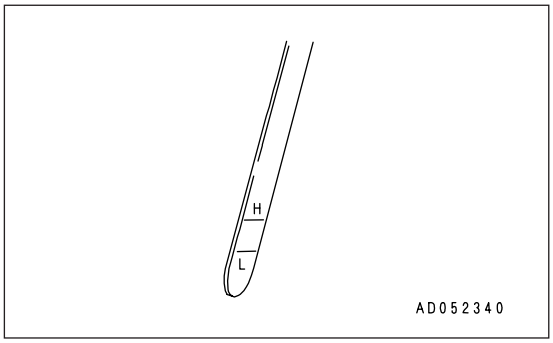

REMARK
When checking the oil level after the engine has been operated, wait for at least 15 minutes after stopping the engine before checking.
If the machine is at an angle, make it horizontal before checking.

CHECK FUEL LEVEL, ADD FUEL

⚠ WARNING

When adding fuel, never let the fuel overflow. This may cause a fire. If any fuel is spilled, wipe it up completely. Never bring flames near fuel because it is highly flammable and dangerous.

1. Open fuel filler cap (F) of the fuel tank.
2. When fuel filler cap (F) is opened, float gauge (G) will rise according to the fuel level.
   Check that the fuel tank is full. Check by looking into the tank and by using float gauge (G).

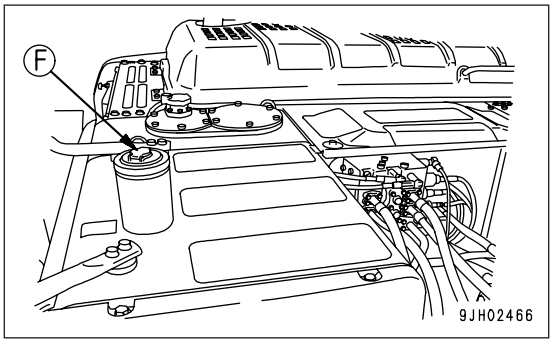

3. If the tank is not full, add fuel through the fuel filler until float gauge (G) rises to the maximum position.
   Fuel tank capacity: 400 liters
   Position of tip of float gauge (G) when tank is full: Approx. 50 mm from top surface of fuel tank
4. After adding fuel, push float gauge (G) straight down with fuel filler cap (F). Be careful not to get float gauge (G) caught in the tab of fuel filler cap (F), and tighten fuel filler cap (F) securely.

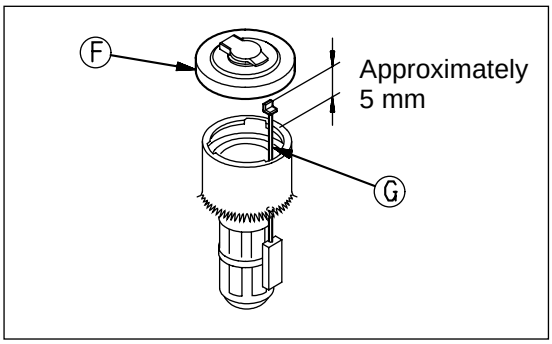

REMARK
If breather hole (1) on the cap is clogged, the pressure in the tank will drop and fuel will not flow.
Clean the hole from time to time.

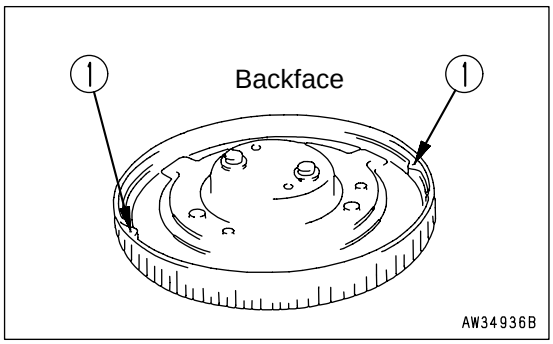

DRAIN WATER, SEDIMENT FROM FUEL TANK

1. Open the pump room door on the right side of the machine.
2. Put a container to catch the drained fuel under drain hose (1).
3. Open drain valve (2) at the rear of the hydraulic tank and drain the sediment and water accumulated at the bottom of the tank together with the fuel.
4. When clean fuel comes out, close drain valve (2).
5. Close the pump room door on the right side of the machine.

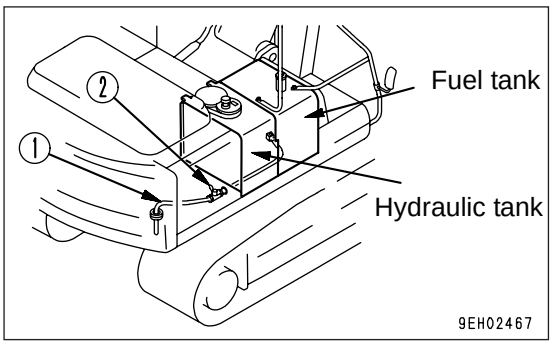

CHECK FOR WATER AND SEDIMENT IN WATER SEPARATOR, DRAIN WATER

1. Open the cover at the rear right of the machine.
2. Inspect the water separator, and check if the ring inside has risen to the marked line.
3. If the ring has risen to the marked line, carry out the procedure from Step 4.

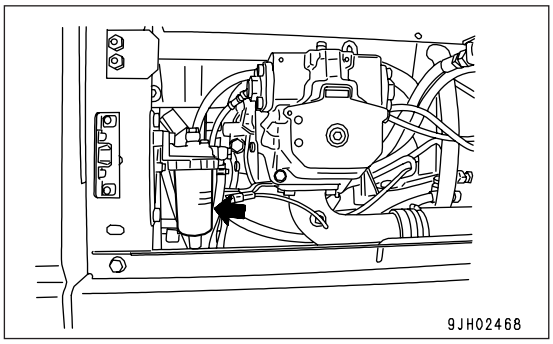

4. Set a container under the water separator to catch the drained oil.
5. Close fuel valve (6) at the bottom of the fuel tank.
6. Remove air bleed plug (5) at the top of the water separator.
7. Loosen drain valve (1) at the bottom of the water separator, and drain the water and sediment into the container.
8. Loosen ring nut (2), then remove filter case (3).
9. Remove element (4) from the separator base.
10. Wash element (4) in clean diesel oil.
11. Check element (4), and replace it if it is damaged.
12. When installing element (4), perform Steps 6 and 7 in the opposite order.
    Tightening torque of ring nut (2): 40 ± 3 N•m
    {4.1 ± 0.3 kgf•m}
13. Fill filter case (3) with fuel. When the fuel comes out from air bleed plug (5), tighten air bleed plug (5).

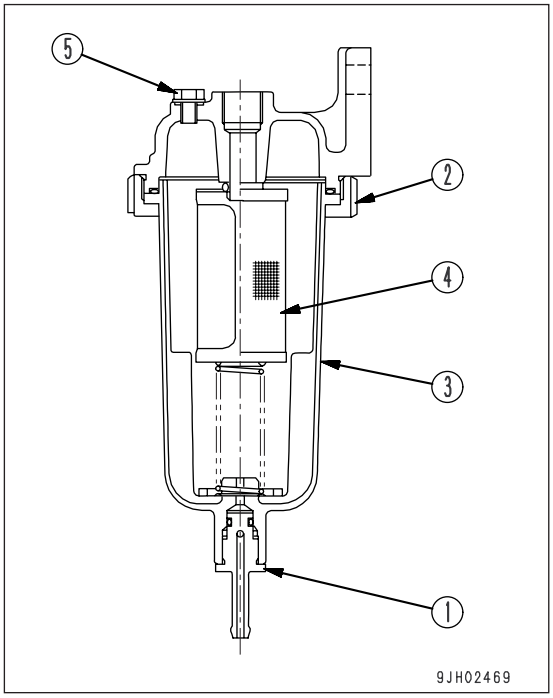

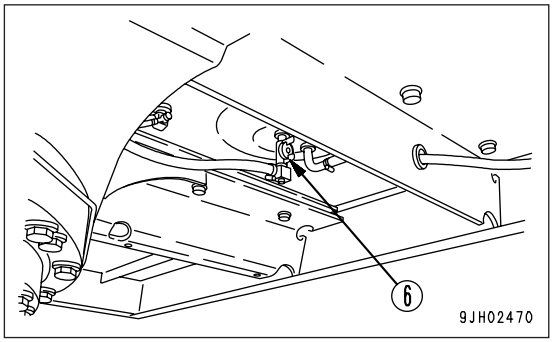

CHECK OIL LEVEL IN HYDRAULIC TANK, ADD OIL

⚠ WARNING

When removing the oil filler cap, oil may spurt out, so turn the cap slowly to release the internal pressure before removing the cap.

1. If the work equipment is not in the position shown in the diagram on the right, start the engine, run the engine at low speed, retract the arm and bucket cylinders, then lower the boom, set the bucket teeth in contact with the ground, and stop the engine.
2. Within 15 seconds after stopping the engine, move each control lever (for work equipment and travel) to the full stroke in all directions to release the internal pressure.

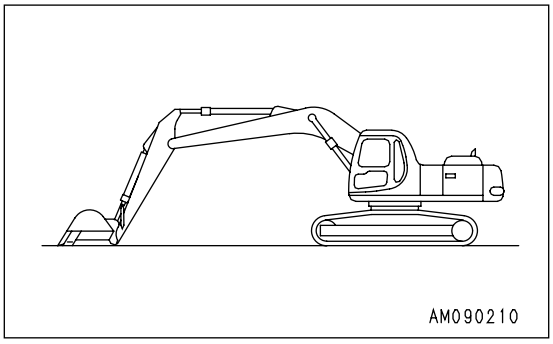

3. Check sight gauge (G). The oil level should be between the H and L lines.

NOTICE
Do not add oil above the H line. This will damage the hydraulic circuit or cause the oil to spurt out. If oil has been added to above the H level, stop the engine and wait for the hydraulic oil to cool down, then drain the excess oil from drain plug (P).

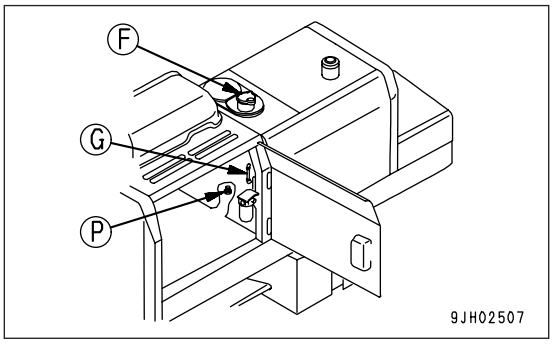

4. If the oil level is below the L line, add oil through oil filler (F) at the top of the hydraulic tank.

REMARK
The oil level will vary depending upon the oil temperature. Accordingly, use the following as a guide:

- Before operation: between H and L level
  (Oil temperature 10 to 30ºC)
- Normal operation: around H level
  (Oil temperature 50 to 80ºC)

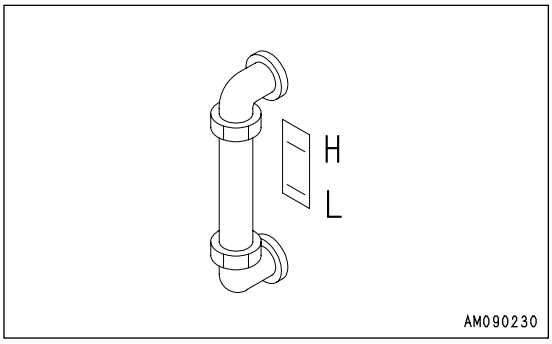

CHECK ELECTRIC WIRINGS

⚠ WARNING

- **If the fuses frequently blow, if there are traces of short circuits in the electrical wiring, locate the cause immediately and carry out repairs, or contact your Komatsu distributor for repairs.**
- **Keep the top surface of the battery clean and check the breather hole in the battery cap. If it is clogged with dirt or dust, wash the battery cap to clean the breather hole.**

Check for damage, wrong fuse capacity, and any sign of disconnection or short circuit in the electric wiring. Check for loose terminals and tighten any loose parts.

In particular check the wiring of the "battery", "starting motor" and "afternator" carefully.

When carrying out walk-around checks or checks before starting, always check if there is any accumulation of flammable material around the battery, and remove it.

Please contact your Komatsu distributor for investigation and correction of the cause.

CHECK FUNCTION OF HORN

1. Turn the starting switch to the ON position.
2. Confirm that the horn sounds without delay when the horn button is pressed. If the horn does not sound, ask your Komatsu distributor for repair.

ADJUST BEFORE OPERATION

⚠ WARNING

- **Adjust the seat position before starting operations or after changing the operator.**
- **Adjust the seat so that the control levers and switches can be operated freely and easily with the operator’s back against the backrest.**

A: Fore-and-aft adjustment
Pull lever (1) up, set the seat to the desired position, then release the lever.
Fore-and-aft adjustment: 160 mm (16 stages)

B: Adjusting reclining

NOTICE
The seat can be reclined to a large angle when the seat is pushed fully forward, but the reclining angle is reduced when the seat is moved back, so when moving the seat to the rear, return the seat back to its upright position.

Pull lever (2) and set the seat back to a position which is comfortable for operation, then release the lever.

Sit with your back against the seat back when adjusting. If your back is not touching the seat back, the seat back may suddenly move forward.

C: Adjusting seat tilt

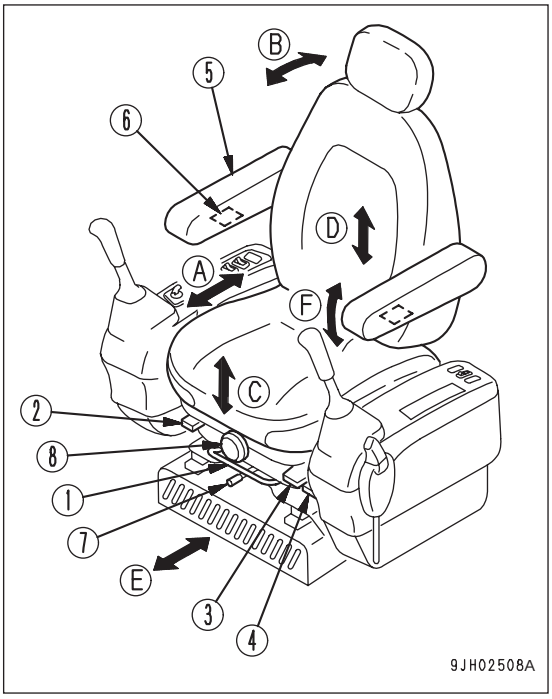

q Forward tilt
Push lever (3) up to adjust the angle of the front of the seat. (4 stages)
q To raise the angle at the front of the seat, keep the lever pushed up and apply your weight to the rear of the seat.

q To lower the angle at the front of the seat, keep the lever pushed up and apply your weight to the front of the seat.

q Rear tilt
Pull lever (4) up to adjust the angle of the rear of the seat. (4stages)
q To raise the angle at the rear of the seat, keep the lever (3) pulled up and stand up slightly to remove your weight from the seat.

q To lower the angle at the rear of the seat, keep the lever (3) pulled up and apply your weight to the rear of the seat.

Amount of tilt: Up 13°, down 13°

q Adjusting seat height
You can move the seat up or down by combining adjustments 1 and 2.
After setting the forward tilt or rear tilt to the desired height, set the other to make the seat horizontal. Release the lever to secure the adjustment.
Height adjustment: 60 mm

D: Adjusting armrest angle
Armrest (5) can be made to spring up by hand approx. 90°.
To make fine vertical adjustments of the armrest angle, turn the bottom (6) of the armrest by hand.
Armrest adjustment angle: 25°

REMARK
If the seat back is tipped to the front without raising the armrest (5), the armrest will rise automatically.

E: Overall fore-and-aft adjustment of seat
Move lever (7) to the right, set the seat to the desired position, then release the lever. In this case, the operator's seat, left and right control levers, and safety lock lever adjust together.
Fore-and-aft adjustment: 120 mm

F: Adjusting suspension
Turn knob (8) to the right to make the suspension harder, or to the left to make the suspension softer. Adjust the reading of the dial to match the operator's weight and select the optimum suspension.

REMARK
To obtain the optimum adjustment, turn the knob (8) so that the indicator of the weight display (kg) in the transparent portion of knob (8) is the same as the operator's weight.

ADJUSTMENT OF MIRRORS

Loosen nut (1) and bolt (2) mounting the mirror, and adjust to the position which gives the best view from the operator's seat of the blind spot to the left and right sides at the rear of the machine.

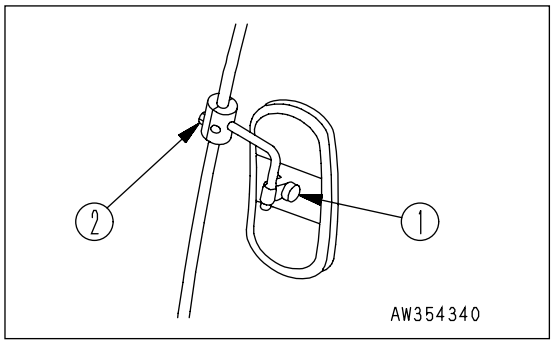

q Adjust the mirror mount so that it is possible to see any person (or object of height 1 m and diameter 30 cm) at the rear left and right of the machine.

q Install the mirror to the mounting position and dimensions shown. The values given below are reference values for the range of view.

Mounting position X : 100 mm
Range of view Y (right side) : 1500 mm
Range of view Z. (left side) : 1830 mm
Mirror A: Must be able to see hatched area (A)
Mirror B: Must be able to see hatched area (B)
Mirror C: Must be able to see hatched area (C) (if equipped)

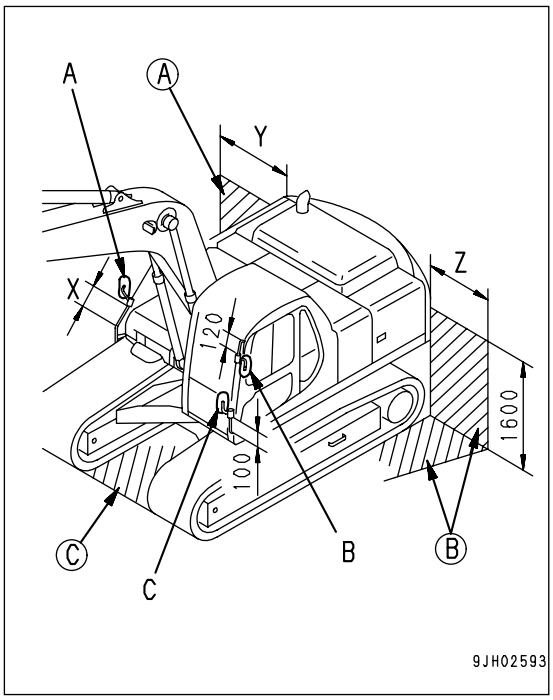

SEAT BELT

⚠ WARNING

- **Before fitting the seat belt, check that there is no abnormality in the belt or its mounting bracket. If it is worn or damaged, replace the seat belt.**
- **Even if the seat belt appears normal, replace it every 3 years. The date of manufacture of the belt is shown on the back of the belt.**
- **Always wear the seat belt during operations.**
- **Fit the seat belt so that it is not twisted.**

FASTENING AND REMOVING SEAT BELT

This seat belt has a retractor, so it is not necessary to adjust the length.

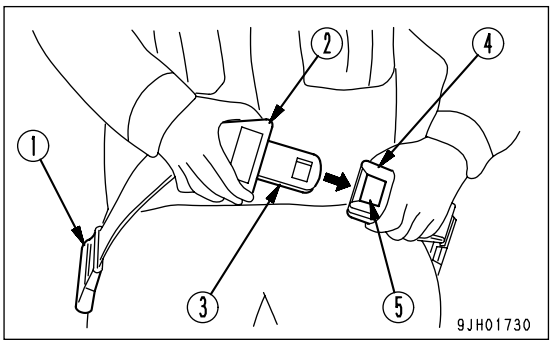

Fastening seat belt
Hold grip (2) and pull the belt out from the retractor (1), check that the belt is not twisted, then insert tongue (3) into buckle (4) securely.
Pull the belt lightly to check that it is properly locked.

Removing belt
Press button (5) in buckle (4), and remove tongue (3) from the buckle (4).
The belt is automatically spooled, hold grip (2) and return the belt slowly to the retractor (1).

OPERATIONS BEFORE STARTING ENGINE

⚠ WARNING

q **When starting the engine, check that the safety lock lever is secured at the LOCK position.**
If the control levers are not locked and they are touched by accident when starting the engine, the work equipment may move unexpectedly, and may lead to a serious accident.

q **Before getting up from the operator's seat, always set the safety lock lever to the LOCK position, regardless of whether the engine is running or stopped.**

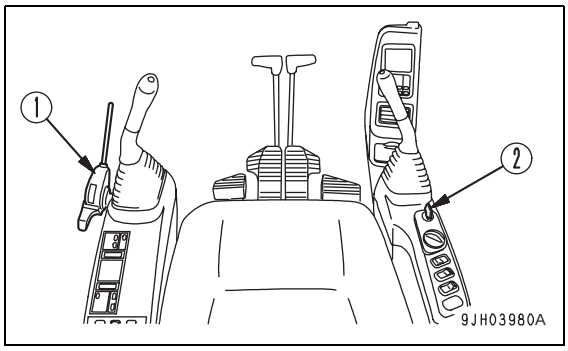

1. Check that safety lock lever (1) is at the LOCK position.

2. Check the position of each lever.

Set the control lever to the neutral position.
When starting the engine, never touch the knob switch.

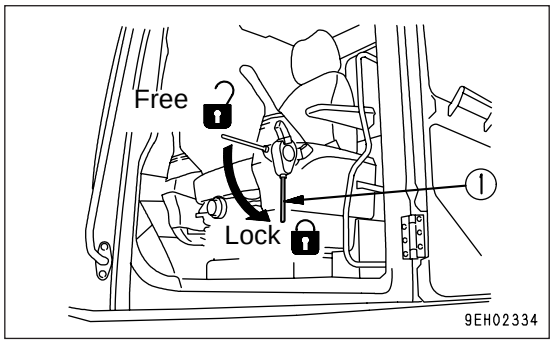

3. Insert the key in starting switch (2), turn the key to the ON position, then carry out the following checks.

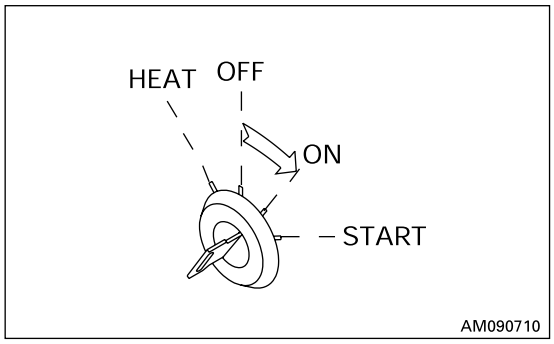

q If a password has been set, the input display screen is shown on the monitor screen.

After entering the password, press confirmation switch (3).

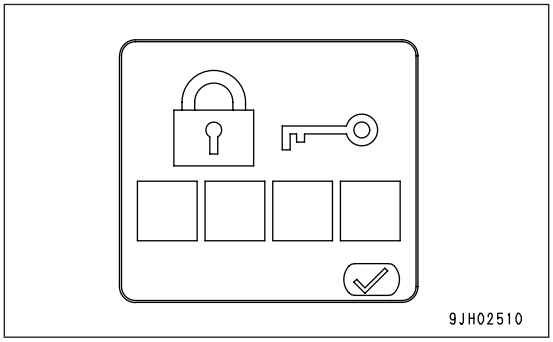

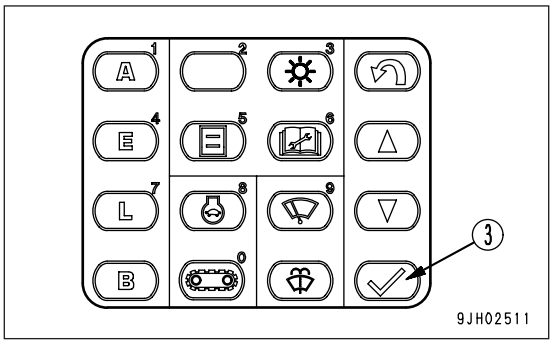

1) The buzzer sounds for approx. 1 second, and the following monitors and meters light up for approx. 3 seconds.

   Q Radiator water level monitor (4)
   Q Engine oil level monitor (5)
   Q Charge monitor (6)
   Q Fuel level monitor (7)
   Q Engine water temperature monitor (8)
   Q Engine oil pressure monitor (9)
   Q Engine water temperature gauge (10)
   Q Fuel gauge (11)
   Q Air cleaner clogging monitor (12)

   If the monitors do not light up or the buzzer does not sound, there is probably a failure in the monitor. Contact your Komatsu distributor for repairs.

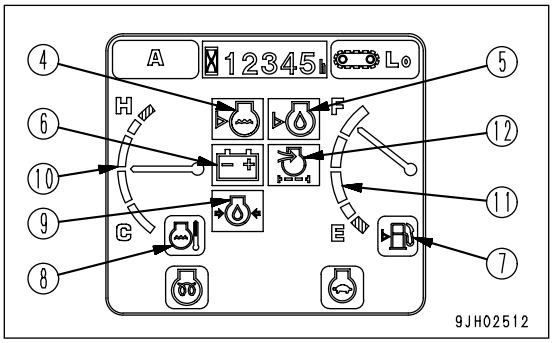

2) After approx. 3 seconds, the screen switches to the working mode/travel speed display monitor. Then it switches to the normal screen.

   Q Fuel level monitor (7)
   Q Engine water temperature monitor (8)
   Q Engine water temperature gauge (10)
   Q Fuel gauge (11)
   Q Hydraulic oil temperature gauge (13)
   Q Hydraulic oil temperature monitor (14)

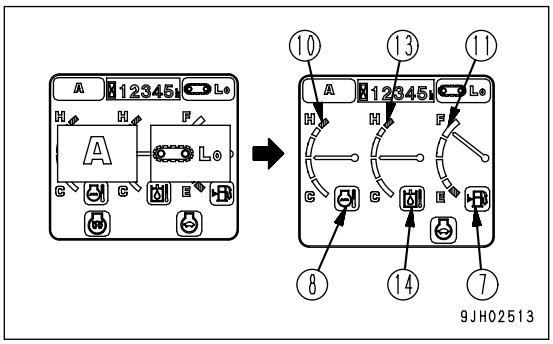

3) If the hydraulic oil temperature gauge goes out and caution lamp (15) stays lighted up red, carry out inspection immediately for the item which is lighted up red.

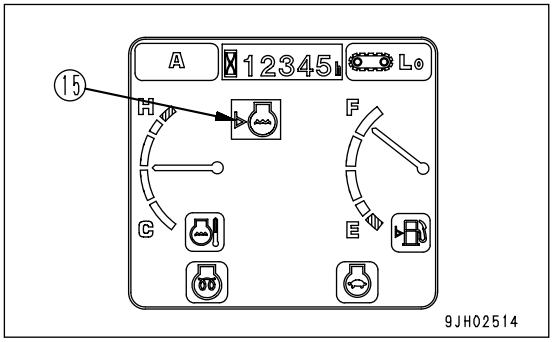

4) If there are any items where the maintenance time has passed, maintenance interval monitor (16) lights up for 30 seconds. Press maintenance switch (17), check the item, then carry out maintenance immediately.

For details of the method of checking the maintenance interval, see "MAINTENANCE SWITCH (PAGE 79)" in the Explanation of components.

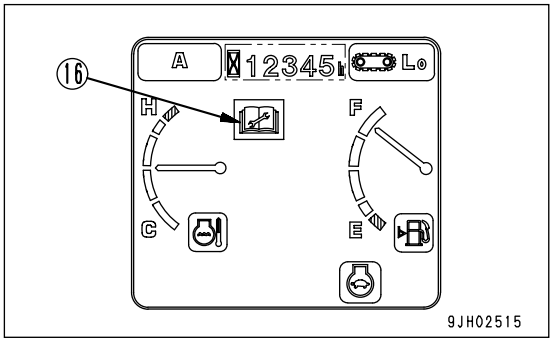

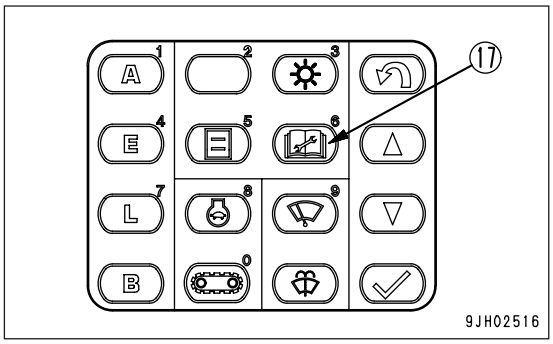

5) Press lamp switch (18) and check that the front lamp lights up.

If it does not light up, there is probably a blown bulb or disconnection. Contact your Komatsu distributor for repairs.

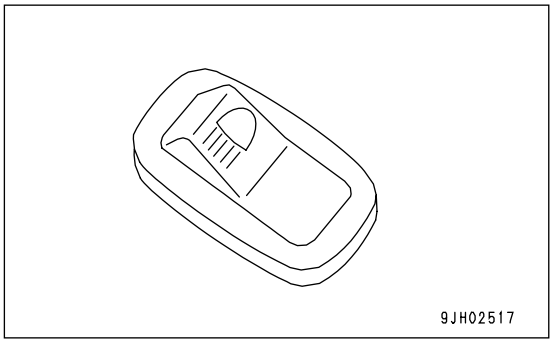

STARTING ENGINE

NORMAL STARTING

⚠ WARNING

- **Check that there are no persons or obstacles in the surrounding area, then sound the horn and start the engine.**
- **Exhaust gas is toxic. When starting the engine in confined spaces, be particularly careful to ensure good ventilation.**

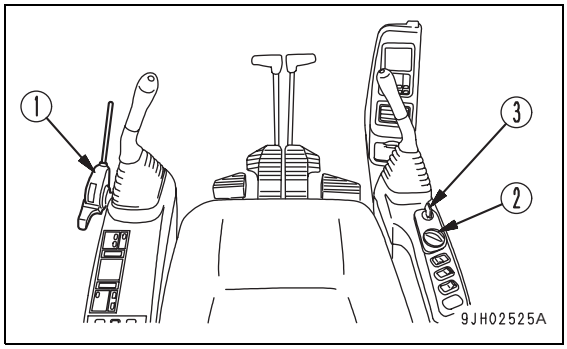

NOTICE

- **Before starting the engine, check that the fuel control dial is at the low idling (MIN) position.**
- **Do not crank the starting motor continuously for more than 20 seconds.**
  If the engine does not start, wait for at least 2 minutes before trying again.
- **If the fuel control dial is at the FULL position, the engine will accelerate suddenly and cause damage to the engine parts, so set it to an intermediate or low speed position.**

1. Check that safety lock lever (1) is at LOCK position. If safety lock lever (1) is at the FREE position, the engine will not start.

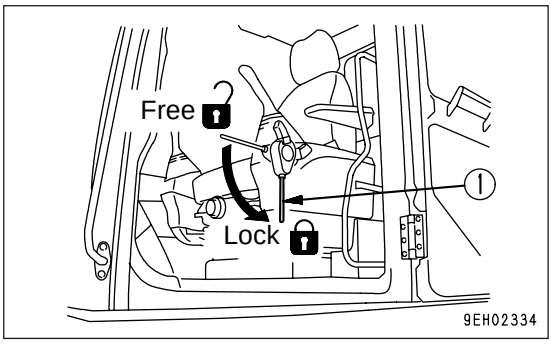

2. Set fuel control dial (2) at the low idling (MIN) position.
   If it is at the high idling (MAX) position, always change it to the low idling (MIN) position.

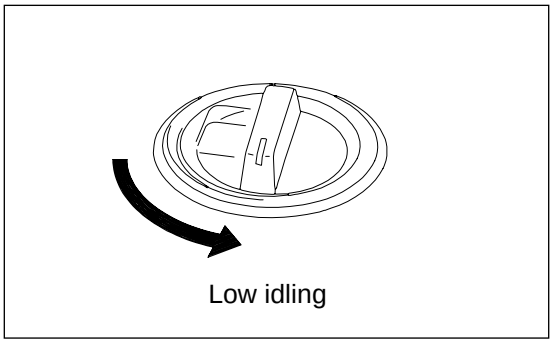

3. Turn the key in starting switch (3) to the START position. The engine will start.

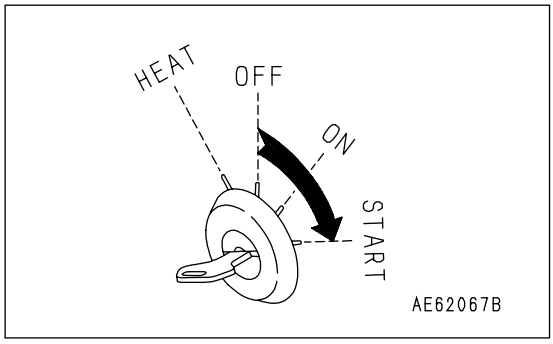

4. When the engine starts, release the key in starting switch (3).
   The key will return automatically to the ON position.

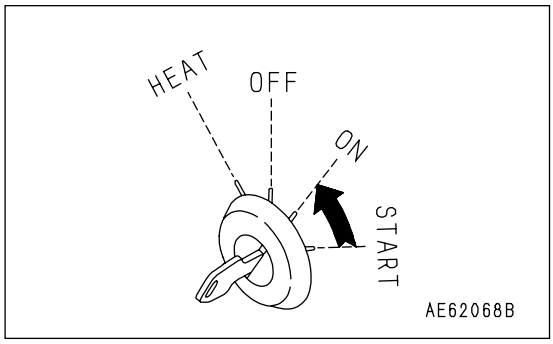

5. Even after the engine is started, do not touch the work equipment control levers or the travel pedals, while the engine hydraulic pressure monitor lamp is still lighted.

NOTICE
If the engine oil pressure monitor does not go out even after 4 to 5 seconds have passed, stop the engine immediately. Check the oil level, check for leakage of oil, and take the necessary action.

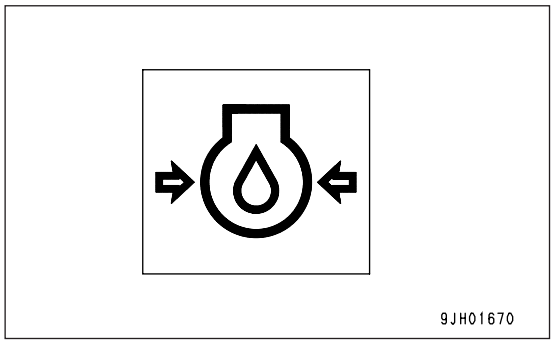

STARTING ENGINE IN COLD WEATHER

⚠ WARNING

- **Check that there are no persons or obstacles in the surrounding area, then sound the horn and start the engine.**
- **Never use starting aid fluids. They may cause explosions.**

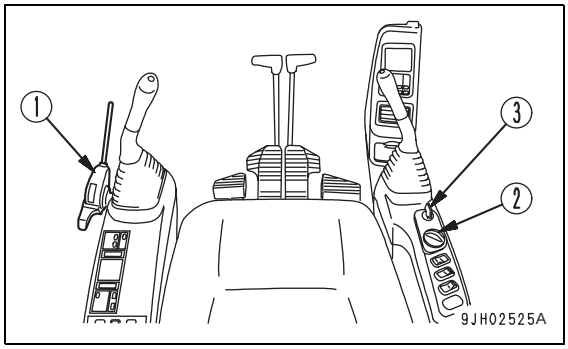

NOTICE
- **Before starting the engine, check that fuel control dial (2) is at the low idling (MIN) position.**
- **Do not keep the starting motor rotating continuously for more than 20 seconds.**
  If the engine fails to start, wait for about 2 minutes and repeat from Step 2.
- **If the fuel control dial is at the FULL position, the engine will accelerate suddenly and cause damage to the engine parts, so set it to an intermediate or low speed position.**

When starting in low temperatures, do as follows.

1. Check that safety lock lever (1) is in the LOCK position. If it is in the FREE position, the engine cannot be started.

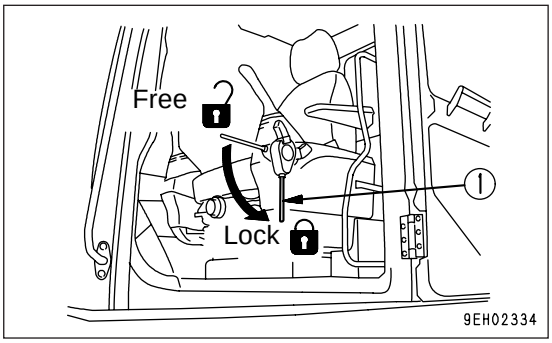

2. Set fuel control dial (2) at a low idling (MIN) position.
   Do not set fuel control dial (2) at the high idling (MAX) position.

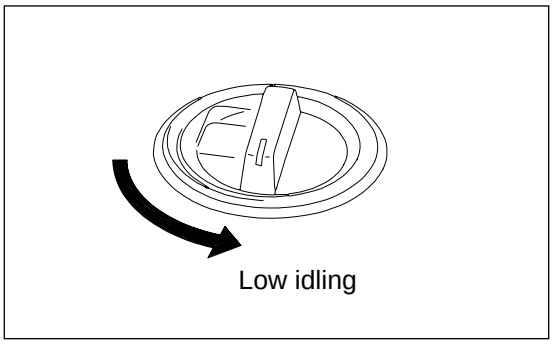

3. Hold the key in starting switch (3) at the HEAT position, and check that preheating monitor (4) lights up.
   After about 18 seconds, preheating monitor lamp (4) will flash to indicate that preheating is finished.

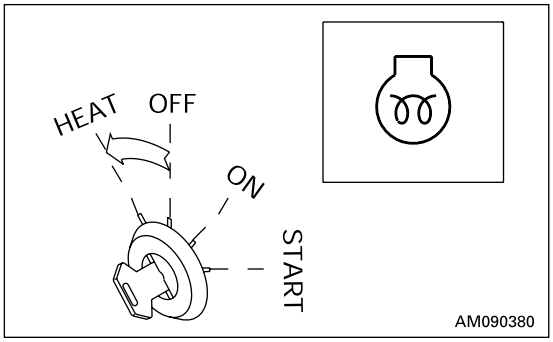

REMARK

- The monitors and gauges will also light up when the key is turned to the HEAT position. This is normal.
- If the temperature is low, the monitor screen may become dark or it may take time for the display to appear. This is normal.

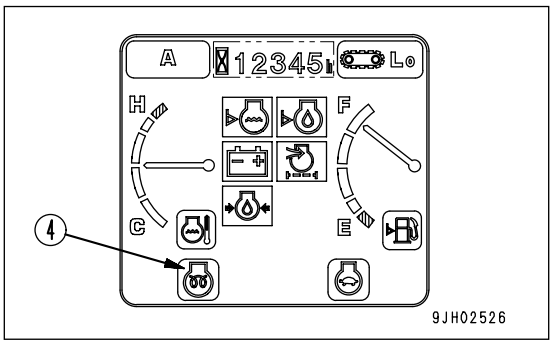

4. When preheating monitor (4) goes out, turn the key in starting switch (3) to the START position to start the engine.

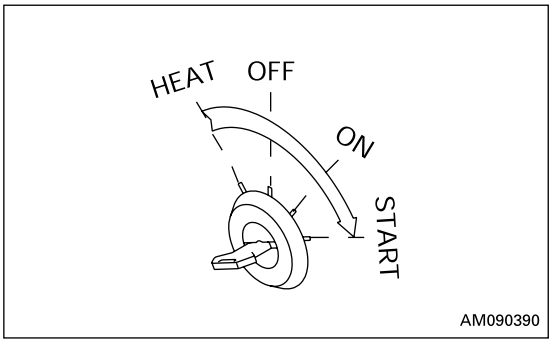

5. When the engine starts, release the key in starting switch (3).
   The key will return automatically to the ON position.

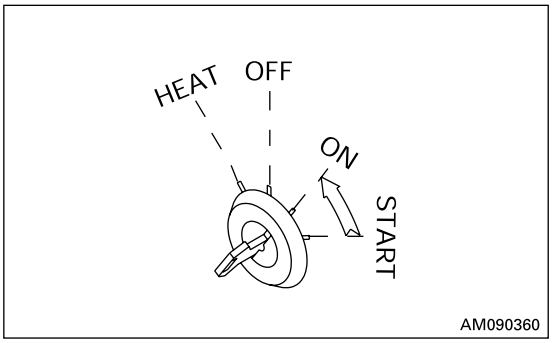

6. Even after the engine is started, do not touch the work equipment control levers and the travel pedals, while the engine hydraulic pressure monitor lamp is still lighted.

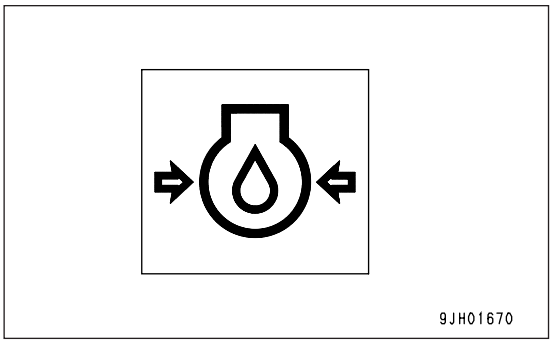

AFTER STARTING ENGINE

⚠ WARNING

- **Emergency stop**
  If there has been any abnormal actuation or trouble, turn the starting switch key to the OFF position.
- **If the work equipment is operated without sufficiently warming up the machine, the response of the work equipment to the movement of the control lever will be slow, and the work equipment may not move as the operator desires. Always, fully warm up the machine. Particularly in cold areas, be sure to carry out the warming-up operation fully.**

BREAKING-IN THE NEW MACHINE

⚠ CAUTION

Your Komatsu machine has been thoroughly adjusted and tested before shipment. However, operating the machine under severe conditions at the beginning can adversely affect the performance and shorten the machine life.
Be sure to break-in the machine for the initial 100 hours (as indicated by the service meter).
During break-in operations, follow the precautions described in this manual.

- Idle the engine for 5 minutes after starting it up.
- Avoid operation with heavy loads or at high speeds.
- Avoid sudden starts, sudden acceleration, sudden steering and sudden stops except in cases of emergency.

WARMING-UP OPERATION

NOTICE

- **When the hydraulic oil is at a low temperature, do not carry out operations or move the levers suddenly. Always carry out the warm-up operation. This will help to extend the machine life.**
- **Do not suddenly accelerate the engine before the warm-up operation is completed.**
  Do not run the engine at low or high idle continuously for more than 20 minutes. This will cause leakage of oil from the turbocharger oil supply piping. If it is necessary to run the engine at idle, apply a load from time to time or run the engine at a mid-range speed.

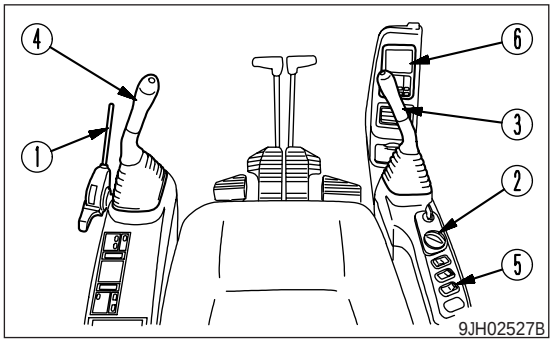

REMARK

- If the engine water temperature is above 30ºC, to protect the turbocharger, the engine speed does not rise for 2 seconds after starting, even if the fuel control dial is turned.
- If the hydraulic oil temperature is low, the hydraulic oil temperature monitor display will be white.

After starting the engine, do not immediately start operations. First, carry out the following operations and checks.

1. Turn fuel control dial (2) to the center position between LOW IDLING and HIGH IDLING and run the engine at medium speed for about 5 minutes with no load.

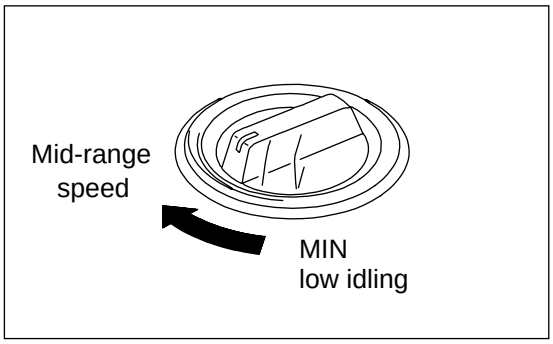

2. Set safety lock lever (1) to the FREE position, and raise the bucket from the ground.

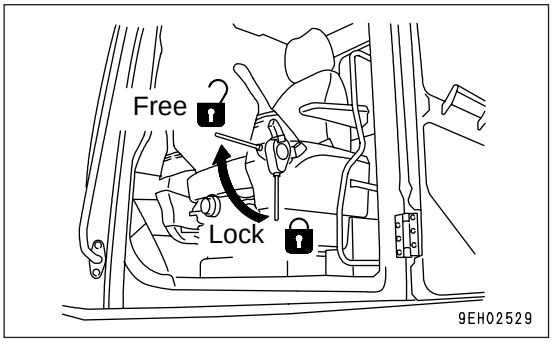

3. Operate bucket control lever (3) and arm control lever (4) slowly to move the bucket cylinder and arm cylinder to the ends of their stroke.

4. Carry out bucket and arm operation for 5 minutes at full stroke, alternating between bucket operation and arm operation at 30 second intervals.

REMARK
If swing lock switch (5) is set to the ON position, you can raise the oil temperature faster.

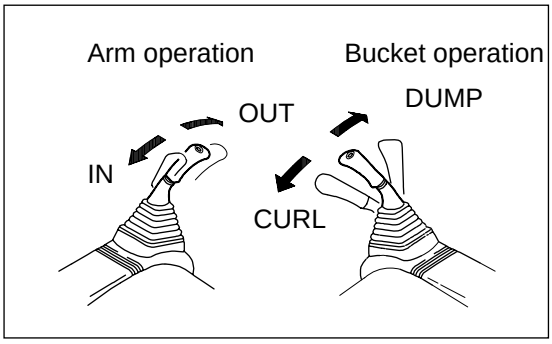

NOTICE
When the work equipment is retracted, take care that it does not interfere with the machine body or ground.

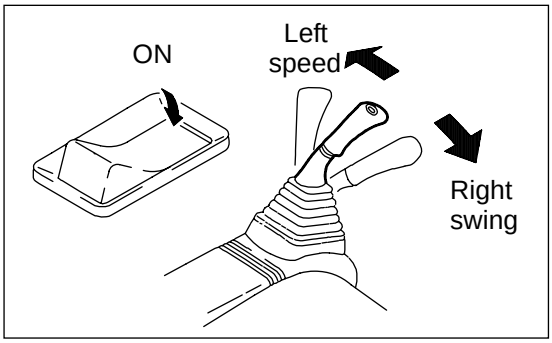

5. After carrying out the warming-up operation, check that all the gauges on machine monitor (6) and the caution lamps are in the following conditions.
   - Radiator water level monitor (7): OFF
   - Engine oil level monitor (8): OFF
   - Charge monitor (9): OFF
   - Fuel level monitor (10): Green display
   - Engine water temperature monitor (11): Green display
   - Engine oil pressure monitor (12): OFF
   - Engine water temperature gauge (13): Indicator in black range
   - Fuel gauge (14): Indicator in black range
   - Preheating monitor (15): OFF
   - Air cleaner clogging monitor (16): OFF
   - Hydraulic oil temperature gauge (17): Indicator in black range
   - Hydraulic oil temperature monitor (18): Green display

6. Check that there is no abnormal exhaust gas color, noise, or vibration. If any abnormality is found, repair it.

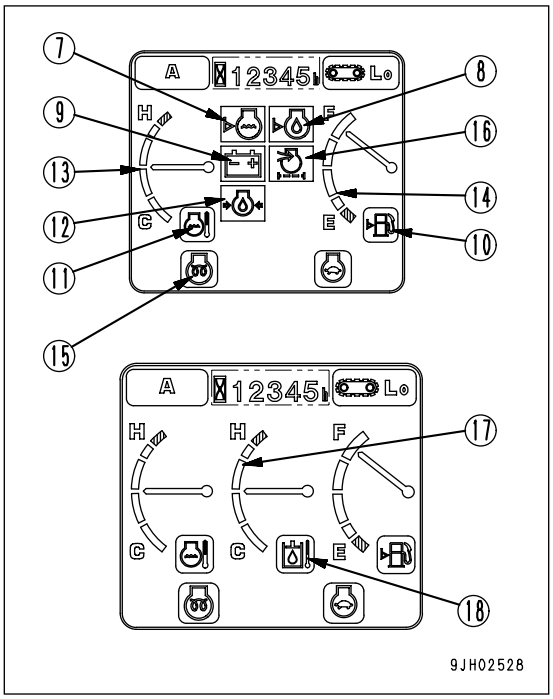

7. If air cleaner clogging monitor (16) is lit up, clean or replace the element immediately.
   For details of the method of cleaning the element, see "CHECK, CLEAN AND REPLACE AIR CLEANER ELEMENT (PAGE 225)".

8. Use working mode switch (19) on machine monitor (6) to select the working mode to be used.

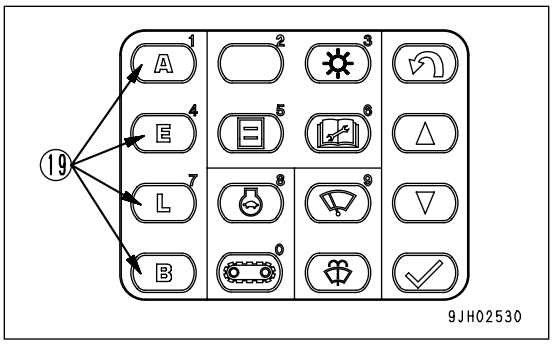

q Working mode monitor display

1) A mode
For heavy-load operations

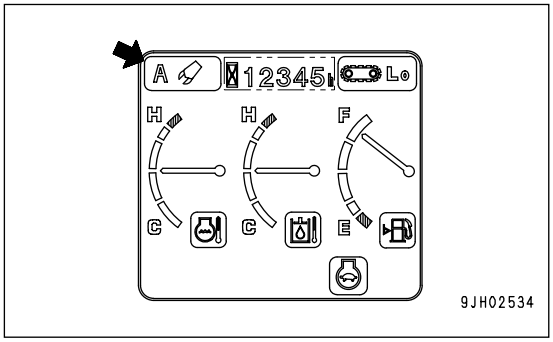

2) E mode
For operations with emphasis on fuel economy

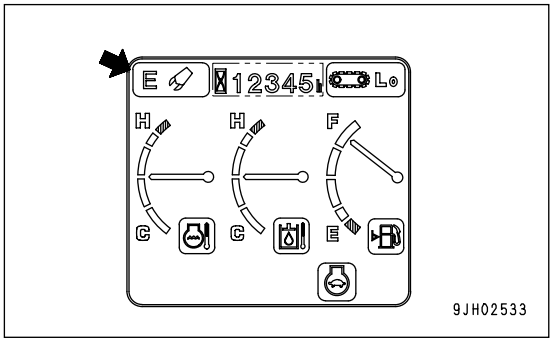

3) L mode
For lifting operations

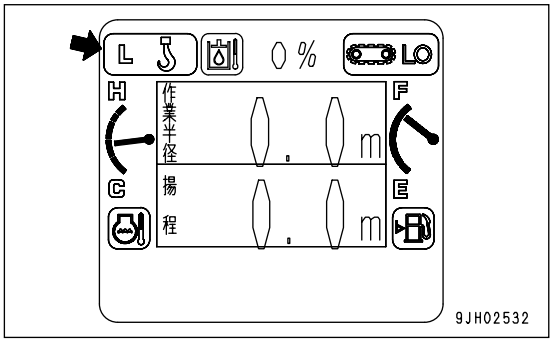

4) B mode
For breaker operations

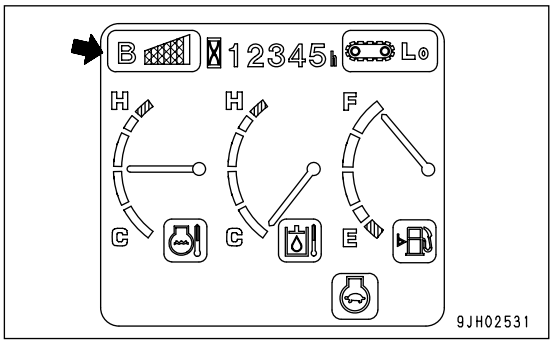

IN COLD AREAS (AUTOMATIC WARMING-UP OPERATION)

When starting the engine in cold areas, carry out the automatic warming-up operation after starting the engine.

When the engine is started, if the engine water temperature is low (below 30°C), the warming-up operation is carried out automatically.

The automatic warming-up operation is canceled if the engine water temperature reaches the specified temperature (30°C) or if the warming-up operation is continued for 10 minutes. If the engine water temperature or hydraulic oil temperature are low after the automatic warming-up operation, warm the engine up further as follows.

NOTICE

- **Never carry out operations or operate the levers suddenly when the hydraulic oil is still at low temperature. Always continue the warming-up operation until the work equipment monitor display is green. This will extend the service life of the machine.**
- **Do not suddenly accelerate the engine before the warming-up operation is completed.**
  Do not run the engine at low high idle continuously for more than 20 minutes. This will cause leakage of oil from the turbocharger oil supply piping. If it is necessary to run the engine at idle, apply a load from time to time or run the engine at a mid-range speed.

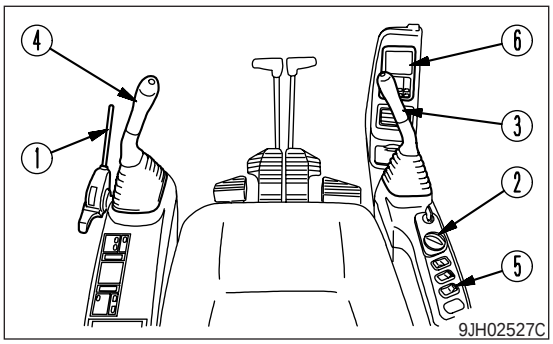

REMARK

If the hydraulic oil temperature is low, the hydraulic oil temperature monitor display will be white.

1. Turn fuel control dial (2) to the medium speed position.

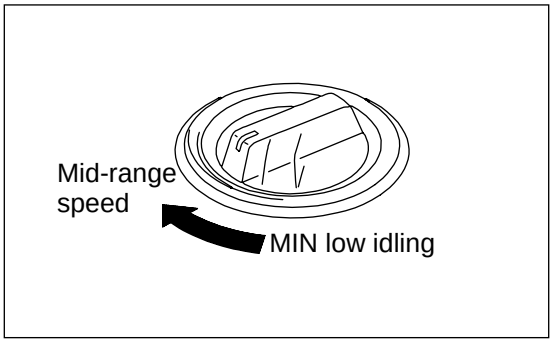

2. Set safety lock lever (1) to the FREE position and raise the bucket from the ground.

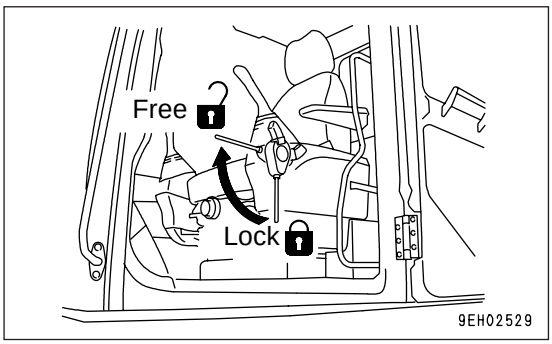

3. Operate bucket (3) and arm (4) control levers slowly to move the bucket and arm cylinder to the ends of their stroke.

4. Operate the bucket and the arm fully, in turn for 30 seconds, for 5 minutes.

REMARK
Turn swing lock switch (5) ON (ACTUATED) and operate the lever to make the oil temperature rise more quickly.

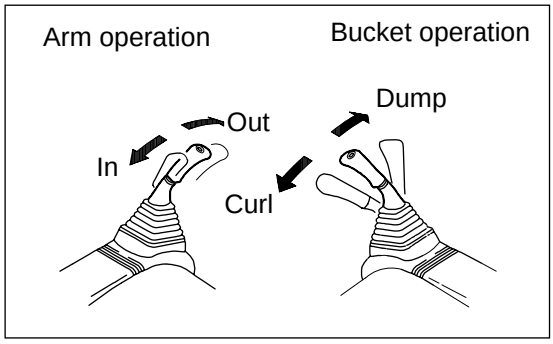

NOTICE
When the work equipment is retracted, take care that it does not interfere with the machine body or ground.

5. After carrying out the warming-up operation, check that all the gauges on machine monitor (6) and the caution lamps are in the following conditions.
   - Q Radiator water level monitor (7): OFF
   - Q Engine oil level monitor (8): OFF
   - Q Charge monitor (9): OFF
   - Q Fuel level monitor (10): Green display
   - Q Engine water temperature monitor (11): Green display
   - Q Engine oil pressure monitor (12): OFF
   - Q Engine water temperature gauge (13): Indicator in black range
   - Q Fuel gauge (14): Indicator in black range
   - Q Preheating monitor (15): OFF
   - Q Air cleaner clogging monitor (16): OFF
   - Q Hydraulic oil temperature gauge (17): Indicator in black range
   - Q Hydraulic oil temperature monitor (18): Green display

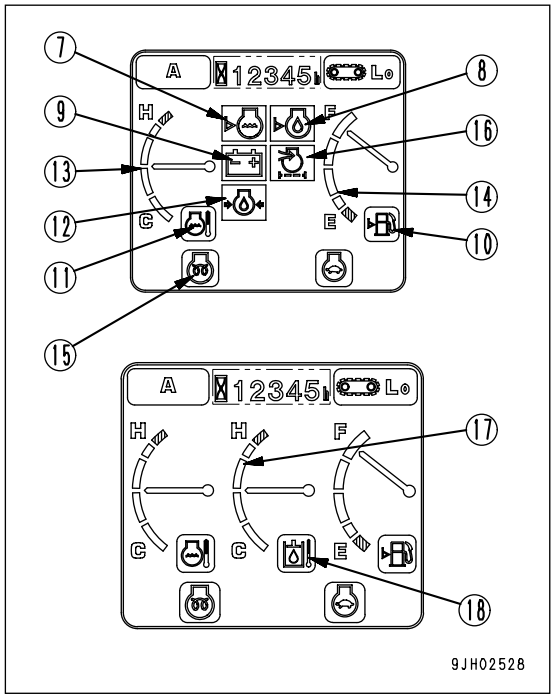

6. Check that there is no abnormal exhaust gas color, noise, or vibration. If any abnormality is found, repair it.

7. If air cleaner clogging monitor (16) is lighted up, clean or replace the element immediately.
   For details of the method of cleaning the element, see "CHECK, CLEAN AND REPLACE AIR CLEANER ELEMENT (PAGE 225)".

8. Turn fuel control dial (2) to the full speed (MAX) position and carry out the operation is Step 4 for 3 to 5 minutes.

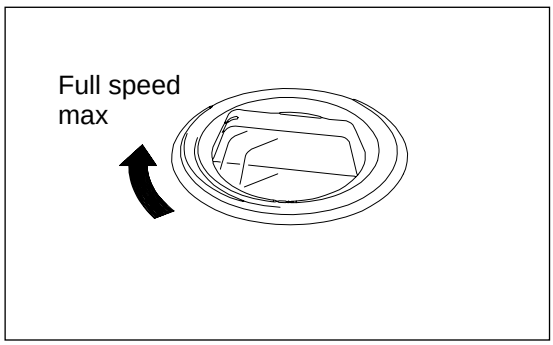

9. Repeat the following operation 3 to 5 times and operate slowly.
   Boom operation RAISE ↔ LOWER
   Arm operation IN ↔ OUT
   Bucket operation CURL ↔ DUMP
   Swing operation LEFT ↔ RIGHT
   Travel (Lo) operation FORWARD ↔ REVERSE

REMARK
In the above operation is not carried out, there may be a delay in response when starting or stopping each actuator, so continue the operation until it becomes normal.

10. Use working mode switch (19) on machine monitor (6) to select the working mode to be used.

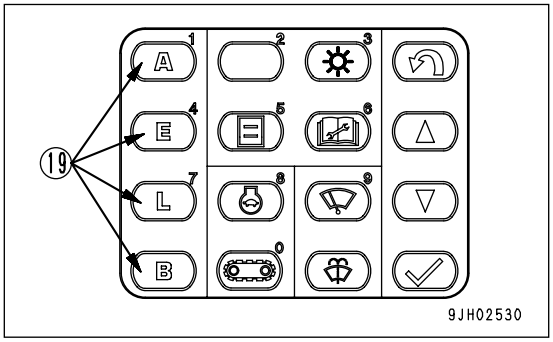

q Working mode monitor display

1) A mode
For heavy-load operations

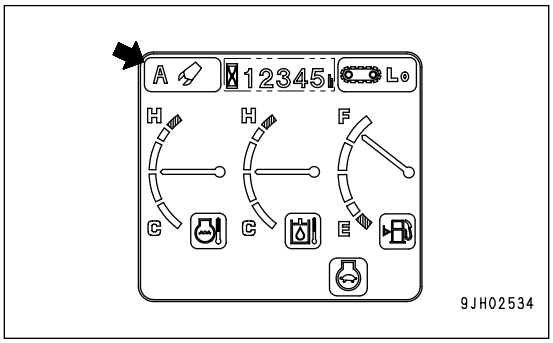

2) E mode
For operations with emphasis on fuel economy

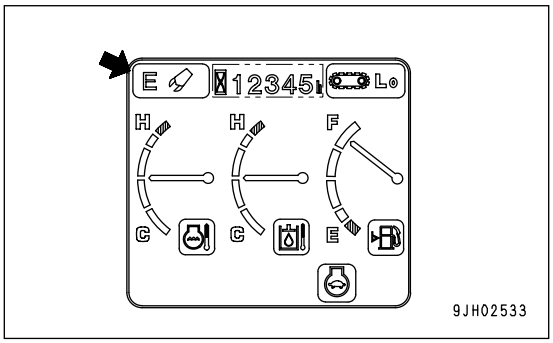

3) L mode
For lifting operations

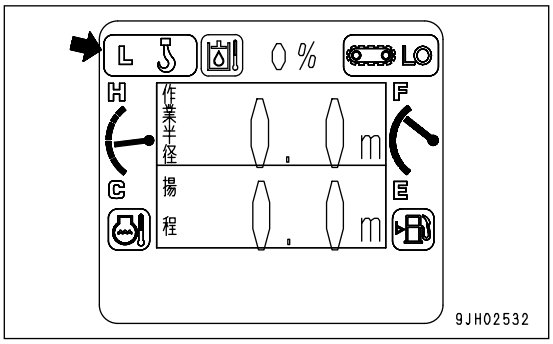

4) B mode
For breaker operations

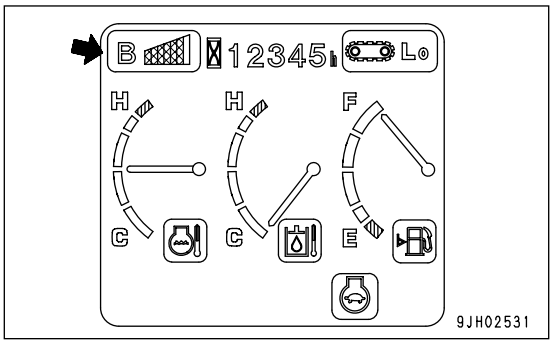

NOTICE

Canceling automatic warming-up operation

If it becomes necessary in an emergency to lower the engine speed to low idle, cancel the automatic warming-up operation as follows.

1) Turn fuel control dial (2) to the full speed (MAX) position and hold it for 3 seconds.

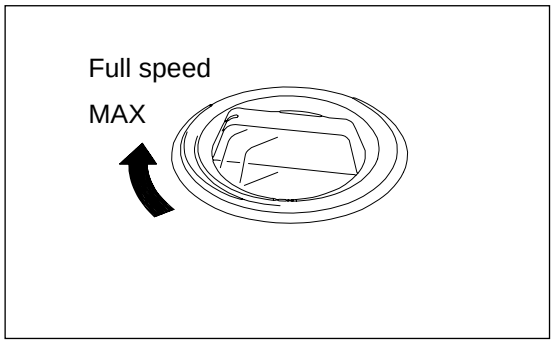

2) When fuel control dial (2) is returned to the low idling (MIN) position, the engine speed will drop.

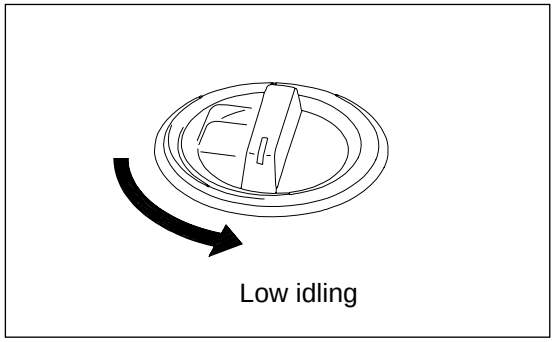

STOPPING THE ENGINE

NOTICE
If the engine is abruptly stopped before it has cooled down, engine life may be greatly shortened. Consequently, do not abruptly stop the engine apart from an emergency.

In particular, if the engine has overheated, do not abruptly stop it but run it at medium speed to allow it to cool gradually, then stop it.

1. Run the engine at low idling speed for about 5 minutes to allow it to gradually cool down.

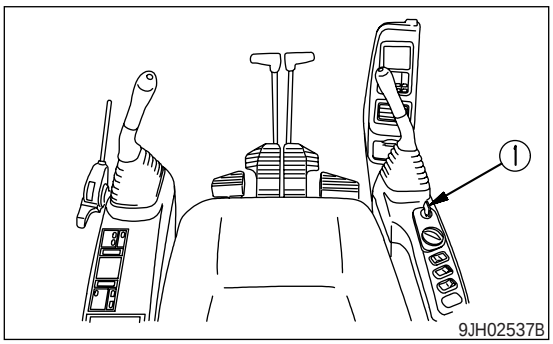

2. Turn the key in starting switch (1) to the OFF position and stop the engine.
3. Remove the key from starting switch (1).

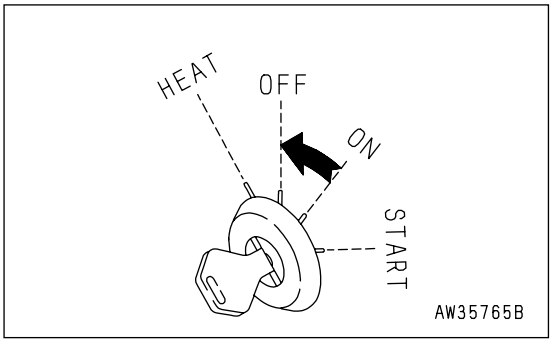

CHECK AFTER SHUTTING OFF ENGINE

1. Walk around the machine and check the work equipment, machine exterior, and undercarriage, and check for leakage of oil or water. If any abnormalities are found, repair them.
2. Fill the fuel tank.
3. Check the engine compartment for paper and debris. Clean out any paper and debris to avoid a fire hazard.
4. Remove any mud affixed to the undercarriage.

REMARK
After stopping the engine, if the starting switch is turned to the ON or START position within approx. 10 seconds, to start the engine again, the monitor display is not reset. The previous screen (before the starting switch was turned OFF) is displayed.

MACHINE OPERATION

PREPARATIONS FOR MOVING THE MACHINE OFF

⚠ WARNING

- **Before operating the steering levers, check the direction of the track frame.**
  If the sprocket is at the front, the operation of the travel levers is reversed.
- **When moving off, check that the area around the machine is safe, and sound the horn before moving.**
- **Do not allow anyone in the area around the machine.**
- **Remove all obstacles from the travel path of the machine.**
- **The rear of the machine is a blind spot, so be particularly careful when travel in reverse.**
- **If the lever is moved inside the deceleration range, engine speed will rise suddenly. Operate the levers carefully.**
- **For machines equipped with a travel alarm, check that the warning equipment works properly.**

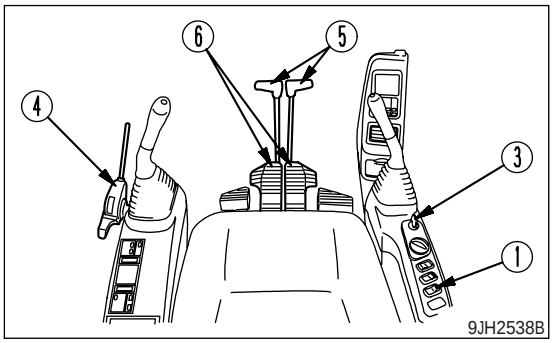

1. Set swing lock switch (1) to the ON (actuated) position and confirm that swing lock monitor lamp (2) lights up.

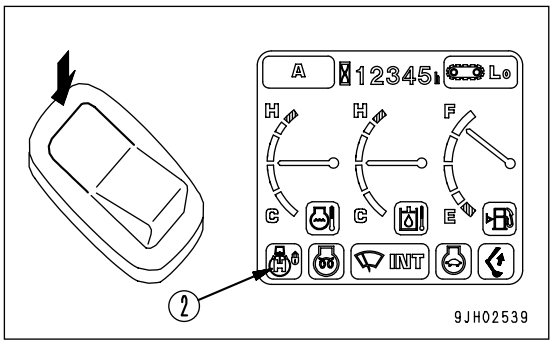

2. Turn fuel control dial towards the full speed position to increase the engine speed.

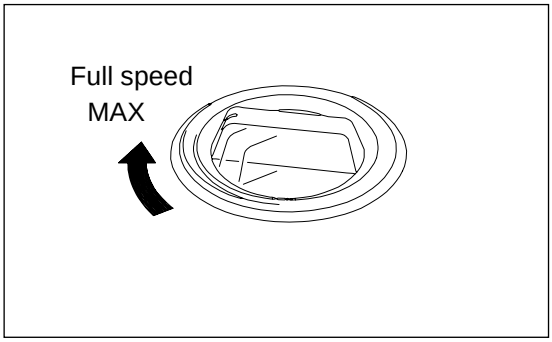

MOVING MACHINE FORWARD

1. Set safety lock lever (4) in the FREE position, fold the work equipment, and raise it 40 to 50 cm (16 to 20 in) from the ground.

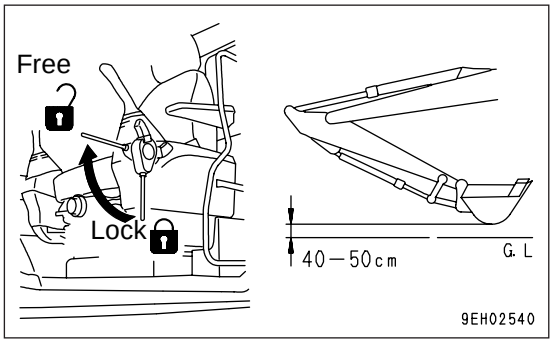

2. Operate right and left travel levers (5) or right and left travel pedals (6) as follows.

q When the sprocket is at the rear of the machine

Push travel levers (5) forward slowly or depress the front part of travel pedals (6) slowly to move the machine off.

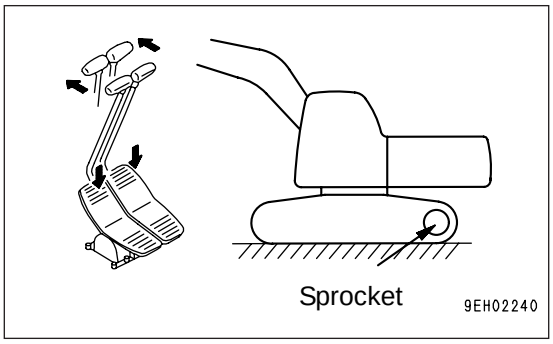

q When the sprocket is at the front of the machine

Pull travel levers (5) backward slowly or depress the rear part of travel pedals (6) slowly to move the machine off.

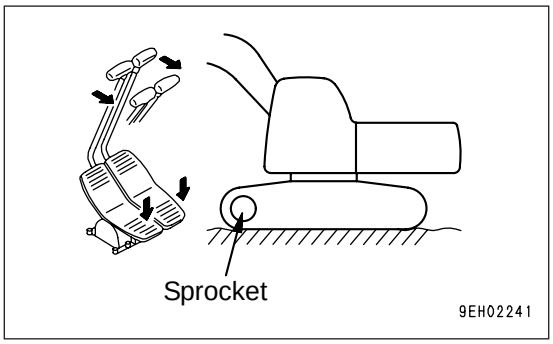

3. For machines equipped with a travel alarm, check that the alarm sounds. If the alarm does not sound, please contact your Komatsu distributor for repairs.

MOVING MACHINE BACKWARD

1. Set safety lock lever (4) in the FREE position, fold the work equipment, and raise it 40 to 50 cm from the ground.

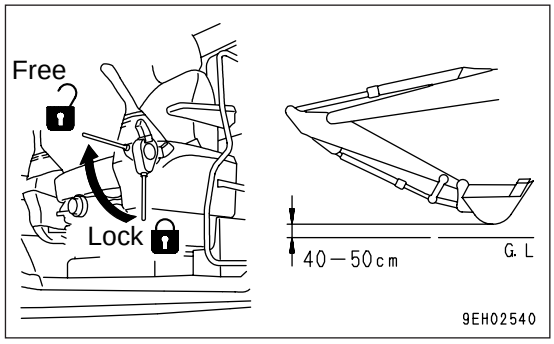

2. Operate right and left travel levers (5) or right and left travel pedals (6) as follows.

q When the sprocket is at the rear of the machine

Pull travel levers (5) backward slowly or depress the rear part of travel pedals (6) to move the machine off.

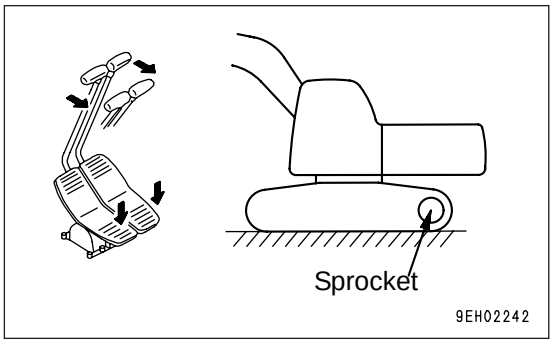

q When the sprocket is at the front of the machine

Push levers (5) forward slowly or depress the front part of pedals (6) to move the machine off.

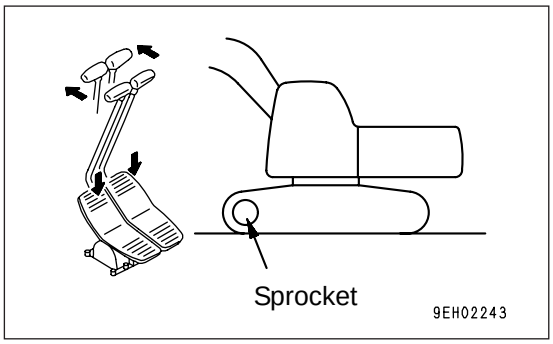

3. For machines equipped with a travel alarm, check that the alarm sounds. If the alarm does not sound, please contact your Komatsu distributor for repairs.

REMARK

In cold temperatures, if the machine travel speed is not normal, carry out the warming-up operation thoroughly.
In addition, if the undercarriage is clogged with mud and the machine travel speed is not normal, remove the soil and mud from the undercarriage.

STOPPING MACHINE

⚠ WARNING

Avoid stopping suddenly. Give yourself ample room when stopping.

1. Put the left and right travel levers (1) in the neutral position, then stop the machine.

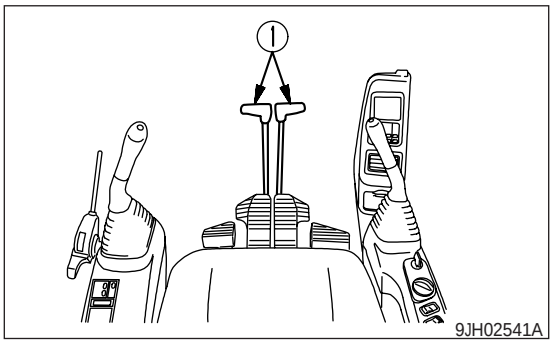

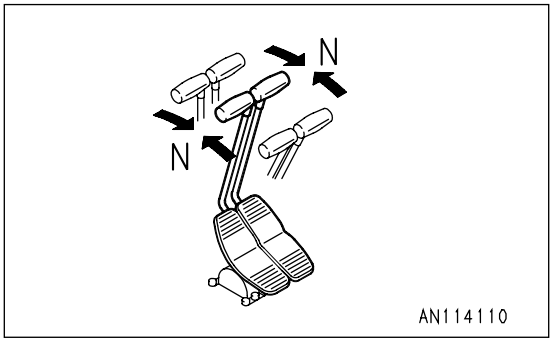

STEERING THE MACHINE

Steering

⚠ WARNING

Before operating the travel levers, check the position of the sprocket. If the sprocket is at the front, the operation of the travel levers is reversed.

Use the travel levers to change direction.

Avoid sudden changes of direction as far as possible. In particular, when carrying out counter-rotation (spin turn), stop the machine first before turning.

Operate the travel levers (1) as follows.

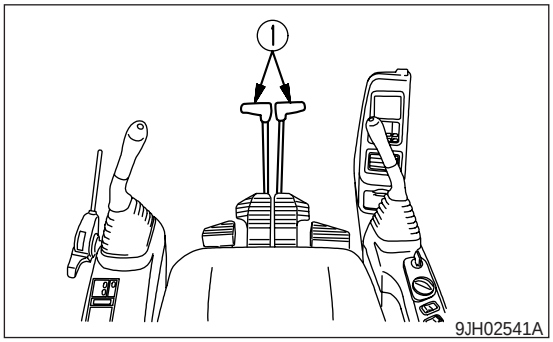

Steering the Machine when Stopped

When turning to the left:

Push the right travel lever forward to turn to the left when traveling forward; and pull it back to turn left when traveling in reverse.

REMARK
When turning to the right, operate the left travel lever in the same way.

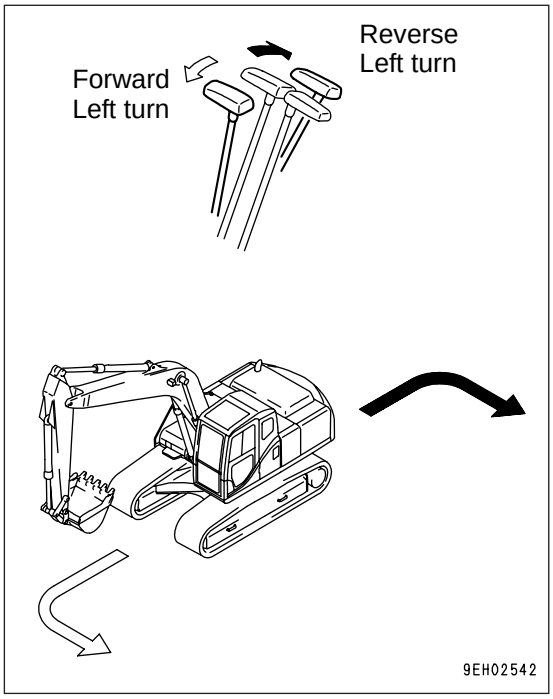

Steering When Traveling (Left and Right Travel levers Both Operated in Same Direction)

When turning to the left:

If the left travel lever is returned to the neutral position, the machine will turn to the left.

REMARK
When turning to the right, operate the right travel lever in the same way.

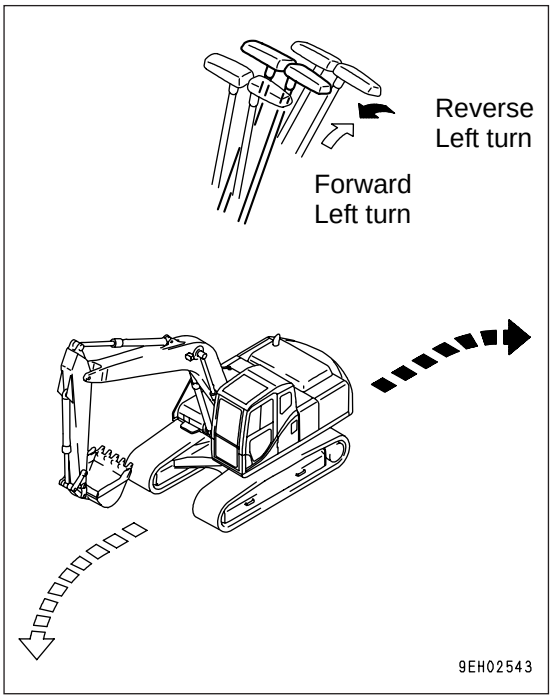

Counter-rotation Turn (Spin Turn)

When using counter-rotation (spin turn) to turn left, pull the left travel lever back and push the right travel lever forward.

REMARK
When using counter-rotation to turn right, pull the right travel lever back and push the left travel lever forward.

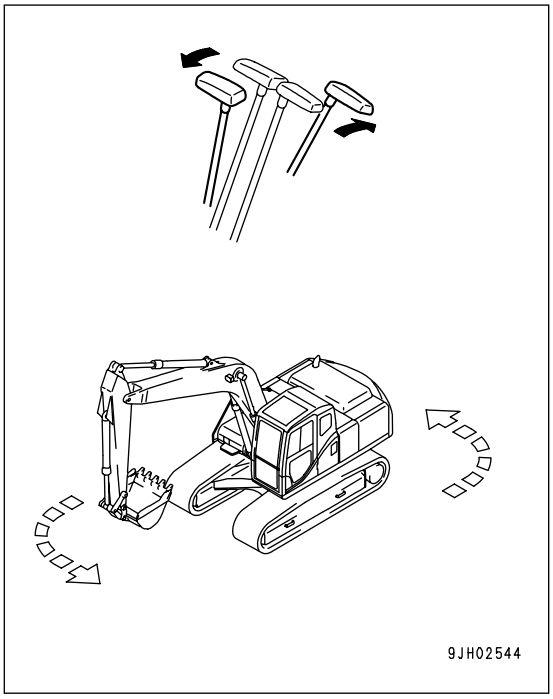

SWINGING

⚠ WARNING

- **The rear of the machine extends outside the track width. Check that the surrounding area is safe before swinging the upper structure.**
- **Check that swing lock monitor is not lit up.**
- **If the swing control lever is operated quickly, the upper structure will move quickly; if it is operated slowly, the upper structure will move slowly.**

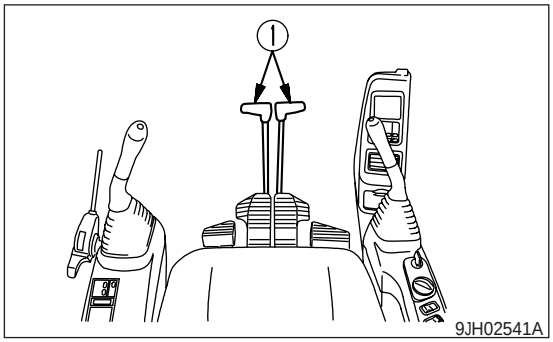

1. Before starting the swing operation, turn swing lock switch (1) OFF and check that swing lock monitor (2) has gone out.

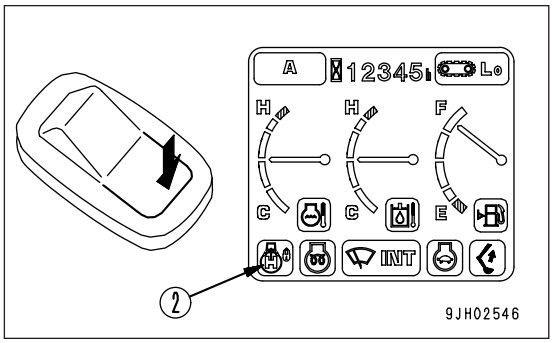

2. Operate left work equipment control lever (3) to operate the swing.
   At the N position, the spring brake is applied.

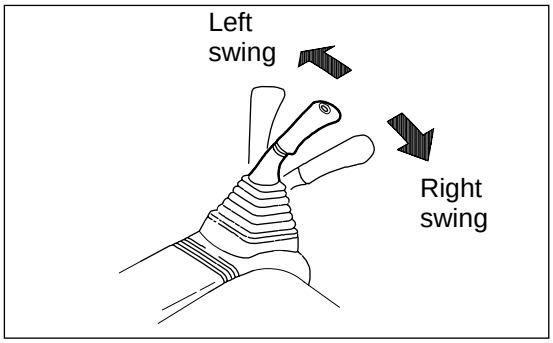

3. When not using the swing, turn swing lock switch (1) ON. Check that swing lock monitor (2) lights up.

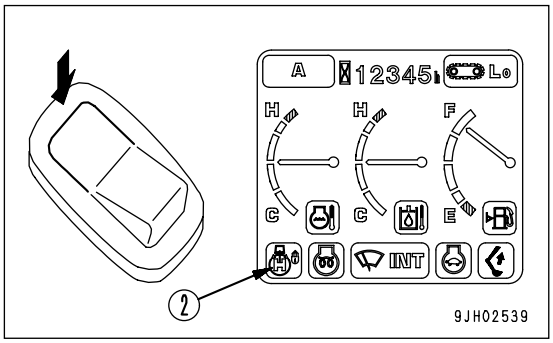

WORK EQUIPMENT CONTROLS AND OPERATIONS

⚠ WARNING

- **If the lever is operated when the auto-deceleration is being actuated, the engine speed will suddenly rise, so be careful when operating the lever.**
- **If the work equipment control lever is operated quickly, the work equipment will move quickly; if the lever is operated slowly, the work equipment will move slowly.**

The work equipment is operated by the left and right work equipment control levers. The left work equipment control lever operates the arm and swing, and the right work equipment control lever operates the boom and bucket.

The movements of the lever and work equipment are as shown in the diagrams on the right. When the levers are released, they automatically return to the neutral position and the work equipment is held in place

- When the machine is at a standstill, and the work equipment levers are put in neutral, the engine speed is kept at medium speed due to the function of the auto-deceleration, even if the fuel control dial is set at the MAX position.

REMARK
If the levers are operated within 15 seconds after stopping the engine, the work equipment can still be lowered to the ground. In addition, the levers can be operated to release any remaining pressure inside the hydraulic cylinder circuit and the boom can be lowered after loading the machine onto a trailer.

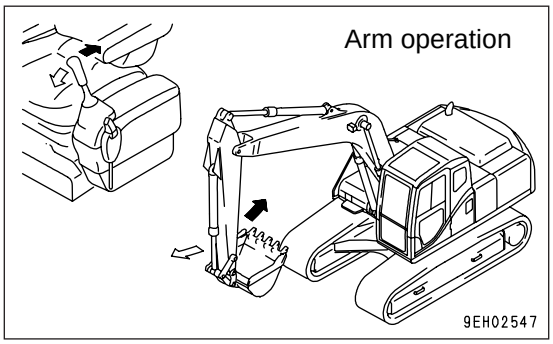

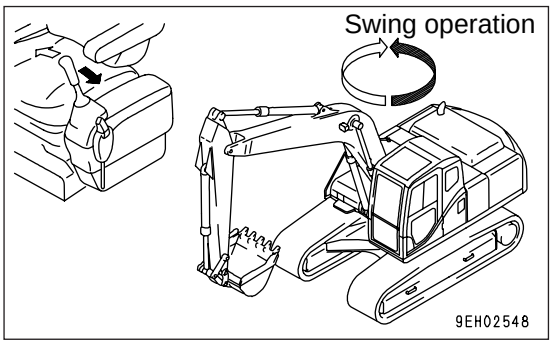

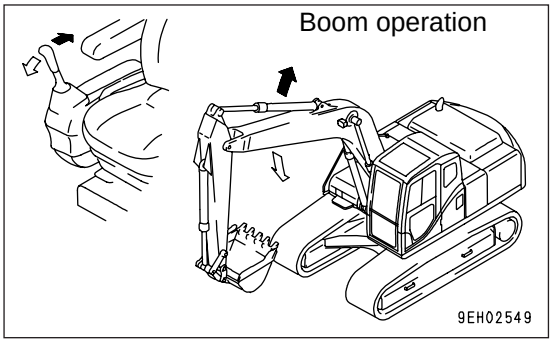

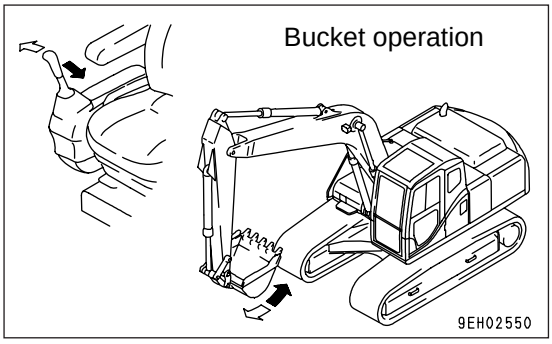

OPERATING WORKING MODE

Working mode
By using the working mode selector switch to select a working mode that matches the operating condition, it is possible to carry out operations efficiently.

Use the following procedure to make effective use of each working mode.

When the starting switch is turned ON, the working mode is set to A mode (digging).

Use the working mode switch to set the most efficient mode to match the type of work.

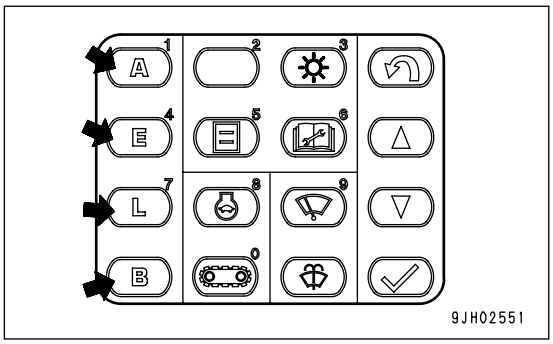

Working mode	Applicable operations
A mode	Normal digging, loading operations (Operations with emphasis on productivity)
E mode	Normal digging, loading operations
L mode	When positioning work equipment exactly (lifting operations)
B mode	Breaker operations

NOTICE
If breaker operations are carried out in the heavy digging mode, the hydraulic equipment may be damaged. Operate the breaker only in B mode.

ONE-TOUCH POWER MAX. SWITCH
The one-touch power max. switch can be used during operations to increase the power. Make effective use of this function whenever necessary in combination with the working mode.

1. Press top right hand switch on the left knob switch and keep it pressed. The power is increased for up to 8.5 seconds, while the switch is being pressed. The increased power is automatically canceled after 8.5 seconds.
   Q This function is not actuated when the working mode is set to L mode or B mode.

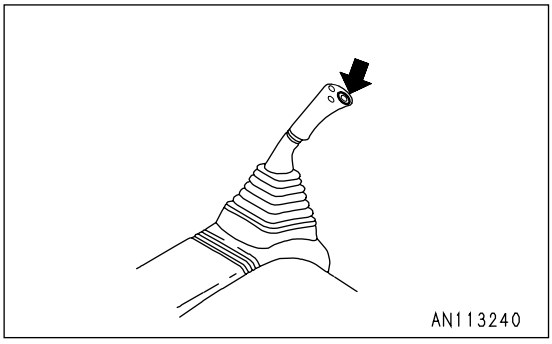

PROHIBITED OPERATIONS

⚠ WARNING

- **If it is necessary to operate the work equipment control lever when the machine is traveling, be extremely careful when operating.**
- **If any lever is operated when the auto-deceleration is being actuated, the engine speed will suddenly increase, so be careful when operating.**

OPERATIONS USING SWING FORCE

Do not use the swing force to compact soil or break objects. This is not only dangerous, but will also markedly reduce the life of the machine.

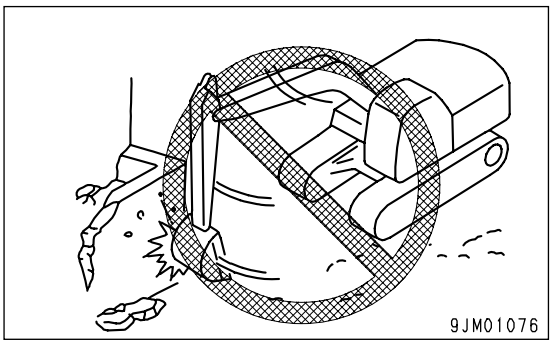

OPERATIONS USING TRAVEL FORCE

Do not dig the bucket into the ground and use the travel force to carry out excavation. This will damage the machine or work equipment.

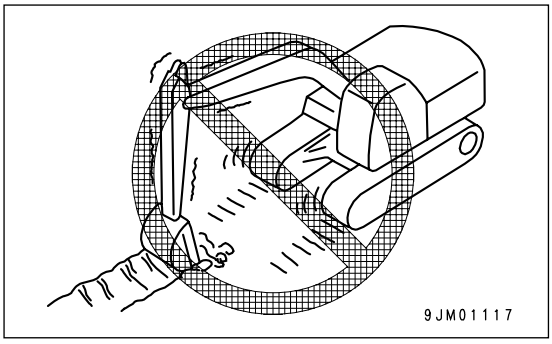

OPERATIONS USING HYDRAULIC CYLINDER STROKE ENDS

If the cylinder is used when the cylinder rod is at either end of its stroke during operations, the external force will cause impact on the work equipment. This will damage the hydraulic cylinders. Avoid carrying out operations with the hydraulic cylinder fully retracted or fully extended.

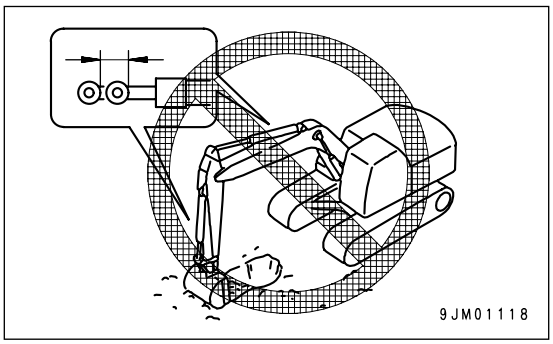

OPERATIONS USING BUCKET DROPPING FORCE

Do not use the dropping force of the machine for digging, or use the dropping force of the bucket as a pickax, breaker, or pile driver.

This will markedly reduce the life of the machine.

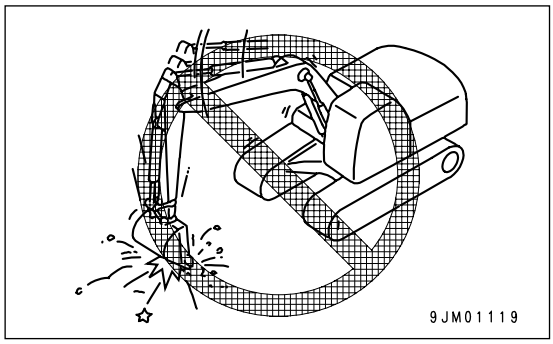

OPERATIONS USING MACHINE DROPPING FORCE

Do not use the dropping force of the machine for digging.

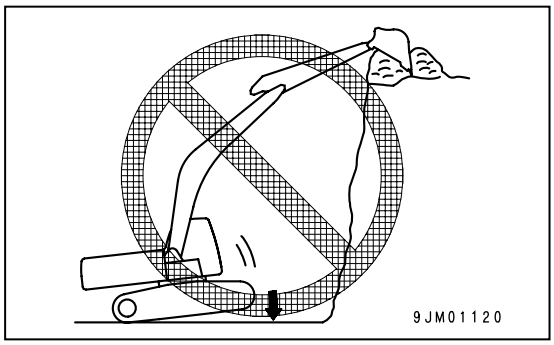

DIGGING HARD ROCKY GROUND

It is better to excavate hard rocky ground after breaking it up by some other means. This will not only reduce damage to the machine but make for better economy.

SUDDEN LEVER SHIFTING HIGH SPEED TRAVEL

(1) Never carry out sudden lever shifting as this may cause sudden starting.

(2) Avoid sudden lever shifting from forward to reverse (or from reverse to forward).

(3) Avoid sudden lever shifting change such as sudden stopping from near top speed (lever release operation).

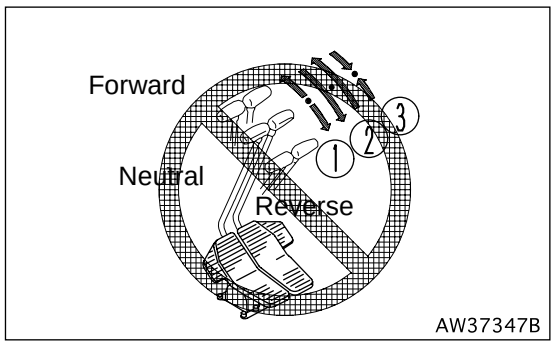

GENERAL OPERATION INFORMATION

TRAVELLING

When travelling over obstacles such as boulders or tree stumps, the machine (in particular, the undercarriage) is subjected to a large shock. Reduce the travel speed and travel over the obstacle keeping it at the center of the tracks. Remove such obstacles if possible or avoid traveling over them.

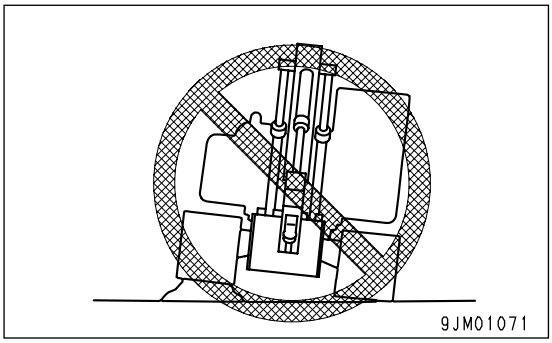

HIGH SPEED TRAVEL

On uneven roadbeds such as rock beds or uneven roads with large locks, travel at Lo speed. When Hi-speed traveling, set the idler in the forward position.

q To switch the travel speed, press travel speed selector switch (1). The travel speed is displayed as Lo, Mi, or Hi on the monitor display.

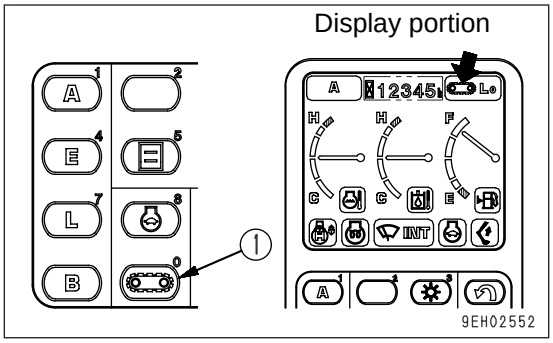

PERMISSIBLE WATER DEPTH

⚠ CAUTION

When driving the machine out of water, if the angle of the machine exceeds 15º, the rear of the upper structure will go under water, and water will be thrown up by the radiator fan. This may cause the fan to break.
Be extremely careful when driving the machine out of water.

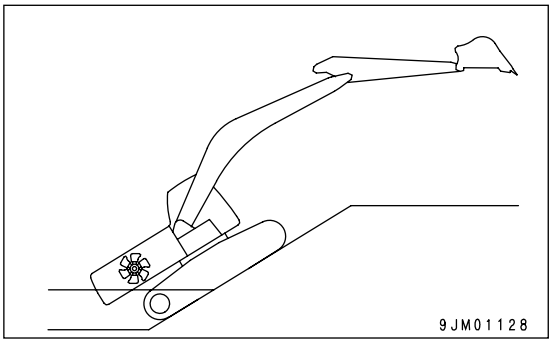

Do not drive the machine in water deepen than of the center of carrier roller (1).

Supply grease to the parts which have been under water for a long time until the used grease is pushed out of the bearings (around the bucket pin, in particular).

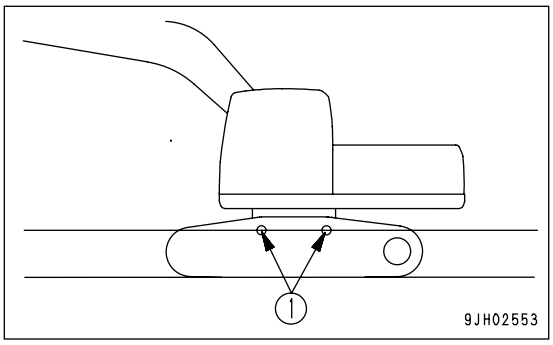

TRAVELLING ON SLOPES

⚠ WARNING

When travelling, raise the bucket approx. 20 to 30 cm from the ground.

Do not travel downhill in reverse.

- **When traveling over ridges or other obstacles, keep the work equipment close to the ground and travel slowly.**
- **Never turn on slopes or travel across slopes.**
  Always go down to a flat place to perform these operations. It may be longer, but it will ensure safety.
- **Always operate or travel in such a way that it is possible to stop safely at any time if the machine slips or becomes unstable.**
- **Turning or operating the work equipment when working on slopes may cause the machine to lose it balance and turn over. Avoid such operations.**
  It is particularly dangerous to swing downhill when the bucket is loaded.
  If such operations have to be carried out, pile soil to make a platform on the slope so that the machine can be kept horizontal when operating.
- **Do not travel up or down steep slopes. There is danger that the machine may turn over.**
- **When travelling uphill, if the shoes slip or it is impossible to travel uphill using only the force of the tracks, do not use the pulling force of the arm to help the machine traveling uphill. There is danger that the machine may turn over.**

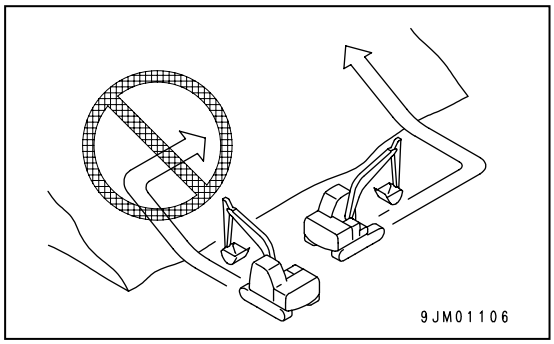

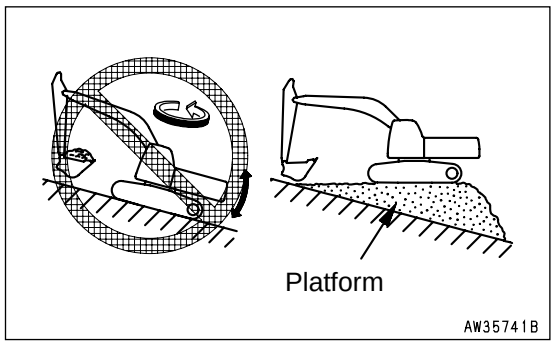

1. When travelling down steep hills, use the travel lever and fuel control lever to keep the travel speed low. When traveling down a steep hill of more than 15º, set the work equipment to the posture shown in the diagram on the right, and lower the engine speed.

REMARK
Travel down hills with the sprocket side down.
If the machine travels down with the sprocket side up, the track tends to become loose, and that can cause skipping pitches.

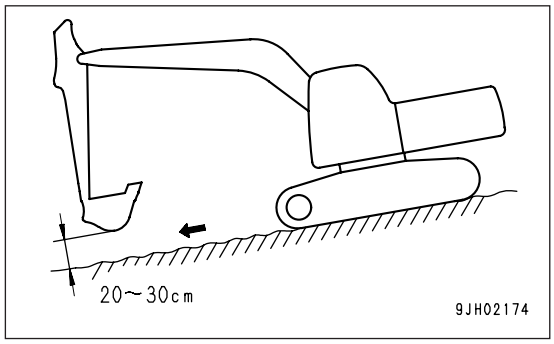

2. When travelling up a steep hill of more than 15º, set the work equipment to the posture shown in the diagram on the right.

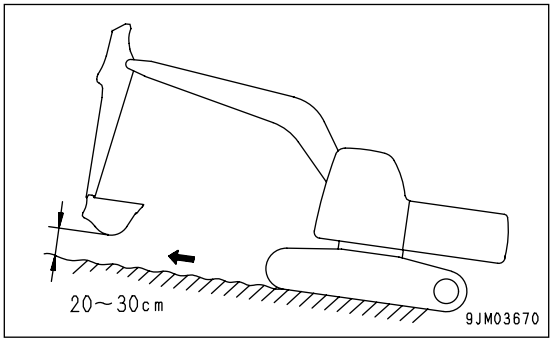

q When travelling up steep slopes, to ensure balance, extend the work equipment to the front, keep it raised 20 - 30 cm from the ground surface, and travel at low speed.

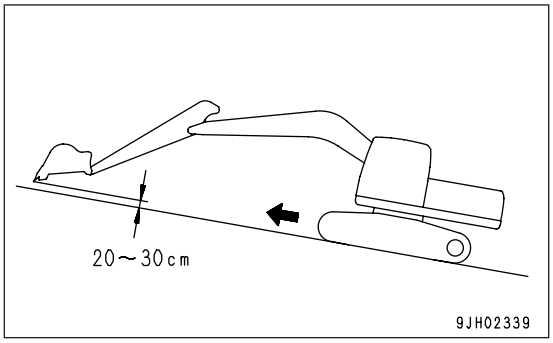

TRAVELLING DOWNHILL

To brake the machine during downhill runs, put the travel lever in the neutral position. This will cause the brake to be automatically applied.

ENGINE STOPPED ON SLOPE

If the engine stops when traveling uphill, move all the levers to the neutral position, then start the engine again.

PRECAUTIONS ON SLOPES

q If the engine stops when the machine is on a slope, never use the left work equipment control lever to carry out swing operations. The upper structure will swing under its own weight.

q Be extremely careful when opening or closing the door on slopes. The weight of the door may cause the door to open or close suddenly.
Always set the door so that it is firmly locked in position, open or closed.

ESCAPE FROM MUD

Always operate carefully to avoid getting stuck in mud. If the machine does get stuck in mud, do as follows to get the machine out.

STUCK ONE SIDE OF TRACK

NOTICE

When using the boom or arm to raise the machine, always have the bottom of the bucket in contact with the ground. (Never push with the teeth). The angle between the boom and arm should be 90º to 110º. The same applies when using the inverting bucket.

When only one side is stuck in mud, use the bucket to raise the track, then lay boards or logs and drive the machine out. If necessary, also put a board under the bucket.

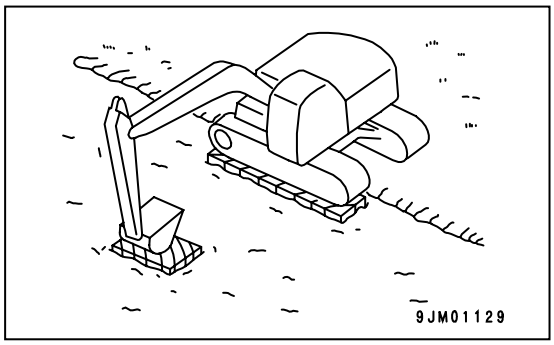

STUCK BOTH SIDES OF TRACKS

If the tracks on both sides are stuck in mud and the machine slips and cannot move, use the procedure given above to lay logs or timber. Dig the bucket into the ground at the front, operate the arm in the same way as when digging, and set the travel lever to FORWARD to pull the machine out.

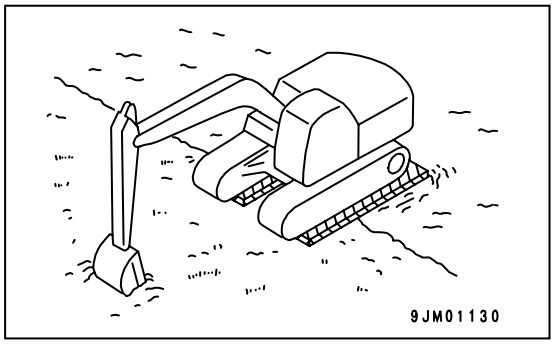

RECOMMENDED APPLICATIONS

In addition to the following, it is possible to further increase the range of applications by using various attachments.

BACKHOE WORK

A backhoe is suitable for excavating at a position lower than the machine.

When the condition of the machine is as shown in the diagram at right, each cylinder's maximum pushing excavation force is obtained when the bucket cylinder and link, arm cylinder and arm are at 90º.

When excavating, use this angle to effectively optimize your work efficiency.

The range for excavating with the arm is from a 45º angle away from the machine to a 30º angle toward the machine.

There may be some differences depending on the excavation depth, but try to stay within the above range rather than operating the cylinder at the end of its stroke.

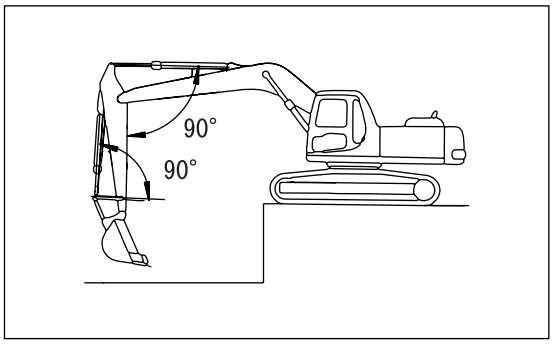

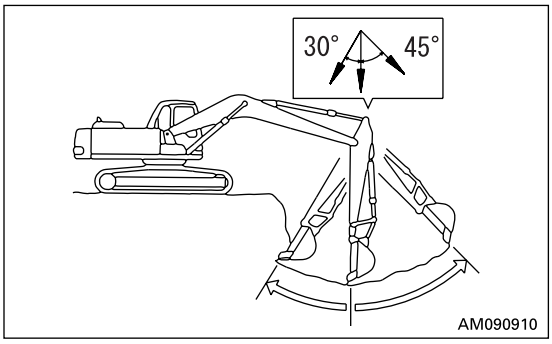

SHOVEL WORK

A shovel is suitable for excavating at a position higher than the machine. Shovel work is performed by attaching the bucket in the reverse direction.

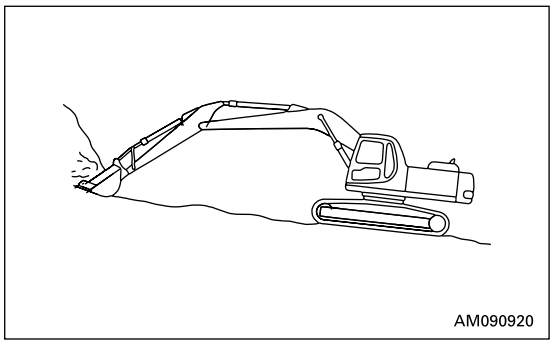

DITCHING WORK

Ditching work can be performed efficiently by attaching a bucket to match the width of the ditch and then setting the tracks parallel to the line of the ditch to be excavated.

To excavate a wide ditch, first dig out both sides and then finally remove the center portion.

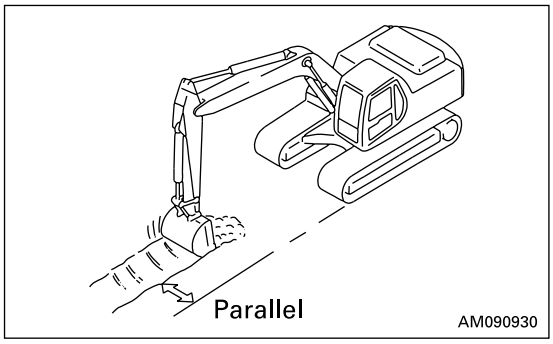

LOADING WORK

In places where the swing angle is small, work can be carried out more efficiently by stopping the dump truck in a place where it can be seen easily by the operator.

Loading is easier and the capacity is greater if you load from the rear of the dump truck body than if you load from the side.

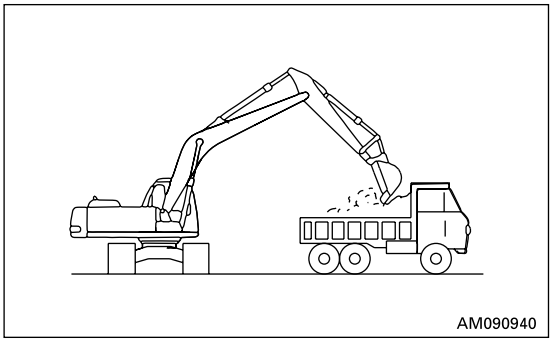

REPLACEMENT AND INVERSION OF BUCKET

⚠ WARNING

- **When the pin is knocked in with a hammer, pieces of metal may fly into your eyes and cause serious injury.**
  When carrying out this operation, always wear goggles, hard hat, gloves, and other protective equipment.
- **When the bucket is removed, place it in a stable condition.**
- **If the pins are hit with force, the pin may fly and injure people in the surrounding area, so check that the surrounding area is safe.**
- **When removing the pin, be extremely careful not to stand behind the bucket or to put your foot or any part of your body behind the bucket from the side.**
- **When removing or installing the pin, be extremely careful not to get your hands caught.**
- **Never put your fingers in the pin holes when aligning the holes.**

Stop the machine on a firm, flat surface. When performing joint work, make clear signals to each other and work carefully.

REPLACEMENT

1. Place the bucket in contact with a flat surface.

REMARK
When removing the pins, place the bucket so that it is in light contact with the ground.
If the bucket is lowered firmly to the ground, the resistance will be increased and it will be difficult to remove the pins.

NOTICE
After removing the pins, make sure that they do not become contaminated with sand or mud and that the seals of bushing on both sides do not become damaged.

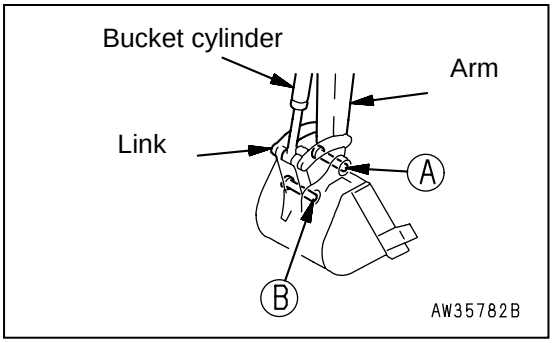

2. Remove the double nut from the stopper bolt of each pin of the arm and link, remove the bolts, then take out arm pin (A) and link pin (B), and remove the bucket.
3. Align the arm with holes (1) and the link with holes (2), then coat with grease and install pins (A) and (B).

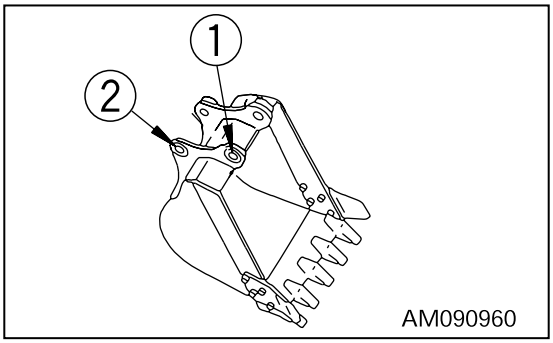

REMARK

- Carry out installation in the reverse order to removal.
- When installing the bucket: For arm pin part (A), fit an O-ring at the position on the bucket shown in the diagram on the right. After inserting the pin, fit it into the proper groove. For link pin part (B), install the bucket with the O-ring fitted in the proper groove.

4. Install the stopper bolts and nuts for each pin, then grease the pin.

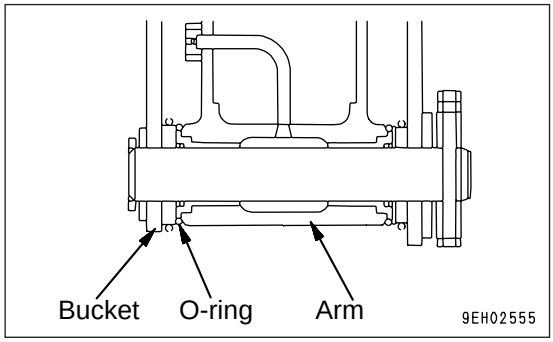

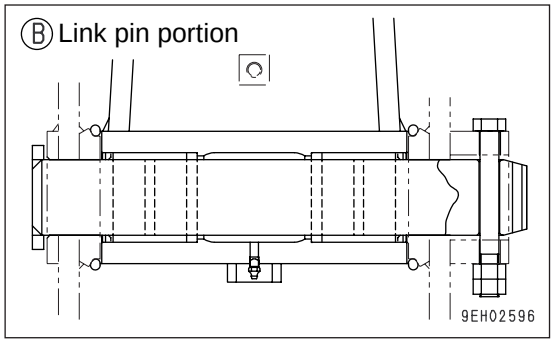

INVERSION

1. Place the bucket in contact with a flat surface.

REMARK
When removing the pins, place the bucket so that it is in light contact with the ground.
If the bucket is lowered firmly to the ground, the resistance will be increased and it will be difficult to remove the pins.

NOTICE
After removing the pins, make sure that they do not become contaminated with sand or mud and that the seals of bushing on both sides do not become damaged.

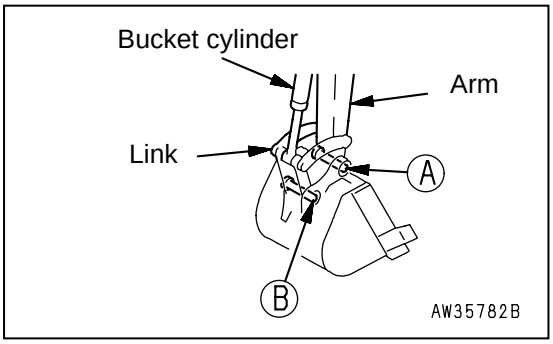

2. Remove the double nut from the stopper bolt of each pin of the arm and link, remove the bolts, then take out arm pin (A) and link pin (B), and remove the bucket.

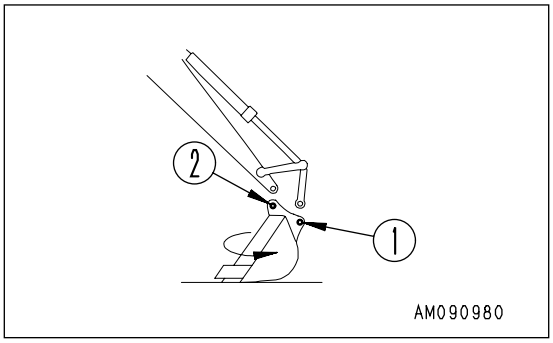

3. Reverse the bucket.
   After reversing the bucket, align the mounting pin hole with the arm and link, align the arm with the link mounting hole, then align the link with the arm mounting hole and install the bucket.

4. Align the arm with holes (1) and the link with holes (2), then coat with grease and install pins (A) and (B).

REMARK
When reversing, do not install an O-ring. Keep the O-ring in a safe place until using it again.

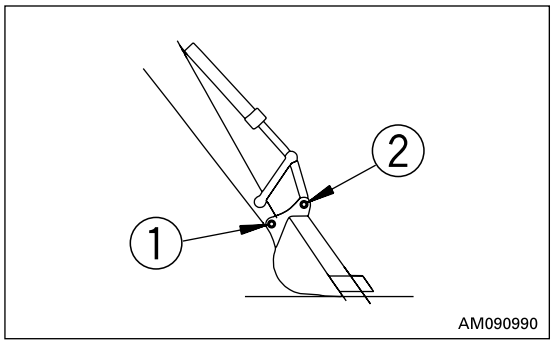

5. Install the stopper bolts and nuts for each pin, then grease the pin.

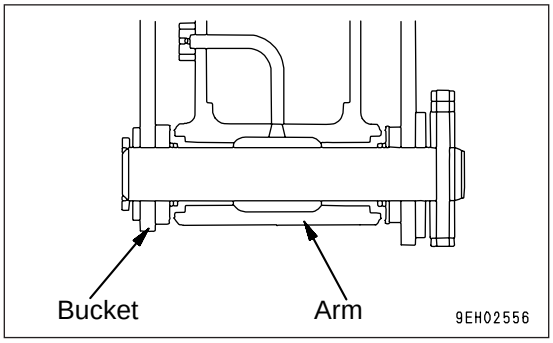

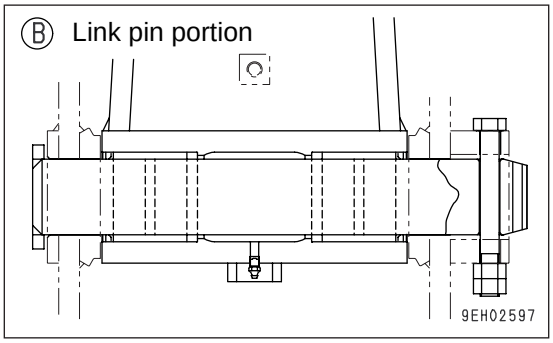

PARKING MACHINE

⚠ WARNING

- **Avoid sudden stops. Leave as much room as possible when stopping.**
- **Park the machine on firm level ground.**
  Avoid parking the machine on a slope.
  If the machine must be parked on a slope, put blocks under the tracks and dig the work equipment into the ground to prevent the machine from moving.
- **If the work equipment lever is touched by mistake, the work equipment or machine may suddenly move and cause serious personal injury or accident. Always set the safety lock lever securely to the LOCK position before standing up from the operator's seat.**

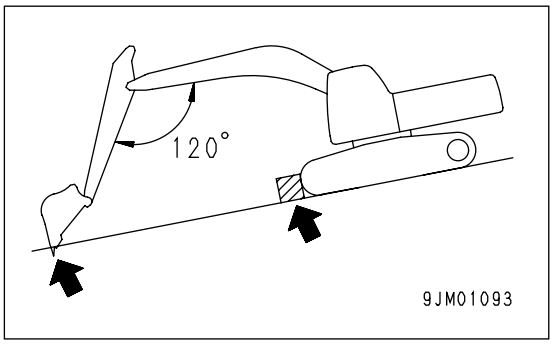

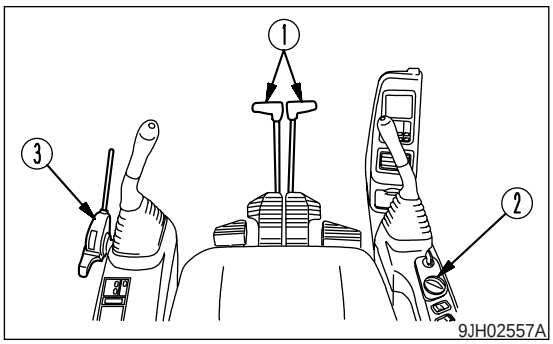

1. Put left and right travel levers (1) in the neutral position. The machine stops.

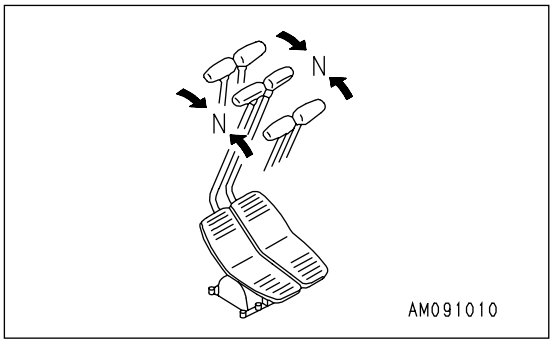

2. Lower the engine speed to low idling using fuel control dial (2) .

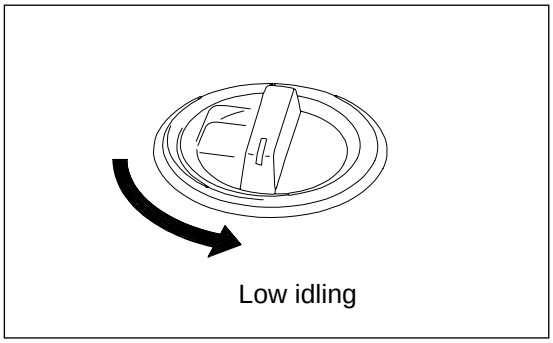

3. Lower the bucket horizontally until the bottom touches the ground.

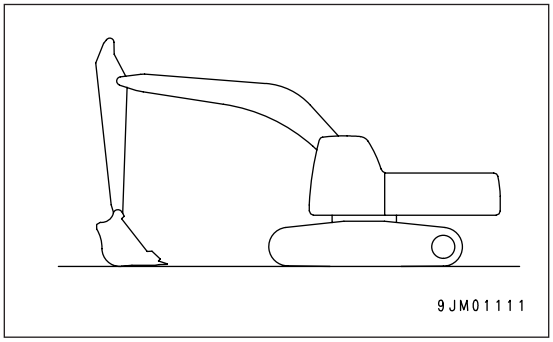

4. Set safety lock lever (3) in the LOCK position.

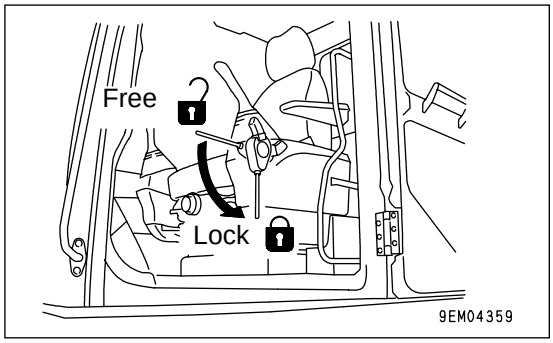

CHECK AFTER FINISHING WORK

Check the engine water temperature, engine oil pressure, and fuel level on the machine monitor.

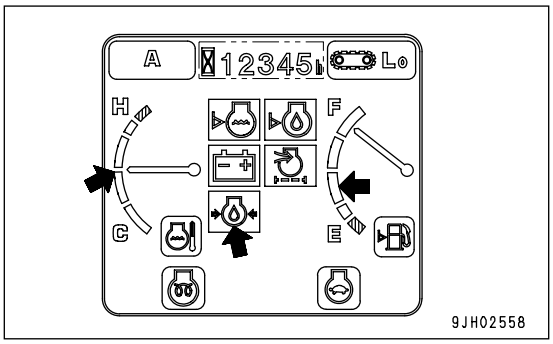

LOCKING

Always lock the following places.

(1) Door of operator's cab
Always remember to close the window.
(2) Fuel tank filler port
(3) Engine hood
(4) Battery box cover
(5) Left side door of the machine
(6) Right side door of the machine
(7) Hydraulic tank filler port

REMARK
Use the starting switch key to lock and unlock all these locks.

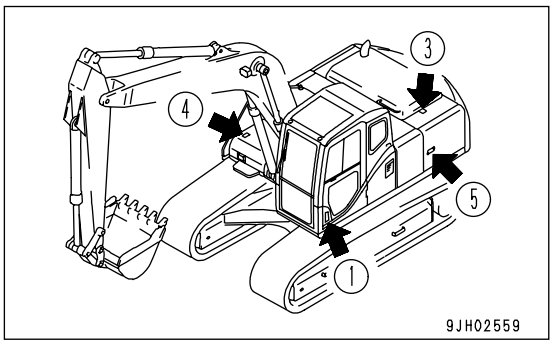

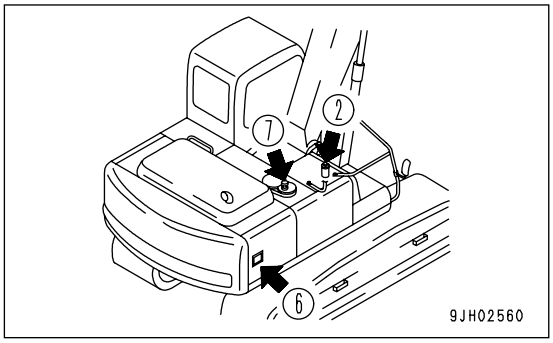

TRANSPORTATION

When transporting the machine, observe all related laws and regulations, and be careful to assure safety.

TRANSPORTATION PROCEDURE

As a basic rule, transport the machine by trailer.

Select the trailer to match the weight and dimensions given in "SPECIFICATIONS (PAGE 271)" .

Note that the value for the weight and transportation dimensions given in SPECIFICATIONS may differ according to the type of shoe or type of arm or other attachments.

LOADING AND UNLOADING WITH TRAILER

⚠ WARNING

- **Always turn the auto-deceleration switch OFF (cancel) during loading and unloading operations.**
  If the auto-deceleration switch is left ON, the machine may suddenly start moving.
- **Always drive the machine at low speed when loading or unloading the machine on a trailer. Do not operate the travel speed selector switch.**
- **Run the engine at low idling, set to low speed, and operate the machine slowly when loading or unloading.**
- **Do not load or unload the machine during the automatic warming-up operation.**
  If the automatic warming-up operation is canceled during the loading or unloading operation, the speed will suddenly change.
- **Select firm, level ground when loading or unloading the machine.**
  Maintain a safe distance from the edge of the road.
- **Use ramps with ample width, length, thickness, and strength and install them at a maximum slope of 15º.**
  When using piled soil, compact the piled soil fully and take action to prevent the slope face from collapsing.
- **To prevent the machine from slipping on the ramps, remove all mud and dirt from the machine tracks before starting to load.**
  Be sure that the ramp surface is clean and free of water, snow, ice, grease, or oil.
- **Never correct your steering on the ramps. There is danger that the machine may turn over.**
  If necessary, drive off the ramps, correct the direction, then enter the ramps again.
- **Do not use the work equipment for loading and unloading operations. It is dangerous.**
- **When on the ramps, do not operate any lever except the travel lever.**
- **The center of gravity of the machine will change suddenly at the joint between the ramps and the track or trailer, and there is danger of the machine losing its balance. Travel slowly over this point.**
- **The trailer is unstable, so pull in the work equipment and swing slowly when swinging the upper structure on the trailer.**

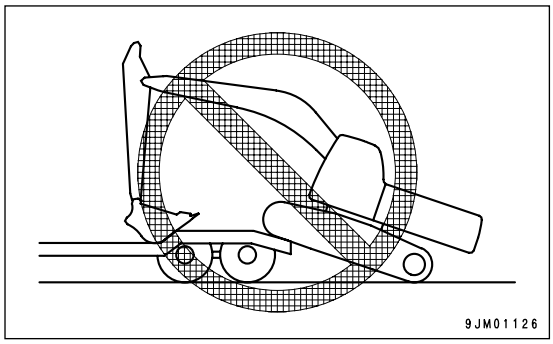

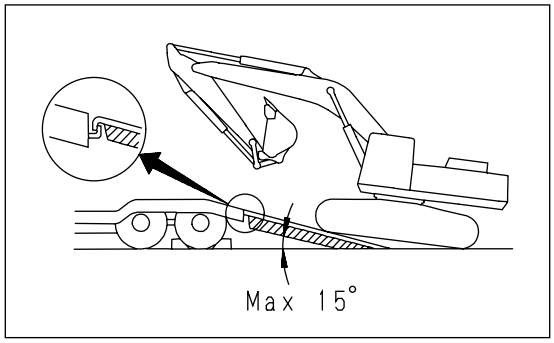

When loading or unloading, always use ramps or a platform and carry out the operation as follows.

LOADING

1. Perform loading and unloading on firm, level ground only. Maintain a safe distance from the edge of a road.

2. Properly apply the brakes on the trailer and put blocks under the tires to ensure that the trailer does not move. Then fix the ramps in line with the centers of the trailer and the machine.
   Make sure that both ramps are at the same level.
   Make the slope of the ramps a maximum of 15º.
   Set the distance between the ramps to match the center of the tracks.

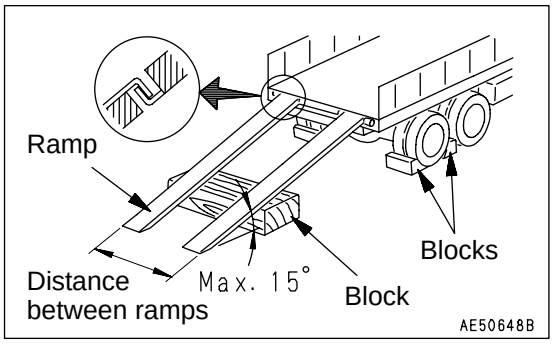

3. Set the travel speed selector switch to the LOW position.
   Q To switch the travel speed, press travel speed selector switch (1). The travel speed is displayed as Lo, Mi, or Hi on the monitor display.

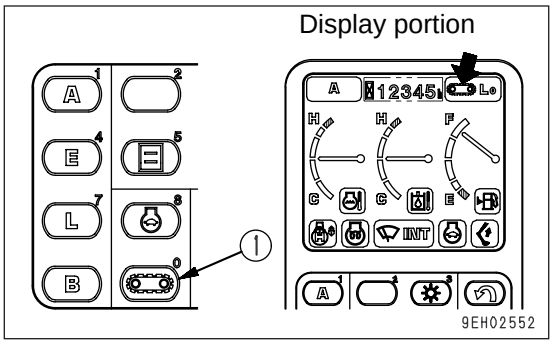

4. Turn auto-deceleration switch (1) OFF and operate the fuel control dial to set the engine speed to low idling.
   Q Each time auto-deceleration switch (1) is pressed, it switches OFF → ON → OFF in turn.
   Q When auto-deceleration switch (1) is turned OFF, display monitor (2) goes out.

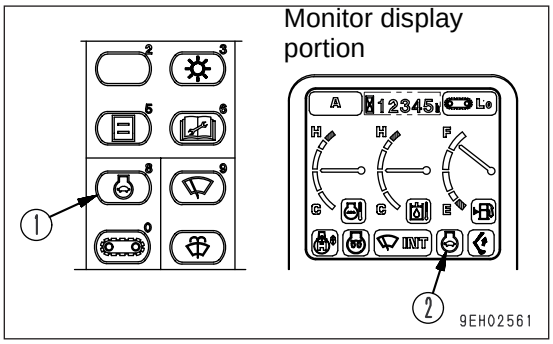

5. Turn the swing lock switch ON to apply the swing lock.
   Q When the swing lock switch is turned ON, display monitor (3) lights up.

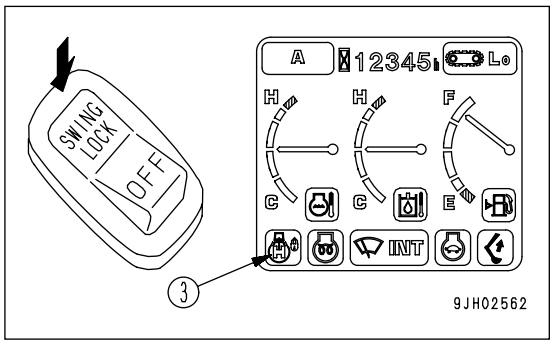

6. If the machine is equipped with work equipment, set the work equipment at the front, and travel forward to load it; if it has no work equipment, travel in reverse to load it.

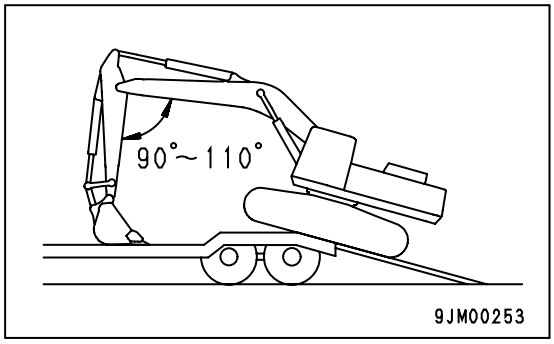

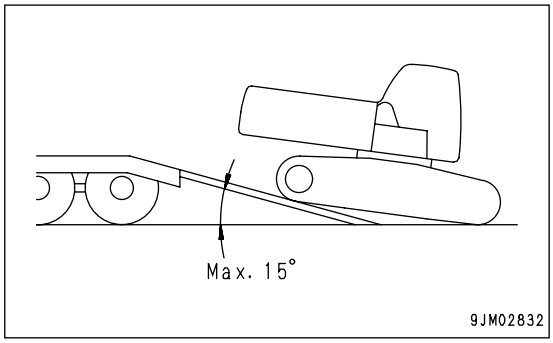

7. Align the direction of travel with the ramps and travel slowly.
   Lower the work equipment as far as possible without causing interference.
   When on the ramps, operate only the travel lever. Do not operate any other lever or pedal.

8. When the machine travels over the rear wheels of the trailer, it becomes unstable, so drive slowly and carefully. (Never operate the steering.)

9. At the moment the machine passes the rear wheels, it tilts forward, so be careful not to let the work equipment hit the trailer body. Drive the machine forward to the specified position, then stop the machine.

10. Turn the swing lock switch OFF to cancel the swing lock, then swing the upper structure slowly 180°.

11. Stop the machine at the specified position on the trailer.

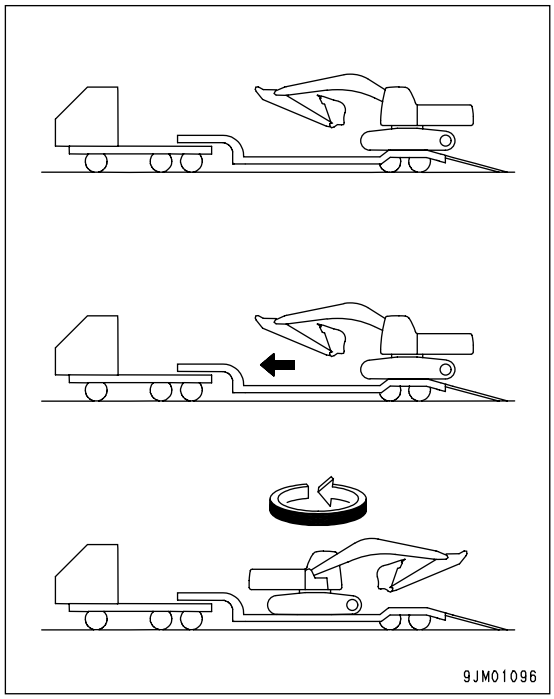

12. Turn the swing lock switch ON to lock the swing lock
    Q When the swing lock switch is turned ON, display monitor (3) lights up.

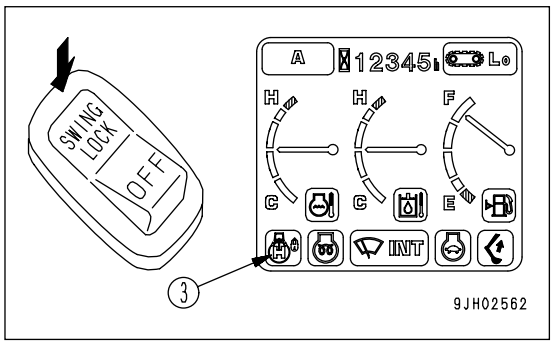

SECURING MACHINE

NOTICE

- **Stow the car radio antenna. In addition, remove the mirrors. Tie the removed parts securely to the trailer.**
- **To prevent damage to the bucket cylinder during transportation, fit a wooden block at one end of the bucket cylinder to prevent it from touching the floor.**

After loading the machine on the trailer, secure the machine as follows.

1. Extend the bucket and arm cylinders fully, then lower the boom slowly.
2. Stop the engine, then remove the key from the starting switch.

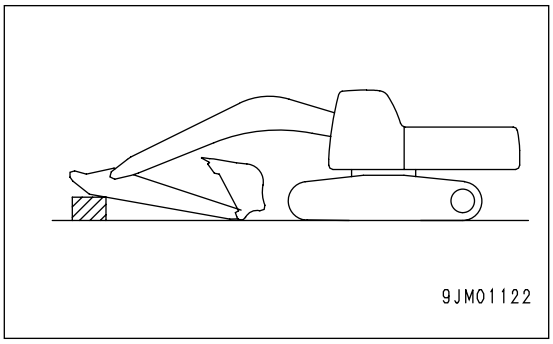

3. Lock the control levers securely with the safety lock lever.
4. Lock the operator's cab, side cover, and engine hood.

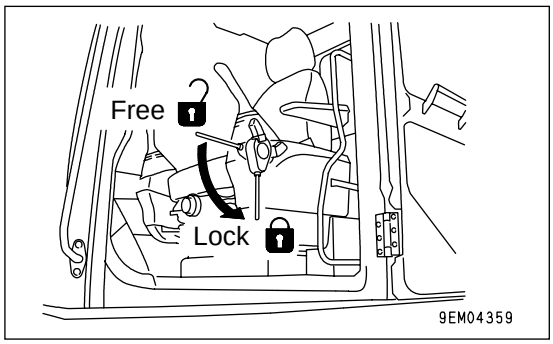

5. Put blocks under both ends of the tracks to prevent the machine from moving during transportation, and tie the machine down securely with chains or wire rope of suitable strength.
   Be particularly careful to fix the machine in position securely so that it does not slip to the side.

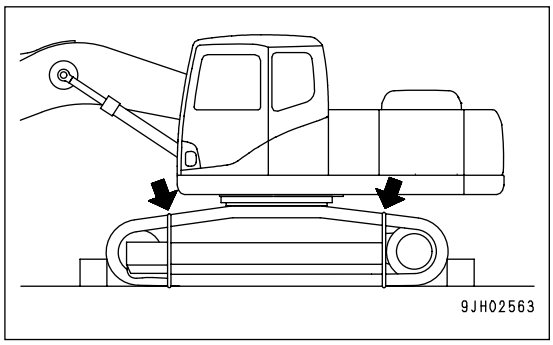

REMOVING, INSTALLING MIRRORS

The mirrors are at the positions shown in the diagram on the right. (※: if equipped)
If they are damaged, or are to be removed for shipment, or are to be installed again, use the following procedure.

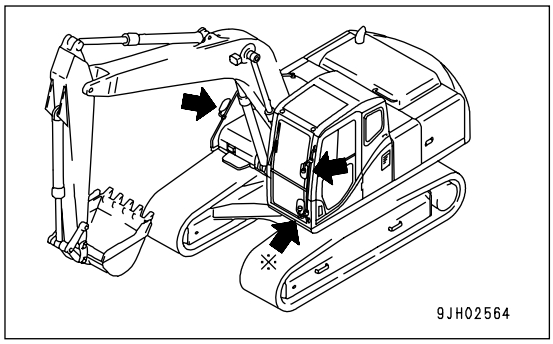

Removal

1. Loosen locknut (2) of mirror (1), then remove mirror (1) from support (3).
2. Loosen bolt (4), then remove support (3) and clamp (5) from the handrail.

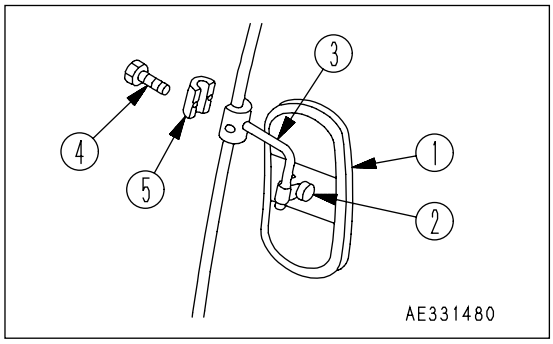

Installation

1. Install support (3) and clamp (5) to the handrail, then tighten bolt (4).
2. Install mirror (1) to support (3), then tighten locknut (2).

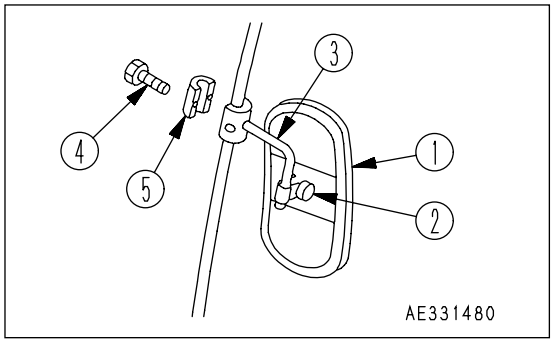

UNLOADING

1. Perform loading and unloading on firm, level ground only. Maintain a safe distance from the edge of a road.
2. Properly apply the brakes on the trailer and put blocks under the tires to ensure that the trailer does not move. Then fix the ramps in line with the centers of the trailer and the machine.
   Be sure that both ramps are at the same level.
   Make the slope of the ramps a maximum of 15º.
   Set the distance between the ramps to match the center of the tracks.

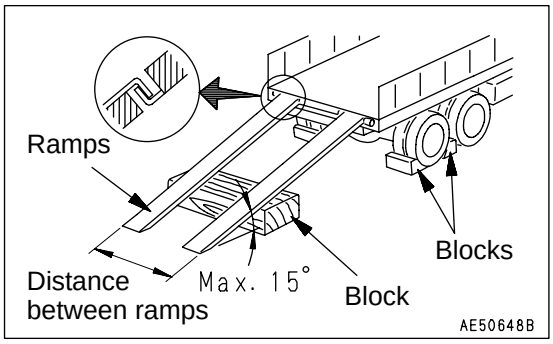

3. Remove the chains or wire rope holding the machine.
4. Start the engine.
   Carry out the warming-up operation thoroughly in cold weather.
5. Set the safety lock lever (1) to the FREE position.

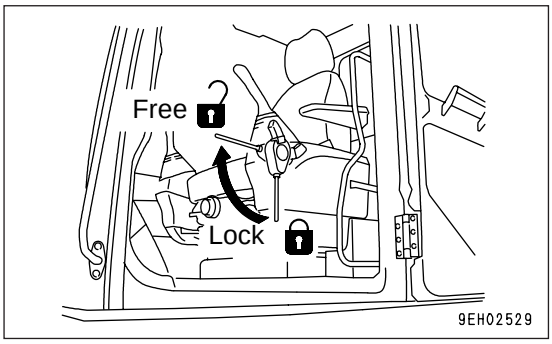

6. Set the travel speed selector switch to the LOW position.
   - To switch the travel speed, press travel speed selector switch (1).The travel speed is displayed as Lo, Mi, or Hi on the monitor display.

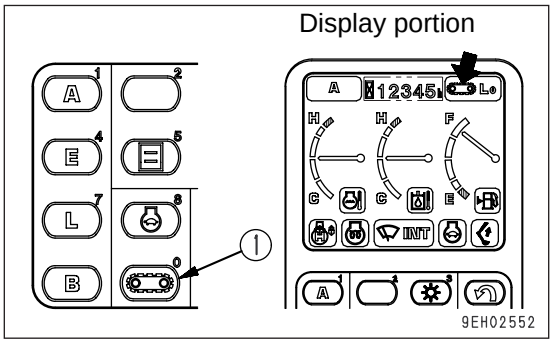

7. Turn auto-deceleration switch (1) OFF and operate the fuel control dial to set the engine speed to low idling.
   - Each time auto-deceleration switch (1) is pressed, it switches OFF → ON → OFF in turn.
   - When auto-deceleration switch (1) is turned OFF, display monitor (2) goes out.

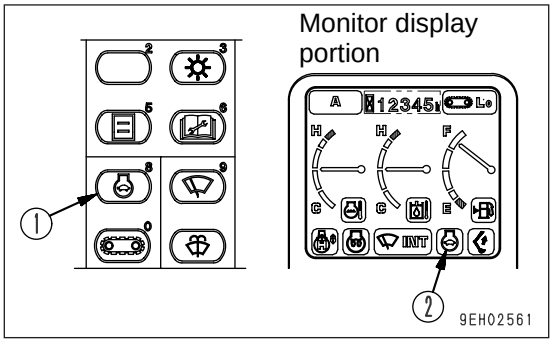

8. Turn the swing lock switch OFF to release the swing lock.
   Q When the swing lock switch is turned OFF, display monitor (3) goes off.

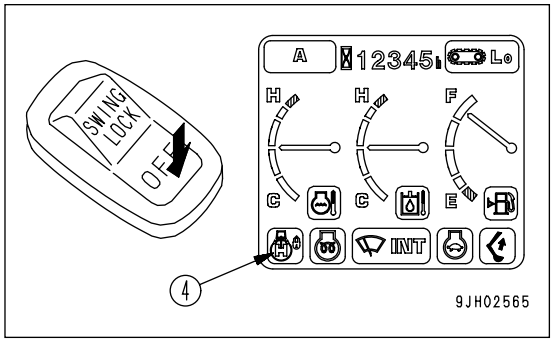

9. Raise the work equipment, pull in the arm under the boom, then move the machine slowly.

10. When the machine is horizontal on top of the rear wheels of the trailer, stop the machine.

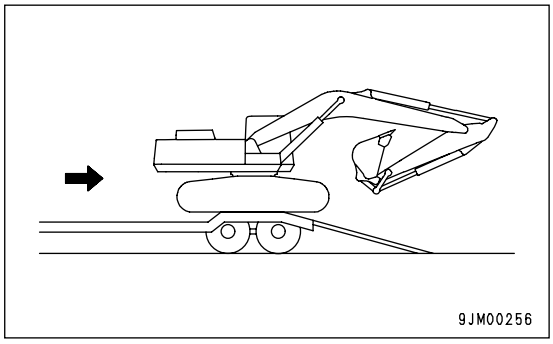

11. When moving from the rear of the trailer on to the ramps, set the angle of the arm and boom to 90 - 110º, lower the bucket to the ground, then move the machine slowly.

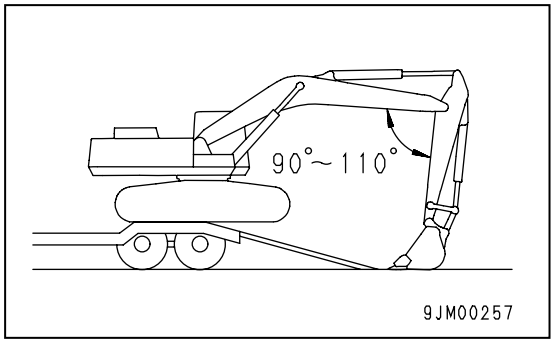

12. When moving down the ramps, operate the boom and arm slowly to lower the machine carefully until it is completely off the ramps.

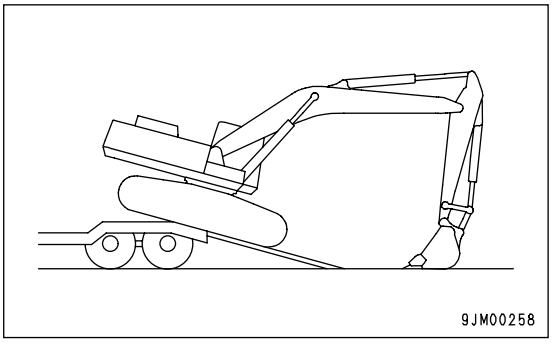

LIFTING MACHINE

⚠ WARNING

- **Never raise the machine with any worker on it.**
- **Always make sure that the wire rope used for lifting the machine is of ample strength for the weight of the machine.**
- **Never try to lift the machine in any posture other than the posture given in the procedure below. There is a danger that the machine may lose its balance.**
- **Never lift the machine with the upper structure swung to the side. Swing the work equipment so that it is at the sprocket end and set the undercarriage and upper structure parallel before lifting.**
- **When lifting, keep the machine horizontal.**
- **It is dangerous to go under the machine when it is raised. Never go under the machine when it is raised.**

STANDARD SPECIFICATION MACHINE

NOTICE
The lifting procedure applies to machines with standard specifications.
The method of lifting differs according to the attachments and options actually installed. In such cases, please contact your Komatsu distributor for information.

For details of the weight, see "SPECIFICATIONS (PAGE 272)".

When lifting the machine, carry out the operation on flat ground as follows.

1. Swing the upper structure so that the work equipment is at the sprocket end.
2. Extend the bucket cylinder and arm cylinder fully, then lower the work equipment to the ground as shown in the diagram on the right using the boom cylinder.
3. Stop the engine, check that there is nothing around the operator's compartment, then get off the machine. Close the cab door and front glass securely.

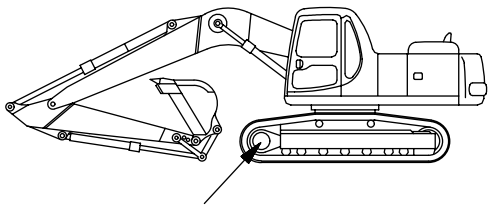

4. Pass wire ropes between the 1st and 2nd track rollers from the front and between the 1st and 2nd track rollers from the rear.
   For machines equipped with a full roller guard for the track roller, pass the wire rope under the track.

5. Ensure that the centre of gravity mark is centrally located between the lifting wires.

6. Set the lifting angle of the wire rope to 30º to 40º, then lift the machine slowly.

7. After the machine comes off the ground, check carefully that the machine is balanced, then lift slowly.

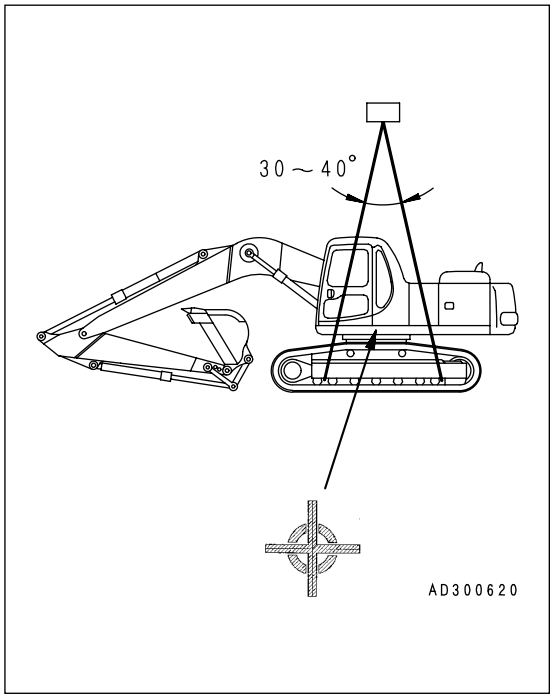

COLD WEATHER OPERATION

COLD WEATHER OPERATION INFORMATION

If the temperature becomes low, it becomes difficult to start the engine, and the coolant may freeze, so do as follows.

FUEL AND LUBRICANTS

Change to fuel and oil with low viscosity for all components. For details of the specified viscosity, see "USE OF FUEL, COOLANT AND LUBRICANTS ACCORDING TO AMBIENT TEMPERATURE (PAGE 215)".

COOLING SYSTEM COOLANT

⚠ WARNING

- **Antifreeze is toxic. Be careful not to get it into your eyes or on your skin. If it should get into your eyes or on your skin, wash it off with large quantities of fresh water and see a doctor at once.**
- **Antifreeze is toxic. Be extremely careful when handling it. When replacing coolant containing antifreeze or when handling coolant when repairing the radiator, contact your Komatsu distributor or ask your local antifreeze dealer. Be careful not to let the water flow into drainage ditches or spray on to the ground surface.**
- **Antifreeze is flammable, so do not bring any flame close. Do not smoke when handling antifreeze.**

NOTICE

- **Never use methanol, ethanol or propanol based antifreeze.**
- **Absolutely avoid using any water leak preventing agent, weather it is used independently or mixed with an antifreeze.**
- **Do not mix one antifreeze with a different brand.**

For details of the antifreeze mixture when changing the coolant, see "CLEAN INSIDE OF COOLING SYSTEM (PAGE 230)".

REMARK

Where no permanent antifreeze is available, an ethylene glycol antifreeze without corrosion inhibitor may be used only for the cold season. In this case, clean the cooling system twice a year (in spring and autumn). When refilling the cooling system, add antifreeze in autumn, but do not add any in spring.

For details of the antifreeze mixture when changing the coolant, see "CLEAN INSIDE OF COOLING SYSTEM (PAGE 230)".

BATTERY

⚠ WARNING

- **The battery generates flammable gas, so do not bring fire or sparks near the battery.**
- **Battery electrolyte is dangerous. If it gets in your eyes or on your skin, wash it off with large amounts of water, and consult a doctor.**
- **Battery electrolyte dissolves paint. If it gets on to the bodywork, wash it off immediately with water.**
- **If the battery electrolyte is frozen, do not charge the battery or start the engine with a different power source. There is danger that the battery may explode.**

When the ambient temperature drops, the capacity of the battery will also drop. If the battery charge ratio is low, the battery electrolyte may freeze. Maintain the battery charge as close as possible to 100%, and insulate it against cold temperature so that the machine can be started easily the next morning.

REMARK
Measure the specific gravity and calculate the rate of charge from the following conversion table.

Temperature of fluid / Rate of charge	20ºC	0ºC	-10ºC	-20ºC
100	1.28	1.29	1.30	1.31
90	1.26	1.27	1.28	1.29
80	1.24	1.25	1.26	1.27
75	1.23	1.24	1.25	1.26

- Because the battery capacity drops markedly in low temperatures, cover the battery or remove it from the machine. Keep it in a warm place overnight, and install it again the next morning.
- If the electrolyte level is low, add distilled water in the morning before beginning work. To prevent fluid in the battery from freezing in the night, do not add the water after the day's work.

AFTER DAILY WORK COMPLETION

⚠ WARNING

- **Performing idle-running of the tracks is dangerous, so stay well away from the tracks.**
- **After completion of operations, fill the fuel tank to prevent the formation of water caused by condensation of moisture in the empty space in the tank when the temperature goes down.**

To prevent mud, water, or the undercarriage from freezing and making it impossible for the machine to move on the following morning, always observe the following precautions.

- Mud and water on the machine body should be completely removed. This is to prevent damage to seals caused by mud or dirt getting inside the seals with frozen drops of water.
- Park the machine on hard, dry ground.

  If this is impossible, park the machine on wooden boards.

  The boards help protect the tracks from being frozen in soil and the machine can start next morning.
- Open the drain valve and drain any water collected in the fuel system to prevent it from freezing.
- After operation in water or mud, remove water from undercarriage as described below to extend undercarriage service life.

1. Swing 90º with engine at low idle and bring the work equipment to the side of the track.
2. Jack up the machine until the track is raised slightly from the ground. Rotate the track under no load. Repeat this procedure on both the left and right sides.

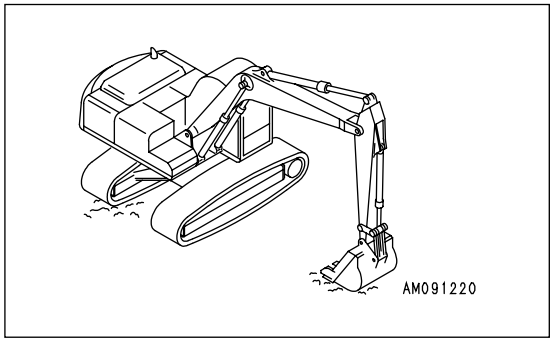

AFTER COLD WEATHER SEASON

When season changes and the weather becomes warmer, do as follows.

q Replace the fuel and oil for all parts of the machine with oil of the viscosity specified.

For details, see "USE OF FUEL, COOLANT AND LUBRICANTS ACCORDING TO AMBIENT TEMPERATURE (PAGE 215)".

q If for any reason permanent antifreeze cannot be used, and an ethyl glycol base antifreeze (winter, one season type) is used instead, or if no antifreeze is used, drain the cooling system completely, then clean out the inside of the cooling system thoroughly, and fill with fresh soft water.

LONG TERM STORAGE

BEFORE STORAGE

NOTICE

When storing the machine, set the machine in the posture shown in the diagram on the right to protect the cylinder rod.
(To prevent rusting of the cylinder rod)

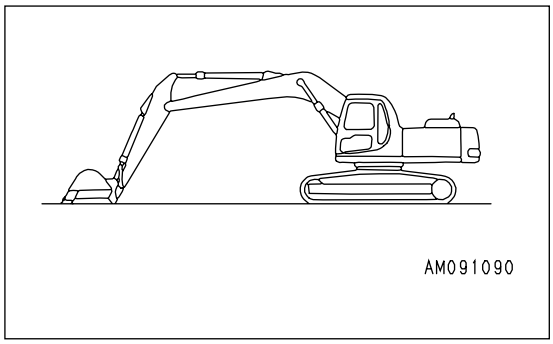

When putting the machine in storage for a long time, do as follows.

- Clean and wash all parts, then store the machine indoors. If the machine has to be stored outdoors, select level ground and cover the machine with a sheet.
- Completely fill the fuel tank, lubricate and change the oil before storage.
- Apply a thin coat of grease to the metal surface of the hydraulic piston rods.
- Disconnect the negative terminals of the battery and cover it or remove it from the machine and store it separately.
- If the ambient temperature is expected to drop below 0ºC, add antifreeze to the cooling water.
- Lock each control lever and pedal with the lock lever and pedal lock.
- Set the stop valve to the LOCK position on machines which can install attachments. Install a plug in the elbow.
- Set the selector valve on the machines which can install attachments to the "Where no attachment is mounted" position.

DURING STORAGE

⚠ WARNING

If it is unavoidably necessary to carry out the rust-preventive operation while the machine is indoors, open the doors and windows to improve ventilation to prevent gas poisoning.

- During storage, always operate the machine once a month so that a new film of oil will be coated over movable parts and component surfaces. At the same time, charge the battery.
- For machines equipped with an air conditioner, run the air conditioner.
- Rotate the tracks.

AFTER STORAGE

NOTICE
If the machine is to be used when the monthly rust prevention operation has not been carried out, please contact your Komatsu distributor.

When using the machine after long-term storage, do as follows before using it.

q Wipe off all the grease coating the hydraulic cylinder rods.

q Add oil and grease to all places.

q When the machine has been stored for a long time, the moisture in the atmosphere will get into the oil. Check the oil at all parts before and after starting the engine. If there is water in the oil, change all the oil.

STARTING MACHINE AFTER LONG-TERM STORAGE

When starting the engine after long-term storage, cancel the automatic warming-up operation as follows.

1. Turn the starting switch key to the ON position.
2. Turn the fuel control dial from the low idling (MIN) position to the full (MAX) position, hold it there for 3 seconds, then return it to the low idling (MIN) position and start the engine.

TROUBLESHOOTING

AFTER RUNNING OUT OF FUEL

When starting after running out of fuel, fill with fuel and bleed the air from the fuel system before starting.

For details of bleeding the air, see "REPLACE FUEL FILTER CARTRIDGE (PAGE 259)".

PHENOMENA THAT ARE NOT FAILURES

Note: the following phenomena are not failures:

q When the arm is pulled in, the speed of movement will drop momentarily when the arm reaches vertical (more or less).

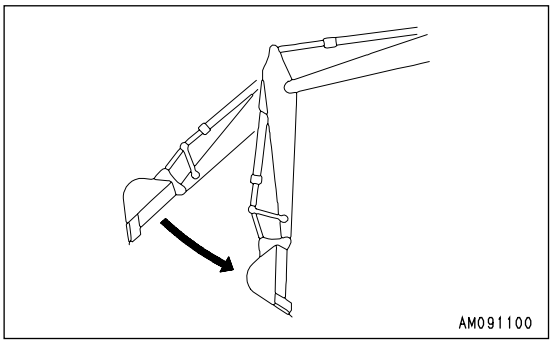

q The arm speed will drop momentarily when the bucket teeth are more or less horizontal.

q Bucket or arm shakes during heavy-duty digging operations.

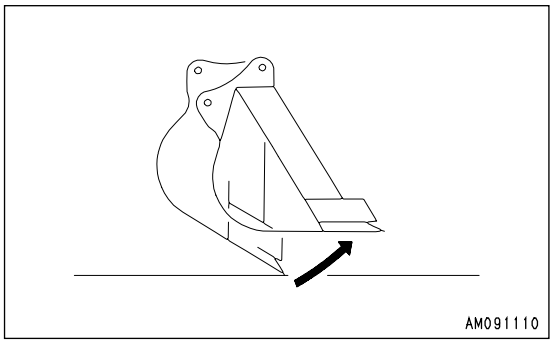

q When starting or stopping the swing, noise will be emitted from the brake valve.

q When going down a steep slope at low speed, a noise will be emitted from the travel motor.

TOWING THE MACHINE

⚠ WARNING

- **When towing the machine, use a wire rope that has ample strength for the weight of the machine that is being towed.**
- **Do not apply a sudden load to the wire rope.**

If the machine sinks in mud and cannot get out under its own power, or if the drawbar pull of the excavator is being used to tow a heavy object, use a wire rope as shown in the diagram on the right.

Place pieces of wood between wire ropes and body to prevent damage to ropes and body.

At this time, never use the hook for light-weight towing.

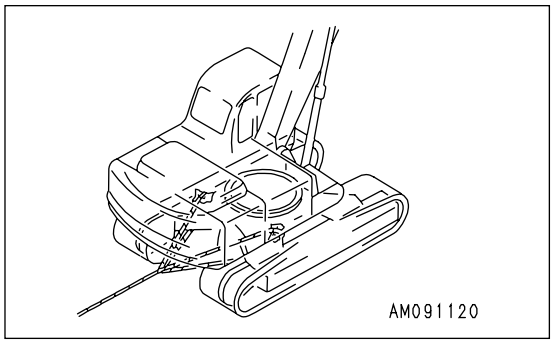

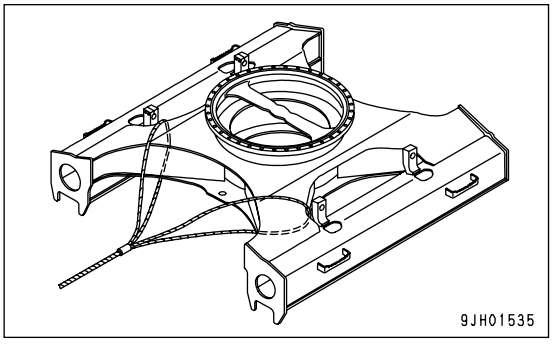

LIGHTWEIGHT TOWING HOOK

⚠ WARNING

- **The shackle must always be used.**
- **Hold the rope level and direct it straight to the track frame.**
- **Move the machine slowly.**

The track frame has been equipped with a towing eye to pass the shackle for towing light objects.

Permissible towing load:
PC290 : Max. 58800 N (6000 kgf) TBC

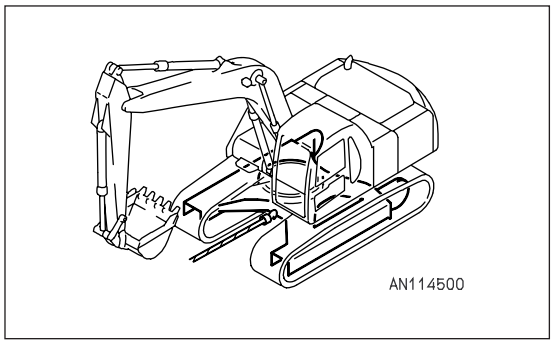

PRECAUTIONS ON PARTICULAR JOBSITES

- When carrying out digging operations in water, if the work equipment mounting pin goes into the water, grease it every time it comes out of the water.
- For heavy-duty operations and deep digging, grease the work equipment mounting pins every time before each operation.

After greasing, operate the boom, arm, bucket, and blade several times, then grease again.

DISCHARGED BATTERY

⚠ WARNING

- **It is dangerous to charge the battery while it is still mounted on the machine. Always remove the battery before charging it.**
- **When checking or handling the battery, stop the engine and turn the starting switch key to the OFF position.**
- **The battery generates hydrogen gas, so there is danger of explosion.**
  Do not bring lighted cigarettes near the battery, or do anything that will cause sparks.
- **Battery electrolyte is diluted sulfuric acid, and it will attack your clothes and skin. If it gets on your clothes or on your skin, wash it off immediately with large amounts of water. If it gets into your eyes, wash it out with fresh water, and consult a doctor.**
- **When handling batteries, always wear protective goggles and rubber gloves.**
- **When removing the battery, first disconnect the cable from the ground (normally the negative (-) terminal). When installing, install the positive (+) terminal first.**
  If a tool touches the positive terminal and the chassis, there is danger that it will cause a spark, be extremely careful.
- **If the terminals are loose, there is danger that the defective contact may generate sparks that will cause an explosion.**
- **When installing the terminals, install them tightly.**
  When removing or installing the terminals, check which is the positive (+) terminal and which is the negative (-) terminal.
- **Green rust around the terminals is a cause of self-discharge of the battery. Clean the terminals with sandpaper. After removing the rust, coat the terminals thinly with grease before installing.**

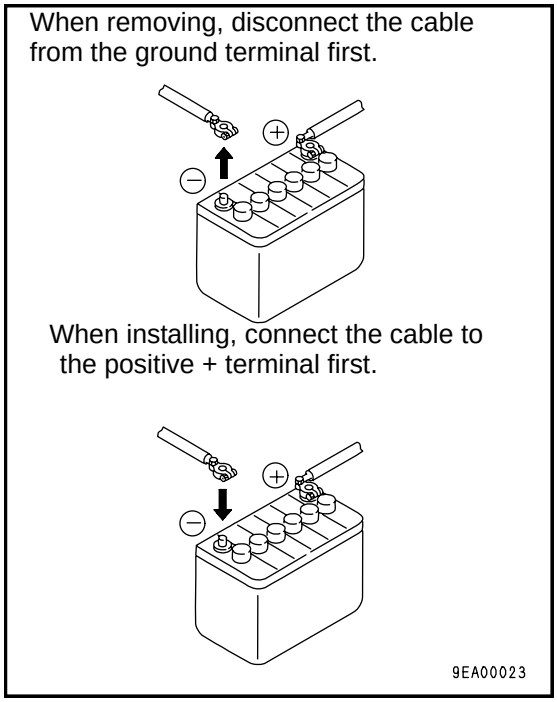

REMOVAL AND INSTALLATION OF BATTERY

NOTICE
After fastening the battery in position, check that it does not move. If it moves, check and retighten it.

- When removing, remove from the ground side terminal first (normally the (-) terminal).
  Be careful not to touch the positive (+) terminal and the machine with any tool. Letting a tool touch is dangerous as it causes sparks.
- When installing, connect the ground side last.
- When replacing the battery, attach the battery securely with the battery mounting clamp.
- Tightening torque of mounting bolts : 9.8 to 14.7 N•m (1 to 1.5 kgf•m)

BATTERY CHARGES

When charging the battery, there is danger that the battery may explode if it is mishandled. Follow the instructions in "OTHER TROUBLE (PAGE 196)" and the instruction manual supplied with the charger, and be sure to observe the following precautions.

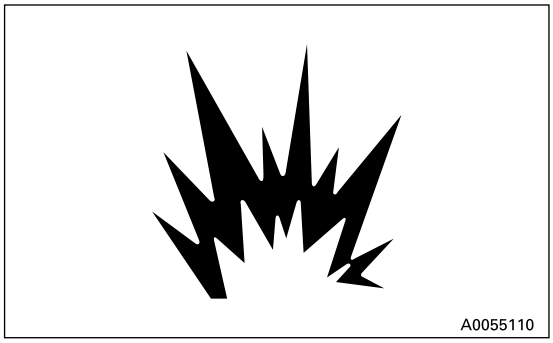

- Set the voltage of the charger to match the voltage of the battery to be charged. If the voltage is not selected correctly, the charger may overheat and cause an explosion.

- Connect the positive (+) charger clip of the charger to the positive (+) terminal of the battery, then connect the negative (-) charger clip of the charger to the negative (-) terminal of the battery. Be sure to connect the clips securely.

- Set the charging current to 1/10 of the value of the rated battery capacity; when doing rapid charging, set it to less than the rated battery capacity.
  If the charger current is too high, the electrolyte will leak or dry up, and this may cause the battery to catch fire and explode.

- If the battery electrolyte is frozen, do not charge the battery or start the engine with a different power source.
  There is a danger that this will ignite the battery electrolyte and cause the battery to explode.

- Do not use or charge the battery if the battery electrolyte level is below the LOWER LEVEL line. This may cause an explosion. Always check the battery electrolyte level periodically and add distilled water to bring the electrolyte level to the UPPER LEVEL line.

STARTING ENGINE WITH BOOSTER CABLES

When starting the engine with a booster cable, do as follows:

CONNECTING AND DISCONNECTING BOOSTER CABLES

⚠ WARNING

- **When connecting the cables, never contact the positive (+) and negative (-) terminals.**
- **When starting the engine with a booster cable, always wear safety glasses.**
- **Be careful not to let the normal machine and problem machine contact each other. This prevents sparks from generating near the battery which could ignite the hydrogen gas given off by the battery. If hydrogen gas explodes, it could cause serious injury.**
- **Make sure that there is no mistake in the booster cable connections.**
  The final connection is to the upper structure frame, but sparks will be generated when this is done, so connect to a place as far as possible from the battery. (However, avoid connecting the cable to the work equipment, as conduction is poor.)
- **Use care when removing the cables from a machine that has been started. To avoid hydrogen explosion, do not allow the cable ends to contact each other or the machine.**

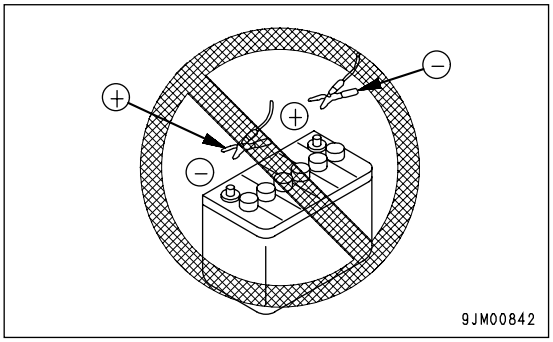

NOTICE

- **The starting system for this machine uses 24 Volts. For the normal machine, use a 24V battery.**
- **The size of the booster cable and clip should be suitable for the battery size.**
- **The battery of the normal machine must be the same capacity as that of the engine to be started.**
- **Check the cables and clips for damage or corrosion.**
- **Make sure that the cables and clips are firmly connected.**
- **Check that the safety lock levers and parking brake levers of both machine are in the LOCK position.**
- **Check that each lever is in the NEUTRAL position.**

BOOSTER CABLE CONNECTION

Keep the starting switch of the normal machine and problem machine at the OFF position.

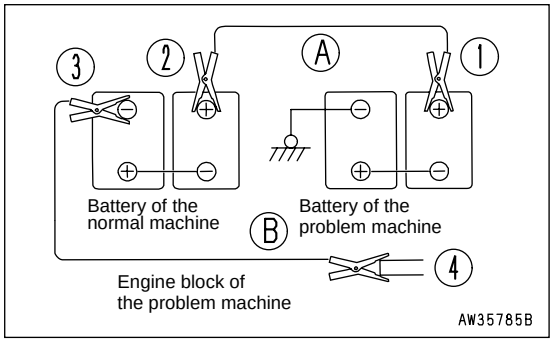

Connect the booster cable as follows, in the order of the numbers marked in the diagram.

1. Make sure that the starting switches of the normal machine and problem machine are both at the OFF position.
2. Connect one clip of booster cable (A) to the positive (+) terminal of the problem machine.
3. Connect the other clip of booster cable (A) to the positive (+) terminal of the normal machine.
4. Connect one clip of booster cable (B) to the negative (-) terminal of the normal machine.
5. Connect the other clip of booster cable (B) to the upper structure of the problem machine.

STARTING THE ENGINE

⚠ CAUTION

Always check that the safety lock lever is set to the LOCK position, regardless of whether the machine is working normally or has failed. Also check that all the control levers are at the HOLD or neutral position.

1. Make sure the clips are firmly connected to the battery terminals.
2. Start the engine of the normal machine and keep it to running at high idling speed.
3. Turn the starting switch of the problem machine to the START position and start the engine. If the engine doesn't start at first, try again after 2 minutes or so.

BOOSTER CABLE DISCONNECTION

After the engine has started, disconnect the booster cables in the reverse order in which they were connected.

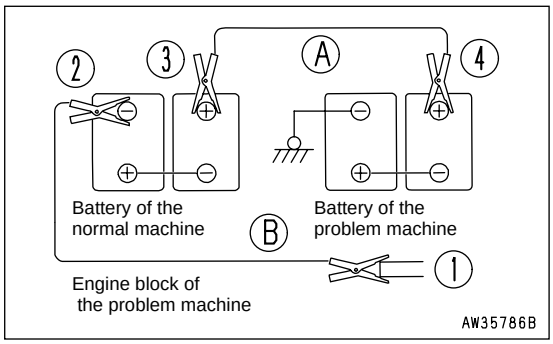

1. Remove one clip of booster cable (B) from the upper structure of the problem machine.
2. Remove the other clip of booster cable (B) from the negative (-) terminal of the normal machine.
3. Remove one clip of booster cable (A) from the positive (+) terminal of the normal machine.
4. Remove the other clip of booster cable (A) from the positive (+) terminal of the problem machine.

OTHER TROUBLE

ELECTRICAL SYSTEM

q ( ): Always contact your Komatsu distributor when dealing with these items.

q In cases of abnormalities or causes which are not listed below, please contact your Komatsu distributor for repairs.

Problem	Main causes	Remedy
Lamp does not glow brightly even when the engine runs at high speed	q Defective wiring, deterioration of battery	q (Check, repair loose terminals, disconnections, replace battery)
Lamp flickers while engine is running	q Loose fan belt	q Check fan belt tension, replace
Charge level monitor does not go out even when engine is running	q Defective alternator q Defective wiring	q (Replace) q (Check, repair)
Abnormal noise is generated from alternator	q Defective alternator	q (Replace)
Starting motor does not turn when starting switch is turned to ON	q Defective wiring q Defective starting motor q Insufficient battery charge	q (•Check, repair) q (•Replace) q •Charge
Pinion of starting motor keeps going and out	q Insufficient battery charge q Defective safety relay	q Charge q (Replace)
Starting motor turns engine sluggishly	q Insufficient battery charge q Defective starting motor	q Charge q (Replace)
Starting motor disengages before engine starts	q Defective wiring, defective ring gear pinion q Insufficient battery charge	q (Check, repair) q Charge
Pre-heating monitor does not light	q Defective wiring q Defective heater relay q Defective monitor	q (Check, repair) q (Replace) q (Replace)
Oil pressure monitor does not light up when engine is stopped (starting switch at ON position)	q Defective monitor q Defective caution lamp switch	q (Replace) q (Replace)
Outside of electrical heater is not warm when touched by hand	q Defective wiring q Disconnection in electric heater q Defective operation of heater relay switch	q (Check, repair) q (Replace) q (Replace)

CHASSIS

q ( ): Always contact your Komatsu distributor when dealing with these items.

q In cases of abnormalities or causes which are not listed below, please contact your Komatsu distributor for repairs.

Problem	Main causes	Remedy
Speed of travel, swing, boom, arm, bucket is slow	q Lack of hydraulic oil	q Add oil to specified level, see CHECK BEFORE STARTING
Pump generates abnormal noise (sucking in air)	q Clogged element in hydraulic tank strainer, lack of oil	q Clean, see EVERY 2000 HOURS SERVICE
Excessive rise in hydraulic oil temperature	q Loose fan belt q Dirty oil cooler q Lack of hydraulic oil	q Check fan belt tension, replace q Clean, see EVERY 500 HOURS SERVICE q Add oil to specified level, see CHECK BEFORE STARTING
Track comes off	q Track too loose	q Adjust track tension, see WHEN REQUIRED
Abnormal wear of sprocket		
Bucket rises slowly, does not rise	q Lack of hydraulic oil	q Add oil to specified level, CHECK BEFORE STARTING
Does not swing	q Swing lock switch still applied	q Turn swing lock switch OFF

ENGINE

q ( ): Always contact your Komatsu distributor when dealing with these items.

q In cases of abnormalities or causes which are not listed below, please contact your Komatsu distributor for repairs.

Problem	Main causes	Remedy
Engine oil pressure monitor lights up	q Engine oil pan oil level is low (sucking in air) q Clogged oil filter cartridge q Defective tightening of oil pipe, pipe joint, oil leakage from damaged point q Defective engine oil pressure sensor q Defective monitor	q Add oil to specified level, see CHECK BEFORE STARTING q Replace cartridge, see EVERY 500 HOURS SERVICE q (Check, repair) q (Replace sensor) q (Replace)
Steam spurts out from top of radiator (pressure valve)	q Cooling water level low, leakage of water q Loose fan belt q Dirt or scale accumulated in cooling system	q Check, add water, repair, see CHECK BEFORE STARTING q Check fan belt tension, adjust, replace q Change coolant, flush inside of cooling system, see WHEN REQUIRED
Radiator water level monitor lights up	q Clogged radiator fins or damaged fins q Defective thermostat q Loose radiator filler cap (high-altitude operations) q Defective water level sensor q Defective monitor	q Clean or repair, see EVERY 500 HOURS SERVICE q (Replace thermostat) q Tighten cap or replace packing q (Replace sensor) q (Replace sensor)
Engine does not start when starting motor is turned	q Lack of fuel q Air in fuel system q Defective fuel injection pump or defective nozzle q Starting motor cranks engine sluggishly q Preheating monitor does not light up q Defective compression q Defective valve clearance	q Add fuel, see CHECK BEFORE STARTING q Repair place where air is sucked in, see EVERY 500 HOURS SERVICE q (Replace pump or nozzle) q See ELECTRICAL SYSTEM q See ELECTRICAL SYSTEM q (Adjust valve clearance)
Exhaust gas is white or blue	q Too much oil in oil pan q Improper fuel	q Set oil to specified level, see CHECK BEFORE STARTING q Change to specified fuel

Problem	Main causes	Remedy
Exhaust gas occasionally turns black	q Clogged air cleaner element q Defective nozzle q Defective compression q Defective turbocharger	q Clean or replace, see WHEN REQUIRED q (Replace nozzle) q (See defective compression above) q Clean or replace turbocharger
Combustion noise occasionally make breathing sound	q Defective nozzle	q (Replace nozzle)
Abnormal noise generated (combustion or mechanical)	q Low-grade fuel being used q Overheating q Damage inside muffler q Excessive valve clearance	q Change to specified fuel q Refer to "Radiator water levelmonitor lights up" as above q Replace muffler q (Adjust clearance)

ELECTRONIC CONTROL SYSTEM

If an error code appears on the machine monitor display (normally displays TIME), follow the countermeasure table as shown below in the self-diagnosis.

Machine monitor trouble display

Monitor display	Error mode	Countermeasure
E02	PC-EPC valve system error	If the pump override switch is set to the ON position, operation can be carried out.However,immediately have the TVC valve system inspected by your Komatsu distributor.(*)
E03	Swing brake system error	Turn the swing prolix switch ON to cancel the brake. When applying the swing brake, operate the swing lock switch manually. Depending on the cause of the failure, it may be impossible to release the brake.In any case, have the system inspected immediately by your Komatsu distributor.(*)
E05	Governor system error	Governor will not execute the control function. Manually operate the governor-lever.To fix the governor lever at the full stroke position, use the retaining bolt holes on bracket.In this case, immediately have the governor system inspected by your Komatsu distributor.
CALL	Error indicating that operation cannot be continued	Place the machine in a safe posture, then have it inspected immediately by your Komatsu distributor.
In the case where the monitor will not display error codes and work equipment operation and swing operation cannot be carried out.		Have the machine inspected immediately by your Komatsu distributor.

(*): For details of handling the emergency pump drive switch, swing holding brake cancel switch, and emergency work equipment actuation switch, see "SWITCHES (PAGE 85)".

POINT OF CONTACT TO TELEPHONE WHEN ERROR OCCURS

If an error screen is displayed on the monitor, the screen changes as follows each time input confirmation switch (1) is pressed.

Error screen → screen A → screen B → screen C → error screen

Check the point of contact telephone number on screen B.

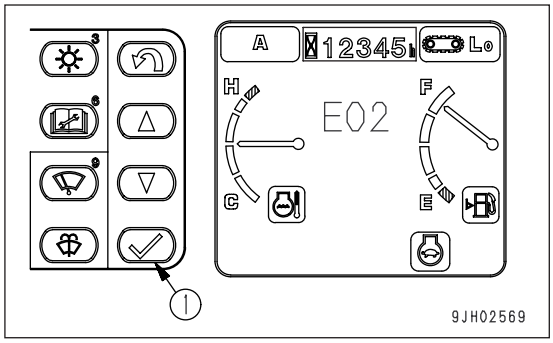

REMARK
If the point of contact telephone number has not been registered, screen B is not displayed.
If it is necessary to register the point of contact telephone number, ask your Komatsu distributor to register it.

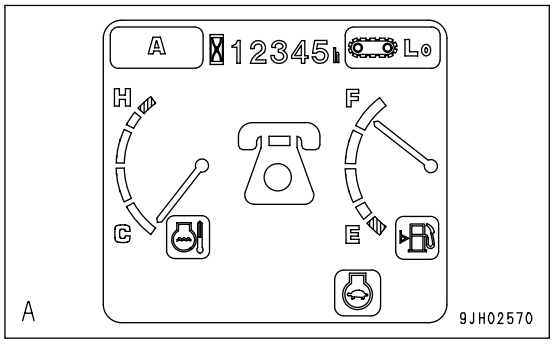

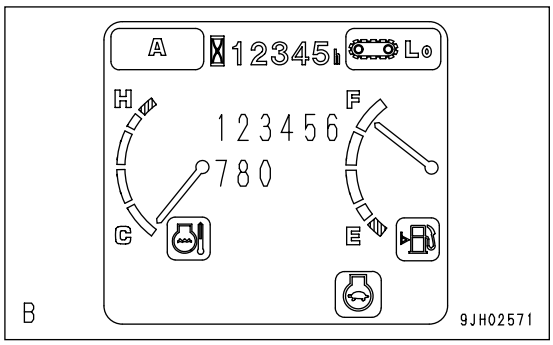

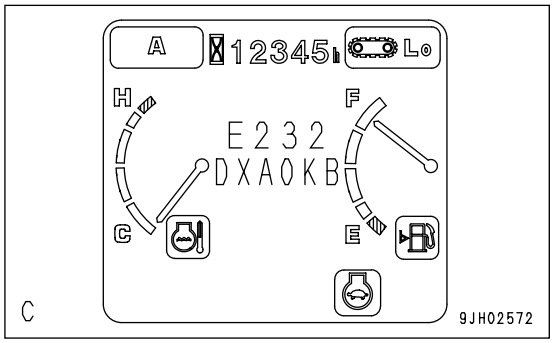

MEMO

MAINTENANCE

⚠ WARNING

Please read and make sure that you understand the safety volume before reading this section.

MAINTENANCE INFORMATION

Do not carry out any inspection and maintenance operation that is not found in this manual.

SERVICE METER READING

Check the service meter reading every day to see if the time has come for any necessary maintenance to be carried out.

KOMATSU GENUINE REPLACEMENT PARTS

Use Komatsu genuine parts specified in the Parts Book as replacement parts.

KOMATSU GENUINE LUBRICANTS

Use Komatsu genuine oils and grease. Choose oils and grease with proper viscosities specified for ambient temperature.

WINDSHIELD WASHER FLUID

Use automobile windshield washer fluid, and be sure not to let any dirt get into it.

FRESH AND CLEAN LUBRICANTS

Use clean oil and grease. Also, keep the containers of the oil and grease clean. Keep foreign materials away from oil and grease.

CHECK DRAINED OIL AND USED FILTER

After oil is changed or filters are replaced, check the old oil and filters for metal particles and foreign materials. If large quantities of metal particles or foreign materials are found, report to the person in charge, and carry out suitable action.

FUEL STRAINER

If your machine is equipped with a fuel strainer, do not remove it while fueling.

WELDING INSTRUCTIONS

- q Turn off the engine starting switch.
- q Do not apply more than 200V continuously.
- q Connect grounding cable within 1m from the area to be welded. If grounding cable is connected near instruments, connectors, etc., the instruments may have troubles.
- q Avoid seals or bearings from being between the area to be welded and the position of grounding point.
- q Do not use the area around the work equipment pins or the hydraulic cylinders as the grounding point.

DO NOT DROP THINGS INSIDE MACHINE

q When opening inspection windows or the oil filler port of the tank to carry out inspection, be careful not to drop nuts, bolts, or tools inside the machine.
If such things are dropped inside the machine, it will cause damage and malfunction of the machine, and will lead to failure. If you drop anything inside the machine, remove it immediately.

q Do not put unnecessary things in your pockets. Carry only things which are necessary for inspection.

DUSTY JOBSITE

When working at dusty worksites, do as follows:

q Check the clogging of the air cleaner more frequently with the dust indicator. Clean the air cleaner element more frequently.

q Clean the radiator core frequently to avoid clogging.

q Clean and replace the fuel filter frequently.

q Clean electrical components, especially the starting motor and alternator, to avoid accumulation of dust.

q When inspecting or changing the oil, move the machine to a place that is free of dust to prevent dirt from getting into the oil.

AVOID MIXING LUBRICANTS

Never mix different kinds of oil. If a different type of oil has to be added, drain the old oil and replace all the oil with the new type of oil.

LOCKING THE INSPECTION COVERS

When carrying out maintenance with the inspection cover open, lock it in position securely with a lock bar. If inspection or maintenance is carried out with the inspection cover open and not locked in position, there is danger that it may be suddenly blown shut by the wind and cause injury to the worker.

HYDRAULIC SYSTEM - AIR BLEEDING

When hydraulic equipment has been repaired or replaced, or the hydraulic piping has been removed and installed again, the air must be bled from the circuit. For details, see "BLEEDING AIR FROM HYDRAULIC SYSTEM (PAGE 244)".

HYDRAULIC HOSE INSTALLATION

- When removing parts at locations where there are O-rings or gasket seals, clean the mounting surface, and replace with new parts.

  When doing this, be careful not to forget to assemble the O-rings and gaskets.

- When installing the hoses, do not twist them or bend them into loops with a small radius.

  This will cause damage to the hose and markedly reduce its service life.

CHECKS AFTER INSPECTION AND MAINTENANCE WORKS

If you forget to carry out the checks after inspection and maintenance, unexpected problems may occur, and this may lead to serious injury or property damage. Do as follows.

- Checks after operation (with engine stopped)
  - Have any inspection and maintenance points been forgotten?
  - Have all inspection and maintenance items been carried out correctly?
  - Have any tools or parts been dropped inside the machine? It is particularly dangerous if parts are dropped inside machine and get caught in the lever linkage mechanism.
  - Is there any leakage of water or oil? Have all the bolts been tightened?
- Checks when operating engine
  - For details of the checks when operating the engine, see "TWO WORKERS FOR MAINTENANCE WHEN ENGINE IS RUNNING (PAGE 50)" and pay careful attention to safety.
  - Are the inspection and maintenance items working properly?
  - Is there any leakage of oil when the engine speed is raised and load is applied to the oil pressure?

SELECTING FUEL AND LUBRICANTS TO MATCH AMBIENT TEMPERATURE

It is necessary to use fuel and lubricants that match the ambient temperature.

For details, see "USE OF FUEL, COOLANT AND LUBRICANTS ACCORDING TO AMBIENT TEMPERATURE (PAGE 215)".

LUBRICANTS, COOLANT AND FILTERS

HANDLING OIL, FUEL, COOLANT, AND PERFORMING OIL CLINIC

OIL

q Oil is used in the engine and work equipment under extremely severe conditions (high temperature, high pressure), and it deteriorates with use.

Use oil that matches the grade and temperature for use given in the Operation and Maintenance Manual.

Even if the oil is not dirty, change the oil after the specified interval.

q Oil corresponds to blood in the human body, so be careful when handling it to prevent any impurities (water, metal particles, dirt, etc.) from getting in.

The majority of problems with machine are caused by the entry of such impurities.

Take particular care not to let any impurities get in when storing or adding oil.

q Never mix oils of different grades or brands.

q Add the specified amount of oil.

Having too much oil or too little oil are both causes of problems.

q If the oil in the work equipment is not clear, there is probably water or air getting into the circuit. In such cases, please contact your Komatsu distributor.

q When changing the oil, replace the related filters. In particular, when replacing the engine oil filter, fill the new filter with fresh, clean specified oil before installing.

q We recommend periodic analysis of the oil to check the condition of the machine. For those who wish to use this service, please contact your Komatsu distributor.

FUEL

q The fuel pump is a precision instrument, and if fuel containing water or dirt is used, it cannot work properly.

q Be extremely careful not to let impurities get in when storing or adding fuel.

q Use the fuel specified in the Operation and Maintenance Manual.

Fuel may congeal depending on the temperature when it is used (particularly in low temperature below -15ºC, so it is necessary to change to a fuel that matches the temperature.

q To prevent the moisture in the air from condensing and forming water inside the fuel tank, fill the fuel tank after completing the day's work.

q Before starting the engine, or when 10 minutes have passed after adding fuel, drain the sediment and water from the fuel tank.

q If the engine runs out of fuel, or if the filters have been replaced, it is necessary to bleed the air from the circuit.

COOLING SYSTEM COOLANT

- River water contains large amounts of calcium and other impurities, so if it is used, scale will stick to the engine and radiator, and this will cause defective heat exchange and overheating.

  Do not use water that is not suitable for drinking.

- When using anti-freeze, observe the precautions given in the Operation and Maintenance Manual.

- Komatsu machines are supplied with Komatsu specified anti-freeze in the coolant.

  This anti-freeze is effective in preventing corrosion of the cooling system.

  The anti-freeze can be used continuously for 2 years or 4000 hours. Therefore, it can be used as it is even in hot areas.

- Anti-freeze is flammable, so be extremely careful not to expose it to flame or fire.

- The ratio for the mixture of water and anti-freeze differs according to the ambient temperature.

  For details of the ratio, see "CLEAN INSIDE OF COOLING SYSTEM (PAGE 230)".

- If the engine overheats, wait for the engine to cool before adding coolant.

- In addition to causing overheating, lack of cooling water also causes corrosion of the cooling circuit due to entry of air.

GREASE

- Grease is used to prevent binding and noise at the joints.

- The nipples not included in the MAINTENANCE section are nipples used when overhauling, so they do not need to be greased periodically.

  If any part becomes stiff or generates noise after being used for a long time, grease it.

- Wipe off all of the old grease that is pushed out when greasing.

  Be particularly careful to wipe off the old grease in places where sand or dirt sticking in the grease would cause wear of the rotating parts.

CARRYING OUT KOWA (Komatsu Oil Wear Analysis)

KOWA is a maintenance service that makes it possible to prevent machine failures and down-time. With KOWA, the oil is periodically sampled and analyzed. This enables early detection of wear of the machine drive parts and other abnormalities.

Periodic use of KOWA makes the following possible:

- It enables abnormalities to be detected early, leading to reduction of repair costs and machine downtime.

- It enables repair schedules to be planned, leading to improved machine availability.

KOWA ANALYSIS ITEMS

q Analysis of metal wear particles
This uses an ICP (Inductively Coupled Plasma) analyzer to measure the density of metal wear particles in the oil.

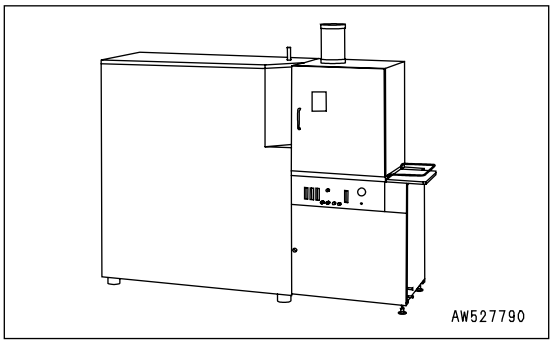

q Measurement of particle quantity
This uses a PQI (Particle Quantifier Index) measurer to measure the quantity of large iron particles in the oil.

q Others
Measurements are made of items such as the ratio of water or fuel in the oil, and the dynamic viscosity.

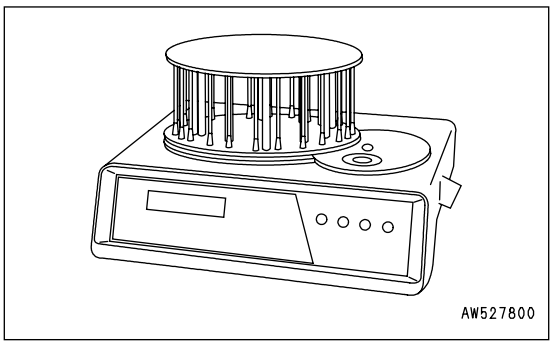

OIL SAMPLING

q Sampling interval
250 hours: Engine
500 hours: Other components
q Precautions when sampling
  q Make sure that the oil is well mixed before sampling.
  q Carry out sampling regularly at fixed intervals.
  q Do not carry out sampling on rainy or windy days when water or dust can get into the oil.

For further details of KOWA, please contact your Komatsu distributor.

OIL AND FUEL STORAGE

q Keep indoors to prevent any water, dirt, or other impurities from getting in.

q When keeping drum cans for a long period, put the drum on its side so that the filler port of the drum can is at the side. (To prevent moisture from being sucked in)
If drum cans have to be stored outside, cover them with a waterproof sheet or take other measures to protect them.

q To prevent any change in quality during long-term storage, be sure to use in the order of first in - first out (use the oldest oil or fuel first).

FILTERS

- Filters are extremely important safety parts. They prevent impurities in the fuel and air circuits from entering important equipment and causing problems.

  Replace all filters periodically. For details, see the Operation and Maintenance Manual.

  However, when working in severe conditions, replace the filters at shorter intervals according to the oil and fuel (sulfur content) being used.

- Never try to clean the filters (cartridge type) and use them again. Replace with new filters.

- When replacing oil filters, check if any metal particles are affixed to the old filter. If any metal particles are found, please contact your Komatsu distributor.

- Do not open packs of spare filters until just before they are to be used.

- Use Komatsu genuine filters.

EXPLANATION OF LUBRICATION CHART DECAL

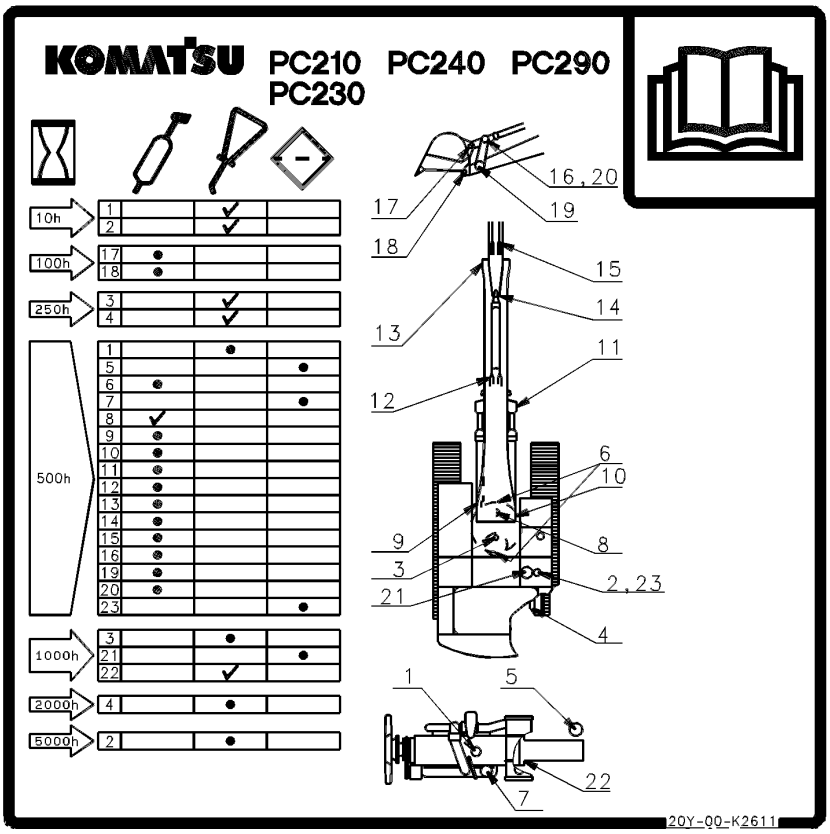

	Interval of service		Change filter
	Lubrication by greasing (G)	(LITRES)	Amount of oil required at change (liters)
	Check oil level/change (EO)		

Key to lubrication points (to be checked)

Item	Part	Action	refer to page
1	Engine oil	Check level Change oil	126 258
2	Hydraulic oil	Check level Change oil	129 270
3	Swing machinery oil	Check level Change oil	250 265
4	Final drive oil	Check level Change oil	251 267
5	Engine oil filter & fuel water seperator	Change filter	258
6	Swing circle	Lubricate	257
7	Engine oil filter	Change filter	258
8	Swing pinion	Lubricate	260
9	Boom cylinder foot pin	Grease	257
10	Boom foot pin	Grease	257
11	Boom cylinder rod end pin	Grease	256
12	Arm cylinder foot pin	Grease	256
13	Boom arm coupling pin	Grease	256
14	Arm cylinder rod end	Grease	256
15	Bucket cylinder foot pin	Grease	256
16	Bucket cylinder rod end	Grease	249
17	Bucket-link coupling pin	Grease	248
18	Arm-bucket coupling pin	Grease	248
19	Arm link coupling pin	Grease	249
20	Link coupling pin	Grease	249
21	Hydraulic filter element	Change filter	264
22	Damper case	Check level	266

ELECTRIC SYSTEM MAINTENANCE

q It is extremely dangerous if the electrical equipment becomes wet or the covering of the wiring is damaged. This will cause electrical leakage and may lead to malfunction of the machine. Do not wash the inside of the operator's cab with water. When washing the machine, be careful not to let water get into the electrical components.

- Minimum service relating to the electric system is a check of fan belt tension, check of damage or wear in the fan belt and check of battery fluid level.
- Never install any electric components other than those specified by Komatsu.
- External electrical interference may cause malfunction of the control system controller. Before installing a radio receiver or other wireless equipment, please contact your Komatsu distributor.
- When working at the seashore, carefully clean the electric system to prevent corrosion.
- When installing an operator's cab cooler or any other electrical equipment, connect it to an independent power source connector. The optional power source must never be connected to the fuse, starting switch, or battery relay.

HANDLING HYDRAULIC SYSTEM

- During and after operations, the hydraulic system is at high temperature. During operations, it is also under high pressure, so pay careful attention to the following when carrying out inspection and maintenance of the hydraulic system.
- Stop the machine on level ground, lower the bucket to the ground, and set it so that there is no pressure on the cylinder circuit.
- Stop the engine.
- Immediately after operations, the hydraulic oil and lubricating oil are under pressure and at high temperature, so wait for the temperature to go down before starting maintenance.
- Even when the temperature goes down, there may still be internal pressure. When loosening plugs, screws, or hose connections, do not stand directly in front. Loosen them gradually to release any internal pressure before removing.
- When carrying out inspection or maintenance of the hydraulic circuits, bleed the air to release the internal pressure.
- Minimal inspection or maintenance consists of checking the hydraulic oil level, replacing the filters, and changing the hydraulic oil.
- When removing high-pressure hoses, check that the O-ring is not damaged. If it is damaged, replace it.

WEAR PARTS LIST

Wear parts such as the filter element, bucket tooth, etc. are to be replaced at the time of periodic maintenance or before their abrasion limits.

The wear parts should be changed as scheduled in order to use the machine economically.

For part change, Komatsu genuine parts should be used (excellent quality).

When ordering parts, please check the part number in the parts book.

The parts in parentheses are to be replaced at the same time.

Item	Part No.	Part Name	Q'ty	Replacement frequency
Engine oil filter	6735-51-5141	Cartridge	1	Every 500 hours service
Fuel filter	6732-71-6111	Cartridge	1	Every 500 hours service
Hydraulic tank breather	20Y-60-21470	Element	1	Every 500 hours service
Hydraulic oil filter	20Y-60-31121 (07000-15160)	Element (O-ring)	1 (1)	Every 1000 hours service
Air cleaner	600-185-3100	Element assembly	1	—
Additional filter for breaker (if equipped)	20Y-970-1820 (07000-12115)	Element (O-ring)	1 (1)	—
Electric heater	6732-11-4811	Gasket	2	—

USE OF FUEL, COOLANT AND LUBRICANTS ACCORDING TO AMBIENT TEMPERATURE

PROPER SELECTION OF FUEL, COOLANT AND LUBRICANTS

RESERVOIR	KIND OF FLUID	AMBIENT TEMPERATURE °C		Type of oil	Capacity	
		Min Temp	Max Temp		Specified	Refil
Engine oil pan	Engine oil	0° C -20° C -20° C -15° C	30° C 10° C 50° C 50° C	SAE 30 CD SAE 10W SAE 10W-30 SAE 15W-40	26.3 liters	24 liters
Swing machinery case		-20° C	40° C	SAE 30	6.6 liters	6.6 liters
Final drive case (each)		-20° C	40° C	SAE 30	8.0 liters	7.8 liters
Damper case		-20° C	40° C	SAE 30	0.75 liter	-
Hydraulic system		-20° C -20° C -20° C -25° C	40° C 40° C 40° C 40° C	SAE 10W SAE 10W-30 SAE 15W-40 Bio degradable hyd. oil (Hees) ISO 46	247 liters	143 liters
	Hydraulic oil	-20	40° C	HO46-HM ※		
Fuel tank	Diesel fuel	- 6° C -20° C		ASTM D975 N° 2 ASTM N° 1 for winter	400 Liters	-
Cooling system	Water	-30° C		**Add antifreeze**	31 liters	-

※ For HO46-HM, use the oil recommended by komatsu.

REMARK

q When fuel sulphur content is less than 0.5%, change oil in the oil pan at the periodic maintenance hours described in this manual.
Change oil according to the following table if fuel sulphur content is above 0.5%.

Fuel sulphur content	Change interval of oil in engine oil pan
0.5 to 1.0%	1/2 of regular interval
Above 1.0%	1/4 of regular interval

- When starting the engine in an atmospheric temperature lower than 0°C, be sure to use engine oil SAE10W, SAE10W-30 and SAE15W-40, even though an atmospheric temperature goes up to 10°C more or less in the day time.
- Use API classification CD as engine oil and if API classification CC, reduce the engine oil change interval to half.
- There is no problem if single grade oil is mixed with multigrade oil (SAE10W-30, 15W-40), but be sure to add single grade oil that matches the temperature in the table.
- We recommend Komatsu genuine oil which has been specifically formulated and approved for use in engine and hydraulic work equipment applications.

Specified capacity: Total amount of oil including oil for components and oil in piping.
Refill capacity: Amount of oil needed to refill system during normal inspection and maintenance.

ASTM: American Society of Testing and Material
SAE: Society of Automotive Engineers
API: American Petroleum Institute

No.	Supplier	Engine Oil [CD or CE] SAE10W, 30, 40 10W30, 15W40(The 15W40 oil marked * is CE.)	Gear Oil [GL-4 or GL-5] SAE80, 90, 140	Grease [Lithium-Base] NLGI No.2	Anti-freeze Coolant [Ethylene Glycol Base] Permanent Type
1	KOMATSU	EO10-CD EO30-CD EO10-30CD EO15-40CD	GO90 GO140	G2-LI G2-LI-S	Komatsu Anti-freeze
2	AGIP	Diesel sigma S super diesel multi- grade *Sigma turbo	Rotra MP	GR MU/EP	—
3	AMOCO	*Amoco 300	Multi-purpose gear oil	PYKON premium grease	—
4	ARCO	*Arcofleet S3 plus	Arco HD gear oil	Litholine HEP 2 Arco EP moly D	—
5	BP	Vanellus C3	Gear oil EP Hypogear EP	Energrease LS-EP2	—
6	CALTEX	*RPM delo 400 RPM delo 450	Universal thuban Universal thuban EP	Marfak all purpose 2 Ultra-duty grease 2	—
7	CASTROL	*Turbomax *RX super CRD	EP EPX Hypoy Hypoy B Hypoy C	MS3 Spheerol EPL2	—
8	CHEVRON	*Delo 400	Universal gear	Ultra-duty grease 2	—
9	CONOCO	*Fleet motor oil	Universal gear lubricant	Super-sta grease	—
10	ELF	Multiperformance 3C Performance 3C	—	Tranself EP Tranself EP type 2	—
11	EXXON (ESSO)	Essolube D3 *Essolube XD-3 *Essolube XD-3 Extra *Esso heavy duty Exxon heavy duty	Gear oil GP Gear oil GX	Beacon EP2	—
12	GULF	Super duty motor oil *Super duty plus	Multi-purpose gear lubri-cant	Gulfcrown EP2 Gulfcrown EP special	—
13	MOBIL	Delvac 1300 *Delvac super 10W-30, 15W-40	Mobilube GX Mobilube HD	Mobilux EP2 Mobilgrease 77 Mobilgrease special	—
14	PENNZOIL	*Superme duty fleet motor oil	Multi-purpose 4092 Multi-purpose 4140	Multi-purpose white grease 705 707L White-bearing grease	—
15	PETROFINA	FINA kappa TD	FINA potonic N FINA potonic NE	FINA marson EPL2	—
16	SHELL	Rimura X	Spirax EP Spirax heavy duty	Albania EP grease	—
17	SUN	—	Sunoco GL5 gear oil	Sunoco ultra prestige 2EP Sun prestige 742	—
18	TEXACO	*Ursa super plus Ursa pre-mium	Multigear	Multifak EP2 Starplex 2	Texaco Havoline XLC
19	TOTAL	Rubia S *Rubia X	Total EP Total Transmission TM	Multis EP2	Total fina Elf Glacelf CHP Supra
20	UNION	*Guardol	MP gear lube LS	Unoba EP	—
21	VEEDOL	*Turbostar *Diesel star MDC	Multigear Multigear B Multigear C	—	—

TIGHTENING TORQUE SPECIFICATIONS

TIGHTENING TORQUE LIST

⚠ CAUTION

If nuts, bolts, or other parts are not tightened to the specified torque, it will cause looseness or damage to the tightened parts, and this will cause failure of the machine or problems with operation.
Pay careful attention when tightening parts.

Unless otherwise specified, tighten the metric nuts and bolts to the torque shown in the table below.

The tightening torque is determined by the width across the flats of the nut and bolt.

If it is necessary to replace any nut or bolt, use a Komatsu genuine part of the same size as the part that was replaced

Thread diameter a(mm)	Width across flat b(mm)	Tightening torque			
		Target value		Service limit	
		N•m	kgf•m	N•m	kgf•m
6	10	13.2	1.35	11.8 - 14.7	1.2 - 1.5
8	13	31	3.2	27 - 34	2.8 - 3.5
10	17	66	6.7	59 - 74	6.0 - 7.5
12	19	11	11.5	98 - 123	10.0 - 12.5
14	22	177	18	157 - 196	16.0 - 20.0
16	24	279	28.5	245 - 309	25.0 - 31.5
18	27	382	39	343 - 425	35.0 - 43.5
20	30	549	56	490 - 608	50.0 - 62.0
22	32	745	76	662 - 829	67.5 - 84.5
24	36	927	94.5	824 - 1030	84.0 - 105.0
27	41	1320	135.0	1180 - 1470	120.0 - 150.0
30	46	1720	175.0	1520 - 1910	155.0 - 195.0
33	50	2210	225.0	1960 - 2450	200.0 - 250.0
36	55	2750	280.0	2450 - 3040	250.0 - 310.0
39	60	3280	335.0	2890 - 3630	295.0 - 370.0

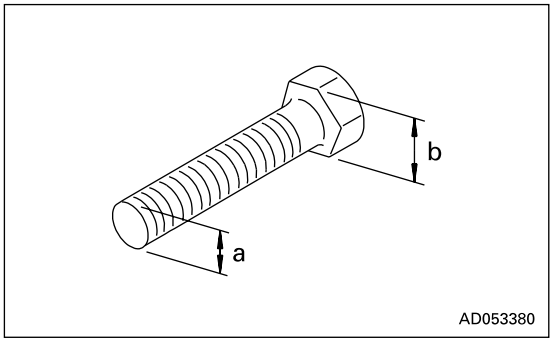

Apply the following table for Hydraulic Hose

.

Thread diameter a(mm)	Width across flat b(mm)	Tightening torque			
		Target value		Service limit	
		N•m	kgf•m	N•m	kgf•m
14	19	29.4	3.0	27.5 - 39.2	2.8 - 4.0
18	24	78.5	8.0	58.8 - 98.1	6.0 - 10.0
22	27	117.7	12.0	88.3 - 137.3	9.0 - 14.0
24	32	147.1	15.0	117.7 - 176.5	12.0 - 18.0
30	36	215.7	22.0	176.5 - 245.2	18.0 - 25.0
33	41	255.0	26.0	215.7 - 284.4	22.0 - 29.0

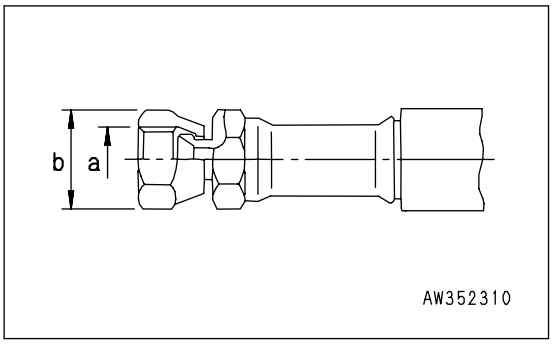

PERIODIC REPLACEMENT OF SAFETY CRITICAL PARTS

To ensure safety at all times when operating or driving the machine, the user of the machine must carry out periodic maintenance. In addition, to further improve safety, the user should also carry out periodic replacement of the parts given in the table. These parts are particularly closely connected to safety and fire prevention.

With these parts, the material changes as time passes, or they easily wear or deteriorate. Because it is difficult to judge the condition of the parts simply by periodic inspection, they should be replaced after a fixed period of time regardless of their condition. This is necessary to ensure that they maintain their function completely.

However, if these parts show any abnormality before the replacement interval has passed, they should be repaired or replaced immediately.

If the hose clamps show any deterioration, such as deformation or cracking, replace the clamps at the same as the hoses.

When replacing the hoses, replace the O-rings, gaskets, and other such parts at the same time.

Ask your Komatsu distributor to replace the safety critical parts.

SAFETY CRITICAL PARTS

No.	Safety critical parts for periodic replacement	Q'ty	Replacement interval
1	Fuel hose (Fuel tank - Water separator)	1	Every 2 years or 4000 hours, whichever comes sooner
2	Fuel hose (Water separator - Fuel pump)	1	
3	Fuel return hose (Fuel injection pump - Fuel tank)	2	
4	Spill hose (Engine output connector - Fuel tank)	1	
5	Pump outlet hose (Pump - Control valve)	2	
6	Work equipment hose (Boom cylinder inlet)	4	
7	Work equipment hose (Bucket cylinder line - Boom foot section)	2	
8	Work equipment hose (Bucket cylinder inlet)	2	
9	Work equipment hose (Arm cylinder line - Boom foot section)	2	
10	Work equipment hose (Arm cylinder inlet)	2	
11	Additional attachment line hose (Boom foot section)	2	
12	Additional attachment line hose (Boom top section)	2	
13	Swing line hose (Swing motor inlet)	2	
14	Main suction hose	1	
15	Heater hose	2	
16	Travel line hose (Control valve - Swivel joint)	4	
17	Travel line hose (Swivel joint - Travel motor)	4	
18	Seat belt	1	Every 3 years

MAINTENANCE SCHEDULE

If the machine is equipped with a hydraulic breaker, the maintenance schedule for some parts will be different. For details, see "MAINTENANCE INTERVAL FOR HYDRAULIC BREAKER (PAGE 223)" to confirm the correct maintenance schedule when carrying out maintenance.

MAINTENANCE SCHEDULE CHART

Initial 250 Hours Maintenance (Only after the first 250 hours)

REPLACE FUEL FILTER CARTRIDGE 259
CHECK ENGINE VALVE CLEARANCE, ADJUST 268

When Required

CHECK, CLEAN AND REPLACE AIR CLEANER ELEMENT 225
CLEAN INSIDE OF COOLING SYSTEM 230
CHECK AND TIGHTEN TRACK SHOE BOLTS 233
CHECK AND ADJUST TRACK TENSION 234
CHECK ELECTRICAL INTAKE AIR HEATER 236
REPLACE BUCKET TEETH 237
ADJUST BUCKET CLEARANCE 237
CHECK WINDOW WASHER FLUID LEVEL, ADD FLUID 239
CHECK AND ADJUST AIR CONDITIONER (IF EQUIPPED) 240
WASHING WASHABLE FLOOR 241
METHOD OF SETTING MACHINE ANGLE 243
BLEEDING AIR FROM HYDRAULIC SYSTEM 244
METHOD FOR RELEASING INTERNAL PRESSURE IN HYDRAULIC CIRCUIT 246

Checks Before Starting

Every 100 Hours Maintenance

LUBRICATING 248

Every 250 Hours Maintenance

LUBRICATING 249
CHECK OIL LEVEL IN MACHINERY CASE, ADD OIL 250
CHECK OIL LEVEL IN FINAL DRIVE CASE, ADD OIL 251
CHECK LEVEL OF BATTERY ELECTROLYTE 252
CHECK, ADJUST TENSION OF AIR CONDITIONER COMPRESSOR BELT 255

Every 500 Hours Maintenance

LUBRICATING 256
LUBRICATE SWING CIRCLE (2 POINTS) 257
CHANGE OIL IN ENGINE OIL PAN, REPLACE ENGINE OIL FILTER CARTRIDGE 258
REPLACE FUEL FILTER CARTRIDGE 259
CHECK SWING PINION GREASE LEVEL, ADD GREASE 260
CLEAN AND INSPECT RADIATOR FINS, OIL COOLER FINS AND CONDENSER FINS 260
CLEAN INTERNAL AND EXTERNAL AIR FILTERS OF AIR CONDITIONER SYSTEM 261
REPLACE BREATHER ELEMENT IN HYDRAULIC TANK 263

Every 1000 Hours Maintenance

REPLACE HYDRAULIC FILTER ELEMENT 264
CHANGE OIL IN SWING MACHINERY CASE 265
CHECK OIL LEVEL IN DAMPER CASE, ADD OIL 266
CHECK ALL TIGHTENING PARTS OF TURBOCHARGER 266
CHECK PLAY OF TURBOCHARGER ROTOR 266
CHECK FAN BELT TENSION AND REPLACE FAN BELT 266

Every 2000 Hours Maintenance

CHANGE OIL IN FINAL DRIVE CASE 267
CLEAN HYDRAULIC TANK STRAINER 268
CLEAN, CHECK TURBOCHARGER 268
CHECK ALTERNATOR, STARTING MOTOR 268
CHECK ENGINE VALVE CLEARANCE, ADJUST 268
CHECK VIBRATION DAMPER 268

Every 4000 Hours Maintenance

CHECK WATER PUMP 269

Every 5000 Hours Maintenance

CHANGE OIL IN HYDRAULIC TANK 270

MAINTENANCE INTERVAL FOR HYDRAULIC BREAKER

For machine equipped with a hydraulic breaker, the hydraulic oil deteriorates faster than for normal bucket digging operations, so set the maintenance intervals as follows.

Hydraulic Oil Filter Element - Replace

- On new machines, replace the element after the first 100 to 150 hours, then carry out further replacement of the element according to the table on the right.

1. Replacement interval for hydraulic oil
2. Replacement interval for bio-oil
3. Hydraulic filter element
4. Additional filter element

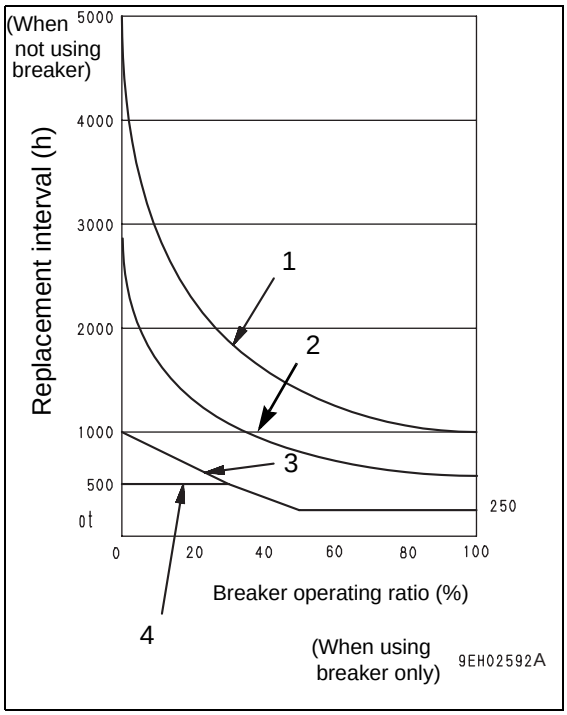

Hydraulic Oil - Change

- Change the oil according to the table on the right.

Breaker Circuit Additional Oil Filter Element - Replace

- Use a guideline of 250 hours for use of the breaker (operating ratio for the breaker: 50 % or more), and replace the element according to the table on the right.

USE OF BIO-DEGRADEABLE OIL

Special care must be taken when using bio-degradable oil in the hydraulic system of the hydraulic excavator.
When the machine is supplied from the factory with bio-degradable oil, the following change intervals should be used. The oil supplied from the factory is classed as BO46-G3. (If the machine has been filled with any other type of bio-degradable oil, then contact your Komatsu distributor for advice on change intervals).

Filter changes

1. The first filter change should be made 50 hours after first use.
2. The second, and subsequent changes should be made at the standard changing intervals.
3. If an abnormality is found in the characteristics of the oil, change the filter immediately.

Oil changes

1. Change the bio-degradable oil every 2500 hours.
2. If an abnormality is found in the characteristics of the oil, change the oil immediately.

MAINTENANCE PROCEDURE

EVERY 10 HOURS MAINTENANCE (FOR THE FIRST 50 HOURS)

Carry out the following maintenance every 10 hours for the first 50 hours of operation on new machines.

q Grease Work Equipment Pins.

For details of the method of replacing or maintaining , see section on EVERY 100 HOURS, 250 HOURS and EVERY 2000 HOURS MAINTENANCE.

INITIAL 250 HOURS MAINTENANCE (ONLY AFTER THE FIRST 250 HOURS)

Carry out the following maintenance only after the first 250 hours of operation on new machines.

q Replace Fuel Filter Cartridge

q Check and adjust engine valve clearance

Special tools are needed for inspection and maintenance, so contact your Komatsu distributor.

For details of the method of replacing or maintaining, see the section on EVERY 500 HOURS and 2000 HOURS SERVICE.

WHEN REQUIRED

CHECK, CLEAN AND REPLACE AIR CLEANER ELEMENT

⚠ WARNING

- **If inspection, cleaning, or maintenance is carried out with the engine running, dirt will enter the engine and cause damage to the engine. Stop the engine before carrying out these operations.**
- **When using compressed air, there is danger of dirt flying and causing personal injury. Wear protective glasses, dust mask, or other protective equipment.**
- **When removing the outer element from the air cleaner body, it is dangerous to pull it out by force. When working at high places or where the foothold is poor, be careful not to fall because of the reaction when pulling out the outer element.**

Checking

If air cleaner clogging monitor (1) of the monitor panel flashes, clean the air cleaner element.

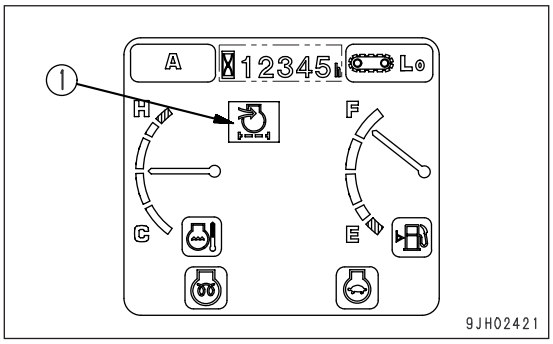

Replacing

- Replacing element, O-ring
  If one year has passed since installing the element or if air cleaner clogging monitor (1) on the monitor panel flashes immediately after the element is cleaned, replace the outer element, inner element, and O-ring.
- Replacing evacuator valve
  Replace it if it is damaged or the rubber is markedly deformed.

NOTICE

Do not clean the air cleaner element until the air cleaner clogging monitor on the monitor panel flashes. If the element is cleaned frequently before the clogging monitor flashes, the air cleaner will not be able to display its performance fully, and the cleaning efficiency will also go down.
In addition, during the cleaning operation, more dirt stuck to the element will fall inside the inner element.

Outer Element - Clean

1. Open the rear door at the left side of the machine, remove 3 hooks (2), then remove cover (3).

NOTICE

Before and after cleaning the element, do not leave or keep it in direct sunlight.

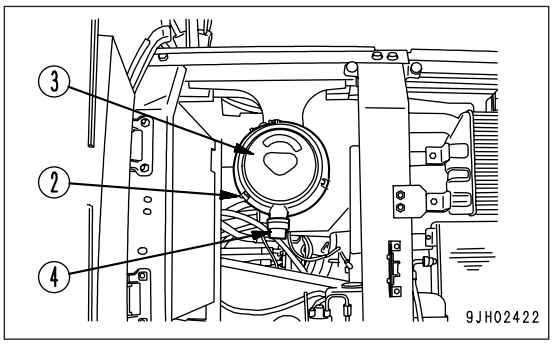

2. Hold the outer element, rock it lightly up and down and to the left and right, and rotate the element to the left and right to pull it out.

NOTICE

- **Never remove the inner element. It will allow dirt to enter and cause failure of the engine.**
- **Do not use a screwdriver or other tool.**

3. After removing the outer element, cover the air connector inside the air cleaner body with a clean cloth or tape to prevent dirt or dust from entering.

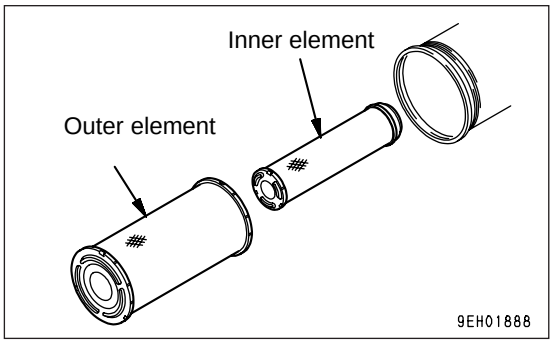

4. Wipe off or brush off the dirt stuck to cover (3) and the inside of the air cleaner body.

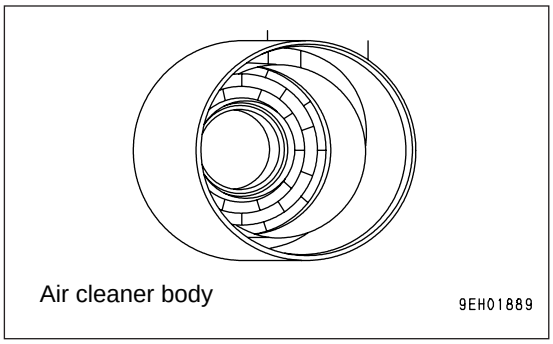

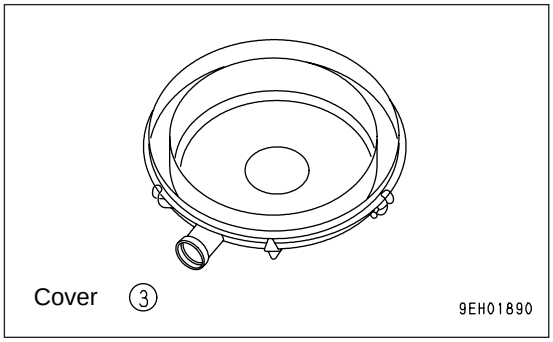

5. Remove any dirt or dust that is accumulated to evacuator valve (4) installed to cover (3).

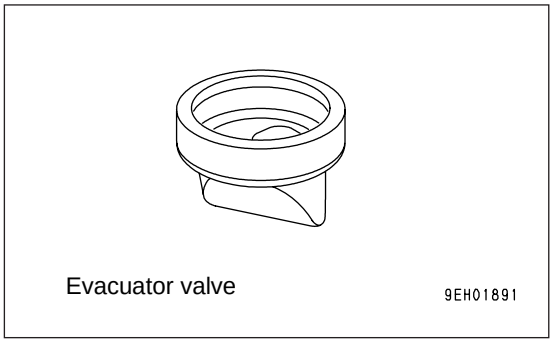

6. Direct dry compressed air (less than 0.69 MPa (7 kgf/cm^2, 99.4 psi)) to the outer element (4) from inside along its folds, then direct it from outside along its folds and again from inside.
   1) Remove one seal from the element whenever the element has been cleaned.
   2) Replace the outer element which has been cleaned 5 times repeatedly or used throughout a year. Replace the inner element at the same time.

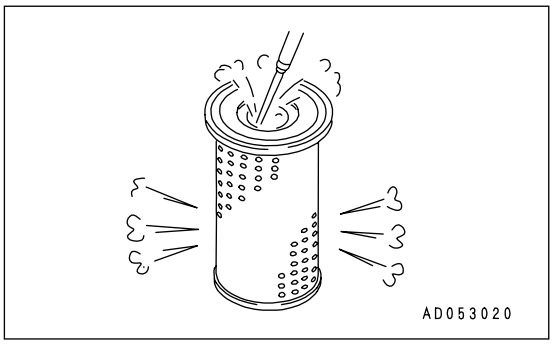

3) Replace both inner and outer elements when the monitor lamp (1) flashed soon after installing the cleaned outer element even though it has not been cleaned 5 times.
4) When replacing the element, stick on seal (A) packed in the same box as the element. Stick the seal in the position shown in the diagram on the right.

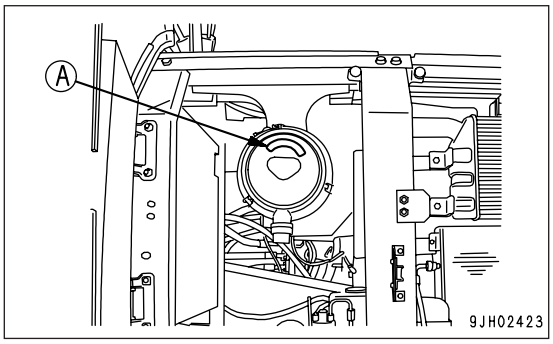

7. Remove the cloth or tape cover installed in Step 3.

8. If small holes or thin cracks are found on the element when it is checked by shining a light through it after cleaning, replace the element.

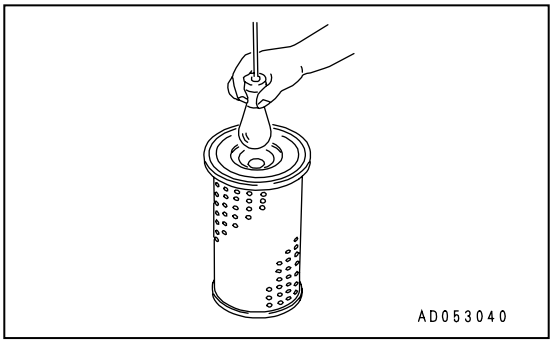

NOTICE

- **When cleaning the element, do not hit or beat it against anything.**
- **Do not use an element whose folds or gasket or seal are damaged.**

Air Cleaner Element - Install

NOTICE

- **Do not use any damaged gasket or seal or element with damaged pleats.**
- **Cleaning the element or O-ring after one year has passed and using them again will cause problems. Replace them with new parts.**
- **The seal portion on imitation parts lacks precision, and allows the entry of dust, which leads to damage of the engine. Do not use such imitation parts.**
- **Do not run the engine with the inner element removed. It will cause damage to the engine.**

1. Check that there is no dirt or oil stuck to the seal portion of the new element or cleaned element. Wipe off any dirt or oil.

2. When the outer element has been removed, check that the inner element has not come out of position and is not at an angle. If is at an angle, insert your hand and push it in straight.

3. Push the outer element in straight with your hand when installing it to the air cleaner body.
   If the element is held and rocked lightly up and down and to the left and right while pushing it in, the element can be inserted easily.

NOTICE

When inserting the element, if the rubber at the tip is swollen or the outer element is not pushed in straight, and cover (3) is assembled by force to hook (2), there is danger that the hook and air cleaner body may be damaged, so be careful when assembling.

4. Install cover (3) as follows.
   1) Align cover (3) with the element.
   2) Hook the tip of hook (2) to the protruding part of the air cleaner body and lock it in position.
   3) When locking hooks (2) in position, apply the hooks in turn on opposite sides (top, bottom, left, right) in the same way as when tightening bolts.
   4) Install cover (3) so that the evacuator is facing the ground.
   5) When cover (3) is installed, check that the clearance between the air cleaner body and cover (3) is not too large.
      If it is too large, install again.

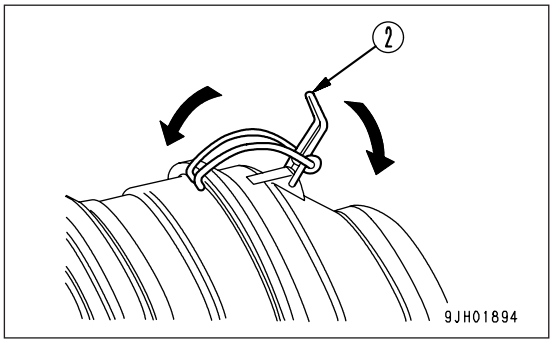

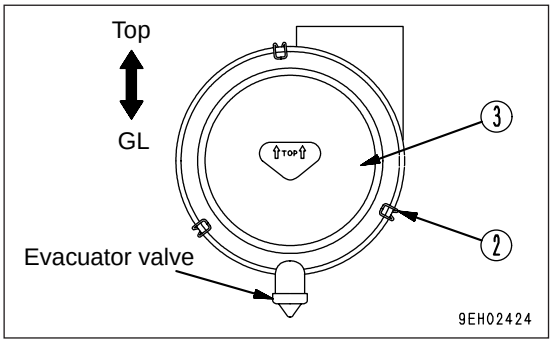

Air Cleaner Inner Element - Replace

1. First remove the outer element, and then remove the inner element.
2. Cover the air connector side (outlet side) with a clean cloth or tape.
3. Clean the air cleaner body interior, then remove the cover from the air intake port in Step 2.
4. Install a new inner element to the connector, then tighten the nut.

NOTICE

The inner element must not be cleaned and used again. When replacing the outer element, replace the inner element at the same time.

5. Set the outer element in position, then lock cover (3) with hooks (2).

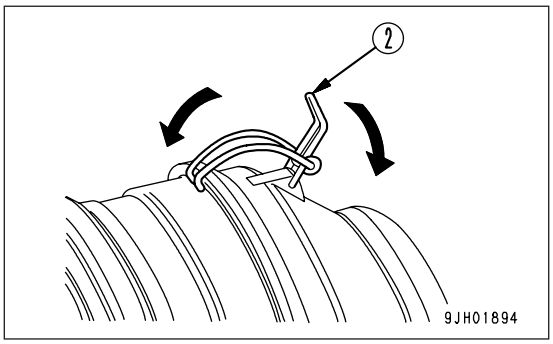

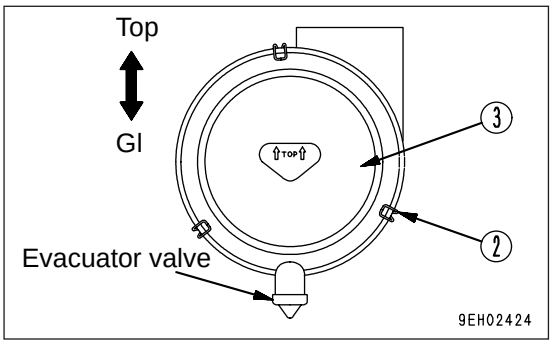

CLEAN INSIDE OF COOLING SYSTEM

⚠ WARNING

- **Immediately after the engine is stopped, the coolant is at a high temperature and the radiator is under high internal pressure.**
  If the cap is removed to drain the coolant in this condition, there is a hazard of burns. Wait for the temperature to go down, then turn the cap slowly to release the pressure before removing it.
- **Cleaning is carried out with the engine running. When standing up or leaving the operator's seat, set the safety lock lever to the LOCK position.**
- **For details of starting the engine, see "BEFORE STARTING ENGINE (PAGE 124)" and "STARTING ENGINE (PAGE 137)" in the OPERATION section.**
- **There is danger of touching the fan if the undercover is left removed.**
  Never enter behind the machine when the engine is running.

Clean the inside of the cooling system, change the coolant and replace the corrosion resistor agent KI according to the table below.

Kind of coolant	Cleaning inside of cooling system and changing coolant	Adding corrosion resistor agent KI
Permanent type antifreeze (All season type)	Every year (autumn) or every 2000 hours whichever comes first	Every 1000 hours and when cleaning the inside of the cooling system and when changing coolant.
Non permanent type antifreeze containing ethylene glycol (winter, one season type)	Every 6 months (spring, autumn) (Drain antifreeze in spring, add antifreeze in autumn)	
When not using antifreeze	Every 6 months or every 1000 hours whichever comes first	

Stop the machine on level ground when cleaning or changing the coolant.

Use a permanent type of antifreeze.

If, for some reason, it is impossible to use permanent type antifreeze, use an antifreeze containing ethylene glycol.

Super Coolant (AF-ACL) has an anti-corrosion effect as well as an antifreeze effect.

The ratio of antifreeze to water depends on the ambient temperature, but to obtain the corrosion resistance effect, a minimum ratio of 30% by volume is necessary.

In areas where the water is hard, add Komatsu genuine corrosion resistor agent KI. One packet of corrosion resistor agent contains 100g. The standard density of the mixture should be 7 g/liters.

When deciding the ratio of antifreeze to water, check the lowest temperature in the past, and decide from the mixing rate table given below.

It is actually better to estimate a temperature about 10°C lower when deciding the mixing rate.

Mixing rate of water and antifreeze

PC290

Min. atmospheric temperature	°C	-10	-15	-20	-25	-30
Amount of antifreeze	liters	9.3	11.1	12.7	14.2	15.4
Amount of water	liters	21.6	19.8	18.2	16.7	15.5

⚠ WARNING

Antifreeze is flammable, so keep it away from flame.

Antifreeze is toxic. When removing the drain plug, be careful not to get water containing antifreeze on you. I If it gets in your eyes, flush your eyes with large quantities of fresh water and see a doctor at once.

Use city water for the cooling water.

If river water, well water or other such water supply must be used, contact your Komatsu distributor.

We recommend use of an antifreeze density gauge to control the mixing proportions.

q Prepare a container to catch drained coolant: Min 21.5 liters capacity.

Prepare a hose to supply water.

1. Turn radiator cap (1) slowly and remove it.
2. Remove the undercover, then set the container under drain valve (2) to catch the coolant mixture.
   Open drain valve (2) at the bottom of the radiator and drain the coolant.
3. After draining the coolant, close drain valve (2), and fill with city water. When the radiator is full, start the engine and run it at low idle to raise the temperature to at least 90°C, then continue to run it for approx. 10 minutes.

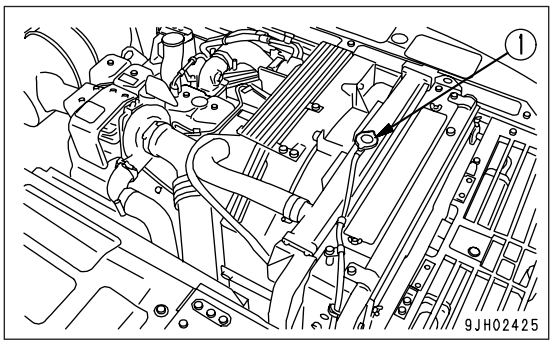

4. Stop the engine, open drain valve (2), and drain the water.

5. After draining the water, clean the radiator with detergent. For the cleaning method, follow the detergent instructions.

6. Close drain valve (2).

7. Install the undercover.

8. Add water through the water filler, up to the filler port.

9. Run the engine at a low speed for 5 minutes, then at a high speed for 5 minutes to bleed air mixed in the cooling water. (At this time, keep the water filler cap removed.)

10. After draining off the cooling water of reserve tank (3) , clean the inside of the reserve tank and refill the water between FULL and LOW level.

11. Stop the engine and tighten the cap. Check the coolant level, and add water if the level is low.

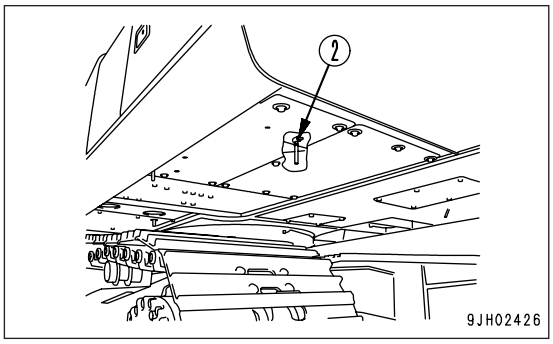

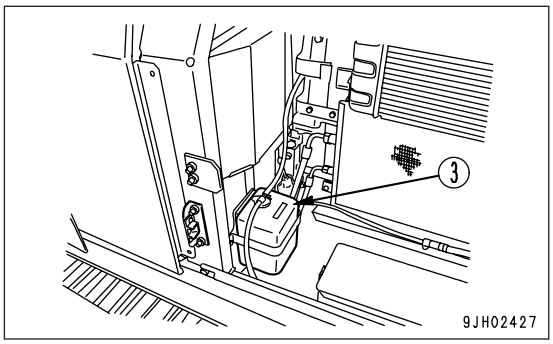

CHECK AND TIGHTEN TRACK SHOE BOLTS

If the machine is used with loose track shoe bolts (1), they will break, so tighten any loose bolts immediately.

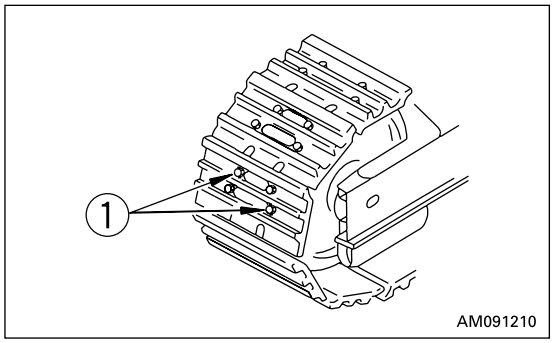

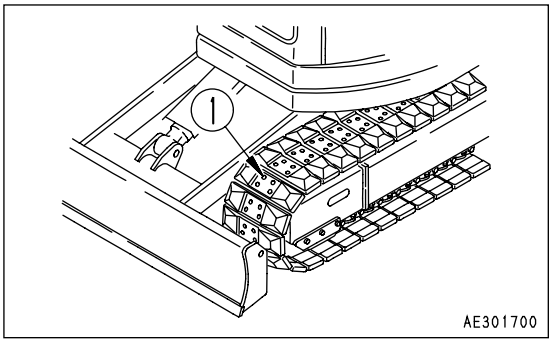

Method for tightening

q Track shoe

1. First tighten to a torque of 490 ± 49 N•m (50 ± 5 kgf•m) then check that the nut and shoe are in close contact with the link contact surface.
2. After checking, tighten further 120º ± 10º.

q Road liner

1. Tighten to a torque of 549 ± 59 N•m (56 ± 6 kgf•m).
   After tightening, check that the nut and shoe are in close contact with the link contact surface.

Order for tightening

Tighten the bolts in the order shown in the diagram on the right. After tightening, check that the nut and shoe are in close contact with the link mating surface.

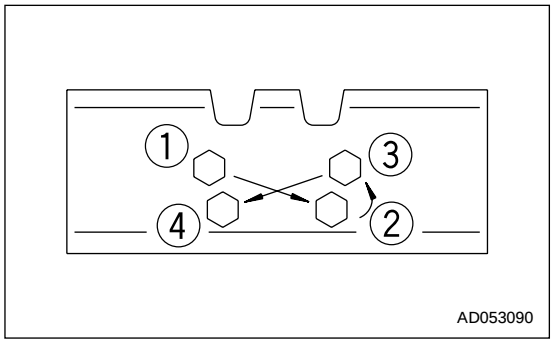

CHECK AND ADJUST TRACK TENSION

⚠ WARNING

For details of starting the engine and operating the work equipment, see "BEFORE STARTING ENGINE (PAGE 124)", "STARTING ENGINE (PAGE 137)", "AFTER STARTING ENGINE (PAGE 141)", and "WORK EQUIPMENT CONTROLS AND OPERATIONS (PAGE 157)" in the OPERATION section.

The wear of the pins and bushings on the undercarriage will vary with the working conditions and type of soil, so inspect the track tension frequently in order to maintain the standard tension.
Stop the machine on firm, horizontal ground when carrying out the inspection and maintenance.

Checking

1. Run the engine at low idle, move the machine forward a distance equal to the length of track on the ground, then stop the machine.

2. Choose wooden block (3) that will reach from idler (1) to carrier roller (2), then place it on top of the track.

3. Measure the maximum deflection between the top surface of the track and the bottom surface of the wooden block.
   Q Standard deflection
   Deflection "a" should be 10 to 30 mm.

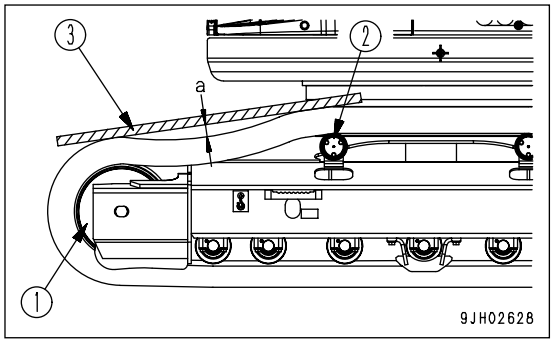

If the track tension is not at the standard value, adjust it in the following manner.

Adjustment

⚠ WARNING

There is danger of plug (1) flying out under the high internal pressure of the grease. Never loosen plug (1) more than 1 turn.

Never loosen any part other than plug (1). Never put your face in the mounting direction of plug (1).

If the track tension cannot be loosened with the procedure given here, please contact your Komatsu distributor.

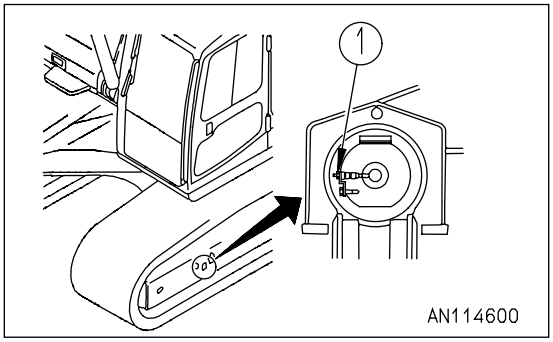

When increasing tension
Prepare a grease gun.

1. Pump in grease through grease fitting (2) with a grease gun.
2. To check that the tension is correct, move the machine slowly forward (7 - 8 m).
3. Check the track tension again, and if the tension is not correct, adjust it again.

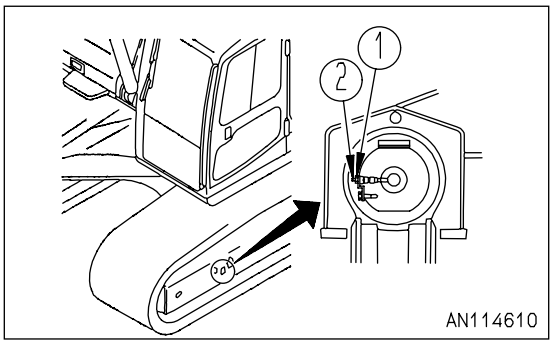

4. Continue to pump in grease until dimension S becomes zero (0). If the tension is still loose, the pin and bushing are excessively worn, so they must be either turned or replaced.
   Please contact your Komatsu distributor for repairs.

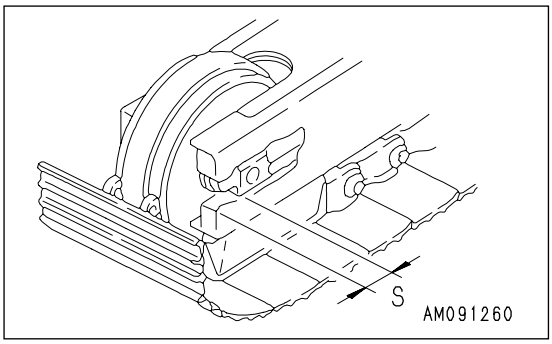

When loosening tension

⚠ WARNING

It is extremely dangerous to release the grease by any method except the procedure given below.

If the track tension is not relieved by this procedure, please contact your Komatsu distributor for repairs.

1. Loosen plug (1) gradually to release the grease.
2. Turn plug (1) a maximum of one turn.
3. If the grease does not come out smoothly, move the machine forwards and backwards a short distance.
4. Tighten plug (1).
5. To check that the tension is correct, move the machine slowly forward (7 - 8 m).
6. Check the track tension again, and if the tension is not correct, adjust it again.

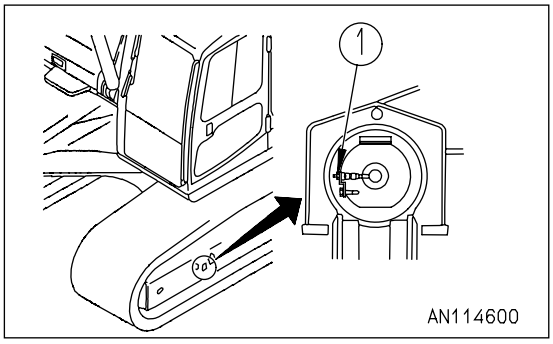

CHECK ELECTRICAL INTAKE AIR HEATER

Before the start of the cold season (once a year), contact your Komatsu distributor to have the electrical intake air heater repaired or checked for dirt or disconnections.

REPLACE BUCKET TEETH

Replace the point before the adapter starts to wear.

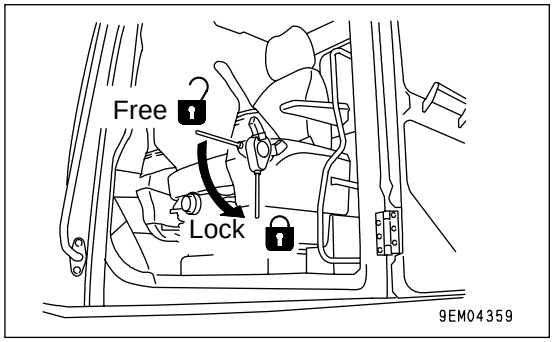

⚠ WARNING

- **It is dangerous if the work equipment moves by mistake when the teeth are being replaced. Set the work equipment in a stable position, then stop the engine and apply the locks securely to the levers.**
- **If the locking pin is knocked out with excessive force, there is a hazard that the pin may fly out. Check that there is no one in the surrounding area.**
- **Pieces will often fly during the replacement operation, so wear safety glasses, gloves, and other protective equipment.**

NOTICE
Please confirm with your bucket supplier for the correct procedure to replace bucket teeth and side cutters.

ADJUST BUCKET CLEARANCE

⚠ WARNING

It is dangerous if the work equipment moves by mistake when the clearance is being adjusted.

Set the work equipment in a stable position, then stop the engine and lock the safety lock lever securely.

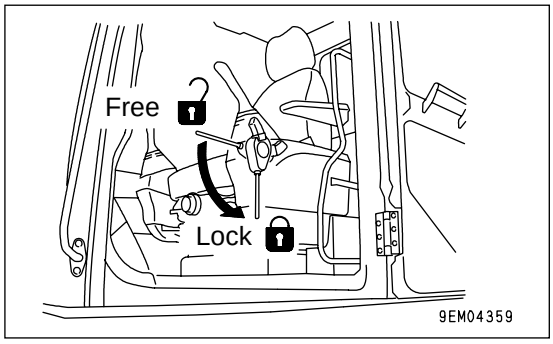

1. Set the work equipment to the position shown in the diagram at right, stop the engine and set the lock lever to the locked position.

2. Shift O-ring (1) of the linkage and measure the amount of play "a".
   Measurement is easier if you move the bucket to one side or the other so all the play can be measured in one place. (In the diagram this is on the left-hand side)

   Use a gap (clearance) gauge for easy and accurate measurement.

3. Loosen the four plate fixing bolts (2) and loosen plate (3). Because it uses split shims, you can carry out the operation without removing the bolts entirely.

4. Remove shim (4) corresponding to the amount of play "a" measured above.
   [Example]
   In the case of play of 3 mm, remove two 1.0 mm shims and one 0.5 mm shim. Play becomes 0.5 mm. For shim (4), two types of 1.0 mm and 0.5 mm are used.
   When play a is smaller than one shim, do not carry out any maintenance.

5. Tighten the four bolts (2).
   If the bolts (2) are too stiff to tighten, pull out pin stopper bolt (5) for easier tightening.

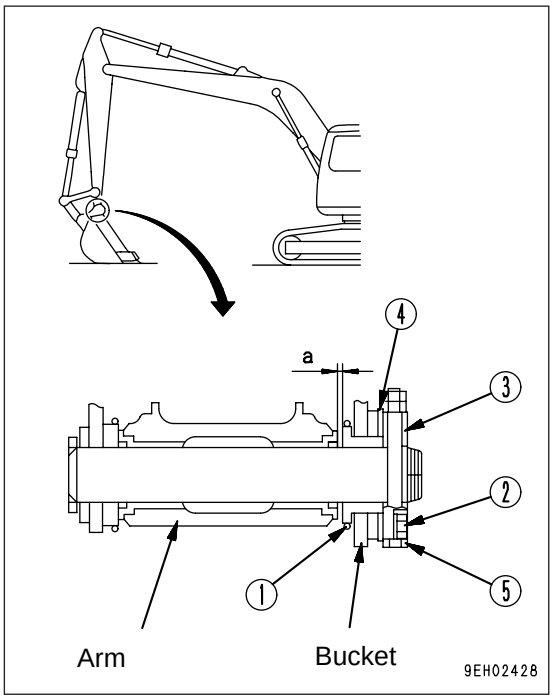

CHECK WINDOW WASHER FLUID LEVEL, ADD FLUID

If there is air in the window washer fluid, check the level of the fluid in window washer tank (1). Add automobile window washer fluid if necessary.

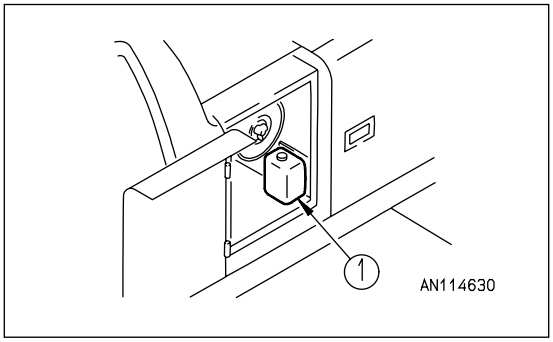

When adding fluid, be careful not to let any dust get in.

Mixture ratio of pure washer fluid and water

Since the ratio should be varied depending on atmospheric temperature, replenish washer fluid at the following mixture ratio, taking temperature into account.

Operation area and season	Mixture ratio	Freezing temperature
Normal	Pure washer fluid 1/3: water 2/3	- 10ºC
Winter in cold region	Pure washer fluid 1/2: water 1/2	- 20ºC
Winter in extremely cold region	Pure washer fluid	- 30ºC

Pure washer fluid comes in two types: for -10ºC (for general use) and for -30ºC (cold regions).

Use pure washer fluid according to operation area and season.

CHECK AND ADJUST AIR CONDITIONER (IF EQUIPPED)

CHECK LEVEL OF REFRIGERANT (GAS)

⚠ WARNING

If the refrigerant used in the cooler gets into your eyes or on your hands, it may cause loss of sight or frostbite. Do not touch the refrigerant. Never loosen any part of the refrigerant circuit.
Do not bring any flame close to any point where the refrigerant gas is leaking.

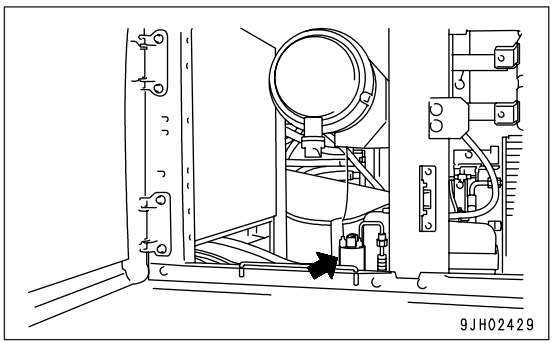

If there is a lack of refrigerant (Freon 134a), the cooling performance will be poor.

When operating the cooler at high speed, there should be no bubbles in the sight glass (inspection window) mounted on the condenser unit receiver.

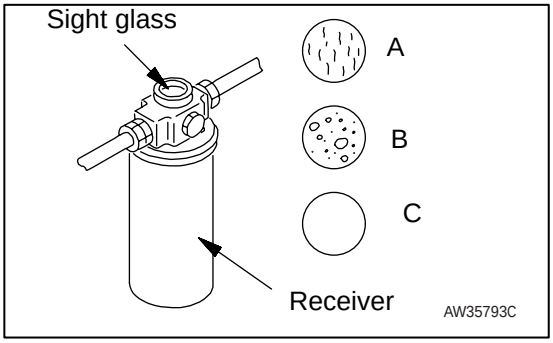

- q A: No bubbles in refrigerant flow: Correct
- q B: Bubbles in refrigerant flow (bubbles continuously pass through): Refrigerant level low
- q C: Colorless, transparent: No refrigerant

REMARK
When there are bubbles, the refrigerant gas level is low, so contact your refrigerant dealer to have refrigerant added. If the air conditioner is run with the refrigerant gas level low, it will cause damage to the compressor.

Check in off-season
When not being used for a long period, operate the cooler for 3 to 5 minutes once a month to supply lubricant to each component of the compressor.

Inspection and maintenance items list for cooler

Inspection and maintenance items	Contents	Maintenance interval
Refrigerant (gas)	Filling quantity	Twice a year; spring and autumn
Condenser	Clogging of fin	Every 500 hours
Compressor	Function	Every 4000 hours
V belt	Damage and tension	Every 250 hours
Blower motor and fan	Function (Check for abnormal sound)	When required
Control mechanism	Function (Check for normal function)	When required
Piping for connection	Installation condition looseness of tightening connection portions gas leakage, damage	When required

WASHING WASHABLE FLOOR

⚠ WARNING

- **When setting the machine at an angle, use strong blocks to stabilize the machine and be extremely careful when carrying out the operation.**
- **If the control levers are touched by mistake, the work equipment or machine may suddenly move, and this may lead to a serious accident. Set the safety lock lever securely to the LOCK position before standing up from the operator's seat.**

NOTICE

- **When carrying out this operation, be careful not to get water on the monitor and connectors inside the operator's cab.**
- **Never spray water above the pedestal of the operator's seat (2).**

With the washable floor, it is possible to flush out the dirt on the cab floor directly with water.

Method of washing

1. Set the machine at an angle.
2. Swing the upper structure slowly so that the water drain holes (1) in the cab floor are at a low position.

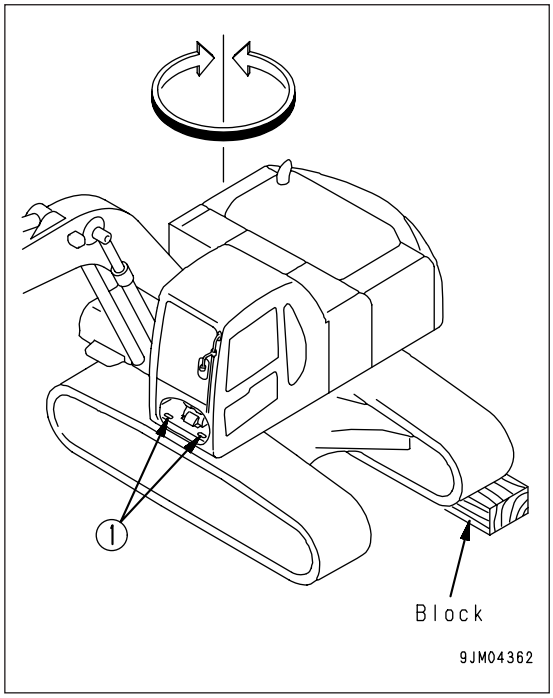

3. Lower the work equipment to the ground and set the machine in a stable condition.

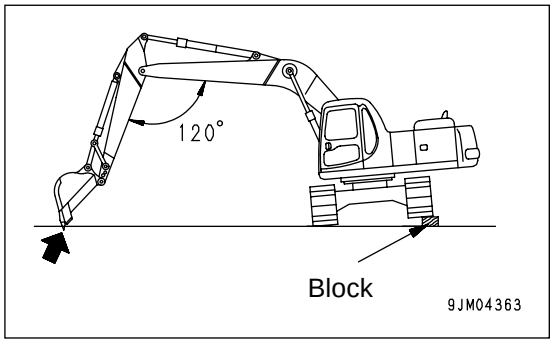

4. Set the safety lock lever to the LOCK position, then stop the engine.

5. Remove the floor mat.

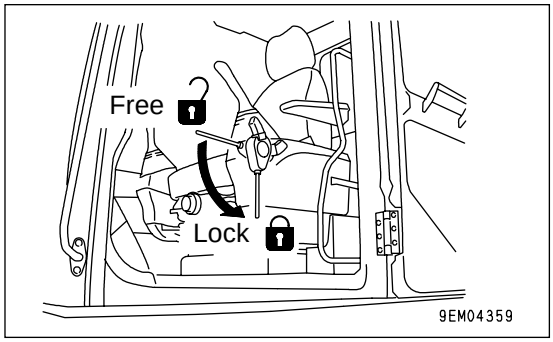

6. Flush out the dirt on the floor directly with water through water drain hole (1).

7. After completing the washing operation, install the floor mat.

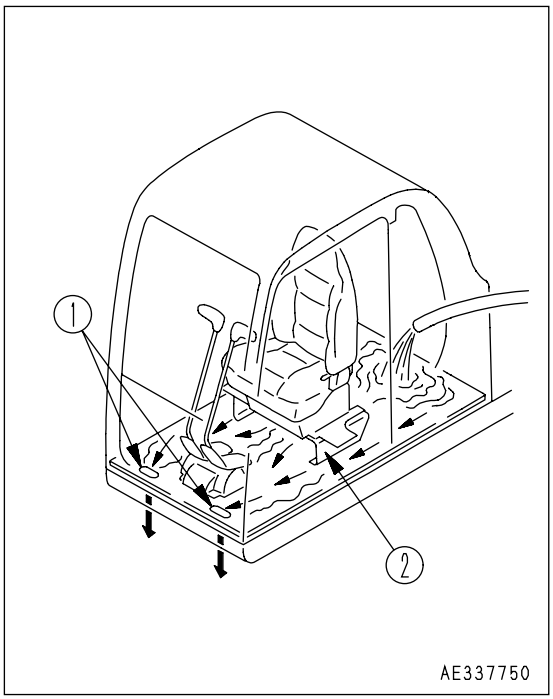

METHOD OF SETTING MACHINE ANGLE

Method Using Slope

⚠ WARNING

Select a firm flat place.

Always put blocks under the track to prevent the machine from moving, and dig the work equipment into the ground.

1. Stop machine so that the work equipment is on the downhill side.
2. Put blocks under the track and dig the work equipment into the ground.

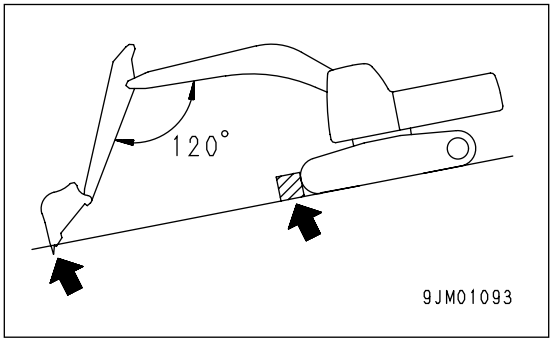

Method Using Block

⚠ WARNING

Select a firm flat place.

Put strong blocks under the undercarriage to stabilize the machine and be extremely careful when carrying out the operation.

1. Raise the chassis with the boom and arm.
   When doing this, operate the levers slowly.
2. Insert a block securely between the ground surface and the raised track and make sure that the machine is stable.

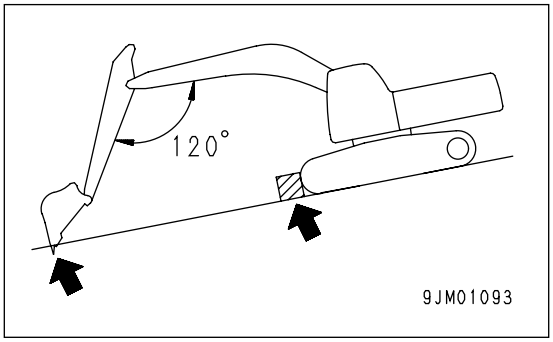

3. Raise the boom slowly and lower the machine.
   When doing this, check that the machine is always stable.

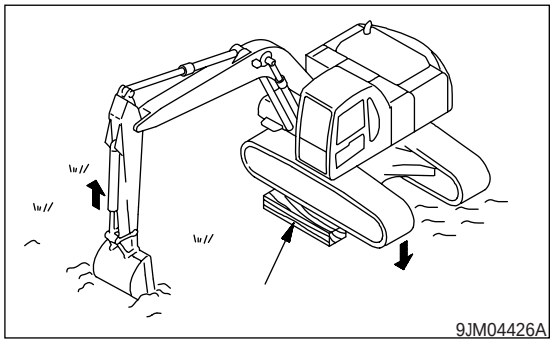

BLEEDING AIR FROM HYDRAULIC SYSTEM

For details, see "STARTING ENGINE (PAGE 137)". If it is necessary to refer to the items for starting the engine, moving the machine off, steering, or stopping, see the OPERATION section.

1. Bleeding air from pump
   1) Loosen air bleed plug (1) and check if oil oozes out.
   2) If the oil does not ooze out, remove the drain hose from the hydraulic pump case and fill the pump case completely with hydraulic oil through drain port (2). Hold the removed hose firmly, keeping the mouth-piece higher than the oil level in the hydraulic tank so that oil will not spill out of the hose.
   3) After air bleeding is completed, first tighten air bleed plug (1) and then install the drain hose.

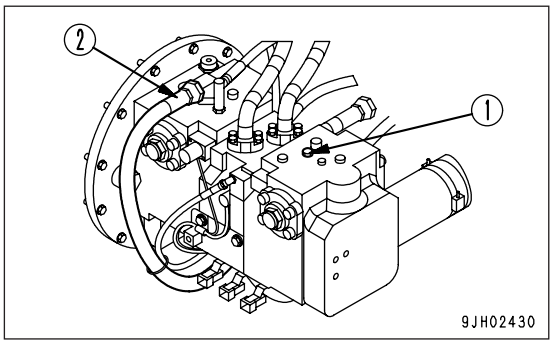

NOTICE
If the drain hose is installed first, oil will spurt out of air bleed plug (1).
If the pump is run when the pump case is not full of oil, there will be abnormal generation of heat, and this will lead to premature failure of the pump.

2. Starting engine
   Start the engine. For details, see "STARTING ENGINE (PAGE 137)".
   Run the engine at low idle for 10 minutes after starting, then start operations.

3. Bleeding air from cylinders
   1) Run the engine at a low idle and extend and retract the cylinders 4 to 5 times to a point 100 mm from the end of the stroke. (Be careful not to operate to the end of the stroke.)
   2) Next, operate each cylinder 3 to 4 times to the end of its stroke.
   3) Finally, operate each cylinder 4 to 5 times to the end of its stroke to completely remove the air.

NOTICE
If the engine is run immediately at high speed or the cylinder is operated to the end of its stroke, the air inside the cylinder may cause damage to the piston packing.

4. Bleeding air from swing motor (bleed the air only when the oil inside the swing motor case has been drained and refilled)
   Q When oil has been drained from inside swing motor case and refilled
   1) Run the engine at low idle, loosen drain hose (1), and check that oil oozes out from drain hose (1).

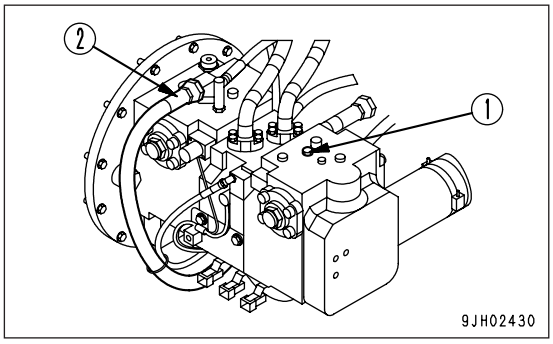

NOTICE
When doing this, do not operate the swing.

   2) If the oil does not ooze out, stop the engine, remove drain hose (1), then fill the motor case with hydraulic oil.
   3) After completion of bleeding air, install drain hose (1).
   4) Run the engine at low idle, and slowly swing the upper structure at least 2 times uniformly to the left and right.

NOTICE
If the air is not bled from the swing motor, the motor bearings may be damaged.

5. Bleeding air from travel motor (only when oil inside travel motor case has been drained and refilled)
   1) Run the engine at low idle and loosen air bleed plug (1). If oil spills out, tighten the plug.

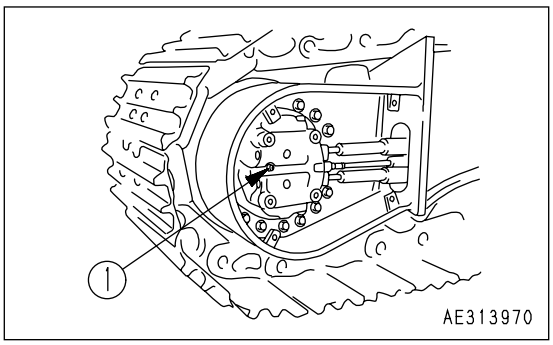

   2) Run the engine at low idle and swing the work equipment 90º to bring it to the side of the track.
   3) Jack up the machine until the track is raised slightly from the ground. Rotate the track under no load for 2 minutes.
      Repeat this procedure on both the left and right sides, and rotate the track equally both forward and in reverse.

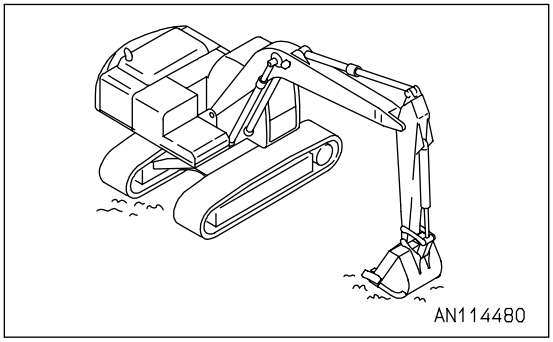

6. Bleeding air from attachment (when installed)
   If a breaker or other attachment has been installed, run the engine at low idling and operate the attachment pedal repeatedly (approx. 10 times) until the air has been bled from the attachment circuit.

NOTICE
- **If the method of bleeding the air from the attachment itself is specified by the manufacturer, bleed the air according to the specified procedure.**
- **After completing the air bleeding operation, stop the engine, and leave the machine for 5 minutes before starting operations. This will remove the air bubbles in the oil inside the hydraulic cylinders.**
- **Check that there is no leakage of oil and wipe off any oil that has been spilled.**
- **After completing the air bleeding operation, inspect the oil level, and if the oil level is low, add oil.**

METHOD FOR RELEASING INTERNAL PRESSURE IN HYDRAULIC CIRCUIT

⚠ WARNING

- **The hydraulic circuit is under pressure, so release the pressure inside the circuit before inspecting or replacing the piping or hoses. If the pressure is not released, high-pressure oil will spurt out and may cause serious personal injury.**
- **The parts and oil are at high temperature after the engine is stopped, and may cause serious burns. Wait for the temperature to go down before starting the operation.**
- **When the oil filler cap is removed, oil may spurt out, so turn the cap slowly to release the internal pressure before removing the cap.**

1. Stop the machine on horizontal, firm ground.

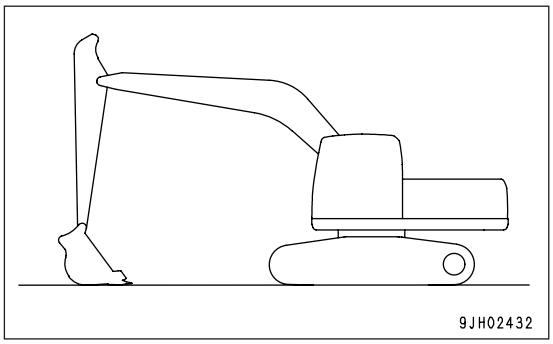

2. Within 15 seconds after stopping the engine, turn the starting switch to the ON position, and operate the control levers (work equipment, travel) fully in each direction to release the internal pressure.

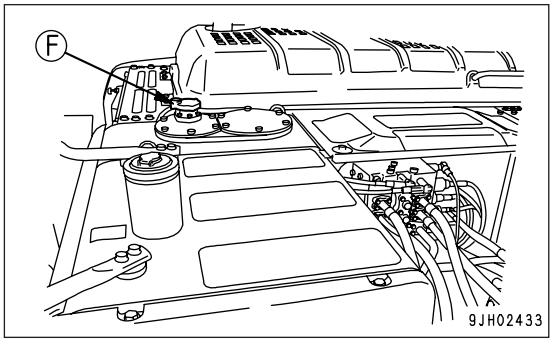

3. Slowly loosen oil filler cap (F) at the top surface of the hydraulic tank to release the internal pressure.

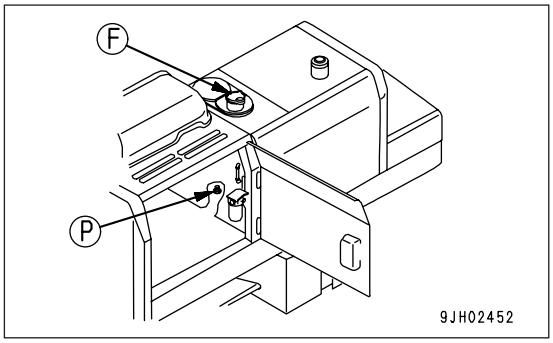

CHECK BEFORE STARTING

For details of the following items, see "CHECKS BEFORE STARTING (PAGE 125)" in the OPERATION section.

- q Check coolant level, add water
- q Check oil level in engine oil pan, add oil
- q Check fuel level, add fuel
- q Check for water and sediment in water separator, drain water
- q Check oil level in hydraulic tank, add oil
- q Check electric wiring/connections
- q Check function of horn

EVERY 100 HOURS MAINTENANCE

LUBRICATING

LUBRICATING

The minimum greasing interval is 100 hours.

q When operating the machine for the first 50 hours, carry out the greasing every 10 hours.
q After carrying out digging work in water, grease the pins that were under water.

1. Set the work equipment in the greasing posture below, then lower the work equipment to the ground and stop the engine.
2. Use a grease pump to pump grease in through the grease fittings shown by the arrows.
3. After greasing, wipe off any old grease that was pushed out.

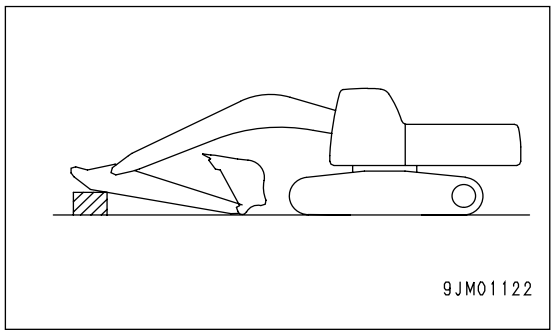

(1) Arm-Bucket coupling pin (1 point)

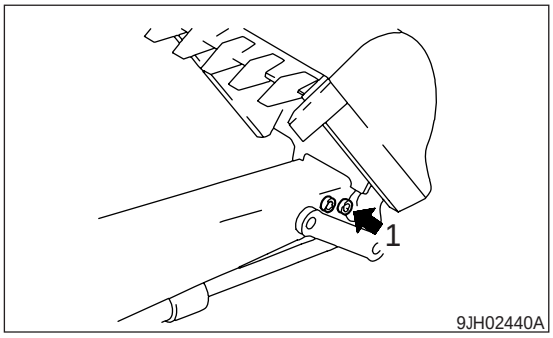

((2) Bucket-Link coupling pin (1 point)

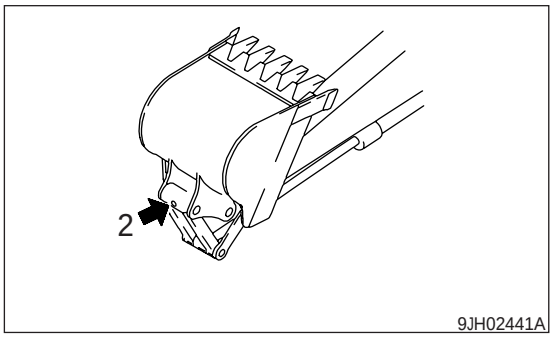

EVERY 250 HOURS MAINTENANCE

LUBRICATING

NOTICE

- **When operating the machine for the first 50 hours, carry out the greasing every 10 hours.**
- **After carrying out digging work in water, always grease the pins that were under water.**
- **When carrying out heavy-duty operations, such as hydraulic breaker operations, carry out the greasing every 100 hours.**

1. Set the work equipment in the greasing position below, then lower the work equipment to the ground and stop the engine.
2. Using a grease pump, pump in grease through the grease fittings shown by arrows.
3. After greasing, wipe off any old grease that was pushed out.

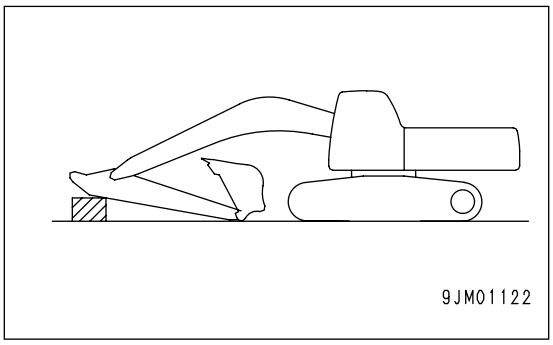

(1)Arm-Link coupling pin (1 point)

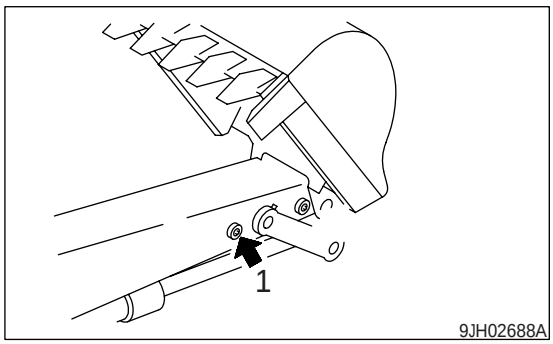

(2)Link coupling pin (2 points)

(3)Bucket cylinder rod end (1 point)

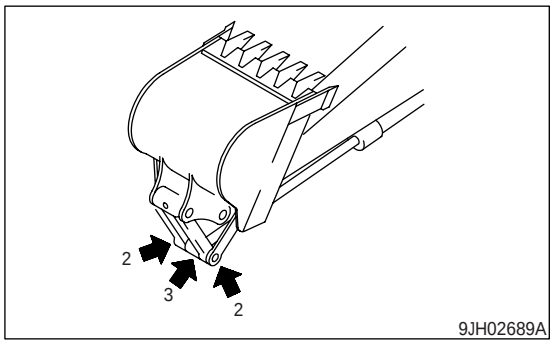

CHECK OIL LEVEL IN MACHINERY CASE, ADD OIL

⚠ WARNING

The parts and oil are at high temperature after the engine is stopped, and may cause serious burns. Wait for the temperature to go down before starting the operation.

1. Remove dipstick (G) and wipe the oil from the dipstick with a cloth.
2. Insert dipstick (G) fully in the guide.
3. When dipstick (G) is pulled out, if the oil level is between the H and L marks of the gauge, oil level is proper.
4. If the oil does not reach the L mark on dipstick (G), remove oil filler (F), and add engine oil.
5. If the oil level exceeds the H mark on the dipstick, loosen drain plug to drain the excess oil.
6. After checking oil level or adding oil, insert the dipstick into the hole and install oil filler cap.

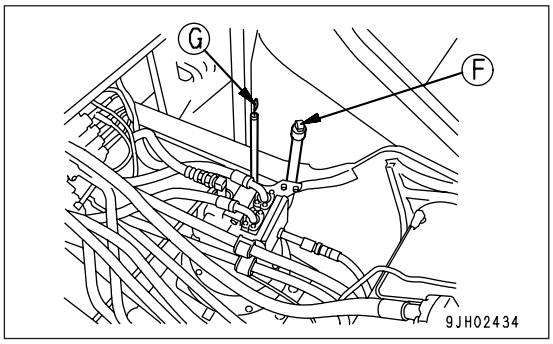

CHECK OIL LEVEL IN FINAL DRIVE CASE, ADD OIL

⚠ WARNING

- **The parts and oil are at high temperature after the engine is stopped, and may cause serious burns. Wait for the temperature to go down before starting the operation.**
- **If there is still pressure remaining inside the case, the oil or plug may fly out. Loosen the plug slowly to release the pressure.**

- Prepare a hexagonal wrench.

1. Set the final drive so that TOP mark comes to the top and the mark and plug (P) are perpendicular to the ground.
2. Using a hexagonal wrench, remove plug (F) and check that the oil level is within a range from the bottom of the plug hole to a point 10 mm below it.
3. If the oil level is too low, install plug (F), operate the travel levers, and drive forward or in reverse to rotate the sprocket one turn. Then repeat Step 2 to check again.
4. If the oil level is still too low, add engine oil through the hole in plug (F) until the oil overflows.
5. After checking, install plug (F).

REMARK
There are two plugs (F). Add oil through the one easier to fill oil and through which no internal gears are to be seen.

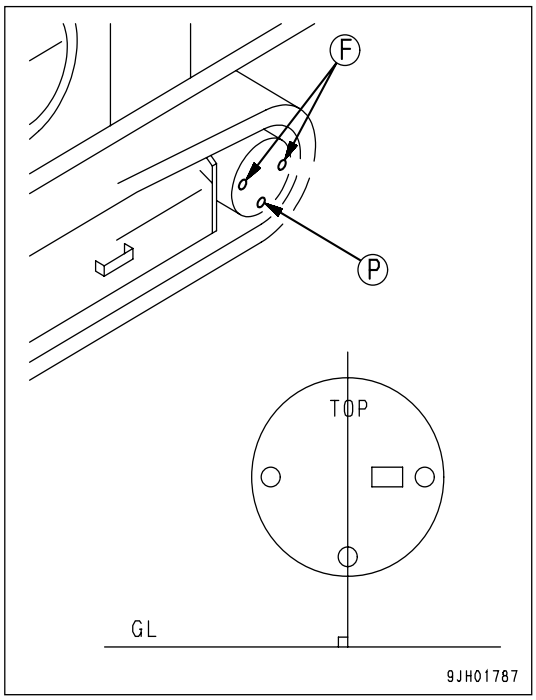

CHECK LEVEL OF BATTERY ELECTROLYTE

Carry out this check before operating the machine.

⚠ WARNING

- **Do not use the battery if the battery electrolyte level is below the LOWER LEVEL line. This will accelerate deterioration of the inside of the battery and reduce the service life of the battery. In addition, it may also cause an explosion.**
- **The battery generates flammable gas and there is danger of explosion. Do not bring fire or sparks near the battery.**
- **Battery electrolyte is dangerous. If it gets in your eyes or on your skin, wash it off with large amounts of water and consult a doctor.**
- **When adding distilled water to the battery, do not allow the battery electrolyte to go above the UPPER LEVEL line. If the electrolyte level is too high, it may leak and cause damage to the paint surface or corrode other parts.**

NOTICE
When adding distilled water in cold weather, add it before starting operations in the morning to prevent the electrolyte from freezing during the night.

Inspect the battery electrolyte level at least once a month and follow the basic safety procedures given below.

1. Open cover (1) at the rear left side of the machine. The batteries are installed at (A) part.

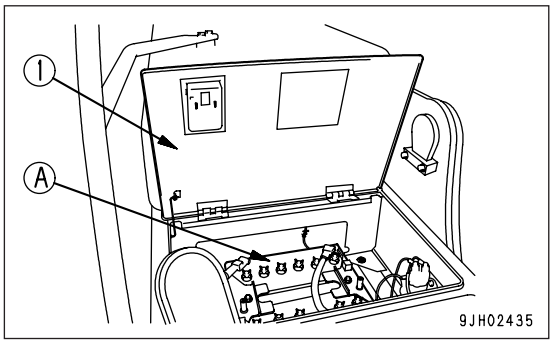

When checking electrolyte level from side of battery

If it is possible to check the electrolyte level from the side of the battery, check as follows.

1. Use a wet cloth to clean the area around the electrolyte level lines and check that the electrolyte level is between the UPPER LEVEL (U.L) and LOWER LEVEL (L.L) lines. If the battery is wiped with a dry cloth, static electricity may cause a fire or explosion.

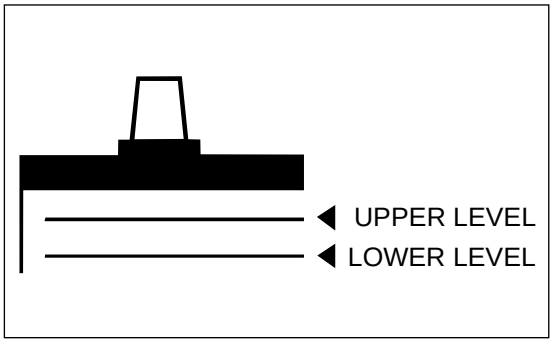

2. If the electrolyte level is below the midway point between the U.L and L.L lines, remove cap (1) and add distilled water to the U.L line.

3. After adding distilled water, tighten cap (1) securely.

REMARK
If distilled water is added to above the U.L line, use a small hose or tubing to lower the level to the U.L line. Neutralize the removed fluid with baking soda (sodium bicarbonate), then flush it away with a large amount of water or consult your Komatsu distributor or battery maker.

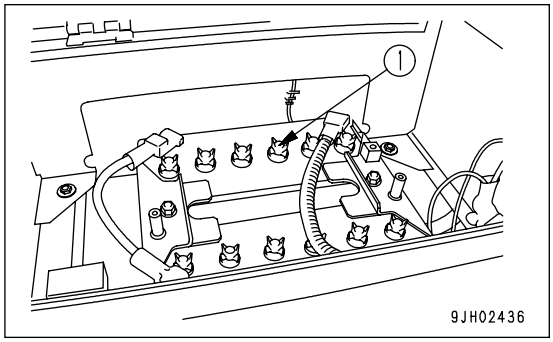

When it is impossible to check electrolyte level from side of battery

If it is impossible to check the electrolyte level from the side of the battery, or there is no display of the UPPER LEVEL line on the side of the battery, check as follows.

1. Remove cap (1) at the top of the battery, look through the water filler port, and check the electrolyte surface. If the electrolyte does not reach the sleeve, add distilled water so that the level reaches the bottom of the sleeve (UPPER LEVEL line) without fail.

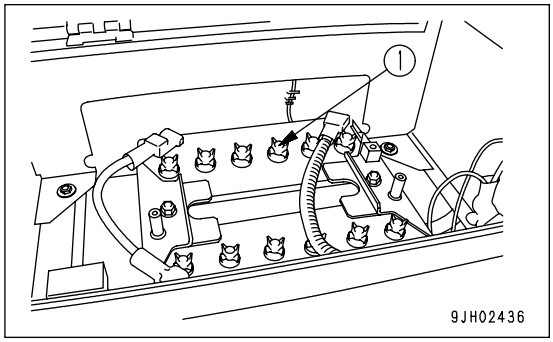

Use the diagram below for reference, and check if the electrolyte reaches the bottom of the sleeve.

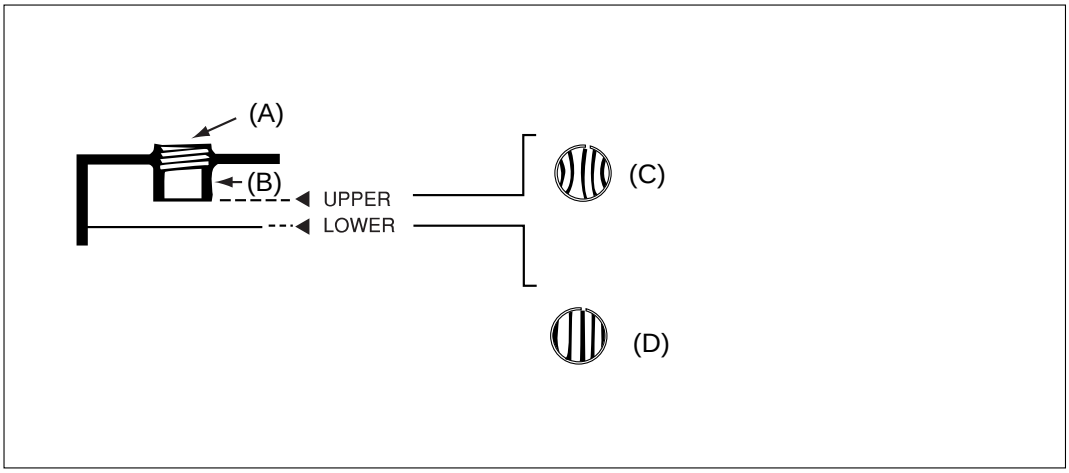

(A)	Filler port
(B)	Sleeve
UPPER	Upper level
LOWER	Lower level
(C)	Correct level The electrolyte level is up to the bottom of the sleeve, so the surface tension causes the surface to rise and the plate appears to be warped.
(D)	Too low (level) The electrolyte level is not up to the bottom of the sleeve, so the plate appears to be normal.

2. After adding distilled water, tighten cap (1) securely.

REMARK
If distilled water is added to above the bottom of the sleeve, use a small hose or tubing to lower the level to the bottom of the sleeve. Neutralize the removed fluid with baking soda (sodium bicarbonate), then flush it away with a large amount of water or consult your Komatsu distributor or battery maker.

When it is possible to use indicator to check electrolyte level

If it is possible to use an indicator to check the electrolyte level, follow the instructions given.

CHECK, ADJUST TENSION OF AIR CONDITIONER COMPRESSOR BELT

Checking

Press the belt at a point midway between the drive pulley and compressor pulley with a finger force of approx. 58.8 N (6 kgf) and check that the deflection is 5 - 8 mm.

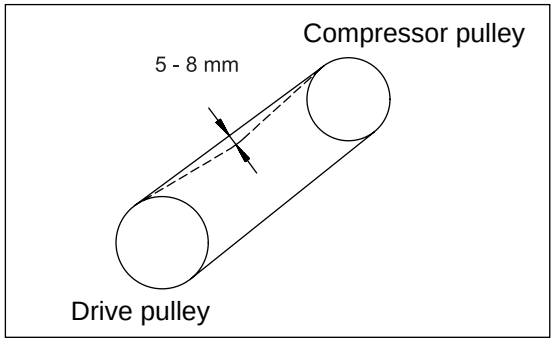

Adjusting

1. Loosen bolts (1) and (2).
   - Q Bracket (4) holds the compressor in place. When bolts (1) and (2) are loosened, bracket (4) moves with the securing position of bolt (2) as a fulcrum.

2. Loosen nut (5) attached to the fixed bracket (3) and then tighten bolt (6).
   - Q Tighten bolt (6) so that the deflection of the belt will be 5 - 8 mm (approx. 58.8N (6 kgf)).

3. Tighten bolts (1) and (2) to secure bracket (4).

4. Loosen bolt (6) to remove pressure from bracket (4).

5. Tighten nut (5).

6. Check each pulley for damage, wear of the V-groove, and wear of the V-belt. In particular, be sure to check that the V-belt is not touching the bottom of the V-groove.

7. Replace the belt if it has stretched, leaving no allowance for adjustment, or if there is a cut or crack on V-belt.

8. When the new V-belt is installed, readjust it after one hour of operation.

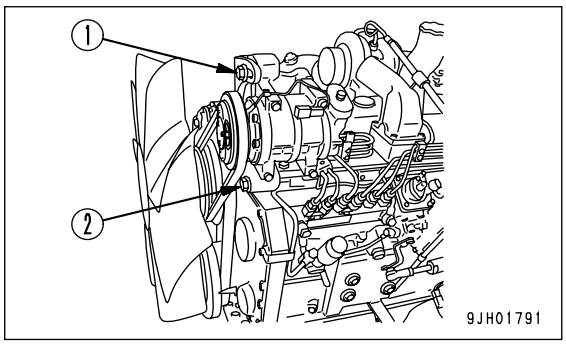

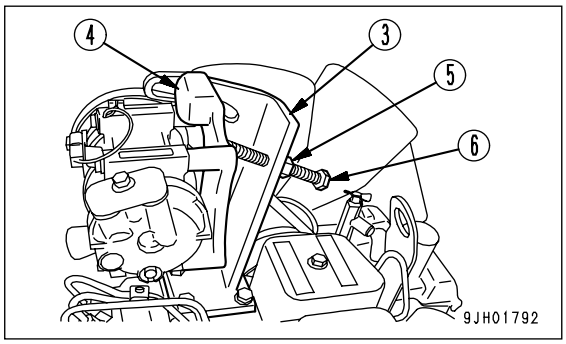

EVERY 500 HOURS MAINTENANCE

Maintenance for every 250 hours service should be carried out at the same time.

LUBRICATING

NOTICE

- **For the first 50 hours on a new machine, carry out greasing for greasing points 1 to 12 every ten hours. Carry out the greasing for these points also at 250 hours and 500 hours on a new machine. After this, carry out the greasing every 500 hours or every six months, whichever comes sooner.**
- **After carrying out digging work in water, always grease the pins that were under water.**
- **When carrying out heavy-duty operations, such as hydraulic breaker operations, carry out the greasing every 100 hours.**

1. Set the work equipment in the greasing position below, then lower the work equipment to the ground and stop the engine.
2. Using a grease pump, pump in grease through the grease fittings shown by arrows.
3. After greasing, wipe off any old grease that was pushed out.

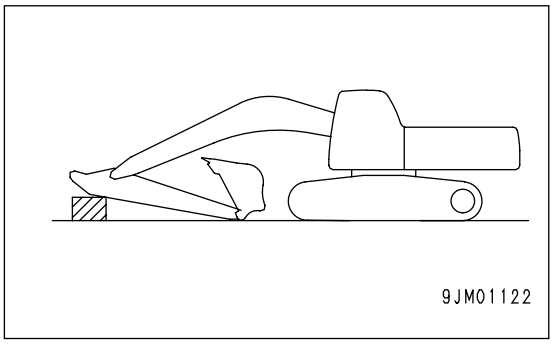

(1) Boom cylinder rod end pin (2 points)

(2) Arm cylinder foot pin (1 point)

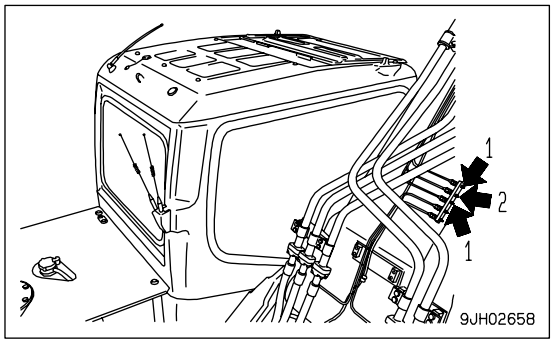

(3) Boom-Arm coupling pin (1point)

(4) Arm cylinder rod end (1 point)

(5) Bucket cylinder foot pin (1 point)

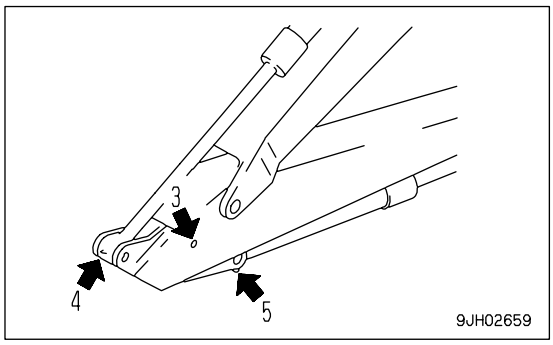

(6) Boom cylinder foot pin (2 points)

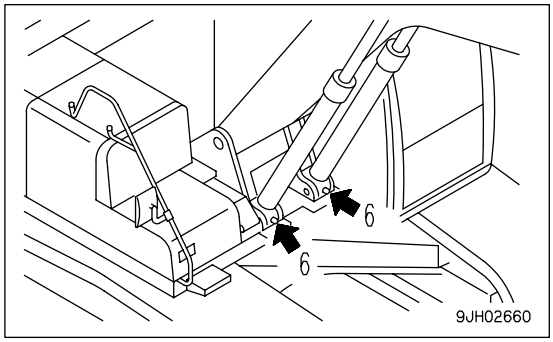

(7) Boom foot pin (2 points)

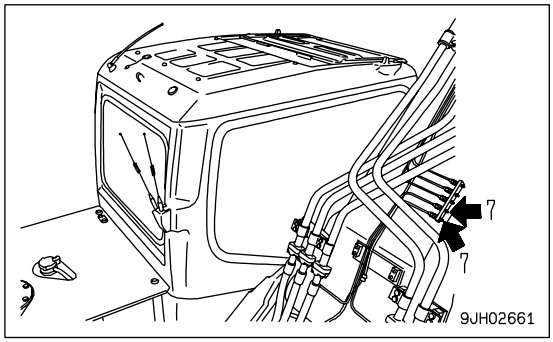

LUBRICATE SWING CIRCLE (2 POINTS)

1. Lower the work equipment to the ground.
2. Use a grease gun to pump grease in through the grease fittings shown by the arrows.
3. After greasing, wipe off all the old grease that was pushed out.

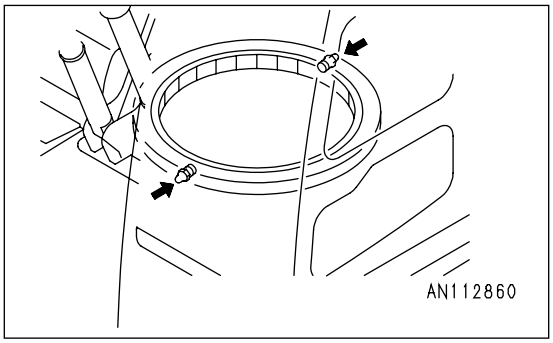

CHANGE OIL IN ENGINE OIL PAN, REPLACE ENGINE OIL FILTER CARTRIDGE

⚠ WARNING

The parts and oil are at high temperature after the engine is stopped, and may cause serious burns. Wait for the temperature to go down before starting the operation.

Prepare the following:

q Refill capacity of oil pan: 24 liters

q Filter wrench

1. Remove undercover (1) at the bottom of the machine, then set a container under drain valve (P) to catch the drained oil.

2. To prevent getting oil on yourself, lower the lever of drain valve (P) slowly, drain the oil, then raise the lever to close the valve.

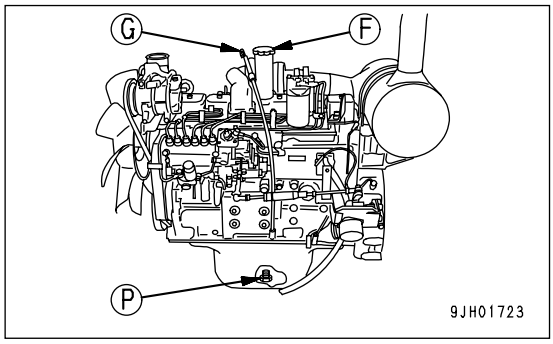

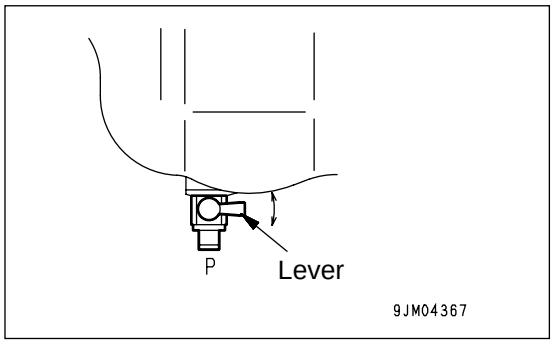

3. Open the cover at the rear right, then use a filter wrench to turn filter cartridge (1) to the left to remove it.

4. Clean the filter holder, fill the new filter cartridge with clean engine oil, coat the packing surface and thread of the filter cartridge with engine oil (or coat it thinly with grease), then install the filter cartridge to the filter holder.

REMARK
Check that there is no old packing stuck to the filter holder. If there is any old packing remaining, it will cause oil leakage.

5. When installing, bring the packing surface into contact with the seal surface of the filter holder, then tighten it further 3/4 - 1 turn.

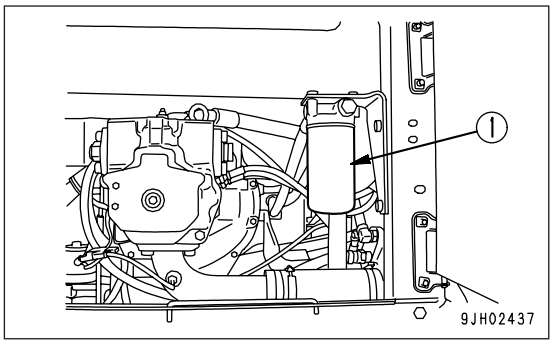

6. After replacing the filter cartridge, open the engine hood and add engine oil through oil filler (F) to between the H and L marks on dipstick (G).

7. Run the engine at idle for a short time, then stop the engine and check that the oil level is between the H and L marks on dipstick (G).
   For details, see "CHECK OIL LEVEL IN ENGINE OIL PAN, ADD OIL (PAGE 126)".

8. Install the undercover.

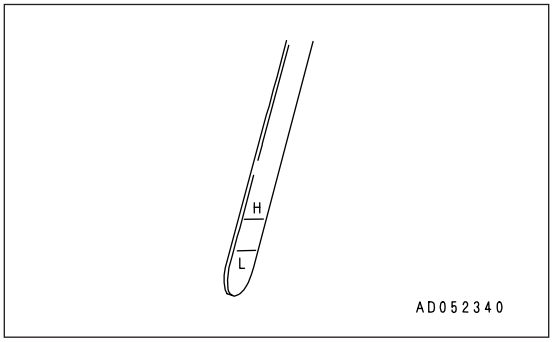

REPLACE FUEL FILTER CARTRIDGE

⚠ WARNING

- **The parts are at high temperature immediately after the engine has been operated. Wait for all parts to cool down before replacing the filter.**
- **Do not bring fire or sparks near the fuel.**

Prepare a filter wrench and a container to catch the fuel.
Use a genuine Komatsu filter cartridge.

1. Set the container to catch the fuel under the filter cartridge.

2. Using a filter wrench, turn filter cartridge (1) counterclockwise to remove it.

3. Clean the filter holder, fill a new filter cartridge with clean fuel, coat the packing surface with engine oil, then install it to the filter holder.

4. After bringing the packing surface into contact with the seal surface of the filter holder, tighten it a further 1/2 turns.
   If the filter cartridge is tightened too far, the packing will be damaged and this will lead to leakage of fuel. If the filter cartridge is too loose, fuel will leak from the packing, so tighten it carefully.

5. After replacing the fuel filter cartridge, bleed the air from the system. Bleed the air as follows.

6. Fill the fuel tank with fuel (to the position where the float is at the highest position).

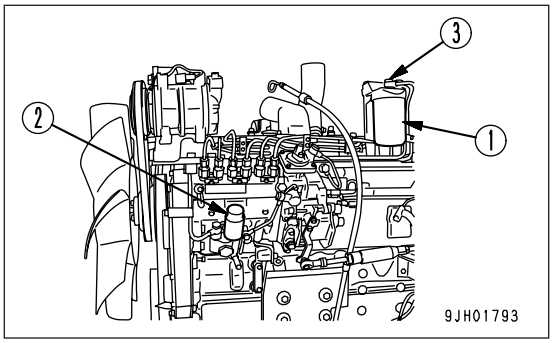

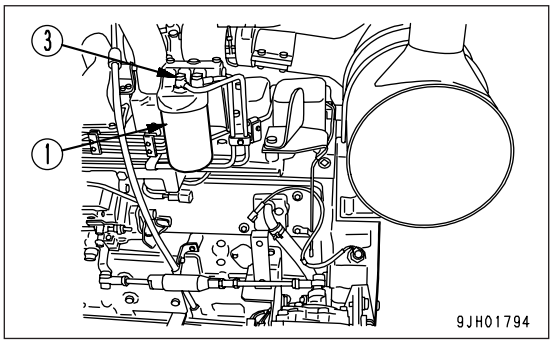

7. After replacing filter cartridge (1), loosen air bleed plug (3).

8. Loosen the knob of feed pump (2), pump it up and down, and continue to make the fuel overflow until no more bubbles come out from air bleed plug (3). Then tighten the knob of feed pump.

9. Tighten air bleed plug (3).
   After replacing the filter cartridge, start the engine and check for any leakage of oil from the filter seal surface.

REMARK
Use the feed pump to bleed air from the fuel system, when the machine has run out of fuel, too.

CHECK SWING PINION GREASE LEVEL, ADD GREASE

Prepare a scale.

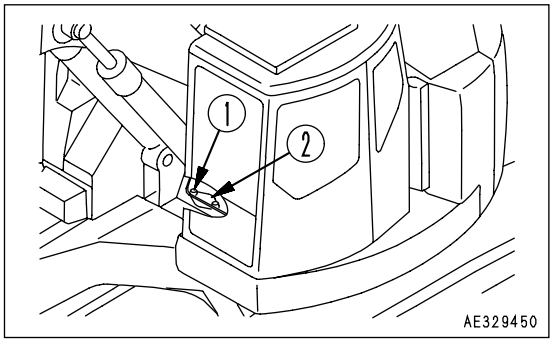

1. Remove two bolts (1) on the top of the revolving frame and remove cover (2).
2. Insert a scale into the grease and check that the height of the grease in the portion where the pinion passes is at least 14 mm. Add more grease if necessary.
3. Check the color of the grease. If it is milky white, it is necessary to change the grease. Please contact your Komatsu distributor.

The total amount of grease
PC290 : 33 liters

4. Install cover (2) with two bolts (1).

CLEAN AND INSPECT RADIATOR FINS, OIL COOLER FINS AND CONDENSER FINS

⚠ WARNING

If compressed air, high-pressure water, or steam hit your body directly, or they cause dirt or dust to be blown up, there is a danger of serious injury. Use safety glasses, dust mask, or other protective equipment.

NOTICE
When using compressed air, if the nozzle is brought too near the fins, the fins may be damaged. Use compressed air from a reasonable distance to prevent damage to the fins.
Do not direct the jet directly at the core. If the fins are damaged, it will cause leakage of water and overheating. On dusty jobsites, inspect fins every day, regardless of the maintenance interval.

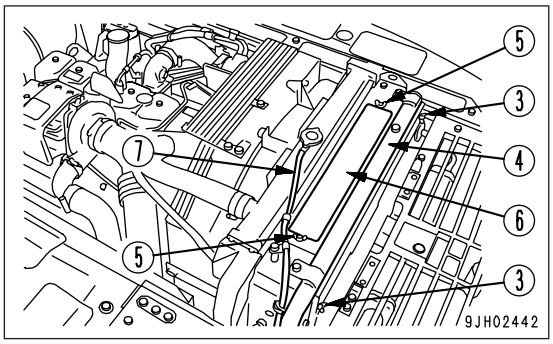

1. Open engine hood (1).
2. Loosen screw (3) and pull up net (2).
3. Clean net (2). (it is to be installed again, as instructed in the Step 8)
4. Loosen screw (5) and detach net (6) between the radiator and the oil cooler.

5. Inspect the front and rear of the oil cooler fins (4), radiator fins (7), after-cooler fins (8), and condenser fins (9) for dirt, dust, dry leaves, etc. Blow them away with compressed air. Steam or water may be used instead of compressed air.

6. Check the rubber hose. Replace it with a new one, if the hose is found to have cracks or to be hardened by age. Also check the hose clamps for looseness.

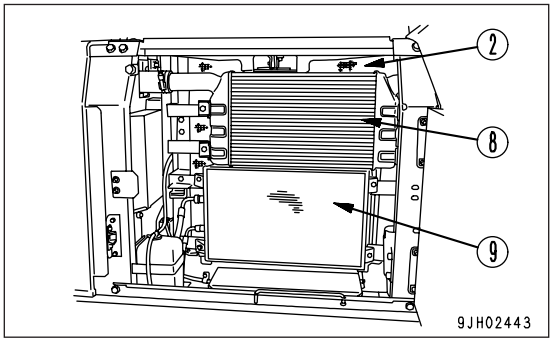

7. Remove cover (10) from underneath and dispose of the dirt, dust, dry leaves, etc., which have fallen on it.

8. Install the cleaned net (2) back to the its original place and secure it with screw (3).

9. Secure net (6) with screw (5).

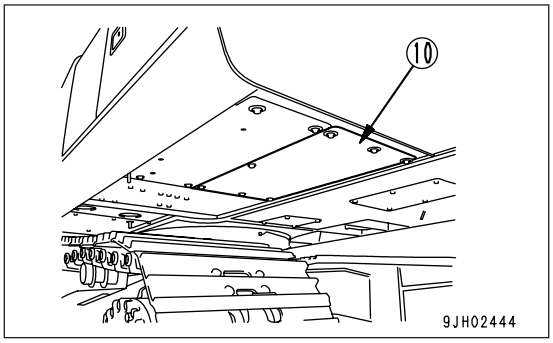

CLEAN INTERNAL AND EXTERNAL AIR FILTERS OF AIR CONDITIONER SYSTEM

⚠ WARNING

If compressed air, high-pressure water, or steam hit your body directly, or they cause dirt or dust to be blown up, there is danger of serious injury. Use safety glasses, dust mask, or other protective equipment.

NOTICE

The interval for cleaning the filter is 500 hours, but if the machine is used on an extremely dusty jobsite, reduce the maintenance interval and clean the filter more frequently.

REMARK

If the filter is clogged, the air flow is reduced and a muffled sound can be heard from the air conditioner unit.

CLEANING RECIRCULATED AIR FILTER

1. Remove wing bolts (1) from the inspection window at the bottom rear left on the inside of the operator's cab, then take out the recirculated air filter.

2. Clean the filter with compressed air. If there is oil on the filter, or if the filter is extremely dirty, wash it in a neutral agent. After rinsing it in water, dry it thoroughly before using it again.
   If the clogging of the filter cannot be removed by blowing with air or washing in water, replace the filter with a new one.

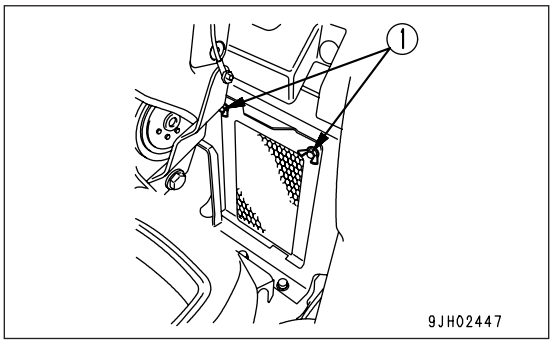

CLEANING FRESH AIR FILTER

1. Pull up the lock release lever under the door release lever to release the lock.

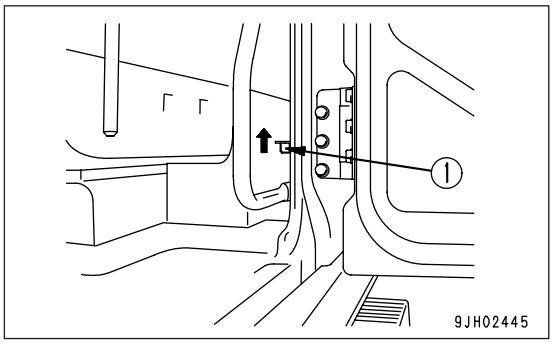

2. Open cover (2) at the bottom left of the operator's cab by hand, pull out filter case (3) from the inside, then remove the filter.

3. Clean the filter with compressed air. If there is oil on the filter, or if the filter is extremely dirty, wash it in a neutral agent. After rinsing it in water, dry it thoroughly before using it again.
   If the clogging of the filter cannot be removed by blowing with air or washing in water, replace the filter with a new part.

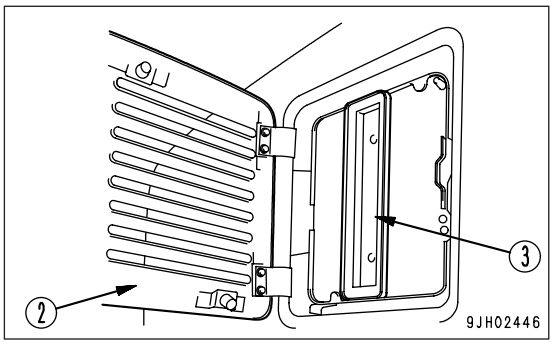

4. After cleaning, insert the filter in filter case (3) again, open the cover at the bottom left of the operator's cab by hand, return the filter case to its original position, then close the cover. When doing this, check that the lock is applied.

REPLACE BREATHER ELEMENT IN HYDRAULIC TANK

⚠ WARNING

- **The parts and oil are still at high temperature after the engine is stopped, and may cause serious burns. Wait for the temperature to go down before cleaning the breather element in the hydraulic tank.**
- **When the oil filler cap is removed, oil may spurt out, so turn the cap slowly to release the internal pressure, then remove it carefully.**

1. Remove the cap from oil filler (F) at the top of the hydraulic tank.

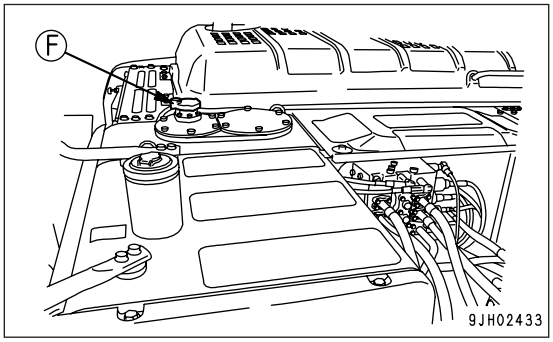

2. Replace internal element (1).

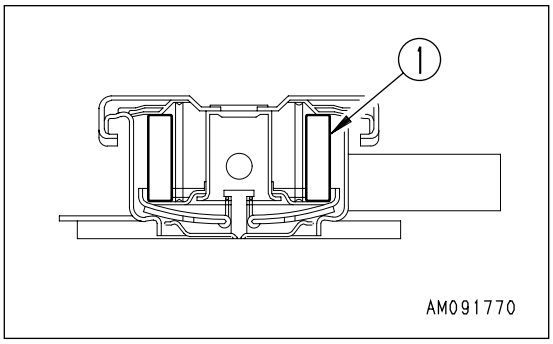

EVERY 1000 HOURS MAINTENANCE

Maintenance for every 250 and 500 hours service should be carried out at the same time.

REPLACE HYDRAULIC FILTER ELEMENT

⚠ WARNING

- **The parts and oil are at high temperature after the engine is stopped, and may cause serious burns. Wait for the temperature to go down before cleaning the hydraulic tank strainer.**
- **When the oil filler cap is removed, oil may spurt out, so turn the cap slowly to release the internal pressure, then remove it carefully.**

NOTICE
If the machine is equipped with a hydraulic breaker, the hydraulic oil will deteriorate much faster than during normal bucket operations. For details, see "MAINTENANCE INTERVAL FOR HYDRAULIC BREAKER (PAGE 223)" when carrying out maintenance.

1. Set the work equipment on hard and flat ground in the maintenance posture as shown in the figure. Then lower it to the ground and stop the engine.

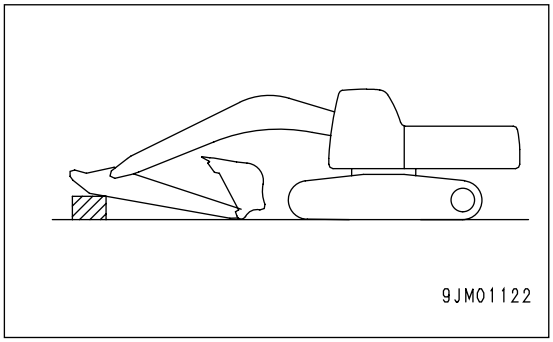

2. Remove the cap from oil filler (F), and release the internal pressure.
3. Loosen 6 bolts, then remove cover (1). When doing this, the cover may fly out under the force of spring (2), so hold the cover down when removing the bolts.
4. After removing spring (2), valve (3) and strainer (4), take out element (5).
   - Inspect the bottom of the filter case for dirt, and remove it, if any. Be very careful not to let dirt fall into the hydraulic tank.

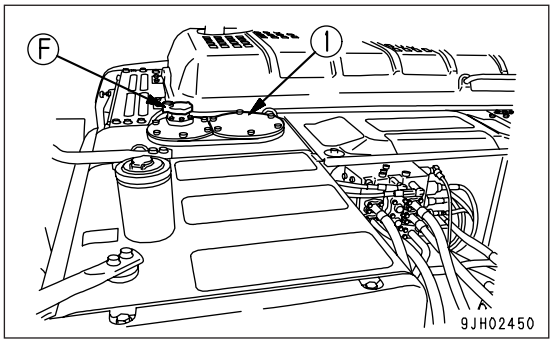

5. Clean the removed parts in diesel oil.
6. Install the new element in the place where old element (4) was installed.
7. Set valve (3), strainer (4) and spring (2) on top of the element.
8. Set cover (1) in position, push it down by hand, and install the cover with the mounting bolts.
9. Install the oil filler cap.

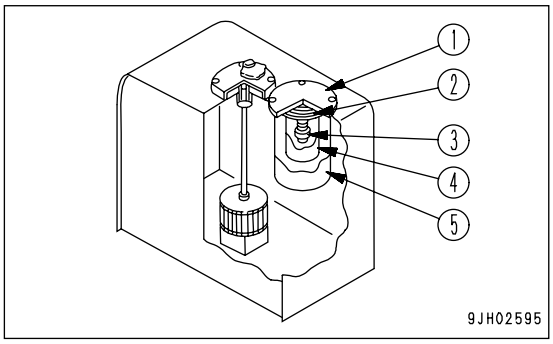

10. To bleed the air, start the engine according to ""START-ING ENGINE (PAGE 137)" and run the engine at low idle for 10 minutes.

11. Stop the engine.

CHANGE OIL IN SWING MACHINERY CASE

⚠ WARNING

The parts and oil are at high temperature after the engine is stopped, and may cause serious burns. Wait for the temperature to go down before starting the operation.

q Refill capacity: 6.6 liters

1. Remove cover (A) of the inspection hole.

2. Set an oil container under drain valve (P) under the machine body.

3. Loosen drain valve (P) and drain the oil. Then tighten the drain valve again.

4. Remove the cap from oil filler (F) and add the specified amount of engine oil through oil filler (F).

5. Pull out dipstick (G) and wipe the off oil from it with a clean cloth.

6. Insert dipstick (G) into the gauge pipe as far as it will go and then pull out it again.

7. If the oil level is between the H and L marks on dipstick (G), it is normal. If the oil does not reach the L mark, add more oil through oil filler (F).

8. If the oil level exceeds the H mark, drain the excess engine oil from drain valve (P), and check the oil level again.
   Q When draining the excess engine oil, pull out hose (1) from the check hole and then open the drain valve.

9. Close the drain valve an reinstall the hose (1).

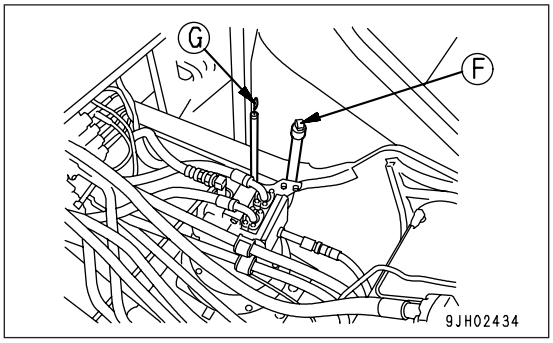

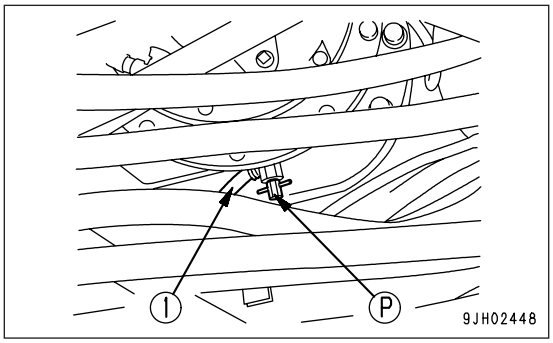

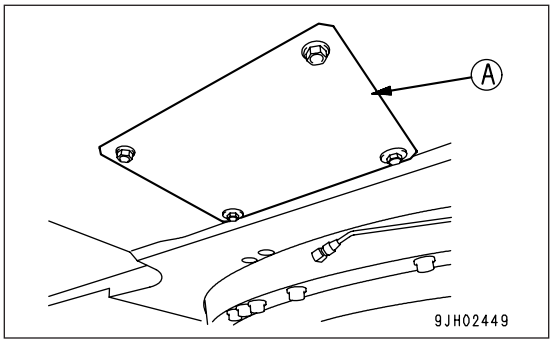

CHECK OIL LEVEL IN DAMPER CASE, ADD OIL

⚠ WARNING

The parts and oil are at high temperature after the engine is stopped, and may cause serious burns. Wait for the temperature to go down before starting the work.

NOTICE
For the oil level check, park the machine on flat ground and wait for at least 30 minutes after the engine has stopped to start the work.

1. Open the cover on the right side of the machine.

2. Remove oil inspection plug (G) and check that the oil is near the bottom of the check hole. If the oil level is low, remove the plug from oil filler (F), and add oil through oil filler (F) until the oil level is close to the bottom of the oil inspection plug (G) hole.

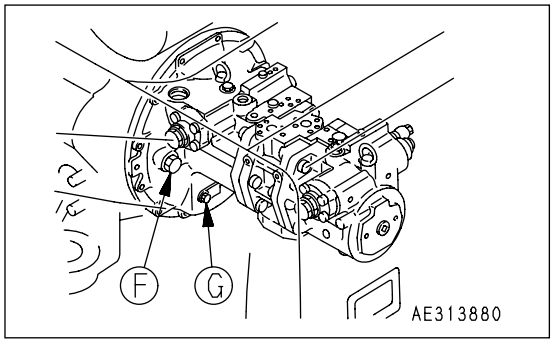

NOTICE
If the oil level is found to be high. Drain the oil to the specified level. The excess oil may cause overheating.

3. Install oil inspection plug (G) and oil filler plug (F).

4. Close the cover.

CHECK ALL TIGHTENING PARTS OF TURBOCHARGER

Contact your Komatsu distributor to have the tightening parts checked.

CHECK PLAY OF TURBOCHARGER ROTOR

Ask Komatsu distributor to check the play of the turbocharger rotor.

CHECK FAN BELT TENSION AND REPLACE FAN BELT

Special tools are required for inspection and replacement of the fan belt. Contact your Komatsu distributors for inspection and replacement.

REMARK
An installed auto fan belt tension adjuster, "Auto Tensional Fan Belt", dispenses with the belt deflection adjustment.

EVERY 2000 HOURS MAINTENANCE

Maintenance for every 250, 500 and 1000 hours service should be carried out at the same time.

CHANGE OIL IN FINAL DRIVE CASE

⚠ WARNING

- **The oil is at high temperature after the engine is stopped. Wait for the temperature to go down before starting the operation.**
- **If there is pressure remaining inside the case, the oil or plug may fly out. Loosen the plug slowly to release the pressure.**

- Refill capacity (each): 4.5 liters
- Hexagon wrench

1. Set the final drive so that the TOP mark comes to the top and the mark and plug (P) are perpendicular to the ground.
2. Set a container under plug (P) to catch the oil.
3. Remove plugs (P) and (F) with the hexagon wrench and drain the oil.

REMARK
Check the O-rings in the plugs for damage. If necessary, replace with new ones.

4. Tighten plug (P).
5. Add engine oil trough the hole of plug (F).
6. When the oil overflows from the hole of plug (F), install plug (F).
   Plugs (P) and (F) are tightened to the torque of
   68.6 ± 9.8 N•m (7 ± 1 kgf•m).

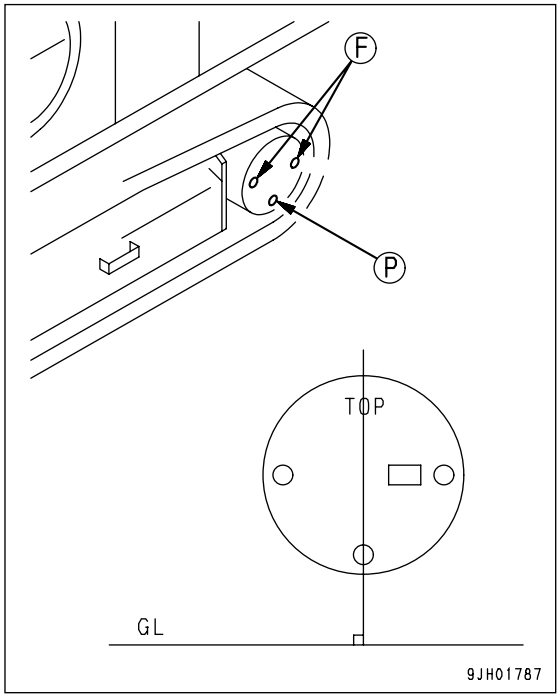

REMARK
There are two plugs (F). Add oil through the one easier to fill oil and through which no internal gears are to be seen.

CLEAN HYDRAULIC TANK STRAINER

⚠ WARNING

- **The parts and oil are at high temperature after the engine is stopped, and may cause serious burns. Wait for the temperature to go down before cleaning the hydraulic tank strainer.**
- **When the oil filler cap is removed, oil may spurt out, turn the cap slowly to release the internal pressure, then remove it carefully.**

1. Loosen 6 bolts, then remove cover (1).
   When doing this, the cover may fly out under the force of spring (2), so push the cover down when removing the bolts.
2. Pull up the top of rod (3), and remove spring (2) and strainer (4).
3. Remove the dirt stuck to strainer (4), then wash it in clean diesel oil or flushing oil.
   If strainer (4) is damaged, replace it with a new one.
4. Refit strainer (4) by inserting it into the tank projecting part (5).
5. Assemble it so that the protruding part at the bottom of cover (1) holds spring (2), then tighten the cover with the bolts.

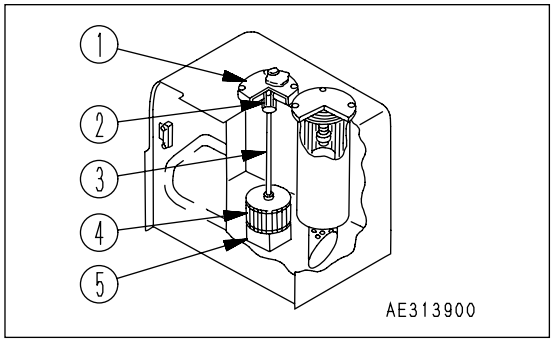

CLEAN, CHECK TURBOCHARGER

Contact your Komatsu distributor for cleaning or inspection.

CHECK ALTERNATOR, STARTING MOTOR

The brush may be worn, or the bearing may have run out of grease, so contact your Komatsu distributor for inspection or repair.

If the engine is started frequently, carry out inspection every 1000 hours.

CHECK ENGINE VALVE CLEARANCE, ADJUST

A special tool is required for removing and adjusting the parts, call your Komatsu distributor for service.

CHECK VIBRATION DAMPER

A special tool is required for removing and adjusting the parts, call your Komatsu distributor for service.

EVERY 4000 HOURS MAINTENENCE

Maintenance for every 250, 500, 1000 and 2000 hours service should be carried out at the same time.

CHECK WATER PUMP

Since the pulley may have play, oil may leak, water may leak and the drain hole (A) may be clogged, contact your Komatsu distributor for inspection, overhaul or replacement.

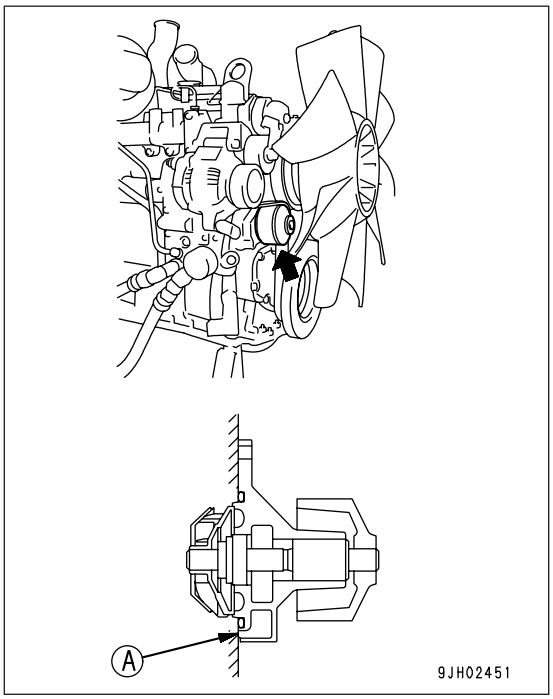

EVERY 5000 HOURS MAINTENANCE

Maintenance for every 250, 500 and 1000 hours service should be carried out at the same time.

CHANGE OIL IN HYDRAULIC TANK

⚠ WARNING

- **The parts and oil are still at high temperature after the engine is stopped, and may cause serious burns. Wait for the temperature to go down before servicing the hydraulic tank.**
- **When the oil filler cap is removed, oil may spurt out, so turn the cap slowly to release the internal pressure, then remove it carefully.**

NOTICE
If the machine is equipped with a hydraulic breaker, the hydraulic oil will deteriorate much faster than during normal bucket operations. For details, see "MAINTENANCE INTERVAL FOR HYDRAULIC BREAKER (PAGE 223)" when carrying out maintenance.

Prepare the following.

- Refill, capacity: 143 liters
- Prepare a handle for the socket wrench set.

1. Swing the upper structure so that the drain plug at the lower part of the suction tube comes to the middle of the left or right track.
2. Retract the arm and bucket cylinders to the stroke end, then lower the boom and put the bucket teeth in contact with the ground.
3. Lock the safety lock lever and stop the engine.

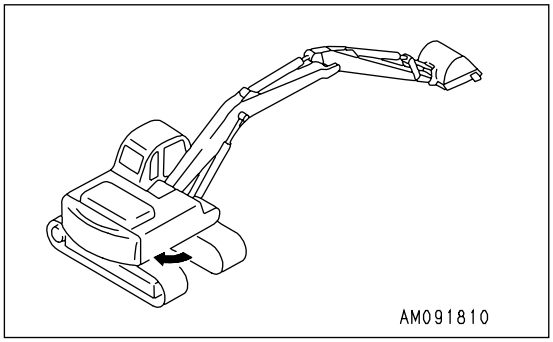

4. After the tank has cooled, remove the cap from oil filler (F) on the hydraulic tank.
5. Set an empty oil container under the drain plug under the machine. Remove drain plug (P) and drain the oil.
   Check the O-ring installed on plug (P). If it is damaged, replace the O-ring. After draining the oil, tighten drain plug (P).
   Tightening torque: 69 ± 10 N•m.

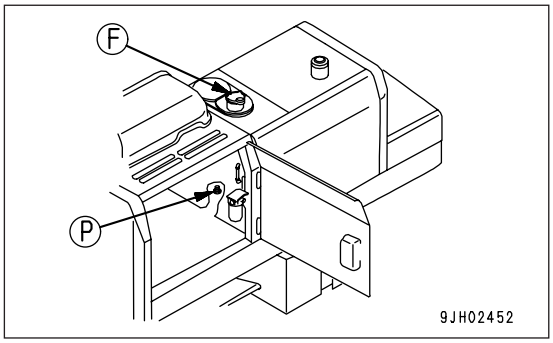

When removing drain plug (P), be careful not to get oil on yourself.

6. Add the specified amount of engine oil through oil filler port (F).
   Check that the oil level is between H and L on the sight gauge.

For details of the method of bleeding the air, see "CHECK OIL LEVEL IN HYDRAULIC TANK, ADD OIL (PAGE 129)".

SPECIFICATIONS

SPECIFICATIONS

	Item	Unit	PC290LC-7	PC290NLC-7
	Operating weight	kg	28,455	28,080
	Bucket capacity	m^3	1.2	
	Name of engine		KOMATSU SAA6D102E-2-C diesel engine	
	Engine horsepower	kW (HP)/rpm	134/2050	
A	Overall length	mm	9,790	
B	Overall height	mm	3,210	
C	Overall width	mm	3,290	2,990
D	Track width	mm	700	600
E	Height of cab	mm	3,130	
F	Radius of upper structure	mm	2,940	
G	Length of track	mm	4,955	4,625
H	Tumbler center distance	mm	3,700	
	Min. ground clearance	mm	498	
	Travel speed (Low/Medium/High)	km/h	3.0/4.5/5.5	
	Swing speed	rpm	10.5	

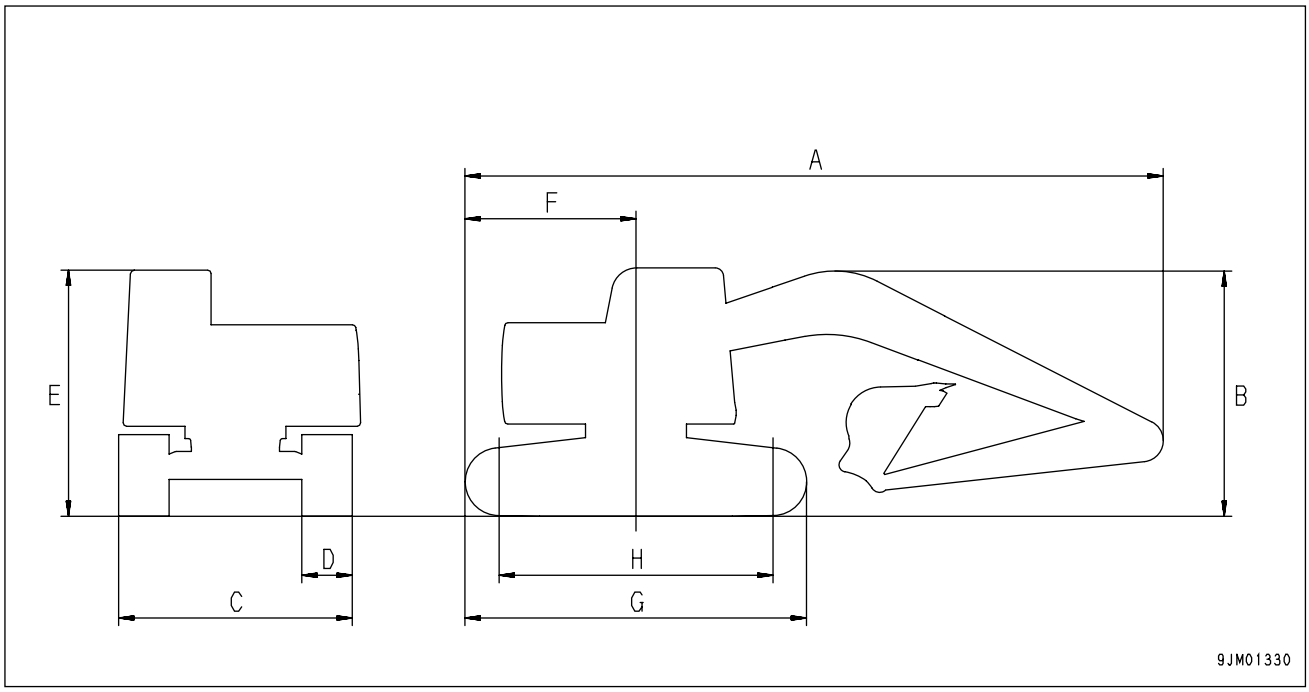

WORKING RANGE MONO BOOM

	Working ranges	Unit	PC290LC-7	PC290NLC-7
A	Max. digging reach	mm	10,100	
B	Max. digging depth	mm	6,460	
C	Max. digging height	mm	10,000	
D	Max. vertical wall depth	mm	5,650	
E	Max. dumping height	mm	7,035	
F	Min. dumping height	mm	3,430	
G	Max. reach at ground level	mm	9,990	

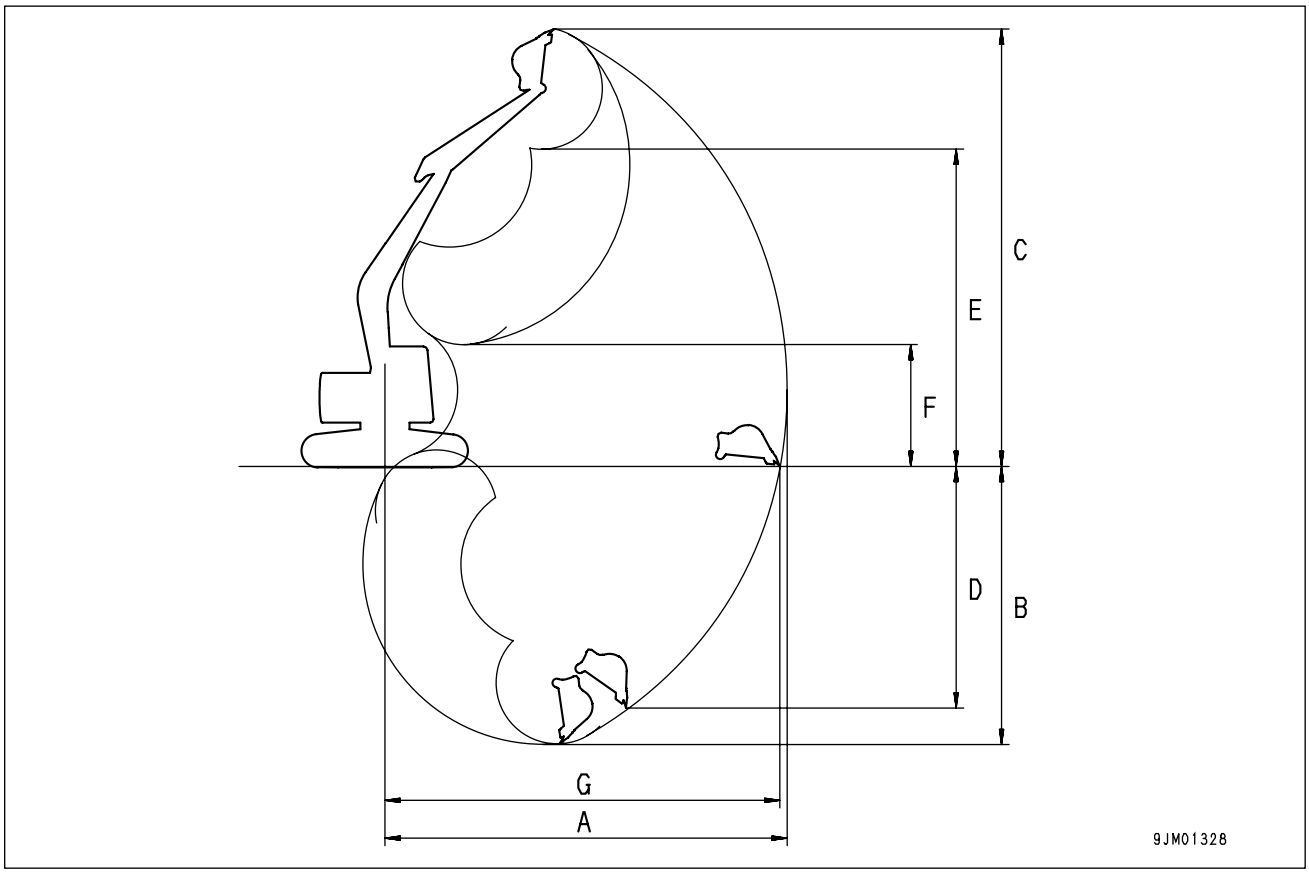

WORKING RANGE 2 PIECE BOOM

		ARM LENGTH		
		2.5m	3.0m	3.5m
A	Max.digging height	11606	12133	12500
B	Max. dumping height	8659	9068	9399
C	Max. digging depth	5810	6294	6735
D	Max. vertical wall digging depth	2444	2179	2540
E	Max. digging depth of cut for 2.44m level	5643	6202	6648
F	Max. digging reach	9989	10543	10964
G	Max. digging reach at ground level	9797	10361	10789
H	Min. swing radius	2660	2587	2731

EXPLANATION OF LIFTING CAPACITY CHART

PC290LC- 7K, PC290NLC-7K

LEGEND
A : Reach from swing centre
B : Bucket hook height

OF : Lifting capacity (rating overfront)
OS : Lifting capacity (rating overside)

LEGEND

(1) Position of lifting point
(2) Arm length:
(3) Boom length
(4) Hydraulic pressure: 37.2 MPa

WORKING CONDITIONS:

- q WITH BUCKET (0.9m^3 CECE).(680 kg)°
- q IF OBJECT HANDLING IS PERFORMED WITH OTHER TOOL INSTALLED, THE WEIGHT DIFFERENCE OF THE TOOL SHALL BE DEDUCTED FROM THE VALUES OF THIS TABLE.
- q WITH FULLY EXTENDED BUCKET CYLINDER.
- q ON A COMPACT HORIZONTAL LEVEL GROUND.

PC290LC WITH 700 mm WIDTH SHOE.
PC290NLC WITH 600 MM WIDTH SHOE

Loads do not exceed 87% of hydraulic capacity or 75% of tipping capacity (* load limited by hydraulic capacity rather than tipping)

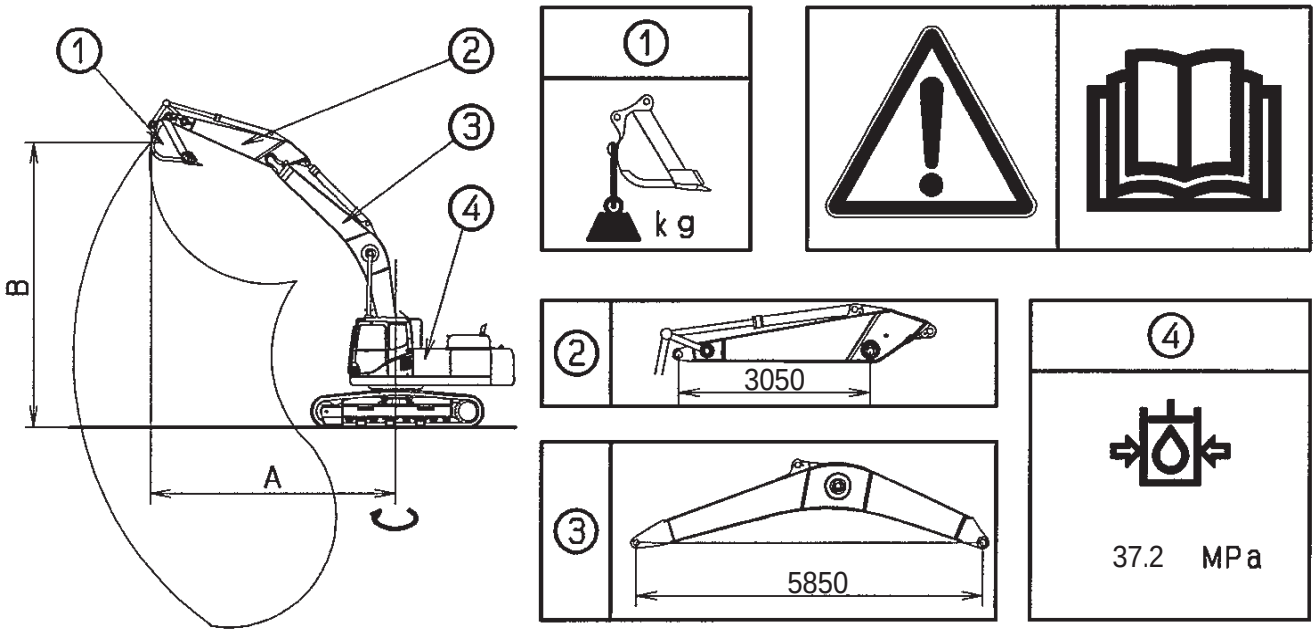

PC290LC-7K MONO BOOM

MODEL	ARM	Height	MAX		7.5m		6.0m		4.5m		3.0m		1.5m	
			OF	OS	OF	OS	OF	OS	OF	OS	OF	OS	OF	OS
PC290LC-7K MONO BOOM	3.5 m	6.0m	* 2400	* 2400	* 4300	* 4300								
		4.5m	* 2450	* 2450	* 5650	4900	* 6600	* 6600						
		3.0m	* 2650	* 2650	* 6850	4700	* 7950	6900	* 10050	* 10050	* 14800	* 14800		
		1.5m	* 2950	* 2950	6700	4500	* 9350	6500	* 12800	10250	* 12500	* 12500		
		0.0m	* 3450	3150	6500	4350	9300	6200	* 14600	9650	* 11050	* 11050	* 5000	* 5000
		-1.5m	* 4300	3400	6400	4250	9000	5900	14750	9400	* 13750	* 13750	* 8500	* 8500
		-3.0m	* 5900	4000	6350	4250	8950	5900	14700	9350	* 18200	* 18200	* 12250	* 12250
		-4.5m	7950	5300			9150	6050	* 13100	9550	* 18850	* 18850		
	3.0 m	6.0m	* 3100	* 3100	* 4750	* 4750								
		4.5m	* 3150	* 3150	* 6500	4850	* 7200	7200						
		3.0m	* 3350	* 3350	6900	4700	* 8550	6850	* 11000	10900	* 17550	* 17550		
		1.5m	* 3700	3350	6700	4550	9600	6500	* 13550	* 10150	* 8050	* 8050		
		0.0m	* 4300	3400	6550	4400	9300	6200	15050	9850	* 9500	* 9500		
		-1.5m	* 5250	3700	6450	4300	9050	5950	14850	9450	* 13600	* 13600	* 8550	* 8550
		-3.0m	6550	4400			9150	6050	* 14550	9500	* 19500	* 19500	* 13200	* 13200
		-4.5m	* 8350	6000			* 8750	6250	* 12300	9700	* 17400	* 17400		
	2.5 m	6.0m	* 5000	* 5000			* 7050	* 7050						
		4.5m	* 5150	4250	7000	4800	* 7900	7050	* 9450	* 9450				
		3.0m	* 5500	3900	6850	6450	* 9150	6750	* 12100	10650				
		1.5m	5550	3750	6650	4500	9550	6400	* 14300	9950				
		0.0m	5750	3650	6550	4400	9300	6200	14950	9550	* 8900	* 8900		
		-1.5m	6300	4250	6500	4350	9200	6100	14850	9500	* 15200	* 15200		
		-3.0m	* 7700	5150			9250	6150	* 13950	9600	* 19550	* 19550		
		-4.5m	* 8950	7650					* 10950	9900				
	2.0 m	6.0m	* 5100	* 5100			* 7850	7150						
		4.5m	* 5200	4600	* 5950	4700	* 8500	6950	* 10400	* 10400	* 14950	* 14950		
		3.0m	* 5550	4150	6750	4600	* 9650	6650	* 12950	10400				
		1.5m	5950	4050	6600	4450	9450	6350	* 14850	9750				
		0.0m	6200	4150	6550	4400	9150	6050	14850	9500				
		-1.5m	6950	4650			9200	6100	14850	9500	* 15900	* 15900		
		-3.0m	8700	5850			9300	6200	* 13150	9650	* 17800	* 17800		
		-4.5m												

PC290NLC-7K MONO BOOM

Model	Arm	Height	MAX		7.5 m		6.0 m		4.5 m		3.0 m		1.5 m	
			OF	OS	OF	OS	OF	OS	OF	OS	OF	OS	OF	OS
PC290NLC-7K MONO BOOM	3.5 m	6.0m	* 2400	* 2400	* 4300	* 4300								
		4.5m	* 2450	* 2450	* 5650	4400	* 6600	6550						
		3.0m	* 2650	* 2650	6800	4250	* 7950	6200	* 10050	9950	* 14800	* 14800		
		1.5m	* 2950	2750	6550	4050	* 9350	5800	* 12800	9100	* 12500	* 12500		
		0.0m	* 3450	2800	6400	3850	9150	5500	* 14600	8550	* 11050	* 11050	* 5000	* 5000
		-1.5m	* 4300	3000	6250	3750	8850	5250	14500	8300	* 13750	* 13750	* 8500	* 8500
		-3.0m	* 5900	3550	6250	3750	8800	5200	14500	8250	* 18200	16550	* 12250	* 12250
		-4.5m	7800	4700			9000	5400	* 13100	8450	* 18850	17000		
	3.0 m	6.0m	* 3100	* 3100	* 4750	4450								
		4.5m	* 3150	* 3150	* 6500	4350	* 7200	6500						
		3.0m	* 3350	3050	6750	4200	* 8550	6150	* 11000	9750	* 17550	* 17550		
		1.5m	* 3700	2950	6550	4050	9450	5800	* 13550	9000	* 8050	* 8050		
		0.0m	* 4300	3000	6400	3900	9150	5550	14800	8550	* 9500	* 9500		
		-1.5m	* 5250	3300	6350	3800	8900	5300	14600	8350	* 13600	* 13600	* 8550	* 8550
		-3.0m	6450	3900			9000	5400	* 14550	8400	* 19500	16850	* 13200	* 13200
		-4.5m	* 8350	5350			* 8750	5550	* 12300	8600	* 17400	17300		
	2.5 m	6.0m	* 5000	4550			* 7050	6600						
		4.5m	* 5150	3850	6850	4300	* 7900	6400	* 9450	* 9450				
		3.0m	* 5500	3450	6700	4150	* 9150	6050	* 12100	9500				
		1.5m	5450	3350	6550	4000	9400	5750	* 14300	8850				
		0.0m	5650	3400	6400	3900	9150	5500	14700	8500	* 8900	* 8900		
		-1.5m	6200	3750	6400	3850	9000	5400	14600	8400	* 15200	* 15200		
		-3.0m	7600	4500			9100	5450	* 13950	8500	* 19550	17050		
		-4.5m	* 8950	6850					* 10950	8800				
	2.0 m	6.0m	* 5100	5000			* 7850	6450						
		4.5m	* 5200	4150	* 5950	4200	* 8500	6250	* 10400	10050	* 14950	* 14950		
		3.0m	* 5550	3700	6650	4100	9650	5950	* 12950	9250				
		1.5m	5850	3600	6500	4000	9300	5650	* 14850	8650				
		0.0m	6100	3700	6400	3900	9000	5400	14600	8400				
		-1.5m	6800	4150			9050	5450	14600	8400	*15900	*15900		
		-3.0m	8600	5200			9150	5550	* 13150	8550	* 17800	17200		
		-4.5m												

EXPLANATION OF LIFTING CAPACITY CHART (PC290LC,NLC-7K 2 PIECE BOOM)

LEGEND
A : Reach from swing centre
B : Bucket hook height

OF : Lifting capacity (rating overfront)
OS : Lifting capacity (rating overside)

LEGEND

(1) Position of lifting point
(2) Arm length:
(3) Boom length
(4) Hydraulic pressure: 37.2 MPa

WORKING CONDITIONS:

- q WITH BUCKET (0.90m^3 CECE).(848 kg)
- q IF OBJECT HANDLING IS PERFORMED WITH OTHER TOOL INSTALLED, THE WEIGHT DIFFERENCE OF THE TOOL SHALL BE DEDUCTED FROM THE VALUES OF THIS TABLE.
- q WITH FULLY EXTENDED BUCKET CYLINDER.
- q ON A COMPACT HORIZONTAL LEVEL GROUND.

PC290LC-7 with 700mm width shoe

PC290NLC-7 with 600mm width shoe

Loads do not exceed 87% of hydraulic capacity or 75% of tipping capacity (* load limited by hydraulic capacity rather than tipping)

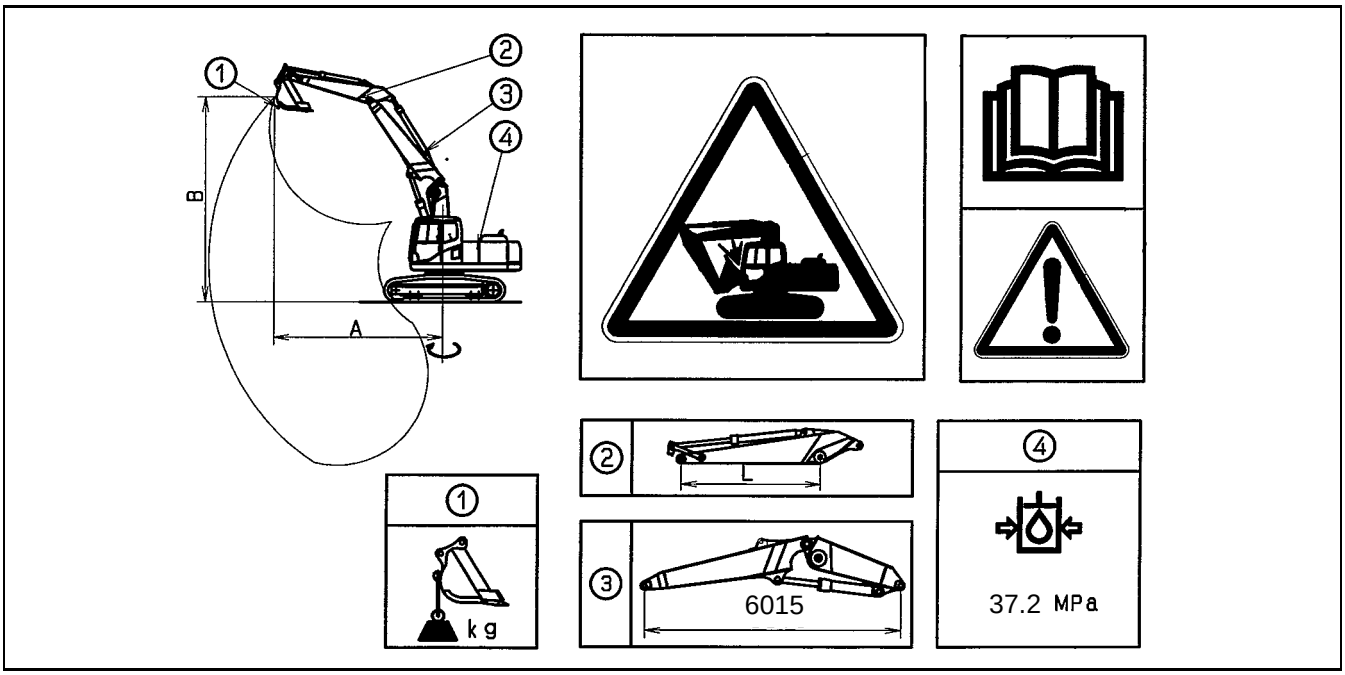

PC290LC-7K 2 PIECE BOOM

model	Arm	Height	MAX		7.5m		6.0m		4.5m		3.0m		1.5m	
			OF	OS	OF	OS	OF	OS	OF	OS	OF	OS	OF	OS
PC290LC-7K	2.5m	6.0m	5100*	4450	7100*	4950	8250*	7400	8050*	8050*				
		4.5m	5000*	3850	7100	4900	9050*	7100	11200*	11200*				
		3.0m	5150*	3550	6900	4750	9900	6750	13300*	10350				
		1.5m	5150	3500	6750	4600	9550	6400	15050*	9800				
		0.0m	5300	3600	6600	4450	9200	6100	14850	9500				
		-1.5m	5800	3950	6600	4450	9250	6150	14550	9450				
		-3.0m												
		-4.5m												
	3.0m	6.0m	3200*	3200*	6050*	5050	6550*	6550*	6000*	6000*				
		4.5m	3150*	3150*	7150	4950	7900*	7250	8100*	8100*	7800*	7800*		
		3.0m	3200*	3200	7000	4800	9600*	6900	12600*	10850				
		1.5m	3400*	3150	6800	4600	9650	6500	14550*	10050				
		0.0m	3700*	3200	6650	4450	9250	6150	14950	9600				
		-1.5m	4250*	3500	6550	4400	9200	6100	14800	9450	10150*	10150*		
		-3.0m					9100	6050						
		-4.5m												
	3.5m	6.0m	2850*	2850*	5550*	4900	6550*	6550*	6350*	6350*				
		4.5m	2850*	2850*	6950*	4800	8250*	7100	9000*	9000*	9700*	9700*		
		3.0m	2950*	2950*	6850	4650	9500*	6750	12600*	10700				
		1.5m	3200*	3100	6650	4500	9500	6400	14550*	9950				
		0.0m	3600*	3200	6500	4350	9150	6050	14900	9500	7050*	7050*		
		-1.5m	4250*	3500	6450	4300	9150	6050	14800	9400	11250*	11250*		
		-3.0m					9050	5950						
		-4.5m												

PC290NLC-7K 2 PIECE BOOM

Model	Arm	Height	MAX		7.5m		6.0m		4.5m		3.0m		1.5m	
			OF	OS	OF	OS	OF	OS	OF	OS	OF	OS	OF	OS
PC290LC-7K	2.5m	6.0m	5100*	4000	7050	4500	8250*	6700	8050*	8050*				
		4.5m	5000*	3450	6950	4400	9050*	6400	11200*	10250				
		3.0m	5150*	3200	6800	4250	9750	6050	13300*	9250				
		1.5m	5050	3100	6650	4100	9400	5750	14950	8700				
		0.0m	5200	3200	6500	4000	9000	5400	14600	8400				
		-1.5m	5700	3500	6500	3950	9050	5450	14550*	8350				
		-3.0m												
		-4.5m												
	3.0m	6.0m	3200*	3200*	6050*	4600	6550*	6550*	6000*	6000*				
		4.5m	3150*	3050	7050	4500	7900*	6550	8100*	8100*	7800*	7800*		
		3.0m	3200*	2850	6850	4300	9600*	6200	12600*	9700				
		1.5m	3400*	2800	6650	4150	9500	5800	14550*	8900				
		0.0m	3700*	2850	6500	4000	9100	5450	14700	8500	10150*	10150*		
		-1.5m	4250*	3100	6450	3950	9050	5450	14550	8350				
		-3.0m					8950	5350						
		-4.5m												
	3.5m	6.0m	2500*	2500*	5250*	4650	5650*	5650*	5200*	5200*				
		4.5m	2500*	2500*	6250*	4500	6800*	6650	6750*	6750*	5950*	5950*		
		3.0m	2550*	2550*	6900	4300	9100*	6250	11750*	9900	17950*	17950*		
		1.5m	2750*	2600	6650	4100	9500	5850	13950*	9000				
		0.0m	3050*	2650	6500	3950	9150	5500	14750	8450	8000*	8000*		
		-1.5m	3550*	2850	6400	3850	9000	5350	14500	8250	11000*	11000*		
		-3.0m			6400	3850	9000	5350	14000*	8300				
		-4.5m												

MEMO

ATTACHMENTS AND OPTIONS

⚠ WARNING

Please read and make sure that you understand the safety volume before reading this section.

GENERAL PRECAUTIONS

PRECAUTIONS RELATED TO SAFETY

If attachments or options other than those authorized by Komatsu are installed, this will not only affect the life of the machine, but will also cause problems with safety.

When installing attachments not listed in this Operation and Maintenance Manual, contact your Komatsu distributor first.

If you do not contact Komatsu, we cannot accept any responsibility for any accidents or failures.

⚠ WARNING

General precautions

- **Attachments are powerful tools. To prevent serious injury or damage, use the attachment correctly.**
- **Read the instruction manual for the attachment thoroughly, and do not use this attachment unless you are sure that you have understood the guidelines completely.**
  If you lose the instruction manual, ask the manufacturer or attachment sales company for a new copy.
- **Depending on the attachment, installation of a front guard to the machine is necessary.**
- **Depending on the attachment, the impact noise may make it difficult for fellow workers to transmit instructions for the operation. Before starting operation, decide upon a leader and determine the signals to be used.**
- **Do not carry out swinging operations to the side with a heavy load on the attachment. This is particularly dangerous on slopes.**
- **Compared with a machine equipped with a bucket, a machine equipped with a breaker has a heavy load at the front of the work equipment and is unstable. To avoid the danger of tipping over, do not carry out operations with the attachment swung to the side.**
- **When an attachment is installed, the swing range and center of gravity of the machine are different, and the machine may move in an unexpected ways. Be sure that you understand the condition of the machine with a particular attachment.**
- **Before starting operations, set up a fence around the machine to prevent people from entering.**
  Never operate the machine when there are people near the machine.
- **To prevent serious accidents caused by misoperation, do not put your foot on the pedal except when operating the pedal.**

⚠ WARNING

Precautions for attachment removal and installation operations

When removing or installing the attachment, do as follows to ensure safety in the operation.

- **Carry out the removal and installation operation on firm, level ground.**
- **When carrying out the operation with two or more workers, determine the signals and follow these during the operation.**
- **Use a crane when you lift or carrying heavy objects (more than 25 kg).**
- **When removing heavy components, support the component before removing it.**
  When lifting with a crane, be particularly careful about the position of the center of gravity.
- **It is dangerous to carry out operations with a load left raised by a crane. Prepare a stand and ensure that the condition is safe.**
- **When leaving an attachment removed or when installing the attachment, make sure that it is in a stable condition and cannot fall over.**
- **Never go under a load raised by a crane.**
  Stay in a safe place where there is no danger if the load should fall.

NOTICE

Qualifications are required to operate a crane. Never allow the crane to be operated by an unqualified person.

For details of removal and installation operations, contact your Komatsu distributor.

PRECAUTIONS WHEN INSTALLING ATTACHMENTS

⚠ WARNING

Long work equipment reduces the stability of the machine, so if the swing is operated on a slope, or when going down a steep hill, the machine may lose its balance and overturn.

The following operations are particularly dangerous, so never operate the machine in these ways.

- **If heavy work equipment is installed, the overrun of the swing becomes greater (the distance from the point where the operator operates the control levers to stop the swing to the point where the upper structure stops completely), so there is danger of mistaking the distance and hitting something.**
  Operate so that there is an ample margin to the stopping point.
  Furthermore, the hydraulic drift also becomes larger (when the work equipment is stopped in mid-air, it will gradually move down under its own weight).

- **Follow the correct procedure when installing the boom and arm.**
  If the correct procedure is not followed, this may lead to serious damage or injury, so consult your Komatsu distributor before carrying out installation.

- **If long work equipment is installed, the working range will suddenly become larger, so there is danger of mistaking the distance and hitting something.**
  Operate the work equipment so that there is ample space from any obstacles in the area.

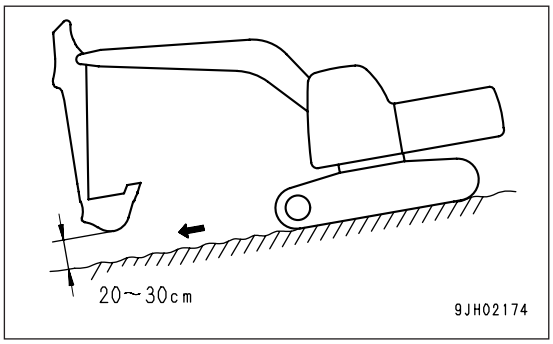

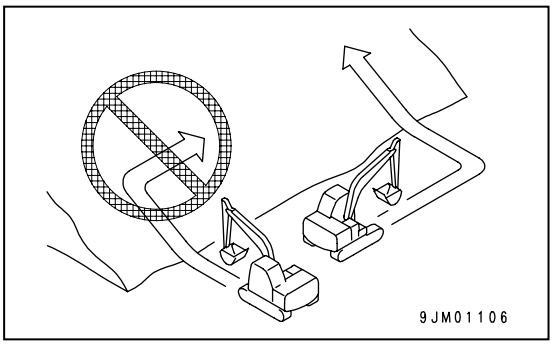

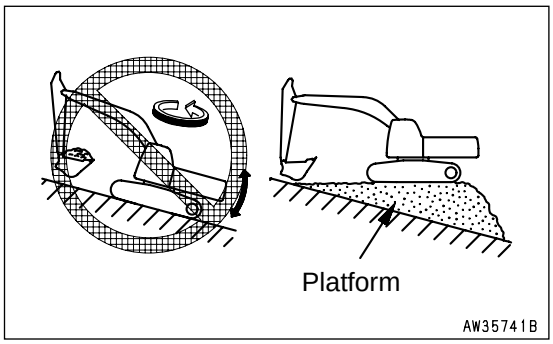

HANDLING BUCKET WITH HOOK

CHECKING FOR DAMAGE TO BUCKET WITH HOOK

Check that there is no damage to the hook, stopper, or hook mount. If there is any abnormality, contact your Komatsu distributor.

PROHIBITED OPERATIONS

PRECAUTIONS DURING OPERATIONS

- When carrying out lifting operations, reduce the engine speed and use the lifting operation mode.
- Depending on the posture of the work equipment, there is the danger that the wire or load may slip off the hook.

  Be careful to maintain the correct hook angle to prevent this from happening.
- Never steer the machine while lifting a load.
- If the bucket with hook is turned and used for operations, it will hit the arm during dumping operations, so be careful when using it.

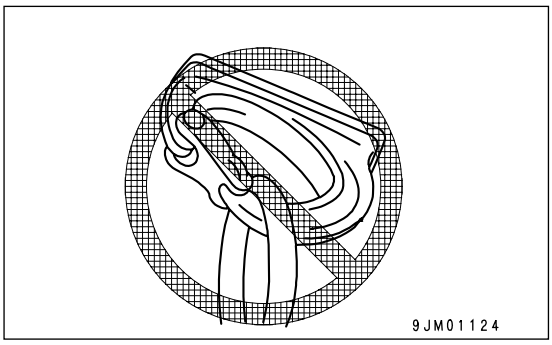

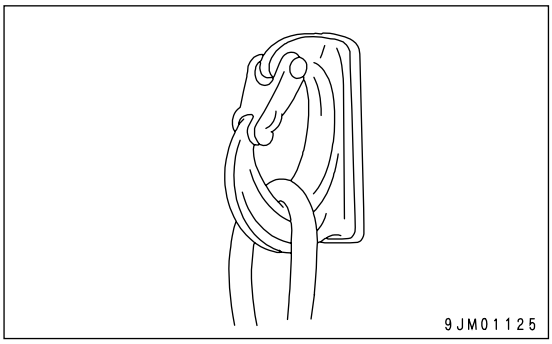

- If you are planning to install a hook, contact your Komatsu distributor.

MACHINES READY FOR ATTACHMENTS

EXPLANATION OF COMPONENTS

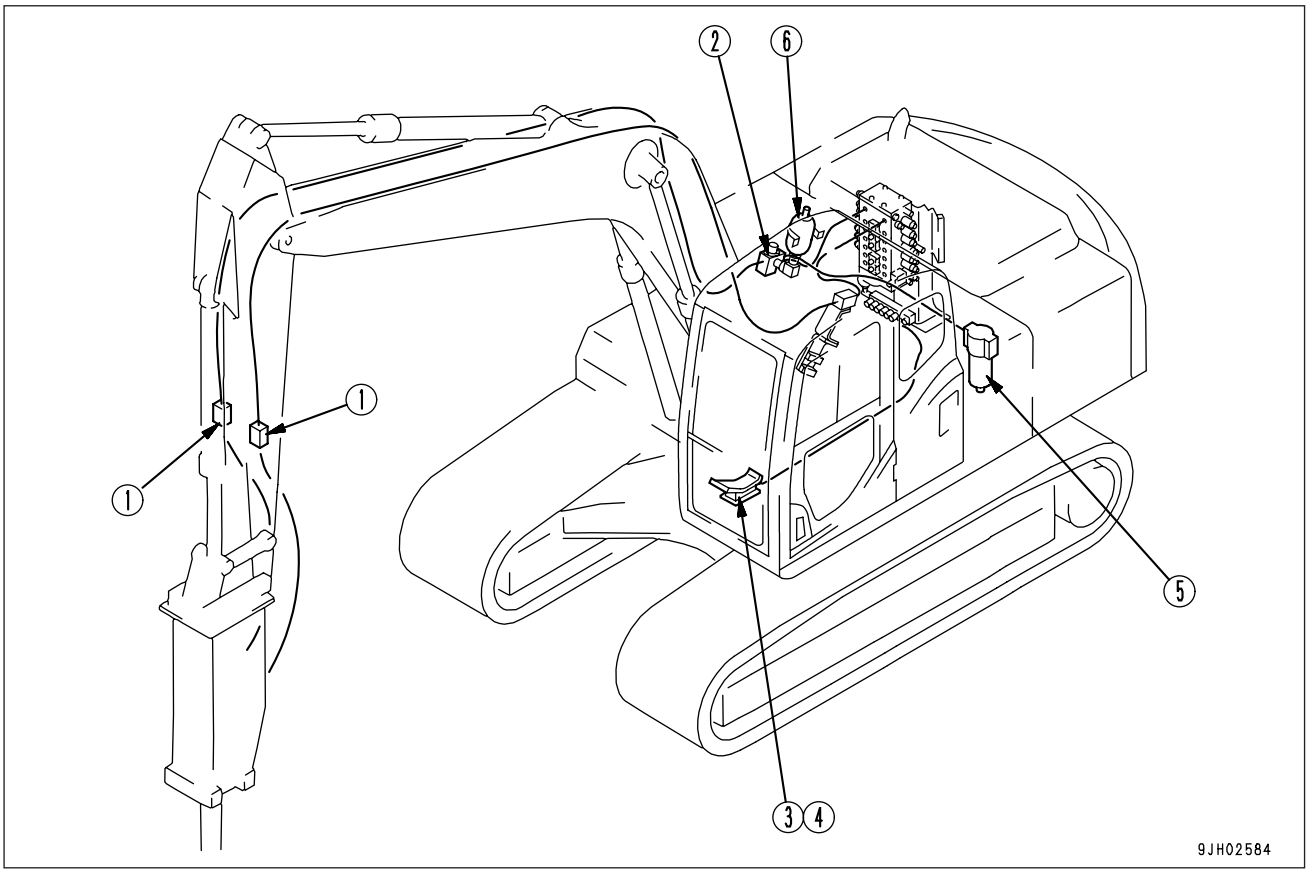

(1) Stop valve	(4) Lock pin
(2) Selector valve	(5) Additional filter for breaker
(3) Attachment control pedal	(6) Accumulator

STOP VALVE

This valve (1) stops the flow of the hydraulic oil.

(a) FREE: Hydraulic oil flows
(b) LOCK: Hydraulic oil stops

Set this valve to the LOCK position when removing or installing attachments.

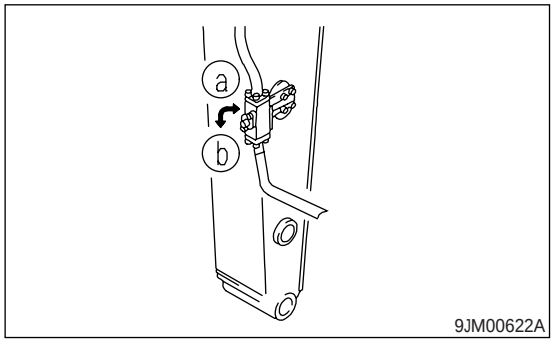

SELECTOR VALVE

This valve (2) switches the flow of hydraulic oil.

The selector valve is automatically switched according to the selected working mode. It is necessary to switch the working mode to match the attachment that is installed. For details of switching the working mode, see "HYDRAULIC CIRCUIT (PAGE 289)".

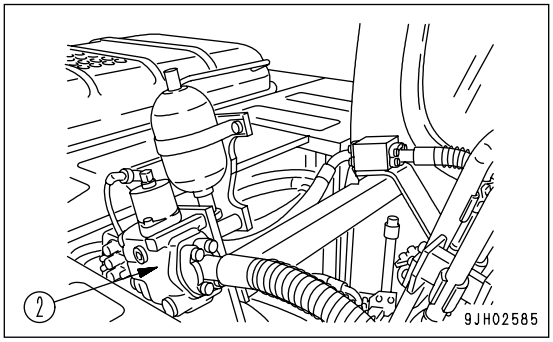

NOTICE
If a service circuit from the attachment maker has been added, the return circuit may not switch automatically.

ATTACHMENT CONTROL PEDAL

This pedal (3) is used to control the attachment.

When the front, center (neutral), and rear of the pedal are depressed, the movement of the attachment is as follows.

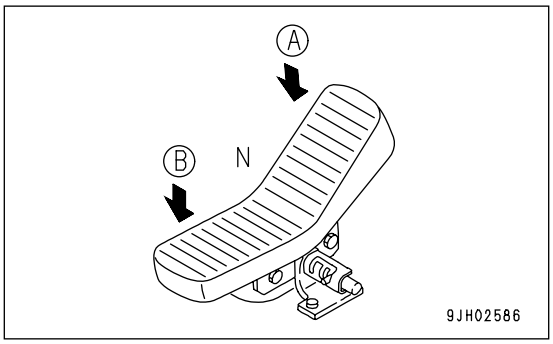

Hydraulic breaker
Front of pedal (A) : Actuated
Center of pedal N : Stopped
Rear of pedal (B) : Stopped

Regarding other attachments, hold a meeting with the attachment maker at the time of installation to confirm the operation of the pedal and attachment before using it.

REMARK
This pedal cover (3) differs in thickness at both ends. It can be installed facing in either direction, so install it according to your own preference.

LOCK PIN

This pin (4) locks the control pedal.

Position (a) : Locked
Position (b) : Only front of pedal can be operated to full position (rear is locked)
Position (c) : Both front and rear of pedal can be operated to full position

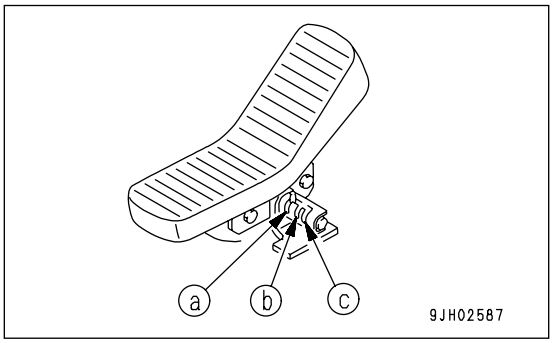

- When using a breaker, select B mode on the monitor and set the lock pin to position (b).
  When not using the attachment, set the lock pin to position (a).
- When using a breaker, select A or E mode on the monitor and set the lock pin to position (c).

NOTICE
When using a breaker, if the lock pin is set to position (c) and the rear portion (B) of the pedal is depressed, it will cause defective operation or breakage of the breaker. Set the lock pin to position (b) when using the breaker.

ADDITIONAL FILTER FOR BREAKER

This filter (5) prevents deterioration of the hydraulic oil when using a breaker.

Oil only flows when B mode is selected on the monitor.

NOTICE
Install an additional filter in the return circuit on machines equipped with a hydraulic breaker.

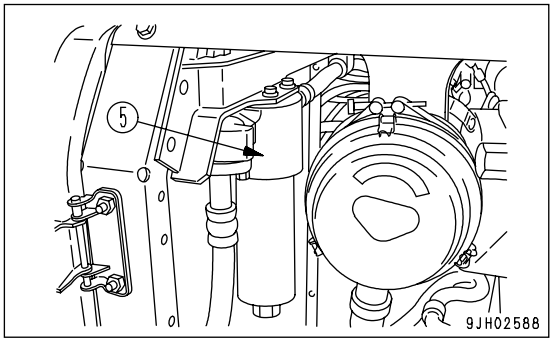

ACCUMULATOR

⚠ WARNING

The accumulator is charged with high-pressure nitrogen gas. It is extremely dangerous if it is handled incorrectly. For details of handling, see "HANDLING THE ACCUMULATOR (PAGE 122)".

This accumulator (6) is installed to reduce the peak pressure in the hydraulic circuit when a breaker is used. Normally, do not touch it.

NOTICE
The need to install an accumulator depends on the breaker manufacturer. When installing a breaker made by another manufacturer, please consult your Komatsu distributor. Depending on the breaker manufacturer, it may be necessary to install the accumulator at the inlet or outlet port of the breaker.

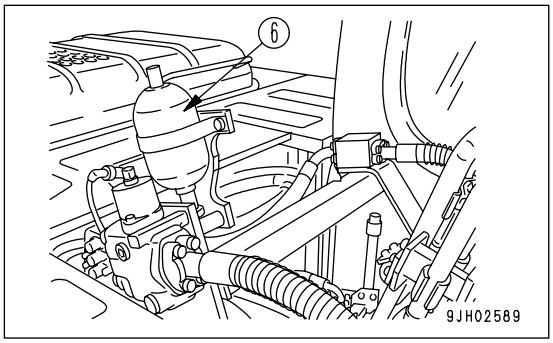

HYDRAULIC CIRCUIT

NOTICE

- **When a breaker is installed, it is necessary to connect the return circuit directly to the return filter, so use only B mode. Do not use any other mode.**
- **The standard set pressure of the service valve safety valve depends on the mode selected when the machine is shipped from the factory.**
  If B mode is selected: 20.6 MPa (210 kgf/cm^2)
  If A or E mode is selected: 27.4 MPa (280 kgf/cm^2)
  Adjustment may be needed depending on the attachment, so in such a case, please contact your Komatsu distributor.

SWITCHING HYDRAULIC CIRCUIT

- Depending on the type of attachment, set the working mode on the monitor as follows.
- The set pressure of the service valve safety valve and the hydraulic circuit switch is according to the working mode selected.

Attachment	Working mode	Hydraulic circuit	Set pressure of service safety valve
Breaker or other attachment with one-way circuit	B mode	Return circuit automatically switched so that it does not pass through control valve	When shipped from factory : 20.6 MPa (210 kgf/cm^2)
Crusher or other attachment with two-way circuit	A mode or E mode	Return circuit automatically switched so that it passes through control valve	When shipped from factory : 27.4 MPa (280 kgf/cm^2)

ADJUSTING OIL FLOW

Depending on the attachment, it is necessary to change the oil flow in the service circuit.

For details of setting the oil flow, see "OPERATION (PAGE 294)".

SWITCHING BETWEEN BREAKER AND GENERAL ATTACHMENT

- When a possible attachment (if equipped) is installed and B mode is selected:
  1) The circuit becomes a circuit for breaker operation (1-way circuit).
  2) The hydraulic oil flowing in the breaker circuit flows to the additional filter for the breaker.
  3) The relief valve is set to a lower pressure.
     When shipped from factory: 20.6 MPa (210 kgf/cm^2)
  4) It is possible to adjust the maximum flow with the select mode.
- When a possible attachment (if equipped) is installed and A mode or E mode is selected:
  1) The circuit becomes a circuit for crusher operation (2-way circuit).
  2) The hydraulic oil flowing in the crusher circuit does not flow to the additional filter for the breaker.
  3) The relief valve is set to a higher pressure.
     When shipped from factory: 27.4 MPa (280 kgf/cm^2)
  4) It is possible to adjust the maximum flow with the select mode.

HYDRAULIC CIRCUIT CONNECTION

When connecting the attachment, connect the hydraulic circuit as follows.

1. Remove blanking head and split flanges (1) at the end of the stop valve piping. Be careful not to lose or damage any part that has been removed.

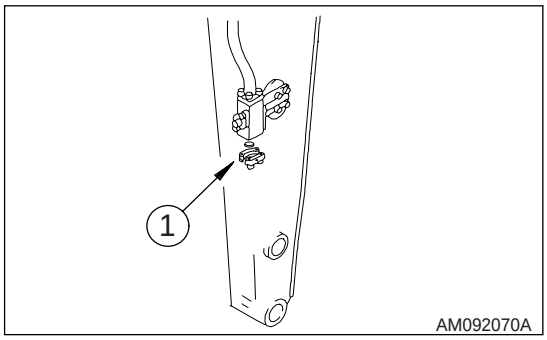

2. Connect attachment hose (2) provided by the attachment manufacturer to the plug removed in Step 1.
   For the mouthpiece size, the action to take differs according to the attachment manufacturer, so please consult your Komatsu distributor.

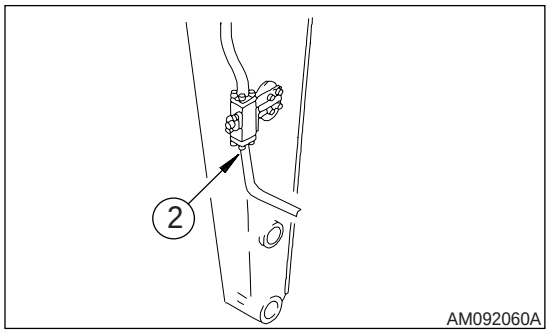

PATH OF OIL

The direction of operation of the pedal and the path of the oil are as shown in the diagram below.

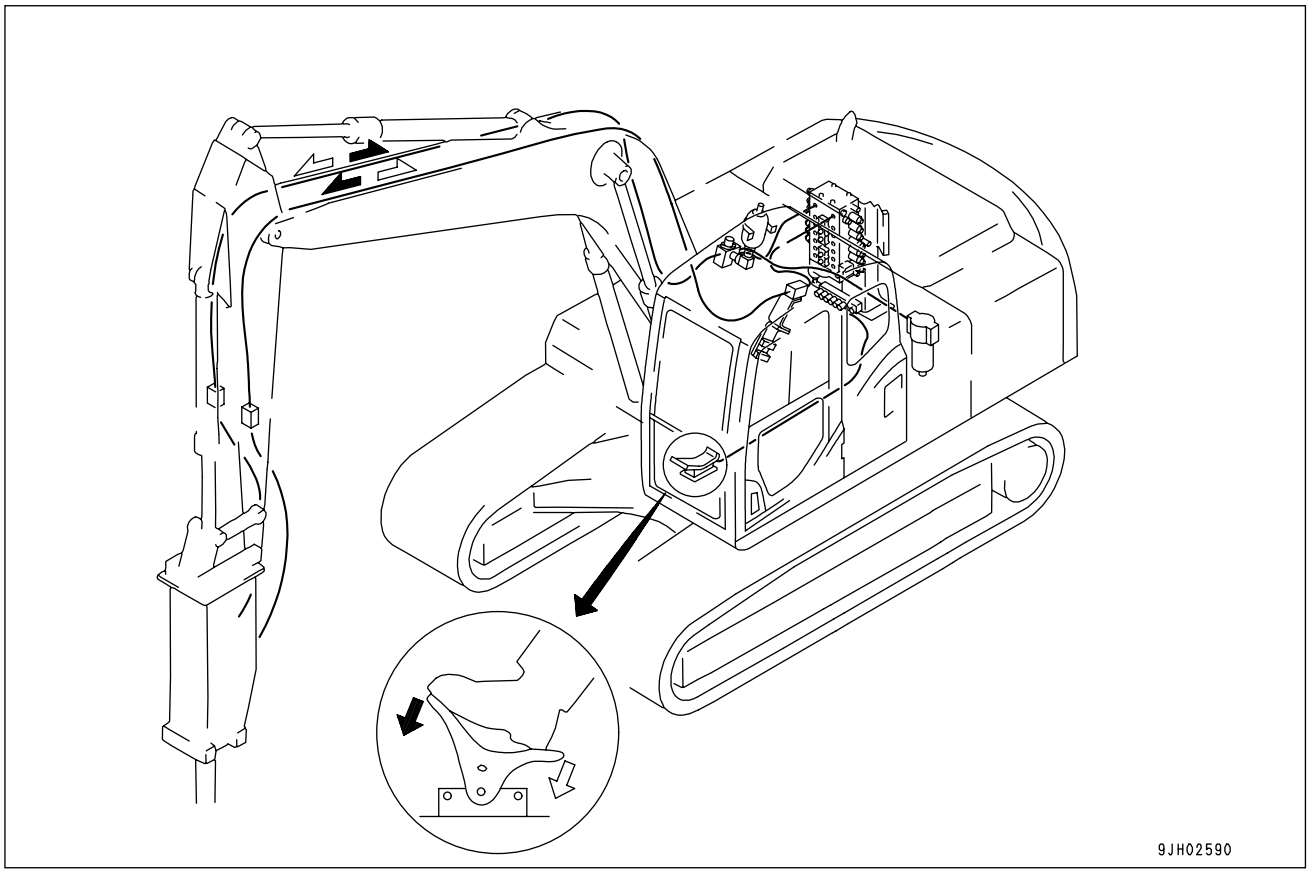

When the front of the pedal is depressed, oil flows to the piping on the left side of the work equipment; when the rear of the pedal is depressed, oil flows to the piping on the right side of the work equipment. (When a breaker is installed, only the front of the pedal can be used.)

REPLACE ADDITIONAL BREAKER FILTER ELEMENT

⚠ WARNING

Immediately after operating the engine, all parts still retain high temperature. Never replace the filter in such condition. Replace it only after each part has sufficiently cooled.

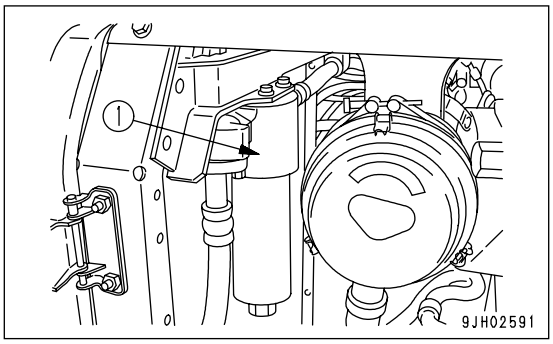

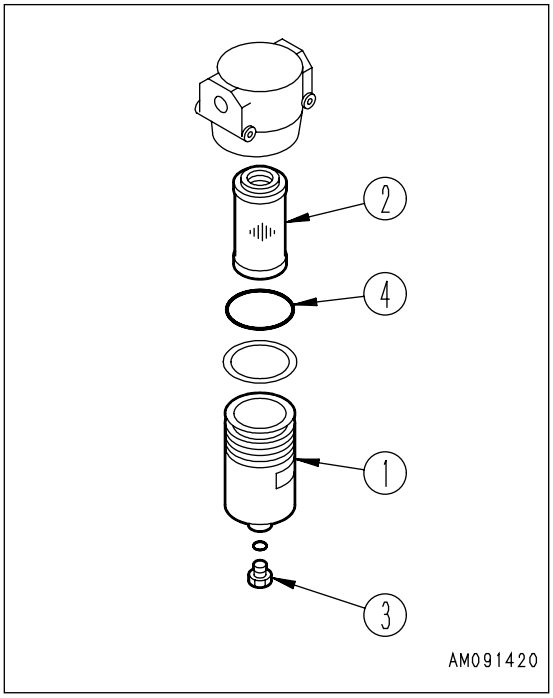

q Prepare a container for draining off oil.

1. Place the container under the filter element.
2. Turn filter case (1) counterclockwise to remove it. Remove element (2) from the case.
3. Unscrew plug (3) from filter case (1).
4. Clean the removed parts. Mount a new element (2) and O-ring (4).
5. After the case reaches the filter holder, additionally tighten the case by more than a 1/2 turn.

NOTICE
For the element replacement interval, see "MAINTENANCE INTERVAL FOR HYDRAULIC BREAKER (PAGE 223)".

ATTACHMENT MOUNTING/DISMOUNTING PROCEDURE

DISMOUNTING PROCEDURE

1. Place the attachment on the ground and stop the engine.
2. Turn the starting switch to the ON position and push down the safety lock lever to FREE position.

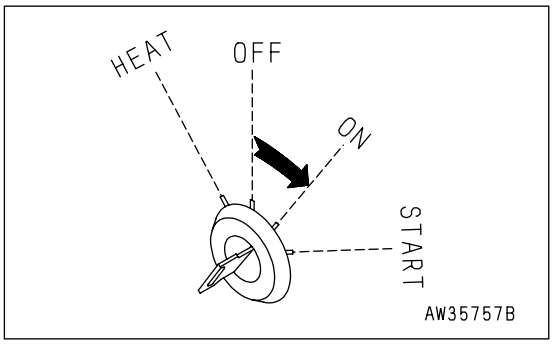

3. Operate each work equipment control lever and the attachment control pedal back and forth, left and right at full stroke 2 to 3 times to eliminate the internal pressure in the hydraulic circuit.

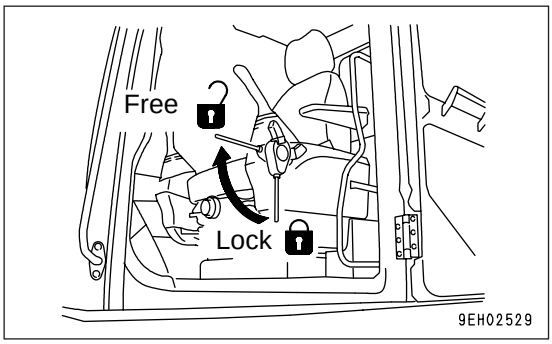

4. Loosen slowly oil filler cap (F) on top of the hydraulic tank to eliminate the internal pressure in the hydraulic circuit.

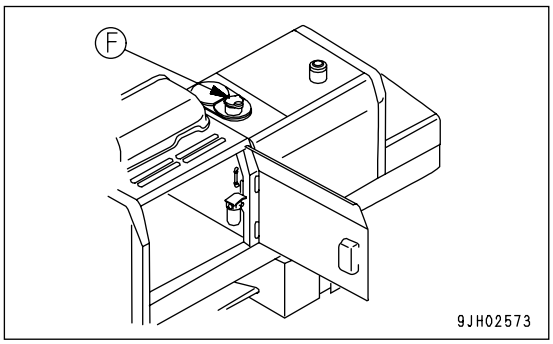

5. After confirming low oil temperature, turn the rotor of the stop valve connected to the inlet and outlet piping on the arm side face toward the lock side.
6. Remove the hoses on the attachment side. Install the blind plugs to the two outlets.

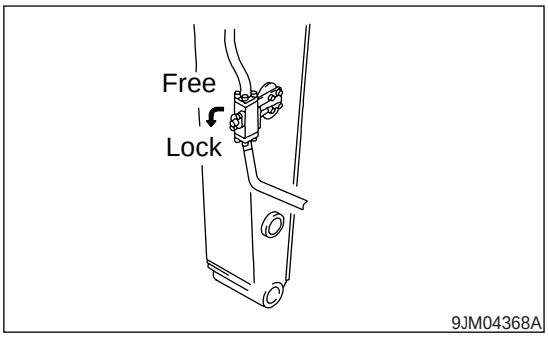

The blind plugs are used to prevent the attachment from incorrect operation caused by mixing in of foreign matter. After the plugs are correctly installed, store the attachment.

7. Dismount the attachment by removing the retaining pins (2 pins). Then, mount the bucket.
   For the bucket mounting procedure, see "REPLACEMENT AND INVERSION OF BUCKET (PAGE 167)".

8. After the bucket is mounted, check the hydraulic oil level.

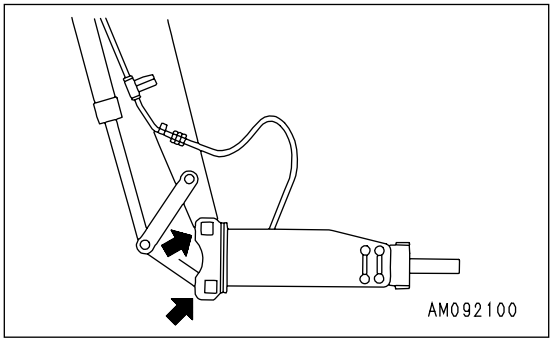

MOUNTING PROCEDURE

1. Remove the bucket.
   For bucket dismounting procedure, see "REPLACEMENT AND INVERSION OF BUCKET (PAGE 167)".

2. Place the attachment on a flat place, install pins (A) and (B) to the arm in that order.

3. Turn the starting switch to ON position and push down the safety lock lever to FREE position.

4. Operate each work equipment control lever and the attachment control pedal back and forth, left and right at full stroke 2 to 3 times to eliminate the internal pressure in the hydraulic circuit.

5. Loosen slowly oil filler cap (F) on top of the hydraulic tank to eliminate the internal pressure in the hydraulic circuit.

6. After confirming low oil temperature, remove the blind plug from the outlet and inlet port respectively.
   Take care that no dust, mud etc. adheres to the hose mouthpiece portions.
   If O-ring is damaged, replace it with a new one.

7. Turn the rotor of the stop valve connected to the inlet and outlet piping on the arm side face toward the free side.

8. Confirm that oil level in the hydraulic oil tank is correct, after mounting the attachment.

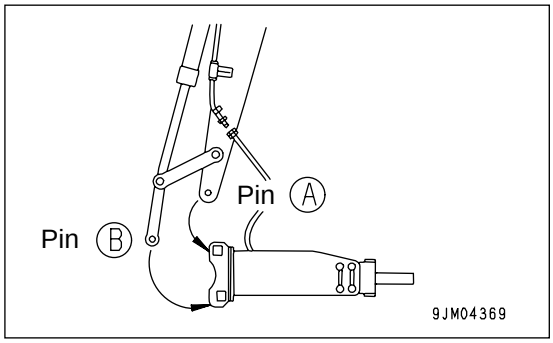

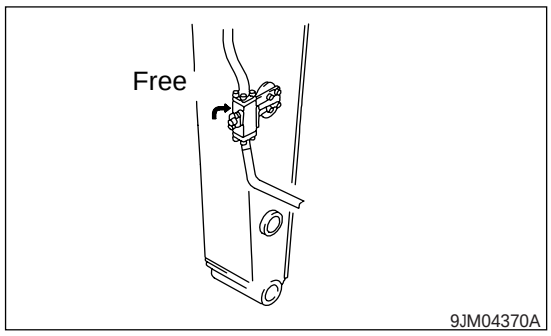

OPERATION

⚠ WARNING

- **Do not rest a foot on the pedal and depress it, when the auto deceleration switch is in ON position. The engine speed rises all of sudden and the attachment will move suddenly and cause serious damage or injury.**
- **Do not put your foot on the pedal except when operating the pedal. If you rest your foot on the pedal during operations, and it is depressed by accident, the attachment may move suddenly and cause serious damage or injury.**

The operation of the attachment is as follows.

When the B mode control switch is ON and the lock pin position makes only the front of the pedal free, if the front of the pedal is depressed, the breaker is actuated.

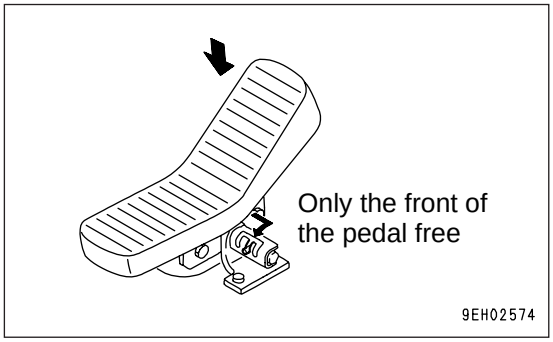

1. Set the working mode to B mode.
2. When select switch (1) on the monitor is pressed, the screen changes to screen (A). Select a suitable oil flow for the breaker from among 180 liters/min, 140 liters/min, and 100 liters/min, then press input confirmation switch (2).
3. The monitor screen changes to screen (B), so if it is necessary to make fine adjustment, press up switch (3) or down switch (4) to move the bar graph showing the oil flow up or down, then press input confirmation switch (2).
   - It is possible to change the oil flow in segments of approx. 10 liters/min.
   - If fine adjustment is not necessary, simply press input confirmation switch (2).
   - The default setting is 180 liters/min.
   - Even if the starting switch is turned OFF, the set oil flow when the engine is next started will be the value set by the above procedure.

   Precautions when using
   - Check that the stop valve is at the FREE position.
   - Check that the working mode is B mode.
     For details of the path of the oil, see "HYDRAULIC CIRCUIT (PAGE 289)".
   - When considering whether it is necessary to install an accumulator for the attachment circuit, contact the attachment manufacturer and then decide.
   - For other precautions when handling the breaker, follow the instruction manual from the breaker manufacturer and use the breaker correctly.

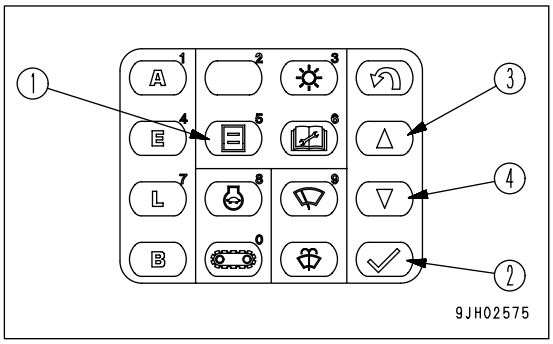

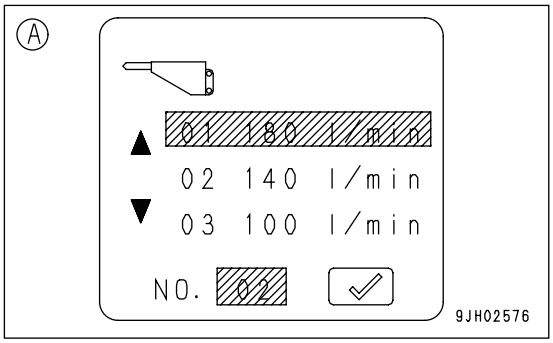

- The deterioration of the hydraulic oil when using the breaker is much faster than for normal operations, so reduce the maintenance interval for the hydraulic oil and element.
  For details, see "MAINTENANCE INTERVAL FOR HYDRAULIC BREAKER (PAGE 223)".

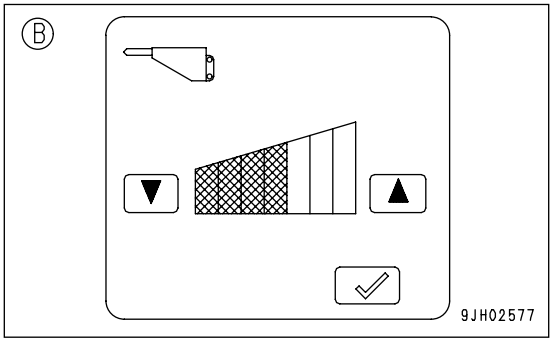

WHEN USING CRUSHER OR OTHER GENERAL ATTACHMENT

When the A mode or E mode control switch is ON and the lock pin position makes both the front and the rear of the pedal free, if the front or rear of the pedal is depressed, the attachment is actuated.

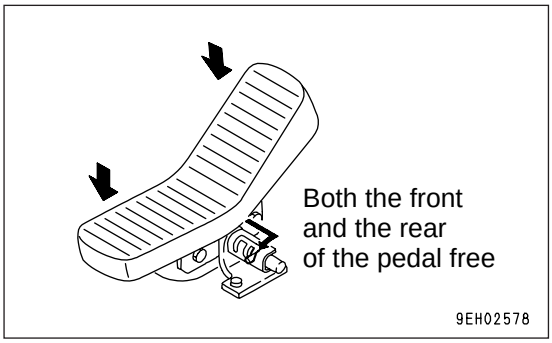

1. Set the working mode to A mode or E mode .

2. When select switch (1) on the monitor is pressed, the screen changes to screen (C), so press up switch (3) or down switch (4) to move the bar graph showing the oil flow up or down, then press input confirmation switch (2).
   - The default setting is the full flow (approx. 430 liters/min.
   - Even if the starting switch is turned OFF, the set oil flow when the engine is next started will be the value set by the above procedure.

   Precautions when using
   - Check that the stop valve is at the FREE position.
   - Check that the working mode is A mode or E mode.
     For details of the path of the oil, see "HYDRAULIC CIRCUIT (PAGE 289)".
   - For other precautions when handling the attachment, follow the instruction manual from the attachment manufacturer and use the attachment correctly.

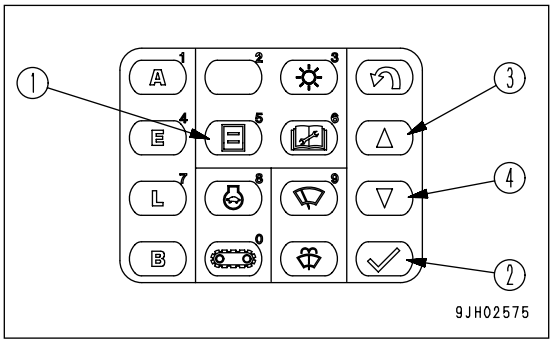

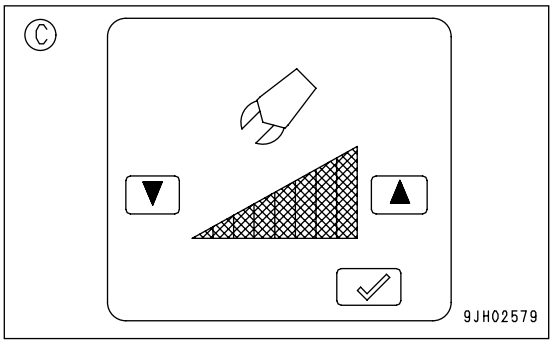

LONG-TERM STORAGE

If the equipment is not to be used for a long period, do as follows.

- Set the stop valve to the LOCK position.
- Install the blind plugs and O-rings to the valves.
- Set the selector valve to the "when not use" position.
- Lock the lock pin in the lock position.

If the pedal is operated when there is no breaker or general attachment installed, it will cause overheating and other problems.

SPECIFICATIONS

Hydraulic specifications

- Max. merging oil flow 214×2 liters / min
- Safety valve of service valve Relief setting pressure 27.47 MPa (280 kgf / cm²) (except B mode)
- Safety valve of service valve Cracking pressure 24.53 MPa (250 kgf / cm²) (except B mode)
- Safety valve of service valve Relief setting pressure 20.60 MPa (210 kgf / cm²) (B mode)
- Safety valve of service valve Cracking pressure 15.21 MPa (155 kgf / cm²) (B mode)

In addition to the valves listed above, a safety valve with relief setting pressure of 24.53 MPa (250kgf / cm²) and a safety valve with cracking pressure of 20.11 MPa (205 kgf / cm²) are available. Consult the Komatsu distributor in the territory.

ATTACHMENT GUIDE

⚠ WARNING

- **Please read the instruction manual for the attachment and the sections of this manual related to attachments and options.**
- **When installing any attachment or option, there may be problems with safety, so please contact your Komatsu distributor before installing.**
- **Installing attachments or options without consulting your Komatsu distributor may not only cause problems with safety, but may also have an adverse effect on the operation of the machine and the life of the equipment.**
- **Any injuries, accidents, or damage resulting from the use of unauthorized attachments or options will not be the responsibility of Komatsu.**

COMBINATIONS OF WORK EQUIPMENT

⚠ WARNING

Depending on the type or combination of work equipment, there is danger that the work equipment may hit the cab or machine body.
When using unfamiliar work equipment for the first time, check before starting if there is any danger of interference, and operate with caution.

PC290
This table lists the combination of attachments which can be installed to the long arm (standard), short arm and extension arm.

○ : Can be used
△ : Can be used only for light-duty work
× : Cannot be used

NOTICE
- **When the extension arm is equipped, if the bucket is drawn to the machine body, the arm interferes with the body. Operate the extension arm carefully.**
- **When the boom is fully lowered during oblique digging, the boom interferes with the undercarriage. Operate the boom carefully.**

Categories of use

For general digging : Digging or loading sand, gravel, clay etc.
For light duty digging : Digging or loading dry, loose earth and sand, mud etc.
For loading work : Loading dry, loose earth and sand

- For digging or loading hard soil or soft rock, it is recommended that the strengthened bucket with high durability and high wear resistance be employed.

PC290LC,290NLC
For trimming of a slope and rolling compaction.

○ : available
△ : available only for light-duty work
× : not available

NOTICE
When the boom is fully lowered during oblique digging, the boom interferes with the undercarriage. Operate the boom carefully.

Categories of use

For general digging : Digging or loading sand, gravel, clay etc.
For light duty digging : Digging or loading dry, loose earth and sand, mud etc.
For loading work : Loading dry, loose earth and sand

q For digging or loading hard soil or soft rock, it is recommended that the strengthened bucket with high durability and high wear resistance be employed.

*: Equipped with side cutter. *1 is available only during loading operation.

Name of bucket	Capacity (m^3) SAE (CECE)	Outside width (mm)	Use	Standard arm 3.0 m	Long arm 3.5 m	Short arm 2.5 m	Short arm 2.0 m
*Narrow bucket	0.72 (0.55)	900	Narrow digging	○	○	○	○
*Standard bucket	1.0 (0.76)	1260	General digging	○	△ *1	○	○
*Light duty bucket	1.17 (0.89)	1300	Light duty digging	△	×	△	△
Light duty bucket	1.26 (0.96)	1400	Loading	△	×	△	△
Slope finishing bucket	0.40 (0.31)	–	For trimming of a slope and rolling compaction	○	○	○	○
Trapezoidal bucket (Variable slope type)	0.55 (0.42)	–	Trapezoidal shaped ditching	○	○	○	○
Ripper bucket	0.61 (0.47)	950	Digging rocks	○	○	○	○
Clamshell bucket	0.66 (0.50)	866	Ditching, loading	○	○	○	○
Ditch cleaning bucket	0.8 (0.61)	1800	Ditching, cleaning	○	○	○	○
One tooth ripper	–	–	Digging, removing rocks	○	×	○	○
Three teeth ripper	–	–	Digging, removing rocks	○	×	○	○

SELECTION OF TRACK SHOES

Select suitable track shoes to match the operating conditions.

METHOD OF SELECTING SHOES

Confirm the category from the list of uses in Table 1, then use Table 2 to select the shoe.

Categories B and C are wide shoes, so there are limitations on their use. When using these shoes, check the precautions, then investigate and study fully the conditions of use to confirm that these shoes are suitable.

When selecting the shoe width, select the narrowest shoe possible that will give the required flotation and ground pressure. If a wider shoe than necessary is used, the load on the track will increase, and this will cause the shoes to bend, links to crack, pins to break, shoe bolts to come loose, and various other problems.

Table 1

Category	Use	Precautions when using
A	Rocky ground, riverbeds, normal soil	• On rough ground with large obstacles such as boulders or fallen trees, travel at low speed.
B	Normal soil, soft ground	• These shoes cannot be used on rough ground where there are large obstacles such as boulders or fallen trees. • Travel at Hi or Mi speed only on flat ground, and if it is impossible to avoid going over obstacles, shift down and travel at half speed in Lo.
C	Extremely soft ground (swampy ground)	• Use the shoes only in places where the machine sinks and it is impossible to use A or B shoes. • These shoes cannot be used on rough ground where there are large obstacles such as boulders or fallen trees. • Travel at Hi or Mi speed only on flat ground, and if it is impossible to avoid going over obstacles, shift down and travel at half speed in Lo.
D	Paved road	• Take note of low gradeability due to the flat shoes and exercise a due care.
E	Paved road	• Be sure to follow the instructions set forth in the "Handling of Road Liner" section for the protection of the rubber pad shoes.

Table 2

	PC290LC, 290NLC-7	
	Specifications	Category
Option	600 mm Triple	A
Option	700 mm Triple	B
Option	800 mm Triple	C
Option	850 mm Swamp	C

SELECTION OF BUCKET TEETH

Depending on the working conditions, there is danger that an adapter or tooth may break, so select from the vertical pin or horizontal pin teeth to get teeth that are suitable for the purpose.
While the standard teeth of both vertical and horizontal pin types may be used widely, the following kinds of teeth are recommended depending on the working conditions.

METHOD OF SELECTING TEETH

Use of vertical pin teeth

General digging: Digging and loading normal soil, such as sand, gravel, clay, etc.
Light-duty digging: digging and loading dry and loose sandy soil, or muddy soil
Loading: loading of dry and loose earth

Use of horizontal pin teeth

Heavy-duty digging: digging hard soil, soil with rocks involving hammering work, scraping and the like

- The heavy-duty bucket is of a horizontal pin type and as such, use it for heavy duty-digging.

Use of long-life teeth

- Jobsites where long wear life is demanded, such as when loading hard rocks.
- Jobsites where no penetration is needed, such as when working with crushed rocks after blasting or ripping
- Jobsites where heavy-duty operations are carried out, such as hitting or pulling up rocks with the tips of the teeth

Self-sharpening teeth (both vertical pin type and horizontal pin type)

- Jobsites demanding penetration such as digging and loading sandy or clayey soil

STANDARDS FOR SELECTING VERTICAL PIN TYPE AND HORIZONTAL PIN TYPE TEETH

			Applicable Work Site			
			Rock	Crushed stone	Clayey soil, Decompressed weathered granite	Sand
Work Contents	Heavy	Digging with hammering work	Horizontal pin type teeth		Horizontal pin type teeth Vertical pin type teeth	
		Scraping down	Horizontal pin type teeth		Horizontal pin type teeth Vertical pin type teeth	
	↕	General excavation	Horizontal pin type teeth Vertical pin type teeth			
	Light	Loading	Horizontal pin type teeth Vertical pin type teeth			

HANDLING OF RUBBER PAD SHOE AND ROAD LINER

Be sure to observe the following instructions, when using a machine equipped with rubber pad shoes or Road Liner.

WORKING ENVIRONMENT

- Use a machine equipped with rubber pad shoes or Road Liner mainly for jobs on the paved roads. If used otherwise, breakage or chipping will occur on the rubber and the service life will be considerably reduced. Particularly the following jobsites must be avoided.
  - Jobsite strewn with crushed concrete or on sand
  - Jobsite with protruding edged objects like steel bar, glass and the like
  - Jobsite on rocky terrain or in a river with many rocks

  A ride over a concrete road shoulder or above all the tip of sheet piles driven into the ground must be avoided.
- Be careful of machine skidding on the road covered with water, ice, snow or gravel. Pay special attention when unloading a machine from a truck.
- Use a machine equipped with rubber pad shoes or Road Liner in the ambient temperature range of -25°C to 65°C due to the properties of rubber.

WORKING CONDITIONS

- A job using the undercarriage as a fulcrum, side digging job, digging job on a slope and a job requiring frequent steering, as shown in the picture, cause an excessive load on the rubber and there is danger that it may be damaged.
- Durability of rubber pad shoes may not be covered with warranty, if a special work equipment is mounted.

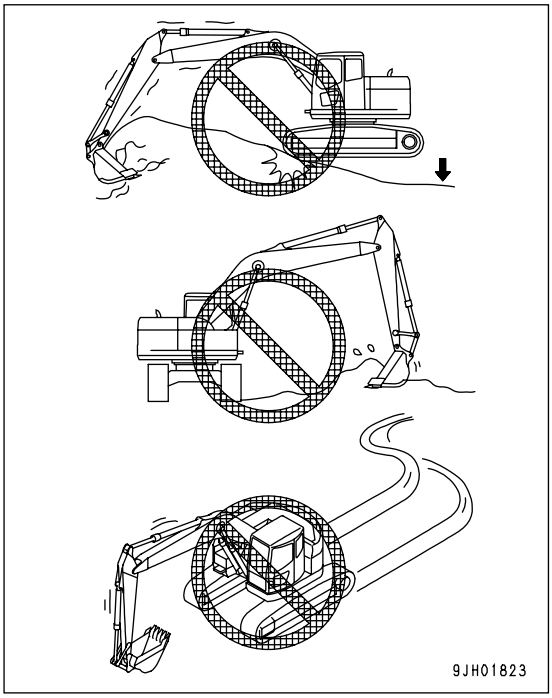

STORAGE AND MAINTENANCE

- Take care that no oil or grease sticks to the rubber. If it does, wipe it off immediately.
- Install rubber pad shoes and Road Liner (A) corresponding to the number of the links. If there is any missing pad or liner, the rubber will be greatly deformed and damaged.
- If rubber pad shoes or Road Liner (A) has to be stored for a long period, keep it indoors to avoid direct sunlight and rain.

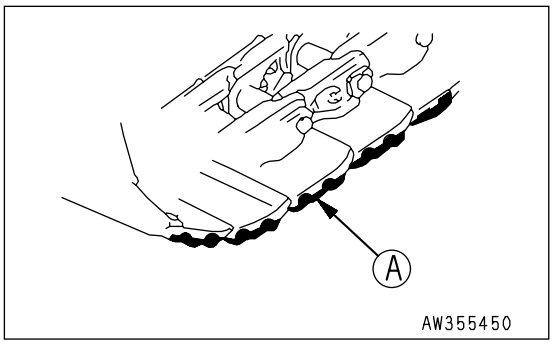

EXTENT OF DAMAGE TO RUBBER

- When traveling on a concrete pavement, rubber may stick to the road surface, leaving a dark track behind. It is the time for replacement.

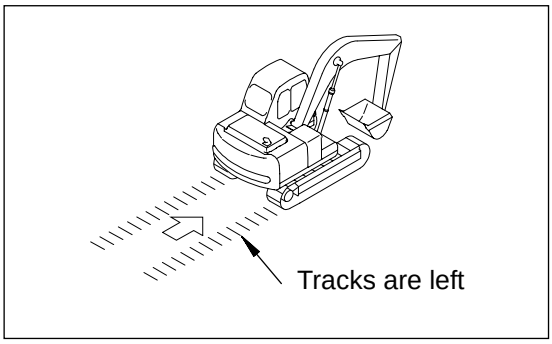

- The rubber is still usable, even if it does not look in good shape with part of the rubber chipped or cuts developed on the surface, so long as damage has not developed all over the shoe or it does not damage a road surface.

CHECK ROAD LINER (MACHINES EQUIPPED WITH ROAD LINER)

If the road liners are in the following condition, they must be repaired or replaced, so please contact your Komatsu distributor for repair or replacement.

Height of lug

- If lug height "a" is reduced by wear, the drawbar pull will drop. If "a" is less than 5 mm, replace with a new part.

  When making judgement whether to replace, repair, or continue using road liner, please contact your Komatsu distributor.

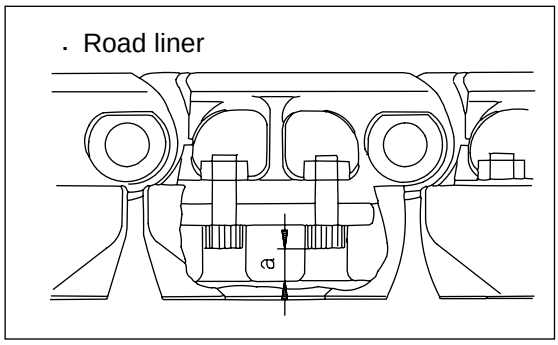

Replace road liner

- When all the road liners of the machine need to be replaced, ask your Komatsu distributor to replace them.
- When only some of the road liners need to be replaced, replace them by using the road liner replacing tools. Order the tools from your Komatsu distributor.

HANDLING TRAPEZOIDAL BUCKET

This bucket is used to dig trapezoidal ditches in paddy fields, farmland etc. and it can dig 3 types of ditch gradients (45°, 40° and 38°) when a movable plate is attached.

q The mounting position of the movable plate varies depending on whether the ditch gradient is 45°, 40° or 38°.

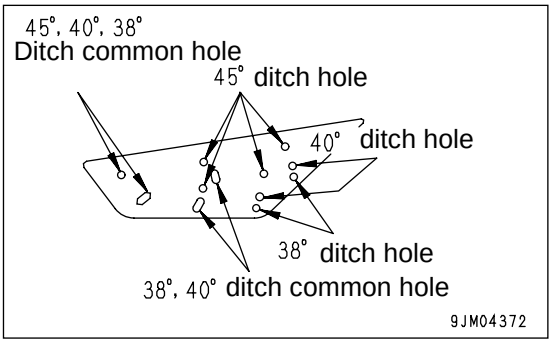

HOW TO PERFORM EXCAVATION

Operate the boom, the arm and the bucket to make the line (A) of the side-plate of the bucket vertical.

The guide plate (B) to check this position is installed beside the bucket pins. Accordingly, hold this plate horizontally when digging.

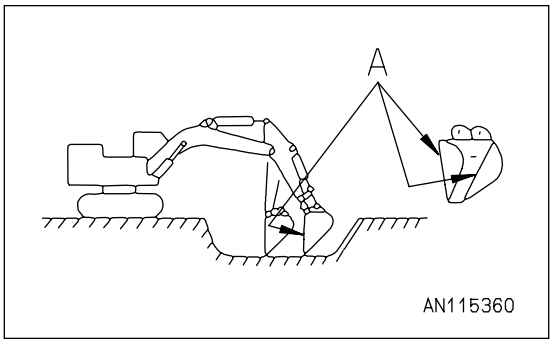

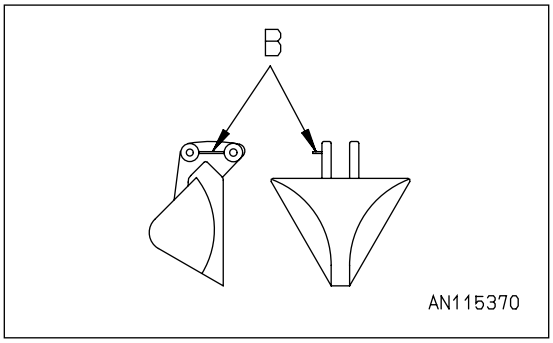

Ditch gradient of 45°

Attach the bucket only or the movable plate by selecting the related ditch holes. Perform digging by the above method.

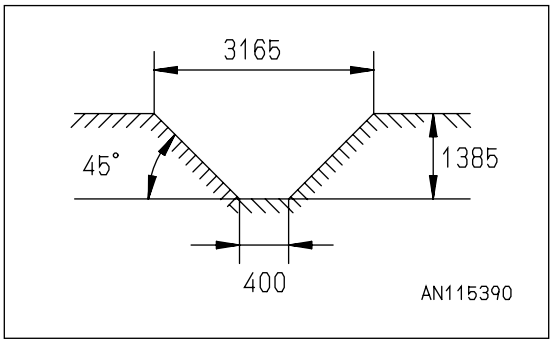

Ditch gradient of 40° and 38°

Attach the movable plate by selecting the related ditch holes. Perform digging according to the above method.

Even if the trapezoidal bucket is provided with the movable plate, perform digging with the bucket side face perpendicular to the ground.

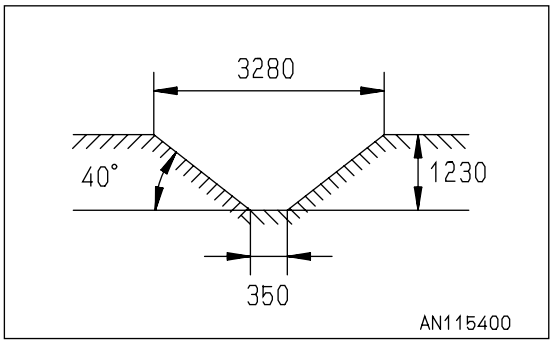

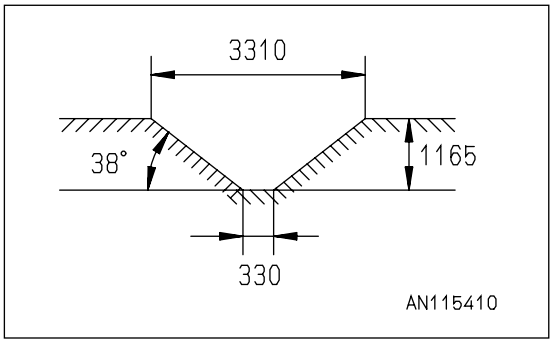

HANDLING EXTENSION ARM

When the extension arm is installed, if the arm is retracted, the bucket interferes with the boom cylinder foot and the revolution frame. Be careful during operation and transportation.

- When the extension arm is installed, use the narrow bucket (bucket width: 750 mm and 560 mm) without the side cutter.
  Since the standard bucket causes body instability and the bucket interferes with the operator's cab when retracting the arm, do not mount the standard bucket.
- Work in hard soil or rocky terrain will shorten the life of the extension arm, the boom and the arm.
  It is better not to use the extension arm in such conditions.

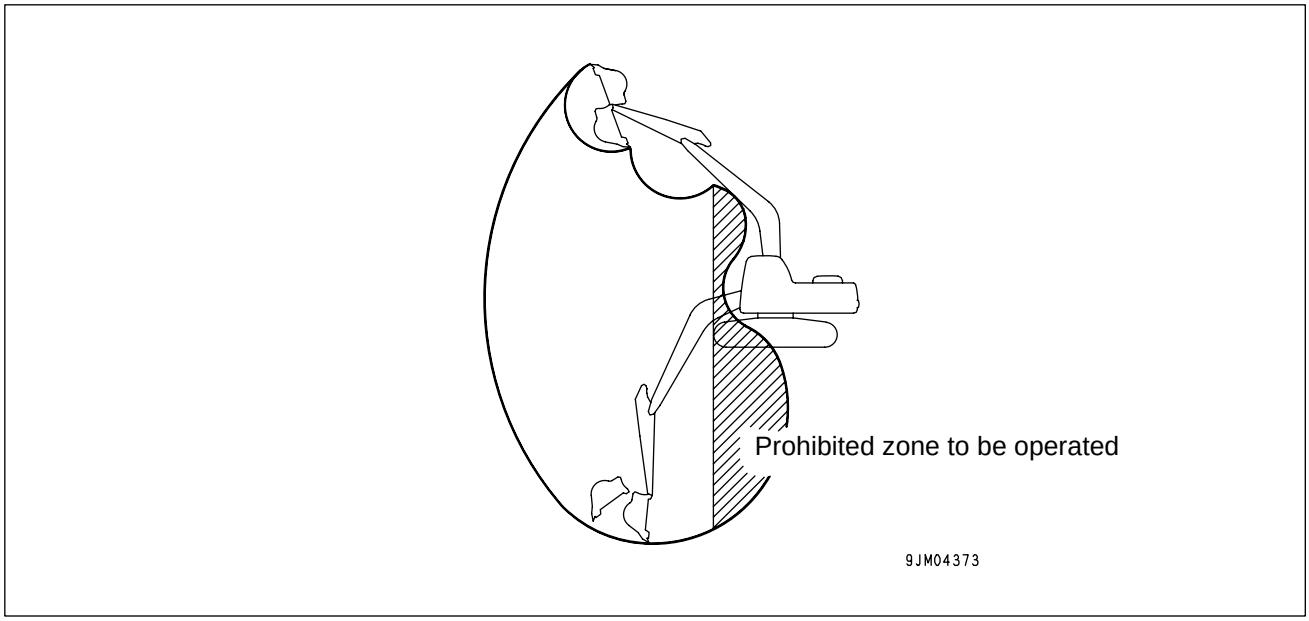

HANDLING CLAMSHELL BUCKET

This bucket is used for digging and loading in side-ditches or the confined spaces.

How to perform excavation

This clamshell digs by pushing the boom against the ground.

However, when performing bucket operation, perform digging while gradually raising the boom.

If the clamshell bucket rotates, relieve the bucket cylinder pressure then set the lever to the neutral position. This can temporarily stop the rotation.

PRECAUTIONS WHEN USING

- For safety, avoid abrupt traveling, swing and stopping.
- Make the teeth of the bucket vertical while digging.
- Do not swing the bucket to crush the rock or to cut through soil.
- Do not use the bucket for hammering or pulling out piles etc.
- Before leaving the machine, open the bucket and lower it to the ground.

REMARK
Remove the bucket from the arm when transporting the machine.

LUBRICATING

- Prepare a grease pump.

1. Stop the machine on firm horizontal ground, lower the work equipment to the ground, then stop the engine.
2. Using a grease pump to pump grease in through grease fittings (12 points) shown by the arrows.
3. After greasing, wipe off any old grease that was pushed out.

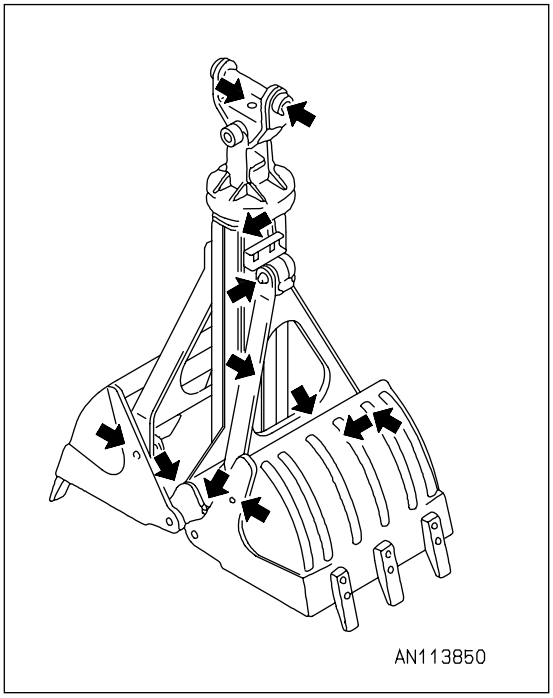

RECOMMENDED ATTACHMENT OPERATIONS

This section describes the necessary precautions to be observed when operating a hydraulic excavator equipped with an attachment.

NOTICE
Select the attachment most suited to the machine body.

- **The machine models to which attachments can be mounted vary. For selection of attachment and machine model, consult your Komatsu distributor.**

HYDRAULIC BREAKER

MAIN APPLICATIONS

- Crushed rock
- Demolition work
- Road construction

This attachment can be used for a wide range of work including demolition of buildings, breaking up of road surfaces, tunnel work, breaking up slag, rock crushing, and breaking operations in quarries.

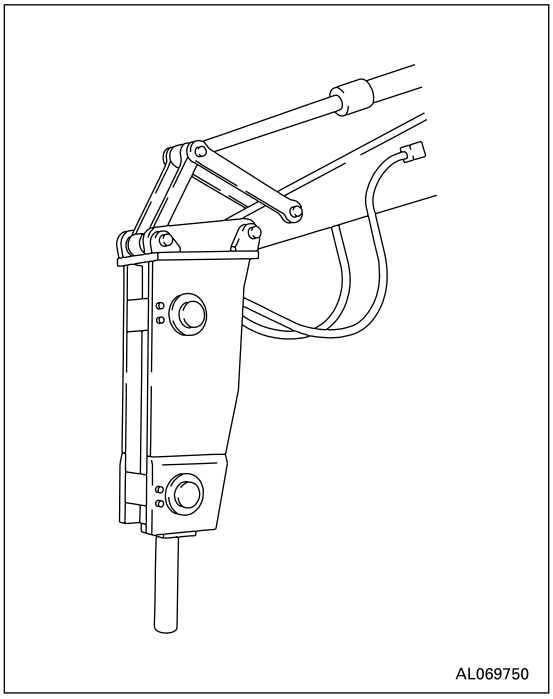

Keep the chisel pushed perpendicularly against the impact surface when carrying out breaking operations.

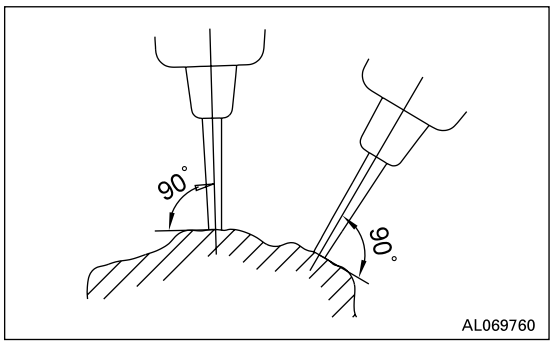

When applying impact, push the chisel against the impact surface and operate so that the chassis rises approx. 5 cm off the ground. Do not let the machine come further off the ground than this amount.

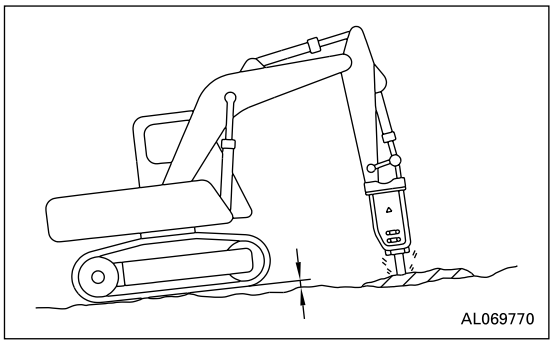

When applying continuous impact to the same impact surface, if the chisel does not penetrate or break the surface within 1 minute, change the point of impact and carry out breaking operations closer to the edge.

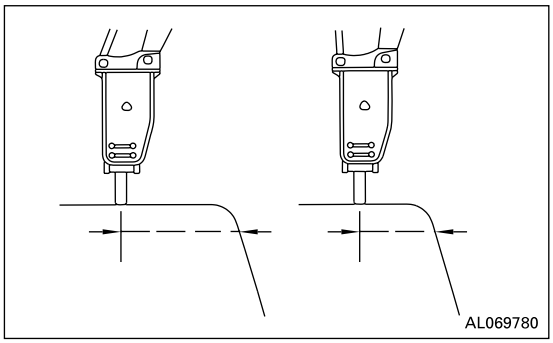

The direction of penetration of the chisel and the direction of the breaker body will gradually move out of line with each other. Adjust the bucket cylinder to keep them aligned.

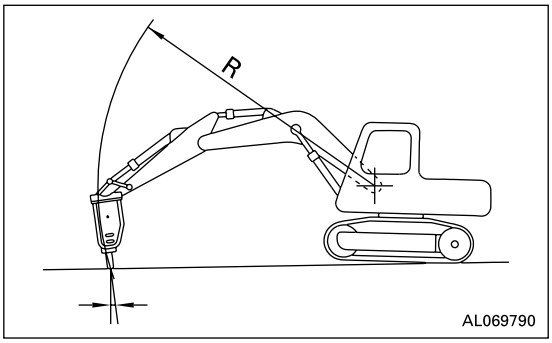

Keep the chisel pressed against the impact surface properly to prevent using the impact force when there is no resistance.

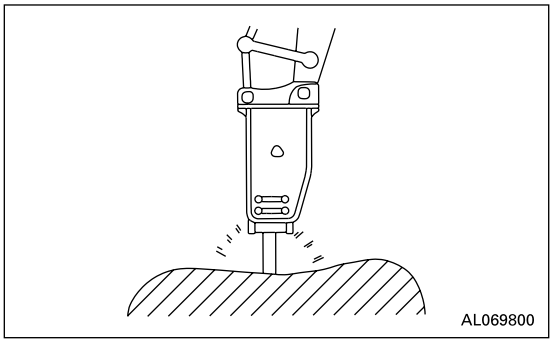

PROHIBITED WORKS

To ensure that the machine has a long life, and to ensure that operations are carried out in safety, do not operate the machine in any of the following ways.

- Do not operate any cylinders to the end of their strokes. Leave approx. 5 cm to spare.

Using the mount to gather in pieces of rock

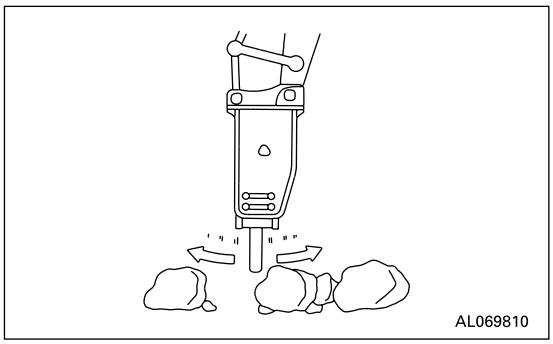

Operations using the swing force

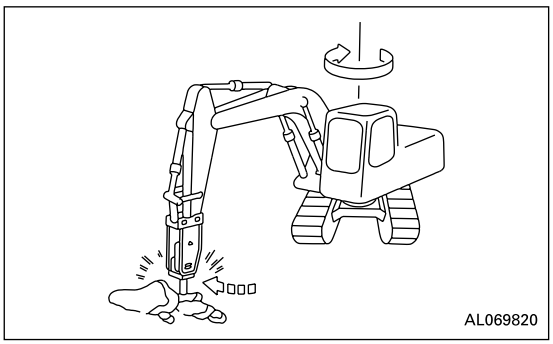

Moving the chisel while carrying out impacting operations

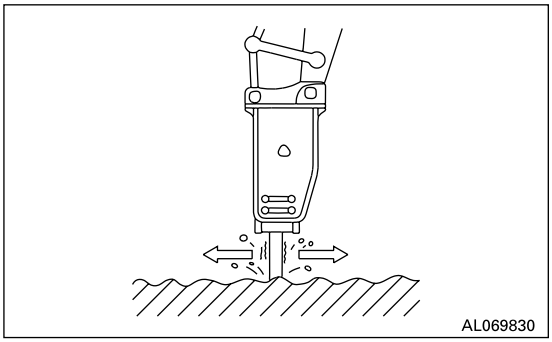

Applying impact horizontally or in upward direction

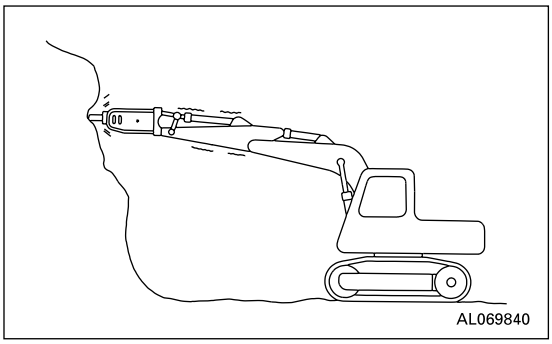

Twisting the chisel when it has penetrated the rock

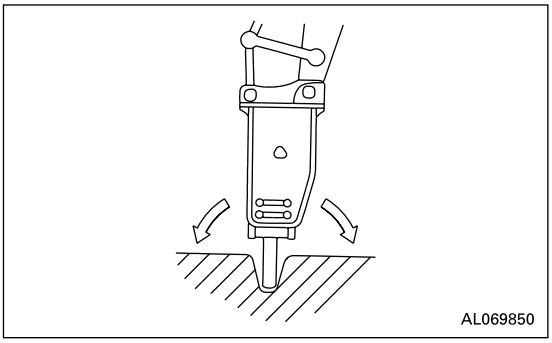

Pecking operations

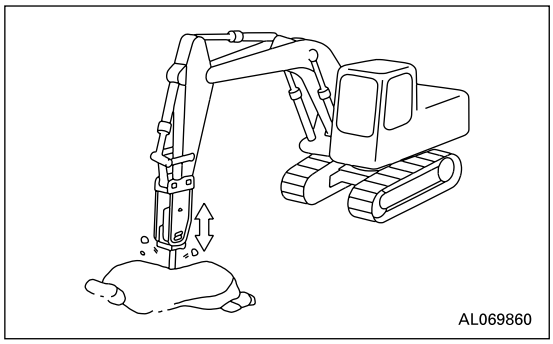

Extending the bucket cylinder fully and thrusting to raise the machine off the ground

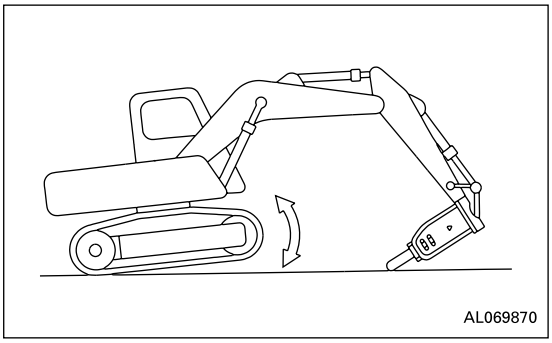

GREASING POSITION FOR HYDRAULIC BREAKER

Supply grease in the correct position.

NOTICE
If grease is supplied in an incorrect position, the breaker is filled with more grease than necessary. As a result, soil and sand will enter the hydraulic circuit and can damage the hydraulic devices while the breaker is used. Accordingly, be sure to supply grease in the correct position.

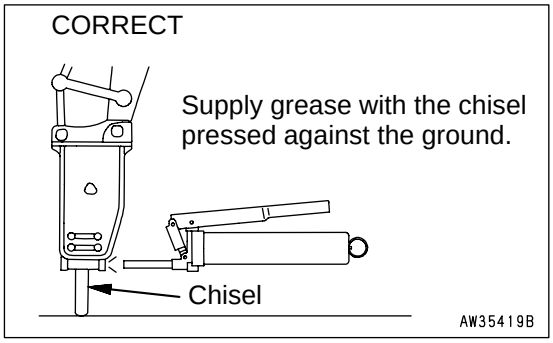

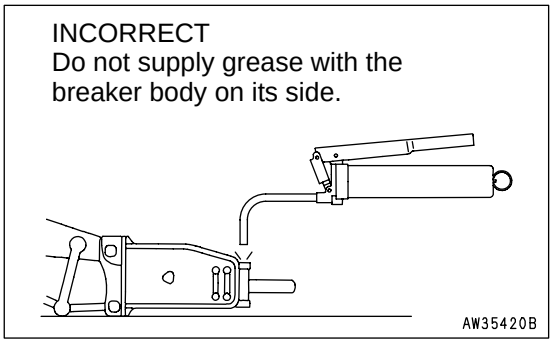

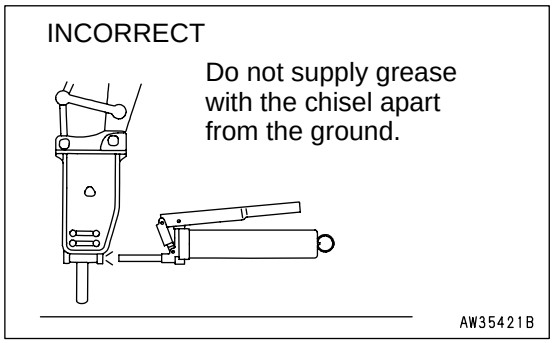

2-PC BOOM

FEATURES OF 2-PIECE BOOM & ARM

This sketch shows format of two piece boom machine, including location of grease points (For 1st and 2nd booms only).

For starting procedure, refer to “OPERATION” on page 57

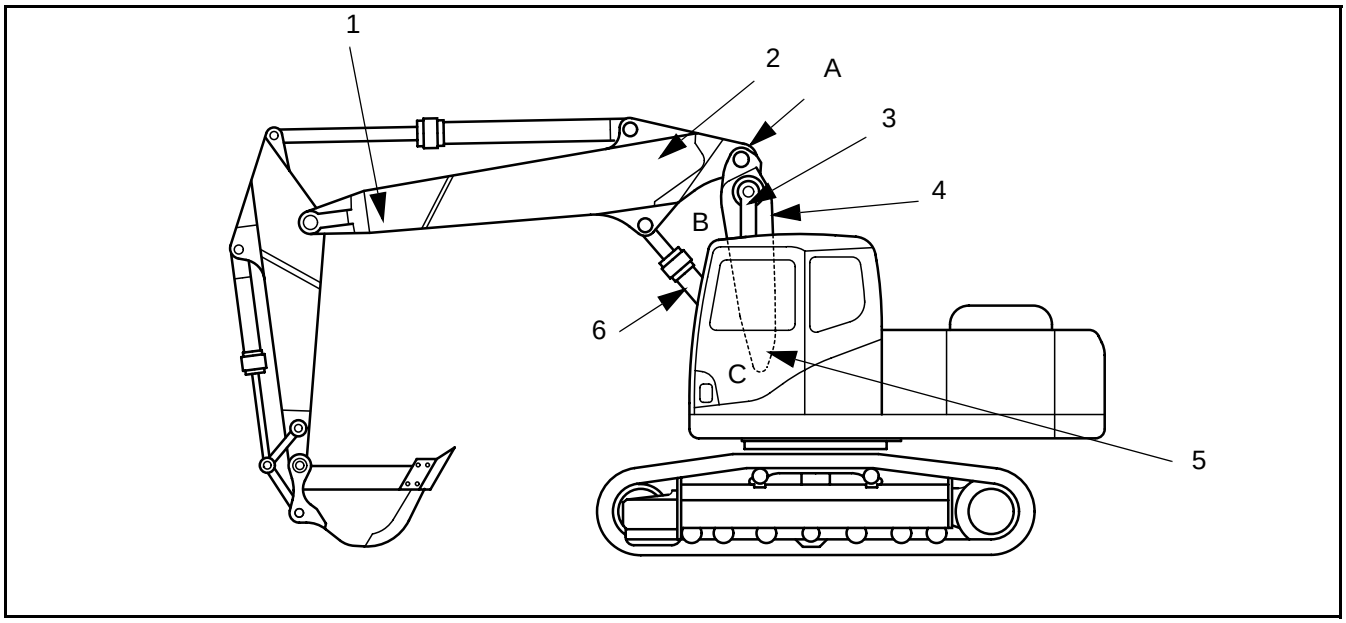

1.	Side of arm. 1 grease point located here for joint D	4.	First boom
2.	Second boom	5.	Top of boom foot 5 grease points located here for joints A, B and C
3.	First boom raise cilinder	6	Second boom adjust cylinder

OPERATION

Explanation of Devices

2 piece boom control pedal.

The control pedal to the left of the travel levers controls two functions on a 2-Piece Boom machine:

The pedal controls the operation of the second boom adjust cylinder. Pressing down on the front of the pedal pushes the second boom away from the cab, pressing down on the rear of the pedal pulls the second boom towards the cab.

1	2 Piece boom control pedal

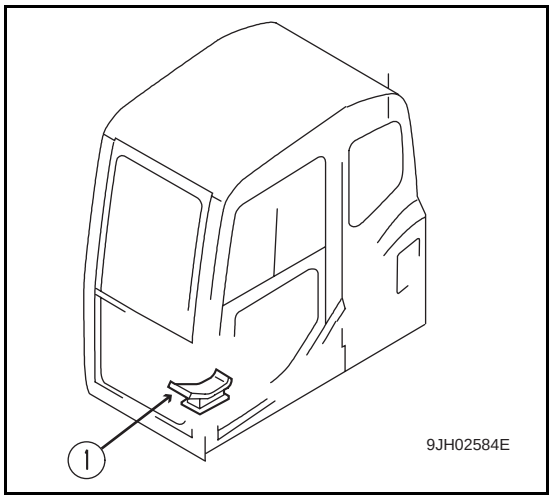

A	Extend 2nd boom raise cylinder
B	Retract 2 nd boom raise cilinder

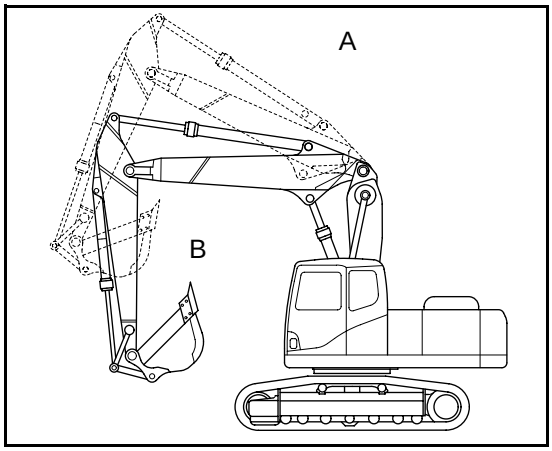

A	Press the rear of the pedal
B	Press the front of the pedal

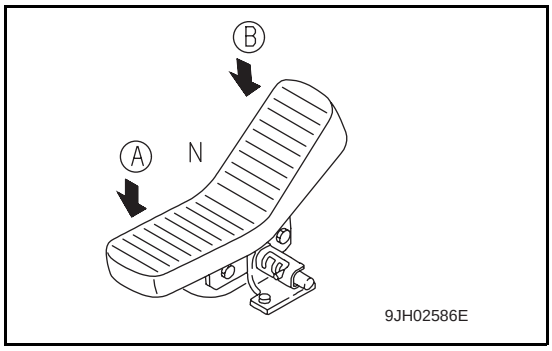

BEFORE STORAGE POSTURE WHEN LEAVING MACHINE

When leaving the operator’s compartment, put the machine in the following posture for reasons of safety.

1. When leaving the machine for a long time see ,"LONG TERM STORAGE (PAGE 187)" for instructions on correct preparation of machine for long term storage.

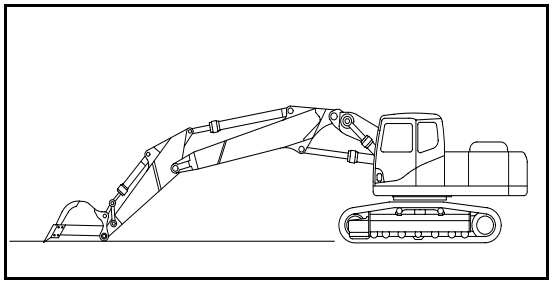

2. When leaving the machine for a short time.

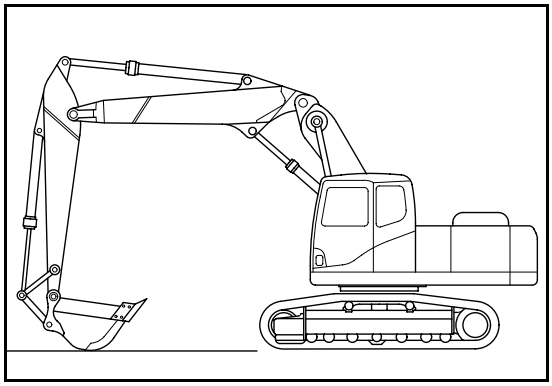

TESTING AND ADJUSTING

INSPECTION AND MAINTENANCE

To use the machine safely, and to prevent failures before they occur, always carry out checks before starting and periodic maintenance.

The locations for periodic inspection are as shown in the diagram below.

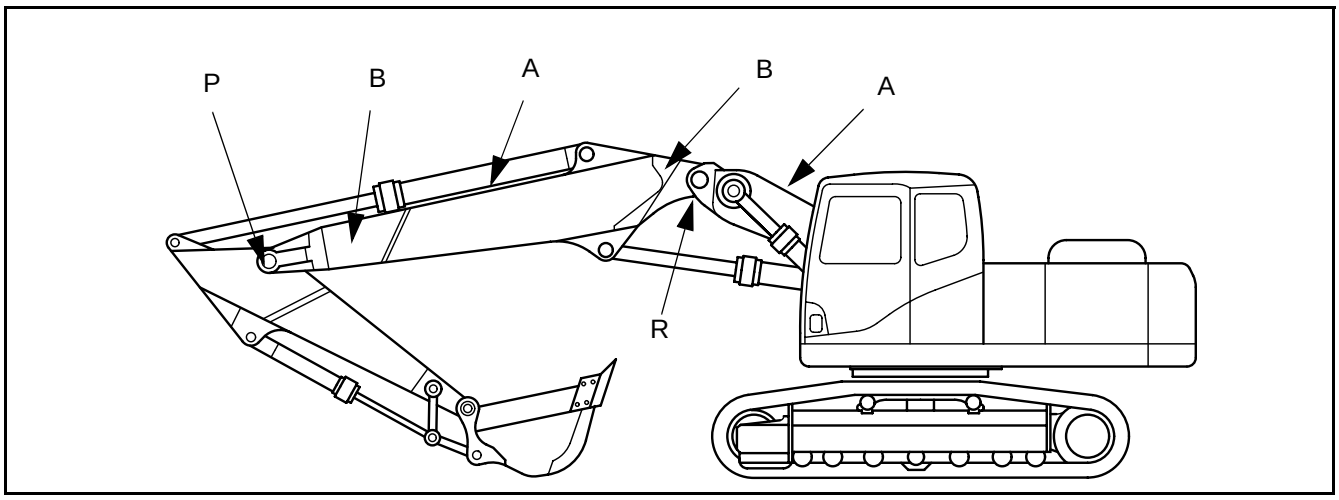

A	Cracks at end of weld (checks before starting).
P R	Play, wear of pins (every 1000 Hours).
B	Furrows in base metal (checks before starting).

NOTICE
If any abnormality is found during inspection, please contact your Komatsu distributor.

For details of inspection and maintenance items for the chassis other than those listed above, “MAINTENANCE” on page 203

PERODIC MAINTENANCE

- Changing the hydraulic oil

When changing the hydraulic oil, set the work equipment in the posture shown below.

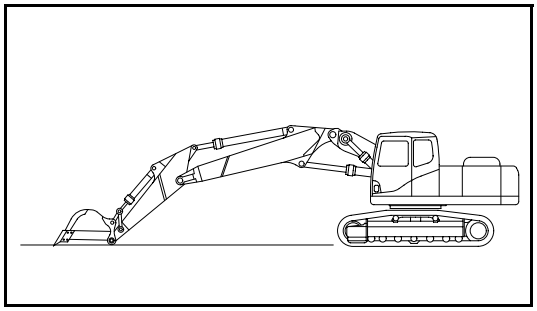

- Hydraulic oil capacity for the 2-piece boom machine is litres.
- Periodic maintenance required is the same as mono-boom machine.

TRANSPORTATION

PROCEDURE FOR LOADING ON TO TRAILER

q Loading and unloading procedure.

Refer to “TRANSPORTATION” on page 173 for correct procedure for loading and unloading of machine.

(2-piece boom machine is same as mono-boom machine)

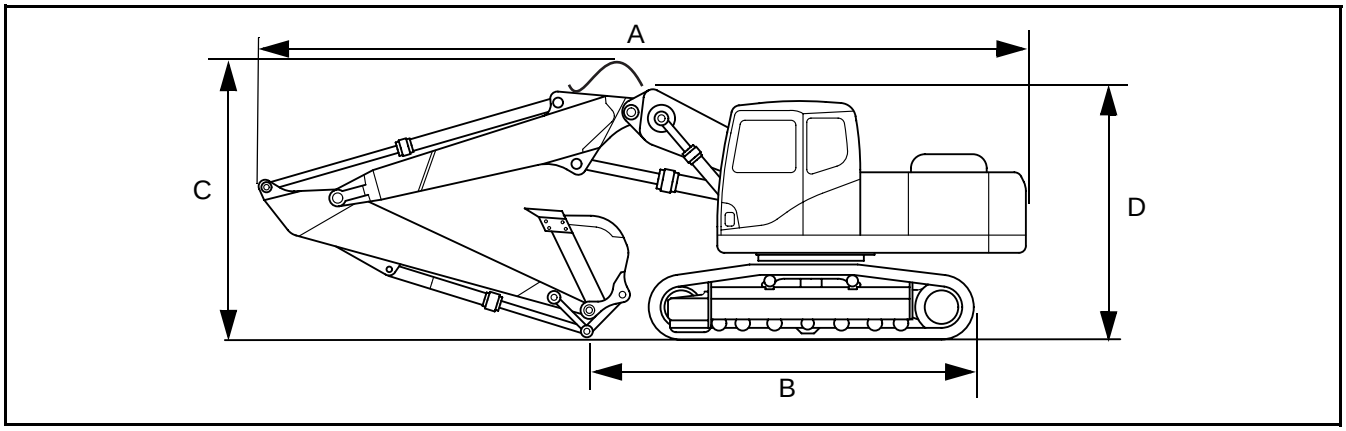

For transportation dimensions, refer to the below mentioned table.

		ARM LENGTH		
		2.5m	**3.0m**	**3.5m**
PC290LC-7K	A	10050	10015	9970
	B	6935	6225	5930
	C	3515	3550	3730
	D	3130	3130	3230
PC290NLC-7K	A	10050	10015	9970
	B	6770	6060	5765
	C	3515	3550	3730
	D	3130	3130	3230

MEMO

A
AFTER COLD WEATHER SEASON 186
AFTER DAILY WORK COMPLETION 185
AFTER RUNNING OUT OF FUEL 189
AFTER STARTING ENGINE 141
AFTER STORAGE 188
ATTACHMENT GUIDE 297

B
BATTERY 44
BEFORE STARTING ENGINE 124
BEFORE STORAGE 187

C
CAP, COVER WITH LOCK 101
CAR RADIO 117
CARRYING OUT KOWA (Komatsu Oil Wear Analysis) 208
CHECK AFTER FINISHING WORK 171
CHECK AFTER SHUT OFF ENGINE 149
CHECK BEFORE STARTING 247
CHECKING FOR DAMAGE TO BUCKET WITH HOOK 285
COLD WEATHER OPERATION 183
COLD WEATHER OPERATION INFORMATION 183
COMBINATIONS OF WORK EQUIPMENT 297
CONTROL LEVERS, PEDALS 91

D
DIRECTIONS OF MACHINE 6
DISCHARGED BATTERY 192
DOOR AT FRONT OF TOOL BOX 102
DURING STORAGE 187

E
ELECTRIC SYSTEM MAINTENANCE 212
ENGINE HOOD 102
ENGINE SERIAL NUMBER PLATE AND ITS LOCATION 7
ESCAPE FROM MUD 164
EVERY 1000 HOURS MAINTENANCE 264
EVERY 2000 HOURS MAINTENANCE 267
EVERY 4000 HOURS MAINTENENCE 269
EVERY 500 HOURS MAINTENANCE 256
EVERY 5000 HOURS MAINTENANCE 270
EXPLANATION OF COMPONENTS 60, 286

F
FOREWORD 2
FRONT WINDOW 95
FUSE 119
FUSIBLELINK 120

G
GENERAL OPERATION INFORMATION 161
GENERAL PRECAUTIONS 282
GENERAL VIEW 58
GENERAL VIEW CONTROLS AND GAUGES 59
GENERAL VIEW OF MACHINE 58

H
HANDLING ACCUMULATOR 122
HANDLING AIR CONDITIONER 104
HANDLING BUCKET WITH HOOK 285
HANDLING OIL, FUEL, COOLANT, AND PERFORMING OIL CLINIC 207
HYDRAULIC BREAKER 306

I
INITIAL 250 HOURS MAINTENANCE (ONLY AFTER THE FIRST 250 HOURS) 224
INTRODUCTION 5

L
LIFTING MACHINE 181
LIFTING OBJECTS WITH BUCKET 47
LIGHTWEIGHT TOWING HOOK 190
LOADING AND UNLOADING WITH TRAILER ... 174
LOCKING 172
LONG TERM STORAGE 187
LUBRICANTS, COOLANT AND FILTERS 207

M
MACHINE MONITOR 60
MACHINE OPERATION 150
MACHINE OPERATIONS AND CONTROLS 124
MACHINE SERIAL NUMBER PLATE AND ITS LOCATION 7
MACHINES READY FOR ATTACHMENTS 286
MAINTENANCE INFORMATION 204
MAINTENANCE INTERVAL FOR HYDRAULIC BREAKER 223
MAINTENANCE PROCEDURE 224
MAINTENANCE SCHEDULE 220
MAINTENANCE SCHEDULE CHART 220

O
OPERATION AND MAINTENANCE MANUAL HOLDER 124
OTHER TROUBLE 196

P
PARKING MACHINE 170
PERIODIC REPLACEMENT OF SAFETY CRITICAL PARTS 219
PHENOMENA THAT ARE NOT FAILURES 189
POSITION FOR ATTACHING SAFETY LABELS .. 18

PRECAUTIONS ON PARTICULAR JOBSITES ... 191
PRECAUTIONS RELATED TO SAFETY 282
PRECAUTIONS WHEN INSTALLING
ATTACHMENTS 284
PRODUCT IINFORMATION 7
PROHIBITED OPERATIONS 159, 285
PROPER SELECTION OF FUEL, COOLANT AND
LUBRICANTS 215

R

RECOMMENDED APPLICATIONS 165
RECOMMENDED ATTACHMENT OPERATIONS ....
306
REPLACEMENT AND INVERSION OF BUCKET 167

S

SAFETY CRITICAL PARTS 219
SAFETY INFORMATION 3, 16, 26
SAFETY LABELS 19
SAFETY MACHINE OPERATION 35
SAFETY MAINTENANCE INFORMATION 48
SERVICE METER LOCATION 8
SPECIFICATIONS 272
STARTING ENGINE 137
STEERING THE MACHINE 154
STOPPING THE ENGINE 149
SWINGING 156
SWITCHES 85

T

TIGHTENING TORQUE LIST 218
TIGHTENING TORQUE SPECIFICATIONS 218
TOWING 46
TOWING THE MACHINE 190
TRANSPORTATION 43, 173
TRANSPORTATION PROCEDURE 173
TRAVELING ON SLOPES 162
TROUBLESHOOTING 189

U

USE OF FUEL, COOLANT AND LUBRICANTS
ACCORDING TO AMBIENT TEMPERATURE 215

W

WEAR PARTS LIST 214
WHEN REQUIRED 225
WORK EQUIPMENT CONTROLS AND
OPERATIONS 157

Y

YOUR MACHINE SERIAL NUMBERS AND
DISTRIBUTOR 8