Crankshaft rear seal, removal

Remove flywheel.

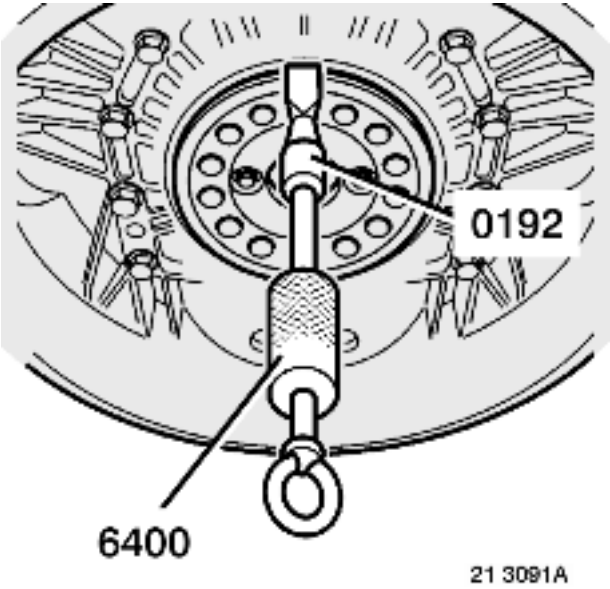

Remove lip seal.
Use tool 6400 + 0192.

Take care to not damage the crankshaft contact face of the seal during extraction.

Tools

Specific tools

Illustration	RENAULT TRUCKS part N°	Designation	Manufacturer's reference N°	Manufacturer's code N°	Scale	Qty
	7409990192	PULLER			2	1
	7409996400	PULLER			2	1

Crankshaft rear seal, fitting

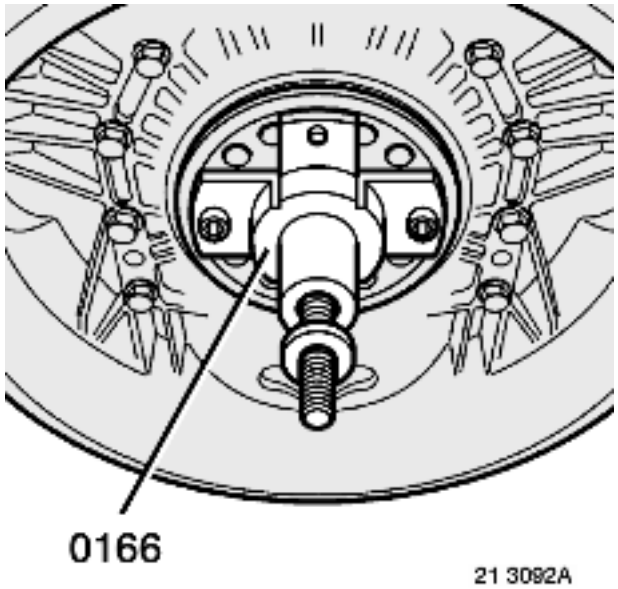

Clean and carefully inspect the contact faces of seal.
Mount tool 0166.

Check that the tool is correctly placed on the locating dowel before tightening the bolts.

21 3534A

The seal is supplied fitted to a protective ring that is placed on the assembly tool. It is essential to hold the seal to the ring until it is finally installed in the case.Do not apply grease to the lips.Any gasket that has been removed from its ring must not be re-used.

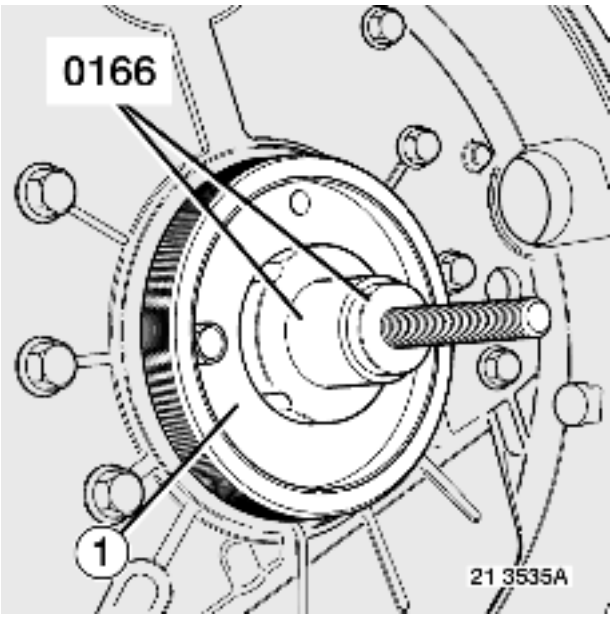

Fit protective ring **(1)** to tool 0166.

Match the direction of orientation.

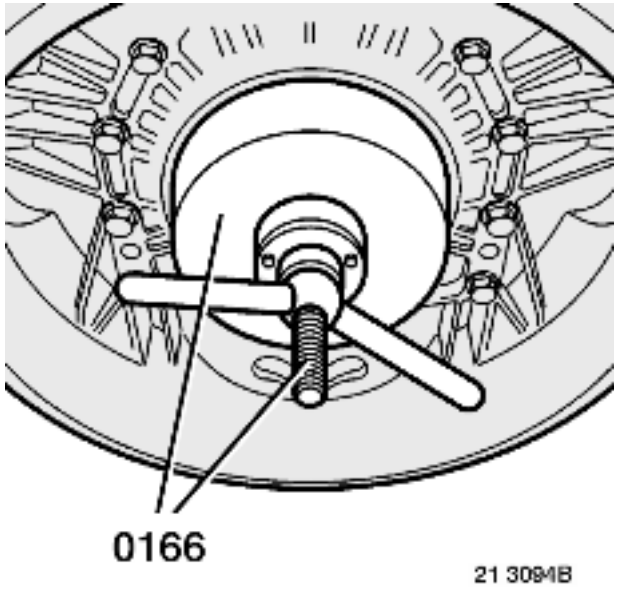

Drive in seal as far as abutment.
Withdraw tool 0166.
Fit flywheel.

Tools

Specific tools

Illustration	RENAULT TRUCKS part N°	Designation	Manufacturer's reference N°	Manufacturer's code N°	Scale	Qty
	7409990166	PUSHER			1	1

Engine flywheel, removal

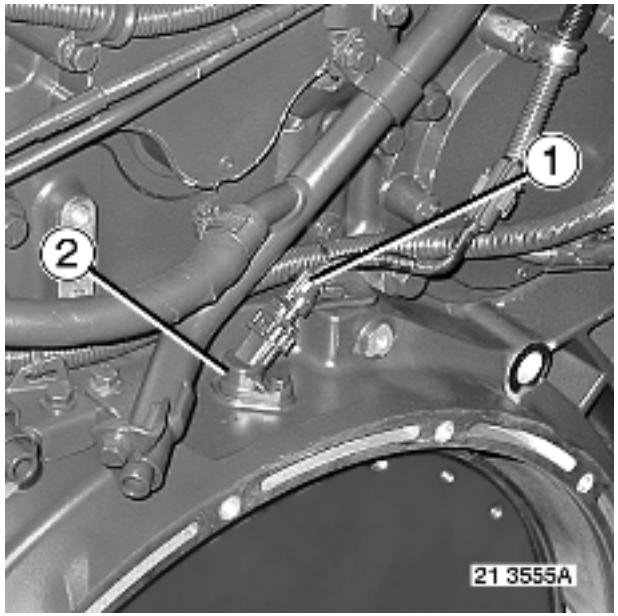

Removal

Unplug connector **(1)**.

Remove engine speed sensor **(2)**.

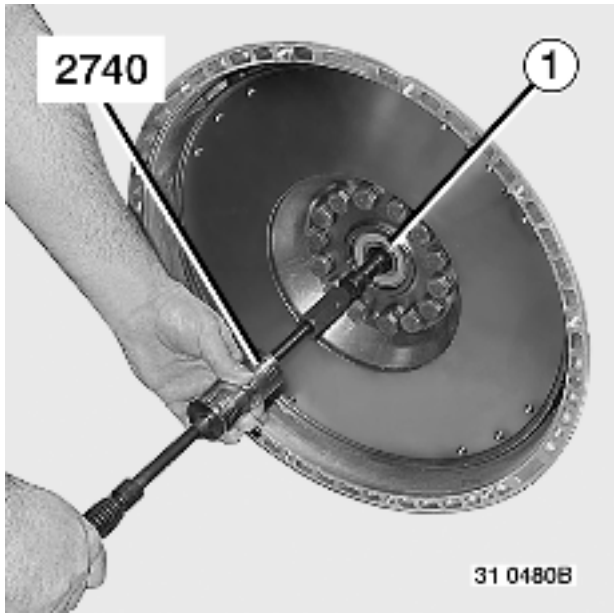

Remove pilot bearing **(1)**.
Use tool 2740.

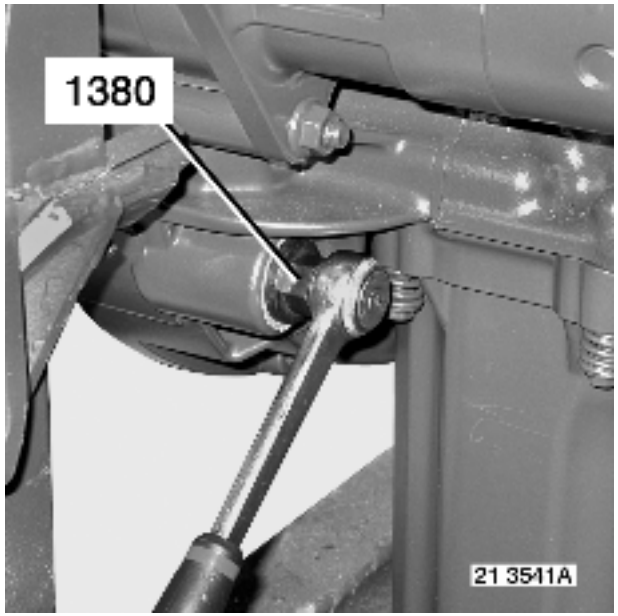

Retain the flywheel against motion using tool 1380.

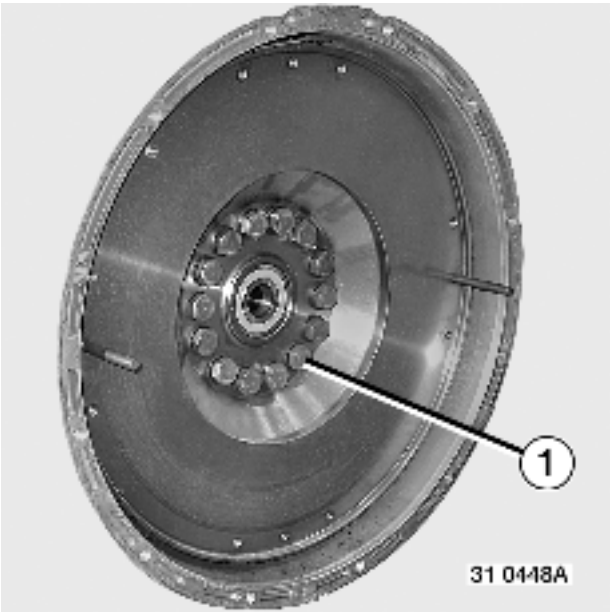

Loosen bolts **(1)** proceeding in the reverse sequence to tightening.

Withdraw tool 1380.

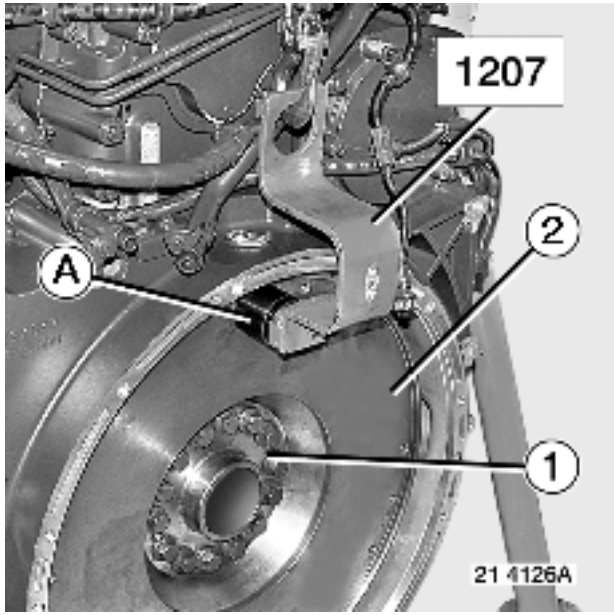

Mount tool 1207.

Use a spacer **(A)** length: **50 mm** thickness: **5 mm**.
Remove bolts **(1)**.
Remove flywheel **(2)**.
Use lifting tackle.

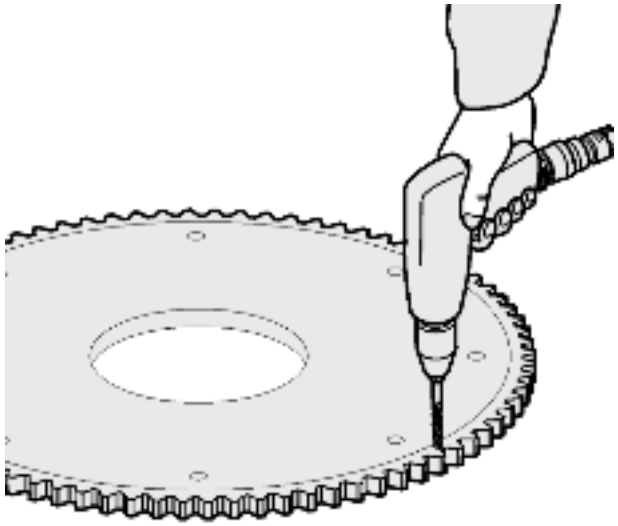

21 2765

Ring gear

Disassembly

Remove ring gear.

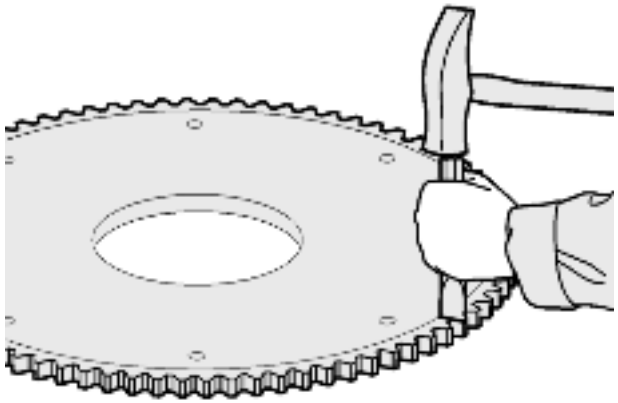

21 2766

Tools

Specific tools

Illustration	RENAULT TRUCKS part N°	Designation	Manufacturer's reference N°	Manufacturer's code N°	Scale	Qty
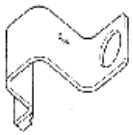	5000261207	HOOK (ENGINE FLYWHEEL)			1	1
	5000261380	CONTROL			1	1
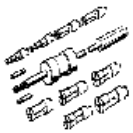	5000262740	PULLER			1	1

Engine flywheel, fitting

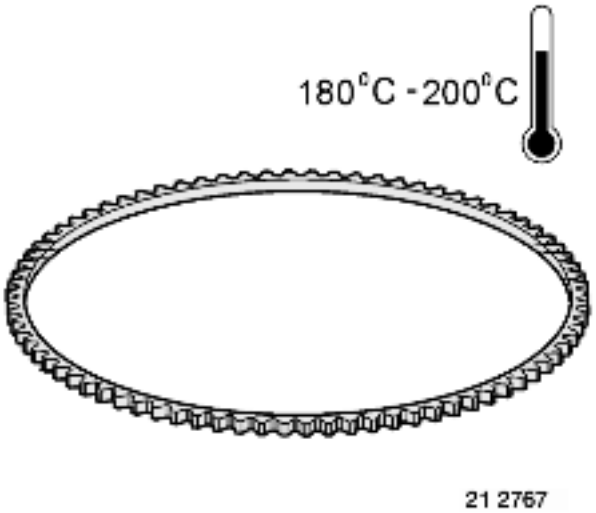

Ring gear

Assembly

Wear heat-resistant gloves for protection.
Heat at **200°C**.

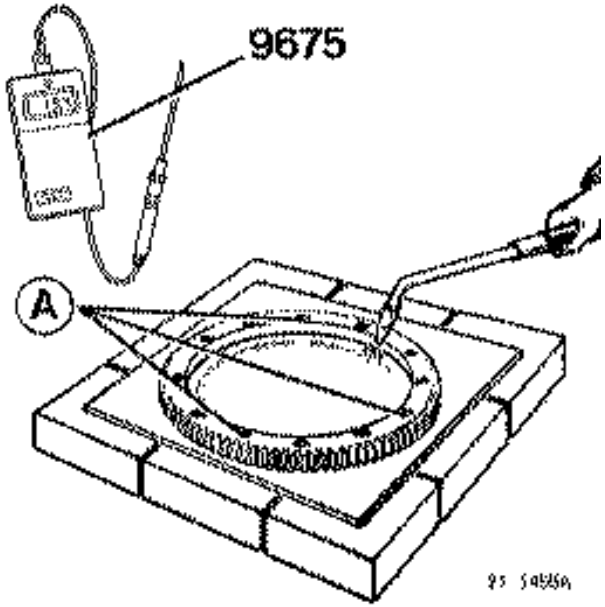

If a welding torch is used, take a sheet metal plate and heat it to distribute the heat evenly. Check the temperature at 3 points **(A)**.
Use tool 9675.

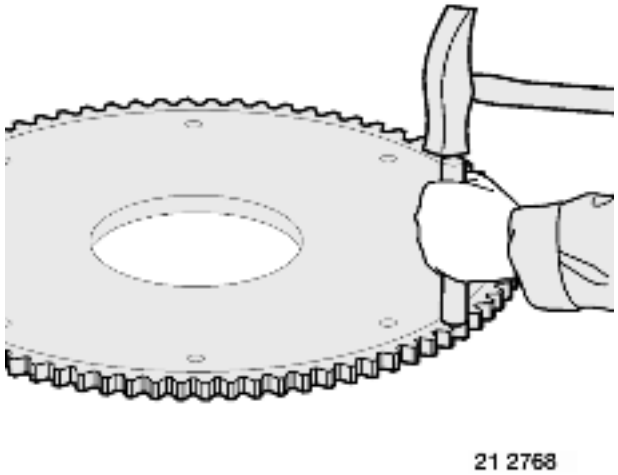

Wear heat-resistant gloves for protection.

Fit ring gear.

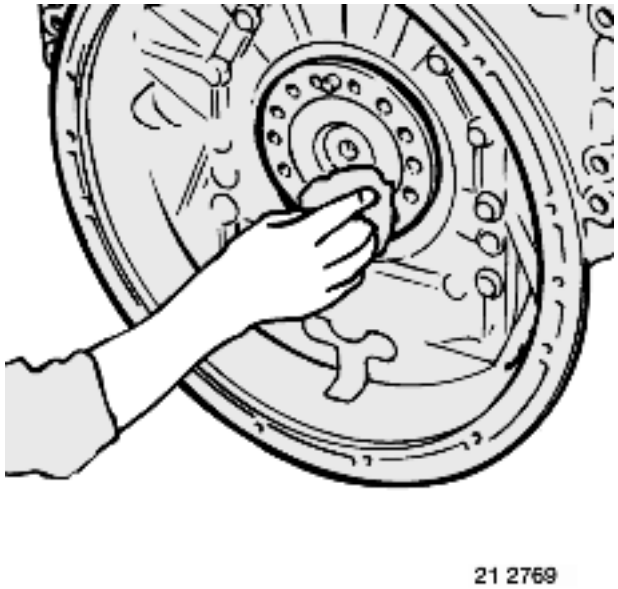

Fitting

Clean the contact faces thoroughly.

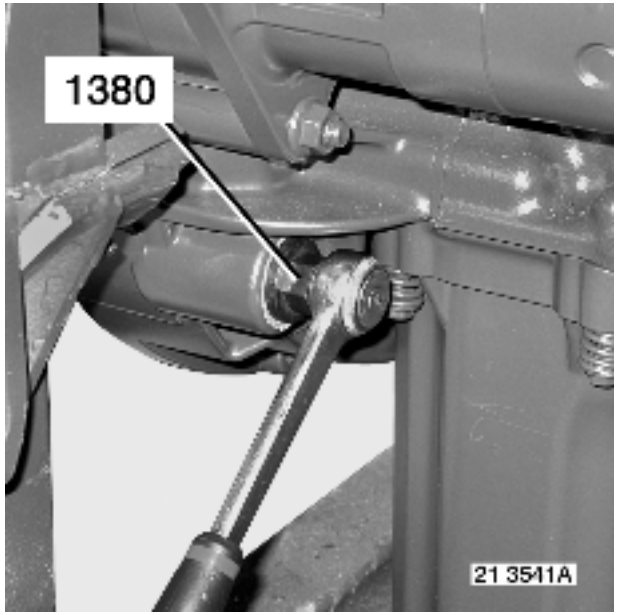

To fit, proceed in the reverse sequence to removal.

Retain the flywheel against motion using tool 1380.

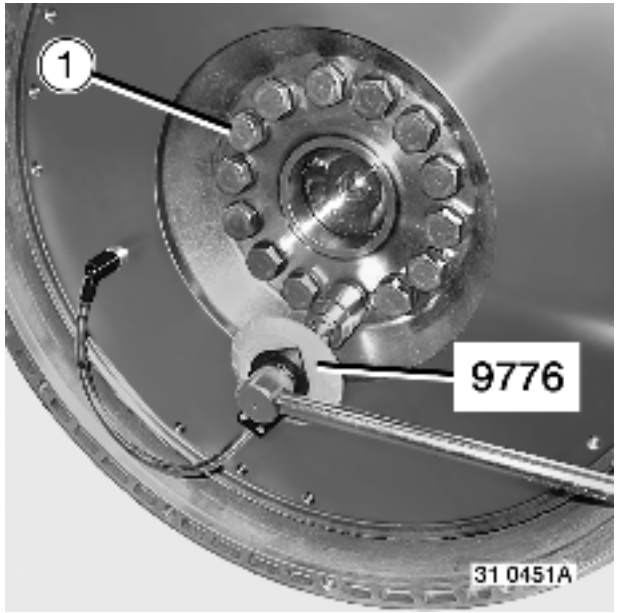

Tighten bolts **(1)** to torque following the tightening sequence.

Use tool 9776.

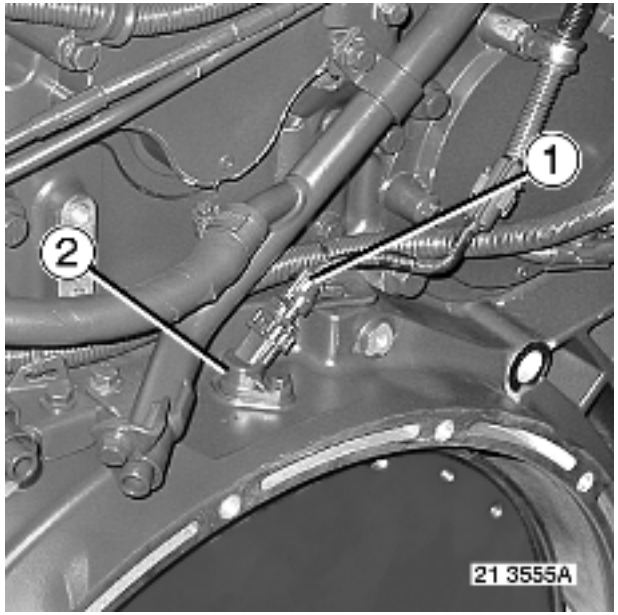

Fit engine speed sensor **(2)**.
Tighten to torque.

Check the air gap.

Plug in connector **(1)**.

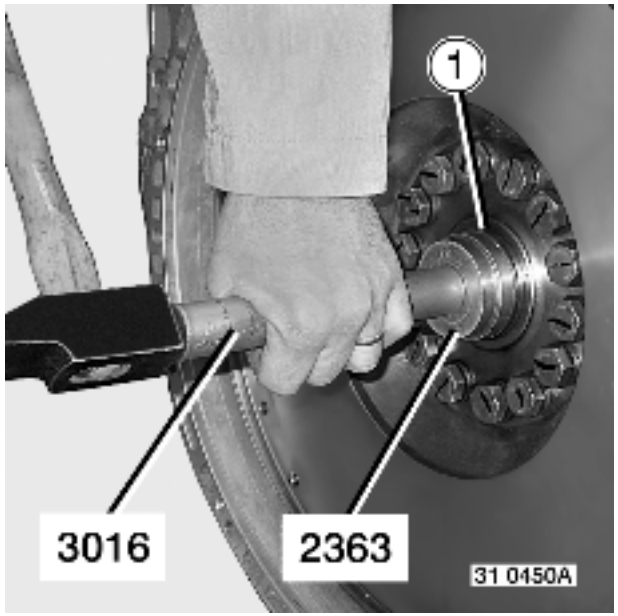

Fit pilot bearing **(1)**.
Make pilot bearing **(1)** flush with its housing.
Use tool 2363 + 3016.

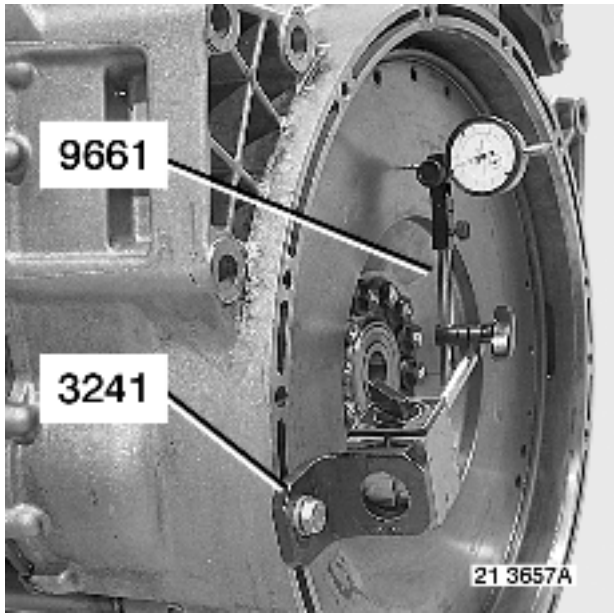

Inspection of the flywheel run-out

Check the buckle.

Use tool 3241 + 9661.

Note down the value.

If the measured value is higher than the Manufacturer's value, see page(s) .

Remove the engine flywheel.

Clean the contact faces thoroughly.

Tools

General purpose tools

Illustration	RENAULT TRUCKS part N°	Designation	Manufacturer's reference N°	Manufacturer's code N°	Scale	Qty
	9675	THERMOMETER	AL	APPA 51 + 80110	1	1
	9661	MEASURING TOOL (DIAL GAUGE AND MAGNETIC FOOT)	AQ		2	1

AL	**CHAUVIN ARNOUX**
	190 rue Championnet
	FRANCE
	01 44 85 44 85 - 01 46 27 73 89 -

AQ	**BROWN & SHARP ROCH**
	13-15 avenue Georges de la Tour
	BP 45
	FRANCE
	03 83 76 83 76 - 03 83 74 13 16 -

Specific tools

Illustration	RENAULT TRUCKS part N°	Designation	Manufacturer's reference N°	Manufacturer's code N°	Scale	Qty
	5000261380	CONTROL			1	1
	5000263016	HANDLE			2	1
	5000262363	PUSHER			2	1
	5000269776	INDICATOR DISC			1	1

Locally manufactured tool

Illustration	RENAULT TRUCKS part N°	Designation	Manufacturer's reference N°	Manufacturer's code N°	Scale	Qty
	OFL3241	HOOK			2	1

Engine flywheel, tightening torques

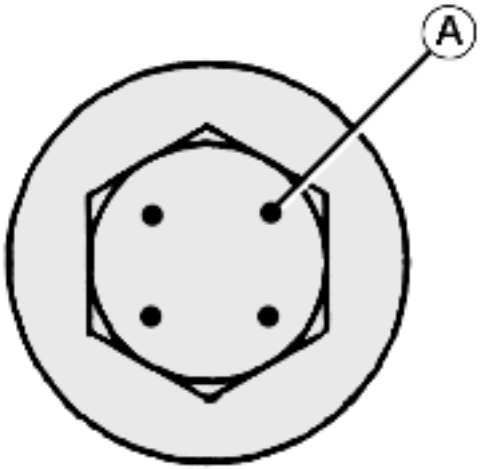

21 2927A

*The bolts can be re-used no more than **4** times maximum. Mark the bolt head with an indentation **(A)** after tightening each time using a centre punch. In this case, apply engine oil to the screw-threads and under the bolt heads.Do not apply engine oil to new bolts, which are already pre-lubricated.*

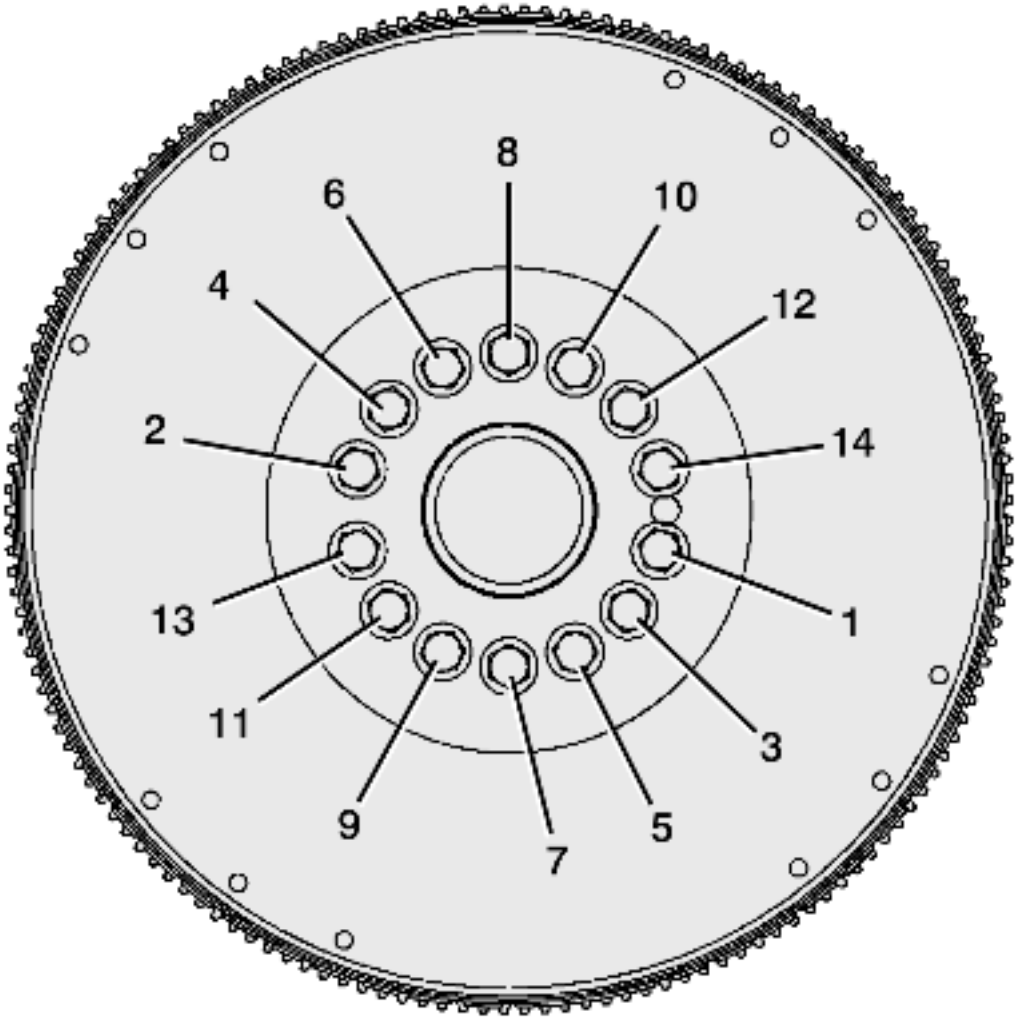

21 3514A

The item numbers indicate the tightening sequence.

Stage**1**	**60±5 Nm**
Stage**2**	**120±10 °**
Control torque	**270 › 410 Nm**

Crankshaft front seal, removal

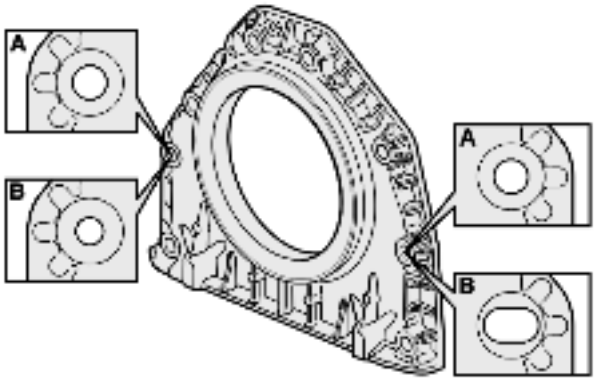

21 3748A

There are **2** crankcase models:
Model **A**.
Model **B**.
See illustration opposite.

Models A and B.
Remove damper.

Remove the oil sump.

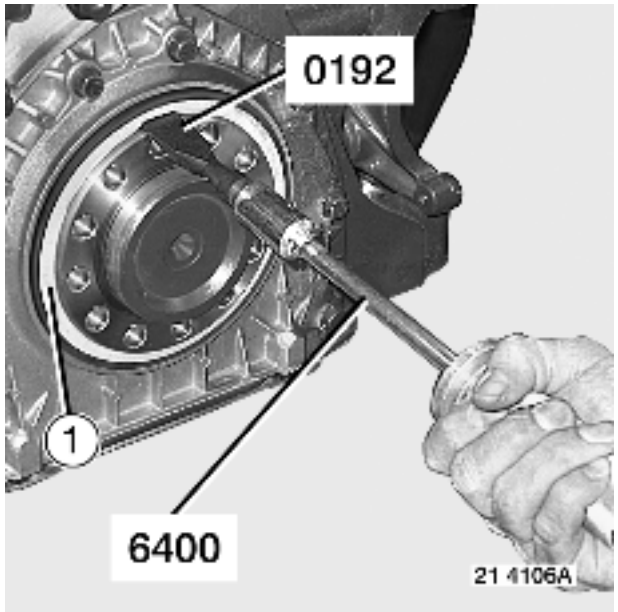

Remove lip seal**(1)**.
Use tool 0192 + 6400.

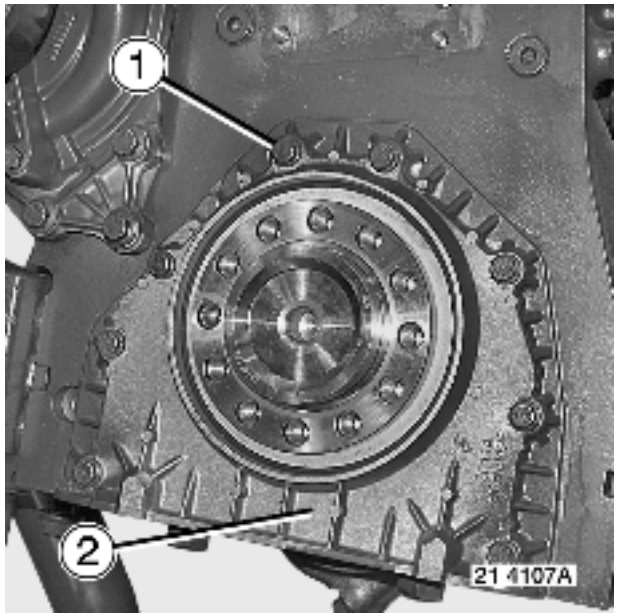

Remove securing nuts and bolts **(1)**.
Remove casing **(2)**.

Tools

Specific tools

Illustration	RENAULT TRUCKS part N°	Designation	Manufacturer's reference N°	Manufacturer's code N°	Scale	Qty
	7409990192	PULLER			2	1
	7409996400	PULLER			2	1

Crankshaft front seal, fitting

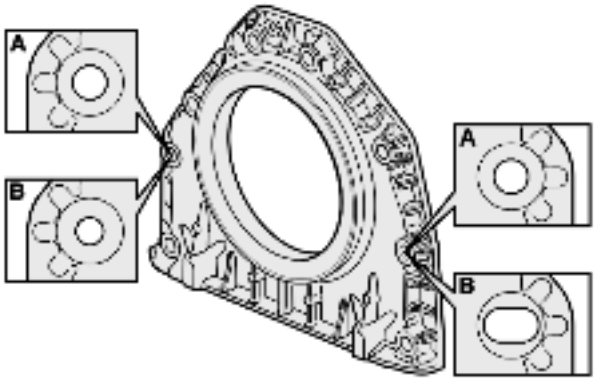

21 3748A

There are **2** crankcase models:
Model **A**.
Model **B**.
See illustration opposite.

Model: A

If it has, it is essential to replace the seal and the crankcase.

The seal is supplied fitted to a protective ring. It is essential to hold the seal to the ring until it is finally installed in the case.Do not apply grease to the lips.Any seal that has been removed from its ring must not be re-used.

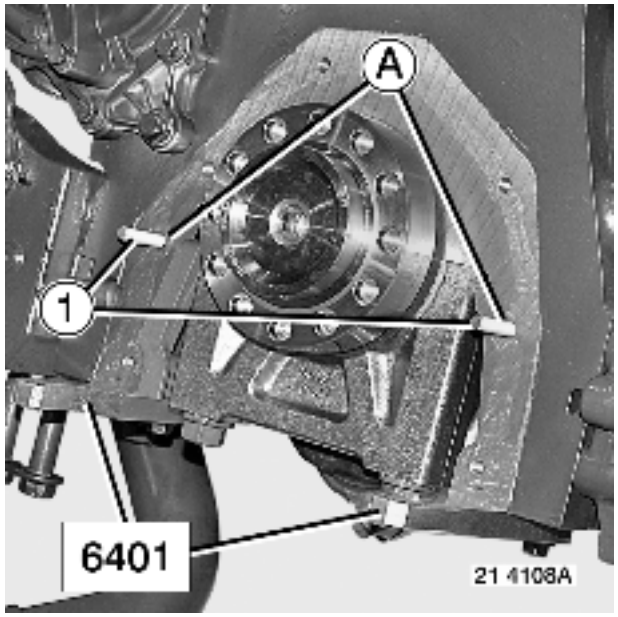

Install tool 6401.
Tighten bolts to torque.

Fit bolts **(1)** in locations **(A)**.
Use **2** headless screws **(1)** diameter: **M8** mm, length: **50** mm.
Clean the contact faces thoroughly.
Apply a bead of sealing compound to the gearbox casing joint face.
Apply "

SILICONE 7091

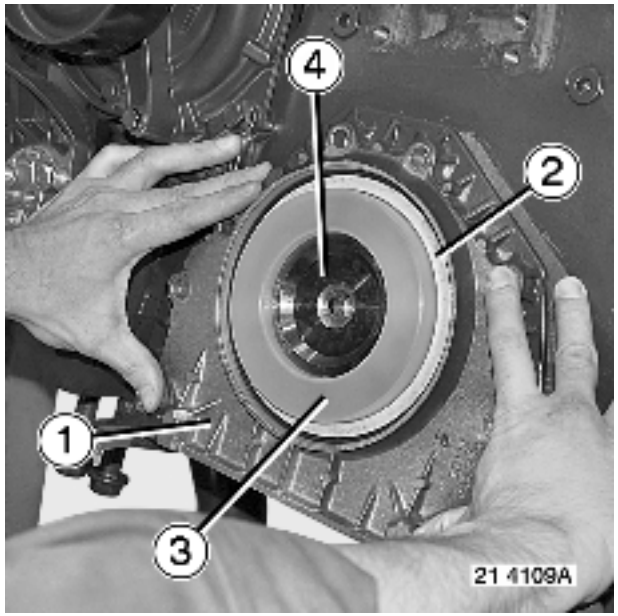

Position the casing **(1)** / gasket **(2)** / protection ring **(3)** assembly on the crankshaft **(4)**.
Push the casing **(1)** as far as abutment.

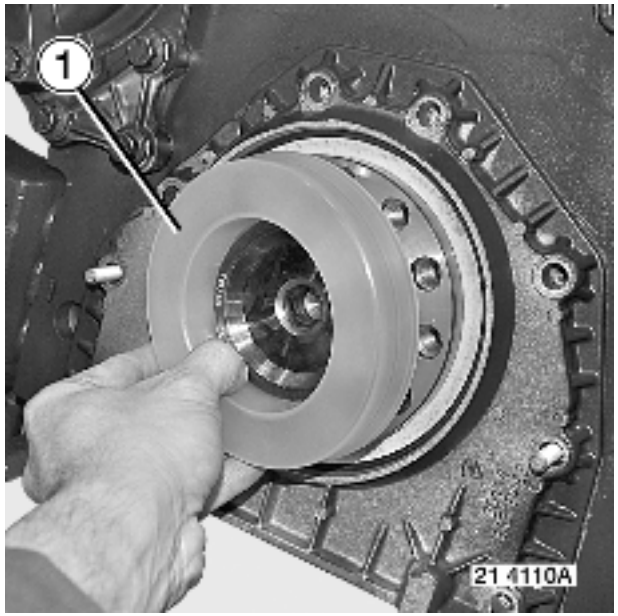

Withdraw protective ring **(1)**.

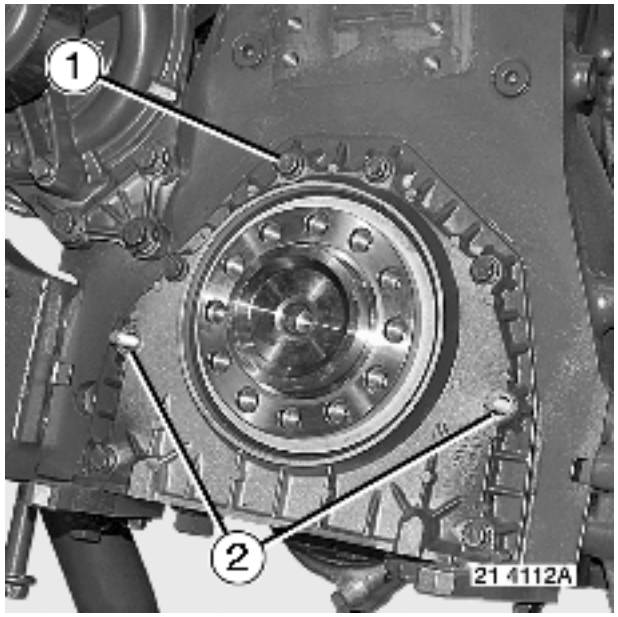

Fit bolts **(1)**.
Start bolts **(1)**.
Remove headless bolts **(2)**.

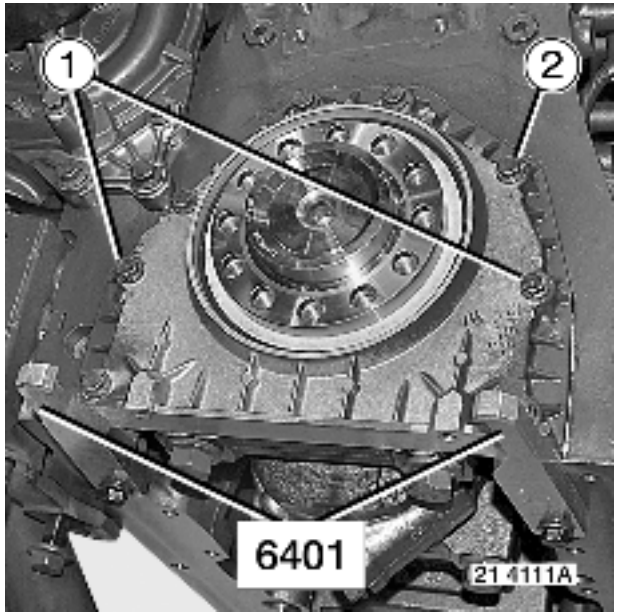

Fit bolts **(1)**.

Tighten bolts **(1 - 2)** to torque.

Withdraw tool 6401.
Fit the oil sump.

Fit damper.

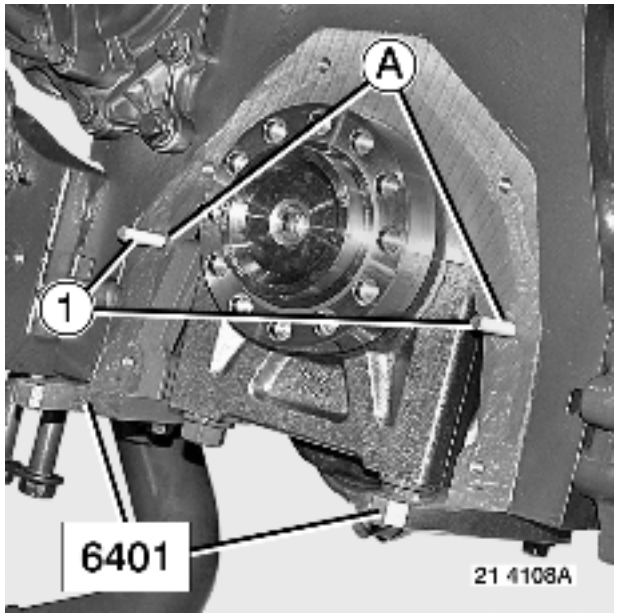

Model: B
Install tool 6401.
Tighten bolts to torque.

Fit bolts **(1)** in locations **(A)**.
Use **2** headless screws **(1)** diameter: **M8** mm, length: **50** mm.
Clean the contact faces thoroughly.
Apply a bead of sealing compound to the gearbox casing joint face.
Apply "

SILICONE 7091

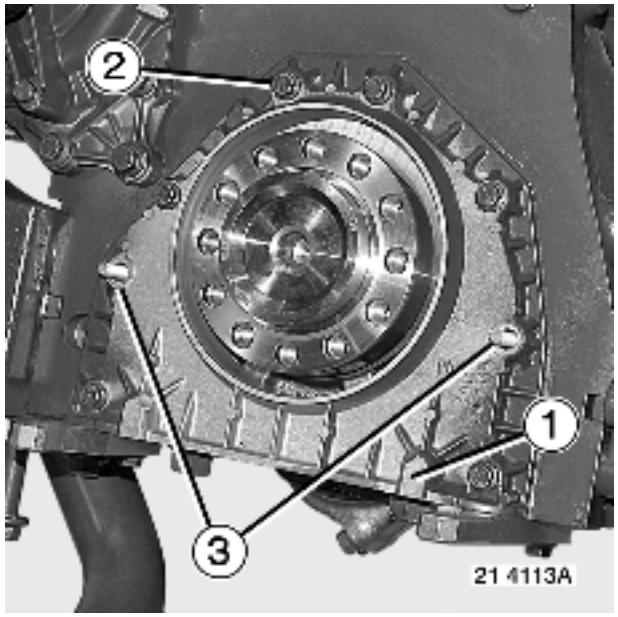

Fit casing **(1)**.
Fit bolts **(2)**.
Start bolts **(2)**.
Remove headless bolts **(3)**.

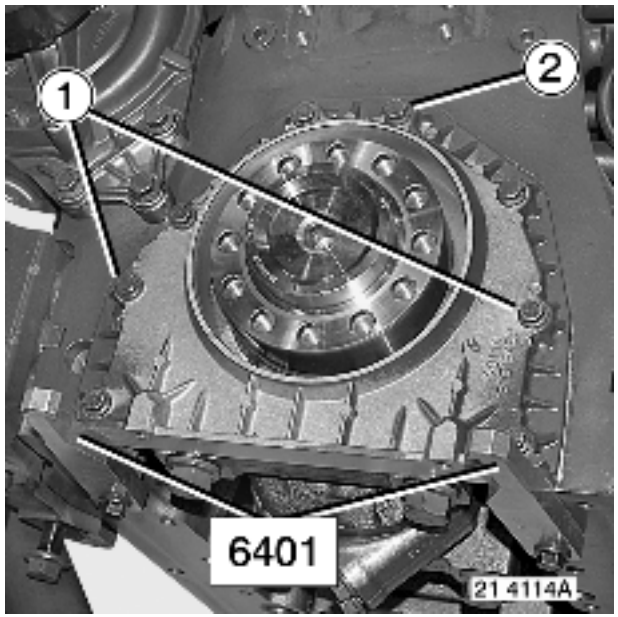

Fit bolts **(1)**.
Tighten bolts **(1 - 2)** to torque.

Withdraw tool 6401.

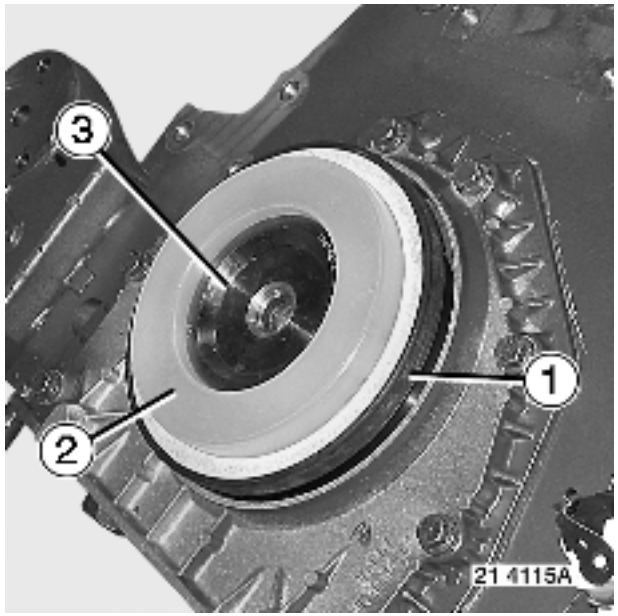

Clean and carefully inspect the contact faces of seal **(1)**.

The seal is supplied fitted to a protective ring. It is essential to hold the seal to the ring until it is finally installed in the case.Do not apply grease to the lips.Any seal that has been removed from its ring must not be re-used.

Position protective ring **(2)** on crankshaft **(3)**.

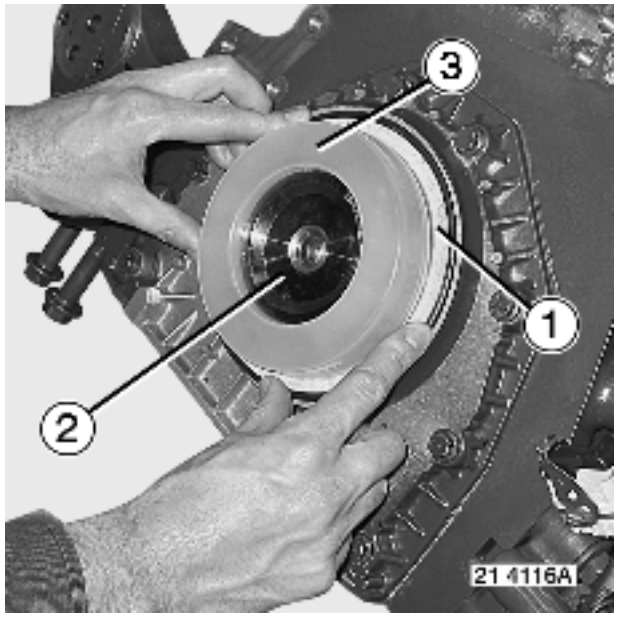

Slide seal **(1)** onto crankshaft **(2)**.
Withdraw protective ring **(3)**.

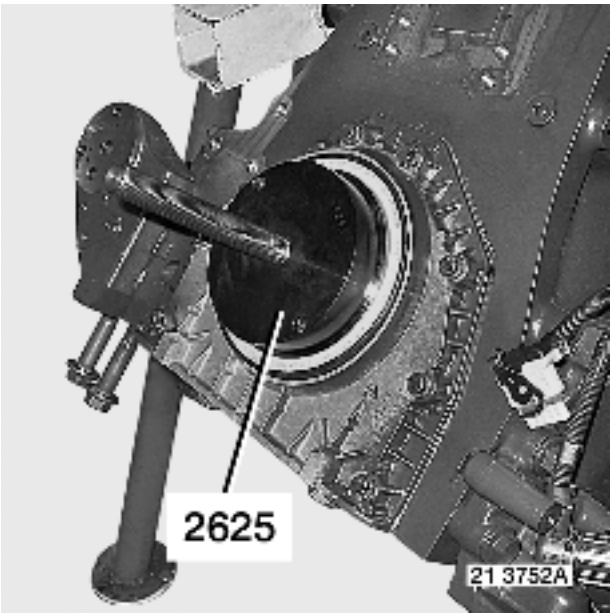

Mount tool 2625.

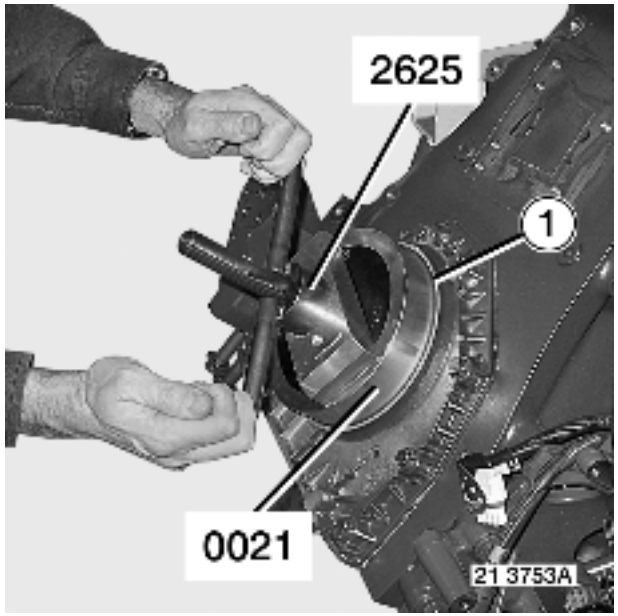

Mount tool 0021.
Using tool 2625, bring tool 0021 into abutment against the crankshaft so as to position seal **(1)** correctly in its housing.
Withdraw tool 0021 + 2625.
When fitting a model **B casing already fitted with a gasket**, follow the same procedure as for fitting a model **A** casing.

Fit the oil sump.

Fit damper.

Consumables

Automotive part N°	Industrial reference N°
56 89 501 292	Silicon adhesive 7091

Tools

Specific tools

Illustration	RENAULT TRUCKS part N°	Designation	Manufacturer's reference N°	Manufacturer's code N°	Scale	Qty
	7409996401					
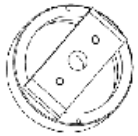	7488800021					
	5000262625					

Crankshaft sealed casing, tightening torques

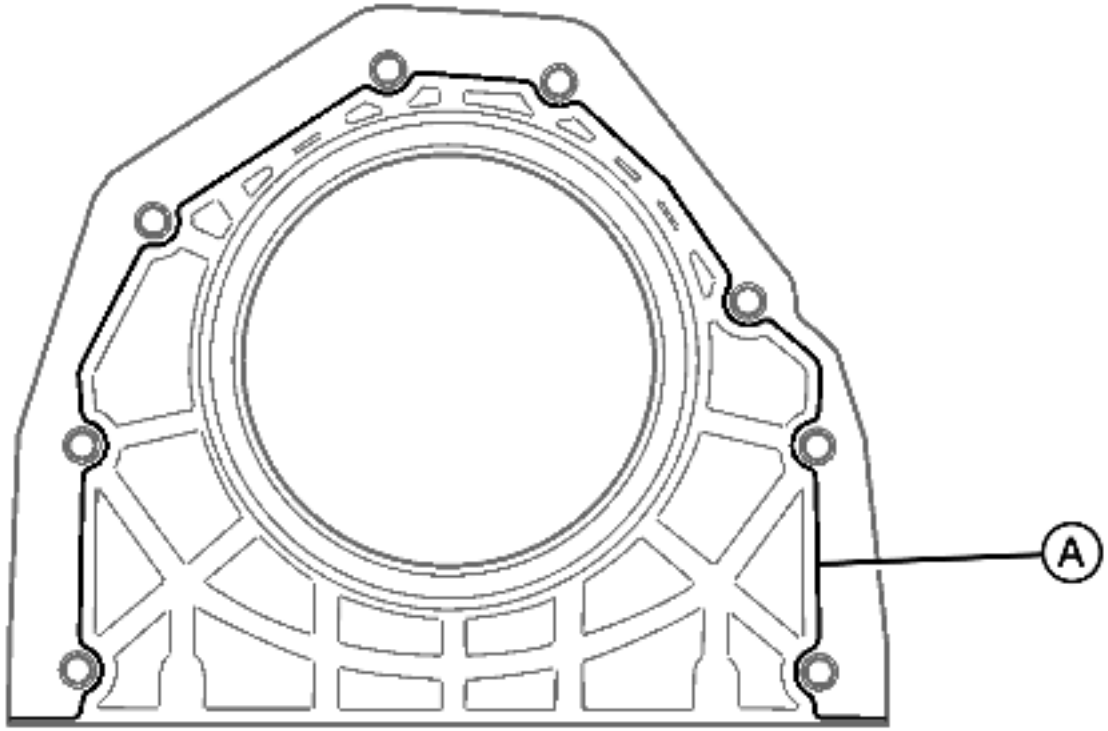

21 2721A

Apply a bead of silicone **dia. 2 mm (A)** as shown in the drawing. Perform assembly within 20 minutes of application of the silicone.
Apply "

ADHESIF SILICONE 7091

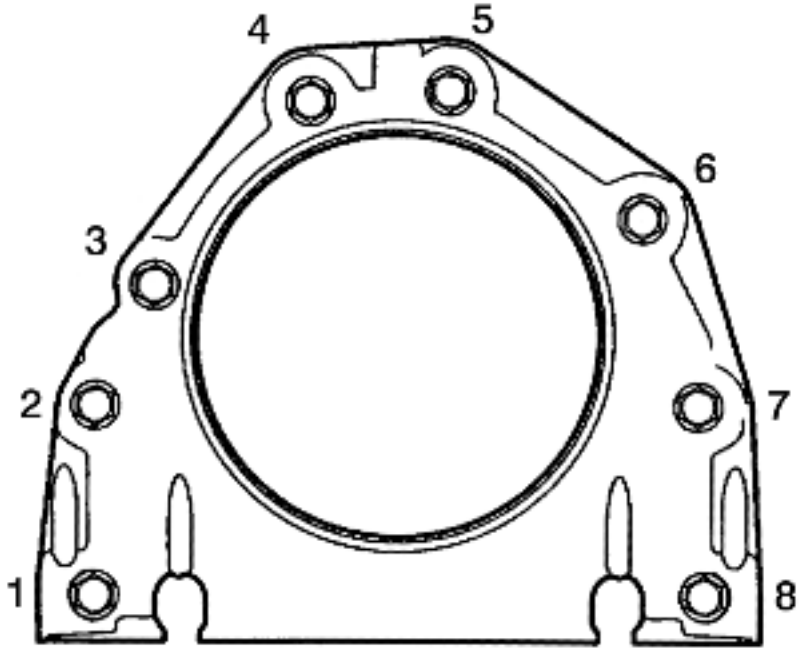

21 2722A

The item numbers indicate the tightening sequence.

Stage **1**: bolts **(2 - 7)**	**24±4 Nm**
Stage **2**: bolts **(1 › 8)**	**24±4 Nm**

Follow the tightening sequence.