https://truckmanualshub.com/

SISU AXLES

SPARE PARTS BOOK

Front Axle
FSDP-14-G

Book No. 211 (11/2009)

Sisu Axles, Inc.
Autotehtaantie 1
PO Box 189
FIN-13101 Hameenlinna
Finland
Phone +358 204 55 2999
Fax +358 204 55 2900

https://truckmanualshub.com/

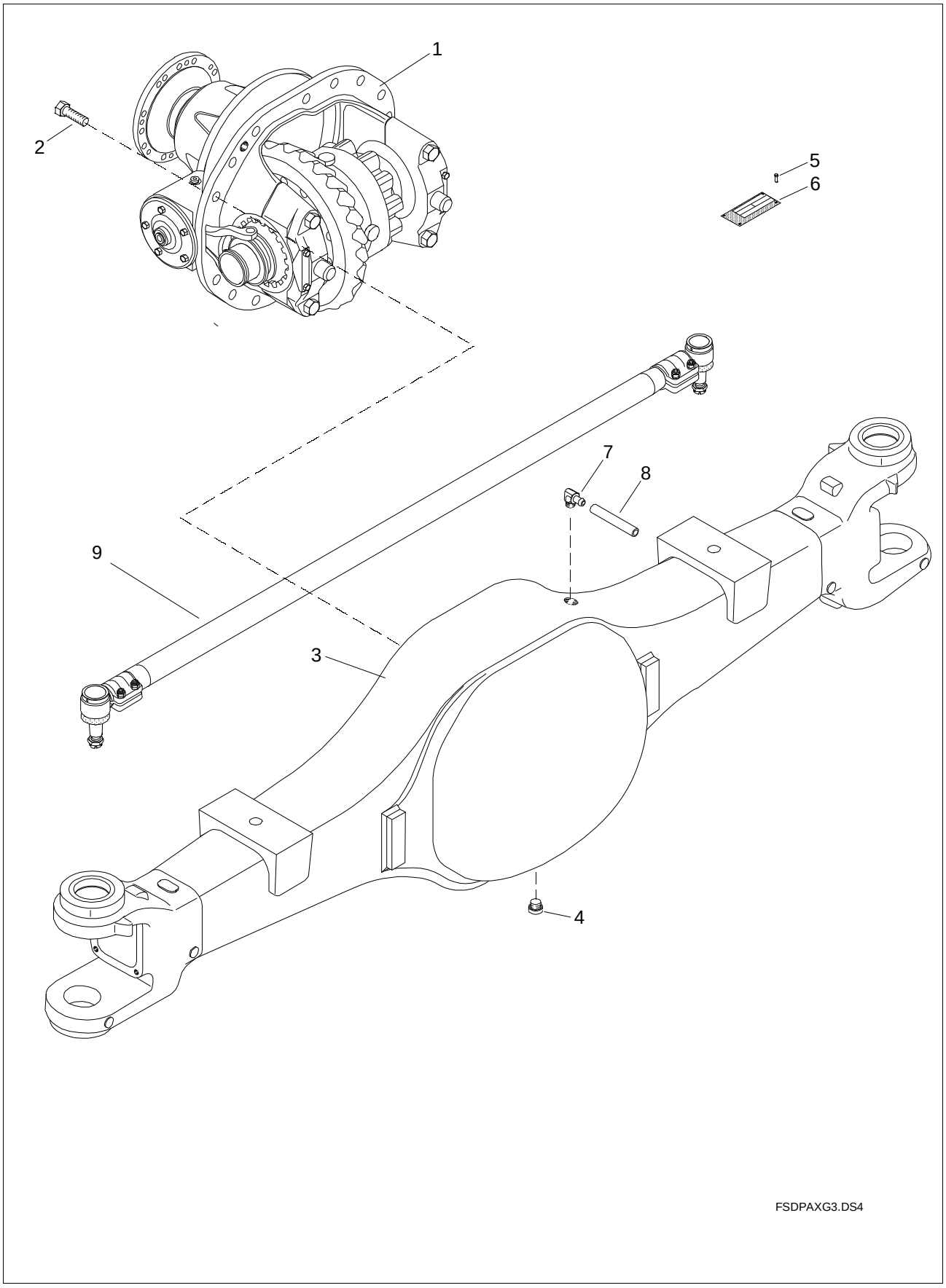

https://truckmanualshub.com/

Item	Qty.	Order no.	Description	Note
1		**N1**	Note	Diff Carrier Assemblies on Separate Pages
2	16	**90303-16407**	Hex Screw	M16x40, 10.9
3	1	**101-0110-342**	Axle housing	Track 2360, Caster 2 deg.
3	1	**541-113-3810**	Axle housing	Track 2360, hydraulic steering
3	1	**541-113-3900**	Axle housing	Track 2580
3	1	**543-116-2100**	Axle housing	Track 2360
4	1	**90831-24139**	Oil plug	R 3/4", Up to No. 00702, 2/2000
4	1	**90873-22109**	Oil plug	M22x1.5, since No 00703, 2/2000
4	1	**91201-22150**	Seal ring	Cu, since No 00703, 2/2000
5	4	**90111-29054**	Rivet	D2.9x5
6	1	**591600-20823**	Name plate	
7	1	**179-841-1000**	Breather pipe	
7	1	**179-842-0000**	Breather Cover	
7	1	**90621-32253**	Split pin	3.2x25
9	1	**540-201-9762**	Tie rod assy	L=1400 mm, straight, 2360 mm track
9	1	**540-201-9851**	Tie rod assy	L=1620 mm, straight, 2580 mm track
9	1	**540-201-9871**	Tie rod assy	L=1450, Drop 90, 2580 track

https://truckmanualshub.com/

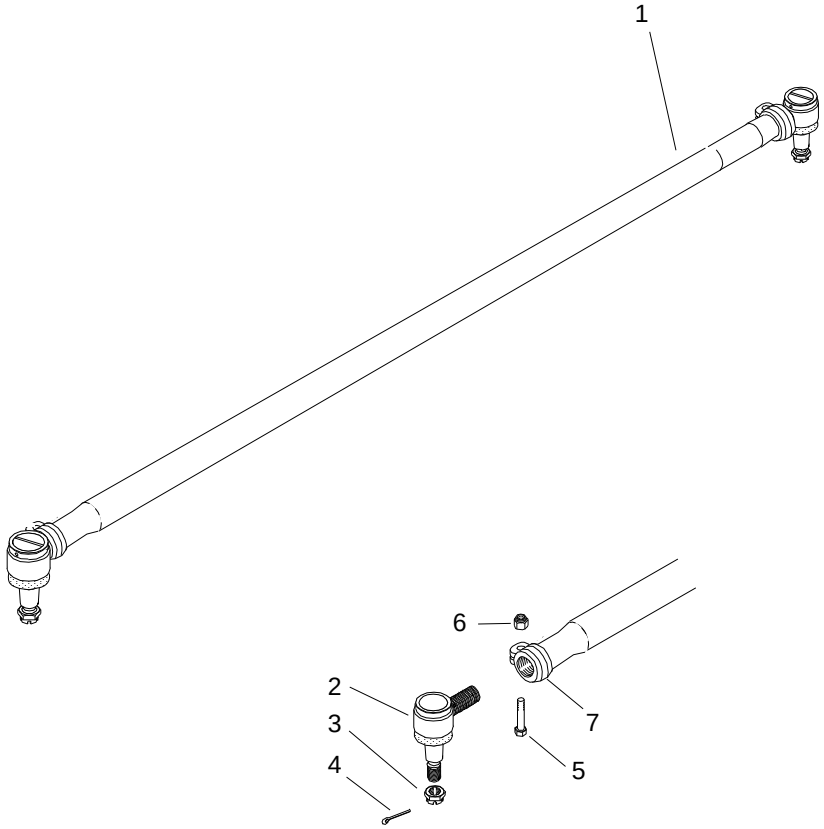

TRWSTRO4.DS4

https://truckmanualshub.com/

Item	Qty.	Order no.	Description	Note
1	1	**540-201-9762**	Tie rod assy	1400 mm, complete
2	1	**560-530-0511**	Ball Joint Assembly	RH, D50, M38x1.5
2	1	**560-530-0521**	Ball Joint Assembly	LH, D50, M38x1.5
3	2	**590546-30463**	Nut	M30x1.5
4	2	**90621-63633**	Split pin	6.3x63
5	2	**590321-12707**	Hex Screw	M12x1.5x70, DIN 960, 10.9
6	2	**590556-12197**	Nut	M12x1.5, DIN 980, 10
7	1	**606-0800-303**	Clamp	40 mm diameter

https://truckmanualshub.com/

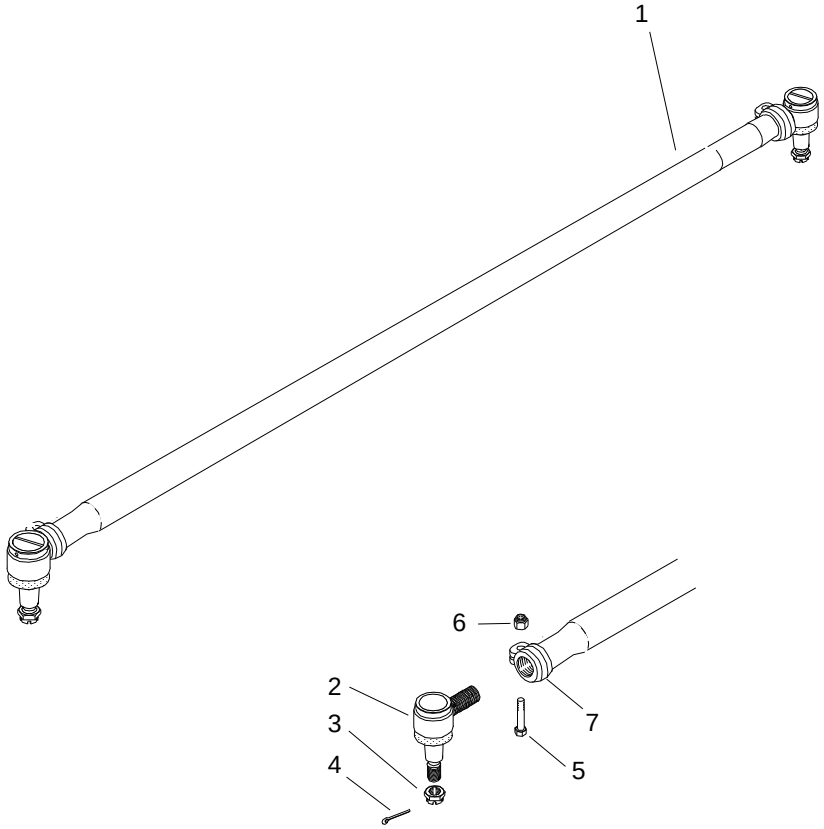

TRWSTRO4.DS4

https://truckmanualshub.com/

Item	Qty.	Order no.	Description	Note
1	1	**540-201-9851**	Tie rod assy	L=1620 mm, straight, complete
2	1	**560-530-0511**	Ball Joint Assembly	RH, D50, M38x1.5
2	1	**560-530-0521**	Ball Joint Assembly	LH, D50, M38x1.5
3	2	**590546-30463**	Nut	M30x1.5
4	2	**90621-63633**	Split pin	D6.3x63
5	2	**590321-12707**	Hex Screw	M12x1.5x70, DIN 960, 10.9
6	2	**590556-12197**	Nut	M12x1.5, DIN 980, 10
7	1	**606-0800-303**	Clamp	40 mm diameter

https://truckmanualshub.com/

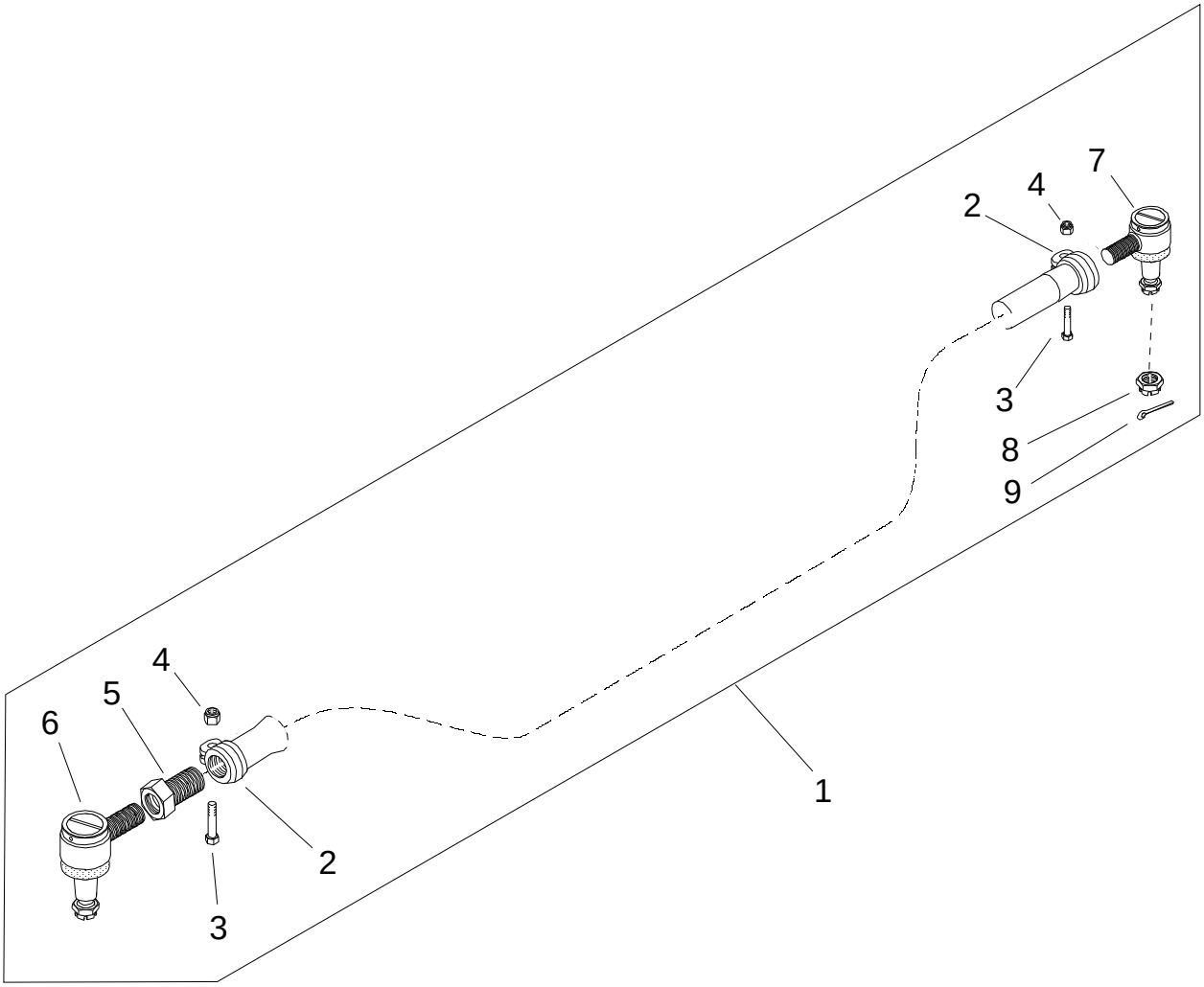

TRW-TROD.DS4

https://truckmanualshub.com/

Item	Qty.	Order no.	Description	Note
1	1	**540-201-9871**	Tie rod assy	L=1450 mm, drop 90 mm, complete
2	2	**594-104-1110**	Clamp	50 mm diameter
3	2	**590321-14807**	Hex Screw	M14x1.5x80, DIN 960, 10.9
4	2	**590556-14227**	Nut	M14x1.5, DIN 980, 10
5	1	**540-216-0300**	Adj. piece	M38x1.5LH/M30x1.5RH
6	1	**560-530-0711**	Ball Joint Assembly	RH, D50, M30x1.5
7	1	**560-530-0511**	Ball Joint Assembly	RH, D50, M38x1.5
8	2	**590546-30463**	Nut	M30x1.5
9	2	**90621-63633**	Split pin	D6.3x63

https://truckmanualshub.com/

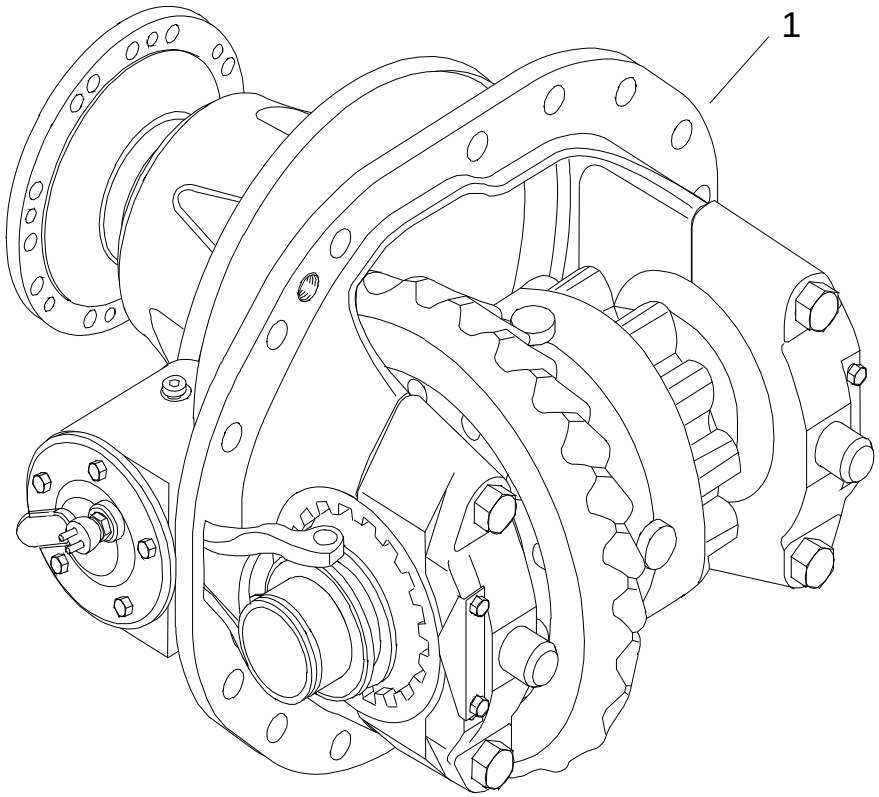

DP330COM.DS4

https://truckmanualshub.com/

Item	Qty.	Order no.	Description	Note
1	1	**543-203-2151**	Diff. Carrier Assembly	FR 8.79, diff. lock, HS1700-1800 flange
1	1	**543-203-2529**	Diff. Carrier Assembly	FR 6.36, w/o diff. lock, HS1700-1800 flange
1	1	**543-203-2551**	Diff. Carrier Assembly	FR 8.79, w/o diff. lock, HS1700-1800 flange
1	1	**543-203-2581**	Diff. Carrier Assembly	FR 10.55, w/o diff. lock, HS1700-1800 flange
1	1	**543-203-3021**	Diff. Carrier Assembly	FR 5.54, w/o diff. lock, HS1700-1800 flange
1	1	**543-203-3787**	Diff. Carrier Assembly	FR 9.51, diff. lock, ISO 8667-T180 flange
1	1	**543-203-3789**	Diff. Carrier Assembly	FR 9.51, diff. lock, HS1700-1800 flange
1	1	**543-203-8351**	Diff. Carrier Assembly	FR 8.79, HS1700/1800, w/o diff lock, 180°
1	1	**543-203-8451**	Diff. Carrier Assembly	FR 8.79, HS1700/1800, w/o lock, CCW input, 180°

https://truckmanualshub.com/

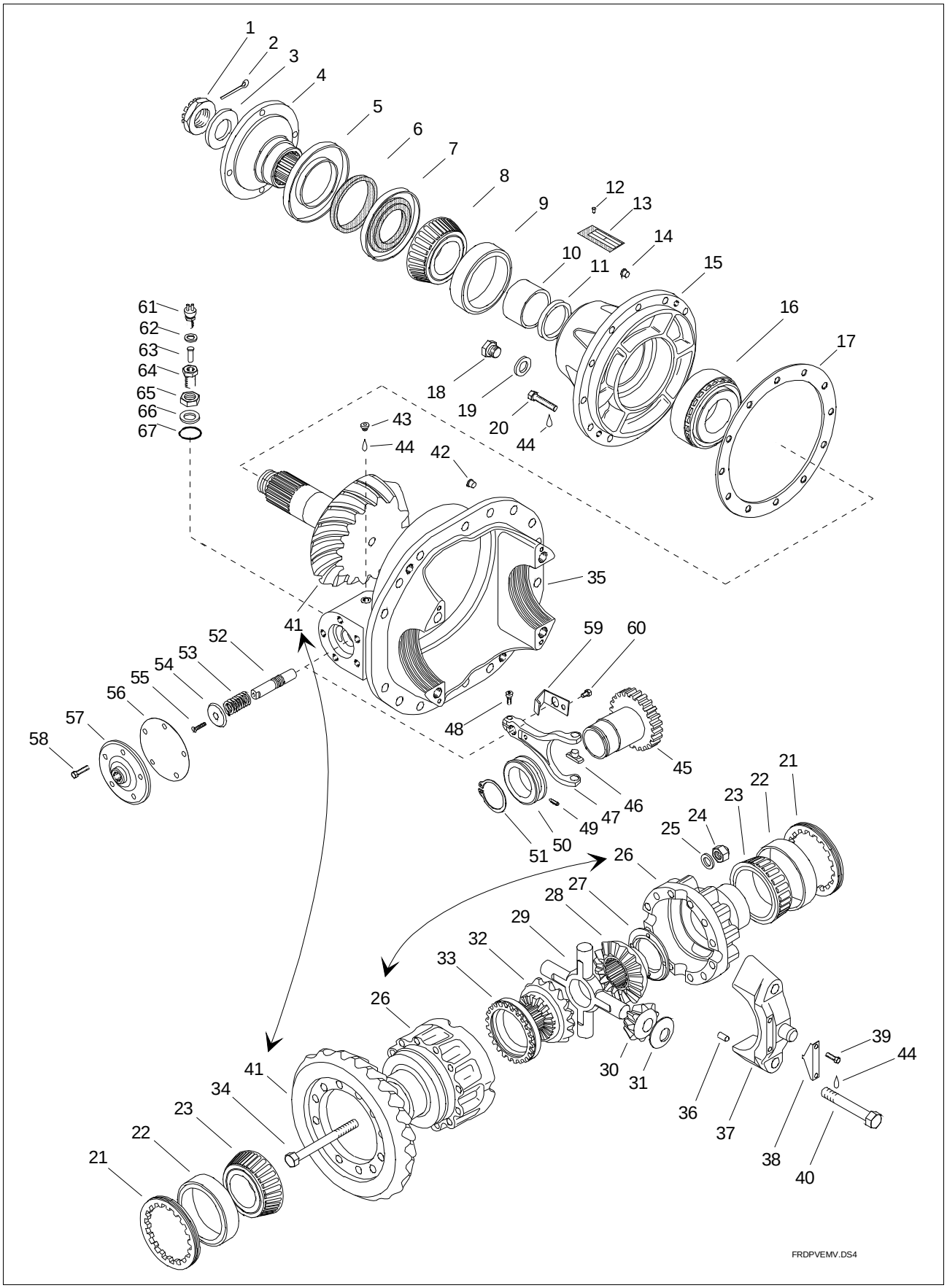

https://truckmanualshub.com/

Item	Qty.	Order no.	Description	Note
1	1	**90546-42653**	Nut	M42x1.5
2	1	**90621-63633**	Split pin	6.3x63
3	1	**90705-43069**	washer	D43/80x6
4	1	**138-918-0400**	Flange	HS1700-1800
4	1	**138-918-0401**	Flange	ISO 8667 - T180
5	1	**090-711-9000**	Shield	
6	1	**090-400-9500**	V-ring	VS-95, Up to serial No 133452 (12/2003)
7	1	**591122-08508**	Shaft seal	D85/140x13/20, Since serial No 133453 (12/2003)
7	1	**91122-08504**	Shaft seal	D85/140x13, Up to serial No 133452 (12/2003)
8	1	**090-110-6740**	Bearing inner race	
9	1	**090-121-3700**	Bearing outer race	
10	ar	**099-557-1026**	Spacer ring	(l=53.70)
10	ar	**099-557-1028**	Spacer ring	(l=53.74)
10	ar	**099-557-1030**	Spacer ring	(l=53.78)
11	ar	**099-517-1000**	Shim	(s=0.30)
11	ar	**099-517-1001**	Shim	(s=0.40)
11	ar	**099-517-1002**	Shim	(s=0.50)
12	4	**90111-29054**	Rivet	D2.9x5
13	1	**91600-20811**	Name plate	
14	2	**91425-09100**	Shield plug	
15	1	**144-231-0502**	Bearing housing	
16	1	**090-050-7001**	T. Roller bearing	
17	ar	**144-239-1400**	Shim	(s= 0.50 mm)
17	ar	**144-239-1401**	Shim	(s= 0.20 mm)
17	ar	**144-239-1403**	Shim	(s= 0.10 mm)
17	ar	**144-239-1404**	Shim	(s= 1.00 mm)
18	1	**90873-22103**	Plug	M22x1.5, Allen head
19	1	**91201-22152**	Seal ring	D22/27x1.5 Al
20	14	**90303-12308**	Hex Screw	M12x30
21	2	**143-226-0012**	Adjusting nut	D149
22	2	**090-121-4700**	Bearing outer race	
23	2	**090-110-9000**	Bearing inner race	
24	12	**90556-16247**	Nut	M16x1.5
25	12	**099-601-8110**	washer	D17/28x6
26	1	**143-310-2711**	Diff. case assy	
27	1	**090-357-5000**	Thrust washer	D75/111x3
28	1	**543-351-4210**	Side gear	D55/Z26
29	1	**143-331-0603**	Spider	
30	4	**143-341-0700**	Pinion gear	
31	4	**143-345-0400**	Thrust washer	D29/65x1.5
32	1	**543-351-4200**	Side gear	D55/Z26
33	1	**143-357-0000**	Sliding Ring	
34	12	**099-116-3230**	Hex Screw	M16x1.5, L=193, 12.9
35	1	**143-210-1511**	Differential Carrier	
36	4	**590604-08141**	Pin	Ø8x14
37		**143-214-2180**	Bearing Case Half	Not Servised Separately
38	2	**143-227-0610**	Lock plate	
39	4	**90303-08103**	Hex Screw	M8x10
40	4	**90301-20377**	Hex Screw	M20x130
41	1	**143-240-1821**	Ring and pinion gear set	17/26, FR 5.56, LH
41	1	**143-240-1829**	Ring and pinion gear set	16/28, FR 6.36, LH
41	1	**143-240-1831**	Ring and pinion gear set	24/27 FR 4.09, LH
41	1	**143-240-1851**	Ring and pinion gear set	12/29, FR 8.79, LH
41	1	**143-240-1881**	Ring and pinion gear set	10/29, FR 10.54, LH
41	1	**543-240-5711**	Ring and pinion gear set	25/32, FR4.65, RH
41	1	**543-240-5721**	Ring and pinion gear set	21/32, FR 5.54, RH
41	1	**543-240-5779**	Ring and pinion gear set	23/31, FR 4.90, RH
41	1	**543-240-5789**	Ring and pinion gear set	13/34, FR 9.51, RH
41	1	**543-240-5821**	Ring and pinion gear set	17/26, Final Ratio 5.56, RH
41	1	**543-240-5851**	Ring and pinion gear set	12/29, FR 8.79, RH (ccw input)
41	1	**543-240-5869**	Ring and pinion gear set	7/36, Final Ratio 18.70, RH
41	1	**543-240-7111**	Ring and pinion gear set	25/32, FR 4.65, LH
42	2	**91425-13120**	Shield plug	

https://truckmanualshub.com/

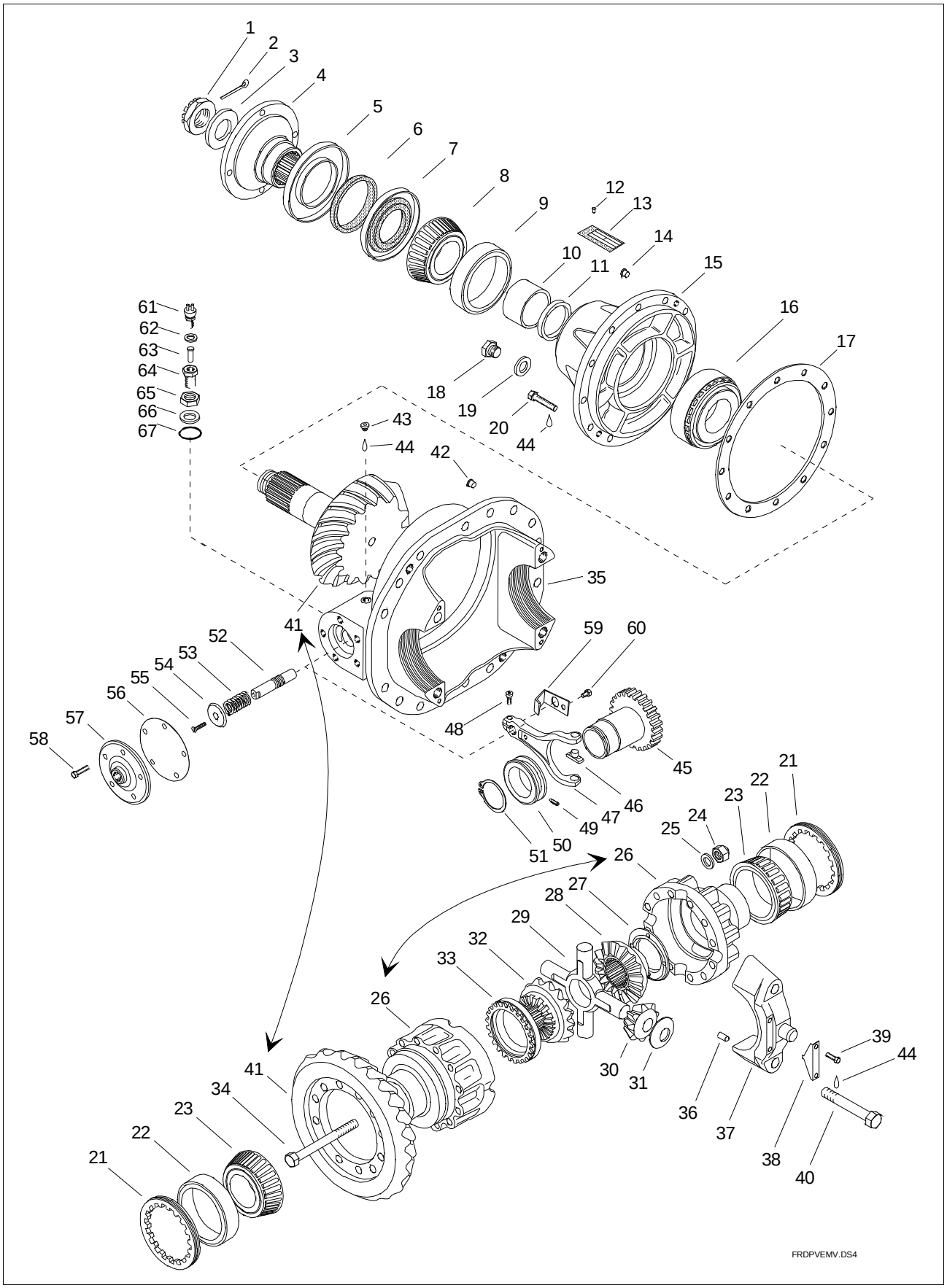

https://truckmanualshub.com/

Item	Qty.	Order no.	Description	Note
43	1	**90873-10053**	Plug screw	M10x1, Allen head
44		**95752-10010**	Thread locking compound	
45	1	**144-341-0900**	Sliding Gear	
46	2	**133-348-0710**	Sliding shoe	
47	1	**144-751-1210**	Control fork	without indicator switch
47	1	**544-751-1410**	Control fork	with indicator switch
48	1	**90313-06208**	Allen Screw	M6x20
49	1	**90335-05108**	Stopping screw	M5x10
50	1	**144-348-0000**	Sliding ring	
51	1	**91711-06500**	Retainer ring	D65
52	1	**172-212-1710**	Sliding Shaft	D16/20x125
53	1	**097-122-0100**	Return spring	D29.5x43
54	1	**172-361-0410**	Push plate	D70x12
55	1	**90319-08206**	Screw	M8x20
56	1	**172-351-1202**	Membrane	
56	1	**572-351-1204**	Membrane	Viton (optinal)
57	1	**144-736-0300**	Cover	Without diff. lock
57	1	**172-161-0700**	Membrane cover	M18x1.5
57	1	**172-161-0701**	Membrane cover	M16x1.5
57	1	**572-161-1501**	Membrane cover	M16x1.5, side connection
58	5	**90303-08203**	Hex Screw	M8x20
59	1	**541-812-0200**	Guide plate	with indicator switch
60	1	**90303-08123**	Hex Screw	M8x12, with indicator switch
61	1	**186-490-0281**	Signal Lamp Switch	M12x1.5
62	1	**91201-12150**	Seal ring	D12/18x1.5
63	1	**141-812-0100**	Control pin	D8/10x26
64	1	**141-812-0000**	Binding screw	M12x1.5/M18x1.5
65	1	**91842-18243**	Lock Nut	M18x1.5
66	1	**91838-18010**	Pressure ring	Ms DR/R 18x23
67	1	**91838-18100**	O-ring	Ø16x2.5

https://truckmanualshub.com/

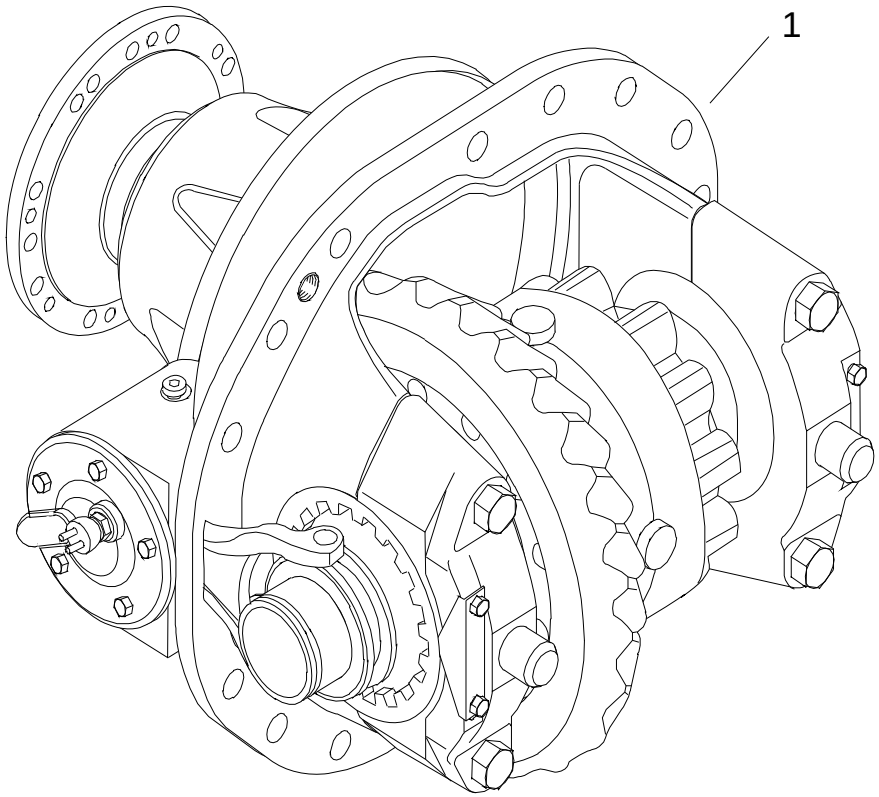

DP330COM.DS4

https://truckmanualshub.com/

Item	Qty.	Order no.	Description	Note
1	1	**380-0205-305**	Diff. Carrier Assembly	FR 7.01, HS1700/1800, w/diff lock, 180°
1	1	**380-0205-306**	Diff. Carrier Assembly	FR 7.01, HS1700/1800, w/o lock, 180°
1	1	**380-0205-307**	Diff. Carrier Assembly	FR 6.36, HS1700/1800, w/diff lock, 180°
1	1	**380-0205-308**	Diff. Carrier Assembly	FR 6.36, HS1700/1800, w/o lock, 180°
1	1	**543-204-3519**	Diff. Carrier Assembly	FR 7.01, HS1700/1800 flange, w/o diff lock,
1	1	**543-204-3529**	Diff. Carrier Assembly	FR 6.36, HS1700/1800 flange, w/o diff lock
1	1	**543-204-3551**	Diff. Carrier Assembly	FR 8.79, HS1700/1800 flange, w/o diff lock
1	1	**543-204-3581**	Diff. Carrier Assembly	FR 10.55, HS1700/1800 flange, w/o diff lock
1	1	**543-204-3687**	Diff. Carrier Assembly	FR=9.51, ISO-T180 flange, w/diff lock
1	1	**543-204-3689**	Diff. Carrier Assembly	FR 9.51, HS1700/1800 flange, w/diff lock
1	1	**543-204-4351**	Diff. Carrier Assembly	FR 8.79, HS1700/1800, w/diff lock, 180°
1	1	**543-204-4451**	Diff. Carrier Assembly	FR 8.79, HS1700/1800, w/diff lock, CCW input, 180°

https://truckmanualshub.com/

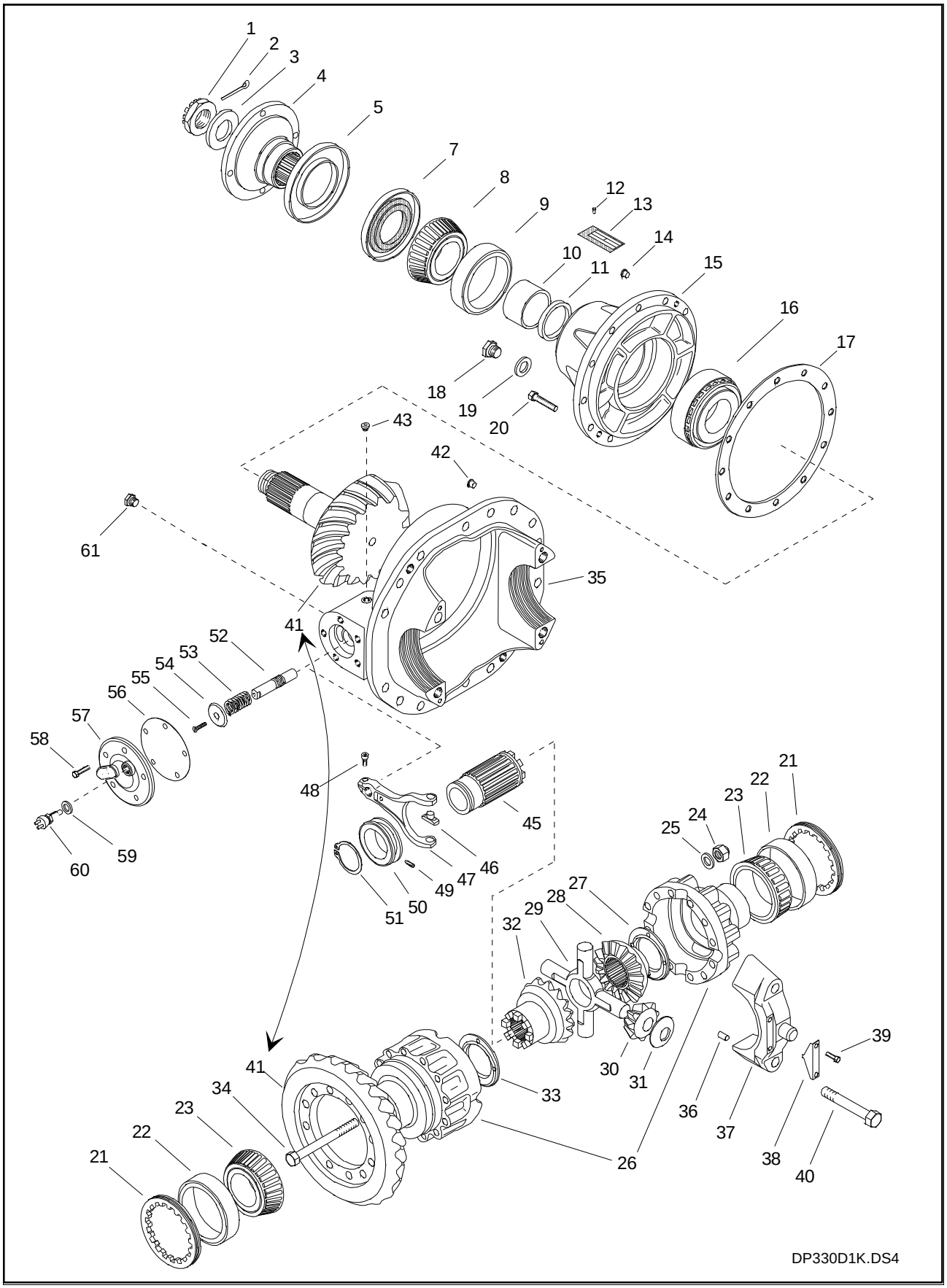

https://truckmanualshub.com/

Item	Qty.	Order no.	Description	Note
1	1	**90546-42653**	Nut	M42x1.5
2	1	**90621-63633**	Split pin	6.3x63
3	1	**90705-43069**	washer	D43/80x6
4	1	**138-918-0400**	Flange	HS1700-1800
4	1	**138-918-0401**	Flange	ISO 8667 - T180
4	1	**538-967-0100**	End Yoke	Input Splined Yoke 1710
5	1	**090-711-9000**	Shield	
7	1	**591122-08508**	Shaft seal	D85/140x13/20
8	1	**090-110-6740**	Bearing inner race	
9	1	**090-121-3700**	Bearing outer race	
10	ar	**099-557-1026**	Spacer ring	(l=53.70)
10	ar	**099-557-1028**	Spacer ring	(l=53.74)
10	ar	**099-557-1030**	Spacer ring	(l=53.78)
11	ar	**099-517-1000**	Shim	(s=0.30)
11	ar	**099-517-1001**	Shim	(s=0.40)
11	ar	**099-517-1002**	Shim	(s=0.50)
12	4	**90111-29054**	Rivet	D2.9x5
13	1	**91600-20811**	Name plate	
14	2	**91425-09100**	Shield plug	
15	1	**144-231-0502**	Bearing housing	
16	1	**090-050-7001**	T. Roller bearing	
17	ar	**144-239-1400**	Shim	(s= 0.50 mm)
17	ar	**144-239-1401**	Shim	(s= 0.20 mm)
17	ar	**144-239-1403**	Shim	(s= 0.10 mm)
17	ar	**144-239-1404**	Shim	(s= 1.00 mm)
18	1	**90871-22193**	Plug screw	M22x1.5, hex head
19	1	**91201-22150**	Seal ring	D22/27x1.5 Cu
20	14	**90303-12308**	Hex Screw	M12x30
21	2	**143-226-0012**	Adjusting nut	D149
22	2	**090-121-4700**	Bearing outer race	
23	2	**090-110-9000**	Bearing inner race	
24	12	**90556-16247**	Nut	M16x1.5
25		**0**		Not installed
26	1	**543-310-4811**	Diff. case assy	With diff lock
26	1	**543-310-4831**	Diff. case assy	W/o diff lock
27	1	**090-357-5000**	Thrust washer	D75/111x3
28	1	**543-351-4210**	Side gear	D55/Z26
29	1	**143-331-0603**	Spider	
30	4	**143-341-0700**	Pinion gear	
31	4	**143-345-0400**	Thrust washer	D29/65x1.5
32	1	**543-351-4310**	Side gear	D55/Z26, w/diff lock
32	1	**543-351-4610**	Side gear	D55/Z26, W/o diff lock
33	1	**090-359-7000**	Thrust washer	D97/127x3
34	12	**599-116-3250**	Hex Screw	M16x1.5, L= 207, 12.9
35	1	**143-210-1511**	Differential Carrier	Incl. Bearing Case Halfs and Bolts
36	4	**590604-08141**	Pin	Ø8x14
37		**143-214-2180**	Bearing Case Half	Not Servised Separately
38	2	**143-227-0610**	Lock plate	
39	4	**90303-08163**	Screw	M8x16
40	4	**90301-20377**	Hex Screw	M20x130
41	1	**143-240-1819**	Ring and pinion gear set	14/27, FR 7.01, LH
41	1	**143-240-1821**	Ring and pinion gear set	17/26, FR 5.56, LH
41	1	**143-240-1829**	Ring and pinion gear set	16/28, FR 6.36, LH
41	1	**143-240-1851**	Ring and pinion gear set	12/29, FR 8.79, LH
41	1	**143-240-1881**	Ring and pinion gear set	10/29, FR 10.55, LH
41	1	**543-240-5789**	Ring and pinion gear set	13/34, FR 9.51, RH
41	1	**543-240-5851**	Ring and pinion gear set	12/29, FR 8.79, RH (ccw input)
41	1	**543-240-7111**	Ring and pinion gear set	25/32, FR 4.65, LH
42	2	**91425-13120**	Shield plug	

https://truckmanualshub.com/

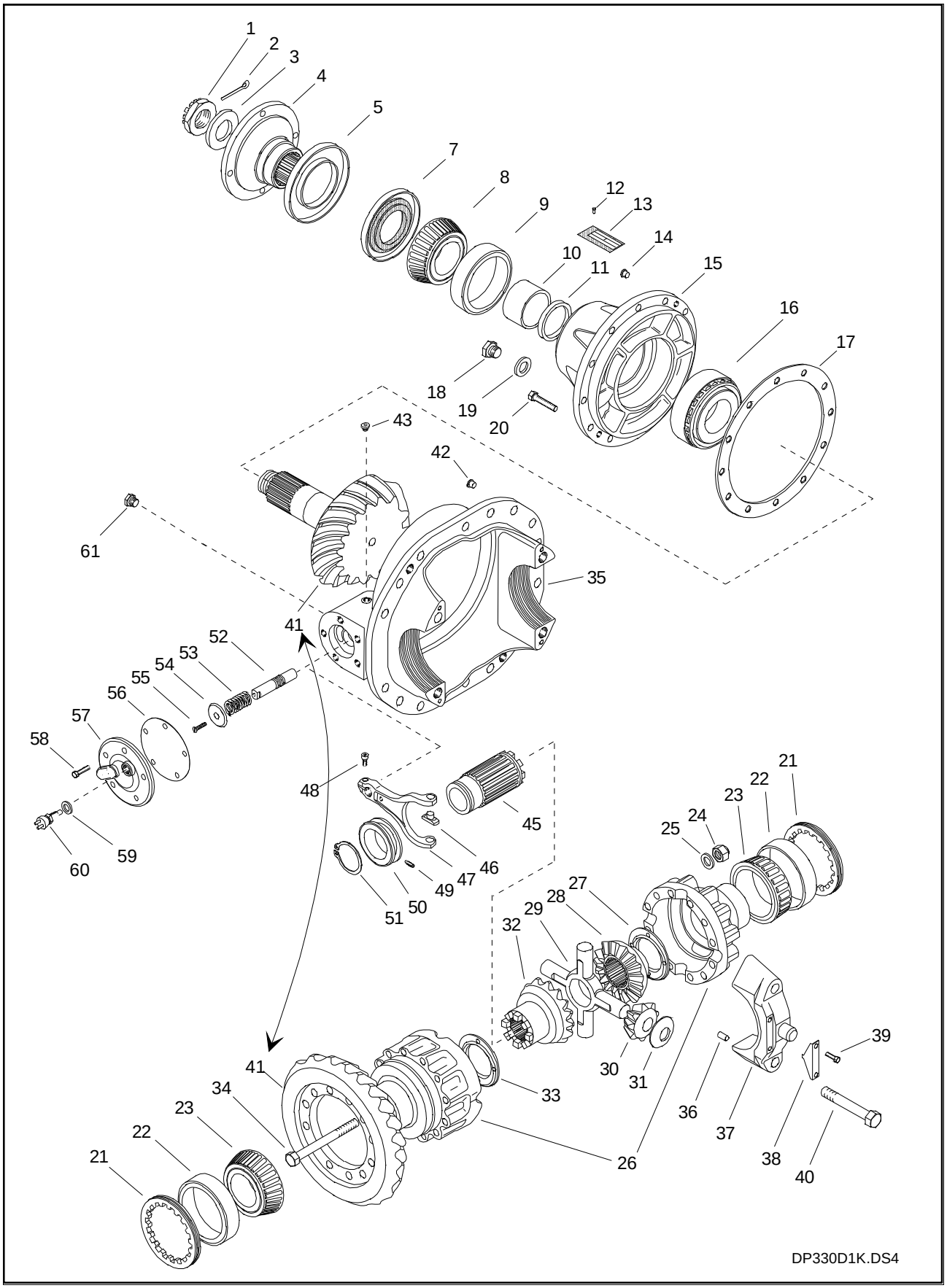

https://truckmanualshub.com/

Item	Qty.	Order no.	Description	Note
43	1	**90871-10143**	Plug screw	M10x1, hex head 14 mm
45	1	**144-341-1700**	Sliding Gear	
46	2	**133-348-0710**	Sliding shoe	
47	1	**144-751-1210**	Control fork	
48	1	**90313-06208**	Allen Screw	M6x20
49	1	**90335-05108**	Stopping screw	M5x10
50	1	**144-348-0000**	Sliding ring	
51	1	**91711-06500**	Retainer ring	D65
52	1	**172-212-1710**	Sliding Shaft	
53	1	**097-122-0100**	Return spring	
54	1	**172-361-0410**	Push plate	
55	1	**90319-08206**	Screw	M8x20
56	1	**172-351-1202**	Membrane	
57	1	**144-736-0300**	Cover	Without diff lock
57	1	**572-161-1502**	Membrane cover	For Signal Lamp Switch Option
58	5	**90303-08203**	Hex Screw	M8x20
59	1	**91201-18150**	Seal ring	D18/22x1.5 Cu
60	1	**586-490-0381**	Signal Lamp Switch	M18x1.5
61	1	**90871-18173**	Plug screw	M18x1.5
61	1	**91201-18150**	Seal ring	D18/22x1.5 Cu

https://truckmanualshub.com/

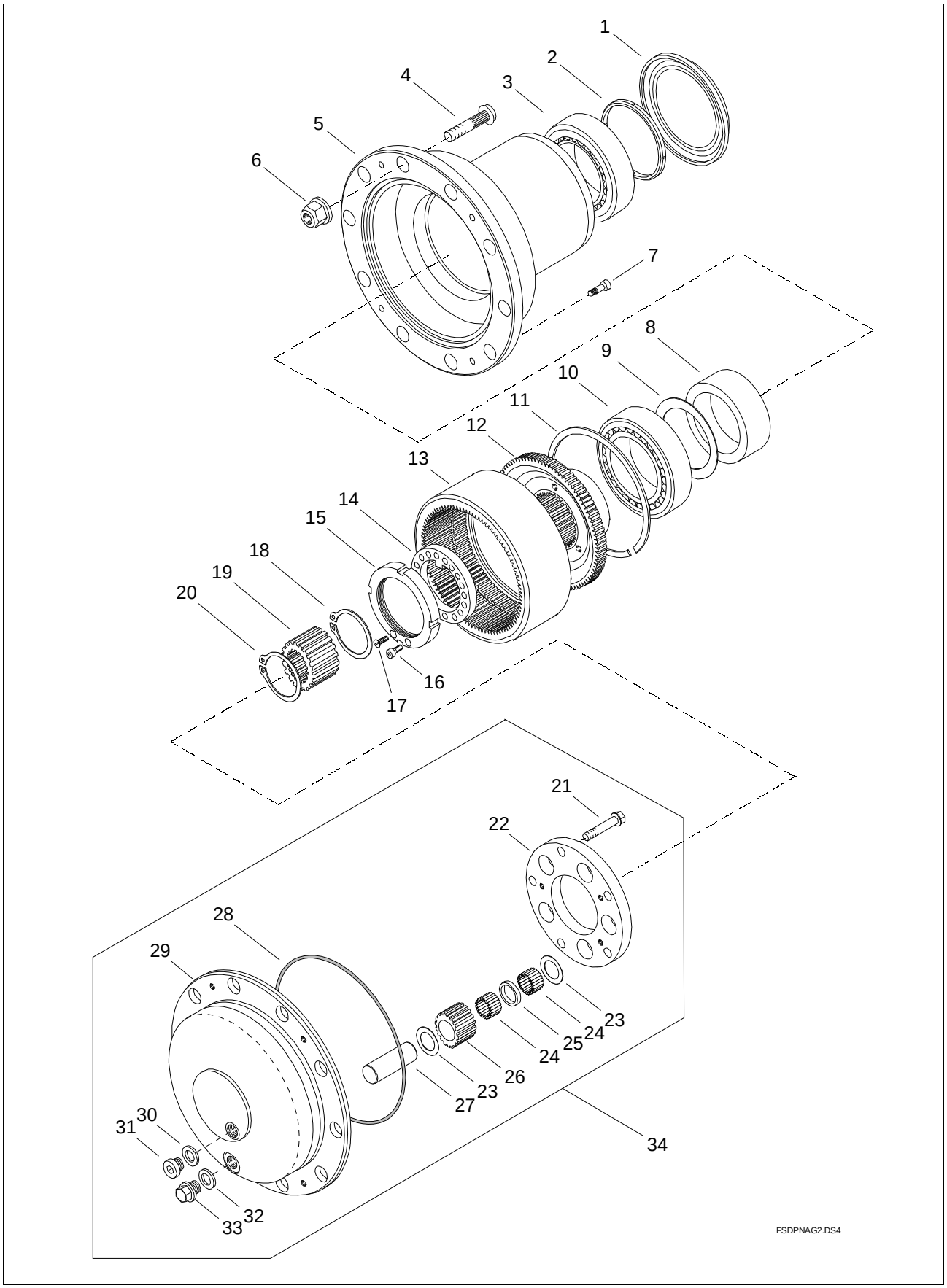

https://truckmanualshub.com/

Item	Qty.	Order no.	Description	Note
1	2	**591122-13301**	Shaft seal	Ø133,4/187,5, Up to No. 20286 (2/2002)
1	2	**591122-15001**	Shaft seal	Ø150/180, Since No. 20287 (2/2002)
2	2	**540-415-1010**	Spacer ring	Up to No. 20286 (2/2002)
2	2	**540-415-1300**	Spacer ring	Since No. 20287 (2/2002)
2	2	**91101-33026**	O-ring	133x2.62, Since No. 20287 (2/2002)
3	2	**91744-01101**	T. Roller bearing	
4	20	**140-911-2700**	Wheel bolt	L=113 mm
4	20	**540-911-3500**	Wheel bolt	L=103 mm
5	NLA	**541-411-1401**	Wheel hub	Superceded by item 541-411-1402
5	2	**541-411-1402**	Wheel hub	Reinforced, with seal 591122-13301
5	NLA	**541-411-1410**	Wheel hub	Superceded by item 541-411-1412
5	2	**541-411-1412**	Wheel hub	reinforced, with seal 591122-15001
6	20	**540-916-1610**	Wheel nut	M22x1.5
7	8	**590313-10303**	Allen Screw	M10x30
8	2	**543-416-0210**	Spacer ring	L=44 mm
9	ar	**590731-09510**	Shim	s= 0.1 mm
9	ar	**590731-09515**	Shim	s= 0.15 mm
9	ar	**590731-09520**	Shim	s= 0.2 mm (preferred thickness)
9	ar	**590731-09530**	Shim	s= 0.3 mm (preferred thickness)
9	ar	**590731-09550**	Shim	s= 0.5 mm (preferred thickness)
9	ar	**590732-09510**	Shim	s= 1.0 mm (preferred thickness)
10	2	**91744-01201**	T. Roller bearing	
11	2	**91720-22001**	Retainer ring	D220x3
12	2	**535-271-0611**	Ring gear hub	
13	2	**535-261-2110**	Ring gear	
14	2	**143-418-0510**	Lock plate	S=6 mm, holed
15	2	**599-290-8004**	Lock Nut	M90x2
16	2	**590319-08186**	Allen Screw	M8x18
17	2	**590319-08126**	Allen Screw	M8x12
18	2	**591711-05500**	Retainer ring	D55x2
19	2	**535-211-1310**	Sun gear	N55x2x26
20	2	**591711-05500**	Retainer ring	D55x2
21	10	**590169-01670**	Special screw	M16x1.5x70
22	2	**535-231-1310**	Planet carrier	
23	20	**590-353-1100**	Spacer plate	D33.5/55.5x1.47
24	480	**91385-50240**	Needle roller	D5x23.8
25	10	**590-354-3100**	Spacer ring	D33.5/42x7
26	10	**535-241-1310**	Planet gear	
27	10	**535-251-1410**	Planet gear shaft	
28	2	**591109-66052**	O-ring	D266x5.33
29	2	**541-471-0410**	Planetary gear housing	
30	2	**91201-22150**	Seal ring	D22/27x1.5 Cu
31	2	**90873-22109**	Oil plug	M22x1.5, Allen head
32	2	**91201-22150**	Seal ring	D22/27x1.5 Cu
33	2	**90871-22193**	Plug screw	M22x1.5, hex head
34	2	**541-404-0171**	Planetary gear	

https://truckmanualshub.com/

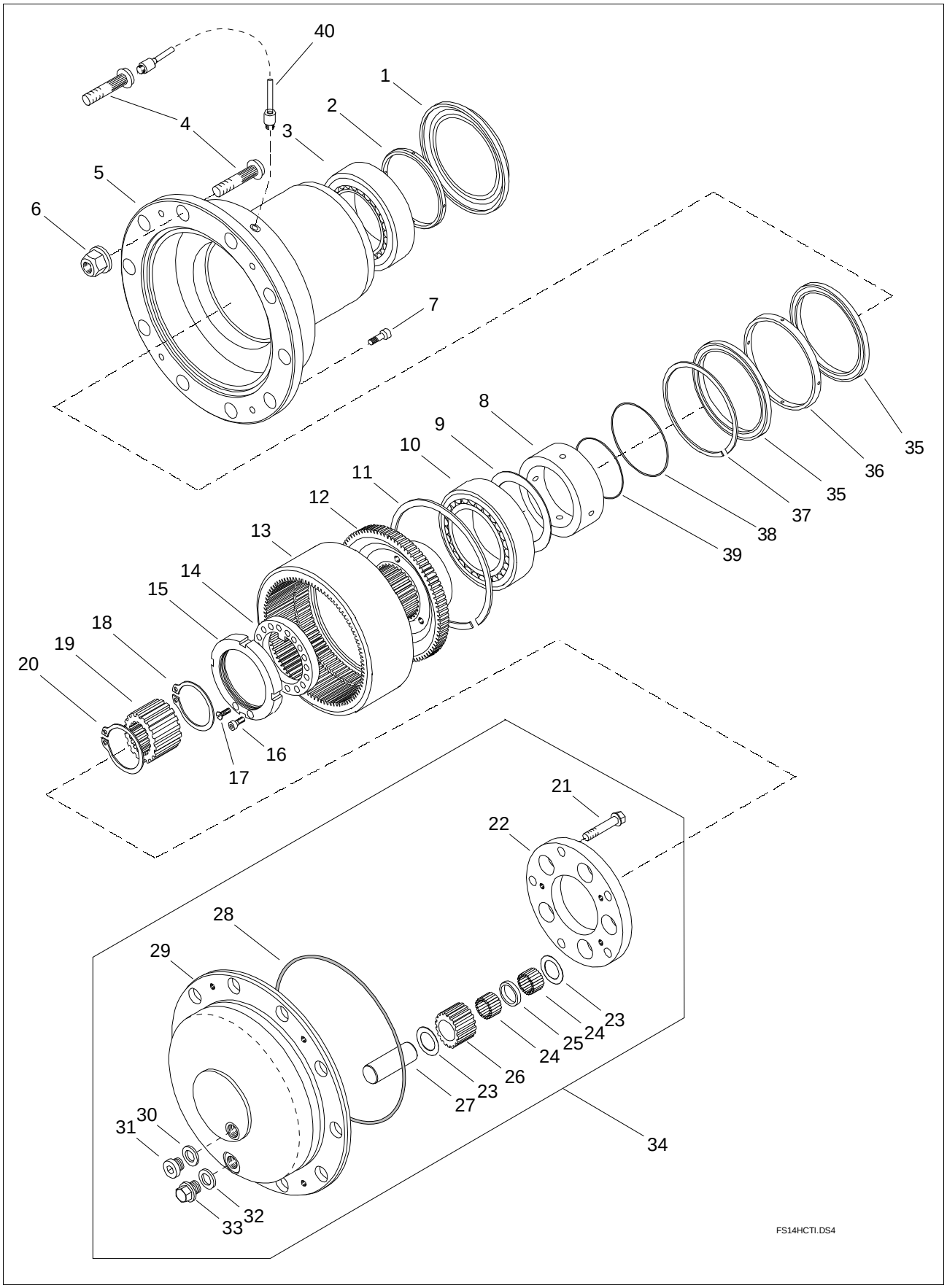

https://truckmanualshub.com/

Item	Qty.	Order no.	Description	Note
1	2	**591122-15001**	Shaft seal	Ø150/180
2	2	**540-415-1300**	Spacer ring	D133.35/150x22
2	2	**91101-33026**	O-ring	133x2.62
3	2	**91744-01101**	T. Roller bearing	
4	18	**140-911-2510**	Wheel bolt	L=93 mm
4	18	**540-911-3500**	Wheel bolt	L=103 mm
4	2	**540-911-3610**	Wheel bolt	CTI, L=91mm
4	2	**540-911-3700**	Wheel bolt	CTI, L=103 mm
5	NLA	**541-411-2300**	Wheel hub	FS-14, CTI, superceded by item 541-411-2302
5	2	**541-411-2302**	Wheel hub	FS-14, CTI, reinforced
6	20	**540-916-1610**	Wheel nut	M22x1.5
7	8	**590313-10303**	Allen Screw	M10x30
8	2	**540-415-1500**	Spacer ring	D95/125x44, CTI
9	NLA	**590731-09510**	Shim	s= 0.1 mm
9	NLA	**590731-09515**	Shim	s= 0.15 mm
9	ar	**590731-09520**	Shim	s= 0.2 mm
9	ar	**590731-09530**	Shim	s= 0.3 mm
9	ar	**590731-09550**	Shim	s= 0.5 mm
9	ar	**590732-09510**	Shim	s= 1.0 mm
10	2	**91744-01201**	T. Roller bearing	
11	2	**91720-22001**	Retainer ring	D220x3
12	2	**535-271-0611**	Ring gear hub	
13	2	**535-261-2110**	Ring gear	
14	2	**143-418-0510**	Lock plate	S=6 mm, punched
15	2	**599-290-8004**	Lock Nut	M90x2
16	2	**590319-08186**	Allen Screw	M8x18
17	2	**590319-08126**	Allen Screw	M8x12
18	2	**591711-05500**	Retainer ring	D55x2
19	2	**535-211-1310**	Sun gear	N55x2x26
20	2	**591711-05500**	Retainer ring	D55x2
21	10	**590169-01670**	Special screw	M16x1.5x70
22	2	**535-231-1310**	Planet carrier	
23	20	**590-353-1100**	Spacer plate	D33.5/55.5x1.47
24	480	**91385-50240**	Needle roller	D5x23.8
25	10	**590-354-3100**	Spacer ring	D33.5/42x7
26	10	**535-241-1310**	Planet gear	
27	10	**535-251-1410**	Planet gear shaft	
28	2	**591109-66052**	O-ring	D266x5.33
29	2	**541-471-0410**	Planetary gear housing	
30	2	**91201-22150**	Seal ring	D22/27x1.5 Cu
31	2	**90873-22109**	Oil plug	M22x1.5, Allen head
32	2	**91201-22150**	Seal ring	D22/27x1.5 Cu
33	2	**90871-22193**	Plug screw	M22x1.5, hex head
34	2	**541-404-0171**	Planetary gear	
35	4	**591122-12501**	Shaft seal	CTI, D125/145x7.5/11,3
36	2	**540-415-1810**	Spacer ring	CTI, D145/137x14.5
37	2	**591720-14501**	Retainer ring	CTI, FK7-ESB - D145/6.0x1.5
38	2	**591107-05022**	O-ring	CTI, D105x2, superceded by item 591107-05252
38	2	**591107-05252**	O-ring	CTI, D105x2.5
39	2	**91106-89532**	O-ring	CTI, D89.5x3
40	2	**579-615-0500**	Pipe	CTI, including fittings

https://truckmanualshub.com/

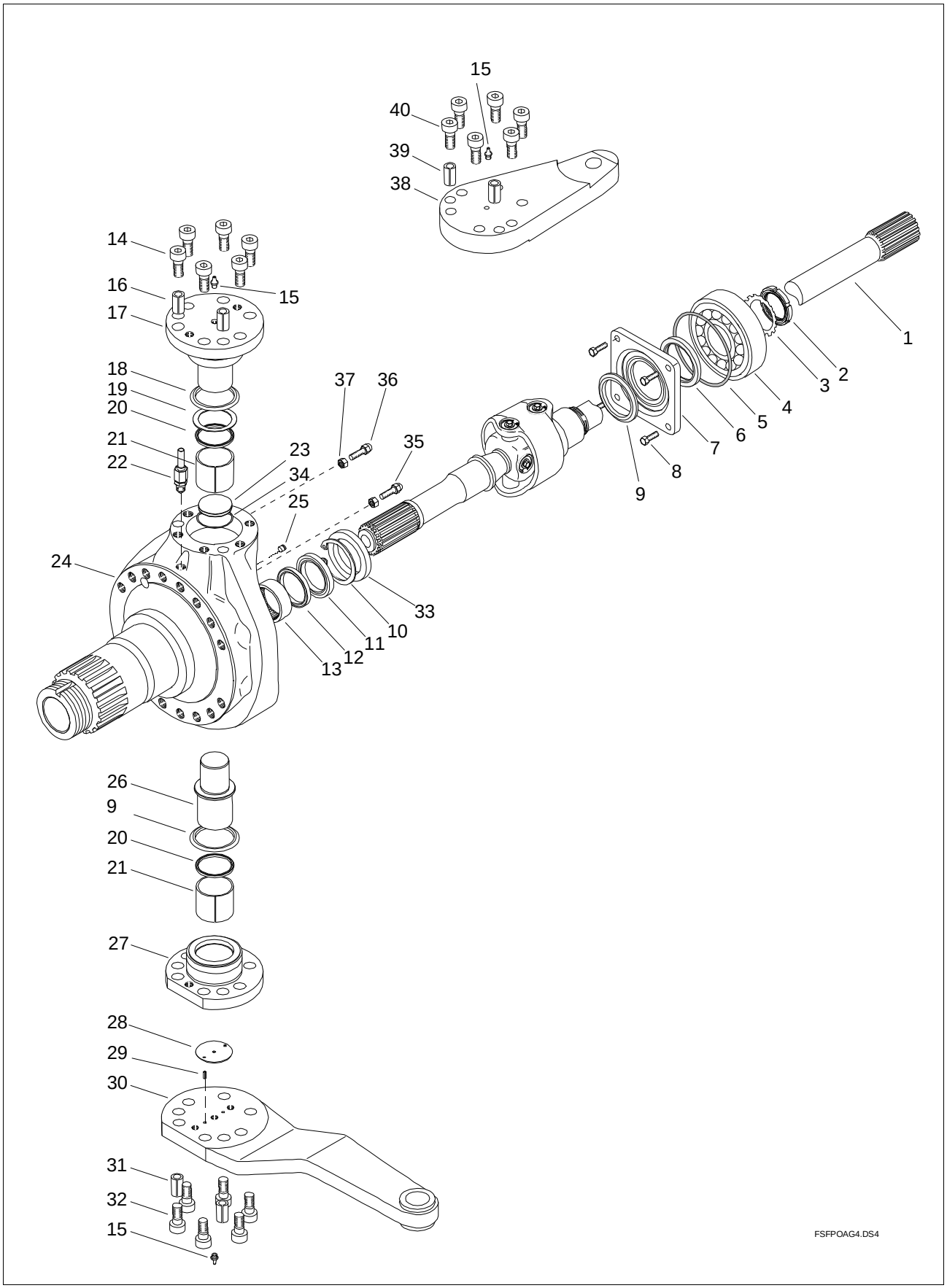

https://truckmanualshub.com/

Item	Qty.	Order no.	Description	Note
1	1	**541-502-0301**	Axle Shaft	FSMP, RH
1	2	**541-502-0311**	Axle Shaft	FSDP
1	1	**541-502-0401**	Axle Shaft	FSMP, LH
2	2	**590575-06040**	Lock Nut	
3	2	**590735-06012**	Lock plate	
4	2	**591733-00601**	Spherical roller bearing	
5	2	**591101-01045**	O-ring	
6	2	**090-500-6501**	Shaft seal	
7	2	**541-532-0000**	Cover	For Gamma-seal, up to No. 00179 (1/2000)
7	2	**541-532-0010**	Cover	For Foam-seal, since No. 00179 (1/2000)
8	8	**90303-10303**	Hex Screw	M10x30
9	2	**590-561-0010**	Gasket	Foam-seal, with cover 541-532-0010
9	2	**591123-06501**	Gamma-seal	+2 pcs with cover 541-532-0000
10	2	**092-957-8000**	Retainer ring	
11	2	**591122-06003**	Shaft seal	
12	2	**91122-06001**	Shaft seal	
13	2	**591738-10601**	Needle bush	
14	12	**90311-16508**	Allen Screw	M16x50, w/o steering arms
15	4	**91402-10003**	Grease nipple	
15	4	**91421-06060**	Shield hat	
16	4	**590602-18400**	Spring cotter	D18x40, w/o steering arms
17	2	**540-121-1710**	King pin	
18	2	**090-400-7000**	Gamma-seal	
19	ar	**590731-05621**	Shim	0.2 mm
19	ar	**590731-05631**	Shim	0.3 mm
19	ar	**590731-05651**	Shim	0.5 mm
19	ar	**599-413-8100**	Spacer plate	1.0 mm
20	4	**591222-05501**	Shaft seal	
21	4	**590-314-8110**	King pin bushing	
22	2	**579-616-0000**	Breather pipe	
22	2	**591937-04027**	Support ring	
22	2	**591952-40610**	Fitting	Angle Fitting 90°
23	2	**595-518-0110**	Plug	
24	2	**541-141-1302**	Steering knuckle	
25	2	**590804-00060**	Plug	
26	2	**540-121-1800**	King pin	
27	2	**540-136-0210**	Bearing housing	
28	2	**599-413-8010**	Thrust washer	
29	4	**590602-04140**	Spring cotter	
30	1	**540-241-6300**	Tie rod arm	RH
30	1	**540-241-6310**	Tie rod arm	LH
31	4	**590602-18600**	Spring cotter	D18x60
32	12	**90311-16608**	Allen Screw	M16x60
33	2	**590-561-0000**	Gasket	Foam-seal, oil before installation
34	2	**591101-04720**	O-ring	
35	2	**140-249-1210**	Stop screw	
36	2	**140-249-1500**	Stop screw	
37	4	**90502-16243**	Nut	
38	1	**540-261-6200**	Steering arm	RH
38	1	**540-261-6210**	Steering arm	LH
39	ar	**590602-18700**	Spring cotter	D18x70, 2 pcs per steering arm
40	ar	**90311-16908**	Allen Screw	M16x90, 6 pcs per steering arm

https://truckmanualshub.com/

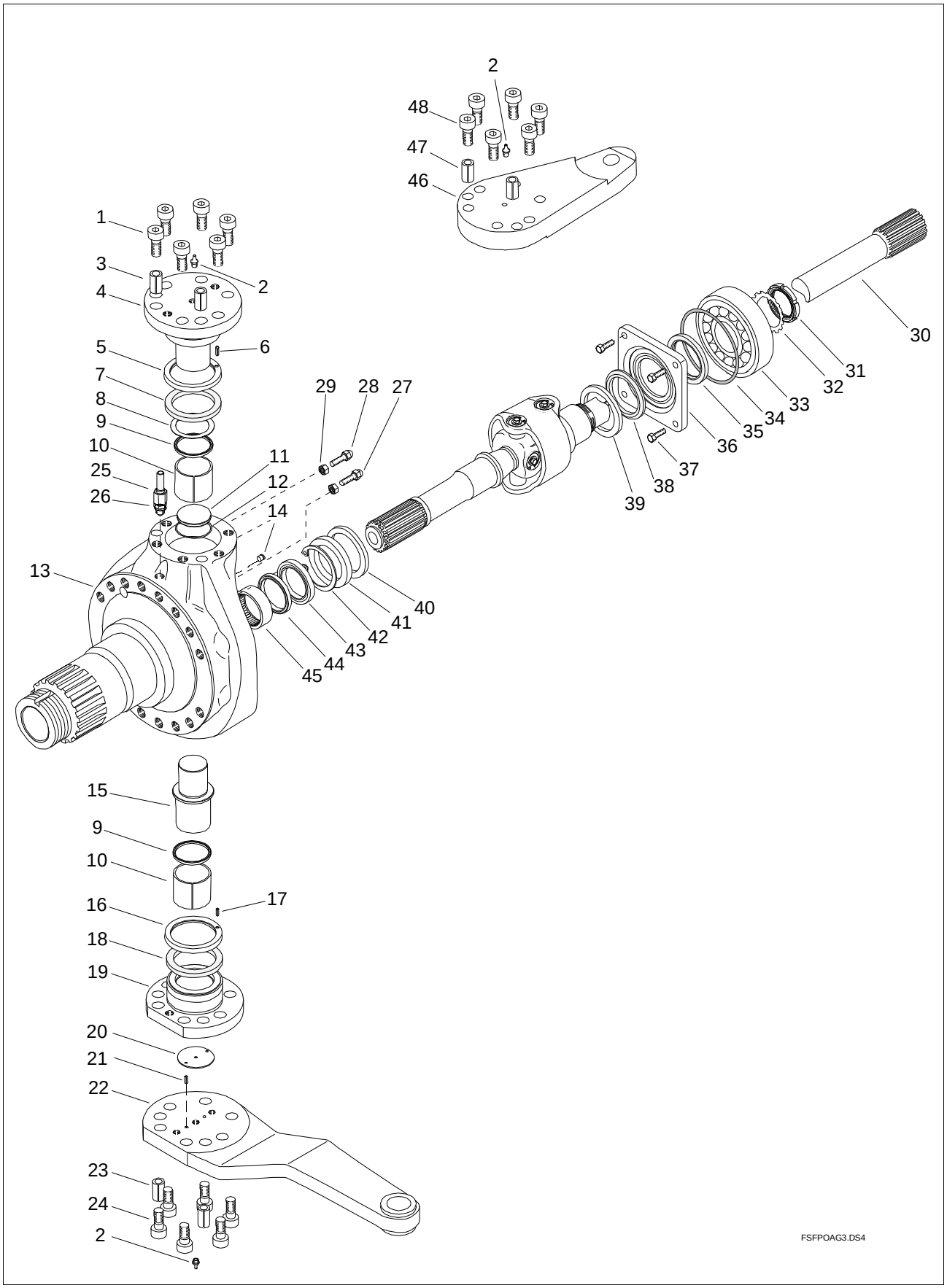

https://truckmanualshub.com/

Item	Qty.	Order no.	Description	Note
1	12	**90311-16508**	Allen Screw	M16x50, w/o steering arms
2		**91402-10003**	Grease nipple	M10x1, Straight
3	4	**590602-18400**	Spring cotter	D18x40, w/o steering arms
4	2	**540-121-2010**	King pin	
5	2	**590-722-1200**	Protective cup	D79.5/93x10.5
6	2	**590602-03100**	Spring cotter	D3x10 mm
7	2	**590-561-0110**	Gasket	Foam-seal, Oil before installation
8	ar	**590731-05621**	Shim	0.2 mm
8	ar	**590731-05631**	Shim	0.3 mm
8	ar	**590731-05651**	Shim	0.5 mm
8	ar	**599-413-8100**	Spacer plate	1.0 mm
9	4	**591222-05501**	Shaft seal	D55/63x5.0
10	4	**590-314-8110**	King pin bushing	D60/55x50
11	2	**595-518-0110**	Plug	D50x6
12	2	**591101-04720**	O-ring	D47x2
13	2	**541-141-1303**	Steering knuckle	
15	2	**540-121-1800**	King pin	
16	2	**590-722-1210**	Protective cup	D65/93x11
17	2	**590111-29064**	Rivet	2.89x6.35
18	2	**590-561-0200**	Gasket	Foam-seal, Oil before installation
19	2	**540-136-0301**	Bearing housing	
20	2	**599-413-8010**	Thrust washer	D55x2.5
21	4	**590602-04140**	Spring cotter	D4x14
22	1	**540-241-6200**	Tie rod arm	RH, L=360 mm, Taper 1:10
22	1	**540-241-6210**	Tie rod arm	LH, L=360 mm, Taper 1:10
22	1	**540-241-6300**	Tie rod arm	RH, L=420 mm, Taper 1:10
22	1	**540-241-6310**	Tie rod arm	LH, L=420 mm, Taper 1:10
22	1	**540-241-7000**	Tie rod arm	RH, L=310 mm, Taper 1:10, For hydraulic steering
22	1	**540-241-7010**	Tie rod arm	LH, L=310 mm, Taper 1:10, For hydraulic steering
23	4	**590602-18600**	Spring cotter	D18x60
24	12	**90311-16608**	Allen Screw	M16x60
25	2	**579-616-0000**	Breather pipe	D6/4, L=1500
25	2	**591937-04027**	Support ring	D4
26	2	**591952-40610**	Fitting	M10x1, D6/4
27	2	**140-249-1210**	Stop screw	Total L=52mm
28	2	**140-249-1500**	Stop screw	Total L=65mm
29	4	**90502-16243**	Nut	M16
30	2	**541-502-0311**	Axle Shaft	L=1200, track 2360
30	2	**541-502-0411**	Axle Shaft	L=1310, track 2580
31	2	**590575-06040**	Lock Nut	M60x2, KM12
32	2	**590735-06012**	Lock plate	MB12, D60x1.5
33	2	**591733-00601**	Spherical roller bearing	D60/110x28
34	2	**591101-01045**	O-ring	D101x4.5
35	2	**090-500-6501**	Shaft seal	D65/90x10
36	2	**541-532-0010**	Cover	For Foam-seal
37	8	**90303-10303**	Hex Screw	M10x30
38	2	**590-561-0300**	Gasket	Foam-seal, Oil before installation
39	2	**590-711-9110**	Protective cup	D85x9
40	2	**590-711-9100**	Seal housing	
41	2	**590-561-0210**	Gasket	Foam-seal, Oil before installation
42	2	**092-957-8000**	Retainer ring	D80x2.5
43	2	**591122-06003**	Shaft seal	D60/80x12
44	2	**91122-06001**	Shaft seal	D60/75x8
45	2	**591738-10601**	Needle bush	D60/72x35
46	1	**540-261-6200**	Steering arm	RH, L=215 mm, Taper 1:8, big end down
46	1	**540-261-6210**	Steering arm	LH, L=215 mm, Taper 1:8, big end down
46	1	**540-261-7100**	Steering arm	RH, L=271 mm, Taper 1:8, big end up
46	1	**540-261-7110**	Steering arm	LH, L=271 mm, Taper 1:8, big end up
46	1	**540-261-7500**	Steering arm	RH, L=271 mm, Taper 1:8, big end down, S/N 143555
46	1	**540-261-7510**	Steering arm	LH, L=271 mm, Taper 1:8, big end down, S/N 143555
47	ar	**590602-18700**	Spring cotter	D18x70, 2 pcs per steering arm
48	ar	**90311-16908**	Allen Screw	M16x90, 6 pcs per steering arm

https://truckmanualshub.com/

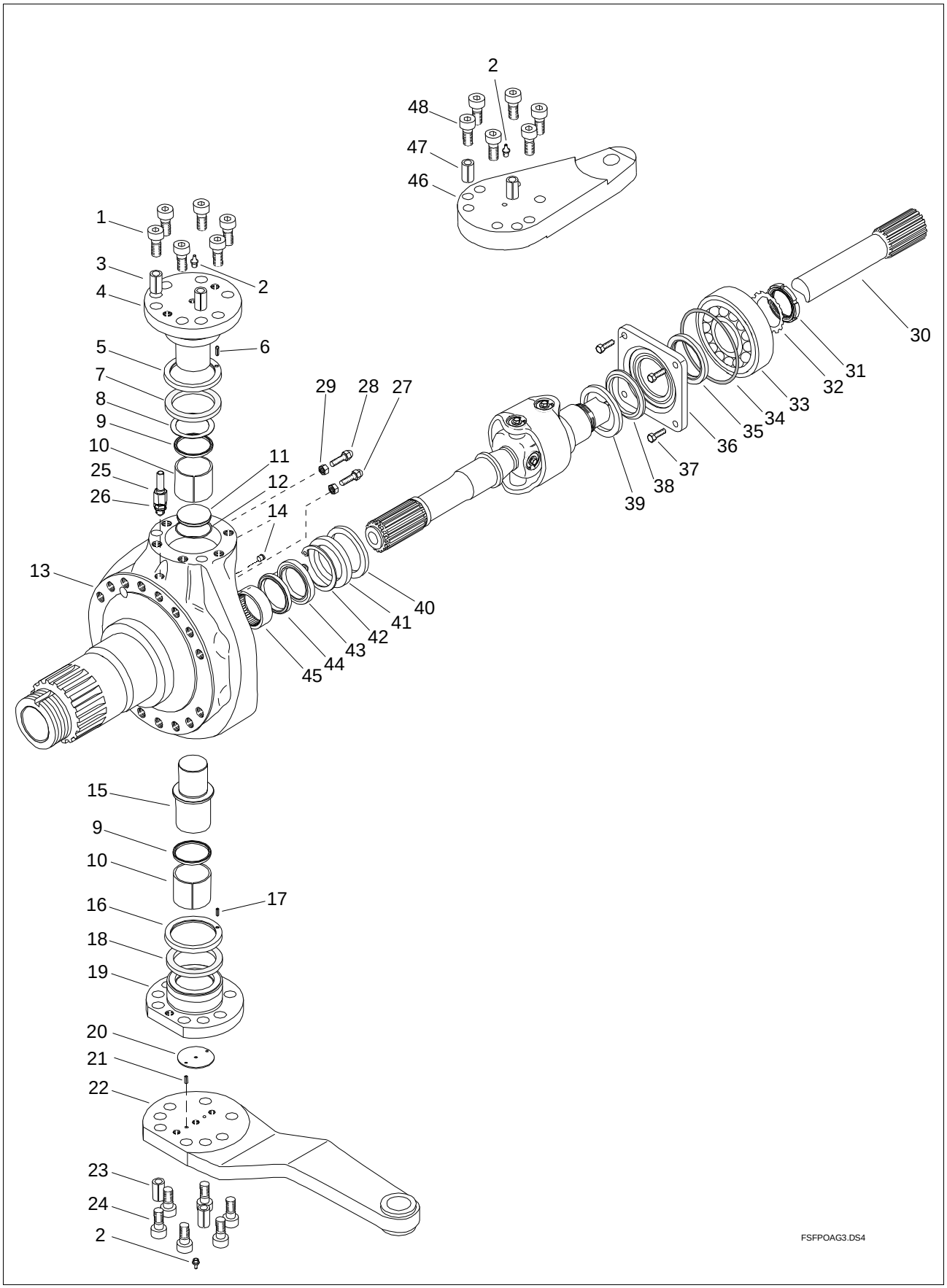

https://truckmanualshub.com/

Item	Qty.	Order no.	Description	Note
1	12	**90311-16508**	Allen Screw	M16x50, w/o steering arms
2		**91402-10003**	Grease nipple	M10x1, Straight
3	4	**590602-18400**	Spring cotter	D18x40, w/o steering arms
4	2	**540-121-2010**	King pin	
5	2	**590-722-1200**	Protective cup	D79.5/93x10.5
6	2	**590602-03100**	Spring cotter	D3x10 mm
7	2	**590-561-0110**	Gasket	Foam-seal, Oil before installation
8	ar	**590731-05621**	Shim	0.2 mm
8	ar	**590731-05631**	Shim	0.3 mm
8	ar	**590731-05651**	Shim	0.5 mm
8	ar	**599-413-8100**	Spacer plate	1.0 mm
9	4	**591222-05501**	Shaft seal	D55/63x5.0
10	4	**590-314-8110**	King pin bushing	D60/55x50
11	2	**595-518-0110**	Plug	D50x6
12	2	**591101-04720**	O-ring	D47x2
13	2	**541-141-1303**	Steering knuckle	W/o CTI-system
13	2	**541-141-1600**	Steering knuckle	With CTI-system
15	2	**540-121-1800**	King pin	
16	2	**590-722-1210**	Protective cup	D65/93x11
17	2	**590111-29064**	Rivet	2.89x6.35
18	2	**590-561-0200**	Gasket	Foam-seal, Oil before installation
19	2	**540-136-0301**	Bearing housing	
20	2	**599-413-8010**	Thrust washer	D55x2.5
21	4	**590602-04140**	Spring cotter	D4x14
22	1	**540-241-6200**	Tie rod arm	RH, L=360 mm, Taper 1:10
22	1	**540-241-6210**	Tie rod arm	LH, L=360 mm, Taper 1:10
22	1	**540-241-6300**	Tie rod arm	RH, L=420 mm, Taper 1:10
22	1	**540-241-6310**	Tie rod arm	LH, L=420 mm, Taper 1:10
22	1	**540-241-7000**	Tie rod arm	RH, L=310 mm, Taper 1:10, For hydraulic steering
22	1	**540-241-7010**	Tie rod arm	LH, L=310 mm, Taper 1:10, For hydraulic steering
23	4	**590602-18600**	Spring cotter	D18x60
24	12	**90311-16608**	Allen Screw	M16x60
25	2	**579-616-0010**	Breather pipe	D8/6, L=1500
25	2	**591937-06027**	Support ring	D6
26	2	**591952-40810**	Fitting	M10x1, D8/6
27	2	**140-249-1210**	Stop screw	Total L=52mm
28	2	**140-249-1500**	Stop screw	Total L=65mm
29	4	**90502-16243**	Nut	M16
30	1	**541-502-0301**	Axle Shaft	L=1150, LH, track 2360
30	1	**541-502-0401**	Axle Shaft	L=1255, LH, track 2580
30	1	**541-502-0401**	Axle Shaft	L=1255, RH, track 2360
30	1	**541-502-0441**	Axle Shaft	L=1345, RH, track 2580
31	2	**590575-06040**	Lock Nut	M60x2, KM12
32	2	**590735-06012**	Lock plate	MB12, D60x1.5
33	2	**591733-00601**	Spherical roller bearing	D60/110x28
34	2	**591101-01045**	O-ring	D101x4.5
35	2	**090-500-6501**	Shaft seal	D65/90x10
36	2	**541-532-0010**	Cover	For Foam-seal
37	8	**90303-10303**	Hex Screw	M10x30
38	2	**590-561-0300**	Gasket	Foam-seal, Oil before installation
39	2	**590-711-9110**	Protective cup	D85x9
40	2	**590-711-9100**	Seal housing	
41	2	**590-561-0210**	Gasket	Foam-seal, Oil before installation
42	2	**092-957-8000**	Retainer ring	D80x2.5
43	2	**591122-06003**	Shaft seal	D60/80x12
44	2	**91122-06001**	Shaft seal	D60/75x8
45	2	**591738-10601**	Needle bush	D60/72x35
46	2	**504-0310-301**	Steering arm	L=216 mm, Taper 1:8, big end down
46	1	**540-261-6200**	Steering arm	RH, L=215 mm, Taper 1:8, big end down
46	1	**540-261-6210**	Steering arm	LH, L=215 mm, Taper 1:8, big end down
46	1	**540-261-7100**	Steering arm	RH, L=271 mm, Taper 1:8, big end up
46	1	**540-261-7110**	Steering arm	LH, L=271 mm, Taper 1:8, big end up
46	1	**540-261-7500**	Steering arm	RH, L=271 mm, Taper 1:8, big end down1
46	1	**540-261-7510**	Steering arm	LH, L=271 mm, Taper 1:8, big end down

https://truckmanualshub.com/

47	ar	**590602-18700**	Spring cotter	D18x70, 2 pcs per steering arm
48	ar	**590311-16808**	Allen Screw	M16x80, 6 pcs per steering arm

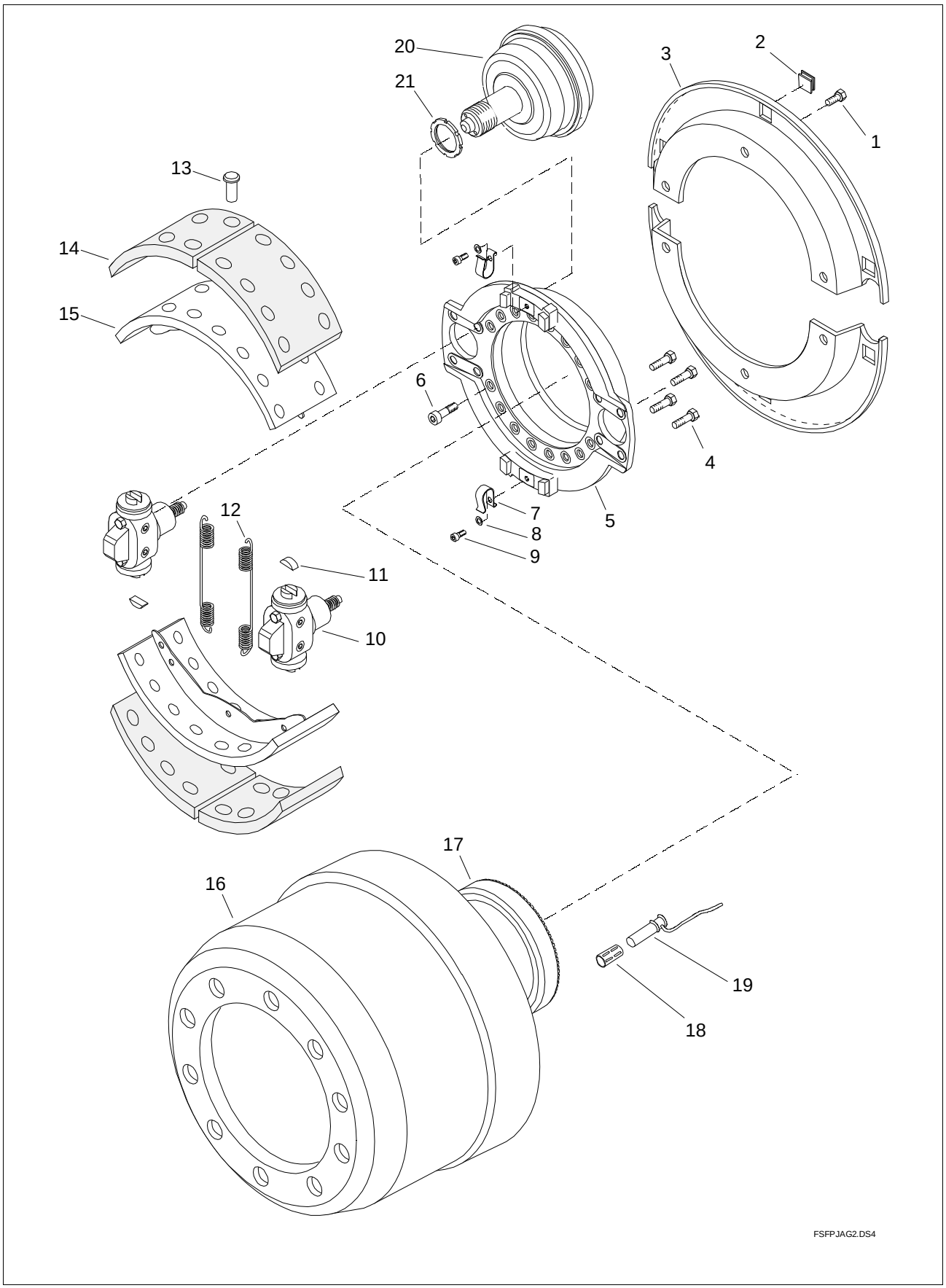

https://truckmanualshub.com/

Item	Qty.	Order no.	Description	Note
1	12	**90313-08123**	Allen Screw	M8x12
1	12	**90705-08423**	washer	D8.4/17x1.6
2	12	**591426-02000**	Plug	
3	4	**546-131-7011**	Dust Shield	
4	16	**590316-14358**	Screw	Not serviced separately
4	16	**590707-14223**	washer	Not serviced separately
5	2	**546-111-3601**	Brake Bracket	
6	32	**90311-16608**	Allen Screw	M16x60
7	4	**546-817-0010**	Bracket	Including pos. 8 & 9, Not serviced separately
8	4	**590710-10547**	washer	Not serviced separately
9	4	**590317-10163**	Hex Screw	Not serviced separately
10	2	**546-011-0011**	Expander	RH, Including pos. 4
10	2	**546-011-0021**	Expander	LH, Including pos. 4
11	4	**546-358-0300**	Sliding shoe	
12	ar	**546-099-0001**	Repair kit of springs	For two wheels (inc. 7-9,12)
12	4	**592052-24002**	Return spring	Not serviced separately
13	96	**591501-00991**	Rivet	Not serviced separately
14	ar	**546-360-2111**	Brake lining set	200 mm, For two wheels, including rivets
14	ar	**546-360-2121**	Br. lining set(over size)	200 mm, For two wheels, including rivets
15	4	**546-309-9811**	Brake shoe assy	200 mm, Complete with linings
16	2	**546-311-8111**	Brake drum	Supersession for 146-311-7210 & 546-311-8200
17	2	**589-291-0300**	Ring gear	ABS
18	2	**189-295-0000**	Bush	ABS
19	2	**189-250-0071**	Sensor	ABS, Wabco
19	2	**589-250-0081**	Sensor	ABS, Knorr, protected wire
20	4	**572-101-2271**	Brake chamber	20"
20	4	**572-101-2281**	Brake chamber	18"
20	4	**572-101-2312**	Brake chamber	12"
20	4	**572-103-5231**	Spring Brake Chamber	20/24"
21	0	**599-246-9010**	Lock Nut	Superceded by item 599-246-9100
21	4	**599-246-9100**	Lock Nut	1.75-12 UNS