https://truckmanualshub.com/

BOMAG
FAYAT GROUP

Operating Instruction
Maintenance Instruction

Original Operating Instructions

BPR 50/55 D / BPR 60/65 D

Go to Discount-Equipment.com to order your parts

S/N 101 692 82 1001> / S/N 101 692 83 1001> / S/N 101 692 91 1001> / S/N 101 692 92 1001>

Reversible Vibrating Plate

Discount Equipment
www.discount-equipment.com

008 201 24 EN

© 12/2014

https://truckmanualshub.com/

PARTS FINDER

Search Website by Part Number

Discount Equipment

Search Manual Library For Parts Manual & Lookup Part Numbers – Purchase or Request Quote

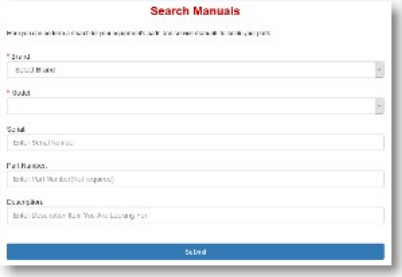

Can't Find Part or Manual? Request Help by Manufacturer, Model & Description

Discount-Equipment.com is your online resource for quality parts & equipment.

Florida: 561-964-4949 Outside Florida TOLL FREE: 877-690-3101

Need parts?

Click on this link: http://www.discount-equipment.com/category/5443-parts/ and choose one of the options to help get the right parts and equipment you are looking for. Please have the machine model and serial number available in order to help us get you the correct parts. If you don't find the part on the website or on one of the online manuals, please fill out the request form and one of our experienced staff members will get back to you with a quote for the right part that your machine needs.

We sell worldwide for the brands: Genie, Terex, JLG, MultiQuip, Mikasa, Essick, Whiteman, Mayco, Toro Stone, Diamond Products, Generac Magnum, Airman, Haulotte, Barreto, Power Blanket, Nifty Lift, Atlas Copco, Chicago Pneumatic, Allmand, Miller Curber, Skyjack, Lull, Skytrak, Tsurumi, Husquvarna Target, Stow, Wacker, Sakai, Mi-T-M, Sullair, Basic, Dynapac, MBW, Weber, Bartell, Bennar Newman, Haulotte, Ditch Runner, Menegotti, Morrison, Contec, Buddy, Crown, Edco, Wyco, Bomag, Laymor, EZ Trench, Bil-Jax, F.S. Curtis, Gehl Pavers, Heli, Honda, ICS/PowerGrit, IHI, Partner, Imer, Clipper, MMD, Koshin, Rice, CH&E, General Equipment ,Amida, Coleman, NAC, Gradall, Square Shooter, Kent, Stanley, Tamco, Toku, Hatz, Kohler, Robin, Wisconsin, Northrock, Oztec, Toker TK, Rol-Air, APT, Wylie, Ingersoll Rand / Doosan, Innovatech, Con X, Ammann, Mecalac, Makinex, Smith Surface Prep,Small Line, Wanco, Yanmar

https://truckmanualshub.com/

Table of contents

1 Foreword **5**

2 Technical data **9**

2.1 Technical data BPR 50/55 D **10**

2.1.1 Noise and vibration data 12

2.2 Technical data BPR 60/65 D **13**

2.2.1 Noise and vibration data 15

3 Safety regulations **17**

4 Display and control elements **25**

4.1 General notes **26**

4.2 Description of indicators and control elements **27**

4.3 Function of the Economizer **29**

5 Operation **31**

5.1 General **32**

5.2 Tests before taking into operation **33**

5.3 Folding down the steering rod **34**

5.4 Starting the engine electrically **35**

5.5 Starting with recoil starter **37**

5.6 Operation of Economizer **40**

5.7 Work/operation **42**

5.8 Shutting down the engine **44**

5.9 Loading/transport **45**

6 Maintenance **47**

6.1 General notes on maintenance **48**

6.2 Fuels and lubricants **50**

6.2.1 Engine oil 50

6.2.2 Fuel 51

6.2.3 Mineral oil based hydraulic oil 52

6.3 Table of fuels and lubricants **53**

6.4 Running-in instructions **54**

6.4.1 General 54

6.4.2 After 25 operating hours 54

6.5 Maintenance table **55**

6.6 Daily maintenance **56**

6.6.1 Clean the machine 56

6.6.2 Checking the engine oil level 56

6.6.3 Check the fuel level 57

6.6.4 Check, clean the water separator 58

6.7 Monthly maintenance **59**

6.7.1 Battery service 59

6.7.2 Air filter maintenance 60

6.7.3 Cleaning the cooling fins and the cooling air intake openings 62

6.8 Half-annual maintenance **63**

6.8.1 Checking the oil level in the exciter housing 63

6.8.2 Servicing the V-belt 63

Go to DiscountEquipment.com to order your parts

https://truckmanualshub.com/

Table of contents

6.8.3 Checking, adjusting the valve clearance 64
6.8.4 Checking the screw joints on the diesel engine 66
6.9 Annual maintenance 68
6.9.1 Changing the engine oil and cleaning the oil filter 68
6.9.2 Replace the fuel filter 70
6.9.3 Replacing the starter rope 71
6.9.4 Changing the oil in the exciter housing 73
6.9.5 Check the hydraulic oil level 74
6.9.6 Check the rubber buffers 76
6.10 As required 77
6.10.1 Tightening the screws 77
6.10.2 Engine conservation 77

7 Trouble shooting 79
7.1 General notes 80
7.2 Starting with jump wires 81
7.3 Fuses 82
7.4 Engine problems 83
7.5 Trouble shooting Economizer 85

8 Disposal 87
8.1 Final shut-down of machine 88

Go to Discount-Equipment.com to order your parts

https://truckmanualshub.com/

1 Foreword

Go to Discount-Equipment.com to order your parts

https://truckmanualshub.com/

Foreword

BOMAG manufactures machine for earth, asphalt and refuse compaction, stabilizers/recyclers as well as milling machine and finishers.

BOMAG's vast experience in connection with state-of-the-art production and testing methods, such as lifetime tests of all important components and highest quality demands guarantee maximum reliability of your machine.

This manual comprises:

- Safety regulations
- Operating instructions
- maintenance instructions
- Trouble shooting

Using these instructions will

- help you to become familiar with the machine.
- avoid malfunctions caused by unprofessional operation.

Compliance with the maintenance instructions will

- enhance the reliability of the machine on construction sites,
- prolong the lifetime of the machine,
- reduce repair costs and downtimes.

BOMAG will not assume liability for the function of the machine

- if it is handled in a way not complying with the usual modes of use,
- if it is used for purposes other than those mentioned in these instructions.

No warranty claims can be lodged in case of damage resulting from

- operating errors,
- insufficient maintenance and
- wrong fuels and lubricants.

Please note!

This manual was written for operators and maintenance personnel on construction sites.

These operating and maintenance instructions are part of the machine.

You should only operate the machine after you have been instructed and in compliance with these instructions.

Strictly observe the safety regulations.

Please observe also the guidelines of the Civil Engineering Liability Association "Safety Rules for the Operation of Road Rollers and Soil Compactors" and all relevant accident prevention regulations.

For your own personal safety you should only use original spare parts from BOMAG.

For your machine BOMAG offers service kits to make maintenance easier.

In the course of technical development we reserve the right for technical modifications without prior notification.

Go to Discount-Equipment.com to order your parts

https://truckmanualshub.com/

These operating and maintenance instructions are also available in other languages.

Apart from that, the spare parts catalogue is available from your BOMAG dealer against the serial number of your machine.

Your BOMAG dealer will also supply you with information about the correct use of our machines in soil and asphalt construction.

The above notes do not constitute an extension of the warranty and liability conditions specified in the general terms of business of BOMAG.

We wish you successful work with your BOMAG machine.

BOMAG GmbH

Copyright by BOMAG

Please fill in

. . . . . .

Machine type (Fig. 1)

. . . . . .

Serial No. (Fig. 1 and 2)

. . . . . .

Engine type (Fig. 3)

. . . . . .

Engine No. (Fig. 3)

Supplement the above data together with the commissioning protocol.

During commissioning our organisation will instruct you in the operation and maintenance of the machine.

Please observe strictly the safety regulations and all notes on risks and dangers!

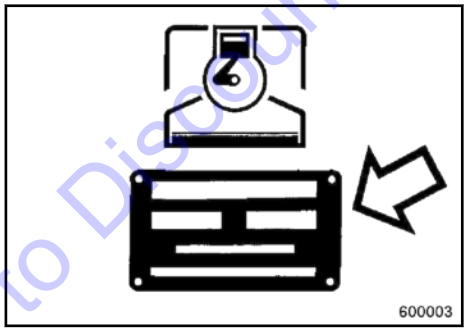

Fig. 1

Go to Discount-Equipment.com to order your parts

https://truckmanualshub.com/

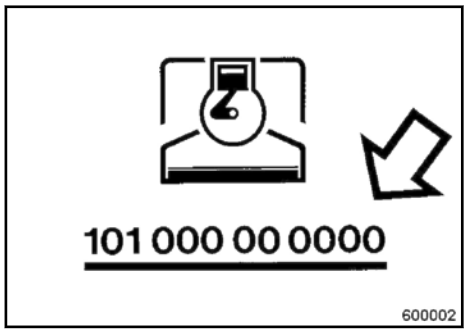

Fig. 2

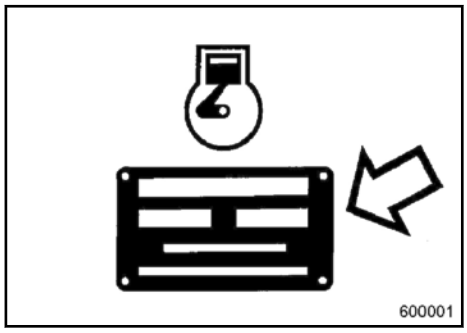

Fig. 3

Go to Discount-Equipment.com to order your parts

https://truckmanualshub.com/

2 Technical data

Go to Discount-Equipment.com to order your parts

https://truckmanualshub.com/

2.1 Technical data BPR 50/55 D

Dimensions

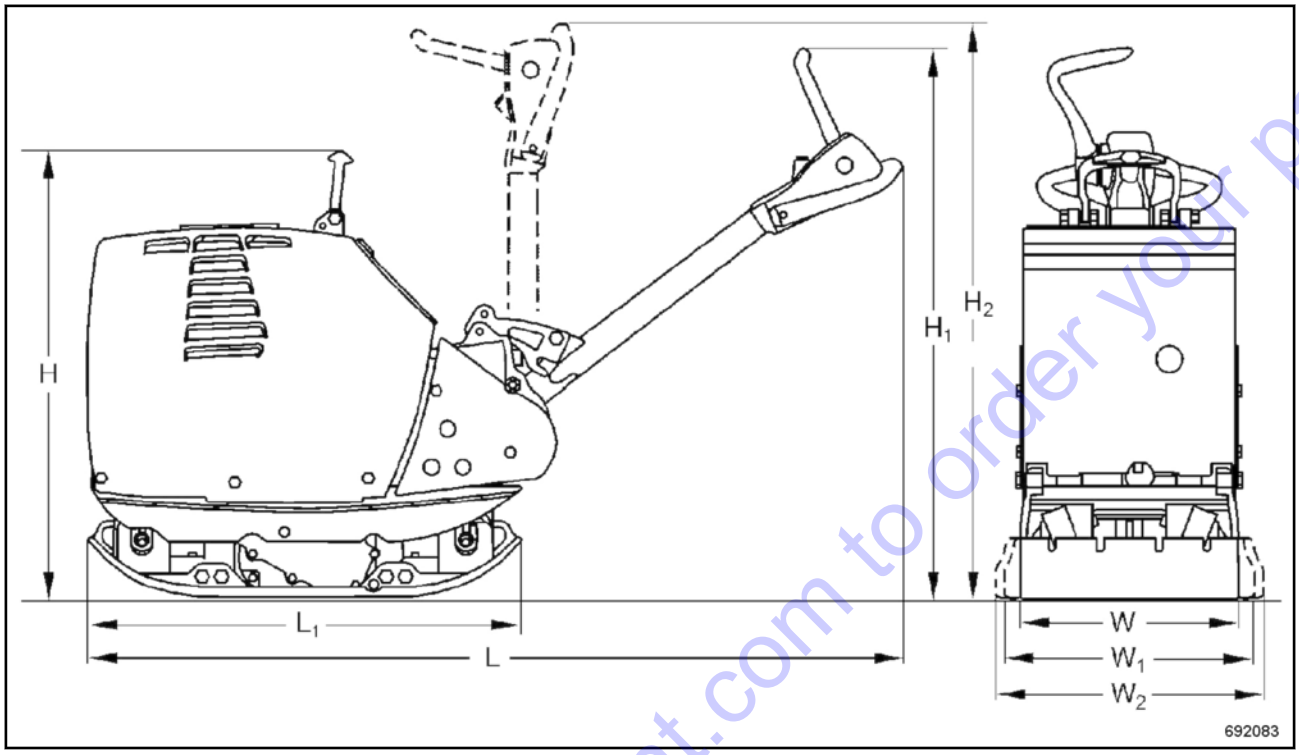

Fig. 4

H	H_1	H_2	L	L_1	W	W_1	W_2
790 (31.1)	980 (38.6)	1350 (53.2)	1700 (66.9)	900 (35.4)	450 (17.7)	550 (21.7)	750 (29.5)
Dimensions in millimetre (Dimensions in inch)							

Weights		
Operating weight (CECE) (W)	385 (849)	kg (lbs)
Operating weight (CECE) (W_1)	400 (882)	kg (lbs)
Operating weight (CECE) (W_2)	415 (915)	kg (lbs)
Basic weight	395 (871)	kg (lbs)

Go to Discount-Equipment.com to order your parts

https://truckmanualshub.com/

Weights		
"STONEGUARD" (special base plate for paving stones) *(optional equipment)*	+ 27 (+ 60)	kg (lbs)
ECONOMIZER *(optional equipment)*	+ 5 (+ 11)	kg (lbs)

Travel characteristics		
Max. working speed	28 (92)	m/min (ft/min)
Max. gradability (depending on soil)	35	%

Drive		
Engine manufacturer	Hatz	
Type	1B40	
Cooling	Air	
Number of cylinders	1	
Rated power ISO 3046	6.7 (9.0)	kW (hp)
Rated speed	3000	min^{-1}
Drive system	mechanical	

Exciter system		
Frequency	66 (3960)	Hz (vpm)
Centrifugal force	50 (11241)	kN (lbf)
Amplitude	1.85 (0,073)	mm (in)

Filling capacities		
Fuel (diesel)	5.0 (1.3)	l (gal us)

Go to Discount-Equipment.com to order your parts

https://truckmanualshub.com/

2.1.1 Noise and vibration data

The following noise and vibration data were determined in accordance with the following guidelines under equipment specific conditions and by using harmonized standards:

- EC Machine Directive edition 2006/42/EC
- Noise Emission Directive 2000/14/EC, Noise Protection Directive 2003/10/EC
- Vibration Protection Directive 2002/44/EC

During operation these values may vary because of the prevailing operating conditions.

2.1.1.1 Noise data

Sound pressure level at the operator's place

L_{pA} = 95 dB(A), determined acc. to ISO 11204 and EN 500.

WARNING!

Loos of hearing caused by too high noise burdens!

– Wear your personal protective outfit (ear defenders).

Guaranteed sound power level

L_{WA} = 108 dB(A), determined acc. to ISO 3744 and EN 500.

2.1.1.2 Vibration data

Hand-arm vibration

Vector total of the weighted effective acceleration in three orthogonal directions:

Weighted total vibration value

a_{hv} = 8.7 m/s^2 on crushed rock determined acc. to ISO 5349 and EN 500.

Observe the daily vibration load (Industrial safety acc. to 2002/44/EEC).

Go to Discount-Equipment.com to order your parts

https://truckmanualshub.com/

2.2 Technical data BPR 60/65 D

Dimensions

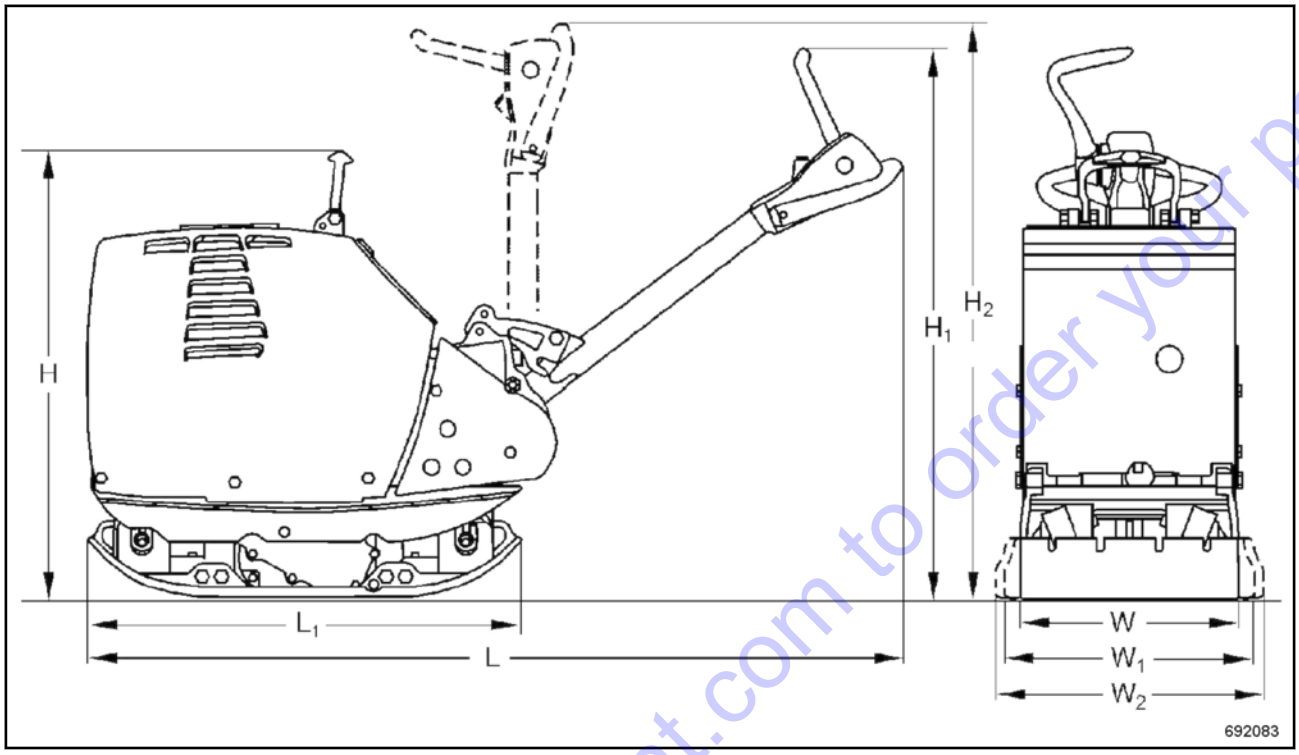

Fig. 5

H	H_1	H_2	L	L_1	W	W_1	W_2
790 (31.1)	980 (38.6)	1350 (53.2)	1700 (66.9)	900 (35.4)	450 (17.7)	650 (25.6)	750 (29.5)
Dimensions in millimetre (Dimensions in inch)							

Weights		
Operating weight (CECE) (W)	435 (959)	kg (lbs)
Operating weight (CECE) (W_1)	455 (1003)	kg (lbs)
Operating weight (CECE) (W_2)	466 (1027)	kg (lbs)
Basic weight	450 (992)	kg (lbs)

Go to Discount-Equipment.com to order your parts

https://truckmanualshub.com/

Technical data – Technical data BPR 60/65 D

Weights		
"STONEGUARD" (special base plate for paving stones) *(optional equipment)*	+ 27 (+ 60)	kg (lbs)
ECONOMIZER *(optional equipment)*	+ 5 (+ 11)	kg (lbs)

Travel characteristics		
Max. working speed	28 (92)	m/min (ft/min)
Max. gradability (depending on soil)	35	%

Drive		
Engine manufacturer	Hatz	
Type	1B40	
Cooling	Air	
Number of cylinders	1	
Rated power ISO 3046	6.7 (9.0)	kW (hp)
Rated speed	3000	min^{-1}
Drive system	mechanical	

Exciter system		
Frequency	66 (3960)	Hz (vpm)
Centrifugal force	60 (13489)	kN (lbf)
Amplitude	1.96 (0,077)	mm (in)

Filling capacities		
Fuel (diesel)	5.0 (1.3)	l (gal us)

Go to Discount-Equipment.com to order your parts

https://truckmanualshub.com/

2.2.1 Noise and vibration data

The following noise and vibration data were determined in accordance with the following guidelines under equipment specific conditions and by using harmonized standards:

- EC Machine Directive edition 2006/42/EC
- Noise Emission Directive 2000/14/EC, Noise Protection Directive 2003/10/EC
- Vibration Protection Directive 2002/44/EC

During operation these values may vary because of the prevailing operating conditions.

2.2.1.1 Noise data

Sound pressure level at the operator's place

L_{pA} = 95 dB(A), determined acc. to ISO 11204 and EN 500.

WARNING!

Loos of hearing caused by too high noise burdens!

– Wear your personal protective outfit (ear defenders).

Guaranteed sound power level

L_{WA} = 108 dB(A), determined acc. to ISO 3744 and EN 500.

2.2.1.2 Vibration data

Hand-arm vibration

Vector total of the weighted effective acceleration in three orthogonal directions:

Weighted total vibration value

a_{hv} = 8.7 m/s^2 on crushed rock determined acc. to ISO 5349 and EN 500.

Observe the daily vibration load (Industrial safety acc. to 2002/44/EEC).

Go to Discount-Equipment.com to order your parts

https://truckmanualshub.com/

Go to Discount-Equipment.com to order your parts

https://truckmanualshub.com/

3 Safety regulations

Go to Discount-Equipment.com to order your parts

https://truckmanualshub.com/

Safety regulations

General

This BOMAG machine has been built in compliance with the latest technical standard and complies with the applicable regulations and technical rules. However, dangers for persons and property may arise from this machine, if:

- it is used for purposes other than the ones it is intended for,
- it is operated by untrained personnel,
- it is changed or converted in an unprofessional way,
- the safety instructions are not observed.

Each person involved in the operation, maintenance and repair of the machine must therefore read and comply with these safety regulations. If necessary, this must be confirmed by obtaining the signature of the customer.

Furthermore, the following obviously also applies:

- applicable accident prevention instructions,
- generally accepted safety and road traffic regulations,
- country specific safety regulations. It is the duty of the operator to be acquainted with these instructions and to apply these accordingly. This applies also for local regulations concerning different types of handling work. Should the recommendations in these instructions be different from the regulations valid in your country, you must comply with the safety regulations valid in your country.

Intended use

This machine must only be used for:

- Compaction of all types of soils
- Repair work on all types of soil
- Paving of walkways
- Work in trenches
- Underfilling and compaction of hard shoulders

Unintended use

Dangers may arise from the machine when it is used for purposes other than the one it is intended for.

Any danger caused by intended use is the sole responsibility of the customer or driver/operator, the manufacturer cannot be made liable.

Examples for unintended use are:

- Dragging the machine along as a measure of transportation
- Throwing the machine off the transport vehicle
- Attaching an additional weight to the machine

It is not permitted to stand on the machine while working.

Any transport ropes fastened to the machine must be removed before operation.

Starting and operation of the machine in explosive environments and in underground mining is prohibited.

Go to Discount-Equipment.com to order your parts

https://truckmanualshub.com/

Remaining dangers, remaining risks

Despite careful work and compliance with standards and regulations it cannot be ruled out that further dangers may arise when working with and handling the machine.

Both the machine as well as all other system components comply with the currently valid safety regulations. Nevertheless, remaining risks cannot be ruled out completely, even when using the machine for the purpose it is intended for and following all information given in the operating instructions.

A remaining risk can also not be excluded beyond the actual danger zone of the machine. Persons remaining in this area must pay particular attention to the machine, so that they can react immediately in case of a possible malfunction, an incident or failure etc.

All persons remaining ion the area of the machine must be informed about the dangers that arise from the operation of the machine.

Regular safety inspections

Have the machine inspected by an expert (capable person) as required for the conditiosn the machine is working under, but at least once every year.

Who is allowed to operate the machine?

Only trained, instructed and authorized persons of at least 18 years of age are permitted to drive and operate this machine. For operation of the machine the responsibilities must be clearly specified and complied with.

Persons under the influence of alcohol, medicine or drugs are not allowed to operate, service or repair the machine.

Maintenance and repair work requires specific knowledge and must therefore only be performed by trained specialists.

Changes and conversions to the machine

Unauthorized changes to the machine are prohibited for safety reasons.

Original parts and accessories have been specially designed for this machine.

We wish to make explicitly clear that we have not tested or approved any parts or accessories not supplied by us.

The installation and/or use of such products may have an adverse effect on the active and/or passive safety.

The manufacturer explicitly excludes any liability for damage caused by the use of non-original parts or accessories.

Damage, deficiencies, misuse of safety installations

Machines which are not safe to operate must be immediately taken out of service and shall not be used, until these deficiencies have been properly rectified.

Safety installations and switches must neither be removed nor must they be made ineffective.

Go to Discount-Equipment.com to order your parts

https://truckmanualshub.com/

Notes on safety in the operating and maintenance instructions

WARNING!

Paragraphs marked like this highlight possible dangers for persons.

NOTICE!

Paragraphs marked like this highlight possible dangers for machines or parts of the machine.

Paragraphs marked like this contain technical information for the optimal economical use of the machine.

ENVIRONMENT!

Paragraphs marked like this point out practices for safe and environmental disposal of fuels and lubricants as well as replacement parts.

Observe the regulations for the protection of the environment.

Loading/transporting the machine

Make sure that persons are not endangered by the machine tipping or sliding off.

Use only safe lifting gear of sufficient load bearing capacity Minimum lifting capacity of lifting gear: see operating weight in chapter "Technical Data".

Loads must only be attached and hoisted by an expert (capable person).

Fasten the lifting gear only at the specified lifting points.

Check lifting eye for damage before use. Do not use a damaged or in any other way impaired lifting eye.

Do not lift or lower the machine jerkily.

The tension must always be effective in vertical direction.

The machine must not swing about when being lifted.

Do not step or stand under suspended loads.

Always use suitable lashing gear on the lifting points to lash down the machine.

Lash the machine down, so that it is secured against rolling, sliding and turning over.

Starting the machine

Before starting

Become acquainted with the equipment, the control elements, the working principle of the machine and the working area.

Go to Discount-Equipment.com to order your parts

https://truckmanualshub.com/

Wear your personal protective outfit (hard hat, safety boots, etc.). Wear ear defenders.

Before starting the machine check whether:

- the machine shows any obvious faults
- all guards and safety elements are in place
- the controls are fully functional
- the machine is free of oily and combustible material
- all grips are free of grease, oils, fuel, dirt, snow and ice.

When starting with recoil starter check the starter rope for chafing before starting, replace if necessary. A damaged rope can break and cause injuries during starting.

Use only machines which are serviced at regular intervals.

Do not use starting aid sprays or other inflammable fluids for starting.

Starting and operation of the machine is closed rooms and trenches

Exhaust gases are highly dangerous! Always ensure an adequate supply of fresh air when starting and operating in closed rooms and trenches!

Operation

Operate the machine only with the steering rod folded down.

Guide the machine only by the steering rod.

Guide the machine so hat your hands do not hit against solid objects, danger of injury.

As a measure to avoid injury the machine must only be guided from the side by the steering handle

Always keep an eye on a running machine.

Watch out for unusual noises and development of smoke. Perform trouble shooting and have the fault corrected.

Operate the machine only with full engine speed, as otherwise the centrifugal clutch will be destroyed.

Parking the machine

Park the machine on level and firm ground.

Before leaving the machine:

- Park the machine so that it cannot tip over,
- shut the engine down and pull the ignition key out.

Mark machines, which could be in the way, with a clearly visible sign.

Refuelling

Do not inhale any fuel fumes.

Refuel only with the engine shut down.

Do not refuel in closed rooms.

No open fire, do not smoke.

Go to Discount-Equipment.com to order your parts

https://truckmanualshub.com/

Do not spill any fuel. Catch running out fuel, do not let it seep into the ground.

Keep dirt and water away from the fuel.

A leaking fuel tank can cause an explosion. Ensure tight fit of the fuel tank cover, if necessary replace immediately.

Maintenance work

Comply with the maintenance work described in the operating and maintenance instructions, including the information concerning the replacement of parts.

Maintenance work must only be performed by qualified and authorized persons.

Keep unauthorized persons away from the machine.

Do not touch hot engine parts.

Do not perform maintenance work while the motor is running.

Park the machine on level, firm ground.

Remove the key from the ignition switch.

Working on the engine

Drain the engine oil at operating temperature – danger of scalding!

Wipe off spilled oil, catch running out oil and dispose of environmentally.

Store used filters and other oil contaminated materials in a separate, specially marked container and dispose of environmentally.

Working on electric parts of the machine

Before starting to work on electric parts of the machine disconnect the battery and cover it with insulating material.

Do not use fuses with higher ampere ratings and do not bridge fuses - fire hazard!

Working on the battery

When working on the battery do not smoke, do not use open fire!

Do not let acid come in contact with hands or clothes! When injured by acid flush off with clear water and seek medical advice.

Wear gloves and goggles.

Metal objects (e.g. tools, rings, watch straps) must not come in contact with the battery poles – danger of short circuit and burning!

For recharging remove the plugs from the battery to avoid the accumulation of highly explosive gases.

Observe the applicable instructions when starting with an auxiliary battery.

Switch off the charging current before removing the charging clamps.

Ensure sufficient ventilation, especially if the battery is to be charged in a closed room.

Dispose of old batteries according to regulations.

Working on the fuel system

Go to Discount-Equipment.com to order your parts

https://truckmanualshub.com/

Do not inhale any fuel fumes.

Avoid open fire, do not smoke, do not spill any fuel.

Catch running out fuel, do not let it seep into the ground and dispose off environmentally.

Cleaning work

Do not perform cleaning work while the motor is running.

Do not use gasoline or other easily inflammable substances for cleaning.

When using a steam cleaner for cleaning do not subject electrical parts and insulation material to the direct jet or cover these items beforehand.

Do not guide the water jet directly into air filter and air intake or exhaust muffler.

After maintenance work

After all maintenance work is completed reinstall all guards and safety installations.

Repair

Repair work must only be performed by qualified and authorized persons. Use our repair instructions for this work.

Exhaust gases are highly dangerous! Always ensure an adequate supply of fresh air when starting in closed rooms!

Mark defective machines by attaching a warning note to the steering handle.

Welding

Before starting welding work on the machine disconnect the battery and cover the fuel tank with insulating material.

Safety stickers on the machine

Keep safety stickers in good condition and legible and follow their meaning.

Replace damaged and illegible safety stickers.

Go to Discount-Equipment.com to order your parts

https://truckmanualshub.com/

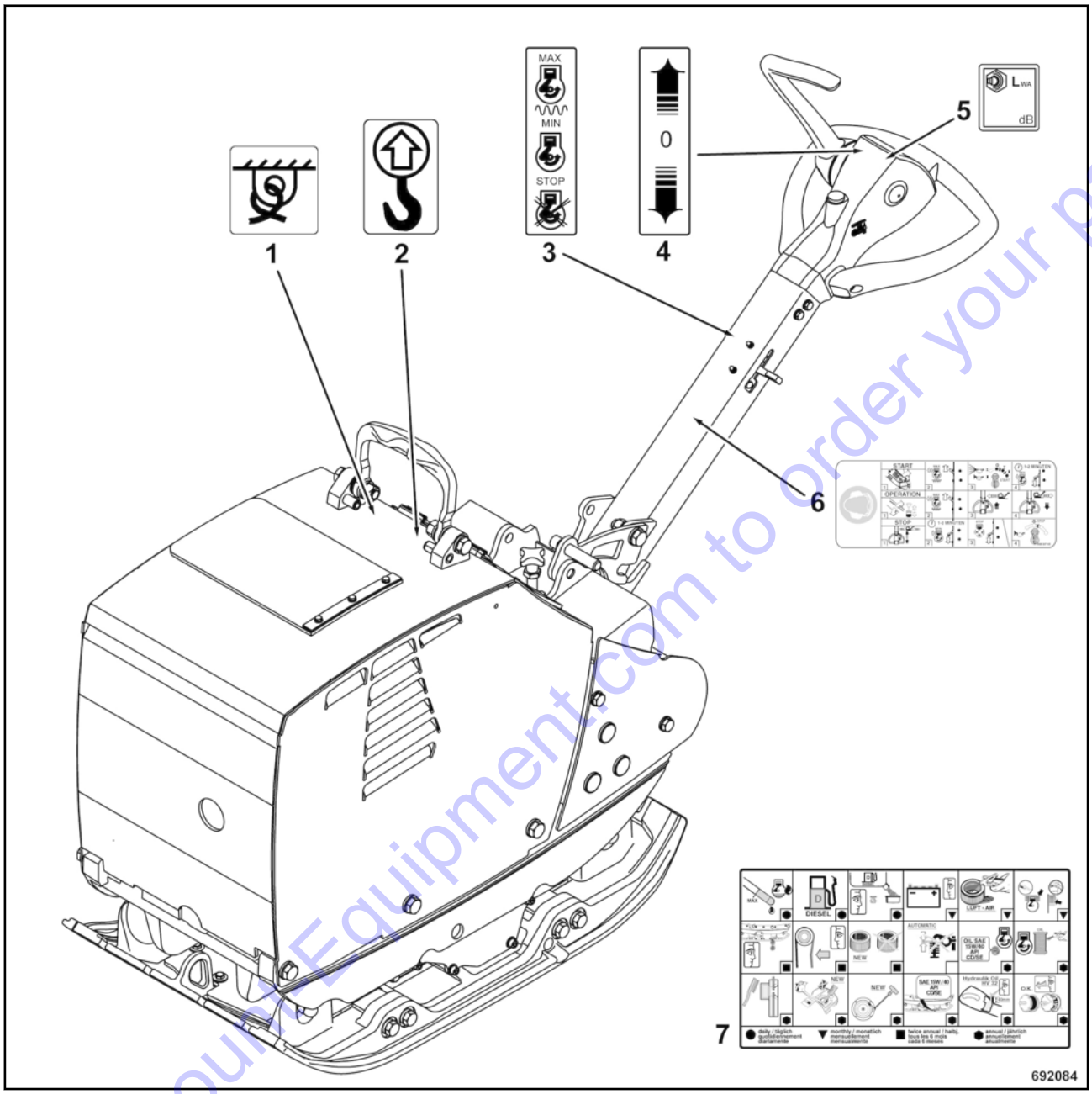

Fig. 6: Stickers and decals

1 Information sticker - Lashing point
2 Information sticker - Lifting point
3 Information sticker - Throttle lever
4 Information sticker - Travel lever
5 Information sticker - Guaranteed sound capacity level
6 Brief operating instructions
7 Maintenance sticker

Go to DiscountEquipment.com to order your parts

https://truckmanualshub.com/

4 Display and control elements

Go to Discount-Equipment.com to order your parts

https://truckmanualshub.com/

4.1 General notes

If you are not yet familiar with the control and display elements on this machine you should read this section thoroughly before starting any operation on the machine. Here all functions are described in detail.

The section "Operation" contains only brief descriptions of the individual control steps.

Go to Discount-Equipment.com to order your parts

https://truckmanualshub.com/

4.2 Description of indicators and control elements

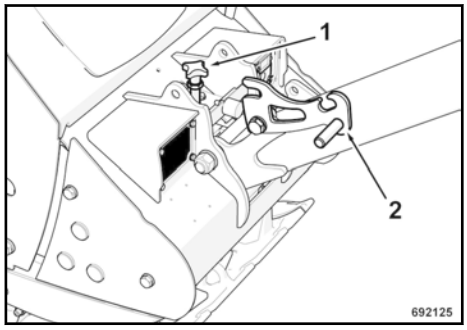

Fig. 7

1 - Steering rod height adjustment

2 - Locking pawl lever

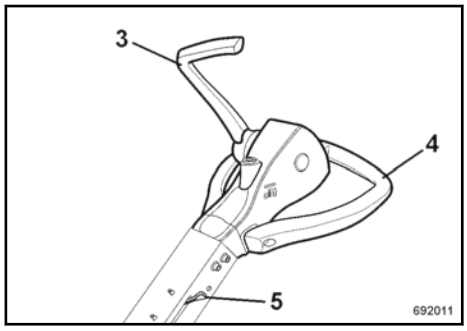

Fig. 8

3 - Travel lever

4 - Handle

5 - Throttle lever

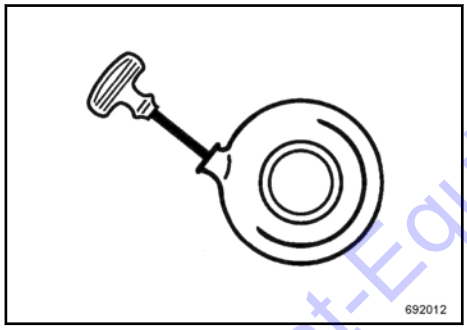

Fig. 9

- Recoil starter

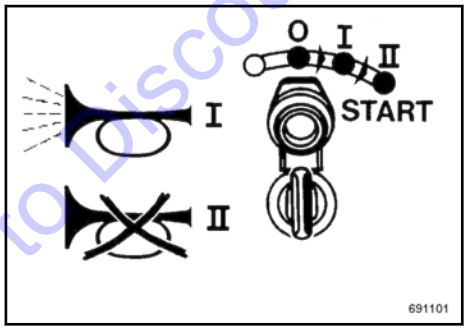

Fig. 10

- Start switch

Position "0"	Ignition off, warning buzzer off
Position "I"	Ignition on, warning buzzer on
Position "II"	Engine starts, warning buzzer off

Go to Discount-Equipment.com to order your parts

https://truckmanualshub.com/

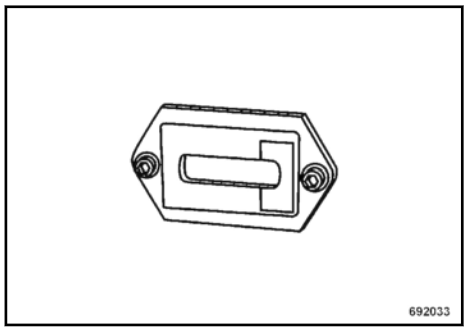

Fig. 11

- Operating hour meter

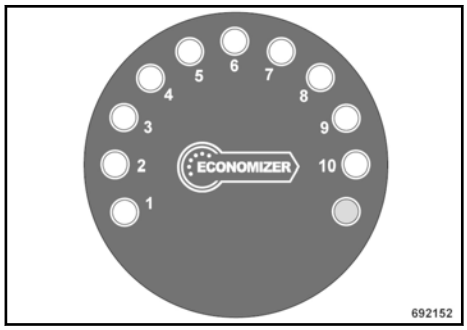

Fig. 12

- Economizer display[Optional equipment]

Go to Discount-Equipment.com to order your parts

https://truckmanualshub.com/

4.3 Function of the Economizer

Surface covering compaction control is used to determine the dynamic stiffness of the soil. A acceleration sensor measures the reaction of the soil to the vibrating base plate of the vibratory plate. An LED display shows the soil stiffness measuring value as a non-dimensional value.

This continuous measuring display enables the detection and directed subsequent compaction of possibly arising weak spots.

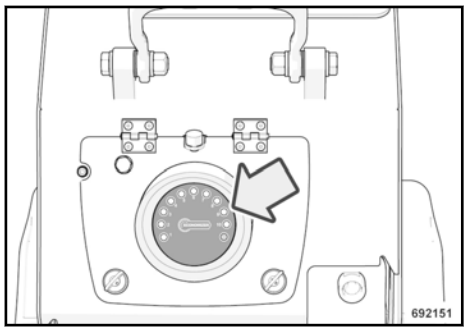

Fig. 13

The Economizer consists of two components:

- the evaluation and display module is integrated in the maintenance flap (within the operator's view ↳ Fig. 13). It shows the measuring value measured by the compaction control.
- The acceleration sensor is fastened to the base plate. It converts the accelerations occurring on the base plate into voltage signals.

For the output of the measuring value in the LED display the voltage signal from the acceleration sensor is picked up and processed by the evaluation unit.

In order to achieve the required soil stiffness measured in MN/m^2, a reference measurement (e.g. dynamic load plate) must be made before the material is compacted.

This is necessary to find out how many LEDs in the Economizer display correspond with the required value in MN/m^2 on the soil being compacted.

Evaluation and display module

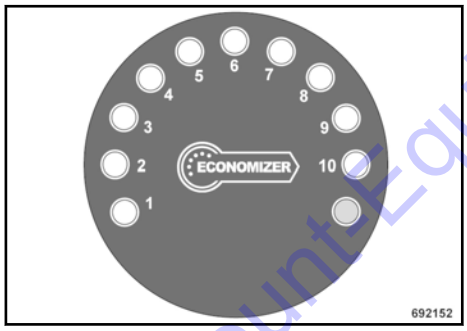

Fig. 14

The yellow LEDs represent the measuring value from the compaction control in 10 stages.

The brightness of the respective last LED varies in order to show intermediate values (example: 4.5: four LEDs are fully on, the fifth LED lights with reduced brightness).

The red LED informs about the system status.

Acceleration sensor

The sensor consists of a sensor element, which is enclosed in a sensor housing, and a connecting cable with plug-in connector. Actual sensor, housing, cable and plug-in connector come as a unit, which cannot be repaired on its own.

The unit is mounted to the base plate of the machine.

Go to DiscountEquipment.com to order your parts

https://truckmanualshub.com/

The Economizer is maintenance free.

Do not clean the front screen with hard objects! The material may be destroyed. Possibly disturbing scratches can be removed by polishing, e.g. with lacquer polish.

Vibrating plates of the same type show identical measuring values when used on the same soil.

The measuring values achieved with different vibratory plates with Economizer from BOMAG can be made comparable by calibration to a reference value.

Go to Discount-Equipment.com to order your parts

https://truckmanualshub.com/

5 Operation

Go to Discount-Equipment.com to order your parts

https://truckmanualshub.com/

5.1 General

If you are not yet acquainted with the controls and indicating elements on this machine you should thoroughly read chapter "Indicators and control elements" before starting work.

All indicators and control elements are described in detail in this chapter.

Go to Discount-Equipment.com to order your parts

https://truckmanualshub.com/

5.2 Tests before taking into operation

The following inspections must be carried out before each working day or before a longer working period.

WARNING!
Danger of accident!
Please observe strictly the safety regulations in the corresponding section of this instruction manual!

Park the machine on ground as level as possible.

Clean the machine.

Check:

condition of engine and machine.

fuel tank and fuel lines for leaks.

screw connections for tight fit.

air intake area for dirt.

For a description of the following tasks refer to the chapter "Daily maintenance".

engine oil level, top up if necessary.

fuel level, top up if necessary.

Go to Discount-Equipment.com to order your parts

https://truckmanualshub.com/

5.3 Folding down the steering rod

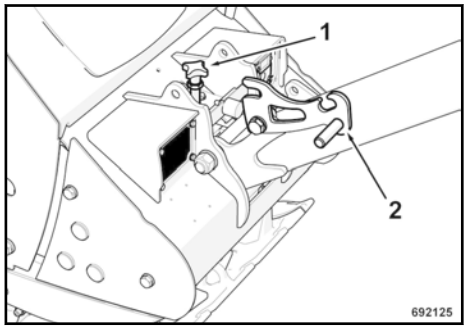

Fig. 15

Pull the locking pawl lever (2) ↳ Fig. 15 and lower the steering rod, so that it can swing freely.

Adjust the steering rod with the height adjustment (1) to the height of your body.

Go to Discount-Equipment.com to order your parts

https://truckmanualshub.com/

5.4 Starting the engine electrically

WARNING!
Exhaust gases are highly dangerous!
Always ensure an adequate supply of fresh air when starting and operating in closed rooms and trenches!

WARNING!
Danger of accident!
Before starting make sure that there are no persons in the danger area of engine or machine and that all safety installations are in place.

Always hold on to the machine.

Always keep an eye on a running machine.

WARNING!
Loss of hearing!
Wear your personal noise protection means (ear defenders) before starting operation.

Set the throttle lever ↳ Fig. 16 to position "MAX".

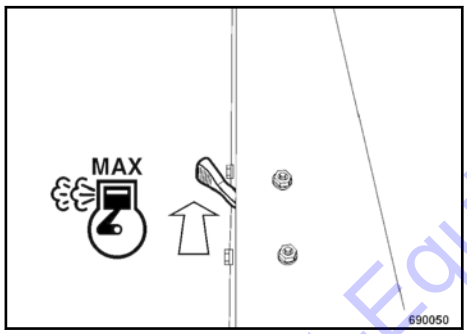

Fig. 16

Shift the travel lever ↳ Fig. 17 to position "0".

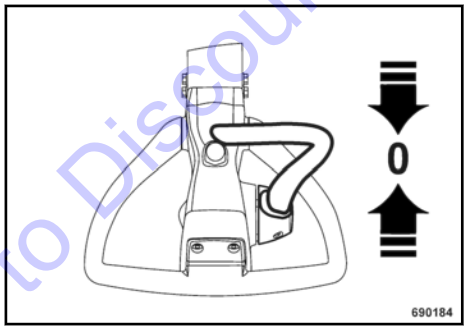

Fig. 17

NOTICE!

Starting attempts should not exceed 30 seconds uninterrupted or max. 3 times 10 seconds. After this time allow the starter to cool down to ambient temperature.

If the engine has not started after these attempts, determine the cause.

Go to Discount-Equipment.com to order your parts

https://truckmanualshub.com/

The starter switch is designed with a re-start lock. For a new starting attempt turn the ignition key first back to position "0".

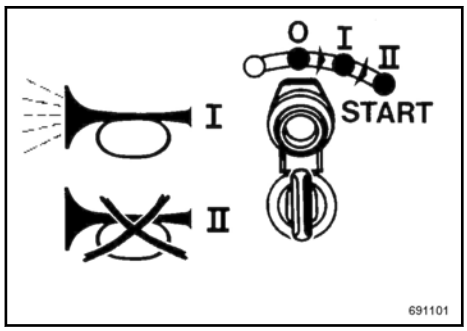

Fig. 18

Turn the ignition key to position "I" ↳ Fig. 18, the warning buzzer sounds.

Then turn the ignition key further to position "II" to start the engine.

As soon as the engine runs, return the ignition key to position "I". The warning buzzer stops.

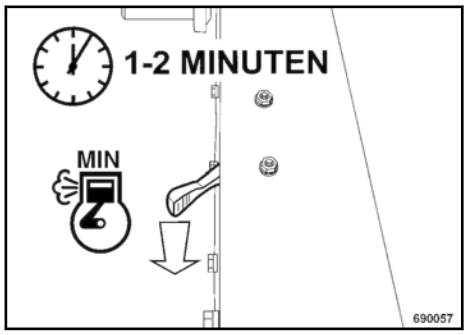

Fig. 19

After starting take the throttle lever back to position "MIN" ↳ Fig. 19.

Run the engine warm for approx. 1 to 2 minutes in idle speed.

Operation of the vibratory plate can be started as soon as the engine responds to short throttle commands.

NOTICE!

When the engine is running leave the ignition key in position "I".

Go to Discount-Equipment.com to order your parts

https://truckmanualshub.com/

5.5 Starting with recoil starter

Starting with the recoil starter should only be used in case of a defective, discharged or missing battery.

WARNING!
Exhaust gases are highly dangerous!
Always ensure an adequate supply of fresh air when starting and operating in closed rooms and trenches!

WARNING!
Danger of accident!
Before starting make sure that there are no persons in the danger area of engine or machine and that all safety installations are in place.

Before starting check the starter rope for chafing, replace if necessary. A damaged rope can break and cause injuries during starting.

Always hold on to the machine.

Always keep an eye on a running machine.

WARNING!
Loss of hearing!
Wear your personal noise protection means (ear defenders) before starting operation.

Set the throttle lever ↳ Fig. 20 to position "MAX".

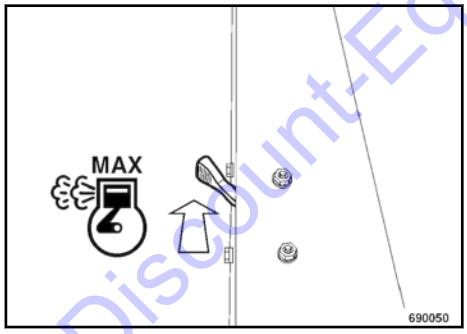

Fig. 20

Go to Discount-Equipment.com to order your parts

https://truckmanualshub.com/

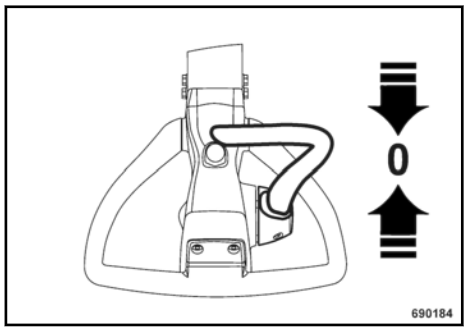

Fig. 21

Shift the travel lever ↳ Fig. 21 to position "0".

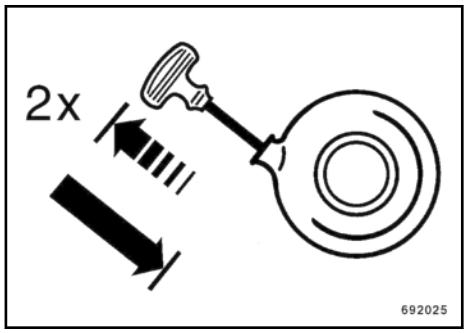

Fig. 22

Slightly pull the starter handle ↳ Fig. 22 two times, until resistance can be felt (compression pressure), and return it to initial position.

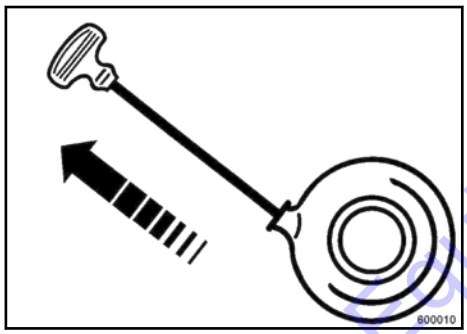

Fig. 23

Pull the starter handle ↳ Fig. 23 quickly and powerful as far out as possible.

NOTICE!

Do not let the starter handle hit back, but guide it back.

If the engine does not start during the first attempt, repeat the starting process.

Go to Discount-Equipment.com to order your parts

https://truckmanualshub.com/

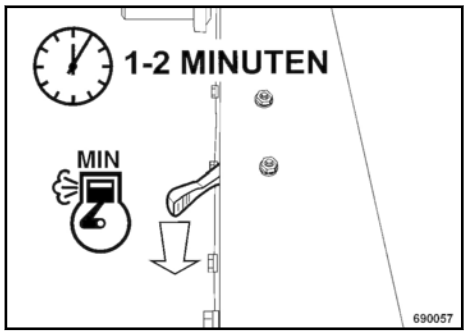

Fig. 24

Set the throttle lever ↳ Fig. 24 to position "MIN".

Run the engine warm for approx. 1 to 2 minutes in idle speed.

Operation of the vibratory plate can be started as soon as the engine responds to short throttle commands.

Go to Discount-Equipment.com to order your parts

https://truckmanualshub.com/

5.6 Operation of Economizer

Meaning of display LEDs/self test

The display LEDs signalize the measuring value of the system. After the corresponding processing by the evaluation module, the display shows a measurement for the compaction of the soil. The number of lighting LEDs symbolizes the increasing compaction of the soil.

The measuring system is automatically started when switching on the machine. The system first of all runs a self test of the LED display.

Self-test: the LEDs come on in individual steps from one to ten. Once all LEDs are on, the display goes out again in single steps.

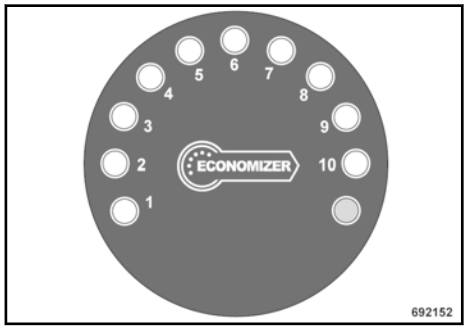

Fig. 25

After the self-test the system will change to measuring mode. The red status LED (a) ↳ Fig. 26 initially lights all the time. This enables the detection of possible system faults.

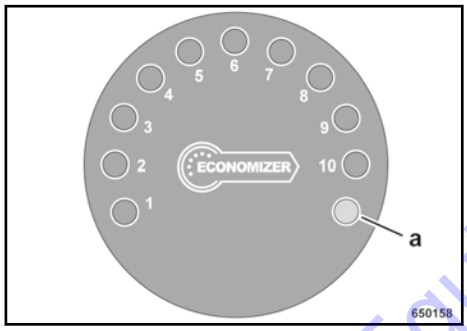

Fig. 26

Notes on operation

- The display value is higher during the first pass than during the second pass: Due to the front rounded shape the contact area increases on loose material, a slightly higher measuring value may be displayed.
- The Economizer does not reach the maximum display value, even after many passes: Due to different soil stiffness values the maximum value cannot be reached in each case.
- The display varies during a pass by one LED up/down: Caused by deviations in material composition and mat height. The average of the display reading during the last pass is decisive.
- The displayed value rises when changing the travel direction: The effective force applied to the soil by the vibratory plate rises when reversing the travel direction. Correct measuring values can only be achieved in forward and reverse travel with maximum speed.

Go to Discount-Equipment.com to order your parts

https://truckmanualshub.com/

- The display rises to the red section, while all yellow LEDs are on: Maximum compaction with this vibratory plate has been reached.
- The red status-LED lights permanently, no other LED lights up: The Economizer does not detect any vibration.
- The red LED is flashing: Diesel vibration frequency is too low. In order to obtain comparable Economized measuring values, the vibratory plate must work with a predetermined frequency. Measuring values obtained with low frequency cannot be compared with values obtained with high frequency.
- The displayed measuring values are not plausible. weak spots may also be located under the layer to be compacted and thus adversely affect compaction of the layers above. In unfavourable cases an excessively varying material composition or moisture can influence the measuring results.

Check the sensor on the base plate for tight fit! Both screws must be tight.

- Influence of the water content in the soil on the Economizer: Display of reduced measuring values in case of too dry or too moist material.
- Influence of extension bars on the measuring value: Assembling or removing extension bars changes the contact area and the vibration amplitude. A generally valid statement about the influence on the measuring result cannot be made.

Go to Discount-Equipment.com to order your parts

https://truckmanualshub.com/

5.7 Work/operation

WARNING!

Danger of accident!

Operate the machine only with the steering rod folded down.

Guide the machine only by the steering rod.

Guide the machine so hat your hands do not hit against solid objects.

Always keep an eye on a running machine.

NOTICE!

Operate the vibratory plate only with full engine speed, as otherwise the centrifugal clutch will be destroyed.

For short breaks you should always return the throttle lever to idle speed position, this avoids premature wear of the centrifugal clutch.

Set the throttle lever ↳ Fig. 27 to position "MAX".

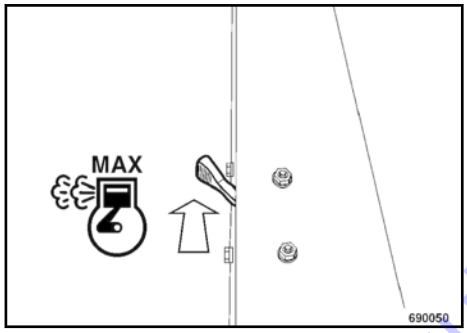

Fig. 27

Drive forward

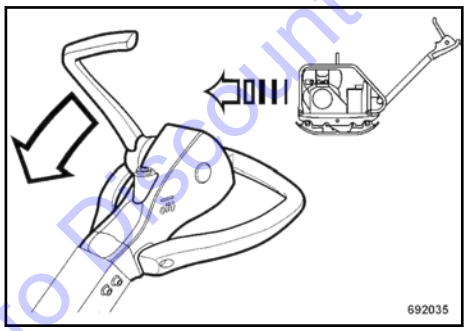

Fig. 28

Push the travel lever ↳ Fig. 28 forward, until the vibratory plate has reached the desired speed.

The machines drives with a speed which corresponds with the travel lever position.

If the machine moves forward with considerably reduced speed, pull the travel lever completely back and shift it forward again.

Go to Discount-Equipment.com to order your parts

https://truckmanualshub.com/

Drive backwards

WARNING!

Danger of accident!

As a measure to avoid injury the machine must only be guided from the side by the steering handle

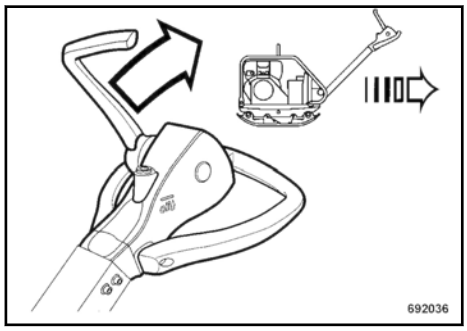

Fig. 29

Pull the travel lever ↳ Fig. 29 back, until the vibratory plate has reached the desired speed in reverse.

The machines vibrates backwards with a speed which corresponds to the travel lever position.

Vibration on the spot

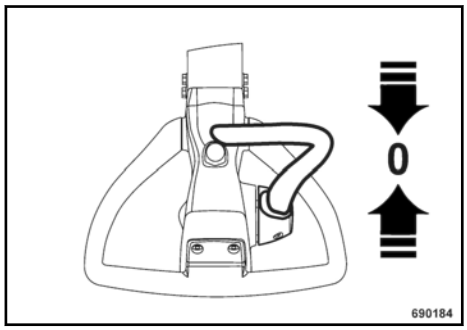

Fig. 30

Move the travel lever ↳ Fig. 30 to middle position, the machine will vibrate on the spot.

If the vibratory plate got stuck

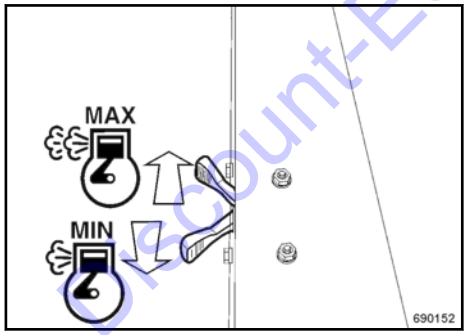

Fig. 31

Keep shifting the throttle lever ↳ Fig. 31 between "MIN" and "MAX" positions.

At the same time pull the vibratory plate by the steering rod to the right and left, until it comes free.

Go to Discount-Equipment.com to order your parts

https://truckmanualshub.com/

5.8 Shutting down the engine

NOTICE!

Do not shut the engine down all of the sudden from full speed, but let it idle for a while for temperature equalization.

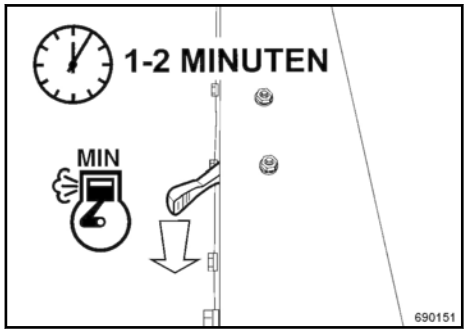

Fig. 32

Shift the throttle lever to position "MIN" ↳ Fig. 32 and let the engine run with idle speed for a short while.

Vibration is shut down.

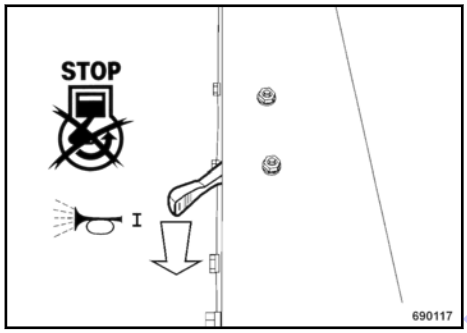

Fig. 33

Set the throttle lever ↳ Fig. 33 to position "STOP".

The warning buzzer sounds.

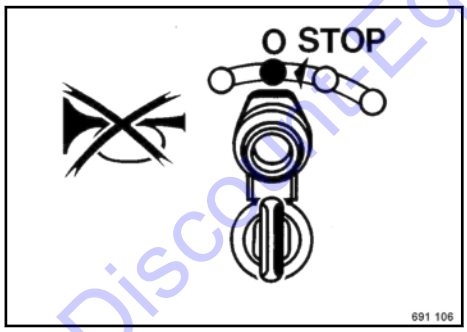

Fig. 34

Turn the ignition key ↳ Fig. 34 to position "0" and pull it out.

The warning buzzer no longer sounds.

Go to DiscountEquipment.com to order your parts

https://truckmanualshub.com/

5.9 Loading/transport

WARNING!

Danger of accident! Life hazard!

Make sure that persons are not endangered by the machine tipping or sliding off.

Use only safe lifting gear of sufficient load bearing capacity Minimum lifting capacity of lifting gear: see operating weight in chapter "Technical Data".

Loads must only be attached and hoisted by an expert (capable person).

For lifting the machine attach the lifting gear only to the lifting eye provided for this purpose.

Check lifting eye for damage before use. Do not use a damaged or in any other way impaired lifting eye.

Do not lift or lower the machine jerkily.

The tension must always be effective in vertical direction.

The machine must not swing about when being lifted.

Do not step or stand under suspended loads.

Always use suitable lashing gear on the lifting points to lash down the machine.

Lash the machine down, so that it is secured against rolling, sliding and turning over.

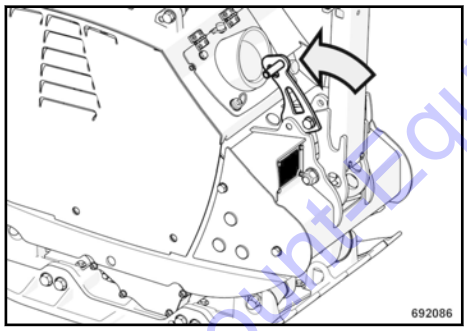

Fig. 35

Adjust the steering rod upright and engage the locking lever ↳ Fig. 35.

Go to Discount-Equipment.com to order your parts

https://truckmanualshub.com/

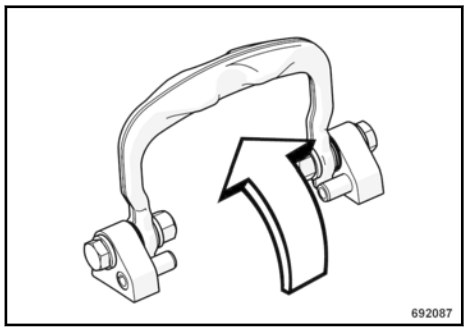

Fig. 36

Fold the lifting hook ↳ Fig. 36 up.

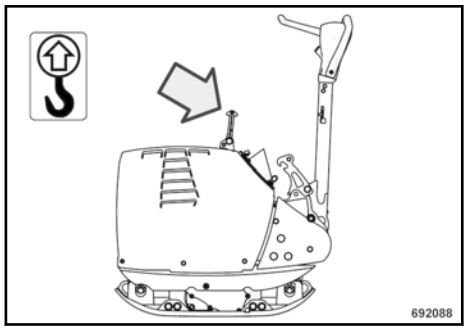

Fig. 37

Always attach the lifting tackle to the lifting eye to load the vibratory plate ↳ Fig. 37 on a transport vehicle.

Lash the vibratory plate down to the transport vehicle, so that it is secured against rolling, sliding and turning over. Fasten the lashing tackle at the marked lashing points.

Go to Discount-Equipment.com to order your parts

https://truckmanualshub.com/

6 Maintenance

Go to Discount-Equipment.com to order your parts

https://truckmanualshub.com/

6.1 General notes on maintenance

When performing maintenance work ensure strict compliance with the respective safety instructions and particularly the safety regulations mentioned in the corresponding section of these operating and maintenance instructions.

Thorough maintenance of the machine guarantees far longer safe functioning of the machine and prolongs the lifetime of important components. The effort needed for this work is only little compared with the problems that may arise when not observing this rule.

Always clean machine and engine thoroughly before starting maintenance work.

For maintenance work stand the machine on level ground.

Do not touch hot engine parts.

Perform maintenance work only with the engine shut down.

ENVIRONMENT!

During maintenance work catch all oils and fuels and do not let them seep into the ground or into the sewage system. Dispose of oils and fuels environmentally.

Keep used filters in a separate waste container and dispose of environmentally.

Open the hood to perform maintenance work.

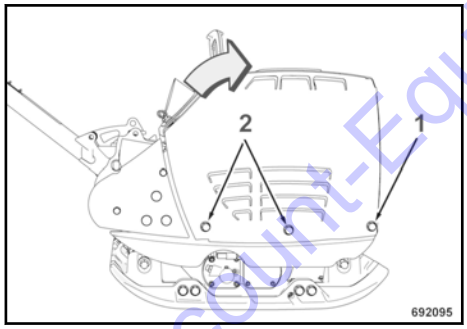

Fig. 38

Loosen the hood fasteners (1) on both sides and remove the fasteners (2) from both sides ↳ Fig. 38.

Fold the hood back.

Notes on the fuel system

The lifetime of the diesel engine depends to a great extent on the cleanliness of the fuel.

Keep fuel free of contaminants and water, since this will damage the injection elements of the engine.

Drums with inside zinc lining are not suitable to store fuel.

Go to Discount-Equipment.com to order your parts

https://truckmanualshub.com/

The fuel drum must rest for a longer period of time before drawing off fuel.

Under no circumstances must the drum be rolled to the tapping point just before drawing out fuel.

When choosing the storage place for fuel make sure that spilled fuel will not harm the environment.

Do not let the hose stir up the slurry at the bottom of the drum.

Do not draw off fuel from near the bottom of the drum.

Fuel residues in the drum are not suitable for the engine.

Notes on the performance of the engine

On diesel engines both combustion air and fuel injection quantities are thoroughly adapted to each other and determine power, temperature level and exhaust gas quality of the engine.

If your engine has to work permanently in "thin air" (at higher altitudes) and under full load, you should consult our customer service or the customer service of the engine manufacturer.

Frequent causes of faults

Operating errors

Incorrect, inadequate maintenance

If you cannot locate the cause of a fault or rectify it yourself by following the trouble shooting chart, you should contact our customer service department.

Go to Discount-Equipment.com to order your parts

https://truckmanualshub.com/

6.2 Fuels and lubricants

6.2.1 Engine oil

6.2.1.1 General

Modern diesel engines put high demands on the lubrication oil used. The engine powers that have continuously increased over the past few years lead to higher thermal loads for the lubrication oil. Apart from that, the lubrication oil is additionally loaded by contamination because of the reduced lubrication oil consumption and the prolonged lubrication oil change intervals.

For this reason it is necessary to follow the requirements and recommendations in these operating instructions in order not to reduce the lifetime of the engine.

Engine oils of the same specification can generally be mixed among each other. However, mixing of engine oil should be avoided, because the poorest characteristics of a mixture will always prevail.

The use of additives for lubrication oils is not permitted.

The lubrication oil quality has a considerable influence on the lifetime, performance and thus the economy of the engine. The following is generally valid: the better the lubrication oil quality, the better its properties.

6.2.1.2 Oil quality

Lubrication oils are classified according to their performance and quality class.

The following lubrication oil specifications are permitted:

- API CD/CE/CF/CF-4/CG-4 or higher quality
- ACEA B2/E2 or higher quality

6.2.1.3 Oil viscosity

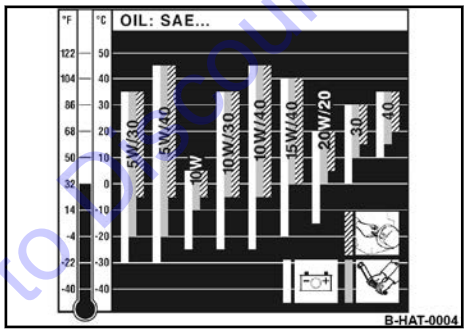

Fig. 39

Since lubrication oil changes its viscosity with the temperature, the ambient temperature at the operating location of the engine is of utmost importance when choosing the viscosity class (SAE-class).

Optimal operating conditions can be achieved by using the oil viscosity chart as a reference.

6.2.1.4 Oil change intervals

Annually or every 250 operating hours.

Go to Discount-Equipment.com to order your parts

https://truckmanualshub.com/

When changing to a higher alloyed oil quality after a longer period of operation, it is recommended to perform the first oil change of the higher quality oil already after 25 operating hours.

6.2.2 Fuel

6.2.2.1 Fuel quality

The following fuel specifications are permitted:

- EN 590
- ASTM D 975 Grade 1-D/2-D
- BS 2869 A1/A2

With respect to the percentage (ppm) of sulphur the fuel used in the engine must comply with all relevant exhaust emission regulations in the are of use of the engine.

6.2.2.2 Winter fuel

For winter operation use only winter diesel fuel, to avoid clogging because of paraffin separation.

At very low temperatures disturbing paraffin separation can also be expected when using winter diesel fuel.

Diesel fuels suitable for temperatures down to -44 °C (-47 °F) are available for Arctic climates.

NOTICE!

Danger of engine damage!

– The admixture of petroleum and the addition of "flow enhancing additives" (fuel additives) is not permitted.

6.2.2.3 Storage

Even traces of zinc, lead and copper can cause deposits in the injection nozzles, especially in modern Common-Rail injection systems.

Zinc and lead coatings in refuelling systems and fuel lines are not permitted.

Copper containing materials (copper lines, brass items) should be avoided, because they can cause catalytic reactions in the fuel with subsequent depositing in the injection system.

Go to Discount-Equipment.com to order your parts

https://truckmanualshub.com/

6.2.3 Mineral oil based hydraulic oil

The hydraulic system is operated with hydraulic oil HV 32 (ISO) with a kinematic viscosity of 32 mm^2/s at 40 °C (104 °F).

For topping up or for oil changes use only high-quality hydraulic oil, type HVLP according to DIN 51524, part 3, or hydraulic oils type HV according to ISO 6743/3.

The viscosity index (VI) should be at least 150 (observe information of manufacturer).

Go to Discount-Equipment.com to order your parts

https://truckmanualshub.com/

6.3 Table of fuels and lubricants

Assembly	Fuel or lubricant		Filling quantity
	Summer	Winter	Observe the level mark!
Engine oil	SAE 10W-40 Specification: *Chapter 6.2.1 'Engine oil' on page 50*		1.5 l (0.4 gal us)
	SAE 15W-40		
	SAE 10W-30		
	SAE 30	SAE 10W	
Fuel	Diesel	Winter diesel fuel	5.0 l (1.3 gal us)
	Specification: *Chapter 6.2.2 'Fuel' on page 51*		
Vibrator shaft housing	as engine oil		0.4 l (0.11 gal us)
Steering rod	Hydraulic oil (ISO), HV 32 Specification: *Chapter 6.2.3 'Mineral oil based hydraulic oil' on page 52*		0.4 l (0.11 gal us)

Go to Discount-Equipment.com to order your parts

https://truckmanualshub.com/

6.4 Running-in instructions

6.4.1 General

The following maintenance work must be performed when running in new machines or overhauled engines:

NOTICE!

Danger of engine damage!

– Up to approx. 250 operating hours check the engine oil level twice every day.

Depending on the load the engine is subjected to, the oil consumption will drop to the normal level after approx. 100 to 250 operating hours.

6.4.2 After 25 operating hours

Change the engine oil *Chapter 6.9.1 'Changing the engine oil and cleaning the oil filter' on page 68*.

Check, adjust the valve clearance *Chapter 6.8.3 'Checking, adjusting the valve clearance' on page 64*.

Check engine and machine for leaks.

Retighten the fastening screws on air filter, exhaust and other attachments.

Retighten the bolted connections on the machine.

Check the V-belt *Chapter 6.8.2 'Servicing the V-belt' on page 63*.

Check the oil level in the vibrator housing *Chapter 6.8.1 'Checking the oil level in the exciter housing' on page 63*.

Go to Discount-Equipment.com to order your parts

https://truckmanualshub.com/

6.5 Maintenance table

No.	Maintenance works	Page
	Daily maintenance	
6.6.1	*Clean the machine*	*56*
6.6.2	*Checking the engine oil level*	*56*
6.6.3	*Check the fuel level*	*57*
6.6.4	*Check, clean the water separator*	*58*
	Monthly maintenance	
6.7.1	*Battery service*	*59*
6.7.2	*Air filter maintenance*	*60*
6.7.3	*Cleaning the cooling fins and the cooling air intake openings*	*62*
	Half-annual maintenance	
6.8.1	*Checking the oil level in the exciter housing*	*63*
6.8.2	*Servicing the V-belt*	*63*
6.8.3	*Checking, adjusting the valve clearance*	*64*
6.8.4	*Checking the screw joints on the diesel engine*	*66*
	Annual maintenance	
6.9.1	*Changing the engine oil and cleaning the oil filter*	*68*
6.9.2	*Replace the fuel filter*	*70*
6.9.3	*Replacing the starter rope*	*71*
6.9.4	*Changing the oil in the exciter housing*	*73*
6.9.5	*Check the hydraulic oil level*	*74*
6.9.6	*Check the rubber buffers*	*76*
	As required	
6.10.1	*Tightening the screws*	*77*
6.10.2	*Engine conservation*	*77*

Go to Discount-Equipment.com to order your parts

https://truckmanualshub.com/

6.6 Daily maintenance

6.6.1 Clean the machine

NOTICE!

Perform cleaning work only after the engine has cooled down and with the engine stopped.

Dirty operating conditions, particularly lubrication oil and fuel deposits on the cooling fins of the engine and the cooling air intake opening have an adverse effect on the cooling of the engine. You should therefore immediately seal any oil or fuel leaks near fuel tank, cylinder or cooling air intake and subsequently clean the cooling fins.

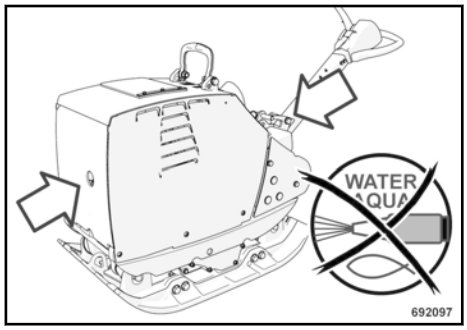

Fig. 40

NOTICE!

Do not guide the water jet directly into the cooling air openings of the recoil starter, into the dry air filter or on electrical equipment .

After wet cleaning run the engine warm to evaporate all water residues and to avoid corrosion.

6.6.2 Checking the engine oil level

NOTICE!

Danger of engine damage!

– +Use only oil of the permitted specification *Chapter 6.2.1 'Engine oil' on page 50*.

Protective equipment: ■ Protective gloves

Park the machine on level and firm ground.

Shut down the engine.

Go to Discount-Equipment.com to order your parts

https://truckmanualshub.com/

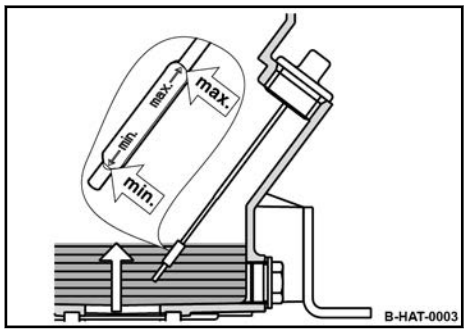

Fig. 41

Clean the area around the oil dipstick.

Pull the dipstick out, wipe it off with a lint-free, clean cloth and reinsert it until it bottoms.

Pull the dipstick back out.

NOTICE!
Danger of engine damage!
– Do not overfill with engine oil.

The oil level must always be between the "MIN"- and "MAX"-marks. If the oil level is too low, top up oil to the "MAX" mark immediately.

6.6.3 Check the fuel level

WARNING!
Fire hazard!
When working on the fuel system do not use open fire, do not smoke, do not spill any fuel.

Do not refuel in closed rooms.

Shut down the engine.

WARNING!
Health hazard!
Do not inhale any fuel fumes.

ENVIRONMENT!
Catch running out fuel, do not let it seep into the ground.

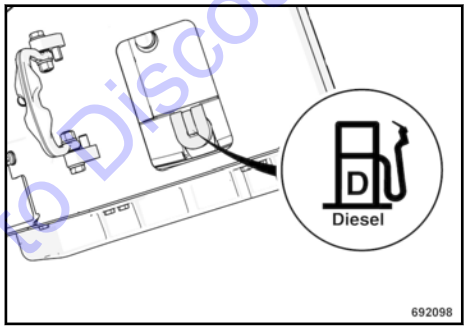

Fig. 42

Clean the area around the filler cap ↳ Fig. 42, unscrew the filler cap.

NOTICE!
Contaminated fuel can cause malfunction or even damage of the engine.

For quality and quantity of fuel refer to the "table of fuels and lubricants".

Go to Discount-Equipment.com to order your parts

https://truckmanualshub.com/

Fill in fuel through a funnel with screen.

Close the tank again.

6.6.4 Check, clean the water separator

WARNING!
Fire hazard!
When working on the fuel system do not use open fire, do not smoke. Do not spill any fuel.

Shut down the engine.

WARNING!
Health hazard!
Do not inhale any fuel fumes.

ENVIRONMENT!
Any fuel must be caught and disposed of in an environmentally friendly manner.

The inspection interval for the water separator depends on the water proportion in the fuel and the care that is execised when refuelling.

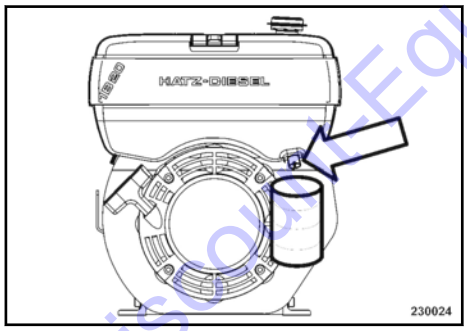

Fig. 43

Place the transparent container ↳ Fig. 43 under the drain plug.

Loosen the screw for approx. 3 to 4 turns and collect running out water/fuel.

Since water is heavier than diesel fuel, water will run out before the fuel. This can be noticed by a clearly visible parting line.

When only fuel comes running out, tighten the drain plug again.

Go to Discount-Equipment.com to order your parts

https://truckmanualshub.com/

6.7 Monthly maintenance

6.7.1 Battery service

WARNING!

Danger of cauterisation ! Danger of explosion!

When working on the battery do not use open fire, do not smoke!

The battery contains acid. Do not let acid come in contact with skin or clothes!

Wear protective clothing!

Wear safety goggles!

Do not lay any tools on the battery!

For recharging remove the plugs from the battery to avoid the accumulation of highly explosive gases.

ENVIRONMENT!

Dispose of old batteries in compliance with legal regulations.

Maintenance free batteries also need care. Maintenance free only means that the fluid level does not need to be checked. Each battery suffers under self-discharge, which may, in not checked occasionally, even cause damage to the battery as a result of exhaustive discharge.

The following therefore applies for the service life:

Switch off all consumers (e.g. ignition).

Check open-circuit voltage of the battery at regular intervals. At least once per month.

Reference values: 12.6 V = fully charged; 12.3 V = 50% discharged.

Recharge the battery immediately after an open-circuit voltage of 12.25 V or less is reached. Do not perform quick charging.

The open-circuit voltage of the battery occurs approx. 10 hours after the last charging process or one hour after the last discharge.

Go to Discount-Equipment.com to order your parts

https://truckmanualshub.com/

After each charging process allow the battery to rest for one hour before taking it into service.

For resting periods of more than one month you should always disconnect the battery. Do not forget to perform regular open-circuit voltage measurements.

NOTICE!

Exhausted batteries (batteries with formation of sulphate on the plates) are not covered under warranty!

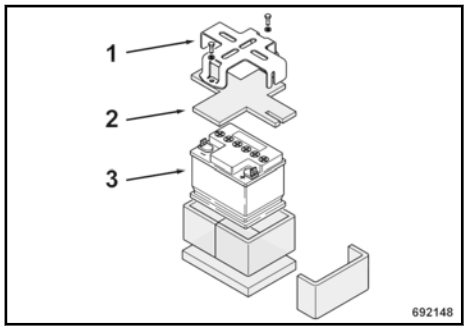

Fig. 44

Unscrew bracket (1) ↳ Fig. 44 of the battery.

Remove the vibration insulation mat (2).

Remove the battery (3) and clean the battery compartment.

Clean the outside of the battery.

Clean battery poles and pole clamps and grease them with pole grease (Vaseline).

Check the condition of the vibration insulation mats, replace if necessary.

On serviceable batteries check the acid level, if necessary top up to the filling mark with distilled water.

Install battery (3) and the vibration damping mat (2).

Fasten the bracket (1) again.

6.7.2 Air filter maintenance

Contamination of the air filter depends mainly on the proportion of dust in the intake air, if necessary clean several times a day.

Go to Discount-Equipment.com to order your parts

https://truckmanualshub.com/

NOTICE!

Danger of engine damage!

- Do not start the engine after having removed the air filter.
- If necessary, the air filter may be cleaned up to six times. The air filter must be replaced at the latest after half a year or 500 operating hours respectively.
- Cleaning does not make sense if the air filter element is covered with a sooty deposit.
- Do not use gasoline or hot fluids to clean the filter element.
- After cleaning the air filter must be inspected for damage using a torch.
- Do not continue to use a damaged air filter element. If in doubt use a new air filter.

Protective equipment:
- Working clothes
- Protective gloves
- Safety goggles

Park the machine in secured condition.

Allow the engine to cool down.

Remove the air filter cover (3).

Unscrew the knurled nut (2) and pull out the air filter (1).

Clean the air filter cover.

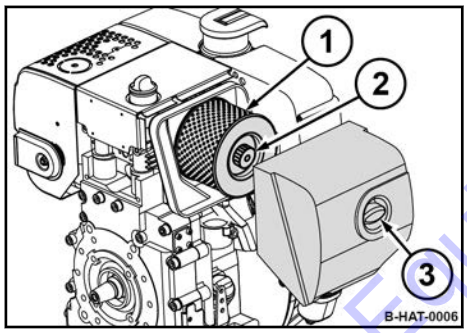

Fig. 45

NOTICE!

Danger of engine damage!

- Avoid the infiltration of dirt into the air intake opening.
- Do not clean the air filter housing with compressed air.

Clean the filter housing with a clean, lint-free cloth.

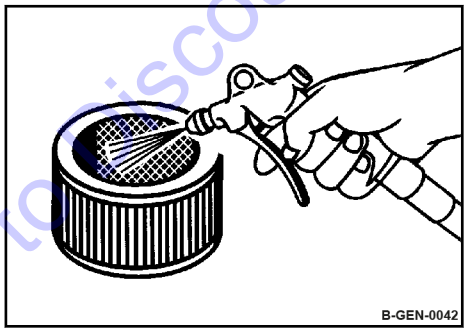

Fig. 46

CAUTION!

Danger of eye injuries caused by particles flying around!

- Wear your personal protective equipment (safety gloves, protective working clothes, goggles).

Blow the air filter out with dry compressed air (max. 5 bar (73 psi)) from inside to outside by moving the gun up and down inside the element, until it if free of dust.

Examine the air filter with a torch for cracks and holes.

Replace the air filter if it is damaged.

Go to Discount-Equipment.com to order your parts

https://truckmanualshub.com/

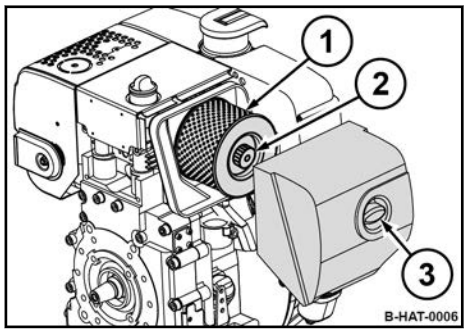

Fig. 47

Insert the air filter (1) carefully into the filter housing and fasten it with the knurled nut (2).

NOTICE!
Danger of engine damage!
– Ensure correct fit of air filter cover and seal.

Assemble the air filter cover (3).

6.7.3 Cleaning the cooling fins and the cooling air intake openings

Protective equipment:
- Working clothes
- Protective gloves
- Safety goggles

Park the machine in secured condition.

Allow the engine to cool down.

Loosen dried on dirt with a suitable brush from all cooling fins and cooling air intake openings.

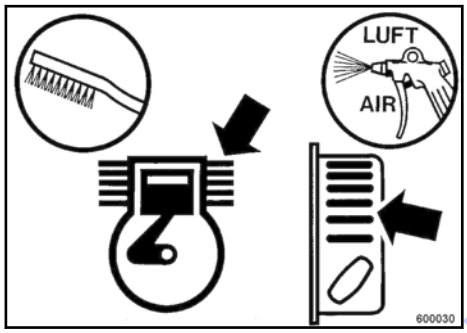

Fig. 48

CAUTION!
Danger of eye injuries caused by particles flying around!
– Wear your personal protective equipment (safety gloves, protective working clothes, goggles).

Blow cooling fins and cooling air intake openings out with compressed air.

In case of damp or oily contamination you should consult our customer service department.

Go to Discount-Equipment.com to order your parts

https://truckmanualshub.com/

6.8 Half-annual maintenance

6.8.1 Checking the oil level in the exciter housing

NOTICE!

Park the machine on level ground.

Clean the area around breather and drain plug.

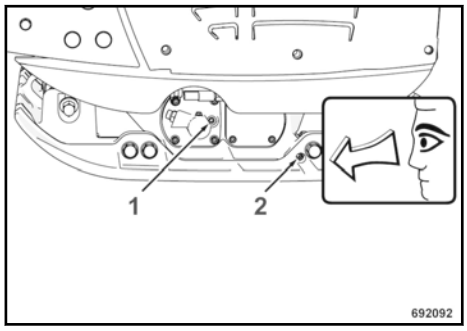

Fig. 49

Unscrew the bleeding screw (1) ↳ Fig. 49.

Unscrew the oil level inspection plug (2) and check the oil level.

The oil level must reach the bottom edge of the inspection opening, if necessary fill in oil.

For quality of oil refer to the "table of fuels and lubricants".

Clean the oil level inspection plug and screw in with sealing agent (e.g. BOMAG 009 700 16).

Screw the bleeding screw back in.

6.8.2 Servicing the V-belt

Checking the V-belt

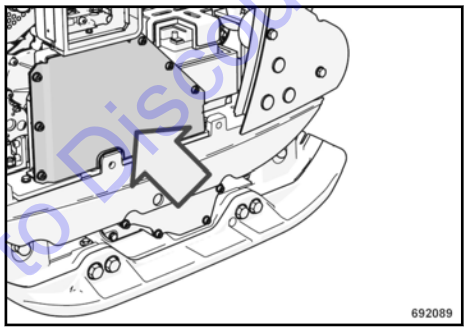

Fig. 50

Remove the V-belt guard ↳ Fig. 50.

Go to Discount-Equipment.com to order your parts

https://truckmanualshub.com/

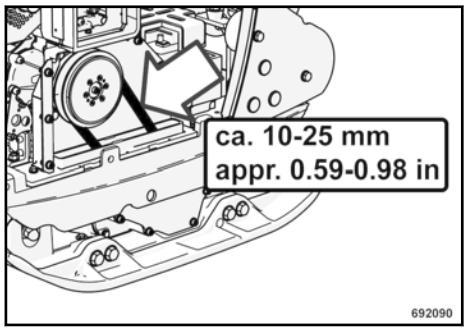

Fig. 51

Check condition and tightness of V-belt ↳ Fig. 51.

Compression measurement: approx. 10 to 25 mm (0.59 to 0.98 in)

NOTICE!

Replace a damaged V-belt.

The V-belt cannot be tightened manually. Always replace the V-belt, if the compression measurement is exceeded.

Replacing the V-belt

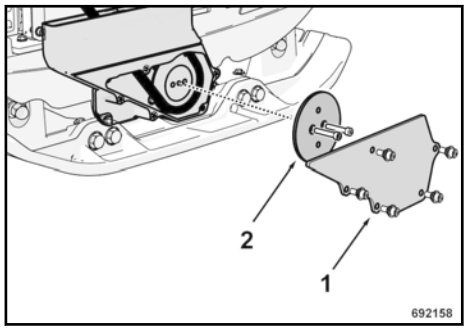

Fig. 52

Remove the safety cover (1) ↳ Fig. 52.

Disassemble the front V-belt pulley (2).

Take off the V-belt and replace it with a new one.

If necessary reassemble the spacers that had been removed.

Assemble the front V-belt pulley and fasten it.

Assemble the guard and fasten it (tightening torque: 15 Nm (11 ft.lbs)).

Install the top V-belt guard .

6.8.3 Checking, adjusting the valve clearance

NOTICE!

Danger of engine damage!

We recommend to have this work carried out by trained personnel or our after sales service.

– Before checking the valve clearance let the engine cool down.
– After a short test run check the engine for leaks.

Preparations

Protective equipment:
- Working clothes
- Protective gloves

Park the machine in secured condition.

Allow the engine to cool down to ambient temperature.

Go to Discount-Equipment.com to order your parts

https://truckmanualshub.com/

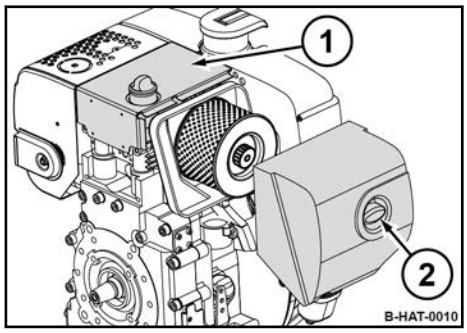

Fig. 53

Remove the air filter cover (2).

Disassemble the covering (1).

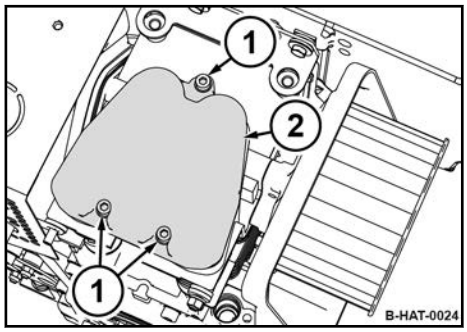

Fig. 54

Unscrew the fastening screws (1).

Remove valve cover (2) with gasket.

Checking the valve clearance

Valve clearance:	
Intake valve (IN)	0.10 mm (0,004 in)
Exhaust valve (EX)	0.10 mm (0,004 in)

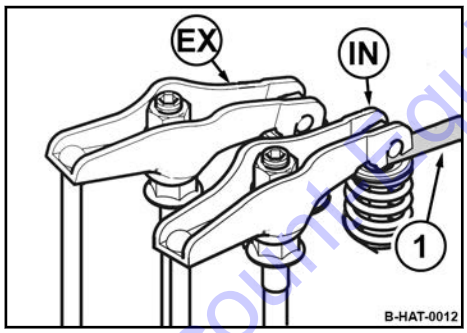

Fig. 55

Crank the engine, until the exhaust valve (EX) is fully open.

Check the valve clearance on the intake valve (IN) with a feeler gauges (1), adjust if necessary.

Crank the engine further, until the intake valve is fully open.

Check the valve clearance on the exhaust valve, adjust if necessary.

Go to Discount Equipment.com to order your parts

https://truckmanualshub.com/

Adjusting the valve clearance

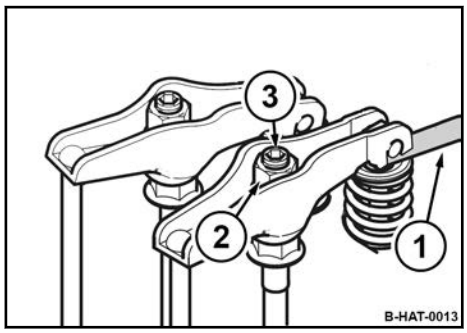

Fig. 56

Loosen screw (3) on the rocker arm.

Adjust the hexagon nut (2), until the feeler gauge (1) can be inserted and pulled out with noticeable resistance after the screw (3) has been tightened.

Final work

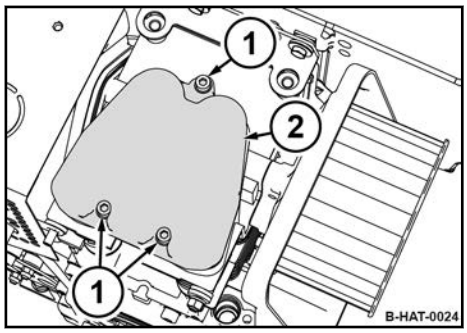

Fig. 57

Install the valve cover (2) with a new gasket.

Tighten the fastening screws (1) evenly.

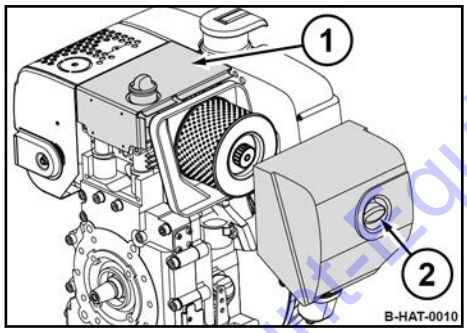

Fig. 58

Assemble covering (1) and air filter cover (2).

After a short test run check the valve cover for leaks.

6.8.4 Checking the screw joints on the diesel engine

Park the machine in secured condition.

Allow the engine to cool down.

Go to Discount-Equipment.com to order your parts

https://truckmanualshub.com/

NOTICE!

Components may get damaged!

- Do not retighten the cylinder head fastening screws.
- Do not retighten or adjust the setscrews on throttle control and injection system.

Check all screw joints on the diesel engine for condition and tight fit, retighten if necessary.

Go to Discount-Equipment.com to order your parts

https://truckmanualshub.com/

6.9 Annual maintenance

6.9.1 Changing the engine oil and cleaning the oil filter

Change the engine oil at the latest after 250 operating hours.

NOTICE!

Danger of engine damage!

– Change the oil only with the engine at operating temperature.
– Use only oil of the permitted specification *Chapter 6.2.1 'Engine oil' on page 50*.
– Filling quantity: *Chapter 6.3 'Table of fuels and lubricants' on page 53*

Protective equipment:
- Working clothes
- Protective gloves
- Safety goggles

Park the machine in secured condition.

Clean the area around the dipstick and pull the dipstick out.

Clean the area around the drain hose.

Loosen the hose clamp (1) and route the drain hose to the outside.

WARNING!

Danger of burning on hot components!

– Wear your personal protective outfit (protective gloves, protective clothing).

Unscrew the oil drain plug (2) and catch any oil running out.

Clean the drain plug and screw it back in.

Assemble the drain hose with the hose clamp.

Draining off engine oil

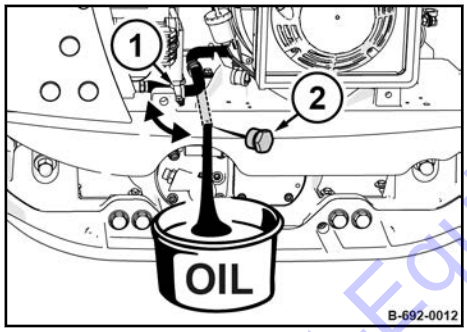

Fig. 59

Go to Discount-Equipment.com to order your parts

https://truckmanualshub.com/

Cleaning the oil filter

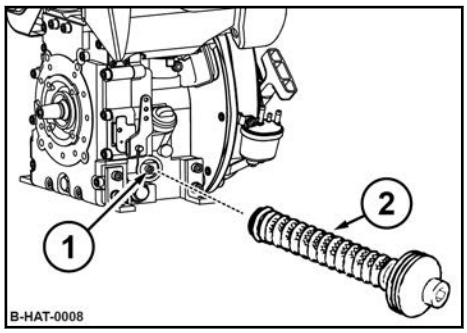

Fig. 60

Loosen the screw (1) for approx. five turns and pull the oil filter (2) out of the housing.

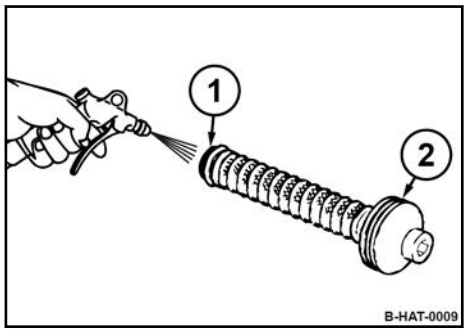

Fig. 61

CAUTION!

Danger of eye injuries caused by particles flying around!

– Wear your personal protective equipment (safety gloves, protective working clothes, goggles).

Blow the oil filter out from inside to outside.

Check the seal (2) for damage, change if necessary.

Slightly oil the seal rings (1) and (2).

Insert the oil filter (2) into the housing and press it against the end stop.

Before tightening the screw (1) make sure that the tensioning springs touch the oil filter with both ends.

Tighten the screw.

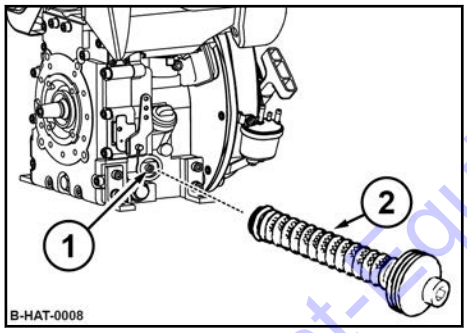

Fig. 62

Filling in engine oil

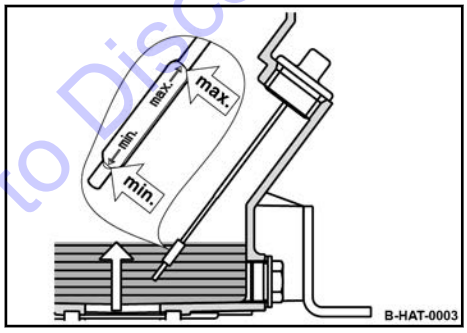

Fig. 63

Fill in fresh engine oil up to the bottom edge of the filling opening.

After a short test run check the oil level on the dipstick, if necessary top up to the top dipstick mark.

Go to Discount-Equipment.com to order your parts

https://truckmanualshub.com/

Final work

Check oil filter and drain plug for leaks.

Dispose of oil environmentally.

6.9.2 Replace the fuel filter

WARNING!
Fire hazard!
When working on the fuel system do not use open fire, do not smoke, do not spill any fuel.

Do not refuel in closed rooms.

Shut down the engine.

WARNING!
Health hazard!
Do not inhale any fuel fumes.

NOTICE!

Ensure strict cleanliness to keep dirt out of the fuel lines. Dirt particles can destroy the injection system.

The service interval to change the fuel filter depends on the cleanliness of the fuel. If necessary this service must be performed every six months.

ENVIRONMENT!

Catch running out fuel, do not let it seep into the ground.

Dispose of the used fuel filter environmentally.

Open the quick lock on the tank.

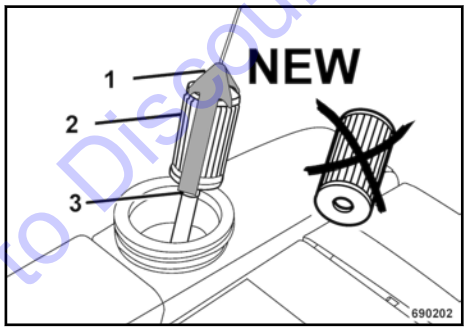

Fig. 64

Go to Discount-Equipment.com to order your parts

https://truckmanualshub.com/

Pull the holder (1) ↳ Fig. 64 with the fuel filter (2) by the cord out of the tank.

Pull the fuel hose (3) off the fuel filter

Push the fuel filter out of the holder.

Push the new fuel filter into the holder.

Push the fuel hose onto the new fuel filter.

NOTICE!

Do not insert the hose into the tank without a filter. Danger of contamination!

Insert the holder with the fuel filter into the tank and attach the quick lock.

The fuel system is self bleeding.

6.9.3 Replacing the starter rope

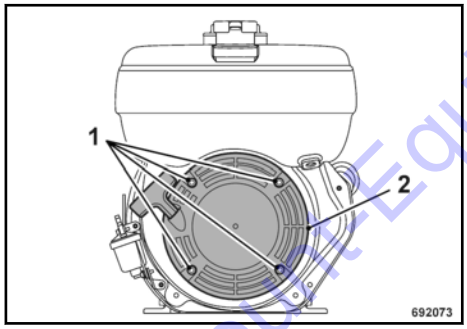

Fig. 65

Unscrew the fastening screws (1) ↳ Fig. 65 and pull the recoil starter (2) from the engine housing.

Go to Discount Equipment.com to order your parts

https://truckmanualshub.com/

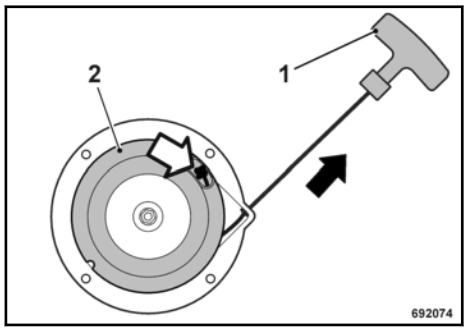

Fig. 66

Pull the starter rope with the starter handle (1) out completely ↳ Fig. 66.

Secure the coil (2) against winding up.

Loosen the knot of the starter rope on the coil and remove the old starter rope.

Carefully turn the coil back, until the recoil spring is relieved.

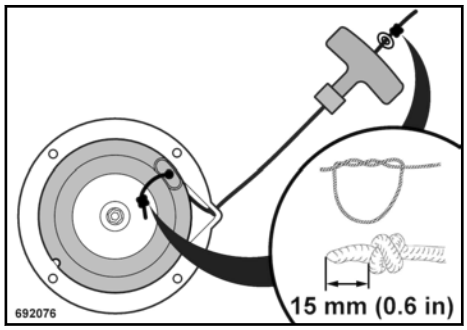

Fig. 67

Thread in the new starter rope and fix it with knots on both ends ↳ Fig. 67.

NOTICE!

Incorrect sense of rotation will damage the spring ends of the recoil spring.

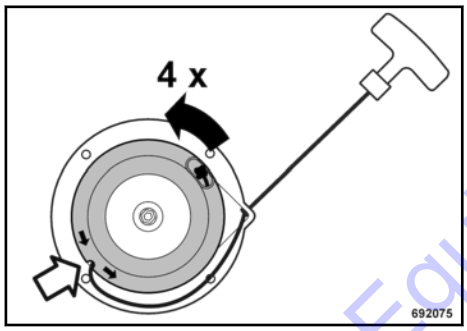

Fig. 68

Pre-tension the coil by approx. 4 rotations in direction of arrow. Thereby place the starter rope into the recess in the coil ↳ Fig. 68.

WARNING!

Danger of injury!

Do not let the starter handle hit back, but guide it back slowly.

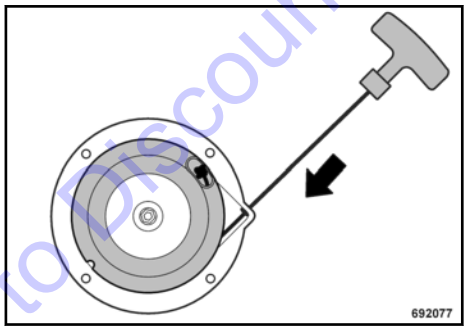

Fig. 69

Slowly guide the starter handle back to initial position ↳ Fig. 69. The rope is thereby wound on the coil.

Test function and light movement of the recoil starter by pulling the starter handle.

Mount the recoil starter to the engine housing.

Go to Discount-Equipment.com to order your parts

https://truckmanualshub.com/

6.9.4 Changing the oil in the exciter housing

Perform this maintenance work at the latest after 500 operating hours

NOTICE!

Components may get damaged!

– Use only oil of the permitted specification *Chapter 6.3 'Table of fuels and lubricants' on page 53*.

Protective equipment:
- Working clothes
- Protective gloves

Park the machine on level ground.

Park the machine in secured condition.

Clean the area around oil breather filter (1) and filling/drain plug (2).

Tilt the machine slightly towards the oil drain side and support it safely.

Unscrew the bleeding screw.

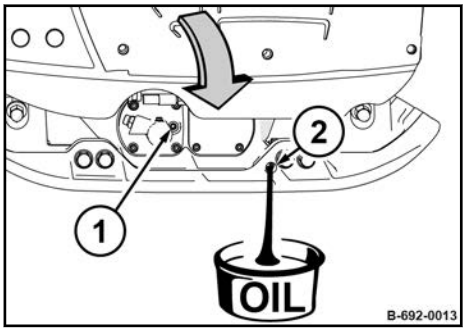

Fig. 70

WARNING!

Danger of burning on hot components!

– Wear your personal protective outfit (protective gloves, protective clothing).

Unscrew the filling/drain plug and catch any oil running out.

Tilt the machine to the opposite side and secure it properly.

Fill in new oil.

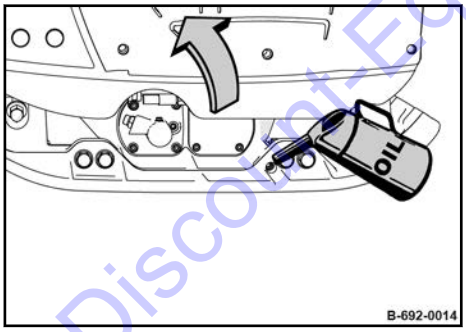

Fig. 71

Go to Discount-Equipment.com to order your parts

https://truckmanualshub.com/

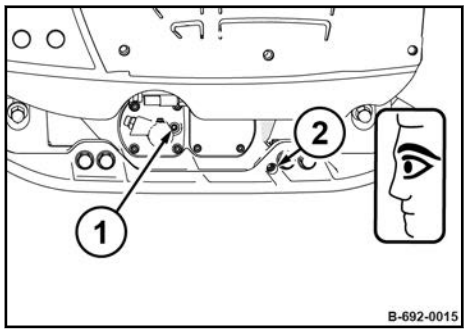

Fig. 72

Stand the machine horizontally.

⇨ **Nominal value:** Bottom edge of filling/drain bore.

Clean bleeding screw (1) and filling/drain plug (2) and install with sealing agent (spare parts number: 009 700 16).

Dispose of oil environmentally.

6.9.5 Check the hydraulic oil level

NOTICE!

Park the machine horizontally.

ENVIRONMENT!

Catch running out oil, do not let it seep into the ground and dispose off environmentally.

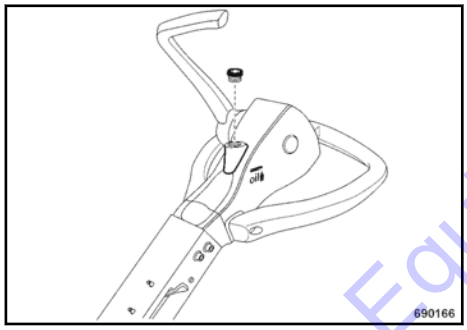

Fig. 73

Adjust the steering rod with height adjustment ↳ Fig. 73 so that the area with the level inspection plugs is horizontal.

Unscrew the plug.

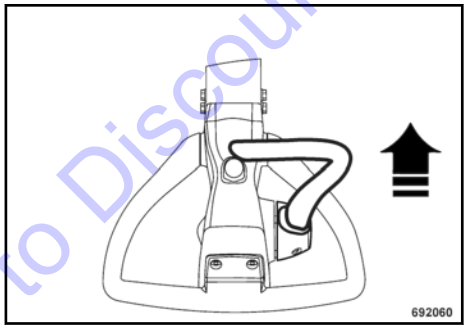

Fig. 74

Hold the travel lever in forward position ↳ Fig. 74.

Go to Discount-Equipment.com to order your parts

https://truckmanualshub.com/

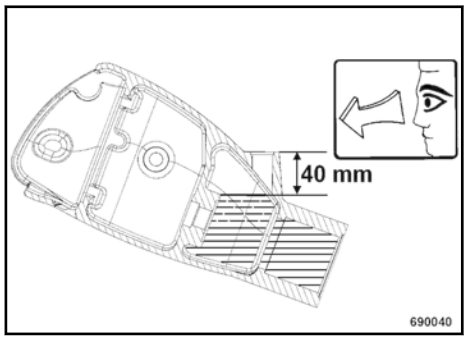

Fig. 75

Check whether the hydraulic oil level is approx. 40 mm (1.6 in) below the filler opening ↳ Fig. 75 (see also mark on steering rod head), top up hydraulic oil if necessary.

Filling up hydraulic oil

For quality and quantity of oil refer to the "table of fuels and lubricants".

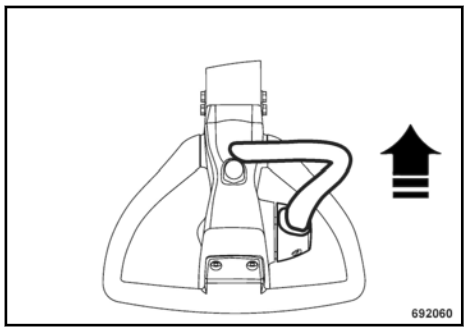

Fig. 76

Shift the travel lever forward against the stop ↳ Fig. 76.

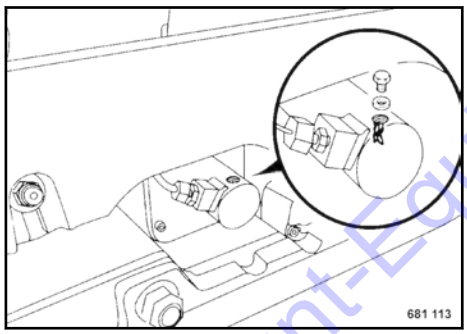

Fig. 77

Lay a cloth down before loosening the venting screw.

Slacken the bleeding screw ↳ Fig. 77.

Wait until all air has escaped, then tighten the bleeding screw.

Go to Discount-Equipment.com to order your parts

https://truckmanualshub.com/

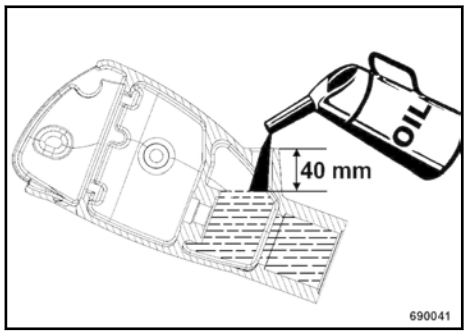

Fig. 78

Fill in hydraulic oil to approx. 40 mm (1.6 in) below the edge of the filler opening ↳ Fig. 78.

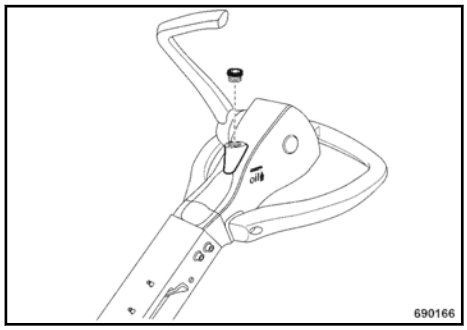

Fig. 79

Screw in and tighten the plug ↳ Fig. 79.

6.9.6 Check the rubber buffers

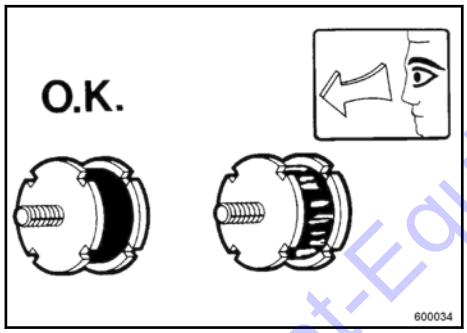

Fig. 80

Check all rubber buffers ↳ Fig. 80 for tight fit, cracks and damage and replace immediately if damaged.

Go to Discount-Equipment.com to order your parts

https://truckmanualshub.com/

6.10 As required

6.10.1 Tightening the screws

Self locking nuts must always be replaced by new ones after they have been unscrewed.

Bolt dimensions	Tightening torques* ft - lb		
	8.8	10.9	12.9
M4	2	3	4
M5	4	7	7
M6	7	11	13
M8	18	26	33
M10	37	55	61
M12	65	91	108
M14	101	145	173
M16	156	221	264
M18	213	303	361
M20	304	426	513
M22	413	559	695
M24	524	738	885
M27	774	1092	1308
M30	1047	1482	1770

Fig. 81

*Strength classes for screws with untreated, non-lubricated surfaces. The quality designations are stamped on the screw heads.

8.8 = 8 G

10.9 = 10 K

12.9 = 12 K

The values result in a 90% utilization of the screw's yielding point at a coefficient of friction of μ total = 0.14.

The compliance with the tightening torques is to be checked with torque wrenches.

The tightening torques are not applicable when using MoS_2 lubricants.

6.10.2 Engine conservation

If the engine is to be shut down for a longer period of time (e.g. during the winter) we recommend the following conservation measures for the engine to avoid corrosion:

Clean the engine including the cooling system: with cold cleansing agent or, even better, with a steam cleaner.

Run the engine warm and shut it down.

Drain the still warm engine oil and fill in anti-corrosion engine oil.

Drain the fuel from the fuel tank, mix it well with 10% anti-corrosion oil and fill it in again. Instead of mixing anti-corrosion oil with the fuel it is also possible to fill the tank with injection pump testing oil with anti-corrosive properties (e.g. Calibration Fluid B).

Run the engine for 10 minutes until all lines, filters, pump and nozzles are filled with the conserving mixture and the new engine oil is distributed to all parts.

After running the engine remove the valve cover and spray the rocker chamber with a mixture of diesel fuel and 10% anti-corrosion oil. After this screw the cover back on.

Crank the engine several times by hand (throttle lever in stop position) to spray the combustion chamber.

Take the V-belt off and spray the grooves in the V-belt pulleys with anti-corrosion oil. Remove the anti-corrosion oil before taking the machine back into operation.

Close the air intake opening on the air filter and the exhaust tube.

Go to Discount-Equipment.com to order your parts

https://truckmanualshub.com/

Depending on weather conditions these conserving measures will provide protection for approx. 6 - 12 months.

The conserving oil must be replaced by engine oil according to the API- (MIL) classification before taking the machine into service.

Anti-corrosion oils are those that comply with the MIL-L-21260 or TL 9150-037/2 resp. Nato Code C 640/642.

Mark a machine with a conserved engine by attaching a clearly visible warning tag.

Go to Discount-Equipment.com to order your parts

https://truckmanualshub.com/

7 Trouble shooting

Go to Discount-Equipment.com to order your parts

https://truckmanualshub.com/

7.1 General notes

Please observe strictly the safety regulations in the corresponding section of these operating and maintenance instructions.

Malfunctions are frequently caused by incorrect operation of the machine or insufficient maintenance. Whenever a fault occurs you should therefore thoroughly read these instruction on correct operation and maintenance.

If you cannot locate the cause of a fault or rectify it yourself by following the trouble shooting chart, you should contact our customer service department.

Go to Discount-Equipment.com to order your parts

https://truckmanualshub.com/

7.2 Starting with jump wires

Choose this type of starting if the starter battery is flat and the machine cannot be started manually with the recoil starter.

NOTICE!

A wrong connection will cause severe damage in the electric system.

The auxiliary battery must have the same voltage as the starter battery.

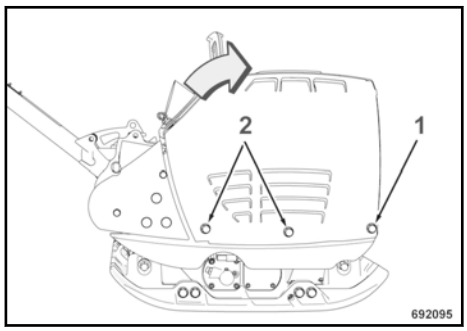

Fig. 82

Loosen the hood fasteners (1) on both sides and remove the fasteners (2) from both sides ↳ Fig. 82.

Fold the hood back.

Remove the battery holder and take off the vibration damping mat.

Check vibration damping mats, brackets and screw connections, replace if necessary.

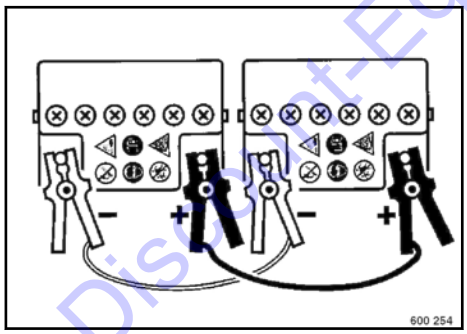

Fig. 83

Join the plus poles on external battery and starter battery with the jump wire ↳ Fig. 83.

Use the second jump start cable to connect the negative poles on external battery and starter battery.

Start the engine as described in the chapter “Starting the engine”.

When the engine is running remove the jump start cable from the two negative poles first and from the positive poles after.

This work sequence is necessary to avoid short circuit caused by contact between positive and negative cables.

Close the hood again and ´fasten it with bolts.

Go to Discount-Equipment.com to order your parts

https://truckmanualshub.com/

7.3 Fuses

WARNING!
Fire hazard!
Do not use fuses with higher ampere ratings and do not bridge fuses.

NOTICE!
Always cover the fuse with the protective cover.

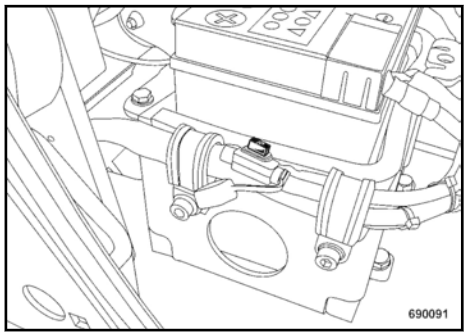

Fig. 84

Fuse (25 A) ↳ Fig. 84.

NOTICE!
Machines with Economizer are protected by an additional fuse (5 A).Optional equipment

Go to Discount-Equipment.com to order your parts

https://truckmanualshub.com/

7.4 Engine problems

Fault description	Cause	Remedy
No or poor starting of engine	Fuel tank empty	Fill in fuel
	No fuel at the injection pump, supply not correct, fuel filter clogged (can be notice if no fuel runs out when the fuel supply line is pulled off)	Check the fuel supply Check the fuel supply line to the engine Check the fuel filter, replace if necessary
	Injection nozzle out of order	Have examined by a specialist
Engine does not start or starts poorly (at low temperatures)	Paraffin separation in the fuel	Check the fuel, if necessary drain the fuel tank and fill in winter fuel
	Insufficiently charged battery	Check the battery or have it checked by a specialist.
Engine difficult to crank	Oil with too high viscosity	Drain off oil and fill in oil of correct viscosity
The starter does not switch on orthe engine is notcranked.	Fault in the electric system:	Have examined by a specialist.
	- Battery or other cable connections not correctly connected.	Have examined by a specialist.
	- Cable terminals loose or oxidised.	Have examined by a specialist.
	- Battery defective or not charged.	Have examined by a specialist.
	- Starter defective.	Have examined by a specialist.
Engine has no compression	Incorrect valve clearance	Have examined by a specialist
	Engine defective	Have examined by a specialist
Engine looses power and speed	Fuel tank empty	Fill in fuel
	Throttle lever does not stay in selected position	Tighten the nuts
	Fuel filter clogged	Change the fuel filter
	Tank ventilation blocked	Check the tank ventilation
Engine looses power and speed, black exhaust smoke	Air filter clogged	Clean the air filter
	Incorrect valve clearance	Have examined by a specialist
	Injection nozzle defective	Have examined by a specialist
	Too much oil in crankcase	Drain the oil down to the MAX-mark on the dipstick

Go to Discount-Equipment.com to order your parts

https://truckmanualshub.com/

Trouble shooting – Engine problems

Fault	Possible cause	Remedy
Engine overheating	Lack of cooling air	Clean cooling air inlet and cooling fins
	Function of injection system not correct	Have examined by a specialist
	Too much oil in crankcase	Drain the oil down to the MAX-mark on the dipstick
Engine stops	Fuel tank empty	Fill in fuel
	Fuel filter clogged	Check the fuel filter, replace if necessary
	Tank ventilation blocked	Check the tank ventilation
	Air in the fuel system	Check the fuel system for air Check the bleeding valve
Engine runs with high speed, but no vibration	Centrifugal clutch defective	Change the centrifugal clutch
	V-belt	Check tension, replace if necessary

Go to Discount-Equipment.com to order your parts

https://truckmanualshub.com/

7.5 Trouble shooting Economizer

Fault	Description	Possible cause
Status-LED off	Operation	
Status-LED on	no frequency detected	Engine not running
		Plug-in connector defective Sensor/cable defective
Status-LED flashing	Frequency detected, but outside permissible range	Engine speed too low Vibration frequency too low
		Sensor defective
		atypical soil V-belt slipping incorrect V-belt installed

Go to Discount-Equipment.com to order your parts

https://truckmanualshub.com/

Go to Discount-Equipment.com to order your parts

https://truckmanualshub.com/

8 Disposal

Go to Discount-Equipment.com to order your parts

https://truckmanualshub.com/

8.1 Final shut-down of machine

If the machine can no longer be used and needs to be finally shut down you must carry out the following work and have the machine disassembled by an officially recognized specialist workshop.

WARNING!

Danger of cauterisation ! Danger of explosion!

When working on the battery do not use open fire, do not smoke!

The battery contains acid. Do not let acid come in contact with skin or clothes!

Wear protective clothing!

Remove the batteries and dispose of in compliance with legal regulations.

ENVIRONMENT!

Catch all fuels and lubricants, do not let them seep into the ground and dispose of in compliance with legal regulations.

Empty the fuel tank.

Drain lubrication oil from engine and exciter housing.

Drain off hydraulic oil.

WARNING!

Danger of explosion!

Parts that previously contained combustible fluids must not be cut with a cutting torch.

Go to Discount-Equipment.com to order your parts

https://truckmanualshub.com/

PARTS FINDER

Search Website by Part Number

Discount Equipment

Search Manual Library For Parts Manual & Lookup Part Numbers – Purchase or Request Quote

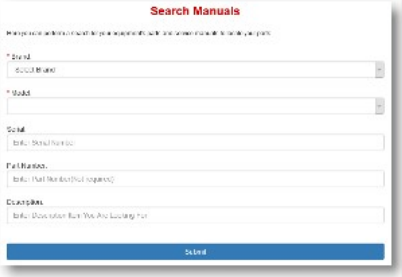

Can't Find Part or Manual? Request Help by Manufacturer, Model & Description

Discount-Equipment.com is your online resource for quality parts & equipment.

Florida: 561-964-4949 Outside Florida TOLL FREE: 877-690-3101

Need parts?

Click on this link: http://www.discount-equipment.com/category/5443-parts/ and choose one of the options to help get the right parts and equipment you are looking for. Please have the machine model and serial number available in order to help us get you the correct parts. If you don't find the part on the website or on one of the online manuals, please fill out the request form and one of our experienced staff members will get back to you with a quote for the right part that your machine needs.

We sell worldwide for the brands: Genie, Terex, JLG, MultiQuip, Mikasa, Essick, Whiteman, Mayco, Toro Stone, Diamond Products, Generac Magnum, Airman, Haulotte, Barreto, Power Blanket, Nifty Lift, Atlas Copco, Chicago Pneumatic, Allmand, Miller Curber, Skyjack, Lull, Skytrak, Tsurumi, Husquvarna Target, Stow, Wacker, Sakai, Mi-T-M, Sullair, Basic, Dynapac, MBW, Weber, Bartell, Bennar Newman, Haulotte, Ditch Runner, Menegotti, Morrison, Contec, Buddy, Crown, Edco, Wyco, Bomag, Laymor, EZ Trench, Bil-Jax, F.S. Curtis, Gehl Pavers, Heli, Honda, ICS/PowerGrit, IHI, Partner, Imer, Clipper, MMD, Koshin, Rice, CH&E, General Equipment ,Amida, Coleman, NAC, Gradall, Square Shooter, Kent, Stanley, Tamco, Toku, Hatz, Kohler, Robin, Wisconsin, Northrock, Oztec, Toker TK, Rol-Air, APT, Wylie, Ingersoll Rand / Doosan, Innovatech, Con X, Ammann, Mecalac, Makinex, Smith Surface Prep,Small Line, Wanco, Yanmar