https://truckmanualshub.com/

Agrison 80HP CDF - 100HP CDF Tractor

Operation Manual

AGRISON®

https://truckmanualshub.com/

用 户 须 知
Instructions to the User

用 户 须 知

Instructions to the User

尊敬的用户：

Dear user,

感谢您对我公司的信任，购买我公司生产的“沭河”牌系列轮式拖拉机，为了您能正确、合理、高效地使用该拖拉机，请您注意以下重要信息：

Thank you for your trust of our company and procurement of our “Shuhe” series wheeled tractor. To correctly, rationally, and efficiently use the tractor, please pay attention to the following important information:

1. 使用本拖拉机之前，不管您以前有无驾驶经验，都应该认真阅读本说明书。这样将会有助于您更合理有效地操作该拖拉机。

   Prior to using the tractor, please carefully read this Use And Maintenance no matter you are a new or experienced driver. By this way, you can operate the tractor more rationally and effectively.

2. 为了能给您创造更多的经济效益，延长拖拉机的使用寿命，请您在使用本产品之前，仔细阅读本说明书和与之配套的发动机及农机具使用说明书，并严格执行说明书中的规定，操作、维护、保养好拖拉机，以便于充分发挥拖拉机的性能。

   To bring more economic benefits and extend the service life of the tractor, you are recommended to, prior to using the tractor, carefully read the Use And Maintenance and the Use And Maintenances of the accompanied engine and agricultural machinery as well as strictly perform corresponding stipulations to do well in the tractor operation, repair, and maintenance, so as to fully play its performance.

3. 请不要随意改装拖拉机，以免影响拖拉机性能和发生意外事故，同时将会造成难以履行“三包”服务的后果。

   It is not allowed to randomly retrofit the tractor, so as to avoid affecting its performance and leading to accidents; in addition, it will also make it difficult to perform the “three-guarantee” service.

4. 本拖拉机只能由熟悉拖拉机特性并具有相关安全操作知识的人员操作、保养和维修。

   The tractor can only be operated, maintained, and repaired by the staff familiar with the tractor characteristics and with the safe operation knowledge.

5. 驾驶员必须持有当地交通部门签发的农用车、拖拉机驾驶执照。

   The driver shall bear the agricultural vehicle and tractor driving license issued by the local transportation department.

6. 任何时候都应遵守《中华人民共和国道路交通安全法》、《道路交通安全法实施条例》和其他安全规定以及道路交通规则，防止发生意外事故。

   It is a must to always follow the Road Traffic Safety Law of the People’s Republic of China, the Regulation on the Implementation of the Road Traffic Safety Law of the People’s Republic of China, relevant safety stipulations, and road traffic rules, so as to avoid accidents.

7. 因各地农艺情况和土壤状况差异较大，本使用说明书中推荐的用途、参数和配套农机具及作业效率可能会有所不同，请用户根据实际情况进行选择。使用时不应超过使用说明书的规定，否则可能导致拖拉机性能下降或出现故障。

   Due to different agricultural conditions and soil states, the purpose, parameters, supporting agricultural machinery, and working efficiency recommended in the Use And Maintenance may be different, and the user is recommended to make selections based on actual conditions. Upon use, the stipulations in the Use And Maintenance shall be strictly followed; or else, the tractor performance may be degraded or the malfunction may be caused.

AGRISOM™ 1300 651 830

https://truckmanualshub.com/

用 户 须 知

Instructions to the User

8. 本使用说明书并非产品质量保证书，本书的数据、插图和说明等内容仅限于操作、保养和维修机器。

   The Use And Maintenance is not same as the product quality guarantee, and the data, illustrations, and descriptions are only applicable for the tractor operation, maintenance, and repair.

9. 本系列拖拉机的执行标准为 GB/T 15370.2《农业拖拉机通用技术条件 第 2 部分：50kW～130kW 轮式拖拉机》和 Q/SCL 0016《沭河系列轮式拖拉机企业标准》。

   The executive standards of the series tractor cover GB/T 15370.2 General Requirement of Agricultural Tractors - Part 2: 50 ~ 130 kW Wheeled Tractor and Q/SCL 0016 Enterprise Standard of Shuhe Series Wheeled Tractor.

10. 本说明书主要依据出版时现行产品为基础进行编制，重点介绍通用型。为提升拖拉机的质量、提高使用性能和安全性能，我公司会持续适时改进变更，因此本说明书的内容、插图等可能有与实物不同的地方。若有更改，恕不另行通知，敬请谅解。

    The Use And Maintenance is prepared mainly based on the current product at the date of publishing, which focuses on the general type introduction. To enhance the tractor quality and improve the service and safety performances, our company will continuously and timely make improvements and changes; thus, the content and illustrations in the Use And Maintenance may be different from the physical objects. It is subjected to changes without further notice.

11. 用户如有三包维修及配件供应问题，请与我公司就近的销售网点联系。

    For matters such as the “three-guarantee” repair and parts supply, please contact with the local sales dealer.

欢迎广大用户选购我公司产品，我公司以质量第一、信誉第一、用户至上为宗旨，竭诚为广大用户服务。

Welcome to buy our product, and we will try to serve all users wholeheartedly with the tenets of the “Quality First, Reputation First, and User Utmost”.

AGRISON™ 1300 651 830

https://truckmanualshub.com/

常用单位中英文对照表
Common Unit Contrast List (Chinese - English)

常用单位中英文对照表

Common Unit Contrast List (Chinese - English)

序号 No.	单位类别 Unit Category	国际单位 International Unit	中文对照 English Meaning
1	时间 Time	S	秒 Second
2		min	分钟 Minute
3		h	小时 Hour
4	长度 Length	mm	毫米 Millimeter
5		cm	厘米 Centimeter
6		m	米 Meter
7		km	千米 Kilometer
8	力 Force	N	牛顿 Newton
9		KN	千牛 Kilonewton
10	力矩 Torque	N·m	牛顿·米 Newton · meter
11	质量 Mass	kg	千克 Kilogram
12		g	克 Gram
13	压力 Pressure	Pa	帕 Pascal
14		kPa	千帕 Kilopascal
15		MPa	兆帕 Megapascal
16		kgf/cm^2	千克力/平方厘米 Kilogram force / square centimeter
17	温度 Temperature	℃	摄氏度 Centigrade
18	速度 Speed	km/h	千米/小时 Kilometer / hour
19	转速 Rotation speed	r/min	转/分钟 Rotation / minute

AGRISONTM 1300 651 830

常用单位中英文对照表
Common Unit Contrast List (Chinese - English)

20	电流 Current	A	安培 Ampere
21	电压 Voltage	V	伏 Volt
22	容积 Capacity	L	升 Liter
23		ml	毫升 Milliliter
24	流量 Flow	L/min	升、分钟 Liter per minute
25	功率 Power	kW	千瓦 Kilowatt
26		PS	马力 Horsepower
27	油耗 Oil consumption	g/kW·h	克 / 千瓦·小时 Gram / kilowatt · hour
28	蓄电池容量 Storage battery capacity	A·h	安培·小时 Ampere · hour

AGRISON™ 1300 651 830

https://truckmanualshub.com/

概 述、预期用途

Overview，Expected purposes

概 述

Overview

本说明书详细地介绍了 SH90 系列轮式拖拉机安全规则及使用注意事项、主要技术规格、磨合、使用、技术保养、调整、常见故障和故障排除方法等，是本产品使用和维修人员必备的技术资料，也可供有关农机管理人员参考。

This instruction book makes a detailed description of safety rules, precautions, main technical specifications, running-in, use, technical maintenance, adjustment, common faults and failure elimination methods of the SH90 series wheeled tractor, and it is a necessary technical document for the users and maintenance personnel of this product and it can also be available as reference for agricultural machinery management personnel.

警告：表示如果不避免，可能造成人身伤害；

WARNING: means it may cause personal injury if it is not avoided.

注意：表示如果不避免，可能造成较低或中等程度的人身伤害；

CAUTION: means it may cause low or moderate personal injury if it is not avoided.

重要事项：表示如果不避免，可能造成机器损坏或破坏环境。

IMPORTANT: means it may cause machine damage or destruction of the environment if if it is not avoided

请仔细阅读符号后面的信息，并告知其他操作者。

Please read the information behind the symbols and inform other operators.

AGRISON™ 1300 651 850

预 期 用 途

Expected purposes

沭河 SH90 系列轮式拖拉机是一种多用途的大型农用轮式拖拉机，该机具有结构紧凑、操纵方便、转向灵活、牵引力大、用途广泛、维修保养方便等特点。如配备适当农具，可进行耕、耙、播、收等作业；配备拖车可进行运输作业，拖挂质量比（挂车总质量与拖拉机整机质量的比值）应不大于 3；通过动力输出轴可与秸秆还田机作业，也可作为抽水机、脱粒机的原动力。请按本说明书的要求正确配套农机具，以获得最大的经济效益。使用者应严格遵守制造厂规定的使用、保养和维修条件，以及预期用途的基本要求。用于其他作业均与拖拉机预期用途违背。

The Shuhe SH90 series wheeled tractor is a versatile large-scale agricultural wheeled tractors and the machine is possessed with the features of compact structure, easy to manipulate, flexible steering, great traction force, versatility and convinientmaintenance. If equipped with appropriate farm tools, the machine can conduct the operation of plowing, harrowing, sowing and harvesting; If equipped with a trailer, the machine can do transportation operations and the trailer-tractor mass ratio(the ratio between the total mass of the trailer and whole tractor mass) should not exceed 3; through the power output shaft, the tractor can operate in cooperation with straw returning machine; the tractor can also be used as the motive power for water pumps and threshers. Please match correct agricultural machines and tools with this tractor in accordance with the requirements of this instruction book in order to obtain maximum economic benefits. The users should strictly abide by the use, maintenance and repair conditions specified by the manufacturer, as well as the basic requirements for its expected purposes. Other operations are contrary to the expected purposes of this tractor.

本拖拉机只能由熟悉本拖拉机特性，并具有相关安全操作知识的人员操作、保养和维修。

https://truckmanualshub.com/

概 述、预期用途

Overview，Expected purposes

This tractor can only be operated, maintained and repaired by those who are familiar with its characteristics and have ralated safe operation knowledge.

任何时候都必须遵守防止发生意外的规则和其他安全以及道路交通规则。

Rules that prevent accidents and other safety and road traffic must be obeyed at any time.

任何对本拖拉机的擅自改制，或用于拖拉机预期用途相违背的作业，而导致及其可靠性降低、机器损坏或人身伤害，生产厂家概不负责。

The manufacter will not responsible for the reduced reliability, machinery breakdown damage and personal injury due to any arbitray modification of this tractor or operating it against the expected purpose.

禁止从事以上以外的作业。

The tractor is forbidden to operatate other jobs that not mentioned above.

禁止用于超负荷的耕作及运输。

The tractor is forbidden in overloaded cultivation and transportation.

禁止拖拉机拖斗载人。

The tractor is forbidden to carry persons with tractor trailer.

AGRISON™ 1300 651 830

https://truckmanualshub.com/

目录
Catalogues

目录

Catalogues

1.安全注意事项 Safety precautions 1
安全规则及使用注意事项 Safety rules and notices of use 1
安全警告标志 Safety Warning Mark....9
2.产品标志 Product Marking 19
3.拖拉机主要技术规格 Main technical specifications of the tractor....21
产品型号 Product model 21
产品技术规格 Product Specification 23
发动机主要技术规格 The engine main technical specifications 41
拖拉机理论速度 Theory of tractor speed....45
4．操作说明 Operator Instruction 49
产品描述 Product Description....50
拖拉机操纵机构及仪表 Operating mechanism and instrument of tractor....50
发动机的起动 How to start engine....57
拖拉机起步 How to start tractor....61
拖拉机的转向 How to steer tractor....62
拖拉机的换档 How to gear shift tractor 62
差速锁的操作 How to operate differential lock 67
前驱动桥的使用 How to use front drive axle 68
拖拉机的制动 How to brake tractor....69
拖拉机停车和发动机熄火 How to stop tractor and how to flameout engine....69
轮距的调整 Adjustment of wheel track 70
轮胎的使用与拆装 How to use and assemble/disassemble tyre....75
配重的使用 How to use counter weight 78
驾驶座的调整 How to adjust driver’s seat 79
拖拉机覆盖件 Tractor covers 80
拖拉机工作装置的使用 How to use operating device of tractor....84
拉机的磨合 Tractor running in 102
拖拉机常见故障和排除方法 Common fault and troubleshooting for tractor 108
5．附件、备件及易损件 Accessories, spare parts and consumables....126
附件 Accessories 126
随机备件 Spare part 127
易损件 Wearing part.... 131
6. 维护保养说明 Instruction on maintenance 134
技术保养规程 Technical maintenance regulation 134
技术维护保养操作 Operations for Technical Maintenance 136
拖拉机底盘的调整 Tractor chassis adjustment 147
液压悬挂系统调整 Hydraulic hitch system adjustment 157
全液压转向系统使用注意事项 Precaution when using full hydraulic steering system 162
7 存放 Storage.... 164
拖拉机存放期损坏的原因 Reasons for the damage of tractor during storage 164
拖拉机封存 Tractor sealing and storing.... 165

概 述、预期用途
Overview，Expected purposes

拖拉机封存期间的保养 Maintenance for tractor during sealing up 166

AGRICONTM 1300 651 830

https://truckmanualshub.com/

拖拉机的启封 Tractor unsealing 166
8 交货、验收、运输 Delivery, inspection and transportation 168
交货、验收 Delivery & inspection 168
运输 Transportation 168
9 拆散和处置 Disassemble and dispose 170
10. 保修事项 Warranty term 171
产品保修的依据 Product warranty basis 171
不实行保修的情况 Cases not covered by the warranty policies 171
11. 附录 Appendixes 173
拖拉机的用油和溶液 Oils and solutions used on the tractor 173
主要螺栓、螺母拧紧力矩表 Tightening torque table of major bolts and nuts 175
油封 Reinforced seal 177
滚动轴承 Rolling bearing 177
11.5 O 形橡胶密封圈 O-ring seal 180
11.6 配套农机具 Supporting farm machines and implements of the SHUHE SH 90series tractors 183
用户信息反馈单 Customer Information Feedback Form 192

AGRISON™ 1300 651 830

https://truckmanualshub.com/

1.安全注意事项

Safety precautions

1.1 安全规则及使用注意事项

Safety rules and notices of use

操作前必读

Reading prior use

1. 必须充分地阅读并理解使用保养说明书及安全警告标志；
   The instructions for use and maintenance and the safety warning identifiers have to be fully read and understood.
2. 必须记住正确的操作及作业方法。
   The correct manipulation and operating method have to be kept in mind.

图 1-1 操作前必读

Fig.1-1 Reading prior to use

合格的操作者

An qualified operator

1. 操作机器时,必须有足够的判断能力；
   When operating the machine, the driver must be able enough for sound judgment.
2. 身体感觉不适、酒后、睡眠不足、孕妇、色盲及未满 18 岁的人不能操作机器；
   Persons feeling not well, drunk, short of sleeping, pregnant women, color blindness and those under 18 year-old are not allowed to operate the machine.
3. 驾驶员应受过专门训练，取得驾驶执照并按时接受审验；
   The driver should have received the special training, acquired the driving license and subject to the proof-test on time.
4. 初次操作的人，在熟练之前，请低速运转。
   In case of first driving, the operator is required to drive slowly before skilled.

图 1-2 合格的操作者

Fig.l-2 An qualified operator

驾驶员的服装

Driver's clothes

- 驾驶员在作业时，应穿合适的紧身工作服，不许穿肥大的外套和衬衫， 不许扎领带。
  During the operation, the driver should put on the tight-fitting work clothes. The large coat and the shirt as well as tie are not allowed.

图 1-3 驾驶员服装

Fig.l-3 Driver's clothes

AGRISON™ 1300 651 230

https://truckmanualshub.com/

安全注意事项
Safety precautions

油料的使用
Use of fuel

1. 燃油为易燃物，使用时应严禁烟火；
   The fuel is the combustible substance，fire is strictly prohibited when in use.
2. 燃油箱加油前，应将发动机熄火；
   Prior to tank refueling, the engine should shut down.
3. 加油和检修燃油系统时严禁吸烟；
   Smoking is strictly prohibited when the fuel system is refueled and overhauled.
4. 燃油或机油溢出时，请用干净的抹布擦试干净。
   Use clean rag to wipe out in case of fuel or machine oil overflow.
5. 燃油和润滑油的品质严格按“附录”规定的要求执行。
   The requirements set out in the “Appendix” must be compliedwith for the fuel and the lubricating oil quality.

图 1-4 油料的使用
Fig.l-4 Use of fuel

废弃油料的放置
Waste oil placement

1. 换下的机油属废弃油料，不能随意丢弃。
   The used machine oil is waste fuel substance and can not discard at random.
2. 换下的蓄电池酸液会污染环境，不能随意乱倒。
   The used acid of accumulator cell is contaminative to the environment and not spill randomly.

图 1-5 废弃油料的放置
Fig.l-5 Disused fuel placement

当管路泄漏时
When the pipeline leaks out

- 从油管泄露的高压油，不要用手去直接接触；可以用厚纸或木板去探测可能泄露的部位。
  Do not hand on the high-pressure oil leaked from the oil pipe; You may use the paste- or wood board to test the possibly leakage.

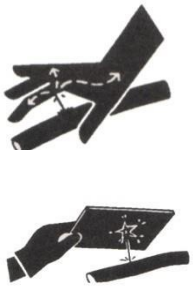

图 1-6 当管路泄漏时
Fig.l-6 When the pipeline leaks out

ACRISONTM 1300 63

https://truckmanualshub.com/

安全注意事项
Safety precautions

紧急事件的处置

Disposal in emergency cases

1. 刹车失灵时，英文定方向盘，到达安全的地方立即熄火，关闭发动机。

   In case of brake fail, steadily holds the steering wheel. Shuts down the engine at a safe place and shut the engine down.

2. 方向盘失灵时，应立即刹车，然后熄火关闭发动机。

   In case of malfunction of the steering wheel malfunctions, brakes immediately, and then shuts down the engine.

3. 机器失火时，应立即熄火关闭发动机。如备有灭火器，可用灭火器对准火焰的根部俯射；如无灭火器，可用沙子等进行灭火。

   When the machine catches fire, the engine should be immediately shut down. If the fire extinguisher is available, down shots the flame root; lf the fire extinguisher is not available. the sand and like substances can be used for fire fighting

4. 发生安全事故后，应视情况立即拨打当地的急救中心，医院或消防部门的急救电话。

   After the safety incident, immediately dials the F/A call of the local first-aid service, hospital or fire department according to the situation.

警告：

WARNING:

✧ 为了您的生命及财产安全，为了您亲人的幸福，请您安全操作。

Please hold your safe operation for sake of your life, property security and family happiness.

✧ 拖拉机起步时，应注意道路上有无障碍物，在拖拉机和农具或拖车之间是否有人，并鸣笛警示，以防拖拉机突然起动，发生以外危险。

When the tractor starts up, attention should be paid to whether there is any obstacles on road anyone between tractor and farm tool or trailer to prevent from the sudden startup of engine and the accidental danger.

✧ 不要在离开驾驶座的位置去起动和操纵拖拉机，起动拖拉机时要确保变速杆在空档位置，动力输出操纵杆和前驱动手柄置于分离状态，提升器操作手柄置于下降位置,以防拖拉机突然起动，发生意外危险。

Do not leave driver seat to start and operate the tractor. Prior to the startup, make sure that various shift levers remain on the neutral gear position, the dynamic output control handle and the front drive control handle are disengaged and the lifter operating handle on neutral to prevent from the sudden startup of engine and the accidental danger.

✧ 不要用跨接短路线柱的方法起动发动机，否则，当变速箱挂着档时，拖拉机会自动行走失控，发生意外危险。

Do not start up the engine by the way of bridge-over short circuit stubs, otherwise, The tractor will automatically loose control on driving and cause the accidental danger when the gearbox is engaged.

✧ 各踏板的运动均不受到阻碍，所有踏板必须能无障碍地回复原位。地板上、踏板上不可放置对踏板行程有妨碍的东西，不可放置在踩动踏板时会滚动或滑动的物品。踏板周围不可放置额外的脚毯或其他辅垫物，以免影响踏板动作发生意外危险。

The pedal action should not have any hindrance all of pedals must be free from obstacles and able to back on home position. On the floor and under the pedal, there must not be any things hindering the treadle travel. No rolling or slip objects may lay aside when steps on the pedals. The extra foot blanket or other

AGRISONM 1300 651 830

安全注意事项
Safety precautions

mats are not allowed to lay around the pedals, in order to avoid the influence on the treadle movement and cause the accidental danger.

✧ 拖拉机行走时不允许有人上下拖拉机，发动机运转时不允许爬到拖拉机底下进行检查和修理，以防发生危险。

While the tractor is moving, persons are not allowed to get on and off. During the engine run. no check and repair operation by crawling under the bottom of' the tractor are permitted for prevention from the accidental danger.

✧ 停车后，驾驶员从拖拉机上下来以前，一定要取出钥匙，将各变速杆拨到空档位置，并将制动手柄锁紧，以防发动机突然起动，自行动作失控，发生意外危险。

After parking and before getting down from the tractor, the driver must take out the key, set all shift levers on the neutral position, and lock up the braking handle to prevent the tractor from the sudden startup, action out of control and accidental danger.

✧ 运输作业时，必须将左右制动踏板连锁在一起，合理控制速度，过涵洞、桥梁时，要充分注意是否超高，转向拐弯时要提前充分减速，避免意外情况发生，引起翻车、撞车。

During the operation, the L/R brake pedals must chain-linked and the speed reasonably under control When crossing the tunnels and the bridges, full attention must be paid to whether the load is over the limited height. The sufficient deceleration must be made in advance while turning to avoid the accident, overturn and collision.

✧ 上下坡行驶时，必须将左右制动踏板连锁在一起，合理运用油门控制，拖拉机严禁挂空档或踩下离合器踏板滑行下坡，上下坡时严禁换档，以免发生翻车危险。

On and down slop, the lowest gear must be used and the use accelerograph reasonably controlled. It is strictly prohibited for the tractor to shift on neutral gear or to glide downhill by stepping on the clutch pedal. It is strictly prohibited for the gear shift on and down slop so as to avoid the danger of overturn.

✧ 拖拉机高速行驶中不得急转弯，不能使用单边制动进行急转弯，以免发生翻车危险。

The sudden turn is not allowed while the tractor drives on high speed. Do not make the sudden turn by the unilateral braking, to avoid the danger of overturn.

✧ 拖拉机在道路上行驶时应注意交通标志，严格遵守交通法规，以免发生意外安全危险。

By driving the tractor, the attention should be paid to the traffic indication and the traffic law and rules strictly observed, in order to avoid the accidental safety hazard.

✧ 转移时，必须严格遵守交通规则，两车之间应保持行车间距至少 60m（米），以免引起撞车发生意外危险。

In case of tractor displacement, the traffic rules should be strictly observed with at least 60mts of distance maintained between vehicles, to avoid the collision by accident.

✧ 沟、穴、堤坝等附近的路基较脆弱，拖拉机的重量可能使其崩溃，请绕开行驶，否则会发生意外危险。

The roadbeds near ditches, caves are more fragile, the tractor’s weight possibly causes their crushes, please make a detour, otherwise the accidental danger may arise.

✧ 拖拉机不得超载、超负荷使用，严禁超极限工作，以免机件过载，造成机器损坏甚至出现人身伤亡事故。

The tractor is not allowed to the overload and the excess use of load. It is prohibited to run over limit duty, which may cause the machine damage, even the casualty of present persons.

✧ 拖拉机夜间作业时，要有良好的照明设备，以免影响拖拉机的工作效果，发生意外危险事故。

When tractor works at night, the good lighting attachment must be provided in order to avoid the influence on the tractor work efficiency and dangerous accidents.

AGRISONM 1300 651 830

https://truckmanualshub.com/

安全注意事项
Safety precautions

✧ 拖拉机进行收割或场院作业时，须在排气管上安装火星消灭装置，以免发生意外危险事故。
When the tractor carries on the harvest or backyard work, the spark extinguish device must be fixed on the exhaust pipe, in order to avoid the accidental fire.

✧ 雨雪天作业时，必须降低作业速度，避免道路、地面湿滑造成的翻车危险。
When working on rain day, the operation rate must be reduced to prevent the path and ground from creating slippery and the danger of overturns.

✧ 进行动力输出作业时，必须确保连接可靠，防护可靠，避免运动部件脱出伤人。
When the operation of dynamic output is carried out, the reliable connection and protection must be guaranteed to avoid the moving parts for shaking off and injuring persons.

✧ 挂接、牵引机具时，必须确保各销轴连接可靠、牢固，销轴脱落造成的撞车危险，脱开挂接、牵引机具时，应该保各销轴全部处于分离状态，避免分离不清造成破坏机器及造成人身安全的危险。
When hitching and towing the attached tools, the reliable and fast connection of pin rolls must be guaranteed to prevent them from shaking off and causing the danger of collision. When disconnecting the hitch and towing tools, be sure that all pin rolls apart and avoid the damage on the machine ang human safety danger by the misconnection.

✧ 提升时，必须注意发动机油门的控制，避免因提升速度太快，造成破坏机器及造成人身安全的危险。
When lifting, be careful of the control on the engine throttle to avoid over-speed of winding, which may damage the machine or endanger the personal safety.

✧ 蓄电池充电时，应保证注液塞的排气孔畅通，远离明火，充完电先断电源，以防引起爆炸。
During the battery charge, Make sure that the air vent of fluid injection fills is unimpeded and far away from the open fire. After charge, the power should be first cut off to prevent from explosion.

✧ 要严格遵守高压输电线路所允许的安全高度，以免发生意外危险事故！
The installation height allowed by the High voltage transmission line must be strictly observed, in order to avoid the dangerous accident!

注意：

CAUTION:

✧ 各联接部位的螺栓螺母及易松零件，如前后驱动轮固定螺母处、转向拉杆连接螺母等处应经常检查，发现松动及时拧紧，以免发生意外危险事故。
Bolts, nuts and easy loose components on each joint, e.g. the nuts on the front/rear drive wheels and those attaching the steering draw rod should be frequently checked. If loose, screws it tightly to avoid the dangerous accident.

✧ 拖拉机动力输出轴工作时，必须安装动力输出轴防护罩，严禁人员接近动力输出轴，动力输出轴带负荷时，拖拉机不能急转弯，以免损坏万向节或拖拉机动力输出轴；动力输出轴不用时应使手柄处于分离位置，以免发生意外危险事故。
When the tractor runs by dynamic output, the safety shield of power take-off shaft has to be installed. Persons are strictly prohibited to approach the Power take-off shaft. When the power take-off shaft is on load, the tractor is not allowed to make the sudden turn in order to avoid the damage on the universal joint or the power take-off shaft; When the Power take-off shaft is not in use, the handle should be made on separate position, to avoid the dangerous accident.

✧ 停车后，发动机没有熄火前，驾驶员不得离开拖拉机，以防拖拉机突然起动，自行动作失控，发生意外危险。
After stopping and prior to the engine shutdown of the tractor, the drive must not leave the tractor, to

AGRISONTM 1300 651 830

https://truckmanualshub.com/

安全注意事项
Safety precautions

prevent the tractor from the sudden startup, action out of control and accidental risk.

✧ 不得已在斜坡停放车时，应使手制动手柄处于工作状态，使发动机熄火，挂上档（上坡位置挂前进档，下坡位置挂倒档），一定要使用驻车制动并用三角塞块将后轮塞住，以防拖拉机自行动作失控，发生意外危险。

When, the hand braking handle should be in active state, let the engine shut down, put on gear (Uphill position on front gear, downhill on reverse gear position), The auxiliary brake must be used with three pieces of triangle chocks blocking the rear wheels, to prevent from the action out of control and the accidental risk.

✧ 轮胎的安装和调整只能由经验丰富的专业人员使用合适的专用工具进行，轮胎安装不正确会引起严重事故；

The installation and adjustment of tires can be carried out by the trained persons with special-purpose tool. The wrong installation of tires may cause the serious accident.

✧ 清理水箱时，应先熄火关闭发动机并等水箱冷却后再进行清理，以免发生烫伤事故及损坏水箱。

When the water tank is to be cleaned up, the engine should be first shut down and lets the water tank cool for cleaning, in order to avoid the scald accident and the damage on the water tank.

✧ 在选装部件、换装部件或挂接机具的安装使用前，请注意安全并仔细阅读安全标志和使用说明书。

Before the selection for installing and replacing the parts, or for safe use by towng the machine and tool, please pay attention to the safety and carefully read the safety identifiers and the instruction for use.

重要事项：

IMPORTANT:

✧ 新出厂的拖拉机或大修后的拖拉机，必须按拖拉机磨合要求进行磨合。

For the tractor from the new production or after overhaul, the running-in has to be made according to the requirements of tractor's running-in, in order to avoid the affects on the normal service life of tractor.

✧ 拖拉机应严格按要求使用各种溶液。燃油必须经过至少 48h（小时）沉淀净化后，传动系润滑油必须经过提升器吸油滤清器精度相同的滤油器的过滤后，才能加注。

The tractor should use various kinds of solution strictly according to the request. The fuel oil must be subject to at least 48h(hours) sediment and purification process. Only having passed through the filtration by filter at the same precision as that of oil absorption filter of lifter, that the lubricating oil in the transmission system can be added.

✧ 拖拉机起动前必须检查油路、电路、冷却水情况；启动后必须随时注意各仪表的读数。

Prior to the startup of tractor, the oil system, electric circuit and the cooling water have to be examined; After the startup, the attention has to be paid anytime to the readout of various instruments.

✧ 使用动力输出轴驱动农具以前，应检查拖拉机和驱动农具匹配合理性。耕作时，应使动力输出轴与万向节传动轴的夹角不大于 15°（度）；液压操纵正常时，地头转弯提升农具后，动力输出轴及农具输入轴与传动轴夹角不大于 20°（度）；禁止在动力输出接通前先将旋耕机入土，这会导致旋耕机损坏及拖拉机离合器严重损坏（为提高作业效率，转弯时可不切断动力源，但必须农具提升高度在离地 200mm（毫米）左右）。

Before the power take-off shaft actuates the farm tool, the matching rationality， between the tractor and driven farm should be inspected. When tillage is performed, the included angle between the power take-off shaft and the universal joint drive shaft should not be bigger than 15° (grad); When the hydraulic operating control is normal, and after the farm tool has been lifted at the curve of field edge, the included angle between the power take-off shaft and the universal joint drive shaft should not be bigger than 20°(grad); It is prohibited to dig the Rototiller into field prior to the power take-off

AGRISOM 1300 651 830

安全注意事项
Safety precautions

connection, for this will cause the damage on the Rototiller and severe damage on the tractor clutch [To increase the work efficiency, the power supply can not be shut off at the time of curve, however, the lifting height of tools must maintain ca. 200mm above the ground (millimeter)].

✧ 拖拉机悬挂农具转移时应将农具位置锁定；驾驶员离开拖拉机时一定要将农具降到地面。

The tractor is hanging the farm tool shifts when should farm tool position locking; The farm tools must be lower on the ground when the driver leaves the tractor.

✧ 冬季气温低于 0℃（摄氏度）时，必须使用防冻液。

When the temperature in winter is lower than 0? (degree Celsius), the anti-freezing fluid must be used.

✧ 拖拉机前驱动桥只在农田作业和道路泥泞轮胎打滑时使用；其他情况下严禁使用，否则易造成轮胎及传动系早期磨损。

The front driving axle of tractor can be used only at the time of farmland work, on muddy road and skidded tires: the use on other cases is not allowed, otherwise it is easy to create the premature wear of tire and the power transmission.

✧ 拖拉机在行驶过程中，驾驶员的脚不允许放在制动器踏板或离合器踏板上，以免发生制动器或离合器早期损坏。

During the running process of tractor, driver's foot are not allowed to place on the brake pedal or the clutch pedal, in order to avoid the premature wear of the brake or the clutch.

✧ 拖拉机配带农机具进行道路转移时，应将悬挂装置上拉杆调整到最短状态，并调整限位杆防止农机具左右摆动，同时必须将上拉杆及限位杆的锁紧螺母拧紧，确保行驶安全，避免由此带来的破坏机器和农机具的危险。

When the tractor displaces with attached farm tools, the upper lever of the hitch unit should be adjusted to the shortest condition, and the limit lever Adjusted to prevent the farm tools from swinging. At the meantime, the locking nuts of upper and limit levers must be tightly screwed in order to guarantee the travel security and avoid the damage risk on the machine and farm tools.

✧ 维修拖拉机，必须选用质量合格的零部件。

For the tractor maintenance, the qualified spare-parts must be used:

拧开散热器盖

Twists off the radiator cap

● 发动机仍在热态时，拧开散热器盖要十分小心，怠速运转几分钟后，将发动机熄火，然后将散热器盖拧松到第一档位置，待减掉压力后再将盖拧下。

When the Engine remains on warm state, care should be fully taken when twisting off the radiator cap. After several minutes of idle regime rotation and engine shutdown and cooling, twists the radiator cap to the first gear position, then takes it out after the pressure has been reduced.

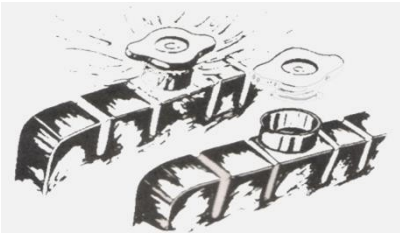

图 1-7 拧开散热器盖

Fig. 1-7 Twists off the radiator cap

AGRISON™ 1300 651 830

https://truckmanualshub.com/

安全注意事项
Safety precautions

进行电器部件维修时

Maintenance of electric parts

1. 将电锁开关的钥匙拔下来。

Tanks out the electrical locking switch key.

2. 将搭铁线与蓄电池断开后，才能进行电器维修。

Only the electric appliance service can be carried out after the earth wire has been separated from the battery.

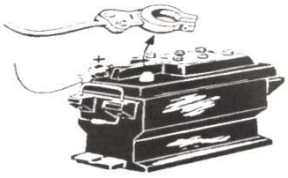

图 1-8 进行电器部件维修

Fig. 1-8 Maintenance of electric parts

拖拉机出现异常现象时

In case of abnormal phenomenon occurred on the tractor

1. 不允许拖拉机“带病”工作，特别在无油压、油压过低、水温过高或出现异常响声和气味时，应及时停车检查，并排除故障。

The tractor is not allowed to work“in spite of defects”. In particular, on lack of oil pressure, excessively low oil pressure, over-high water temperature or unusual sound and smell, stops the work in time for check-up and troubleshooting.

2. 进行润滑保养和田间调节时，应关闭发动机。

During the lubrication maintenance and adjustment on field, the engine should be shut down.

图 1-9 拖拉机出现异常现象时

Fig.1-9 When abnormal phenomenon occurred on the tractor

拖拉机无人看管时的安全规则

Safety regulations for the unmanned tractor

1. 挂上空档并把液压操纵手柄移到中位。

   Engage the neutral gear and turn the hydraulic control handle to the neutral position.

2. 提升装置或牵引挂接装置等放到最低位置。

   Place the lifting device or pulling and hooking device to the lowest position.

3. 接合驻车制动器。

   Engage the parking brake.

4. 取下发动机开关钥匙。

   Take down the engine switch key.

5. 如果在斜坡停车，必须用三角塞块将后轮可靠塞住。

   If the tractor is stopped on the slope, the triangle block shall be used to block the rear wheels.

ACHSONTM 1300 651 830

https://truckmanualshub.com/

安全注意事项
Safety precautions

1.2 安全警告标志

Safety Warning Mark

注意：

CAUTION:

- ✧ 安全警告标志应保持清晰易见，变得脏污时，可用肥皂水来洗，以柔软抹布擦拭干净；
  The safety warning mark shall be kept clear and visible; if becoming dirty, the soapy water and a piece of soft cloth shall be used for cleaning;
- ✧ 安全标志丢失或不清晰时，需及时同经销部门或生产厂家联系进行更换；
  When the safety mark is lost or unclear, the dealer or the manufacturer shall be timely contacted for replacement;
- ✧ 若更换贴有安全警告标志的零件，在更换零件时，应同时更换安全警告标志；
  When replacing the spare parts affixed with the safety warning mark, the safety warning mark shall be replaced as well;
- ✧ 安全警告标志所提示的内容涉及到人身安全，必须严格执行。
  The safety warning mark involved with the personal safety shall be strictly followed.

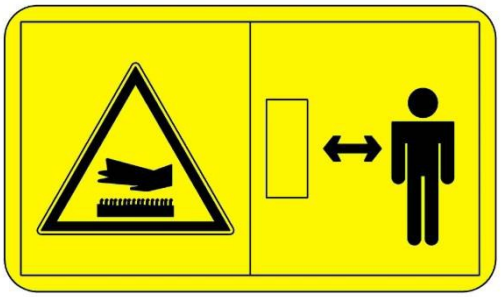

含义：机器工作时请与机器热表面保持距离，以免造成人身伤害。

Meaning: Upon working, the machine shall be kept away from its thermal surface, so as to avoid personal injury.

粘贴位置：消音器外侧、水箱侧面

Sticking position: Muffler outside and water tank side

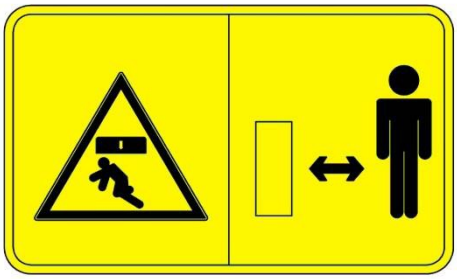

含义：请与拖拉机保持安全距离，以免造成人身伤害；

Meaning: Please keep a safe distance between the tractor, so as to avoid personal injury;

粘贴位置：挡泥板后侧

Sticking position: Fender rear side

RISE 1300 651 830

https://truckmanualshub.com/

安全注意事项
Safety precautions

含义：禁止乘坐在拖拉机非乘员位置上，以免妨碍驾驶员的视线，造成人身伤害；

Meaning: It is forbidden to sit on the driver’s seat, so as to avoid hindering the driver’s sight and causing personal injury;

粘贴位置：左后挡泥板前侧

Sticking position: Front side of left and right fenders

含义：见左图所示。

Meaning: It is shown in the left-side picture.

粘贴位置：燃油箱加油口附近。

Sticking position: Near the fuel tank fuel filler.

含义：提升器工作时，请与机器保持距离。否则将发生压伤事故!

Meaning: When the lifter works, please keep a distance between the machine; or else, crush accident may be caused!

粘贴位置：挡泥板后侧

Sticking position: Fender rear side

SOLD M 1300 651 830

安全注意事项
Safety precautions

含义：按要求对吸油滤清器进行清洗，并同时检查滤网、密封圈等易损件，若有损坏，应及时更换。

Meaning: Clean the oil filter as required, and simultaneously check the filter screen, seal ring, and other vulnerable parts. If damaged, timely replace them.

粘贴位置：吸油滤清器固定板上。

Sticking position: On the fixing plate of the oil filter.

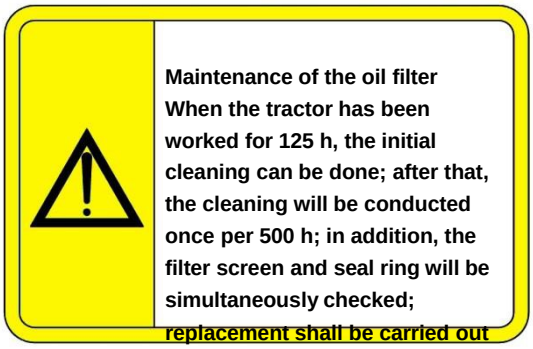

动力输出警告标识

Meaning: Power-take-off warning mark

粘贴位置：动力输出轴防护罩上部

Sticking position: Upper part of the power-take-off shaft shroud

注：以上标识配动力输出 760/1000r/min 的机型！

NOTE: The above represents the machine type equipped with the power-take-off of 760/1000r/min.

1300 651 830

https://truckmanualshub.com/

安全注意事项
Safety precautions

含义：动力输出轴工作时，应远离动力源；动力输出轴挂接农机具时应停机操作。

Meaning: The working power-take-off shaft shall be away from the power source; when the power-take-off shaft is hooked with the agricultural machinery, it shall be stopped for operation.

粘贴位置：动力输出防护罩上部

Sticking position: Upper part of the power-take-off shaft shroud

含义：提醒限位销安装位置

Meaning: Prompting the limit pin mounting position

粘贴位置：左限位杆上

Sticking position: On the left limit rod

SONTM 1300 651 830

安全注意事项
Safety precautions

含义：应定期检查位于后桥壳体端面的油尺高度，以避免润滑油液面低于油尺下限而造成传动系零部件损坏.

Meaning: The oil dipstick height at the end surface of the rear axle housing shall be regularly checked, so as to avoid damaging the transmission system parts owing to the fact that the lubricating oil level is lower than the lower limit of the oil dipstick.

粘贴位置：后桥壳体后端面

Sticking position: Rear end surface of the rear axle housing

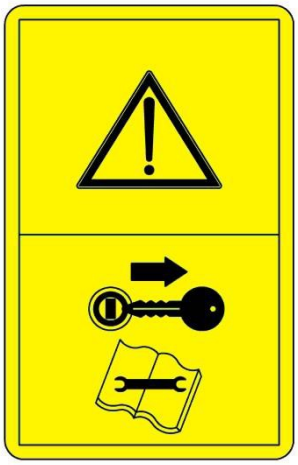

含义：维修、保养、 调整前，应关停发动机，并抽出启动钥匙，按照使用说明书要求操作，以免造成人身伤害；

Meaning: Prior to repair, maintenance, and adjustment, the engine shall be stopped and the start key shall be pulled out; operations shall be performed in accordance with the requirements of the Use And Maintenance, so as to avoid personal injury;

粘贴位置：仪表台正面

Sticking position: Dashboard front side

ONTM 1300 651 830

https://truckmanualshub.com/

安全注意事项
Safety precautions

含义：只有在机器的所有部件完全停止运转后，才能与其接触，以免造成人身伤害。

Meaning: The parts can be contacted after they completely stop, so as to avoid personal injury.

粘贴位置：PTO（动力输出轴）防护罩上。

Sticking position: On the PTO (power-take-off shaft) shroud.

含义：为防止损坏电器元件或引起火灾，请严格按要求规格插接保险丝。

Meaning: To prevent damaging the electric elements or causing fire hazard, please plug the fuse in strict accordance with the required specifications.

粘贴位置：电器盒附近。

Sticking position: Near the electric box.

4WD ONTM 1300 651 830

https://truckmanualshub.com/

安全注意事项
Safety precautions

含义：请阅读使用说明书，了解无文字安全标识的含义，以免造成人身伤害。

Meaning: Please read the Use And Maintenance to comprehend meanings of the safety marks without characters, so as to avoid personal injury.

粘贴位置：仪表台正面。

Sticking position: Dashboard front side.

含义;为防止人身伤害，此处禁止乘坐、脚踏。

Meaning: To prevent personal injury, it is not allowed to sit or stand on it.

粘贴位置：地板后横板。

Sticking position: Rear cross plate of the floor.

1300 651 830

https://truckmanualshub.com/

安全注意事项
Safety precautions

含义：驾驶员必须在驾驶座位上起动发动机，严禁在起动机处以短路的方式起动发动机，以免造成人身伤害。

Meaning: The driver must start the engine on the driver's seat; it is not allowed to start the engine by short circuit method at the starter, so as to avoid personal injury.

粘贴位置：仪表台正面。

Sticking position: Dashboard front side.

含义：发动机工作时，不要打开或拆下安全防护罩，且不要将手伸入工作区域，以免造成人身伤害。

Meaning: When the engine runs, don't open or remove the safety shroud; in addition, don't put hands into the working area, so as to avoid personal injury.

粘贴位置：发电机防护罩上，水箱风扇附近。

Sticking position: On the generator shroud and near the water tank fan.

AGRISON™ 1300 651 830

https://truckmanualshub.com/

安全注意事项
Safety precautions

含义：见左图所示。

Meaning: It is shown in the left-side picture.

粘贴位置：动力输出轴附近。

Sticking position: Near the power-take-off shaft

AGRISON™ 1300 651 830

https://truckmanualshub.com/

安全注意事项
Safety precautions

含义：见左图所示。

Meaning: It is shown in the left-side picture.

粘贴位置：气制动储气罐表面。（选装）

Sticking position: Air brake reservoir surface. (Optional)

AGRISON™ 1300 651 830

https://truckmanualshub.com/

2.产品标志

Product Marking

产品铭牌

Product nameplate

产品铭牌是拖拉机的重要有效识别标志，其位置在拖拉机仪表台左侧。在接受服务时服务人员要查看产品铭牌，因此，请不要丢失产品铭牌，并要保持清晰。

The nameplate is an important and effective identification mark of the tractor, which location is at the left side of the tractor dashboard. The service personnel will chek the product nameplate when received service so it is important to keep it safe and clear.

图 2-1 产品铭牌

Fig.2-1 product nameplate

发动机信息

Engine information

发动机产品铭牌是拖拉机动力配套装置的重要有效识别标志，其位置在拖拉机机罩下面，发动机铭牌位于发动机上。在接受服务时服务人员要查看此铭牌，因此，请不要丢失铭牌，并要保持清晰。

The engine product nameplate is an important and effective identification mark for the tractor power supporting device, and its position is below the enging hood. The engine nameplate is located on the engine. When the tractor needs to receive service, the service personnel will chek the nameplate so it is important to keep it safe and clear.

图 2-2 发动机铭牌

Figure 2-2 engine name plate

图 2-3 发动机编号

Figure 2-3 engine serial number

AGRISON™ 1 51 830

https://truckmanualshub.com/

AGRISON™ 1300 651 830

https://truckmanualshub.com/

产品标志
Product Marking

整机型号和出厂编号
Overrall unit model and serial number

拖拉机出厂时，整机型号和出厂编号打刻位置在变速箱右侧面上，具体位置如图所示。

When the tractor is delivered from the factory, the overall unit model and serial number are engraved on the left side of the gearbox. The specific location can be seen in the Figure

图 2-4 整机型号和出厂编号

AGRISON™ 1300 651 830

https://truckmanualshub.com/

3.拖拉机主要技术规格

Main technical specifications of the tractor

3.1 产品型号

Product model

沭河 SH 系列拖拉机产品型号含义如下：

The implication of Shuhe SH series tractors models is as follows:

SH ○ ○ ○ □—□

- 重大变形顺序号
  Sequence number of major transformation
- 功能代号，空白表示一般农业用式，T 表示运输用式。
  Function code, blank means general agricultural application type and T means transportation type
- 型式代号，0 表示后轮驱动四轮式；4 表示四轮驱动式。
  Model code, 0 means rear-wheel-drive four wheel type; 4 means four-wheel-drive type
- 功率代号，用发动机标定功率值（单位为 kW）乘以 1.36 系数附近的整数表示。
  Power code, expressed by engine rated power value (unit: kW) multiplied by the integer near the coefficient 1.36.
- 系列代号。
  Series code

对应的功率如下：

The corresponding power is as follows:

AGRISONTM 1300 651 830

https://truckmanualshub.com/

产品型号对应的功率：

Power corresponding to product model:

SH800/SH804 轮式拖拉机额定功率为 59kW（千瓦）[80PS（马力）]
The rated power of SH800/SH804 wheeled tractor is 59kW[80PS]
SH850/SH854 轮式拖拉机额定功率为 62.5kW（千瓦）[85PS（马力）]
The rated power of SH850/SH854 wheeled tractor is 62.5kW[85PS]
SH900/SH904 轮式拖拉机额定功率为 66.2kW（千瓦）[90PS（马力）]
The rated power of SH900/SH904 wheeled tractor is 66.2kW[90PS]
SH950/SH954 轮式拖拉机额定功率为 70kW（千瓦）[95PS（马力）]
The rated power of SH950/SH950 wheeled tractor is 70kW[95PS]
SH1000/SH1004 轮式拖拉机额定功率为 73.5kW（千瓦）[100PS（马力）]
The rated power of SH1000/SH1004 wheeled tractor is 73.5kW[100PS]

产品执行标准： GB/T 15370.2《农业拖拉机通用技术条件 第 2 部分：50kW～130kW 轮式拖拉机》和 Q/SCL 0016《沭河系列轮式拖拉机企业标准》。

Product execution standards: GB/T15370.2 General Requirement of Agricultural Tractors - Part 2: 50 ~ 130 kW Wheeled Tractor and Q/SCL 0016 Enterprise Standard of Shuhe Series Wheeled Tractor.

AGRISON™ 1300 651 830

https://truckmanualshub.com/

拖拉机主要技术规格
Main technical specifications of the tractor

3.2 产品技术规格

Product Specification

SH800/SH804/SH850/SH854/SH900/SH904

项目 Project		单位 Unit	SH800	SH804	SH850	SH854	SH900	SH904
型式 Type		——	4×2 轮式 4×2WHEELED	4×4 轮式 4×4WHEELED	4×2 轮式 4×2WHEELED	4×4 轮式 4×4WHEELED	4×2 轮式 4×2WHEELED	4×4 轮式 4×4WHEELED
标定牵引力 Calibrated traction force		kN（千牛）	14.6	17.3	15.8	19	17.3	20.8
外形尺寸 Overall dimensions	长（包括前配重、后悬挂） Length (including the front ballast and rear linkage)	mm（毫米）	4290					
	宽（常用轮距、 标准轮胎外侧） Width (common wheel track and standard tyre outside	mm（毫米）	2100					
	高（至消音器顶、 标准轮胎） Height (to the muffler top, standard tyre)	mm（毫米）	2810					
轴距 Wheel base		mm（毫米）	2195					

AGRISON™ 1300 651 830

轮距（标准轮胎） Wheel track (standard tyre)	前轮 Front wheel	mm（毫米）	1410 1510 1610 1710 (常用 1510) Frequently-used , 1，510)	1610	1410 1510 1610 1710 (常用 1510)	1610	1410 1510 1610 1710 (常用 1510)	1610

AGRISON™ 1300 651 830

拖拉机主要技术规格
Main technical specifications of the tractor

项目 Project		单位 Unit	SH800	SH804	SH850	SH854	SH900	SH904
	前轮调整方式 Front wheel adjustment method	——	有级可调 Step adjustable	固定式 Fixed type	有级可调 Step adjustable	固定式 Fixed type	有级可调 Step adjustable	固定式 Fixed type
	后轮 Rear wheel	mm（毫米）	1620、1720、1820、1920、2020 (常用 16200 Frequently-used 1,620)					
	后轮调整方式 Rear wheel adjustment method	——	有级可调 Step adjustable					
离地间隙 Ground clearance	最小离地间隙 Minimum ground clearance	mm（毫米）	476	379	476	379	476	379
	农艺间隙 Agricultural clearance	mm（毫米）	450	375	450	375	450	375
最小转向圆半径 Minimum steering circle radius	使用单边制动 Applying the unilateral brake	m（米）	4.2±0.2	4.4±0.3	4.2±0.2	4.4±0.3	4.2±0.2	4.4±0.3
	不使用单边制动 Not applying the unilateral brake	m（米）	4.6±0.2	4.9±0.2	4.6±0.2	4.9±0.2	4.6±0.2	4.9±0.2
结构质量 Structural mass	带驾驶室 With CAB	kg（千克）	3350	3850	3350	3850	3350	3850
	不带驾驶室 Without CAB	kg（千克）	3100	3600	3100	3600	3100	3600
最小使用质量 Minimum service mass	带驾驶室 With CAB	kg（千克）	3590	4200	3590	4200	3590	4200
	不带驾驶室 Without CAB	kg（千克）	3340	3900	3340	3900	3340	3900
质量分配	前轮　带驾驶室	kg（千克）	1340	1690	1340	1690	1340	1690

AGRISONTM 1300 651 830

拖拉机主要技术规格
Main technical specifications of the tractor

项目 Project			单位 Unit	SH800	SH804	SH850	SH854	SH900	SH904
Mass distribution	Front wheel	With CAB							
		不带驾驶室 Without CAB	kg（千克）	1300	1500	1300	1500	1300	1500
	后轮 Rear wheel	带驾驶室 With CAB	kg（千克）	2250	2510	2250	2510	2250	2510
		不带驾驶室 Without CAB	kg（千克）	2040	2400	2040	2400	2040	2400
配重 Counterweight	前配重 Front counterweight		kg（千克）	270					
	后配重 Rear counterweight		kg（千克）	480					
传动系 Transmission system	离合器 Clutch		——	单片、干式、双作用离合器 Single friction plate Dry, double-acting clutch transmission					
	变速箱 Transmission		——	组成式 4×(2+1)，8 个前进档，4 个倒退档，选装爬行档时为 4×(2+1)×2，16 个前进档，8 个倒退档，主副变速均为啮合套换档 Composition formula4 × (2 +1), 8 forward gears, 4 reverse gears OptionalCreeper4 × (2 +1) x 2,16 forward gears, 8 reverse gears, both the main and auxiliary transmission engagement sleeve gear shift					
	后桥 Rear axle	中央传动 Central drive	——	螺旋圆锥齿轮副 Spiral bevel gear pair					
		差速器 Differential	——	四行星轮、闭式 Four planetary wheels, closed type					
		差速锁 Differential lock	——	花键套式 Spline bushing type					
		后最终传动 Rear final drive	——	行星齿轮式 Planetary gear type					

AGRISONTM 1300 651 830

拖拉机主要技术规格
Main technical specifications of the tractor

项目 Project			单位 Unit	SH800	SH804	SH850	SH854	SH900	SH904
	前轴 Front shaft	前轴 Front shaft	——	伸缩套管式 Telescopic type	——	伸缩套管式 Telescopic type	——	伸缩套管式 Telescopic type	——
	前驱动桥 Front drive axle	传动轴 Transmission shaft	——	——	中置式传动轴 Central transmission shaft	——	中置式传动轴 Central transmission shaft	——	中置式传动轴 Central transmission shaft
		前中央传动 Front central drive	——	——	封闭锥齿轮式 Closed bevel gear type	——	封闭锥齿轮式 Closed bevel gear type	——	封闭锥齿轮式 Closed bevel gear type
		前差速器 Front differential	——	——	闭式，2 个行星锥齿轮 Closed type, 2 bevel gears	——	闭式，2 个行星锥齿轮 Closed type, 2 bevel gears	——	闭式，2 个行星锥齿轮 Closed type, 2 bevel gears
		前最终传动 Front final drive	——	——	单级行星齿轮 Single-stage planetary gear	——	单级行星齿轮 Single-stage planetary gear	——	单级行星齿轮 Single-stage planetary gear
行走系 Running system	机架 Frame		——	无架式 No frame					
	轮胎气压 Tyre pressure	前轮 Front wheel	kPa（千帕）	167~186（田间作业）167~186（field work）/225~245（运输作业）	118~138（田间作业）118~138 (field work）/167~176（运输作业）/167~176	167~186（田间作业）167~186（field work）/225~245（运输作业）	118~138（田间作业）118~138 (field work）/167~176（运输作业）/167~176	167~186（田间作业）167~186（field work）/225~245（运输作业）	118~138（田间作业）118~138 (field work）/167~176（运输作业）/167~176

AGRISONTM 1300 651 830

https://truckmanualshub.com/

拖拉机主要技术规格
Main technical specifications of the tractor

项目 Project				单位 Unit	SH800	SH804	SH850	SH854	SH900	SH904
					/225~245(transport operations)	(transport operations)	/225~245(transport operations)	(transport operations)	/225~245(transport operations)	(transport operations)
		后轮 Rear wheel		kPa（千帕）	118~138（田间作业）/167~176（运输作业） 118~138（field work）/167~176 transport operations)					
	轮胎规格 Tyre specifications	标准 Standard	前轮 Front wheel	——	6.5-20	11.2-24	6.5-20	11.2-24	6.5-20	11.2-24
			后轮 Rear wheel	——	16.9-34					
制动系 Brake system	行车制动器 Service brake			——	静液压、湿式、盘式制动器 Hydrostatic, wet disc brakes					
	停车制动 Parking brake			——	独立机械手制动 Independent mechanical hand brake					
	挂车制动操纵 Trailer brake control			——	断气式、气压制动 Breathe, pneumatic brake					
转向系 Steering system	方式 Mode			——	前轮液压转向 Front wheel hydraulic steering					
	转向器 Steering gear			——	摆线转阀式全液压转向器 cycloid rotational valve hydraulic steering control unit					
工作装置 Working device	液压系统型式 Hydraulic system type			——	开心、分置式 Open, split type					
	液压油泵 Hydraulic oil pump			——	齿轮泵、CBJ30-F20HZ Gear pump, CBJ30-F20HZ					
	分配器			——	滑阀式					

AGRISONTM 1300 651 830

拖拉机主要技术规格
Main technical specifications of the tractor

项目 Project			单位 Unit	SH800	SH804	SH850	SH854	SH900	SH904
	Distributor			Side valve type					
	油缸 Oil cylinder	直径 X 行程 DiameterX stroke	mm（毫米）	φ110×128					
		型式 Type	——	双作用 Double action					
	悬挂点尺寸 Linkage point dimensions		mm（毫米）	三点后悬挂：2 类 Rear three linkage: type2 连接孔×宽度： Connecting hole×width 上悬挂点：φ25.5×51 Upper linkage point: φ25.5×51 下悬挂点：φ28.7×45 Lower linkage point: φ28.7×45					
	耕深调节方式 Cultivation depth adjustment method		——	位控制、浮动控制 Position control,Floating control					
	系统最大提升力【悬挂点后 610mm（毫米）处】 Maximum lifting force of the system [610 mm (millimeter) behind the linkage point]		kN（千牛）	≥15		≥15		≥16.8	
	系统安全阀开启压力 System safety valve opening pressure		MPa（兆帕）	17.5±0.5					

AGRISONTM 1300 651 830

https://truckmanualshub.com/

拖拉机主要技术规格
Main technical specifications of the tractor

项目 Project			单位 Unit	SH800	SH804	SH850	SH854	SH900	SH904
	液压输出 Hydraulic output	型式 Type	——	液压输出(选装) Hydraulic output (optional)					
		数量 Quantity	——	2					
		规格 Specifications	——	M18X1.5					
动力输出轴 Power-take-off shaft	型式 Type		——	后置独立式 Rear stand-alone					
	规格 Specifications		——	Ⅰ型（φ35X6 齿或 φ38X8 齿）【GB1592-89】 Ⅰ type（φ35X6 gear or φ38X8 gear）【GB1592-89】					
	转速 Rotation speed		r/min（转/分）	标准：760/1000（选装 540/1000、540/760、760/850） standard：760/1000（optional540/1000、540/760、760/850）					
	动力输出轴标定功率下限 Lower limit of rated power of the power-take-off shaft		kW（千瓦）	50.2		53.2		56.3	
拖挂装置 Trailing device	连接销直径 Connecting pin diameter		mm（毫米）	40					
	连接销 Connecting pin		mm（毫米）	215					
电器仪表系统 Electric instrument system	电气系统 Electric system		——	12V 负极搭铁双线制 12V cathode earthing double wire system					
	发电机 Generator	型号 Model	——	JFZ19/4DJFZ1601					
		电压 Voltage	V（伏）	14					
		功率 Power	kW（千瓦）	0.9/1					

AGRISONTM 1300 651 830

拖拉机主要技术规格
Main technical specifications of the tractor

项目 Project			单位 Unit	SH800	SH804	SH850	SH854	SH900	SH904
	调节器 Regulator	型号 Model	——	包含在电器盒中 Included in the electrical box					
		调节电压 Regulating voltage	V（伏）	14					
	起动机 Starter	型号 Model	——	QDJ154F/QDJ1408GM/ A8300-3708100/ QDJ1567					
		电压 Voltage	V（伏）	12					
		功率 Power	kW（千瓦）	3.7					
	蓄电池 Storage battery	型号 Model	——	6-QW-120					
		电压 Voltage	V（伏）	12					
		容量 Capacity	A·h（安培·小时）	120					
		数量 Quantity	——	1					
	照明及信号装置 Lighting and signal device	前照灯 Headlamp	——	12V（伏），55/60W 组合式 12V（Voltage），55/60W combined type					
		前转向灯 Front steering lamp	——	12V，21W，2 个					
		前位置灯 Front position	——	12V，5W，2 个					

AGRISONTM 1300 651 830

拖拉机主要技术规格
Main technical specifications of the tractor

项目 Project			单位 Unit	SH800	SH804	SH850	SH854	SH900	SH904
		lamp							
		后组合灯 Rear combination lamp	——	示宽 10W，转向 21W,制动 21W，反射器（红）左右各一个 For width of 10W, for steering 21W, one reflector(red) on either side.					
		后工作灯 Rear working lamp	——	12V，35W，2 个					
		挂车插座 Trailer socket	——	七孔插座带插销 1 个 7-bore socket with a plug					
	监控及警示装置 Monitoring and warning device	组合仪表 Combination instrument	——	带水温表，油量表，转速表、机油压力，1 个 With a water temperature gauge, fuel gauge, tachometer, oil pressure					
		警示装置 Warning device	——	1.充电指示灯，左右转向指示灯，位置灯指示灯，远光指示灯； 1. Charging indicator light, left and right steering indicator light, position indicator light, high beam indicator light; 2.气制动故障报警灯（气制动机型选装），机油压力低报警灯； 2. Air brake trouble light (for air brake type), low oil pressure light 3.反射器；3. Reflector 4.安全警告标识。 4. Safety warning signs					
灌注容量 Filling capacity	散热器 Radiator		L（升）	14					
	发动机油底壳 Engine oil pan		L（升）	按发动机说明书 In accordance with the instruction instruction book of the engine					
	燃油箱 Fuel tank		L（升）	126					
	油浴式空气滤清器		L（升）	按需加至规定油面					

AGRISONTM 1300 651 830

拖拉机主要技术规格
Main technical specifications of the tractor

项目 Project		单位 Unit	SH800	SH804	SH850	SH854	SH900	SH904
	Oil-bath air cleaner		Filled to specified oil lever as required.					
	液压转向用油 Hydraulic steering oil	L（升）	2.5					
	传动系用油 Transmission system oil	L（升）	38					
	提升器 Lifter	L（升）	17					
	前驱动桥 Front drive axle	L（升）	6.1					
	前驱动桥最终传动 Front drive axle final drive	L（升）	1.2（每侧 Each side）					

SH950/SH954/SH1000/SH1004

项目 Project		单位 Unit	SH950	SH954	SH1000	SH1004
型式 Type		——	4×2 轮式 4×2WHEELED	4×4 轮式 4×4WHEELED	4×2 轮式 4×2WHEELED	4×4 轮式 4×4WHEELED
标定牵引力 Calibrated traction force		kN（千牛）	18.7	22.5	19.2	23.1
外形尺寸 Overall dimensions	长（包括前配重、后悬挂） Length (including the front ballast and rear linkage)	mm（毫米）	4290			
	宽（常用轮距、 标准轮胎外侧） Width (common wheel track and standard tyre outside	mm（毫米）	2100			
	高（至消音器顶、 标准轮胎）	mm（毫米）	2810			

AGRISONTM 1300 651 830

拖拉机主要技术规格
Main technical specifications of the tractor

项目 Project		单位 Unit	SH950	SH954	SH1000	SH1004
	Height (to the muffler top, standard tyre)					
轴距 Wheel base		mm（毫米）	2195			
轮距（标准轮胎） Wheel track (standard tyre)	前轮 Front wheel	mm（毫米）	1410 1510 1610 1710 (常用 1510) Frequently-used ,1，510)	1610	1410 1510 1610 1710 (常用 1510)	1610
	前轮调整方式 Front wheel adjustment method	——	有级可调 Step adjustable	固定式 Fixed type	有级可调 Step adjustable	固定式 Fixed type
	后轮 Rear wheel	mm（毫米）	1620、1720、1820、1920、2020 (常用 16200 Frequently-used 1,620)			
	后轮调整方式 Rear wheel adjustment method	——	有级可调 Step adjustable			
离地间隙 Ground clearance	最小离地间隙 Minimum ground clearance	mm（毫米）	440	340	440	340
	农艺间隙 Agricultural clearance	mm（毫米）	450	375	450	375`
最小转向圆半径 Minimum steering circle radius	使用单边制动 Applying the unilateral brake	m（米）	4.2±0.2	4.4±0.3	4.2±0.2	4.4±0.3
	不使用单边制动 Not applying the unilateral brake	m（米）	4.6±0.2	4.9±0.2	4.6±0.2	4.9±0.2
结构质量 Structural mass	带驾驶室 With CAB	kg（千克）	3350	3850	3350	3850
	不带驾驶室	kg（千克）	3100	3600	3100	3600

AGRISONTM 1300 651 830

https://truckmanualshub.com/

拖拉机主要技术规格
Main technical specifications of the tractor

项目 Project			单位 Unit	SH950	SH954	SH1000	SH1004
	Without CAB						
最小使用质量 Minimum service mass	带驾驶室 With CAB		kg（千克）	3590	4200	3590	4200
	不带驾驶室 Without CAB		kg（千克）	3340	3900	3340	3900
质量分配 Mass distribution	前轮 Front wheel	带驾驶室 With CAB	kg（千克）	1340	1690	1340	1690
		不带驾驶室 Without CAB	kg（千克）	1300	1500	1300	1500
	后轮 Rear wheel	带驾驶室 With CAB	kg（千克）	2250	2510	2250	2510
		不带驾驶室 Without CAB	kg（千克）	2040	2400	2040	2400
配重 Counterweight	前配重 Front counterweight		kg（千克）	270			
	后配重 Rear counterweight		kg（千克）	480			
传动系 Transmission system	离合器 Clutch		——	单片、干式、双作用离合器 Single friction plate Dry, double-acting clutch transmission			
	变速箱 Transmission		——	组成式 4×(2+1)，8 个前进档，4 个倒退档，选装爬行档时为 4×(2+1)×2，16 个前进档，8 个倒退档，主副变速均为啮合套换档 Composition formula4 × (2 +1), 8 forward gears, 4 reverse gears OptionalCreeper4 × (2 +1) x 2,16 forward gears, 8 reverse gears, both the main and auxiliary transmission engagement sleeve gear shift			
	后桥 Rear axle	中央传动 Central drive	——	螺旋圆锥齿轮副 Spiral bevel gear pair			

AGRISONTM 1300 651 830

拖拉机主要技术规格
Main technical specifications of the tractor

项目 Project			单位 Unit	SH950	SH954	SH1000	SH1004
		差速器 Differential	——	四行星轮、闭式 Four planetary wheels, closed type			
		差速锁 Differential lock	——	花键套式 Spline bushing type			
		后最终传动 Rear final drive	——	行星齿轮式 Planetary gear type			
	前轴 Front shaft	前轴 Front shaft	——	伸缩套管式 Telescopic type	——	伸缩套管式 Telescopic type	——
	前驱动桥 Front drive axle	传动轴 Transmission shaft	——	——	中置式传动轴 Central transmission shaft	——	中置式传动轴 Central transmission shaft
		前中央传动 Front central drive	——	——	封闭锥齿轮式 Closed bevel gear type	——	封闭锥齿轮式 Closed bevel gear type
		前差速器 Front differential	——	——	闭式，2 个行星锥齿轮 Closed type, 2 bevel gears	——	闭式，2 个行星锥齿轮 Closed type, 2 bevel gears
		前最终传动 Front final drive	——	——	单级行星齿轮 Single-stage planetary gear	——	单级行星齿轮 Single-stage planetary gear
行走系 Running system	机架 Frame		——	无架式 No frame			
	轮胎气压 Tyre pressure	前轮 Front wheel	kPa（千帕）	167~186（田间作业）	118~138（田间作业）	167~186（田间作业）	118~138（田间作业）

AGRISONTM 1300 651 830

拖拉机主要技术规格
Main technical specifications of the tractor

项目 Project				单位 Unit	SH950	SH954	SH1000	SH1004
					167~186（field work）/225~245（运输作业）/225~245(transport operations)	118~138 (field work）/167~176（运输作业）/167~176 (transport operations)	167~186（field work）/225~245（运输作业）/225~245(transport operations)	118~138 (field work）/167~176（运输作业）/167~176 (transport operations)
		后轮 Rear wheel		kPa（千帕）	118~138（田间作业）/167~176（运输作业） 118~138（field work）/167~176 transport operations)			
	轮胎规格 Tyre specifications	标准 Standard	前轮 Front wheel	——	6.5-20	11.2-24	6.5-20	11.2-24
			后轮 Rear wheel	——	16.9-34			
制动系 Brake system	行车制动器 Service brake			——	静液压、湿式、盘式制动器 Hydrostatic, wet disc brakes			
	停车制动 Parking brake			——	独立机械手制动 Independent mechanical hand brake			
	挂车制动操纵 Trailer brake control			——	断气式、气压制动 Breathe, pneumatic brake			
转向系 Steering system	方式 Mode			——	前轮液压转向 Front wheel hydraulic steering			
	转向器 Steering gear			——	摆线转阀式全液压转向器 cycloid rotational valve hydraulic steering control unit			
工作装置 Working	液压系统型式 Hydraulic system type			——	开心、分置式			

AGRISONTM 1300 651 830

https://truckmanualshub.com/

拖拉机主要技术规格
Main technical specifications of the tractor

项目 Project			单位 Unit	SH950	SH954	SH1000	SH1004
device				Open, split type			
	液压油泵 Hydraulic oil pump		——	齿轮泵、CBJ30-F20HZ Gear pump, CBJ30-F20HZ			
	分配器 Distributor		——	滑阀式 Side valve type			
	油缸 Oil cylinder	直径 X 行程 DiameterX stroke	φ110×128	φ110×128			
		型式 Type	双作用 Double action	双作用			
	悬挂点尺寸 Linkage point dimensions		mm（毫米）	三点后悬挂：2 类 Rear three linkage: type2 连接孔×宽度： Connecting hole×width 上悬挂点：φ25.5×51 Upper linkage point: φ25.5×51 下悬挂点：φ28.7×45 Lower linkage point: φ28.7×45			
	耕深调节方式 Cultivation depth adjustment method		——	位控制、浮动控制 Position control,Floating control			
	系统最大提升力【悬挂点后 610mm（毫米）处】 Maximum lifting force of the system [610 mm (millimeter) behind the linkage point]		kN（千牛）	≥15		≥15	
	系统安全阀开启压力 System safety valve opening pressure		MPa（兆帕）	17.5±0.5			

ACRISONTM 1300 651 830

拖拉机主要技术规格
Main technical specifications of the tractor

项目 Project			单位 Unit	SH950	SH954	SH1000	SH1004
	液压输出 Hydraulic output	型式 Type	液压输出(选装) Hydraulic output (optional)	液压输出（选装） Hydraulic output (optional)			
		数量 Quantity	2	2			
		规格 Specifications	M18X1.5	M18X1.5			
动力输出轴 Power-take-off shaft	型式 Type		——	后置独立式 Rear stand-alone			
	规格 Specifications		——	Ⅰ型（φ35X6 齿或 φ38X8 齿）【GB1592-89】 Ⅰ type（φ35X6 gear or φ38X8 gear）【GB1592-89】			
	转速 Rotation speed		r/min（转/分）	标准：760/1000（选装 540/1000、540/760、760/850） standard：760/1000（optional540/1000、540/760、760/850）			
	动力输出轴标定功率下限 Lower limit of rated power of the power-take-off shaft		kW（千瓦）	59.5		62.5	
拖挂装置 Trailing device	连接销直径 Connecting pin diameter		mm（毫米）	40			
	连接销 Connecting pin		mm（毫米）	215			
电器仪表系统 Electric instrument system	电气系统 Electric system		——	12V 负极搭铁双线制 12V cathode earthing double wire system			
	发电机 Generator	型号 Model	——	JFZ19/4DJFZ1601			
		电压 Voltage	V（伏）	14			
		功率	kW（千瓦）	0.9/1			

AGRISONTM 1300 651 830

拖拉机主要技术规格
Main technical specifications of the tractor

项目 Project			单位 Unit	SH950	SH954	SH1000	SH1004
		Power					
	调节器 Regulator	型号 Model	——	包含在电器盒中 Included in the electrical box			
		调节电压 Regulating voltage	V（伏）	14			
	起动机 Starter	型号 Model	——	QDJ154F/QDJ1408GM/ A8300-3708100/ QDJ1567			
		电压 Voltage	V（伏）	12			
		功率 Power	kW（千瓦）	3.7			
	蓄电池 Storage battery	型号 Model	——	6-QW-120			
		电压 Voltage	V（伏）	12			
		容量 Capacity	A·h（安培·小时）	120			
		数量 Quantity	——	1			
	照明及信号装置 Lighting and signal device	前照灯 Headlamp	——	12V（伏），55/60W 组合式 12V（Voltage），55/60W combined type			
		前转向灯 Front steering lamp	——	12V，21W，2 个			

AGRISONTM 1300 651 830

拖拉机主要技术规格
Main technical specifications of the tractor

项目 Project			单位 Unit	SH950	SH954	SH1000	SH1004
		前位置灯 Front position lamp	——	12V，5W，2 个			
		后组合灯 Rear combination lamp	——	示宽 10W，转向 21W,制动 21W，反射器（红）左右各一个 For width of 10W, for steering 21W, one reflector(red) on either side.			
		后工作灯 Rear working lamp	——	12V，35W，2 个			
		挂车插座 Trailer socket	——	七孔插座带插销 1 个 7-bore socket with a plug			
	监控及警示装置 Monitoring and warning device	组合仪表 Combination instrument	——	带水温表，油量表，转速表、机油压力，1 个 With a water temperature gauge, fuel gauge, tachometer, oil pressure			
		警示装置 Warning device	——	1.充电指示灯，左右转向指示灯，位置灯指示灯，远光指示灯； 1. Charging indicator light, left and right steering indicator light, position indicator light, high beam indicator light; 2.气制动故障报警灯（气制动机型选装），机油压力低报警灯； 2. Air brake trouble light (for air brake type), low oil pressure light 3.反射器；3. Reflector 4.安全警告标识。 4. Safety warning signs			

AGRISONTM 1300 651 830

拖拉机主要技术规格
Main technical specifications of the tractor

项目 Project		单位 Unit	SH950	SH954	SH1000	SH1004
灌注容量 Filling capacity	散热器 Radiator	L（升）	14			
	发动机油底壳 Engine oil pan	L（升）	按发动机说明书 In accordance with the instruction instruction book of the engine			
	燃油箱 Fuel tank	L（升）	126			
	油浴式空气滤清器 Oil-bath air cleaner	L（升）	按需加至规定油面 Filled to specified oil lever as required.			
	液压转向用油 Hydraulic steering oil	L（升）	2.5			
	传动系用油 Transmission system oil	L（升）	38			
	提升器 Lifter	L（升）	17			
	前驱动桥 Front drive axle	L（升）	6.1			
	前驱动桥最终传动 Front drive axle final drive	L（升）	1.2（每侧 Each side）			

AGRISONTM 1300 651 830

3.3 发动机主要技术规格

The engine main technical specifications

SH800/SH804/SH850/SH854/SH900/SH904

项目 Item		单位 Unit	SH800/ SH804	SH850/SH854	SH900/SH904
发	生产企业	——	一拖（洛阳）柴油机有限公司/广西玉柴机器股份有限公司		

拖拉机主要技术规格
Main technical specifications of the tractor

项目 Item		单位 Unit	SH800/ SH804	SH850/SH854	SH900/SH904	
动机 Engine	Manufacturing enterprise		YTO (Luoyang) Diesel Engine Co., Ltd. / Guangxi Yuchai Machinery Co., Ltd.			
	商标与品牌 Trademark and brand	——	东方红/玉柴 Dongfanghong/Yuchai			
	型号 Model	——	LR4B5-23	LR4M5-23	LR4M5-23	YC4B105Z-T20
	缸数 Number of cylinders	——	4			
	缸径×行程 Cylinder diainstrument×stroke	mm（毫米）	108×135	110×135	110×135	108×125
	排量 Displacement	L（升）	4.95	5.13	5.13	4.58
	压缩比 Compression ratio	——	18:1			17.5:1
	标定功率 Calibrated power	kW（千瓦）	59	62.5	66.5	
	标定转速 Calibrated rotating speed	r/min（转/分）	2300			
	最大扭矩/转速 Maximum torque/ rotating speed	N·m/ r/min（牛·米/转/分）	≥295/ 1600～1800	≥310/ 1600～1800	≥330/ 1600～1800	

AGRISONTM 1300 651 830

拖拉机主要技术规格
Main technical specifications of the tractor

项目 Item		单位 Unit	SH800/ SH804	SH850/SH854	SH900/SH904
	额定工况燃油消耗率 Rated condition fuel consumption rate	g/kW·h（克/千瓦·小时）	≤242		
	额定工况机油消耗率 Rated condition engine oil consumption rate		≤1.63		
	润滑方式 Lubrication mode	——	强制、飞溅润滑 Forced splash lubrication		
	启动方式 Starting mode	——	电起动 Electric start		
	冷却方式 Cooling mode	——	强制水冷 compulsive water-cooling		
	空气滤清器型式 Air cleaner type	——	干式或湿式 Dry or wet type		

SH950/SH954/SH1000/SH1004

项目 Item		单位 Unit	SH950/ SH954	SH1000/SH1004
发动机 Engine	生产企业 Manufacturing enterprise	——	一拖（洛阳）柴油机有限公司/广西玉柴机器股份有限公司 YTO (Luoyang) Diesel Engine Co., Ltd. / Guangxi Yuchai Machinery Co., Ltd.	
	商标与品牌 Trademark and	——	东方红/玉柴 Dongfanghong/Yuchai	

AGRISONTM 1300 651 830

拖拉机主要技术规格
Main technical specifications of the tractor

项目 Item		单位 Unit	SH950/ SH954		SH1000/SH1004	
	brand					
	型号 Model	——	LR4V5-23	YC4B105Z-T22	LR4M3Z-23	YC4A110Z-T20
	缸数 Number of cylinders	——	4			
	缸径×行程 Cylinder diainstrument×stroke	mm（毫米）	115×135	108×125	115×135	108×132
	排量 Displacement	L（升）	5.61	4.58	5.61	4.86
	压缩比 Compression ratio	——	18:1	17.5:1	18:1	17.5:1
	标定功率 Calibrated power	kW（千瓦）	70		73.5	
	标定转速 Calibrated rotating speed	r/min（转/分）	2300			
	最大扭矩/转速 Maximum torque/ rotating speed	N·m/ r/min（牛·米/转/分）	≥350/1600~1800	≥350/1500~1700	≥380/1600~1800	≥380/1500~1700
	额定工况燃油消耗率 Rated condition fuel consumption rate	g/kW·h（克/千瓦·小时）	≤242			

AGRISONTM 1300 651 830

https://truckmanualshub.com/

拖拉机主要技术规格
Main technical specifications of the tractor

项目 Item		单位 Unit	SH950/ SH954	SH1000/SH1004
	额定工况机油消耗率 Rated condition engine oil consumption rate		≤1.63	
	润滑方式 Lubrication mode	——	强制、飞溅润滑 Forced splash lubrication	
	启动方式 Starting mode	——	电起动 Electric start	
	冷却方式 Cooling mode	——	强制水冷 compulsive water-cooling	
	空气滤清器型式 Air cleaner type	——	干式或湿式 Dry or wet type	

注：技术规格表中参数均为标准配置下的数值。
Note: Technical Specifications Table parameters are standard values.

3.4 拖拉机理论速度

Theory of tractor speed

SH800/SH804/SH850/SH854/SH900/SH904 **拖拉机理论速度** 单位：km/h

Theoretic speed of SH800/SH804/SH850/SH854/SH900/SH904

机型 Machine model	SH800/SH804		SH850/SH854		SH900/SH904	
档位 Gear position	16F+8R					
	前进档 Forward gear	倒档 Reverse gear	前进档 Forward gear	倒档 Reverse gear	前进档 Forward gear	倒档 Reverse gear

AGRISONTM 1300 651 830

拖拉机主要技术规格
Main technical specifications of the tractor

普通档 Normal	低 1 Low 1	2.315	3.106	2.315	3.106	2.315	3.106
	低 2 Low 2	3.601	4.832	3.601	4.832	3.601	4.832
	低 3 Low 3	5.761	7.732	5.761	7.732	5.761	7.732
	低 4 Low 4	8.039	10.789	8.039	10.789	8.039	10.789
	高 1 High 1	10.04	/	10.04	/	10.04	/
	高 2 High 2	15.62	/	15.62	/	15.62	/
	高 3 High 3	24.99	/	24.99	/	24.99	/
	高 4 High 4	34.873	/	34.873	/	34.873	/
爬行档 Creeper	低 1 Low 1	0.463	0.622	0.463	0.622	0.463	0.622
	低 2 Low 2	0.72	0.966	0.72	0.966	0.72	0.966
	低 3 Low 3	1.152	1.546	1.152	1.546	1.152	1.546
	低 4 Low 4	1.608	2.158	1.608	2.158	1.608	2.158
	高 1 High 1	2.008	/	2.008	/	2.008	/
	高 2 High 2	3.124	/	3.124	/	3.124	/

AGRISON™ 1300 651 830

拖拉机主要技术规格
Main technical specifications of the tractor

	高 3 High 3	4.998	/	4.998	/	4.998	/
	高 4 High 4	6.975	/	6.975	/	6.975	/

注：1.上表数值是以发动机 2300r/min（转/分）、标准后轮胎时的理论速度。
Notes: 1. The theoretical speed value in above table based on engine 2300r/min (rev / min), the standard tire.

SH950/SH954/SH1000/SH1004 **拖拉机理论速度** 单位：km/h

Theoretic speed of SH950/SH954/SH1000/SH1004

机型 Machine model		SH950/SH954		SH1000/SH1004	
档位 Gear position		16F+8R			
		前进档 Forward gear	倒档 Reverse gear	前进档 Forward gear	倒档 Reverse gear
普通档 Normal	低 1 Low 1	2.315	3.106	2.315	3.106
	低 2 Low 2	3.601	4.832	3.601	4.832
	低 3 Low 3	5.761	7.732	5.761	7.732
	低 4 Low 4	8.039	10.789	8.039	10.789
	高 1 High 1	10.04	/	10.04	/
	高 2 High 2	15.62	/	15.62	/
	高 3 High 3	24.99	/	24.99	/

AGRISON™ 1300 651 830

拖拉机主要技术规格
Main technical specifications of the tractor

	高 4 High 4	34.873	/	34.873	/
爬行档 Creeper	低 1 Low 1	0.463	0.622	0.463	0.622
	低 2 Low 2	0.72	0.966	0.72	0.966
	低 3 Low 3	1.152	1.546	1.152	1.546
	低 4 Low 4	1.608	2.158	1.608	2.158
	高 1 High 1	2.008	/	2.008	/
	高 2 High 2	3.124	/	3.124	/
	高 3 High 3	4.998	/	4.998	/
	高 4 High 4	6.975	/	6.975	/

注：1.上表数值是以发动机 2300r/min（转/分）、标准后轮胎时的理论速度。
Notes: 1. The theoretical speed value in above table based on engine 2300r/min (rev / min), the standard tire.

AGRISON™ 1300 651 830

https://truckmanualshub.com/

操作说明
Operator Instruction

4．操作说明

Operator Instruction

⚠注意：正确的操作拖拉机，可以充分发挥拖拉机的效能，减少拖拉机的磨损和防止事故的发生。保证操作者优质、高效、低耗、安全地完成田间及道路作业。

Note: operating the tractor properly can bring efficiency of the tractor into full play to reduce tractor wear and prevent an accident and ensure operator to complete farm and road operations fast, efficiently, in low consumption and safety mode

表 4-1 常用标识符号

Table 4-1 Commonly used identification symbols

符号 Symbol	含义 Implication	符号 Symbol	含义 Implication	符号 Symbol	含义 Implication
	安全警戒符号 Safety warning signs		四轮驱动 Four-wheel drive		喇叭 Horn
	远光灯 High beam light		近光灯 Low beam light		快 Fast
	发动机机油压力 Engine oil pressure		蓄电池充电状况 Battery charging condition		慢 Slow
	转向灯指示 Steering light indication		洗涤器 Washer		位置灯 Position light
	发动机预热 Engine preheating		后雨刮 Rear rain brush		雨刮器 Rain brush
	空滤器堵塞报警 Air filter blockage warning		液压油滤清器 Hydraulic oil filter		气压制动失灵故障 Air brake failure

AGRISONT 1300 651 830

https://truckmanualshub.com/

操作说明
Operator Instruction

	发动机冷却液温度 Engine coolant temperature		燃油油量 Fuel volume		驻车制动 Parking brake
	差速锁 differential lock		危险指示灯 Hazard indicator light		警报灯 Warning light

4.1 产品描述

Product Description

本说明书介绍了沭河 SH90 系列包括 SH800/SH804、SH850/SH854、SH900/SH904、SH950/SH954、SH1000/SH1004 十种型号的轮式拖拉机的使用、技术保养、调整、故障和排除方法等。

This Operation Instruction introduces application, technical maintenance, adjustment, failure and its elimination of SHUHE SH series, including ten models of wheeled tractors.i.e.SH800/SH804/SH850/SH854/SH900/SH904/SH950/SH954/SH1000/SH1004

沭河 SH90 系列轮式拖拉机是一种多用途的中型农用轮式拖拉机。该机具有结构紧凑、操纵方便、转向灵活、提升力大和维修保养方便等特点。

SH90 series wheeled tractor is a kind of multifunctional large wheeled tractor used for farm. The farm machine tool has compact in structure, easy control, flexible steering, high lifting capacity and maintainability.

4.2 拖拉机操纵机构及仪表

Operating mechanism and instrument of tractor

4.2.1 拖拉机操纵机构

0peration mechanism for the tractor

AGRISONTM 1300 651 830

https://truckmanualshub.com/

操作说明
Operator Instruction

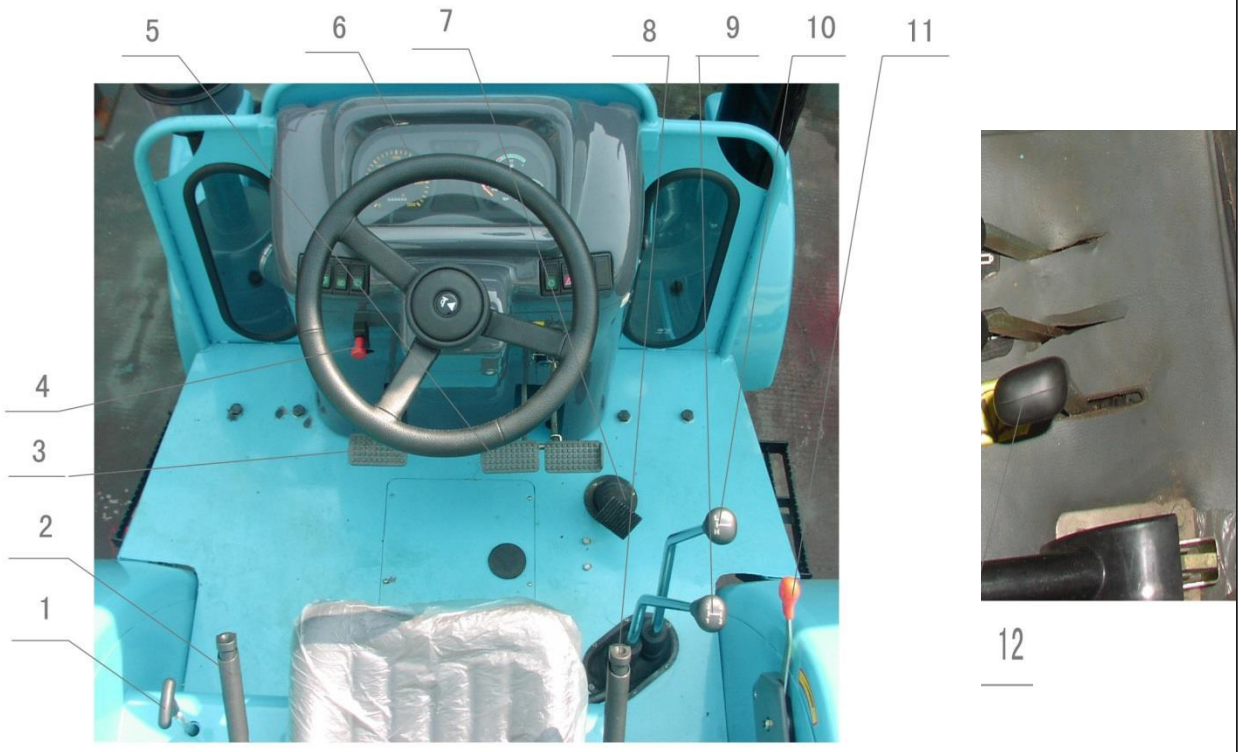

图 4-1 操纵机构手柄及操纵踏板

Figure 4-1 Control Mechanism of Tractor

1.动力输出操纵手柄 2.制动器操纵手柄 3.主离合踏板 4.熄火拉线
5.左右制动踏板 6.仪表盘 7.油门操纵踏板(脚油门) 8.副离合器操纵手柄
9.主变速杆 10.副变速杆 11 油门操纵手柄(手油门) 12. 分配器操纵手柄

1. Power take-off control handle; 2. parking brake control handle; 3. main clutch pedal;
4. Extinguish cable handle; 5. left/right braking pedal; 6. foot throttle control pedal,
7. Auxiliary clutch control handle; 8. distributor control handle; 9. main gear Shift lever;
10. Auxiliary gear shift lever; 11. hand throttle control handle 12. Distributor control handle

AGRISOM

4.2.2 仪表及开关
Instrument and switch

https://truckmanualshub.com/

操作说明
Operator Instruction

拖拉机仪表及开关

Instrument and switch

组合仪表包括水温表、燃油表、发动机转速表，还有转向指示灯、远近光指示灯、位置指示灯、充电报警灯及发动机油压报警灯和气压报警灯等各种指示装置，以便于用户随时监测整车工作情况。

Combination instrument is composed of water temperature gauge, engine tachometer, turn light indicator lamp, high/low beam indicator lamp, position indicator lamp, charge indicator lamp oil pressure indicator lamp of engine and alarm indicator lamp of air pressure, etc. This will help the user monitor the working condition of the whole tractor at any time.

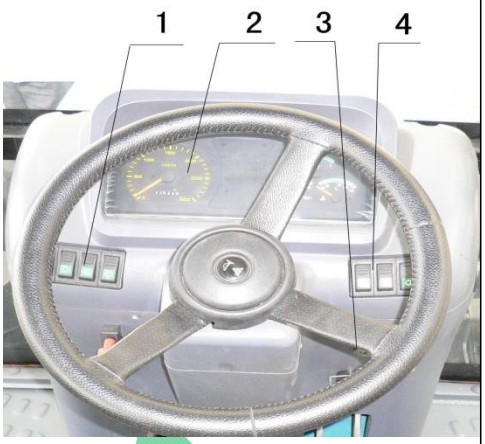

图 4-2 仪表及开关

1．左侧翘板开关组合　　2．组合仪表总成

3．点火锁　　4．右侧翘板开关组合

Figure 4-2　instrument and switch

1. combination instrument assembly　　2. right rocker switch combination;

3. ignition lock:　　4. left rocker switch combination

重要事项：

IMPORTANT:

拖拉机工作时，驾驶员要时刻注意各种仪表及指示灯，若发生异常情况，要立即停车、检修。

When the tractor is operating, the driver shall always observe various instruments and indicator lights. If any abnormality occurs, it is necessary to stop and overhaul.

发动机转速表

Engine tachometer

发动机启动后，指示数值为发动机工作转速（r/min 表示转每分钟），方框内显示数值为发动机工作小时数。

After the engine is started, indicated value is the operating rotary speed of the engine. The value in the box is operating hours of the engine.

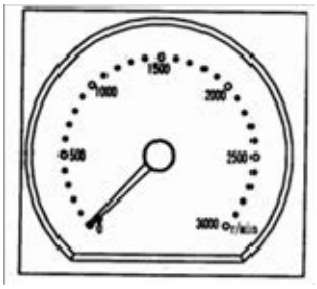

图 4-3 发动机转速表

Figure4-3 engine tachometer

AGRISONM 1300 651

操作说明
Operator Instruction

水温表

water temperature gauge

用刻度标记发动机冷却液温度值，指针由左向右运动，其中红色区域为高温区。

To mark the engine cooling liquid temperature, with the finger moving from left to right Red area is high temperature zone.

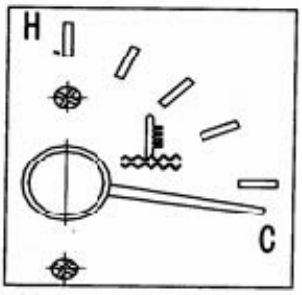

图 4-4 水温表

Figure 4-4 water temperature gauge

油量表

Oil gauge

油量表用刻度表示油箱内的油量。指针指向上边的 F 区；表示油箱充满燃油；指针指向下边的 E 区，表示油箱内的油量不足 1 / 4。在使用拖拉机中，若发现无油或油量不足时，指针仍在 F 区，表明油量传感器或油量表出现短路故障；当油箱满时，指针仍在 E 区不动，表明油量传感器或油量表出现断路故障，应检修。

Oil gauge uses the graduation to indicate the oil mount in the tank Direction of finger Rightmost position: indicate that oil cylinder is filled with fuel. Finger points to left red zone indicates that oil is not enoughin the oil tank. It is necessary to fill oil immediately.

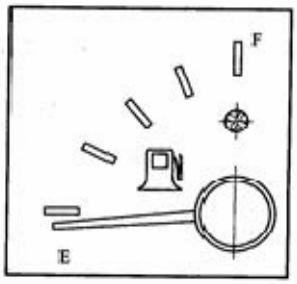

图 4-5 油量表

Fig. 4-5 oil gauge

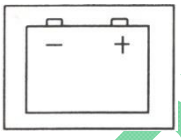

充电报警灯(红色)

Charging indicator （ red ）

发动机起动后该灯应熄灭，表示发电机发电正常。如指示灯不熄灭，应检修；若起动时指示灯不亮，则应检修仪表内灯泡。

After the engine is started, the indicator extinguishes, which means the accumulator is charged normally. Check and repair if the indicator does not extinguish.

发动机油压报警灯(红色)

Engine oil pressure warning lamp （ red ）

钥匙打在点火位置，该灯亮；发动机起动后，该灯应熄灭表示润滑系统压力正常。 发动机怠速时，该灯可能亮，这是因为怠速时润滑系统压力低，属正常现象。如果发动机在正常工作转速时，该灯亮，应立即停机检查：起动时该灯不亮，则应检修仪表内灯泡。

When the key is turned to the ignition position, the lamp is lit. After the engine starting, the lamp will be extinguished. It means the oil lube system pressure is normal When the engine is idling, the light may be illuminating because it is normal that pressure in the lubrication system is low during the idling period. If the lamp is light when the engine working in normal rpm, it should be checked immediately after stop.

JACKSONTM 13006518

https://truckmanualshub.com/

操作说明
Operator Instruction

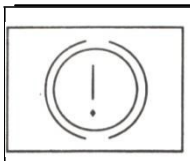

气压报警灯(红色)

Air pressure alarm lamp (red)

当气刹系统气压低于 0.4Mpa 时，该灯亮，表明制动气路有故障，应检修。接通钥匙，发动机未起时，气压不足，灯亮为正常状态。

For a tractor with air brake, when the pressure of air brake system is lower than 00Mpa,the light is illuminating Indicate brake pneumatic line is faulty or pressure warning device is broken. Switch on the key but unstart the engine under inflation, it is normal that the lamp is illuminating.

重要事项：

IMPORTANT:

✧ 发动机运转前，钥匙接通点火位置，应检查以上三灯是否亮，若不亮，则可能为灯泡损坏或线路故障，应及时检修。

Before the engine runs, the key switches on the ignition position. Check if the above three lights are illuminating. If they are not illuminating, it is possible that bulbs are damaged or circuit faulty.Overhaul immediately.

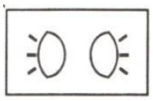

停车示廓指示灯(绿色)

Position indicator (green)

夜间在公路上行驶的拖拉机在停车时，为保证交通安全，提醒前后行驶车辆驾驶员注意，应将小灯打开，使灯光开关处于“1”位，此时，停车示廓指示灯的小灯全亮。

When the running tractor running on the road at night wants to park, in order to ensure the safety, and remind drivers in the front and rear running vehicle, the lamps should be turned on, to make the switch on I position, at this position, the lamp will be lit.

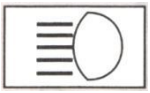

前照灯远光指示灯(蓝色)

Front light high beam indicator (blue)

灯光开关处于“2”位，变光开关处于“2”位时，该灯亮。表明此时前照灯为远光。

When the light switch is "2" position and the dip switch is "2" position, the light is illuminating Indicate head light is high beam

左转向指示灯(绿色)

Right steering indicator (green)

拖拉机左转时，接通左转向开关，该灯亮。

When the tractor turning left, the turning left switch will be turned on and the lamp will be lit.

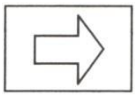

右转向指示灯(绿色)

Right steering indicator (green)

拖拉机右转时，接通右转向开关，该灯亮。

When the tractor turning right, the turning right switch will be turned on and the lamp will be lit.

AGRISONTM 1300 651 830

操作说明
Operator Instruction

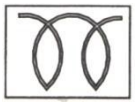

预热指示灯(黄色)

Preheating indictor (yellow)

拖拉机预热时，该灯亮。

When the tractor is preheating, the lamp will be lit.

左侧翘板开关组合

Left rocker switch combination

1．变光开关

Dimmer switch

2．灯光开关

Light switch

3．顶、后工作灯开关

Roof/rear light switches

4．雨刮器开关

Rain brush switch

图 4-6 左侧翘板开关组合

Fig. 4-6left rocker switch

变光开关

Dip switch

“2”位：远光灯亮。“0”位：近光灯亮。“l”位：备用。远近光转换受灯光开关控制。

Headlight on full beam is lit Dipped headlight lit. Position “1". stand by service. Conversion between the high beam and dipped headlight is controlled by light switch

灯光开关

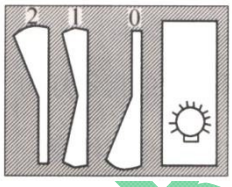

Light switch

“0”位时切断电源。“1”位：示廓位置灯亮。“2”位：控制前照灯电源，接通此位，即可用变光开关控制前照灯远近光转换。

Shutoff the power. Outline marker lamp (position lamp) lit Control front light power supply, dimmer switch is used to control front light far/near light switchover as long as this position is powered on

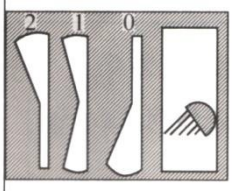

顶、后灯开关

Top and rear light switch

“0”位：切断电源。“l”位：顶工作灯亮(有驾驶室时使用)。“2”位：后工作灯亮。

Power off Top lamp lit (if with cab) Position “2": rear lights on.

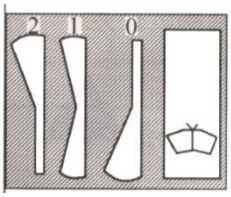

雨刮开关

Wiper Switch

“2”位，雨刮器快档工作；“1”位，雨刮慢档工作：“0”位，雨刮器复位停止工作。

Position "2"- quick operating; Position"1"- slow operating; Position"0"- resetting, stop operating.

AGRISONTM 1300 65

操作说明
Operator Instruction

右侧翘板开关组合

Right rocker switch combination

1．夜间照明开关

1. lighting switch at night;

2.危险报警开关

2. warning switch for danger;

3.转向开关

3. steering switch

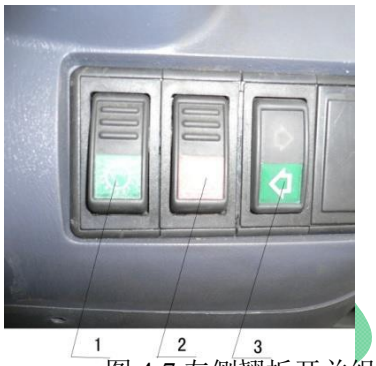

图 4-7 左侧翘板开关组合

Fig. 4-7right rocker switch combination

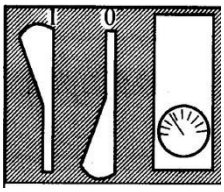

夜间照明开关

Lighting switch at night

“1”位：所有开关上的指示灯仪表照明灯全亮。“0”位：各指示灯灭。用于夜间行驶时，照明各开关。

All indicator lamp on the switch and instrument lamp are lit Position "0": each indicator off. To control the double-action oil cylinder on the machinery.

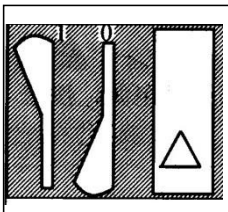

危险报警开关

Warning switch for danger

“1”位：前后左右转向灯、仪表上的左右转向灯及危险报警开关上的指示灯均亮。当拖拉机因故障停在公路上或其他原因需要警告前后车辆和行人引起注意，以避免。发生事故时，使用此功能。

Front/rear and left/right steering lamps, left/right steering lamps on instrument and indicator on danger alarming switch are lit. When the tractor stops on the road because of fault or other reasons, it is required to warn other vehicles and passengers about it to avoid any incident. Now this function is used.

转向开关

Steering switch

“0”位：接通右转向灯。“1”位：切断电源。“2”位：接通左转向灯。

Position "1": left steering lamps on; position "0": power supply off; Position "2": right steering lamps on.

AGRISON™ 1300 651 85

https://truckmanualshub.com/

操作说明
Operator Instruction

点火锁

Ignition lock

- 将钥匙插入点火锁中，顺时针转动钥匙依次为：ON 档(点火档)，接通整车线路的电源；ACC 档(辅助档)，联通辅助电器元件，如：暖风、雨刮、风扇等；ST 档(起动档)，使整车起动工作，发动机起动后钥匙返回 ACC 档，此时 ON 和 ACC 同时接通，提供整车电器元件电源。

  Insert the key into the electric lock, turn it clockwise, start the engine, then return to "ON". "OFF" means switching off, i.e. switch off the circuit of the whole tractor; "ACC" means auxiliary gear, connecting auxiliary electrical elements, such as heater, wiper, fan, etc. "ON" means ignition, put on the power of the whole tractor; "H" means preheating, put on the preheating circuit, "ST" means startin, to strart the engine and make the whole tractor operate.

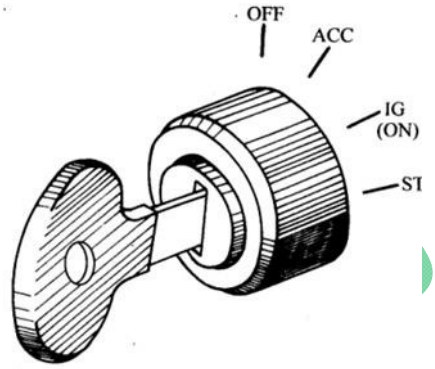

图 4-8 点火锁

Fig.4-8 ignition lock

4.3 发动机的起动

How to start engine

注意：

CAUTION:

✧ 使用前，对拖拉机进行认真、全面的检查，可以消除隐患，有效地防止事故的发生。

Before using, an overall check shall be made on the tractor to eliminate potential accidents efficiently.

4.3.1 发动机起动前的准备工作

Preparations before the engine is started

- 起动前应作认真检查，各部分连接必须紧固、可靠，各操纵机构作用正常，各部分管接头是否拧紧，有无漏油、漏水、漏气现象。

  Before starting, it should be carefully checked, to ensure that each part is fixed tightly and stable, each operation mechanism function is normal, each pipe joint is fastened, and there is no oil/water/air leakage.
- 检查发动机油底壳、拖拉机变速箱、后桥及液压系统的润滑油油面位置。水箱散热器内应加足冷却水。燃油箱中应有足够的燃油。

  Check oil pan of the engine, tractor gearbox, rear axle and lube oil level of hydraulic system. Cooling water should be added enough to the water tank radiator. There should be enough fuel oil in the fuel oil tank.
- 将燃油箱油路开关手柄扳至与油管顺向位置，使燃油油路处于接通状态。

  Move the oil circuit switch of the fuel tank to the same direction as of the oil pipe, and make the fuel circuit in the status of switching on;
- 检查变速箱操纵杆、动力输出轴操纵手柄，将主变速杆、动力输出操纵手柄，前驱动桥操纵手柄均置于空档位置，分配器操纵手柄置于下降位置。

  Check the transmission control lever and power take-off control handle. place the main gear shift lever, power take-off control handle. Front drive axle control handle in “NEUTRAL” and distributor control handle in "LOWER” position;

AGRISONTM 1300 654

https://truckmanualshub.com/

- 扳动熄火拉线锁紧装置，使熄火拉线松回，此时喷油泵处于供油位置。

  Turn flameout cable lock device to retract flameout cable, at this time oil-spraying pump is in oil-supplying position.
- 手油门置于半开状态。

  Place the hand throttle in the status of half-open;
- 对于新的、经过大修或长时间停置不用的拖拉机，起动前首先要排除油路中的空气，以保证柴油发动机顺利起动。

  For the tractor which is new, overhauled or not in use for a long time, before starting, first discharge the air in oil line to ensure that diesel engine can start smoothly.
- 方法如下：首先松开柴油滤清器的放气螺钉，用手压泵泵油将油箱至柴油滤清器一段油路中的空气放尽，直至放出的燃油无气泡为止。然后拧紧柴油滤清器的放气螺钉，松开喷油泵上的放气螺钉，用同样的方法放气直至放出的燃油无气泡为止。

  The procedure as follows: first release the exhaust screw of diesel filter, then discharge the air in the oil line from oil tank to diesel filter by hand pump until there is no bubble in the discharged oil Then, unfasten the exhaust screw of the fuel pump to exhaust air in the same method no until no air bubble not included in the flow oil.

重要事项 ：

IMPORTANT :

✧ 应定期清理水箱网孔中的杂物，以免发动机因散热不良发生故障。

Clean contaminant in water tank screen regularly to avoid engine accident by improper heat radiation.

✧ 拖拉机安装背负式收割机后，在田间作业时散热条件恶劣，为保证发动机能够长时间连续作业，建议您在拖拉机适当部位安装辅助散热装置。

When the tractor is mounted with the knapsack type harvester, the heat emission condition for working in field is worse. In order to make the engine to continuous work for a long time. it is suggested to mount a auxiliary heat emission device on suitable position of the tractor.

4.3.2 启动发动机
Start the engine

⚠ **注意：**

CAUTION:

✧ 发动机起动前，应确保主副变速杆、前驱动操纵杆处于空挡位置，分配器操纵杆置于不工作（中立）位置，以防止拖拉机突然起动，发生意外危险。

In order to avoid enexpected danger and prevent the tractor starting suddenly, you shall make sure the main/auxiliary gear shift lever and front drive control lever are in "NEUTRAL- and the distributor control lever is in "LOWER" position before the engine starts.

蓄电池起动：

Accumulator starts

AGRISONIC 1300 651 830

https://truckmanualshub.com/

操作说明
Operator Instruction

常温起动(气温在-5℃以上时)：将钥匙顺时针转动至“ON”位，接通电路，然后再转动钥匙至“ST”位起动发动机，钥匙自动弹回到“0N”位。若带安全启动开关，则应先踩下主离合器踏板，再转动钥匙起动发动机

Normal temperature starting (when air temperature is above -5℃); turn the key clockwise to "ON" to switch on the circuit. and tum the key to "ST" to start the engine; you let go immediately after the engine starts, and the key will bounce back to "ON".If there is a safe starting switch, you shall step on the main clutch pedal, then tum the key to start then engine.

图 4-9 启动钥匙
Fig.4-9 ignition key

- 预热起动(仅适于带有预热电路的机型)：
  Preheating start (just suitable to the type with preheating circuit

1. 将钥匙插入点火锁中，顺时针转动到点火档(ON)，接通预热电路：
   Insert the key into the ignition lock and turn clockwise to the ignition position (ON) ON the preheating circuit:

若气温高于 5℃，指示灯不亮，控制器不工作，可打到起动档(ST)，直接起动发动机。
If the temperature is higher than 5 ° C, the light is off, the controller does not work, turn to start (ST) position, start the engine directly.
若气温低于 5℃，指示灯亮，控制器开始工作，此时预热塞通电预热；
If the temperature is below 5 ℃, indicator light, the controller starts to work, the glow plug is energized warm-up;

2. 预热塞预热时间与电瓶电压有关，一般为 30s（秒）左右。预热结束，指示灯以 1 次 / 秒的频率闪烁，处于等待起动阶段；
   Glow plugs warm-up time and the battery voltage, usually around the 30s (seconds). Warm-up is completed, the indicator flashes at a frequency of 1 / s, is waiting for the start-up phase;
3. 指示灯以 1 次 / 秒频率闪烁时，打到起动档(电瓶最低电压不低于 6.5V)，指示灯变为常亮，燃油电磁阀打开供油；若指示灯闪烁时未打到起动档，则预热装置在指示灯闪烁 30s（秒）后自动停止工作；
   1 / s frequency flashing, the indicator hit the starter file (lowest battery voltage is lower than 6.5V), the indicator light turns solid, oil fuel solenoid valve is opened; did not hit the starter file if the light is flashing preheating device automatically stop working after the indicator flashes 30s (seconds);
4. 起动成功后，控制器自动进行后加热过程，后加热过程一般为 60～140s（秒），根据环境温度判断。
   After a successful start, the controller automatically after the heating process, after the heating process is generally 60 to 140S (seconds) Classifying according to the ambient temperature.
5. 不带预热电路的拖拉机，在严寒天气起动发动机之前，向水箱内加入温度在 90℃以上的热水，直到缸体放水阀处有热水流出时，关闭放水阀，然后将整个冷却系统加满热水。放出油底壳内的机油(最好在上次熄火时趁热放出)，放在有盖的容器内加热至 70～90℃，再加入油底壳内，禁止用火烘烤油底壳。
   For a tractor without preheating circuit, first pour hot water above 90 ℃ into water tank before

AGRISONM 1300 6

https://truckmanualshub.com/

starting the engine in winter until hot water goes out of drain valve and shut off the drain valve. Then make the whole cooling system full of hot water. Discharge engine oil on the oil pan (it is better to discharge at engine kill). Put into a container with a cover to heat until 70-90℃, then add into the oil pan. It's forbidden to heat the oil pan on the fire.

利用牵引拖拉机起动

Start with a traction tractor:

- 利用牵引拖拉机起动时，被牵引拖拉机使用高 III 档或高Ⅳ档，为保证安全，牵引拖拉机的速度不应高于 15km / h。
  When starting up with a traction tractor, the traction tractor uses High Ⅲ or High Ⅳ shift; for safety, the speed of traction tractor should not be higher than 15km/h.

重要事项：

IMPORTANT:

✧ 发动机起动后，应立即松手，让钥匙自动弹回到“ON”位（见点火锁图片）。否则，起动后的发动机将反带起动电动机致使启动电机损坏；
After the engine is started, release it immediately. The key returns to "ON" gear automatically. Otherwise, started engine will make actuating motor run reversely so as to damage the actuating motor.

✧ 每次连续起动时间不得超过 5s（秒），每次起动时间间隔应不少于 15s（秒），为了维护蓄电池的充电性能，连续起动不得超过 3 次。若连续三次未能起动，应查明原因后再起动。
Continuous starting time cannot exceed 5s each time. The starting interval shall not be less than 15s, in order to maintain charging performance of the accumulator, continuous times cannot exceed three times If the starting fails for continuous three times, it should be stopped to troubleshoot.

重要事项：

IMPORTANT:

✧ 利用牵引拖拉机起动时，一旦发动机运转，应立即踩下主离合器踏板，并减小油门，以防发动机憋死灭火。
When starting by the traction tractor, once the engine is running, step on main clutch pedal immediately and throttle down to prevent the engine kill.

4.3.3 发动机运行
Engine running

- 发动机起动后，应立即减小油门，使发动机处于怠速运转状态，检查此时的发动机机油压力，确保机油压力不低于 98kPa(1kgf / cm2，此时油压指示灯熄灭)。
  After the engine is started, the throttle shall be eased up immediately. Check the engine oil pressure at this moment to ensure engine oil is not lower than 9kPa. Now the oil pressure indicator extinguishes.
- 发动机起动后，不应立即进行全负荷运转，应当使发动机中速空载运转加热。当冷却液温度达 60℃以上时，才允许提高到最高转速，投入满负荷工作。
  After the engine is started, full-load running shall not be made immediately. It is necessary to run the engine idly at medium speed to preheat. When coolant temperature is above 60℃. it is allowed to increase to the highest speed and operate at full load.
- 应缓慢增减发动机的转速和负荷，特别是对刚起动着的发动机，不允许猛“轰油门”高速运转。
  The engine rotary speed and load should be slowly increased or decreased, especially for a newly starting engine; it is not allowed to run at high speed by sudden turning the handle oil throttle.
- 发动机运转时，应经常检查机油压力和冷却液温度，在发动机正常工作期间冷却温度一般在 85～

ACRISONTM 1300 651 830

https://truckmanualshub.com/

95℃（摄氏度）压力应在 294kPa～490Kpa（千帕）。

During the running of the engine, engine oil pressure and coolant temperature shall be checked normally. During the normal operations of the engine, the cooling temperature is 85～9℃, engine oil pressure is 294 to 49kPa.

重要事项：

IMPORTANT:

✧ 任何情况下机油压力不能低于 98kPa（千帕），及时查明原因并排除故障。

Under no circumstance, can oil pressure be less than 9.8kPa to avoid engine damage.

4.4 拖拉机起步

How to start tractor

- 发动机处于低速状态，踩下离合器踏板，然后将变速箱换档杆挂到所需的档位上。

  When the engine is at a lower speed, press the clutch pedal to the floor, then move the gear shift lever to the desired gear;
- 向下推动手制动手柄，松开停车制动器。

  Push the braking handle down, let go of the parking brake;
- 鸣号并观察周围有无障碍物。

  Beep and check if there are any obstructions
- 逐渐提高发动机转速，缓慢松开离合器踏板使拖拉机平顺起步。起步后则应迅速地松开离合器踏板，以免离合器滑磨。

  Gradually increase engine rotary speed step gradually and release clutch pedal to have the tractor started stably. Release clutch pedal immediately after starting to avoid clutch slipping
- 逐渐加大油门，使拖拉机达到所需的工作速度。

  Press on the accelerator gradually to make the tractor reach desired working speed;
- 使用中不允许采用半接合离合器的方法来降低拖拉机的行驶速度。行驶中不得将脚一直放在离合器踏板上，以免加速分离杆和摩擦片的磨损。

  During using, it is not allowed to use clutch semi-engagement to lower the tractor speed. During running, it is not allowed to put food always on the clutch pedal, so that to avoid accelerating the releasing rod and friction disc wear.

图 4-10 脚油门踏板

Fig.4-10 Accelerator pedal

重要事项:

IMPORTANT:

✧ 为防止变速箱传动齿轮打齿及离合器早期损坏，严禁使用高档起步

To prevent “Tooth Breakage” of drive gear of gearbox or earlier clutch damage, Shift High Start is orbidden.

✧ 起步前一定要松开停车制动器，以免损坏其工作部件。

Release the brake before starting to avoid damaging operating parts.

AGRISON™ 138 651 830

https://truckmanualshub.com/

✧ 挂档或换挡时必须踩下主离合器，以防变速箱传动齿轮打齿及离合器早期损坏。
When putting into gear or gear shifting, the clutch pedal shall be stepped on to disengage main clutch to prevent drive gear tooth of gearbox from being broken or prevent the clutch from being damaged early.

4.5 拖拉机的转向

How to steer tractor

拖拉机在道路上转向时，应先操纵方向盘上芯部的喇叭开关，鸣号示警，再行转向。若车速较高，应先减速，弯缓应早转慢打，少打少回。弯急应迟转快打，多打多回。

You shall press the horn on the center of the steering wheel to alarm others before the tractor turns. If the speed is too high, it should be firstly lower the speed, slowly steer and early turn, little steer and little return if steering angle is large, it should be slowly steer and early turn, more steer and more return.

拖拉机转小弯或在松软土地上转弯时，由于前轮侧滑而使转向不灵，可在转动方向盘的同时，踏下相应一侧的制动器踏板，来帮助转向。

When tractor turns a small angle or turns on a spongy-soft soil, steering is not flexible due to side slip of front wheel, therefore. it's possible to step on brake pedal on corresponding side while steering wheel is rotated to help steering

⚠ 警告：

WARNING:

✧ 拖拉机高速行驶时，切不可使用单边制动作急转弯，当前轮大转角转弯时，若安全阀起作用时发出“吱吱”声，此时方向盘应少许向回转一些，避免液压转向系统长时间过载。
When tractor runs at a high speed, it is not allowed to use single-side brake for a sharp turn. When front wheel turns at a large angle, if an abnormal sound is heard while relief valve functions, steering wheel should retract a little to prevent hydraulic steering system from being damaged due to long time overload which may cause an accident by steering out of control.

✧ 田间作业中转弯或倒车之前，一定要使入土的农机具工作部件抬升出地面，以免损坏农具或造成人员伤亡事故。
In field operation prior to turning or backward, operating parts and components of farm machine in soil are exposed to above floor to prevent the equipment or person from being damaged or hurt

4.6 拖拉机的换档

How to gear shift tractor

主副变速由 2 根操纵杆分别操纵，实现 8+4 档。主变速杆 A 可获得 4 个排档(1、2、3、4)，副变速杆 B 可获得 2 个前进速度区段(L 为低速区，H 为高速区)和 1 个倒退区 R。

Main and auxiliary gear shifts are controlled by two control handles to change the speed. Control main gear shift lever A - 4 shifts (3 and I), controlling auxiliary gear shift lever B can achieve 2 forward speed areas (L is low speed, H is high speed and R is reverse)

4.6.1 8+4 档和 16+8 爬行档

8+4 gears and 16+8 creeper gears;

AGRISOM 1300 651 830

操作说明
Operator Instruction

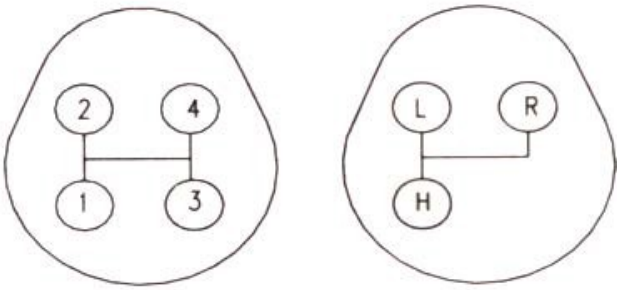

主变速杆 A　　副变速杆 B

Main gear shift lever A　　Auxiliary gear shift lever B

图 4-12 拖拉机的换挡

Fig. 4-12 Gear shift of the tractor

踩下主离合器踏板，操纵副变速杆 B，由空档位置向左推，再向前推得到低档位 L，若向后推得到高档位 H，由空档位置向右推，再向前推得到倒档位 R。

Press the main clutch pedal to the floor, move the auxiliary gear shift lever B, push it to the left from "NEUTRAL", then push it forward to low speed gear L, if push it backward, it will be high speed gear H; push it to the right from "NEUTRAL" then push it forward to reverse gear R.

踩下主离合器踏板，主变速杆 A 从空档位置向左移，再向后推得到 1 档，若向前推得到 2 档；由空档位置向右移，再向后得到 3 档，若向前得到 4 档。

Press the main clutch pedal to the floor. move the main gear shift lever A to the left from "NEUTRAL" then push it backward to Gear 1, if push it will be Gear 2; move the main gear shift lever A to the right from “NEUTRAL” then push it backward to Gear 3, if push it forward, it will be Gear 4.

如果您的拖拉机选装了爬行档，那么在地板中右部设有高、低速手柄，中间档位为空档，向上拉动得到爬行档，向下按动得到普通档，与前面的主副变速杆组合，可得到 16 个前进档及 8 个倒退档。

If creeper gear is optional, there is a high/low speed handle on the center-right of the floor. The central gear is neutral, pull it up will be low speed gear, and press it down will be high speed gear; combining with the above main/auxiliary gear shift lever, you may get 16 forward gears and 8 reverse gears.

变速箱在使用过程中一般不需要调整，但在使用和保养过程中应注意：

变速箱的润滑油与后桥润滑油相通，加油口在后桥箱体上，放油时，应分别拧开变速箱和后桥箱放油螺栓，并将放油螺栓上吸附的铁屑清洗干净。用油尺检查润滑油液面的高度。

正确选择拖拉机工作速度，不但可以获得最佳生产率和经济性，并可以延长使用寿命。拖拉机工作时，不应经常超负荷，要使发动机具有一定的功率储备。拖拉机田间工作速度的选择应使发动机处于 80％左右负荷下工作为宜。对于拖拉机轻负荷作业且工作速度又不高时，可选用高 1 档位小油门工作，以节省燃油。拖拉机基本工作档选择如表 4—1 所示。

AGRISOM 1300 651 830

操作说明
Operator Instruction

4.6.2 8+4 档和 16+8 梭式换挡

8+8 gears and 16+8 shuttle-type gear shift:

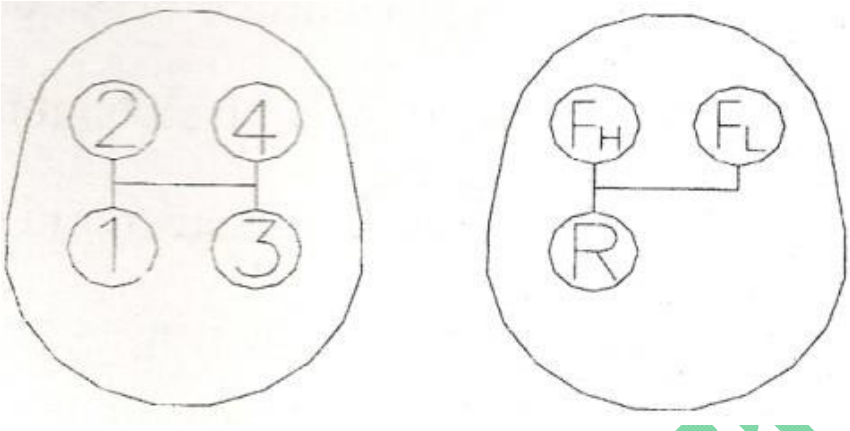

主变速杆 A　　副变速杆 B

Main gear shift lever A　　Auxiliary gear shift lever B

图 4-13 拖拉机换挡

Figure 4-13 Gear shift of the tractor

踩下主离合器踏板踩到底，将副变速换档杆 B，把它推到左边，从“空挡”，然后向前推高速档位 H，如果将其向后推，这将是反向档位 R; 副变速换档杆 B 从“空挡”向右推，然后向前推，这将挂到低速档位 L。

Press the main clutch pedal to the floor, move the auxiliary gear shift lever B, push it to the left from "NEUTRAL", then push it forward to high speed gear H, if push it backward, it will be reverse gear R; push it to the right from "NEUTRAL" then push it forward , it will be low speed gear L.

踩下主离合器踏板踩到底。移动换档杆从“空挡”到左，然后将它向后推到档位 1，如果向前推，将档位 2;移动换档杆从“空挡”，然后将其推到右边向后档位 3，如果将其向前推，将得到档位 4。

Press the main clutch pedal to the floor. move the main gear shift lever A to the left from "NEUTRAL" then push it backward to Gear l, if push it forward, it will be Gear 2; move the main gear shift lever A to the right from "NEUTRAL" then push it backward to Gear 3, if push it forward, it will be Gear 4.

如果 16+8 梭式换档是可选的，中间偏右的地板上有一个高/低速手柄。中间齿轮是空挡的，把手柄拉起来将是低速档，然后按下来将高速齿轮：结合上述主/副换档杆，你可能会得到 16 个前进档和 8 个倒退档。

If 16+8 shuttle-type gear shift is optional, there is a high/low speed handle on the center-right of the floor. The central gear is neutral, pull it up will be low speed gear, and press it down will be high speed gear: combining with the above main/auxiliary gear shift lever, you may get 16 forward gears and 8 reverse gears.

正确选择拖拉机的运行速度，为获得最佳的生产率和经济性和延长使用寿命的目的。拖拉机工作时，不应经常超负荷。发动机应该有一定的动力储备。在外地工作时，选定的拖拉机的速度应使发动机负荷 80％。当拖拉机轻型操作在低速，高档可以用来节省燃油。见表 2-2 和 2-3 基本操作档位选择的拖拉机。

Select operating speed of tractor properly for the purpose of obtaining optimum productivity and economy and prolongation of service life. When working, the tractor should not often overload. The engine should have a certain power reserve. When working in field, the selected speed of the tractor should make the engine load 80%. When the tractor dos light-duty operations at a low speed, high shift l can be used to save fuel oil by throttling down. See Table 2-2 and 2-3 for basic operating gear selection of the tractor.

AGRISOM 1300 651 530

操作说明
Operator Instruction

重要事项：

IMPORTANT:

✧ 发动机运转时，在换档前应将主离合器踏板踩到底，过几秒钟后再换档，以防变速箱啮合套啮合不良，发生“打齿”现象。

When engine runs, step on main clutch pedal to bottom prior to gear shifting, shift after several seconds to prevent improper engagement of gearbox engagement sleeve to produce "Tooth Breakage".

✧ 只有在拖拉机静止时，才可挂入倒档。

Shift Backward cannot be engaged until tractor is at rest to avoid gear from being damaged.

✧ 拖拉机行驶时请不要将手放在变速杆上，否则手上的压力会传到变速箱内的换档拨叉上，造成拨叉过早磨损。

When tractor is running, never place your hand(s) on gear shift lever. otherwise, the pressure on your hand(s) can be transmitted to gear shift fork in gearbox by which causes the fork to be worn early.

表 4-2 拖拉机作业基本工作档位: 8F+4R 或 16F+8R（爬行档）-后轮胎 16.9-34

Table 4-2 Operating gear of the tractor: 8F+4R or 16F+8R (creeper gear optional)-real tyre16.9-34

档位 Gear				速度(km / h) Speed km/h	用途 Function
方向 Direction	爬行档 Creeper gear	副变速 Auxiliary gear shift	主变速 Main gear shift		
前进挡 Forward gear	爬行档 Creeper gear	低速区 Low speed gear	1	0.46/0.48	工程作业 Engineering operation
			2	0.72/0.75	
			3	1.15/1.20	
			4	1.61/1.68	
		高速区 High speed gear	1	2.01/2.09	移栽、收获、旋耕 Transplant, harvest, rotary tillage, 耕地、耙地、播种、割晒 Plowing, harrowing, sowing, windrowing
			2	3.12/3.26	
			3	5.0/5.21	
			4	6.97/7.27	
	普通档 Normal gear	低速区 Low speed gear	1	2.31/2.41	移栽、收获、旋耕 Transplant, harvest, rotary tillage, 耕地、耙地、播种、割晒 Plowing, harrowing, sowing, windrowing
			2	3.60/3.75	
			3	5.76/6.01	
			4	8.03/8.38	
		高速区 High speed gear	1	10.03/10.47	耙地、田间运输 Harrowing, field transportation
			2	15.61/16.29	
			3	24.98/26.06	道路运输 Road transportation
			4	34.85/36.37	
到退档 Reverse gear	爬行档 Creeper gear	低速区 Low speed gear	1	0.62/0.65	挂接农机具倒退 Mounting of farm implements, reverse
			2	0.97/1.01	
			3	1.55/1.61	
			4	2.16/2.25	
	爬行档 Creeper gear	高速区 High speed gear	1	3.10/3.24	
			2	4.83/5.04	
			3	7.73/8.06	
			4	10.78/11.25	

AGRISONTM 1300 651 830

操作说明
Operator Instruction

动力输出轴转速 Rotational speed power take-off shaft (r/min)	高 Quick	1000	旋耕、割晒、汲水、脱粒 Rotary tillage, windrowing, water drawing, threshing
	低 Slowly	760（540）	

表 4-3 拖拉机作业基本工作档位: 16F+8R（梭式换挡）-后轮胎 16.9-34

Table 4-3 Operating gear of the tractor: 16F+8R (shuttle-type gear shift)-real tyre16.9-34

档　位 Gear				速度(km / h) Speed km/h 爬行档 Creeper gear	用　途 Function 副变速 Auxiliary gear shift
方向 Direction	爬行档 Creeper gear	副变速 Auxiliary gear shift	方向 Direction		
前进挡 Forward gear	爬行档 Creeper gear	低速区 Low speed gear	1	1.58/1.65	移栽，收割，旋耕，工程作业 Transplant, harvest, rotary tillage, engineering operation
			2	2.11/2.20	
			3	2.73/2.85	
			4	5.31/5.54	
		高速区 High speed gear	1	2.34/2.44	工程作业 Engineering operation
			2	3.12/3.25	
			3	4.04/4.22	
			4	7.86/8.20	移栽、收割、旋耕、犁耕、耙地、播种 Transplant, harvest, rotary tillage, plowing, harrowing, sowing
	普通档 Normal gear	低速区 Low speed gear	1	2.31/2.41	
			2	3.60/3.75	
			3	11.70/12.21	割晒 windrowing
			4	22.76/23.75	耙地、田间运输、道路运输 Harrowing, field transportation, Road transportation
		高速区 High speed gear	1	10.03/10.47	
			2	13.35/13.94	
			3	17.32/18.08	犁耕、耙地、播种、割晒 Plowing, harrowing, sowing, windrowing
			4	33.69/35.16	
到退档 Reverse gear	Low speed gear	Reverse gear	1	2.41/2.51	挂接农机具倒退 Mounting of farm implements, reverse
			2	3.21/3.35	
			3	4.16/4.34	
			4	8.09/8.44	
	High speed gear	Reverse gear	1	10.33/10.78	
			2	13.74/14.34	
			3	17.83/18.60	
			4	34.67/36.18	
动力输出轴转速 Rotational speed power take-off shaft (r/min)			高 Quick	1000	旋耕、割晒、汲水、脱粒 Rotary tillage, windrowing, water drawing, threshing
			低 Slowly	760（540）	

AGRISONTM 1300 651 830

操作说明
Operator Instruction

注：上表中各速度为拖拉机理论行驶速度，而非实际作业速度。“ / ”前、后分别为发动机转速 2300r / min 和 2400r / min 的行驶速度。由于各地农艺状况和土壤状况差异较大，用户应根据实际情况合理选择作业档位和机具型号(仅供参考)。

Notes: The speed in the above table is theoretical running speed, not the actual operating speed. Before and after"/" are the running speeds (rotational speed of engine: 2300r/min and 2400r/min) respectively .The user shall properly select the operating gear and implements model according to the actual condition due to different agricultural and soil conditions. (only for reference)

4.7 差速锁的操作

How to operate differential lock

差速锁的操作

How to operate differential lock

拖拉机在行驶或作业过程中，若遇到陷车或单边驱动打滑，拖拉机不能前进时，可按下列步骤接合差速锁，使左、右驱动轴刚性连接，以同一转速驶出打滑地段。

During running or working, if the tractor can not move forward when it falls in pit or single-drive slips, it can turn on the differential lock as following sequences, to rigid connect the left and right drive shaft.

- 踩下主离合器踏板，操纵变速杆挂上低速档。
  Step on main clutch pedal, operate gear shift lever and engage low shift
- 将油门操纵手柄扳至最大供油位置。
  Push the throttle control handle to the maximum supply position
- 右脚踩住差速锁操纵踏板 2。
  Press on the differential lock control pedal by right foot.
- 平顺地松开离合器踏板，使拖拉机平顺地起步。
  Release the clutch pedal smoothly to operate the tractor stably .
- 驶出打滑地段后，松开差速锁踏板 2，差速锁自动脱开
  After running out of the skidding section, to release the differential pedal, the differential lock will automatically release.

图 4-14 差速锁踏板
Fig. 4-14differential lock pedal

重要事项

IMPORTANT:

✧ 在拖拉机正常行驶中和拐弯时，严禁使用差速锁，以免损坏机件和加速轮胎磨损。
When the tractor drives normally and turns, it is forbidden to use differential lock to avoid damaging components and accelerate tyre wear.

AGRISON™ 130 651 830

https://truckmanualshub.com/

4.8 前驱动桥的使用

How to use front drive axle

沭河 SH90 系列四轮驱动拖拉机在田间重负荷作业或在潮湿松软土壤上工作，若只靠后轮驱动，拖拉机的牵引力可能不足，此时挂接前驱动桥可以增大拖拉机的牵引力，降低打滑率，从而提高拖拉机的作业适应性。为了便于接合和分离前驱动桥，应遵循下述操纵程序。

SHUHE SH 90series of 4-wheel drive tractor can make heavy-duty operations in the field or on the wet and soft soil. If only rear wheel acts to drive, the traction performance of the tractor may not be enough. Now front drive axle can be used to increase the traction force and decrease the slippage so as to improve the operation adaptability of the tractor. In order to engage and release the front axle. the following operation sequence should be followed:

4.8.1 前驱动桥的挂接

Mount front drive axle

踩下主离合器踏板，挂好变速箱档位，然后慢慢松开离合器踏板，待拖拉机稍动时，及时向上拉动前驱动桥操纵手柄（前一页图中序号 1），使两轮驱动变为四轮驱动。

Step on main clutch pedal and engage the gearbox shift, then release clutch pedal slowly. After the tractor moves a little, pull up front drive axle control handle backward immediately and change two-wheel drive into four-wheel drive.

4.8.2 前驱动桥的断开

Disconnection of front drive axle

需要断开前驱动桥时，踩下主离合器踏板，向下推动前驱动桥操纵手柄（前一页图中序号 1），使前驱动桥分离。

When it is necessary to disconnect the front drive axle, you need to press the main clutch pedal to the floor, push the front drive axle control handle down to disconnect the front drive axle.

重要事项：

IMPORTANT:

✧ 拖拉机在硬路面作一般的运输作业时，不允许接合前驱动桥，否则会引起前轮过早磨损，增加燃油消耗。只有当雨雪天气，路面较滑，上大坡后轮容易打滑时才能接合前驱动桥。当拖拉机驶出困难区段后，应将前驱动桥分离。

The tractor will run out of the slip area with the same rotating speed when the tractor transports on the hard road, it is not allowed to connect front drive axle. Otherwise, it will result in early wear for front wheel and oil consumption increase. Only in rainy or snowy days, which road is comparatively slip and it is easy to slip when climbing the large slope, the front axle can be connected. When the tractor gets out of adverse circumstances, front drive axle shall be disengaged.

✧ 拖拉机运输作业时，前轮胎磨损较快且轮胎花纹左右两侧磨损不均时，可根据情况将左右轮胎调换使用。

When tractor performs a transportation operation, front wheel tyres wear rapidly and left/right sides of tyre tread patterns are worn unevenly, therefore, it's possible to exchange the left/right tyres.

AGRICONTM 13000651830

https://truckmanualshub.com/

4.9 拖拉机的制动

How to brake tractor

一般情况下，应先减小油门，踩下离合器踏板，然后根据情况逐渐踩下制动器踏板使拖拉机平稳停住。

Usually, minish oil throttle, step on clutch pedal, and then gradually step on the brake pedal to park the tractor stably.

紧急停车时，应同时踩下离合器和制动器踏板，不能单独踩下制动器踏板，以免制动器摩擦片急剧磨损或使发动机熄火。

At emergency, step on the clutch and brake pedal simultaneously. It is forbidden to step on brake pedal separately to prevent the brake friction disk from being worn sharply or avoid the engine kill.

加挂拖车制动时，应调整制动阀拉杆长度，使拖车先刹住，再刹住主机。

When coupling to trailer brake, you shall adjust the lengthof the rod of the brake valve, make it first brake the trailer, then the tractor itself.

图 4-15 制动踏板

Fig. 4-15Braking of the tractor

左右制动踏板联锁杆

Left/right brake pedals interlock

拖拉机在道路行使时，应用连锁杆 1 将左右制动踏板锁在一起。

When tractor runs on road, lock both left/right brake pedals together with a lock plate.

警告：

Warning

✧ 每次出车前，都应检查制动油箱油量以及制动管路是否有渗油现象．若油箱油量过少或管路有渗漏油现象，应及时查明原因，进行维修，否则将造成制动失灵等重大事故发生。

Prior to running a vehicle, check oil level in brake oil cylinder and brake pipe for leakage, and troubleshoot if necessary, otherwise, which will cause a serious accident such as brake out of control

✧ 拖拉机在道路行驶时，一定要把左右制动器踏板联锁起来，以免制动时拖拉机跑偏甚至翻车。

When tractor runs on road, left/right brake pedals must be interlocked to prevent tractor from running eccentrically or overturning when braking.

4.10 拖拉机停车和发动机熄火

How to stop tractor and how to flameout engine

- 减小油门、降低拖拉机行驶速度。
  Throttle down to decrease the tractor running speed
- 踩下离合器踏板，再踩下制动器踏板，当拖拉机停下后，将变速箱换档杆置于空档位置。
  Step on the clutch pedal and then the brake pedal. When the tractor stops, shifting lever shall be set at the

AGRISONTM 1300

https://truckmanualshub.com/

neutral gear.

- 松开离合器、制动器踏板，减小油门使发动机怠速运转。
  Release clutch/brake pedal, and reduce the oil throttle to make the engine run idly.
- 熄火拉线手柄向后拉，油泵停止供油，发动机立即熄火，随后将熄火拉线手柄推回至供油位置。
  Pull backward flameout bar by which oil pump stops supplying oil and engine flame goes out. Afterwards, push it back to its oil supplying position.
- 将起动开关钥匙旋至“OFF”位，关闭所有电源。
  Turn staring switch key to ”OFF” position, shut off all power supply

注意：

CAUTION:

✧ 停车后，在发动机没有熄火前，驾驶员不得离开拖拉机，以防拖拉机突然启动，发生意外危险；
The driver is not allowed to leave the tractor after it is stopped before the engine does not go out to prevent tractor from being started suddenly which may cause accident;

✧ 不得已在坡地停车时，应挂上档（上坡位置挂前进档，下坡位置挂倒档），一定要使用驻车制动并用三角塞块把后轮塞住以防拖拉机突然起动或自行动作失控，发生意外危险。
If it need to park on a sloping field, shift should be engaged (Shift Forward on uphill and Shift Backward on downhill) to prevent tractor from being started suddenly and getting out of control which may cause accident.

重要事项：

IMPORTANT:

✧ 冬季气温低于 0℃（摄氏度）时，未使用防冻液的拖拉机必须在发动机怠速状态下拧开水箱放水阀、发动机放水开关，放尽冷水，然后熄火停机，以免冷却水结冰将机体冻裂。
In winter, when the temperature is below 0℃, for the tractor without anti freezing solution, drain valve of water tank shall be opened during the run idle of the engine until the cooling water is discharged completely. Then switch off the motor to avoid damage caused by cooling water frozen.

✧ 由于水箱出水口位置比水泵进水口位置高，冬季放水后，为防止水箱出水管内存留的水冻裂水管，建议用户停机后将发动机放水开关打开，将熄火手柄置于熄火位置，用电瓶拖动发动机运转 2～3 次，每次 15s（秒），间隔（2～3）min（分钟），以便将水管内的水排除干净。
Because water outlet position in water tank is higher than water inlet position of water pump. after water discharge in winter, to prevent water pipe from being frozen by water reserved in outlet pipe of water tank, it's recommended that customer opens water discharge switch after stop, set flameout handle to flameout position, and run engine for 2 to 3 times dragged by accumulator, 15 seconds for every 2minutes for the purpose of drain water in water pipe emptily

4.11 轮距的调整

Adjustment of wheel track

4.11.1 前轮轮距的调整

Adjustment of front wheel track (non-stepless , adjustable wheel track model)

AGRISONTM 1300 651 830

https://truckmanualshub.com/

操作说明
Operator Instruction

- 沭河 SH90 系列轮式(后轮驱动型)拖拉机前轮距的调整：用千斤顶将拖拉机前轴抬起，拆下左、右主副套管锁紧螺栓 1，然后拆下锁紧螺栓 2 和油缸固定螺栓 3，调整副套管及油缸位置并相应调整横拉杆长度至所需位置，最后将拆卸的螺栓重新装好并紧固。调整前轮距有 4 种可供选用：1410mm、1510mm、1610mm、1710mm。

  Adjustment of front wheel track with the model of two-wheel drive: jack up the front axle of the tractor, dismantle the locking bolts 1 and 2 0f the left/right main/auxiliary sleeves, then removelocking bolt 4 and fixing bolt 3 0f the oil cylinder, adjust the auxiliary sleeve, position of the oil cylinder and the length of the tie rod correspondingly to the desired position. Finally, install all the removed bolts and tighten 4 selections are available when adjusting the front well track: 1410mm,1510m,1610mm,1710mm.

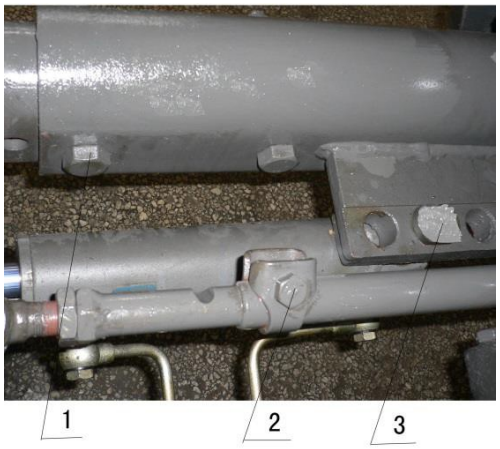

图 4-16 拖拉机前桥

Fig.4-16 Front axle of the tractor

- 沭河 SH804、SH854、SH904、SH954、SH1004(四轮驱动型)拖拉机前轮距的调整：通过改变辐板和轮辋的连接位置，可得到 1610mm、1710mm、1810mm、1950mm4 种轮距。

  Adjustment of front wheel track with the model of four-wheel drive: change the connecting position of the radials and rim, 4 kinds of wheel track could achieve: 1610mm, 1710mm, 1810mm, 1950mm.

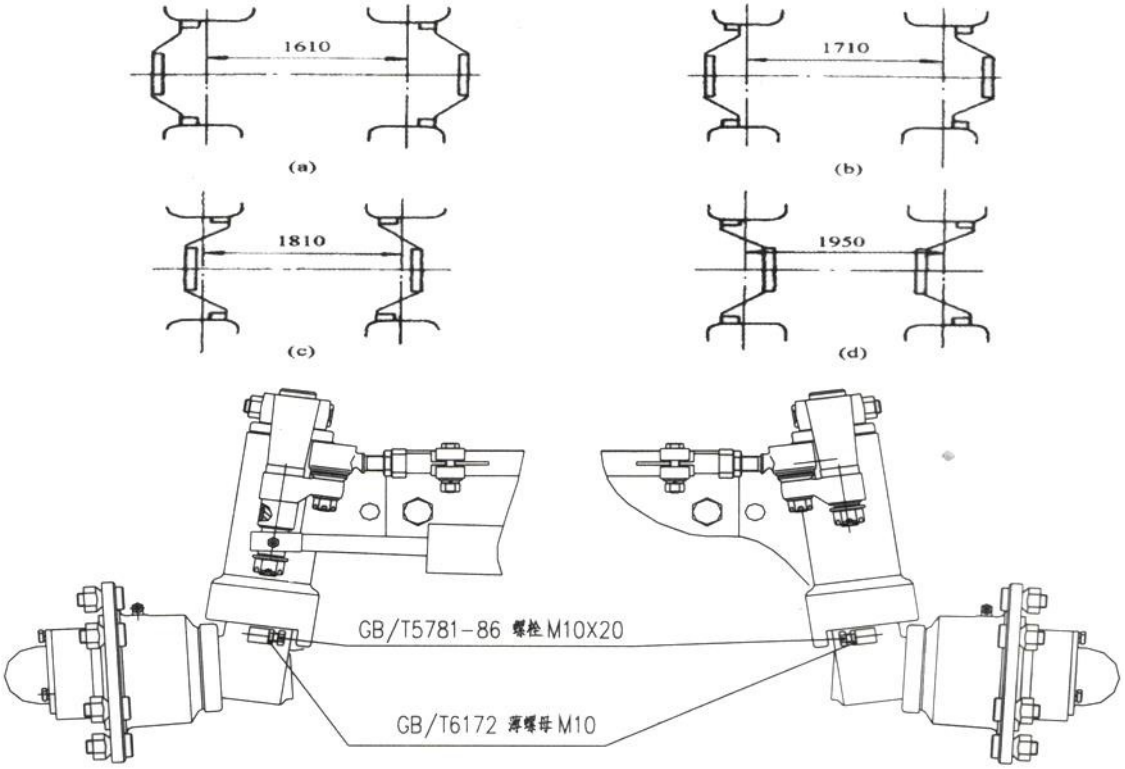

图 4-17 拖拉机前轮距的调整（单位:毫米)

Fig. 4-17Adjustment of the front wheel track of the tractor (unit: mm)

当前轮距调到最小一级(1610mm)时，前桥需同时进行下调整：

When the front wheel track is adjusted to the minimum level, the following adjustment shall be made

https://truckmanualshub.com/

simultaneously.

- 将前轮档泥板拆掉

  Remove the front fender;

- 如图所示，将前桥左转向节调节螺孔处各拧入 M10X20 螺栓，通过调整螺栓的旋入长度限定前轮的转向角度，使前轮转向摇摆到极限位置时，不与相邻零部件干涉，然后用薄螺母锁紧。

  ,As shown in Figure 4-17， screw M10x20 bolt into the adjusting screw holes of the left/right steering knuckles of the front axle; limit the steering angle of the front wheels by adjusting screw-in length of the bolt; the front wheels will not interfere with the other adjacent parts and components when it turns to the extreme positions, then lock with thin nut.

4.11.2 后轮距的调整

Adjustment of rear wheel track (non-stepless, adjustable wheel track model)

通过辐板、轮毂和轮辋的不同连接位置可获得如图所示的 5 种轮距 1608mm, 1692mm, 1796mm, 1892mm, 1996mm。

Change the connecting positions of the radials, wheel hub and rim, 5 kinds of wheel track could achieve as shown in Figure 2-33: 1608mm, 1692mm, 1796mm, 1892mm, 1996mm.

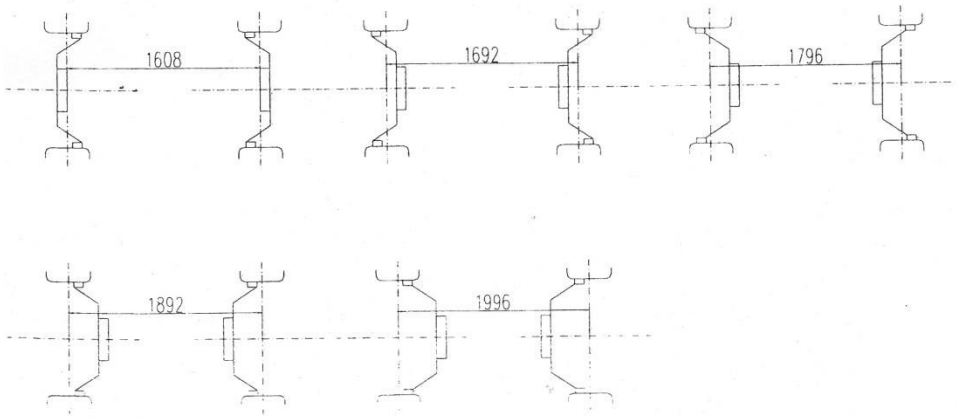

图 4-18 拖拉机后轮距的调整（单位:毫米)

Fig. 4-18Adjustment of the rear wheel track of the tractor (unit: mm)

注：后轮距由 1620 调整为其它轮距时，后配重则无法使用，请用户根据实际作业情况选择。

Notes: Rear counter weight cannot be used when the rear wheel track is changed from 1608 mm to the other one. The user may select the proper one according to the actual operating condition.

4.11.3 无级调节轮距机型的轮距调整

Wheel track adjustment for model of stepless adjustable wheel track

- 两轮驱动型：用千斤顶将拖拉机前轴抬起，拆下左、右主副套管锁紧螺栓 1，然后拆下锁紧螺栓 2 和油缸固定螺栓 3，调整副套管及油缸位置并相应调整横拉杆长度至所需位置，最后将拆卸的螺栓重新装好并紧固。不翻转辐板通过螺栓位置改变可以有 6 种可供选用：1595mm、1695mm、1795mm、1895mm、1995mm、2095mm。翻转辐板后改变螺栓固定位置又可以得到 6 种轮距 1651mm、1751nun、1851mm、1951mm、2051mm、2151mm。

  Two-wheel drive model: jack up the front axle of the tractor, dismantle the locking blots 1 and 2 of the left/right main/auxiliary sleeves, then remove locking bolt 4 and fixing bolt 3 of the oil cylinder, adjust the auxiliary sleeve, position of the oil cylinder and the length of the tie rod correspondingly to the desired position, finally, install all the removed bolts and tighten. 6 kinds of wheel track are available by changing the positions of the bolts while not inverting the radials:1595mm, 1695mm, 1795mm. 1895mm

AGRISON 651 830

https://truckmanualshub.com/

and 2095mm; 6 kinds of wheel track are available after inverting the radials and changing the fixing positions of the bolts 1651mm, 1751mm, 1851mm, 1951mm, 2051mm, 2151mm.

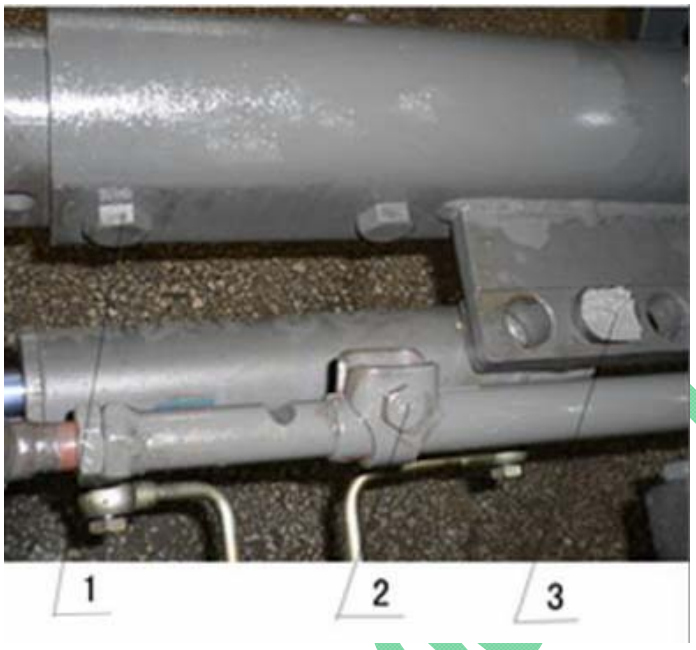

图 4-19 拖拉机前轮距的调整（单位:毫米)

Fig. 4-19Adjustment of the front wheel track of the tractor (unit: mm)

- 四轮驱动型：通过改变辐板和轮辋的连接位置，可得到 6 种轮距，即下图所示的 1610mm、1710mm、1750mm、1810mm、1850mm、1970mm 在每种轮距的辐板和轮辋的状态下在辐板和前桥之间加装驱动桥连接套，可使每种轮距增加 270mm 从而获得 1880mm、1980mm、2020mm、2080mm、2120mm、2240mm 六种前轮轮距。

  Four-wheel drive model: 6 kinds of wheel track are available by changing the connecting positions of the radials and rim, as shown in Figure 2-35:1610mm, 1710mm, 1750mm, 1810mm, 1850mm and 1970mm. Under the circumstance of each kind of wheel track, adding the joint sleeve of the drive axle between the radials and the front axle, that will make each kind of wheel track increase by 270mm to 1880mm, 1980mm, 2020mm, 2080mm, 2120mm and 2240mm.

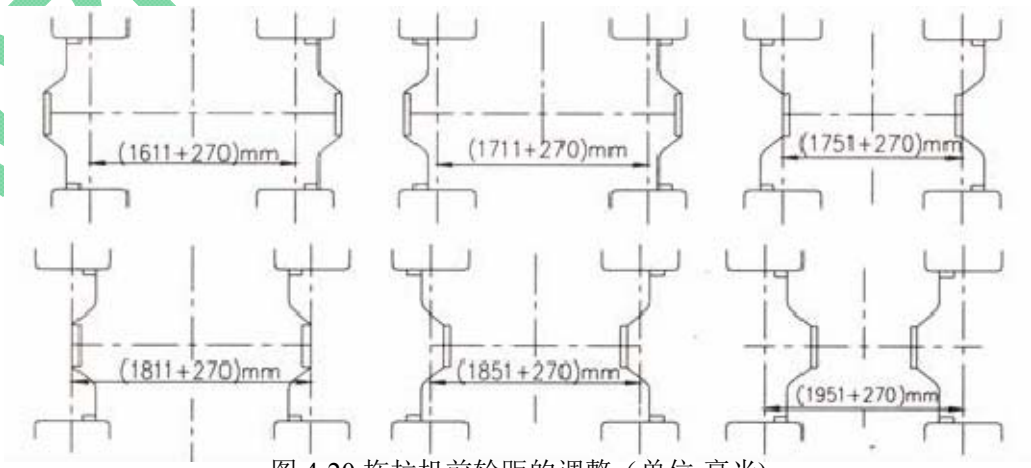

图 4-20 拖拉机前轮距的调整（单位:毫米)

Fig. 4-20Adjustment of the front wheel track of the tractor (unit: mm)

https://truckmanualshub.com/

4.11.3.2 后轮距的调整(13.6—38 轮胎)

Adjustment of rear wheel track (tyre13.6-38)

✧ 常用轮距为 1620mm，通过辐板、轮毂和轮辋的不同连接位置可获得如图所示的 7 种轮距位置，在每种位置通过调整轮毂和轮毂安装座可以得到 7 种轮距调节范围。

The normal wheel track is 1620mm, 7 kinds of wheel track as shown in Figure 2-36 are available by changing the positions of radials, wheel hub and rim. At each position, 7 kinds of adjusting ranges of the wheel track are available by adjusting the wheel hub and its mounting seat.

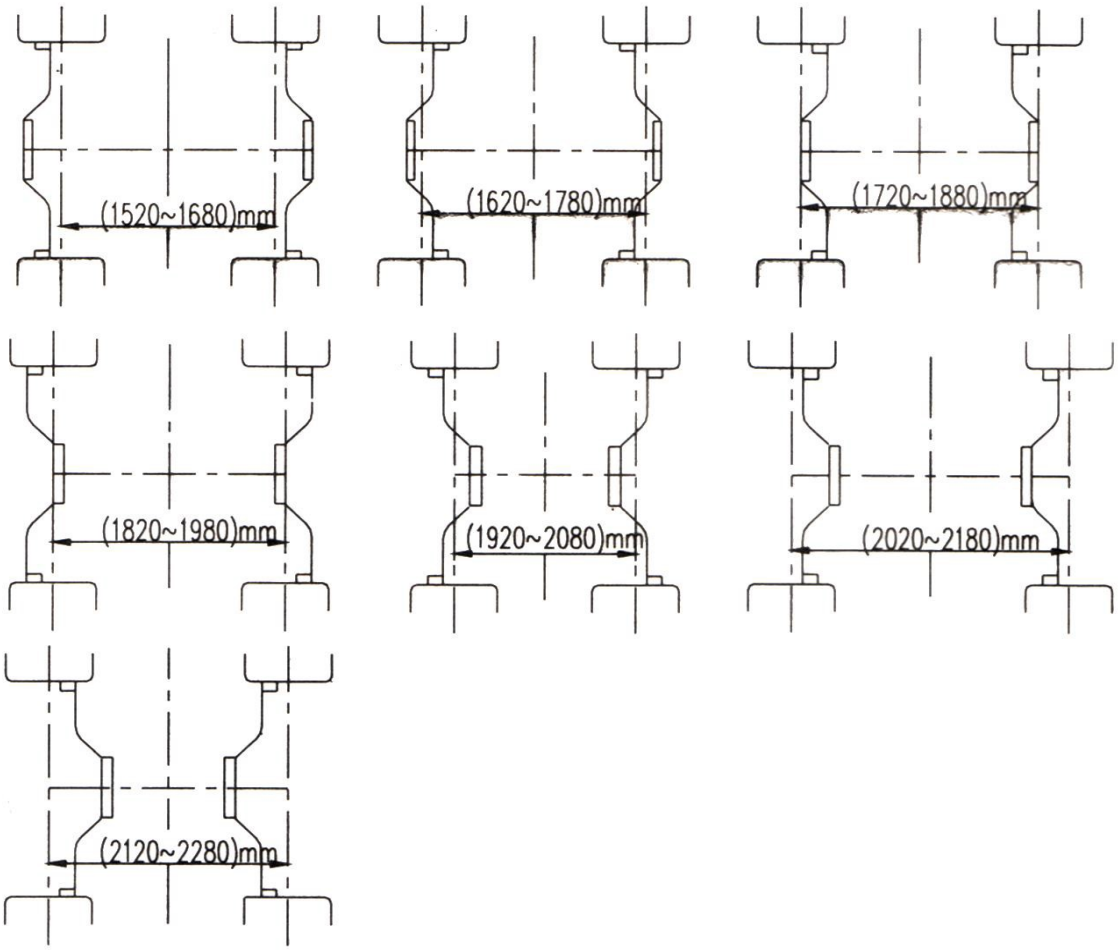

图 4-21 拖拉机后轮距的调整（单位:毫米)

Fig. 4-21Adjustment of the front wheel track of the tractor(tyre13.6-38) (unit: mm)

4.11.4 前轮前束的调整

Adjustment of the toe-in of the front wheel

操作说明
Operator Instruction

拖拉机停放在水平的地面上，使前轮处于直线行驶位置，如图所示，通过调整横拉杆 2 的长度使 A-B=前束值。注意前束检查调整完后，应将横拉杆两端锁紧螺母 1 紧固。

Place the tractor on the horizontal ground, make the front wheel in the position of straight running, as shown in Figure 2-38. Adjusting the length of the tie rod 2 to make A-B=value of toe-in. After checking and adjusting the toe-in, you shall tighten the nuts 1 on the ends of the tie rod.

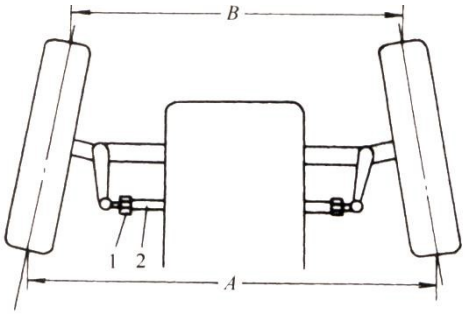

图 4-22 前轮前束的调整

Fig.4-22 Adjustment of the toe-in of the front wheel

4.12 轮胎的使用与拆装

How to use and assemble/disassemble tyre

4.12.1 轮胎的使用

Use Of tyre

轮胎是拖拉机的主要易损件，必须注意轮胎的使用和维护，以尽可能延长其使用寿命。

Tyre is the consumable of tractor. More attention shall be paid to usage and maintenance to prolong its service life.

轮胎都有规定的负荷值，超负荷会使轮胎过分变形，胎侧过度弯曲而易断裂，胎体织物以及缓冲层也易脱胶，织物层松散直至轮胎破裂，特别在路面不平或受障碍物冲击时，更容易破裂。

The tyre has specified loading value. If overloaded, the tyre is deformed excessively; the side is bent excessively, which is easy to break off. Adhesive for the woven fabric in the tyre and buffer layer is easy to come apart. The woven fabric layer is loose until the tyre is broken. Especially on the uneven or affected by the impact of obstructions, it is much easier to break.

轮胎充气压力必须符合规定，过高过低，都会影响使用寿命。气压过低易使轮胎过分变形，加速胎面磨损，甚至使内外胎迅速碾坏，气门嘴被切掉；同时增加行驶阻力。前轮胎气压过低，操纵费力；过高，会使胎体织物过分拉伸而断裂，并加速胎面磨损，机身振动增大。田间作业时轮胎气压宜适当低一些；长期公路运输则适当高些。轮胎气压应在常温下用气压表检查，以免作业后轮胎发热而测量不准。驾驶操作不当也会使轮胎早期磨损或损坏。在行车中应避免高速越过障碍物、猛刹车或急转弯。在碎石路面行车时应尽量避免轮胎滑转。

Inflation pressure of the tyre shall comply with the provisions. Both too hight or too low will influence its service life. It is apt to make the tyre distortion too much, hasten the tread wear, or even make the tubes and tyres crush rapidly and inflating valve cut off because of too low air pressure; at the same time, increase the running resistance. If the air pressure of front wheel tyre is too low, the operation will be arduous; if too high, the tyre fabric will be excessively drawn and broken. and the tyre wear will increase and the tractor vibration will increase. The tyre pressure for working in the field should be suitably low, and the tyre pressure for long-term transportation on road should be suitably high. Pressure in the tyre shall be measured by pressure gage in ambient temperature. The measurement after the operation is not proper because of tyre heating. Improper operation for driving can wear or damage the tyres early During running, the tractor should avoid going over obstacle at high speed, emergency stop or steering. When running on broken-stone road, the tyre slip should be avoided as little as possible.

使用中勿使轮胎沾上油、酸或碱等化学腐蚀品，尽量避免在烈日下曝晒，以免橡胶老化变质。前轮定位

AGRISON™ 1300 651 6

https://truckmanualshub.com/

及前束也须经常检查是否正确，以免轮胎偏磨。当轮胎花纹磨损不均时，可将左、右轮胎对换使用。

During using, the tyres should be prevented from adhering any oil, acid or alkaline chemical corrosive. Or explosion under burning sun as little as possible. in order to avoid rubber aging and degraded. Front wheel alignment and toe-in should be regularly checked for correctness, in order to avoid tyre partial worn. When the patterns on the tyre are worn nonuniformly, left and right tyres can be exchanged.

重要事项：

Important

✧ 四轮驱动型拖拉机前后轮胎充气压力应相同，以防轮胎异常磨损。

Inflation pressure for front and rear tyres of 4-wheel drive tractor shall be the same to prevent the tyres from being worn.

4.12.2 轮胎的拆装

Disassembly and assembly for tyre

轮胎的拆卸

How to dismantle tyre

拆装轮胎时要用专用工具，严禁用尖硬的工具(如改锥)和大锤乱敲乱打，以免刺破轮胎或损坏胎缘和轮圈。

When assembling and disassembling, special tools shall be used. Sharp tools are forbidden. For example, sledge hammer cannot be used to strike at random to avoid the tyre from being pierced or the edge and the rim from being damaged

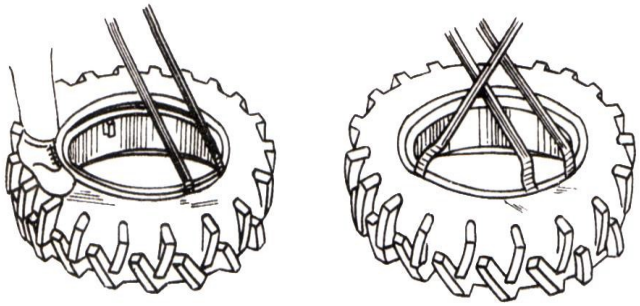

图 4-23 轮胎的拆卸

Fig. 4-23 Dismantling of the tyre

拆卸轮胎时，应先放气，并将外胎两边的胎缘压到轮圈的凹槽内，再用撬棍从气门嘴附近将一边的胎缘撬出轮圈外，然后用两根撬棍交替撬出整个胎缘。把内胎取出后，再用同样方法撬出另一边胎缘，取下外胎。

Before dismantling the tyre, you shall deflate it, press the tyre flange of the outer tyre into the slot of the rim, and use the crowbar to pry the tyre flange of one side out of the rim from the incinity of the inflating valve, then alternatively use two crowbars pry the whole tyre flange out. After taking off inner tube, prize open the wheel rim on the other side in the same way and take off outer tyre.

AGRISON™ 020 651 830

https://truckmanualshub.com/

操作说明
Operator Instruction

轮胎的安装

How to mount tyre

安装轮胎时，应先检查轮辋与轮胎是否配套，轮辋边不得有毛刺和严重变形，并清除轮辋上的铁锈，检查轮胎有无破损。安装时将各零件擦净后，在内外胎之间涂以薄层石粉。把轮辋放平，装上外胎，用脚踩或撬棍撬入轮辋中。放入内胎（可将外胎稍稍垫起），用铅丝把气门嘴固定在轮辋气门嘴孔中，防止滑脱。将外胎另一边用撬棍撬入轮辋中（在最后一段最费劲，可用手锤轻轻敲击撬棍，如图所示）。最后检查一下气门嘴位置是否歪斜，轮缘与轮辋是否贴合紧密。充气时再检查内胎是否撬破，边充气边用手锤敲打外胎，最好充到规定气压后，再放掉一半重新充气，以使内胎正常膨胀和消除折绉现象。轮胎向拖拉机上安装时，还须注意轮胎花纹的方向，否则会影响附着性能和耐磨性，而且积泥。

When mounting the tyre, the rim shall match with the tyre; the edge of the rim shall be no burr or Severe distortion; without rust on the rim; and with no damage on the tyre. After parts and cents have been cleaned when mounting, a thin layer of talcum powder between inner tube and outer tyre Place wheel rim in level, assemble its outer tyre, and prize into wheel rim by foot or stick.

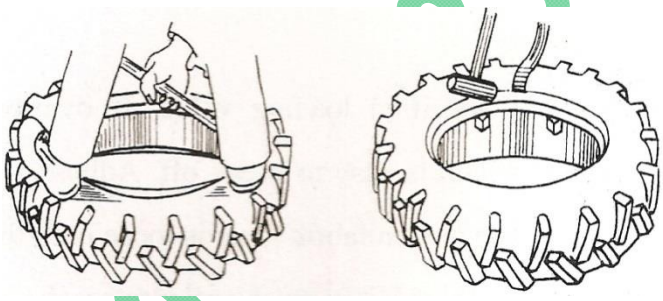

图 4-24 轮胎的组装

Fig. 4-24 tie mounting

Put into the tyre tube (outer tyre can be underlaid a little). Air valve is fastened in the hole of the tyre rim by lead wire to prevent it from slipping, Pry the other side of outer tyre into the rim by a crowbar. It is the most difficult to pry the last segment. It is possible to use a hand hammer to strike the crowbar lightly. Finally, check air valve position for OK and wheel rim and wheel for tight joint. When inflating, recheck if the tyre tube leaks or not. Inflating as well as striking the outer tyre manually shall be made at the same time. It is better to discharge half of the air after reaching the specified pressure and then refill so that tyre tube can expand normally and crimping can be eliminated. When installing the tyre, the direction of tyre pattern shall be correct.Otherwise, it will affect adhesive performance and wear resistance, and deposit the mud

警告：

WARNING:

✧ 严禁在充气状态下拆卸轮胎、轮毂与辐板、辐板与轮辋的连接螺栓，以防轮胎可能飞出伤人！

It is forbidden to remove the connection screws of the tyre, drive wheel hub and rim during the inflation. Otherwise, the wheel may fly out to cause personal injury.

AGRISOMM 1300 330

https://truckmanualshub.com/

4.13 配重的使用

How to use counter weight

4.13.1 后配重

Rear counter weight

拖拉机进行田间作业时，为了提高拖拉机作业性能，根据不同作业类型可选择不同的配重数量。铸铁配重每块质量 40kg，单边最多可装 6 片(240kg)。

When the tractor is performing field operation, in order to raise operating performance, the user could choose different ounter weight according to different operations. Use cast iron to make counter weight, each piece of cast iron is 40kg, 6 pieces at most for single side (240kg).

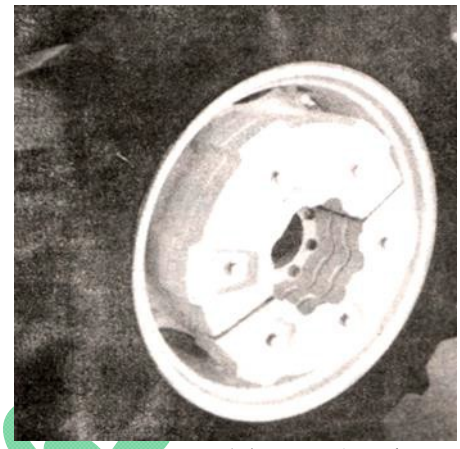

图 4-25 后配重

Figure 4-25 rear counterweight

- 大负荷犁耕作业区可选装单边 6 片配重：
  Ploughing operation area with heavy load may mount 6 pieces of cast iron for single side(optional);
- 主要以旋耕作业为主可选装单边 2 片配重或不装配重；
  Take the rotary tillage as the main operation, you could mount 2 pieces of cast iron for single side or without counter weight(optional);
- 犁耕作业区，可选装单边 4 片配重。
  For the common ploughing operation area, you could mount 4 pieces of cast iron for sigle side(optional).

警告：

WARNING:

✧ 将带后配重的后轮从拖拉机上拆下之前，应首先从轮胎上拆去后配重，以免发生失稳的危险。
Before removing the rear wheel with rear counterweight from the tractor, first remove the counterweight from the tyre to avoid unstable risk.

AGRISONTM 1300 6

https://truckmanualshub.com/

4.13.2 前配重

Front counter weight

为了调整拖拉机前后重量关系，有必要在拖拉机的前部安装前配重块。对于大负荷犁耕作业或配挂大型播种机械等，为保证拖拉机不翘头和行驶安全性能，必须配装前配重。拖拉机最多选装铸铁前配重为 11 块，重 270kg，其中前配重架质量为 57.6kg。

In order to adjust the relation between front and rear weight of the tractor, it is necessary to mount front counterweight in the front of the tractor. For the ploughing operation with heavy load or mounting with large sowing implements, you must mount enough front counter weight in order to ensure the tractor running safely and not with a raised head. Mass of the front counterweight frame is 57.6kg

The tractor can select maximum 11 pieces cast-iron front counterweights, each one is of 22kg weight.

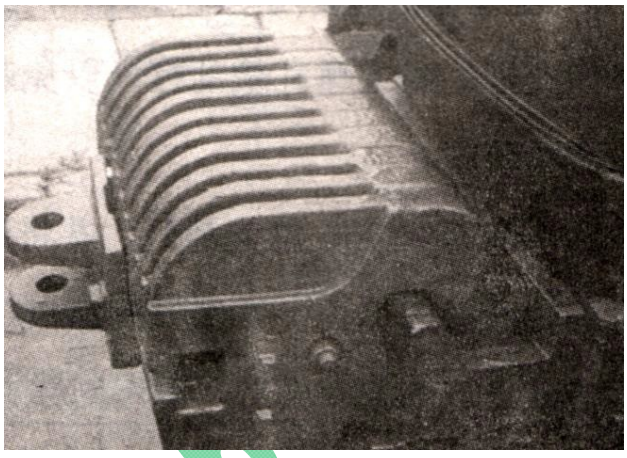

图 4-26 前配重

Fig. 4-26 Front counter weight

警告：

WARNING:

✧ 拖拉机后部配挂大型农具时，为了您的安全，必须配带足够重量的前配重,否则有翻车危险!

In order to keep your safety, you must mount enough counterweight to avoid rolling over when mounting large implements at the tail of the tractor.

4.14 驾驶座的调整

How to adjust driver’s seat

4.14.1 驾驶座的前后调节

Front and rear adjustment for driver's seat

松动驾驶座下部螺栓，根据驾驶员的身高前后调节座椅。调整好后，拧紧螺栓。

Unfasten the bolt 1 under the driver's seat, according to the operator's height to forward and backward. After adjustment, tighten thebolts

图 4-27 驾驶员座椅前后调整

Fig. 4-27forward/backward adjustment of the driver’s seat 1 bolt

AGRISON™ 1300

https://truckmanualshub.com/

4.14.2 驾驶座的刚度调节

Rigidity adjustment of driver's seat

根据驾驶员的身高、体重调整调节驾驶座手轮。

The driver's seat hand wheel 1 is adjusted according to the height and weight of the driver.

图 4-28 驾驶员座椅前刚度调整

Figure4-28 Rigidity adjustment of the driver's seat

注意：

CAUTION:

✧ 为了安全起见，座椅调整必须在拖拉机处于静止状态时进行。
For safety, seat can not be adjusted until tractor is at rest to avoid accident.

✧ 座椅刚度不能调得太软，在高低不平的路面上行驶时更要注意这一点。
Rigidity of seat is not adjusted too soft, pay special attention to this point when running on an uneven road to avoid accident.

4.15 拖拉机覆盖件

Tractor covers

主要包括：机罩、驾驶室、轮罩、仪表台、地板及附件等。

Mainly include: engine cover, cab, fender, instrumentation console .floor and accessories, etc.

1.机罩：

Engine cover:

拖拉机的发动机罩采用美观大方的流线型钣金结构。将机罩上的左右机罩边锁锁扣打开，然后抓住机罩下方轻轻向上提起，机罩即在左右两根气弹簧的推动下自动打开。向下拉压罩，机罩下降到一定角度时机罩锁自动关闭，然后将机罩的左右机罩边锁锁紧即可。

Engine cover of the tractor is made of streamlined sheet metal which is good and elegant in style. Pull the wire end on the left reinforced panel of the entyre tractor, unlock the cover lock then grab the cover knob, pulling it up slowly, the cover will automatically open with the help of 2 gas springs. Pull the cover knob down, the cover lock will automatically lock when the cover decrease to a certain angle.

图 4-29 机罩

Fig. 4-29 Engine cover

AGRISONTM 1300 651 85

https://truckmanualshub.com/

操作说明
Operator Instruction

2 仪表台

Instrumentation console :

拖拉机的电器控制开关和组合仪表全部安装在仪表台上，仪表台主要起控制开关支架和装饰密封作用。

All the control switches of the electric devices and combination instruments are all installed on the instrumentation console. The instrumentation console mainly plays the role of con trolling switch bracket and decorational sealing

图 4-30 仪表台

Fig. 4-30instrumentation console

3 驾驶室(选装)

Cab(optional):

拖拉机的驾驶室是由异型管材焊接成框架，并镶以大面积的空间曲面玻璃组成。

The cab frame is welded by tubular profiled bar, and glazed with spatial curved glass with large area.

4 驾驶室风扇

Fan in the cab

如图所示，驾驶室装有内饰，带有风扇装置。

As show in Figure 4-31, the cab is mounted with interior decorations and fan.

图 4-31 驾驶室风扇

Fig.4-31 Fan in the cab

AGRISONTM 1300 651

https://truckmanualshub.com/

5 驾驶室内饰

The Cab interior

驾驶室内饰包括挡泥板内饰、地板垫、仪表台、内顶衬等，如图所示。

Interior decoration of the cab includes interior decoration of the Fender, floor mat, instrumentation console and roof lining, etc, asshow in Figure 4-32.

图 4-32 驾驶室内饰

Fig. 4-32 Interior decoration of the cab

6 车门

Door

车门采用异型材门框，内镶整块曲面玻璃，与整个流线型驾驶室融为一体，既衬托出宽敞舒适的驾驶空间，又使整车美观性大大提高。车门开启时(见图)，顺时针转动车门钥匙 90°，取下钥匙后，用手抓住车门把手，大拇指向里推压件 1，车门锁即被打开，同时向外拉动把手，车门即打开。关闭车门时，反向操作即可将车门锁上。

The doorframe adopts profiled bar, inside is glazed with mono block curved glass, which blend well with the steamlined cab. On one hand, it accentuates the capacious and comfortable driving space; on the other hand, it greatly improves the beauty of the entire tractor. When the door opens, rotate 90 degrees of the door key clockwise.

After removing the key, grab the doorknob use the thumb to push the compression element 1, the door lock is unlocked; at the same time, pull the knob outward, the door is opened. When closing the door, lock the door in reverse order.

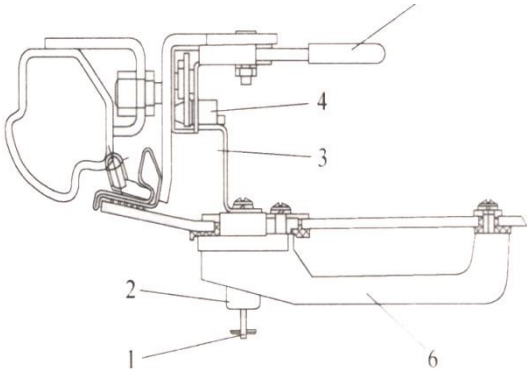

图 4-33 驾驶室门锁

Figure 4-33 Door lock of the cab

1.钥匙　2.门锁　3.推杆

4.锁定板 5.开锁手柄 6.门把手

1. door key; 2.door lock; 3. push rod;

4. locking plate; 5.unlocking handle;

6. door handle

AGRISONTM 1300 651 8

https://truckmanualshub.com/

操作说明
Operator Instruction

7 左、右侧窗

Left/right Window

Adopt all-glass construction. When opening, lift the locking handle and push it outward simultaneously till it is seized, lift the locking handle slightly, then, the side window is open and its position is limited. The maximum the side window could open is the effective length of the locking handle.

图 4-34 左、右侧窗锁止把手

Fig. 4-34 Left/right window 1, locking handle

8 后窗

Rear Window

拖拉机后窗采用向上半自动开启式，开启状态分普通状态和最大状态两种。

The rear window adopts upper semi- automatic opening; the opening status is divided into normal status and maximum status.

- 普通状态：旋转手柄(1)，当手柄前部突起滑出卡槽后，向外推动手柄(1)，直到手柄后部凸起到达槽位置时，再次旋转手柄 1 使后部凸起滑入卡槽即可使后窗打开并保持一定角度。关闭时，反向操作即可。

  Normal status: rotate handle 1, when front part of handle protrudes to slide out of the slot, push handle 1 until the bulge on the rear of handle reaches the slot, handle 1 shall be rotated again to make rear bulge slide into the slot which can make rear window open and kept at a certain angle.When closing, operate in reverse order

- 最大状态：放置手柄(1)，当手柄前部凸起滑出卡柄后，向外推动手柄(1)，直到克服气弹簧拉力后，气弹簧即由“拉”的状态转变为向外“推”的状态，后窗自动打开，到关闭时，向里拉动手柄，克服气弹簧的“推”力后，气弹簧即由向外“推”的状态转变为向里“拉”的状态，后窗将自动回到关闭状态，再将手柄旋转，使前部凸起滑入卡槽处于锁死状态即可。

  Maximus status: place the handle, when the bulge of the front part slides out of the seized handle, push the handle outward till it overcomes the tension of the gas springs, the gas springs will be turned into the status of “push" from the status of "pull", the rear window will automatically open; when closing, operate in reverse order .

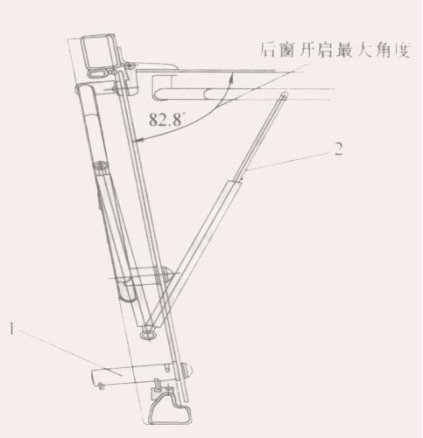

图 4-35 后窗

Fig.4-35 Rear Window

AGRICONTM 1300 651

https://truckmanualshub.com/

9 顶窗

Roof window

顶窗为玻璃钢结构，开启时，握住手把，同时用拇指按动顶窗锁按头，锁将自动弹开。轻轻向外推顶窗，在左右两根气弹簧的作用下，顶窗将自动打开。关闭时反向操作即可。

The roof window adopts fiberglass reinforced plastic construction. When opening, hold the handle, at the same time, press the compression head of the roof window lock by thumb, the lock will spring open automatically. Push the roof window outward gently, with the help of 2 gas springs, the roof window will open automatically. When closing, operate in reverse order

图 4-36 顶窗

Figure 4-36 Roof window

4.16 拖拉机工作装置的使用

How to use operating device of tractor

沭河 SH90 系列拖拉机主要有以下工作装置：(部分选装)

This series of tractors have working devices as follows: (including optional parts)

- 液压提升器：配带犁耕作业时应优先使用力位综合调节，以保证作业效果；
  Hydraulic lifter: to ensure operational effect, a comprehensive draft/position adjustment should be selected firstly when tilling operation with, a plough is carrying out.
- 简单液压输出：主要用于液压挂车等；
  Simple hydraulic output: mainly used in hydraulic trailer etc.
- 液压输出装置：可用于液压翻转犁，液压耙等；
  Hydraulic output device: can be used in hydraulic overturn plough and hydraulic harrow etc.
- 悬挂机构：主要用于悬挂农机具的挂接等；
  Hitch mechanism: mainly used to mount hitch farm machine.
- 动力输出装置：主要用于需要动力驱动的农机具等；
  Power output device Mainly used for farm machine driven by power .
- 摆式牵引装置：主要用于需要重耙、割草机、牵引式播种机、单轴拖车等；
  Swing traction device: mainly used in harrow, lawn mower or traction type sower etc.
- 拖挂架：主要用于双轴挂车等。
  Rack: mainly used in single axle trailer and double-axle trailer etc.

4.16.1 液压提升器的操纵

Operation on hydraulic lifter

4.16.1.1 半分置式液压提升器

Type of control for semi—separate hydraulic lifter

AGRISOM 1300 651

操作说明
Operator Instruction

半分置式的液压提升器可实现位控制、力位综合控制和浮动控制等控制功能。液压提升器工作时，操纵手柄用来升降农具，控制耕深。

Semi-separate hydraulic lifter possesses the functions of positon control, comprehensive draft/position control and floating control. When hydraulic lifter working, the operation handle can lift the farm machine and control the working depth.

- 位控制：当拖拉机配带农具进行旋耕、割草、收割等作业时上拉杆受拉力，力控制弹簧不起作用，这时应采用位控制。在位控制范围内，农具的升降移动量与操纵手柄的前后移动量成正比。操纵手柄向前(下降方向)移动愈多，农具下降愈多；反之，操纵手柄向后(提升方向)移动愈多，农具提升愈多。

  Position control: when tractor provided with farm machine is making a rotary tilling, mowing or harvesting operation, upper pull bar is forced, draft control spring does not function, therefore, it's necessary to use position control at this time. Within the control range, the lifting/lowering movement of the implements is proportional to the forward/backward movement of the control handle.
  The more control handle moves forwards(the more lowering side moves); the more farm machine lowers On the contrary, the more control handle moves backwards (the more lifting side moves), the higher farm machine lifts

- 力位综合控制：力位综合控制就是力控制和位控制同时对农具进行耕深控制，比较适于拖拉机在土壤比阻变化较大的土壤上耕作。防止耕作中遇到土壤比阻突然减小，农具下降过猛而把深层生土翻到地表。耕作时，由操纵手柄控制犁耕深度，在综合控制范围内，操纵手柄愈向前(下降方向)移，耕深愈深，反之，耕深愈浅。当调节到所要求的耕深后，松开操纵板上的蝶形螺母，将限位块移到操纵手柄位置，然后将蝶形螺母拧紧。这样可保证每次降落农具后，操纵手柄与限位块相碰，使耕深基本保持不变。

  Comprehensive draft/position control: comprehensive draft/position control means that both draft control and position control are synchronously control tilling depth of farm machine, which is more suitable to work on the changed soil specific resistance land. Prevent the soil specific resistance from reducing suddenly during ploughing, and do not turn the deep raw soil over to the surface when the farm implements falls too hard. When tilling, the tilling depth is controlled by control handle. Within the range of integrated control, the more the control handle go forward, the deeper the tilling is. On the contrary, the tilling is much shallower. When required depth is adjusted, release the butterfly nut on the control panel. Move the limit block to the control handle position and then tighten butterfly nut. Thus, it can ensure the tilling depth nearly no changing during each time of lowering the farm machine when the operation handle contact the stopper.

- 浮动控制：当使用带限深轮的农具进行作业时，应采用浮动控制。将操纵手柄放在浮动位置，这时液压系统处于浮动状态，提升臂可以自由摆动。农具的耕深由限深轮控制，机组沿地面仿形耕作。

  Floating control: when operation is carried out by means of farm machine with a depth wheel, floating control should be used. Control handle is put in floating position. Now the hydraulic system is in floating sate. Lifting arm can swing freely. Tilling depth of farm machine is controlled by limit depth wheel. The machine set makes copy tillage along the ground.

AGRISOM™ 139 651 830

https://truckmanualshub.com/

4.16.1.2 分置式液压提升器

Application of separate hydraulic lifter

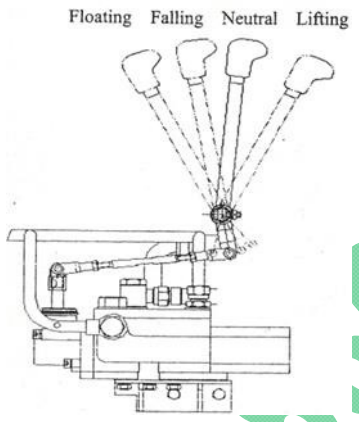

图 4-37 分置式液压提升器使用

Fig. 4-37 Application of separate hydraulic lifter

- 操纵手柄由“中立”位置向下扳到最低位置时(明显感到操纵手柄被定位)，悬挂机构开始提升，当提升到终了位置时，操纵手柄自动复位(即回到中立位置)；

  Move the control handle from “Neutral" to the extreme forward (feel the control handle is positioned significantly);the hitch begins to lift; when lifting to the ultimate position, the control handle will automatically reset(i.e.return to ‘‘Neutral");

- 从中立位置向后移动手柄（感觉手柄到位了），与悬挂系统开始下降，此时松开手柄，它会立刻返回到中位，悬挂系统停止下降

  Move the control handle backward from “Neutral"(at this moment, the control handle is not at the extreme backward position), the hitch begins to fall, at this moment, once let go of the control handle, it will immediately bounce back to "Neutral", stops falling;

- 操纵手柄由“中立”位置板到最上位置(明显感到操纵手柄被定位)时，则悬挂机构下降到终了位置后处于“浮动”状态。

  Control handle turns to the lowest position from the “neutral" position (it feels clearly that control handle is locked), hitch mechanism lowers to final position and then locates in “floating"' state.

4.16.1.3 农具下降速度的控制

Falling speed control of the farm implements(semi--separate hydraulic lifter)

为了调节农具的下降速度以及将农具锁定在所需的位置上，设有下降速度控制手轮“A”。当逆时针转动手轮，农具的下降速度变慢；顺时针方向转动手轮，农具下降速度增快。在使用中，应根据农具的质量大小和地面的软硬，选择适当的农具下降速度，以免下降速度过快而损坏农具。

In order to adjust the falling speed of the farm implements and lock them at a desired position, there is a hand wheel “A" for controlling the falling speed(see Figure 4-37). When turn the hand wheel anticlockwise, the falling speed of the farm implements slows; while turn the hand wheel clockwise, the falling speed of the farm implements quickens. During application, to avoid damaging the farm implements due to too quickly falling speed, you may choose proper falling speed of the farm implements according to the quality of the farm implements and soft/hard ground

当拖拉机带农具长距离转移时，应将农具提升到最高位置，然后将下降速度控制手轮旋出使农具不能下降，这时农具就被锁定在最高位置，起到液压锁的作用，以达到拖拉机机组安全转移的目的。

When the tractor moves long with farm implements, you should lift the farm implements to the highest position, then back out the hand wheel for controlling the falling speed anticlockwise to make the farm implements not fall, at this moment, the farm implements are locked on the highest position and plays a role of hydraulic lock to realize the purpose of safe transfer of the unit assembly of the tractor.

重要事项：

IMPORTANT:

✧ 使用需要带动力输出的机具时，为了避免机具提升过高，造成动力输出轴与机具的传动轴因夹角过大而损坏，要求机具提离地面的高度能保证拖拉机在地头转弯时不受影响的提升高度为准。

When using farm machine with power output, because farm machine is lifted too high, which causes

AGRISON™ 1300 651 650

https://truckmanualshub.com/

damage arising from too large anle between power output shaft and drive shaft of farm machine, it is required that lifting height will not affect turns at the end of field.

4.16.2 简单液压输出（半分置式液压提升器）

Simple hydraulic output (semi separate hydraulic lifter)

需要液压输出时，应按下述步骤进行：

When it is necessary to make hydraulic output, you shall perform as follows:

- 将操纵手柄推到下降位置，使悬挂杆件放到最低位置。
  Push operating handle to its lowering position by which places hitch bar to its lowest position.
- 下降速度控制手轮“A”顺时针方向拧死，关闭通向提升器油缸油路。
  Tighten up the hand wheel “A” for controlling the falling speed clockwise to close the oil pipe lead to the oil cylinder of the lifter.
- 将缸头上液压输出空心螺栓“B”拧下，拆掉套筒，接上高压油管，将操纵手柄置于“提升”位置，压力油即可进入液压输出装置进行液压输出。若让液压输出装置回油，只需将操纵手柄置于下降位置即可。
  Unscrew the hollow bolt ”B” of the hydraulic output on the cylinder head, remove the sleeve, connect the oil pipe with high pressure, place the control handle at "Lifting”, the pressure oil could flow into the hydraulic output device to make hydraulic output. You may place the control handleat "Falling" to make hydraulic output device return oil.

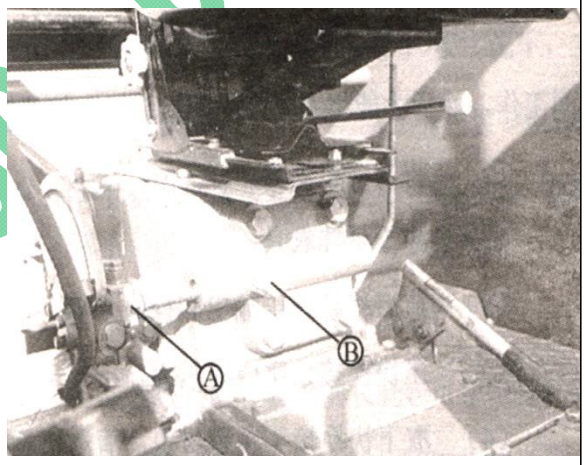

图 4-38 简单液压输出
Figure 4-38 Simple hydraulic output

注：

Notes:

提升器和液压输出不能同时使用，当不需要液压输出时，应将液压输出管路拆下，将套筒及空心螺栓重新拧到缸头上，然后逆时针方向转动下降速度控制手轮，打开通向提升器油缸的油路，提升器即可恢复工作。

The lifter and simple hydraulic output cannot be used simultaneously You shall dismantle the hydraulic output pipe when the simple hydraulic output is not necessary; screw the sleeve and hollow bolt into the cylinder head, then turn the hand wheel for controlling the falling speed anticlockwise to open the oil pipe lead to the oil cylinder of the lifter, and the lifter returns to service.

4.16.3 液压输出装置的操纵和使用

How to operate and use hydraulic output device

AGRISON™ 130 651 830

操作说明
Operator Instruction

根据需要选装1片(DFl50F)或2片(DF250F)滑阀式液压输出多路阀，两阀片分别由C、D两根操纵手柄操纵，用以控制机具上的两个双作用油缸。用4个M10螺栓将多路阀总成固定在多路阀固定板上，此固定板与后桥半轴壳体连接，多路阀的进油口与回油口分别与齿轮泵和提升器接通，出油口与分配器进油口接通。每片控制阀有2个M22×1.5的快换接头阴接头Al、B1和A2、B2(如图所示)，不用时，用密封盖封好。使用时将备用的阳接头(置于备件箱)与快换接头的阴接头联接好，再与液压农机具的油缸进、出油口接通。操纵手柄“C”控制第一路液压输出A1、B1，操纵手柄“D”控制第二路液压输出A2、B2。若接单作用缸，油缸的油管要与第一路输出口 Al或第二路输出口A2相连接。上、下操纵手柄“C”、“D”，单作用或双作用油缸便会完成相应的动作。两片液压输出阀均可以通过拧进或拧出多路阀上的单双作用转换螺钉“E”来实现单作用液压输出或双作用液压输出(如图所示)。把螺钉“E”逆时针拧松通出，可以实现单作用的液压输出。反之，将螺钉“E”完全拧入可实现双作用的液压输出。

图 4-39 多路阀总成

Fig.4-39Multiple unit valve

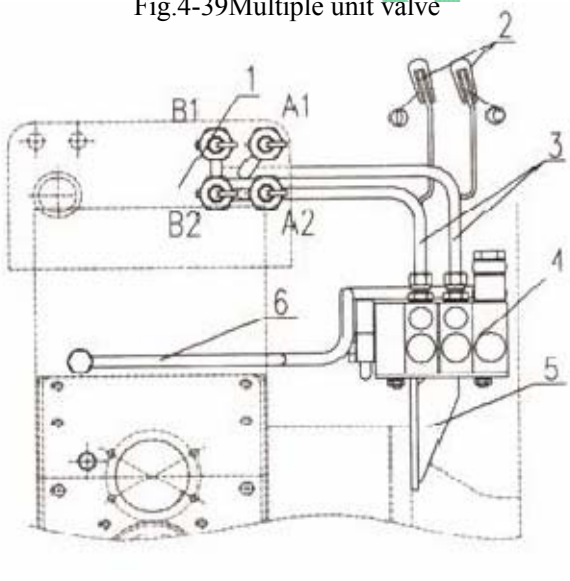

图 4-40 液压输出装置的操纵和使用

Fig.4-40 How to operate and use hydraulic output device

1.快换接头 2.操纵手柄 3.多路阀输油管 4.多路阀总成 5.多路阀固定板 6.回油管总成

1 .quick coupler; 2.coptrol handle; 3. oil delivery pipe of the multiple unit valve; 4.multiplc unit valve assembly; 5.fixing board of the multiple unit valve ;6.return oil pipe assembly

1 piece of (DF1 50F) or 2 pieces (DF250F) of hydraulic output multiple unit valve with slide valve type may be optional. Two pieces of valve plate are controlled by C/D control handle respectively to control two double-acting cylinders on the control implements. Fix the multiple unit valve assembly on the fixing board (which is connected with half-axle housing of the rear axle) of the multiple unit valveby 4 bolts(M10),the inlet/return opening connects with the gear pump/lifter respectively, and the outlet connects with the inlet of the distributor.

Each piece of control valve is with 2 quick joints M22x 1.5,negative joints A1, B1 and A2, B2 (as shown if Figure 2-58, use the sealing cover to seal it when it is not used. spare male connector is connected with female connector of quick change coupler, and then connected with oil inlet and outlet of oil tank on the farm machine Control handle "A” controls 1St circuit hydraulic output AB2 while control handle “B" controls 2nd hydraulic output AB1. if connecting with single-acting cylinder, oil pipe of the cylinder shall connect with outlet A1 of the first pipe or outlet A2 0f the second pipe. Move up/down the control handle “C"/”D", the single-acting or double-acting oil cylinder will finish the corresponding action. Two hydraulic output valves can screw in or screw out single/double-action exchange screw ”E” on the multi-way valve to achieve single-action hydraulic output or double-action hydraulic output. See diagram 2-60 Unscrew and exit bolt E counter clockwise, single-function hydraulic output can be perform. On the contrary, the screw “E" is fully screwed in to achieve double-action hydraulic output.

AGRISON™

https://truckmanualshub.com/

操作说明
Operator Instruction

重要事项：

IMPORTANT:

✧ 不用快换接头时，座孔一定要用备用防尘盖盖好。

When the quick joint is not used, its socket hole shall be covered with dust coverto avoid dust;
提升器和液压输出阀不能同时使用。

Lifter and hydraulic output valve can not be used simultaneously.

✧ 液压输出阀操纵完成后，操纵手柄必须回到中立位置，否则将引起液压系统过热。

After hydraulically output device is operated over, its operating handle should be set to neutral position, otherwise, which may cause hydraulic system overheat

4.16.4 悬挂机构的使用

Application of hitch mechanism

沭河 SH90 系列拖拉机采用后置三点悬挂装置与农具挂接，下拉杆最大提升行程：出厂状态：635mm(提升杆与“B”孔连接)

Adopts 3-point rear mounted device to couple to the farm implements. Max. lifting travel of the lower link: 635mm (lifting rod is connected with the hole “B") .

4.16.4.1 下拉杆连接

Connection of the lower link

下拉杆与提升杆连接孔是前孔“B”，下拉杆与限位杆连接孔是后孔“A”。

There are 2 connecting holes in the lower link and lifting rod: front hole "C" and central hole ”B". When operate normally, usually connect the central hole “B"; while it is necessary to transfer at a long distance with farm implements, shall connect the front hole “C”. The connecting hole of the lower link and positon-limit rod is the rear hole "A".

图 4-41 悬挂装置

Fig.4-41 hitch mechanism

4.16.4.2 提升杆的连接

Lifting bar connection

一般情况下，提升杆的长度应调整在中间长度。左、右提升杆的调整均可通过转动中间提升杆导管焊合来进行。顺时针转动，提升杆伸长：反之则缩短。调整提升杆主要是对农具的横向水平位置进行调整。

Usually the lifter length should be adjusted to the medium length. You could adju.st left/right lifting rod by turning the pipe solder of the central lifting rod. The lifting rod will lengthen if turn clockwise; otherwise, shorten. Adjust the lifting rod is mainly to adjust the transverse and horizontal position of the farm implements.

4.2.16.4.3 上拉杆连接

Connection of upper link

上拉杆与支座的连接有 3 个孔供选用，可根据农具的立柱高度选用合适的位置。一般情况下，当立柱高度小于或等于 510mm 时，选用下孔，当立柱高度在 5lOmm-6lOmm 之间时选用中间孔，当立柱高度大于 161mm 时选用上孔。也可根据实际情况适当调整。调整上拉杆长度主要用来调节农具的纵向水平位置，调整前后犁耕深的一致性。

3 holes are optional between the connection of the upper link and the base. Choose the proper position according the height of the upright post of the farm implements. In general conditions, choose the lower hole if

AGRISOM™ 138 651 830

操作说明
Operator Instruction

the height of the upright post is less than 510mm; choose the central hole if the height of the upright post is between 510mm and 610mm: choose the upper hole if the height of the upright post is more than 610mm. Can be suitably adjusted according to the real condition. Adjust the length of the upper link is mainly to adjust the longitudinal position of the farm implements and consistency of the tilling depth of the front/rear plow.

4.16.4.4 限位杆调整

Adjustment of the position-limit rod

限位杆主要是限制农具(即下拉杆)的横向摆动量。将锁销插入限位套管的长孔，可使限位杆有一定的移动量；当锁销插入限位套管的前面圆孔，可使限位杆固定不动。旋转带螺纹的限位套管可调整限位杆的长度。后面的圆孔是调整限位杆长度时，放置锁销的插孔。

根据农具的作业形式来选择限位杆移动量。配带犁、耙等作业时限位杆应有一定的移动量， 使拖拉机有良好的操作性能。而配带旋耕机、割草机等作业时应使限位杆固定不动。

Position-limit rod is mainly to limit the transvers oscillating quantity of the farm implements (i.e. lower link). Insert the lock pin into the long hole of the position-limit sleeve, the position-limit rod have a certain amount of movement: while insert the lock pin into the round hole in the front of the position-limit sleeve, the position-limit rod is fixed. Screw the limit sleeve with thread to adjust the length of limit rod. The rear round hole is the place to put the lock pin when adjusting the length of the position-limit rod.

The travel of limit rod is selected according to the operating form of farm machine. In order to make the tractor possess good operating function, a certain amount of movement shall be made when it is with plow and harrow to work. Operating with a rotary tilling machine and a mower, limit rod shall be fixed.

重要事项：

IMPORTANT:

✧ 拖拉机带悬挂农具长途转移时，将上拉杆调到最短，并调整限位杆防止农具左右摆动，同时必须将上拉杆及限位杆上的锁紧螺母拧紧。

When the tractor will move together with the hitch farm machine for long distance, the height should be adjusted to the minimum by upper track rod and the machinery should be fixed by adjusting limit rod to avoid left/right swing, at the Same time, the nut for upper track rod and limit rod should also be fastened, so that to prevent the farm machine damaged owing to extra-large swing

✧ 拖拉机在地头转弯时，为避免机器损坏，必须先提起农具方可转弯，待进入直线行驶位置方可降落农具。

When the tractor is steering in the end of the land, the farm machine must be lifted up before turning, and lowered when running in a straight line, so that to avoid the machine burnt.

AGRISONM 1300 651 830

https://truckmanualshub.com/

操作说明
Operator Instruction

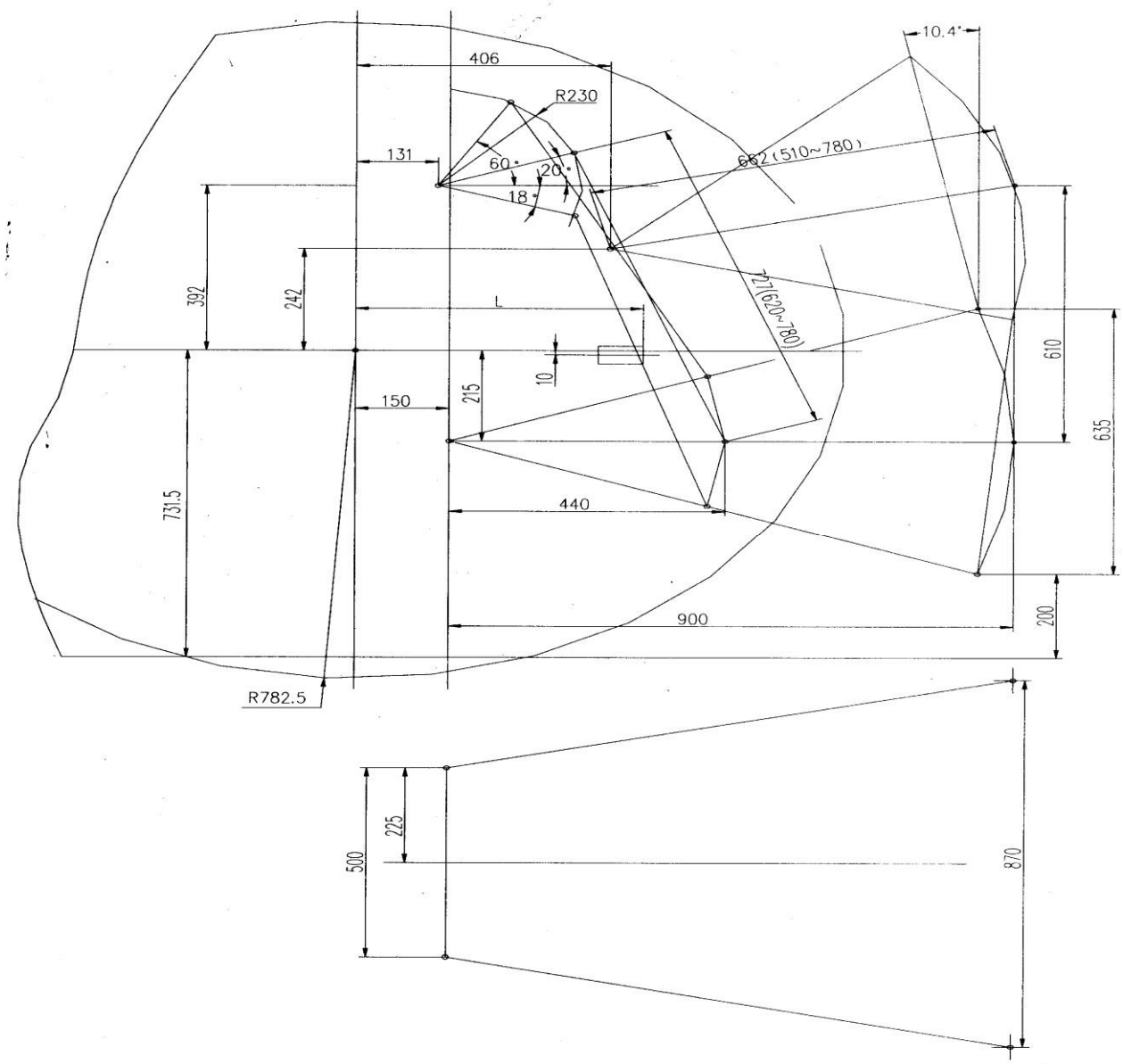

图 4-42 半分置式液压提升器悬挂机构运动图

Fig. 4-42 Hitch mechanism movement diagram for the model with a semi-separate lifter

https://truckmanualshub.com/

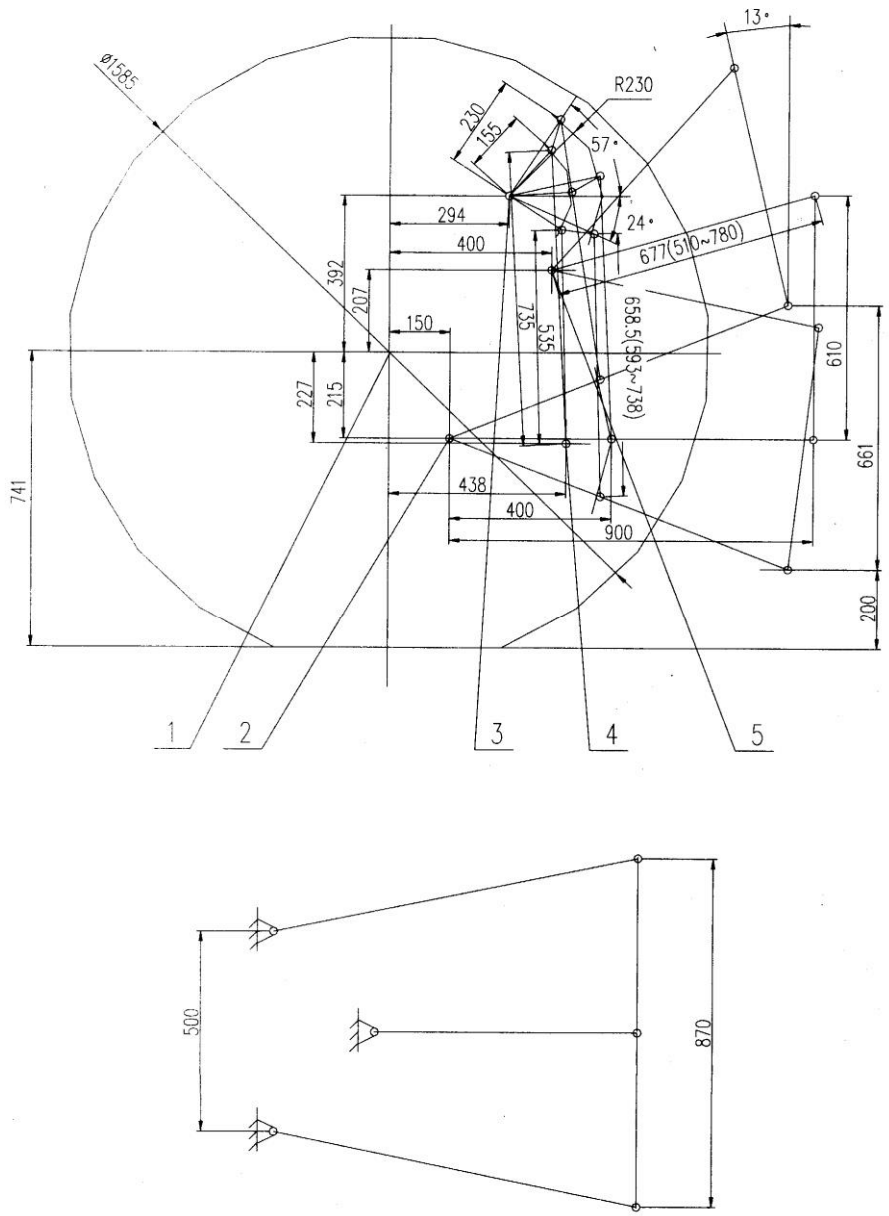

图 4-43 分置式液压提升器悬挂机构运动图

Fig.4-43 Hitch mechanism movement diagram for the model with a separate lifter

1.驱动轮中心 2.下铰接点 3.提升轴连接点

4.下油缸支撑点 5.上铰接点

1. center of the driving gear; 2.lower link point; 3.connecting point of the lifting shaft;

4.supporting point of the oil cylinder; 5.upper link point

4.16.5 动力输出装置的操纵

Power output shaft controlling

沭河 SH90 系列拖拉机的动力输出轴为独立式。它可以进行移动作业，也可进行固定作业，动力输出轴的工作是完全独立的。当踩下主离合器踏板，拖拉机停止前进，而动力输出轴可以继续工作。若踩下副离合器踏板，动力输出轴停止工作，而拖拉机可以继续前进。当拖拉机的配套农具需要动力输出时，应按下述步骤操作：

The power output of SH series tractor is independent. It may perform both movable operation and immovable

https://truckmanualshub.com/

operation. The operation of the power take-off shaft is totally independent. When stepping on clutch pedal, the tractor stops, but power output shaft can go on working. If take up the auxiliary clutch handle, the output shaft will stop working, but the tractor will continuously run forward. When the farm machine attached to the tractor requires power output, the procedures as follows:

- 将农具与悬挂机构联接：
  Connect the farm implements with the mounting mechanism;
- 踩下副离合器踏板，将动力输出操纵手柄置于中间空档位置；
  Pull up the auxiliary clutch control handle, place the power take-off shaft at ”Neutral”
- 先把动力输出轴套管拧下，然后将农具上万向节与动力输出轴联接；
  Remove the power take-off shaft sleeve, then connec.t the uniersal joint on the farm implements with the power take-off shaft;
- 将动力输出防护罩装好；
  Install the power take-off cover;
- 将提升器操纵手柄置于“提升”位置，提升农具；
  Set operating handle of lifter to "UP" position to lift up farm machine.
- 再次踩下副离合器踏板，根据需要选择动力输出轴转速。将动力输出操纵手柄下压，可得到高档 1000r／min(或 850r／min)；若上提，则得到低档 760r／min(或 540r／min)。
  Pull up the auxiliary clutch control handle again, choose the rotational speed of the power take-off shaft as desired. Pull up the auxiliary clutch control handleagain. Press down the power take-off shaft control handle to reach high speed gear 1000r/min; if pull up reach low speed gear 540r/min [or -760r/min].
  不需要动力输出时，动力输出操纵手柄应处于中间空档位置，并将动力输出轴套管重新装上拧紧
  When power output is not needed, operating handle of power output shaft should be set in neutral position, and reassemble power output shaft shield.

警告：

WARNING:

✧ 动力输出接合时,禁止任何人靠近农机具,以免发生危险!
When power output is engaged, it is forbidden that anyone is close to the farm machine tool so as to prevent an accident

4.16.6.1 挂车制动系统的操纵

Towing rod with oscillating type

摆式牵引杆只能用于牵引式农具，牵引杆的后端通过牵引销与农具联接，牵引杆可以横向摆动，挂接农具比较方便。工作中牵引杆可以左右摆动，但在拖拉机牵引农具倒退时，必须将 2 个定位销插入牵引板的孔中，使牵引杆不能摆动。

Towing rod with oscillating type is only used for farm implements with towing type. The rear end of the towing rod is connected with the farm implements by towing pin. The towing rod could oscillate transversely, which makes more convenient to couple to the farm implements. When operating, the towing rod could oscillate to the left/right, but when the tractor tows the farm implements to reverse, 2 positioning pins must be inserted into the holes of the towing board to make the towing rod not oscillate.

通过翻转牵引杆可改变牵引点的高度，以达到牵引高度适宜配套农具。

The height of the towing point could be changed by turning over the towing rod, which helps suit the matching farm implements.

AGRISONTM 13006511830

https://truckmanualshub.com/

4.16.6.2 拖挂架

Towing stand

拖挂架适用于各种类型挂车，不可与摆式牵引杆同时安装。

Towing stand applies to all kinds of trailers, but is not equipped with the towing rod with oscillating type simultaneously.

⚠ **警告：**

WARNING:

✧ 牵引作业和带挂车时不要超负荷。

Not overload during traction operation or with a trailer, otherwise, which may shorten machine service life or vehicle/person damaged/dead if seriously.

✧ 制动刹车时，挂车的制动要稍先于拖拉机的制动。

When braking，trailer brake is earlier slightly than tractor to prevent overturn.

4.16.7 挂车制动系统的操纵

Control of trailer braking system

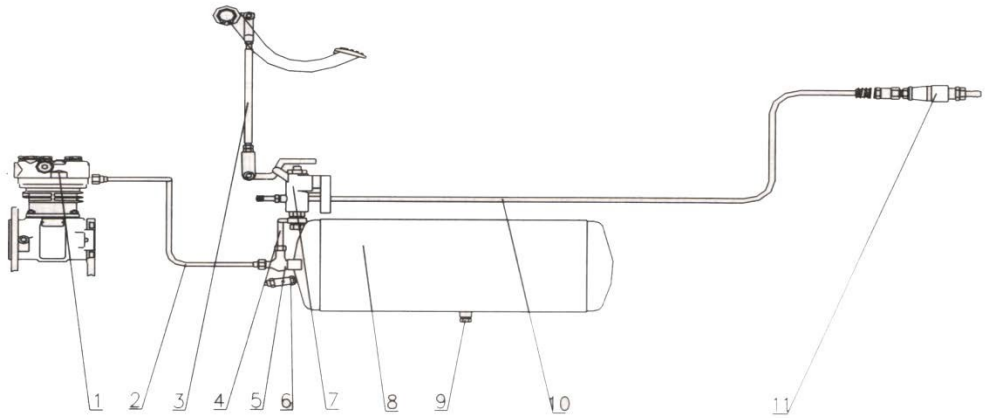

图 4-44 拖车制动系统

Fig.4-44 Braking system of the trailer

1．空气压力机 2 贮气筒进气管焊合 3．推杆 4．输气管焊合 5．三通 6．安全阀总成 7.断气刹车阀 8．贮气筒焊合 9．堵塞 10．气制动出气软管组件 11．快换接头

1. air compressor; 2. Inlet pipe of the air reservior; 3.push rod; 4. air supply pipe; 5. Y-joint; 6. relief valve assembly; 7.air brake vale; 8.air reservior; 9.plug; 10. outlet pipe of air brake valve; 11. quick joint

沭河 SH90 系列拖拉机挂车气刹车系统为“断气”控制系统，要求与其配套的挂车，必须备有全套的“断气”控制刹车装置。对于只备有制动气室和控制器的“给气”控制刹车装置的挂车，必须将“给气”控制系统改装成“断气”控制系统后才可以配套。

The braking system of the trailer is “air-break" control system. The trailer to match with it must be equipped with whole set of “air-break" control braking device. For the trailer only equipped with “air-supply" control braking device of braking chamber and controller, it cannot be configured until it changes the “air-supply" control system to “air-brake" control system.

- 拖拉机配带挂车运输时，应注意观察气压指示灯，储气筒内的气压不应低于 0.44MPa(4.5kgf / cm2)，否则，应使气压升高到规定值以上再开车。

  When the tractor is transporting with a trailer, you shall 013serve the air pressure indicator lamp, the

https://truckmanualshub.com/

pressure in the air reservior shall not be lower than 0.44MPa; otherwise, you cannot drive until the air pressure raises to the required value.

- 平时储气筒内的平衡气压应不低于 0.70MPa(7kgf / cm2)，否则，应调整气压调节器。当发动机停止工作时，如果气压表上读数迅速下降，表明有漏气现象，应及时检查排除。

  In normal times, the balanced air pressure in the air reservior shall not be lower than 0.70MPae When the engine stops running, if the barometre reading falls sharply, which shows that there is air leakage, check immediately and eliminate it.

- 储气筒安全阀的开启压力为 0.75 MPa～0.8MPa(7.5 kgf / cm2～8kgf / cm2)，在使用中如发现气压表读数超上述范围应及时进行调整。

  The opening pressure of the relief valve of the air reservior shall be (0.75 to 0.8) MPa. Adjust it in time if the air pressure alarm indicator gives warning during operation.

- 在使用过程中如果出现拖拉机的储气筒压力正常，而挂车的储气筒压力偏低(表现出不能保挂车有效制动)时，只应调整刹车阀左面的调整螺钉。

  If find that the air pressure in the air reservior of the tractor is normal while the air pressure in the air reservior of the trailer is lower (not make sure whether the trailer could brake ffectively) during operation, you shall only adjust the adjusting screw on the left of the braking valve.

- 在使用过程中如发现储气筒气压总是在 0.75 MPa～0.8 MPa (7.5 gf / cm2-8kgf / cm2)或更高的范围，说明安全阀不起卸荷作用，应及时清洗或更换安全阀。

  If find the air pressure in the air reservior is always between 0.75 and 0.8MPa or at a higher range, which means the relief valve does not play the role of unloading. You shall clean or replace the relief valve in time

- 拖拉机带挂车进行运输作业前，必须对整个机组的制动系统工作状态进行检查，必须保证挂车的制动与拖拉机的制动同步或挂车制动略为提前，不得滞后。必要时可调整刹车阀的调节螺钉来满足上述要求。

  Before the tractor is transporting with a trailer. you must check the braking system of the entyre unit assembly to ensure that the braking of the trailer and the braking of the tractor are synchronous or the former is a little bit ahead of time, do not lag . If necessary, adjust the adjusting screws of the braking valve to meet the above requirements.

注意：

WARNING:

如果挂车的制动滞后于主车制动，可能会造成翻车的危险。

If the trailer braking later than the main tractor braking, it may cause turnover accident.

制动阀杆的两个调整螺钉出厂时在已专用试验台上调整好，并涂有红色标记，一般不得随意拧动。以免造成制动失效。

The two adjusting screws on the brake valve lever has been adjusted on special test desk before ex-works, and marked with red. They should be not screwed as will in order to avoid brake invalid.

为确保气制动系统正常工作，要求拖拉机每工作 50 小时后，打开放水阀，将贮气筒内积水放掉.

In order to ensure the pneumatic braking system work normal, after every 50 work hour, the water in air tank should be drained by turning on drain valve.

4.16.8 电气系统的使用与调整

Application the electrical system and its adjustment

AGRISOUTH 1300 651 830

操作说明
Operator Instruction

沭河 SH90 系列拖拉机电气系统采用电压为 12V，硅整流发电机负极搭铁双线制。由发动机起动设备及照明信号装置组成。

The electrical system of SH series tractor adopts the voltage of 12V, silicon rectification generator with negative pole grounded and double-wire system. It is composed of starting equipment of the engine, lighting and light signalling devices.

沭河 SH90 系列拖拉机电器线路原理图见下图，其电器线路号、标称截面积和导线颜色见表 2—2。
发动机起动设备包括起动电动机、硅整流发电机，以上设备的使用及保养详见发动机使用保养说明书。
照明信号装置由前组合灯、后照灯、驾驶室顶照灯、扶手灯(转向、位置)、后尾灯(转向、位置、刹车)、组合仪表、喇叭、保险丝盒等组成。

The starting equipment of the engine includes motor and silicon rectification generator; see Operation/maintenance Instruction of the Engine for the application and maintenance of the abovementioned equipment. Lighting and light signalling devices are composed of front combination lamp, rear light, roof lamp in the cab, slim-line lamp (steering, position) , tail lamp (steering, position, braking), combination instrument, horn, fuse box, etc.

表 4-4　沭河 SH90 系列拖拉机电器线路线号、标称截面积和导线颜色

Table 4-4 Wire No. , nominal cross-sectional area and the wire color of the electrical device of SH series tractor

线号 Wire No.	标称截面积 Nominal cross-sectional area	导线颜色 Wire color	线号 Wire No.	标称截面积 Nominal cross-sectional area	导线颜色 Wire color	线号 Wire No.	标称截面积 Nominal cross-sectional area	导线颜色 Wire color	线号 Wire No.	标称截面积 Nominal cross-sectional area	导线颜色 Wire color
1	4.0	红 Red(R)	13	0.75	绿兰 Green Blue(GL)	26	0.75	橙 Orange(O)	39	4.0	棕 Brown (Br)
1b	2.5	红 Red(R)	14	1.0	白红 White Red (WR)	27	0.75	绿黑 Green Black(GB)	40	0.75	灰 Gray(S)
2	1.5	粉 Pink(v)	15	1.5	兰红 BlueRed (LR)	28	0.75	橙兰 Orangeblue(OL)	42	2.5	黑 Black(B)
3	4.0	红白 RedWhite(RW)	16	1.0	红白 RedWhite(RW)	29	0.75	绿灰 Green Gray(GS)	50	1.0	粉 Pink(v)

AGRISONTM 1300 651 830

操作说明
Operator Instruction

4	1.5	黄 Yellow(Y)	17	0.75	粉绿 PinkGreen(VG)	30	0.75	棕黄 BrownYellow(BrY)	51	1.0	粉白 Pink White (VR)
5	1.0	绿 Green (G)	18	0.75	棕 Brown (Br)	31	0.75	白 White (W)	53	0.75	红棕 Red Brown (RBr)
6	1.5	蓝 Blue(L)	19	0.75	浅兰 Lightblue(Lu)	32	0.75	棕白 Brown White (BrW)	54	0.75	兰绿 Blue Green (LG)
7	1.0	黄黑 YellowBlack(YB)	20	0.75	红白 RedWhite(RW)	33	0.75	红绿 Red Green (RG)	55	0.75	红灰 RedGray(RS)
8	0.75	灰白 Gray White (SW)	21	0.75	兰黑 BlueBlack(LB)	34	1.0	白兰 White Blue (WB)	56	0.75	浅绿 Light Green (LuG)
9	1.0	红蓝 RedBlue(RL)	22	0.75	红黑 RedBlack(RB)	35	0.75	绿红 Green Red (GR)	57	0.75	灰黑 GrayBlack(SB)
10	1.5	黄红 YellowRed(YR)	23	1.0	紫 Purple (P)	36	0.75	紫黑 Purple Black(PB)	10a	0.75	黄红 YellowRed(YR)
11	1.0	红黄 RedYellow(RY)	24	1.5	绿白 Green White (GW	37	1.0	紫黄 Purple Yellow(PY)	42a	0.75	黑 Black(B)
12	1.0	黄蓝 YellowBlue (YL)	25	0.75	棕红 Brown Red(BrR)	38	0.75	棕绿 Brown Green (BrG)			

AGRISON™ 1300 651 830

https://truckmanualshub.com/

后照灯、后尾灯

Rear light，tail lamp

后照灯、后尾灯总成(转向、位置、刹车)位置图

Position diagram of rear light and tail lamp assembly(steering, position，braking)

图 4-45 后照灯和后尾灯

Fig. 4-45 Rear light and tail lamp

Socket for rear trailer

后挂车插座接线位置图

Connection position of the rear trailer is shown in Figure 4-46, among which the sockets not marked in the figure will not be used.

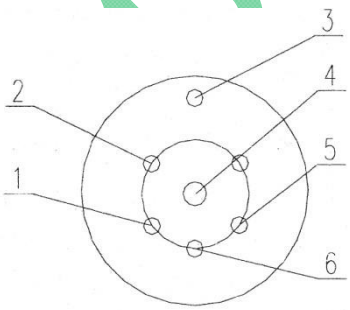

图 4-46 后挂车插座

Fig.4-46 Socket for rear trailer

1.接右转向灯电源线　　2.接工作灯电源线

3.接地线　　4.接位置灯电源线

5.接制动灯电源线　　6 .接左转向灯电源线

1. to the power wire of the right turn light;　　2. to the power wire of the working light;

3. to the earth wire;　　4. to the power wire of the position lamp;

5. to the power wire of the braking lamp;　　6.to the power wire of the left tum light

AGRISON 300 65

https://truckmanualshub.com/

操作说明
Operator Instruction

顶工作灯

Roof lamp

驾驶室的顶工作灯共有 4 个，分别位于驾驶室前上部和后上部，驾驶室前工作灯如右图所示

There are 4 roof lamps in the cab in all, lying on the front upper/rear upper part separately. The front roof lamp in the cab is shown in the right figure.

可根据工作时需要左右转动工作灯灯体，以满足改变光照方向的需要。

You could turn the lampbody of the roof lamp as desired.

图 4-47 顶工作灯

Fig. 4-47Roof lamp

中央电器盒

Central electric box

中央电器盒内主要有：主电源继电器、电子闪光器、灯光继电器等电路控制元件，并有十五路保险片，各档的工作电流及所保护的电器如图所示。电器元件断路时，首先要检验保险盒内保险片，如有保险片损坏，立刻从电路板上取下一块备用同电流匹配的保险片换上，以保证电器元件不受损坏。

There are such circuit control elements as power supply relay, electronic flasher, lighting relay and fifteen-way Fuse, operating current of each gear and the electrical devices under its protection is shown in Table 2-5. When the electrical element is broken , first check the fuse in the fuse box, if damaged, take down a piece of standby fuse with of the same circuit from the circuit board and replace to protect the electrical elements from damaging.

图 4-48 中央电器盒

Fig.4-48 Central electric box

表 4-5 保险盒各档的工作电流及所保护的电器

Table 2-5 Operating current of each gear of the fuse box and the electrical devices under its protection

保险盒档别 Gear of fuse box	一 One	二 Two	三 Three	四 Four	五 Five	六 Six	七 Seven	八 Eight	九 Nine
额定工作电流 Rated operating current	10A	10A	20A	10A	10A	20A	5A	20A	15A

AGRISON™ 13006518

https://truckmanualshub.com/

操作说明
Operator Instruction

额定工作电流 Protected electric device	刹车灯和喇叭 Braking lamp and horn	转向灯报警 Turn light and warning device	雨刮器空调 Wipe and air-conditioner	大灯近光 Low beam	大灯近光 High beam	附件电源 Power of accessories	位置小灯 Position lamplet	顶照灯 Top light	灯光继电器 Lighting relay

AGRISON™ 1300 651 830

https://truckmanualshub.com/

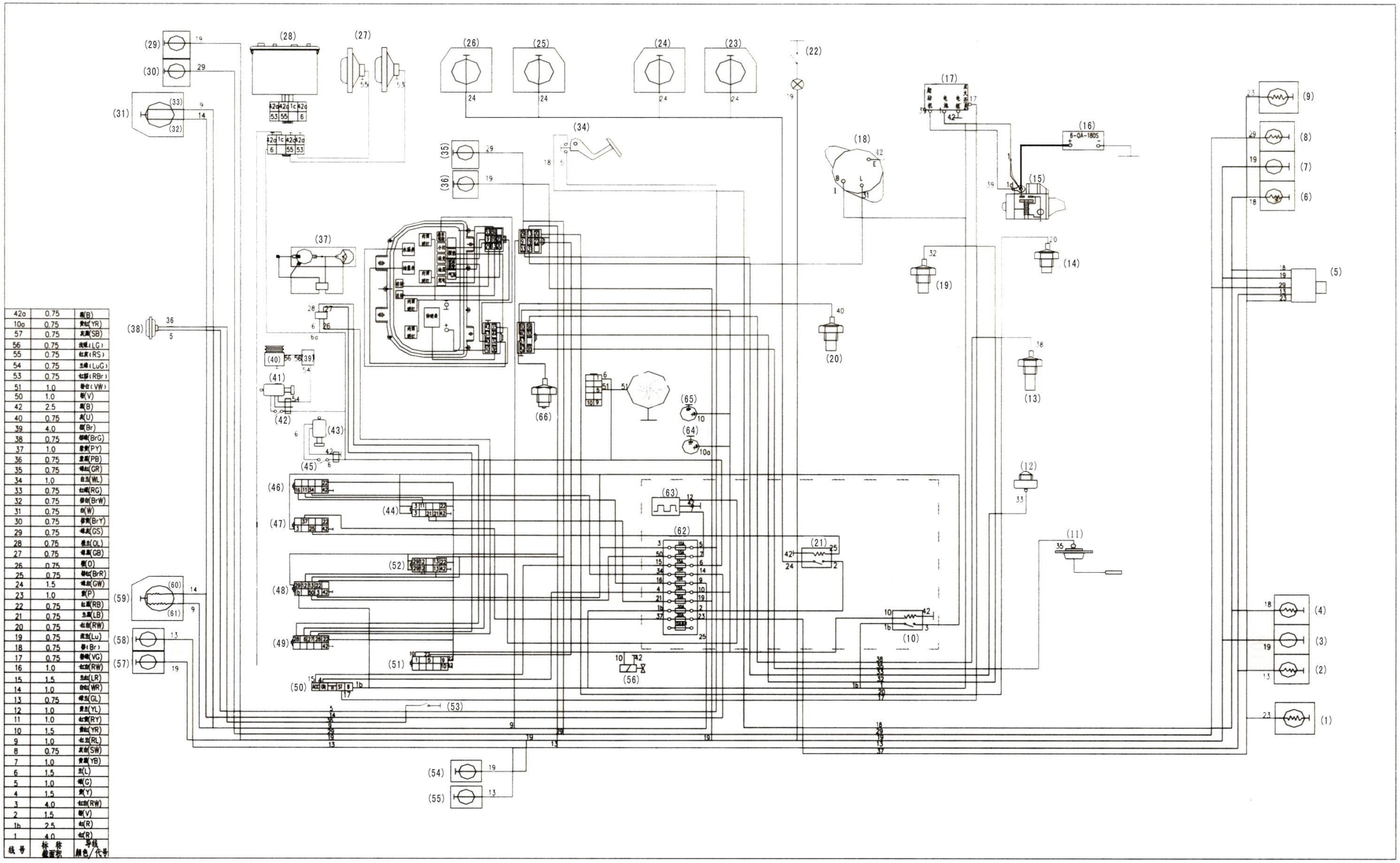

线号	标称截面积	导线颜色/代号
42a	0.75	黑(B)
10a	0.75	黄红(YR)
57	0.75	灰黑(SB)
56	0.75	浅绿(LG)
55	0.75	粉红(RS)
54	0.75	兰绿(LuG)
53	0.75	红棕(RBr)
51	1.0	橙白(VW)
50	1.0	橙(V)
42	2.5	黑(B)
40	0.75	黑(U)
39	4.0	棕(Br)
38	0.75	棕绿(BrG)
37	1.0	棕黄(PY)
36	0.75	棕黑(PB)
35	0.75	棕红(GR)
34	1.0	白兰(WL)
33	0.75	白红(RG)
32	0.75	棕白(BrW)
31	0.75	白(W)
30	0.75	棕黄(BrY)
29	0.75	绿黑(GS)
28	0.75	绿兰(GL)
27	0.75	绿黑(GB)
26	0.75	橙(O)
25	0.75	棕红(BrR)
24	1.5	绿白(GW)
23	1.0	黄(P)
22	0.75	红黑(RB)
21	0.75	兰黑(LB)
20	0.75	红白(RW)
19	0.75	黑兰(Lu)
18	0.75	棕(Br)
17	0.75	绿橙(VG)
16	1.0	红白(RW)
15	1.5	兰白(LR)
14	1.0	白红(WR)
13	0.75	绿兰(GL)
12	1.0	黄兰(YL)
11	1.0	红黄(RY)
10	1.5	黄红(YR)
9	1.0	红兰(RL)
8	0.75	黑白(SW)
7	1.0	黄黑(YB)
6	1.5	兰(L)
5	1.0	绿(G)
4	1.5	黄(Y)
3	4.0	红白(RW)
2	1.5	橙(V)
1b	2.5	红(R)
1	4.0	红(R)

图 4-49 电气原理图

Fig.4-49Electrical schematics

https://truckmanualshub.com/

4.17 拉机的磨合

Tractor running in

拖拉机在投入使用前，要在规定的润滑、转速、负荷条件下运转一段时间，同时进行必要的检查、调整与保养，使技术状态正常化，这一系列工作称为磨合。

Only when the plough out of the soil, the tractor can steer. Before starting to use, the tractor should run for a certain period under the condition of specified lubrication, rpm and load. And the tractor should be checked, adjusted and maintained to make technical status normal. Such a series of work is called as Running-in.

4.17.1 磨合前的准备工作

Preparations before running-in

- 磨合期间对拖拉机进行每班技术保养和 50h 技术保养(见本说明书第四章拖拉机技术保养)。
  During the running-in, technical maintenance per shift and per 50h shall be made on the tractor. See Use And Maintenance 6 Maintenance
- 检查并拧紧拖拉机外部螺栓、螺母及螺钉。
  Check and tighten the bolts, nuts and screws outside the tractor
- 在前轮毂、前驱动桥主销及水泵轴的油杯处加注润滑脂。检查发动机油底壳、传动系及提升器、前驱动桥中央传动及最终传动油面，不足时按规定加注。
  Fill lube grease into the oil cups of front wheel hub, front axle and water pump shaft. Check the oil levels in oil pan, drvie train & lifter, front drive axle central drive and final drive. If not aedequate, fill in them according to the specification.
- 加足符合标号的燃油和冷却液。
  Fill fuel oil and coolant conforming to the labeling.
- 检查轮胎气压是否正常。
  Check if tyre pressure is normal
- 检查电器线路是否连接正常、可靠。
  Check if electrical circuit is normal and reliable
- 使各操纵手柄均处于空档位置。
  Make each operation handle in neutral shift position.

4.17.2 发动机空转磨合

Engine running in at idle running

对发动机进行 15min（分钟）的空转磨合。按“柴油发动机使用保养说明书”规定的顺序起动发动机后，使发动机先由低速(小油门)到中速(中油门)，最后到高速(大油门)的顺序，依次运行各 5min （分钟）。

During the idling running-in, it is necessary to check carefully working conditions of engine, air compressor , hydraulic oil pump. Observe if there is abnormal phenomenon and sound. Check for the water leakage, oil leakage or gas leakage. Check the instrument for normal operation.

在发动机空转磨合过程中，应仔细检查发动机、空气压缩机、液压油泵的工作状况，观察有无异常现象及声响，检查有无漏水、漏油和漏气现象。仪表是否工作正常。当发现有不正常现象，应立即停车，排除故障后重新进行磨合。 确信发动机工作完全正常时才能进行下列的磨合。

When any abnormal condition occurs, stop immediately and troubleshoot. Then run in again.

The following running in cannot started until the engine is confirmed to work normally.

AUBISONTM 1300 651 830

https://truckmanualshub.com/

4.17.3 动力输出轴空载磨合

Power output shaft idling running in

将发动机油门操纵手柄置于中油门位置，发动机以中速运转，分别使动力输出轴以低速、高速各运转5min，检查有无异常现象。磨合后须使动力输出轴处于空档位置。

The engine throttle control handle is set at medium position, and the engine runs at medium speed. Make power output shaft run at low speed and high speed for 5min, respectively. Then check if there is any abnormality.

Power output shaft is in neutral position after running-in.

4.17.4 液压系统磨合

Running in of hydraulic system

起动发动机将油门放在中油门位置运转，操纵分配器手柄，升降悬挂机构数次，观察有无异常现象。然后在悬挂机构上挂上质量约 800kg 重物或质量相当的配套农具，使发动机在大油门位置下运转，操纵分配器手柄，使悬挂机构能全行程上升与下降，其次数不少于 20 次。检查液压悬挂机构能否固定在最高位置或所需位置、升降时间及有无渗漏现象。

Start the engine and run the engine with the throttle in middle power position. Operate the handle of distributor and lift & lower down the suspesion mechanism for several times to observe if there is abnormal phenomenon. Then hang a heavy thing about 800kg weight or similar farm machine attachment on the hitch mechanism, run the engine on the oil throttle position, operate the distribution handle, to make the hitch mechanism to full-travel lift up and down for over 20 times. Check that the hydraulic hitch mechanism can be fixed at the highest position or the required position, and check for the lifting time and. Leakage phenomenon.

在拖拉机静止情况下，发动机以低中高速运转，平稳地向左及向右操纵方向盘各 10 次，观察拖拉机前轮左右转向的随动情况，声音是否正常，操纵方向盘是否轻便、平稳。

With tractor in the stationary condition, run the engine at low and high speed, and operate the steering wheel to the left and to the right smoothly for 10 times each. Observe the follow-on moment of he front wheels when the tractor leftwards and rightwards turns, and check for the sound. And the control of the steering is easy and smooth.

磨合过程中若发现故障，应及时分析原因并排除。

Timely analyse and remove the troubles if there is troubles occurring during the running in.

AGRISOM 1300 651 830

https://truckmanualshub.com/

4.17.5 拖拉机空驶及负荷磨合

Tractor driving without load and running in with load

当发动机空转磨合，动力输出轴及液压系统磨合后，确认拖拉机的技术状态完全正常时，方可进行整机磨合，其磨合顺序和时间按表 4-5、4-6、4-7 规定地磨合规范进行，总计磨合 60h。空驶磨合时，在低速下进行转弯操作和适当地使用单边制动器，并在高速下试验紧急制动。

After idling running in of engine and the running in of power output shaft and hydraulic system and confirmation the tractor technical conditions are completely normal, you can start to conduct the entire engine running in whose running-in procedure and time shall be in compliance with the running-in specifications in Table4-5, 4-6 and4-7, with a total running in time of 60h. During the idle running-in, make turns at the low speed and appropriately use single-side brake and test emergency brake at the high speed.

空驶磨合后，当拖拉机技术状态完全正常时方可进行负荷磨合，负荷必须由小到大，档位由低到高逐档进行。选装了爬行档的拖拉机，可挂接爬行挡磨合，四轮驱动拖拉机进行 I～Ⅳ档负荷磨合时应使前驱动桥接合；其它档磨合时，应使前驱动桥分离。磨合过程中必须注意：

Load running-in can be made only when the technical conditions of the tractor is completely normal after the idle running-in. The load shall be from low to high while the speed shall be also from low to high. For tractor with option of crawl shift, it can run in on crawl shift; the front axle can be engaged when the four-wheel drive tractor is running with I -IV shift load. and it should be released when running in on other shift. During the running-in, pay attention to:

- 观察电器设备和各种仪表的读数是否正常。
  Check if electrical equipments and the readings for various instruments is normal
- 发动机运转是否正常。
  Is the engine running normally or not
- 离合器接合是否平顺，分离是否彻底。
  Check if clutch is engaged smoothly, and disengaged completely
- 变速箱的换档是否轻便、灵活，有无乱档、自动脱档现象。
  Is gear shift of gearbox easy and flexible, with/without random shift or spontaneous out-of-gear
- 制动器工作是否可靠。
  If brake action reliable
- 差速锁接合与分离是否可靠。
  Differential lock engagement and disengagement are reliable or not
- 前驱动桥的接合与分离是否可靠。
  If the engagement/release of the front axle is reliable

当发现故障时，应排除后方能继续进行磨合。

When fault occurs, running in can not go on until troubleshooting.

AGRISON™ 1300 651 830

https://truckmanualshub.com/

4.17.6 磨合后的技术保养

Technical maintenance after running-in

拖拉机经过磨合后，在传动系统、润滑系统和液压系统中将有一些金属屑末或脏物混在润滑油中。因此，必须清洗并更换全部的润滑油和液压系统用油，进行必要的技术保养后，才能转入正常使用。

After running-in, there will be some metal chip or filth mixed in lube oil of the drive system, lubrication system and hydraulic system of the tractor. Therefore, it is necessary to clean and replace all lubricaion oils and hydraulic fluids and conduct the necessay technical maintenance, then you can put the engine into normal operation.

磨合后的技术保养内容如下：

The technical maintenance of engine after running in is as follows:

- 停机后趁热放出发动机油底壳和转向系油箱中的机油，并清洗油底壳、机油滤网、柴油滤清器、机油滤清器、空气滤清器和转向油箱中的滤网，更换柴油滤清器、机油滤清器滤芯后，按技术要求注入新润滑油。

  After parking, to drain. the warm lube oil in diesel engine oil pan and steering oil tank, wash the pan, engine oil filter screen and diesel oil air separator, engine oil air separator and steering oil tank screen, change the filter core of diesel oil air separator and engine oil air separator, and fill fresh lube oil as required.
- 趁热放出传动系和提升器、前驱动桥的油液，同时加入适量轻柴油或煤油。发动机不起动，用慢速拖动拖拉机前进或倒退 3min 左右或将拖拉机前、后轮胎抬起离开地面，2 个方向转动前、后轮胎约 3min 左右，立即将清洗液放出。同时拆下提升器的吸油滤清器进行清洗，重新装好后，按规定对传动系提升器前驱动桥加注新的油液。

  Before cooling, discharge the oil in drive system and lifter, front drive axle. At the same time, fill in an appropriate amount of light diesel oil or kerosene. If the engine is misfired, slowly tow the tractor forward and backward for 3 min or lift the tractor's front/rear wheels off the ground, and rotate the front/rear wheel for 3 min along both directions, then immediatelyy drain out the cleanning fluids. At the same time, to dismount the air separator for the lifter to wash, after reassembling, to fill fresh oil for drive system lifter and front axle.
- 按“柴油发动机使用保养说明书”的规定对柴油发动机进行技术保养。

  Make technical maintenance on diesel motor according to "Maintenance Instruction of Diesel Motor"
- 放出冷却水，用清水清洗发动机冷却系统后，加入新的冷却液。

  Drain the cooling water and clean the cooling system of the engine by water and then replace with new coolant.
- 检查前轮前束、离合器、制动器的自由行程，必要时进行调整。

  Check toe-in and free strokes for clutch and brake. Adjust if necessary.
- 检查拧紧所有外部螺栓、螺母和螺钉。

  Check and tighten all bolts, nuts and screws outside
- 按维护保养表向拖拉机各个部位加注润滑脂。

  Fill lubrication grease to each Iubrication point of tractor according to Maintenance Chart

重要事项：

IMPORTANT:

✧ 新出厂的或大修后的拖拉机必须经过磨合才能投入正常使用，否则将缩短拖拉机的使用寿命。

Tractor can not be put into normal operation until running in after overhaul or ex-works, otherwise, which

AGRISOM™ 1300 651 830

https://truckmanualshub.com/

will shorten its service life.

✧ 驾驶人员必须首先学会并熟悉掌握拖拉机的操纵和使用方法以后，才能对拖拉机进行磨合，以免造成机器损坏。

Tractor can not be run in until driver has been familiar with and has mastered how to operate and how to use a tractor.

表 4-6 沭河 SH90 系列轮式拖拉机的磨合规范

Table 4-6 SH90series tractor running Specifications [8F+4R& 16F+8R (with optional crawler gear)

牵引负荷 Traction load (kN)				0	(3-4)kN	(7-8)kN	(10.5-11.5)kN
相当的作业项目 Corresponding working item				空驶 Empty driving	牵引挂车装 4t 质量的货物运输 Freight of the trailer with 4t load	挂犁砂土地(比阻 30kPa～35kPa)上作业，耕深为 18mm～20cm 犁耕 Working with plough on sand clay with a soil specific resistance of 30 -35 kPa, and a tilling depth of 18-20 cm	挂犁在壤土地(比 45kPa～50kPa) 作业，耕深为 20cm 犁耕 Working with plougl on clay with a soil specific resistance of 45 ~50 kPa, and a tilling depth of 20 cm.
油门开度 Opening degree of oil throttle				3/4	3/4	全开 Full open	全开 Full open
方向 Direction	爬行档 Crawler gear	副变速 Aux. main gearbox	主变速 main gearbox				
前进档 FWD Gear	低档 L-gear	低档 L-gear	1	0.5h			
			2				
			3				
			4				
		高档 H-gear	1				
			2	0.5h			
			3				
			4				
	高档 H-gear	低档 L-gear	1	0.5h			
			2	0.5h			
			3	0.5h			
			4	0.5h			
		高档 H-gear	1	0.5h			
			2	0.5h			
			3	0.5h	2h	4h	8h
			4	0.5h	2h	4h	5h
倒退档 BCK-gear	低档 L-gear	倒档 R-gear	1		4h	4h	4h
			2		4h	4h	
			3		4h		
			4		3h		

AGRISONTM 13006510 30

操作说明
Operator Instruction

	高档 H-gear	倒档 R-gear	1	0.5h			
			2	0.5h			
			3	0.5h			
			4	0.5h			
总时间 Total hours(h)				7h	19h	16h	18h

表 4-7 沭河 SH90 系列轮式拖拉机的磨合规范

Table 4-7 SH-series tractor running Specifications (16F+8R shuttle gear shift)

牵引负荷 Traction load (kN)				0	(3-4)kN	(7-8)kN	(10.5-11.5)kN
相当的作业项目 Corresponding working item				空驶 Empty driving	牵引挂车装 4t 质量的货物运输 Freight of the trailer with 4t load	挂犁砂土地(比阻 30kPa～35kPa)上作业，耕深为 18mm～20cm 犁耕 Working with plough on sand clay with a soil specific resistance of 30 -35 kPa, and a tilling depth of 18-20 cm	挂犁在壤土地(比 45kPa～50kPa) 作业，耕深为 20cm 犁耕 Working with plougl on clay with a soil specific resistance of 45 ~50 kPa, and a tilling depth of 20 cm.
Opening degree of oil throttle				3/4	3/4	Full open	Full open
方向 Direction	爬行档 Crawler gear	副变速 Aux. main gearbox	主变速 main gearbox				
前进档 FWD Gear	低档 L-gear	低档 L-gear	1	0.5h			
			2				
			3				
			4			4h	5h
		高档 H-gear	1				
			2	0.5h			
			3				
			4			4h	5h
	高档 H-gear	低档 L-gear	1	0.5h		4h	8h
			2	0.5h			
			3	0.5h			
			4	0.5h			
		高档 H-gear	1	0.5h		4h	
			2	0.5h			
			3	0.5h	2h		

AGRISONTM 13006518830

https://truckmanualshub.com/

			4	0.5h	2h		
倒退档 BCK-gear	低档 L-gear	倒档 R-gear	1		4h		
			2		4h		
			3		4h		
			4		3h		
	高档 H-gear	倒档 R-gear	1	0.5h			
			2	0.5h			
			3	0.5h			
			4	0.5h			
总时间 Total hours(h)				7h	19h	16h	18h

4.18 拖拉机常见故障和排除方法

Common fault and troubleshooting for tractor

4.18.1 底盘故障和排除方法

Chassis fault and troubleshooting

4.18.1.1 离合器故障和排除方法

Clutch fault and troubleshooting

表 4-8 离合器故障和排除方法

Table 4-8 Clutch fault and troubleshooting

故障现象 Fault	故障原因 Fault reasons	排除方法 Troubleshooting
1. 离合器打滑 Clutch slipping	(1) 摩擦片及压盘有油污 Oil stain on friction lining and pressure plate; (2) 摩擦片磨损过多或烧毁 Friction lining over wear or burnt: (3) 蝶形弹簧压力降低 Belleville spring reduction (4) 踏板自由行程太小，或无自由行程 Free pedal travel too small, or no free travel (5) 离合器从动盘变形严重 Clutch plate severely deformed	(1) 用汽油清洗，查找原因并排除故障 Use gasoline to wash and locate the cause and do troubleshooting (2) 更换摩擦片 Replace friction lining (3) 更换蝶形弹簧 Replace belleville spring (4) 按要求重新调整踏板自由行程 Readjust free travel of pedal according to the requirements (5) 更换离合器从动盘 Replace clutch plate

AGRISOM 1300 651 830

https://truckmanualshub.com/

故障现象 Fault	故障原因 Fault reasons	排除方法 Troubleshooting
2. 离合器分离不彻底、挂档有响声 The separation of clutch is not thoroughly , and the engagement is done noisely	(1) 踏板自由行程过大，工作行程过小 Free pedal travel too large, or operation travel too small (2) 离合器从动盘翘曲过大 Warpage of clutch plate too large (3) 3 个分离杠杆头部不在同一平面内 disengaging lever heads are not on the same plane	(1) 调整踏板自由行程至 25-30mm Adjust the pedal free travel t0 25-30 mm (2) 更换从动盘 Replace driven disk (3) 按要求调整 Adjust according to requirements
3. 拖拉机起步时抖动 Tractor is jittering when starting	(1) 3 个分离杠杆端头不在同一平面内 disengaging lever heads are not on the same plane (2) 摩擦片、从动盘沾油 Oil stain on friction lining and clutch plate (3) 从动盘翘曲严重 clutch plate severelu warpaged (4) 飞轮与离合器壳固定螺钉松动 The set screw for flywheel and clutch loosened	(1) 按要求调整 Adjust according to requirements (2) 清洗摩擦片、从动盘 Clean friction lining and clutch plate (3) 更换从动盘 Replace driven disk (4) 立即停车检查，排除故障 Immediately stop the vehicle and do troubleshooting

4.18.1.2 变速箱故障和排除方法

Gearbox fault and troubleshooting

表 4-9 变速箱故障和排除方法

Table 4-9 Gearbox fault and troubleshooting

故障现象 Fault	故障原因 Fault reasons	排除方法 Troubleshooting
1 挂档困难或挂不上档 Putting into gear is difficult or can't be done	(1) 离合器分离不彻底 Clutch is not disengaged completely (2) 变速联锁拉杆过长 Gearbox interlocking pull rod too long (3) 变速杆拨头磨损严重 Gear lever fork severely worn (4) 啮合套端面及齿轮端面磨损或打坏 The meshing bush end surface and gear end surface worn or broken up	(1) 按离合器故障排除方法排除 Do troubleshooting according to the that for clutch (2) 将变速联锁拉杆适当调短 Properly adjust the gearbox interlocking pull rod to be shorter (3) 更换变速杆 Replace shift lever (4) 更换或修理 Replace or repair

AGRISON™ 1300 651 830

操作说明
Operator Instruction

故障现象 Fault	故障原因 Fault reasons	排除方法 Troubleshooting
2 自动脱档 Shift disengagement automatically	(1) 变速联锁拉杆过短 Gearbox interlocking pull rod too short (2) 拨叉轴定位槽磨损严重 Locating slot of shift fork severely worn (3) 联锁销弹簧压力不足 The pressure of interlocking pin spring inadequate (4) 齿轮轴上的轴承磨损，使轴产生倾斜 The bearing on gear shaft worn, making shaft declined (5)齿座花键磨损 Spline tooth wear seat	(1) 将变速联锁拉杆适当调长 Properly adjust the gearbox interlocking pull rod to be longer (2) 更换拨叉轴 Replace shift fork (3) 调整或更换联锁销弹簧 Adjust or replace interlocking pin spring (4) 更换轴承 Replace bearing (5) 更换齿座 Replacement tooth Block
3. 乱档 Random shift	(1) 变速杆拨头磨损 Shift lever fork worn (2) 变速导板槽磨损严重 Gearbox guide plate severely worn (3) 拨叉和啮合套的拨槽磨损 The fork slot of fork and meshing bush worn (4) 互锁销及拨叉轴定位槽磨损 Locating pin of interlocking pin and shift fork severely worn	(1) 修理或更换变速杆 Repair or replace shift lever (2) 更换变速导板 Replace gearbox guide plate (3) 更换拨叉和啮合套 Replace fork and meshing bush (4) 更换互锁销及拨叉轴 Replace interlocking pin and shift fork shaft
4. 变速箱底部检查窗盖处漏油 Oil leakage at inspection window on the bottom of gearbox	(1) 发动机曲轴后油封失效 Rear oil seal of engine crank shaft failure (2) 变速箱输入轴油封失效 Oil seal of input shaft of gear box (3) 变速箱输入轴轴承座处漏油 Oil leakage from bearing of input shaft of gearbox	(1) 更换油封 Replace oil seal (2) 更换油封 Replace oil seal (3) 涂胶后重装 Refit after coating glue

AGRISONIM 1300 651 830

https://truckmanualshub.com/

故障现象 Fault	故障原因 Fault reasons	排除方法 Troubleshooting
5. 变速箱内有杂音或敲击声 Noise or knocking sound in gearbox	(1) 齿轮磨损过大，齿面剥落或轮齿折断 The gear wear exceeds the normal value, the tooth surface is peeled or wheel tooth is broken (2) 轴承磨损严重或损坏 Bearing worn seriously or damaged (3) 润滑油不足或油质不符合规定 Lub oil is not efficient. or not in compliance with the requirements	(1) 更换齿轮 Repalce gear (2) 更换轴承 Replace bearing (3) 加足或更换润滑油 Fill or replace lube oil

4.18.1.3 后桥与制动器故障和排除方法

Fault and troubleshooting for rear axle and brake

表 4-10 后桥与制动器故障和排除方法

Table4-10 Fault and troubleshooting for rear axle and brake

故障现象 Fault	故障原因 Fault reasons	排除方法 Troubleshooting
1. 中央传动噪音增大 Noise for central drive is increased	(1) 小圆锥齿轮轴承游隙太大 The bearing play of small cylindrical gear too large (2) 齿轮啮合不正常 Gear engagement abnormal (3) 圆锥齿轮副轴承或齿轮损坏 Bearing of conical gear pair or gear damaged (4) 差速器轴磨损，咬死 Differential gear shaft worn or stuck (5) 行星齿轮或垫片磨损 Planet gear or gasket worn (6) 差速器轴承磨损或损坏 Differential gear broken or damaged	(1) 按要求调整 Adjust according to requirements (2) 按要求重新调整 Readjust according to requirements (3) 更换轴承或齿轮 Replace bearing or gear (4) 更换差速器轴 Replace the differential gear shaft (5) 更换行星齿轮或垫片 Replace planetary gear or shims (6) 更换差速器轴承 Replace differential bearing
2. 小圆锥齿轮轴承和差速器轴承过热 Small cylindrical gear and differential bearing too hot	(1) 预紧力过大 The pre-tightening force too large (2) 润滑不好 Lubrication poor (3) 圆锥齿轮副齿侧间隙过小 The backlash at gear pair side of conical gear too small	(1) 重新调整轴承预紧力 Readjust bearing pre-tightening force (2) 检查润滑油位，不足时补充 Check lubrication oil level , and supplement if not adequate (3) 重新调整齿侧间隙 Readjust the backlash

AGRISOM 1300 651 830

https://truckmanualshub.com/

故障现象 Fault	故障原因 Fault reasons	排除方法 Troubleshooting
3. 最终传动声音异常 The final driving sound abnormal	(1) 行星架固定螺栓松动，止退垫片损坏 The set bolt of planetary bracket lose, and ther thrust washer damaged (2) 轴承、齿轮或轴损坏 Bearing, gear or shaft damage	(1) 按要求拧紧行星架固定螺栓，更换止退垫片 Tighten the set bolt of planetary bracket, and replace thrust washer (2) 更换轴承、齿轮或轴 Replace bearing, gear or shaft
4 制动失灵 Brake out of control	(1) 制动管路内有空气 Air remained in braking pipeline (2) 制动液不足，管路漏油 Brake fluids not sufficient, or pipeline leaking (3) 制动器踏板自由行程过大 Free stroke of brake pedal is too large. (4) 摩擦片严重磨损或偏磨 Friction lining worn severely or unevenly (5) 制动泵卡阀 Brake pump valve seized	(1) 排出管路内空气 Exhaust the air in pipeline (2) 排除漏油点，添加制动液 Remove leaking points, and add brake fluids (3) 重新调整踏板自由行程 Readjust free stroke of pedal. (4) 更换摩擦片 Replace friction lining (5) 清洗制动泵 Clean brake pump
5. 制动时拖拉机跑偏 When braking, the tractor runs eccentrically	(1) 左、右制动踏板自由行程不一致 The travels of left and right brake pedals are not consistant. (2) 某一边制动摩擦片损坏 Brake friction lining on one side damaged (3) 制动管路单边漏油 Leaking at single side of brake pipeline (4) 制动管路单边进气 Air intake at single side of brake pipeline (5) 两后轮胎气压不一致 Pressure in two rear tyres is different	(1) 调整 Adjust (2) 更换摩擦片 Replace friction lining (3) 排除漏油点 Remove leaking points (4) 排气 Exhaust (5) 检查，并按规定对轮胎充气 Check and fill tyre with air according torequirement.

AGRISON 1300 651 830

4.18.1.4 行走系统故障和排除方法

Walking system fault and troubleshooting

表 4-11 行走系统故障和排除方法

Table 4-11 Walking system fault and troubleshooting

故障现象 Fault	故障原因 Fault reasons	排除方法 Troubleshooting

操作说明
Operator Instruction

故障现象 Fault	故障原因 Fault reasons	排除方法 Troubleshooting
1 前轮胎磨损严重 Front wheel tyre(s) worn seriously	(1))球销、油缸、转向摆臂紧固螺母、螺栓松动 Front wheel rim or spoke severely deformed. (2) 前束调整不当 Toe-in of front wheel is abnormal (3) 轴承间隙过大或磨损严重 Steering knuckle and two pin shafts of oil tank worn seriously (4) 转向主销磨损严重 Tyre pressure not adequate during transportation. (5) 前轮轮辋严重变形 Front axle does not release before transportation (6) 驱动轮装反 Drive tyre thread mounted in reverse	(1) 校正前轮轮辋或辐板 Calibrate front wheel rim or spoke (2) 调整前束 Adjsut toe-in (3) 更换销轴 Replace axis pin (4) 检查，并按规定对轮胎充气 Check and fill tyre with air according to requirement. (5) 脱开前驱动桥 Disconnect front drive axle (6) 按要求重新安装轮胎 Refit the wheel according to the requirements
2 前轮摆动 Front wheel swings	(1) 球销、油缸、转向摆臂紧固螺母、螺栓松动 Set nuts or bolts for ball pin, oil cylinder and steering arm are loose (2) 前束调整不当 Toe-in of front wheel is abnormal (3) 轴承间隙过大或磨损严重 Bearing gap too large or severely worn (4) 转向主销磨损严重 Knuckle pin severely worn (5) 前轮轮辋严重变形 Front wheel rim severely deformed	(1) 检查紧固 Check for the tightening (2) 调整前束 Adjsut toe-in (3) 调整或更换轴承 Adjust or replace bearing (4) 更换转向主销 Replace knuckle pin (5) 校正前轮轮辋 Calibricate front wheel rim

AGRISOM 1300 651 830

https://truckmanualshub.com/

故障现象 Fault	故障原因 Fault reasons	排除方法 Troubleshooting
3 噪声大(四轮驱动型拖拉机) Large noise (the tractor of four-wheel drive type)	(1) 前中央传动齿轮啮合印痕不好 Engagement trace of front central drive gear is abnormal (2) 中央传动轴承间隙过大或损坏 Clearance between centeral drive bearing is too large or distroyed (3) 差速器轴磨损或损坏 Differential axle worn or damaged (4) 行星齿轮或垫片磨损 Planet gear or gasket worn (5) 最终传动齿轮副啮合不好 Final meshing of planeatry gear pair poor	(1) 重新调整啮合印痕 Readjsut meshing impress (2) 调整或更换 Adjust or replace (3) 更换差速器轴 Replace the differential gear shaft (4) 更换行星齿轮或垫片 Replace planetary gear or shims (5) 调整最终传动齿轮 Replace planetary drive gear
4. 传动轴及护套发热(四轮驱动型拖拉机) Drive shaft and sleeve becoming heating(4-wheel drive tractor)	(1) 传动轴弯曲变形严重，出现摩擦 The drive shaft severely bentor deformed, together with friction (2) 中间支承轴承座松动 Middle bearing seat loosened	(1) 校正或更换传动轴 Modify or replace drive shaft (2) 按要求拧紧 Tighten according to the requirements
5. 分动箱噪声大（四轮驱动型拖拉机） Auxiliary box noisy, 4-wheel drive tractor	(l) 速度档位过高 Speed gear too high (2) 轴承或齿轮磨损严重 Bearing or gear severely worn	(l) 挂低速档 Put into low egar (2) 更换或修理 Replace or replace

4.18.1.5 液压转向系统故障和排除方法

Hydraulic steering system fault and troubleshooting

表 4-12 液压转向系统故障和排除方法

Table 4-12 Hydraulic system fault and troubleshooting

故障现象 Fault	故障原因 Fault reasons	排除方法 Troubleshooting

AGRISONTM 1300 651 830

操作说明
Operator Instruction

故障现象 Fault	故障原因 Fault reasons	排除方法 Troubleshooting
1 漏油 Oil leaking	(1) 各管道接头处胶圈损坏或螺栓松动 Rubber rings or bolts at various pipe joints damaged or loose (2) 液压转向器阀体、隔盘、定子及后盖结合面胶圈损坏 Rubber rings on connections of hydraulic steering gear valve body, separate chamber, stator and rear cover damaged. (3) 轴颈处胶圈损坏 Rubber ring at axle journal damaged (4) 转向器结合部位螺栓松动 Bolts at joining portion of the steering gearloose	(1) 更换胶圈或拧紧螺栓 Replace the rubber ring or tighten the bolt (2) 清洗更换胶圈 Wash and change rubber ring (3) 更换胶圈 Replace rubber rings (4) 拧紧螺栓 Tightening bolts

AGRISON™ 1300 651 830

操作说明
Operator Instruction

故障现象 Fault	故障原因 Fault reasons	排除方法 Troubleshooting
2 转向沉重 Steering heavy	(1) 齿轮油泵供油量不足，齿轮油泵内漏或转向油箱内滤网堵塞，慢转轻，快转重 Oil delivery of gear oil pump is not enough. Gear oil pump leaks inside or oil screen inside the steering oil tank is blocked, light at slow speed and heavy at rapid speed	(1) 检查齿轮油泵是否正常，清洗滤网 Check if gear oil pump is normal. Clean the filter screen.
	(2) 转向系统有空气，转动方向盘，而油缸时动时不动 Air exists in steering system, when rotating steering wheel, oil cylinder sometimes moves and sometimes does move.	(2) 排除系统中空气，并检查吸油管路是否进气 Discharge the air in the system and check if air exists in the oil suction pipe
	(3) 转向油箱油位不足 Oil level in steering oil cylinder is insufficient.	(3) 加油至规定油面高度 Add oil up to specified oil level
	(4) 安全阀弹簧弹力变弱，或钢球不密封，轻负荷转向轻，增加负荷转向沉 Spring elasticity in relief valve becomes weak, or steel ball is not sealed, light load is steering lightly, and steering becomes heavier if load is increased.	(4) 清洗安全阀并调整安全阀弹簧压力 Wash safety valve and adjust safety valve spring pressure
	(5) 油液粘度太大 Oil viscidity too high	(5) 使用规定的油液 Apply the specified oil liquid
	(6) 阀体内钢球单向阀失效，快转与慢转方向盘均沉重，并且转向无力 Steel ball check valve in the valve body fails, steering wheel is heavy when turning it slowly or quickly, and steering is weak.	(6) 清洗、保养或更换零件 Clean, maintain or replace parts
	(7) 转向系漏油，包括内漏(油缸)、外漏 Oil leakage from steering system, including inside and outside.	(7) 检查并排除漏油点 Troubleshoot oil leakage point

AGRISOM +300 651 830

https://truckmanualshub.com/

故障现象 Fault	故障原因 Fault reasons	排除方法 Troubleshooting
3. 转向失灵 Steering not effective	(1) 拨销折断或变形 Gear shifting fork locating slot worn (2) 联动轴开口折断或变形 Linkage shaft opening broken or deformed (3) 转子与联动轴相互位置装错 Rotor and linkage shaft are mounted wrongly. (4) 转向油缸活塞或活塞密封圈损坏 Steering oil cylinder piston or piston seal ring damaged.	(1) 更换拨销 Replace fork pin (2) 更换联动轴 Replace coupled axle (3) 重新装配 Refit (4) 更换活塞或密封圈 Replace the piston or the seal ring
4. 无人力转向 Hydraulic steering without person power	(1) 转子与定子间隙过大 Clearance between rotor and stator is too big. (2) 油缸活塞密封性太差，动力转向时，油缸活塞到极端位置而驾驶员终点感不明显；人力转向时，方向盘转动、油缸不动 Sealing for oil cylinder piston is worse, the driver can not have obvious ending feel when the piston reaching the limit during power steering. And the steering wheel rotaries while the oil cylinder does not move during power steering.	(1) 更换转子和定子 Replace rotator or stator (2) 更换活塞密封圈 Replace the piston seal ring
5. 转向不灵敏 Steering not flexible	(1) 阀芯与阀套间隙过大 The gap between valve inside and valve sleeve too large (2) 联动轴与拨销间隙过大 The gap between interlocking shaft and fork pin too large (3) 联动轴与转子间隙过大 The gap between interlocking shaft and rotor too large (4) 回位弹簧片折断或过软 The return spring plate broken or too soft	(1) 更换 Replace (2) 更换 Replace (3) 更换 Replace (4) 更换 Replace

4.18.1.6 液压悬挂系统故障和排除方法

Hydraulic hitch system fault and troubleshooting

表 4-13 液压悬挂系统故障和排除方法

Table 4-13 Hydraulic hitch system fault and troubleshooting

故障现象 Fault	故障原因 Fault reasons	排除方法 Troubleshooting

AGRISOFTM 1300 651 830

操作说明
Operator Instruction

故障现象 Fault	故障原因 Fault reasons	排除方法 Troubleshooting
1. 不论轻重负荷均不能提升 No matter what the loading is heavy or light, it's forbidden to lift.	(1) 提升器壳内油面过低 Oil level inside lifter too low (2) 滤油器滤网堵塞严重 The strainer of oil filter severely blocked (3) 吸油管路进气 Air entrance into suction pipe (4) 齿轮油泵失效 Gear oil pump failed (5) 操纵手柄轴外端或内端的弹性销脱落 The spring pin at outside/inside end of operation handle dropped (6) 分配器内摆杆脱落 The swing rod inside distributor dropped (7) 主控制阀卡滞在中立或下降位置，或回油阀卡死在开启位置 The main control valve seized at the middle or lowering position. or the oil return valve seized at the opening position (8) 主控制阀卡滞 Main control valve seized (9) 下降阀卡滞 Lowering valve seized (10) 销变短，或下降阀总成松动旋出，使下降阀打不开 Pin shortened, or lowering valve assembly loose and screwed up, making lowering valve unable to be opened. (11) 缸头内通向油缸油路关闭 Oilway from cylinder end to oil cylinder closed	(1) 加油到规定油面 Add oil to the specified oil level (2) 清洗或更换滤油器滤网 Clean or replace the strainer of oil filter (3) 检查管路连接处 Check the joining portion of pipeline (4) 检查修理或更换齿轮油泵 Check, Repair or replace gear oil pump (5) 重新安装弹性销 Refit spring pin (6) 打开分配器，装好摆杆 Open distributor, and fit swing rod (7) 拆开分配器，清洗各阀 Dismantle distributor, and clean valves (8) 清洗主控制阀 Clean main control valve (9) 清洗下降阀 Clean lowering valve (10) 取下下降阀堵塞，重新调整下降阀推销的间隙或拧紧下降阀总成 Remove plug for lowering valve, readjust the gap of lowering valve push pin or tighten lowering valve assembly (11) 将油路打开 Open the oil way

AGRISONTM 1300 651 830

https://truckmanualshub.com/

操作说明
Operator Instruction

故障现象 Fault	故障原因 Fault reasons	排除方法 Troubleshooting
2. 轻负荷提升,重负荷下不能提升或提升缓慢 Lift should be in light load, and lift will be invalid or slower in heavy load	(1) 吸油路吸空或进气 The oil suction line sucks air or air enters the line (2) 系统安全阀调整压力过低 The adjustment pressure for system safety valve too low (3) 油缸安全阀调整压力过低 The adjustment pressure for oil cylinder safety valve too low (4) 齿轮油泵严重磨损压力不足 Gear oil pump severely worn or pressure inadequate (5) 油缸密封圈漏油 Oil cylinder seal ring leaking	(1) 检查吸油路及滤油器 Check oil suction line and oil filter (2) 调整或更换系统安全阀 Adjust or replace system safety valve (3) 调整或更换油缸安全阀 Adjust or replace oil cylinder safety valve (4) 修复或更换齿轮油泵 Repair or replace gear oil pump (5) 更换油缸密封圈 Replace oil cylinder seal ring
3. 农具提升过程抖动，提升缓慢 Farm machine is trembling or lifting slowly during the lifting course	(1) 滤油器堵塞 Oil filter blocked (2) 吸油管路进气 Air entrance into suction pipe (3) 齿轮油泵失效 Gear oil pump failed (4) 液压油面过低 Hydraulic oil level too low	(1) 清洗或更换滤芯 Clean or replace filter element (2))排除接头、O 形圈处漏气 Solve the problem of air leaking from joints, O seal ring (3) 更换齿轮油泵 Replace gear oil pump (4) 按要求加注润滑油 Add lube oil according to the requirements
4. 农具提升后频繁“点头”发动机熄火后静沉降快 Farm machine “nodes” frequently after being lifted. Static sediment is quick after the engine kill	(1) 分配器单向阀密封不严 The sealness of check valve of the distributor poor (2) 下降阀密封不严 Sealness of lowering valve poor (3) 油缸安全阀漏油或调整不当 The oil cylinder safety valve leaking or improperly adjusted (4) 油缸活塞 O 形圈损坏漏油 seal ring for oil cylinder damaged or leaking (5) 分配器或缸头与提升器壳体进油孔之间的密封圈安装不好脱落或损坏 The seal ring between distributor or ylinder end and lifter case improperly installed peeled or damaged	(1) 清洗单向阀必要时用细研磨膏对研 Clean check valve, and lap in the valve with fine colathar if necessary (2) 清洗或对研下降阀 Clean or lap in the lowering valve (3) 修复或重新调整油缸安全阀 Repair or readjust oil cylinder safety valve (4) 更换 O 形圈 Replace “O” seal ring (5) 检查更换密封圈 Check and Replace seal ring seal ring

AGRISOLIM 1300 651 830

https://truckmanualshub.com/

故障现象 Fault	故障原因 Fault reasons	排除方法 Troubleshooting
5 手柄在提升位置时分配器处发出尖锐响声 When the handle is in lift position, the distributor send will send out loud noise.	(1) 调整不正确，内提升臂顶提升器壳体，使安全阀开启 Because improper adjustment, the inner lifting arm props aginst lifter case to make safety valve open	(1) 首先测量此时农具提升高度，然后重新调整、缩短力位调节杆，使提升最高位置低于原来位置 First measure the lifting height of farm tool at this moment, then readjsut , shorten the force/position adjsuting rod to make lift height lower that the original position
6. 缸头无液压输出或输出无力 hydraulic output or output weak on cylinder head	(1) 没截断油缸进油路 Not cut off oil inlet pipe of oil cylinder (2) 下降速度控制阀前锥体与锥孔密封不严 Front cone and conical hole of speed lowering control valve have not been sealed tightly (3) 提升器处于提升中立位置 Lifter in neutral lifting position.	(1) 顺时针拧紧下降速度控制手轮 Tighten speed lowering hand-wheel clockwise. (2) 将下降速度控制阀前锥体与锥孔对研修复，或更换下下降速度控制阀 Match/grind front cone and conical hole of speed lowering control valve. or replace the valve (3) 将提升器操纵手柄扳到下降位置，使外提升臂降到最低位置，截断油缸进油路。然后将操纵手柄扳到提升位置。 Push lifter control handle to the lowering position to lower the outer lifting arm to the lowest position and shut off the inlet oil line to oil tank Then, put the operation handle to lift position

4.18.1.7 气刹系统故障和排除方法

Fault and troubleshooting for pneumatic braking system

表 4-14 气刹系统故障和排除方法

Table 4-14 Air brake system fault and troubleshooting

故障现象 Fault	故障原因 Fault reasons	排除方法 Troubleshooting

AGRISON™ 1300 651 830

https://truckmanualshub.com/

1. 气压不足 Air pressure not sufficient	(1) 管路漏气 Air leakage in pipeline (2) 气泵进排气阀片磨损或弹簧损坏 Air exhaust valve plate of air inlet pump worn or spring damaged (3) 气泵活塞环、气缸套磨损严重 Piston ring of air pump or air cylinder liner worn seriously (4) 气压表失灵 Air Pressure gauge failure (5) 安全阀关门不严 Relief valve closed not tightly	(1) 检查漏气处并排除 Check air leakage and make fault and troubleshooting (2) 更换 Replace (3) 更换活塞环、汽缸套 Replace piston ring or air cylinder liner (4)修理或更换气压表 Repair or replace air Pressure gauge (5) 检查或更换安全阀 Check or replace relief valve
2. 断气刹车阀不回 Open circuit brake valve cannot reset	(1) 断气刹车阀内进入灰尘 Dust into air shut-off brake valve (2) 断气刹车阀内进油或水 Oil or water into air shut-off brake valve	(1) 清洗断气刹车阀 Clean air shut-off brake valve (2) 放出贮筒内油或水，擦洗断气刹车阀 Discharge oil or water in storage cylinder, scrub away air shut-off brake valve
3. 断气刹车阀不排气 Open circuit brake valve cannot discharge	(1) 挺杆卡死 Tappet seized (2) 回位弹簧断裂或弹力减弱 Return spring broken or spring weakened	(1) 回位弹簧断裂或弹力减弱 Check to move freely hydraulic tappet without any blockage (2) 更换回位弹簧 Replace return spring

4.18.2 电器系统故障和排除方法

Ectrical system fault and troubleshooting

4.18.2.1 起动电动机故障和排除方法

Starting motor faults and troubleshooting

表 4-15 起动电动机故障和排除方法

Table4-15 Starter fault and troubleshooting

故障现象 Fault	故障原因 Fault reasons	排除方法 Troubleshooting
1. 起动电动机不运转 ectromotor does not run	(1) 蓄电池容量不足 Accumulator capacity insufficient (2) 蓄电池极桩太脏，电缆松动 Accumulator pole too dirty or cable loosened (3) 电缆线接头松动，搭铁线处锈蚀 Cable connector loosened or put up iron wire rusted (4) 起动开关等控制电路断线 The wires in control circuits such as the start switch broke	(1) 按规定向蓄电池充电 Charge the accumulator according to the specifications (2) 清除脏物，紧固连接件 Remove dirt, and tighten connecting parts (3) 紧固接头，去除锈蚀 Tighten connectors, and remove rusts (4) 检查电路，连接可靠 Check circuit, connection reliable

AGRISONIM 1300 651 830

操作说明
Operator Instruction

	(5) 碳刷与整流子接触不良 The contact between carbon brush in invalid (6) 起动电动机内部断路、短路 Interior of start motor opened shorted	(5) 调整碳刷弹簧压力，清理整流子 Adjust press of carbon brush spring, and clear commutator. (6) 检修起动电动机 Repair starting motor
2. 起动电动机起动无力，不能起动发动机 ectromotor start failure, the electromotor can not start	(1) 蓄电池容量不足 Accumulator capacity insufficient (2) 导线接触不良 Poor wire connection (3) 整流子表面烧损或有油污 Rectifier surface burnt or contaminated by oil (4) 碳刷磨损过多或碳刷弹簧压力不足，使其与整流子接触不良 Carbon brush worn too much or its spring pressure insufficient by which makes a bad contact with rectifier. (5) 电磁开关主触点烧蚀，接触不良 Main contact of solenoid switch is burned, resulting in poor connection (6) 轴承严重磨损，电枢擦壳 Bearing severely worn , and armature rubs case	(1) 向蓄电池充电 charge to the accumulator (2) 拧紧导线连接处 Tighten the connection portion of the wires (3) 磨光整流子表面或清除油污 Grind commutator surface or remove oil stain (4) 更换或调整 Replace or adjust (5) 用“0”号非金属砂纸磨光 Grind using #0 non-metal sand-paper (6) 更换轴承 Replace bearing
3. 发动机已起动，但起动电动机继续旋转，发出尖锐的噪音 After the engine has been started, the engine goes on running but sends sharp noise.	(1) 起动电动机继电器内铜接触盘和两个触点粘连 Copper contact disc inside relay of the starting motor adjoined with two contacts (2) 起动电动机杠杆脱钩或偏心螺钉松脱 The lever of starting motor unhooked or eccentric screw loose (3) 杠杆回位弹簧折断或丧失弹性 Pull rod return spring broken or elasticity lost (4) 起动电动机电枢轴折断或弯曲 Starting motor armature broken or bent (5) 齿面拉毛卡死 Toothed surface napped or seized	(1) 检查线路，修整触点 Check the circuits, and dress the contacts (2) 重新调整和固定 Readjust and fix (3) 更换弹簧 Replace spring (4) 更换起动电动机 Replace starting motor (5) 修整齿面 Dress the tooth surface

4.18.2.2 发动机故障和排除方法

Engine fault and troubleshooting

表 4-16 发动机故障和排除方法

Table 4-16 Engine fault and troubleshooting

ACKSONTM 1300 651 830

操作说明
Operator Instruction

故障现象 Fault	故障原因 Fault reasons	排除方法 Troubleshooting
1 发电机不发电 Generator does not generate electricity	(1) 接线错，接线断，接触不良 Wiring wrong, broken or contact no good. (2) 转子线圈断路 Rotor circuit broken (3) 整流二极管损坏 Rectified diode damaged (4) 碳刷接触不良 Carbon brush in a bad contact (5) 调节器损坏 Regulator damaged	(1) 检修线路 Check & repair the circuits (2) 检修或更换发电机总成 Repair or replace generator set (3) 更换二极管 Replace diode (4) 清除脏物或更换碳刷 Remove dirt and replace carbon brush (5) 修理或更换调节器 Repair or replace regulator
2 发电机充电不足 Generator harging insufficient	(1) 传动 V 带松弛 The drive V belt loose (2) 碳刷接触不良，滑环有油污 Carbon brush in a bad contact and slide ring contaminated by oil (3) 调节器损坏 The regulator damaged (4) 蓄电池电解液太少或极板硫化严重，或过于陈旧 The electrolyte in accumulator too little, or electrode is severely sulfurized, or too old	(1) 调整传动 V 带张紧度 Adjust tension of drive V belt (2) 调整碳刷，清洗滑环 Adjust carbon brush, and clean sliding ring (3) 更换调节器 Replace regulator (4) 补充电解液至规定高度，极板硫化严重不能恢复容量的蓄电池应更换 Supplement the electrolyteup to specified height. The accumulator whose electrode is severely sulfurized and the capacity could not be recovered should be replaced
3 发电机充电电流过大易烧灯泡 Charging current of generator is too large which causes bulb easy to be burnt	(1) 调节器调节电压过高 Regulating voltage for the regulator is too high (2) 调节器磁化线圈脱焊，失去调节作用 The magnetizing coil of regulator is sealing off, thus losing regulation function	(1) 按规定调整电压至合适值 Adjust pressure to proper value according to requirements (2)检修磁化线圈，重新焊牢焊接点 Repair magnetizing coil, and re-weld contact firmly.

4.18.2.3 蓄电池故障和排除方法

Accumulator fault and troubleshooting

表 4-17 蓄电池故障和排除方法

Table 4-17 Accumulator fault and troubleshooting

故障现象 Fault	故障原因 Fault reasons	排除方法 Troubleshooting

AGRISONTM 1300 651 830

操作说明
Operator Instruction

1. 蓄电池电量不足，起动发动机困难 Capacity of the accumulator is not enough, and the engine is difficult to start.	(1)电解液液面过低 The electrolyte level too low (2) 极板间短路 Short circuit between electrode plates (3) 极板硫化 Sulphurization of electrode plate (4) 线路接头接触不良，极柱上氧化物过多，充电不足 Circuit connector contact not in good, oxide on pole too much or charging not enough.	(1) 添加蒸馏水或密度为 1:1 的稀硫酸溶液 Add distilled water or dilute sulphuric acid solution with a density of 1:1 (2) 清除沉淀物，更换电解液 Remove deposits and replace electrolyte (3) 反复充放电，清除硫化 Charge and discharge repeatedly ro remove sulphurization (4) Connect, fasten, deoxidize and coat a layer of vaseline on pile head
2.Self-discharge too much	(1) 电解液中含有杂质 Impurity in electrolyte (2) 蓄电池外部导线有短路处 Short circuit in exterior wire of accumulator (3) 蓄电池表面有电解液溢出，使正、负极桩短路 Electrolyte overflows from accumulator surface. short circuit positive/negative poles (4) 将金属工具或杆件放在正、负极柱间，造成严重短路 Serious short circuit is caused by placement of metal tool or bar between positive/negative poles. (5) 极板活性物质脱落，沉积过多使极板短路；隔板损坏使极板短路；极板翘曲使正、使正负极短路 Active substance on pole breaks off,pole is short circuit caused by too much deposit or by isolation plate damaged; positive/negative pole is short circuit by pole wrapped.	(1) 按规定加注用化学纯硫酸和蒸馏水配制的电解液 Fill in electrolyte prepared with chemical pure sulphur acidand distilled water (2) 检查短路部位，排除故障 Check short circuit, troubleshoot (3) 用碱水或温水擦洗蓄电池表面及柱头，使其外部清洁(不能漏进蓄电池) Use Alkali water or warm water to scrub the surface and studs of the accumulator to make its exterior clean (without leaking into accumulator) (4) 禁止在蓄电池表面摆放金属杆件或工具 Metal bar or tool is forbidden to be placed on accumulator surface. (5) 修理或更换蓄电池 Repair or replace accumulator

4.18.2.4 仪表故障和排除方法

Instrument fault and troubleshooting

表 4-18 仪表故障和排除方法

Table 4-18 Instrument fault and troubleshooting

AGRISONTM 13006510830

https://truckmanualshub.com/

故障现象 Fault	故障原因 Fault reasons	排除方法 Troubleshooting
1. 水温表指针总指低温 finger of water Temperature gauge always indexes low temperature	(1) 线路出现断路，插接处接触不良 Circuit opened, and contact at the pug-in portion poor (2) 水温传感器损坏 Watwer temperature sensor damaged	(1) 检修线路，清除插接处赃物 Check and repair circuits. Remove dirt at plug-in portion (2) 更换水温传感器 Replace water temperature sensor
2. 水温表指针总指高温 finger of water temperature gauge always indexes high temperature	(1) 水温传感器短路损坏 Water temperature sensor short circuit or damaged. (2) 线路中有短路 Short circuit	(1) 更换水温传感器 Replace water temperature sensor (2) 检修排除短路故障 Check and repair to remove short circuit faults
3.油压或气压表指示不正常 gauge indication abnormal	(1) 线路有断路短路处 Circuit opened or short circuited (2) 传感器有断路、短路、接触不良 Oil volume sensor circuit broken, short or not in good contact	(1) 检修排除 Check and repair to remove faults (2) 检修或更换传感器 Repair or replace sensor

4.18.2.5 灯光故障和排除方法

Lamplight fault and troubleshooting

表 4-19 灯光故障和排除方法

Table 4-19 Light fault and troubleshooting

故障现象 Fault	故障原因 Fault reasons	排除方法 Troubleshooting
1. 前照灯无远近光 Front light without far/near light	(1) 线路断路；短路保险丝烧断 Circuit broken, short circuit fuse blowout (2) 灯开关接触不良、损坏 Rear light switch not in good contact or damaged (3) 灯丝烧断 Filament broken	(1) 检修接通 Check and repair, then connect (2) 检修更换 Check and repair and then replace (3) 更换质量好的灯泡 Replace with a good quality bulb
2. 后灯不亮 Rear light off	(1) 线路断路 Circuit opened (2) 后灯开关接触不良，损坏 Rear light switch not in good contact or damaged	(1) 检修接通 Check and repair, then connect (2) 检修更换 Check and repair and then replace

AGRISOM 13000651830

https://truckmanualshub.com/

5．附件、备件及易损件

Accessories, spare parts and consumables

5.1 附件

Accessories

拖拉机附件主要包括暖风机、内饰件、地板垫、挡泥板垫、摆式牵引杆等。

Tractor accessories mainly includes warm air blower, interior decoration, floor mat, swing traction rod, etc.

5.1.1 暖风机(选装)：

Warm air blower(option)

拖拉机上暖风机装在驾驶室内前上部，暖风机开关布置在暖风机上，打开电源，即可使暖风机工作，保证驾驶室内舒适的工作温度。

Tractor upper warm air blower is on the cab front top, warm air blower switch is on the blower. which can make warm air blower to work when turn on, in order to ensure comfortable work temperature in the cab.

当驾驶室内需要通风时(尤其是进入夏季)，只需关闭发动机上供暖风机的热循环水出水阀之后，打开暖风机开关：此时，暖风机的风扇开始运转。

When ventilation is needed in the cab, especially in summer, just turn on warm air blower after turning off the outlet valve for the warm air blower hot recycling water; at that time. the fan for the warm air blower starts to run.

暖风机上左右两侧的两个小翻板门是用来调节驾驶室内气流循环的。

The two small opening doors on right/left side of the warm air blower are used to adjust the circulation of air current inside of the cab;

图 5-1 暖风机

Fig.5-1 warm air blower

5.1.2 地板垫(选装)

Floor mat(option)

地板垫采用松软舒适的橡胶模制成型，整个地板垫包括四大块，厚 10 毫米，全部用塑料扣钉紧扣在地板上，当需要拆下时，先用螺丝刀将扣钉轻轻撬起，即可将相应的地板垫取下。当要重新铺垫时，只要将原来的扣钉再扣好即可。

Applying soft and comfortable rubber molding, the whole floor mat consists of four pieces with 10mm thickness which is all fixed on the floor by plastic buckles. If dismounting, the relative floor mat can be taken away after the buckles are prized up slightly with screw diver. If need mounted again, just buckle again the original buckles.

5.1.3 挡泥板垫(选装)

Fender gasket (option)

采用 PVC 发泡表面吸附面料，模制成型，整块挡泥板垫用塑料扣钉紧扣在左右挡泥板上，通常不必拆下。

AGRISONM 1300 651 830

https://truckmanualshub.com/

Applied PVC foaming surface adsorption material and molding, the whole fender gasket is fixed on right/left fender by plastic buckles.

5.1.4 摆式牵引杆(选装)：
Swing traction rod (option)

摆式牵引杆仅用于牵引式农具。牵引杆的后端通过牵引销与农具联接。牵引杆可以横向摆动，挂接农具比较方便。工作中牵引杆可以左右摆动，但在拖拉机牵引农具倒退时，必须将定位销 1 插入牵引板的孔中，使牵引杆 2 不能摆动。

Swing traction rod is just used for traction type farm machine .Traction rod rear end connected with farm machine by traction pin Traction rod can transversally swing, which will be more convenient for mounting farm amchine Traction rod can swing to right/left. However, when the tractor is towing farm machine backward, positioning pin I must be inserted into the hole of traction plate, in order to make traction rod 2 not to swing

通过翻转牵引杆可改变牵引点的高度，以达到牵引高度适宜配套农具。

Traction point can be changed to suitable height by turning traction rod, in order to connect the matched farm machine.

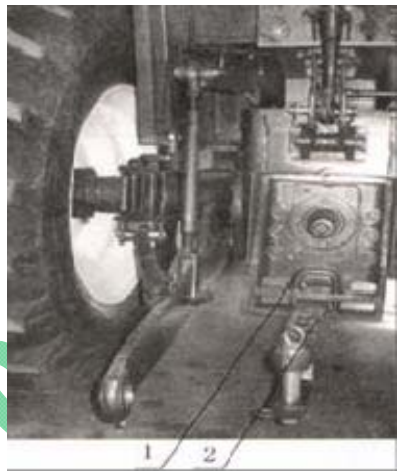

图 5-2 摆式牵引

Fig.5-2 Swing traction rod

重要事项：

IMPORTANT:

✧ 选用暖风机的拖拉机，进入冬季，发动机的冷却系统必须使用防冻液，以免冻裂暖风机或空调。
For tractor with warm air blower or air conditioner, engine cooling system must apply anti-freezing liquid in winter, in order to prevent warm air blower or air conditioner from frozen damage.

5.2 随机备件

Spare part

5.2.1 随机备件

Spare part

表 5-1 随机备件

Table 5-1 list of spare parts provided with the machine

序号 Sequence No.	代号 code	名称 description	数量 Quantity	备注 remark
1		保险片 5A Fuse 5A	1	
2		保险片 10A Fuse 10A	4	
3		保险片 15A Fuse 15A	1	

AGRISON™ 1300

附件、备件及易损件
Accessories, spare parts and consumables

序号 Sequence No.	代号 code	名称 description	数量 Quantity	备注 remark
4		保险片 20A Fuse 20A	3	
5		发动机随机备件 Engine Spares	1	来自发动机配套厂 From the engine supporting plant
6	SH400.48.050	后挂车插销总成 The rear trailer plug assembly	1	与后挂车七孔插座总成配对使用 Paired with rear trailer socket assembly
7	SH900.41.013	动力输出轴安全防护罩焊合件 PTO safety shield welding pieces	1	
8	SH900.41.117	输出轴防护套 Output shaft protective sleeve	1	塑料件 Plastic parts
9	SH900.48.036	蓄电池 6-QW-120 Accumulator 6-QW-120	1	免维护型 Maintenance-free
10	SH904.58.020	快换阳接头总成 Quick-change male connector assembly	4	选装件，仅用于配有液压后输出的机型，与快换接头总成配套使用 Optional parts, only equipped with rear hydraulic output models, and supporting the use of quick-change connector assembly

AGRISONTM 1300 651 830

5.2.2 随机工具
Facilitates provide with the machine

表 5-2 随机工具

Table5-2 facilities provided with the machine

序号 Sequence No.	代号 code	名称 description	数量 Quantity	备注 remark

https://truckmanualshub.com/

操作说明
Operator Instruction

1	QB/T 2564.4	一字螺钉旋具 1X5.5 125P Flat screw driver ,lx5.5x125P	1	
2	SH800.96-08	十字螺钉旋具 2—150 X 6 Cross slotted screw driver. 6X150P	1	
3	GB/T 3390.1	手动套筒扳手套筒 18X 12.5 socket for socket wrench, 18x12.5L	1	
4	GB/T 3390.1	手动套筒扳手套筒 21 X 12.5 socket for socket wrench, 21x12.5L	1	
5	GB/T 3390.1	手动套筒扳手套筒 27X 12.5 socket for socket wrench, 27x12.5L	1	
6	GB/T3390.3	手动套筒扳手传动附件 H12.5 Sliding T-handle for socket wrench. H 12.5	1	
7	GB/T3390.4	手动套筒扳手连接附件 JG12.5 X 250 Extension bar for socket wrench,204	1	
8	JB/T7492.1	压杆式油枪 A200 Level type oil gun,A200	1	
9	JB/T3411.47	外卡簧钳 A2.5 plier for mounting circlips forshaft,A2.5	1	
10	JB/T3411.48	内卡簧钳 A2.5 plier for mounting circlips for hole,A2.5	1	
11	SH800.96-09	内六角扳手 M8 Hexagon socket screw -M 8	1	
12	GB/T 4388	双头呆扳手 8×10 Double open-end wrench .8x10x119	1	
13	GB/T 4388	双头呆扳手 10×12 Double open-end wrench .10x12x135	1	
14	GB/T 4388	双头呆扳手 13×16 Double open-end wrench .13x16x159	1	
15	GB/T 4388	双头呆扳手 16×18 Double open-end wrench .16x18x183	1	
16	GB/T 4388	双头呆扳手 18× 21 Double open-end wrench .18x21x199	1	
17	GB/T 4388	双头呆扳手 21×24 Double open-end wrench .21x24x223	1	
18	GB/T 4388	双头呆扳手 24×27 Double open-end wrench .24x27x247	1	
19	GB/T 4388	双头呆扳手 30×34 Double open-end wrench .30x34x295	1	
20		发动机随机工具 Facility provided with the engine	1set	来自配套厂 from engine matching part

AGRISOM™ 1300 651 830

https://truckmanualshub.com/

				factory

5.2.3 用户自备维修工具

Facilities provided by the customer

表 5-3 用户自备维修工具

Table 5-3 facilities provided by the customer

序号 Sequence No.	代号 code	名称 description	数量 Quantity	备注 remark
1	GB/T 6295.1	钢丝钳 Wire cutter	1	
2	GB/T 4440	活扳手 300×36 Adjustable wrench	1	
3	SG 216	钳工锤 1 磅 Machinist's hammer,1 pound	1	

5.2.4 随机文件清单

List of documents provide with the machine

表 5-4 随机文件清单

Table 5-4 list of documents provided with the machine

序号 Sequence No.	文件名称 Document description	单位 Quantity	备注 remark
1	拖拉机使用说明书 Technical document provided with the engine	1	存放于档案袋中 Stored in archives bag
2	合格证 quality certificate	1	存放于档案袋中 Stored in archives bag
3	拖拉机三包服务凭证 Three-commitments warranty after sales service	1	存放于档案袋中 Stored in archives bag
4	空调使用使明书 Instruction manual for air conditioner	1	存放于档案袋中 Stored in archives bag
5	暖风使用说明书 Instruction manual for warm air blower	1	存放于档案袋中 Stored in archives bag
6	拖拉机零部件图册 Tractor component catalogue	1	存放于档案袋中 Stored in archives bag
7	发动机合格证 Engine quality certificate	1	来自发动机配套厂 From engine manufacturer, stored in the archives bag
8	拖拉机使用说明书 Instruction manual for tractor	1	存放于档案袋中 Stored in archives bag
9	随机物品装箱清单 Packing list of parts provide with the machine	1	存放于档案袋中 Stored in archives bag

AGRISONIM 1300 651 830

操作说明
Operator Instruction

注：

Note:

发动机随机工具、随机备件、随机文件请按照柴油机装箱单验收。

The facilities, spare parts and documents provided with the engine should be acceptance tested according to the packing list for the diesel engine.

5.3 易损件

Wearing part

沭河 SH90 系列轮式拖拉机的易损件包括：11.4 中所列的所有轴承；附录 11.3 中所列的所有油封；附录 11.5 中所列的所有密封圈；下表所示的整机使用的所有保险片、灯泡；各种橡胶护套、各种玻璃制品、皮带。

Consumables for SHUHE-SH Series machine includes: all bearings listed in appendix 11.4. all oil sea.ls listed in appendix 11.5, all fuses, bulbs, various rubber boot, various glass products and belts used for the whole machine in table 5-5.

Table 5-5 list of consumables

序号 Sequence No.	代号 code	名称 description	数量 Quantity	备注 remark
1	SH900.45.202	前下窗玻璃 Front wind shield glass	1	
2	SH900.45.206	后挡风玻璃 Front wind shield glass	1	
3	SH900.45.081	前挡风玻璃 Front wind shield glass	1	Model EC
4	SH900.45.082	左前下窗玻璃 Front wind shield glass	1	
5	SH900.45.083	右前下窗玻璃 Front wind shield glass	1	
6	SH900.45.084	左车门玻璃 Rear window glass	1	
7	SH900.45.085	右车门玻璃 left-side window glass	1	
8	SH900.45.086	左侧窗玻璃 Right-side window glass	1	
9	SH900.45.087	右侧窗玻璃 left door glass	1	
10	SH900.45.088	后挡风玻璃 Right door glass	1	
11	SH900.45.089	后下窗玻璃 glass of rear lower window	1	
12	SH900.37.174	防尘套 Rear floor glass	1	

AGRISOM 1300 651 630

https://truckmanualshub.com/

附件、备件及易损件
Accessories, spare parts and consumables

13	SH900.45.201	地板防尘罩 Seal boot	1	
14	SH400.26.116	油门防尘套 Sealing boot for accelerator pedal	1	
18		保险片 5A Fuse 5A	2	
19		保险片 10A Fuse 10A	8	
20		保险片 15A Fuse 15A	2	
21		保险片 20A Fuse 20A	3	
22	12V-H4-55/60W	远近光双丝灯泡 double-filament bulb for high beam and dipped headlight	2	
23	12V-1141-21W	转向灯泡 Steering lamp bulb	6	
24	12V-89-5W	位置灯泡 positioning lamp bulb	6	
25	12V-H3-35W	后工作灯泡 Rear work lamp bulb	2	
26	12V-H3-55W	顶工作灯泡 Bulb for top work lamp	4	
27	12V-1141-21W	制动灯泡 Braking lamp bulb	2	
28		发动机风扇皮带 Engine fan belt	1	玉柴发动机机型 type of YUCHAI power engine
29		发动机风扇皮带 Engine fan belt	1	东方红发动机机型 Type of YTO engine
31		空调压缩机皮带 Belt of air conditioner compressor	1	玉柴发动机机型 type of YUCHAI power engine
32		空调压缩机皮带 Belt of air conditioner compressor	1	东方红发动机机型 Type of YTO engine

AGRISOM 1300 651 830

重要事项：

Important

✧ 上述所列的各种备件、工具及易损件均为该机器专用件，请妥善使用或保存放置，防止丢失，以备机器使用、维修及保养时使用；如有丢失，可能会影响机器的功能使用及性能下降；

All the above-mentioned various spare parts, facilities and consumables are special parts for the machine. Please keep them in most upright position and avoid anyone lost, for the machine future use, maintenance and repair. If any one lost, the machine function may be affected or degraded

✧ 在维修保养时，请使用生产厂家要求的正规配件；如使用非正规配件，可能会影响机器的功能、

https://truckmanualshub.com/

使用性能及使用寿命。

When maintaining and repairing the machine, the original spare parts required by .the supplier should be applied, otherwise, the machine function, operation performance and work life may be affected.

AGRISON™ 1300 651 830

https://truckmanualshub.com/

存放
Storage

6. 维护保养说明

Instruction on maintenance

定期地对拖拉机各部分进行清洁、检查、润滑、紧固、调整或更换某些零件等一系列技术维护措施，总称为技术保养。做好技术保养工作，可以减缓各零部件技术状态恶化的速度，减少故障，延长使用寿命，确保拖拉机经常在良好的状态下工作。

Technical maintenance includes a series of technical maintenance measures, such as regularly cleaning and checking, lubricating, fastening and adjusting Every parts of the tractor or changing some parts, etc. Regularly maintenance can reduce the degrading speed of technical condition for Every part and component reduce fault, extend work life, and keep the tractor working in good status.

6.1 技术保养规程

Technical maintenance regulation

沭河 SH90 系列拖拉机按照累计工作小时数，确定技术保养周期，分为每班技术保养(每工作 10h)、50h 技术保养、200h 技术保养、400h 技术保养、800h 技术保养、1600h 技术保养。

Technical maintenance period for SHUHE SH series tractor depends on the accumulated work hours, which includes technical maintenance for every shift (every 10 work hours), every 50 work hours, every 200 work hours, every 400 work hours, every 800 work hours, every 1600 work hours, and special maintenance in winter and technical maintenance for long-term storage.

6.1.1 每班技术保养

Maintenance for every shift

(1)清除拖拉机上的尘土和油污；

To remove the dust and oil dirt on the tractor, and clean air separator under heavy dust working condition.

(2)检查并紧固拖拉机外部各紧固件，发现松动应及时拧紧，尤其是前、后轮的紧固螺母。

To check tightness for each fastener outside of the tractor, tight them if necessary, especially for front/rear wheel tight nut.

(3)检查发动机油底壳、水箱、燃油箱、液压转向油箱、行使制动器油箱、液压提升器及蓄电池的液面高度，不足时添加。检查油底壳液面时，须将拖拉机停放在水平的地面上，在发动机停止工作 15min 后进行。

To check the oil level of engine oil pan, water tank, fuel tank, hydraulic steering oil tank, ydraulic lifter and accumulator, and refill if necessary; when checking oil level of engine oil pan, the tractor should be parked for at least 15 minutes on a plane.

(4)按维护保养表 4-l 加注润滑脂。

Fill lubricating grease according to Maintenance Table 4-1.

(5)检查前、后轮胎气压，不足时按规定充气。

To check front/rear tyre pressure, charge it is necessary as required.

(6)检查调整主、副离合器和行使制动器踏板的自由行程。

To check and adjust the free path of main/auxiliary clutch and driving brake pedal

(7)检查拖拉机有无漏气、漏油、漏水等现象，如有“三漏”应排除。

To check if the motor has any air/oil/water leakage, if any, eliminate the leakage.

(8)按“柴油发动机使用保养说明书”中“日常班次技术保养”的要求对柴油发动机进行保养。

AGNSONTM 13006511830

存放
Storage

To maintain the diesel engine according to the requirement of daily-shift technical maintenance described in diesel engine operation and maintenance manual;

6.1.2 50h 技术保养
Maintenance for every 50 work hours

- 完成每班技术保养的全部内容；
  All content of technical maintenance after Every shift working
- 按维护保养表 4-1 加注润滑脂。
  Fill lubricating grease according to Maintenance Table 4-1
- 检查油浴式空气滤清器油面并除尘。
  To check oil level of oil bath type air separator and remove dust.
- 按“柴油发动机使用保养说明书”中“一级技术保养”的要求对柴油发动机进行保养。
  To maintain the diesel engine according to the requirement of level l technical maintenance described in diesel engine operation and maintenance manual;

6.1.3 200h 技术保养
Maintenance for every 200 work hours

- 完成 50h 技术保养的全部内容.
  All items for technical maintenance after Every 50 work hours
- 更换柴油发动机油底壳润滑油。
  Replace lube oil in diesel engine oil pan, clean oil pan and filter screen;
- 对油浴式空气滤清器油盆清洗保养.
  Replace engine oil filter element, and discharge the air in oil piping after assembly;
- 清洗提升器液压油滤清器，必要时更换滤芯。
  Clean air filter element and replace engine oil;
- 按“柴油发动机使用保养说明书”中“二级技术保养”的要求对柴油发动机进行保养。
  To maintain the diesel engine according to the requirement of level 2 technical maintenance described in diesel engine operation and maintenance manual;

6.1.4 400h 技术保养
Maintenance for every 400 work hours

- 完成 200h 技术保养的全部内容。
  All items for technical maintenance after Every 200 work hours
- 按维护保养表 4-1 加注润滑脂。
  Fill lubricating grease according to Maintenance Table 4-1
- 检查前驱动桥中央传动、末端传动油面高度，必要时添加。
  Check and adjust atomizing conditions, gas valve clearance, if necessary;
- 检查传动系统及提升器的油面高度，必要时添加。
  Check and adjust oil nozzle pressure if necessary
- 检查停车制动器手柄自由行程，必要时调整。
  Check and adjust atomizing conditions, if necessary
- 清洗保养液压转向油箱滤清器。
  Clean filter for hydraulic steering oil tank;
- 按“柴油发动机使用保养说明书”中“二级技术保养”的要求对柴油发动机进行保养。
  To maintain the diesel engine according to the requirement of level 2 technical maintenance described in diesel engine operation and maintenance manual;

6.1.5 800h 技术保养

ACRGOM 1300 651 830

https://truckmanualshub.com/

存放
Storage

Maintenance for every 800 work hours

- 完成 400h 技术保养的全部内容。
  All items for technical maintenance after Every 400 work hours
- 更换液压转向系统用传动液压用油。
  Replace hydraulic steering system with hydraulic transmission oil.
- 更换传动系统和提升器用传动液压用油。
  Replace transmission and lifter with oil which can use for hydraulic and transmission.
- 检查柴油发动机气门间隙。
  Check the diesel engine valve clearance.
- 检查调整喷油泵喷油压力。
  Check and adjust the injection pressure of injection pump.
- 对燃油箱进行清洗保养。
  Cleaning and maintenance the fuel tank.
- 按“柴油发动机使用保养说明书”中“三级技术保养”的要求对柴油发动机进行保养。
  Follow the "three technical maintenance" requirements in "diesel engine use and maintenance manual"to maintain diesel engine.

6.1.6 1600h 技术保养

Maintenance for every 1600 work hours

- 完成 800h 技术保养的全部内容。
  All items for technical maintenance after Every 800 work hours
- 对柴油发动机冷却系统进行清洗保养。
  To clean and maintain the diesel engine cooling system
- 更换前驱动桥中央传动和最终传动润滑油。
  To change lube oil in front drive axle central drive and final drive
- 对启动电动机进行检查、调整、维护和保养。
  To check, adjust and maintain the electromotor
- 按“柴油发动机使用保养说明书”中“三级技术保养”的要求对柴油发动机进行保养。
- To maintain the diesel engine according to the requirement of level 3 technical maintenance described in diesel engine operation and maintenance manual;

6.1.7 长期储存后技术保养

Technical maintenance for long-term storage

若拖拉机存放期不到 1 个月，发动机机油更换不超过 100 工作小时，就不需要专门防护措施。若拖拉机存放超过 1 个月，就必须对其进行专门的技术保养，详见本说明书第七章。

If the tractor has been stored less than one month, and within 100 hours since engine oil change, special technical maintenance is not necessary. If the tractor has been stored over one month, special technical maintenance should be done according to 7-Storage described in this manual.

6.2 技术维护保养操作

Operations for Technical Maintenance

6.2.1 拖拉机的维护保养

Tractor Maintenance

表 4-1　　沭河 SH90 系列拖拉机维护保养

AGRISOFT 1300 651 830

存放
Storage

Table 4-1 SHUHE SH series Tranctor Maintainenance

序号 No.	维护保养部位 Maintained parts	操作内容 Operating items	点数 Number of points	保养周期 Maintenance period
1	发动机油底壳 Fngine oil pan	检查液面高度 Check oil level	1	每班 Every shift
2	油浴式空气滤清器 Oil bath air filter	检查液面高度 Check oil level	1	每班 Every shift
3	蓄电池 Accumulator	检查液面高度 Check oil level	1	每班 Every shift
4	液压转向油箱 Hydraulic steering oil tank	检查液面高度 Check oil level	1	每班 Every shift
5	散热器(水箱) Radiator (for water tank)	检查液面高度 Check oil level	1	每班 Every shift
6	发动机水泵轴 Water pump shaft for engine	注润滑脂 Fill lubricating grease	1	每班 Every shift
7	喷油泵 Oil injection pump	检查液面高度 Check oil level	1	每班 Every shift
8	制动器油箱 brake tank	检查液面高度 Check oil level	1	每班 Every shift
9	后轮毂 Rear hub	注润滑脂 Fill lubricating grease	2	每班 Every shift
10	主离合器 Main clutch	调整自由行程 Adjust free stroke	1	每班 Every shift
11	副离合器 Auxiliary clutch	调整自由行程 Adjust free stroke	1	每班 Every shift
12	行驶制动器 Driving brake	调整自由行程 Adjust free stroke	2	每班 Every shift
13	风扇胶带 Fan tape	检查张紧度 Check tension	1	每工作 50h Every 50h
14	转向油缸 Oil tank for steering	注润滑脂 Fill lubricating grease	1	每工作 50h Every 50h
15	前轴主销套管 Main pin sleeve for front shaft	注润滑脂 Fill lubricating grease	2	每工作 50h Every 50h
16	四轮驱动前桥摆轴 4-wheel drive front axle swing shaft	注润滑脂 Fill lubricating grease	2	每工作 50h Every 50h
17	前轴中央摆销套管 Central swing pin sleeve for front shaft	注润滑脂 Fill lubricating grease	1	每工作 50h Every 50h
18	柴油滤清器 Diesel filter	注润滑脂 Fill lubricating grease	1	每工作 200h Every 200h
19	旋装式机油滤清器 Spin-on engine oil filter	更换滤芯 Replace filter element	1	每工作 200h Every 200h

AGRISONTM 400 651 830

存放
Storage

序号 No.	维护保养部位 Maintained parts	操作内容 Operating items	点数 Number of points	保养周期 Maintenance period
20	提升器液压吸油滤清器 oil filter type air separator	清洗或更换滤芯 Clean or replace filter element	1	每工作 200h Every 200h
21	提升器液压回油滤清器 oil filter type air separator	清洗或更换滤芯 Clean or replace filter element	1	每工作 200h Every 200h
22	喷油泵 Oil injection pump	更换润滑油 Replace lube oil	1	每工作 200h Every 200h
23	发动机油底壳 Engine oil pan	更换润滑油 Replace lube oil	1	每工作 200h Every 200h
24	油浴式空气滤清器油盆 Oil pan for oil bath air filter	保养、清洗 Maintain and clean	1	每工作 200h Every 200h
25	传动系及提升器 Drive system and lifter	检查油面高度 Check oil level	1	每工作 400h Every 400h
26	停车制动器 Parking brake	调整自由行程 Adjust free stroke	1	每工作 400h Every 400h
27	呼吸器滤芯 Filter core of respirator	清洗滤芯 Clean filter element	2	每工作 400h Every 400h
28	前轮 Front wheel	注润滑脂 Fill lubricating grease	2	每工作 400h Every 400h
29	主离合器踏板毂 Main clutch pedal hub	注润滑脂 Fill lubricating grease	1	每工作 400h Every 400h
30	副离合器踏板毂 Auxiliary clutch pedal hub	注润滑脂 Fill lubricating grease	1	每工作 400h Every 400h
31	制动踏板毂 Brake pedal hub	注润滑脂 Fill lubricating grease	2	每工作 400h Every 400h
32	前驱动桥中央传动 Center drive for front drive axle	检查油面高度 Check oil level	1	每工作 400h Every 400h
33	前驱动桥主销油杯 Main pin oil cup for front drive	注润滑脂 Fill lubricating grease	2	每工作 400h Every 400h
34	前驱动桥末端传动 End drive for front drive axle	检查油面高度 Check oil level	2	每工作 400h Every 400h
35	液压转向油箱滤清器 Filter for hydraulic steering oil tank	清洗、保养 Clean and maintain	1	每工作 400h Every 400h
36	液压转向油箱 Hydraulic steering oil tank	更换润滑油 Replace lube oil	1	每工作 800h Every 800h
37	燃油箱 Fuel tank	清洗、保养 Clean and maintain	1	每工作 800h Every 800h
38	发动机进排气门 Air inlet/outlet valve for engine	调整气门间隙 Adjust air valve clearance	8	每工作 800h Every 800h

AERSONTM 1300 651 830

存放
Storage

序号 No.	维护保养部位 Maintained parts	操作内容 Operating items	点数 Number of points	保养周期 Maintenance period
39	喷油泵 Oil injection pump	调整喷油压力 Adjust oil injection pressure	4	每工作 800h Every 800h
40	传动系及提升器 Drive system and lifter	更换润滑油 Replace lube oil	1	每工作 800h Every 800h
41	发动机冷却系统 Engine cooling system	清洗、保养 Clean and maintain	1	每工作 1600h Every 1600h
42	采用防冻液的发动机冷却系统 Engine cooling system with anti-freezing liquid	更换防冻液 Replace anti-freezing liquid	1	每工作 1600h Every 1600h
43	前驱动器中央传动 Center drive for front drive	更换润滑油 Replace lube oil	1	每工作 1600h Every 1600h
44	前驱动桥末端传动 End drive for front drive axle	更换润滑油 Replace lube oil	1	每工作 1600h Every 1600h
45	制动系统用制动液 Brake fluid for braking system	更换制动液 Replace brake fluid	1	半年 Half a year

6.2.2 技术维护保养操作
Operations for Technical Maintenance

6.2.21 蓄电池的维护
Accumulator maintenance

- **蓄电池的状态检查**
  Inspection on storage battery condition

➢ 免维护蓄电池平时不需要特殊维护。观察液体比重计观察孔显示：绿色：电池电量充足；黑色：白色：电池基本无电。

It is not necessary to make special maintenance for maintenance-free storage battery.Areometer observation port show that, green for sufficient electricity of storage battery, while black & white for insufficient and none of electricity of storage battery.

➢ 蓄电池观察孔出现黑色显示时需进行补充充电；观察孔出现白色显示时，需要更换蓄电池。

The black colour of storage battery observation port showing means the need for electricity supplement, while white mean the need for replacing storage battery.

图 6-1 液体比重计观察孔
Fig.6-1 areometer observation port

- **蓄电池的维护保养**
- **Storage battery maintenance**

➢ 蓄电池应贮存在清洁、干燥、通风的库房内，温度在(0～40)℃（摄氏度）之间。搬运时应轻放，防止碰撞，切勿倒置；

AGRISONTM 1300 651 830

存放
Storage

Storage battery should be stored in clean, dry and ventilated warehouse within temperature of (0-40)℃ (Celsius degree). Be careful while carrying, prevent collision and keep upright;

- 蓄电池端子与电源接头应连接牢固，以防起动时熔化腐蚀，应在接线端子外涂凡士林；
  The connection between storage battery terminals and power connection should be firm to prevent melting and corrosion while starting, and apply vaseline on the terminal blocks exterior;
- 保护蓄电池外部端子清洁
  Protect external terminal of storage battery to be clean;
  定期检查发电机输出电压是否符合标准，电压为(14. 2±0. 25)V（伏）。
  Regularly check if output voltage of generator meets standard, and voltage is (14. 2±0. 25)V(volt)

注意：

CAUTION:

- 充电时，保证室内空气畅通，远离明火，不可将电解液溅到人体或衣物上，以免造成意外伤害危险；
  During charging, ensure good ventilation of indoor air and be away from open flame, and it is not allowable to splash electrolyte on human body or cloth to avoid injury and danger;
- 充电过程中电解液温度不得高于 45℃（摄氏度），如到此温度，为防止意外危险发生，应将充电电流减半或停止充电以达到降温的目的，但须相应延长充电时间；
  During charging, the temperature of electrolyte should be lower than 45℃(Celsius degree). In case of above that, for avoiding the occurrence of injury and danger, should halve current or stop charging to achieve cooling, while extending corresponding charging time is necessary;
- 充电结束时应首先断开电源，方可使电源与极柱断开，以防擦火引起火灾或爆炸。
  Firstly, should cut off power supply after completing charging that keep power away from terminal post to avoid fire or explosion.

6.2.2.2 行驶制动器油箱的检查和维护

Brake oil tank inspection and maintenance

行驶制动器油箱设置于机罩支架的右侧，正常时制动液面应高出中间凸台 10mm～15mm，当低于此值时应找出漏油原因并排除，然后补充加油。

Driving brake reservoir bracket disposed on the right side of the hood, the brake fluid level should be higher than normal intermediate bosses 10mm ~ 15mm, while below this value should identify and eliminate leakage causes and then supplement refueling.

注意：

Note:

- 正确的制动液液面对制动系统的正常工作至关重要。液压制动用油必须是合成型，不得用含有酒精成份的制动油或共他机械油代替。
  Right brake fluid fluid working face of the braking system is essential. Hydraulic brake oil must be synthetic, not use alcohol based brake fluid or mechanical oil instead of him.

6.2.2.3 液压转向油箱的检查和维护

Hydraulic Steer Oil Tank Inspection and Maintenance

液压转向油箱设置于机罩后体下的右侧。打开油箱盖(带油尺)观察油尺上是否有油痕，如无油痕，说明转向油箱内油量不足，应检查找出漏油原因，然后拆下油箱补充加油至油尺的中间刻线，再装回原位。

AGRISOVM 1300 651 830

存放
Storage

检查时应系统查验液压转向油缸、油管及接头各处均不得漏油，否则易造成转向不灵，油箱内滤网应定期清洗或更换。

Hydraulic steer oil tank mounted on the right side of engine hood. Open the oil tank cover (with dip stick), inspect if there is any oil mark on the dip stick. If not, it indicates the insufficient oil in the steer oil tank and locate the specific reason for oil leaking, then repleshing the oil to the central mark of dip stick, and reinstall it. The hydraulic steer oil tank, oil pipe and the terminals should be inpected systematicly and thoroughly with no oil leaking, otherwise it may result in ineffective steering trouble. The oil tank internal filter should be cleaned or changed regularly.

在检查油面时，应同时检查油箱盖上面中心位置的通气阀(如铆钉状)起落是否灵活，如有油污影响起落应清洗干净。

When checking the oil level. the ventilation hole valve (as rivet style) in the center of the oil tank cover should also be checked at the same time; check if it operates acutely, and clean it if any oil filth affects the operation.

6.2.2.4 油浴式空气滤清器的保养
Oil-bath Air Cleaner Maintenance

打开滤清器下部搭钩，将底部油盆拆下，倒掉脏油，并用煤油或柴油清洗干净，同时清洗滤芯，再加入新的机油至油面高度。然后重新安装好.

Undo the lower agraffe of Cleaner, remove the bottom oil basin, throw away the waste oil, clean it and filter element with kerosene or diesel. then add up new oil to the height of oil surface, and reinstall them

6.2.2.5 干式空滤器的使用与保养
Use and Maintenance of Dry Air Cleaner

干式滤清器使用说明

Use of Dry Air Cleaner

- 当滤清器阻塞报警器指示警告信号或工作 50～10 小时后，需保养主滤芯：
  When the filter blocking alarm indication warning signals or working 50 to 10 hours later, the need to maintain the main filter:
- 在工作环境灰尘较多的情况下，每 8 小时或每班次需对主滤芯进行保养：
  In the case of dusty work environment, every 8 hours or every shift required to carry out maintenance on the main filter:
- 当主滤芯上的尘土经保养后无法清除干净或主滤芯有破损时，应更换滤芯。
  When the main dust on the filter can not be cleaned by the maintenance or after the main filter is damaged, replace the filter.

干式滤清器保养方法

Dry filter maintenance methods

- 取出滤芯，用毛刷对空滤器内壳进行清扫，并排出橡胶除尘袋中的尘土；
  Remove the filter with a brush on the inner shell for cleaning the air filter and exhaust rubber dust bag dust;
- 一面转动滤芯，一面用小于 500Kpa 的压缩空气从滤芯内部向外吹尽尘土；
  While rotating the filter, they use less than 500Kpa compressed air from the inside outward Chuijin dust filter
- 重新装配滤芯。
  Reassemble filter.

重要事项：

IMPORTANT:

AGRISONTM 1300 651 830

存放
Storage

✧ 空气滤清器的正确使用保养直接关系到发动机的使用寿命，因而必须始终保持其清洁。在农田作业时，每班作业都要检查清洗换油。拖拉机在配套收割机时，加高一级滤清器的位置使用效果更好。干式空滤器在保养时禁止用油水冲洗滤芯。

Proper use and maintenance of air filter is directly related to the life of the engine, and therefore must always keep it clean. In agricultural operations, the class work should check the cleaning oil. When the supporting harvester tractors, heightening a filter used in place better. Dry-type air filter prohibit the use of water during maintenance Rinse the filter.

6.2.2.6 风扇胶带张紧度的调整

Fan adhesive tape tension degree adjustment

用大拇指下压风扇胶带中间部位，施加的力为 29.4N～49.0N，其下压距离为 15mm±3mm，如不符合此要求，应进行调整，其方法如下：

Press the fan adhesive tape central part with thumb, push a pressure of (29.4～49.0) N, press distance(15±3)mm, if not meet the requirements, it should be adjust as follow

松开发电机调节支架上的固定螺母，向外侧扳动发电机，使胶带张紧，再拧紧发电机支架上的固定螺母。

Release the fixing nut on the generator adjusting bracket, pull the generator inside out, make the adhesive tape tense. and then screw down the fixing nut on the generator bracket

6.2.2.7 发动机油底壳油量的检查及换油

Engine Oil Basin oil Quantity check and oil replacement

拔出位于发动机油底壳左前方的油尺，检查油面高度是否在上下刻线之间。若油面达不到下刻线，则应取下发动机正时齿轮室盖上的加油口盖进行加油。

Take out the engine oil basin left front dip stick, check if the oil height is located between the upper and lower marks. If oil surface not reach the lower mark, uncover the oil cover on the engine timing gear cover and inject oil

When maintaining oil replacement, loosen screw the oil drain plug on the lower part of oil basin, discard the dirty oil, clean un and refilling new oil

6.2.2.8 前桥的保护

Front Axle Maintenance

按维护保养要求对主销套管、前桥中央摆销套管、转向油缸两端球形接头及横拉杆球头处加注润滑脂，检查横拉杆球销螺母及油缸两端销钉螺母是否松动。

According to the maintenance requirements ,add lubrication oil on king pin tube, front axle central swivel pin tube, steering oil tank ball joints and tie rod ball type, check if the tie rod ball nut and two ends of oil tank pin nuts were loose

4.2.2.9 燃油滤清器的保养

Fuel Filter Maintenance

AGRISONTM 1300 651 830

存放
Storage

燃油滤清器见图。发动机采用 2 级滤清器串联，左边为第 1 级，右边为第 2 级。纸质滤芯不允许清洗，发动机每工作 200h 后更换第 1 级滤芯，更换时可将第 2 级滤芯装在第 1 级内，在第 2 级内换上新滤芯。

See the diagram for the fuel filter. The engine adopts two-level filters connected in series. The left one is the first level and the right one is the second. Washing the paper element is prohibited. After the engine has been running for every 200h, the first-level filter element should be replaced. In practice, the second-Level filter element can be installed in the first-level filter while the second-level filter is installed with a new element

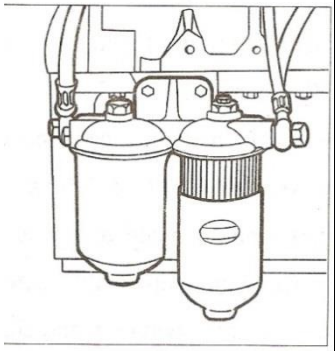

图 6-2 柴油滤清器
Fig.6-2 Fuel filter

6.2.2.10 旋装式机油滤清器的保养

Rotary - mounted oil filter maintenance

旋装式机油滤清器位于发动机左下侧，发动机每工作 200h 后应按技术要求更换。

Rotary - mounted oil filter is located in the lower left side of the engine, the engine after every working 200h technical requirements should be replaced.

旋装式机油滤清器采用整体更换，安装时必须拧紧。

Rotary - mounted oil filter used to replace the whole, the installation must be tightened.

6.2.2.11 液压滤油器的保养

Hydraulic oil filter maintenance

提升器液压吸油滤清器位于发动机右侧下方。保养按技术要求进行。方法如下：旋开液压滤清器后端盖，取出网式滤芯，用汽油清洗干净并用压缩空气吹净。当滤芯难以清洗干净或损坏时，应更换新滤芯。回油滤清器位于提升器壳体左侧，每工作 100 小时应进行清洗，当滤芯难以清洗干净或损坏时，应更换新滤芯。

Lifter hydraulic oil filters are located under the right side engine. Maintenance according to technical requirements. As follows: Unscrew the hydraulic filter end cap, remove the comb filter, clean with gasoline and use compressed air to blow. When the filter is difficult to clean or damaged, replace with new filter. Back to the oil filter is located in the left side of the lifter body, every 100 hours of operation should be cleaned when the filter is difficult to clean or damaged, replace with new filter.

6.2.2.12 前驱动桥末端传动油面检查

Front drive axle end of the transmission oil level check

前驱动桥末端传动油面检查螺塞位于前轮毂，使螺塞口处于水平位置，加注新机油至螺塞口。

Front drive axle end of the transmission oil level check plug is located in the front hubmake plug ports in the horizontal position, filling the new oil to plug ports.

6.2.2.13 前驱动壳体油面检查

Check the oil level of front drive housing

检查前驱动壳体油面时(见图)，应拆出螺塞“A”，油面应达到螺塞孔处，否则应加机油。更换机油时，应从螺塞“B”处放尽污油，再拧上螺塞“B”，从螺塞“A”处加入新机油。

Check the front drive housing oil surface (see figure), should be split out plug "A", the oil level should reach the plug hole, or should add oil. Oil change, should plug "B" at the exhausted waste oil, and then screw on the plug "B", from the plug "A" by adding new oil.

AGRISON™ 1300 651 8

存放
Storage

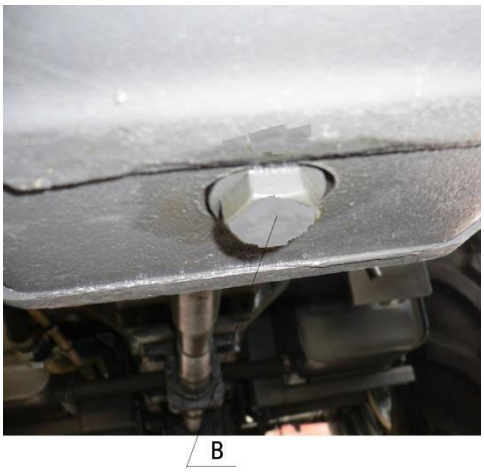

图 6-3 放油螺塞
Fig.6-3 Oil drain plug

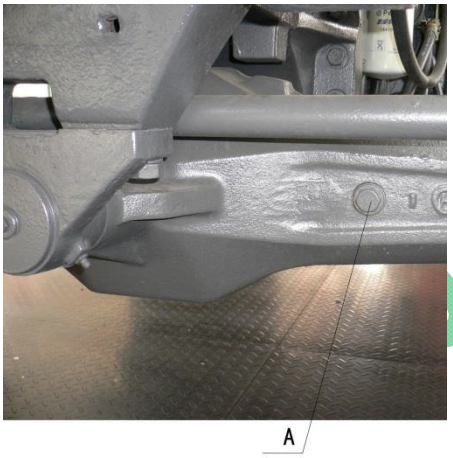

图 6-4 加注孔螺塞
Fig.6-4 Filling hole plug

6.2.2.14 前轮润滑油加注

Lub oil filling of the front wheel

沭河 SH90 系列拖拉机前轮的润滑在前轮的内侧轮毂油杯处加注润滑脂。

Fill lubricating grease in the oil cup of the inner hub of the front wheel.

6.2.2.15 前驱动桥主销的润滑

front drive axle central swivel pin tube

沭河 SH90 系列拖拉机前驱动桥中间摆轴两端各有 1 个油杯，要定期加注润滑脂，一般每工作 400h 加注一次。There is an oil cup at each end of the central pendulum shaft of the front drive axle. It is necessary to periodically add grease in these cups, generally every 400h a time.

6.2.2.16 传动系的保养

Transmission system maintenance

检查油面时，要将拖拉机停放在水平地面上，将发动机熄火，将位于主变速杆右侧的油尺拧出，擦拭干净，然后插入油尺，如果油面低于油尺的下刻线，应补加传动油至油尺上下刻线之间(应在加机油 5 分钟后测量)。更换润滑油时，卸掉位于传动箱底部的放油螺塞，放尽脏油，并用柴油清洗，然后把放油螺塞拧紧，加注新机油。

When checking oil surface, parking the tractor in a flat ground, extinguishing the engine, take out the dip stick of the lifter front part and rear axle, wipe up, then insert the dip stick. If the oil surface lower than the lower mark, filing the lub oil till the oil surface locates between the upper and lower marks (measure filling lub oil after 5min) When changing lube oil. the drain plug l in the transfer box should be removed, to completely drain used oil, then put oil drain plug to tight, and fill fresh lube oil.

6.2.2.17 提升器的保养

Lifter Maintenance

将拖拉机停放在水平地面上，将提升臂下降至最低位置，发动机熄火，拧下提升器上盖上的油尺，检查油面高度，如果低于下刻线应补充加油至上下刻线之间。更换液压油时应将螺塞卸掉放尽脏油，清洗干净后，按要求加注新液压油。

Parking the tractor in flat ground, descending lift arm to the minimum location, extinguishing engine, taking out the lifter cover dip stick, check the oil surface height. If the surface is under the lower mark, filling the oil till it locates between upper and lower marks. In hydraulic oil replacement, the plug should be removed to release dirty oil, and new oil be filled in as required after cleaning it.

AGRISOM 1300 651

https://truckmanualshub.com/

存放
Storage

6.2.2.18 燃油箱的保养

Fuel Tank Maintenance

将拖拉机停放在水平地面上，发动机熄火，卸掉燃油箱下面的放油螺塞，放出油箱底部的沉积物。油箱具有贮存油料、沉淀水分和杂质的作用，使用中应定期进行清洗，清除污物。

Parking the tractor in flat ground, extinguishing engine, take off the drain plug on the fuel tank drain the used oil in the bottom Oil tank functions reserve oil, subside wet and impurity.

6.2.2.19 轮胎充气压力的检查

Tire inflation pressure check

用气压表检查轮胎压力，轮胎充气压力见拖拉机技术规格。轮胎压力过高或过低都将缩短轮胎寿命，并对拖拉机的行驶操纵产生不良影响。

Check tire pressure with a barometer. Common tire inflation pressure refers to Technical Specifications of tractors. Too high or too low tire pressure will shorten the tire life and have negative impacts on traffic control of tractors.

6.2.2.20 发动机冷却系统的保养

Clean regularly during using process

发动机用冷却液可以是煮沸的自来水，也可以是防冻液。防冻液的有效期为 2 年或 1600h，超过此期限应更换并冲洗冷却系统，然后再加入新的防冻液。

Engine Cooling System Maintenance Cooling fluid of engine could either be the tap water or antifreeze. The valid date for antifreeze is 2 years or 1600h, replacing and cleaning the cooling system if excess the date, then fill with fresh antifreeze

冷却系统水垢的清洗：在保养前一班，以每 10L 水中加 750g 苛性钠和 150g 煤油的比例的溶液加满冷却系统。发动机以中速运转 5min～10min，将溶液停留 10h～12h(注意：冬季必须保温以防冻结)，然后重新启动发动机以中速运转 20min 后，停机放出清洗液。

Cooling fluid of engine could either be the tap water or antifreeze. The valid date for antifreeze is 2 years or h, replacing and cleaning the cooling system if excess the date, then fill with fresh antifreeze.

Cooling system scale cleaning: before maintaining, add 750g caustic soda and 150g kerosene in every 10L water then fill them into the cooling system. Running the engine in medium speed for(5-10)min, keep for(10-12)h(reserve the heat and avoid freeze in winter),then start up the engine in the medium speed for 20min, then stop and drain the cleaning fluid.

待发动机冷却后把水管插入水箱进行冲洗，这时应将水箱底部的放水阀打开。清洗后关上放水阀，并加水让发动机运转数分钟后再把水放尽。待发动机冷却后，再按规定添加新的防冻液或冷却水。

After the enging cooled down, unbolt the water release valve at the bottom of water tank. Clean the water tank with the water pipe, check the water tank buffer regularly, jf it got aging replace a new water tank for fear of shorten using life. Turn off the water releasing valve, running the engine for several minutes. After the engine cool down, add new antifreeze or cooling water.

重要事项：

Important notes

在冬季，应根据气温条件经常检查防冻液的浓度，如不合适就要立即恢复正常浓度。对于未使用防冻液的拖拉机待水温下降至 70℃以下时，在发动机怠速运转情况下应把水放尽，以免冷却水结冰将机体冻裂。

In winter, in accordance with the temperature, check the thickness of antifreeze , if out of place, recover the normal thickness. As to tractor with no antifreeze, when temperature fall below 70℃, drain the water during

AGRISOM 1300 651 830

https://truckmanualshub.com/

the idle speed, avoiding cooling water freeze to split.

6.2.2.21 各种呼吸器的维护保养

Maintenance of various respirators

拖拉机停机后，将各种呼吸器逐个拆下，用干净的柴油清洗，清洗后再装回车上，装配时注意要排除油路中的空气。

Afte tractors stop, remove respirators one by one and clean them with diesel before installing. During assembly, be sure to remove the air in the oil circuit.

6.2.2.22 燃油系统的排气

Fuel System Emission

如果拖拉机长期停用或在更换柴油滤清器芯，以及油箱放空的情况下，空气都可能进入燃油管路。燃油系统中的空气会使发动机启动困难。应在加满油箱，油路开关处于接通位置时，按以下步骤排除：先松开燃油滤清器放气螺钉“A”，上、下掀动输油泵手压泵拉钮“B”，直至柴油从放气螺钉孔中流出而无气泡为止，再拧紧放气螺钉“A”，然后松开喷油泵放气螺钉“C”，上、下掀动输油泵手压泵拉钮“B”，直到柴油从放气螺钉孔中流出而无气泡为止，再拧紧放气螺钉“A”。

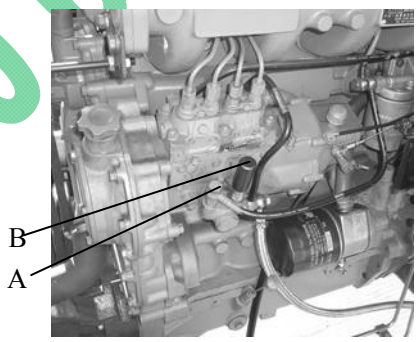

图 6-5 手油泵和放气螺钉

Fig.6-5hand pump and bleed screw

If the tractor long-term disabling or changing the fuel filter core, and fuel tank vent cases, air may enter the fuel line. The fuel system air will make engine start difficult. Should fill the tank, oil switch in the ON position, press the following steps to troubleshoot: Loosen the fuel filter bleed screw "A", the upper and lower tilt pump hand pump pull knob "B", until the diesel fuel from the bleed screw out of the hole without bubbles up, and then tighten the bleed screw "A", then release the fuel pump bleed screw "C", the upper and lower tilt pump hand pump pull knob "B" until the diesel fuel from the bleed screw without bubbles up out of the hole, and then tighten the bleed screw "A".

6.2.2.23 制动系统的排气

Air release of braking system

AGRISONIM 1900 651 830

存放
Storage

制动系统油管经拆卸后，或进行制动平顺性(同步性)检查调整时，都必须对制动系统进行排气。

Air release of braking system is needed after the pipeline of the braking system is dismantled or braking synchronization check or adjustment is made.

制动系统排气应当由训练有素、经验丰富的人员按下列步骤进行：先将制动油箱加满油，缓慢踩下左制动器踏板到底，使之建立制动压力。制动系统排气应当由训练有素、经验丰富的人员按下列步骤进行：先将制动油箱加满油，缓慢踩下左制动器踏板到底，使之建立制动压力。

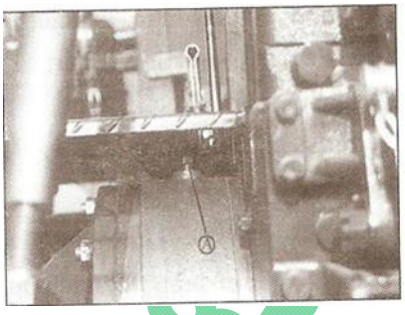

图 6-6 制动器放气螺钉
Fig.6-6 Brake bleed screw

Air release of braking system should be carried out by trained experienced personnel according to the following steps: first fill the brake oil tank top up, slowly tread down the left brake pedal so as to make it have brake pressure. Loosen the release plug "A" to half an lap so as to release the air. Tighter the release plug "A", and repeat the above action until the spill oil has no air bubbles.Then step the brake pedal again to set up oil pressure. When the pedal stroke reaches the normal stroke, oil pressure is fully set up (reach the required pressure). Note: finally wipe the oil on the half axis shell to prevent paint from falling off. Release air in the brake on the the other side in line with the above order. Finally fill oil into the the fuel tank of the brake to regulated liquid level.

警告：

WARNING:

如果没有放尽空气，制动系统可能失灵!

If the air in the braking system is not completely released, it might lead to failure of the braking system!

6.3 拖拉机底盘的调整

Tractor chassis adjustment

6.3.1 离合器的调整

Clutch adjustment

6.3.1.1 离合器踏板自由行程的调整

Adjustment of free of the clutch pedal

- 主离合器操纵机构按如下步骤调整：

  The control system of the main clutch are adjusted as follows:

a. 调整中间杆 7 的接合长度，使主离合踏板自由行程为：28mm～40mm，然后锁紧拉杆螺母 6。

adjust the connecint length of middle rod 7 so that the free stroke of the main clutch pedal is: (28-40) mm, and then lock the nut of the bar 6.

b. 调整调整螺钉合件 3 的伸出长度，限定主离合器踏板工作行程在 130mm～140mm 范围内，使主离合器分离彻底，并能灵活换档，然后将调整螺钉合件用螺母锁紧。

adjust the stretching length of adjusting screw assembly 3 to limit the work storke of the main clutch pedal at (130~140) mm so that the main clutch and support clutch are completely separated, flexible shift can be made. and then lock the screw assembly together with locking nut;

AGRISON™ 1300 651 6

存放
Storage

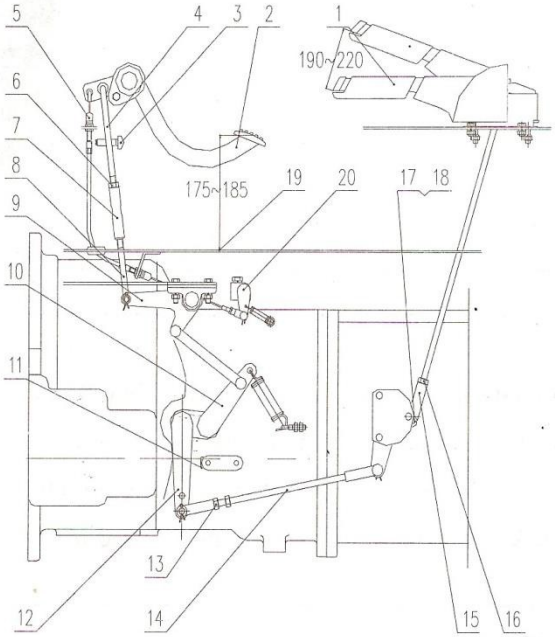

图 6-7 离合器空行程调整

Fig.6-7adjustment on clutch pedal free path

1.副离合操纵手柄 2.踏板 3.限位螺钉 4 上拉杆 5.连锁拉线 6.螺母 7.中间杆 8.下拉杆 9.过度杆 10.主离合摇臂轴焊合 11.限位螺钉 12.副离合摇臂 13 螺母 14.副离合拉杆 15.拉杆叉 16.螺母 17.开口销 18.销轴 19.地板 20.互锁销

1. support clutch control handle; 2. Pedal; 3. limit screw; 4. upper rod; 5. interlocking cable; 6. Nut; 7.middle bar; 8. lower bar; 9.transition lever; 10. main rocker arm; 11. limit screw; 12. support clutch rocker arm; 13. Nut; 14. support clutch pull rod; 15. rod end yoke; 16. nut; 17. cotter pin; 18. Pin; 19. Floor; 20. interlocking -axis rocker arm;

- 副离合器操纵机构按如下步骤调整：

The control system of the support clutch are adjusted as follows:

a. 调整副离合拉杆 14 长度，使副离合操纵把手 1 自由行程 为：30mm～40mm，然后锁紧拉杆螺母。

adjust the length of support clutch pull rod 14 so that the free stroke of the support clutch control handle l is: (30 - 40) mm, and then lock the nut of the bar.

b. 调整变速箱右侧限位螺钉 ll 长度，限定副离合操纵把手 1 工作行程在 190mm～220mm 范围内使副合器分离彻底；动力输出能灵活换档，然后将限位螺钉 11 用螺母锁紧。通过调整联锁拉线 5 两端的紧固螺母相对于拉线安装座的位置，使变速箱总成上的联锁轴摇臂 20 在未踩离合踏板时的初始位置处于图示竖直状态，然后拧紧螺母。

adjust the length of limit screw 11 0n the right of the gear box. and limit the support clutch control handle at (190 - 220) mm so that the main clutch and support clutch are completely separated;

Power output can be shifted flexibly, and then lock the limit screw with nuts. Adjusting the fastening nut at both ends of the interlocking cable 5 in relation to the location of cable installation seat so that the initial position of The interlocking rocker arm 20 0n the gear box assembly is vertical as shown in the figure when the clutch is not stepped, and then tighten the nut.

存放
Storage

重要事项：

IMPORTANT:

✧ 应经常检查及调整离合器自由行程，确保踏板自由行程在 30mm～40mm。
The free stroke of the clutch should be often checked to ensure that the free stroke of the pedal is (28～40) mm so to prevent abnormal clutch wear.

6.3.2 制动器操纵机构的调整

Adjustment of brake control gear

制动器的调整见图。

Adjustment of brake control gear refers to the figure.

通过调整限位螺钉 ll，使踏板中心与地板间的高度为 175mm～185mm：通过调整限位螺钉 3，保证限位螺钉 3 与制动泵之间的间隙 A 为 3mm～4mm，使踏板自由行程在 20mm～26mm 范围内；工作行程为 110mm-120mm 范围内。手制动操纵把手的工作行程为 220mm-250mm，调整手制动拉杆的长度，保证在规定的工作行程范围内可靠地实现驻车制动。具体调整方法为：将手制动操纵把手置于初始位置（操纵杆水平放置），取下开口销，抽出销轴 7，松开螺母 9，转动拉杆叉 8 来调整手制动拉杆的有效长度，直到工作行程满足要求为止。

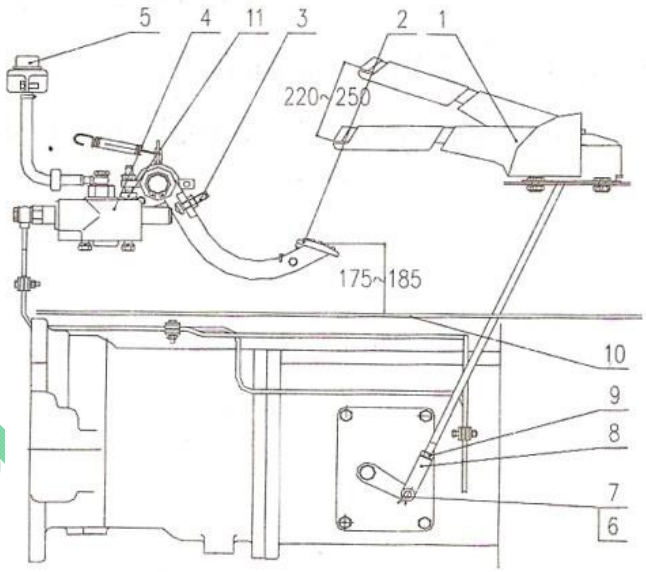

图 6-8 制动系统的调整

Fig. 6-8 Adjustment of brake

1.手制动操纵把手；2.踏板；3.限位螺钉；4.制动泵；5.制动油箱；
6.开口销；7.销轴；8.拉杆叉；9.螺母；10.地板；11.限位螺钉

1.manual brake control handle;
2.pedal; 3.limit screw; 4.brake pump;
5.brake tank; 6.cotter pin; 7.pin
8.rod end yoke; 9.Nut;
10.floor 11.limit screw

Adjust the height between the center of the pedal and the floor to(175~185)mm by adjusting the limit screw Ⅱ; ensure that the gap between the limit screw 3 and the brake pump is (3-4)mm so that the free stroke of the pedal is within (20~26)mm and the working trip is within (110 - 120) mrn by adjusting the limit screw 3. The working stroke of the manual brake control handle is (220 - 250) mm. Adjust the length of handbrake rod to ensure reliable parking and brake in the scope of the regulated working stroke. The specific adjust methods are: put the manual brake control handle at the initial position (joystick is placed horizontally), remove the cottor pin 7, take out nut 9, rotate rod end yoke 8 to adjust the effective hand brake rod length, until the trip meet the job requirement.

AGRISONTM

存放
Storage

注意：

Note:

(1)拖拉机左、右制动踏板的自由行程必须调整一致，否则在紧急制动时，拖拉机将会向一边急剧偏转，造成事故。

If the trace of right and left drive wheel on the road is consistent. such as the two side trace is in straight line, parallel and same long, it means that the adjustment is suitable. Otherwise, re-adjustment is necessary. If it is still not good even after repeated adjustment, the brake should be checked from interior.

为了可靠起见，制动器操纵机构调整后，还要进行制动试验，其步骤是：联锁左右制动踏板，将拖拉机开到干燥而平坦的路面上，在高速直线行驶的情况下，分离主离合器后，用制动器紧急制动，然后停车检查驱动轮在路面上的滑移印痕。若左、右驱动轮在路面上的印痕一致(两边印痕都成直线、互相平行、长度相等)，说明调整合适，否则需要重新调整。若反复调整不好，应检查制动器内部。

For reliability reasons, the brake adjustment control mechanism, but also for the brake test, the steps are: about interlocked brake pedal, the tractor on a dry, flat surface, in the case of high-speed straight running, separate master clutch after emergency braking with brake, then stop and check the drive wheel slippage on the road prints. If the left and right wheels on the road the same impression (prints both sides in a straight line, parallel to each other, of equal length), indicating that the right to adjust, or need to re-adjust. If repeated adjustments bad brakes should be checked internally.

6.3.3 变速箱的调整
Gearbox adjustment

变速箱具有 16 个前进档和 8 个倒退档。在使用过程中，一般不需要调整，但在使用和保养过程中应注意：

Gearbox has 16 forward and 8 reverse gears. During use, generally do not need to adjust, but in the use and maintenance process should pay Caution

变速箱的润滑油与后桥润滑油相通，加油口在提升器壳体上，放油时，应分别拧开变速箱和后桥放油螺栓，并将螺栓塞上吸附的铁屑清洗干净。

Gearbox and rear axle lubricant oil interlinked, fuel filler in improving housing, put the oil should be separately unscrew gearbox and rear axle oil drain bolt and bolt stuffed adsorbed iron clean.

用油尺检查润滑油液面的高度。

Check the oil level with oil-foot height.

6.3.3 后桥的调整
Adjustment of the rear axle

6.3.3.1 小圆锥齿轮轴轴承的调整
Small bevel gear shaft bearing adjustment

AGRISOLTM 1300 651 030

存放
Storage

小圆锥齿轮轴轴承的调整见图。

Small bevel gear shaft bearing adjustment shown in Figure.

小圆锥齿轮轴 1 上的 2 个圆锥滚子轴承 5 和 9 是预紧的。使用过程中由于轴承的磨损使小圆锥齿轮轴产生轴向游隙。重新调整时，先减少调整垫片 7(减少的垫片应保存好，备用)，使圆螺母 4 旋紧后单独转动小齿轮时产生 1.5N.m～2.5N.m 预紧阻力矩。然后测量尺寸 A，选择不同的垫片 6 厚度 δ，

以保证尺寸 A-δ=156 $^{0}_{-0.03}$mm

The two tapered roller bearings 5 and 9Small bevel gear shaft 1 of is preload. Use due to bearing wear make small bevel gear shaft produces axial clearance. Re-adjust, first reduce the adjusting washer 7 (reducing gasket should save, backup), so that after a single round nut 4 Tighten generated when rotating pinion preload drag torque 1.5Nm ~ 2.5Nm. Then measure the dimensions A, choose a different gasket 6 thickness δ,to ensure that the size of A-δ = 156 0-0.03mm.

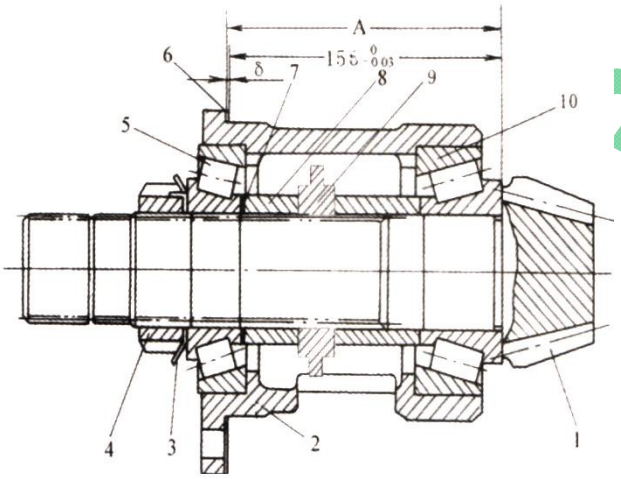

图 6-9 小圆锥齿轮总成

Fig.6-9Small bevel gear assembly

l.小圆锥齿轮轴；2.轴承座；3.止退垫片；4.圆螺母；5.圆锥滚子轴承；

6.调整垫片：7.调整垫片；8.隔套；9.前驱动主动齿轮 l0.圆锥滚子轴承：

l. Small bevel gear shaft; 2. bearing housings; 3. retaining washers; 4 round nut; 5. tapered roller bearings;

6 shims: 7. Adjusting shims; 8 spacer; 9 front drive pinion l0. Tapered roller bearings:

6.3.3.2 差速器轴承的调整

Differential bearing adjustment

AGRISONT 1 830

存放
Storage

差速器轴承的调整见图。

Shown in Figure differential bearing adjustment

差速器左、右轴承 8 和 16 也是预紧的，使用中由于轴承磨损，使大锥齿轮 2 产生轴向游隙，预紧力减小。因此应定期检查。调整时将差速器总成放在平台上，加 80N 的轴向力，测出大圆锥齿轮背面到轴承 16 端面的距离 y_2 和左、右轴承端面间距离 y_1。选择调整垫片 17 的厚度 $\delta 1=61.6-Y_2$(mm)，$\delta_2=213.3-(Y_1+\delta_1)$(mm)。

Differential left and right bearings 8 and 16 are also preloaded, the use of the bearing wear, so that generated large bevel gear two axial clearance, preload decreases. Therefore should be checked regularly. The differential adjustment assembly on the platform, add 80N axial force, a large bevel gear measured back from the end face of the bearing 16 and the left y2, the distance between the right end bearings y1. Select the thickness of shims 17 δ1 = 61.6-Y2 (mm), δ2 = 213.3-(Y1 + δ1) (mm).

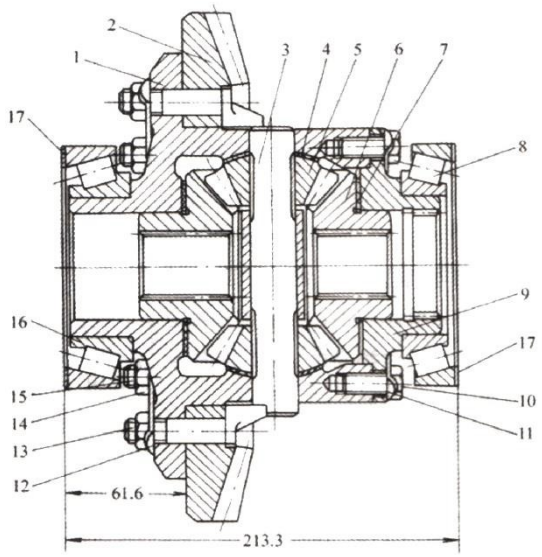

图 6-10 差速器总成

Fig.6-10 Differential assembly

1.差速器壳体；2.大圆锥齿轮；3.行星齿轮轴：4.行星齿轮垫片；5.行星齿轮；6.半轴齿轮：7.半轴齿轮垫片；8.轴承：9.差速器盖；10.螺栓：11.锁片：12.锁片：13.止动螺钉；14.螺母：15.螺钉：16.轴承；17.调整垫片

1. differential case; 2 large bevel gear; 3. planetary gear shaft: 4. planetary gear gasket; 5 planetary gears; 6. Axle gear: 7. Axle gear gasket; 8. Bearings: 9. Differential Cover; 10 bolt: 11. Lock piece: 12. Locking plate: 13. Stopper screws; 14. Nut: 15. Screws: 16 Bearing; 17. Adjusting washer

AGRISON™ 13

6.3.3.3 中央传动锥齿轮的啮合调整

Central drive bevel gear meshing adjustment

存放
Storage

中央传动锥齿轮的啮合调整见图。

Central drive bevel gear meshing adjustment shown in Figure.

在使用过程中，由于齿轮磨损而引起的齿侧间隙增大是不会影响齿轮正常工作的。而轴承磨损使锥齿轮副离开原来的啮合位置时，一般来说，只要不影响齿轮的正常工作，在使用过程中可以不调整。但在大修和齿轮出现不正常工作时或更换轴承(差速轴承和小圆锥齿轮轴承)和弧齿锥齿轮副时，应进行啮合调
整(应在轴承预紧之后)。

During use as gear wear caused by the increase of the backlash will not affect the normal operation of the gear. The bearing wear so leaving the original bevel gear meshing position, in general, they do not affect the normal operation of the gear, in the course can not be adjusted. But in the overhaul and gear that there is no normal working hours, or replace the bearings (bearings and small differential bevel gear bearings) and spiral bevel gears should be meshed adjusted (should be after bearing preload).

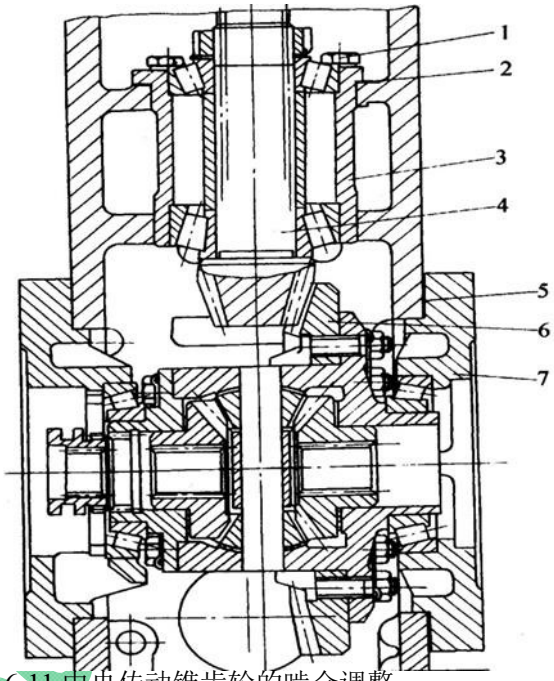

图 6-11 中央传动锥齿轮的啮合调整

Fig.6-11Central drive bevel gear meshing adjustment

1.螺栓;2.调整垫片 3.前轴承座 4.小圆锥齿轮轴;5 调整垫片;6.大圆锥齿轮;7.差速器轴承座

1 bolt; 2. Adjusting washer 3. Before bearing 4 small bevel gear shaft; 5 shims; six large bevel gear; 7. Differential bearing seat

6.3.3.2.1 检查齿侧间隙

Check the side gear clearance

将铅片塞入大、小圆锥齿轮非工作齿间，转动齿轮挤压铅片。然后取出铅片，测量靠齿轮大端处的厚度(即齿侧间隙)应在 0.15mm～0.3mm 范围内，这样在齿轮全周上均匀测量三点，其侧隙的变动量不大于 0.1mm。若啮合间隙不符合要求，可以用差速器轴承座 7 的调整垫片 5 的相应增减来达到。当间隙大时，则将右侧垫片抽出加于左侧，反之，则将左侧垫片抽出加于右侧。

To lead sheet stuffed large and small non-working teeth bevel gear, rotary gear extrusion lead sheet. Then remove the lead sheet, measured by the gear thickness at the big end (i.e. side gear clearance) should be in the range of 0.15mm ~ 0.3mm, so that the entire circumference of the gear measured three uniformly, its backlash amount of change is not greater than 0.1mm . If the backlash does not meet the requirements, you can use the differential bearing adjusting shim 5 7 corresponding increase or decrease to achieve. When the gap is large, then the left plus right Pull out, on the contrary, will be added to the right out of the left pad.

6.3.3.2.2 检查啮合印痕

检查啮合印痕

在大圆锥齿轮齿面上涂一层薄而均匀的红铅油，此时小圆锥齿轮轴 4 凹面受力，将红铅油涂于大圆锥齿轮 6 凸面上，然后转动齿轮，就能在小锥齿轮上得到啮合印痕。正确的啮合印痕应在齿高中部节锥附近并略偏高于小端距端边不得小于 3mm～4mm，其长度不得小于齿长的 60%，高度不得小于齿高的 50%。调整时通过改变调整垫片 2 的厚度使小圆锥齿轮轴向移动和改变调整垫片 5 使大圆锥齿轮轮向移动来达到。为了不破坏差速器轴承的预紧，必须把侧轴承座减少的垫片数加到另一侧轴承座上去，使左右轴承座调整垫片总厚保持不变。

In the large bevel gear tooth surface coated with a thin and uniform red lead oil, then a small concave bevel

AGRISONM 13

gear shaft 4 by force, the red lead oil onto a large convex bevel gear 6, and then turn the gear, you can in the small bevel gear meshing get prints. Prints should be correct meshing tooth pitch cone near the high school and was a bit higher than the small end from the end edge of not less than 3mm ~ 4mm, its length not less than 60% of tooth length, height of not less than 50% of tooth height. Adjusted by varying the thickness of the shims two small axial movement and changing the bevel gear shim five conical gear wheel to make the big move to achieve. In order not to destroy the differential bearing preload, you must reduce the side bearing spacers number to the other side of the bearing seat up, right and left bearing adjusting shim total thickness remains unchanged.

在调整过程中，当啮合间隙和啮合印痕存在矛盾时(即啮合印痕合适，而间隙不合适，或相反)，应以啮合印痕为准，但啮合间隙不得小于 0.15mm。拆检调整时，注意各部调整垫片位置和数量，增减适量后，将拆下的垫片保存好备用。

In the adjustment process, when there is backlash and engaging prints contradiction (ie, engaging prints fit, while the gap is inappropriate, or vice versa), should be subject to engage the prints, but the backlash of not less than 0.15mm. Dismantling the adjustment, note the location and number of ministries shims, increase or decrease amount, it will remove the gasket keep aside.

6.3.4 最终传动的调整

Adjustment of final drive

最终传动的调整见图。行星架 4 和轴承 6 之间的间隙 G=0.075mm～0.125mm，拖拉机装配时已调整好，在使用过程中无需调整。但在大修或更换行星齿轮机构时则需进行调整。

Adjustment of final drive refers to the figure. The gap between the planet carrier 4 and bearing 6 G=(0.075~0.125)mm. It has been adjusted during assembly, so adjustment is not needed. But when performing overhaul or replace the planetary mechanism, it is necessary to be adjusted

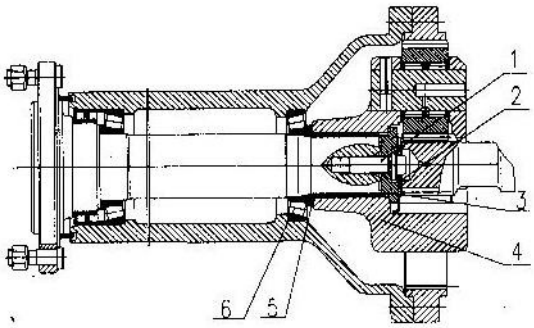

图 6-12 最终传动的调整

Fig.6-12 Adjustment of final drive

1-螺栓 2-止推垫片 3-压板 4-行星架 5-垫片 6-轴承

1.bolt; 2.floor clip ; 3.pressure plate; 4.planet carrier; 5.pad; 6.bearing;

调整时，先测出行星架压板 3 端面至轴承 6 的距离 A，再测出行星架 4 的花键孔深度 B，则调整垫片 5 的厚度 δ=A-(B+0.075～O.125)(mm)。把此厚度垫片放置在图所示位置，然后拧紧行星架固定栓 1，并用止退垫片 2 锁住。

During adjustment, first measure distance A from the surface of the driveshaft to the inner surface of bearing 6; prop the planet frame assembly up with a pad plate 3, let the surface of the planet frame be close to the surface of the planet frame, measure the inner surface depth B from one surface of the planet frame boss. Then adjust the thickness of gasket 58=AB-(0.075~0.125) mm. When fitting gaskets, thicker gaskets shall be fitted first so that the least amount of gaskets are used. Put the chosen adjusing gaskets 5 to the inner ring surface of bearing 5 as shown in

AGRISO TM 1300 651 830

存放
Storage

Figure 5, align planet frame component with the driveshaft spline and fit it on the shaft; then tighten planet frame pressure plate fixing bolt l, and lock it with floor clip 2.

6.3.5 前轮轮毂轴承的调整

Adjustment of front hub bearing

沭河 SH800、SH850、SH900 、SH950、SH1000 型拖拉机前轮轮毂轴承的正常间隙为 0.05mm～0.15mm。使用中由于轴承的磨损，间隙会逐渐增大，当间隙超过 0.4mm 时应进行调整。调整时，用千斤顶支起前轴，使前轮离地，依次取下螺钉 2，轴承盖 3、开口销 4、拧入调整螺母 5 到消除轴承间隙为止，然后再退回 1／30～1／10 圈。此时，前轮应能灵活转动，然后穿入开口销 4 并装上轴承盖 3。

The normal gap of the front hub bearings of SH800 SH850、SH900、SH950 andSH1000-type tractors is (0.05~0.15) mm. During use, due to bearing wear, the gap will increase gradually. When the gap is over 0.4mm, adjust it. During adjustment, prop the front axle up with a jack, so that the front wheel is away from the ground, then remove screw 2, bearing cap 3, cotter pin 4, screw adjusting nut 5 until there is no bearing gap and then back 1 /30~1 /10 laps. At this time. the front wheel should be able torotate flexibly, and then mount cotter pin 4 and bearing cap 3.

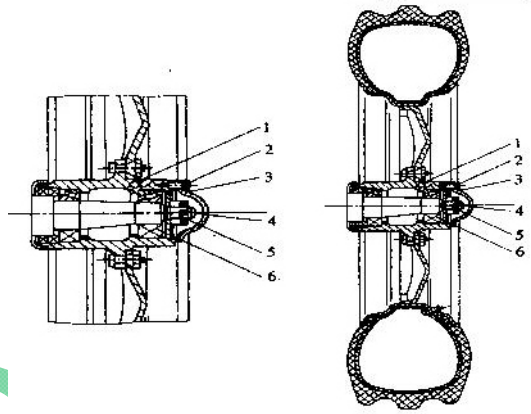

图 6-13 前轮轮毂轴承的调整

Fig. 6-13 Adjustment of front hub bearing

1.油杯.2.螺钉.3.轴承盖 4.开口销 5.调整螺母 6.轴承

1.oil cup; 2.screw; 3bearing cap: 4.cotter pin; 5.adjusting nut; 6.bearing;

6.3.6 前驱动桥的调整(四轮驱动拖拉机)

Adjustment of the front drive axle (four-wheel drive tractor)

6.3.6.1 前驱动桥中央传动的调整

Adjustment of central drive system of the front drive axle

AGRISON™ 1300

存放
Storage

前驱动桥中央传动的调整见图。

Front drive axle center drive adjustment to the Figure.

前驱动小锥齿轮轴上的 2 个圆锥滚子轴承及差速器壳上左、右 2 个圆锥轴承都是预紧的，使用过程中，由于轴承的磨损，小锥齿轮轴及差速器壳产生轴向游隙，因此应定期检查(每 1600h 保养时)。小锥齿轮轴轴承的调整靠调节螺母 1。调整时，先将螺母 1 拧紧，然后退回 1 / 10～1 / 6 圈，最后将螺母锁紧。差速器壳轴承的调整，应同时调整左、右调节螺圈 6，使中央传动锥齿轮副的啮合间隙在 0.15mm～0.3mm 范围内，最后将调节螺圈 6 用锁片 7 锁紧。齿侧间隙和啮合印痕的检测方法同后桥中央 传动的检测方法.

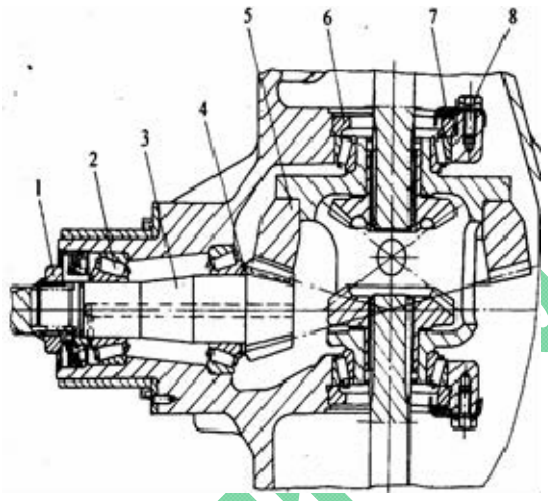

图 6-15 前驱动桥中央传动调整

Fig.6-15 Adjustment of central drive system of the front drive axle

1.调节螺母；2.圆锥滚子轴承；3.小锥齿轮轴；
4.调整垫片；5.大锥齿轮；6.调节螺圈；
7.锁片；8.螺栓

1. Adjusting nut; 2. Tapered roller bearings;
3 bevel pinion shaft; 4 shims;5 large bevel gear;
6. Adjustment screw rings; 7. Locking tabs; 8. Bolts

Front drive bevel pinion shaft two tapered roller bearings and differential case on the right and left two tapered bearings are preloaded using the process, due to bearing wear, bevel pinion shaft and differential shell produces axial clearance should therefore be checked regularly (every 1600h maintenance time). Bevel pinion shaft bearing adjustment by adjusting the nut l. Adjustment, first tighten the nut 1, then return l/10 ~ 1/6 laps, finally nut. Differential case bearing adjustment should also adjust the left and right adjustment screw ring 6, the central drive bevel gear meshing clearance in the range of 0.15mm ~ 0.3mm, the final adjustment screw ring 6 7 Lock with locking tabs. Backlash and engaging prints detection methods with the rear axle center drive detection method.

6.3.6.2 前驱动桥最终传动的调整

Final drive system adjustment of front axle

AGRISON™ 13006512

存放
Storage

前驱动桥最终传动的调整见图。

Final drive system adjustment of front axle refers to the figure.

前驱动桥最终传动的 2 个圆锥滚子轴承 7 是预紧的。检查调整时先拆下螺栓 1，取下行星架 2，将调节螺母 3 拧紧，然后再退回 1 / 10～1 / 6 圈，使前轮毂 6 转动灵活，最后将拆下的零件重新装配拧紧。

Two tapered roller bearings 7 of final drive system of front axie are pretightened. When checking and adjusting, remove planet carrier 2 and tighter adjusting nut 3, then back 1/ 10 - 1 / 6 circle to make front hub 6 rotate flexibly, and finally re-assembles and tightens all removed parts.

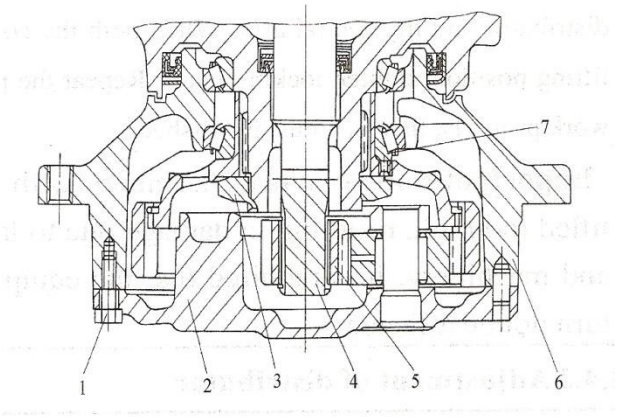

图 6-16 最终传动的调整

Fig. 6-16 Final drive system adjustment of front axie

1.螺栓 2.行星架 3.调节螺母 4.驱动轴 5.太阳轮 6.前轮毂 7.圆锥滚子轴

1.bolts; 2.planet carrier; 3.adjusting nut; 4.driving shaft; 5.sun gear; 6.front hub; 7.taper roller bearing

6.4 液压悬挂系统调整

Hydraulic hitch system adjustment

6.4.1 提升器的调整

Adjustment of hydraulic hitch system

AGRISON™ 1300 651

存放
Storage

拖拉机出厂时，提升器已调整好，用户一般无 需调整。但在使用过程中，由于杆件传动副的磨损和紧固件的松动，提升器原始调整状态被破坏而引起工作不正常，或提升器修理后装配时，均需进行提升器的调整。提升器的调整方法和顺序如下(见图)：

The hydraulic hitch system has been adjusted in factory. Generally, users do not need to adjust it. However, in use process, the hydraulic hitch system needs to be adjusted if there are abnormalities due to the original state damage of the hitch system which is caused by member bar drive set wear and loosening fasteners or after hydraulic hitch system is repaired. The adjustment method and order of the hydraulic hitch system is as follows (see Figure 4-16):

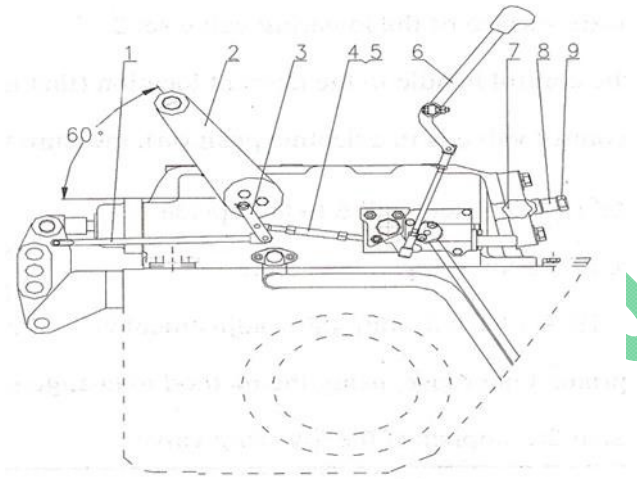

图 6-17 提升器的调整

Fig 6-17 Adjustment of hydraulic

1.连接杆；2.外提升臂；3.冲间臂；4.调节螺套；5.螺母
6.操纵手柄；7.下降速度调节手轮；8.套筒；9.空心螺栓
1. Connecting rod; 2. outer lifting arm;
3. middle arm; 4.adjusting screw set; 5. nut;
6. control handle; 7. lowering speed adjustment

- 把分配器操纵手柄 6 扳至最低下降位置，保持固定不动。
  Put control handle 6 of the distributor tothe lowest position and keep it immobilize.
- 启动发动机将操纵手柄 6 慢慢向提升位置移动，这时外提升臂 2 也不断向提升方向移动。
  Start the engine and slowly move the control handle 6 to the lifting position, at this time, the outer arm 2 also moves towards the lifting position.
- 若操纵手柄 6 移动到最高提升位置，而外提升臂 2 没达到最高位置，就应调整调节螺套
  If the control handle 6 is moved to the highest lifting position, while the outer arm 2 has not reach the highest position , adjusting screw set 4 should be adjusted to increase the distance between feedback arm of the distributor and the central arm so that the outer arm moves upward to a position whose angle with the horizontal line is 60º, lock locking nut 5, At this time, the engraved lines of the outer arm is in alignment with that of the of the hydraulic hitch system. Repeat the process for 3 times and the hydraulic hitch system will work properly, that is, adjust is finished.
- 若操纵手柄 6 尚未移到最高位置，而外提升臂 2 已达到最高位置，就应调整调节螺套 4 缩小反馈臂到中间臂的距离。当操纵手柄 6 移到最高位置，外提升臂 2 也达到最高位置时，拧紧锁紧螺母 5。反复升降 3 次，提升器工作正常，即调整完毕。
  If the control handle 6 is not moved to the highest lifting position, but the outer arm 2 has not reach the highest position，adjusting screw set 4 should be adjusted to decrease the distance between feedback arm of the distributor and the central arm. When both the control handle 6 and the outer arm 2 have reached the highest lifting position, tighten locking nut 5. Repeat the process for 3 times and the hydraulic hitch system will work properly, that is, adjust is finished.

重要事项：

Important notes:

✧ 使用需要带动力输出的机具时，为了避免机具提升过高，造成连接动力输出轴与机具的传动轴因夹角过大而损坏，要求机具提离地面且能保证地头转弯不受影响的提升高度为准。

AGRISOMM 1900 65

存放
Storage

When machinery with power output is needed, to avoid the equipment is lifted too high, resulting in damage due to large angle in drive shaft connecting the power output and machinery, it is required that the equipment be Iifted far from the ground and the headland turn not be affected.

6.4.2 分配器的调整
Distributor adjustment

6.4.2.1 检查下降阀行程
Check trip of lowering valve

- 拧开下降阀堵塞 8。
  unscrew the stopper of Iowing valve 8;
- 将操纵手柄(见上图 6)置于最高提升位置(即控制阀处于提升位置)，测量钢球 6 到下降阀套 2 上端面的距离 H1。

Put the manipulate handle (see Figure 4-16 No.) in the highest lifting position (that is, the control valve is in the
lifting position), measure the distance Hl from steel ball 6 to the upside surface of the lowering valve set 2;

将操纵手柄置于下降位置(即主控制阀处于下降位置)，测量钢球 6 到下降阀套 2 上端面的距离 H2。

Put the control handle to the descent location (that is, the
main control valve is in a decline position), measure the
distance H2 from steel ball 6 to the upside surface of the Iowering valve set 2;

若 H1-H2=2mm±0.2mm，则为调整合适。否则，用增减调整垫片 6 的方法，达到要求的尺寸。

If Hl-H2 = (2 士 0.2) mm, the adjustment is appropriate. Otherwise, using the method to change pad 6 to reach the adjust size

- 拧紧下降阀堵塞。
  Fasten the stopper of the lowering valve

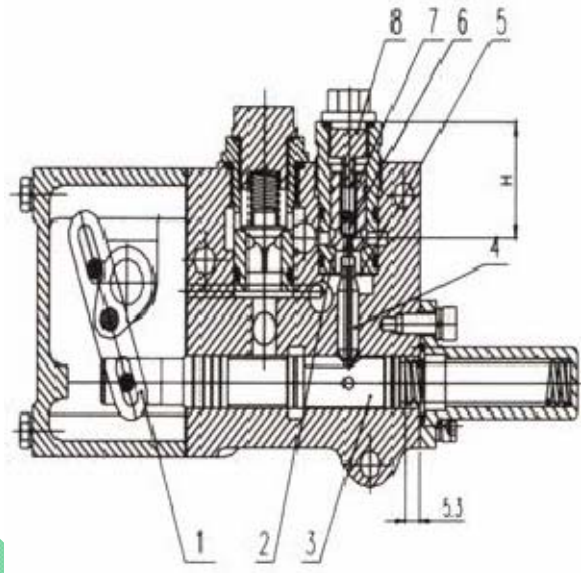

图 6-18 分配器调整

Fig.6-18Adjustrnent of distributor

1.摆杆 2.下降阀套 3.主控制阀 4.推销 5 调整阀片 6.钢球 7.下降阀 8.下降阀堵塞

1.swing rod; 2.lowering valve set; 3.main control valve; 4.push pin; 5.adjust valve; 6. Steel valve 7.lowering valve; 8.lowering valve stopper;

6.4.2.2 分配器安全阀的调整
Adjustment of Safety valve of distributor

重要事项：

Note:

分配器安全阀，出厂时已调整正确，用户一般不必调整，如果需要调整，必须在试验台上进行。分配器安全阀的开启压力为 17.5-18MPa。分配器是精密部件，一般不准任意拆卸，若必须拆卸时，则应在洁净地点进行，并用清洁的汽油或煤油清洗。

The safety valve of distributor has been adjusted correctly in the factory, generally, users do not have to adjust it. If necessary it must be carried out at the pilot stage;The opening pressure of the safety valve of distributor is (.17.5 - 18) MPa;As distributors are precision components, generally, they are not allowed to be demolished arbitrarily, if it is a must not only a clean place is needed but also clean petrol or kerosene are needed for cleaning.

AGRISONTM 13

存放
Storage

6.4.3 强压式液压系统的调整
Adjusteznent of hydraulic system with separated units
6.4.3.1 强压提升器高度限位使调整方法
Adjustement of raiser with separated units

（1）沭河 SH90 系列拖拉机高度限位装置，功能及结构简图如下

Shuhe SH90 series tractors height limit device, function and structure diagram is as follows

通过对限位装置的调整（件调整方法），可任意控制农机机具的提升高度。为了防止在使用过程中，由于操作不当使农机局提升过高而导致动力输出轴断裂的现象发生，请各位用户在使用过程中参照下图，按第二条调整方法的要求，进行调整。限位推板 2 螺母 1 操纵装置装置反馈杆分配器高度限位反馈杆件

By the adjustment of position limitor (See adjustment procedure), the lift height of the farm machinery tool may be freely controlled. Please refer to the Fig.4-43, and make the adjustment as per the procedures described as follows to prevent the broken of PTO shaft caused by the over height of farm machinery tool risen up by improper operation:

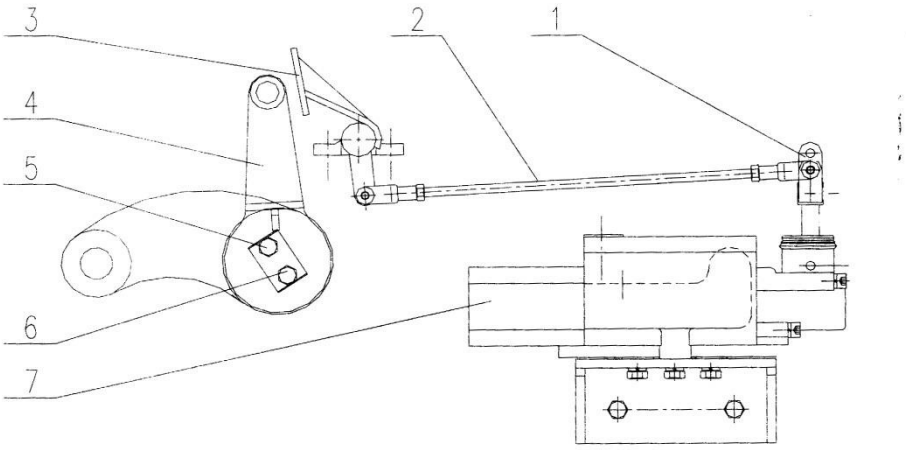

图 6-19 强压提升器高度限位调整方法

Fig .6-19 Height limitor of lifter

1.操纵装置 2.反馈杆 3.高度限位反馈杆件 4-限位推板 5-螺母 1 6.螺母 2 7 分配器

1. Control system; 2. Feedback lever; 3. Feedback lever parts of height limitor; 4. Push board
5. Nuts1; 6. Nuts 2; 7. Distributor;

(2) 调整方法和要求：

Adjustment method and requirements:

1，通过调整提升轴右端的限位推板实现高度的调整，将螺母 1、螺母 2 松开逆时针调整限位推板，提升高度越大；反之越小。

By adjusting the stop push to enhance the shaft right board to achieve a high degree of adjustment, the nut 1, 2 Loosen the nut counterclockwise to adjust the limit push plate, lifting height greater; smaller the contrary.

2，配套驱动机具作业时，地头转弯提升高度的调整:要求提升后机具离开地面的高度（150-250）mm，据此来限位推板的长度。

Supporting the drive machinery operation, headland turning lift height adjustment: Requires upgraded equipment off the ground height (150-250) mm, whereby to limit the length of the push plate.

3，长距离转移或公路转运时的调整：调整限位推板的位置，提升高度须满足农机局最低点离地大于 250mm 以上。

Long-range transport or road transit adjustments: Adjust the position of the push plate limit, lifting height must meet the farm bureau lowest point or more than 250mm from the ground.

存放
Storage

4，调整完毕，紧各处紧固件。

The adjustment is completed, tighten fasteners throughout.

6.4.3.2 强压油缸使用调整方法：

Forced cylinder use and adjustment method:

（1）强压油缸简图：

Forced cylinder diagram:

（2）调整方法：

Adjustment

转运状态的调整：为保证农具在运输时安全可靠，当农具上升至最高点应调节定位卡箍把定位调节阀 8 压到底，通过定位阀，闭塞油缸下腔的油路，使之不能再下降。

Transshipment state adjustment: To ensure safe and reliable tools in the transport, up to the highest point when the tools should be adjusted to locate positioning clamp pressure regulating valve 8 in the end, by positioning the valve, blocking the oil cylinder lower chamber, so they can not be dropped .

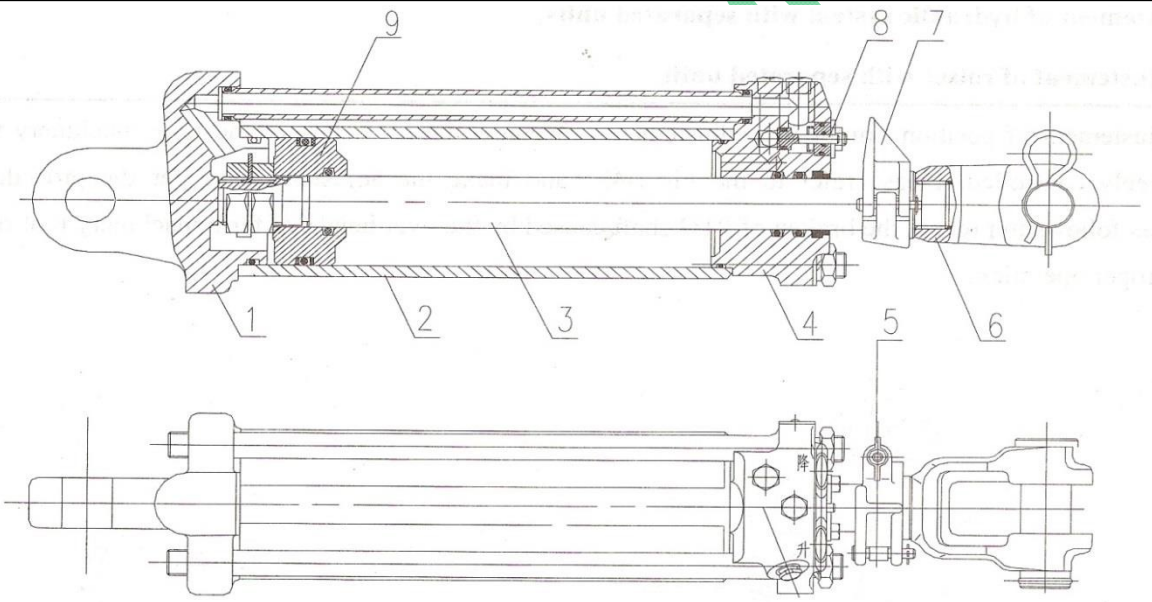

Fig 6-20 双作用油缸

Fig.6-20Double-acting cylinder

1.下盖 2.缸体 3.活塞杆 4.上盖 5.蝶形螺母 6.活塞杆连接叉 7.定位卡箍 8.定位阀 9.活塞

1. Lower cover; 2.Cylinder body; 3. Pistion rod; 4. Upper cover; 5.Wing nut;

6. Piston rod link fork; 7.Position clamp ring; 8. Position valve; 9. Pistion

存放
Storage

6.4.4.3 Adjusting the height of the cylinder down

下降高度由油缸上的定位阀及定位卡箍挡块来实现。定位卡箍挡块可在活塞杆上做上下调整，越靠下，下降量越小，反之，下降量越大。在下降过程中，当定位卡箍挡块压下定位阀时，则停止下降。注意：在调整定位卡箍挡块与定位阀的距离时，要保持两油缸调整一致，误差为 0～0.5mm。

Drop height from the cylinder valve and positioned on the positioning clamp stopper to achieve. Positioning stopper clamp may adjusted up or down on the piston rod, the closer, the smaller the amount of decline, on the contrary, the greater the decline. Falling over process, when the positioning clamp positioning valve stopper pressed, then stopped declining. Note: When adjusting locator card hoop and positioning the valve stopper when the distance adjusted to maintain the two cylinders, with an offset of 0 ~ 0.5mm.

6.5 全液压转向系统使用注意事项

Precaution when using full hydraulic steering system

沭河 SH90 拖拉机采用全液压转向。全液压转向器结构如图所示。拖拉机出厂前，转向系统均调整正确。用户使用过程中应注意以下事项：Shuhe SH90 tractor use full hydraulic steering.Hydraulic steering gear structure is shown.

Tractor factory, the steering system are adjusted correctly. User process should note the following:

(1)经常检查各螺纹连接处，如有松动及时拧紧。全液压转向系统工作时各连接处不得有渗漏油现象。

Regular checks of the threaded connections, tighten if loose in a timely manner. Full hydraulic steering system work each connection may not have oil leakage phenomenon.

(2) 经常检查转向油箱液面，不足时按要求添加。

Check the steering oil level frequently, less than required when adding

(3) 使用过程中，如发现转向沉重或失灵时，应首先仔细查找原因(详见本说明书第二章)不可用力硬扳方向盘，更不要轻易拆开转向器，以防零件损坏。严禁两人同时转动方向盘。

use of the process, if found hard steering or failure, you should first take a close look (see Chapter II of this manual) can not be forced to pull the steering wheel hard, not easy to disassemble the steering to prevent damage to components. They both turn the steering wheel is strictly prohibited.

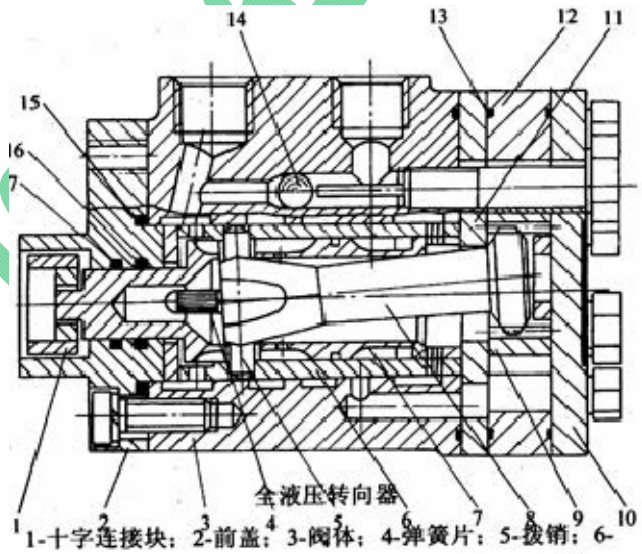

1-十字连接块；2-前盖；3-阀体；4-弹簧片；5-拨销；6-阀套；7-阀芯；8-联动轴；9-转子；10-后盖；11-隔盘；12-定子；13-“O”形圈；14-钢球；15-“O”形圈；16-“X”形圈；17-“O”形圈；

Figure 6-21Structure of Hydrostatic Steering Gear
1.cross link block; 2.front cap; 3.valve body; 4.spring leaf ; 5.pull pin; 6.value housing;7.value cartridge;8.universal driving shaft;9.rotor;10.rear cap;11.diaphram plate;12.stator;13.“O” ring; 14.steel ball;15. “O” ring;16. “X” ring;17. “O” ring;

(4) 安装全液压转向系统时，转向器应保证与转向轴同轴，并且轴向应有间隙。安装后检查方向盘是否回位灵活。

Install hydraulic steering system, steering gear should ensure coaxial with the steering shaft and axial

AGRISON 1 651 830

存放
Storage

clearance should be. After installation check whether the steering wheel back to the bit flexible.

(5) 必须保证油液清洁。为此应经常检查滤清器滤芯和油液的情况。检查方法：将油液滴一滴到吸墨纸上，如油迹有一黑色中心，即应更换油液。

Cleaning fluid must be guaranteed. This should always check the oil filter element and the situation. Inspection methods: the oil droplets drop into blotter, such as traces of oil with a black center, which should replace the oil.

(6) 更换新机油后，应把油缸中的气体排尽。排气方法：将转向油缸螺栓接头松开，使油泵低速运转进行放气，直到流出的油中不含泡沫为止。拆除转向油缸活塞杆与转向轮的联接，转动方向盘，使活塞达到最左或最右的位置(在两个极端位置不要停留)，再向油箱加油至规定最高油面。将所有螺纹连接处拧紧(不要在有压力情况下拧紧)，连接活塞杆。检查转向系统在各种工作条件下，工作是否正常。

Replace the oil after the gas tank should be drained. Exhaust Methods: steering cylinder bolted joint release, the pump must be deflated at low speed until no bubbles out of the oil so far. Remove the steering cylinder piston rod connected to the steering wheel, turn the steering wheel, so that the piston reaches the leftmost or rightmost position (at the two extreme positions do not stay), again with a maximum fuel tank to the oil surface. Will tighten all threaded connections (not in stressful situations tighten), connecting rod. Check the steering system in a variety of working conditions, working properly.

(7) 恒流溢流泵是精密部件，一般不许任意拆卸，必须拆卸时应在清洁地点进行，并用清洁的汽油或煤油清洗。

Constant overflow pumps are precision components, generally does not permit any of the demolition, demolition should be carried out in a clean place, and use clean gasoline or kerosene.

重要事项：

Important

出厂前，恒流溢流泵的溢流阀的安全溢流压力已经调好，切勿自行拆卸、调整。

Before leaving factory，safety relief pressure of relief valve in constant overflow of the pump has been adjusted,do not disassemble, adjust.

AGRISON™ 1300 651 830

https://truckmanualshub.com/

存放
Storage

7 存放

Storage

拖拉机在完成农田作业以后，或因某种原因需要较长时间（超过一个月）停放时，必须妥善保管和封存。拖拉机应保管在良好的环境内，以防止机件锈蚀、老化、变形。

After tractor completing farmland works or due to some reasons for long time (over one month) of storage, must carry out safekeeping and sealing. Tractor should be kept in good environment to be away from corrosion, ageing and deformation.

拖拉机封存前，必须经过彻底的清洗、调整并紧固各连接件，按工作时间完成规定的技术保养（见 5 维修与保养），使拖拉机处于良好的技术状态。

Prior to sealing, the tractor must be cleaned throughly, adjust and fasten all connecting components, and complete specified technology maintenance (see 5 service & maintenance) according to working time to ensure tractor to be at a good technology condition.

重要事项：

IMPORTANT:

✧ 拖拉机长期停用期间对其进行科学的保管和专门的维护保养非常重要。否则，拖拉机技术状态的恶化速度比工作期还要快。

During the non-working period of tractor, it is significant to implement scientific storage and special maintenance. Otherwise, the deterioration speed of technology condition of tractor will be more fast than working period.

✧ 用户不具备防锈处理的条件，且拖拉机需要闲置几个月或更长的时间，至少应更换机油、机油滤清器，并每隔 1 个月时间起动拖拉机一次，低速行使(20～30）min（分钟），检查各部位有无不正常现象。并保持拖拉机外部清洁、干燥。

In case that there is no condition to carry out rust prevention for users and tractor will be stored without working for several months or longer, replacement for machine oil and machine oil filter is necessary; start tractor every one month to run at low speed for (20-30)min(minute), check if existing abnormal condition for all positions and maintain cleaning and drying for tractor exterior.

7.1 拖拉机存放期损坏的原因

Reasons for the damage of tractor during storage

拖拉机存放期间损坏的主要原因如下：

The main reasons for the damage of tractor during storage as follows:

- 锈蚀：在停放期间，空气中的灰尘和水气容易由缝隙、孔口等处浸入机器内部，使零件受到污染和锈蚀；相对运动的表面如活塞、气门、轴承、齿轮等，由于长期在某一位置静止不动，失去流动且具有压力的润滑油膜的保护，产生蚀损、锈斑、胶结阻塞或卡滞，以致报废。

  Corrosion: during the period of storage, dust and steam from air is easy to go into machine interior via gap, hole, etc that will cause contamination and corrosion for parts; surfaces with relative motion such as piston, air valve, bearing, gear, etc, due to long-term no-movement on the same position to lose mobility and the protection from stressful lubricating oil film, will cause corrosion, rust, cement, block or clamping to be discarded.

- 老化：橡胶、塑料等零件在阳光照射下，由于紫外线的作用，会老化、变质、变脆，失去作用或腐

AGRISOM 1300 651 830

存放
Storage

蚀、腐烂。

Ageing: under the sunniness for parts of rubber, plastic, etc, due to ultraviolet affection, will cause ageing, deterioration, embrittlement, no-action or corrosion and decomposition.

- 变形：传动胶带、轮胎等零件长时间受力，产生塑性变形。

  Deformation: long term of force on driving belt, tyre, and other parts will generate plastic deformation.
- 其他：电器零件受潮、蓄电池自行放电等。

Others: electrical equipment parts become damp, storage battery generates self-discharge, and etc.

7.2 拖拉机封存

Tractor sealing and storing

- 存封前，认真检查拖拉机，消除存在故障，保持技术状况良好。将拖拉机外表清洗洁净。

  Prior to storing, carefully check tractor to eliminate existing faults to maintain good technology condition, and clean the outside surface of tractor.
- 放净散热器、气缸体及水泵中的防冻防锈液、润滑系统内的机油，液压系统内的机油。

  Release out antifreezing and antirust liquide of radiator, cylinder block and pump and machine oil of lubricating system and hydraulic pressure system.
- 拆下蓄电池，其极柱上涂上润滑脂，存放在避光、通风、温度不低于 10℃（摄氏度）的室内。

  Take out storage battery, coat lubricating grease on its pillars,and keep it into a lucifugal and ventilated room with a temperature over 10℃(Celsius degree).
- 趁热放净发动机内的机油，加注新机油，并让发动机小油门运行几分钟，使机油均匀地附着在各运动部件地表面。

  While hot, release out motor machine oil, fill into new machine oil, and keep running with small accelerator for several minutes to make machine oil equally attaching on the surface of all moving parts.
- 向各润滑点中注润滑脂.

  Fill lubricating grease for all lubrication points.
- 用加热至(100～200)℃（摄氏度）脱水凡士林涂抹电器触点、接头及未经油漆的金属零件表面。

  After heating to (100-200)℃(Celsius degree), coat dehydration vaseline on electrical appliance contact, joint and the surface of metal parts without paint.
- 松开发动机风扇皮带，必要时将皮带取下，包好单独存放，将皮带轮槽内喷涂防锈剂。拖拉机表面脱漆的部位应补漆。

  Loosen motor fan belt (take it out if necessary), pack and store alone, and spray-coat antirusting agent on the interior of pulley tank. And carry out paint repair for tractor depainting surface
- 放尽柴油箱内的柴油并清洗油箱。

  Release out diesel oil of fuel tank and clean fuel tank.
- 用防护材料（如帆布、防水布或油纸等）将发动机未封闭的管口，如进、排气口，应作封口处理，防止异物、灰尘、水分进入。

  Carry out seal for unsealed nozzle mouth of motor like air inlet and outlet with protection materials (such as canvas, waterproof cloth, oiled paper, etc) to prevent foreign body, dust and water going into
- 将所有操纵手柄放在空挡位置（包括电气系统开关和驻车制动器），将拖拉机前轮放正，悬挂杆件放在最低位置。

  Keep all control cranks into the position of neutral gear (including electrical system switch and parking brake), upright tractor front wheel, and place hanging rod bar at the lowest position.
- 用木架将拖拉机支起，使轮胎卸掉载荷。并定期检查轮胎气压。

AGRISOM 1300 651 830

存放

Storage

Support up the tractor with wooden frame to take off load of tyre, and regularly check tire pressure.

- 拖拉机应停放在机库或车棚内，环境应通风干燥。严禁与具有腐蚀性的物品、气体一起存放。如果条件不具备露天停放时，必须选择地势较高而干燥的平台，并用防雨布盖好。

  Tractor should be placed in machine warehouse or carport with an environment of ventilation and drying. It is strictly forbidden to store with mordant goods and gas. If lack of relevant conditions, while open-air parking, must select dry platform with higher terrain with waterproof cloth for good covering.
- 由拖拉机上拆下的零件和随车工具，应清洗干净后包好，保存在干燥的库房内。

  All parts and enclosed tools taken off from tractor should be packed after cleaning and stored in dry warehouse.

7.3 拖拉机封存期间的保养

Maintenance for tractor during sealing up

- 拖拉机在封存期间必须符合上述拖拉机封存的各项要求。

  During the sealing period of tractor, above said requirements for tractor seal must be met.
- 每月检查拖拉机及零部件有无锈蚀、腐蚀、老化、变形等异常现象，发现问题及时排除。

  Check if there are abnormal conditions like corrosion, rusting, ageing, deformation, etc for tractor and related parts every month, and in case of problem, solve it immediately.
- 每 2 个月，应转动发动机曲轴(10～15)转，以防止内部锈蚀。在需加注润滑脂的润滑部位，清除旧的润滑脂，更换新的润滑脂。

  Every two months, should turn motor bent axle at a total of (10-15) circles to prevent internal rust. In respect of lubricating position requiring filling lubricating grease, get rid of old grease and replace with new one.
- 每 3 个月，应将拖拉机起动，在低速行驶(20～30) min（分钟），检查各部位有无不正常的现象。

  For every 3 months, start tractor with a lower speed driving for (20-30) min(minutes) and check if exist abnormal condition for all parts.
- 定期用干布檫拭蓄电池顶面灰尘，蓄电池即使不使用也会自行放电，每月应对蓄电池补充充电一次。

  Regularly wipe the top surface of storage battery with dry cloth, and carry out boost charging for storage battery per month owing to self-discharge even if non-working of storage battery.
- 拖拉机由火车、汽车长途载运时，不能挂挡，因为火车、汽车途中不停晃动，使被运的拖拉机轮胎也不停地前后移动。一旦挂挡，轮胎移动便带动齿轮、轴承、曲轴、活塞等零件在无润滑油的情况下不断干磨，造成零件烧蚀。

  In case of long-distance transportation for tractor by train and vehicle, it is not allowable to put into gear because due to uninterrupted rocking can make the tyres of transported tractors dolly move. Provided that put into gear and under no lubricating oil condition, tyres movement will drive gear, bearing, bent, axle piston, etc to generate lubricating oil that can cause burning for parts.

7.4 拖拉机的启封

Tractor unsealing

- 清除防锈用的油脂。

  Remove and clean oil of anti-corrosive
- 将封闭的各管口打开。清洁拖拉机。

  Open all sealed pipelines and clean tractor.

AGRISON™ 1300 651 830

https://truckmanualshub.com/

存放
Storage

- 按规定加入冷却液、机油、柴油，向各润滑点加注润滑脂。

  In accordance with provisions to fill cooling liquid, machine oil and diesel oil, and fill lubricating grease into every lubricating point.
- 清除风扇皮带轮槽内的防锈剂，安装皮带。按技术要求调整传动皮带松紧度（见发动机使用保养说明书）。

  Clean away antirusting agent within the inside of fan pulley tank, and install belt. According to technical requirements, adjust the degree of tightness of transmission belt (See motor operation & maintenance instruction).
- 安上蓄电池，并在接线柱上涂上凡士林。

  Install storage battery and wipe vaseline on terminal
- 检查各电路、管路的紧固情况。

  Check fastening conditions of all circuits and pipelines.
- 按说明书要求操纵拖拉机。

Operate tractor according the requirements of instruction manual .

注：由于沭河 SH40 系列拖拉机可与多种发动机配套，有关发动机的封存与启封，详见“发动机使用保养说明书”。

Note:Due to Shuhe SH40 series of tractor matching with many kinds of motor, related sealing and unsealing see motor operation & maintenance instruction".

AGRISON™ 1300 651 830

https://truckmanualshub.com/

8 交货、验收、运输

Delivery, inspection and transportation

8.1 交货、验收

Delivery & inspection

用户购买拖拉机时，应对所购买的机器进行验收，着重检查以下几个方面：

In case of purchasing tractor, user should make acceptance for purchased machine focusing on the points as follows:

1． 随机文件是否齐全

1. Accompanying documents are complete or not

随机文件包括：《拖拉机使用说明书》、《产品合格证》、《三包服务凭证》、《随机物品装箱清单》和“发动机随机技术文件”（来自发动机配套厂家）、《拖拉机零部件图册》、《空调使用说明书》（选装，仅用于带空调机型）、《暖风使用说明书》（选装，仅用于带暖风机型）。核对《产品合格证》、《三包服务凭证》及“发动机随机技术文件”上的相应编号与实物是否吻合。

Accompanying documents are consist of: "Tractor operation instruction", "Manufacturer certificate", " Three Guarantees certificate", "Accompanying goods packing list", “Motor accompanying technical documents” (from motor manufacturer), "Tractor parts & components Figures", "Air-condition operation instruction"(Optional, only for tractor equipped with air-condition), and "Warm-air operation instruction" (Optional, only for tractor equipped with warm-air). Check if the serial number of "Manufacturer certificate", "Three guarantees certificate", and “Motor accompanying technical documents” is consistent with real objects.

2． 随机物品是否齐全

2. Accompanying goods are complete or not

按照《随机物品装箱清单》对拖拉机随机物品进行清点，随机物品包括随机备件和随机工具。发动机随机物品以“发动机随机技术文件”中的规定为准（若有疑问可与经销商联系）。

According to "accompanying goods packing list", check accompanying goods of tractor, and accompanying goods should include spare parts and accompanying tools. The accompanying goods of motor subject to the provisions of “Motor accompanying technical documents” (contact with dealer for any question)

3． 机器状态是否良好

3. Machine condition is good or not

机器经过托运或开运，技术状态有可能发生变化，用户购买时可对机器状态进一步进行确定。

The technology conditions of machine maybe change due to consignment or shipment, user can make further confirmation for machine condition in case of purchase.

8.2 运输

Transportation

拖拉机进行转移时，若自走转移，应严格遵守交通规则，且两车之间应保持行车间距至少 60m，避免意外情况发生引起撞车；若采用装车运输的方式，应做到以下几点：

In case of transferring tractor, if self-transferring, should strictly comply with the traffic rules that the distance of two vehicles must be 60m at least to avoid unforeseen circumstances; in case of adopt the method of entrucking transportation, do as followings:

1．装卸拖拉机机时，应选择平坦的地方进行。

AGRISONTM 13900351 830

https://truckmanualshub.com/

交货、验收、运输
Delivery, inspection and transportation

2．装卸车时应借助专用卸车台。
3．必须有助手在现场引导，且不要让无关人员靠近。
4．装车后将悬挂杆件放至最低位置，拉上手制动，挂上倒档，拔出起动钥匙，锁上车门，关闭电源总开
关。
5．用铁丝将四个轮胎前后“八”字固定，轮胎前后用楔块可靠堰牢，并将后桥梁用铁丝拉住。
6．将后视镜尽可能往里扳，必要时可将其取下，同时必须确保机罩、驾驶室门窗处于关闭状态。带安全
架机型，如有必要，可将安全架置于折叠位置并将其固定牢靠。
7．过涵洞、桥梁时，要充分注意是否超高，拐弯时要充分减速。
8．卸车时应先解除手制动，挂上前进档，用最低速度缓慢开下。

1. Select flat place for loading or unloading tractor.
2. Use dedicated unloading platform when loading & unloading
3. There must be assistant for guidance on the scene without allowance for un-related personnel to be close.
4. After entrucking, keep hanging rod put at the lowest position, pull hand parking brake, hang in reverse, take out starting key, lock the door and turn off power supply main switch.
5. Fasten front and rear four tyres into a splayed shape with iron wires, the front and rear of tyres can be reliable and firmed through wedge, and hold rear axle bridge with iron wires.
6. Pull rearview mirror inward as much as possible, and take it down if necessary, meanwhile must ensure the doors and windows of hood and wheel house be into close condition. For the tractor equipped with safety shelf, if necessary, it is available to fold safety shelf and fasten it.
7. Pay more Caution to super-elevation in case of passing culvert and bridge to slow down when turn around.
8. While unloading, firstly relieve hand parking brake, hang in drive, and slowly drive out at lowest speed.

警告：

WARNING:

✧ 装卸拖拉机时，装运卡车的停车刹应刹紧，前后轮可靠堰牢，以免因卡车突然起动导致拖拉机和操作者倾翻或跌落的危险。

In case of loading and unloading tractor, the parking brake of transporting truck should be done and reliable-firm to avoid the danger of tipping or dropping to tractor and operator due to sudden starting of tractor.

✧ 装卸车时，拖拉机均用最低速度行驶，以免速度过高导致拖拉机倾翻或跌落的危险。

In case of loading and unloading, tractor should drive at lowest speed to avoid the danger of tipping or dropping.

AGRISON™ 1300 651 830

https://truckmanualshub.com/

9 拆散和处置

Disassemble and dispose

当整个机器使用寿命到期后，为了您的人身安全及保护社会环境，请将机器总交给有专业许可拆解的回收公司处理。

When the service life of whole machine expires, considering your personnel safety and protection for social environment, please deliver the machine to recovery companies owning professional disassembly permit for dispose.

拆散时请从上到下、先外后内的顺序进行拆解，在拆解大体积物体或重物时，必须使用专业吊具。废机油等请集中妥善处置，不得随意乱倒，污染环境。

Disassemble from up to down and outside to inside, and in case of disassemble large volume object or heavy objects, must adopt special lifting appliance. And waste machine oil should be centralized disposed appropriately. Forbid to indiscriminately throw rubbish to pollute environment

重要事项：

IMPORTANT:

✧ 换下的机油属废弃油料，不能随意丢弃，以免污染环境

Replaced machine oil is wasted oil that is not allowable to throw away to avoid environmental pollution.

本公司提醒您，在没有专业的拆散工具及实际的操作经验下，拆散时及拆散后不妥善放置可能造成人身伤害。

Our company reminds you that it is possible to cause personal injury to you on condition that disassemble without special disassembling tools and actual operating experience or un-proper placement.

警告：

WARNING:

1.蓄电池为免维护型，电解液具有腐蚀性，不可溅入眼睛及皮肤、衣服上，若溅到酸液必须立即用清水洗净，并尽快到医院医治。报废、损坏的蓄电池严禁拆解，应由专业处理厂家进行处理。

1. Storage battery belongs to maintenance-free with corrosive electrolyte that must be away from eyes, skin and cloth. In case of touching acid liquid, go for hospital as soon as possible. Abandoned and damaged storage battery is strictly forbidden to diassemble, and should be disposed by professional disposing company.

2．拆解大体积物体或重物时，必须使用专业吊具！注意人身安全！

2. In case of disassembly for objects with large volume or weight, using dedicated lifting appliance must be required! Pay Caution to personal safety!

AGRISONTM 1300 651 830

https://truckmanualshub.com/

10. 保修事项

Warranty term

10.1 产品保修的依据

Product warranty basis

沭河 SH90 系列:SH800/804、SH850/854、SH900/904、SH950/954、SH1000/1004 轮式拖拉机，依据下列文件及法规进行保修。

The warranty service for the wheeled tractors SHUHE SH series: SH800/804、SH850/854、SH900/904、SH950/954、SH1000/1004will be undertaken according to the following documents and regulations.

《农业机械产品修理、更换、退货责任规定》2010 年 6 月 1 日起实施；

“Rules of Obligation for Repair, Replacement and Reimbursement of the Agro-Machinery Products". Effect on June 1, 2010;

《中华人民共和国产品质量法》

“Law of the Product Quality of the PRC".

《中华人民共和国消费者权益保障法》

“Law of the Consumer Rights and Interests Safeguard of the PRC".

10.2 不实行保修的情况

Cases not covered by the warranty policies

根据相关法规，在有些情况下将不实行保修。详见沭河 SH90 系列拖拉机《三包服务凭证》有关章节。

According to the relevant laws and regulations. Some cases are not covered by our warranty policies. The details are referred to the relevant chapters in the “3R (repair, replacement and refund) Warranty Voucher".

重要事项：

IMPORTANT:

✧ 某些行为可能会使保修条件失效，详见《三包服务凭证》。

Some behaviors will possibly invalidate the warranty condition. The details are referred to the relevant chapters in the“3R(repair, replacement and refund)Warranty Voucher”。

重要事项：

IMPORTANT:

✧ 如果用户自行改装拖拉机或用于使用说明书规定外的其它用途，将不在厂家的保修范围内，请务必注意。

If the user rebuilds voluntarily the tractor or uses it for purposes other than stipulated in the instruction for use, it will not be covered by the warranty scope of manufacturer, to which we kindly ask you to pay attention.

注：

Note:

1．当用户接受保修时必须出示三包服务凭证，务请妥善保管；

AGRISONIM 1300 651 830

https://truckmanualshub.com/

保修事项

Warranty term

1. Showing "Three Guarantees Service Certificate" is necessary in case of maintenance for user, so keep it into safety;

2．如果机器发生故障，联系保修时必须告知经销商以下内容：机器产品型号，出厂编号，发动机型号和型式等产品铭牌内容，已使用多长时间，详细说明故障情况；

2. In case of fault to machine, following information must be provided while contacting dealer that machine model, factory serial No., nameplate content of motor model and type, service time, and detailed description for fault.

3．三包维修部件供给年限说明：保证产品停产五年内继续供给、维修三包的部件，但是在三包期限内，特殊部件的交货期需协商后决定；三包部件超过供给期限后，所供给的部件需商讨价格和交货期；

3. Supplying time instruction for parts with “Three Guarantees Service”: ensure continuous supply and maintain for parts with “Three Guarantees Service” since the time of machine stop production, however, within the period of “Three Guarantees”, the delivery time of special parts should be decide after negotiation; Over supplying period, the price and delivery time of all parts should be discussed.;

4．请务必使用产品专用的零部件配件和机油。

4. Must use special parts, components and machine oil for this product.

AGRISON™ 1300 651 830

https://truckmanualshub.com/

11. 附录

Appendixes

11.1 拖拉机的用油和溶液

Oils and solutions used on the tractor

表 11-1 拖拉机的用油和溶液

Table 11-1 Oils and Solutions Used on the Tractor

<table>
<tr><td>用油、溶液部位
Application locations of oils and solutions</td><td colspan="7">油和溶液
Oils and solutions</td></tr>
<tr><td rowspan="3">燃油箱
Fuel tank</td><td rowspan="2">国内标准
Domestic standard</td><td rowspan="2">符合 GB/T252 的轻柴油
GB/T252 compliant light diesel oil</td><td>20℃以上
Above 20℃</td><td>4℃～20℃
(4~20) ℃</td><td>-5℃～4℃
(-5~4)℃</td><td>-14℃～-5℃
(-14~-5)℃</td><td>-29℃～-35℃
(-29~-35)℃</td></tr>
<tr><td>10 号
No.10</td><td>0 号
No.0</td><td>-10 号
No.-10</td><td>-20 号
No.-20</td><td>-35 号
No.-35</td></tr>
<tr><td>国际标准
International standard</td><td colspan="6">采用美国材料试验学会 ASTM 燃料油 D-975，一般气温下用 2-D 等级，环境温度在+5℃以下时，应采用 1-D 等级。
Adopt ASTM D-975 fuel oil. Under general air temperatures, use 2-D grade oil; when ambient temperatures are below 50C, use l-D grade oil. Fill the engine fuel and oil strictly following the instructions given in the accompanying documents</td></tr>
<tr><td>发动机油底壳
Engine sump</td><td>国内标准
Domestic standard</td><td colspan="6">按发动机使用说明书要求添加。
Requirements added by the engine manual.</td></tr>
</table>

AGRISOM 1300 651 830

保修事项
Warranty term

	国际 标准 International standard	发动机油底壳、喷油泵、调速器机油及油浴式空气滤清器均采用粘度级 别符合美国汽工程师学会 SAE 粘度分类，-5℃以下用 SAElow，-5℃以上用四季通用的 SAEl5W / 40 多级油。质量级别符合美国石油学会 API CD 级 标准。 Engine sump, injection pump, governor and oil bath air cleaner use the oils with their viscosity grades compliant with SAE viscosity classification. Below -50C, use SAE 10W oil; above -5℃ , use all-season SAE 15W/40 multi-grade oil. Quality class should comply with API CD grade standard
水散 热器 Water radiator		环境温度 4℃（摄氏度）以上：清洁软水 When ambient temperatures are above 4℃ :The tractor cooling system uses clean soft water 环境温度 4℃（摄氏度）以下：必须采用防冻液 When ambient temperatures are below 4℃ : The tractor cooling system must use antifreeze 最低环境温度-15℃（摄氏度）以上：采用-25#长效防冻液（SH/T 0521-1999） When the minimum ambient temperature is above -15℃: Use -25# long-acting antifreeze SH/T0521) 最低环境温度-25℃（摄氏度）以上：采用-35#长效防冻液（SH/T 0521-1999） When the minimum ambient temperature is above -25℃: Use -35# long-acting antifreeze(SH/T0521) 最低环境温度-35℃（摄氏度）以上：采用-45#号防冻液(SH/T 0521-1999) When the minimum ambient temperature is above -35℃ : Use-45# antifreeze (SH/T0521)
变速箱一后桥、液压提升器油、前驱动桥 Gearbox-rear axle, hydraulic Iifter, and front drive axje	国内 标准 Domestic standard	Nl00D 传动液压两用油执行标准：JB / T7282。 N100D dual purpose transmission/hydraulic oil. Implementing standard: JB / T7282
	国际 标准 Internationa standard	传动系统和提升器、液压转向、驱动前桥的中央传动和最终传动可采用 Massey Ferguson 公司的 MFll35 或 Ford 公司的 M2C 86A 或 John Deer 公司的 J20A 通用油。 General purpose oil (including steering oil) may be used, such as MF1135 0f Massey Ferguson, M2C 86A of Ford and J20A of John Deer.
转向油箱 Steering fluid reservoir	国内 标准 Domestic standard	L~HM32 抗磨液压油 L~HM32 wear-resistant hydraulic oil
油杯 Oil cup	国内 标准 Domestic standard	汽车通用锂基润滑脂，符合 GB / T 7324。 GB/T 7324 compliant general purpose lithium base grease for automobile.
	国际 标准	采用美国润滑脂学会 NJGI 润滑脂 D-217，粘度等级为 2。 Use NLGI D-217 grease with a viscosity grade of 2.

AGRISONTM 1300 651 830

https://truckmanualshub.com/

附录
Appendixes

	Internationa standard	
制动 系统 Braking system	国内 标准 Domestic standard	Nl00D 传动液压两用油，执行标准：JB / T7282 Triple-purpose hydraulic/transmission/brake oil. Implementing standard: JB / T7282.
	国际 标准 Internationa standard	可采用 SAE10W 油料，质量级别符合美国石油学会 API CD 级标准。 SAE 10W oil with quality class compliant with API CD grade standard can be used.
挡风玻璃 Windshield	挡风玻璃洗涤器。温度低于-10℃，使用-45 号防冻液(SH/T0521)。 Use for windshield washer. When air temperatures are under -10℃, use -45# antifreeze washer fluid (SH/T0521).	

重要事项：

IMPORTANT:

✧ 传动液压两用油、柴油、柴油机油必须经过至少 48 小时沉淀后，才能加入使用。
Triple-purpose hydraulic/transmission/brake oil. diesel oil and diesel engine oil must be settled for at least 48h before added for use so as to avoid cleanliness reduction which will affect service performance of the machine

✧ 严禁不同牌号、不同生产厂家的油料混用。
Hybrid use of oils of different brands and manufacturers is strictly forbidden so as to avoid affecting service performance of the machine.

✧ 选用暖风机的拖拉机，冬季必须使用防冻液。
On the tractors with heater unit or A/C equipped, antifreeze must be used in winter to avoid frost cracks on these facilities.

11.2 主要螺栓、螺母拧紧力矩表

Tightening torque table of major bolts and nuts

表 11-2 主要螺栓、螺母拧紧力矩表

Table 11-2 Tightening Torque Table of Major Bolts and Nuts

名称及装配部位 Name and assembly location	螺纹规格 Thread specification	拧紧力矩 （N.M） Tightening torque (N.m)
发动机和变速箱壳体连接螺栓、螺母 Bolt connecting engine with gearbox, nut	M10	60～70
发动机和变速箱壳体连接螺栓、螺母 Bolt connecting engine with gearbox, nut	M12	90～110
发动机和变速箱壳体连接螺栓、螺母 Bolt connecting engine with gearbox, nut	M14	150～180

AGRISONTM 1300 651 830

保修事项
Warranty term

发动机和变速箱壳体连接螺栓、螺母 Bolt connecting engine with gearbox, nut	M16x1.5	200～260
变速箱和后桥箱连接螺栓 Bolt connecting gearbox with rear axle	M12	90～110
变速箱和后桥箱连接螺栓 Bolt connecting gearbox with rear axle	M16x1.5	200～260
发动机与离合器壳体 Engine and clutch housing	M8	25～30
大圆锥齿轮固定螺栓 Fixing bolt of the large bevel gear	M14x1.5	160～200
驱动轴壳体与后桥壳体连接螺栓 Bolt joining the housing of drive shaft and that of rear axle	M14x1.5	160～200
驱动轮轮毂与辐板连接螺栓 Bolt joining the hub and web of driving wheel	M18x1.5	397～457
前轮轮毂与辐板连接螺栓 Bolt joining the hub and web of front wheel	M16x1.5	200～260
托架与发动机连接螺栓 Bolting connecting the engine to the bracke	M16	182～245
提升器壳体与后桥壳体连接螺栓 Bolt joining the housing of lifter and that of rear axle	M12	95～110
油缸缸头与提升器壳体连接螺栓 Bolt joining the oil cylinder end and the housing of lifter	M18x1.5(老结构 Old structure) M20x1.5(新结构 New structure)	260～290 396～465
力调节支座与后桥壳体连接螺栓 Bolt joining the force-adjusting base and the rear-axle housing	M12	90～110
左右转向臂螺母 Nuts of the left and rear steering arms	M14x1.5	140～205
转向油缸两端固定销螺母 Pin-nut fixing both ends of the steering oil cylinder	M18x1.5	300～330
方向盘与转向柱连接螺母 Nut joining the steering wheel and the steering column	M16x1.5	130～150
前后摆销支座与前托架连接螺栓 Bolt joining the swing-pin base and the front bracket	M16	182～245

重要事项：

IMPORTANT:

✧ 拧紧拖拉机主要螺栓、螺母时，必须使用扭力扳手。

When tightening the major bolts and nuts on the tractor, torque wrenches must be used.

AERISON™ 1300 651 830

https://truckmanualshub.com/

11.3 油封

Reinforced seal

表 11-3 油封

Table 11-3 reinforced seal

安装部位 Installation location	规格 Specifications	标准号 / 图号 Standard code	件/台 quantity
分动箱轴承座 Transfer case bearing seat	FB30x52x7D	GB/T9877.1	2
变速箱输入轴轴承座 Bearing block for the input shaft of	FB50x72x8D	GB/T9877.1	2
动力输出轴 Power output shaft	SG60x90x12	JB2600	2
转向节立轴 Vertical shaft of steering knuckle	SD65x90x12	JB2600	8
半轴壳轴承座 Bearing block for the semi-axle housing	FB100x130x12D	GB/T9877.1	4
前桥传动轴中间支承座 Intermediate base for the front drive axle	FB30x52x7D	GB/T9877.1	2
前驱动桥前轮毂 Front wheel hub on front drive axle	165x190x7	5137109	2
前驱动桥半轴 Semi-axle of the front drive axle	40x62x12	5136002	2
前驱动桥驱动叉轴 Drive fork shaft of the front drive axle	42x62x17	5133799	2
前驱动桥小锥齿轮轴 Front drive axle bevel pinion shaft	45x75x10	5135294	1
前驱动桥壳体主销孔 Kingpin hole of the front drive axle housing	56x70x7.5	5121471	2
动力输出轴头处油封 Oil seal at the end of power output shaft	FB70x90x10D	GB/T9877.1	2

11.4 滚动轴承

Rolling bearing

表 11-4 滚动轴承

Table 11-4 rolling bearing

安装部位 Installation position	轴承名称 Bearing name	型号 model	件 / 台 quantity	轴承标准号 Bearings standard
变速箱输入轴轴承座	单列向心球轴承	6310	1	GB/T 276

AGRISONTM 1300 651 830

保修事项
Warranty term

Bearing block for the input shaft of gear box	Single-row radial ball bearing			
变速箱输入轴后端 Rear end of the input shaft of gear box	单列圆柱滚子调心轴承 Single-row self-aligning roller bearing	20209	1	special
副变速中间轴前端 Front end of the intermediate shaft of auxiliary transmission	单列向心球轴承 Single-row radial ball bearing	NUP1014	1	special
副变速中间轴后端 Rear end of the intermediate shaft of auxiliary transmission	单列向心球轴承 Single-row radial ball bearing	6408N	1	GB/T 276
动力输出传动轴中段 Intermediate section of the power output shaft	单列向心球轴承 Single-row radial ball bearing	6306	1	GB/T 297
后驱动轴内侧 Inner flank of rear drive shaft	圆锥滚子轴承 Tappered roller bearing	30214	2	GB/T 297
后驱动轴外侧 Outer flank of rear drive shaft	圆锥滚子轴承 Tappered roller bearing	30215	2	GB/T 297
后最终传动行星轮轴 Planetary gear shaft of rear final drive	滚针 Rolling needle	8x23.8	252	GB/T 309
动力输出传动轴前端 Front end of power output shaft	单列向心球轴承 Single-row radial ball bearing	6309	1	GB/T 276
动力输出传动轴后端 Rear end of the power output shaft	单列向心球轴承 Single-row radial ball bearing	6210	1	GB/T 276
动力输出轴后端 Rear end of power output shaft	单列向心球轴承 Single-row radial ball bearing	6310	1	GB/T 276
动力输出轴前端 Front end of the power output shaft	单列向心球轴承 Single-row radial ball bearing	6308	1	GB/T 276
差速器右侧 Left to the differential	圆锥滚子轴承 Tappered roller bearing	30216	1	GB/T 297
差速器左侧 Left to the differential	圆锥滚子轴承 Tappered roller bearing	30216	1	GB/T 297
后桥小锥齿轮轴后端 Rear end of the small bevel gear shaft of rear axle	圆锥滚子轴承 Tappered roller bearing	32311	1	GB/T 297
后桥小锥齿轮轴中端 Middle end of the small bevel gear shaft of rear axle	圆锥滚子轴承 Tappered roller bearing	30310	1	GB/T 297
变速箱输出轴后端 Rear end of the output shaft of gear box	单列向心球轴承 Single-row radial ball bearing	6211N	1	GB/T 276
变速箱输出轴前端 Front end of the output shaft of gear box	滚针轴承 Rolling needle bearing	K323920	1	JB/T7918

AGRISONTM 1300 651 830

附录
Appendixes

变速箱中间轴后端 Rear ends of gearbox countershaft	单列向心球轴承 Single-row radial ball bearing	6211	1	GB/T 276
变速箱中间轴前端 Front ends of gearbox countershaft	单列向心球轴承 Single-row radial ball bearing	6210N	1	GB/T 276
分动箱中间齿轮轴 Inter meidate gear shaft of transfer case	圆柱滚子轴承 Cylindrical roller bearing	42305E	2	GB/T 283
分动箱传动轴后端 Rear end of the drive shaft of transfer case	单列向心球轴承 Single-row radial ball bearing	6306E	2	GB/T 276
前驱动传动轴中段 Inter meidate section of the front drive shaft	单列向心球轴承 Single-row radial ball bearing	6006E	1	GB/T 276
前驱动小锥齿轮轴后端 Rear end of the small bevel gear shaft of front drive	圆锥滚子轴承 Tappered roller bearing	32207	1	特制 special
前驱动小锥齿轮轴前端 Front end of the small bevel gear shaft of front drive	圆锥滚子轴承 Tappered roller bearing	802048	1	特制 special
前驱动差速器 Differential of front drive	圆锥滚子轴承 Tappered roller bearing	2007112E	2	GB/T 297
前驱动轴中段 Intermediate section of the front drive shaft	单列向心球轴承 Single-row radial ball bearing	6007	2	GB/T 297
前轮毂轴承 Bearing for the front wheel hub	圆锥滚子轴承 Tappered roller bearing	819310	4	special
前最终传动行星齿轮轴 Planetary gear shaft of the front final drive	滚针 Rolling needle	5x23.8		GB/T 309
转向节轴内侧 Inner flank of the steering knuckle	圆锥滚子轴承 Tappered roller bearing	32209	2	GB/T 297
转向节外侧 Outer flank of the steering knuckle	圆锥滚子轴承 Tappered roller bearing	32307	2	GB/T 297
转向节主销 Kingpin of the steering knuckle	平底推力球轴承 Thrust ball bearing with flat seat	51210	2	B/T 301
副离合轴承座 Bearing block for the auxiliary cluthc shaft	角接触球轴承 Augular contact ball bearing	7016AC	1	B/T 292
主离合分离轴承座 Bearing block for the release shaft of main clutch	角接触球轴承 Augular contact ball bearing	996712	1	特制 Hand tailor
转向器立柱套管轴承座 Bearing block for the sleeve of steering column	单列向心球轴承 Single-row radial ball bearing	6004	1	B/T 276

AGRISONTM 1300 651 830

保修事项
Warranty term

变速箱 III 档主动齿轮内孔处 At the bore of driving gear for the third shift of gear box	滚针轴承 Rolling needle bearing	KK64x74x41	1	JB/T7918
变速箱 I 档从动齿轮内孔处 At the bore of driven gear of the first shift of gear box	滚针轴承 Rolling needle bearing	KK64x74x41	1	JB/T7918
变速箱 II 档从动齿轮内孔处 At the bore of driven gear of the second shift of gear box	滚针轴承 Rolling needle bearing	KK64x74x41	1	JB/T7918
变速箱后端副变速从动齿轮内孔处 At the bore of auxiliary driven gear at the rear end of gear box	滚针轴承 Rolling needle bearing	KK55x65x43	1	JB/T7918
动力输出从动轴前端 Front end of the power output driven shaft	轴承 Bearing	6210	1	B/T 276
动力输出从动轴后端 Rear end of the power output driven shaft	圆锥滚子轴承 Tappered roller bearing	7212E	2	B/T 276
动力输出主动双连齿轮后端 Rear end of the power output driving dual gear	圆锥滚子轴承 Tappered roller bearing	7210E	2	B/T 297

11.5 O 形橡胶密封圈

O-ring seal

表 11-5 O 形橡胶密封圈

Table 10-5 O-ring seal

安装部位 Installation position	规格 specification	标准号 / 图号 standard	件/台 quantity
分配器手柄轴 Distributor handle shaft	9.5x2.65G	GB/T3452.1	1
分配器反馈轴 Distributor feedback shaft	9.5x2.65G	GB/T3452.1	1
联锁轴 Interlocking shaft	13.2x1.8G	GB/T3452.1	1
分配器下降阀堵塞 The lowering valve of distributor is blocked	16x1.8G	GB/T3452.1	1
分配器安全阀 Relief valve of the distributor	19x2.65G	GB/T3452.1	2
分配器安全阀堵塞 Relief valve of the distributor is blocked	11.8x2.65G	GB/T3452.1	1
分配器主阀前盖 Front cover of the main valve of	19x2.65G	GB/T3452.1	1

AGRISON™ 1300 651 830

附录
Appendixes

分配器下降阀 Lowering valve of the distributor	19x2.65G	GB/T3452.1	1
分配器单向阀 Non-return valve of the distributor	19x2.65G	GB/T3452.1	2
分配器单向阀堵塞 The non-return valve of distributor is blocked.	20x1.8G	GB/T3452.1	1
制动泵螺塞 Screw plug of the brake pump	20x2.65G	GB/T3452.1	2
分配器回油阀 Oil return valve of the distributor	21.2x2.65G	GB/T3452.1	1
转向油泵进油口 Inlet of the steering oil pump	19x2.65G	GB/T3452.1	1
分配器单向阀 Non-return valve of the distributor	25.7x2.65G	GB/T3452.1	1
制动泵阀杆 Valve stem of the brake pump	25x3.55G	GB/T3452.1	2
制动泵出油管接头 Joint of the oil outlet pipe of brake pump	30x3.55G	GB/T3452.1	2
提升器提升轴 Lifting shaft of the lifter	54.5x5.3G(old structure) 56x3.55G(new structure) 63x3.55G(new structure)	GB/T3452.1	2
提升器活塞 Lifter piston	100x5.3G	GB/T3452.1	1
提升器缸头进油孔 Oil inlet of the lifter cylinder end	12.5x2.65G(old structure) 17x2.65G(new structure)	GB/T3452.1	2 2
提升器缸头 Lifter cylinder end	103x3.55G(old structure) 132x3.55G(new structure)	GB/T3452.1	1
提升器缸筒 Lifter cylinder body	118x3.55G	GB/T3452.1	1
制动器活塞 Piston of the brake	260x3.55G	SH800.43.149	2
制动器活塞 Piston of the brake	300x3.55G	SH800.43.150	2
动力输出操纵手柄轴 Power output operating-handle shaft	17x1.8G	GB/T3452.1	1
前桥传动轴外护套管 Protective sleeve for the front drive axle	45x3.55G	GB/T3452.1	4
分动箱操纵轴 Operating shaft of the transfer case	17x1.8G	GB/T3452.1	2
前驱动桥小锥齿轮轴 Front drive axle bevel pinion shaft	31.5x1.8G	GB/T3452.1	1
前驱动桥半轴轴承座	80x2.62G	4966231	2

AGRISONTM 1300 651 830

保修事项
Warranty term

Bearing block for the front drive semi-axle			
前驱动桥后安装座 Rear base for the front drive axle	99.6x5.3G	GB/T3452.1	2
前驱动桥前安装座 Front base for the front drive axle	52.6x3.55G	GB/T3452.1	1
分配器进油接头 Oil inlet joint of the distributor	12.5x2.65G	GB/T3452.1	1
手制动凸轮轴 Manual brake camshaft	15x2.65G	GB/T3452.1	2
转向轴 Steering shaft	15x2.65G	GB/T3452.1	1
油泵出口弯管接头 Elbow joint at the oil pump outlet	20x2.65G	GB/T3452.1	1
差速锁拨叉轴 Fork shaft of the differential lock	20x2.65G	GB/T3452.1	1
油泵进油口连接板 Connecting plate at the oil pump inlet	21.2x2.65G	GB/T3452.1	1
差速锁拨叉轴座 Fork shaft base of the differential lock	30x2.65G	GB/T3452.1	1
前桥摆销 Swing pin of the front axle	50x5.3G	GB/T3452.1	2
油泵出口弯管接头 Elbow joint at the oil pump outlet	15x2.65G	GB/T3452.1	1
油泵进油口连接板 Connecting plate at the oil pump inlet	21.2x1.8G	GB/T3452.1	1
吸油管接头与提升器壳体接合面 Where the oil suction pipe meets the lifter housing	26.5x2.65G	GB/T3452.1	1
吸油管接头与吸油滤清器接合面 Where the oil suction pipe Joint meets the oil suction filter	32.5x2.65G	GB/T3452.1	1

AGRISON™ 1300 651 830

https://truckmanualshub.com/

11.6 配套农机具

Supporting farm machines and implements of the SHUHE SH 90series tractors

表 11-6 配套农机具

Table 11-6 Supporting farm machines and implements of the SHUHE SH series tractors

类别 Category	拖拉机型号 Tractor model	配套机具名称 Name of supporting implement	机具型号 Implement modle	主要技术参数 Main technical parameters	配套企业 Supporting enterprise
耕地机械 Tilling machinery	SH800/SH804 SH850/854	悬挂三铧犁 Mounted 3-furrow plough	1L-335	深耕（22-28）厘米 Tilling depth (22~28)cm	河北省馆陶县金穗农机制造厂 Jinsui Farm Equipment Factory,Guantao County Hebei Province 保定双鹰农机有限责任公司 Baoding Shuangying AgriculturalMachinery Co.,Ltd. 辽宁黑山县机械制造有限公司 Liaoning Province HeishanCounty Machinery ManufacturingCo., Ltd 河北省宁晋县翼新农机具制造厂 Hebei Province NingjinCounty Jixin Agricultural Implements Manufacturing Plant 郑州犁厂 Zhengzhou plough factory 石河子液压件厂 Shihezi Hydraulic Parts Plant 新疆双箭农机制造有限责任公司 Xinjiang Shuangjian Agricultural Machinery
		悬挂翻转三铧 Mounted 3-furrow reversible plough	1LF-335		
		悬挂调幅三铧犁 Suspended three-furrow plough	1LT-335	深耕（22-28）厘米 Tilling depth (22~28)cm	
		悬挂五铧犁 Mounted 5-furrow plough	1L-427	深耕（18-24）厘米 Tilling depth (18~24)cm	
		悬挂六铧犁 Suspended six-furrow plough	1L-427	深耕（20-26）厘米 Tilling depth (16~20)cm	

AGRISONTM 1300 651 830

保修事项

Warranty term

		悬挂七铧犁 Suspended seven-furrow plough	1L-427	深耕（20-26）厘米 Tilling depth (16~20)cm	Manufacturing Co, Ltd 哈尔滨沃尔科技有限 Harbin Woer Sci-Tech Co, Ltd 广西南宁邕江机械有限公司 Nanning Yongjiang Machinery Co., Ltd. 黑龙江省嫩江农业机械厂 Heilongjiang NenjiangAgricultural Machinery Factory 法国库恩公司 Franch kuen company 法国贝松公司 Franch beisong company
		液压翻转犁 Hydraulic reversible plough	1LF-430/335	深耕（20-26）厘米 Tilling depth(20~26)cm	
		悬挂四铧犁 Mounted 4-furrow plough	1LH-430	犁架高度（750-780）毫米 Height of plow stock(750~780)mm	
		悬挂四铧犁 Mounted 4-furrow plough	1LH-338	犁架高度（750-780）毫米 Height of plow stock(750~780)mm	
		深松浅翻犁 Deep-loosening shallow-turning plough	1LH-435	深耕（30-35）厘米 Tilling depth(30~35)cm	
		深松浅翻犁 Deep-loosening shallow-turning plough	1FSL-435	深耕（30-35）厘米 Tilling depth(30~35)cm	
	SH900/SH904	Hydraulic reversible plough	1LF-435/430	深耕（22-28）厘米 Tilling depth(22~28)cm	
		深松浅翻犁 Deep-loosening shallow-turning plough	1FSL-435	深耕（30-35）厘米 Tilling depth(30~35)cm	
	SH800/SH804	Rotary tiller	1GQN-200/210J	深耕（12-15）厘米，大轮胎机型配高箱机中心高为（450-510）毫米 Tilling depth(12~15)cm Elevated-box machine for	定州开元机械有限公司 Dingzhou Kaiyuan Machinery company 南昌旋耕机厂 Nanchang Rotary Tiller Factory Lianyungang Rotary Tiller Factory
		Variable-speed rotary tiller	1GQNB-200/230		
	SH900/SH904	Rotary tiller	1GQN-200/230J		
		变速旋耕机	1GQNB-200/230		

AGRISONTM 1300 651 830

附录
Appendixes

		Variable-speed rotary tiller		large tyre tractor The height at the center is(450-510)mm	西安市旋耕机厂 Xi'an Rotary Sower Factory
		驱动耙 Driving harrow	DS2000	深耕（12-20）厘米 Tilling depth(12~20)cm	青岛马斯其奥公司 Qingdao Maschio Corporation
整地机械 Levelling machinery	全系列 All series	20 片悬挂中耙 Medium mounted 20-disc harrow	1BJX-2.2	耙深（12-14）厘米 Harrow depth(12~14)cm	佳木斯北方机械制造有限公司 Jiamusi North Machine Building Co., Ltd. 徐州华星农业机械有限公司 Xuzhou Huaxing Agricultural Machinery Co., Ltd. 黑龙江省嫩江农业机械厂 Heilongjiang Nenjiang Agricultural Machinery Factory 哈尔滨沃尔科技有限公司 Harbin Woer Sci-Tech Co, Ltd 阿克苏利农机机械制造有限公司 Akesu Linong Machinery Manufacturing co., Ltd 石河子液压件厂 Shihezi Hyciraulic Parts Plant 新疆双箭农机制造有限责任公司 Xinjiang Shuangjian Agricultural Machinery Manufacturing Co, Ltd
		24 片半悬挂中耙 Medium semi-mounted 24-disc harrow	1BJX-2.5	耙深（12-14）厘米 Harrow depth(12~14)cm	
		28 片半悬挂中耙 Medium semi-mounted 28-disc harrow	1BJBX-3.1	耙深（12-14）厘米 Harrow depth(12~14)cm	
		72 片半悬挂中耙 Light 72-blade folding harrow	1BY-7.2	耙深（8-10 厘米 Harrow depth(8~10)cm	
		24 片液压偏置重耙 Heavy 24-blade hydraulic offset harrow	1BZBX-2.0/2.5	耙深（14-16）厘米 Harrow depth(14~16)cm	

AGRISONTM 1300 651 830

保修事项
Warranty term

		联合整地机 Combined leveling machine	1LZ-3.0/3.6/1LZ-4.2	耙深（8-10 厘米 Harrow depth(8~10)cm	
Levelling machinery	All series	液压中耙 hydraulic medium-harrow	2BJ-3.4	耙深（12-14）厘米 Harrow depth(12~14)cm	黑龙江讷河机械厂 Heilongjiang Province Nahe Machinery Factory
		液压中耙 hydraulic medium-harrow	2BJ-4.0		
播种施肥机械 Seeding and fertilizer-spraying machine	全系列 All series	施肥播种机 Seeding and fertilizer-spraying machine	2BF-24A	小麦播种 24 行 Seeding wheat for 24rows	西安农业机械厂 Xian Agricultural Machineryfactory 石家庄农业机械股份有限公司 Shijiazhuang Agricultural Machinery Co., Ltd. 黑龙江省勃农机械有限公司 Heilongjiang Province Bonong Machinery Co, Ltd 黑龙江白桦实业集团白桦耕作机械厂 Heilongjiang Baihua Industries Group Baihua Plowing Machinery Factory 滦南县永发农机厂 Luannan County YongfaAgricultural Machinery Factory 黑龙江嫩江农业机械厂 Heilongjiang Nenjiang Agricultural Machinery Factory 新疆农牧机械厂 Xinjiang Agricultural and Husbandry Machinery Factory 阿克苏利农机机械制造有限公司 Akesu Linong MachineryManufacturing Co., Ltd
		施肥播种机 Seeding and fertilizer-spraying machine	2BF-24C		
		铺膜播种联合作业机 Seeding and membrane-placing machine	2BML-12	棉花播种 12 行 Seeding maize 12 rows	
		播种施肥联合作业机 Seeding and fertilizer-spraying machine	2BM-8	玉米、大豆 播种：8 行 Seeding maize soybean8 rows	
		播种施肥机 Seeding and fertilizer-spraying	2BFXZ-24	小麦播种 24 行 Seeding wheat 24rows	

AGRISONTM 1300 651 830

附录
Appendixes

		machine			
		播种施肥机 Seeding and fertilizer-spraying machine	2BFXZ-24		
		气吸精量播种机 Air-suction exact seeding machirie:	2BQ-7/8	玉米、大豆 播种 7/8 行 Seeding Maize 7/8rows	
喷药机 sprayer	全系列 All series	悬挂式打药机 Suspended-type Pesticide sprayer	3W-1200/21	药箱容量：1200 升 喷幅：21 米 Pesticide tank capacity:1200L Spraying width:21m	邯郸诚工亿众植堡机械厂 Handan Chenggong Yizhong Plant protection Machinery Factory 黑龙江嫩江农业机械厂 Heilongjiang Nenjiang Agricultural Machinery Factory
还田机 Returning machine	SH800/SH804 SH850/SH824 SH900/SH904	秸秆切碎还田机 Straw Returning shredder	4JH-1.72	工作幅宽：1.8 米/2.0 米 Working width: 1.8m/1.72m	定州开元机械有限公司 Dingzhou Kaiyuan machineryfactory 石家庄农业机械股份有限公司 Shijiazhuang Agricultural Machinery Co., Ltd. 德州华北农业装备有限公司 Dezhou Northern China Agricultural Equipment Co., Ltd. 德州宝丰农机制造责任公司 Dezhou Baofeng Agricultural Machinery Manufacturing Co, Ltd 赵县金利机械厂 Zhaoxian Jinli Machinery Factory
			4JH-180	工作幅宽：1.8 米/2.0 米 留茬高度（2-8）厘米 Working width: 1.8m/2.0m Stubble left(2-8)cm	
	SH950/SH954 SH1000/SH1004		4JHY-1.8/2.0		
			4JH-1.8/2.0		

AGRISONTM 1300 651 830

保修事项

Warranty term

复式机具 Compound implements	SH850/SH854	灭茬旋耕起垄镇压机 Stubble Cleaning, Rotary tilling, ridging and suppreessing	SGTN-200/210	灭茬三行，起三垄；配套轮胎机型:箱体中心高 450-510 毫米 Turn aside stubbles for three rows, form three ridges; Used for large-tyre Tractors; height at the box center(450-510)mm	沈阳华源农机制造有限公司 Shenyang Huayuan Machine Building Co., Ltd. 南昌旋耕机厂 Nanchang Rotary Tiller Factory 连云港旋耕机厂 Lianyungang Rotary Tiller Factory
	SH900/SH904		SGTN-210/240		
	SH950/SH954 SH1000/SH1004		SGTN-240/250	灭茬三/四行，起垄三/四行；配套大轮胎机型：箱体中心高（450-510）毫米（高箱体） Turn aside stubbles for three/four rows, form three/four ridges; Used for large-tyre Tractors; height at the box center(450-510)mm	
收获机械 Harvest machinery	全系列 All series	小麦背负机 Wheat carrier	1L-427	喂入量：2.5 千克/秒 Intake amount 2.5kg/s 割幅：2.2 米 Cutting width:2.2m	福田雷沃国际重工股份有限公司 Foton Lovol International Heavy Industries Co., Ltd. 桂林收割机厂 Guilin harvester factory
		玉米背负机 Maize carrier	4Y-3	3 行 Cut 3 rows	福田雷沃国际重工股份有限公司 Foton Lovol Intemational Heavy Industries Co., Ltd.

AGRISONTM 1300 651 830

附录
Appendixes

路面机械 Road machinery	全系列 All series	公路拌合机 On-the-high way mixer	LBJ-180/200	作业幅宽 1.8 米/2.0 米 Working width:1.8m/2.0m	山东兖州卢仝机械研究所 Shandong yunzhou lutong machinery research institute 连云港市旋耕机厂 Lianyungang Rotary Tiller Factory 江苏省太仓众信机械制造有限公司 Jiangsu Province Taicang Zhongxin Machinery Manufacturing Co., Ltd.
挂车 Trailer	全系列 All series	农用挂车 Agricultural trailer	1L-427	载重量 7 吨 Load 7t	宁津挂车厂 Ningjin Trailer Plant 北京挂车厂 Beijing Trailer Plant 青岛雅凯机械厂 Qingdao Yakai Machinery Plant 河南尉氏百川机械公司 Henan Weishi Baichuan Machinery Corporation
		农用挂车 Agricultural trailer	1L-427		
		液压侧卸农用挂车 Side dump Agricultural trailer	7CC-7		

AGRISON™ 1300 651 830

https://truckmanualshub.com/

保修事项

Warranty term

特别提示:

Important issues:

✧ 选购农机具前，依据将要作业区域的作业条件(土壤阻力、农艺要求等)参考本明细表，初选配套农机具的种类、型号，并咨询经销商、机具厂商，详细阅读农机具的“使用保养说明书”，熟悉农机具的结构、性能、使用方法、适用范围等。

Before shopping farm machines and implements, select types and models of the matching ones roughly, consult dealers according to the operational conditions (soil resistance, agricultural requirements, etc.) of the areas where you will work on and referring to this list.

✧ 依据将要作业区域的作业条件(土壤阻力、农艺要求等)，参考咨询意见，确定农机具型号等主要技术参数，实现合理配套。如果配套不合理，将给机组带来不利影响。

Determine the main technical parameters of the farm machines and implements such as models according to the operational conditions (soil resistance, agricultural requirements, etc.) of the areas where you will work on and referring to the advisory advices so as to realize rational matching. Improper matching will bring adverse effect to the machine set.

✧ 作业条件(土壤阻力、农艺要求等)不同，同一机具的作业效率、效果是不尽相同的，请用户依据当地作业条件合理确定作业速度、作业幅宽等。

Work efficiency and effect of the same implement vary with operational conditions (soil resistance, agricultural requirements, etc.). Therefore, you should determine working speed and width, etc. properly according to local operational conditions, so as to avoid affecting service performance of the machine.

⚠ 注意：

CAUTION:

✧ 使用配套农具前，操作人员应认真阅读农具的“使用保养说明书”，熟悉结构、性能、操作方法、合理配套，以免造成机具和人身事故。

Before using the supporting tools, the operator should carefully read the agricultural implements the use and maintenance manual, familiar with the structure, properties, methods of operation, reasonable facilities, in order to avoid the equipment and personal accident.

AGRISON™ 1300 651 830

https://truckmanualshub.com/

亲爱的用户：

Dear customers

非常感谢您的惠顾，选购、使用沭河 SH90 系列轮式拖拉机，我们愿意竭诚为您服务，及时有效地解决您在使用中出现的问题，最大限度地满足您的要求，做好用户服务工作。

Thank you for your shopping, choosing and using SHUHE SH series wheeled tractors We are willing to provide you with best service by serving you wholeheartedly, solving the problems that you encounter during use promptly and effectively, and meeting your demands to the maximum extent.

现将“用户信息反馈单”随同说明书发给您，请您用正楷字填写。用挂号信寄至：山东省临沭县经济开发区　山东常林道依茨法尔机械有限公司三包服务部，邮政编码：276715。公司将把您的《用户信息反馈单》相关信息输入电脑贮存，以便为您实行优质的“三包”服务。

Now, we will send the "Customer Information Feedback Form" along with the manual to you. Please complete it in round hand and then mail it to Three Guarantees Service Department of Shandong Changlin Agricultural Equipment co., ltd; at the following address by registered letter: No,112, Changlin west street, Linshu county, Shandong Province Zip code:276715 We will input your "Customer Information Feedback Form" into computer for storage in order to provide you with "Three Guarantees' service.

对您的配合和大力支持，我们表示衷心的感谢!

We really appreciate your cooperation and great support!

AGRISON™ 1300 651 830

https://truckmanualshub.com/

保修事项
Warranty term

用户信息反馈单

Customer Information Feedback Form

Product model 产品型号		拖拉机出厂编号 Tractor identification number			发动机生产厂家 Engine Manufacturer		
发动机编号 Engine number		出厂日期 Delivery date			购买日期 Purchase date		
用户姓名 User name		年龄 Age		文化程度 Education level		驾驶工龄 Working years as driver	
家庭住址 Home address				电话号码 Telephone number		邮政编码 Zip code	
购 机 主 要 用 途 Main purposes of your purchase				拖拉机负荷 Tractor load			
出现的故障时间及原因 Occurrence time and causes of troubles							
损坏零件的名称及状况 Names and conditions of damaged parts							
改进意见及建议 Improvement ideas and suggestions							

注：

Note:

此反馈单由机主(或机手)如实填写，以便了解拖拉机使用情况，做好用户服务工作。用户信息反馈单复印后填写有效。

This feedback form shall be completed truthfully by the owner (or operator) so that we can know service condition of your tractor for provision of better customer service. Filling in a copy of this customer information feedback form is valid.

AGRISON™ 1300 651 830

https://truckmanualshub.com/

Agrison

2098 Hume Highway Campbellfield Victoria Australia 3061

P: 1300 651 830 Fax: 1300 854 830 Intl: + 61 3 9357 8867

contact@agrison.com.au

www.agrison.com.au

*All rights reserved.