https://truckmanualshub.com/

Operator’s manual 600 – 900

Downloaded from www.Manualslib.com manuals search engine

https://truckmanualshub.com/

Operator's manual 600 – 900

Serial numbers of your tractor

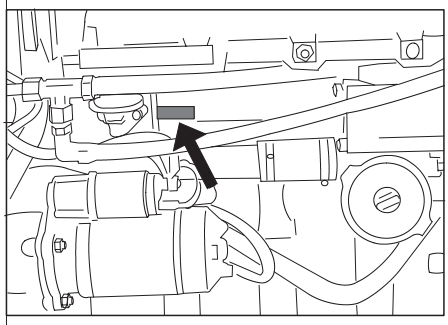

Engine number . . . . . .

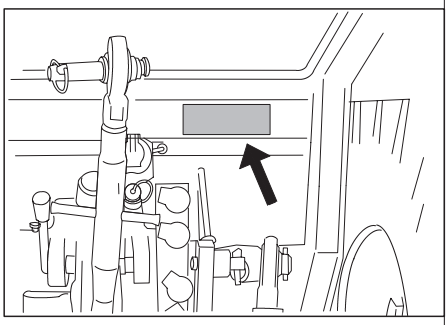

Type plate EEC . . . . . .

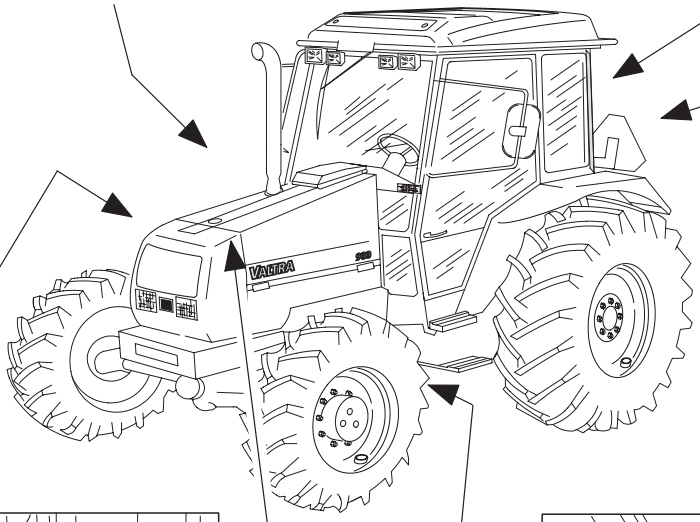

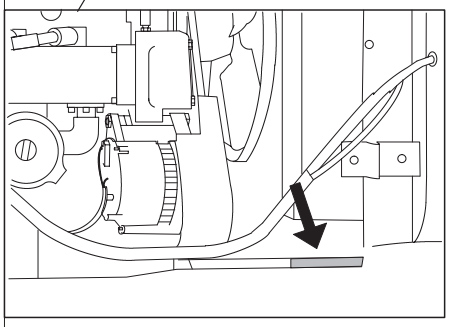

Tractor number . . . . . .

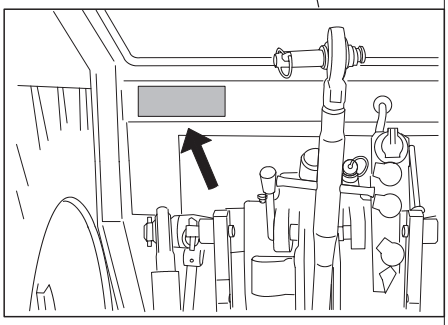

Cab number . . . . . .

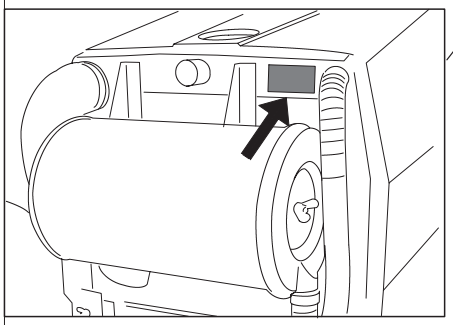

Type plate (on some marketing areas) . .

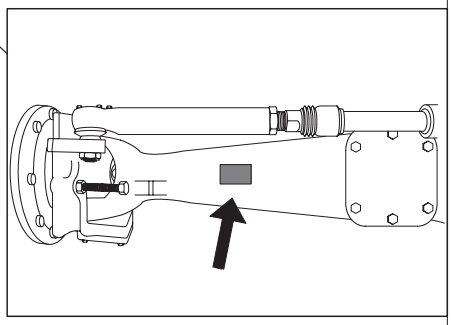

Powered front axle number . . . . . .

69 – 1,6

Downloaded from www.Manualslib.com manuals search engine

https://truckmanualshub.com/

Main table of contents

The Operator's Manual is divided into **12 main parts**, using the letters **A, B, C ... L**. These are futher sub divided into **number** sections. There are **four levels** of titles. E.g. on the marking **D.1.3** the letter D tells that it is the main part **D**, **Instruments and controls**. The first number **1** (see detailed table of contents) tells that it is the **illustration section of the instruments and controls part,** etc.
The detailed table of contents provides a lettering, a numbering and page system. The bottom of each page displays a reference to the main part of the manual it is in.

page no

A Table of contents ..... 4 – 5
B Safety precautions ..... 6 – 13
C General description ..... 14 – 20
D Instruments and controls ..... 21 – 47
E Starting and running ..... 48 – 51
F Operating instructions ..... 52 – 61
G Maintenance schedule ..... 62 – 66
H Periodic maintenance ..... 67 – 84
I Checks and adjustments ..... 85 – 95
J Specifications ..... 96 – 112
K Extra equipment ..... 113 – 133
L Alphabetical index ..... 134 – 136

Downloaded from www.Manualslib.com manuals search engine

https://truckmanualshub.com/

To the operator

Valtra 600, 700, 800, 900
(models sold may vary in different marketing areas)

This Operator's Manual is primarily intended for the driver. The manual contains detailed instructions for driving and maintaining the tractor. Make sure that your new tractor is always handled and maintained in the correct way which will keep it reliable and provide economical operation for many years. In certain marketing areas the whole model range are not sold.
This Operator's Manual is only for agricultural tractors. If the tractor is used as a traffic tractor, it must fulfil the requirements of local traffic regulations. In this case always contact your Valtra dealer first.

In this booklet, information which refers to more than one model is given as (e.g. 600–900 = 600, 700, 800 and 900).
Alternative equipment in the book means equipment, which can be selected when buying. This equipment can not easily be fitted at a later time to the tractor. Extra equipment means the equipment, which can be bought and mounted at a later time to the tractor.

We recommend that you read the manual thoroughly. Follow the maintenance program carefully and add the daily maintenance to your normal routine.

Maintenance, repairs and adjustments which are not described in this Operator's Manual require the use of special tools and exact technical data. For such work you should contact your dealer who has specially trained personnel to help you.

Only use genuine Valtra spare parts for optimum performance from your tractor. You should order spare parts according to the instructions given in the illustrated parts catalogue.

Due to the continual development of Valtra Inc. products, the content of this manual may not always correspond with the new product. Therefore, we retain the right to make alterations without prior notification.

Please note: when using the tractor you must always *follow all valid laws and regulations* even, if they have not specifically been pointed out in this manual.

Valtra Inc.

Downloaded from www.Manualslib.com manuals search engine

https://truckmanualshub.com/

A. Detailed table of contents

Serial numbers of your tractor **1**
Main table of contents **2**
To the operator **3**
A. Detailed table of contents **4**
B. Safety precautions **6**
B 1. Safety rules 6
B 2. Safety precautions 10
B 3. Tractor lights 12
C. General description **14**
C 1. Illustrations Valtra 600–900 14
C 2. Service 17
C 3. Engine 17
C 4. Power transmission 17
C 4.4. Power shuttle 18
C 4.5. Overdrive 18
C 5. Brake system 19
C 6. Steering system 19
C 7. Hydraulic system 20
C 7.1. Hydraulic lifts 20
D. Instruments and controls **21**
D 1. Illustrations 21
D 1.1. Controls on front 21
D 1.2. Instrument panel 22
D 1.3. Controls on right hand side 23
D 1.4. Control panel in models with an electrohydraulic three–point linkage 24
D 1.5. Controls on left hand side 25
D 1.6. Rear side controls 26
D 1.7. Roof console 26
D 1.8. Driver's seat 27
D 2. Instruments and controls, more detail 28
D 2.1. Controls on frontside 28
D 2.2. Instrument panel 29
D 2.2.1. Front panel of instrument panel 29
D 2.2.2. Instrument panel 30
Changing the Agroline tyre/tire parameters for different tyres/tires 34
D 2.2.3. Side panel of instrument panel 34
D 2.3. Controls on right hand side 35
D 2.3.1. Driving 35
D 2.3.1.4. HiShift 36
D 2.3.2. Rear linkage (mechanically controlled hydraulic lift) 38
D 2.3.3. Rear power take–off 38
D 2.3.4. Auxiliary hydraulic 39
D 2.3.5. Side pillar control panel 39
D 2.3.6. Other controls 39
D 2.4. Electro–hydraulic three–point linkage, control panel 40
D 2.4.1. Rear linkage (electrohydraulically controlled lift) 40
D 2.4.2. Side pillar control panel 42
D 2.4.3. Other controls 43
D 2.5. Controls on left hand side 44
D 2.6. Controls on rear side 44
D 2.7. Roof console 45
D 2.8. Seat 46
E. Starting and running **48**
E 1. Points to note during the first 50 hours running . 48
E 2. Start 48
E 2.1. Normal start 48
E 2.2. Cold start 48
E 2.2.1. Cold start, special instructions 48
E 2.3. Starting aerosol 49
E 2.4. Starting with auxiliary batteries (jump starting) 49
E 3. Driving 49
E 3.1. Changing gear 49
E 3.1.1. Forward/reverse models 50
E 3.1.2. Overdrive models 50
E 3.2. Powered front axle 50
E 4. Stopping 51
E 5. Action to be taken during using 51
E 5.1. Permitted driving inclinations for a tractor on a slope 51
E 5.2. Use of snow chains 51
E 5.3. Towing the tractor 51
F. Operating instructions **52**
F 1. Use of power take–off 52
F 2. Trailer 53
F 3. Three–point linkage 54
F 3.1. Lifting links 54
F 3.2. Check links 54
F 3.3. Telescopic lower links 55
F 4. Using the hydraulic lift 55
F 4.1. Using the mechanically controlled hydraulic lift 55
F 4.1.1. Position lever 55
F 4.1.2. The floating position 55
F 4.1.3. Draft control and automatic weight transmission 56
F 4.1.4. Adjustment of lowering speed 56
F 4.2. Using the electrohydraulically controlled hydraulic lift 57
F 4.2.1. Lift/stop/lower switch (Autocontrol switch) 57
F 4.2.2. Activating the linkage 57
F 4.2.3. Position control 57
F 4.2.4. Setting transport height 57
F 4.2.5. Floating position 57
F 4.2.6. Draft control 58
F 4.2.7. Lowering speed control 58
F 5. Operation of auxiliary hydraulics 59
F 5.1. Valves adjusting for single– or double acting 59
F 5.2. Action to be taken during operation 60
F 6. Attaching implements 60
F 6.1. Using PTO shafts 60
F 7. Use of top link 61
G. Maintenance schedule **62**
G 1. Service 62
G 2. Recommended fuel and lubricants 63
G 2.1. Oil recommendations according to outdoor temperature 63
G 2.2. Quality requirements of engine fuel 64
G 2.2.1. Fuel 64
G 2.2.2. Fuel storage 64
G 2.2.3. Filter system 64
G 3. Grease 64
G 4. Lubrication and maintenance schedule 65
H. Periodic maintenance **67**
H 1. General 67
H 1.1. Air filters 67
H 2. Maintenance daily (at least every 10 hours) 68
H 3. Maintenance weekly (at least every 50 hours) . . 69
H 4. Maintenance every 250 hours 72
H 5. Maintenance every 500 hours 74
H 6. Maintenance every 1000 hours (or yearly) 76
H 7. Maintenance every 2000 hours (or every other year) 81
H 8. Maintenance every 4000 hours 84
I. Checks and Adjustments **85**
I 1. Engine 85
I 1.1. Bleeding fuel system 85
I 1.2. Air cleaner 86
I 1.3. Maintenance–cooling system 87
I 2. Electrical system 88
I 2.1. Checking and maintenance of battery 88
I 2.2. Alternator 88
I 2.3. Safety precautions for the electrical system . . 88
I 2.4. Headlight adjustment 89
I 3. Power transmission 89
I 3.1. Adjusting pedal free travel of propulsion clutch 89
I 3.2. Adjusting PTO clutch lever free travel 89
I 4. Brake system 90
I 4.1. Adjusting travel of brake pedals 90

Downloaded from www.Manualslib.com manuals search engine

https://truckmanualshub.com/

I 4.2. Adjusting parking brake 90
I 4.3. Bleeding brake system of air 90
I 5. Steering system 91
I 5.1. Checking and adjusting toe–in of front wheels . . 91
I 5.1.1. Adjusting toe–in 2WD 91
I 5.1.2. Adjusting toe–in 4WD 92
I 5.2. Limiting steering lock of front wheels (powered front axle) 92
I 6. Adjusting track width 92
I 6.1. Front axle 92
I 6.1.1. 2WD axle 93
I 6.1.2. Powered front axle 93
I 6.2. Adjusting track width: Rear axle 94
I 7. If the tractor is not used 94
I 7.1. Storing the tractor 94
I 7.2. Removing the tractor from storage 94
J. Specifications 96
J 1. Dimensions and weights 96
J 2. Max permissible axle loadings 96
J 3. Tyres/tires 97
J 3.1. Tightening torques, wheel nuts 97
J 3.2. Tyre/tire pressures and permissible loadings 98
J 4. Track widths, mm 99
J 5. Engine 99
J 5.1. Lubrication system (engine) 100
J 5.2. Fuel system and air filter 100
J 5.3. Coolant system 100
J 6. Electrical system 100
J 7. Power transmission 101
J 7.1. Clutch 101
J 7.2. Gearbox 101
J 7.3. Speed ranges (km/h) 101
J 7.4. Power take–off 103
J 7.4.1. Running speed at different nominal revs of the rear PTO (km/h) 103
J 7.4.2. Power take–off output 105
J 7.5. Powered front axle 105
J 7.6. 2WD axle 105
J 8. Brakes 105
J 9. Steering system 105
J 9.1. Turning radius 106
J 10. Working hydraulics 106
J 10.1. Hydraulic lift, functions 106
J 10.1.1. Max. lifting force 106
J 10.1.2. On mechanically controlled hydraulic lift 106
J 10.1.3. On electrohydraulically controlled hydraulic lift 106
J 10.1.4. Valves for auxiliary hydraulics 107
J 11. Other specifications 107
J 11.1. The capacity of the cab filter 107
J 11.2. Code number table for calibrating 107
J 12. Wiring diagram, component list 108
J 13. Wiring diagram 110
K. Extra equipment 113
K 1. Extra equipment catalogue 113
K 1.1. Engine 113
K 1.2. Electrical system 113
K 1.3. Power transmission 113
K 1.4. Brake system 113
K 1.5. Steering system 113
K 1.6. Frame and wheel 113
K 1.7. Cab and shields 113
K 1.8. Hydraulic 113
K 2. Extra equipment, operating and service 114
K 2.1. Engine 115
K 2.2. Electrical system 115
K 2.2.1.Safety Stop 115
K 2.2.2. Electric main circuit switch 115
K 2.3. Power transmission 116
K 2.3.1. Front power take–off 116
1. Instructions for operating 116
2. Maintenance 116
3. Specifications 117
K 2.3.2. HiShift for the rear PTO switch 118
1. Instructions for operating 118
2. Adjustment for the slow engagement 119
K 2.4. Brake system 120
K 2.4.1. Trailer air pressure brakes (press air compressor) 120
K 2.4.2. Brake valve of the trailer 122
K 2.5. Steering system 123
K 2.6. Frame and wheel 124
K 2.7. Cab and shields 124
K 2.7.1. Air suspension–driver's seat 124
1. Seat functions 124
K 2.7.2. Air conditioning 125
1. Instructions for operating 125
2. Maintenance 126
K 2.8. Hydraulic and towing device 127
K 2.8.1. Trailer hitch 127
1. Instructions for operating 127
2. Checks and Adjustments 128
2.1. Adjusting lifting links of trailer hitch 128
2.2. Checking locking of trailer hitch 128
3. Specifications 128
K 2.8.2. Agricultural towing device 129
1. Specifications 129
K 2.8.3. Wagon towing device 130
2. Instructions for operating hitch 130
3. Maintenance and greasing 131
4. Specifications 132
K 2.8.4. Front linkage 132
1. Instructions for operating 132
2. Maintenance 133
3. Specifications 133
L. Alphabetical index 134
Conversion table for common units 137

Downloaded from www.Manualslib.com manuals search engine

https://truckmanualshub.com/

B. Safety precautions

B 1. Safety rules

This section summarizes the regulations which must always be followed when working with the tractor. However, these regulations do not exempt the driver from following statutory and other national regulation as regards traffic safety and occupational health and safety.

Safety regulations applicable for different types of working sites and existing road traffic laws must always be followed.

When designing the tractor priority was given to the safety of the operator. Steps and handles have been placed with ease of entry into the cab in mind. The tractor has several safety features eg: guards for belts and pulleys etc.

CE

65–2,2

CE–marking above means that this tractor meets standards of EMC directives.

1 **Brakes** – Always check that the brakes are operating correctly before setting off. The brake pedals should be locked together when driving on the road. The brakes should be adjusted as necessary. Extensive repairs to the braking system should be undertaken only by Valtra approved service personnel. **When implements or ballast weights are front end mounted the rear axle loading is decreased**:
- In these circumstances the driver should check that the rear brakes are still effective.
- When needed use opposite ballast weights at rear.
- On the 4WD models keep the 4WD engaged at least on the slippery ground as then the front wheels are braking.

2 **Children and tractor** – Never allow children in the cab or near the tractor or attached implement while the engine is running. Always lower the implement to the ground when leaving the tractor.

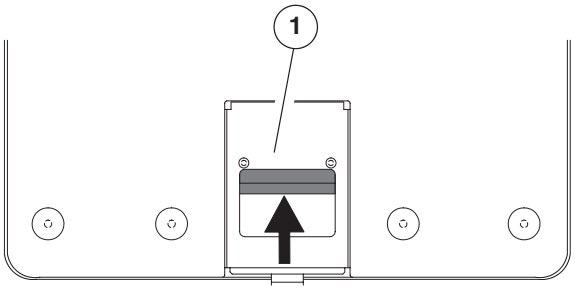

65–2

3 **Roof hatch** – Open the hatch by pulling the lever **1** on the handle rearwards. Then push at the front side of the roof hatch, the gas springs assist the opening of the hatch completely.

4 **Passengers** – No passenger may ride on the tractor unless it is provided with a special seat. Other personal transport, for example, on front–mounted loaders, is not permissible.

CAUTION!
Hold on to the steering wheel or safety handles in the cab if the tractor tips over.
Never try to jump out.

5 **Caution** – Hold on to the steering wheel or safety handles in the cab if the tractor tips over. **Never try to jump out.**

6 **Maintenance** – The driver is responsible for following the maintenance instructions in this Manual and the safety regulations applicable for the tractor. No maintenance work is to be carried out on the tractor or implement unless the engine is stopped and the implement lowered.

7 **Lending** – Never lend the tractor to a person who is not used to driving it. You may be held responsible for any resulting accidents.

8 **Lights** – Always make sure that the lights and reflectors are clean and in working order. Do not forget that the headlights must be correctly adjusted.

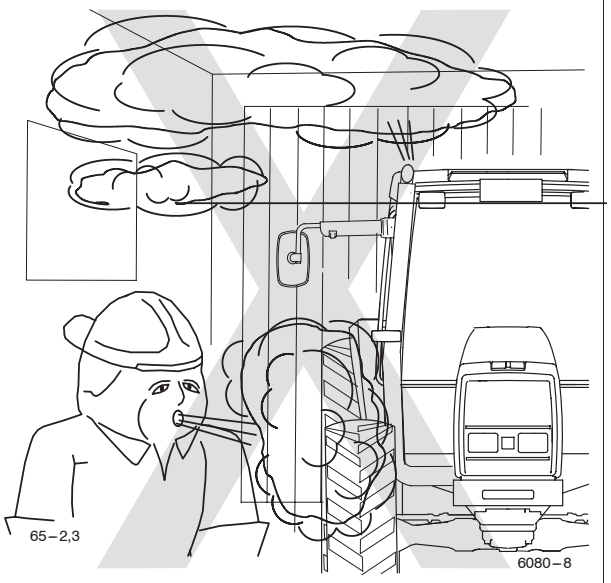

65–2,3

6080–8

9 **Carbon monoxide** – Never start the engine, or run it indoors while the doors are closed as this may lead to poisoning by carbon monoxide.

Downloaded from www.Manualslib.com manuals search engine

https://truckmanualshub.com/

10 **Downhill** – Never drive downhill with the gear lever in neutral or the clutch pedal pressed down. Check the brakes often. The brake pedals should be locked together when driving on the road. Always change down to a lower gear before driving down a steep incline. When driving downhill do not brake continuously–**danger of overheating the brakes!**

11 **Running speed** – Adjust the speed to suit the driving surface, visibility and load. Avoid any sudden increase or reduction (braking) in the running speed as well as tight turns at high speed. If care is not taken the tractor may tip over or the load may be displaced.
CAUTION: The maximum speed of the tractor must not be altered.
Maximum operating forward speed is 40 Km/h, for safety the maximum operating speed in reverse is 20 Km/h.

12 **Power take–off driven attachments** – When running with power take–off driven attachments or machines it is very important that the prescribed safety devices are used and that they are in good condition. Serious accidents have occurred due to failure to use prescribed safety devices. Follow the directions given by the implement or machine manufacturer.

13 **Check links** – When transporting implements on the three–point linkage, the check links must be locked with the locking pins.

14 **Emergency exits** – The cab is provided with six emergency exits. These are the doors, side windows, rear window and roof.

15 **Trailer load** – On tractors with trailers the load must be properly secured. The load must not obstruct the driver's vision or cover lights and reflectors. Loads wich project more than 1 m (39 in) behind the vehicle train must be suitably marked. During day-time this is done with a flag and during darkness with a red light and reflector arrangement.

16 **Trailer** – A trailer should only be coupled to the drawbar. A loaded drawbar must always be lowered with the three–point linkage. Check that trailer brakes are operating property and observe any special instructions issued by the trailer manufacturer.
CAUTION: When the tractor is towing a trailer the brake pedals must be locked together. The brakes are not to be used individually for steering.
CAUTION: When using a trailer make sure that the hitch latch is locked.

17 **Front–end loader** – When working with a front loader be sure that no one is in the working area. There is a danger that the tractor may tip over when the loader is lifted. The driver should put the front–end loader in the down position before leaving the tractor. Any special instructions issued by the loader manufacturer should also be observed.

18 **Running** – Before driving, always check that the tractor is in a safe condition for driving on the road. Rear view mirrors should be adjusted for the correct viewing angle before setting off. When towing an implement whose centre of gravity is located at a significant distance behind the tractor, the driver should remember that there may be considerable sway during cornering.

19 **Differential lock** – The differential lock must only be used when driving on loose or slippery ground. Never turn on a firm surface with the differential lock engaged. The differential lock should be disengaged when cornering.

A3565–12

20 **Markings in operator's manual** – The above symbol occurs in the descriptions and instructions in this manual to draw attention to points where extra care is necessary to avoid personal injury. Where this symbol appears it is particularly important to follow the directions given.

Downloaded from www.Manualslib.com manuals search engine

https://truckmanualshub.com/

The signal words like **DANGER, WARNING, CAUTION** and **NOTE** are used in different situations to protect personnel and the tractor or implement parts as follows:

DANGER, WARNING! These words warn about the most serious danger for personal injury.

CAUTION! This warns about damage to the tractor or implement which may also cause danger to a personnel.

NOTE! This word is to draw the operator's attention to some point e.g. safety instructions.

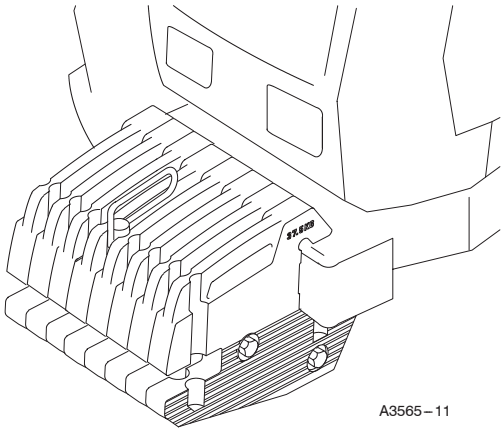

A3565 – 11

21 **Front axle loading** – When driving on the road at least 20 % of the gross weight of the tractor must be on the front axle. When lifting an implement the weight on the front end of the tractor is reduced, and the steering ability of the tractor is impaired or sometimes lost. Therefore sufficient ballast weights should be carried. Ballast weights should be mounted only at the points intended for this purpose.

22 **Attaching implements** – Care must be taken when implements are being attached. There is a risk of an accident if the tractor or implement should move. It is only safe to enter the implement if the parking brake is applied or the wheels blocked in order to prevent the tractor from moving.

23 **Damage** – The driver is responsible for seeing to the repair of any wear which might endanger the safety of the tractor.
CAUTION: If damage occurs to the cab, all parts affected should be replaced with new ones. No repair work (welding, drilling, cutting, or grinding) should be attempted.

24 **Warning stickers** – Do not remove or cover warning and instruction stickers. Always replace a damaged sticker with a new one. New stickers are available from your dealer.

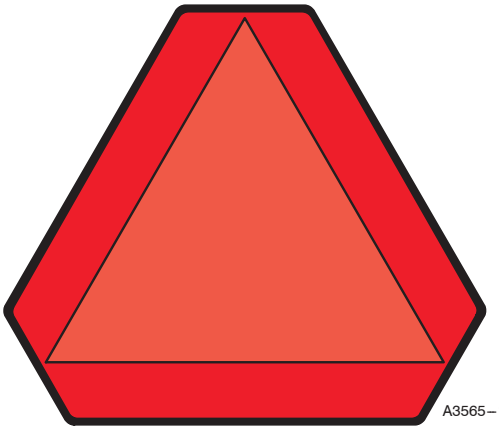

A3565 – 12,1

25 **Triangle for slow vehicle (SMV – Slow Moving Vehicle)** – When driving on public roads always use the SMV emblem at the rear side of the tractor. Also use the rotating light where required by law.

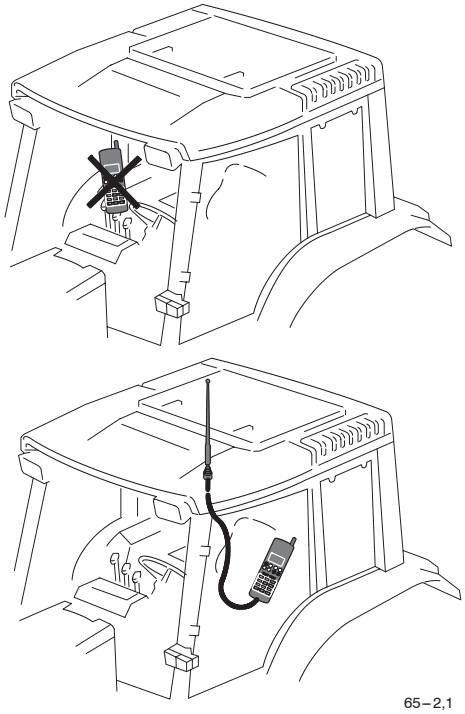

65 – 2,1

26 **Mobile phones** – Mobile phones may cause failure for the electrical linkage function. A mobile phone can not be kept inside the cab, especially not above the right side panel.
When using a mobile phone in the tractor it is recommended that it is connected to the outside antenna.

27 **Hydraulic/fuel pressure** – Oil/fuel under high pressure easily penetrates through clothing and skin and can cause serious injury. Never attempt to locate a leak in the hydraulic system or attempt to close a leak using any part of your body.

Downloaded from www.Manualslib.com manuals search engine

https://truckmanualshub.com/

28 **Implements maintenance** – Implements connected to the linkage or the auxiliary hydraulic system must be lowered to the ground during maintenance.

29 **Motor noise** –When you are operating the engine or working near it, use hearing protectors to avoid noise injuries.

30 **Naked flames and smoking** –Naked Flames, smoking and sparks are prohibited near the fuel system and batteries. (Especially, when charging batteries, **explosive gases present**).

31 **By a fire** – At temperatures in excess of 300˚ C, e.g. if the engine is on fire, the viton seals of the engine (e.g the undermost 0–ring of the oil pressure regulating value) produce very highly corrosive hydrofluoric acid. Do not touch with your bare hands, viton seals which have been subjected to abnormally high temperatures. Always use neoprene rubber or heavy duty gloves and safety glasses when decontaminating. Wash seals and the contaminated area with 10 % calcium hydroxide or other alkali solution. Put all the removed material in sealed plastic bags and deliver them to the point stated by the Authorities concerned. **NOTE: Never destroy viton–seals by burning!**

Downloaded from www.Manualslib.com manuals search engine

https://truckmanualshub.com/

B 2. Safety precautions

The following stickers and symbols must be fixed to the tractor. If any DANGER, WARNING, CAUTION, NOTE or INSTRUCTION stickers are missing, they have to be ordered according to the spare parts catalogue and re–affixed immediately in their places.

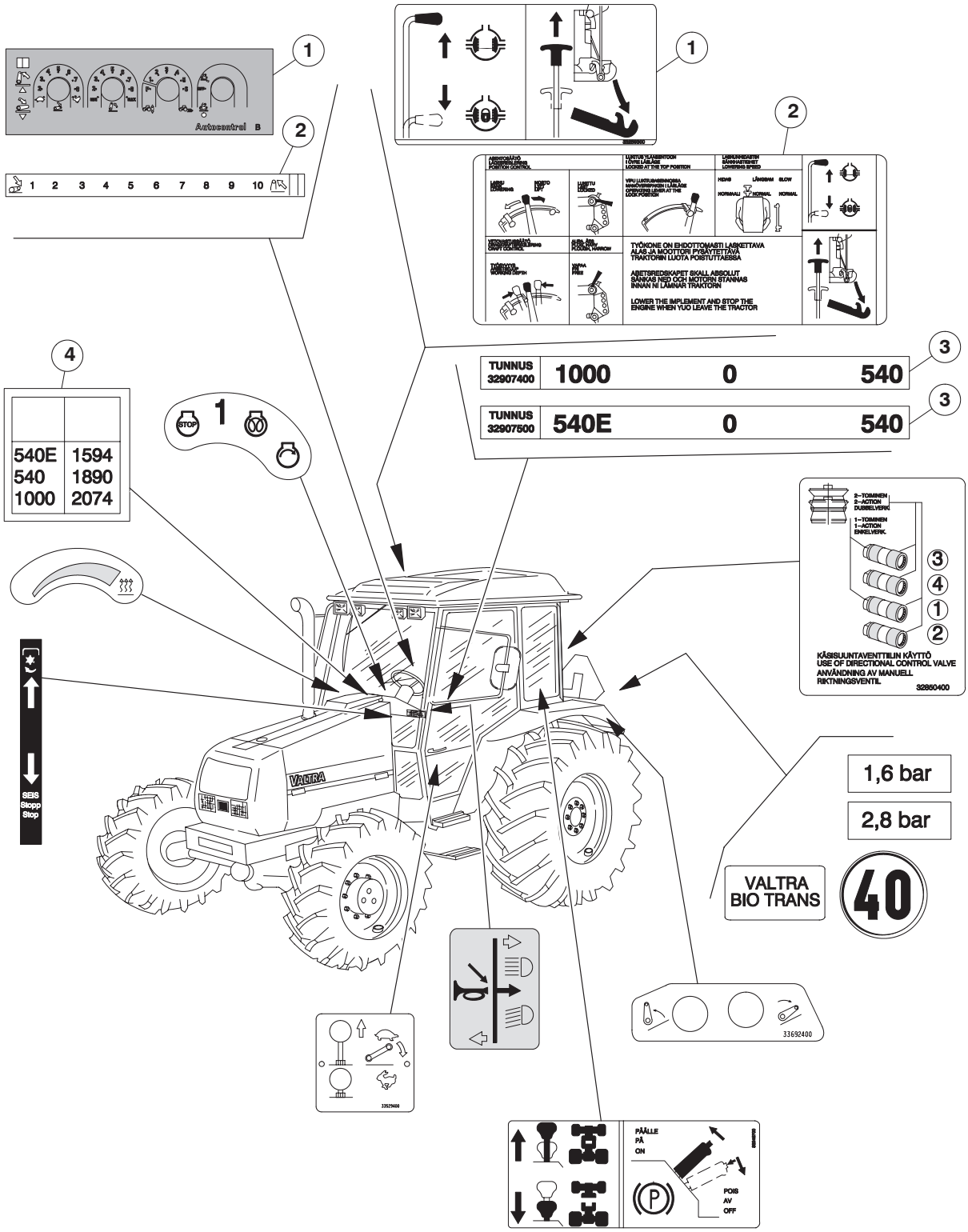

1. Electrohydraulically controlled hydraulic lift
2. Mechanically controlled hydraulic lift
3. Some of these stickers, are model dependant
4. On models with Agrodata instrument panel

Downloaded from www.Manualslib.com manuals search engine

https://truckmanualshub.com/

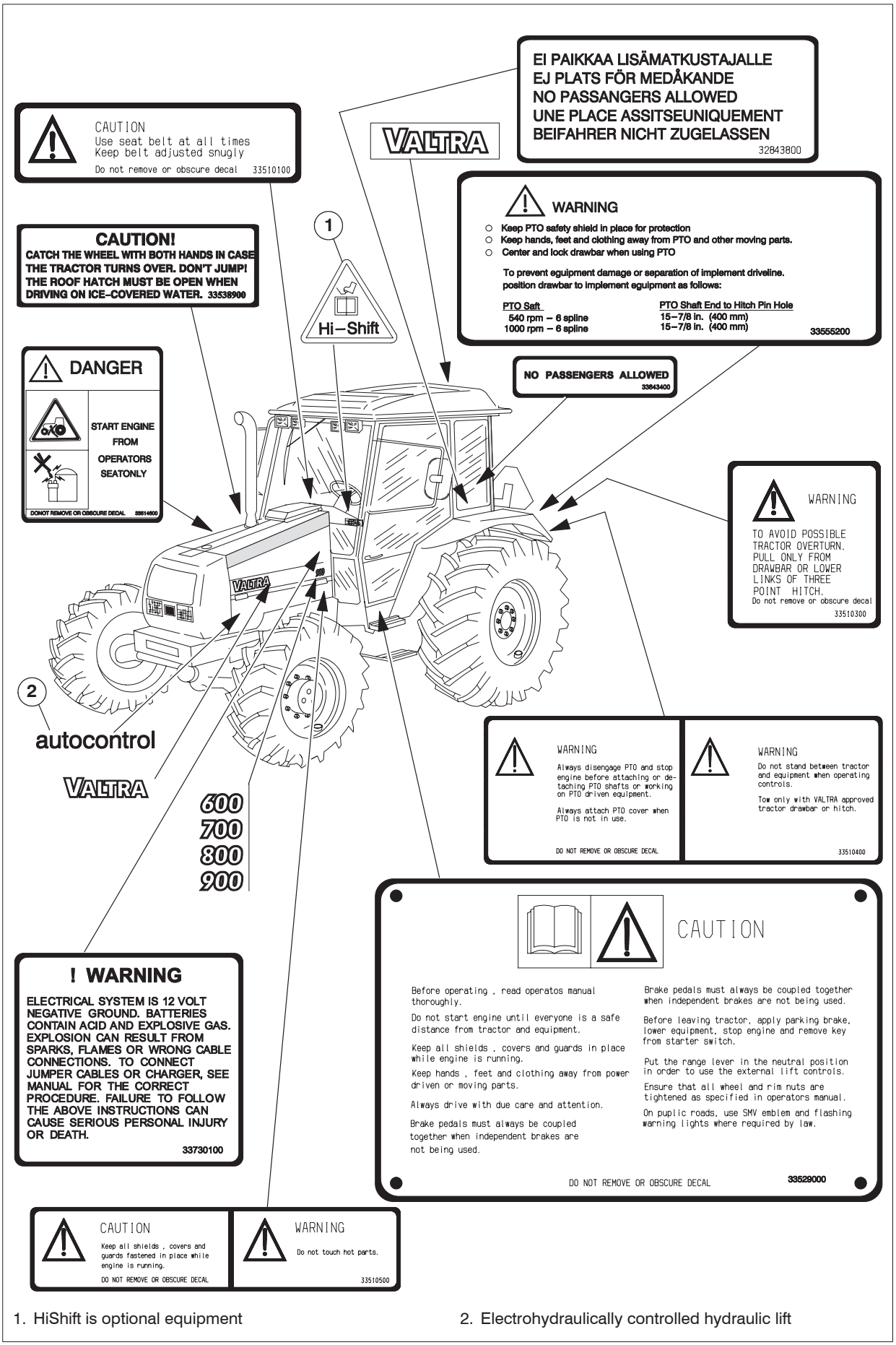

1. HiShift is optional equipment

2. Electrohydraulically controlled hydraulic lift

Downloaded from www.Manualslib.com manuals search engine

https://truckmanualshub.com/

B 3. Tractor lights

Front lights

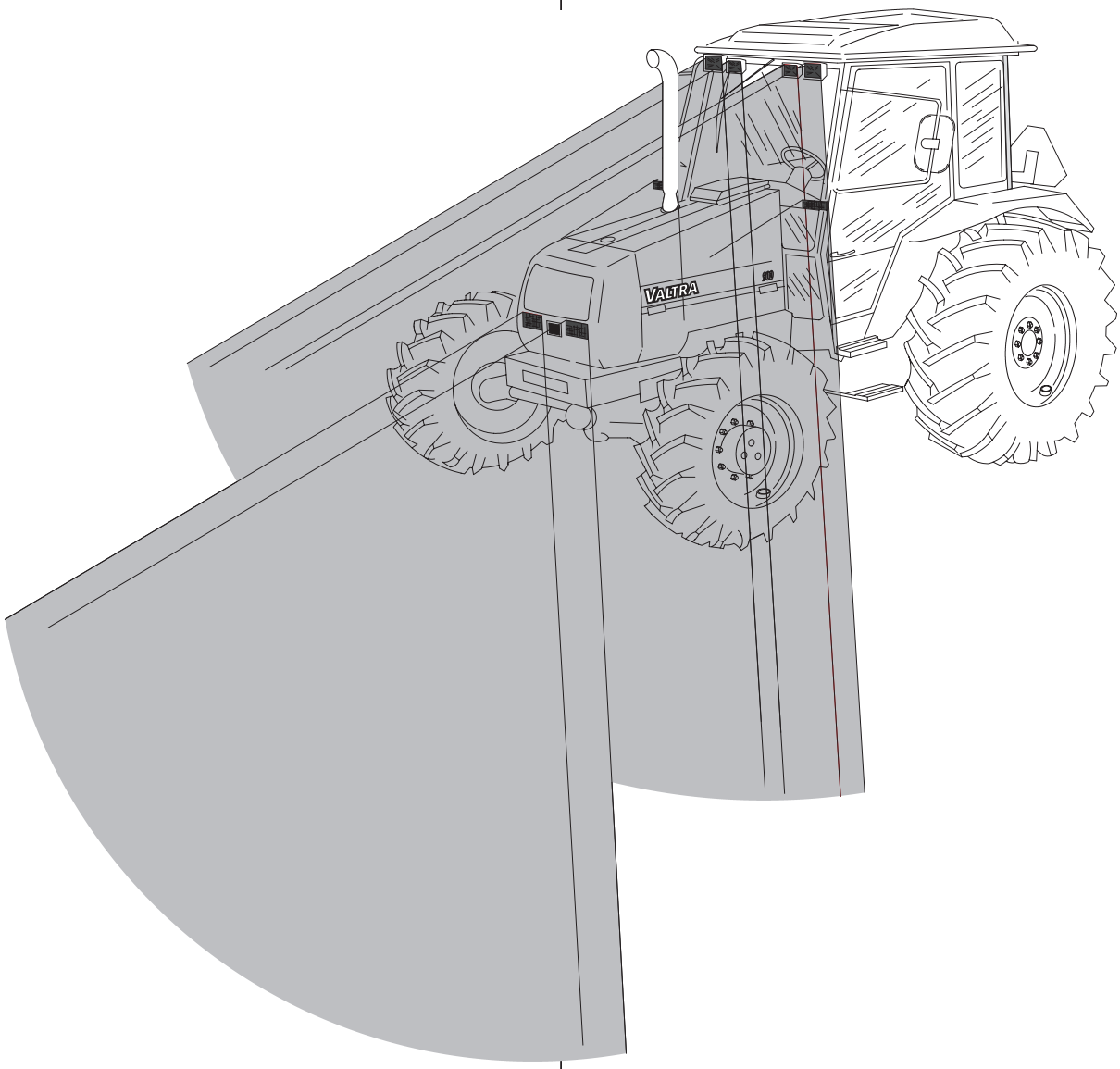

– The lights on the front shield are the normal headlights.
– The lower lights on the cab are parking lights.
– The outer upper lights on the cab are the upper headlights. They are optional equipment. They are not fitted in all marketing areas.
– The inner upper lights are the front working lights.

Downloaded from www.Manualslib.com manuals search engine

https://truckmanualshub.com/

Rear lights

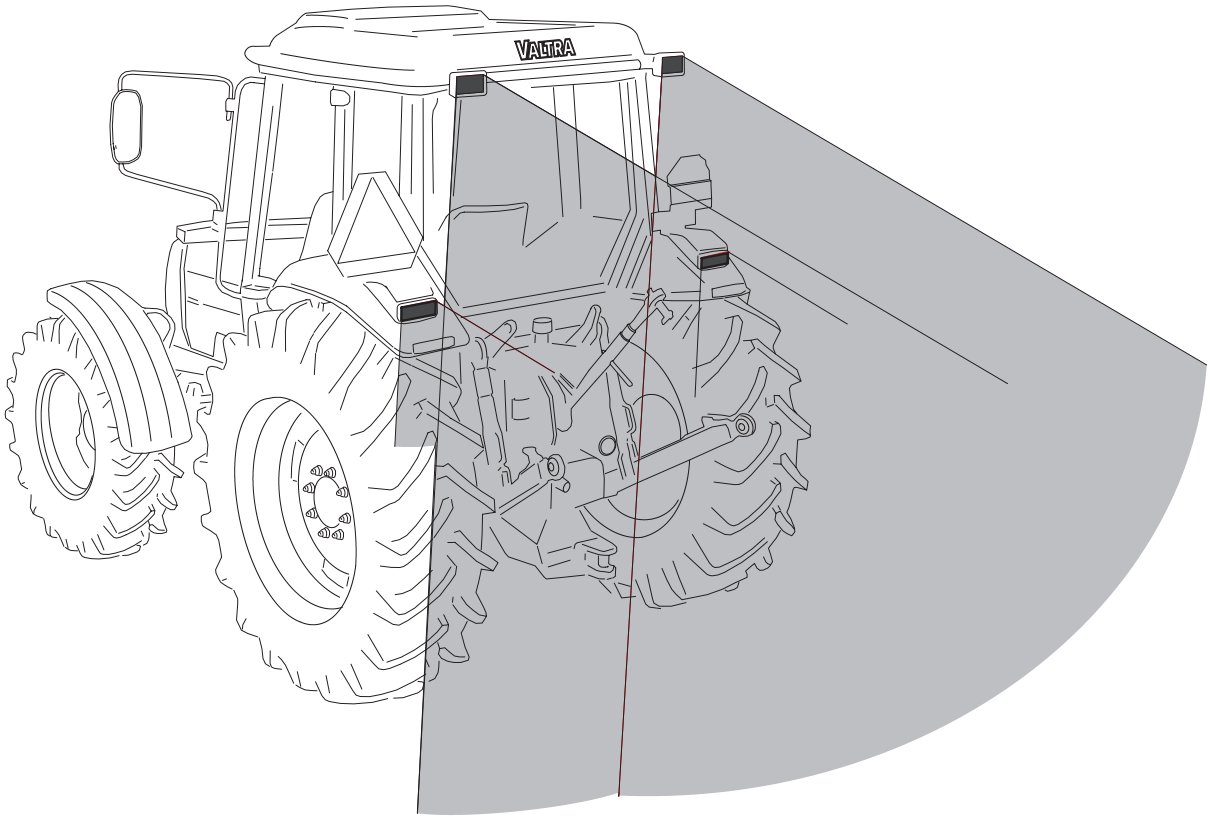

– The lower lights are parking lights.
– The upper lights are working lights. They are as optional equipment.

Downloaded from www.Manualslib.com manuals search engine

https://truckmanualshub.com/

C. General description

C 1. Illustrations Valtra 600–900

The models dealt with here belong to the Valtra's small category tractor series.
The tractors have 4–stroke direct injection diesel engines:
Three–cylinder engine, normally aspirated;
–600
Three–cylinder engine, turbocharged;
–700
Four–cylinder engine, turbocharged;
–800, 900

The tractor is fitted with a double clutch which acts against the flywheel, fully synchronized gearbox, differential lock, hydrostatic steering, working hydraulics (alternatively electrohydraulically controlled hydraulic lift) and power take–off. On these models an engine heater is included as standard. The tractor is obtainable with powered front axle and as alternative equipment a forestry cab and either an additional low gear or overdrive.

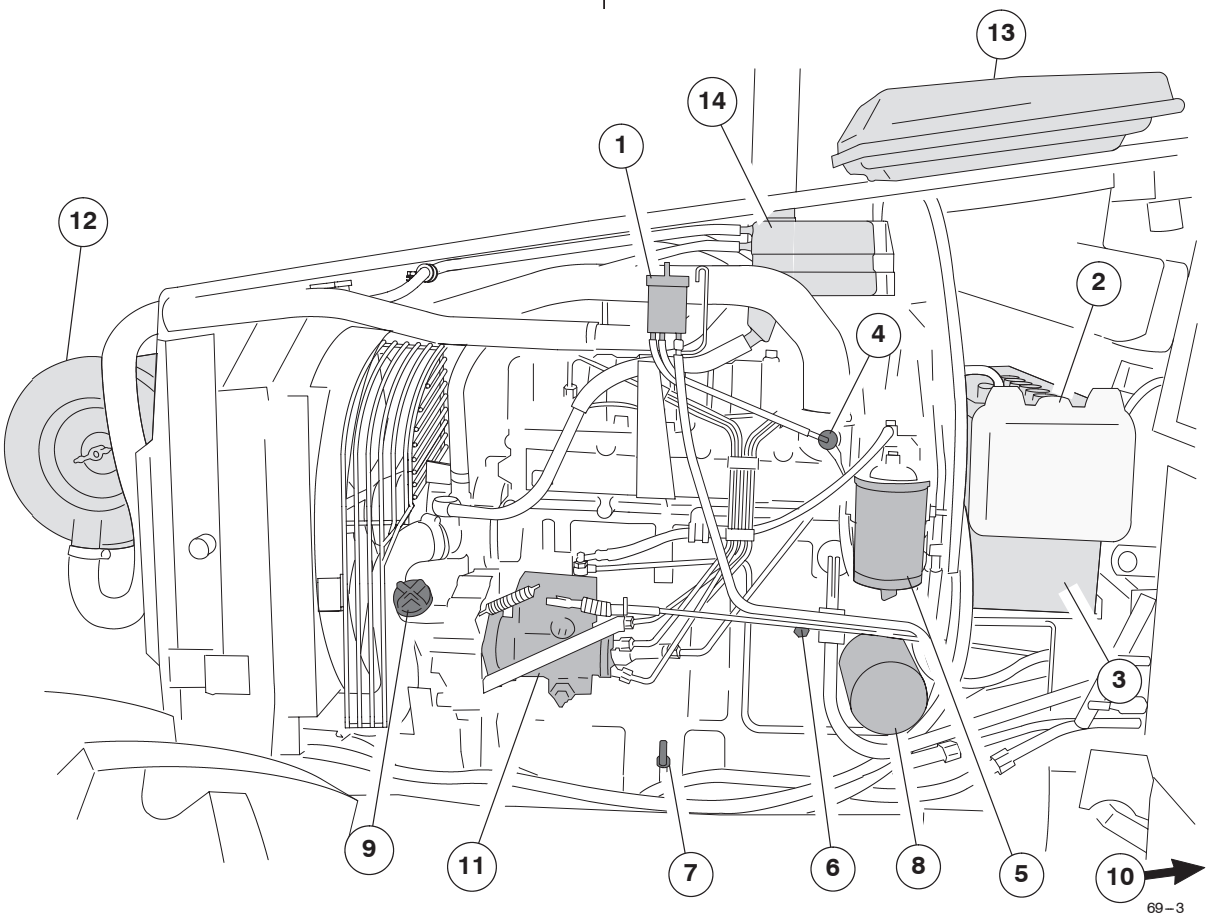

Left side of tractor:

1. Fuel container for thermostart
2. Windscreen washer container
3. Battery
4. Heating coil for thermostart
5. Fuel filter
6. Cylinder block coolant drain plug
7. Dipstick, engine oil
8. Engine oil filter
9. Filler cap for engine oil
10. Engine heater plug (not in picture, under the cab door)
11. Fuel injection pump, in–line pump or distributor pump (as in picture) depending on model
12. Engine air intake prefilter system
    600, 700 cyclone cleaner
    800, 900 ejector (as in picture)
13. Heating system air filter
14. Expansion tank

Downloaded from www.Manualslib.com manuals search engine

https://truckmanualshub.com/

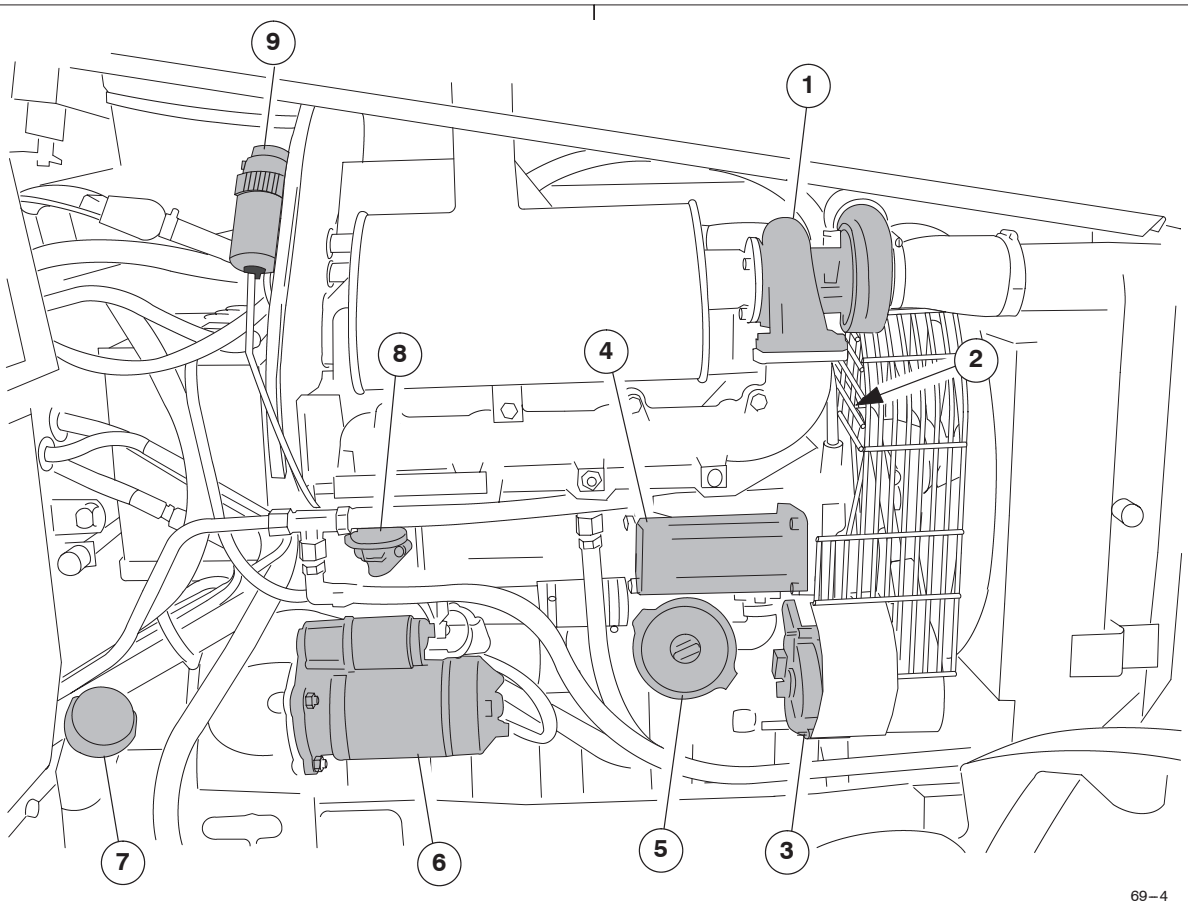

69–4

Right side of tractor:

1. Turbocharger (not on all models)
2. Thermostat housing
3. Alternator
4. Hydraulic pump
5. Suction strainer, hydraulic system
6. Starter motor
7. Fuel filling opening
8. Hand priming pump, fuel system, on distributor pump models, on in–line pump models on the other side of the motor in the injection pump
9. Prefilter, fuel system (not on the in–line pump models)

Downloaded from www.Manualslib.com manuals search engine

https://truckmanualshub.com/

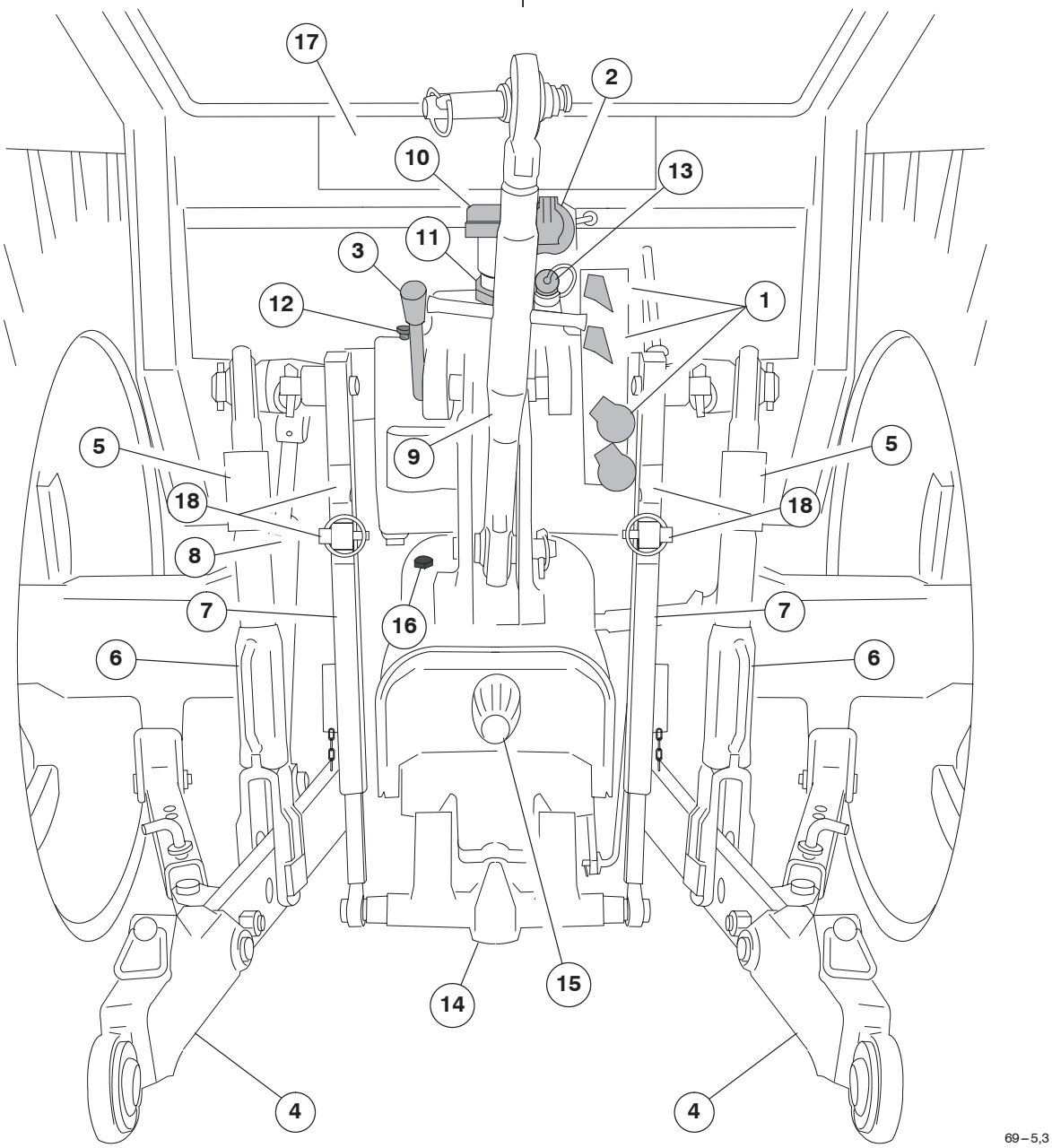

Rear view of tractor:

1. Quick–release couplings, auxiliary hydraulics
2. Trailer socket
3. Detent for disengaging draft control (not on electro hydraulically controlled hydraulic lift)
4. Lowering link
5. Lifting link
6. Levelling gear
7. Lifting link, trailer hitch (extra equipment, with the hydraulic hitch)
8. Extra lifting cylinder
9. Top link
10. Incorporating breather, hydraulic system
11. Oil filling, hydraulic system
12. Dipstick, hydraulic system
13. Auxiliary hydraulic system return coupling
14. Trailer hitch (extra equipment, several different alternatives, for more detailed see beginning of page 127)
15. Power take–off shaft (safety cap)
16. Transmission oil filling cap and dipstick
17. Inlet cover, remote control cables
18. Ring pins bracket

Downloaded from www.Manualslib.com manuals search engine

https://truckmanualshub.com/

C 2. Service

In order to function satisfactorily the tractor must be properly maintained.
The necessary daily lubrication and routine checks, can, of course, be carried out by the driver.

Where adjustments and repairs are necessary which require the attention of a qualified mechanic and the use of special tools, it is advisable to rely on a workshop. In this case we advice you to consult your local dealer as to how your tractor should be looked after as he is in a position to give you the best possible service. Through service bulletins and special training courses he is kept constantly informed of the factory's recommendations regarding care of the tractor.

C 2.1. Cost–free service

Before leaving the factory the tractor was thoroughly tested and adjusted to ensure it is in first-class condition when delivered to you.

However, it is important that the tractor is given further checks during the first period of operation. Bolts must be checked for tightness, various settings inspected and other minor adjustment made. Your dealer therefore gives one cost–free service inspection (excluding oil and filter costs) after 100 hours running.

C 3. Engine

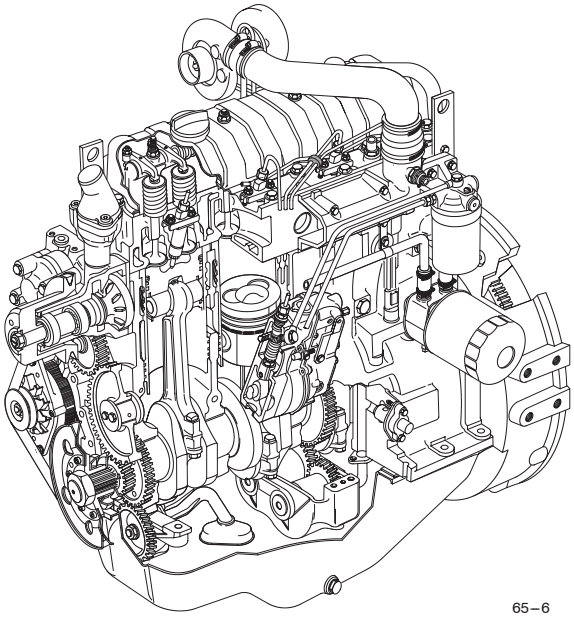

Tractors 600 and 700 have engines of the 320 series and tractors 800 and 900 have engines of the 420 series.
The tractors have 4–stroke direct injection diesel engines:
Three–cylinder engine, normally aspirated;
–600
Three–cylinder engine, turbocharged;
–700
Four–cylinder engine, turbocharged;
–800, 900

The principle of the turbocharged engine is that exhaust gases from the engine cylinders drive the turbo unit which forces air into the cylinders. This means that a higher power output can be obtained with economical fuel consumption.

The engine induction air passes through the air filter and a safety filter inside the air filter. The air intake system has an effective ejector pre–separator system, most of the impurities are removed before they reach the filter by the exhaust fume flow. The safety filter prevents the engine from being damaged if the main filter fails.
These new 20–series engines have lower fuel consumption and cleaner exhaust gases.

C 4. Power transmission

C 4.1. Clutch

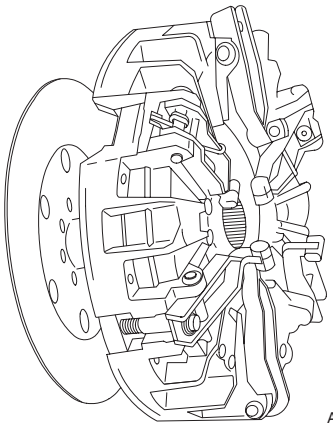

The clutch is of the twin type and is attached to the engine flywheel. There are separate discs for the propulsion clutch and power take–off. Both clutches are operated mechanically independently of each other, the propulsion clutch being controlled by means of a pedal and the power take–off clutch with a lever.The clutch plates are both axel– and rad springed.
As extra equipment the push buttons for HiShift are available, making driving easier so there is no need to use the foot clutch pedal. Traditional use of clutch pedal is, however, always possible.

Downloaded from www.Manualslib.com manuals search engine

https://truckmanualshub.com/

C 4.2. Gearbox

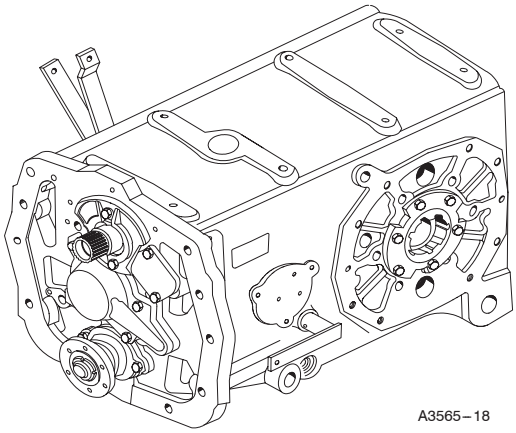

The speed gearbox has four synchronized gears which are controlled with a speed gear lever.
In front of the gearbox there is fitted either a power shuttle or an overdrive unit as alternative equipment.

On models with the shuttle unit the gearbox has three range gears; LL=creeper range, M=Medium range and H= High range. M and H ranges are synchronized. All these three range gears are controlled with one lever. In the gearbox there are 12 forward speeds and 12 reverse speeds.

The overdrive gearbox is fully synchronized. There are low, high and reverse ranges, which are controlled with the same lever. The transmission has 16 speeds forwards and 8 speeds rearwards.

The gearbox has a common housing with the differential. Helical gears of the gearbox give a low noise level and vibrationless power transmission. The gearbox also has pressurized lubrication provided with an oil filter.

C 4.3. Rear axle

The rear axle is fitted directly to the gearbox.
The differential lock is of the pawl type which is engaged and disengaged by means of a spring–loaded lever. An indicator lamp on the instrument panel lights up when the differential lock is engaged.
Final drives are of the planetary gear type. From the planetary gears power is transmitted to the rear wheels.

C 4.4. Power shuttle

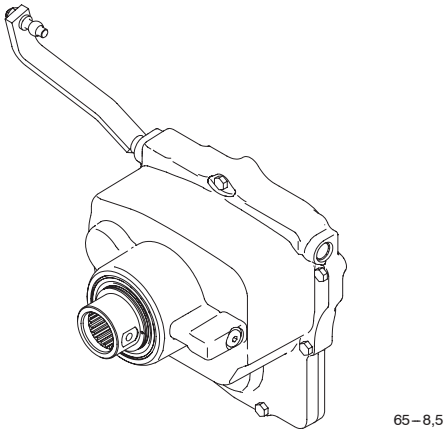

The shuttle unit is synchronized and has a pressure lubrication system. The forward–reverse shutle is controlled with the lever nearest to the driver. For this reason forward/reverse changing can be made quickly and very easily e.g when loading work is carried out.

C 4.5. Overdrive

The overdrive is controlled with the lever nearest to the driver.
Overdrive is synchronized. It is possible to use it with all gears and range gear lever positions to increase speed by about. 15 %.
Tractors provided with this overdrive have 16 forward speeds and 8 reverse.

C 4.6. Powered front axle

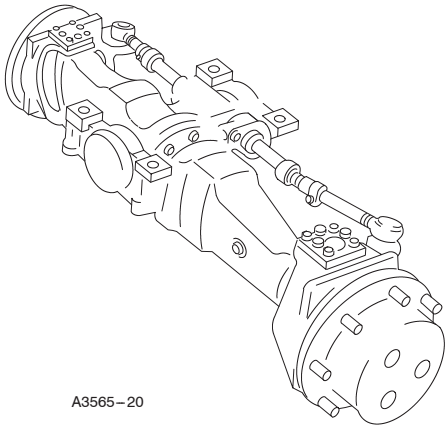

The powered front axle is driven from the output shaft of the gearbox for front wheel drive through a propeller shaft.

Downloaded from www.Manualslib.com manuals search engine

https://truckmanualshub.com/

The differential of the front axle has an automatic differential brake. The differential brake engages automatically when wheel–spin occurs. Front wheel drive is engaged and disengaged by means of a control on the left side of the driver's seat.
Front wheel drive can be used in all gears, but when running on the road it should remain disengaged.

C 4.7. Power take–off

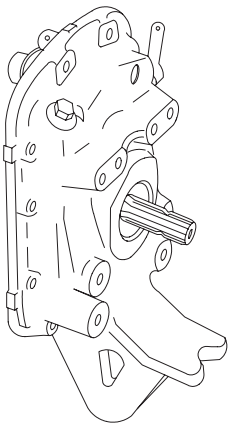

A3565–21

The power take–off works fully independently of the gearbox. It has its own clutch disc in the twin clutch which is attached to the flywheel. Engagement and disengagement of the power take–off is via the PTO clutch control lever of the clutch disc. Power is transmitted from the flywheel to the power take–off through a power take–off shaft which runs through the gearbox.
With the PTO selector control lever, located on the right side of the driving seat, you can select either 540 RPM or 1000 RPM, alternative equipment 540E (750 RPM) PTO.
Front PTO (extra equipment) shaft's nominal speed is 1000 RPM (at an engine rotating speed 2120 PRM).

C 5. Brake system

The oil bath multi–disc brakes are located between the differential and final drive gears in the final drive housing.
The brakes operate hydraulically from the brake pedals.
The pedals can be connected together and used as running brakes or separated and used individually as steering brakes.
The parking brake is mechanically operated and operates on the main brakes.
The brakes can be adjusted by means of adjusting nuts which are fitted on the rear axle.
A trailer brake valve and the air pressure brakes are available as extra equipment.

C 6. Steering system

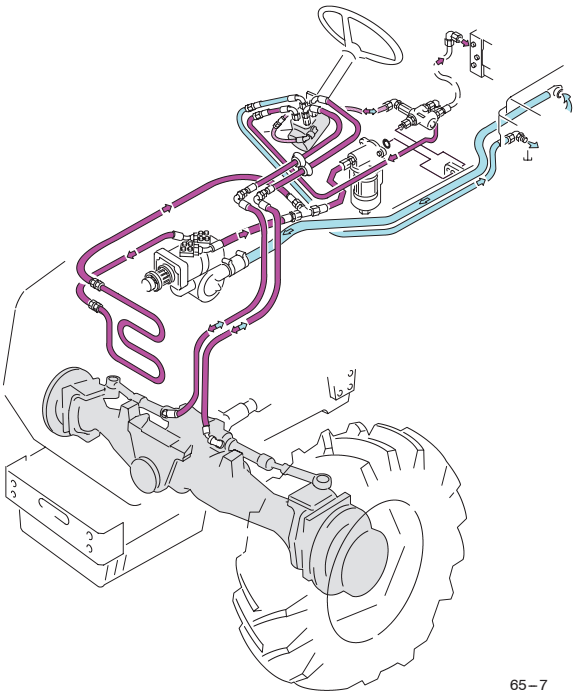

65–7

The tractor has a hydrostatic steering system meaning that the steering movement from steering wheel to the front axle is transmitted by means of oil under pressure. This makes the hydrostatic steering particularly easy to use. If the oil pressure in the steering system should collapse for any reason, steering is still possible by hand. The steering valve then acts as a pump, although steering will be considerably heavier.
On the hydraulic steering system there are two alternatives. On one system there is a different hydraulic pump for the steering system. On the other system there is a priority valve (standard on models 800 and 900) which ensures that there is always sufficient oil for the steering system.

Downloaded from www.Manualslib.com manuals search engine

https://truckmanualshub.com/

C 7. Hydraulic system

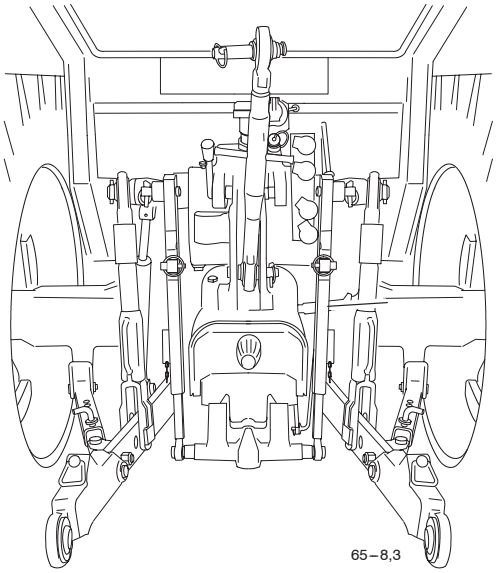

On the hydraulic system there are two alternatives. On one system there is one oil pump, which has a capacity of 36 l/min at an engine speed of 2270 r/min (max 40 l/min). On the other system there are two oil pumps, whose total capacity together is 52 l/min at an engine speed of 2270 r/min (max 55 l/min).

C 7.1. Hydraulic lifts

C 7.1.1. Hydraulic three–point linkage unit

The hydraulic lift has position control, lowering speed control and draft control. Impulses for draft control are obtained through the top link. The sensitivity can be regulated by altering the fastening point of the top link.

C 7.1.2. Electro hydraulic three–point linkage

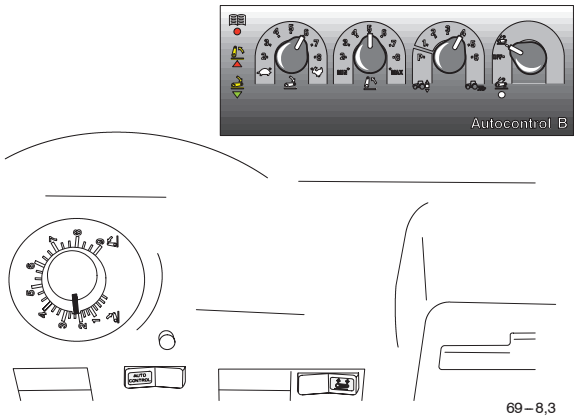

When an electro–hydraulic **Autocontrol B (ACB)** is fitted, the control levers are replaced with knobs and switches. Pre–programmed/programed functions:

– Draft control/position control combining ratio plus sensitivity on the regulator, the sensitivity adjustment is automatic.
– Lowering speed (independent of load)
– Transport height
– Drive balance control system

C 7.1.3. Front linkage (optional equipment)

See more information in section K of the extra equipments on page 132.

C 7.2. Valves for auxiliary hydraulics

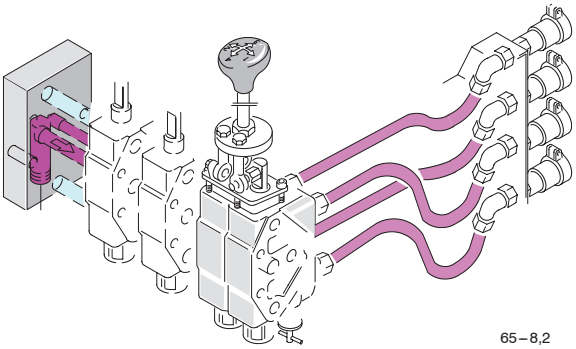

The tractor has two valves for auxiliary hydraulics as standard. One valve can be changed to single – or double acting. Two additional valves can be fitted as an optional accessory, also one valve can be fitted for the trailer braking system. Single–lever control is used for these standard valves.
Four quick–action couplings are mounted as standard at the rear of the tractor. Provision has also been made for the mounting of four extra couplings and brake valve coupling.

Downloaded from www.Manualslib.com manuals search engine

https://truckmanualshub.com/

D. Instruments and controls

Operating instructions for the extra equipment are in section K, after each extra equipment.

D 1. Illustrations

NOTE: The places of the switches can vary depending on the equipment.

D 1.1. Controls on front

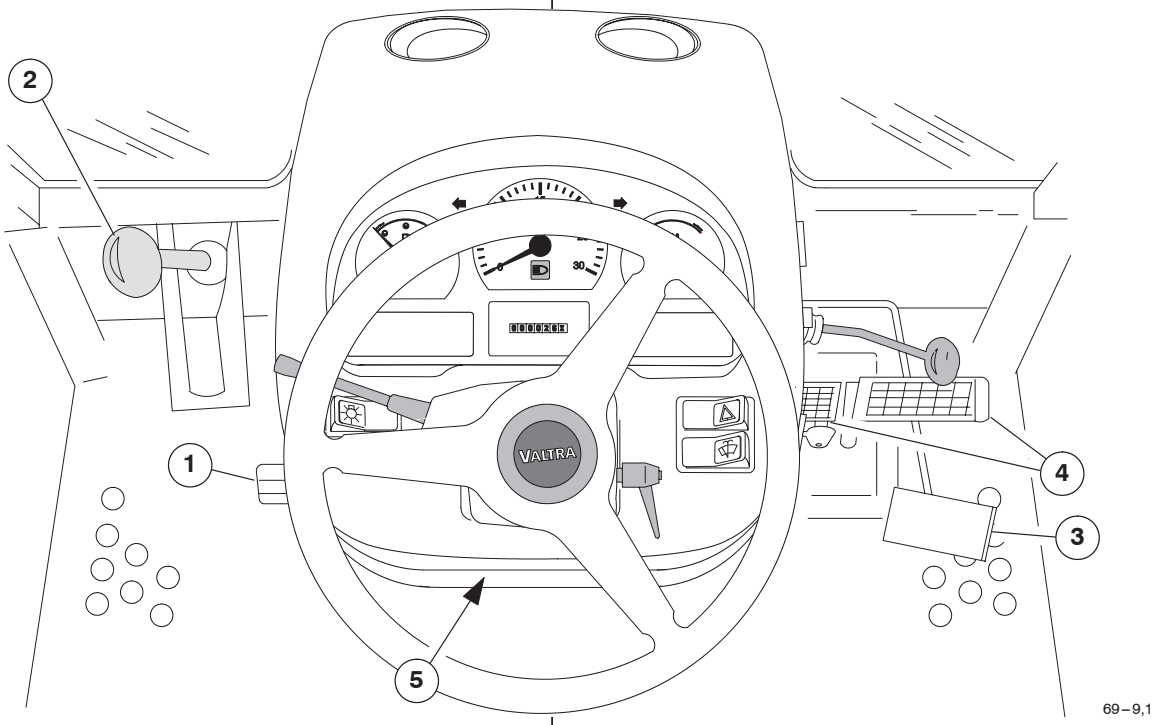

For more detail see page 28.

1 Clutch pedal
2 Clutch lever, power take–off
3 Accelerator pedal
4 Brake pedals
5 Fuse box, openable lower panel for books

Downloaded from www.Manualslib.com manuals search engine

https://truckmanualshub.com/

D 1.2. Instrument panel

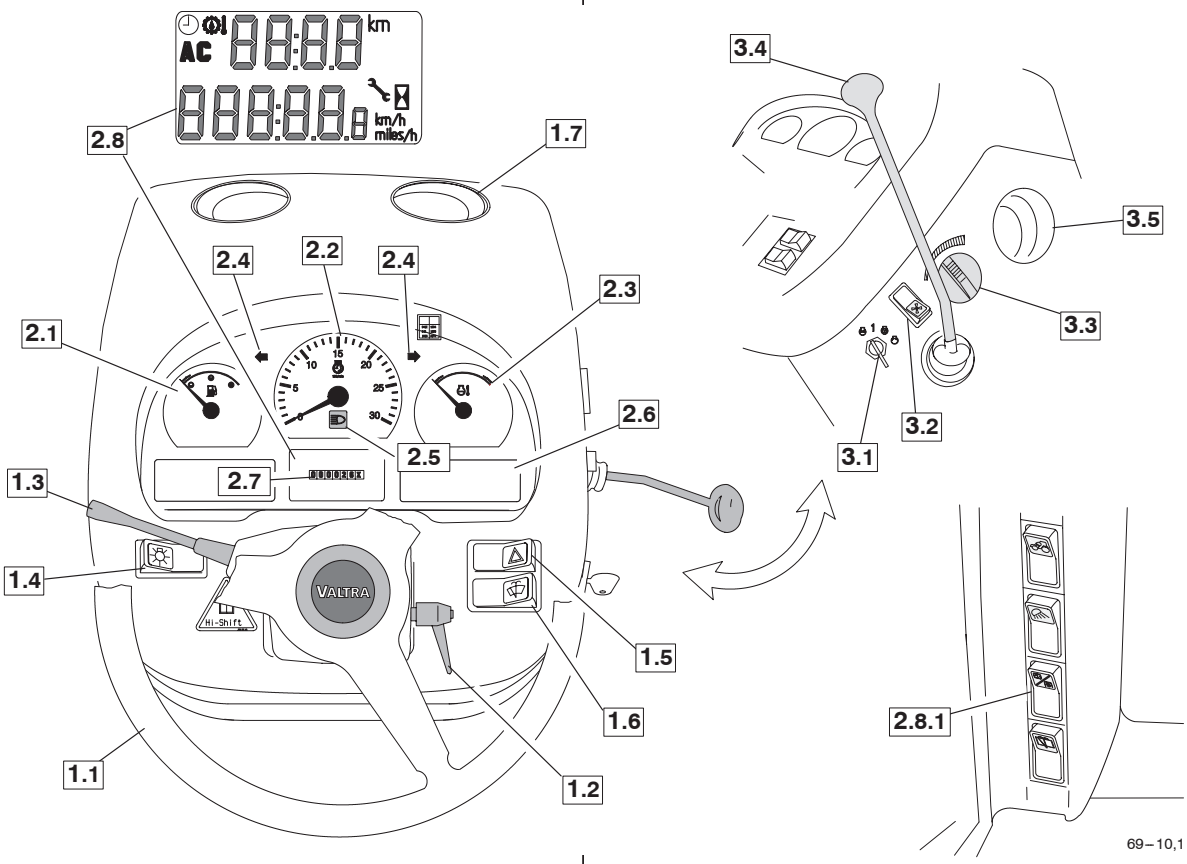

Front panel of instrument panel 1 for more detail see page 29.

1.1 Steering wheel
1.2 Steering wheel adjustment
1.3 Controls for:
– direction indicator flashers
– full/dipped – beam
– horn
1.4 Light switch
1.5 Hazard warning flasher switch
1.6 Switch for windscreen wiper and washer
1.7 Ventilation nozzles

Instrument panel 2 for more detail see page 30

The tractor is available with two instrument panel options.

Infoline – instrument panel, as standard:
– Infoline – instrument panel is equipped with a mechanical hour meter (**2.7**)

Agroline – instrument panel, alternative equipment:
– Agroline – instrument panel is equipped with a digital display (**2.8**), which has several functions. If the tractor is equipped with HiShift the Agroline instrument panel is standard.

2.1 Fuel gauge
2.2 Tachometer
2.3 Coolant thermometer
2.4 Indicator lights for direction indicator
2.5 Indicator light for main beam
2.6 Indicator lights on instrument panel
2.7 **Infoline – instrument panel** (as standard), operating hour meter

2.8 **Agroline – instrument panel** (alternative), LCD – display unit
Continuously shows a display that cannot be chosen with a switch (two functions on the bottom line):
– Operating hours
– Driving speed km/h / miles/h

Displays chosen with change over switch (2.8.1), the change over switch is located on the right side pillar
Functions on the top line:
– Driving trip m, km / miles
– Clock
– Transmission temperature
– Position of lower links (%, 0 – 100 Ac)

Functions on the bottom line:
– Maintenance schedule

2.8.1 Change over switch for LCD – display in Agroline – instrument panel, the change over switch is located on the right side pillar

Side panel of instrument panel 3 for more detail see page 34.

3.1 Ignition switch
3.2 Switch, fan
3.3 Heater control
3.4 Hand throttle lever
3.5 Ventilation nozzle

Downloaded from www.Manualslib.com manuals search engine

https://truckmanualshub.com/

D 1.3. Controls on right hand side

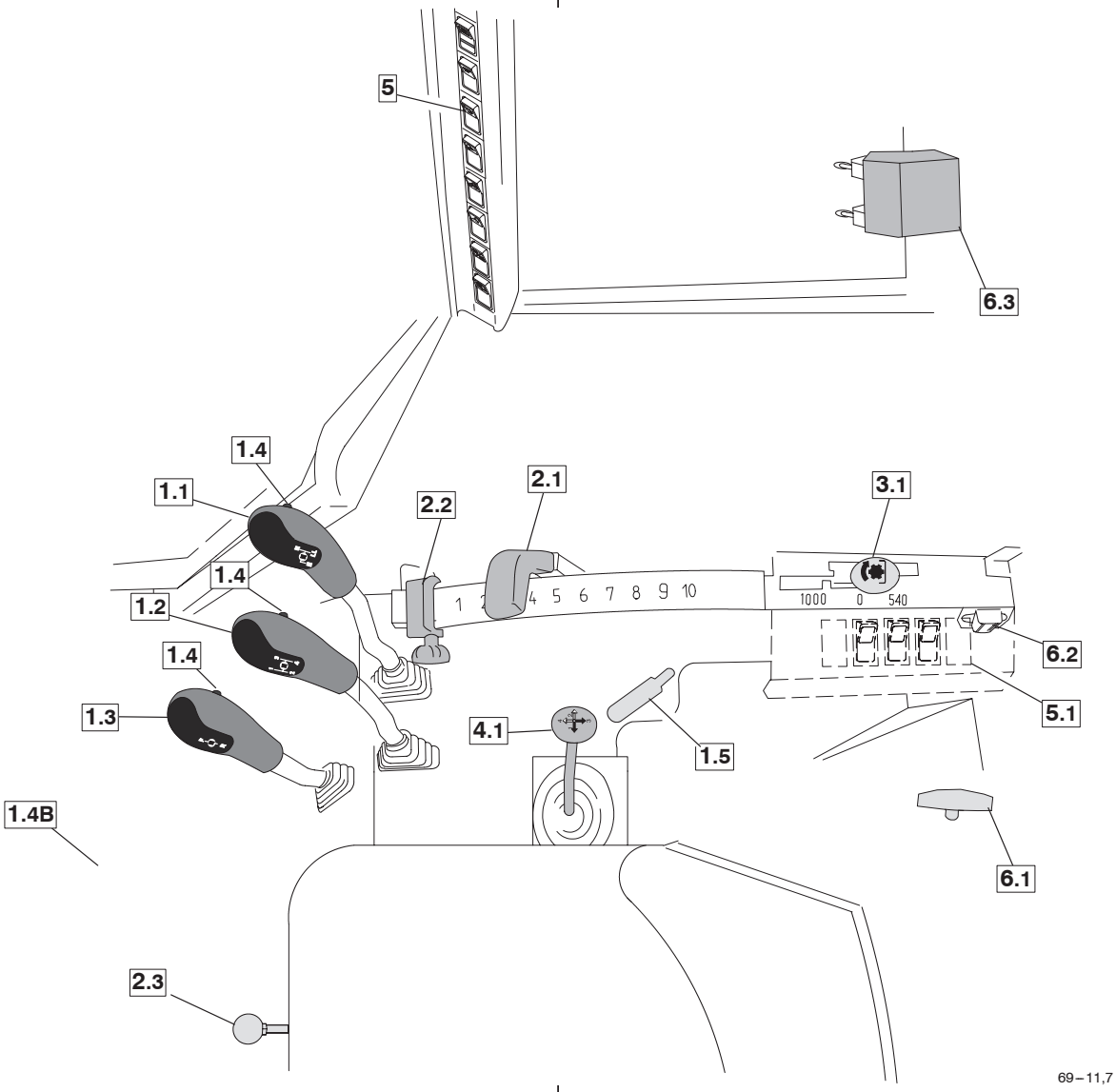

Driving 1 for more detail see page 35

1.1 Range gear lever
1.2 Speed gear lever
1.3 Forward/reverse gear lever, alternative equipment on the left side.
Overdrive lever as alternative equipment.
1.4 Switch for HiShift, extra equipment
1.5 Differential lock

Rear linkage (mechanically controlled hydraulic lift) 2 for more detail see page 38

2.1 Position control, hydraulic lift
2.2 Locking device of position control lever
2.3 Lowering speed control

Rear power take–off 3 for more detail see page 38

3.1 Selector lever, power take–off

Auxiliary hydraulic 4 for more detail see page 39

4.1 Auxiliary hydraulic valve lever

Side pillar control panel 5 see point “Side pillar control panel” on page 24

If the tractor is equipped with a lot of extra equipment there might not be enough space for all the switches on the side pillar, In this situation, the rest of the switches are located on the extra housing (**5.1**) beside the PTO selector lever.

Other controls 6 for more detail see page 39

6.1 Trailer hitch release control, extra equipment
6.2 3 pin power socket
6.3 Openable side window handle, on both sides

Downloaded from www.Manualslib.com manuals search engine

https://truckmanualshub.com/

D 1.4. Control panel in models with an electrohydraulic three–point linkage

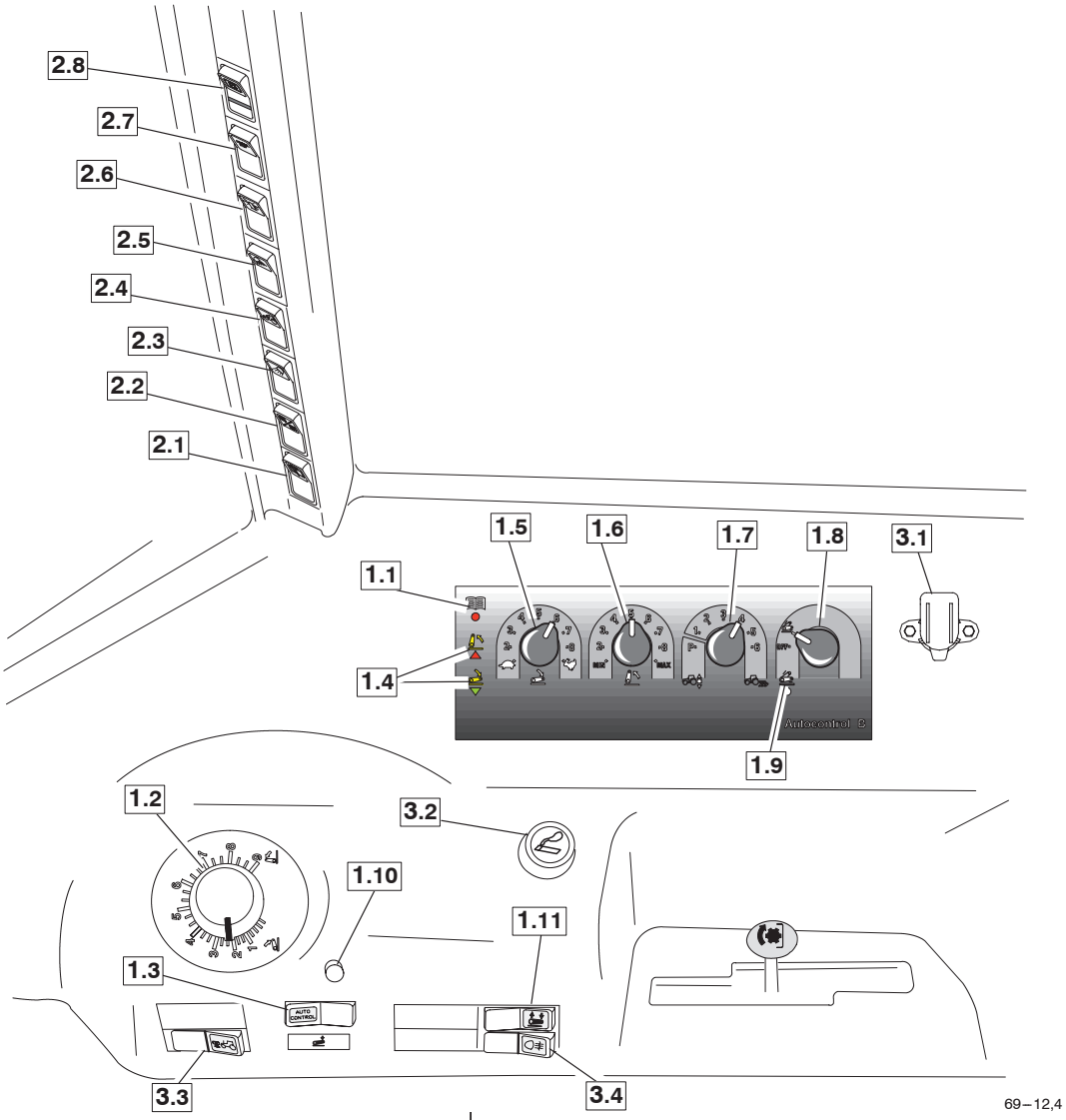

Rear linkage (electro hydraulically controlled hydraulic lift) 1 for more detail see page 40

1.1 Diagnose light (shows a possible fault)
1.2 Position control knob, hydraulic lift
1.3 Lift/stop/lower switch, hydraulic lift
1.4 Lift/lower indicator lights
1.5 Lowering speed selector, hydraulic lift
1.6 Transport height selector, hydraulic lift
1.7 Draft control selector, hydraulic lift
1.8 Drive balance control
1.9 Drive balance control light
1.10 Passing switch for position control knob = forced lowering switch
1.11 Inner switch for connecting implement (corresponding push–buttons are located on both mudguards)

Side pillar control panel 2 for more detail see page 42

The places of the switches can vary depending on the equipment.

2.1 Rear window wiper and washer, extra equipment
2.2 Change over switch for LCD–display in Agroline–instrument panel, if the tractor is equipped with Agroline–instrument panel
2.3 Switch for front working lights, extra equipment
2.4 Upper headlights, extra equipment
2.5 Switch for rear working lights
2.6 Switch for rotating warning light, extra equipment
2.7 Control Stop switch, extra equipment
2.8 Electric main circuit switch, extra equipment

Other controls 3 for more detail see page 43

3.1 3 pin power socket
3.2 Lighter (also for mechanical model)
3.3 Switch for front PTO, extra equipment
3.4 Switch for rear fog light, extra equipment

Downloaded from www.Manualslib.com manuals search engine

https://truckmanualshub.com/

Place for the fastening rack

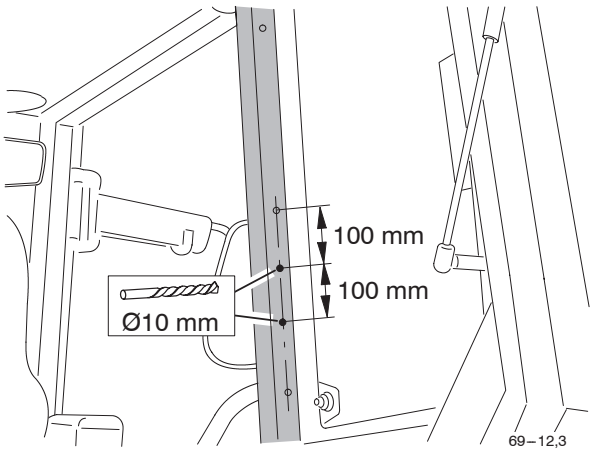

In the centre pillar on the RH side under the covering panel there are two fastening holes with M8 threads. These fastening points are located below the covering panel middle screw in the same line with the panel fixing screws and are 100 mm from each others. To make the fastening holes accessible, carefully drill 10 mm holes at exactly the above mentioned points.

D 1.5. Controls on left hand side

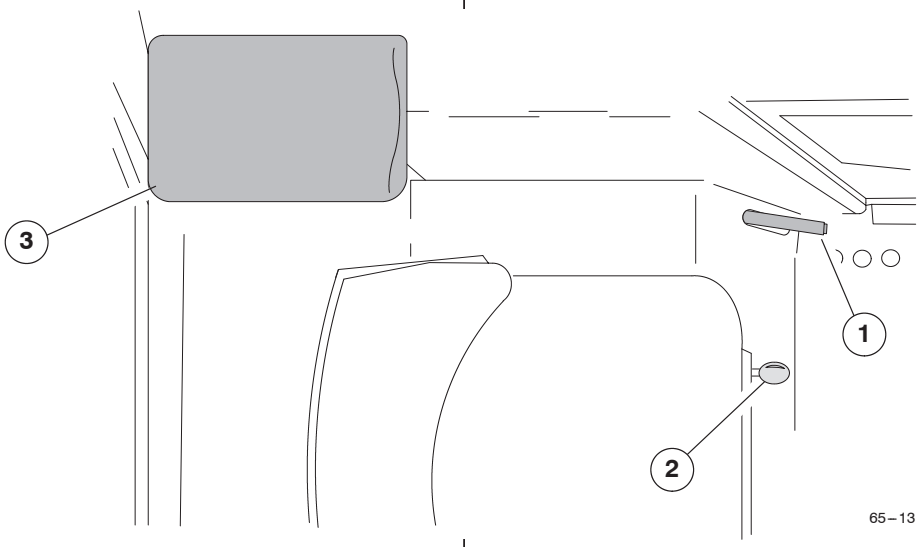

For more detail see page 44.

1 Parking brake

2 Engaging control, four–wheel drive

3 Extra seat

Downloaded from www.Manualslib.com manuals search engine

https://truckmanualshub.com/

D 1.6. Rear side controls

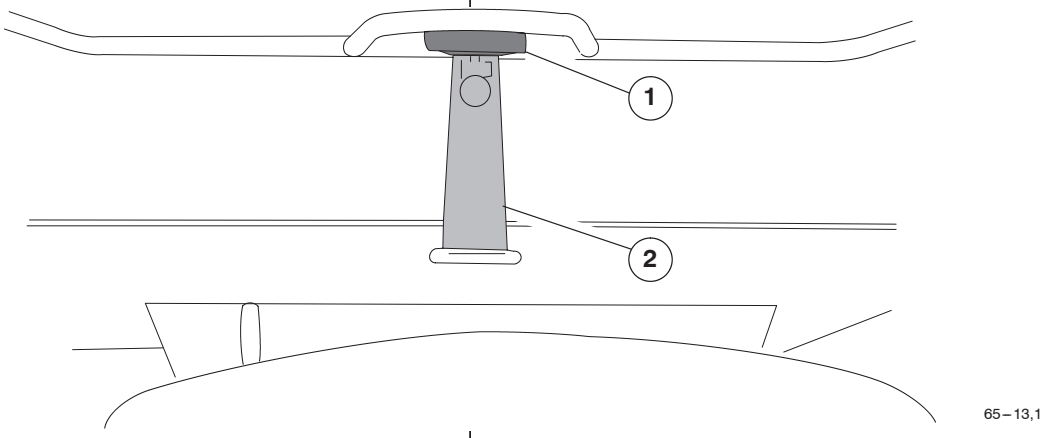

For more detailed see beginning page 44.

1 Rear window opening device

2 Rear window intermediate position latch

D 1.7. Roof console

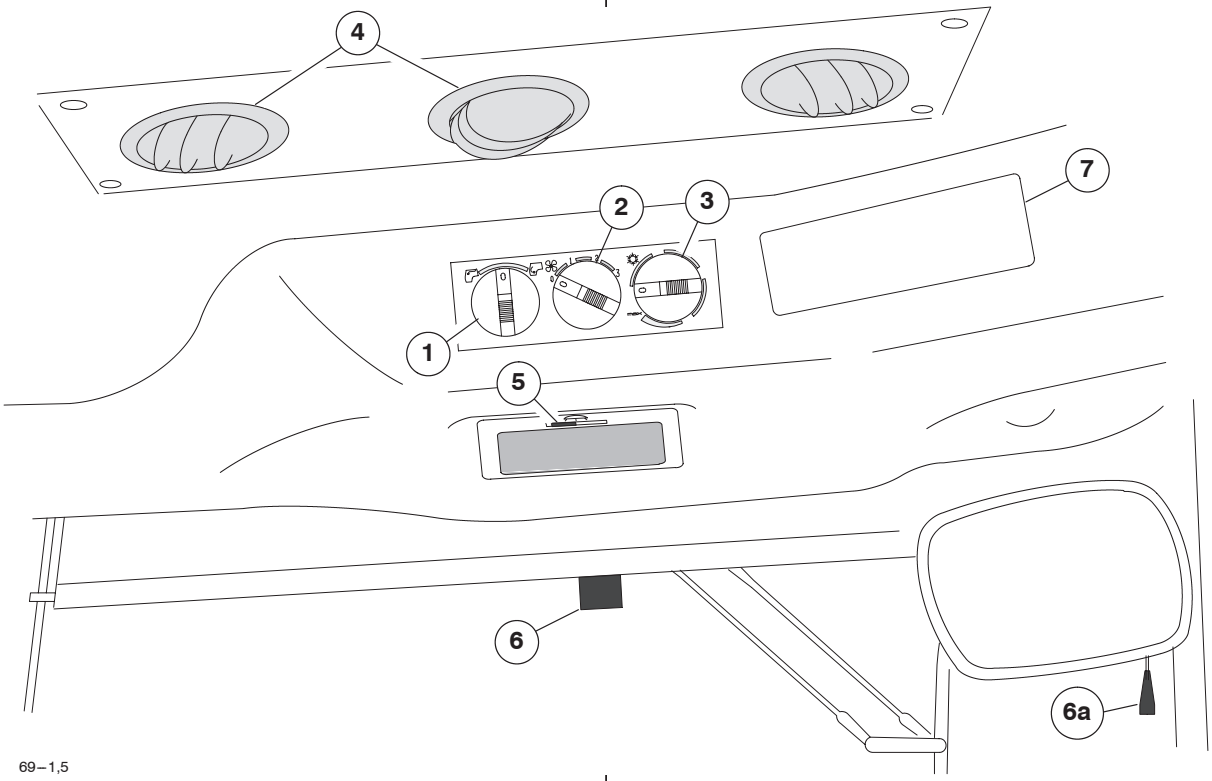

For more detailed see beginning page 45.

1 Recirculation control knob (extra equipment, with air conditioning)
2 Roof heater fan (3–speeds, extra equipment)
3 Air conditioning control knob (extra equipment, see “Extra equipment” (section K) on page 125)
4 Ventilation nozzles (extra equipment, with roof heater fan)
5 Cab light
6 Sun visor down, **6a** up
7 Radio, (extra equipment)

Downloaded from www.Manualslib.com manuals search engine

https://truckmanualshub.com/

D 1.8. Driver's seat

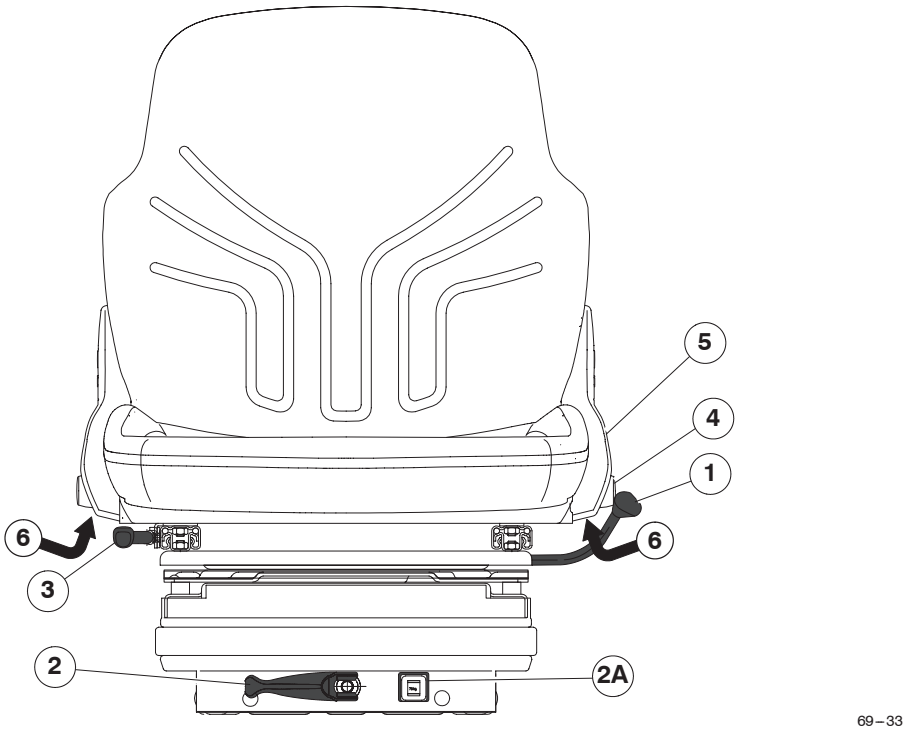

For more detailed see beginning page 46

1 Adjustment forward/rearward
2 Suspension
2A. Weight decal
3 Lock for turning seat
4 Seat belt anchor point
5 Seat back inclination
6 Height adjustment, by lifting the seat

Downloaded from www.Manualslib.com manuals search engine

https://truckmanualshub.com/

D 2. Instruments and controls, more detail

D 2.1. Controls on frontside

D 2.1.1. Clutch pedal (1)

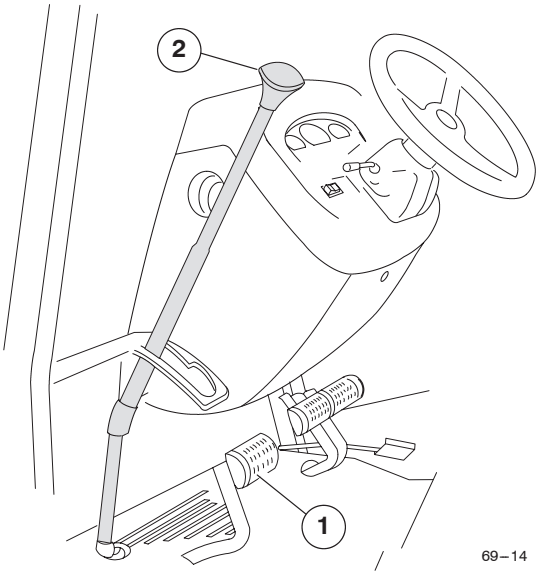

The clutch pedal is used for operating the clutch between the engine and the gearbox.

CAUTION: Never rest your foot on the clutch pedal while driving. Do not allow the clutch to slip more than necessary when starting.

IMPORTANT: The engine can only be started when the clutch pedal is fully depressed (even if the gear lever is in neutral).

D 2.1.2. Clutch lever, power take–off (2)

NOTE: With this lever (2) the disengagement can be done only temporarily (max. 5 min.). When PTO has been desengaged with this lever the indicator light lights up on the instrument panel.

– move the lever (**2**) backwards to the locked position

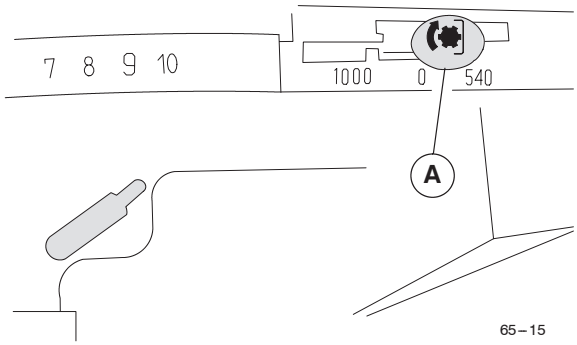

– select the desired PTO range speed with the power take–off selector lever (**A**).
– move the lever (**2**) to the front position

D 2.1.3. Accelerator pedal (3)

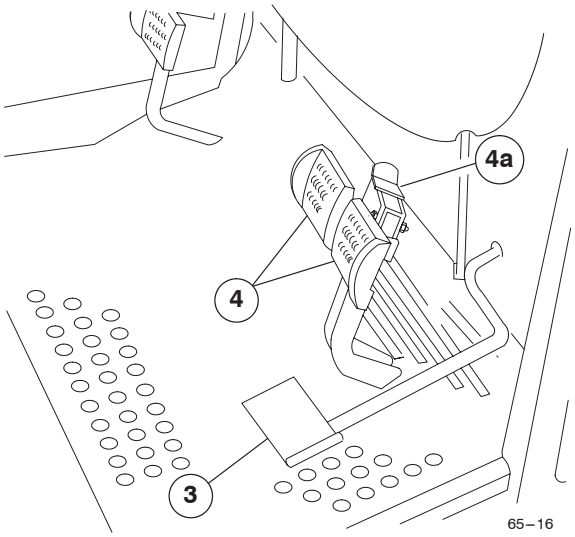

The engine speed can be controlled either with the foot pedal or hand throttle (on page 34).

In the forest cab there is an accelator pedal in the rear of the cab.

D 2.1.4. Brake pedals (4)

WARNING: The brake pedals should always be connected together with locking device 4a when driving on the road.

When running on fields or other working sites the brake pedals can be used independently as steering brakes.

CAUTION: If functional disturbance occur in the braking system, driving must be stopped and the fault repaired before driving may be continued.

Downloaded from www.Manualslib.com manuals search engine

https://truckmanualshub.com/

D 2.1.5. Fuse box, place for books (5)

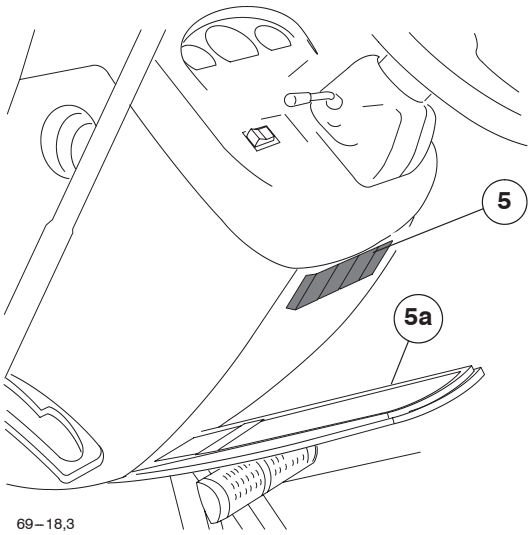

On the openable cover there is also a place (**5a**) for books.
The fuses are rated at 5 A (6 off), 10 A (3 off), 15 A (6 off), 20 A (3 off) and 25 A (2 off), (nominal current rating). A blown fuse indicates a fault condition, which should be traced and repaired. Fuses must not be replaced with ones of a higher rating, since this may cause damage to the electrical equipment.

Fuses, see Checks and Adjustments on page 88.

D 2.2. Instrument panel

D 2.2.1. Front panel of instrument panel (1)

D 2.2.1.1. Steering wheel (1.1)

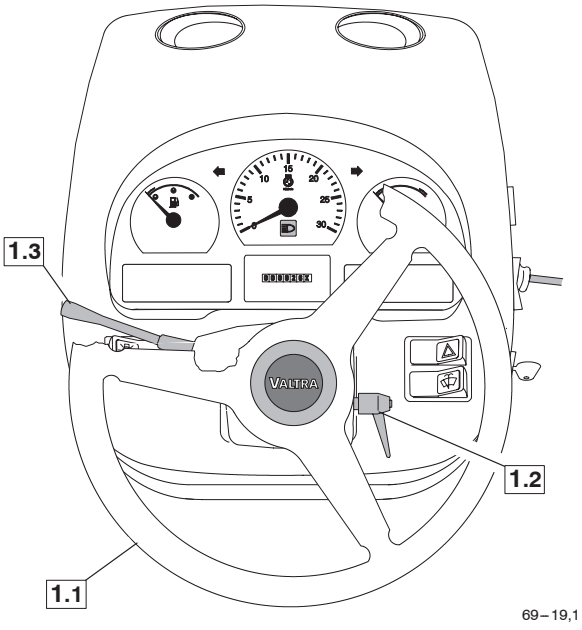

IMPORTANT: Do not hold the front wheels at full steering lock for long periods as the oil temperature quickly rises increasing the risk of damage to the pump. If the oil supply from the hydraulic pump should fail for any reason, the tractor can still be steered manually with the steering wheel.

At full–lock it is possible to force the steering wheel further manually. This slip of the steering wheel, also noticeable when driving across a slope, is normal and is caused by an internal flow of oil for lubrication of the steering valve.

CAUTION: If a malfunction occurs in the steering system the tractor should be stopped and the malfunction corrected before restarting.

D 2.2.1.2. Steering wheel adjustment (1.2)

The steering wheel can be adjusted to different driving positions by first opening the lock. After adjusting tighten the lock.

DANGER: Do not adjust steering wheel position while driving.

D 2.2.1.3. Full/dipped–beam headlights, direction indicator flashers and horn (1.3)

Full/dipped–beam headlights: Pull the lever under the steering wheel to dip/main beam the headlights.
Left/right flashers: Lever moved backwards/forwards.
Horn: End of lever pressed in.

Downloaded from www.Manualslib.com manuals search engine

https://truckmanualshub.com/

D 2.2.1.4. Light switch (1.4)

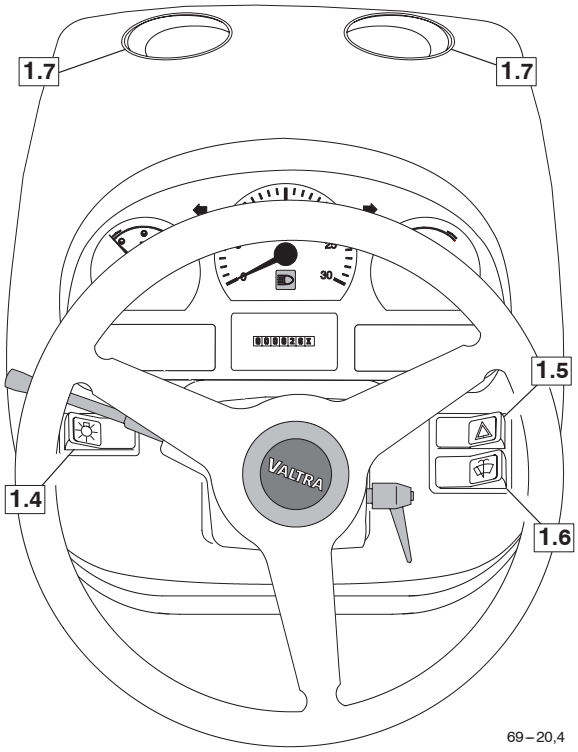

69 – 20,4

With the lights switched on, the rocker switches are internally illuminated for ease of operation in the dark.

Position 1: Marker lights switched on.
Position 2: Marker lights and full/dipped – beam headlights switched on.

NOTE: If the lights are left on after turning the current off the buzzer begins to sound.
When the current is off, the parking lights and the headlights can be switched on without buzzer sounding. This function is useful when leaving the tractor standing with parking lights on.

D 2.2.1.5. Switch for hazard warning flashers (1.5)

When this switch is pressed all four direction indicators flash. Pressing the switch again switches off all four flashers.

D 2.2.1.6. Switch for windscreen wiper and washer (1.6)

The switch controls both the windscreen washer and wiper.

D 2.2.1.7. Ventilation nozzles (1.7)

Turn the nozzles to direct the flow of air. The corresponding nozzles are also on the side panels.

D 2.2.2. Instrument panel (2)

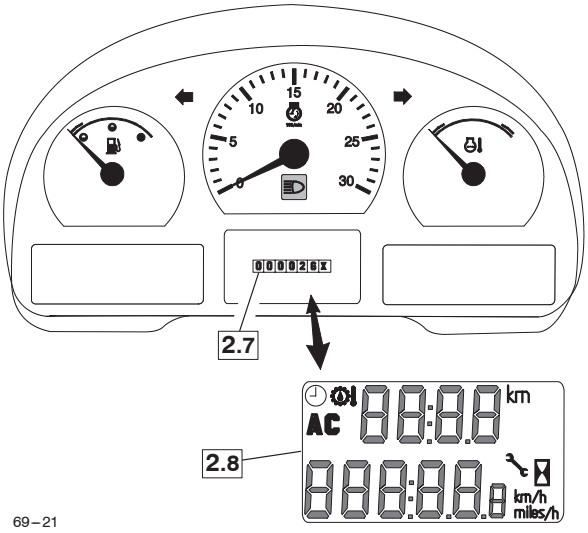

69 – 21

The tractor is available with two instrument panel options.

Infoline – instrument panel:
- Infoline – instrument panel is equipped with a mechanical hour meter (**2.7**)

Agroline – instrument panel:
- Agroline – instrument panel is equipped with a digital display (**2.8**), which has several functions. If the tractor is equipped with HiShift the Agroline instrument panel is fitted as standard.

D 2.2.2.1. Fuel gauge (2.1)

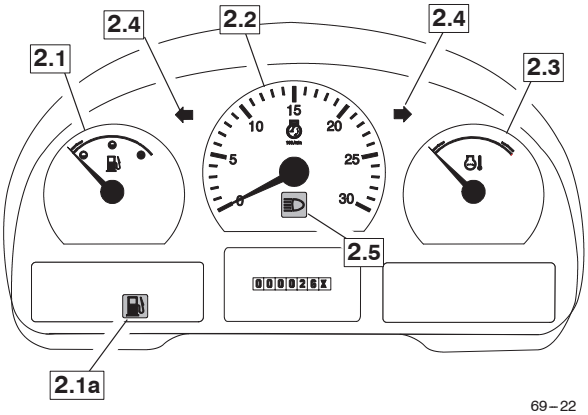

69 – 22

The fuel level warning light (**2.1a**) comes on, when about 14 l of fuel is left
NOTE: To prevent formation of condensation, it is recommended that the tank should be kept full.

D 2.2.2.2. Tachometer (2.2)

The tachometer (rev. counter) shows the engine speed in hundreds of revolutions per minute.

Downloaded from www.Manualslib.com manuals search engine

https://truckmanualshub.com/

D 2.2.2.3. Coolant thermometer (2.3)

The white zone shows the limits for the **normal** operating temperature. **Stop** the engine if the needle moves into the **red zone**.

D 2.2.2.4. Indicator lights for direction indicator (2.4)

There is an indicator light for the right and left direction indicators.

D 2.2.2.5. Indicator light for main beam (2.5)

This indicator light comes on, when the main beam is on.

D 2.2.2.6. Indicator lights on instrument panel (2.6)

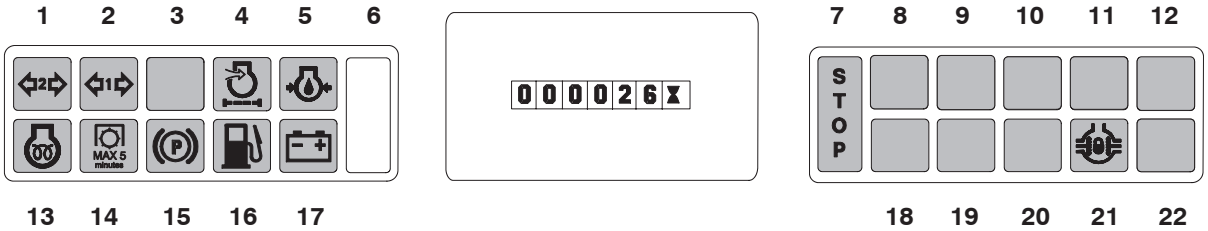

69 – 23

1 Direction indicator warning light for second trailer (green, if one of the bulbs on the vehicle has failed, this light will not come on)
2 Direction indicator warning light for first trailer (green, if one of the bulbs on the vehicle has failed, this light will not come on)
3 Not in use
4 Engine air cleaner warning light for blocked filter (yellow), filter must be serviced
5 Engine oil pressure (red) is too low
6 Not in use
7 **Engine STOP** (red) **is flashing. The tractor and the engine must be stopped immediately. Must only be continued in an emergency, e.g. the tractor can be moved to the roadside.**
8 Not in use
9 Not in use
10 Not in use
11 Not in use
12 Not in use
13 Thermostart – glow (yellow) is on when the starter switch is in the glow position
14 Rear power take – off (yellow) is disengaged with PTO clutch lever, max 5 min
15 Parking brake (red) is applied
16 Low fuel level (yellow), comes on when about 14 l fuel is left without extra tank
17 Battery charging (red) is on when charging does not operate
18 Not in use
19 Not in use
20 Not in use
21 Differential lock (yellow) is engaged
22 Not in use

The stop indicator light is operated at the same as the engine oil pressure indicator light.

If only the central warning light (STOP) starts to flash, the engine temperature is too high (can be seen also on the temperature gauge).

CAUTION: If the central warning light (stop) starts to flash when the tractor has been driven the engine must be stopped immediately and the fault must be repaired before continuing again.

When the starter switch is turned on to position 1, the following indicator lights must come on:

– engine oil pressure (**5**)
– stop light is flashing (**7**)
– parking brake (**15**), when the parking brake is applied
– battery charging (**17**)

D 2.2.2.7. Infoline – instrument panel (as standard), operating hour meter (2.7)

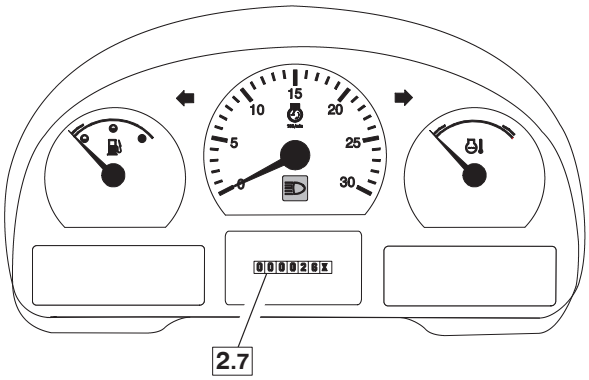

69 – 24

The hourmeter always shows the total number of hours worked.

Downloaded from www.Manualslib.com manuals search engine

https://truckmanualshub.com/

D 2.2.2.8. **Agroline–instrument panel (alternative), LCD–display unit (2.8)**

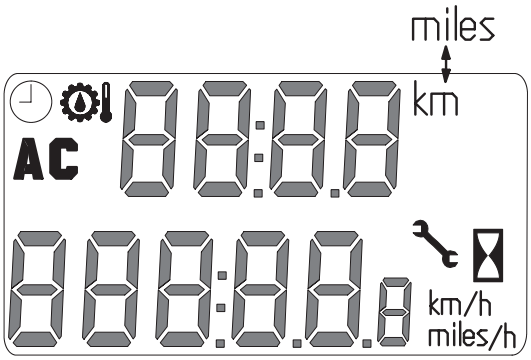

69–25

The display has two lines.

1 **Continuously shows a display that cannot be chosen with a switch** (two functions on the bottom line):

1.1. **Operating hours**

69–25,1

The display shows the operating hours to tenths of decimal accuracy. The operating hours are shown on the bottom line, when the power is on and the tractor is not moving.

1.2. **Driving speed km/h / miles/h**

69–25,2

When the driving speed is under 3 km/h, the symbol **L** is shown in the display. The display shows up to 15 km/h to one decimal place.
The driving speed unit (km/h / miles/h) can be changed by an authorized workshop.

When switching the power on the operating hours are shown first on the bottom line. When the tractor starts to move the bottom line display changes to show the driving speed.

2. **Displays chosen with change over switch (2.8.1) for LCD–display in Agroline–instrument panel** (The top line has four basic functions, the bottom line one function):

2.1. **Functions on the top line**

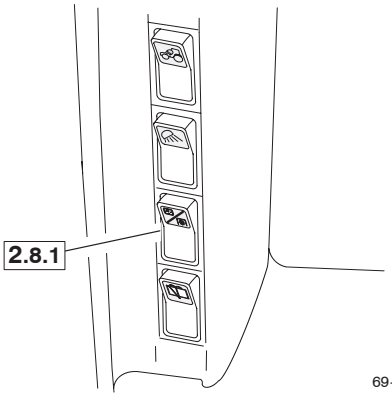

69–25,3

By pressing the upper side of the change over switch for LCD–display unit (**2.8.1**) the display changes. The change over switch is located on the right side pillar.

2.1.1. **Driving trip m, km/miles**

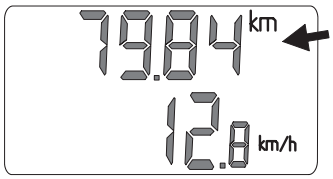

69–25,4

The driving trip display shows the trip up to 1 km with an accuracy of one meter. The display shows symbol **m**. After one kilometre the symbol in display changes to **km** and the driving trip shows up to 100 km, to two decimals places. After 100 km only one decimal place is shown. The maximum display is 999.9 km.
If the driving trip unit (km / miles) needs to be changed, please contact an authorized workshop.

2.1.2. **Clock**

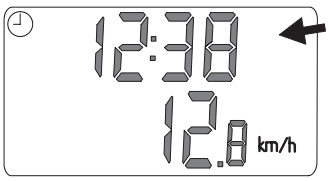

69–25,5

The clock shows hours and minutes.

Downloaded from www.Manualslib.com manuals search engine

https://truckmanualshub.com/

2.1.3. **Transmission temperature**

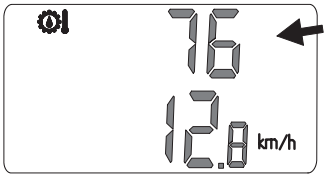

69–25,6

When the temperature is under 40°C the display shows –LO– and when over 40°C it shows the temperature. If the temperature rises over 90°C, clean the radiator and check the gearbox oil level.

2.1.4. **Position of lower links %, 0–100 AC**

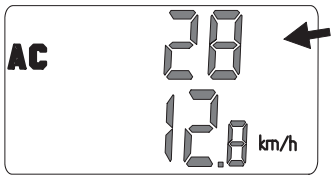

69–25,7

The display shows symbol AC and the position of the lower links as a percentage scale 0 – 100. 0 = the lower links are in the lowest position and 100 = the lower links are in the top position. When the lower links are in the middle position, the display shows the number 50.

2.2. Functions on the bottom line

2.2.1. **Maintenance schedule**

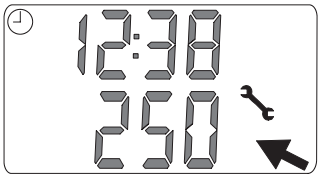

69–25,8

When the tool symbol and periodic maintenance hour number are illuminated in the display, the appropriate service work has to be carried out by an authorized workshop. If this work is not carried out, the tool symbol and periodic maintenance hour number are shown for 10 seconds whenever the ignition is switched on. When the service has carried out this warning will be deleted by simultaneously pressing the low side of the change over switch (**2.8.1**) and switching the ignition on. The tool symbol will illuminate again when the next service interval has been reached.

When the power is switched on, the last display is shown in the display unit.

2.3. Resetting driving trip to zero

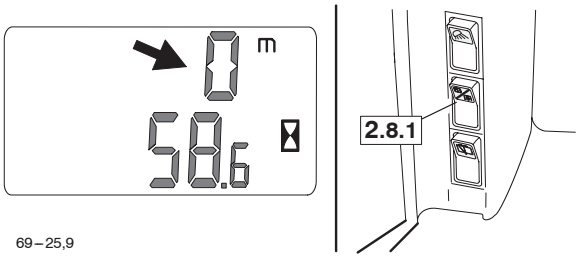

69–25,9

– Choose the driving trip on the display by pressing the upper side of the change over switch for LCD–display unit (**2.8.1**).
– Then press and hold down the low side of the change over switch (**2.8.1**) until the display is zero.

The maximum display is 999.9 km.

2.4. Resetting time

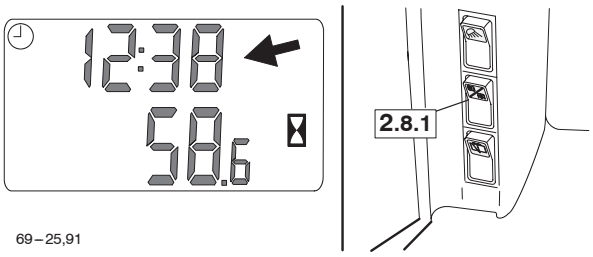

69–25,91

If the setting mode is not altered for over 10 seconds, the display changes into the normal mode.

– With the power switched on and the clock function selected, press and hold the upper side of change over switch for LCD–display unit (**2.8.1**) for over 3 seconds. The display is in the setting mode when the minutes start to flash.
– Set the minutes by pressing the low side of the change over switch (**2.8.1**). By keeping the low side pressed down the numbers change continuously.
– To change the hours press the upper side of the change over switch (**2.8.1**).
– Set the hours by pressing the low side of the change over switch (**2.8.1**).

The new time is set and the display goes into “normal” mode after about 10 seconds without making any changes or by pressing the upper side of the change over switch (**2.8.1**) for over 3 seconds.

Downloaded from www.Manualslib.com manuals search engine

https://truckmanualshub.com/

2.5. Changing the Agroline tyre/tire parameters for different tyres/tires

If the tyres/tires are changed to a different rolling diameter, the instrument must be calibrated on the following way:

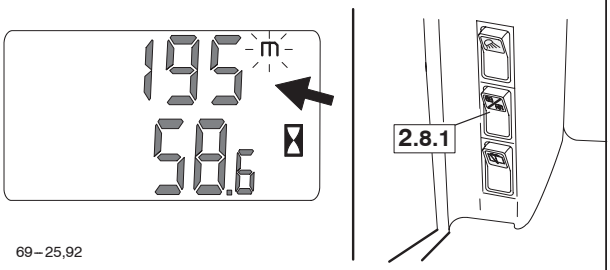

69–25,92

If the setting mode is not altered for over 10 seconds, the display changes into the normal mode.

– With the power switched on press and hold the upper side of change over switch for LCD–display unit (**2.8.1**) for over 3 seconds. The display is in the setting mode (minutes start to flash).
– Press quickly the upper side of change over switch (**2.8.1**), the letter **m** will start to flash.
– Select the right code number by pressing the low side of change over switch (**2.8.1**). By keeping the low side pressed down the numbers change continuously.

Changing the parameters is complete when the display goes into “normal” mode after about 10 seconds or by pressing the upper side of the change over switch (**2.8.1**) for over 3 seconds.

NOTE: The code number value can vary between 100–400. When pressing the switch rear edge, the code value changes from a smaller value to greater one. The code numbers and corresponding tyres/tires are listed in the table on the page 107.

D 2.2.2.9. Change over switch for LCD–display unit in Agroline instrument panel (2.8.1)

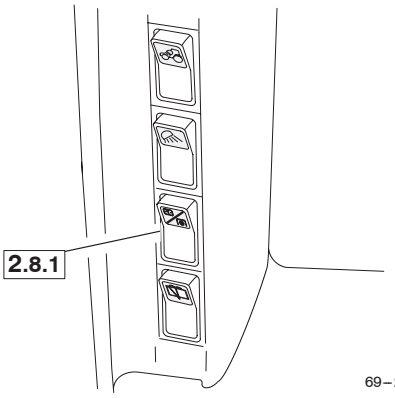

69–25,93

The operation of change over switch for LCD–display unit is explained under “LCD–display unit” starting on page 32.

D 2.2.3. Side panel of instrument panel (3)

D 2.2.3.1. Ignition switch (3.1)

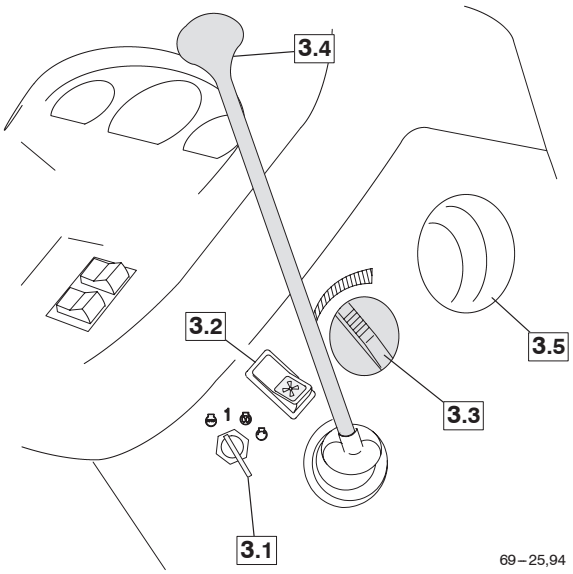

69–25,94

Starter switch positions:

STOP — Stop, motor (symbol 0 on models with STOP control)

1 Power on (normal position for running the engine, which also allows the electrical equipment to be used when the engine is not running)

Glow position for pre–heating the induction air.

Starting position

D 2.2.3.2. Switch, fan (3.2)

The fan has two speeds.

D 2.2.3.3. Heater control (3.3)

The amount of heat is increased by turning the knob clockwise. In summer the heater unit can be used as cab ventilator by closing off the coolant circulation.
The amount of heat from the roof heater fans (extra equipment) is also controlled by this knob.

D 2.2.3.4. Hand throttle lever (3.4)

– Full throttle position (lever in rear position)
– Idling position (lever in front position)

D 2.2.3.5. Ventilation nozzle (3.5)

The ventilation nozzles are on both side panels.

Downloaded from www.Manualslib.com manuals search engine

https://truckmanualshub.com/

D 2.3. Controls on right hand side

D 2.3.1. Driving (1)

D 2.3.1.1. Range gear lever (1.1)

1. **Range gear lever on shuttle models**

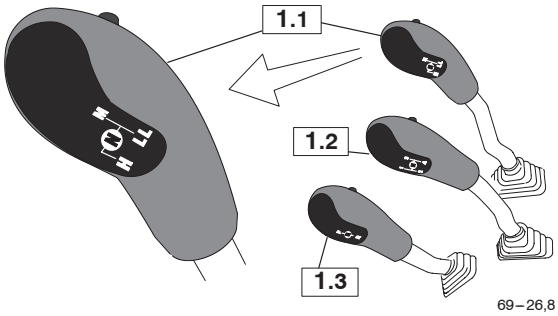

69–26,8

The range lever selects three synchronized ranges.

Rear position on right (in the driving direction)**:** crawling speed range **LL**

Front position on right (in the driving direction)**:** low range **M**

Rear position on left (in the driving direction)**:** high range **H**

Low (M) and High (H) ranges are synchronized. When changing ranges the clutch pedal must be depressed.

2. **Range gear lever on overdrive models**

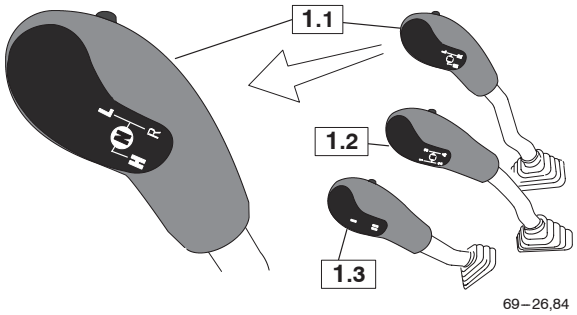

69–26,84

The range gearbox has three synchronized gears.

Front position on right (in driving direction) = low range (L–range)
Rear position on right (in the driving direction) = reverse (R–range)
Rear position on left (in the driving direction) = high range (H–range)

D 2.3.1.2. Speed gear lever (1.2)

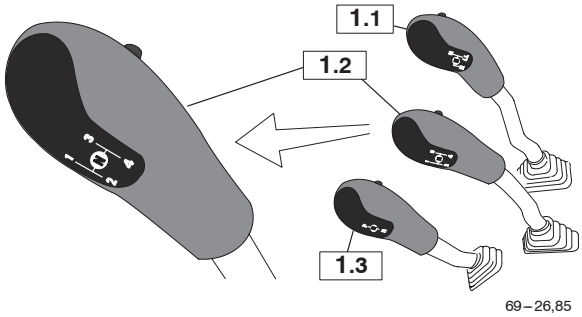

69–26,85

This lever (**1.2**) selects four synchronized speed gears, the middle position is neutral. The speed gears can be used in all three speed ranges and also in the forward and reverse gears.

When changing gear, the clutch pedal must be depressed.

D 2.3.1.3. Forward/reverse gear lever/ overdrive lever (1.3)

Depending on chosen transmission unit, this lever acts either as forward/reverse gear lever or as overdrive lever.

1. **Forward/reverse gear lever**

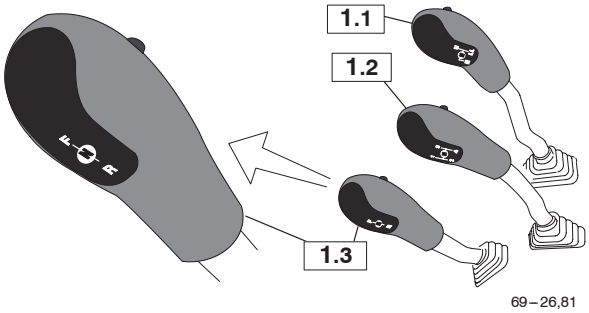

69–26,81

Lever in **front position** = forward speeds
Lever in **rear position** = reverse speeds

Gear change between Forwards & Reverse is synchronized.

When changing driving direction, the tractor must be stopped and clutch pedal depressed.

Downloaded from www.Manualslib.com manuals search engine

https://truckmanualshub.com/

2. **Overdrive lever**

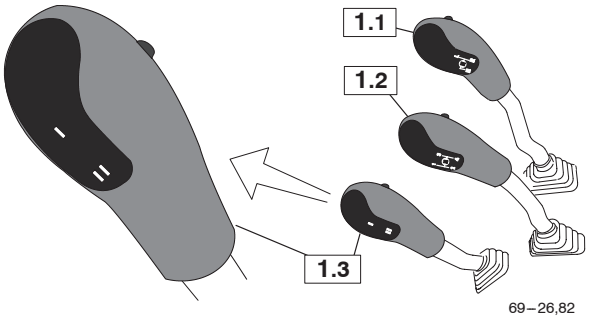

69–26,82

Front position, I = direct range
Rear position, II = high range overdrive connected

Overdrive is synchronized, so it is possible to engage or disengage as the standard gears while running using the clutch pedal. It is possible to use it with all gears and range gear lever positions. Tractors provided with this overdrive have 16 forward speeds and 8 reverse.

CAUTION: There is a mechanism in the overdrive which prevents the lever remaining in the neutral position (middle position) ensuring lubrication of the gear box and PTO. Never, under any circumstances, leave the lever in the neutral position.

D 2.3.1.4. **HiShift (1.4)** (extra equipment)

Push buttons for HiShift are additional equipment, which make for easier driving. With HiShift, the clutch can be used not only with the left foot but also with the fingertip button control.

The contact buttons are placed in all gear levers (tractors equipped with low–gear in range- and speed gear levers), so there is no need to use the clutch pedal. They also enable clutchless shuttle operation.

Traditional use of the clutch pedal is always possible, and also recommended in some situations such as attaching the implements.

a1 **Operating and function of the HiShift**

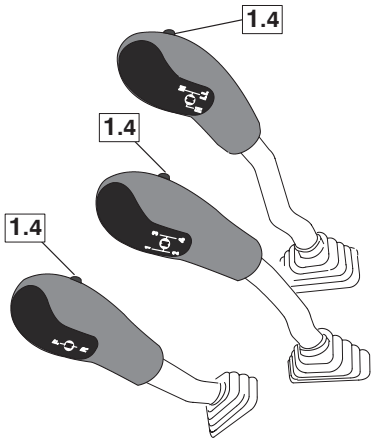

69–26,6

By pressing this push button (**1.4**) the clutch pedal is depressed. When the push button is released, the clutch pedal rises according to the preset adjustment.
When the speed is below 4 km/h the clutch is engaged more slowly (the pedal rises slower) than when the speed is greater than 4 km/h.

When using the HiShift, first press the push button and then move the lever to the desired position. The push button can then be released and the clutch will be engaged.

WARNING: When coupling implements or other operations where precise movements are needed the foot pedal must always be used.

WARNING: You should always be able to operate the clutch pedal by foot if needed. If the tractor engine is left running be sure not to leave children or animals in the cab as the push buttons can be easily operated.

If the clutch pedal has been pressed down by the push button and the clutch is to be engaged by foot operation, wait for a few seconds after releasing the push button before starting to engage the clutch manually.

When operating the clutch for the first time in a cold climate, it is good practise to use the push buttons for the first few operations of the clutch.

The clutch pedal pressure force is limited to 250 N (25kp) with a pressure control valve avoiding any accidental damage to the foot.

Downloaded from www.Manualslib.com manuals search engine

https://truckmanualshub.com/

a2 HiShift clutch adjustment

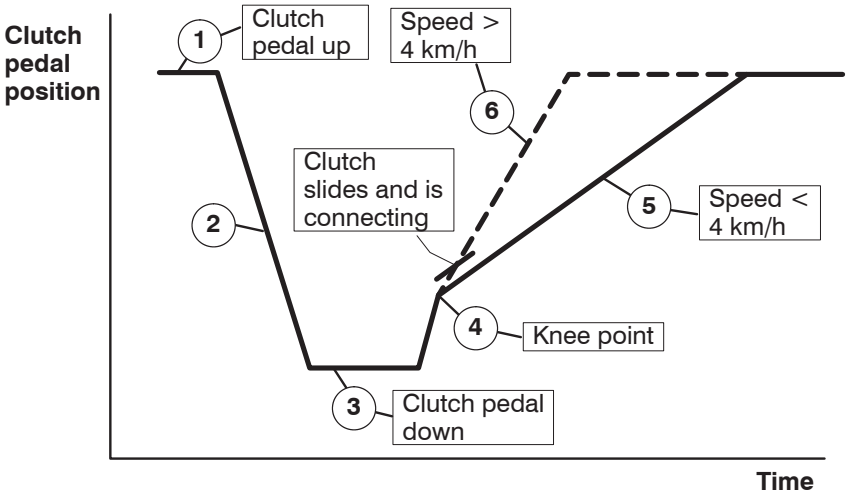

The attached picture shows the function of the HiShift clutch and the influence of the adjustment. The curve shows the clutch pedal position according to time.

- The clutch pedal is up (**1**)
- The HiShift push button is pressed, the clutch pedal goes down quickly (**2**)
- The clutch pedal is down, the desired changing movement is completed (**3**)
- The push button is released, the clutch pedal rises quickly to the point when the clutch begins to engage (knee point), this point has been preset in the factory (**4**)
- If the speed is below 4 km/h then the pedal rises slowly (lower curve) (**5**)
- If the speed is more than 4 km/h then the clutch pedal rises quicker (the upper curve) (**6**)

When necessary the clutch pedal rising speed after the Knee Point (the clutch engagement point) can be adjusted in the following way:

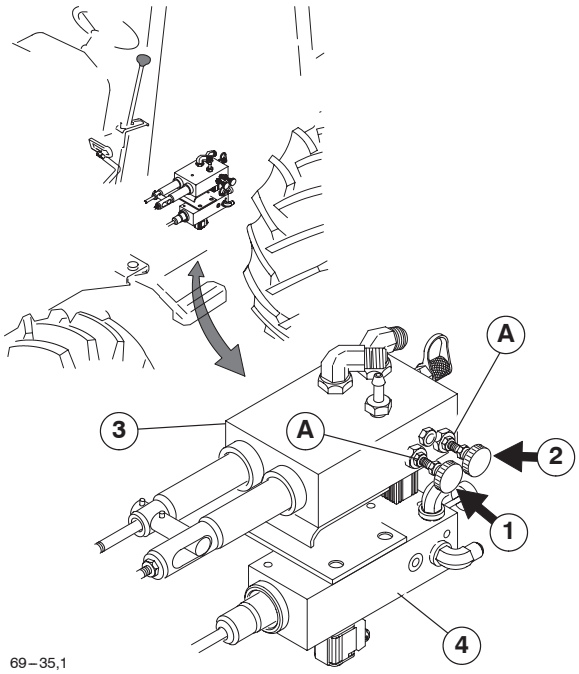

The valve plate, where the adjustment is done, is situated on the left side of the centre frame (= fuel tank).
If the tractor is equipped with both the HiShift drive clutch and with the HiShift switch of the rear PTO, the highest valve plate (**3**) is for the drive clutch and the lowest (**4**) for the PTO switch.

Downloaded from www.Manualslib.com manuals search engine

https://truckmanualshub.com/

Speed under 4 km/h, lower curve, adjusting screw (1)

– By rotating the adjusting knob (**1**) in the closed direction (clockwise) (the lock nut has to be slackened **A**), the clutch rises slower (the curve is gentler) and vice versa. The factory set adjustment is 1 and a $^1/_4$ turns open.

NOTE: The clutch pedal rising speed can not be adjusted too slow, in order that the clutch does not slip and wear unnecessarily. The minimum value is open 1 turn, because of clutch slip. Always adjust Knob 1 first.

Speed over 4 km/h the upper curve, adjusting screw (2)

– By rotating the adjusting knob (**2**) in the closed direction (clockwise) (the lock nut has to be slackened **A**), the clutch rises slowly (the curve is gentler) and vice versa. The factory set adjustment is 2 turns.

D 2.3.1.5. Differential lock (1.5)

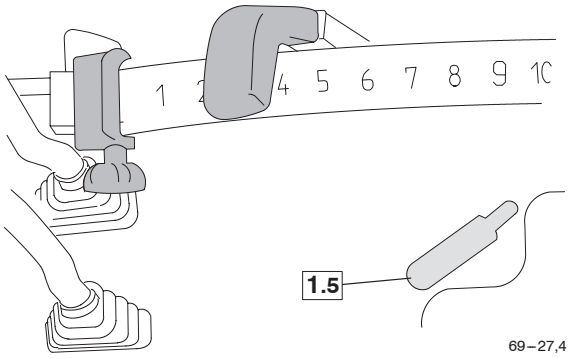

69–27,4

Engaging: Push down the lever.
Disengaging: Reduce the engine speed and pull the lever up.

CAUTION: The differential lock can be engaged while running straight ahead without wheel slip.

D 2.3.2. Rear linkage (mechanically controlled hydraulic lift) (2)

D 2.3.2.1. Position control lever (2.1)

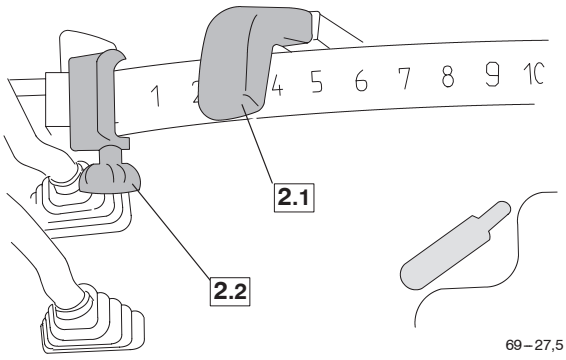

69–27,5

Front position: Lifting arms lowered.
Rear position: Lifting arms raised.

D 2.3.2.2. Locking device of position control lever (2.2)

The movable lever stop (**2.2**), marks the position of the lever. It facilitates return to its previously set position after a lifting operation or similar.

CAUTION: The lever should be locked in the rear position with the stop when the hydraulic lift is not being used or if there is a heavy load on the three–point mounting (further instructions on page 55).

D 2.3.2.3. Lowering speed control (2.3)

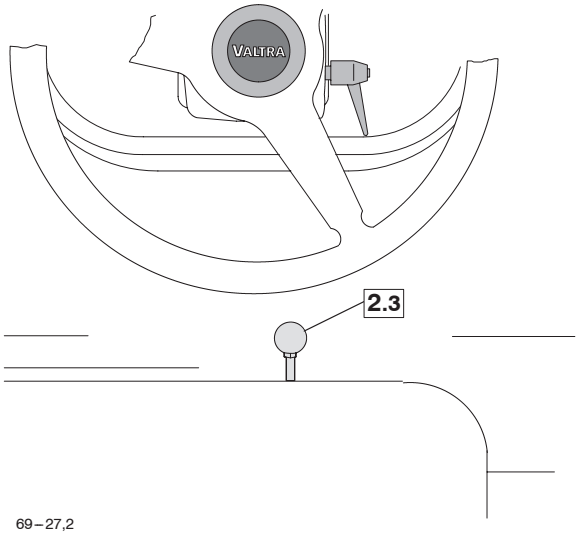

69–27,2

The lowering speed control adjusts the lowering speed of the lower links.

Rear position = Max. lowering speed
Front position = Min. lowering speed

CAUTION: Minimum lowering speed should always be used when heavy implements are mounted on the hydraulic lift.

D 2.3.3. Rear power take–off (3)

D 2.3.3.1. Selector lever, power take–off (3.1)

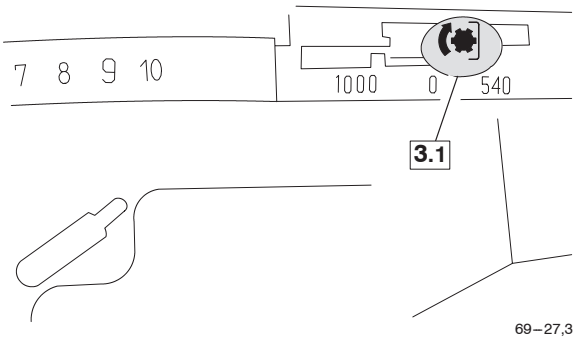

69–27,3

The tractor has some of the following PTO speed

Downloaded from www.Manualslib.com manuals search engine

https://truckmanualshub.com/

alternatives:

1000/540

– **the lever left** = PTO **1000** connected
– **centre position** = PTO disconnected
– **the lever right** = PTO **540** connected

540E/540

– **the lever left** = PTO **540E** connected
– **centre position** = PTO disconnected
– **the lever right** = PTO **540** connected

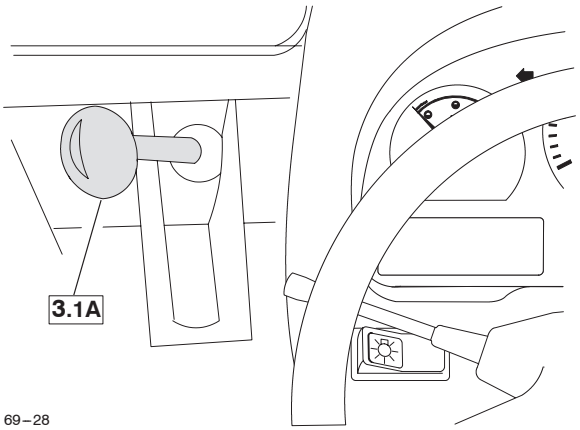

69–28

When engaging or disengaging the power take–off with the selector lever, the PTO clutch lever (**3.1A**) should be in the rear position (disengaged). The clutch lever (**3.1A**) must only be used for temporary disengagement of the power take–off (further instructions on page 52).

D 2.3.4. Auxiliary hydraulic (4)

D 2.3.4.1. Auxiliary hydraulics, control lever (4.1)

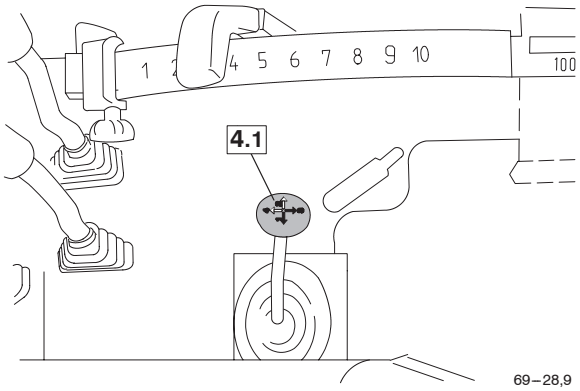

69–28,9

This lever permits control of single or double–acting cylinders (e.g. tipping trailer). The outside valve (the upper double quick–action coupling), is controlled by moving the lever back and forth, the inside valve (the lower double quick–action coupling), by left–right movement. When the lever is pulled back or to the left, pressure acts in the upper quick–action couplings of the double quick–action couplings (e.g. tipper control) and vice versa (see instructions on page 59).
The inside valve can be changed to a single– or double–acting by turning the knob under the valve (see instructions on page 59).

D 2.3.5. Side pillar control panel (5)

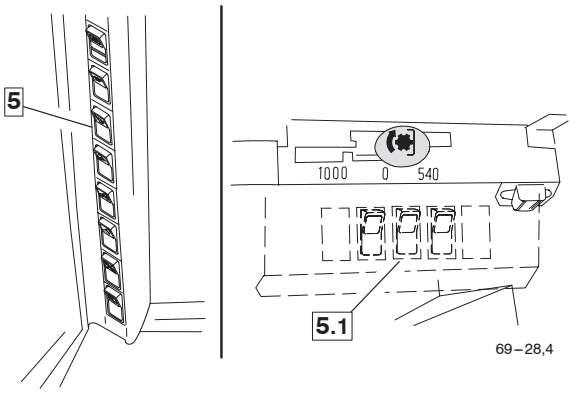

69–28,4

Side pillar switches see point “Side pillar control panel” on page 42.

If the tractor is equipped with a lot of extra equipment there might not be enough space for all the switches on the side pillar, In this situation, the rest of the switches are located on the extra housing (**5.1**) beside the PTO selector lever.

D 2.3.6. Other controls (6)

D 2.3.6.1. Trailer hitch release control (extra equipment) (6.1)

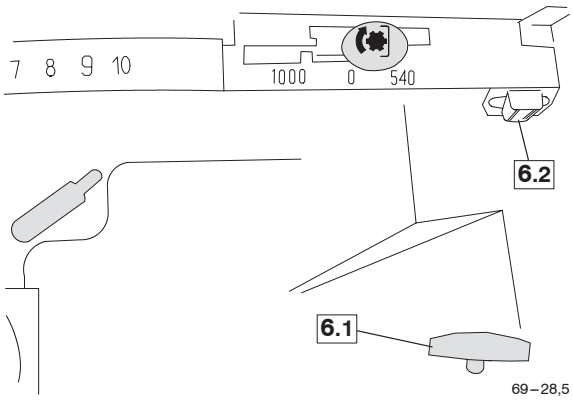

69–28,5

When the lower links are in the top position the trailer hitch can be released by pulling the release control. (See, Using trailer hitch, operating instructions in section K on page 127.

D 2.3.6.2. 3–pin power socket (6.2)

More information, see on page 43.

Downloaded from www.Manualslib.com manuals search engine

https://truckmanualshub.com/

D 2.3.7. **Openable side window (6.3)** (on both sides)

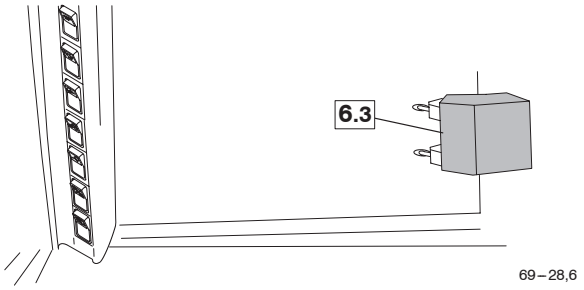

Pull the handle rear side and push the window to the open position.

D 2.4. Electro – hydraulic three – point linkage, control panel

D 2.4.1. Rear linkage (electrohydraulically controlled lift) (1)

The following controls (1 – 12) are only fitted on tractors with an electro – hydraulic three – point linkage. In this case the following controls have been removed from the cab:

– position control lever
– lowering speed control

The operating instructions for electro – hydraulic linkage are (in section F) on page 57.

D 2.4.1.1. Diagnose light (1.1)

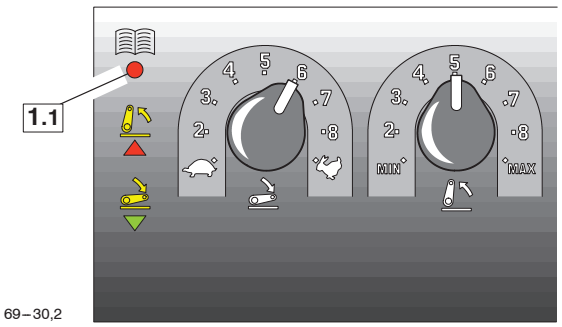

When the tractor ignition switch is on, the light illuminates for a moment, goes out again and illuminates on again. When the diagnostic light is on, it shows that the linkage has not been activated.
The linkage **is activated** by turning the lift/stop/lower switch (**1.3**) to lift or lower position, then the light goes out and the linkage switches can be used. Linkage activation must only be carried out when the main power has been switched off, and when the inner switch for connecting implements or the push button control has been used. The flashing of the diagnostic light informs of a system failure. In these instances contact with your nearest dealer.

D 2.4.1.2. Position control knob (1.2)

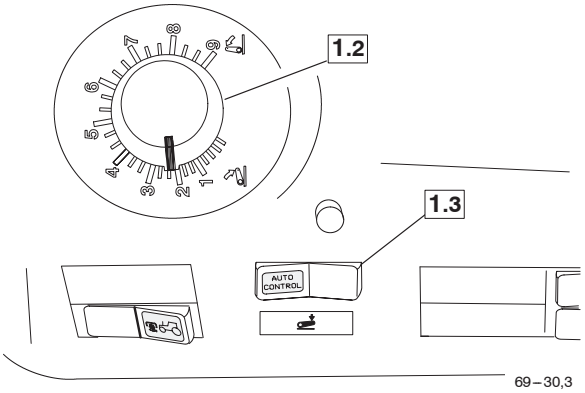

The linkage is lifted when this knob is turned clockwise and lowered when it is turned counter – clockwise. The knob allows continuous control of the position of the lower links. It sets the position of the lower links when the lift/stop/lower switch (**1.3**) is in the lower position.

D 2.4.1.3. Lift/stop/lower switch (1.3)

The lift/stop/lower switch has 3 positions:

– **Left side pressed down** lowers the linkage = Autocontrol position.
– **Centre position stops** the arms.
– **Right side pressed down** the linkage lifts = transport position

By switching to the lift position, the operator can use this switch to lift the implement into the transport position; by switching it to the lower position the implement is then lowered to the right depth (as selected using the position control knob **1.2**).

Linkage movement can be **stopped** by placing the lift/lower switch in the **centre position**.

Downloaded from www.Manualslib.com manuals search engine

https://truckmanualshub.com/

D 2.4.1.4. Lift/lower indicator lights (1.4)

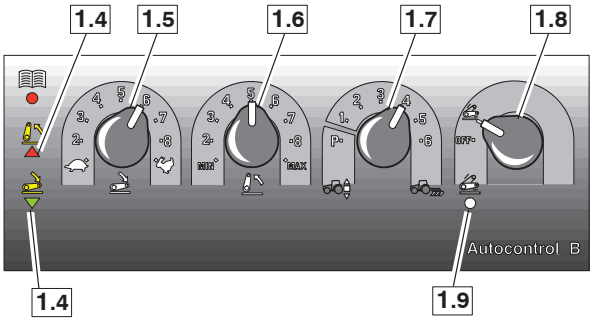

69–31,1

The lift indicator (red = lift) is lit when the lower links are lifting, the lowering indicator (green = lowering) is lit when they are lowering. Neither indicator is lit when the links are stationary.

D 2.4.1.5. Lowering speed selector (1.5)

There are nine different positions available. The lowering speed is increased when this knob is turned clockwise. A slow lowering speed should be selected with heavy implements. The lowering speed is independent of the load.

D 2.4.1.6. Transport height selector (1.6)

The transport height (i. e. the upper position of the lower links) is increased when this knob is turned clockwise. Nine different positions are available. This knob limits the lifting height when either the position control knob (**1.2**) or the lift/stop/lower switch (**1.3**) is used. The height limit is a useful feature when there is a danger that the implement could hit the cab, etc.

CAUTION: This knob does not limit lifting height when the push buttons in the cab or on the mudguards are used.

NOTE: To quickly stop the lowering movement of the lower links, press the lift or lower button.

D 2.4.1.7. Draft control selector (1.7)

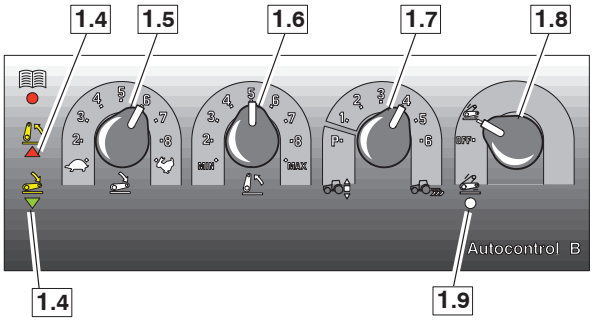

69–31,1

This knob should be turned to the **P** position when the **position control is being used** (base position). This ensures that the linkage will remain in the selected position without draft control. When **draft control is used** (e.g. when ploughing/plowing) the knob should be turned to one of the **six (1–6) sensitivity levels**.

D 2.4.1.8. Drive balance control switch (1.8)

Drive balance control switch has two positions and is used when transporting heavy implements on the linkage. It is used for balancing the tractor when driving. The system only operates in the transport position, in other words when the lift/stop/lower switch is in the lift position.

The balance control system begins to work when driving the tractor. In this case the linkage lowers automatically about 4 % (it can be seen on the lowering light). So that the linkage has enough movement in both direction. The linkage has to be high enough to accommodate these movements.
When the vehicle stops, the balance control system stops functioning and the linkage rises to the starting position (visable on the lifting light).

D 2.4.1.9. Drive balance control light (1.9)

When the drive balance control is ready for work, the light is on.

Downloaded from www.Manualslib.com manuals search engine

https://truckmanualshub.com/

D 2.4.1.10. Passing switch for position control knob = forced lowering switch (1.10)

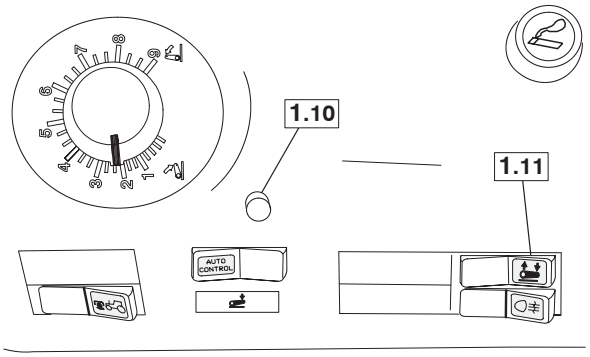

69–31,2

By pushing this switch, the lower links are lowered below the position, set by the position control knob (**1.2**). After releasing the switch the lower links return to the value, set by the position control knob. The switch is spring loaded. The forced lowering only operates when the lift/stop/lower switch (**1.3**) is in the lowering = Autocontrol position. The forced lowering switch uses the lowering speed set by the lowering speed selector.

D 2.4.1.11. Inner switch for connecting implement (1.11)

The lower links are raised and lowered by the switch in the cab and by push button on the rear mudguards. These are useful, for instance, when implements are being attached. The lower links lift or lower as long as the corresponding switch/button is pressed. The switch/push buttons operate when the lift/stop/lower switch (**1.3**) is in the lower position or the centre position.
After these switch/buttons have been used the position control system must be activated by operation of the lift/stop/lower switch (**1.3**).

CAUTION: The transport height selector (1.6) does not limit the lifting height when these switch/buttons are being used.

The lower link position sensor does not limit the lifting height when the switch/push buttons are used; instead the arms are moved to their extreme positions when the switch/buttons are pushed.

D 2.4.2. Side pillar control panel (2)

D 2.4.2.1. Rear window wiper and washer (2.1)

(extra equipment)

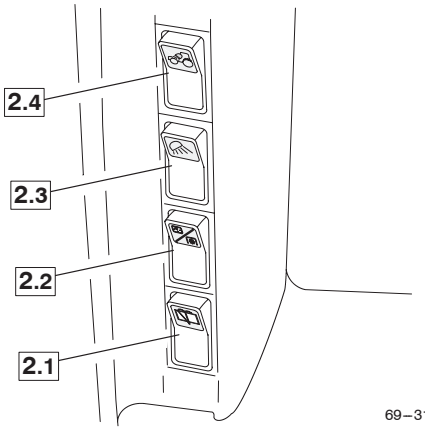

69–31,3

The switch controls both the windscreen washer and wiper.

D 2.4.2.2. Change over switch for LCD–display in Agroline–instrument panel (2.2)

The tractor is fitted with this switch, if equipped with Agroline–instrument panel.
The operation of change over switch for LCD–display unit is explained under “Agroline–instrument panel” starting on page 34.

D 2.4.2.3. Switch for front working lights (2.3)

(extra equipment)

The parking lights or full/dipped–beam headlights must be switched on when using the working lights.

D 2.4.2.4. Switch for upper headlights (2.4) (extra equipment)

When this switch is pressed the upper headlights are switched on. When the upper headlights are on the lower headlights in the front are off and vice versa.

Downloaded from www.Manualslib.com manuals search engine

https://truckmanualshub.com/

D 2.4.2.5. **Switch for rear working lights (2.5)**

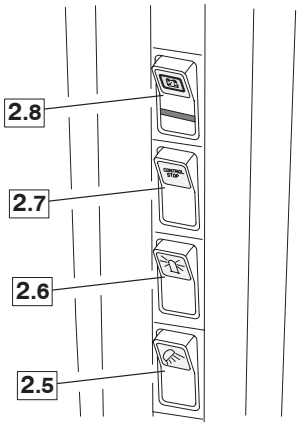

69–31,4

The parking lights or full/dipped–beam headlights must be switched on when using the working lights.

D 2.4.2.6. **Switch for rotating warning light (2.6)** (extra equipment)

D 2.4.2.7. **Control stop switch (2.7)** (extra equipment)

The operating instructions for the control stop switch are under “Extra equipment” (in section K) on page 115.

D 2.4.2.8. **Electric main circuit switch (2.8)** (extra equipment)

The operating instructions for the electric main circuit switch are under “Extra equipment” (in section K) on page 115.

D 2.4.3. **Other controls (3)**

D 2.4.3.1. **3–pin power socket (3.1)**

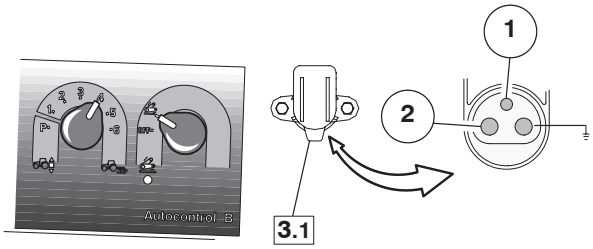

69–31,5

The socket (**3.1**) is of the 3 pin, type ISO/TR 12369. Current (DC) can be taken for various devices, (**1**) 5A through the ignition switch, and 25A (**2**) from the battery, for use by the implement(s) etc. The male connector part number is 33615500.

D 2.4.3.2. **Lighter (3.2)**

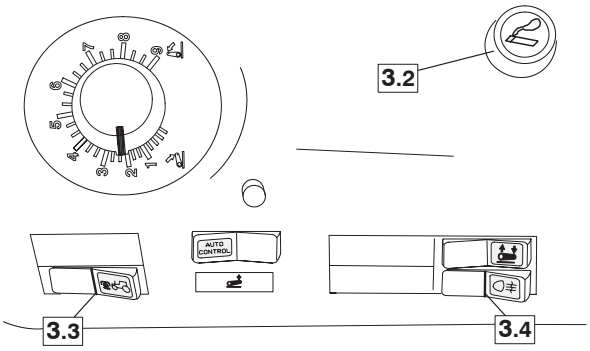

69–31,6

Extra equipment, also for mechanical linkage model.

D 2.4.3.3. **Switch for front PTO (3.3)** (extra equipment)

The operating instructions for the front power take–off are under “Extra equipment” (in section K) on page 116.

D 2.4.3.4. **Switch for rear fog light (3.4)** (extra equipment)

Standard in some marketing areas.

Downloaded from www.Manualslib.com manuals search engine

https://truckmanualshub.com/

D 2.5. Controls on left hand side

D 2.5.1. Parking brake (1)

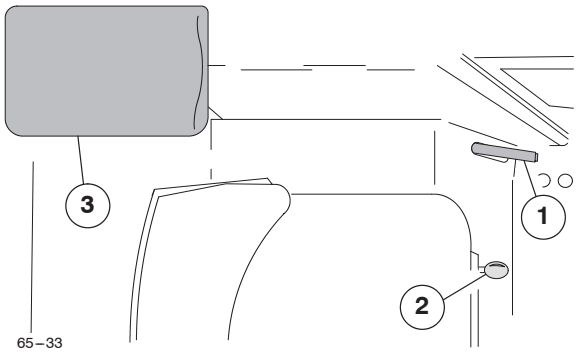

Pull the lever up to apply the hand brake. The brake is released by pushing the button at the end of the lever and pushing the lever down. A warning lamp comes on when the parking brake is applied.

CAUTION: The brake pedals should be connected together when using parking brake.

DANGER: If the tractor has the trailer brake valve, the trailer brakes also operate when using the parking brake, when the tractor engine is running (brake pedals have to be connected together). When the tractor engine is off and the parking brake is on, the trailer brakes do not operate.

D 2.5.2. Engaging control, 4WD (four–wheel drive) (2)

By pulling the lever the four wheel drive engages (see Operating Instructions on page 50).

D 2.5.3. Extra seat (3)

The extra seat can be locked in the sitting position or in the down position.

D 2.6. Controls on rear side

D 2.6.1. Rear window opening device (1)

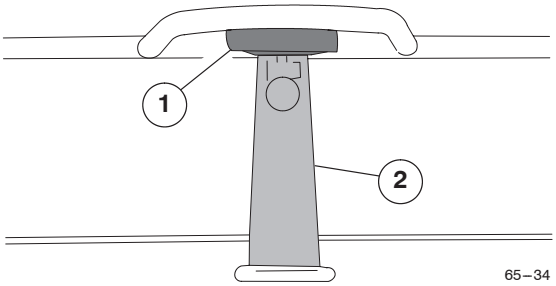

By pulling the handle (**1**) the window can be opened.

D 2.6.2. Rear window intermediate position latch (2)

The window can be opened a little (intermediate position) by using the latch (**2**).

Downloaded from www.Manualslib.com manuals search engine

https://truckmanualshub.com/

D 2.7. Roof console

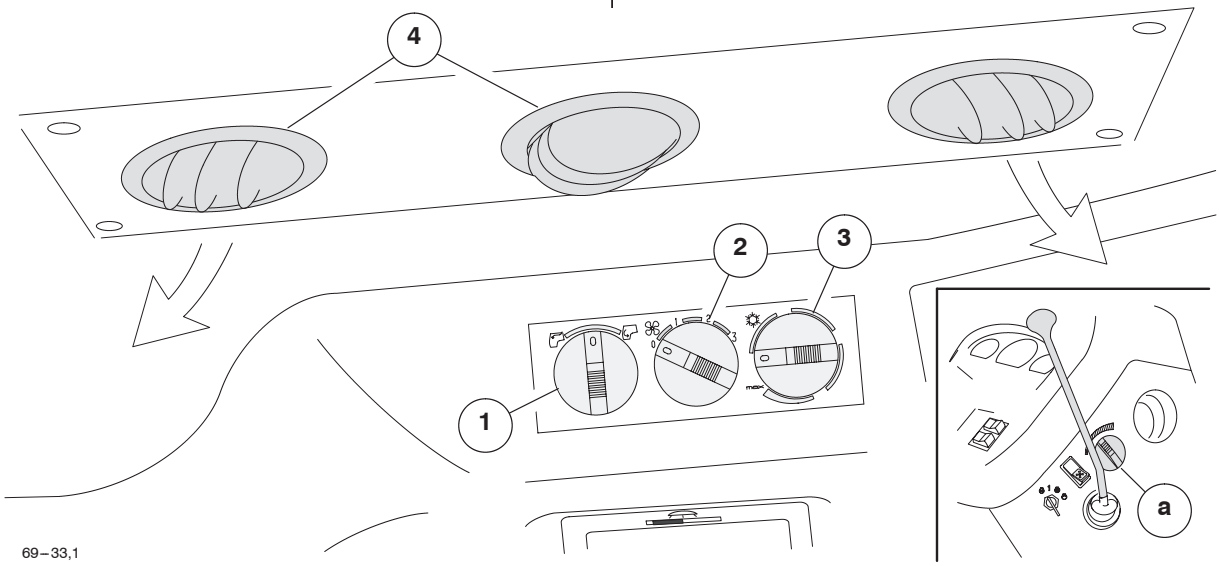

D 2.7.1. Recirculation control knob (1)

(extra equipment, with air conditioning)

On the front part of the roof console there is an adjustable control knob for air recirculation. Turning this knob clockwise progressively closes the air inlet from outside.

With the knob in this position:

- The cab will heat up faster
- The heating capacity will be higher
- Higher cooling capacity with air conditioning.

With the knob in this position:

- The windows will demist faster (reduces humidity/ice forming)
- The pressure in the cab will be higher (reduces dust quantity)

D 2.7.2. Roof fan (2)

(3–speeds, extra equipment)

This fan blows air through the ventilation nozzles in the roof console, the amount of heat can be adjusted with the heater control knop (**a**), see page 34.

D 2.7.3. Air conditioning control knob (3)

(extra equipment)

Air conditioning see page 125.

D 2.7.4. Ventilation nozzles (4)

(extra equipment, with roof fan)

In the upper part of the cab there are three nozzles which can be turned to the desired direction. The window surfaces can be cleared of ice or condensation by turning the nozzles towards the glass.

Downloaded from www.Manualslib.com manuals search engine

https://truckmanualshub.com/

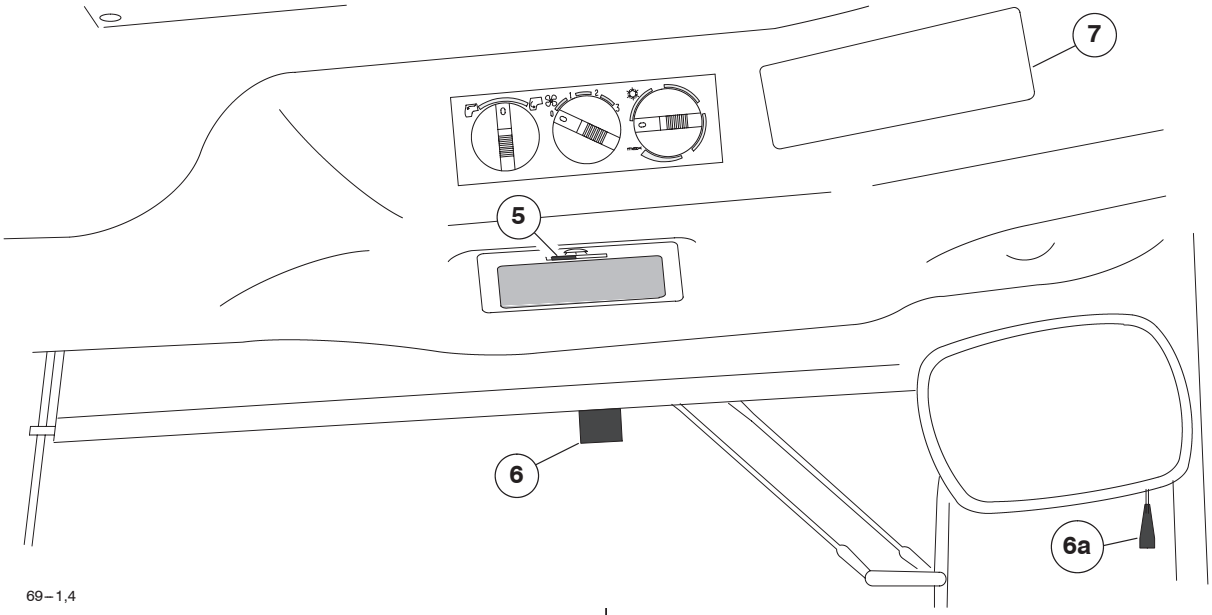

D 2.7.5. **Cab light switch (5)**

The cab light switch has 3 positions. The switch positions are:

– left position = light off
– centre position = door position
– right position = light on

D 2.7.6. **Sun visor (6)**

By pulling the sun visor it can be lowered and by pulling the string (**6a**) the sun visor can be raised.

D 2.7.7. **Radio (7)** (extra equipment)

D 2.8. Seat

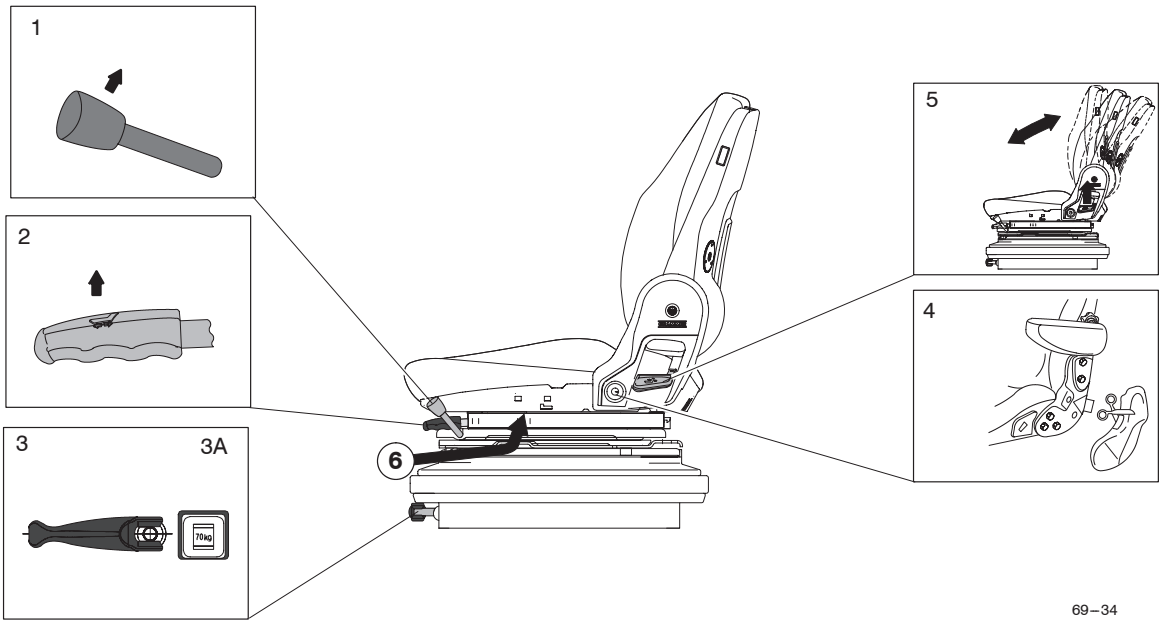

CAUTION: Do not attempt to adjust the seat while driving, increased risk of an accident.

The seat can be adjusted as follows:

D 2.8.1. **Lock for turning the seat (1)**

Release the lock by pulling the control upwards. The seat can now be turned 360° clockwise or counter clockwise. The seat has set positions at 10° (e.g. can be used when

Downloaded from www.Manualslib.com manuals search engine

https://truckmanualshub.com/

ploughing/plowing).

D 2.8.2. Lock for adjustment for forwards/rearwards (2)

Lift up the lever and push the seat forwards or rearwards.

D 2.8.3. Seat suspension control (3)

Turn the control clockwise to make the suspension harder. The decal (**3A**) shows recommended settings for different driver weights.

D 2.8.4. Seat belt anchor point (4)

There are anchor points for the seat belt on the seat.

D 2.8.5. Seat back inclination (5)

Pull this lever up then set the back rest to the desired position.

D 2.8.6. Vertical adjustment (of seat) (6)

Raising: Lift the seat to the desired position. The seat will automatically lock in position.

Lowering: To lower the seat you have to first lift the seat to the top position and allow it to drop to the bottom position. You must then lift it up to the desired position.

Air suspension – driver's seat see page 124.

Downloaded from www.Manualslib.com manuals search engine

https://truckmanualshub.com/

E. Starting and running

Before starting to drive your new tractor make yourself familiar with all instruments and controls. Study the instructions given in the manual concerning the use of the devices. Read the safety precautions at the beginning of this manual.

Check all instruments immediately after starting and keep checking on them while driving. Always carry out daily maintenance on the tractor before starting the day's work.

E 1. Points to note during the first 50 hours running

Drive smoothly and vary the loading in order to run the tractor in correctly. This will give the tractor a longer service life and make it more economical.

– Do not race the engine and do not run it at maximum speed.
– Do not pull heavy loads with the engine running at too low a speed.
– Avoid driving in the same gear and at the same engine speed for long periods at a time.

NOTE: Check that all nuts and bolts are properly tightened (wheels, exhaust system etc.).

E 2. Start

WARNING:
Never run the tractor in an enclosed building.

WARNING:
Never start the engine unless you are seated in the tractor.

IMPORTANT!
If the engine has not been used for some time (over a month), loosen the turbocharger oilpressure pipe (DS/DW–motors) pour clean oil (ca 0.2 l) into the turbocharger housing.

E 2.1. Normal start

1. Depress the clutch pedal and move the gear lever to the neutral position.
2. Move the hand throttle lever to the low idling position.
3. Turn the starter key to start the tractor and release the key when the engine starts. Use accelerator pedal to increase engine revs.
4. Reduce the engine speed as soon as the tractor has started. Never "race" a cold engine.

– Observe the oil pressure. After 3–4 seconds it should be normal (expecially DW/DS models).

NOTE: If the engine does not start the first time, wait until it is completely stopped before trying again.

E 2.2. Cold start

NOTE: Switch off all electrical equipment, as they still draw current on therm and start positions.

1. Depress the clutch pedal and move the gear lever to the neutral position.
2. Move the hand throttle lever to the low idling position.
3. Turn the starter switch key to the "Therm" position and hold it there for 20–25 seconds.
4. From the "Therm" position, turn the key to the "Start" position and hold it there until the engine is started, or for a maximum of 30 seconds. Use accelerator pedal to increase engine revs.
5. If the engine fails to start, move the key back to "Therm" and wait for a further 10 seconds, then make a further attempt to start the engine.
   – Observe the oil pressure. Never "race" a cold engine.

E 2.2.1. Cold start, special instructions

If the engine does not run smoothly after it has started, engage the cold–starting again for a further maximum period of 30 seconds (starter switch key in position "Therm").

If the starter motor does not engage immediately the key is turned to the START position, stop the starting attempt and try again after a short while.

IMPORTANT!
First warm up the engine and hydraulics for a little while at low engine revs. You can speed up the warming of the hydraulic system by turning the steering wheel (not to the limit positions). Do not use the auxiliary hydraulic valves when the oil is cold.

If you have to start the engine without the aid of the cold–starting device when it is very cold, keep the starter motor engaged (for a maximum of 30 seconds at a time) until the engine has started.

Starting the tractor when it is very cold is easier if the battery is kept in a warm place when not working.

Never race a cold engine. Run the engine with a light load until it has reached its normal operating temperature.

CAUTION: Always use the engine heater (standard equipment), when the temperature is below 0°C, when possible.
This ensures the start in cold conditions and reduces the wear on the engine. 2–3 hours warm up before starting is enough. When the engine heater is connected to the plug socket you can hear a hissing sound which means that the warm up is on.

NOTE: If tractor driving is for a short–distance, make sure that the battery is charged enough to ensure re–starting.

Downloaded from www.Manualslib.com manuals search engine

https://truckmanualshub.com/

E 2.3. Starting aerosol

NOTE: Use of a starting aerosol is not recommended. Large doses can damage the engine and the warranty does not cover any damage caused in this way.

WARNING! Starting aerosol must not be used for engines with pre–heating coil as this combination may cause an explosion.

E 2.4. Starting with auxiliary batteries (jump starting)

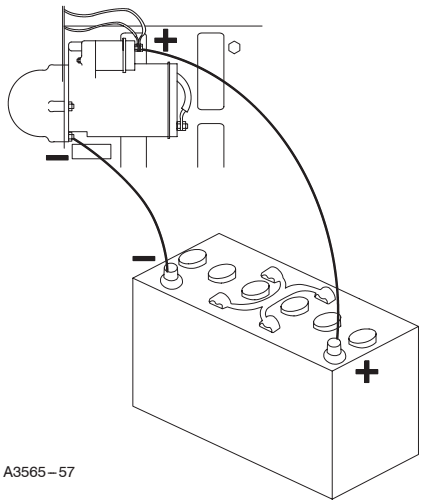

– Check that the auxiliary batteries have the same voltage as the standard battery.

– Open the battery plugs to avoid risk of explosion

– **WARNING: A fully charged battery connected directly to a dead battery can cause a current surge which can cause the batteries to explode.**
The correct procedure is as follows:

– Connect one of the jump leads from the positive terminal on the auxiliary battery to the positive terminal on the starter motor and then connect the other jump lead from the negative terminal on the fully charged battery to ground on the machine, e.g. the starter motor attaching bolt or frame member close to the starter motor.
– When the engine has started, **first remove the jump lead** between ground on the machine and the negative terminal on the auxiliary battery. Then remove the jump lead between the positive terminals.

Start the engine using the ignition switch. Always follow the correct procedure. Never try to start the engine by short-circuiting leads.

Having started the engine, declutch, select the correct gear, and release the parking brake. Steadily increase the engine speed, and release the clutch pedal slowly.

E 3. Driving

– In cold conditions warm the engine to normal operating temperature before applying any loading. Remember that there is heavier wear on the engine when running cold than at normal operating temperature.
– Keep an eye on the warning lamps and gauges.
– Never stop the engine immediately after a hard working shift. Allow the engine to idle for a few minutes so that the temperature falls.
– Lower the implement.
– Stop the engine and turn the ignition switch to the ”O” position.
WARNING! Never turn off the current before the engine has stopped.
– Fill up the fuel tank when finishing work for the day in order to prevent condensation.

E 3.1. Changing gear

Select the ratio which gives the optimum fuel consumption without overloading the engine and the transmission. Bear in mind at the same time that soil conditions can vary within a matter of a few yards in the same field. Select a ratio which allows the engine to operate comfortably at about 75 % of its maximum power.

The highest velocities of the individual gears, see speed ranges (page 101).

To change to neutral while the engine is running use the gear lever, not the range lever. This minimizes the number of gears that remain engaged.

Electrohydraulic clutch, HiShift (extra equipment), using and functioning, see page 36.

Downloaded from www.Manualslib.com manuals search engine

https://truckmanualshub.com/

E 3.1.1. Forward/reverse models

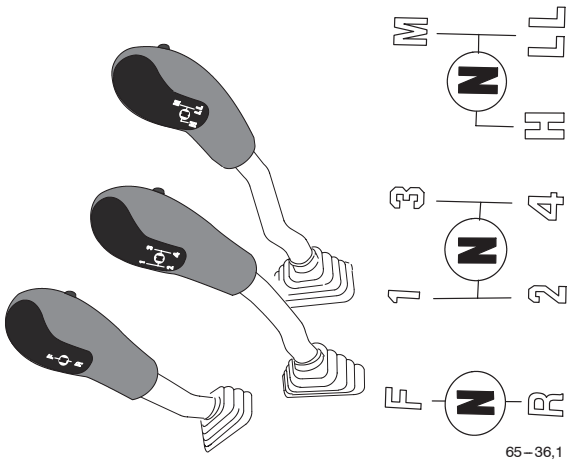

65–36,1

First choose **the right speed range with the RH side lever:**

H = High range
M = Low range
LL = Creeper speed range

Next, select **the desired speed gear (1–4) with the middle lever.**

Finally, choose **the desired driving direction with the LH side lever.**

Forward/reverse gears, range gears (except range LL) and speed gears are synchronized and the clutch pedal must always be used when changing gears.
When engaging the creeper range (LL) or changing driving direction, the tractor must be stationary.

The tractor has 12 gears forward and 12 reverse gears .

CAUTION: The crawling speed range can not be used for bigger drafting force than which is reached with Low range (M).

E 3.1.2. Overdrive models

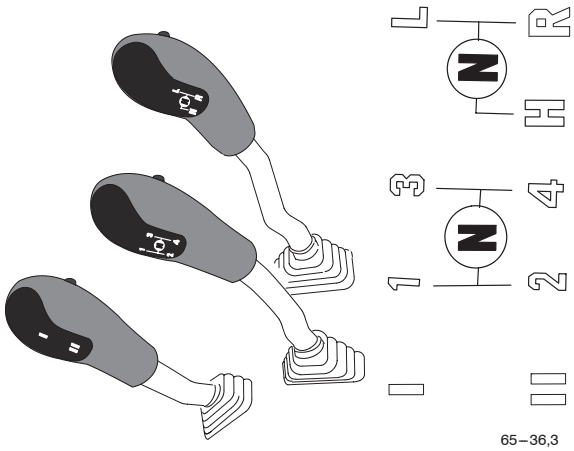

65–36,3

First choose with the **middle lever the desired speed gear 1, 2, 3 or 4**.

After this choose with the **LH side lever the overdrive** on or off.

Finally, choose **the desired driving direction with the RH side lever.** When starting forward it can be chosen high (**H**) or low (**L**) range.

Changing from High to Low while the tractor is moving is not recommended, the difference in rotation speed between the sets of gears is too great to allow a smooth change down.
Overdrive is synchronized, so it is possible to engage or disengage while running.

E 3.2. Powered front axle

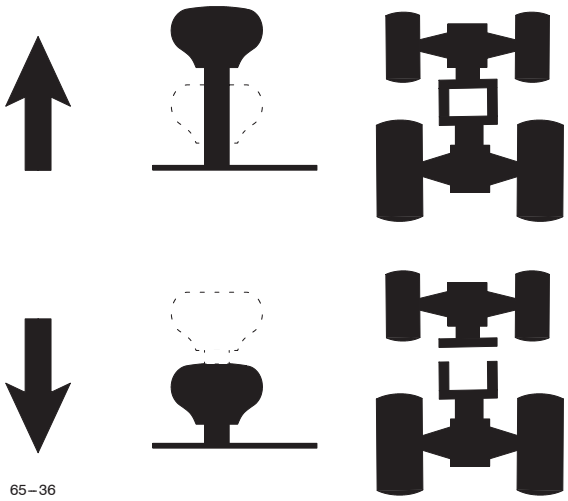

65–36

Four–wheel drive can be operated without pressing down the clutch pedal even when the tractor is running. However, engaging must not be done under heavy loading or if the rear wheels spin. Always keep a good look-out over the running route so that four–wheel drive can be engaged in good time before reaching difficult stretches.

E 3.2.1. Engaging

Pull the lever to engage four–wheel drive.

E 3.2.2. Disengaging

Close the throttle slightly and press down the lever.

E 3.2.3. Running on road

Do not engage four–wheel drive when running on the road unless drive on the front wheels is absolutely necessary.
Speeds in excess of 15 km/h are not allowed with 4WD if road driving conditions are good.

Downloaded from www.Manualslib.com manuals search engine

https://truckmanualshub.com/

E 4. Stopping

Lower the implement (and in cold weather lower links without implements), **apply the parking brake** and stop the engine.

CAUTION: Before pulling out the stop control, reduce the engine speed to idling, for about one minute, to allow time for the engine temperature to stabilise.

Fill up the fuel tank when finishing work for the day in order to prevent condensation.

E 5. Action to be taken during using

E 5.1. Permitted driving inclinations for a tractor on a slope

(continuous driving to ensure a sufficient lubrication)

Lengthwise in relation to the tractor with the front end up:

– 600, 700 . . . . . 33°
– 800, 900 . . . . . 25°

Lengthwise in relation to the tractor with the rear end up:

– 600, 700 . . . . . 36°
– 800, 900 . . . . . 28°

Sideways to the right:

– 600, 700 . . . . . 32°
– 800, 900 . . . . . 28°

Sideways to the left:

– 600, 700 . . . . . 40°
– 800, 900 . . . . . 28°

Combined, to the sides/lengthwise:

– 600, 700 . . . . . 25°/20°
– 800, 900 . . . . . 25°/20°

WARNING: Angles for safe driving should be smaller to avoid the tractor tipping over.

E 5.2. Use of snow chains

Snow chains must always be fitted on the front wheels if they are fitted on the rear wheels. Check that the chains are suitably tensioned so that the mudguards are not damaged. When needed adjust the turning angle of the tyres/tires.

E 5.3. Towing the tractor

If possible towing should be avoided when the engine is not running, because the pressure lubrication of the gearbox does not operate. If towing can not be avoided, the range lever must be in neutral (the rightmost lever) and the gear lever engaged in gear. The forward/reverse gear lever must also be engaged. The gearbox must have normal filling of oil.

NOTE: Towing speed should not exceed 15 km/h.

Downloaded from www.Manualslib.com manuals search engine

https://truckmanualshub.com/

F. Operating instructions

Operating instructions for the extra equipment are in section K, of this book, after each extra equipment.

F 1. Use of power take–off

Before attaching implements to the tractor PTO unit, make sure the **implement** is designed for **540 R.P.M** PTO or **1000 R.P.M** PTO.

F 1.1. To engage PTO

The power take–off should not be engaged, if it is not in use. **Disengagement for a short time can be done with the PTO clutchlever (1) (max 5 min)**. When the PTO is disengaged using lever (**1**) which is situated on left side of the instrument panel, the light on the instrument panel is lit.

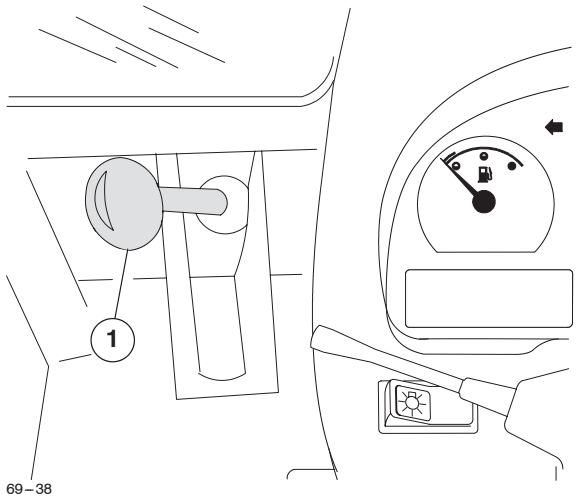

69–38

– Pull the PTO clutch lever (**1**) back (at the same time turning the knob clockwise).
– Set engine revs to low idling.

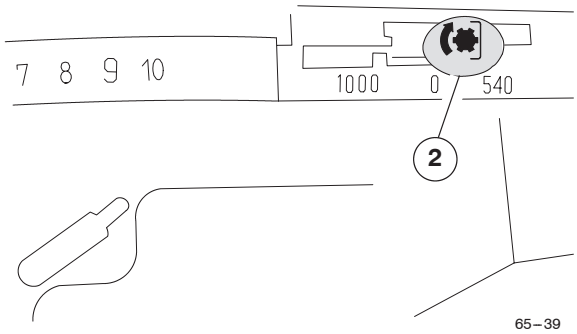

65–39

– Move the PTO selector lever (**2**) to desired PTO range position
  lever in left position = **1000** or **540E**
  lever in right position =**540**
– Release the PTO clutch lever (**1**) steadily and allow it to move forward to the front position. Adjust engine revs.

NOTE! When using the 540 E position, be aware that, when increasing the engine revs, the PTO shaft can rotate up to 800 r/min.

F 1.2. Disengagement

In reverse order.

The power take–off is equipped with a brake, which prevents the PTO shaft from rotating when the PTO is disengaged.

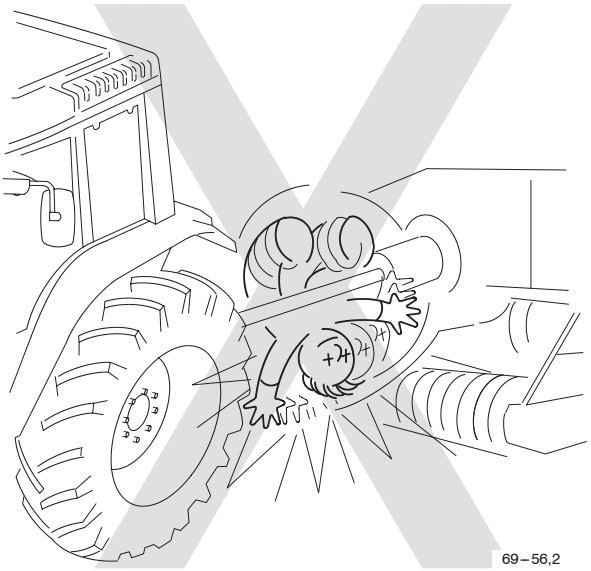

69–56,2

WARNING: Stop the engine and disengage the PTO before attaching an implement to the tractor. Check that the implement's working area is clear before engaging the PTO.

CAUTION: The PTO should only be engaged when the engine is running.

CAUTION: The disengagement of the PTO must only be done using the lever (2) on the right–hand side of the seat, e.g. when leaving the cap.

WARNING: When a PTO driven implement is used no personnel are allowed near the PTO shaft. Service work on the PTO shaft should only be carried out with the PTO disengaged, the engine stopped and the key removed from the ignition switch.

WARNING: After the PTO is disengaged the implement continues to rotate for some time. Do not approach the implement until it has fully stopped.

When coupling or decoupling an implement it should be supported if necessary to prevent it from falling.

Downloaded from www.Manualslib.com manuals search engine

https://truckmanualshub.com/

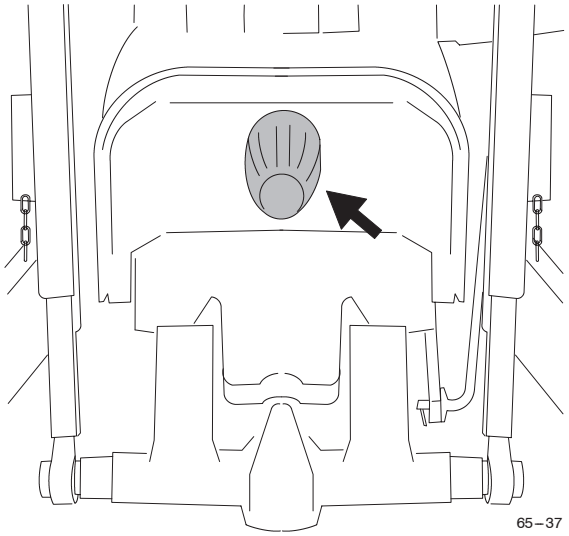

WARNING: The guard casing over the power take–off shaft must always be fitted when the power take–off is not being used.

F 2. Trailer

Gross weight of trailer = load + tare weight of trailer.

The kind of trailer which can be connected to the tractor depends, among other things on whether the trailer has brakes, how much of the trailer weight is on the hitch, the slackening of the tractor brakes and whether the trailer has one or more axles.
For further information, contact the dealer.

When loading the trailer hitch, make sure that the load on the front axle is at least 20% of the tare weight of the tractor. Do not exceed the maximum permissible loading on the tyres/tires or trailer hitch. The values for tyre/tire pressures and permissible loadings are given in the ”Technical specifications”, see page 98 and the trailer hitch loading in the “Extra equipment”, see page 127.

If the tractor is fitted with an optional trailer brake valve the brake fluid used should be (SAE J1703):

– The brake fluid has to be checked regularly, only use brake fluid SAE J1703.

DANGER: The brake fluid is corrosive and poisonous and must therefore be handled carefully at all times.

WARNING: If the trailer hitch is worn–out or otherwise damaged so, that it is possible that the drawbar eye can be detached from the trailor hitch. The hook must be replaced.

F 2.1. Trailer socket

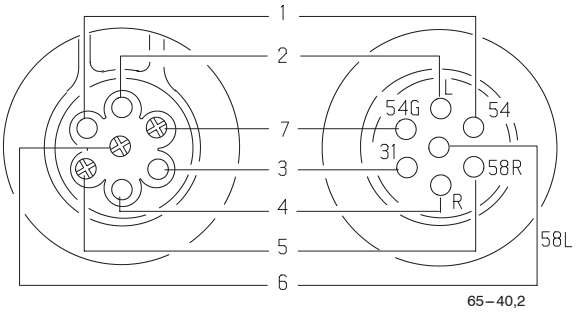

1. Brake light (red)
2. Direction indicator left (yellow)
3. Ground (–) (white)
4. Direction indicator right (violet)
5. Parking light right (brown)
6. Parking light left (black)
7. Continuous current, max. 15 A. The possibility to switch off the currentsupply is only available on the models with a main switch.

Downloaded from www.Manualslib.com manuals search engine

https://truckmanualshub.com/

F 3. Three – point linkage

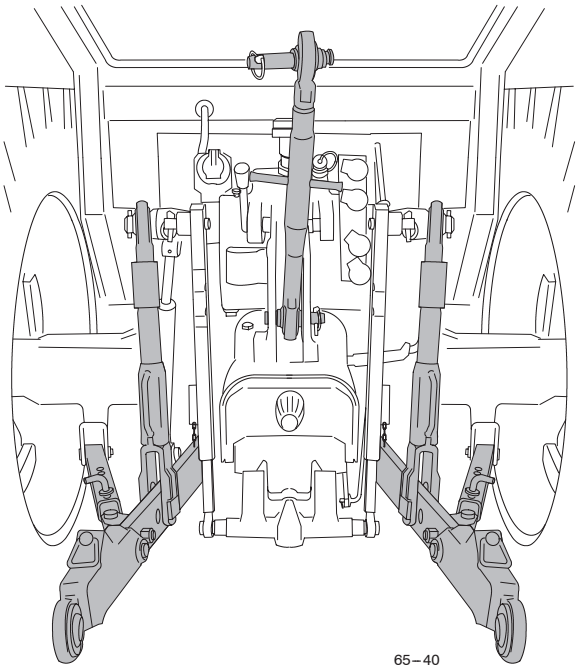

The tractors are supplied with Category 2 telescopic lower links. Hook ends are available as optional equipment.

F 3.1. Lifting links

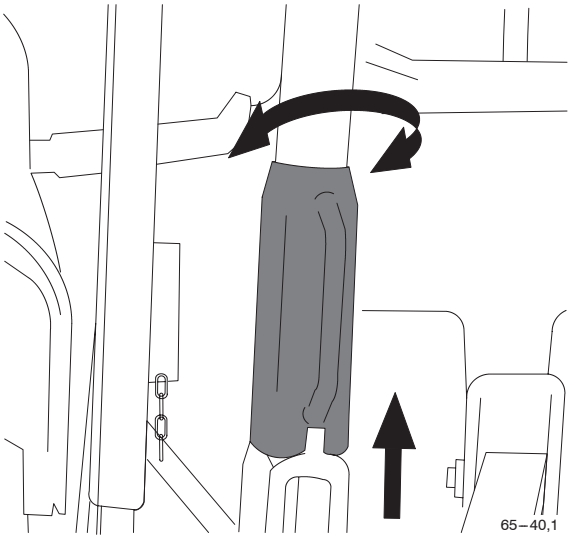

The length of the lifting links can be adjusted by lifting the levelling screws up and turning them in the required direction. After adjustment the levelling screws must be lowered back down to the locked position.

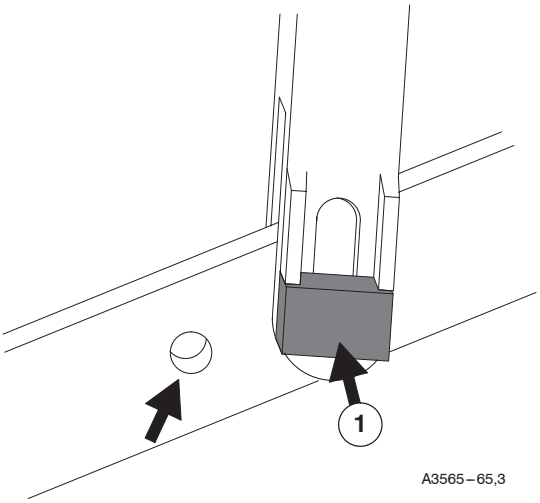

The lifting links can be attached to the lower links at one of two holes. Different holes give different lifting ranges and lifting power for the lower links.
In addition, the carrier pin (**1**) can be fitted to the lower links at two different positions; one gives a fixed position and the other allows slight vertical movement of the lower links.

F 3.2. Check links

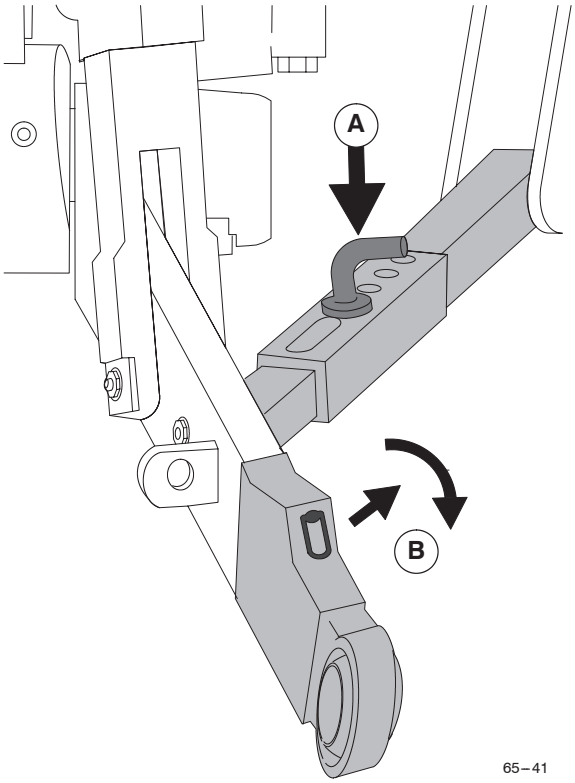

Check links are used to limit the lateral movement of the lower links.

By changing position of the check link attaching pin (**A**),

Downloaded from www.Manualslib.com manuals search engine

https://truckmanualshub.com/

different lateral positions for the lower links can be obtained. If the pins are fitted in the long holes, the lower links have a floating position in the lateral direction.

F 3.3. Telescopic lower links

When **connecting** an implement, pull from the link (**B**), then the lower link will move to the floating position. After disconnecting the lower link will lock when lifting the implement.

When **disconnecting** the implement, pull the link (**B**) and turn 1/4 turn (implement lifted up). Lower the implement and move the tractor forward a few centimeters, this will put the lower links in the floating position and allow the implement to be disconnected easily.

CAUTION: Turn the links anti-clockwise to the down position when connecting the implement.

F 4. Using the hydraulic lift

F 4.1. Using the mechanically controlled hydraulic lift

Position control		Locked at the top position	Lowering speed
Lowering Lift 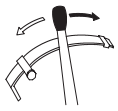	Locked	Operating lever at the lock position 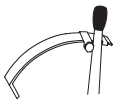	Slow Normal
Draft control	Plough/plow, harrow	Lower the implement and stop the engine when you leave the tractor	
Working depth	Free 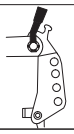		

A3565 – 66

The hydraulic lift is operated by means of:

- Position lever
- Draft control sensitivity (by changing the place of the top link)
- Lowering speed control

DANGER: When transporting tractor mounted implements it is essential that the check links of the lower links are locked with the cotters.

F 4.1.1. Position lever

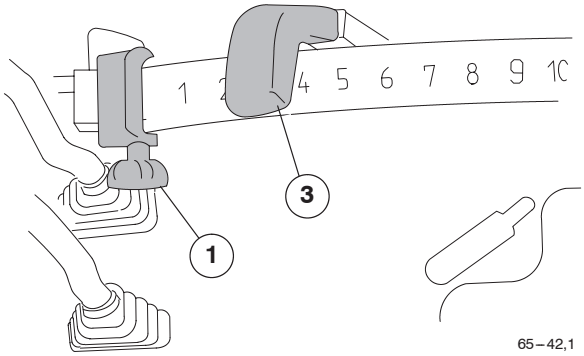

65 – 42,1

Move the lever (**3**) backwards to raise the lower links and forwards to lower them. When the position lever is set in an intermediate position, the lower links move to a corresponding height.

NOTE: Lock the position control lever with locking device (1) in the rearmost position (lower links at top) when transporting an implement mounted on the three – point linkage.

When working with **position control** only the pawl for the top link bracket (impulse sender pawl) should be **in the locked position** (lever in horizontal position).

The position control is used when working with tractor – mounted machines (mowers, centrifugal broadcasters, plant sprayers etc).

With the limiter (**1**) of the position control lever (**3**) the lower links can always be lowered to the same position.

F 4.1.2. The floating position

The floating position is used when working with implements which are provided with support wheels or similar. Push the position lever forward as far as it will go, when the lower links and working implements can move freely up and down.

Downloaded from www.Manualslib.com manuals search engine

https://truckmanualshub.com/

F 4.1.3. Draft control and automatic weight transmission (by means of position lever)

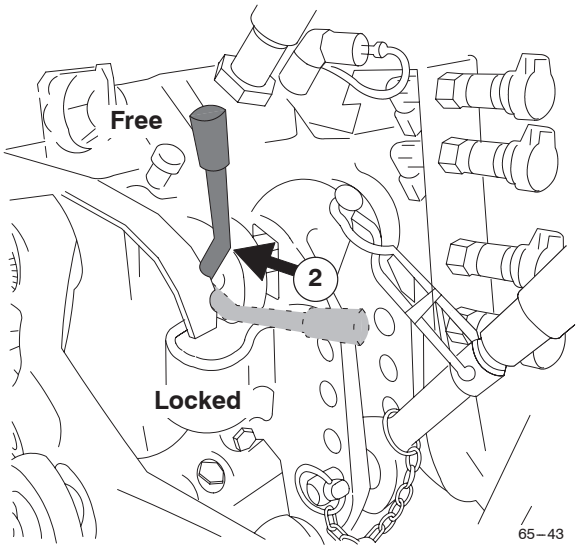

Draft control functions when the impulse sender lever (**2**) is in the vertical position.

Set at a suitable working depth for the implement, position the lever in the locked position. When the draft resistance exceeds the set value the top link bracket activates the hydraulic lift which raises the implement so that the resistance remains constant.

The draft sensing is regulated by the force in the top link. The automatic weight transmission acts together with the draft control.

With increasing draft resistance the hydraulic lift raises the implement and its weight is partly transmitted to the rear wheels of the tractor so that maximum draft is always obtained on the rear wheels.

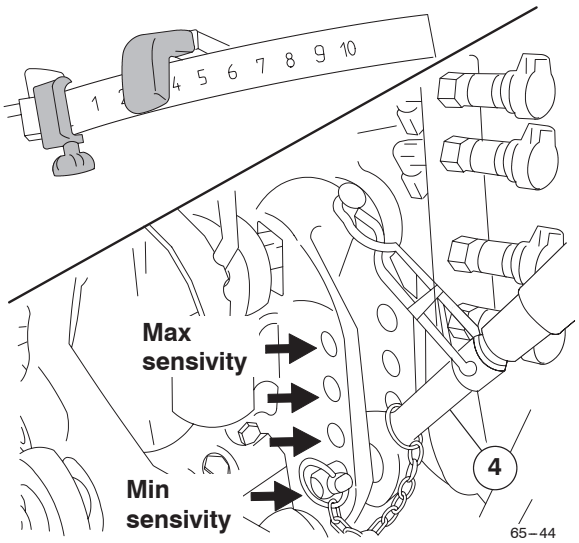

Mechanically controlled hydraulic lift

NOTE: Draft control sensitivity can be altered by moving the attaching points of the top link (4) on the tractor. Draft control sensitivity is least when the top link is connected to the lower hole and greatest when connected to the upper hole.

Draft control is used when working with soil penetrating implements (ploughs/plows, cultivators etc).

NOTE: Semi–mounted and fully mounted implements can not be exploited with top link sensitivity.

WARNING: Only engage draft control with the lever (2) when there is no load on the three–point linkage unit (lowest position) and the position lever is fully in its lowest position.

NOTE: Adjust the check links so that the rear end of the lower links have a play of approx. 70 mm (3 in). The sideways movement of the implement affects the draft resistance.

When draft control is not being used the impulse sender pawl (**2**) should be in the horizontal position.

F 4.1.4. Adjustment of lowering speed

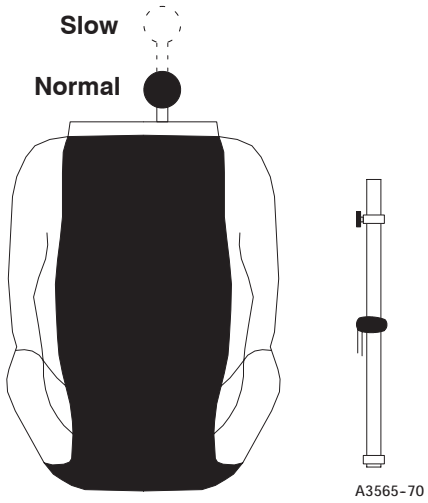

Control fully pushed in = max. lowering speed
Control fully pulled out = min. lowering speed
When heavy implements are connected to the hydraulic lift the lowering speed control should be set at minimum. This gives the smoothest possible lowering movement.

Downloaded from www.Manualslib.com manuals search engine

https://truckmanualshub.com/

F 4.2. Using the electrohydraulically controlled hydraulic lift

F 4.2.1. Lift/stop/lower switch (Autocontrol switch)

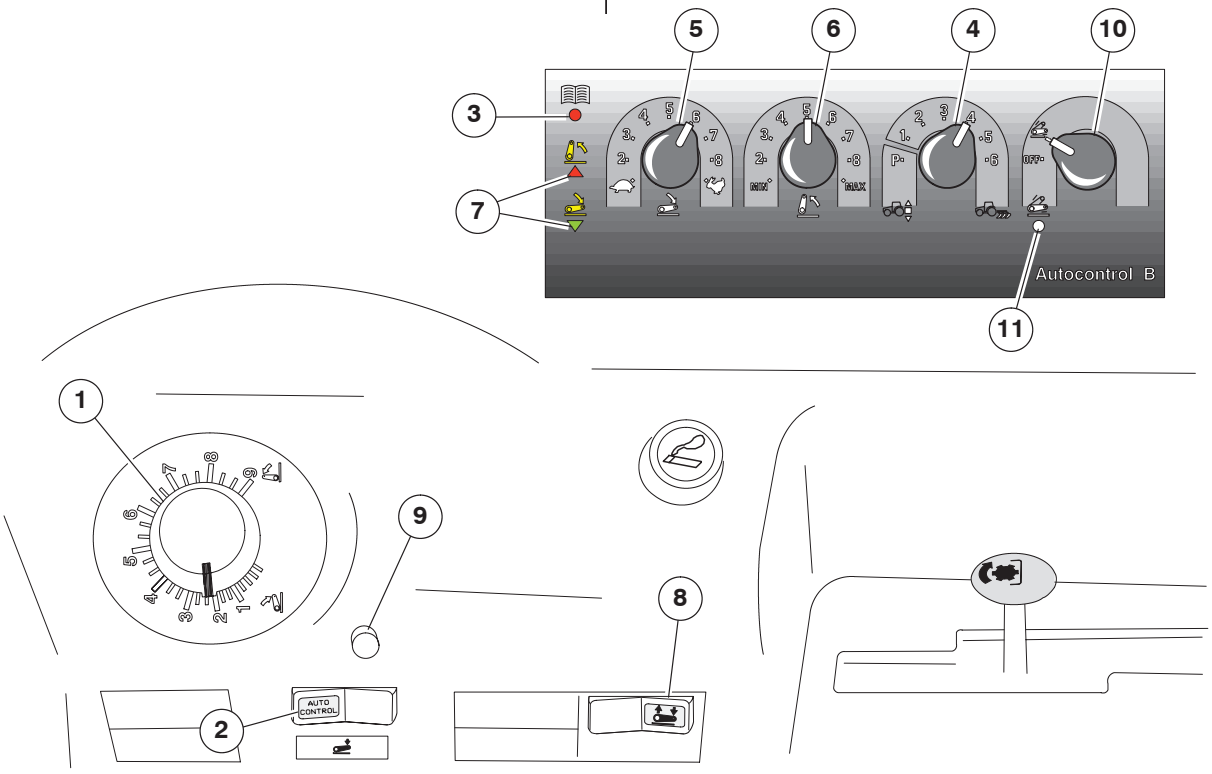

The lift/stop/lower switch (**2**) has 3 positions. When **the left side is pressed down** the lower links are lowered **to the height which is set by the position control knob** (**1**). When **the right side is pressed down** the lower links raise **to the height set by the transport height selector** (**6**). The lower links **stop moving** when the switch is set **in the centre position**.

F 4.2.2. Activating the linkage

The position control is activated by switching the **lift/stop/lower switch (2) to the lift position or to the lower position**. After this, the lower links take up the position set by the position control knob. The linkage can only be activated when the tractor has been switched off or when the push buttons mounted on the mudguards or the inner switch in the cab (**8**) have been used.

F 4.2.3. Position control

The position control is used with implements which run on the ground (mowers, rakes, sprayers etc.).

CAUTION: When the position control is being used the draft control selector (4) must be set to the P position. This ensures that the linkage will remain in the position selected without draft control.

The lower links are raised when the position control knob (**1**) is turned clockwise and lowered when it is turned anti-clockwise. When the knob is set to an intermediate position the lower links take up and maintain the corresponding position.

NOTE: The implement can be lifted up by switching the lift/stop/lower switch (2) to the lift position (=transport position, the upper position chosen by knob 6) and lowered back to the same depth (lower position set by the position control, 1) by switching to the lower position.

CAUTION: When lifting with the inner switch or push buttons the lifting has to be stopped when the linkage has reached its top position. This avoides unnecessary over straining and heating of oil.

F 4.2.4. Setting transport height

The transport height selector (**6**) can be used to limit the lifting height. Switching the lift/stop/lower switch (**2**) to the lift position or using the position control knob (**1**) will result in the links being lifted to the upper limit set by the selector. The numbers of the position control knob (**1**) and the transport height selector (**6**) correspond to each other. Nine different heights can be selected using this knob. This selector does not limit the lifting range when the push buttons are used.

F 4.2.5. Floating position

The floating position is used when working with certain types of implements, which have to follow the ground surface (e.g. sowing machine, roller etc.). The position control knob (**1**) is turned to the extreme anti-clockwise

Downloaded from www.Manualslib.com manuals search engine

https://truckmanualshub.com/

position and the lower links can then move freely up and down following the movements of the implement.

NOTE: The control panel is fitted with lights (7) to indicate whether the lower links are being lifted or lowered.

F 4.2.6. Draft control

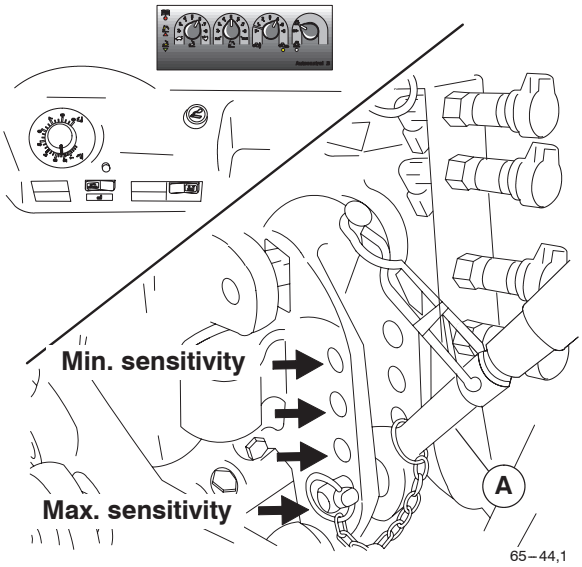

Electrohydraulically controlled hydraulic lift

Draft control is used when working with implements that operate below the surface of the ground (ploughs/plows, cultivators etc.). The draft control sensitivity is set by turning the selector (**4**) to one of six different sensitivity positions (**1–6**). Further the top link (**A**) can be attached to four different holes, which give 24 different sensitivity settings.

On Autocontrol the linkage is adjusted by the draft controls which influence the working depth, 1 = small influence ... 6 = very large influence.

NOTE: Semi–mounted and fully mounted implements can not be exploited with top link sensitivity.

Position 3 or 4 are normally used for ploughing/plowing.

NOTE: The ploughing/plowing depth can be adjusted using the position control knob (1).

The lift/lower indicator lights (**7**) show the speed at which the draft control is operating.

NOTE: The lower links allow a certain amount of sideways movement to the implement, and this also affects the range of the draft control. Therefore the sideways movement of the links should be adjusted to about 70 mm (3 inches) at the ends of the arms.

NOTE: When draft control is not in use the selector switch should be turned to the P position.

When the draft resistance exerted by the implement on the lower links rises to the value set, the linkage lifts the implement in order to counteract the increase in resistance trying to keep it constant.

When the draft control is operating the weight of the implement is automatically shifted to maintain traction. If pulling resistance increases the hydraulic lift raises the implement and some of the weight is transferred to the rear wheels. Thus the driving wheels maintain maximum traction.

F 4.2.7. Lowering speed control

Choice of lowering speed (**5**) depends on the type of implement being used. A slow lowering speed must be used with heavy implements. The lowering speed is increased as the knob is turned clockwise and vice versa. Lowering speed is independent of the load.

F 4.2.8. Passing switch for position control knob = forced lowering switch

The override switch for position control knob (**9**) can be used on jobs, where lower links have to be, temporarily, lower then the value which has been set by the control knob. This is useful e.g. when ploughing/plowing. This switch allows quicker entry of the plough/plow to the correct depth at the beginning and better maintenance of depth in exit at the end.

F 4.2.9. Drive balance control switch

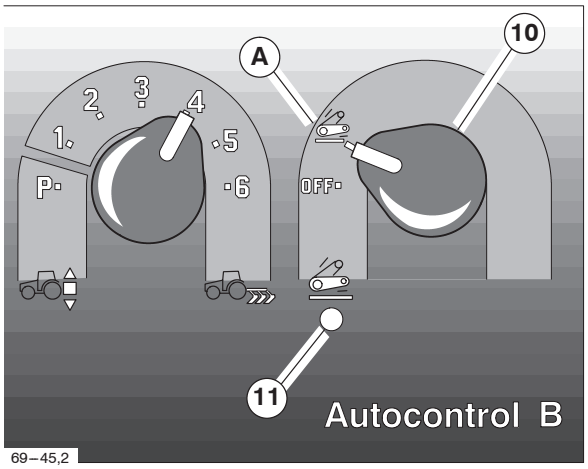

The best use of the drive balance control is in driving at high speed when a heavy implement is attached to the three–point linkage. It can also be used on fields.
The drive balance control is activated, when the switch (**10**) is turned to the position **A** (indicator light **11** lights). Then when lifting the linkage with the lift/stop/lower switch (**2**), the drive balance control is on.

Downloaded from www.Manualslib.com manuals search engine

https://truckmanualshub.com/

F 5. Operation of auxiliary hydraulics

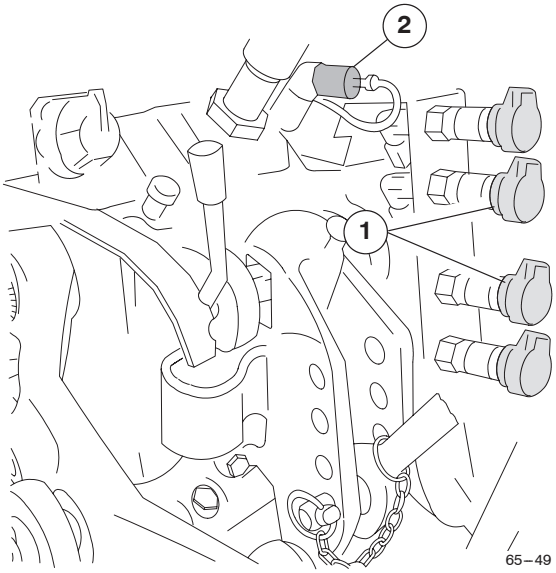

Two auxiliary hydraulic valves are fitted as standard. Single–lever control is used for these valves. Quick action couplings are mounted at the rear of the tractor (**1**, as standard 4 pcs). The working pressure is **18 MPa** with a 37 l pump and **19 MPa** with a 52 l pump.
The lower quick couplings are for the inner valve and the uppers for the outer valve.

The volume of hydraulic oil available for the auxiliary hydraulics is given in the “Technical Specifications”, see page 106.

As extra equipment two extra valves for auxiliary hydraulics can be fitted on the hydraulic system in addition to the two supplied as standard. An extra valve for a trailer brake can also be fitted.

CAUTION: Take great care if using unfamiliar trailers or implements as the oil in the cylinder can contaminate the oil in the hydraulic system of the tractor.

If the external hydraulics are used extensively it is recommended that a return filter should be mounted in the line (extra equipment).

An auxiliary hydraulic 1/2 inch quick–action coupling return connection is fitted as standard (**2**).

F 5.1. Valves adjusting for single– or double acting

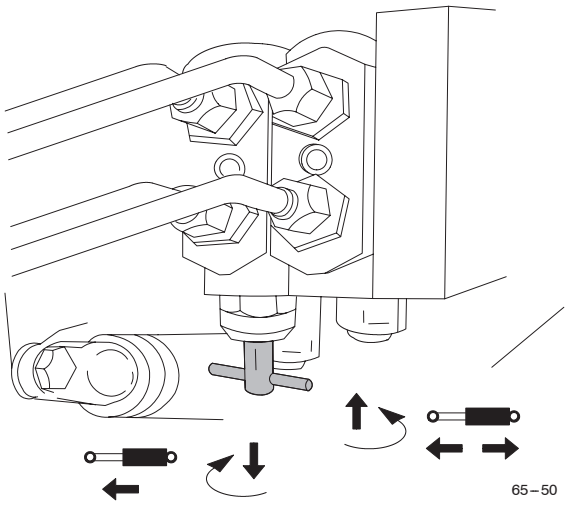

When the adjustment knob under the inner valve has been turned up the valve is double–acting, and when it is turned down the valve is single–acting.

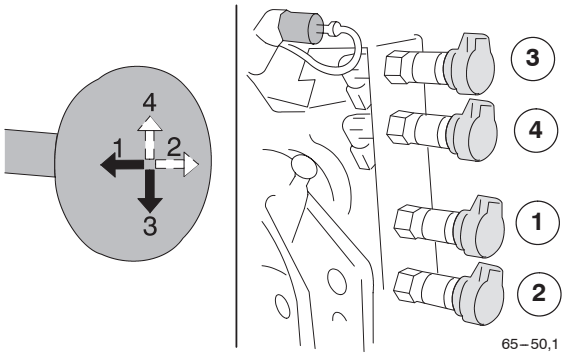

Pressure acts in the quick–coupling **1** in the single–acting position of the inside valve (e.g. tipper control) when the lever is pulled towards the driver (direction 1).
When pulling the lever towards the numbered arrow, pressure acts in the similar numbered quick–acting coupling. The inside valve has to be adjusted into double–acting.

Downloaded from www.Manualslib.com manuals search engine

https://truckmanualshub.com/

F 5.2. Action to be taken during operation

DANGER: When auxiliary cylinders and hydraulic motors are connected ensure that the hoses are attached to the correct couplings. If the hoses are incorrectly attached the functions may be reversed.

WARNING! It is prohibited to transport anything on auxiliary hydraulic valves while driving on the road. The load, the trailer link steering etc. have to be locked (e.g. mechanically).

WARNING! Implements connected to the linkage or the auxiliary hydraulic system must be lowered during maintenance.

CAUTION: When the auxiliary hydraulics are not in use ensure the auxiliary hydraulic control lever(s) are in the central position (neutral). Overheating of the hydraulic pump may result if the levers are locked in the push or pull positions.

F 6. Attaching implements

When attaching implements to the three–point linkage on the electrohydraulically controlled hydraulic lift models (this also applies to the drawbar) use the lift/lower push–buttons located on the mudguards or the inner switch for connecting implement in the cab must be used. The push–buttons only operate when the lift/stop/lower switch is in the lower position.

DANGER! In the electrohydraulically controlled hydraulic lift models always before engaging or disengaging an implement turn the draft control selector to the position control positionP. In the sensitive positions even the small position control knob turning may cause an unexpected linkage movement.
In the electrohydraulically controlled hydraulic lift models always use the push–buttons situated on the mudguards or the inner switch for connecting implements when engaging or disengaging implements.
When engaging or disengaging implements with push–buttons, always stand outside the implement and beside the tractor. Never stand on the implement or between the implement and the tractor.

NOTE: After the buttons or inner switches for connecting implement have been used on the electrohydraulically controlled hydraulic lift models the position control system must be activated by operation of the lift/stop/lower switch.

WARNING: If necessary, when coupling or decoupling an implement it should be supported to prevent it from falling.

Make sure that the implement is correctly attached before putting it to work and that the implement does not strike against the cab when raised to the top position. When transport driving with implements carried by the hydraulic lift, the check links must be locked with pins.

Always follow the implement manufacturer's instructions. Remember that correct adjustment of harrows, ploughs/plows and cultivators greatly reduces the required power. An incorrectly adjusted plough/plow, for instance, creates a badly shaped furrow, tries to twist the tractor away from the travelling direction, increases fuel consumption and causes loss of power because of wheel slip.

When attaching implements to the hydraulic lift, make sure that at least 20 % of the tractor weight still rests on the front wheels. When required use a sufficient number of front ballast weights.

F 6.1. Using PTO shafts

When PTO–powered implements are used, always make sure that the PTO shaft is of the correct length, so that it can work at full deflection vertically and horizontally. If the shaft is too long it will cause damage. Follow the instructions of the manufacturer when fitting the shaft.

WARNING: When fastening the PTO shaft check that its shield is undamaged. Always fasten the shield to a stationary part of the tractor frame or implement.

Downloaded from www.Manualslib.com manuals search engine

https://truckmanualshub.com/

F 7. Use of top link

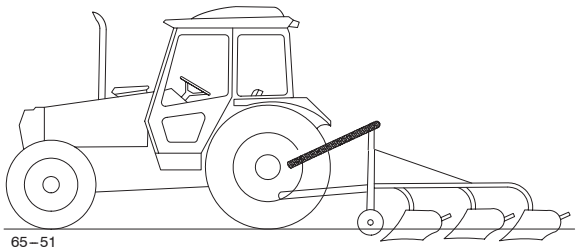

65–51

NOTE! When using a top link turn the bracket towards the tractor until it is fully touching the hydraulic top link. Then there is no danger that the bracket fouls the holder pin and damages the hydraulic top link.

1) If the hydraulic lift cannot raise the implement, this may be due to incorrect position of the top link.

NOTE! The lifting force and lifting height are dependant on which hole the top link is connected to in the brackets on the tractor and on the implement.
Maximum lifting height (**and minimum lifting force**) = top link in lower attaching hole on tractor and in upper attaching hole on implement.
Maximum lifting force (**and minimum lifting height**) = top link in upper attaching hole on tractor and in lower attaching hole on implement.

When you are using a hydraulic top link, ensure that it operates normally when you are attaching an implement.

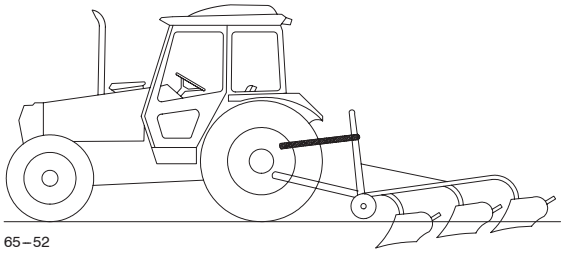

65–52

2) The hydraulic lift has a greater lifting force when the top link is moved upwards on the tractor and downwards on the implement.

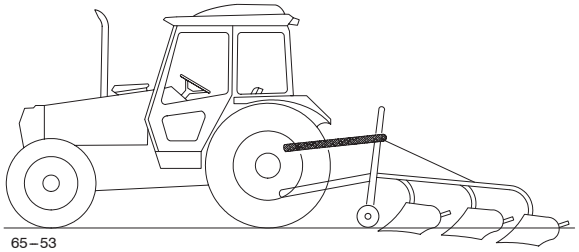

65–53

3) Top link set too long giving poor lifting height on rear end of the implement.

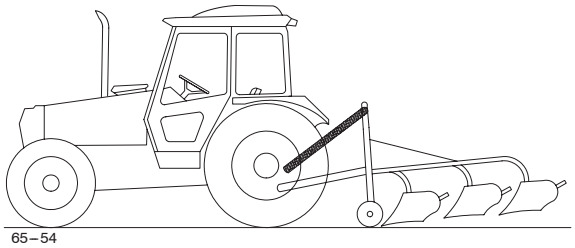

65–54

4) Lifting height large at rear end since top link has been lowered on the tractor and raised on the implement.

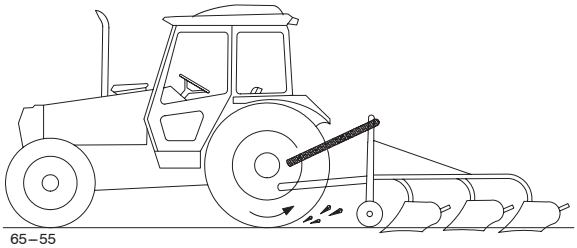

65–55

5) Draft control does not function since top link comes too low on the tractor. The wheels spin.

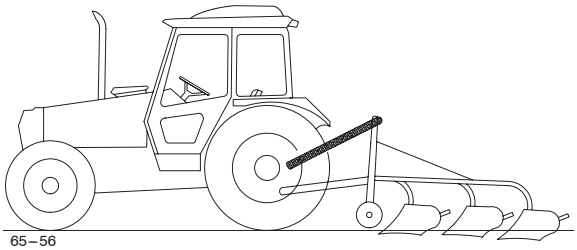

65–56

6) The plough/plow does not sink to the required depth (the top link must be adjusted horizontally). If the top link is shortened in order to further the plough's/plow's depth into the ground, care must be taken to hold the plough/plow straight.

When ploughing/plowing, it is important that the plough's/plows body is in the same direction with the ground surface both lengthways and sideways. If you alter ploughing/plowing depth, the top link length and the lift link gear must be readjusted. As a basic rule, the top link's end situated towards the plough/plow is set clearly higher than the end situated towards the tractor.
NOTE: See also manufacture's instructions.

Downloaded from www.Manualslib.com manuals search engine

https://truckmanualshub.com/

G. Maintenance schedule

G 1. Service

Correct maintenance at the right time is a basic condition for reliable operation of the tractor. Maintenance costs are small compared with any repair costs resulting from lack of maintenance. The most important measures are those which you carry out yourself and which include lubrication and various checks and adjustments.

The service intervals shown apply for normal operating conditions but in more severe conditions servicing should be carried out more frequently.

G 1.1. General instructions concerning oil checks and oil filling

– Always stop the engine before doing any servicing work.
– Apply the parking brake to ensure the tractor cannot move. If the ground is uneven the wheels should be blocked.
– Always observe the utmost cleanliness in all maintenance work.
NOTE: Do not let the water get to the electrical equipment when washing the machine.
– Thoroughly wipe off filler caps and plugs as well as surrounding parts of the tractor before filling up with fuel or oil.
– Inspect the oil and filters when changing. Large amounts of dirt (e.g. heavily clogged filters) can point to a fault which could cause extensive and costly repairs if not corrected in time.
– When carrying out checks the tractor should stand on level ground.
– Levels should be checked before driving when the oil is cold and has had time to run down to the bottom of the unit concerned.
– When changing the oil, bear in mind that the oil can be very hot when it drains from the tractor. Waste oil and oil filters should be handled carefully and disposed of properly.
– Avoid touching the exhaust manifold, turbocharger and other hot parts of the engine.
– Keep the engine surfaces clean in order to avoid the risk of fire.
– The fuel, lubricating oil and coolant cause irritation to skin if in contact for long periods.
– After completion of any service work replace all safety covers etc.

G 1.2. Lubrication of points provided with grease nipples

– Always clean the grease nipples before applying the grease gun.
– Pump in grease to the nipples until clean grease is squeezed out (unless otherwise instructed).
– Wipe off all surplus grease which has been squeezed out at the lubricating points.
– Preferably carry out lubrication with bearing points and joints unloaded and with the bearings in different positions (e.g. lubricate the steering knuckle bearing on the steering axle with the wheels at both full left and right lock and with the front axle lifted up).

G 1.3. Lubrication and maintenance schedule

NOTE: All intervals are counted from zero hours on the hour recorder. For example, the 250 hours service is carried out after 250, 500 hours etc. even if the measures have been carried out at the guarantee service (=100 hours service).
Example: The 500 hour service contains all items mentioned under the 10 hr/daily and the 50 hr/weekly checks as well as the 250 hr service.

G 1.4. Service inspection (at 100 hours)

Your dealer gives this cost–free service inspection (excluding oil and filter costs) after 100 hours running to all new Valtra tractors.

The following steps should be taken:

20 Engine

– Change engine oil and filter
– Change prefilter of fuel system (not models with in–line pump)
– Change fuel filter

40 Power transmission

– Change filter

60 Steering system and front axle

– Change oil in differential
– Change oil in planetary gears

90 Hydraulic system

– Change pressure filter and clean hydraulic pump suction strainer

General

– Lubricate according to chart
– Road test tractor. During the road test check all the functions of all the controls and instruments. After the road test, check for oil leaks, check the coolant and fuel system.

Downloaded from www.Manualslib.com manuals search engine

https://truckmanualshub.com/

G 2. Recommended fuel and lubricants

All volumes are with filters.

Part of machine	Valtra–grade	SAE/Viscocity	API grade	Volume when changing l
Engine 600	Valtra Engine E	10W–30: –20˚C...+30˚C 15W–40: –10˚C...+40˚C	CG–4 CH–4	7
700				
800				9
900				
Hydraulic system	Valtra Transmission Valtra Hydraulic	HT 60: –30˚C...+30˚C HT 100: –10˚C...+40˚C 32: –30˚C...+30˚C 46: –10˚C...+40˚C	ISO VG 32 ISO VG 46	35 upper mark (25 lower mark)
Power transmission	Valtra Transmission	HT 60: –30˚C...+30˚C HT 100: –10˚C...+40˚C	GL–4 (G2–98)	32
Powered front axle (4–WD) differential	Valtra Axle	80W–90	GL–5 (LS)	6,5
hubs				2 x 0,8
Front PTO	Valtra Engine	10W/30	CE CF/CF	1,4
			GL 5/4 CCMC D4	
Fuel tank	Diesel fuel			79
– with extra fuel tank				103
Cooling system 600	Anti–freeze agent + water (standardi ASTM D3306–86a or BS 6580:1985)			13,5
700				13,5
800				15,5
900				15,5
Brake fluid reservoir	Brake fluid SAE J1703			0,3
Windscreen washer	Washer fluid			1,5

Bio oil is also possible on hydraulic/transmission. For more information contact your nearest dealer.

G 2.1. Oil recommendations according to outdoor temperature

When starting the tractor in a warm garage, oil meant for warmer areas may be used.

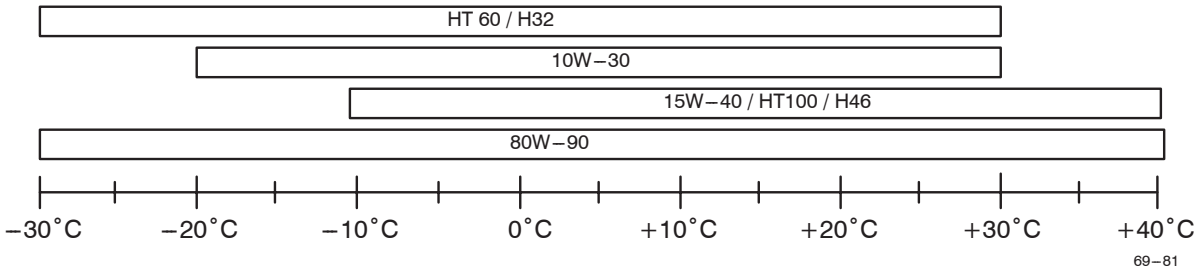

Biodiesel fuel

– Valtra engines are able to use esterified rape oil as biodiesel fuel – or RME (rape oil esterified with methanol) without any technical modifications to the engine. The requirement for the acceptance is that the biodiesel that is used is very pure and that it fills the Austria ”C 1190” biodieselnorm demands of pureness. Practically it means that the amount of pure carbon, hydrogen and oxygen content together in the biodiesel is more than 99 %.
– In the service instructions there is one change: checking cleaning of nozzles every 1000 hours.

Downloaded from www.Manualslib.com manuals search engine

https://truckmanualshub.com/

G 2.2. Quality requirements of engine fuel

Property	Requirement	Test standard
Specific weight +15˚C, ISO 12185	0,82...0,86 kg/litre	ASTM D 4052, EN
Viscosity +40˚C, 445, ISO 31041	1,2...4,5 mm^2/s	ASTM D
Sulphur content	max. 0,2 p–%	ASTM D 4294, ISO 8754
Cetane number 4737	min. 51	ASTM D
Water content	max. 200 mg/kg	ASTM D 1744

The fuel must conform to the EN 590 standard.

G 2.2.1. Fuel

– The properties of light fuel oil that is only intended for warming use do not meet the requirements of modern diesel engines and cannot be used as fuel.
– In particular, distributor–type injector pumps require the fuel to have sufficient lubricity, because they do not have oil lubrication in the same way as typical multi–element pumps. Adding oil to diesel fuel is not recommended, because it causes carbon build–up, and if oil is mixed with even a small amount of water it will clog the filter.
– Additionally, various fuel quality requirements imposed by taxation and seasonal changes have to be taken into consideration.

G 2.2.2. Fuel storage

– Storing and distributing fuel must be arranged in conditions where no water or impurities can enter the storage tanks. The storage tanks must be installed in a slanted position, so that water and impurities are collected at the opposite end from the suction pipe of the pump. The suction pipe of the pump should not reach the bottom of the tank.
– Water must be periodically drained from the tank in order to prevent problems. Refueling at the same time the tank is being refilled must be avoided without exception.
– When the tank is filled with winter–quality fuel in good time, the engine is guaranteed to run flawlessly during the cold season.

G 2.2.3. Filter system

– The engine's standard filter system gives sufficient protection for the injection system from impurities that can be present in well–tended distribution systems.
– The control of distributor–type injection pumps is based on internal pressure, which will drop if the fuel system is clogged. If the pilot pressure drops too low, engine power is reduced, smoke increased and starting becomes more difficult. Additionally, water in the injection system will destroy it in a very short time. **For this reason, the water trap and the filters must always be serviced according to the specified amount of running hours**.
– It is also important always to use original Valtra (or Sisu Diesel) fuel filters. They guarantee sufficient filtration, preventing impurities from damaging the fuel system. There are many cheap filter kits (so–called pirates) on the market, with lower quality and performance in order to minimise the cost. Among other things, the quality and amount of filter paper are often insufficient. There are also often dangerous defects in the basic structure that may cause expensive damage even in a short period of time.

G 3. Grease

Always use the following greases in Valtra tractors. Each point requires it own type of grease.

Valtra Grease Universal grease

Lithium–based universal grease. Is suitable for greasing all heavy machines.
–30˚ ... +130˚C

Universal grease of high quality, lithium based grease for vehicle use. It is recommended for greasing wheel bearings, chassis water pumps, catepillar rollers etc. The grease is adhesive, protects against corrosion and resists water and varying temperatures. Temperature range is –30˚ ... +130˚C.

Valtra Calsium LF Calsium Grease LF

Is suitable for greasing all heavy machines. Long fibre grease. Colour red.
–20˚ ... +60˚C

Calsium LF is of long fibre, high quality and calsium based universal grease for vehicle use. It is recommended for greasing chassis, water pumps, pins etc.The grease is adhesive, protects against corrosion and resists water and varying temperatures. Temperature range is –20˚ ... +60˚C.

Valtra Grease Moly Moly Grease

Is suitable for greasing all heavy machines. Lithium–based universal grease.
–30˚ ... +130˚C

Universal grease of high quality, lithium based grease for vehicle use. It is recommended for greasing wheel bearings, chassis water pumps, catepillar rollers etc. The grease is adhesive, protects against corrosion and resists water and varying temperatures. Temperature range is –30˚ ... +130˚C.

Avoid repeating skin contact.

Protect nature and take care of empty packages.

Downloaded from www.Manualslib.com manuals search engine

https://truckmanualshub.com/

G 4. Lubrication and maintenance schedule

The same numbering system as used on the detached maintenance schedule are placed in brackets where applicable.

G 4.1. Daily/every 10 hours

		See page
1.	Check engine oil level	68
2.	Check coolant level and radiator fins	68

G 4.2. Weekly/every 50 hours

3.	Lubricate front axle and steering nipples	69
	2–wheel drive	
	– front axle mountings (2 nipples)	
	– steering knuckles (2 nipples)	
	4–wheel drive	
	– front axle mountings (2 nipples)	
4.	Lubricate brake and clutch pedals (3 nipples)	69
5.	Lubricate top link and lifting links	70
6.	Check fluid level in windscreen washer	70
7.	Check belt tightness	70
8.	Check electrolyte level in battery	70
9.	Check prefilter (on distributor pump models) and fuel filter of fuel system	71

G 4.3. Every 250 hours

10.	Clean cab air filter and also upper filter (extra equipment)	72
11.	Change engine oil and oil filter	72
12.	Lubricate gear lever joints	73
13.	Check tyre/tire pressures and wheel nuts	73
14.	Check brake fluid level	73
15.	Grease door hinges	74

NOTE: When carrying out servicing you must follow the service intervals, i.e., you must also do all previously mentioned items. For example, when doing 50 hours service you must also do the servicing required at 10 hours.

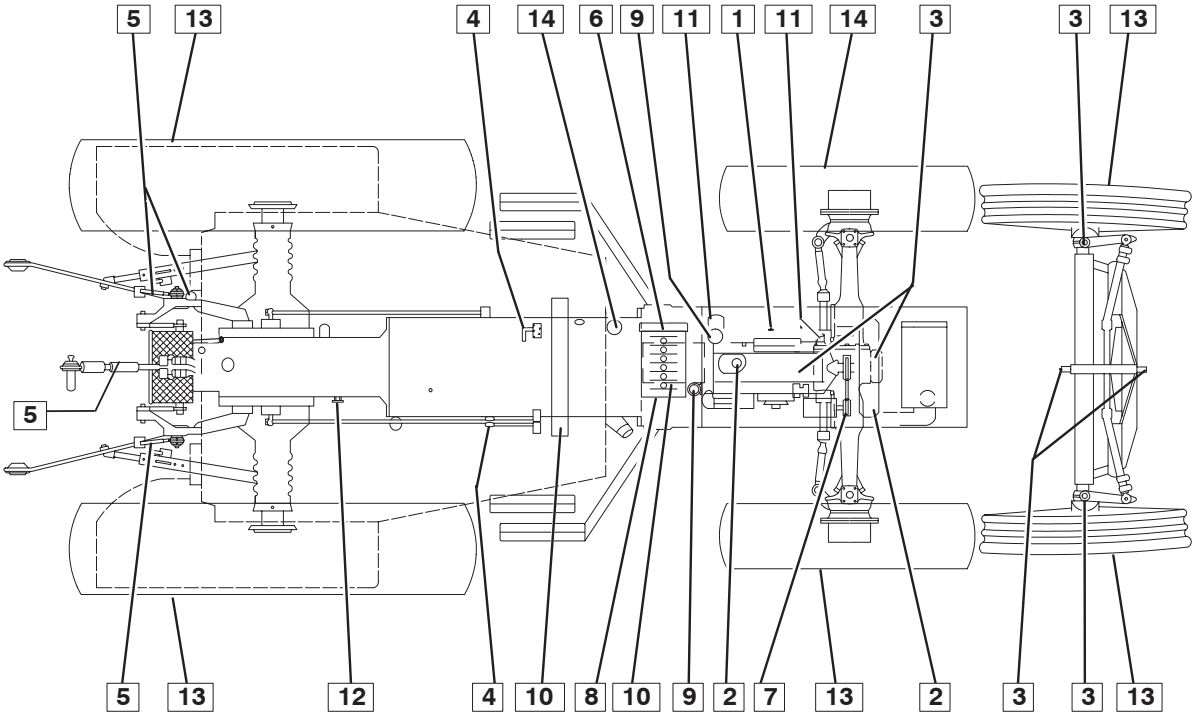

69–57,22

Downloaded from www.Manualslib.com manuals search engine

https://truckmanualshub.com/

G 4.4. Every 500 hours

		See page
16.	Check brake pedal free travel	74
17.	Check propulsion clutch pedal free travel	74
18.	Check PTO lever free travel	74
19.	Check oil level in power transmission	75
20.	Check oil lever in differential, 4–wheel drive	75
21.	Check oil level in hub reduction gears, 4–wheel drive	75
22.	Check oil lever in hydraulic system	75
23.	Change pressure filter in hydraulic system	76
24.	Change oil filter in transmission	76

G 4.5. Every 1000 hours/yearly

25.	Change oil and oil breather filter of the hydraulic system	76
26.	Change oil in power transmission	77
27.	Change oil in differential, 4–wheel drive	77
28.	Change oil in hub reduction gears, 4–wheel drive	77
29.	Clean hydraulic pump suction strainer	78
30.	Clean fuel tank	78
31.	Change prefilter (on distributor pump models) and fuel filter of fuel system	78
32.	Change air filter and safety filter	79
33.	Lubricate front wheel bearings, 2–wheel drive	79
34.	Check and adjust toe–in front wheels (2 nipples)	80
35.	Adjust valves	80
36.	Change cab air filter and upper filter (extra equipment)	80
37.	Tighten bolts and nuts of frame	81
38.	Grease flywheel ring gear	81

When using biodiesel check and clean injectors, see the point 42.

G 4.6. Every 2000 hours/every other year

39.	Clean coolant system	81
40.	Check alternator	82
41.	Check starter motor	82
42.	Check and clean injectors (when using biodiesel after every 1000 hours)	83
43.	Change brake fluid	83

G 4.7. Every 4000 hours

44.	Check turbocharger at authorized workshop, (not on all models)	84

NOTE: When carrying out servicing you must follow the service intervals, i.e., you must also do all previously mentioned items. For example, when doing 2000 hours service you must also do the servicing required at 1000, 500, 250, 50 and 10 hours.

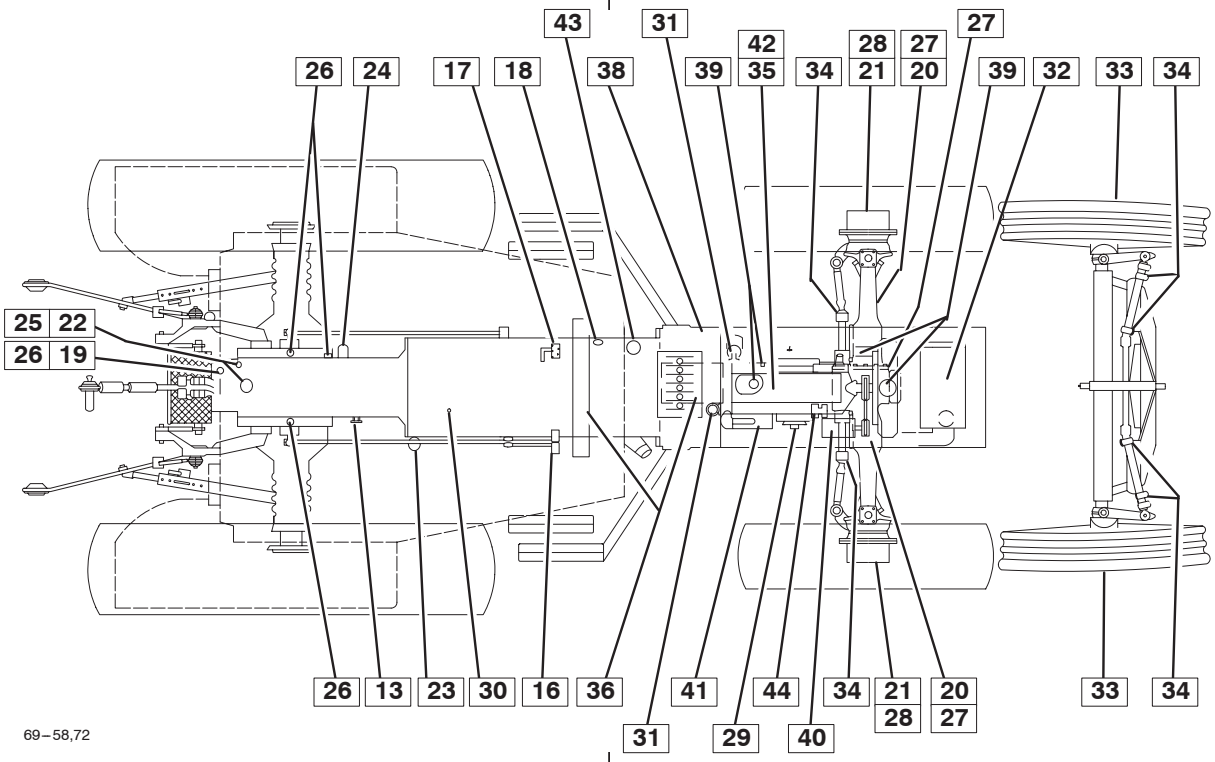

69–58,72

Downloaded from www.Manualslib.com manuals search engine

https://truckmanualshub.com/

H. Periodic maintenance

H 1. General

Periodic maintenance for the extra equipment are in section K, after each extra equipment.

H 1.1. Air filters

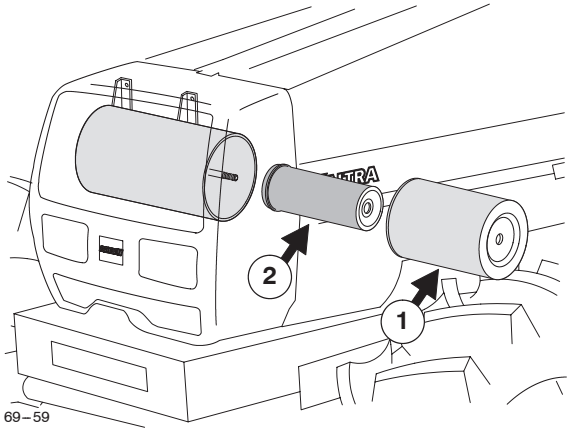

Change air filter (1):

– At least once a year
– After every 1000 hours
– After 5 cleanings, when the warning light of the air cleaner has illuminated 5 times

Change safety air filter (2):

– At least once a year
– After every 1000 hours

Unless it is necessarry do not open the cover of the air cleaner housing. Only associated with the situations mentioned before. During the maintenance check, that the cover of the housing, pipes and unions are in good condition.

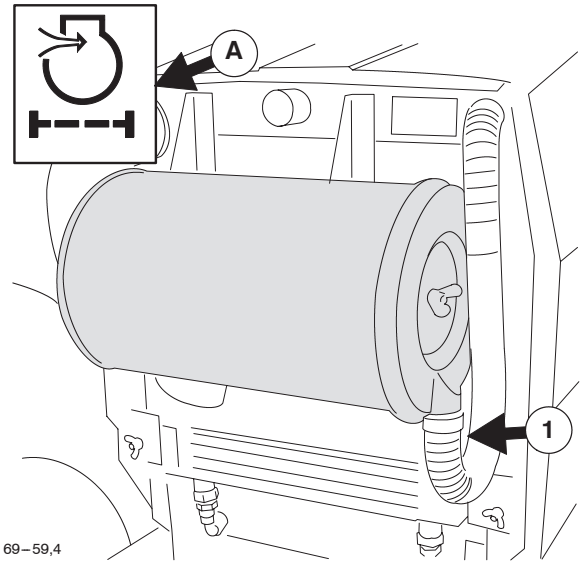

A low–pressure indicator with a warning lamp is connected to the air cleaner. When the lamp (**A**) lights up on the instrument panel, the filter must be cleaned. If the warning light illuminates quickly in dusty conditions, check the ejector pipe (**1**) is fitted properly (800, 900), the models 600 and 700 have dustvalves.

Cleaning:

– Always stop the engine before cleaning. A blockage of the air filter is indicated by a change of the engine beat, smoky exhaust and reduction of engine power.
– Check the inside of the air cleaner housing and the inlet pipe. Dirt on these parts indicates that the filter element is defective or has not been fitted properly.
– Clean the filter element with compressed air, max. pressure 500 kPa, or with an effective vacuum cleaner.

NOTE: The filter element must not be cleaned more than 5 times, after which it must be replaced. The filter must be changed every 1000 hours in accordance with the maintenance requirement: – change of the safety filter.

– Hold up the filter element against the light (or shine a flashlight through the centre hole) and inspect the element.
– If any holes are noticed the filter element must be changed.

Filters fitting, see maintenance point 32 on page 79.

Downloaded from www.Manualslib.com manuals search engine

https://truckmanualshub.com/

H 2. Maintenance daily (at least every 10 hours)

H 2.1. Check engine oil level (1)

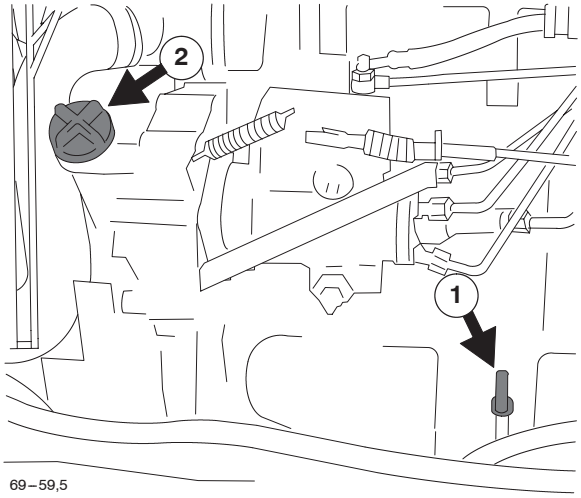

69 – 59,5

The oil lever should come between the max. and min. marks on the dipstick (**1**). Adding oil should be done through the oil filler cap (**2**). Stop the engine and allow it to stand for a few minutes before checking the level so that all the oil has had time to run down into the sump. The distance between the marks corresponds to **1.5 liters** of oil. Oil qualityis to be in accordance with the table on page 63.

H 2.2. Check coolant level and radiator fins (2)

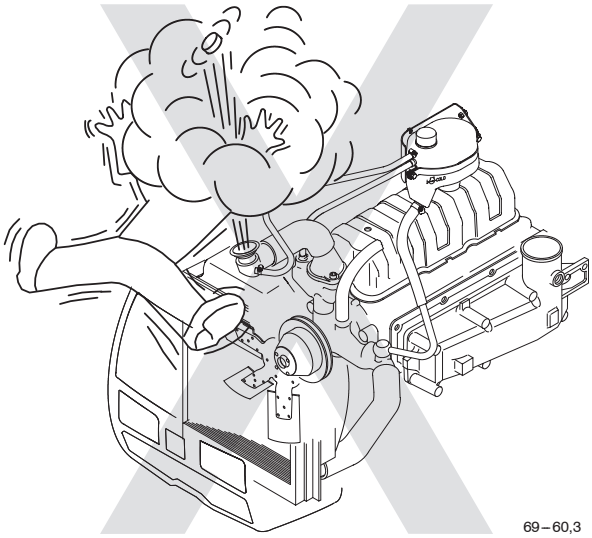

69 – 60,3

DANGER! The radiator cap (1) must not be opened when the system is hot, as the cap has no position for relieving the pressure before opening. DANGER FOR SCALDING!

CAUTION: If it is needed to open both caps when the system is hot, do it in the following order:

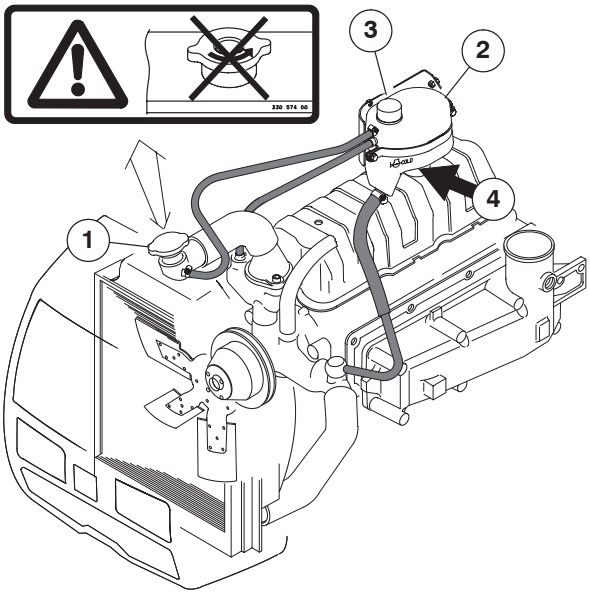

69 – 60,2

- **ALWAYS open the cap (3) of the expansion tank) (2) first. Open the expansion tank cap carefully. When running the tractor the expansion tank has overpressure (0.7 bar).**
- **After that open the radiator cap (1).**

The expansion tank has a liquid level sign (**4**) where the liquid level must be when it is cold. Hot liquid level is higher.

CAUTION: The coolant pump is provided with a drain hole underneath which must not be blocked. On a new engine a certain amount of leakage can occur before the pump has had time to run itself in.

Freezing resistance of coolant
Check the freezing resistance of the coolant at the start of the cold season. If the freezing resistance is low, drain off the necessary amount of coolant and refill with the correct mixture of coolant and anti–freeze.

WARNING: Never use water only as coolant.

Ensure that a recommended coolant is always used, this should be a mix of water and glycol..

Check the radiator core and clean if needed.
When cleaning use air pressure or a water hose.

Downloaded from www.Manualslib.com manuals search engine

https://truckmanualshub.com/

H 3. Maintenance weekly (at least every 50 hours)

H 3.1. Lubricate the front axle and steering nipples (3)

Use Valtra Universal Grease.

2–wheel drive models

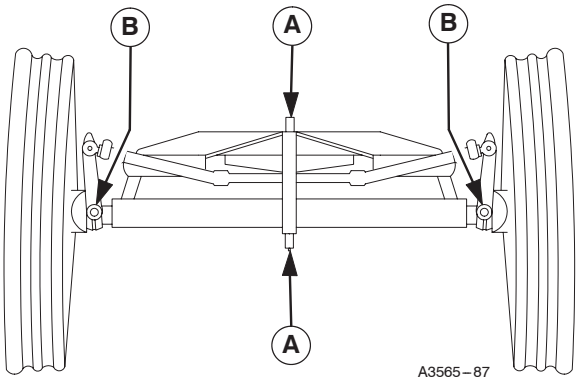

A. Front axle mountings: Lubricate the nipples (two) with grease (lift up the front end to take the weight off the axle).
B. Steering knuckles: Turn the steering wheel backwards and forwards when lubricating (2 pcs).

4–wheel drive models

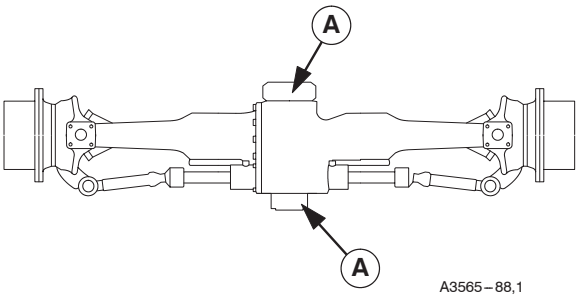

A. Front axle mountings: Lubricate the nipples with grease (lift the front end to take the weight off the axle), 2 pcs.

H 3.2. Lubricate the brake and clutch pedals (4)

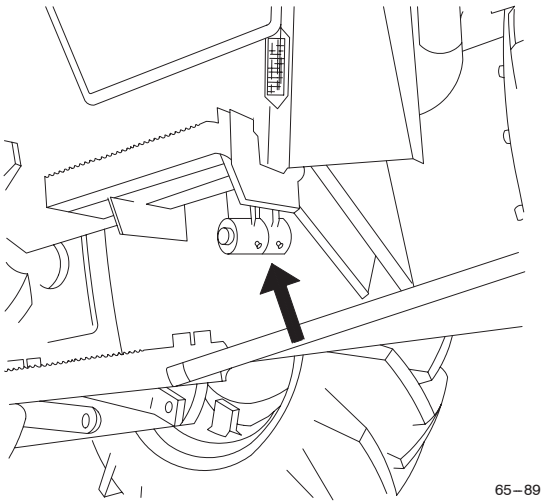

Use Valtra Universal Grease.

One nipple on left side for lubricating the clutch pedal bearing and two nipples on right side for lubricating the brake pedal bearings.

Downloaded from www.Manualslib.com manuals search engine

https://truckmanualshub.com/

H 3.3. Lubrication of the three–point linkage (5)

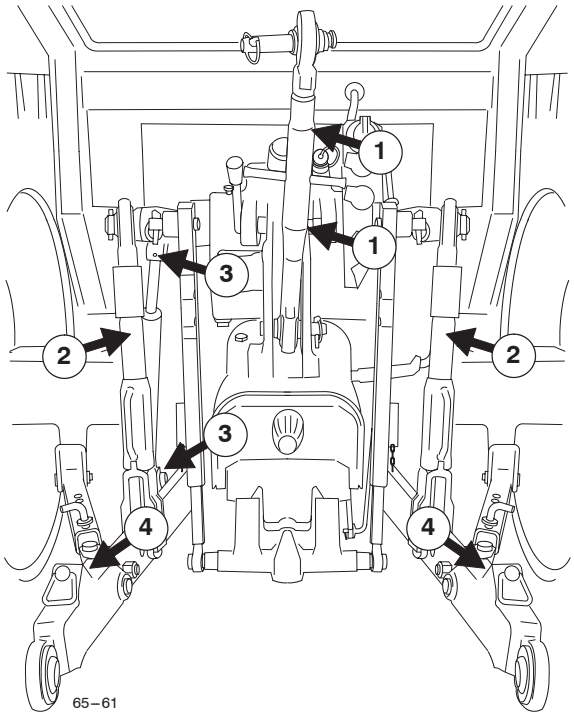

Use Valtra Universal Grease.

– 1, the top link, 2 pcs
– 2, lifting links 2 pcs
– 3, extra cylinder 2 pcs
– 4, telescopic lower links 2 pcs (additional equipment)

H 3.4. Check fluid level in windscreen washer (6)

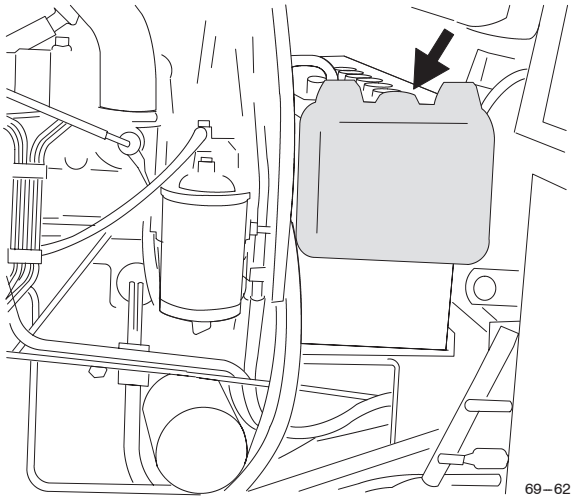

Check that there is always sufficient fluid in the container.
Add washer fluid to the water.
In winter use anti–freeze washer fluid.

H 3.5. Check belt tensions (7)

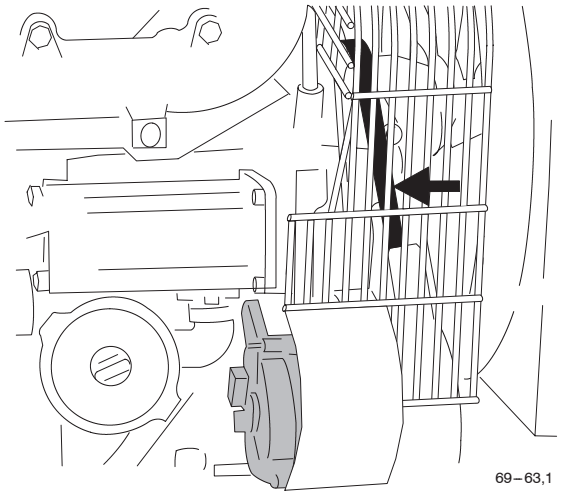

The belt is suitably tensioned when it can be pressed in about 20 mm (0.79 in) with the thumb halfway between the belt pulleys. Remove the finger shield if necessary.

Tensioning fan belt:

– Loosen the alternator attaching bolts
– Turn the alternator until the fan belt is suitably tensioned
– Tighten the alternator attaching bolts.

Check that the fan belt is in good condition when adjusting. A slack, worn and/or oily fan belt can cause problems with battery charging and the cooling system. Always keep a spare fan belt handy.

If the tractor is equipped with a compressor, also check and tension its drive belt.

NOTE: If the finger shield is removed make sure you re–fit it.

H 3.6. Check electrolyte level in battery (8)

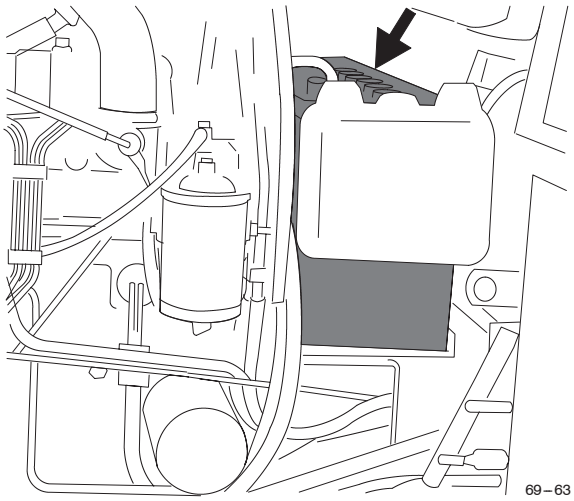

Electrolyte level

Downloaded from www.Manualslib.com manuals search engine

https://truckmanualshub.com/

– Check that the electrolyte level comes about 5–10 mm (0.2–0.4 in) over the battery cell plates.
– Top up with distilled water if necessary.
– Never top up the battery with acid only and never use a naked flame when checking the electrolyte level.

NOTE: If the water in the battery evaporates too quickly, it may be a sign that the charging voltage is too high. Keep the outside of the battery clean and dry. Protect the battery and cable terminals with special grease.

NOTE: In winter it is very important to allow the engine to run for a little while after topping up with distilled water, otherwise the water can freeze before it has mixed properly with the battery acid.

WARNING: Be carefully with the battery solution–danger from corrosion!

H 3.7. Check prefilter and fuel filter (9)

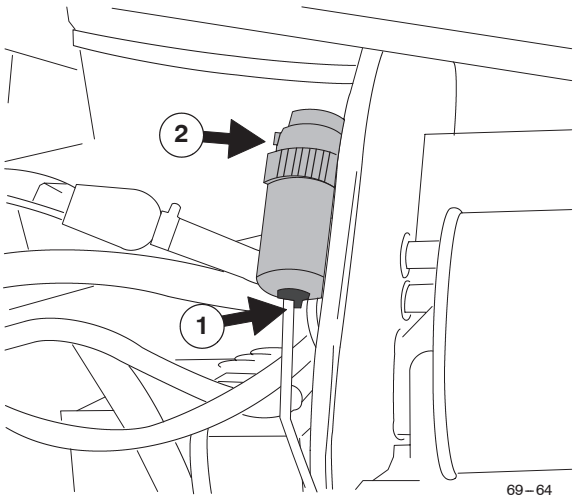

Drain the prefilter (distributor pump models) by opening the tap (**1**) a little in the bottom of the prefilter. By opening the airscrew (**2**) in the upper part of the prefilter water comes out easier. After draining water close the tap and the airscrew.

Drain the prefilter more often if reguired.

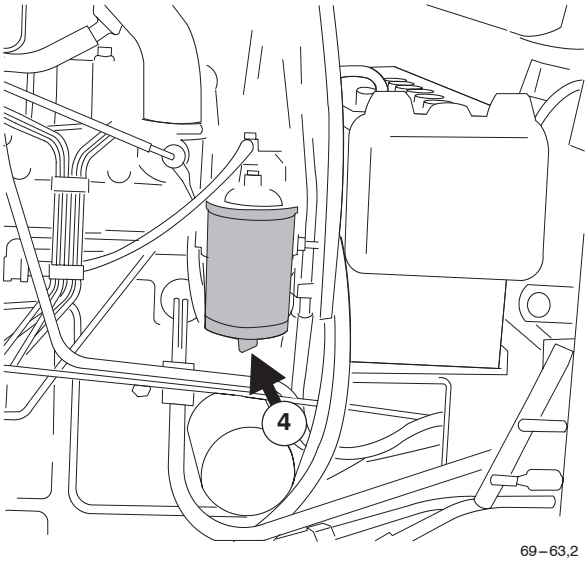

Drain water from the fuel filter by opening the tap (**4**) in the bottom of the filter. Close the tap.

Drain the fuel filter more often if reguired.

Bleed the fuel system if necessary, (see “Checks and Adjustments on page 85).

Downloaded from www.Manualslib.com manuals search engine

https://truckmanualshub.com/

H 4. Maintenance every 250 hours

H 4.1. Clean cab air filter and also upper filter (extra equipment) (10)

Clean lower filter

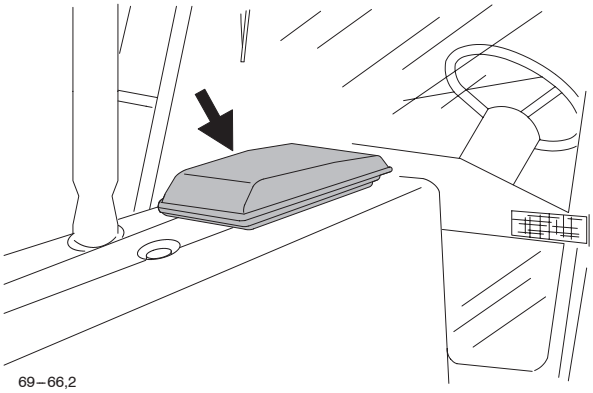

69–66,2

– Lift up the filter housing cover (rear part first)
– Remove the filter element and knock it with the palm of the hand, use a vacuum cleaner from the direction air goes in or blow it clean with compressed air from the centre outwards. Make sure that the air pressure is not too high. Check the condition of the filter. Always change a damaged filter.
– Refit the filter element.

NOTE: The air filter element does not remove chemicals from the outside air.

Clean upper filter (extra equipment)

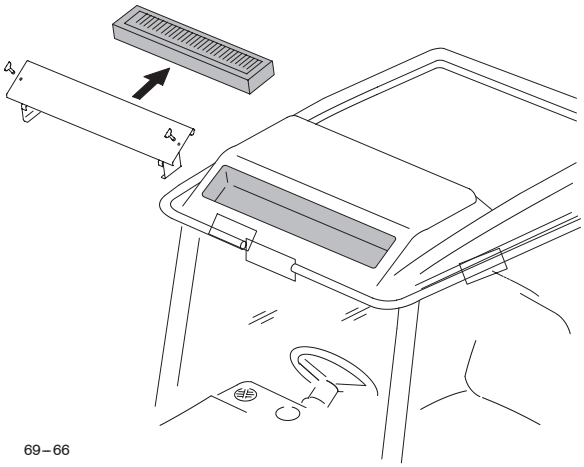

69–66

Remove the air cleaner housing from the front part of the roof and service as for the lower filter.

H 4.2. Change engine oil and engine oil filter (11)

H 4.2.1. Draining

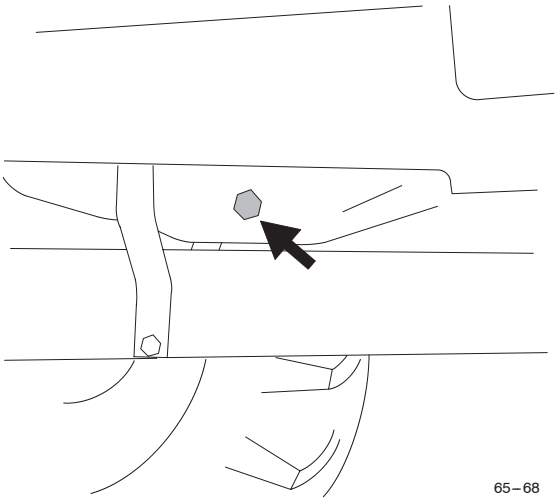

65–68

Remove the drain plug and allow the oil to run out into a suitable container. Drain the oil while the engine is warm (makes draining quicker particularly in cold weather). Clean the plug and replace it.

H 4.2.2. Changing oil filter

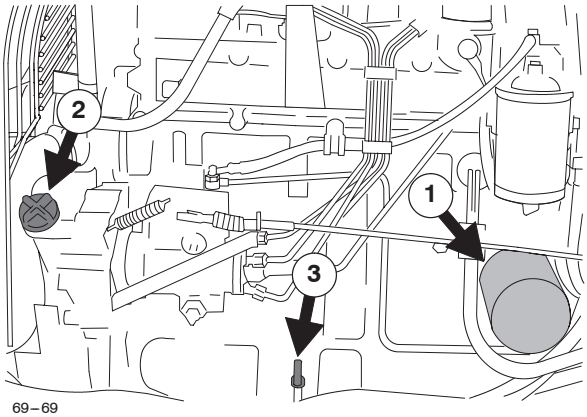

69–69

– Remove the oil filter (**1**) by unscrewing it
– Wipe off the oil which has run out on the chassis
– Oil the new gasket
– Tighten the new filter by hand (not too hard).

H 4.2.3. Crankcase ventilation

When changing the oil always check that the ventilation pipe is clean and not blocked.

Downloaded from www.Manualslib.com manuals search engine

https://truckmanualshub.com/

H 4.2.4. Filling

Oil quality is to be in accordance with the table on page 63.

Fill up with new oil to the prescribed level (upper mark on dipstick **3**) through the filler opening (**2**).

Oil volume incl. filter

–600, 700 . . . . . **7 l**
–800, 900 . . . . . **9 l**

Filter capacity **0.5 l**.
The distance between max and min marks on the dipstick corresponds to **1.5 liters** of oil.

Then start the engine in the normal way. Allow the engine to idle for a little while and check the oil level again.

H 4.3. Lubricate gear lever joints (12)

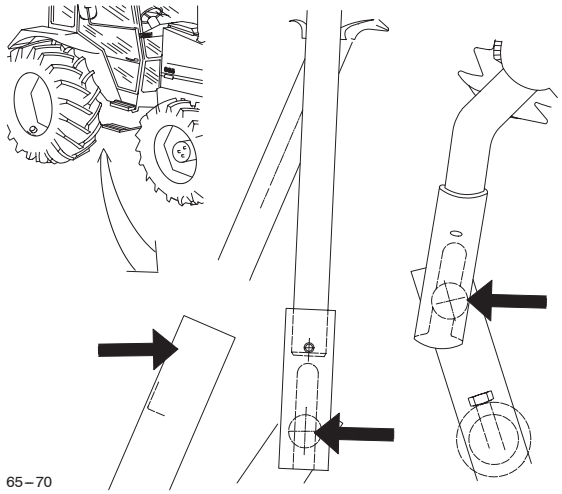

Carefully clean joint before lubricating. Lubricate the joint with Valtra Grease Moly. Carry out lubrication every 250 hours or when necessary.

H 4.4. Check tyre/tire pressures and wheel nuts (13)

NOTE: Check tyre/tire pressures and torque of wheel nuts (also rim/wheel discs) frequently (values are listed in the Technical Specifications on page 98).

WARNING: Avoid over inflation as excess pressure may cause the tyre/tire to explode.

It is recommended that the changing of tyres/tires and wheels is carried out in a professional tyre/tire workshop which is equiped to handle this type of work.

DANGER!
When welding the discs the tyre/tire must be away from the rim/ disc, DANGER OF EXPLOSION!

When mounting the tyre/tire on the disc the pressure limit is 250 kPa. If the tyre/tire does not go on the disc properly, remove it and refit. When the tyre/tire is positioned correctly on the disc, inflate to correct pressure.

H 4.5. Check brake fluid level (14)

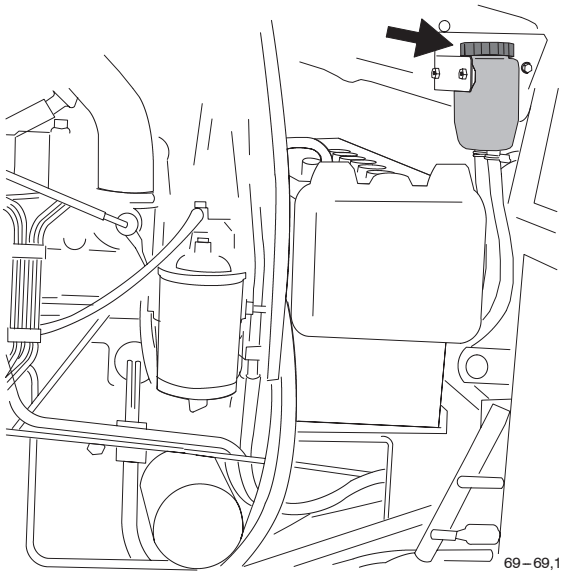

The fluid level should be between the max. and min. marks. Top up with new fluid as necessary, see recommended fuel and lubricants on page 63.

WARNING! Normally there will be no need to top up the fluid. If leakage has occurred, it must be repaired immediately, before driving. If necessary, contact the authorized Valtra–workshop.

The brake fluid level should be checked frequently. Use recommended fluid only.

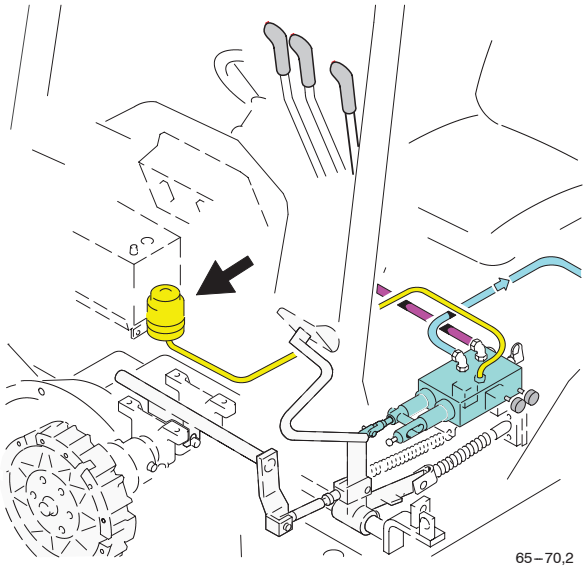

If the tractor is equipped with the push buttons for HiShift as extra equipment, check the brake fluid level. The brake fluid reservoir for HiShift is to the left side of the battery. Check, that the fluid level is between the min. and max. marks.

Downloaded from www.Manualslib.com manuals search engine

https://truckmanualshub.com/

WARNING: Brake fluid is corrosive and poisonous and must be handled carefully at all times (it also corrodes the paint).

H 4.6. Grease door hinges (15)

There are nipples on door hinges. Use Valtra Universal Grease.

H 5. Maintenance every 500 hours

H 5.1. Check free travel of brake pedals (16)

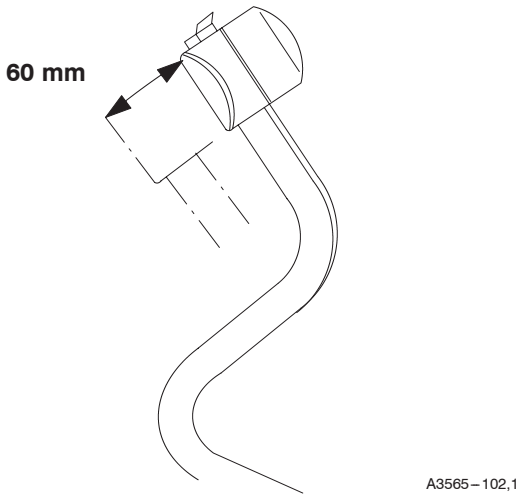

The free travel should be **60 mm** (2.4 in) when the pedals are connected together. Adjust the free travel if necessary (see under " checks and adjustments" on page 90).

H 5.1.1. Adjusting parking brake

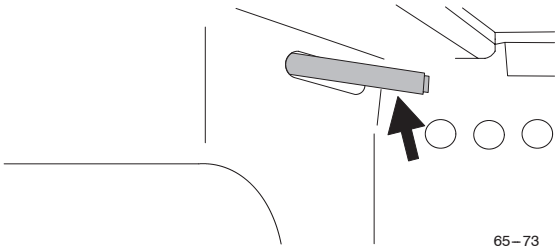

The parking brake acts on the foot brake mechanism mechanically by means of a rod.

Adjust the free travel if necessary (see under " Checks and Adjustments" on page 90).

H 5.2. Check pedal free travel of propulsion clutch (17)

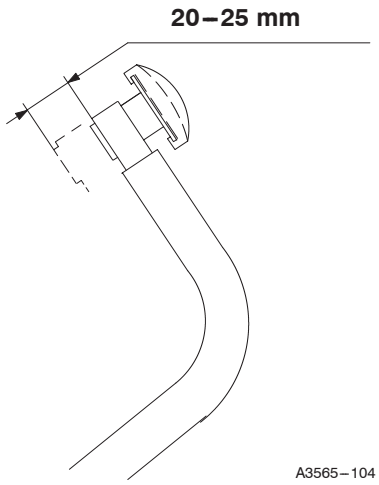

Slowly press down the clutch pedal until the clearance is taken up and declutching begins. The free travel should be **20 – 25 mm**. Adjust the free travel if necessary (see under "Checks and Adjustments" on page 89).

H 5.3. Check the travel of PTO lever (18)

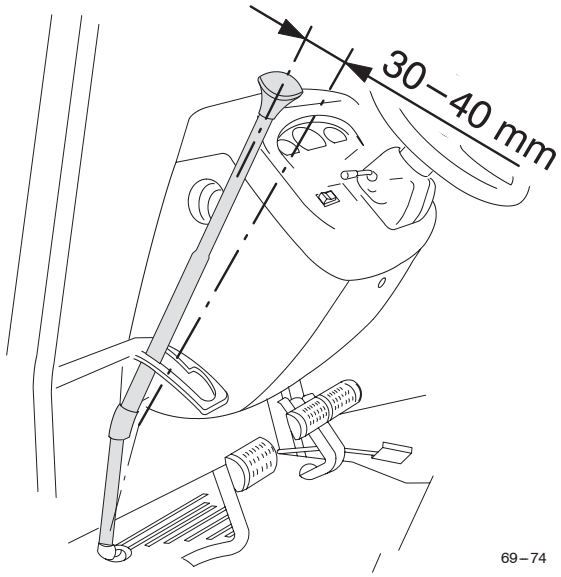

The free travel at the end of the lever should be **30 – 40 mm**. Adjust the free travel when necessary (see under "Checks and Adjustments" on page 89).

Downloaded from www.Manualslib.com manuals search engine

https://truckmanualshub.com/

H 5.4. Check oil level in power transmission (19)

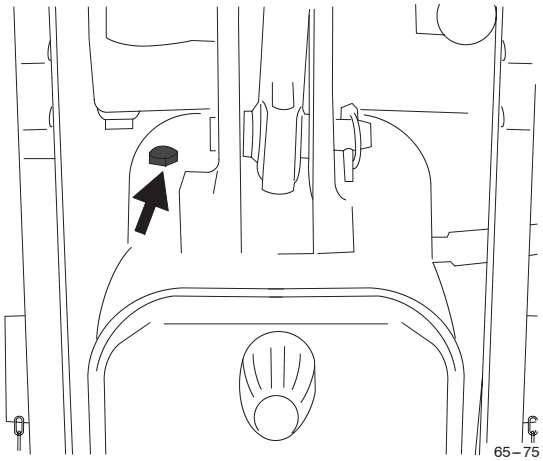

The oil lever should come between the max. and min. marks on the dipstick. Top up with oil when necessary. Oil quality should be in accordance with the table on page 63.

The distance between max and min marks on the dipstick corresponds **3 liters** of oil.

H 5.5. Check oil level in differential (powered front axle) (20)

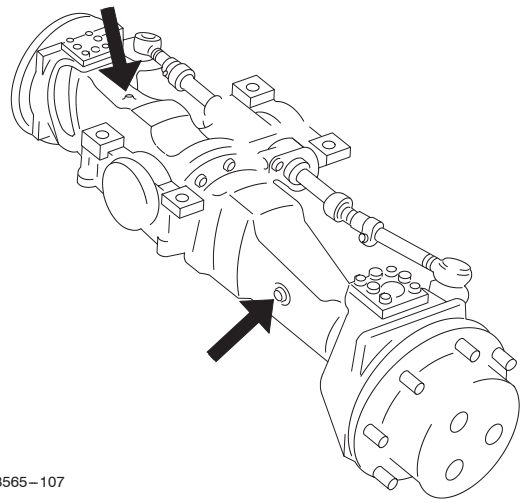

The oil lever should come up to the filling plug hole. Top up when necessary.
Oil quality should be in accordance with the table on page 63.

H 5.6. Check oil level in hub reduction gears (powered front axle) (21)

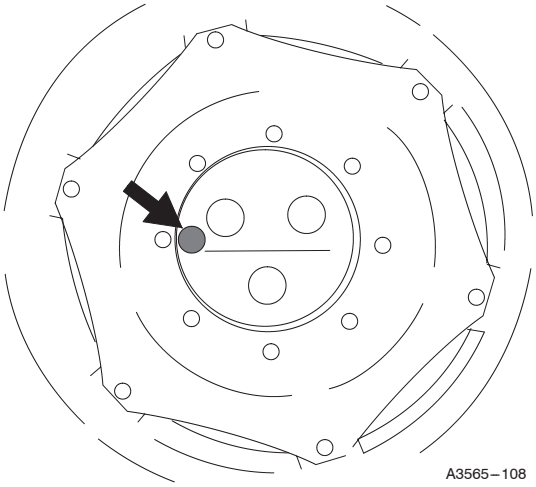

Turn the wheel until the oil surface indicator line is horizontal. The oil surface should be level with the hole. Add more oil if necessary. Oil quality should be in accordance with the table on page 63.

H 5.7. Check hydraulic oil level (22)

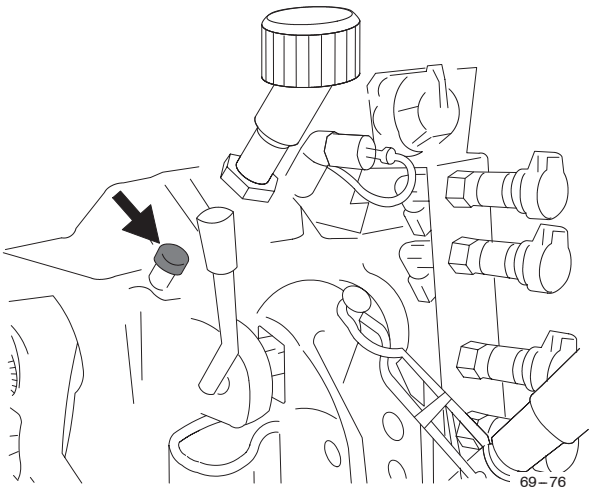

When the hydraulic system is filled to the minimum mark on the dipstick the total volume of oil is **25 l**, of which **14 l** is available for the auxiliary hydraulics.

It is, however, recommended that the system be filled to the maximum mark on the dipstick (total volume =**35 l**). In this case **24 l** is available for the auxiliary hydraulics. Adding oil, see point 25 change oil in hydraulic system. Oil quality should be in accordance with the table on page 63.

Downloaded from www.Manualslib.com manuals search engine

https://truckmanualshub.com/

H 5.8. Change pressure filter in hydraulic system (23)

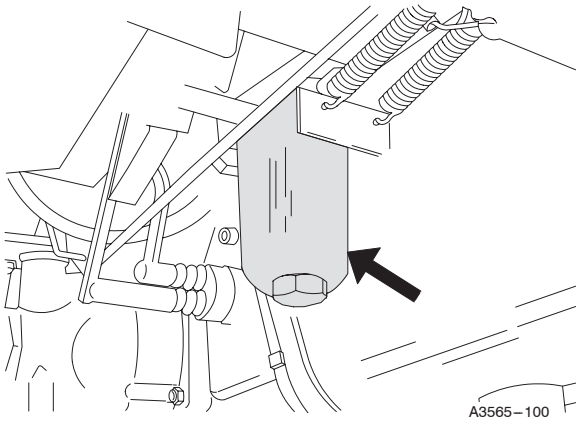

– Clean surrounding parts
– Loosen the filter and take out the element
– Wash the filter housing with diesel fuel and fit the new element (oil the seal first). The seal must always be changed.
– Tighten the filter with a suitable wrench to a torque of **200 Nm**.

NOTE: Always change the filter when carrying out repairs caused by impurities in the hydraulic system. Clean suction strainer as described earlier (see service at 1000 hours intervals page 78).

CAUTION: If the external hydraulics are used extensively and no return oil filter is used, the filter must be changed ever 250 hours.

If the external hydraulics are used extensively it is recommended that a return filter should be mounted in the line (extra equipment).

On tractors with a return filter, all oil which is returning from the outside machine, goes through the return filter. Follow to changing intermediate on the return filter.

H 5.9. Change oil filter in transmission (24)

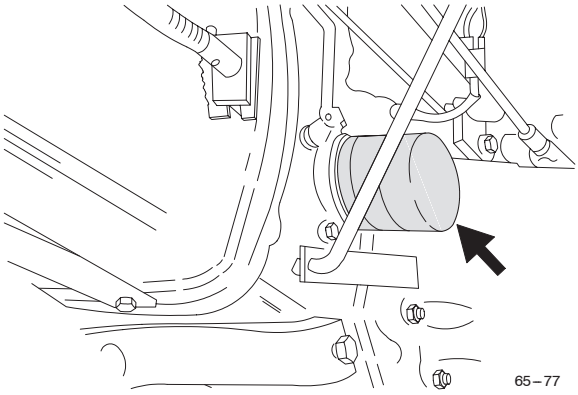

– Clean surrounding parts and remove the filter
– Oil a new seal and fit the new filter. Tighten by hand (not too tight).

H 6. Maintenance every 1000 hours (or yearly)

H 6.1. Change oil and oil breather filter in hydraulic system (25)

Draining

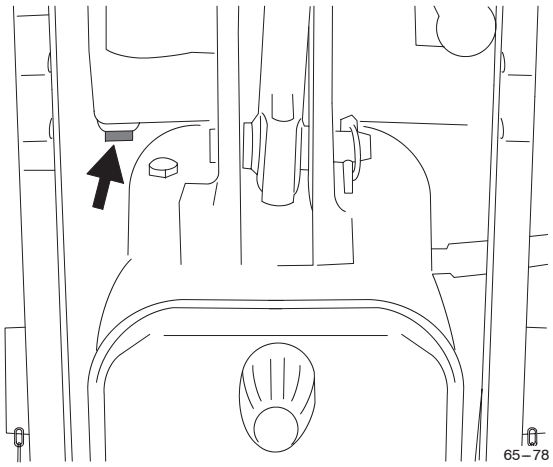

– Run the tractor for warm up the hydraulic oil.
– Remove the drain plug and drain off the oil
– Clean the plug and replace it in again

Refilling

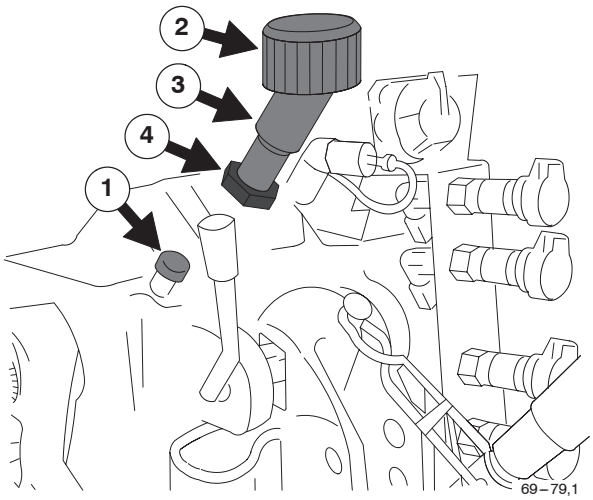

– For refilling the oil, first open the breather filter (**2**) together with the fastening tube (**3**) by opening the locking nut (**4**) (hole inside the breathers fastening tube is too small for refilling the oil).
– Refill with new oil through the filling cap. The lower mark on the dipstick (**1**) corresponds to 25 l, the upper mark to 35 l. The system may be filled to any level between these two points.

Downloaded from www.Manualslib.com manuals search engine

https://truckmanualshub.com/

– Subsequent to refilling, the engine should be started and the hydraulic lift operated for a short time, after which the level should be checked again. Replace the breather filter (**2**) and adjust it with fastening tube (**3**) so that the filter top is horizontal.

Where the larger quantity is recommended, 35 l, the oil level should come up to the upper mark on the dipstick which is fitted on the oil filler cap. Then 24 l can be taken out for auxiliary hydraulics.

H 6.2. Change oil in power transmission (26)

Draining

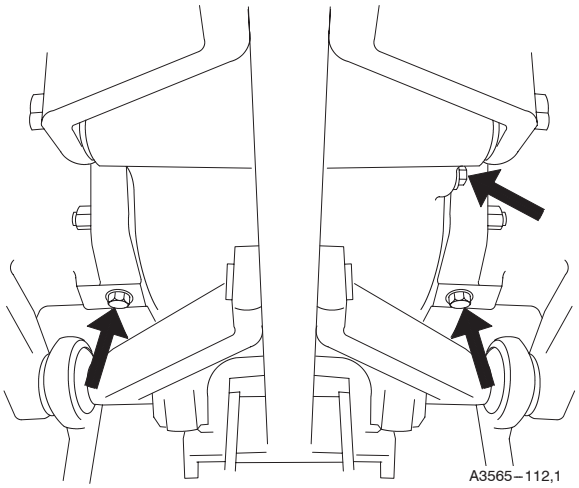

– Run the tractor to warm up the transmission oil.
– Remove the plugs under the gearbox and final drive gears and allow the oil to run out into a suitable container.
– Clean the plugs and screw them in again.

Filling

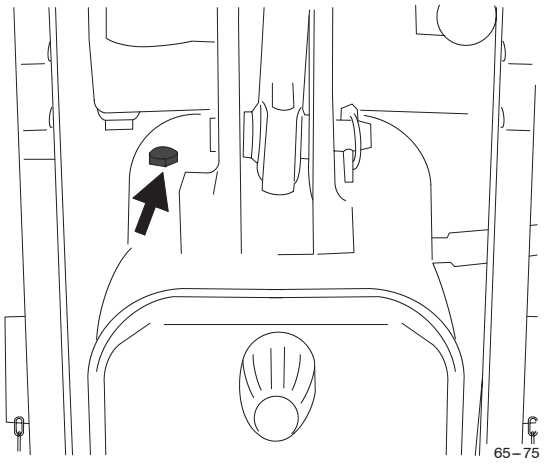

Oil quality should be in accordance with the table on page 63.

– Remove the plug on the dipstick opening
– Fill up with new oil to the upper mark on the dipstick.

Oil quantity is 32 l. The distance between max and min marks on the dipstick corresponds to **3 liters** of oil.

H 6.3. Change oil in differential (powered front axle) (27)

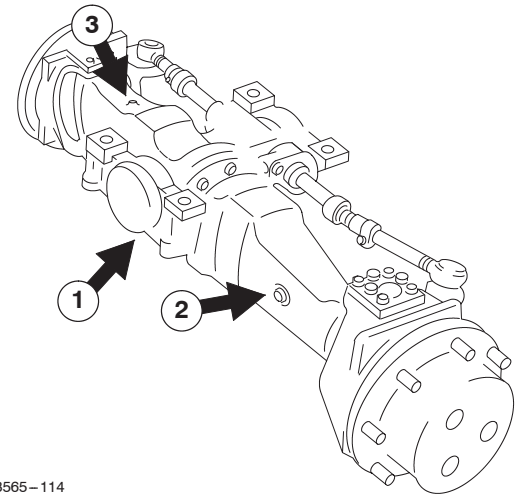

Remove the drain plug (**1**). Clean the plug and screw it in again. Fill up with new oil to the lower edge of the level plug (**2**).

Oil volume 6.5 l
Oil quality should be in accordance with the table on page 63.

H 6.4. Change oil in hub reduction gears (powered front axle) (28)

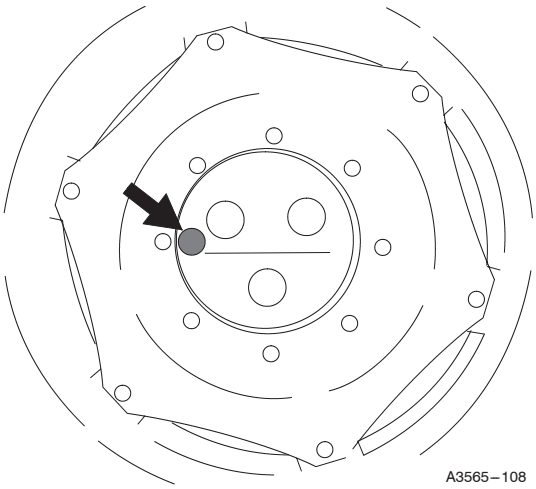

Unscrew the plug and drain the oil. Turn the wheel until the line of the inspection hole is horizontal and fill up with oil to the level of the hole.

Oil volume 2 x 0.8 l
Oil quality should be in accordance with the table on page 63.

Downloaded from www.Manualslib.com manuals search engine

https://truckmanualshub.com/

H 6.5. Clean hydraulic pump suction strainer (29)

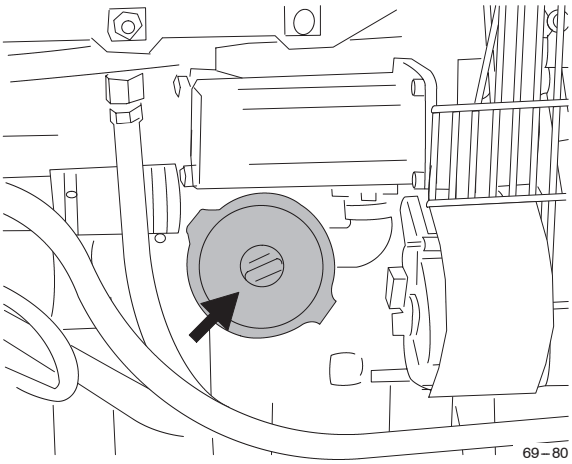

CAUTION: In work where the hydraulic system is subjected to abnormally heavy pollution (e.g. when running with tipping trailers) the suction strainer must be cleaned at shorter intervals. If the pump begins to ”shriek”, the engine should be stopped, the suction strainer cleaned and the viscosity of the oil checked against the manufacturer’s recommendations.

H 6.5.1. Removing and cleaning

– Place the tractor with the front end higher so that less oil runs out.
– Loosen the wing nut on the end of the housing and place a funnel or similar under the housing to collect up the oil.
– Remove the cover and drain off the oil into a suitable container.
– Carefully pull out the element.
– Clean the element with diesel fuel and dry with compressed air.
– Also clean the magnetic plugs.

H 6.5.2. Fitting

– Place the cleaned element in the housing
– Replace the cover together with the seal and tighten the wing nut by hand
– Check the oil level in the hydraulic system.

CAUTION: Look for any foaming of the oil when starting up again (check through the filling opening). Foaming indicates that the cover seal is leaking and must be changed or retightened.

H 6.6. Clean fuel tank (30)

Always clean the fuel tank at the start of the winter season. This avoids problems with condensation in the fuel tank. Always make sure that the tank is as full as possible so that condensation is prevented.

– Empty the tank and rinse it with clean diesel fuel. Screw in the drain plug again.
– Fill up with new fuel (if you suspect that fuel is not clean, use a fine gauze strainer).

WARNING! Never use spirit as anti–freeze agent in the fuel, as this could cause blockage of the fuel filter and impair the lubricating properties of the fuel.

H 6.7. Change prefilter and fuel filter (31)

Change prefilter

(distributor models)

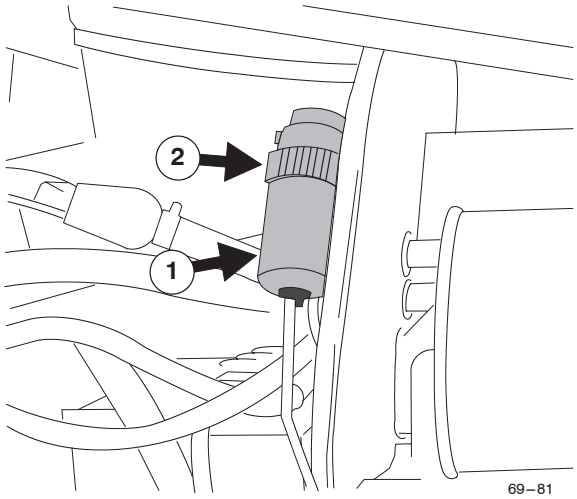

NOTE: Remove the filter by hand, do not use a filter–wrench.

Turn the prefilter lock (**2**) to open and remove prefilter (**1**) by pulling it downwards. Set new filter in place and turn the prefilter lock (**2**) to the fasten direction until you hear a click. Change the prefilter more often if needed.

Change fuel filter

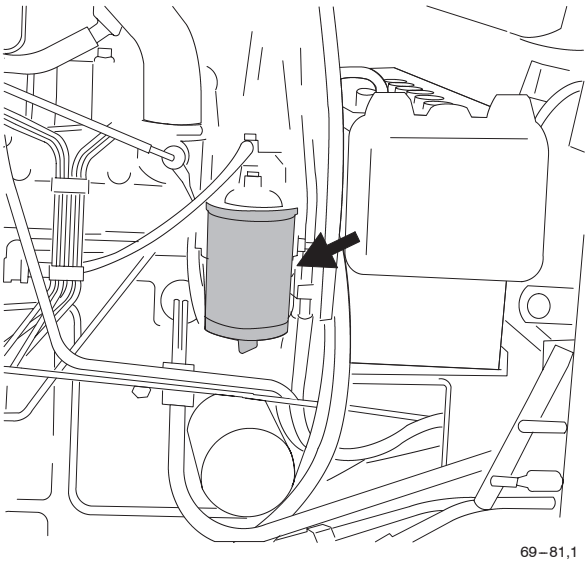

Clean the outside of the filter and remove it. Oil the new gasket and tighten the new filter by hand (not too tight). Change the fuel filter more often if needed.

After changing the filter, pump up fuel with the hand pump until the prefilter (distributor models) and the filter are filled up. If needed bleed the fuel system (see under ”Checks

Downloaded from www.Manualslib.com manuals search engine

https://truckmanualshub.com/

and Adjustments" on page 85).

H 6.8. Change air filter and safety filter (32)

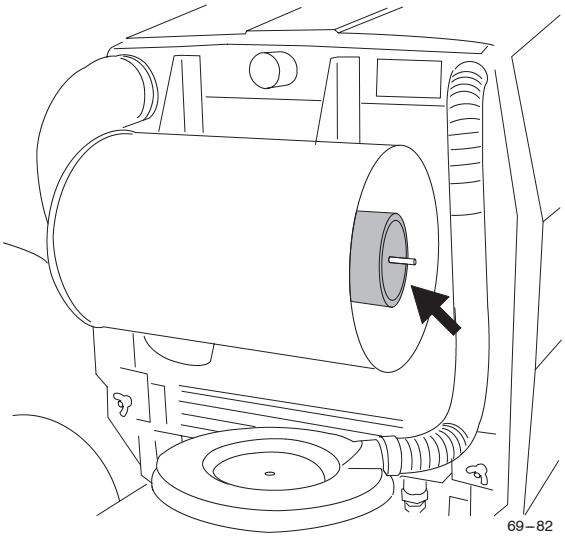

The main air filter has to be changed no later than 1000 hours together with the safety filter if it has not been cleaned already 5 times and changed earlier. The safety filter protects the engine if the main filter should become damaged. The safety filter must not be cleaned, it should always be changed.

CAUTION: Never run the tractor without the safety filter.

Take great care when removing the safety filter so that no dirt enters the inlet pipe.

– Take out the main filter
– Remove the safety filter

Models with cyclone cleaner (600, 700)

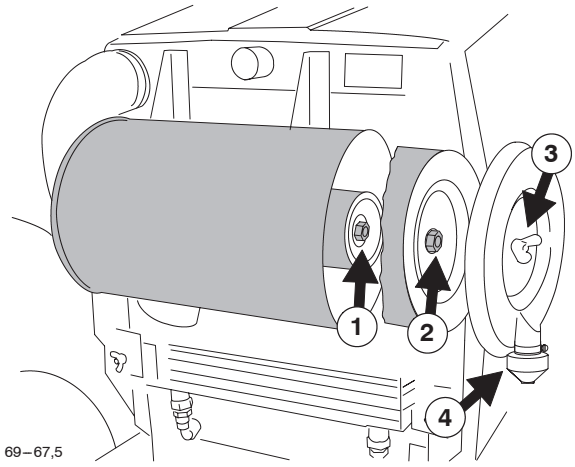

Models with ejector cleaner (800, 900)

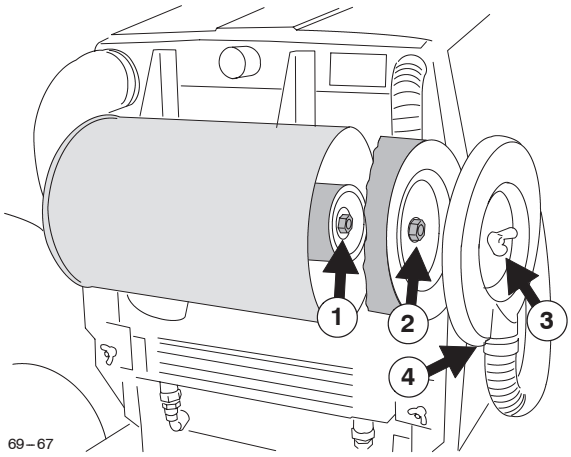

Filters fitting

– Check that, the seals are in good condition
– Check that, the sealing surfaces are clean
– Fit a new safety filter and make sure that it is correctly positioned in the housing. Tighten the nut (**1**) carefully.
– Fit the main filter carefully. Tighten the nut (**2**), on the filter until the filter has come into contact with the end of the housing.

Do not tighten the nut (**3**) on the cover of the air cleaner housing too tight (approx 1–1.5 turns after the flange seal has come into contact with the surface of the housing).
The cover of the housing (also in cyclone cleaner models) must be mounted so that the outlet pipe (**4**) is in the lower position.

H 6.9. Lubricate front wheel bearings (33)

(2WD)

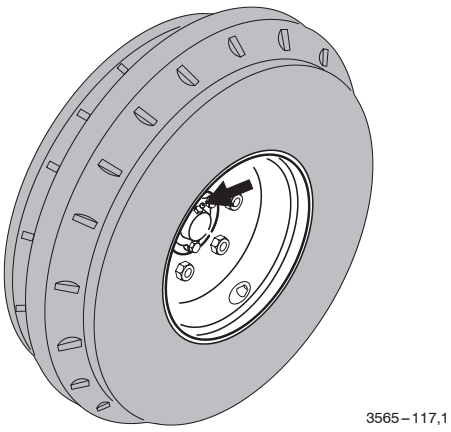

Use Valtra Universal Grease.

In dusty and muddy conditions, it is necessary for lubrication to be carried out much more often. When injecting new greese, ensure that enough is injected so that it pushes the dirt out of the hub.
Check also the bearings tightness and if necessary have them adjusted at an authorized workshop.

Downloaded from www.Manualslib.com manuals search engine

https://truckmanualshub.com/

H 6.10. Check and adjust toe–in of front wheels (34)

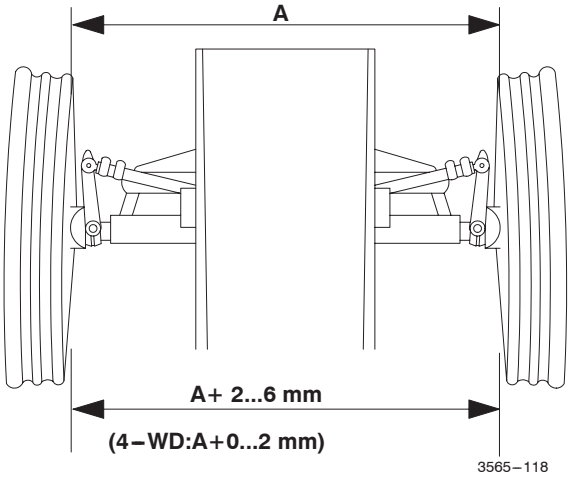

See under "**Checks and Adjustments**" on page 91.

H 6.11. Check and adjust valve clearance (35)

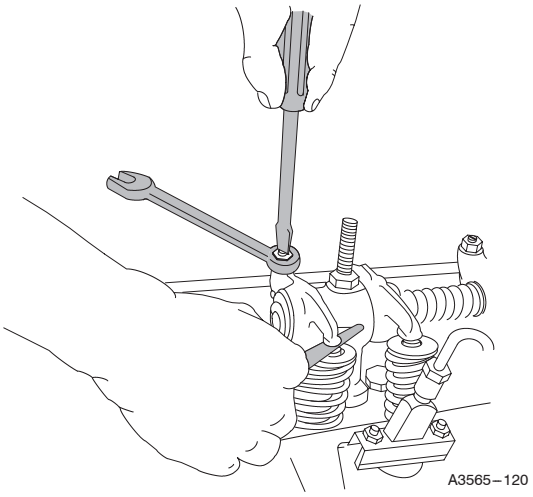

Both inlet and exhaust valves should have a valve clearance of **0.35 mm** (0.014 in). The valve clearance can be adjusted when the engine is either warm or cold.

Checking and adjustment should be carried out by an authorized workshop.

H 6.12. Change cab air filter and upper filter (extra equipment) (36)

Change lower filter

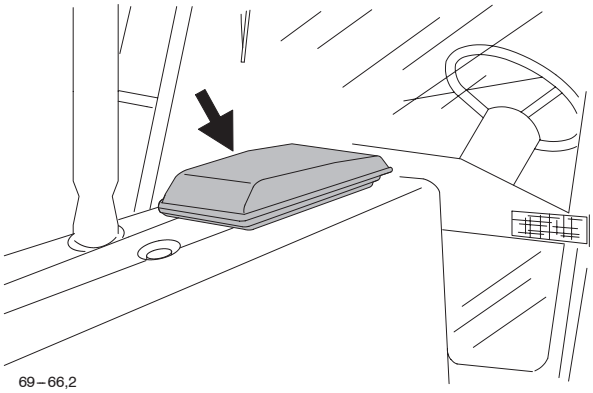

Lift up the filter housing cover (rear part first) and replace the filter with a new one. Change filter more often if necessary.

Change upper filter (extra equipment)

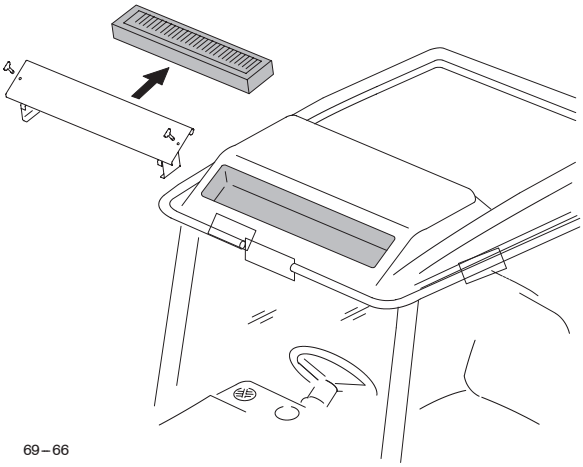

Remove air cleaner housing from the front part of the roof and replace the filter with a new one. Change filter more often if necessary.

Downloaded from www.Manualslib.com manuals search engine

https://truckmanualshub.com/

H 6.13. Tighten frame nuts and bolts (37)

H 6.14. Grease flywheel ring gear (38)

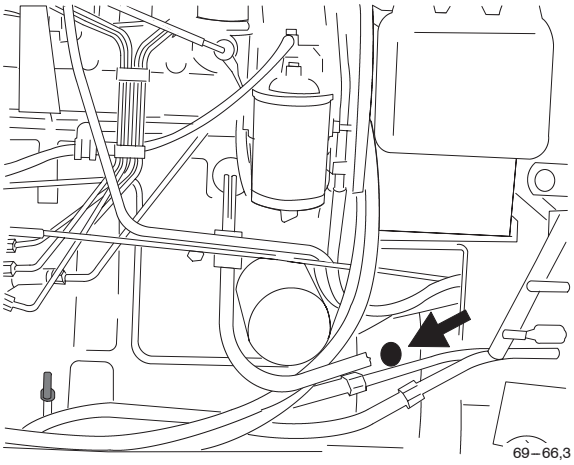

On the left–hand side of the clutch housing there is a hole through which the ring gear can be greased. Apply a little grease (one stroke with a grease gun) at a few points on the ring gear. With use the grease will spread round the gear. Use Valtra Moly Grease, about 1 cm^3.

H 7. Maintenance every 2000 hours (or every other year)

H 7.1. Clean coolant system (39)

Periodically check and clean the outside of the radiator by means of compressed air or by flushing through with water. Also clean from the fan side of the radiator.

The cooling system can be thoroughly cleaned if problems occur in the function, in which case clean as follows.

Clean the coolant system using a special cleaning agent available from your dealer. Follow the manufacturer's instructions.

H 7.1.1. Draining

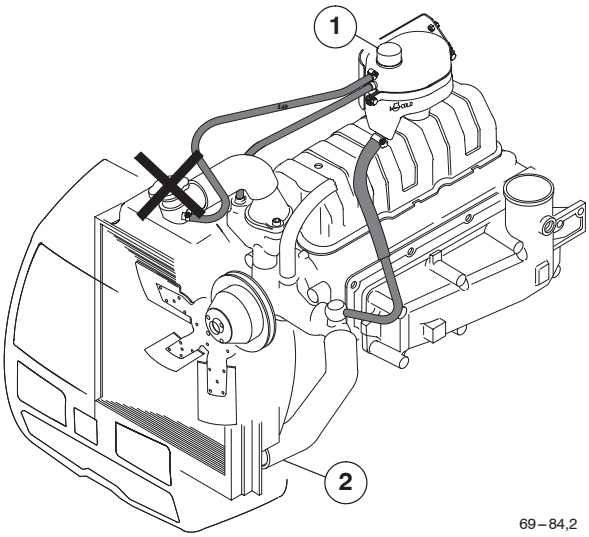

– Always stop the engine before draining the coolant.

DANGER: The radiator cap can not be opened when the system is hot, because the cap has no clamp position, which would remove the pressure before opening.

– **ALWAYS open the cap (1) of the expansion tank first. Open the expansion tank cap carefully. At running temperature the expansion tank has overpressure (0.7 bar).**

Downloaded from www.Manualslib.com manuals search engine

https://truckmanualshub.com/

– Loosen the lower water pipe (**2**) (remove the finger shield if necessary). The best way to drain the system is to loosen the upper end of the pipe and then loosen the lower end, then the pipe can be bent to the side and the fluid drained into a container.

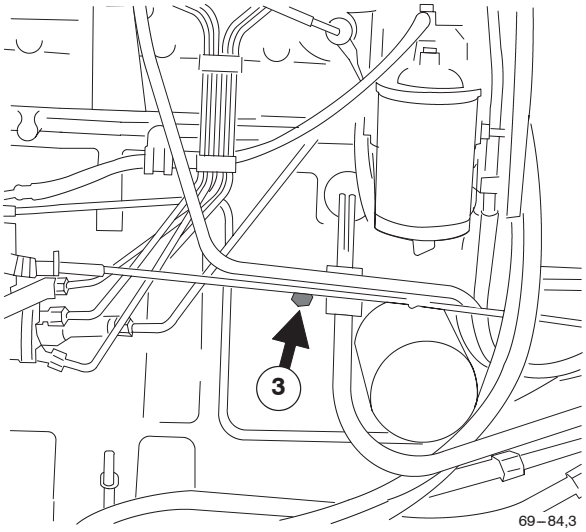

69–84,3

– Open the plug (**3**) on the cylinder block
– Turn on the heater control in cab. Drain the fluid into a container.
– Drain the water pump by cranking the engine a few revs with the drain plugs removed.

H 7.1.2. Filling

Mix the antifreeze and water according to the manufacturer's instructions.

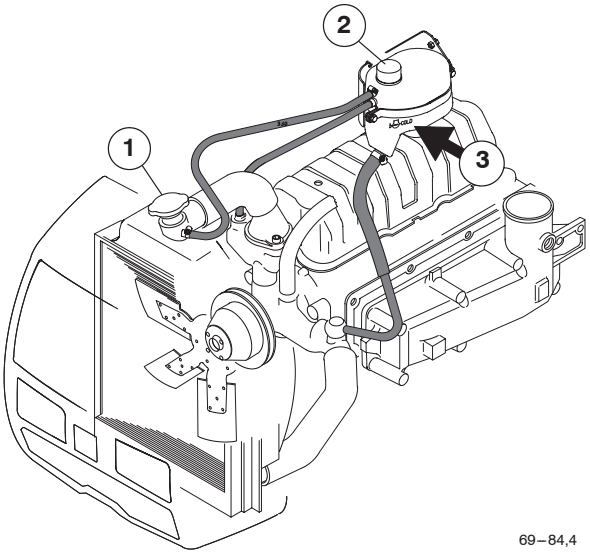

69–84,4

– Fill up the radiator (**1**) with a mixture of anti–freeze fluid and water completely full, close the filler cap. The expansion tank's cap has to be open when filling.
– Fill the expansion tank (**2**) with fluid up to the fluid level sign (**3**).

NOTE! If the finger shield is removed make sure you re–fit it.

H 7.1.3. Coolant volume

– 600 . . . . . **13.5 l**
– 700 . . . . . **13.5 l**
– 800 . . . . . **15.5 l**
– 900 . . . . . **15.5 l**

Ensure that a recommended coolant is always used.

WARNING: Never fill up with cold fluid while the engine is warm. Do not use plain water as coolant.

After changing the fluid run the engine for a time and check the level of fluid.

H 7.2. Check alternator (40)

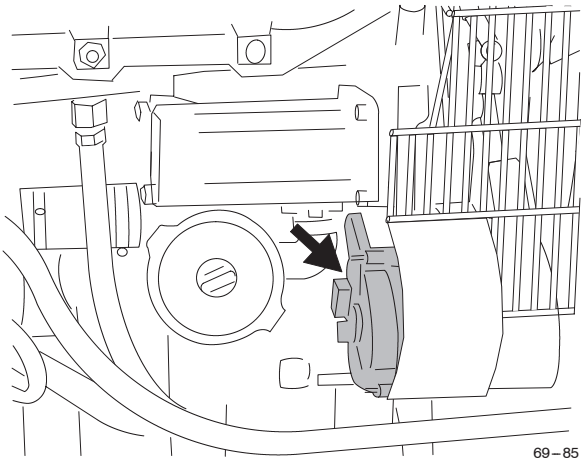

69–85

Check all leads and terminals. Oily or corroded contacts can cause trouble in the battery circuit.
Cleaning and reconditioning of the alternator should be carried out by an authorized workshop.

H 7.3. Check starter motor (41)

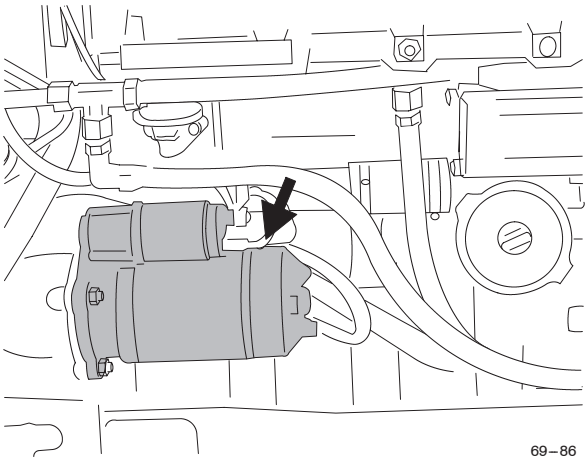

69–86

Check that leads and terminals are clean and in good condition. Correct any defects.
Overhaul and reconditioning of the starter motor should be carried out by an authorized workshop.

Downloaded from www.Manualslib.com manuals search engine

https://truckmanualshub.com/

H 7.4. Check and clean injectors (42)

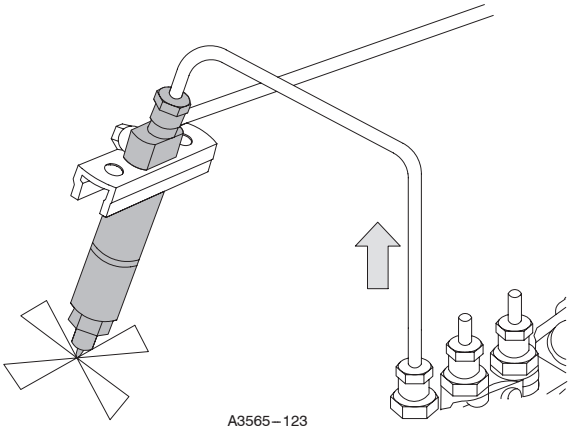

When using biodiesel the checking and cleaning of the injectors must be done after every 1000 hours.
For the engine to produce full power the injectors must be in perfect condition. Checking and cleaning should be carried out by an authorized workshop.

Symptoms of dirty or defective injectors:

– Knocking indicates a fault on one or more of the injectors. Knocking can occur on a cold engine when running at idling speed. When knocking occurs at normal working temperature this indicates that the injectors are not functioning property.
– Air in the fuel system can also cause knocking (disappears after the system has been bled).
– Smokey exhaust gases are another symptom of poor function of the injectors (can also be due to other reasons, e.g. blocked air cleaner).

H 7.5. Change brake fluid (43)

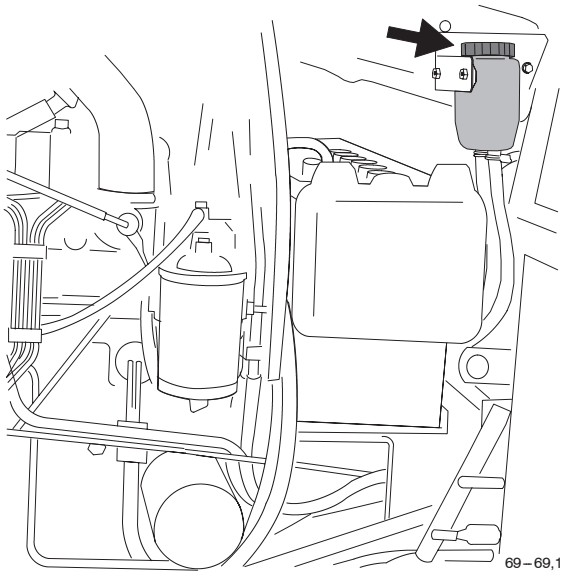

It is recommended that the brake fluid be changed every second year or after 2000 hours of operation.

– Empty the brake fluid reservoir, open the bleed nipples. It is better to place hoses from the nipples into a container, as the fluid corrodes the paint. Pump the brake pedal until all brake fluid in the pipes and cylinders has run out.
– Fill the brake system with new brake fluid.
– Bleed the brake system of air (see Checks and Adjustments on page 90).

If the tractor is equipped with the trailer brake valve and / or air pressure brakes as extra equipment, open also their bleed nipples to drain the hoses. The brakes must also be bleeded from the nipples:

– the fluid brakes of the trailer, see the bleeding instructions on page 123.
– the air pressure brakes, see the bleeding instructions on page 121.

The correct amount of brake fluid is 0.3 liter.

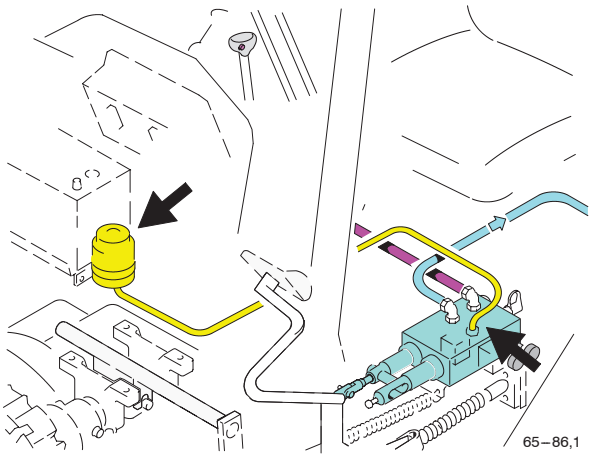

If the tractor is equipped with the push buttons for HiShift as extra equipment, change the brake fluid. The brake fluid reservoir for HiShift is to the left side of the battery. Empty the brake fluid reservoir by loosening the hose coming from the reservoir from the valve side.
The correct amount of brake fluid is 0.3 liter.

WARNING: Brake fluid is corrosive and poisonous and must be handled carefully at all times (it also corrodes the paint).

Downloaded from www.Manualslib.com manuals search engine

https://truckmanualshub.com/

H 8. Maintenance every 4000 hours

H 8.1. Check turbo unit (not on all models) (44)

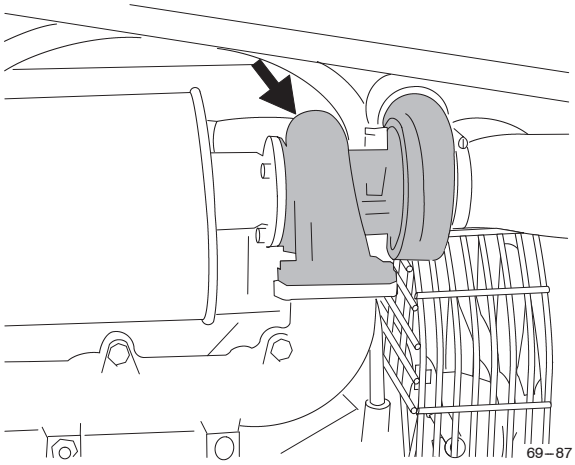

Inspection and reconditioning of the turbo unit should be carried out by an authorized workshop.
For trouble free functioning make sure that the air and oil filters are in good condition, that they are changed according to schedule and that the fuel system is kept clean. Note particularly that the air filter must be clean and have good flow–through properties. Regularly check the attachment of the turbo unit on the exhaust system and the attachment of the intake and exhaust manifolds on the turbo unit.

Vibration or abnormal engine noise are usual symptoms of incorrect function of the turbo unit.

Where any defects are suspected, have the turbo unit checked by an authorized workshop as soon as possible.

Downloaded from www.Manualslib.com manuals search engine

https://truckmanualshub.com/

I. Checks and Adjustments

Check and adjustment instructions for the extra equipment are in section K, after each extra equipment.

I 1. Engine

I 1.1. Bleeding fuel system

There should be no air in the fuel system to ensure that the motor function is of maximum efficiency. The system automaticly removes the small guantity of air which has built up in the filters and injection pump. The fuel system must be bled if any part of it has been removed or if the tractor has run out of fuel during driving so that air has entered the system. Bleed the fuel system as follows:

I 1.1.1. Bleeding distributor pump system of air

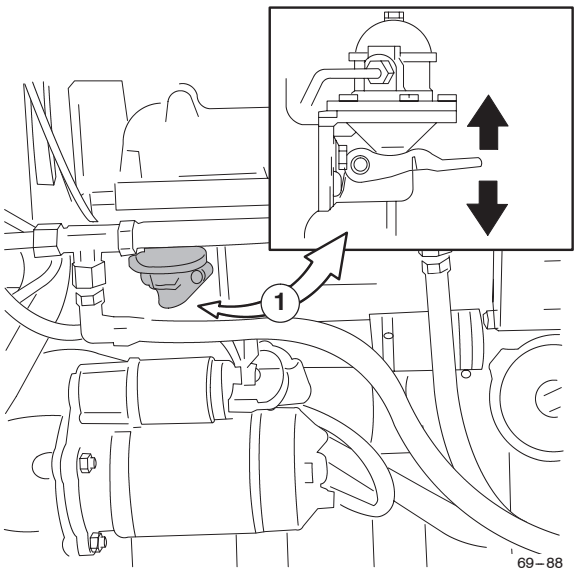

1. Pump by hand the lever (**1**) on the fuel pump. If pumping feels ineffective, turn the engine a little, so the camshaft turns away from the line of the pump arm.

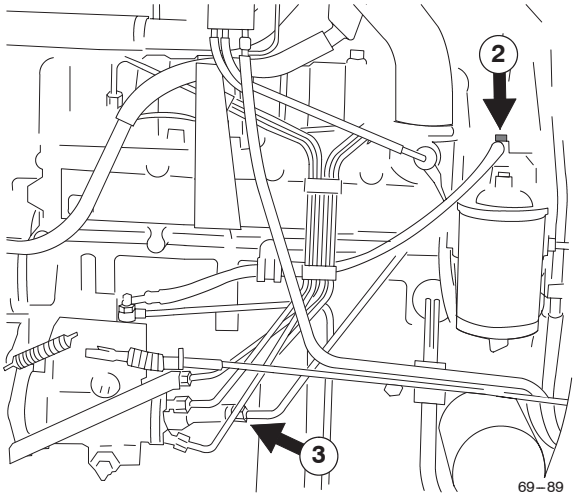

2. Open the bleed screw (**2**). Operate the hand pump (**1**) until there are no air bubbles in the fuel which runs out. Tighten screw (**2**).
   NOTE! Do not open the bleed screw above the prefilter, as it is in the suction side.
3. Continue pumping and open the bleeding union (**3**) which is in the middle of the rearside of the pump, until there are no air bubbles in the fuel which runs out. Tighten the union.

CAUTION: When the pump is empty of fuel, do not leave the tractor switched on for a long time, as there is a stop solenoid in the injection pump which could be damaged.

After bleeding the system as detailed above, the fuel pump will fill up once the starter motor starts to turn the engine.

4. Start the engine and check that there are no leaks.

Downloaded from www.Manualslib.com manuals search engine

https://truckmanualshub.com/

I 1.1.2. Bleeding in–line pump system of air

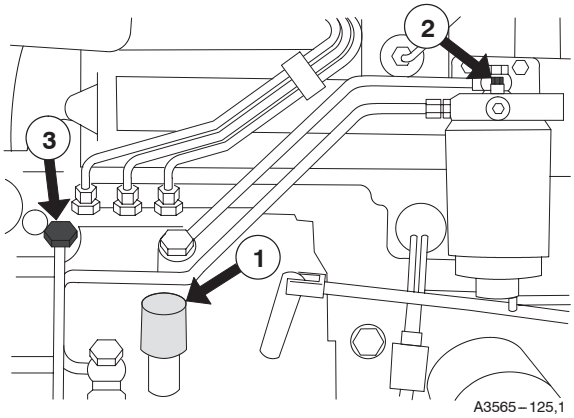

The bleeding of the in–line pump system differs from the bleeding of the distributor pump system as follows:

– The fuel hand priming pump (**1**) is located beside the injection pump. Continue pumping a few times to fill the injection pump, then tighten the bleeding screw (**2**)
– The fuel from the injection pump can also be bled through the overflow valve (**3**) after bleeding the fuel filters.

I 1.1.3. Bleeding the thermostart–system of air

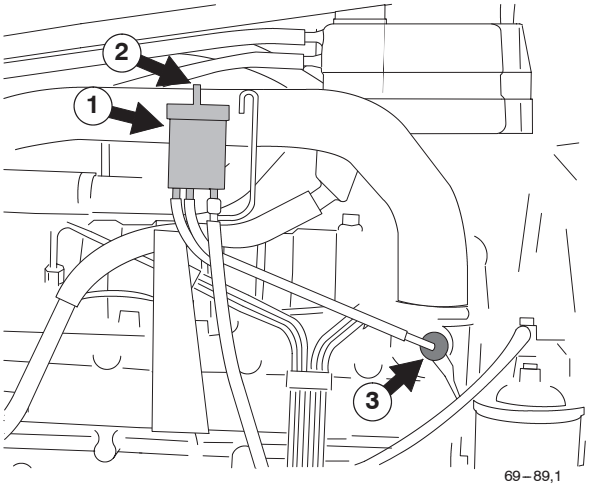

Allways bleed the fuel pipe of the glow plug, if the pipe or the fuel container is empty e.g. after service. damage to the glow plug can occur due to the lack of fuel when starting the engine.

– If the container (**1**) has become empty, fill it with a drip can through the breather hole (**2**) on the cover.
– Open the glow plug pipe adapter (**3**).

I 1.2. Air cleaner

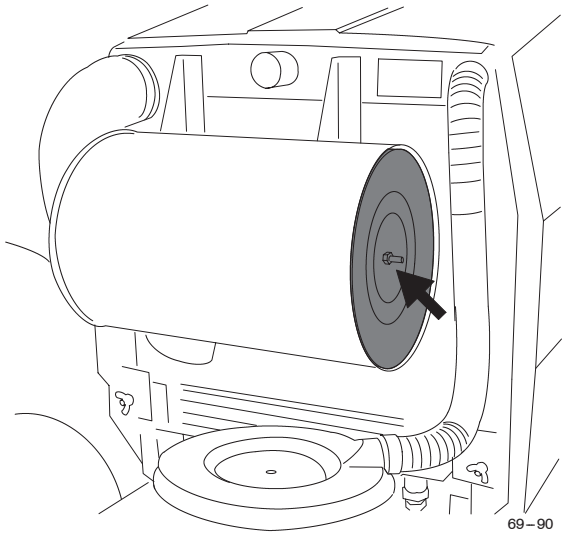

The air cleaner prevents dust and other dirt from entering the engine with the induction air. Engine wear is largely dependent on the cleanliness of the induction air so it is very important to check the air cleaner regularly and to maintain it correctly.

CAUTION: The safety filter inside the main filter must not be cleaned but must always be changed according to the maintenance schedule. The purpose of the safety filter is to prevent damage to the engine if the main filter should fail.

I 1.2.1. Maintenance of main filter

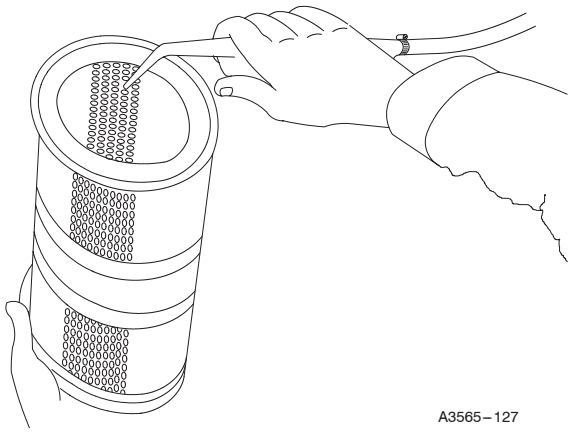

The air filter must not be **cleaned** more than **five times**, after which time it must be replaced. Check when cleaning that the filter and its seals are undamaged. A damaged filter must always be replaced.

NOTE: Never clean or remove the air filter unless it is absolutely necessary. When removing the air filter there is always the possibility that dirt can enter the induction system of the engine.

Downloaded from www.Manualslib.com manuals search engine

https://truckmanualshub.com/

Cleaning the main filter

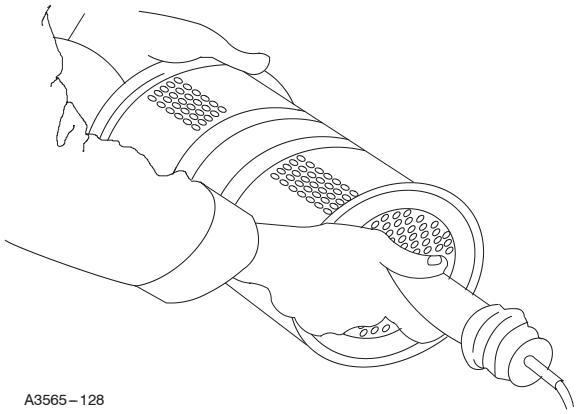

A3565 – 128

Use clean and dry compressed air with a max. pressure of **500 kPa** (5 bar).

1. Direct the air flow against the inside of the filter along the folds. Do not hold the nozzle closer than **3 – 5 cm**.
2. Then direct the air flow against the outside of the filter along the folds and after this against the inside of the filter again.
3. Check the filter and its sealing surfaces by means of a torch. Replace the filter if any holes or other defects are discovered.

NOTE: See service instructions on page 67 and replace safety filter in the air cleaner (maintenance every 1000 hours or yearly page 79).

I 1.3. Maintenance – cooling system

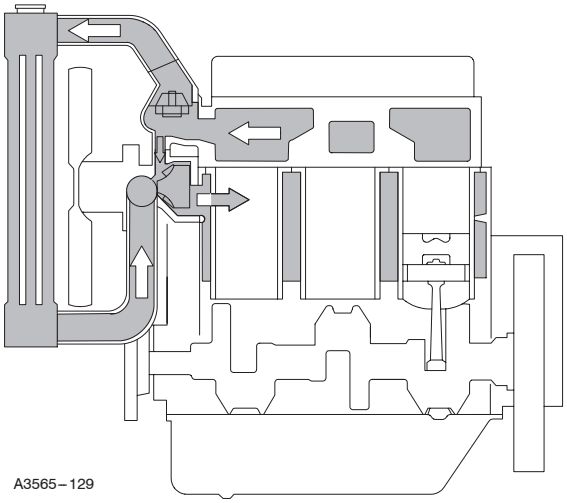

A3565 – 129

The following action should be taken to make sure that the cooling system functions correctly:

– Check the coolant level (see maintenance program daily checks).
– Check the fan belt tension (see maintenance program weekly checks).
– Clean the radiator honeycomb externally by means of compressed air or by flushing through with water.

I 1.3.1. Coolant

The cooling system is filled with a mixture of water and anti – freeze agent on delivery. The anti – freeze agent also has the property of preventing rust from forming in the cooling system. However, the anti – rust properties of the agent diminish with time so that it is important to change the coolant at regular intervals. A suitable mixture is half anti – freeze agent and half water but the manufacturer's directions should always be followed (see cleaning of cooling system, Service at 2000 hrs intervals on page 81).

Downloaded from www.Manualslib.com manuals search engine

https://truckmanualshub.com/

I 2. Electrical system

I 2.1. Checking and maintenance of battery

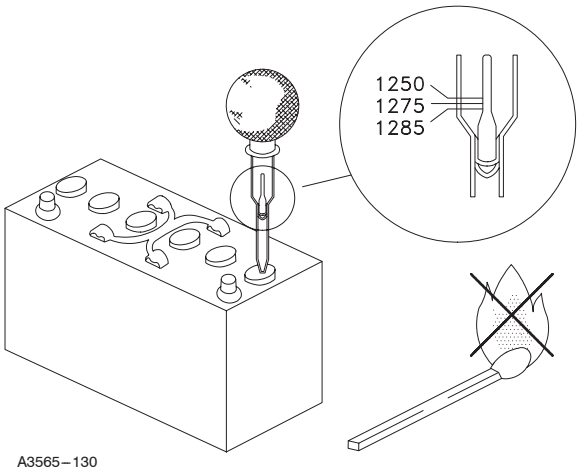

– Check the charge of the battery with an acid tester. Min. 1.23.
– Check fan belt tension.
– Keep the battery clean. It can be washed with lukewarm water after removal from the tractor (always disconnect the negative lead first).
– Also clean the pole studs, the cable terminals and the battery retainer thoroughly. Wash off oxidized spots with water.
– Wipe the outside of the battery, and coat the pole studs and the cable terminals with petroleum jelly.
– Refit the battery (always connect the positive lead first).

WARNING:
Avoid sparking or naked flames near the battery. The battery gives off hydrogen gas which is highly explosive. The battery electrolyte is corrosive.

I 2.2. Alternator

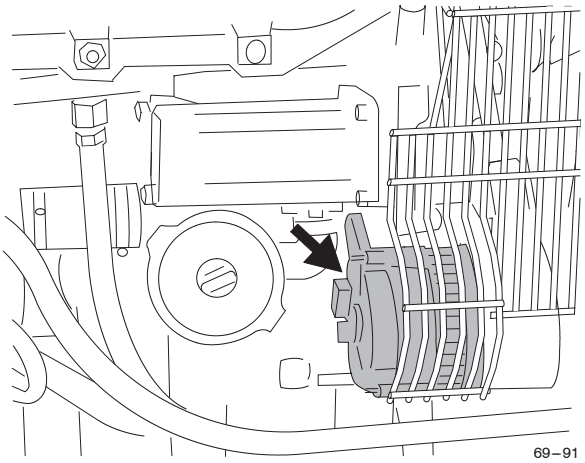

The tractor has a negative–grounded alternator which can easily be damaged if an incorrect connection is made in the electrical system. For example, connection of the battery with wrong polarity can burn out the alternator or rectifier. **The electrical charging circuit must not be broken when the engine is running**.

I 2.3. Safety precautions for the electrical system

– Always connect the battery with the correct polarity.
– Disconnect the negative lead of the battery first and connect it last.
– Never brake the charging circuit while the engine is running.
– Disconnect the battery negative lead before removing the alternator from the engine.
– Arrange enough ventilation to prevent the build–up of explosive gases in and around the battery.

CAUTION: The battery leads (negative first) and the alternator wiring must be disconnected before arc welding is carried out on the tractor or an implement which is attached to it.

Never run the engine with the alternator disconnected. Do not connect any additional electrical equipment, as this may damage components of the existing electrical system.

I 2.3.1. Fuses

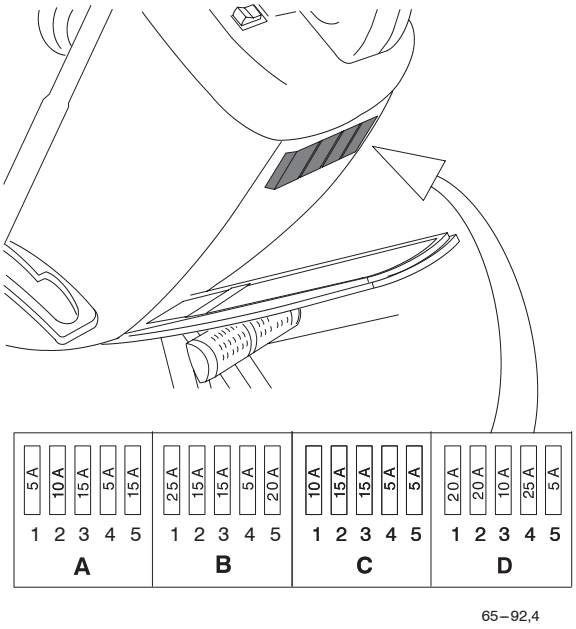

The fuse box is placed under the instrument panel. It is divided into four parts. The fuse rating is as follows: 5A (six), 10A (three), 15A (six), 20 A (three) and 25 A (two). In the component list the fuses are numbered from left to right.
Fuses must not be replaced with ones of a higher rating, as this may cause damage to the electrical

Downloaded from www.Manualslib.com manuals search engine

https://truckmanualshub.com/

equipment. **The fuse list** is on the component list of the wiring diagram on page 108.

When you need a continuous electrical supply eg. to the implement, illumination etc. power can be taken from the trailer connection (see page 53). With the implement control system (optional equipment) electrical power to the optional equipment can be switched on and off from the driver's cab.

Power for optional equipment can also be taken from the spare fuses or unused optional equipment fuses. A continuous power source can be connected from the main current pole of the starter motor (on the models with main circuit breaker, power is switched off with main switch) through the new fuse.

I 2.4. Headlight adjustment

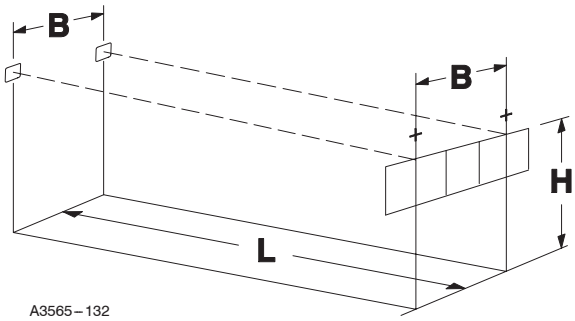

Correct adjustment of the headlights is very important when running on the public road.
Headlight adjustment can be carried out quickly and accurately by using an optical headlight adjusting unit. If no optical instrument is available, adjustment can be done as follows.

With dipped – beam switched on, the cutoff edge of the light pattern should come at height H when the tractor is at distance L. With full – beam switched on, the distance between the light points should be B. Any necessary adjustment is done by using the headlamp adjusting screws.

Measurements:

L = 5 m
B = Center distance between headlights
H = Height of headlights above ground minus 50 mm

If tractor has up lifted full/dipped beam headlights (on the top part of the cab), the lights have to be adjusted so, that the light pattern shines on the mark at a distance of 30 m on even ground.

I 3. Power transmission

I 3.1. Adjusting pedal free travel of propulsion clutch

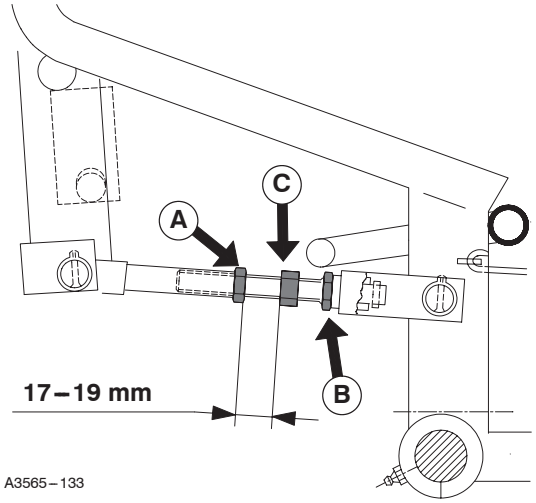

Check the pedal free travel at regular intervals. The pedal free travel should be **20 – 25 mm**. Carry out adjustment as follows:

– Slacken lock nut **A.**
– Screw the adjusting rod with nut **B** until the pedal free travel is correctly adjusted. Tighten the lock nut.
– When the restricting sleeve comes up against the lock nut further adjustment of the pedal free travel is no longer possible, therefore, the clutch disc must be changed. The measurement (17 – 19 mm) shown in the figure applies to a clutch with new disc.

I 3.2. Adjusting PTO clutch lever free travel

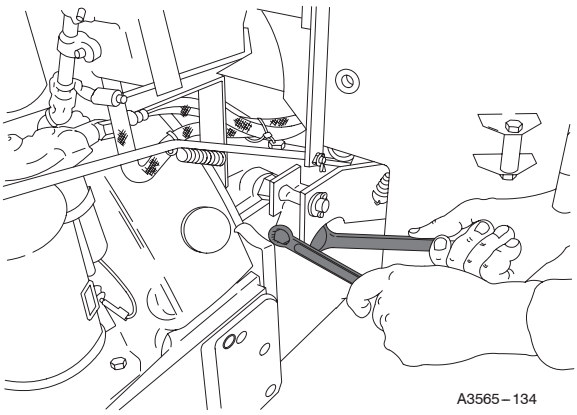

The free travel at the end of the lever should be **30 – 40 mm.**

Downloaded from www.Manualslib.com manuals search engine

https://truckmanualshub.com/

Adjusting:

– Slacken the lock nut.

– Turn the adjusting nut until the travel is correctly adjusted.
– Tighten the lock nut.

I 4. Brake system

I 4.1. Adjusting travel of brake pedals

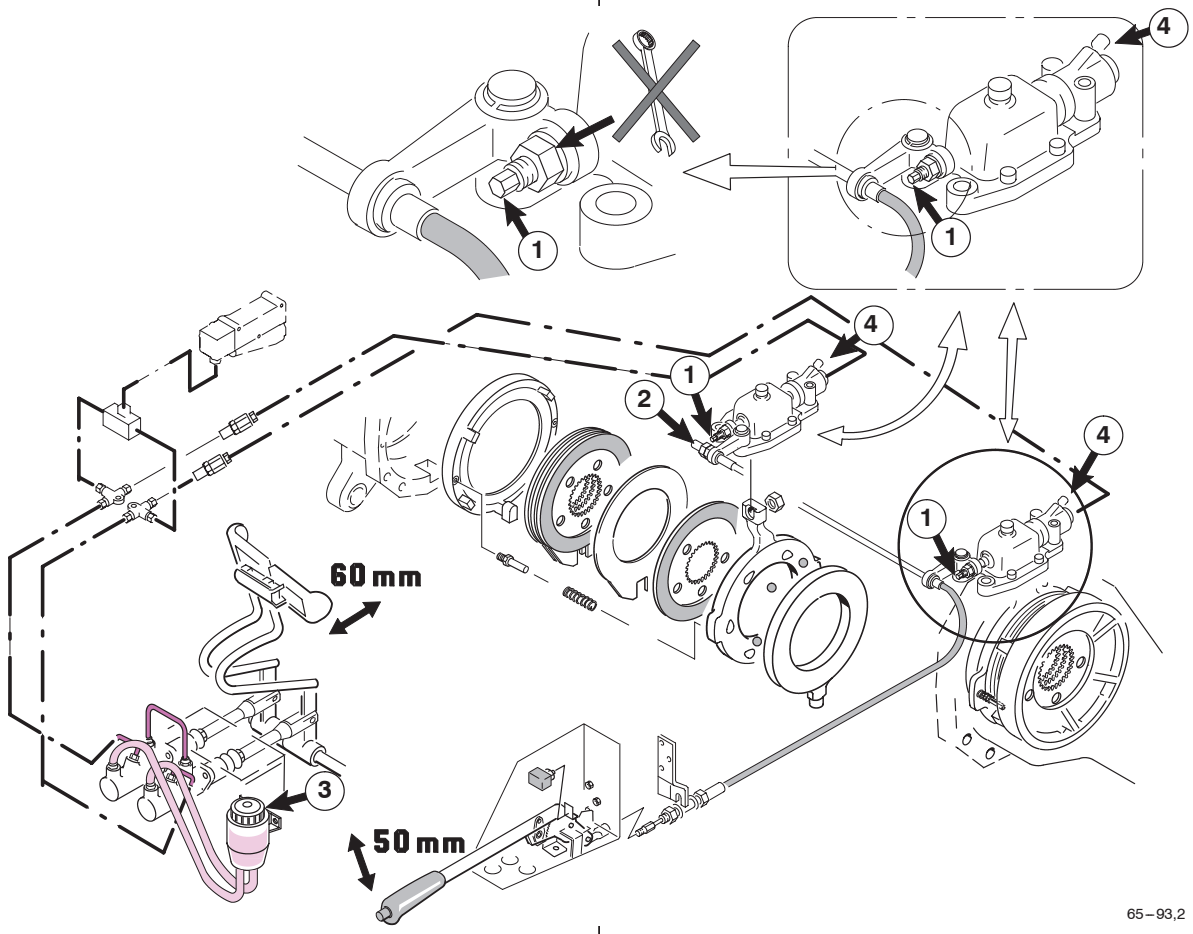

65 – 93,2

The travel should be **60 mm** with pedals connected together.

– Fit blocks in front of the front wheels to prevent the tractor from moving.
– Raise the rear end of the tractor off the ground and adjust both brakes separately by turning the brake rods (**1**) on the drive gear (**NOTE: with the ring spanner of 9 mm**, the fork spanner may slip) until the brakes are on.
– Slacken the brake rods 1 turn and check that the wheels can rotate freely.
– Check by driving with the pedals connected together that the brakes do not pull to one side.

Check the pedals free travel.

I 4.2. Adjusting parking brake

The parking brake is controlled mechanically and it is connected to the foot brake mechanism by a cable.
The parking brake is adjusted in the factory and re–adjustment is not necessary unless parts of brake mechanism have been changed (the parking brake is affected when the foot brakes are adjusted).

When necessary, adjust parking brake lever free travel to about 50 mm (at lever end) by turning the adjusting nut (**2**) at the rear end of the cable.

NOTE: Always adjust the driving brakes before adjusting the parking brake.

I 4.3. Bleeding brake system of air

NOTE: Check that the brake fluid reservoir (3) is full before starting to bleed the system.

Downloaded from www.Manualslib.com manuals search engine

https://truckmanualshub.com/

Bleed the brakes as the following (the brake pedals should not be latched together):

– Depress one of the brake pedals and at the same time open the bleed nipple (**4**) on the brake which is being actuated by the pedal. Before depressing the brake pedal and opening the bleeding nipple, pump several times with the pedal in order to build up the pressure in the system.
– Depress the brake pedal fully and close the nipple and slowly let the brake pedal up again.
– Repeat the pumping action with the brake pedal until the brake fluid which runs out at the bleeding nipple is completely free of air.
– The procedure for bleeding the brake is the same on both sides.
– Check the brake fluid amount in the reservoir after bleeding and top up if required.

If the tractor is equipped with the trailer brake valve and / or air pressure brakes, they must be bled before bleeding the brakes, because their bleeding nipples are placed lower down:

– the fluid brakes of the trailer, see the bleeding instructions on page 123.
– the air pressure brakes, see the bleeding instructions on page 121.

I 5. Steering system

I 5.1. Checking and adjusting toe–in of front wheels

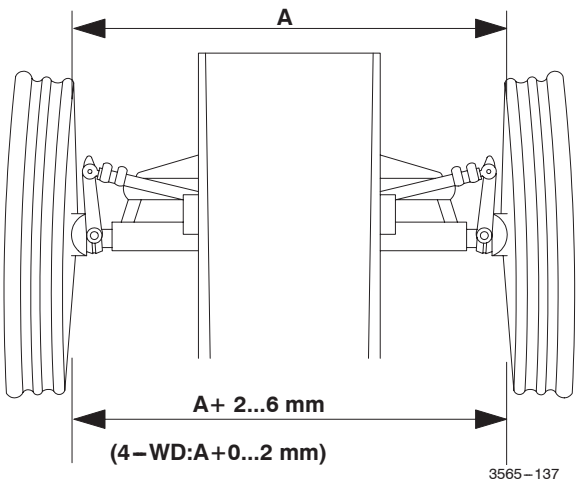

First check that there is no play on the ball joints of the steering arms and tie rod. Set the wheels for running straight ahead.

Checking

Make a vertical mark on the front edge of both front tyres/tires on the middle of the tread level with the hubs. Measure the distance between the marks. Roll the tractor forwards so that the marks again come level with the hub, this time at the rear edge. Measure the distance between the marks again. The measurement should be larger at the rear edge, **2–6 mm** more on two–wheel drive tractors and **0–2 mm** more on four-wheel drive tractors.

I 5.1.1. Adjusting toe–in 2WD

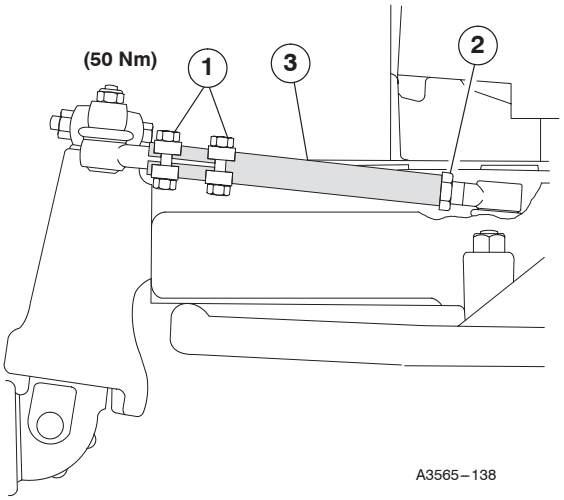

– Loosen the tie rod bolts (**1**) and slacken the locking nut (**2**).
– Turn the rod (**3**) to desired direction (one round at once). Lock the nut (**2**) and re–tighten the bolts (**1**) back.

Adjust both tie–rods so that there is no restriction of the steering lock. Check toe–in as before.

Downloaded from www.Manualslib.com manuals search engine

https://truckmanualshub.com/

I 5.1.2. Adjusting toe–in 4WD

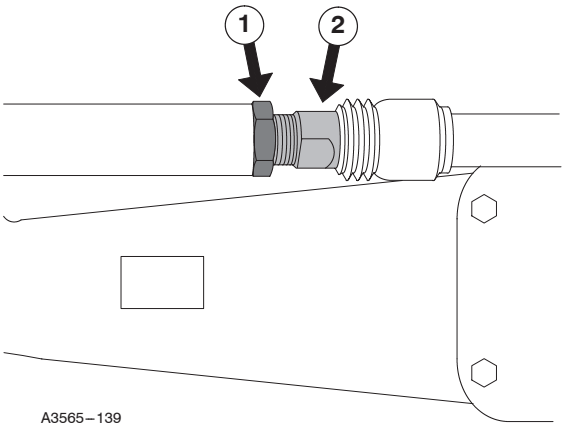

Slacken the locking screw (**1**) of the tie rod and turn the adjusting screw (**2**) in the desired direction. Tighten the locking screw.

Adjust both tie–rods so that there is no restriction of the steering lock. Check toe–in as before.

I 5.2. Limiting steering lock of front wheels (powered front axle)

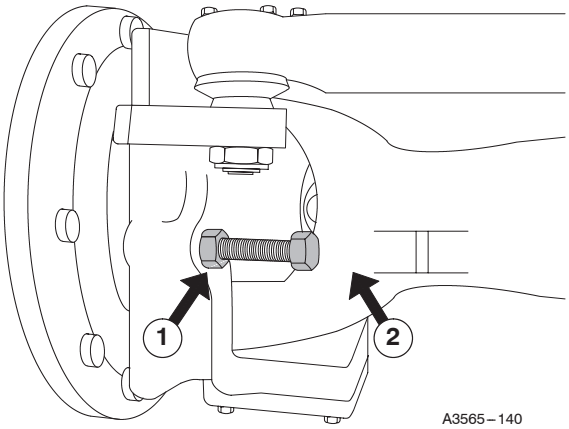

CAUTION: When altering the track width or when fitting a front loader, always make sure that the front wheels have free movement to full lock in both directions and that the front axle and the wheels can turn fully. If necessary adjust the steering lock stops on the powered front axle.
To carry out the adjustment slacken the locking nuts (**1**) and adjust the adjusting screws (**2**). After adjusting tighten the locking nuts.
NOTE: Adjust the adjusting screws of both sides to the same length, so that the turning angle is the same on both sides.

I 6. Adjusting track width

When track widths are adjusted or larger tyres/tires fitted, the turning angles have to be checked/adjusted for max turning angle of the front axle on both sides. Check also when using chains that the distance from the cab to the tyres/tires does not go below 80 mm. Check that the distance from parking lights to the outer sides of the tyres/tires does not exceed 400 mm.

I 6.1. Front axle

Apply the parking brake or scotch the rear wheels to ensure the tractor cannot move.

Downloaded from www.Manualslib.com manuals search engine

https://truckmanualshub.com/

I 6.1.1. 2WD axle

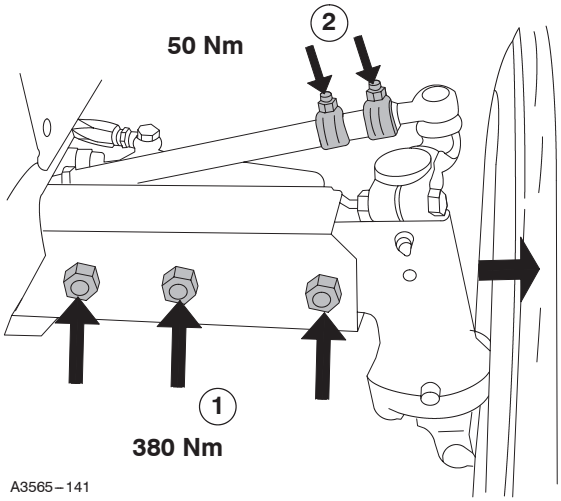

– Raise the front end with a jack under the centre of the front axle.

– Loosen and remove the bolts of the front axle (**1**) and tie rods (**2**)
– Pull out the axle until the desired track width is obtained.
– Move both tyres/tires the same distance.
– The front axle has three different track width possibilities.

Track widths, ”Specifications” are given on page 99. Refit the bolts and tighten the nuts.
NOTE: Check the toe – in after adjusting (instructions on page 91).

I 6.1.2. Powered front axle

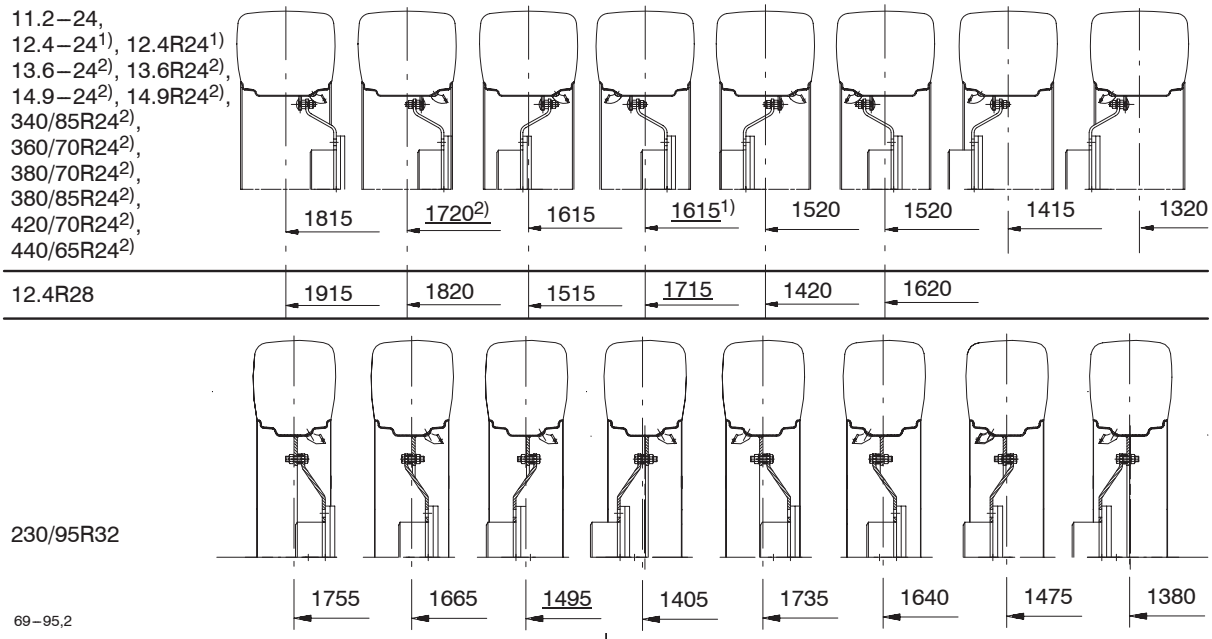

The standard track widths are underlined.

Adjusting front and rear wheel track widths is done in the same way.

Track width can be adjusted by changing the position of the wheel rim in relation to the central disc or by turning the wheel around (as shown above). Make sure that the arrows on the upper part of the tyres/tires are pointing forwards.

CAUTION: When altering the track width or fitting a front – mounted loader, check that the wheels do not go too far at maximum steering lock and axle pivoting movement, if necessary restrict the steering lock with the limiters fitted on the axle.

CAUTION: The toe – in of the front wheels must be checked again after any adjustment of the track width. The widest track width must not be used when running with large front – mounted loaders. (Loadings on the section ”Specifications” see page 96).

Lubricate the wheel nuts and tighten them to the recommended values. Wheel nuts must be retightened periodically (see technical specifications).

Downloaded from www.Manualslib.com manuals search engine

https://truckmanualshub.com/

I 6.2. Adjusting track width: Rear axle

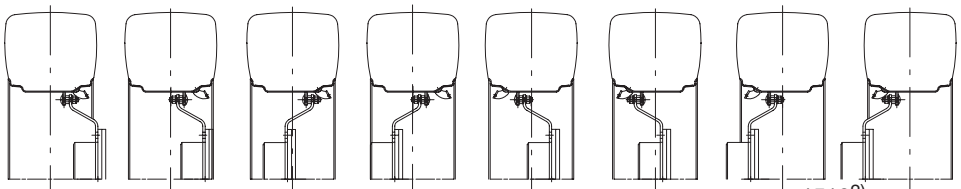

16.9–30, 16.9R30, 18.4R30, 480/70R30	2110	2010	1910	1810	1710	1610	1510[2]	1410[1]
16.9–34, 16.9R34, 18.4–34,18.4R34, 420/85R34, 460/85R34, 480/70R34, 520/70R34, 540/65R34, 13.6–38, 13.6R38, 14.9R38, 340/85R38	2110	2010	1710	1610	1910	1810	1510[2]	1410[1]
13.6–36, 13.6R36	2115	2010	1715	1610	1915	1810	1515	1410[1]

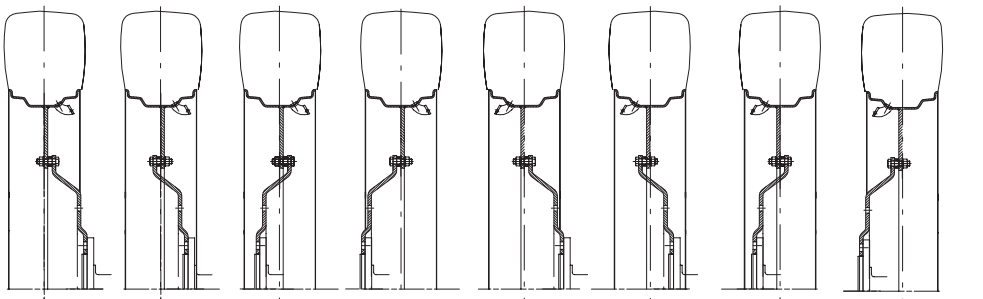

230/95R48	2020	1920	1620	1520	2000	1900	1600	1500

69–96,1

[1] Not in forest cab, in standard cab not with wider than 16.9 tyres/tires.
[2] With 16.9 or wider tyres tires not in forest cab.

Adjusting front and rear wheel track widths is done in the same way.

Before adjusting scotch the front wheels to prevent the tractor from moving. Raise the rear wheels off the ground and position sturdy axle stands under the axle housing.

The standard track widths are underlined.

I 7. If the tractor is not used

I 7.1. Storing the tractor

For a period shorter than two months

No special measures are required provided that:

– The tractor has been regularly maintained
– The tractor is clean and has been washed
– The coolant contains enough anti–corrosion liquid
– The fuel tank is full
– The battery is kept in a suitable place
– The air conditioning is operated for a few minutes at least once a month.

For a period longer than two months

– Clean, wash and lubricate the tractor
– Clean the fuel tank
– Fill the fuel tank with fuel
– Change prefilter of the fuel system, distributor models
– Change the fuel filter and bleed the fuel system of air
– Clean the air cleaner
– Change engine oil and oil filter
– Make sure that the coolant contains enough anti–corrosion liquid and check the charge in the battery
– Run the engine until it is thoroughly warm
– Lower the hydraulic lift to its lower position
– Stop the engine, unscrew the injectors and pour 0.1 liter of preserving oil into each cylinder.
– Crank the engine few rews. Refit the injectors with new gaskets.
– Remove the battery, clean it and store it in a cool dry place where there is an even temperature. Charge the battery every 2 months.
– Slacken the fan belt (compression belt)
– Protect exposed parts against corrosion by applying anti–corrosion oil.
– Cover the air induction pipe to the air cleaner and the exhaust pipe with a plastic bag or similar.
– Operate the air conditioning for a few minutes at least once a month

I 7.2. Removing the tractor from storage

After a period shorter than two months

– Fit the battery (fully charged)
– Check the oil level in the engine and transmission, the coolant level in the radiator, the electrolyte level in the battery and the tyre/tire pressures.

Downloaded from www.Manualslib.com manuals search engine

https://truckmanualshub.com/

– Carry out the general lubrication
– Bleed the fuel system if required
– Pour about 0.2 liter of motor oil into the turbocharger housing through the pressure oil pipe connection (models with turbo)
– Start the engine without racing it
– Test–run the tractor and make sure that everything works correctly.

After a period longer than two months

– Check the tyre/tire pressures
– Remove the protective covers
– Turn the radiator fan carefully forwards and backwards, so that the sealing ring of the coolant pump works loose (it may have stuck to the shaft).
– Wash off any anti–corrosion oil applied to the exterior of the tractor
– Tension the fan belt (compression belt)
– Remove the valve cover and lubricate the rocker mechanism with engine lubricating oil.
– Check the oil level in the engine and transmission, the coolant level in the radiator and the electrolyte level in the battery
– Bleed the fuel system of air
– Refit the battery (fully charged)
– Pour about 0,2 liter of motor oil into the turbocharger housing through the pressure oil pipe connection (models with turbo)
– Start the engine without racing it
– Test–run the tractor.

Downloaded from www.Manualslib.com manuals search engine

https://truckmanualshub.com/

J. Specifications

Specification information for the extra equipment are in section K, after each extra equipment.

J 1. Dimensions and weights (mm, kg)

Tractor	600–2, 700–2	600–4, 700–4	800–2, 900–2	800–4, 900–4
Tyres/tires rear	16.9R34	16.9R34	18.4R34	18.4R34
Tyres/tires front	10.00–16	12.4R24	11.00–16	14.9R24
Length	3745	3861	3877	4043
Width	2139	2139	2177	2177
Height to the exhaust pipe	2655	2655	2676	2700
Height to the roof [1)]	2660	2660	2695	2700
Ground clearance, front axle	505	427	505	472
Ground clearance, back (without trailer hitch)	460	450	495	495
Wheel base	2112	2255	2244	2387

[1)] With low cab, 155 mm lower.

Full tank, with overdrive, without agricultural drawbar, varies, depending on equipments (weights are determined according the EU directives).

Tractor	600–2	700–2	800–2	900–2
Rear/front tyres/tires	16.9R34/10.00–16	16.9R34/10.00–16	18.4R34/10.00–16	18.4R34/10.00–16
Total weight	3160	3210	3330	3360
Front axle (%)	1070 (34)	1100 (34)	1120 (34)	1140 (34)
Rear axle (%)	2090 (66)	2110 (66)	2210 (66)	2220 (66)

Tractor	600–4	700–4	800–4	900–4
Rear/front tyres/tires	16.9R34/13.6R24	16.9R34/13.6R24	18.4R34/14.9R24	18.4R34/14.9R24
Total weight	3390	3440	3560	3590
Front axle (%)	1280 (38)	1310 (38)	1330 (37)	1350 (38)
Rear axle (%)	2110 (62)	2130 (62)	2230 (63)	2240 (62)

J 2. Max permissible axle loadings (kg)

Disregarding limitations due to tyre/tire equipment

Tractor	600–2, 700–2/600–4, 700–4	800–2, 900–2/800–4, 900–4
On rear axle, max 40 km/h	4500/4500	4500/4500
On front axle, max 40 km/h	2050/2050	2050/2050
On front axle, max 8 km/h	–/3500	–/3500
Total weight, max 40 km/h	6500	6500

Downloaded from www.Manualslib.com manuals search engine

https://truckmanualshub.com/

J 3. Tyres/tires (alternative tyre /tire equipment (pairs))

4WD					
Rear	**Front**	**600**	**700, 800, 900**	**Long lower links**	**Fixed discs**
16.9–30/8	11.2–24/8	x	x		
16.9R30	12.4R24	x	x		
18.4R30	13.6R24	x	x		
480/70R30	360/70R24	x	x		
420/85R34	340/85R24	x	x		
16.9–34	13.6–24	x	x		
16.9R34	13.6R24	x	x		
460/85R34	380/85R24	x	x		
18.4R34	14.9R24		x	x	
18.4–34	14.9–24		x	x	
480/70R34	380/70R24	x	x	x	
520/70R34	420/70R24		x	x	
540/65R34	440/65R24	x	x	x	
340/85R38	340/85R24	x	x		
13.6R36	12.4R24	x	x		
13.6–36	12.4–24	x	x		
13.6R38	13.6R24	x [1)]	x		
13.6–38/8	13.6–24/8	x	x		
14.9R38	12.4R28		x		
230/95R48	230/95R32	x	x		
13.6R24/12IND	275/80R18	x	x		x
16.9R34IND	13.6R24/IND	x	x		x
18.4R34/IND	14.9R24/IND		x		x
16.9–34/14FOR	13.6–24/10FOR	x	x		x
18.4–34/14FOR	14.9–24/14FOR		x		x

[1)] Not all tyres/tires marks

Always contact your dealer to ensure the correct ratio is used.
When adjusting track widths or changing tyres/tires the turning angles must be checked/adjusted with maximum turning angles on both sides of the axle.

J 3.1. Tightening torques, wheel nuts

Front wheels, 2WD . . . . . 130 Nm
Front wheels, 4WD . . . . . 300 Nm
Rear wheels . . . . . 550 Nm
Rim/wheel disc, front and rear . . . . . 310 Nm

Downloaded from www.Manualslib.com manuals search engine

https://truckmanualshub.com/

J 3.2. Tyre/tire pressures and permissible loadings (30 km/h, R tyres/tires 40 km/h)

Rear wheels	Pressure (kPa)	Max. load per tyre/tire (kg)
16.9–30/8	170	2300
16.9R30/8	160	2300
18.4R30/8	160	2650
480/70R30	60	1450
	160	2575
16.9–34/8	170	2380
16.9R34/8	160	2430
18.4R34	160	2800
18.4–34/8	140	2565
420/85R34	160	2650
460/85R34	160	3075
480/70R34	160	2725
	60	1800
520/70R34	160	3150
	60	1775
540/65R34	160	2900
	60	1580
13.6R36/8	160	1750
13.6–36/6	160	1615
13.6–38/8	200	1950
13.6R38/8	160	1800
14.9R38/8	160	2060
340/85R38	160	2060
230/95R48	320	2240
13.6R24/12 IND	330	2585
18.4R34 IND	290	4850
16.9R34 IND	290	3935
16.9–34/14 FOR	260	3025
18.4–34/14FOR	260	3730

Front wheels	Pressure	Max. load per tyre/tire (kg)
10.00–16/8	280	1190
10.50–18/10	330	1605
11.00–16/8	160	1320
12.4–24/8	230	1415
12.4R24/8	160	1360
13.6R24	160	1450
13.6–24/8	200	1545
14.9R24	160	1700
14.9–24/8	180	1760
360/70R24	60	845
	160	1500
340/85R24	160	1650
380/70R24	60	930
	160	1650
380/85R24	160	1950
420/70R24	160	1900
	60	1070
440/65R24	160	1800
	60	990
12.4R28	160	1450
230/95R32	320	2000
275/80R18	240	1400
13.6R24 IND	330	2585
14.9R24 IND	330	3090
13.6–24/10 FOR	250	1790
14.9–24/14 FOR	300	1900

When using twin–mounted wheels note the following:

– the loading on these two wheels together can be multiplied by 1.76 of the permissible loading on one wheel.
– using twin–mounted wheels is for decreasing the surface pressure, not for obtaining better side support
– do not exceed tyre/tire size stated for the model, see table J 3, when using dual/extension wheels
– the track width of the inner wheels has to be adjusted to minimum value.
– when needed limited turning angle

Downloaded from www.Manualslib.com manuals search engine

J 4. Track widths, mm

Rear wheels	Track width	Front wheels	Track width
16.9–30, 16.9R30, 18.4R30, 480/70R30	1410[2)], 1510[3)], 1610, 1710, 1810, 1910, 2010, 2110	10.00–16, 11.00–16/8	1410–1510–1610[1)]
16.9–34, 16.9R34, 18.4–34, 18.4R34, 420/85R34, 460/85R34, 480/70R34, 520/70R34, 540/65R34, 13.6–38, 13.6R38, 14.9R38, 340/85R38	1410[2)], 1510[3)], 1610, 1710, 1810, 1910, 2010, 2110	11.2–24, 12.4–24, 12.4R24	1320, 1415, 1520, 1615, 1720, 1815
13.6–36, 13.6R36	1410[2)], 1515, 1610, 1715, 1810, 1915, 2010, 2115	13.6–24, 13.6R24, 14.9–24, 14.9R24, 340/85R24, 360/70R24, 380/70R24, 380/85R24, 420/70R24, 440/65R24	1320, 1415, 1520, 1615, 1720, 1815
230/95R48	1500, 1520, 1600, 1620, 1900, 1920, 2000, 2020	12.4R28	1420, 1515, 1620, 1715, 1820, 1915
13.6R24/12 IND	1620, 1900	230/95R32	1380, 1405, 1475, 1495, 1640, 1665, 1735, 1755,
18.4–34/14 FOR, 18.4R34 IND, 16.9R34 IND, 16.9–34/14 FOR	1650, 1880	275/80R18	1545, 1585
		13.6R24 IND, 13.6–24/10 FOR, 14.9–24/14 FOR, 14.9R24 IND	1430, 1710

Measured between middle of tyres/tires. Adjusting track width on page 92.

Fixed discs

[1)] First adjusting track widths, if rear tyres/tires are 34” or bigger. [2)] Not in forest cab, in standard cab not with wider than 16.9 tyres/tires. [3)] With 16.9 or wider tyres/tires not in forest cab.

In the cabin, the distance between the mudguards is 924 mm. In Forest model the left mudguard is 50 mm wider.

NOTE! Standard track widths are underlined. **When track widths are adjusted or larger tyres/tires fitted, the turning angles have to be checked/adjusted with max turning angle of front axle on both sides. When adjusting the rear axle track widths, check that the wheels rotate freely. Check when using chains that the distance from the cab to the tyres/tires is not less than 80 mm. Check further that the distance from parking lights to the outer sides of the tyres/tires does not exceed 400 mm.**

When using the narrow track widths for the rear axle, check that the lower links do not touch the tyres/tires. When required lock the side regulators.

J 5. Engine

Tractor	600	700	800	900
Engine type	Four–stroke direct injection diesel engine			
Turbocharger	No	Yes	Yes	Yes
Designation	320DE	320DSRE	420DSRE	420DSRE
No. of cylinders	3	3	4	4
Displacement dm^3	3.3	3,3	4,4	4.4
Stroke mm	120	120	120	120
Cylinder bore mm	108	108	108	108
Compression ratio	16.5:1	16,5:1	16,5:1	16.5:1
Power output kW DIN (hp) / r/min	44 (60) 2270	51 (70) 2270	59 (80) 2270	66 (90) 2270
Torque Nm/r/min	220/1400	290/1400	315/1400	350/1400
Moment rice %	19	34	27	26
Idling speed r/min	850	850	850	850
Max no load speed r/min	2470	2470	2470	2470
Valve clearance (cold or warm) mm	0.35	0,35	0,35	0.35

Downloaded from www.Manualslib.com manuals search engine

https://truckmanualshub.com/

J 5.1. Lubrication system (engine)

Complete pressure lubrication with gear pump through the main filter

Oil filter	disposable type filter element
Oil pressure at idling speed (min)	100 kPa (1.0 kp/cm^2)
Oil pressure at normal working speed	250–400 kPa (2.5–4 kp/cm^2)

For oil volumes and qualities, see table on page 63.

J 5.2. Fuel system and air filter

Fuel	diesel fuel
Injection pump:	
– 600	in–line pump
– 700, 800, 900	distributor pump
Injection order from beginning:	
– 600, 700	1–2–3
– 800, 900	1–2–4–3
Pump setting mark	on pulley of crankshaft
Feed pump:	
– 600	plunger pump
– 700, 800, 900	membrane pump
Fuel filter element	paper filter
Cold starting device	Thermostart, pre–heating of induction air
Air cleaner	dry paper element with blockage indicator
Safety filter	dry paper element
Pre–separator system:	
– 600, 700	Cyclone cleaner
– 800, 900	Ejector
Capacity, fuel tank	79 l
– with extra fuel tank	103 l

J 5.3. Coolant system

Coolant	anti–freeze agent+water
Temperature control	thermostat
Pump	centrifugal
Thermostat	79˚C
Winter thermostat	83˚C or 86˚C
Cooling fan:	
– 600, 700	6 fan blades, ø 432 mm
– (700), 800, 900	8 fan blades, ø 483 mm

For cooling system volumes, see table on page 63.

J 6. Electrical system

Battery	130 Ah
Voltage	12 V
Grounding	negative (–)
Starter motor	2.8 kW
Alternator	65A
Bulbs:	
– headlamps	60/55 W H4
– working lights (two)	55 W H3
– parking lights, brake lights	5 W, 5/21 W
– direction indicator lights	21 W
– instrument panel lights and warning lights	2 W – 1.2 W
– cab lights	5 W
Fuses	25 A (2 pcs)
	20 A (3 pcs)
	15 A (6 pcs)
	10 A (3 pcs)
	5 A (6 pcs)

Downloaded from www.Manualslib.com manuals search engine

https://truckmanualshub.com/

J 7. Power transmission

J 7.1. Clutch

Construction . . . . . double clutch
Clutch operation . . . . . pedal
– pedal force . . . . . 160 N (16 kp)
Power take–off clutch . . . . . lever
Disc diameter, propulsion clutch . . . . . 295 mm
Disc diameter, PTO clutch . . . . . 280 mm
Clutch facings . . . . . organic type
Pedal free travel . . . . . 20–25 mm
PTO clutch lever, free travel . . . . . 30–40 mm

Push buttons for HiShift, are available as extra equipment therefore, eliminating the need to use the foot clutch pedal.

J 7.2. Gearbox

Type . . . . . 4–step, fully synchronized, operated by lever

With forward/reverse unit:

Speed ranges . . . . . 3 ranges, operated by lever:
H = high range, synchronized
M = medium range, synchronized
LL = creeper range, no synchronized
Forward/reverse gear unit . . . . . synchronized, operated by lever
No. of speeds . . . . . 12+12

With overdrive:

Speed ranges/reverse gear . . . . . operated by the same lever
2 ranges
H = high range, synchronized
L = low range, synchronized
Overdrive . . . . . synchronized, opearted by own lever
No. of speeds . . . . . 16+8
Differential lock . . . . . mechanical lock, operated by lever
– indicator lamp . . . . . on instrument panel
Lubrication . . . . . built–in gear pump, oil filter
Flange distance, rear axle . . . . . 1750 mm
For oil volumes and qualities, see table on page 63.

J 7.3. Speed ranges (km/h)

J 7.3.1. Speed with forward/reverse unit

At max. engine speed of 2270 r/min. The reverse speeds are 1 % faster.

	13.6R24				13.R36, 13.6-36				16.9-30, 16.9R30, 480/70R30				18.4R30			
	LL	M	H		LL	M	H		LL	M	H		LL	M	H	
1	0.7	2.7	9.2	1	0.9	3.4	11.7	1	0.8	3.3	11.4	1	0.9	3.4	11.9	1
2	1.0	3.9	13.6	2	1.3	5.0	17.3	2	1.2	4.9	16.9	2	1.3	5.1	17.6	2
3	1.4	5.7	19.8	3	1.8	7.3	25.3	3	1.8	7.1	24.6	3	1.9	7.4	25.7	3
4	2.0	8.1	28.1	4	2.6	10.4	35.9	4	2.5	10.1	34.9	4	2.6	10.5	36.4	4

Downloaded from www.Manualslib.com manuals search engine

	16.9-34, 16.9R34, 420/85R34, 480/70R34, 540/65R34, 340/85R38				13.6-38, 13.6R38				14.9R38				18.4-34, 18.4R34, 460/85R34, 520/70R34, 230/95R48			
	LL	M	H		LL	M	H		LL	M	H		LL	M	H	
1	0.9	3.5	12.2	1	0.9	3.5	12.1	1	0.9	3.6	12.4	1	0.9	3.7	12.7	1
2	1.3	5.2	18.1	2	1.3	5.2	17.9	2	1.3	5.3	18.4	2	1.4	5.4	18.8	2
3	1.9	7.6	26.4	3	1.9	7.6	26.2	3	2.0	7.8	26.9	3	2.0	7.9	27.4	3
4	2.7	10.8	37.4	4	2.7	10.7	37.2	4	2.8	11.0	38.2	4	2.8	11.3	38.9	4

J 7.3.2. Speed with overdrive

At engine speed of 2270 r/min, overdrive = gears OR+L, OR+R and OR+H

	13.6R24	13.R36 13.6-36	16.9-30 16.9R30 480/70R30	18.4R30	16.9-34, 16.9R34, 420/85R34, 480/70R34, 540/65R34, 340/85R38	13.6-38 13.6R38	14.9R38	18.4-34, 18.4R34, 460/85R34, 520/70R34, 230/95R48	
L1	2,6	3,4	3,3	3,4	3,5	3,5	3,6	3,6	L1
OR+L1	3,0	3,9	3,8	3,9	4,1	4,1	4,2	4,2	OR+L1
L2	3,6	4,6	4,5	4,7	4,8	4,8	5,0	5,0	L2
OR+L2	4,2	5,3	5,2	5,4	5,6	5,6	5,7	5,7	OR+L2
L3	5,7	7,3	7,1	7,4	7,6	7,6	7,8	7,9	L3
OR+L3	6,5	8,4	8,2	8,5	8,8	8,8	9,0	9,1	OR+L3
L4	7,5	9,7	9,4	9,8	10,1	10,1	10,4	10,4	L4
OR+L4	8,7	11,1	10,8	11,2	11,6	11,6	11,9	12,0	OR+L4
H1	9,1	11,7	11,4	11,8	12,2	12,2	12,5	12,6	H1
OR+H1	10,5	13,5	13,1	13,6	14,0	14,0	14,4	14,5	OR+H1
H2	12,5	16,1	15,6	16,2	16,7	16,7	17,2	17,3	H2
OR+H2	14,4	18,5	17,9	18,6	19,2	19,2	19,8	19,9	OR+H2
H3	19,7	25,3	24,6	25,5	26,4	26,4	27,1	27,3	H3
OR+H3	22,6	29,1	28,3	29,3	30,3	30,3	31,1	31,3	OR+H3
H4	26,1	33,5	32,6	33,8	34,9	34,9	35,6	36,1	H4
OR+H4	30,0	38,5	37,5	38,8	40,2	40,2	41,2	41,5	OR+H4
R1	3,6	4,6	4,5	4,6	4,8	4,8	4,9	4,9	R1
OR+R1	4,1	5,3	5,1	5,3	5,5	5,5	5,6	5,7	OR+R1
R2	4,9	6,3	6,1	6,3	6,6	6,6	6,7	6,8	R2
OR+R2	5,6	7,2	7,0	7,3	7,5	7,5	7,7	7,8	OR+R2
R3	7,7	9,9	9,6	10,0	10,3	10,3	10,6	10,7	R3
OR+R3	8,9	11,4	11,1	11,5	11,9	11,9	12,2	12,3	OR+R3
R4	10,2	13,1	12,8	13,2	13,7	13,7	14,1	14,1	R4
OR+R4	11,7	15,1	14,7	15,2	15,7	15,7	16,2	16,3	OR+R4

Downloaded from www.Manualslib.com manuals search engine

https://truckmanualshub.com/

J 7.4. Power take–off

2 Nominal PTO speeds r/min . . . . . 540/1000 r/min or 540/540E (750) r/min

Engine speeds in different PTO alternatives			
	Engine speed at PTO speed		
PTO speeds	540	540E (750)	1000
540 + 540E	1890	1594 (2214)	–
540 + 1000	1890	–	2074

PTO shaft ISO 500–1979 Z6 . . . . . ø35 mm

Control . . . . . mechanically by a lever between 2 PTO speeds, different clutch which is controlled by a separate lever

Lower link end distance from PTO shaft (T–measure, mm)	
The length of the lower links (mm)	PTO shaft 6–splines
900	652
980	732

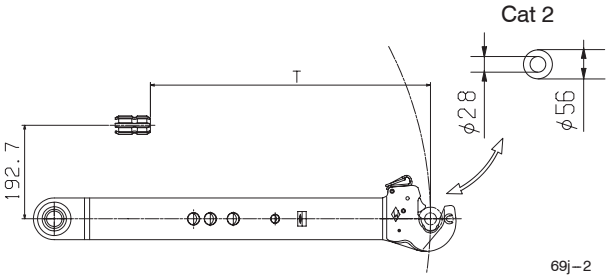

J 7.4.1. Running speed at different nominal revs of the rear PTO (km/h)

There are speed tables only for small, medium and large tyres/tires, the dynamic rolling radius is in brackets. The values for other tyres/tires can be found by comparing with those in the table.

1. Forward/reverse models

	16.9–30, 16.9R30, 480/70R30 (dynamic rolling radius R = 695 mm)				13.6–38, 13.6R38 (dynamic rolling radius R = 740 mm)			
r/min	540E	540	1000	r/min	540E	540	1000	r/min
r/min	1594	1890	2074	r/min	1594	1890	2074	r/min
LL1	0.6	0.7	0.8	LL1	0.6	0.7	0.8	LL1
LL2	0.9	1.0	1.1	LL2	0.9	1.1	1.2	LL2
LL3	1.3	1.5	1.6	LL3	1.3	1.6	1.7	LL3
LL4	1.8	2.1	2.3	LL4	1.9	2.2	2.5	LL4
M1	2.3	2.7	3.0	M1	2.5	2.9	3.2	M1
M2	3.4	4.1	4.5	M2	3.6	4.3	4.7	M2
M3	5.0	5.9	6.5	M3	5.3	6.3	6.9	M3
M4	7.1	8.4	9.2	M4	7.5	8.9	9.8	M4
H1	8.0	9.5	10.4	H1	8.5	10.1	11.1	H1
H2	11.8	14.0	15.4	H2	12.6	14.9	16.4	H2
H3	17.3	20.5	22.5	H3	18.4	21.8	23.9	H3
H4	24.5	29.1	31.9	H4	26.1	30.9	34.0	H4

Downloaded from www.Manualslib.com manuals search engine

	18.4-34, 18.4R34, 460/85R34, 520/70R34, 230/95R48 (dynamic rolling radius R = 770 mm)			
r/min	540E	540	1000	r/min
r/min	1594	1890	2074	r/min
LL1	0.6	0.8	0.8	LL1
LL2	1.0	1.1	1.2	LL2
LL3	1.4	1.7	1.8	LL3
LL4	2.0	2.4	2.6	LL4
M1	2.6	3.1	3.4	M1
M2	3.8	4.5	5.0	M2
M3	5.6	6.6	7.2	M3
M4	7.9	9.4	10.3	M4
H1	8.9	10.6	11.6	H1
H2	13.2	15.6	17.2	H2
H3	19.3	22.8	25.1	H3
H4	27.3	32.4	35.6	H4

2. Overdrive models

16.9–30, 16.9R30, 480/70R30 (dynamic rolling radius R = 695 mm)							
Base gear				Overdrive			
r/min	540E	540	1000	r/min	540E	540	1000
r/min	1594	1890	2074	r/min	1594	1890	2074
L 1	2.3	2.7	3.0	OR+L 1	2.7	3.1	3.5
L 2	3.2	3.8	4.1	OR+L 2	3.6	4.3	4.7
L 3	5.0	5.9	6.5	OR+L 3	5.7	6.8	7.5
L 4	6.6	7.8	8.6	OR+L 4	7.6	9.0	9.9
H 1	8.0	9.5	10.4	OR+H 1	9.2	10.9	12.0
H 2	11.0	13.0	14.3	OR+H 2	12.6	14.9	16.4
H 3	17.3	20.5	22.5	OR+H 3	19.9	23.6	16.4
H 4	22.9	27.1	29.8	OR+H 4	26.3	31.2	34.2

13.6–38, 13.6R38 (dynamic rolling radius R = 740 mm)							
Base gear				Overdrive			
r/min	540E	540	1000	r/min	540E	540	1000
r/min	1594	1890	2074	r/min	1594	1890	2074
L 1	2.5	2.9	3.2	OR+L 1	2.8	3.4	3.7
L 2	3.4	4.0	4.4	OR+L 2	3.9	4.6	5.0
L 3	5.3	6.3	6.9	OR+L 3	6.1	7.2	8.0
L 4	7.0	8.3	9.2	OR+L 4	8.1	9.6	10.5
H 1	8.5	10.1	11.1	OR+H 1	9.8	11.6	12.7
H 2	11.7	13.8	15.2	OR+H 2	13.4	15.9	17.5
H 3	18.4	21.8	23.9	OR+H 3	21.2	25.1	17.5
H 4	24.4	28.9	31.7	OR+H 4	28.0	33.2	36.4

Downloaded from www.Manualslib.com manuals search engine

18.4-34, 18.4R34, 460/85R34, 520/70R34, 230/95R48 (dynamic rolling radius R = 770 mm)								
Base gear					Overdrive			
r/min	540E	540	1000		r/min	540E	540	1000
r/min	1594	1890	2074		r/min	1594	1890	2074
L 1	2.6	3.0	3.3		OR+L 1	2.9	3.5	3.8
L 2	3.5	4.2	4.6		OR+L 2	4.0	4.8	5.3
L 3	5.5	6.6	7.2		OR+L 3	6.4	7.5	8.3
L 4	7.3	8.7	9.5		OR+L 4	8.4	10.0	11.0
H 1	8.9	10.5	11.5		OR+H 1	10.2	12.1	13.2
H 2	12.1	14.4	15.8		OR+H 2	14.0	16.6	18.2
H 3	19.1	22.7	24.9		OR+H 3	22.0	26.1	18.2
H 4	25.4	30.1	33.0		OR+H 4	29.1	34.6	37.9

J 7.4.2. Power take–off output

Tractor	600	700	800	900
Max. power take–off output (kW), at nominal revs of 540 r/min (engine speed 1890 r/min)	36	44.5	49.5	54
Max. power take–off output (kW), at nominal revs of 1000 r/min (engine speed 2074 r/min)	37.5	46.5	51.5	58

J 7.5. Powered front axle

Differential brake . . . . . automatic differential brake
Overall reduction 15.76
Ratio front axle/rear axle 1.342
Oil volume in differential . . . . . 6.5 l
Oil volume in hubs . . . . . 2 x 0.8 l
Flange distance, front axle 4WD . . . . . 1580 mm
Steering angle, adjustable . . . . . stepless adjustment max 55°
Pivoting . . . . . ±13.5°
Camber . . . . . 1°
King pin inclination . . . . . 5°
Caster . . . . . 0°
Toe–in . . . . . 0–2 mm
For oil volumes and qualities, see table on page 63.

J 7.6. 2WD axle

Construction . . . . . beam design
Pivoting . . . . . ±13°
Camber . . . . . 2°
King pin inclination . . . . . 8°
Caster . . . . . 0°
Flange distance, front axle 2WD 1390, 1490, 1590
Toe–in . . . . . 2–6 mm

J 8. Brakes

Type . . . . . disc brakes of multi–disc type running in oil
No. of brake discs . . . . . 4+4 kpl
Friction area . . . . . 2950 cm^2
Pedal free travel . . . . . 50 mm
Parking brake . . . . . mechanically operated, acting on running brakes

J 9. Steering system

Hydrostatic steering with separate pump or oil supply from hydraulic main pumps via priority valve.
Steering cylinder . . . . . 2–side piston

Downloaded from www.Manualslib.com manuals search engine

https://truckmanualshub.com/

Steering pump . . . . . gear pump or common oil supply with hydraulics
Steering pump revolution volume, theoretical . . . . . 14 cm^3/r (32 l/min/2270 r/min) or 22 cm^3/r (52 l/min/2270 r/min)
Max. pressure . . . . . 9 MPa (90 kp/cm^2)
Steering valve revolution volume, theoretical . . . . . 100 cm^3/r
Shock valve opening pressure . . . . . 16 MPa
Steering wheel rotation 4.6

J 9.1. Turning radius

Tractor	600, 700 (with track width 1615 mm) (50°)	800, 900 (with track width 1720 mm) (50°)
Turning radius without steering brakes (front wheel drive disengaged/ front wheel drive engaged) m	4,6/5,0	4,8/5,2

Turning radius without steering brake, 2 WD models 600–700; 3.5 m, 800–900; 3.6 m.

J 10. Working hydraulics

Three points linkage of category II
Pump type . . . . . gear pump
Pump driving . . . . . from timing gears of motor
Pump volume, theoretical . . . . . 16 cm^3/r or with priority valve (standard on models 800, 900)
11 cm^3/r + 11 cm^3/r = 22 cm^3/r
Pump capacity . . . . . 36 l/min/2270 r/min, (max 40 l/min) or 52 l/min/2270 r/min, (max 55 l/min), (standard on models 800, 900)
Max pressure, capacity 36 l/min . . . . . 18 MPa
capacity 52 l/min . . . . . 19 MPa
Shock valve opens at . . . . . 20 MPa
The capacity of hydraulic system with priority valve, measured from output:
– max. power . . . . . 15 kW (17 MPa, 53 l/min)
Pressure filter . . . . . replaceable paper filter
Suction filter . . . . . washable metal gauze filter
Available volume of oil for auxiliary hydraulics . . . . . 24 or 14 l (depends on filling quantity)
Continuous pressure
(e.g. hydraulic motor operation) . . . . . 10 MPa

J 10.1. Hydraulic lift, functions

Tractor	Lower link type	The length of the lower links
600, 700	Category 2, telescopic lower links or Ball–Hitch lower links (extra equipment)	900 mm (980 mm if tyres/tires diameter are 18.4–34 or bigger)
800, 900 (with extra lifting cylinder)		

J 10.1.1. Max. lifting force, (kN)

Tractor	600, 700 (without extra lifting cylinder)	800, 900
Links mounted on rear points	28	33
Links mounted on front points	25	29

Lifting range at end of lower links:
– links mounted on rear points . . . . . 675 mm
– links mounted on front points . . . . . 750 mm

J 10.1.2. On mechanically controlled hydraulic lift

Position control, lowering speed control, draft control with variable sensitivity (by altering connecting points of top link, 4 positions) and auxiliary hydraulic operations.

J 10.1.3. On electrohydraulically controlled hydraulic lift

Position control, lowering speed control, transport height adjustment, sensitivity control, 6 different positions (additional by moving the fastening point of the top link, 4 different positions, in all 24 different sensitivity positions), drive balance control and auxiliary hydraulic operations.

Downloaded from www.Manualslib.com manuals search engine

https://truckmanualshub.com/

J 10.1.4. Valves for auxiliary hydraulics

As standard one 2/1–acting valve of 3–positions and one 2–acting valve of 4–positions, the float position is locked, as option two extra valves and a brake valve for trailer can be mounted.

J 11. Other specifications

J 11.1. The capacity of the cab filter

Standard filter (dop test, 300 m^3) . . . . . > ø 0.2 µm 10 %, > ø 1 µm 20 %, > ø 5 µm 90 %, > ø 8 µm 100 %

Active coal filter, cab (dop test, 200 m^3) . . . . . > ø 2 µm 100 %, from gases > 98 %

J 11.2. Code number table for calibrating

The code numbers of the table are used when calibrating the Agroline instrument panel after changing tyres/tires.

Code numbers with different tyre/tire sizes and transmission types

Rear wheel	Code num-bers		Rear wheel	Code num-bers
12.4R36	148		18.4–34	136
13.6–36	147		18.4R30	142
13.6–38	140		18.4R34	132
13.6R24	186		18.4R38	124
13.6R36	145		20.8R38	119
13.6R38	140		230/95R48	130
14.9–30	156		340/85R38	140
14.9R38	135		420/85R34	138
16.9–30	151		460/85R34	132
16.9–34	138		480/70R30	147
16.9R30	148		480/70R34	139
16.9R34	138		520/70R34	132
16.9R38	129		540/65R34	137

NOTE: If a tractor has tyres/tires which are not listed in this table, the code number can passably be calculated as follows:

$$X = \frac{Y \times V}{V_{max}}$$ in which

X= correct code number
Y= actual code number in AL–instrument
V= tractor's constructional speed (30 or 40 km/h)
V_{max}=tractor's max driving speed which is shown by AL–instrument

Example:

In AL–instrument there is an actual code number 155. Tractor's constructional speed is 40 km/h. AL–instrument shows the tractor max. driving speed of 39 km/h.

$$X = \frac{155 \times 40}{39} = 159$$

Downloaded from www.Manualslib.com manuals search engine

https://truckmanualshub.com/

J 12. Wiring diagram, component list (Wiring diagram on pages 110–112)

Component list number 33202100 L

Optional or alternative equipment listed in brackets

Sym-bol	Component	Code no
A1	Current screw, cabin supply	1
(A2)	Radio	38
(A3)	Controller, front PTO	22
(A5)	Air suspension seat	32
B1	Sensor, engine temperature gauge	8, 59
B2	Sensor, fuel gauge	9
(B3)	Sensor, gearbox temperature*	49
(B6)	Sensor, gearbox*	47
E1	Headlight, right	30
E2	Headlight, left	29
E3	Front direction indicator, right	36
E4	Front direction indicator, left	35
E5	Rear light, right	37
E6	Rear light, left	34
E7	Cab light	18
E8	Thermostart	4
E9	Rear working light, right	25
E10	Rear working light, left	25
(E11)	Front working light, right	26
(E12)	Front working light, left	26
E13	Instrumentation lights	8, 10
(E15)	Cigarette lighter	16
(E16)	Number plate light	34
(E17)	Raised headlights, right	28
(E18)	Raised headlight, left	27
(E19)	Fog light, rear	52
(E22)	Lights on roof console	57
	FA, FB, FC, FD Fuses	
FA1	5A Instruments, ind.lights, Autocontrol, fuel gauge	9, 44
FA2	10A Rot. warning light, radio	24
FA3	15A Wiper+washer, rear wiper+washer	12
FA4	5A Front PTO, light switch illum. light, current socket	28
FA5	15A Direction indicators, braking lights, reverse buzzer, air suspen. seat, warning flashers	38, 58
FB1	25A Light switch	29
FB2	15A Dipped beams	29
FB3	15A Full beams, –indication light	29
FB4	5A Autocontrol	43
FB5	20A Starter switch, electric–stop, rear fog light, control stop, Thermostart	3, 52, 60
FC1	10A Cigarette lighter, cab light	17
FC2	15A Rear working lights	25
FC3	15A Horn, rear socket, front working lights, hazard warning flashers	40
FC4	5A Left parking light, instrumentation lights, working light switches, hazard warning flashers illum. light	35
FC5	Parking light, right	36
FD1	20A Fan, upper fan I–II-speed, Air–conditioner	12
FD2	20A Air–conditioner, upper fan III-speed	56
FD3	10A HiShift, PTO–HiShift, radio	62–63
FD4	25A Current socket	64
FD5	5A Radio, (clock*), light alarm buzzer	1
	In engine room	
(F51)	15A Electrically controlled main circuit breaker	70

Sym-bol	Component	Code no
G1	Battery	1
G2	Alternator	3
H1	Indicator light, direction indicators II	40
H2	Indicator light, direction indicators I	39
H4	Indicator light, air filter	6
H5	Indicator light, engine oil pressure	7
H6	Warning light, Stop, engine temperature	7, 59
(H7)	Indicator light, gearbox oil pressure	
H11	Indicator light, parking brake	9
(H12)	Indicator light, Thermostart	5
H13	Indicator light, PTO clutch	6
H14	Indicator light, high beams	31
H15	Indicator light, fuel reverse	9
H16	Indicator light, charging	4, 68
H20	Indicator light, differential lock	5
H23	Horn	40
(H24)	Rotating light	24
(H27)	Rear buzzer	58
H30	Light alarm buzzer	47
H31	Direction indicator, left	39
H32	Direction indicator, right	35
K1	Auxiliary relay, starter (ignition switch)	2
K2	Direction indicator relay	39
(K3)	Relay, front working lights	26
K4	Relay, rear working lights	26
K5	Headlight dipper switch relay	29
K6	Auxiliary relay, starter switch	5
(K7)	Relay, rear fog light	52
(K8)	Relay, roof fan III–speed	56
K9	Auxiliary relay, starter switch	6
(K18)	Relay, control stop	60
(K24)	Reley, HiShift	63
(K25)	Relay, PTO–HiShift	65
(K51)	Relay, indicator light, contr. main current switch	69
M1	Starter motor	2
M2	Heater fan	12
M3	Windscreen wiper	15
M4	Windscreen washer pump	14
(M5)	Roof fan	55
(M6)	Rear window wiper	20
(M7)	Rear window washer	19
P1	Engine temperature gauge	8
P2	Fuel gauge	9
P3	Rev counter	10
P4	Hour recorder/AC (.../speed*)	11
(P5)	Clock, AC, trip, gearbox oil temperature*	47
(Q2)	Main circuit breaker	1
R1	Resistance, heating fan 1,2 ohm	12
S1	Ignition switch	2, 60
(S2)	Switch, roof fan	55
(S3)	Switch, rear window wiper and washer	18
S4	Switch, windscreen wiper and washer	15
S5	Switch, heater fan	13
(S6)	Switch, rotating warning light	23
S7	Switch, headlights	29
S8	Switch, rear working lights	25
(S9)	Switch, front working lights	27
S10	Combined switch	32
(S11)	Toggle switch, raised headlights	29
S12	Contact, starter interlock	2
S13	Brake light contact	35

Downloaded from www.Manualslib.com manuals search engine

https://truckmanualshub.com/

Wiring diagram, component list (Wiring diagram on pages 110–112)

Sym–bol	Component	Code no
S14	PTO warning light contact	6
S15	Indicator light switch, engine oil press.	7
S16	Switch, hazard warning flashers	36
S17	Indicator light switch, diff. lock	6
S18	Indicator light switch, hand brake contact	10
(S19)	Contact, reverse buzzer	58
S20	Indicator light switch, engine temperature, (Stop)	8, 59
S21	Indicator light switch, air cleaner	6
(S22)	Switch, air conditioning	54
(S23)	Switch, compressor pressure	54
(S26)	Switch, rear fog light	51
(S36)	Switch, control stop	61
(S37)	Switch, cursor+program*	47
(S38)	Contact, front PTO	22
S42	Door switch, cab light, right	18
S43	Door switch, cab light, left	18
(S45)	Switches, HiShift	62–63
(S45.1)	Extra switch, HiShift	62
(S68)	Switch, controlled main current switch	70
(S69)	Switch, PTO–HiShift	69
(V5)	Diodes, HiShift	62–63
(V6)	Diodes, PTO–HiShift	65–66
	Connectors	
X1	37–pins, engine	
X2	9–pins, head lights	29–30
X4	7–pins, trailer socket	37, 53
X4.1	3–pins, trailer socket	37, 53
X4.2	3–pins, trailer socket	37, 53
X5	9–pins, mudguard right	
X6	9–pins, mudquard left	
(X7)	4–pins, air condition	
(X8)	2–pins, current socket	38
(X9)	1–pins, rear wiper	17
(X15)	3–pins, air conditioning, diodes	54
X20	9–pins, front direction indicators	
(X22)	2–pins, rotating light	
X25	9–pins, Agrodata–instrumentation	
X26	26–pins, instrumentation, white	
X27	26–pins, instrumentation, blue	
(X42)	4–pins., front–PTO supply	22
(X44)	1–pin, control stop, optional equipment	59
(X49)	2–pins, air suspension seat	32
X50	3–pin, current socket	64
X51	1–pin, rear buzzer	
Y1	Solenoid valve, electric stop	5, 60
(Y5)	Magnetic clutch, compressor, air condition	54
(Y9)	Solenoid valve, front PTO	22
(Y14)	Solenoid valve, HiShift	62
(Y15)	Solenoid valve, HiShift, retardation	63
(Y16)	Solenoid valve, PTO–HiShift	65
(Y17)	Solenoid valve, PTO–HiShift, retardation	66
	Ground leads	
GR1	Battery	
GR2	Headlights (starter)	
GR3	Instrument panel	
GR4	Earth lead, rear right	
GR5	Cabin roof	
GR6	Cabin front wall	
*)	AL–instrumentation	47–49

Sym–bol	Component	Code no
	ACB Autocontrol power lift	
A1E	Autocontrol electronic unit	42–44
A2E	Switch panel	45
B1E	Position sensor	41
B2E	Draft sensor	41
E1E	Lightning, switch panel	45
E2E	Lightning, position control potentiometer	46
R1E	Potentiometer, position control	45
S1E	Push button, RH mudguard, lifting	43
S2E	Push button, RH mudguard, lowering	43
S3E	Push button, LH mudguard, lifting	42
S4E	Push button, LH mudguard, lowering	42
S5E	Push button, lift/lower, inside	44
S7E	Switch, lowering speed	45
S8E	Switch, transport height	45
S9E	Switch, position/draft control sensitivity	45
S10E	Rocker switch, lift/stop/lower	45–46
S11E	Switch, AC–bypass	44–45
S12E	Switch, drive balance control	45
X2E	Connector, 9 pins, supply+rear drive switch	42
Y1E	Solenoid valve, lowering	41
Y2E	Solenoid valve, lifting	41

Wire colours

VA = white
HA = grey
KE = yellow
VI = green
SI = blue
LI = lilac
PU = red
RU = brown
MU = black

Downloaded from www.Manualslib.com manuals search engine

https://truckmanualshub.com/

J 13. **Wiring diagram** (component list on pages 108 – 109)

33202000O

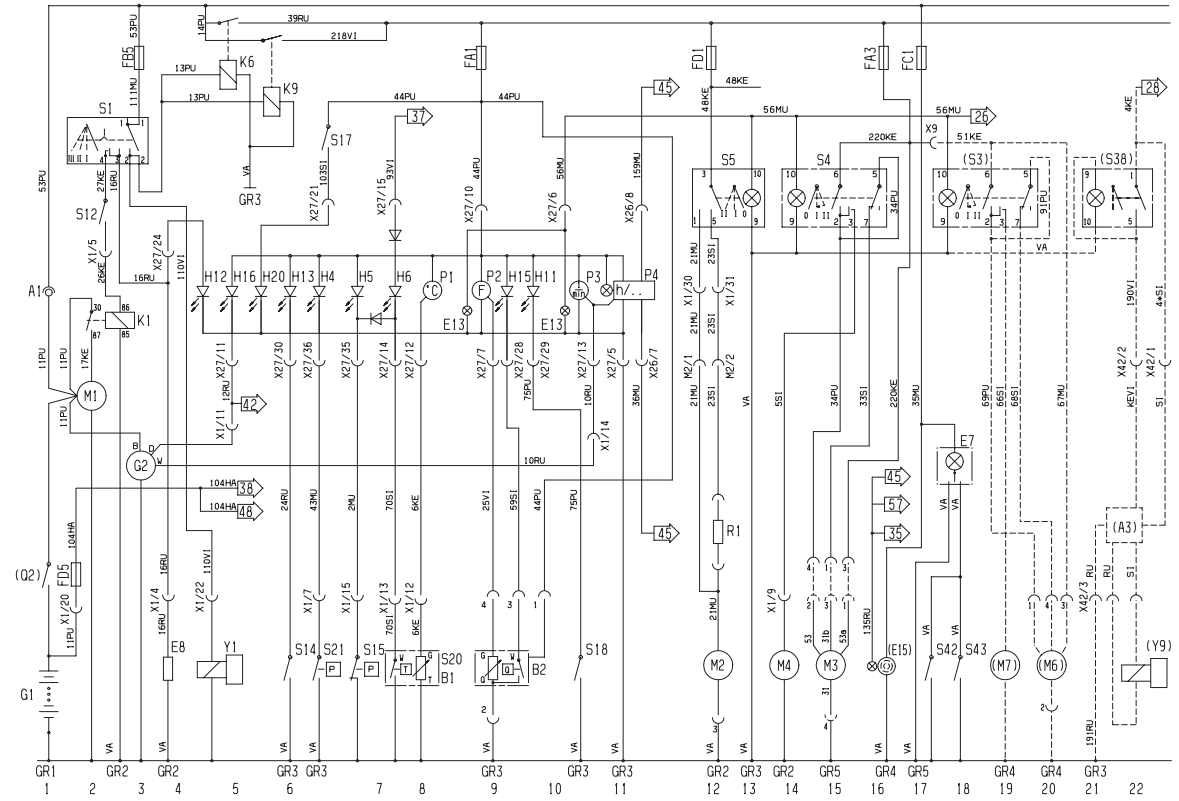

69 – 1

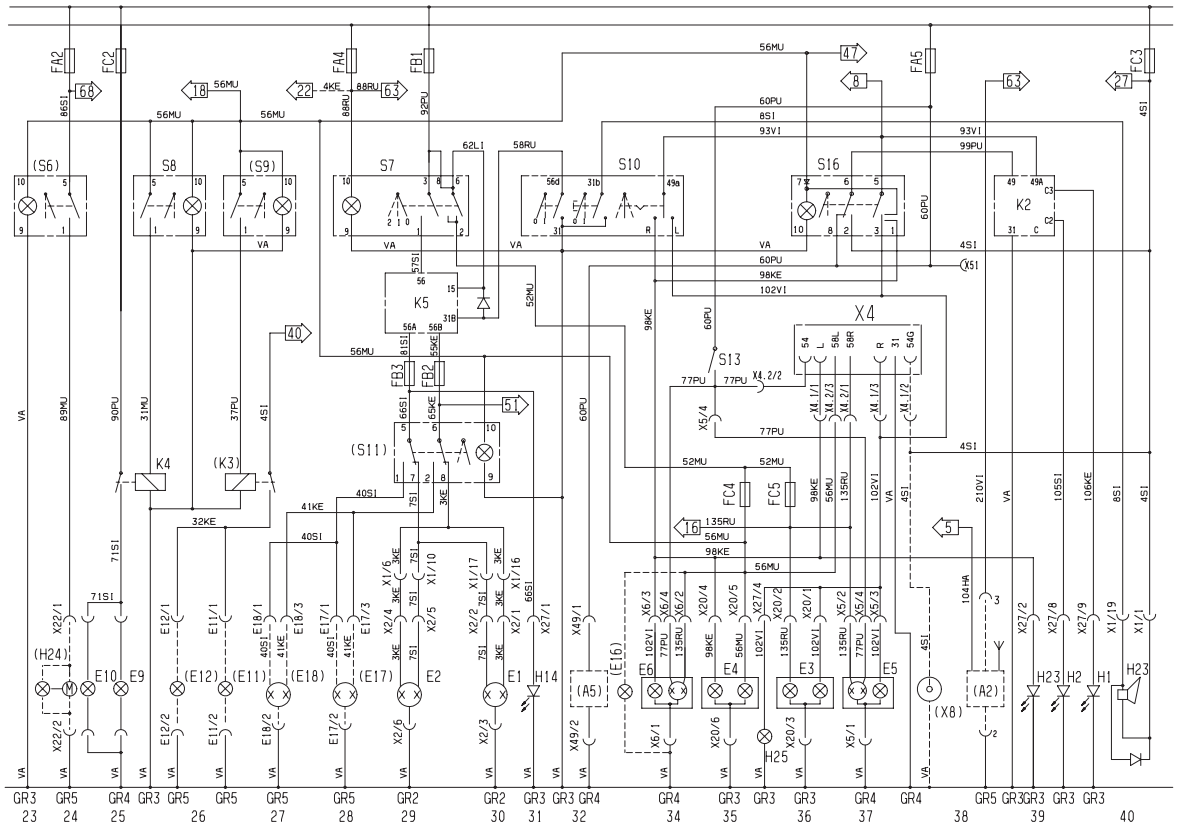

69 – 2

Downloaded from www.Manualslib.com manuals search engine

https://truckmanualshub.com/

Wiring diagram (component list on pages 108–109)

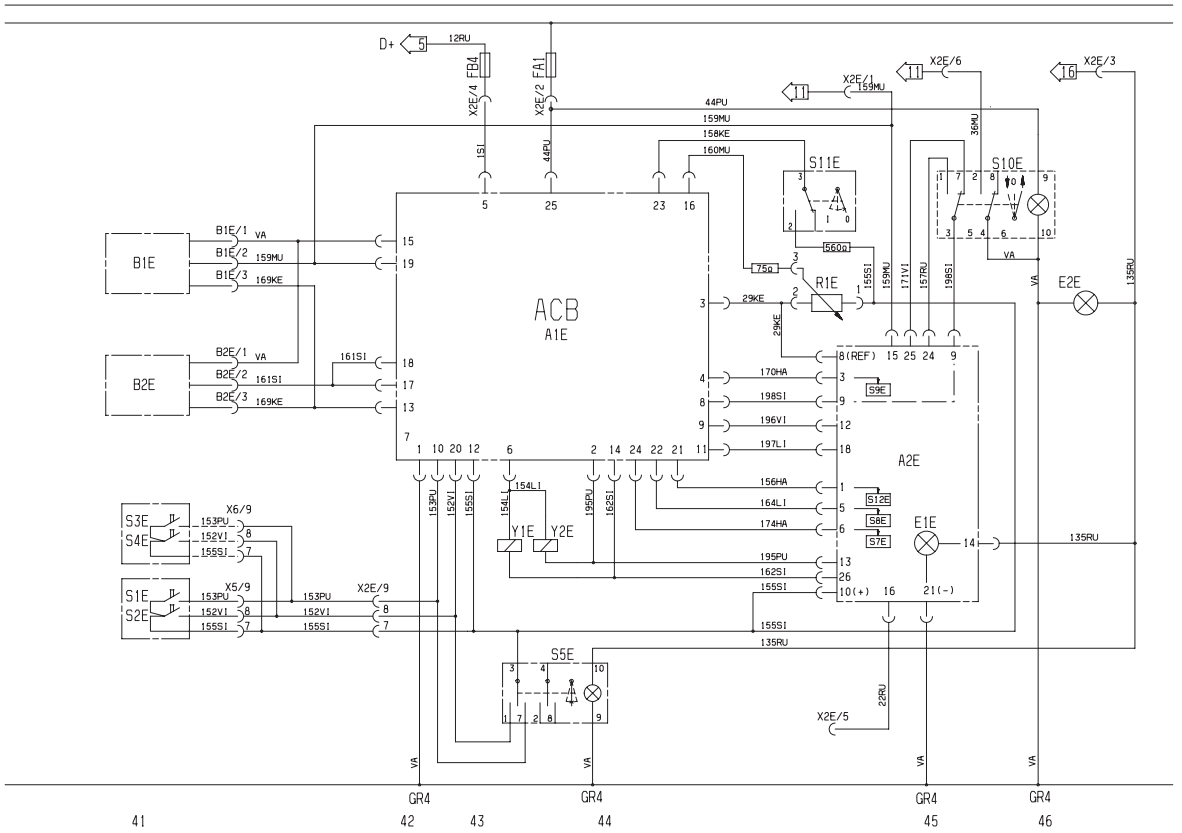

69–3

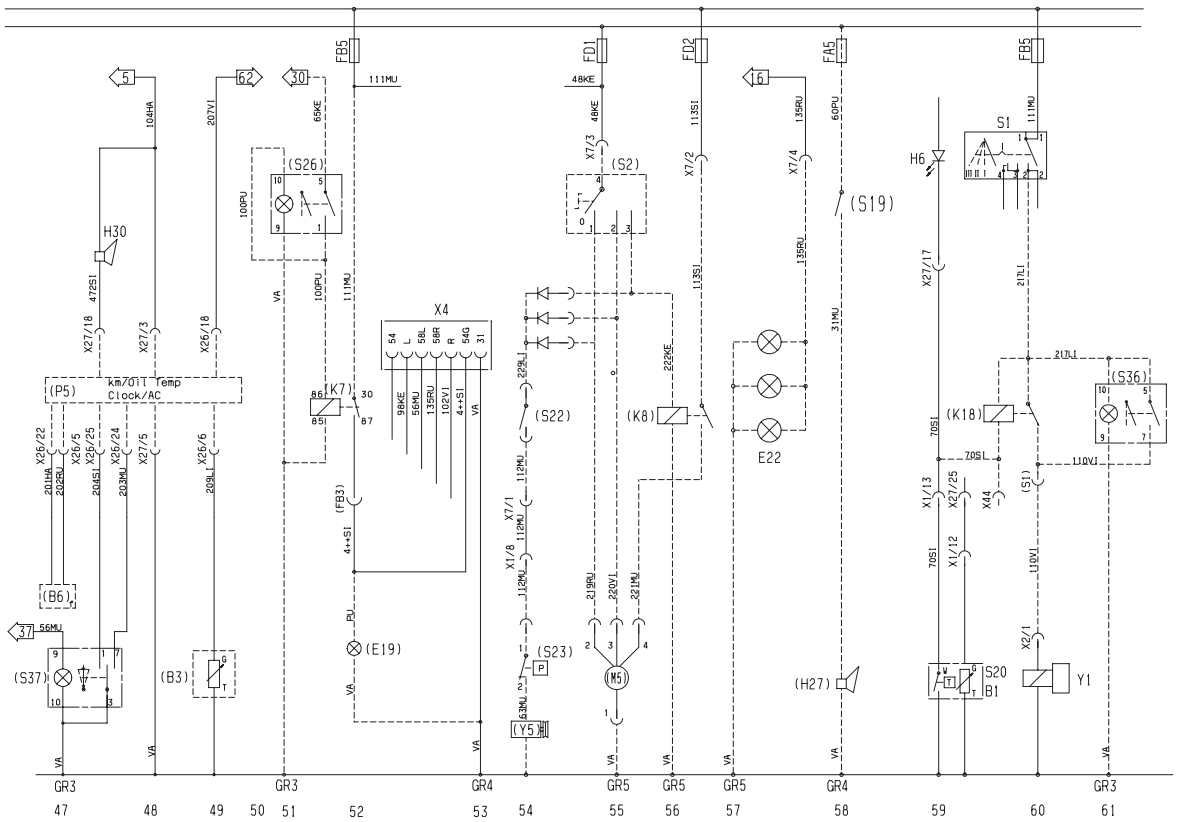

69–4

Downloaded from www.Manualslib.com manuals search engine

https://truckmanualshub.com/

Wiring diagram (component list on pages 108–109)

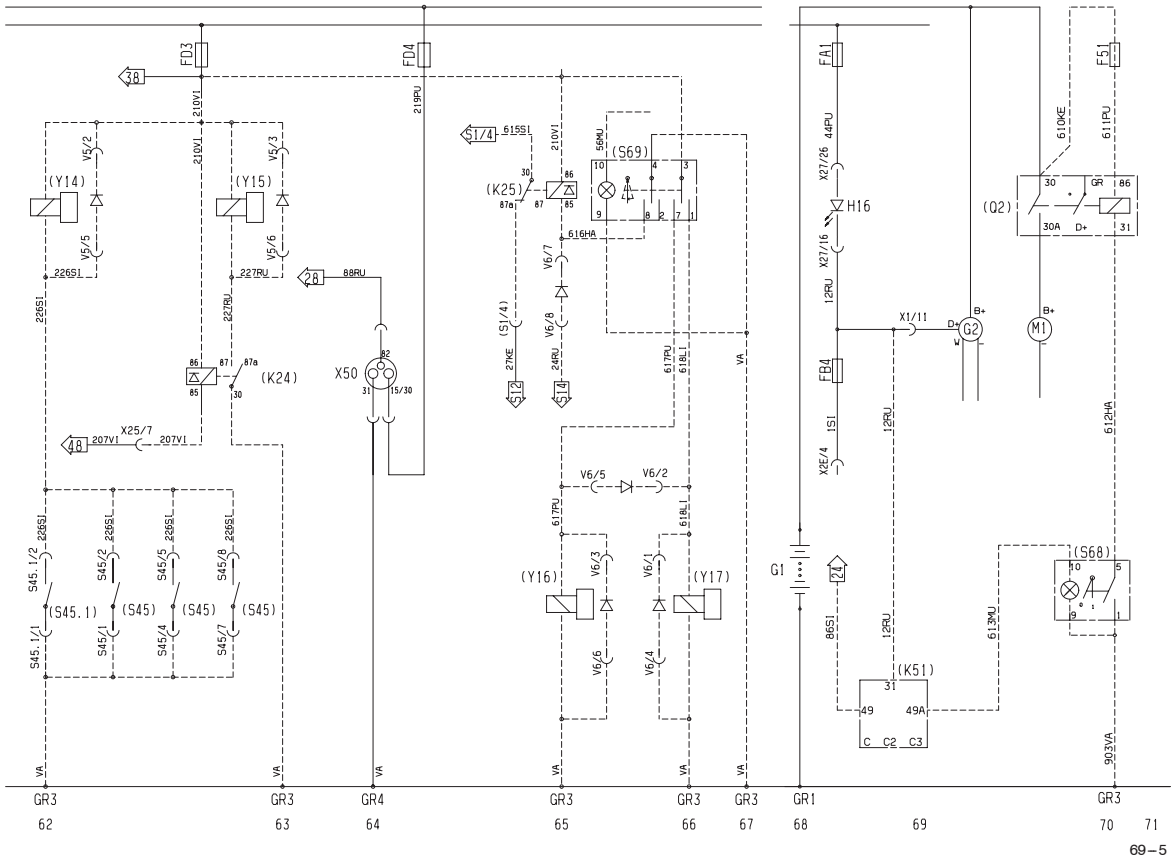

Downloaded from www.Manualslib.com manuals search engine

https://truckmanualshub.com/

K. Extra equipment

K 1. Extra equipment catalogue

It is possible to get extra equipment as described in the following cataloque.

K 1.1. Engine

Air compressor (without air conditioning), not 600

K 1.2. Electrical system

Rear window wiper/washer
Ashtray and cigarette lighter, when mechanical lift
Ashtray (electrohydraulic lift)
Radio equipment
Radio equipment+earphone plug
Radio RDS/casette player
Radio RDS/casette player+plug
Radio RDS/CD
Radio RDS/CD+plug
Radio RDS/CD top
Radio RDS/CD top+plug
Main switch
Rotating light, yellow
Rotating light, blue
Reverse Buzzer
Front working lights
Fog light, rear
Fog light, rear, left hand traffic
Agrodata instrument panel (only with 4WD)
Control stop (distributor models)
Socket with DIN standard
Heater, engine 230 V, DK
Heater, engine 230 V, F
Heater, engine 230 V, Scandinavian+Germany
Socket for cab heater (230V) (not Denmark and Canada)
Socket for cab heater (230V), battery charger (not Denmark and Canada)
Cab heater (230V) (not Denmark and Canada)
Licence plate support and light, white
Licence plate support and light, black
Upper light + front working ligths
Front working ligths, open wind screen
Upper head lights, open wind screen
Battery charger (800, 900)
HiShift (electrohydraulic clutch) (with 55 l/min hydraulic pump) only 4WD models, included AD–instrumentation, not together with air pressure instruments
HiShift PTO switch only with 55 l/min hydraulic pump, not together with air pressure instruments
HiShift drive clutch + PTO switch only with 55 l/min hydraulic pump, included Agroline–instrumentation, not together with air pressure instruments
Electric main circuit switch

K 1.3. Power transmission

Euro block
Front PTO only with front linkage (with 55 l/min hydraulic pump), including the third valve, on 2WD models max load 1000 kg, not together with pressure air brakes

K 1.4. Brake system

Brake valve mounting 40 l
Brake valve mounting 55 l
Pressure air brakes (not with air conditioning, HiShift (electrohydraulic clutch), extra fuel tank, or front PTO), not 600

K 1.5. Steering system

K 1.6. Frame and wheel

Front weights (eight, 37.5 kg)
Front weights (ten, 37.5 kg)
Rear wheel weights (four, 34–38” , 80 kg)
Rear wheel weights (four, 30” , 70 kg)
Locking device for fuel cap
Fuel strainer
Paddy field protection (4WD), front axle
Paddy field protection rear axle
Front mudguars (2WD)
Front mudguars (4WD)
Extra fuel tank 24 l

K 1.7. Cab and shields

First aid kit
Dry powder extinguisher
Seat belt
Charcoal filter
Charcoal filter for roof heater
Valve bracket
Air suspension seat
Windscreen which can be opened
Limiter for openable windscreen with front loader
Extra heater, roof, not with lower roof
Air conditioning + extra heater, roof, no with air pressure compressor and air pressure brakes, not with lower roof
Tool box
Customers name sticker

K 1.8. Hydraulic

K 1.8.1. Towing devices

Hydraulic trailer hitch
Drawbar Tanzania (fixed)
Agricultural towing device (fixed) without hydraulic trailer

Downloaded from www.Manualslib.com manuals search engine

https://truckmanualshub.com/

hitch
Hydraulic trailer hitch + agricultural towing device

Wagon towing device frame Towing coupling D (fixed bolt Ø 31,5 mm) Towing coupling A10 (fixed bolt Ø 31 mm) Towing coupling A11 (fixed bolt Ø 38 mm) Towing coupling C (demountable pin Ø 28 mm, Italy) Towing coupling D2 (demountable pin Ø 43 mm, Italy) Towing coupling D3 (demountable pin Ø 50 mm, Italy) Wagon towing device frame + fixed hitch (Piton Fix) + agricultural towing device	Long frame, width 330 mm
Hydraulic trailer hitch + wagon towing device frame Hydraulic trailer hitch+ agricultural towing device + wagon towing device frame Agricultural towing device (fixed) without hydraulic trailer hitch + wagon towing device frame Agricultural towing device (fixed) without hydraulic trailer hitch North America + wagon towing device frame Hydraulic trailer hitch + agricultural towing device (fixed) without hydraulic trailer hitch North America + wagon towing device frame Towing coupling D (fixed pin Ø 31,5 mm)	Short frame, width 295 mm

Agricultural towing device North America
Hydraulic trailer hitch + agricultural towing device North America

K 1.8.2. Extra valve blocks

When ordering the extra valve blocks you have to know if it is third or fourth valve block:
Auxiliary hydraulic valve block double–acting: push–hold–pull, included DA–SA convertor (allows 2/1 valve block acting)
Auxiliary hydraulic valve block double–acting: push–float–pull, position locked
Auxiliary hydraulic valve block double–acting: push–hold–pull–float, float locked
Auxiliary hydraulic valve block double–acting: push–hold–pull, position locked

Change valve (in order, the valve block has to select (mounting))

K 1.8.3. Three point linkage, equipment

Lift link ram, hydraulic
Top link hydraulic
Top link, long ball–hitch (Cat 2)
Lowering links, telescopic (980 mm) + top link long
Lower link, ball–hitch (Cat 2) (980 mm)
Extra cylinder, power lift (600, 700)

K 1.8.4. Front linkage

Front linkage, (including the third valve), on 2WD models max load 1000 kg
Front weight bracket for front linkage (three point linkage) Cat 2

K 1.8.5. Other

Bio oil (only in hydraulics)

K 2. Extra equipment, operating and service

In this section provides the operating and service instructions of the more complicated extra equipment, which need special attention.

Downloaded from www.Manualslib.com manuals search engine

https://truckmanualshub.com/

K 2.1. Engine

K 2.2. Electrical system

K 2.2.1. Safety Stop

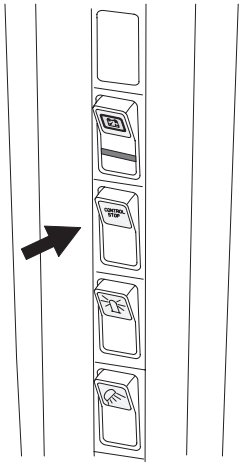

69–98,2

The cut off is useful when the tractor is driving an implement (e.g. compressor, pump etc.) and there is no control from the tractor.

It can be switched off and on with the ”Control Stop” switch located in the side pillar.

– **Upper edge pressed down** = safety stop **on**
– **Low edge pressed down** = safety stop **off**

The safety stop automatically stops the engine if the stop–light comes on (see on page 31).

The safety stop prevents the possibility of more serious damage to the engine. If the safety stop stops the engine the fault must be found and repaired before the engine can be started again.

NOTE: When starting the engine the safety stop must be disengaged.

The safety stop can be controlled externally by connecting a grounding switch or sensor to the connector X44 under the instrument panel (this connector is included in the control stop, grounding has to be done to the frame of the tractor). This extra control stop possibility can be used e.g. on portable sawmill, potato harvester etc. machine use.

NOTE: The safety stop is useful when the tractor is driving an implement and there is no control from the tractor. Do not use when driving.

K 2.2.2. Electric main circuit switch

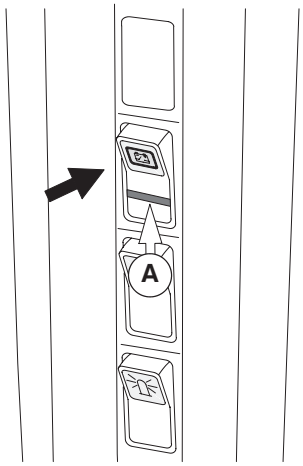

69–129,1

The upper edge pressed down = electric main circuit switch is on. When pressing down the upper edge, push down locking device (**A**) to the midpoint of the switch.

The low edge pressed down = electric main circuit is off. When pressing down the low edge, push down locking device (**A**) to the midpoint of the switch. With this operation the switch will be locked so accidental use is not permitted.

When the main circuit is switched off, all the other circuits are dead, except for the ones to the radio and the clock.

The main circuit is not allowed to be switched off, before the ignition key is turned into the STOP position.

When the engine is switched off/stopped, the indicator light of the main current switch flashes to sign, that the main current has to be switched off.

The fuse of the relay in the main circuit switch is situated on the left side of the engine, under the main circuit switch.

Downloaded from www.Manualslib.com manuals search engine

https://truckmanualshub.com/

K 2.3. Power transmission

K 2.3.1. Front power take–off

1. Instructions for operating

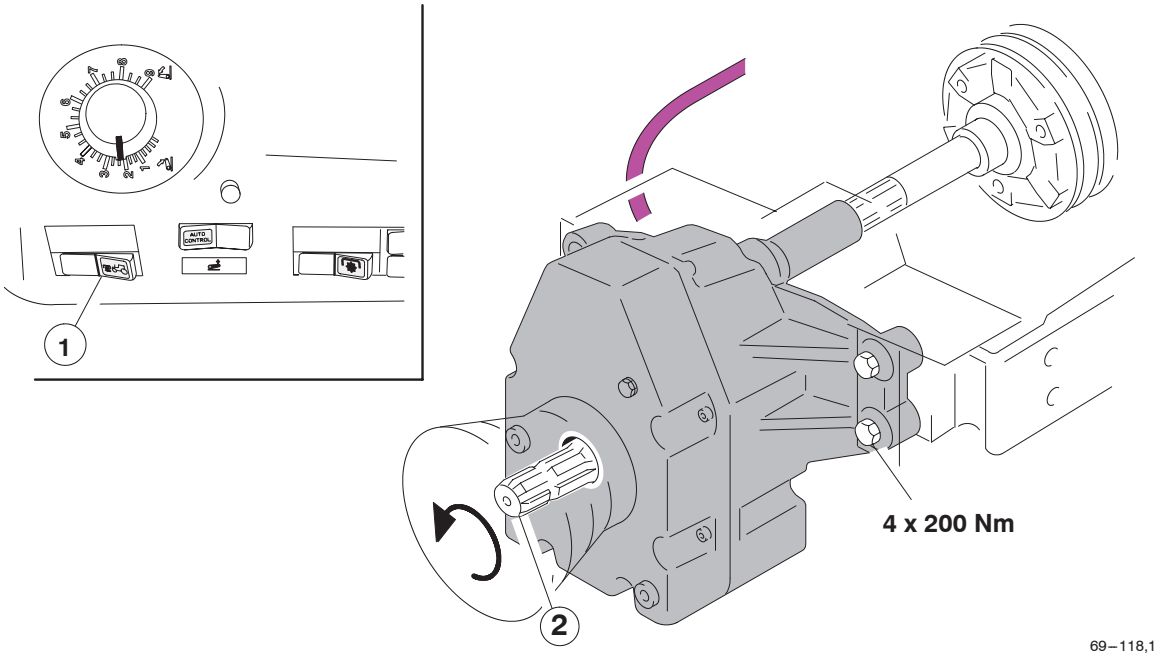

69–118,1

A front PTO is only available with front linkage.

When using the front PTO read the instructions for the rear PTO.

The front PTO switch (**1**) is situated on the right side panel (on the models with mechanical lift the switch is located on the side pillar). The switch is a two position rocker switch.

– **Right side** pressed down: front PTO is **on**.
– **Left side** pressed down: front PTO is **off**.

Front PTO shaft (**2**) diameter is 35 mm and it is 6–spline.

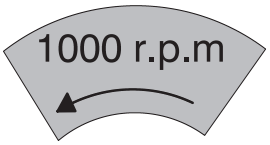

69–114

CAUTION: The front PTO shaft nominal rotating speed is 1000 r/min and the rotating direction is to the left viewed from front. Check that the implement is compatible before connecting.

The front PTO shaft nominal revs of 1000 r/min corresponds to the engine revs of 2120 r/min.

The front PTO engagement is cushioned by precontrolled electric. If the connection is very slow or very fast, then the electric adjustment may be adjusted which should be carried out by the authorized workshop.

2. Maintenance

2.1. General

1. Tighten the screws of the PTO after the first 15–25 running hours. Regularly check the torque of the fixing bolts and hydraulic system. Contact the authorized workshop, if any leaks occur.

2.2. Changing belts

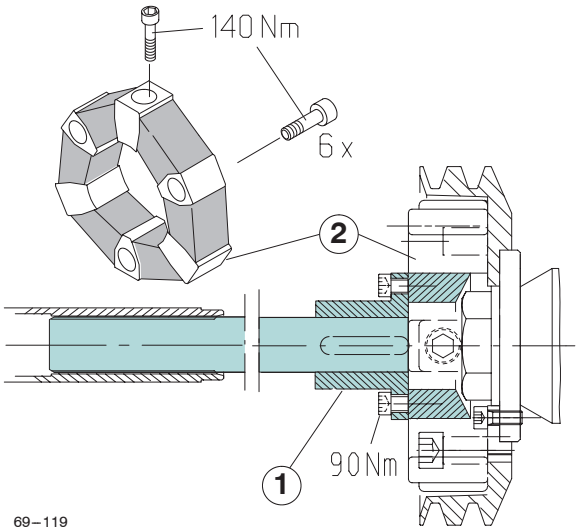

69–119

– loosen the screws of the flange (**1**)

Downloaded from www.Manualslib.com manuals search engine

https://truckmanualshub.com/

– push the axle forward, and into the sleeve
– thread the belts away from the opening
– if the opening is too small, the fastening screws of the machinery have to be loosened and the machinery pulled forward, until the opening is large enough
– mount in the reverse order: tighten the screws to torque of 200 Nm (4 pcs). Tighten the flange screws (**1**) to 90 Nm.

2.3. Maintenance every 500 hours

1. Change oil every 500 hours (after every half year).

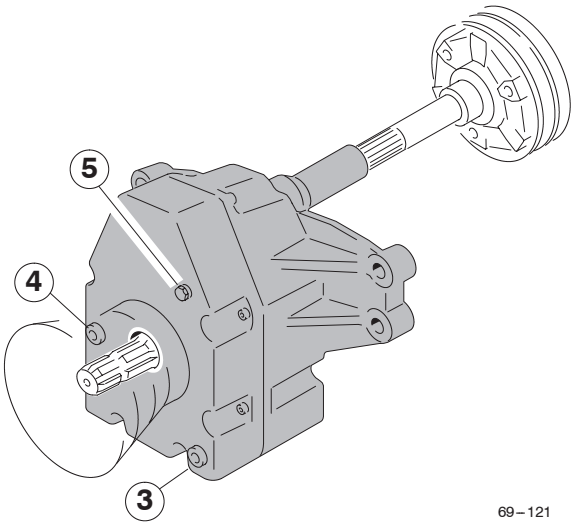

– The oil is drained through drain hole **3**. The housing is filled with 10W30 oil (**1,4 litres**) to the level at inspection hole **4**. Breather **5** can be loosened for bleeding. Check that the breather is not blocked. When filling the tractor has to be levell.
Oil quality 10W/30, API CE/SF, API GL 5/4, CCMC D4.

2. Check the condition of the rubber joint (**2**) after 500 hours use, check it has no wears/breaks/leaks. Change when needed:
– Spread a little Valtra Universal Grease to the under surfaces of the attaching screws before fastening.
– Tighten the screws to 140 Nm so that the rubber will not twist (three screws of axial direction and three of circular direction).

3. Specifications

– Controlled by the switch in the instrument panel
– The nominal speed is 1000 r/min with the engine speed at 2120 r/min
– Driving speeds of front PTO nominal revs with different gears are 2 % greater than corresponding speeds at rear PTO (1000 r/min), see page 103.
– 6 – splines shaft, Ø 35 mm
– Electrohydraulically controlled, wet multidisc clutch
– Pre – programmed/programed soft starting
– Rotating direction anticlockwise seen from front.

Downloaded from www.Manualslib.com manuals search engine

https://truckmanualshub.com/

K 2.3.2. HiShift for the rear PTO switch

1. Instructions for operating

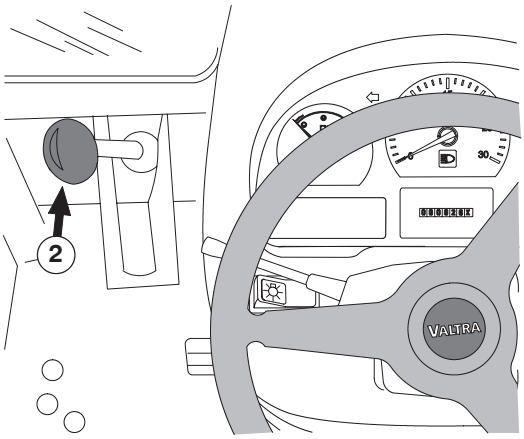

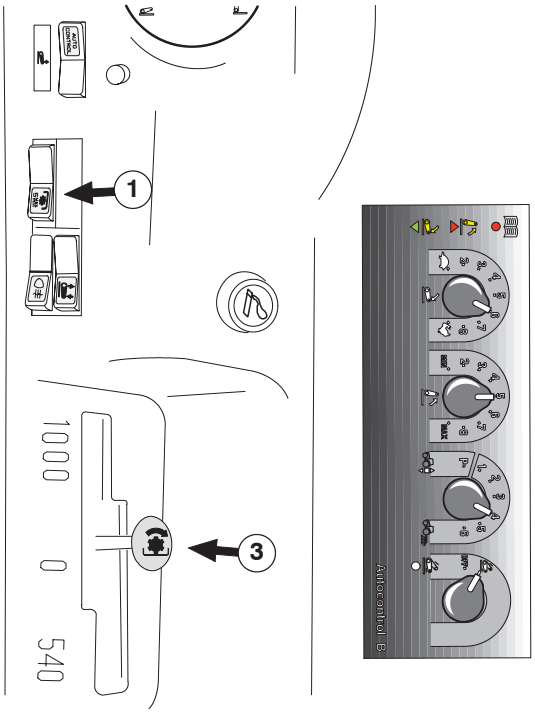

69 – 130

The rear PTO HiShift switch (**1**) is situated on the right side panel or side pillar, depending on the equipment.

With the HiShift switch (**1**) of the rear PTO, the PTO can be switched on and off without using the PTO (**2**) clutch lever. The disengagement with the clutch lever (**2**) is always possible.

NOTE: With the HiShift switch (1) or the lever the PTO can be disengaged only temporarily (max. 5 min.). When the PTO has been disengaged with this lever the indicator light the instrument panel lights up on.

The switch is a three position switch:

- **When the opposite side to the symbols is pressed down = OFF**, PTO disconnected
- **In the centre position** = **ON**, PTO connected (fast engagement)
- **When the symbols side is pressed down**, spring loaded = **slow engagement** of the PTO

The engagement and disengagement of the PTO will be done the same way, when using the HiShift (**1**) or the clutch lever (**2**).

1.1. Engagement

- Adjust the engine speed to low idling
- Press the opposite side to the symbols of the HiShift (**1**) down to disconnect the clutch disc = OFF–position, the light on the instrumentpanel is on
- Move the PTO selector lever (**3**) to the desired PTO range speed position

Fast engagement

- If the rotating material/mass of the implement engaged with the PTO, is small, the PTO will be engaged by pressing the HiShift (**1**) in the middle position (ON). In that case the PTO starts to rotate quickly.

Slow engagement

- If the load is greater, press the symbol side of the HiShift (**1**) down and hold until the PTO is totally connected. After that the switch will be released.

1.2. Disengagement

Adjust the engine speed to low idling

- Press the opposite side of the symbols of the HiShift (**1**) down to detach the clutch disc = OFF–position, the light on the instrument panel is on.
- Move the PTO selector lever (**3**) to the middle position = the PTO range speed is off.
- Press the PTO HiShift switch (**1**) to the middle position

NOTE: The PTO HiShift switch (1) must always be in middle position (= the light on the instrument panel is off), if the PTO is not in use.

For more details on using the PTO see the Working instructions beginning (in section **F**) on page 52.

Downloaded from www.Manualslib.com manuals search engine

https://truckmanualshub.com/

2. Adjustment for the slow engagement

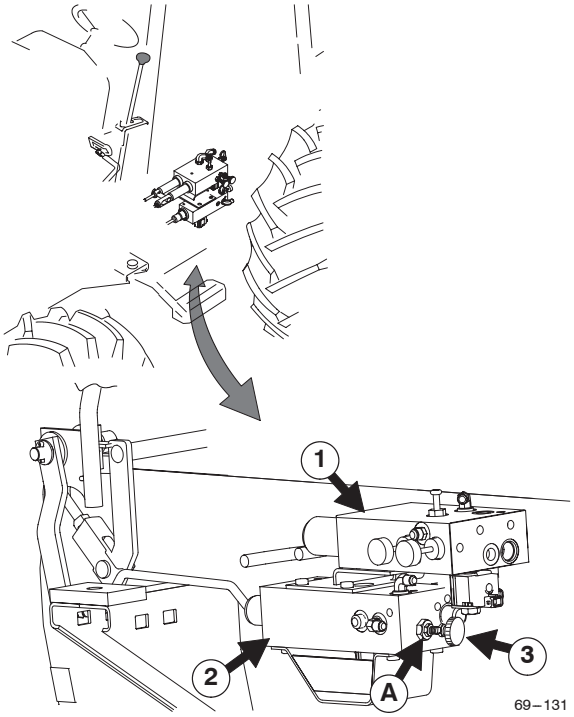

The valve plate, where the adjustment is done, is situated on the left side of the centre frame (= fuel tank).
If the tractor is equipped with both the HiShift drive clutch and with the HiShift of the rear PTO, the highest valve plate (**1**) is for the drive clutch and the lowest (**2**) for the PTO switch.

By rotating the adjusting knob (**3**) the engagement speed of the PTO will be adjusted (the lock nut (**A**) has to be slackened). The basic settings are **3,5** turns open, the adjustment range is between+/– 1 turns.

By rotating the adjusting knob **clockwise** (= in the closed direction) the clutch engages **slower**.

By rotating the adjusting knob **counter–clockwise** (= outwards) the clutch engages **faster.**

NOTE: The clutch pedal rising speed can not be adjusted too slow, in order that the clutch does not slip and wear unnecessarily. The minimum value is open 2,5 turns, because of clutch slip.

Downloaded from www.Manualslib.com manuals search engine

https://truckmanualshub.com/

K 2.4.1. **Trailer air pressure brakes** (press air compressor)

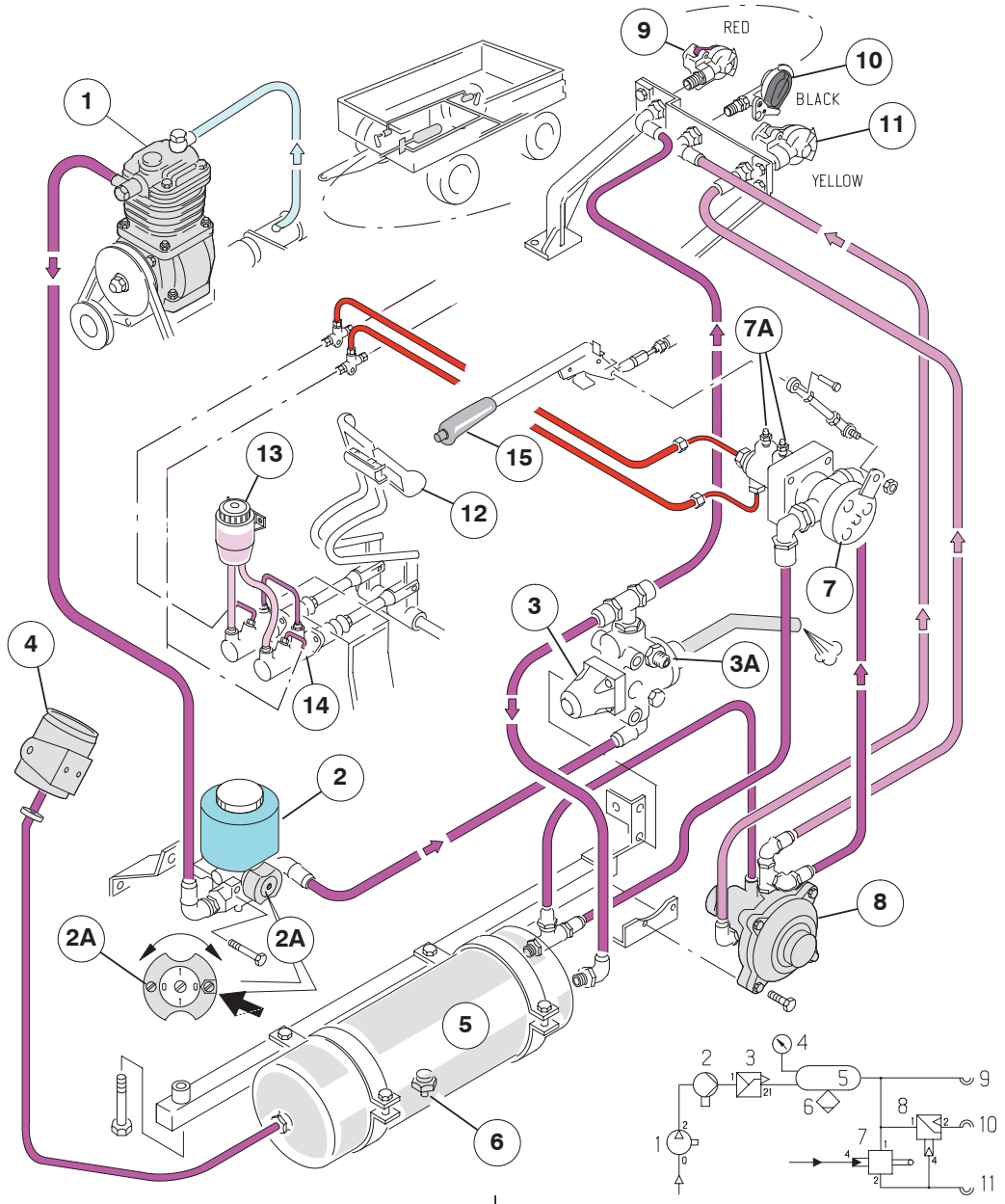

1. **The construction of the air pressure brakes**

1 Compressor
2 Anti freeze device
2A Flow control valve for anti freeze device
3 Pressure adjuster
3A Coupling for output of compressed air
4 Pressure meter
5 Air pressure container
6 Water draining valve
7 Steering valve for trailer
7A Bleeding valves
8 Steering valve for trailer, one pipe system
9 Two pipe system; container line (red)
10 One pipe system connector (black)
11 Two pipe system; brake line (yellow)
12 Brake pedals
13 Brake fluid reservoir, common with the tractor brakes
14 Main brake cylinders
15 Parking brake lever

2. **Instructions for operating**

On the two hose system the trailer is connected to two different couplings (**9** and **11**), which have been marked as follows:
– Container line – **red** cover
– Brake line – **yellow** cover
On the one hose system the trailer is connected to the coupling (**10**) with a **black** cover (brake line) (used in

Downloaded from www.Manualslib.com manuals search engine

https://truckmanualshub.com/

some marketing areas).

NOTE: When using the trailer brakes the brake pedals must always be locked together when driving on the road. When pressing one brake pedal, the brake action of the trailer is smaller.

The trailer brakes operate also when using the parking brake.

From the air pressure system it is possible to get pressure for external purpose (8 bar), e.g. for tyre/tire filling, from coupling (**3A**) which is situated on the left side under the cab. Through this coupling the system can be filled, when needed, by outside compressed air e.g. when the compressor of the tractor is broken. By doing this the coupling can not be turned to bottom.

When the couplings (**9–11**) of the trailer are not in use, keep the covers on them.

When the ambient temperature is **colder than +5°C**, the antifreeze container (**2**) must be filled with ethyl alcohol or methanol. The liquid streaming valve lever (**2A**) has to be in the open (position 1).
The container and streaming valve lever are situated under the left front corner of the cab.

DANGER: There must be maximum pressure in the air pressure system, about 7–8 bar (the pressure gauge (4) of the system is located beside the instrument panel), before driving a tractor which has a trailer with air brakes.

3. Changing and bleeding the brake fluid

When changing the tractor brake fluid, to empty the pipes, open the bleed nipples (**7A**) of the control valve (**7**), both brake pedal circuits have their own bleed nipples. The control valve (**7**) is situated on the left side under the cab on the rearside of the pressure tank.
The control valve is situated lower than the tractor brake cylinders. Therefore it has to be bled before bleeding the brake cylinder. Bleeding is done in the same way from the bleeding valves (**7A**) as bleeding the brake cylinders, see page 90.

4. Service

4.1. Common points

The pressure container can not be welded and drilled.

The system includes a filter, which is situated in the pressure regulator. It has to be cleaned/changed occasionally (depending on use). The filter can be removed by first loosening the tyre/tire filler coupling (**3A**).

The pressure regulator is provided with an inbuilt pressure regulator, which operates, if the pressure rises to 12–14 bar. This can be caused by a broken pressure regulator valve, frozen or blocked filter.

4.2. Service daily

The water has to be drained daily from the press air system by pressing and pulling the spindle (**6**) of the water draining valve at the bottom of the container.

4.3. Service weekly or after every 50 operating hours

Check the fixing bolts of the compressor. Check and adjust the compressor belt tension by adjusting the adjusting wheel (**1**).

4.4. Service after every 250 operating hours

Grease the rubber surfaces of the trailer quick couplings (**9–11**) with Valtra Calsium LF– Grease.

Check the integrity of the system. The system has to be air tight, so that after stopping the engine the pressure does not decrease more than **0.15 bar during 10 minutes** (2%). When needed repair the leaks.

Downloaded from www.Manualslib.com manuals search engine

https://truckmanualshub.com/

K 2.4.2. Brake valve of the trailer

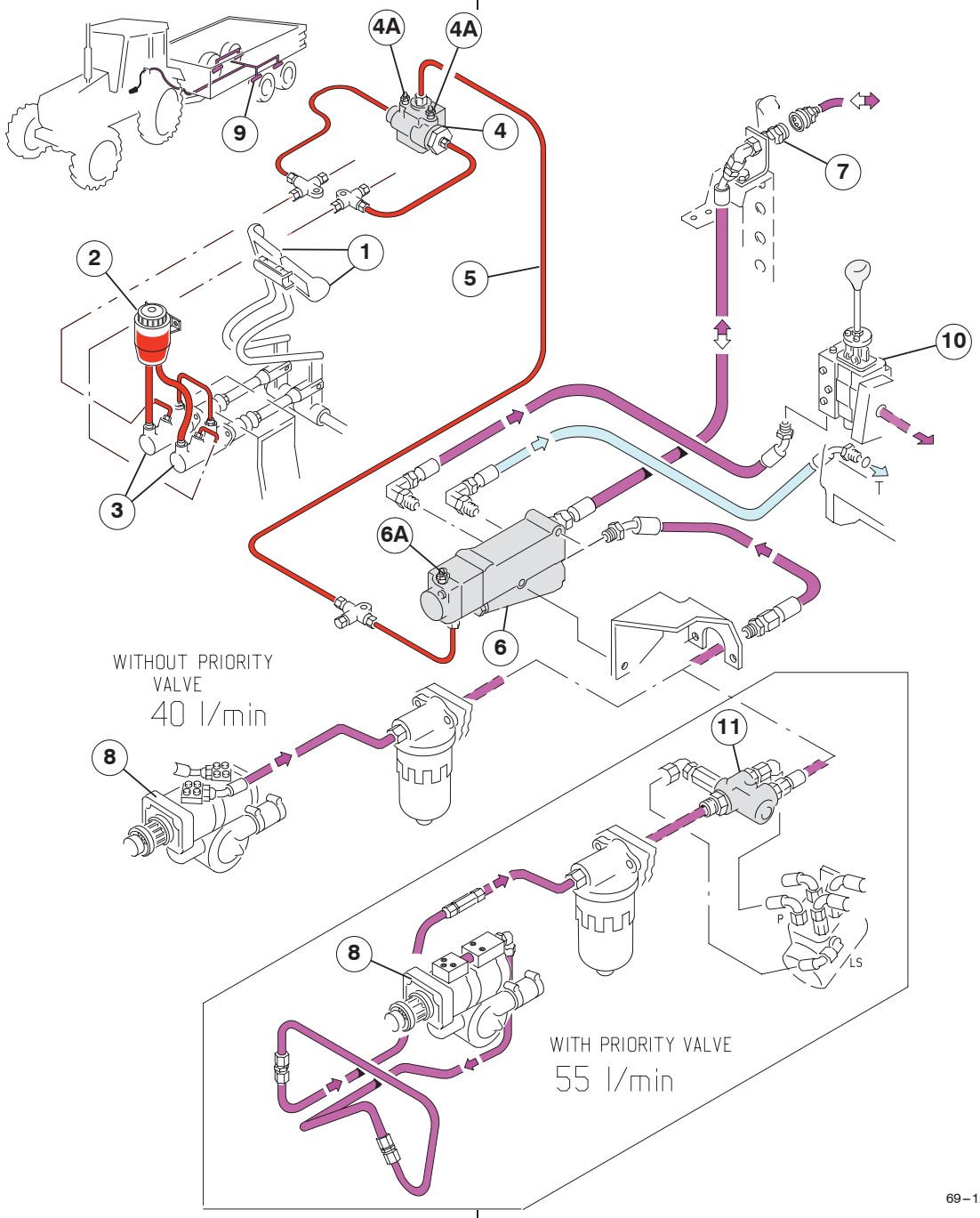

1. **The construction of the trailer brake valve:**

1 Brake pedals
2 Brake fluid reservoir, common with the tractor brakes
3 Main brake cylinders
4 Release valve, (compensation valve) through the release valve the control pressure goes to the brake valve (**6**) only when the **both** pedals are pressed
4A Bleed nipples of the release valve
5 Control pressure for the brake valve
6 Brake valve
6A Bleed nipple of the brake valve
7 Quick–action coupling for the trailer brake
8 Hydraulic pump
9 Brake cylinders for the trailer
10 Auxiliary hydraulic valves + power lift
11 Priority valve, only in 55 l/min models

The trailer brake valve system makes use of the pressure of the tractors hydraulic system (pressure ratio1:7,11 adjustable) controlled with the brake valve.

2. **Instructions for operating**

The trailer brakes are connected to the quick–action coupling at the rear part of the tractor (**7**).

NOTE! When using the trailer brakes the brake pedals must always be locked together when driving on the road.

Downloaded from www.Manualslib.com manuals search engine

https://truckmanualshub.com/

The trailer brakes do not operate, if only one of the brake pedals is pressed. When the locking of the brake pedals is disconnected, the tractor brakes can be used as steering brake.

NOTE: The trailer brakes do not work when using the parking brake.

NOTE: When the engine is not running, the power brake of the trailer does not work.

3. Changing and bleeding of the brake fluid

When changing the tractor brake fluid, to empty the pipes, open the bleed nipples of the trailer brake release valve (**4**) (both brake pedal circuits have their own bleed nipple **4A**), and the bleed nipple (**6A**) of the brake valve (**6**).
The release valve (**4**) and brake valve (**6**) are situated on the right hand side under the cab.The release – and brake valves are situated lower down than the brake cylinder of the tractor.Therefore they have to be bled before bleeding the brake cylinder. First bleed the valves (**4A**) of the release valve, at the same way as when bleeding the brake cylinders, see page 88.
Then bleed the valve (**6A**) of the brake valve, the pedals must be locked together.

4. Specifications

- Function with the pressure of the tractor hydraulics, controlled by the braking valve
- The control pressure of the brake valve will be led from the brake pedal circles through the release valve.
- Trailer brake connection to the tractor with quick–action coupling
- Pressure ratio 1:7,11 (the braking power)

K 2.5. Steering system

Downloaded from www.Manualslib.com manuals search engine

https://truckmanualshub.com/

K 2.6. Frame and wheel

K 2.7. Cab and shields

K 2.7.1. Air suspension – driver's seat

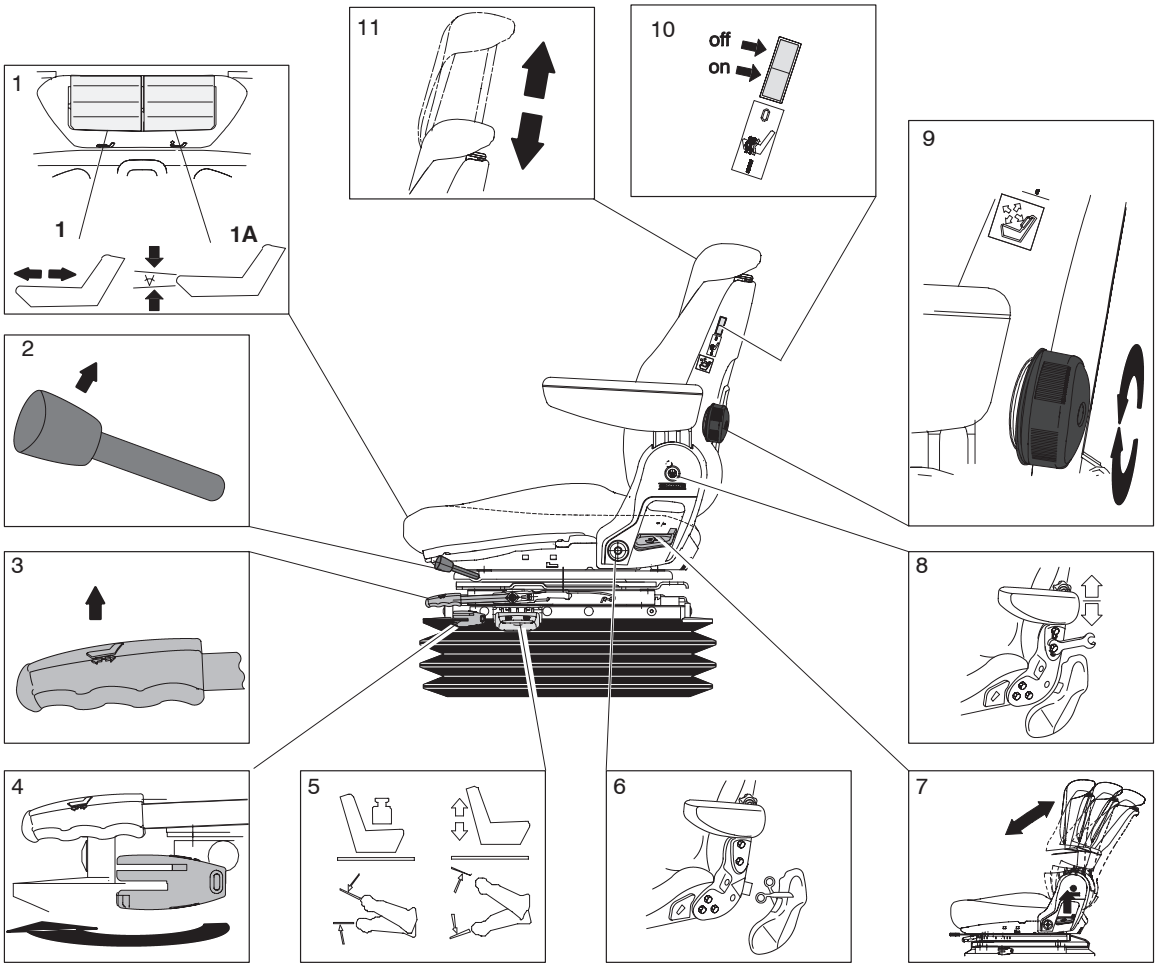

69 – 101,1

CAUTION: Do not attempt to adjust the seat while driving increased risk of an accident.

1. **Seat functions**

1.1. **Handles for seat dept adjusting and seat cushion angle adjusting (1)**

The seat dept adjustment can be done by lifting up handle (**1**), without changing the seat forward/rearward adjustment (**3**).

The seat cushion angle adjustment can be done by lifting handle (**1A**).

1.2. **Lock for turning the seat (2)**

Release the lock by pulling the control upwards. The seat can now be turned 180° counter clockwise. The seat has set positions at 10° and clockwise 30° (e.g. can be used when ploughing/plowing).

CAUTION: If the seat has been adjusted further back than the lock limits, the seat can touch the cab side trim when turning.

1.3. **Forward/rearward adjusting (3)**

Lift up the lever and push the seat forwards or rearwards.

1.4. **Lock for longitudinal suspension (4)**

When the lever is set, as in the drawing, the longitudinal suspension is locked, the seat does not move in the longitudinal direction. By turning the lever to the front position (clockwise 180°) the lock for longitudinal suspension is released.

1.5. **Suspension and vertical adjustment (of seat) (5)**

Suspension according to the driver weight

Pull the control lever. When the compressor starts release the lever. The compressor runs until the suspension has adjusted it's self to the weight of the driver. If the driver is lighter than the previous driver, the compressor runs mo-

Downloaded from www.Manualslib.com manuals search engine

https://truckmanualshub.com/

mentary and the excess pressure is released. The seat then lowers.

The suspension setting is set even if the tractor is switched off.

The seat suspension travel is 100 mm (± 50 mm) regardless of vertical starting position. The suspension area is limited to 100 mm for safety reasons.

Vertical adjustment of seat 80 mm

The seat has a step–less vertical adjustment of 80 mm (±40 mm from seat middle point). The upward adjustment is achieved by pulling the vertical adjustment lever until the required height is reached (the compressor runs continuously). When the lever is released the compressor stops and the seat stays at that height. If the seat is set too high and the upward movement is less than 50 mm => the seat lowers to the highest possible position downwards (automatically).

By pressing the same lever downwards the seat lowers. If the seat is adjusted down to below the lowest limit (the 50 mm downward suspension is not possible any more), the seat will automatically raise to the lowest limit.

Sometimes it may happen, that if the driver has sit really carefully on the seat the previous vertical position is in the memory and the seat raises up to that previous position.

When the seat is locked at a new vertical level there is small “click” sound.

1.6. **Seat belt anchor point (6)**

The anchor points for the seat belt are located on the seat.

1.7. **Seat back inclination (7)**

Pull this lever up then set the back rest to the desired position.

1.8. **Arm rest adjustment (8)**

Adjust the arm rest by removing the cover and changing the arm rest place in the mounting slot.

1.9. **Lumber support adjustment (9)**

By turning the knob clockwise or counter clockwise the lumber support can be adjusted in two directions at same time (height and depth) to the desired position.

1.10. **Seat heating (10)**

The switch for heating the seat is placed on the left side of the seat backrest.

1.11. **Head support height adjustment and removing (11)**

Adjust the head support to the desired height by lifting or lowering it. The head support can also be removed if required by pulling it upwards.

K 2.7.2. Air conditioning

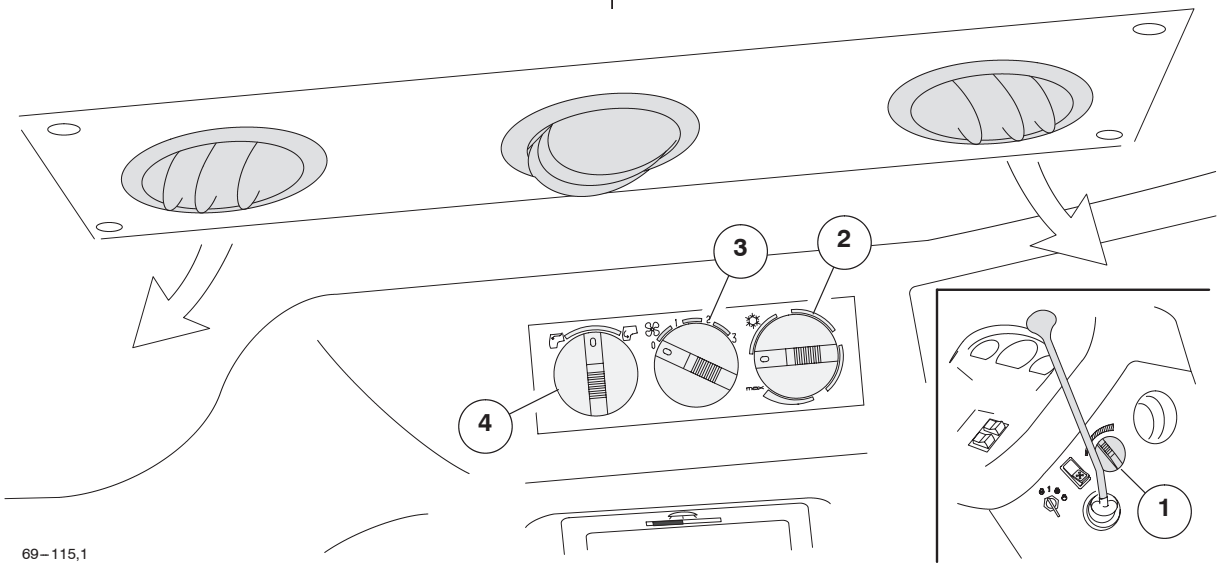

1. **Instructions for operating**

Air conditioning operation

Air conditioning is optional equipment. On new air conditioning systems freon has been replaced with refrigerant (R134a) which does not cause environmental hazard.

NOTE: If the air conditioning system has not been used for some time, unlock the compressor before starting the engine, by rotating the pulley nut with a wrench.

NOTE: When the air conditioning system is in use the cab doors and windows must be closed.

Ensure the cab upper air filter is clean:

1. First turn the knob (**1**) towards to cold. When the engine is running, turn the air conditioning temperature regulating knob (**2**) towards cold (fully clockwise).
2. Move the fan switch (**3**) to the position 3.
3. When the desired cab temperature has been reached, adjust the air conditioning temperature regulating knob (**2**) to maintain a comfortable temperature.
4. Reduce the fan (**3**) speed to obtain a comfortable temperature.

Downloaded from www.Manualslib.com manuals search engine

https://truckmanualshub.com/

NOTE: The efficiency of the air conditioning can be increased by keeping the recirculation control knob (4) in position .

NOTE: Make sure that the compressor starts (at low temperatures the thermostat prevents the compressor from starting).

To prevent locking of the compressor, use the air conditioning for a few minutes at least once a month with the engine stop control in the off position. Push the engine stop control knob in and allow the engine to idle for a few minutes.

2. Maintenance

WARNING: Do not attempt to disassemble any part of the air conditioning system.

Special safety equipment and tools are required to repair the air conditioning system. Contact your dealer if problems occur.

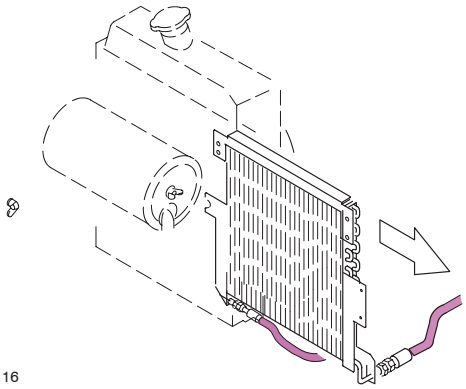

69–116

The condenser must be cleaned at regular intervals to remove dust, insects and other particle. Make cleaning easier by moving the condenser sideways (as in picture).

WARNING: Avoid contact with the refrigerant. If refrigerant enters the eyes a doctor should be contacted without delay. Welding work should not be carried out near to the air conditioning system as poisonous gas may be released. The maximum temperature permitted in the vicinity of the refrigerant pipes is 80˚C.

If the air conditioning is not running properly, have an authorized workshop check the system.

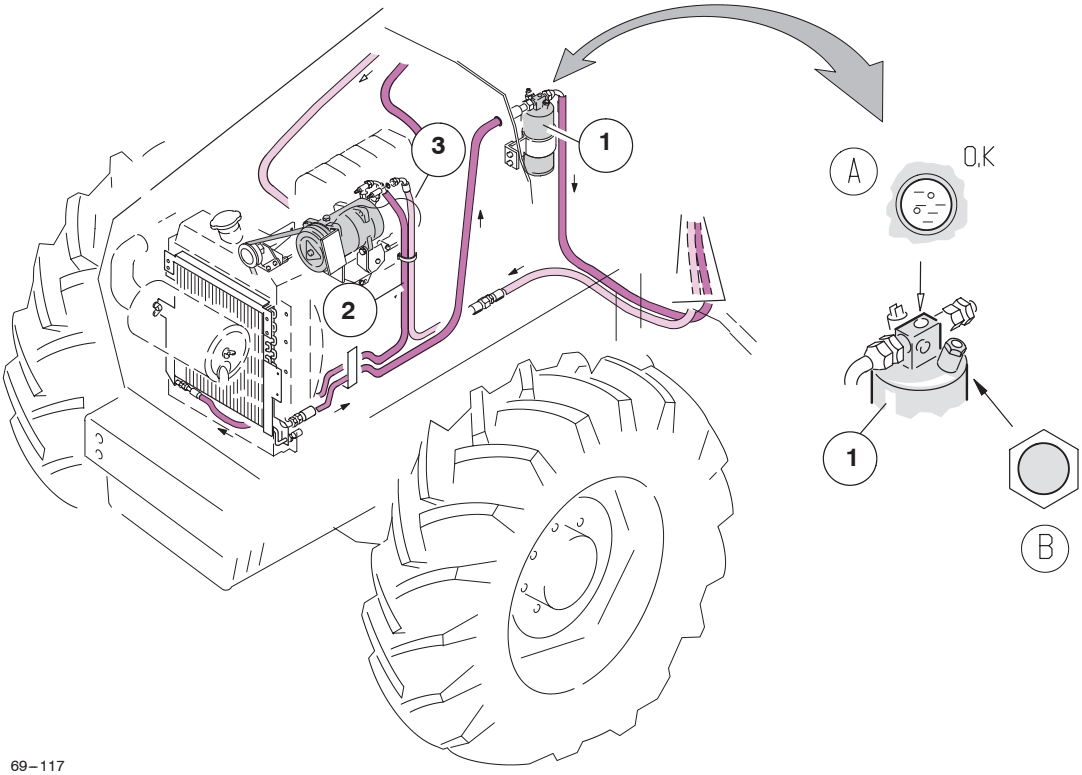

69–117

On the receiver (**1**) of the air conditioning system there is a sight glass **A** and moisture eliminator/indicator (**B**).

Sight glass **A** (run the engine at 1500 rpm, air conditioner at max. cooling for a few minutes):

No bubbles appear at all. EXCESSIVE REFRIGERANT. The high–pressure side (**2**) will be abnormally hot. Contact an authorized workshop.

Downloaded from www.Manualslib.com manuals search engine

https://truckmanualshub.com/

The fluid inside is almost transparent. A few bubbles may appear as the engine speeds up and down. SUFFICIENT REFRIGERANT. The high–pressure side (**2**) will be hot and the low–pressure side (**3**) cold.

A few bubbles appear intermittently, at intervals of 1 to 2 seconds. INSUFFICIENT REFRIGERANT. The high–pressure side (**2**) will be warm, and the low–pressure side (**3**) fairly cold. Contact an authorized workshop.

Bubbles flow continuously, and when the refrigerant is almost exhausted a ”mist” like flow will be seen, with no bubbles visible. VERY LITTLE REFRIGERANT. There will be almost no difference in temperature between the high–pressure side (**2**) and the low–pressure side (**3**) near the compressor. Contact an authorized workshop.

NOTE: Refrigerant must be colourless. If it is brown or yellow, it must be changed. Contact an authorized workshop.

The colour of the moisture indicator/eliminator (**B**)**:** have to be blue.If it is pink replace the moisture indicator /eliminator.

K 2.8. Hydraulic and towing device

K 2.8.1. Trailer hitch

1. Instructions for operating

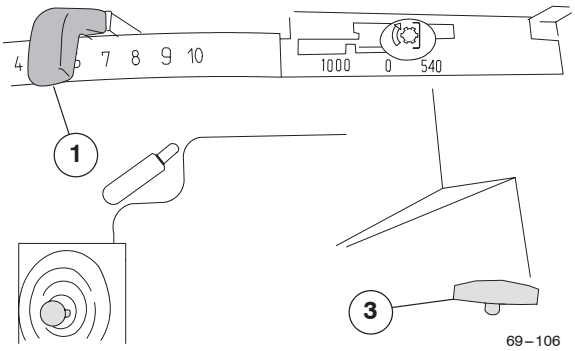

The trailer hitch is raised and lowered with the hydraulic lift control lever (**1**). It locks automatically in the raised position. On tractors with an electro–hydraulic lift the inner switch (**2**) is used for lifting or lowering the hitch.

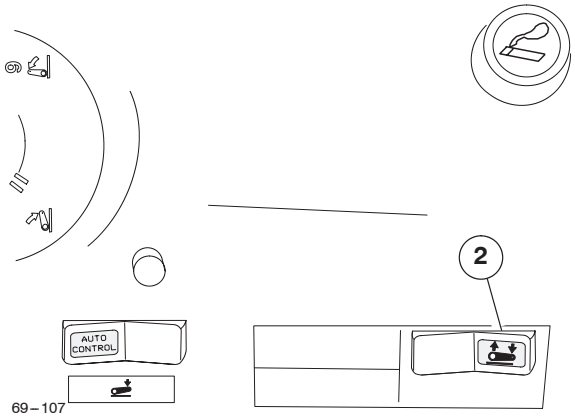

IMPORTANT!
Before releasing the trailer hitch, lift the lower links to the top position. Then the release control (**3**) can be pulled and the hitch lowered.

WARNING: When using the trailer make sure that the hitch latch is locked.

When the hitch is lifted up and the hitch latch has locked, lower the hitch a little so that the load is not on the lifting links of the hitch.

WARNING: Single–axle trailers must always be connected to the trailer hitch.

NOTE: It is responsibility of the tractor driver to make sure that at least 20 % of the total weight is on the front axle of the tractor.

Other limiting factors are loading of the tyres/tires (Technical Specifications on page 96) and axles (Technical Specifications on page 98).

CAUTION: When the hitch is loaded it must always be lowered using the hydraulic lift.

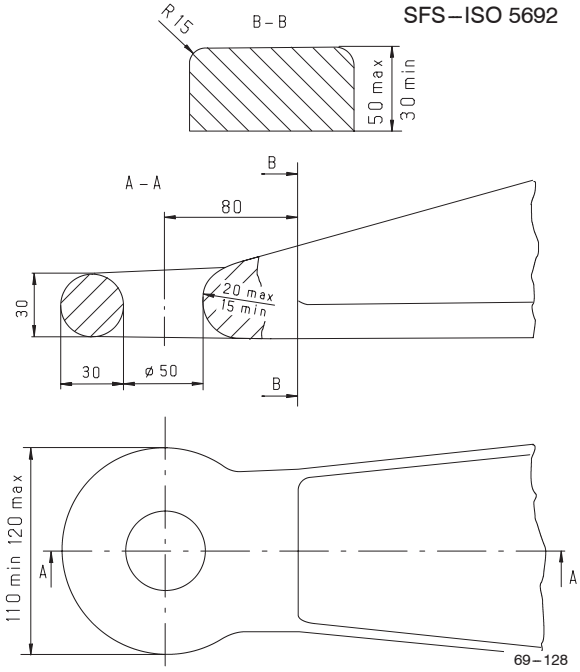

NOTE: Only use drawbar eyes which comply with the regulations and are undamaged. When using other than the allowed drawbar eyes the guarantee/warranty lapses and responsibility becomes invalid.

Downloaded from www.Manualslib.com manuals search engine

https://truckmanualshub.com/

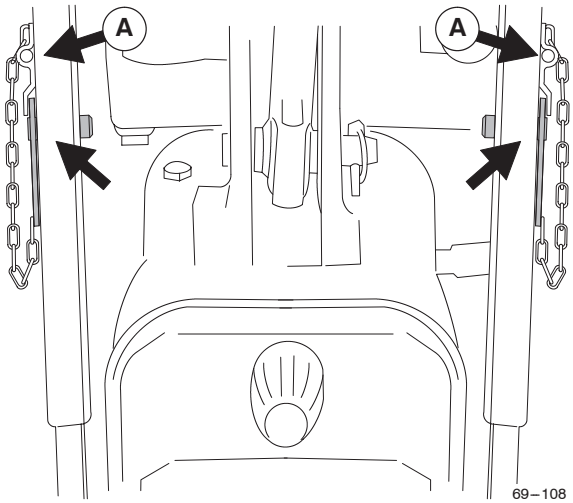

When the pins on the lifting links of the towing hook are set into their holes (drawbar must be locked on the upper position), the lift is locked in its uppermost position. In this case the lift will not be lowered if the lever is moved to the lowering position. Using this locking system ensures safety when you have to do adjustments with the lift up. When the pins are not used, they are kept in the holders (**A**) which are on the lifting link rods.
WARNING: When using locking position of the lifting links of the hitch, both lifting links must be locked.

2. Checks and Adjustments

2.1. Adjusting lifting links of trailer hitch

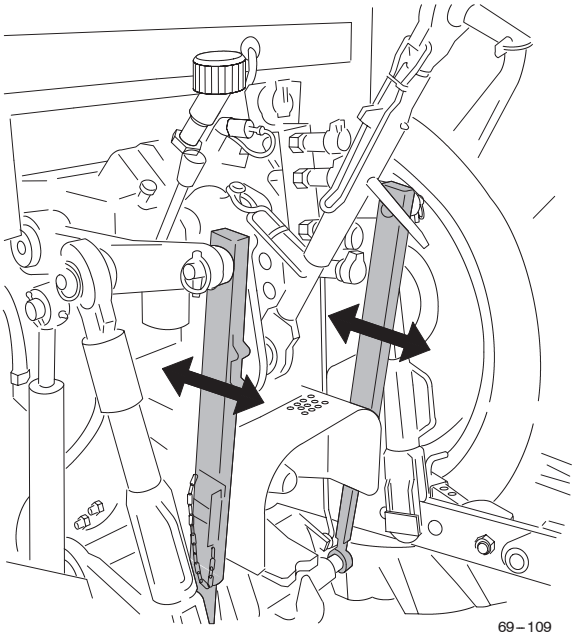

The lifting links should always have a certain amount of clearance when the hydraulic lift is in its upper position. However, they must be adjusted in such a way that the trailer hitch is securely locked by the pawl.

Before adjusting, raise the hydraulic lift to its upper position (on electrohydraulic linkage use the position control knob, the transport height selector must be on max position). Check the adjustment by moving the lifting link by hand. Adjustment is correct when the link moves loosely. Adjust if necessary by turning the cotter at the upper end of the links until a suitable length is obtained. **Check that both lifting links are the same length after adjustment**.

Correctly adjusted lifting links ensure that the hydraulic lift can be raised to its uppermost position. The trailer hitch is locked when the lift is lowered so far that the hitch rests on the pawl, thereby preventing unnecessary loading on the hydraulic pump and overheating of the oil.

On electrohydraulic models the lifting links may be tightened when lifting with push buttons.

2.2. Checking locking of trailer hitch

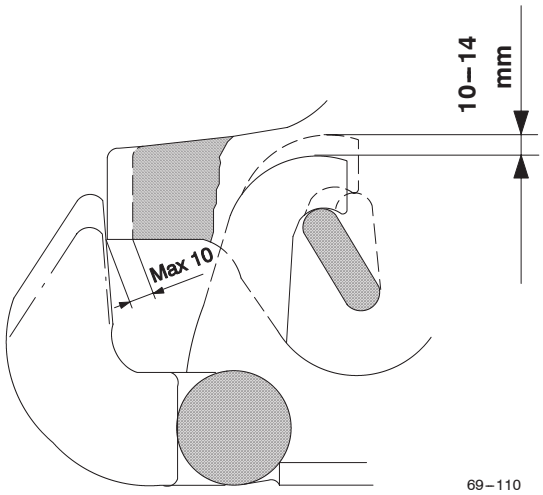

Make sure that the spring returns the pawl fully home. When the pawl is turned upwards the trailer hitch should move up **10–14 mm**.

2.3. Check wear of the trailer hitch

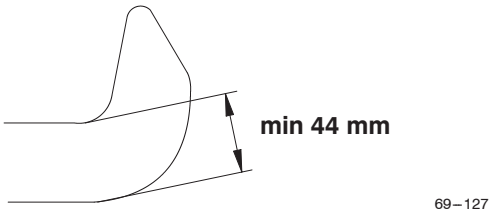

DANGER! When the trailer hitch has worn down to 44 mm from the thinnest part, it has to be replaced.

3. Specifications

- Max permissible vertical loading, on the trailer hitch is 30kN (3000 kg)
- Trailer hitch height on the lower position from tyre/tire centre is 650 mm
- Trailer hitch height from ground is (lower position with tyres/tires 18.4R34) 223 mm

Downloaded from www.Manualslib.com manuals search engine

https://truckmanualshub.com/

K 2.8.2. Agricultural towing device

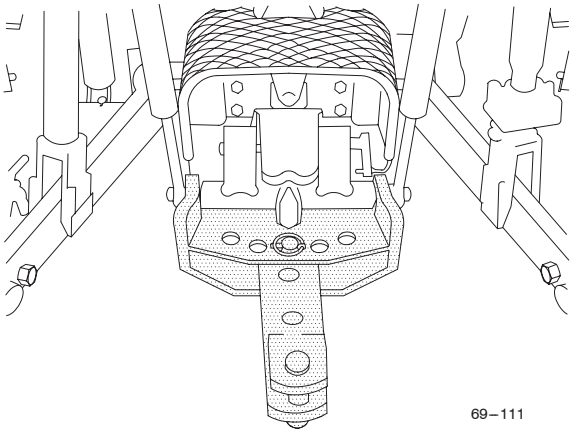

The agricultural towing device is used for the towing of machines where only a small part of the weight rests on the drawbar (e.g. shredders, bailing presses, 2–axle trailer etc).

There are two models of the drawbar:

– With hydraulic trailer hitch
– Fixed without hydraulic trailer hitch

Both the models have almost the same properties.

Also both models are suitable for North America.

1. Specifications

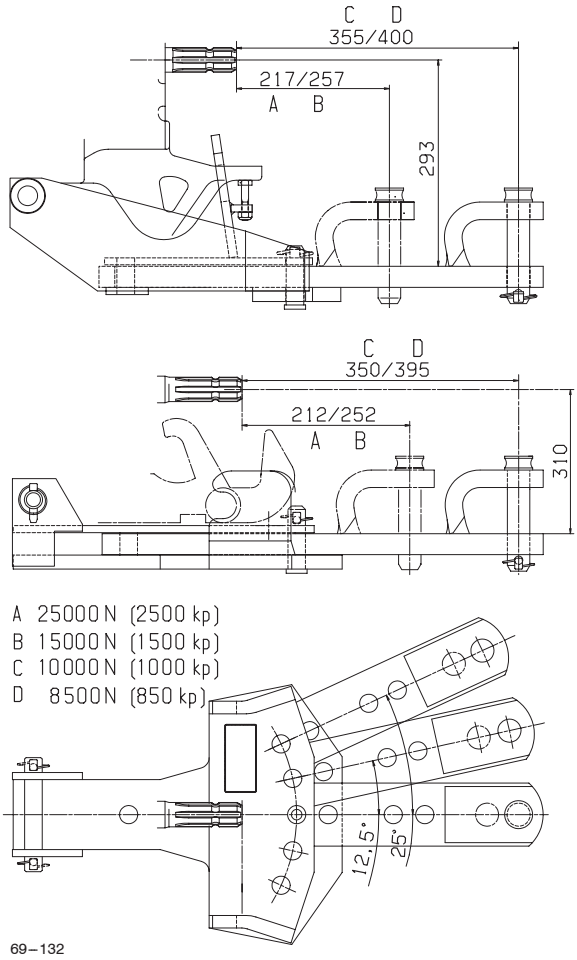

Distance between hitch point and power take–off and corresponding permissible vertical loading. Max permissible vertical loading on the drawbar is 5000 kg.

– Distance between pulling pin and power take–off can be adjusted in four positions
– In the North America – model only the three outermost positions can be to used
– In the two rear positions the drawbar can be turned sideways to two different positions (±12,5° and ±25°).

Downloaded from www.Manualslib.com manuals search engine

https://truckmanualshub.com/

K 2.8.3. Wagon towing device

1. General

DANGER: According to Law the driver has to ensure that all relevant precautions are followed (lockings) etc.

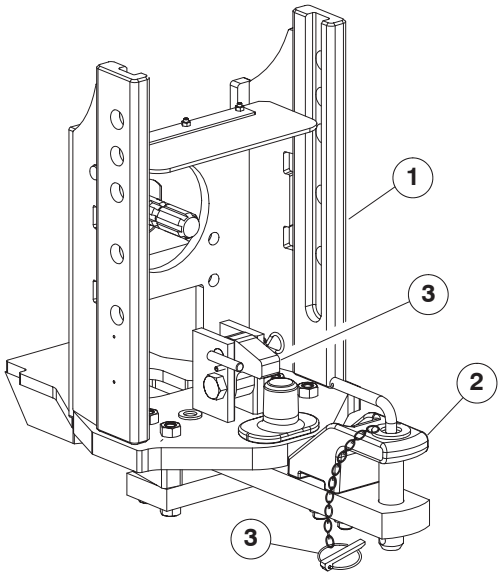

69 – 133

In the picture is the wagon towing device frame with fixed hitch (Piton Fix) (**1**) + agricultural towing device (**2**). The locking (**3**) with trailer must be secured

2. Instructions for operating hitch

2.1. Adjusting the height of the jaw

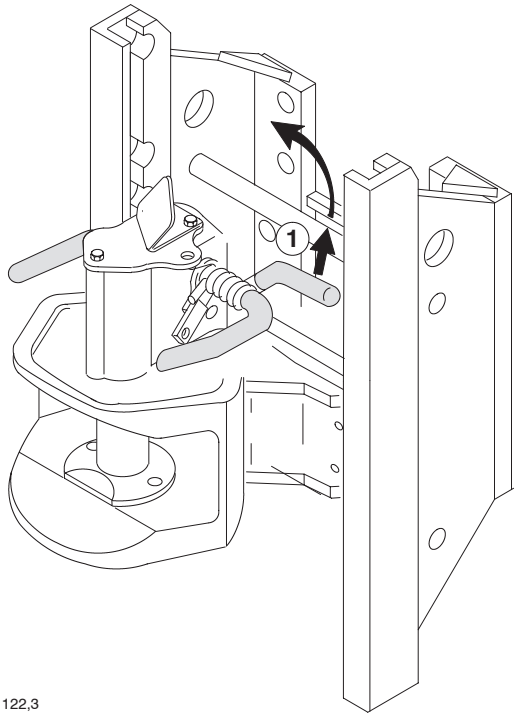

69 – 122,3

Adjusting the height of the mechanical and automatic jaws happens in the same way.

The height of the jaw can be changed by first pulling lever (**1**) upwards and then by turning it to left. Move the jaw into the desired height and release the lever when the locking pins lock the lever into the correct position and the returning springs have relocated. The jaw can also be lifted away from the frame by using this same lever.
A solid drawbar must be used because of the rotating jaws.

DANGER: Changing the height of the jaw is not possible if the lever (1) is broken or it is dirty. The jaw must be locked and secured every time the height has been changed.

Downloaded from www.Manualslib.com manuals search engine

https://truckmanualshub.com/

2.2. **Connecting to the jaw**

Mechanical jaw

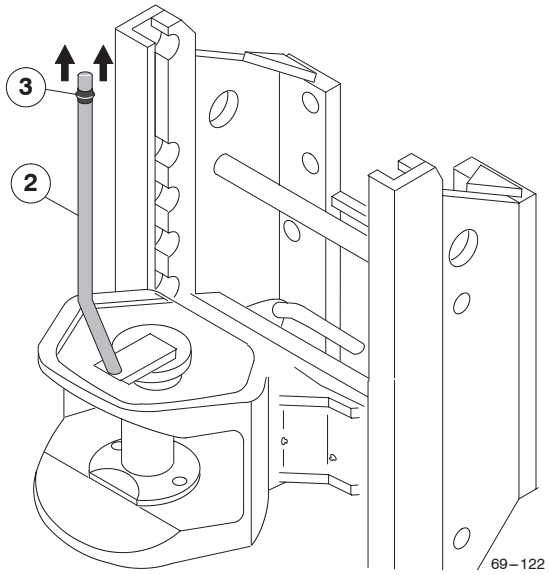

For lifting up the drawbar pin pull up the ring (**3**) at the top of the coupling lever (**2**).

WARNING: After coupling the trailer, check that the pulling pin is completely down and locked.

NOTE: When using jaws, where the towing pin is equipped with locking pin, make sure, when coupling the trailer, the locking pin is locked.

Automatic jaw

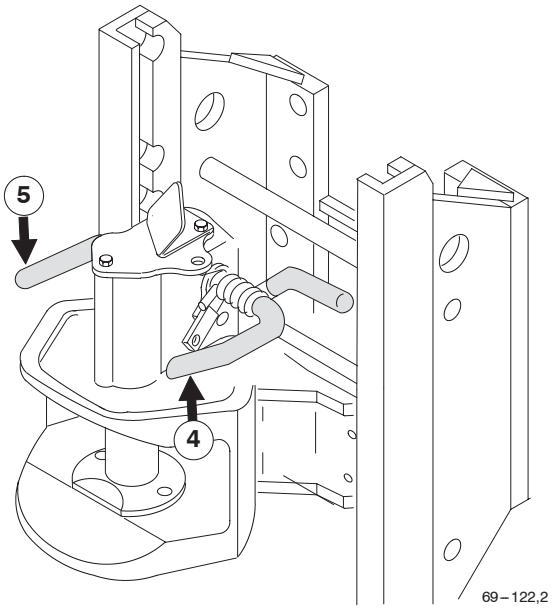

For connecting the trailer to the coupling, lift the puller up by turning lever (**4**) to the upper position. When the draw eye reaches the bottom of the draw gap, the coupling automatically goes down. The towing pin can also be lowered by pushing lever (**5**) downwards.

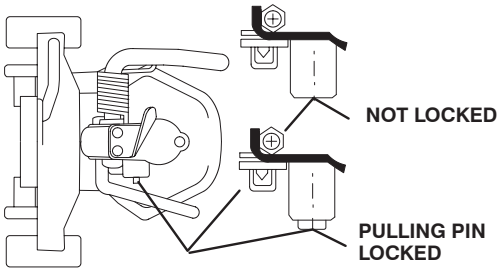

69–123

WARNING: The drawbar pin is locked in the down position when the security knob is out. When coupling the trailer the drawbar locking pin must be secured.

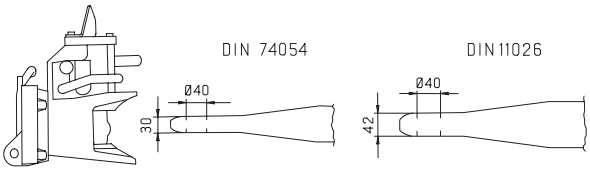

69–124

To ensure the allowed pulling angles drawbar eyes with pulling pins of 30 – 38 mm must only DIN 74054/11026 be used. A solid drawbar must be used because of the clearance in the jaws.

NOTE: Use only drawbar eyes which comply with the regulations and are undamaged. When using other than the allowed drawbar eyes the guarantee/warranty lapses and responsibility becomes invalid.

CAUTION: When using the hydraulic hitch with the wagon towing device, take care that the link of the trailer does not touch the drawbar body.

3. Maintenance and greasing

Maintenance of the mechanical and automatic jaws are alike.

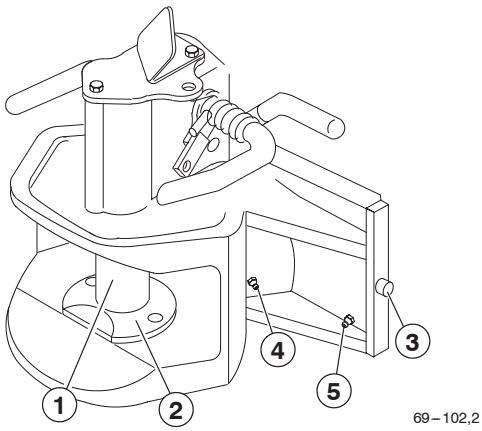

3.1. **Clean regularly:**

– the main pin (**1**) (no pressure wash)
– the control unit of the puller pin (**2**)
– the locking pin (**3**) (2 pcs)

Downloaded from www.Manualslib.com manuals search engine

https://truckmanualshub.com/

3.2. **Grease regularly:**

– nipple (**4**), use Valtra Calsium LF – Grease. After greasing turn the jaw from left to right at least 90°, this will ensure the grease spreads evenly over the desired surfaces.

NOTE: If the jaw is rusted e.g. due the fertiliser, do not use a rust–loosening agent for removing the rust, take to an authorized Valtra workshop.

3.3. **Grease if necessary or every 1000 hours:**

– nipple (**5**), use Valtra Calsium LF – Grease

4. **Specifications**

– Max permissible total weight for the tractor is 55 kN (5500 kg) with all jaws
– Max permissible vertical loading, for the trailer hitch 12,5 kN (1250 kg) with all jaws
– Automatic drawbar, main pin diameter 31 mm, 38 mm
– Mechanical drawbar, main pin diameter 31,5 mm or model Italy 28 mm, 43 mm, 50 mm

K 2.8.4. Front linkage

1. Instructions for operating

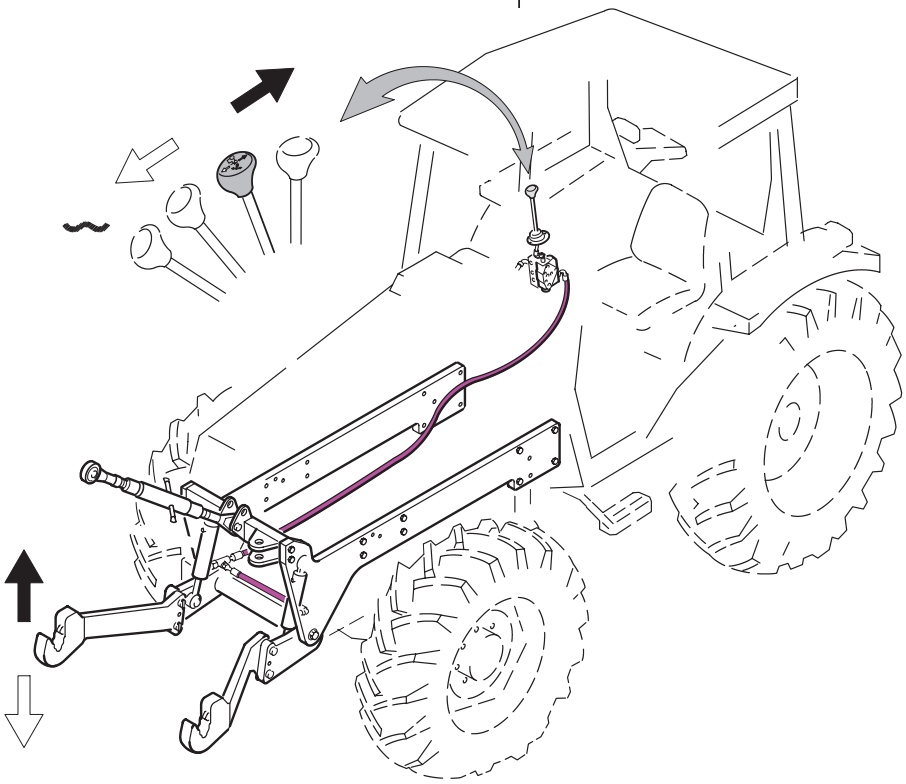

69–103

The control valve is the third valve in the auxiliary hydraulics valve set (as seen from the drivers seat).
The front linkage rises when the lever is pulled backwards and lowers when pushed forwards. When pushing the lever further forwards, it will be in the locked floating position, then machine will then follow the contour of the ground.

Downloaded from www.Manualslib.com manuals search engine

https://truckmanualshub.com/

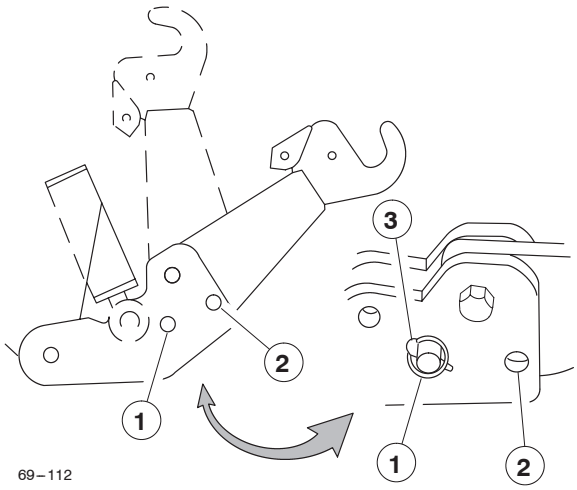

Lifting links positions:

Working position – the fastening pins are in the holes (**1**).
Floating position – the fastening pins are in the holes (**2**).
Transport position – the lifting links are folded up and the fastening pins are in the holes (**2**).

Ensure, that the locking pins of the fastenings pins (**3**) are in their places when the lifting links are mounted.

When using the front linkage, read the instructions of the rear linkage. Note also the following when using the front linkage:

– Before folding the lifting links always lift the front linkage fully up.
– When driving on public roads, with an implement or without an implement lift the front linkage fully up.
– When driving on public roads with an implement on the front linkage covering the headlights, the upper headlights (optional equipment) have to be switched on.

WARNING: When you drive on public roads, and there is no implement on the front linkage, the lifting links have to be folded up.

2. Maintenance

2.1. General

1. Check regularly that all screws and nuts are tight.
2. Tighten all screws and nuts of the linkage after the first 15–25 running hours. Check also that the hydraulic connections have no leaks.

2.2. Maintenance every 250 hours

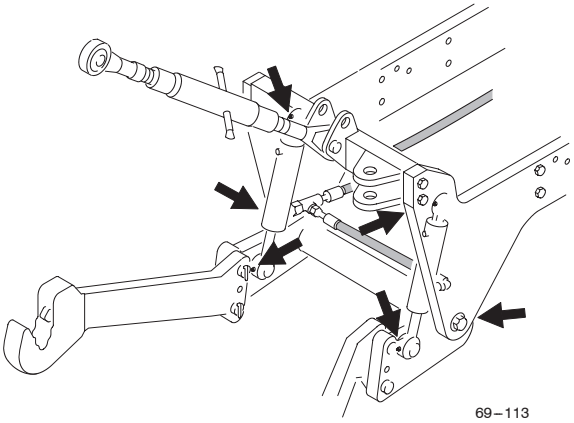

Grease the pins of the lifting cylinders and the shaft of the lifting links with Valtra Universal Grease.

3. Specifications

– Max. lifting force 25 kN, on 2WD models the max load is 1000 kg.
– The diameter of the lifting cylinders is 60 mm, 2 pcs
– Lifting range at the end of lifting links, 620 mm
– The ends of the lifting links can be folded up
– Quick coupling hooks, category 2
– Front drawing point is as standard

Downloaded from www.Manualslib.com manuals search engine

https://truckmanualshub.com/

L. Alphabetical index

A

Action to be taken during using, 51
Adjusting track width, 92
Agricultural towing device (optional), 129
Air conditioning, extra equipment, 125
Air filter, 86
Air filters, maintenance, 67
Air pressure brakes, extra equipment, 120
Air suspension–driver's seat, extra equipment, 124
Alphabetical index, 134
Attaching implements, 60
Auxiliary hydraulic, controls on RH side, 39
Auxiliary hydraulics, 59
Auxiliary hydraulics, control lever, 39
Axle loadings, max permissible, 96

B

Battery, 70
Battery maintenance, 88
Bleeding brake system of air, 90
Bleeding fuel system, 85
Brake pedals, 28
Brake pedals free travel, 90
Brake pedals, free travel, 74
Brake system, 90
Brake system bleeding, 90
Brake system, extra equipment, operating and service, 120
Brake system, presentation, 19
Brakes, 105
Brakes, air pressure, extra equipment, 120

C

Cab and shields, extra equipment, operating and service, 124
Change air filter and safety filter, 79
Change cab air filter and also upper filter (extra equipment), 80
Change oil and oil breather filter in hydraulic system, 76
Change prefilter and fuel filter, 78
Changing gear, 49
Changing the Agroline tyre/tire parameters for different tyres/tires, 34
Check links, 54
Check prefilter and fuel filter, 71
Checks and adjustments, 85
Clean cab air filter and also upper filter (extra equipment), 72
Clutch, 101
Clutch lever, power take–off, 28
Clutch pedal, 28
Clutch pedal free travel, 89
Clutch pedal, free travel, 74
Clutch, presentation, 17
Code number table for calibrating, 107
Control panel for electrohydraulic linkage shortly, 24
Control Stop, 115
Controls on front, shortly, 21
Controls on frontside, more detail, 28
Controls on left hand side shortly, 25
Controls on left hand side, more detail, 44
Controls on RH side, auxiliary hydraulic, 39
Controls on RH side, driving, 35
Controls on RH side, driving, rear linkage (electrohydraulically controlled lift), 40
Controls on RH side, rear linkage (mechanically controlled hydraulic lift), 38
Controls on RH side, rear power take–off, 38
Controls on RH side, side pillar control panel, 39, 42
Controls on right hand side, 35
Controls on right hand side shortly, 23
Conversion table for common units, 137
Coolant system, 100
Coolant thermometer, 31
Cooling system, cleaning, 81
Cooling system, maintenance, 87

D

Detailed table of contents, 4
Differential lock, 38
Dimensions and weights, 96
Draft control selector, EH linkage, 41
Draft control, electrohydraulic linkage, 58
Draft control, mechanically controlled lift, 56
Drawbar, trailer hitch, extra equipment, 127
Drive balance control switch, 41
Driver's seat shortly, 27
Driver's seat, air suspension, 124
Driving, 49
Driving, controls on RH side, 35

E

Electric main circuit switch, 115
Electrical system, 88, 100
Electrical system, extra equipment, operating and service, 115
Electro hydraulic three–point linkage, presentation, 20
Electro–hydraulic linkage, control panel, more detail, 40
Engine, 99
Engine fuel,quality requirements, 64
Engine oil changing, 72
Engine oil filter, 72
Engine, presentation, 17
Equipment catalogue, 113
Extra equipment, 113
Extra equipment catalogue, 113
Extra equipment, operating and service, 114

F

Filter system, 64
Floating position, electrohydraulic linkage, 57
Floating position, mechanically controlled lift, 55
Forward/reverse gear lever, 35
Front axle 2WD, 105
Front linkage, optional equipment, 132
Front panel of instrument panel, 29
Front power take–off, optional equipment, 116
Fuel, 64
Fuel storage, 64
Fuel system, 100
Full/dipped–beam headlights, 29
Fuse box, 29
Fuses, 88
Fuses, list, 108

G

Gearbox, 101
Gearbox, presentation, 18
General description, 14
Grease, 64

H

Hand throttle lever, 34
Headlight adjustment, 89
Heater control, 34
HiShift for the rear PTO switch, extra equipment, 118
HiShift, extra equipment, 36

Downloaded from www.Manualslib.com manuals search engine

https://truckmanualshub.com/

Hydraulic and towing device, extra equipment, operating and service, 127
Hydraulic lift (electrohydraulically controlled), using, 57
Hydraulic lift, functions, 106
Hydraulic lift, mechanically controlled, using, 55
Hydraulic lift, using, 55
Hydraulic lifts, presentation, 20
Hydraulic oil changing, 76
Hydraulic pressure filter, 76
Hydraulic pump suction strainer, 78
Hydraulic system, presentation, 20
Hydraulic three–point linkage unit, presentation, 20

I

If the tractor is not used, 94
Ignition switch, 34
Illustrations, 14
Indicator lights on instrument panel, 31
Instrument and controls, presentation, 21
Instrument panel shortly, 22
Instrument panel, more detail, 29

L

Lift/stop/lower switch (Autocontrol switch), 57
Lift/stop/lower switch, EH linkage, 40
Lifting links, 54
Light switch, 30
Lights of the tractor, 12
Linkage activating, electrohydraulic linkage, 57
Lowering speed control (mechanical hydraulic lift), 38
Lowering speed selector, EH linkage, 41
Lowering speed, electrohydraulic linkage, 58
Lowering speed, mechanically controlled lift, 56
Lubrication and maintenance schedule, 65
Lubrication system, engine, 100

M

Main table of contents, 2
Maintenance daily, 68
Maintenance every 1000 hours (or yearly), 76
Maintenance every 2000 hours, 81
Maintenance every 250 hours, 72
Maintenance every 4000 hours, 84
Maintenance every 500 hours, 74
Maintenance weekly, 69

O

Oil recommendations according to outdoor temperature, 63
Operating instructions, 52
Other controls, controls on RH side, 39, 43
Other specifications, 107
Overdrive lever, 35
Overdrive, presentation, 18

P

Parking brake, 44
Parking brake adjusting, 90
Periodic maintenance, 67
Permissible axle loadings, 96
Points to note during the first 50 hours running, 48
Position control knob, EH linkage, 40
Position control lever (mechanical hydraulic lift), 38
Position control, electrohydraulic linkage, 57
Position lever, mechanically controlled lift, 55
Power take–off, 103
Power take–off, presentation, 19
Power take–off, use, 52
Power transmission, 89, 101
Power transmission oil changing, 77
Power transmission, presentation, 17
Powered front axle, 105
Powered front axle, presentation, 18
Powered front axle, using, 50
PTO clutch lever free travel, 89

Q

Quality requirements of engine fuel, 64

R

Range gear lever, 35
Rear linkage (electrohydraulically controlled lift), controls on RH side, 40
Rear linkage (mechanically controlled hydraulic lift), controls on RH side, 38
Rear power take–off, controls on RH side, 38
Recommended fuel and lubricants, 63
Roof console, presentation, 26, 45
Roof fan, 45
Running speed at different nominal revs of the rear PTO, 103

S

Safety precautions, 6, 10
Safety rules, 6
Safety stop, 115
Seat, more detail, 46
Selector lever, power take–off, 38
Serial numbers of your tractor, 1
Service, 62
Service, presentation, 17
Side panel of instrument panel, 34
Side pillar control panel, controls on RH side, 39, 42
Specifications, 96
Speed gear lever, 35
Speed ranges, 101
Start, 48
Starting aerosol, 49
Starting and running, 48
Starting with auxiliary batteries (jump starting), 49
Steering lock limiting, 92
Steering system, 91
Steering system, presentation, 19
Steering system, specifikation, 105
Steering wheel, 29
Stopping the tractor, 51
Storing the tractor, 94
Switch for hazard warning flashers, 30

T

Telescopic lower links, 55
The capacity of the cab filter, 107
The rear PTO switch for HiShift , extra equipment, 118
Three–point linkage, 54
Tightening torques, wheel nuts, 97
To the operator, 3
Toe–in adjusting, 91
Top link, use, 61
Towing the tractor, 51
Track width adjusting, Rear axle, 94
Track widths, 99
Trailer, 53
Trailer hitch lifting links (extra equipment) adjusting, 128
Trailer hitch, extra equipment, 127
Trailer socket, 53
Transmission oil filter, 76
Transport height selector, EH linkage, 41
Transport height, electrohydraulic linkage, 57
Turning radius, 106
Tyre/tire pressures and permissible loadings, 98
Tyres/tires, 97

U

Use of snow chains, 51
Using the hydraulic lift, 55

V

Valves adjusting for single– or double acting, 59

Downloaded from www.Manualslib.com manuals search engine

https://truckmanualshub.com/

W

Wagon towing device, extra equipment, 130
Wiring diagram, 110
Wiring diagram, component list, 108
Working hydraulics, 106

Downloaded from www.Manualslib.com manuals search engine

https://truckmanualshub.com/

Conversion table for common units

Metric Weights and Measures with Customary Equivalents

Length		
1 millimeter	=	0.03937 inch
1 centimeter	=	0.3937 inch
1 meter	=	39.37 inches
	=	3.281 feet
	=	1.094 yards
1 kilometer	=	0.6214 mile
Area		
1 square centimeter	=	0.155 square inch
1 square meter	=	1.196 yards
	=	10.764 square feet
1 hectare (10,000 m^2)	=	2.471 acres
1 square kilometer	=	0.386 square mile
	=	247.1 acres
Capacity or volume		
1 cubic centimeter	=	0.061 cubic inch
1 cubic meter	=	35.315 cubic feet
	=	1.308 cubic yards
1 milliliter	=	0.0352 fluid ounce (U.K.)
	=	0.0338 fluid ounce (U.S.)
1 liter	=	35.20 fluid ounces (U.K.)
	=	1.7598 pints (U.K.)
	=	0.8799 quart (U.K.)
	=	0.220 gallon (U.K.)
	=	0.0275 bushel (U.K.)
	=	0.110 peck (U.K.)
	=	33.81 fluid ounces (U.S.)
	=	2.1134 pints (U.S.)
	=	1.0567 quarts (U.S.)
	=	0.2642 gallon (U.S.)
	=	0.0284 bushel (U.S.)
	=	0.1135 peck (U.S.)
	=	0.908 dry quart (U.S.)
1 kiloliter	=	219.97 gallons (U.K.)
	=	264.17 gallons (U.S.)
Weight		
1 gram	=	0.03527 ounce (avdp.)
1 kilogram	=	35.274 ounces (avdp.)
	=	2.205 pounds (avdp.)
1 metric ton (1,000 kg)	=	0.984 ton (long)
	=	1.102 tons (short)
	=	2204.6 pounds (avdp.)
Volume per unit area		
1 liter/hectare	=	0.089 gallon (U.K.)/acre
	=	0.107 gallon (U.S.)/acre
Weight per unit area		
1 kilogram/square centimeter	=	14.22 pounds (avdp.)/square inch
1 kilogram/hectare	=	0.892 pound (avdp.)/acre
Area per unit weight		
1 square centimeter/kilogram	=	0.0703 square inch/pound (avdp.)
Temperature conversion formulas		
Centigrade (Celsius)	=	5/9 (Fahrenheit −32)
Fahrenheit	=	9/5 centigrade (Celsius +32)
Illumination		
1 foot−candle	=	10.764 lux
1 lux	=	0.0929 foot−candle

Downloaded from www.Manualslib.com manuals search engine

https://truckmanualshub.com/

Travel speed

1 km/h	=	0.62 mph
1 mph	=	1.61 km/h

Drawbar pull

1 kN	=	224.81 lbf
1 lbf	=	4.4482 N

Power (identified by such terms as crankshaft power, pto power, belt power, drawbar power; indicating the point at which the measurement was taken)

1 kW	=	1.3596 hp
1 hp	=	0.7355 kW

Engine torque

1 Nm	=	0.738 lbf ft
1 lbf ft	=	1.356 Nm

Fuel economy

1 kg/kWh	=	0.278 kg/MJ
	=	1.644 lb/hph
1 lb/hph	=	0.169 kg/MJ
	=	0.608 kg/kWh

Engine displacement

1 liter (dm^3)	=	61.024 in^3
100 in^3	=	1.6387 liters (dm^3)

Hydraulic pump pressure

1 MPa	=	145.037 psi
1000 psi	=	6.8948 MPa

Tyre/Tire pressure

100 kPa	=	14.5037 psi
1 psi	=	6.8948 kPa

When conversions are made the results should be rounded to a meaningful number of digits, relative to the accuracy of original measurements. Values for weights and volumes are based on pure water at 4˚C. under 760 mm of atmospheric pressure.
For additional conversion factors, or for greater accuracy, refer to National Bureau of Standards Misc. Publ. 233 or to the Handbook of Chemistry and Physics.

Customary Weights and Measures with Metric Equivalents

Length

1 inch	=	2.54 centimeters
1 foot	=	30.48 centimeters
	=	0.3048 meter
1 yard	=	0.9144 meter
1 mile	=	1609.34 meters
	=	1.609 kilometers

Area

1 square inch	=	6.452 square centimeters
1 square foot	=	0.0929 square meter
1 square yard	=	0.8361 square meter
1 acre	=	0.4047 hectare
1 square mile	=	259.0 hectares

Capacity or volume

1 cubic inch	=	16.387 cubic centimeters
1 cubic foot	=	0.0283 cubic meter
1 cubic yard	=	0.7646 cubic meter
1 fluid ounce (U.K.)	=	28.409 milliliters
	=	0.0284 liter
1 fluid ounce (U.S.)	=	29.586 milliliters
	=	0.0296 liter
1 liquid pint (U.K.)	=	0.0568 liter
1 liquid pint (U.S.)	=	0.4732 liter
1 liquid quart (U.K.)	=	1.1365 liters
1 liquid quart (U.S.)	=	0.9463 liter

Downloaded from www.Manualslib.com manuals search engine

https://truckmanualshub.com/

1 gallon (U.K.)	=	4.5461 liters
1 gallon (U.S.)	=	3.7853 liters
1 bushel (U.K.) = 4 pecks (U.K.) = 8 gallons (U.K.)	=	36.3687 liters
1 bushel (U.S.) = 4 pecks (U.S.) = 32 dry quarts (U.S.)	=	35.2391 liters
1 peck (U.K.)	=	9.0922 liters
1 peck (U.S.) = 8 dry quarts (U.S.)	=	8.8098 liters
1 dry quart (U.S.) = 1 1/6 liquid quarts (U.S.)	=	1.1012 liters

Weight

1 ounce (avdp.)	=	28.50 grams
1 pound	=	453.592 grams
	=	0.4536 kilogram
1 ton (short)	=	0.907 ton (metric)
1 ton (long)	=	1.016 ton (metric)
	=	1016.05 kilograms

Volume per unit area

1 gallon (U.K.)/acre	=	11.234 liters/hectare
1 gallon (U.S.)/acre	=	9.354 liters/hectare

Weight per unit area

1 pound (avdp.)/square inch	=	0.0703 kilogram/square centimeter
1 pound (avdp.)/acre	=	1.121 kilograms/hectare

Area per unit weight

1 square inch/pound (avdp.)	=	14.22 square centimeters/kilogram

Downloaded from www.Manualslib.com manuals search engine

https://truckmanualshub.com/

Brief summary

Capacity data dm^3 (litre)

Engine oil, incl. filter
– 600, 700 7
– 800, 900 9
Cooling system
– 600 . . . . . 13.5
– 700 . . . . . 13.5
– 800 . . . . . 15.5
– 900 . . . . . 15.5
Hydraulic system, max 35
Power transmission 32
Powered front axle:
– differential 6.5
– hub reduction gears . . . . . 2 x 0.8
Fuel tank 79
– with extra fuel tank 103

Technical data

Engine idling speed . . . . . 750 r/min
Pedal travel, clutch . . . . . 20–25 mm
Pedal travel, brake . . . . . 50 mm
Max. pressure in hydraulic system
capacity 36 l/min . . . . . 18 MPa
capacity 52 l/min . . . . . 19 MPa

With tyres shown in Technical Specifications

Total weight of tractor kg without extra weights (kg)				
600–2	3160		600–4	3390
700–2	3210		700–4	3440
800–2	3330		800–4	3560
900–2	3360		900–4	3590

Max. height of tractor mm (to the exhaust pipe, mm)	
600–2, 700–2	2655
600–4, 700–4	2655
800–2, 900–2	2676
800–4, 900–4	2700

Tightening torques, wheel nuts:

– front wheels, 2WD models . . . . . 130 Nm
– front wheels, 4WD models . . . . . 300 Nm
– rear wheels . . . . . 550 Nm
Rim/wheel disc . . . . . 310 Nm

Tyre pressure recommendations			
Rear wheels	Pressure (kPa)	Front wheels	Pressure (kPa)
16.9–30/8	170	10.00–16/8	280
16.9R30/8	160	10.50–18/10	330
18.4R30/8	160	11.00–16/8	160
480/70R30	60	12.4–24/8	230
	160	12.4R24/8	160
16.9–34/8	170	13.6R24	160
16.9R34/8	160	13.6–24/8	200
18.4R34	160	14.9R24	160
18.4–34/8	140	14.9–24/8	180
420/85R34	160	360/70R24	60
460/85R34	160		160
480/70R34	160	340/85R24	160
	60	380/70R24	60
520/70R34	160		160
	60	380/85R24	160
540/65R34	160	420/70R24	160
	60		60
13.6R36/8	160	440/65R24	160
13.6–36/6	160		60
13.6–38/8	200	12.4R28	160
13.6R38/8	160	230/95R32	320
14.9R38/8	160	275/80R18	240
340/85R38	160	13.6R24 IND	330
230/95R48	320	14.9R24 IND	330
13.6R24/12 IND	330	13.6–24/10 FOR	250
18.4R34 IND	290	14.9–24/14 FOR	300
16.9R34 IND	290		
16.9–34/14 FOR	260		
18.4–34/14F OR	260		

Downloaded from www.Manualslib.com manuals search engine

https://truckmanualshub.com/

Ref no 39 179 21 9 (11/2002)
Printed in Finland by Kopijyvä
English

Downloaded from www.Manualslib.com manuals search engine