https://truckmanualshub.com/

SK1050

Operator’s Manual

Issue 2.0
Original Instruction

053-2963

https://truckmanualshub.com/

Overview

Chapter Contents

Serial Number Location 2

Intended Use 3

Equipment Modification 3

Unit Components 4

Operator Orientation. 5

About This Manual 6

- Bulleted Lists. 6
- Numbered Lists. 6

https://truckmanualshub.com/

Serial Number Location

Record serial numbers and date of purchase in spaces provided. Unit serial number is located as shown.

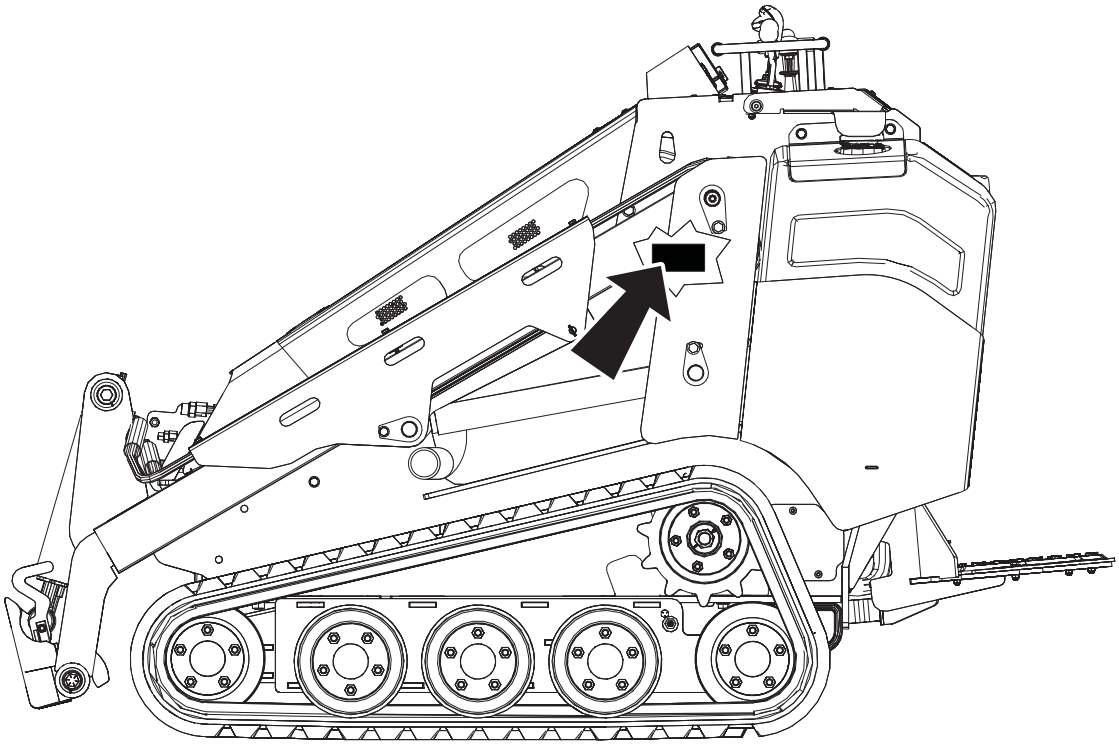

t53om001h.eps

Item	
date of manufacture	
date of purchase	
unit serial number	
engine serial number	

https://truckmanualshub.com/

Intended Use

The SK1050 is a platform, rubber track compact tool carrier unit designed for light-to medium-duty construction work. The SK1050 has a quick attach mount plate which makes it easy for an operator to connect different attachments. The unit is designed for operation in temperatures typically experienced in earth moving and construction work environments. Provisions may be required to operate in extreme temperatures. Contact your Ditch Witch® dealer. Use in any other way is considered contrary to the intended use.

The SK1050 should be operated, serviced, and repaired only by persons familiar with its particular characteristics and acquainted with the relevant safety procedures.

Equipment Modification

This equipment was designed and built in accordance with applicable standards and regulations. Modification of equipment could mean that it will no longer meet regulations and may not function properly or in accordance with the operating instructions. Modification of equipment should only be made by competent personnel possessing knowledge of applicable standards, regulations, equipment design functionality/requirements and any required specialized testing.

https://truckmanualshub.com/

Unit Components

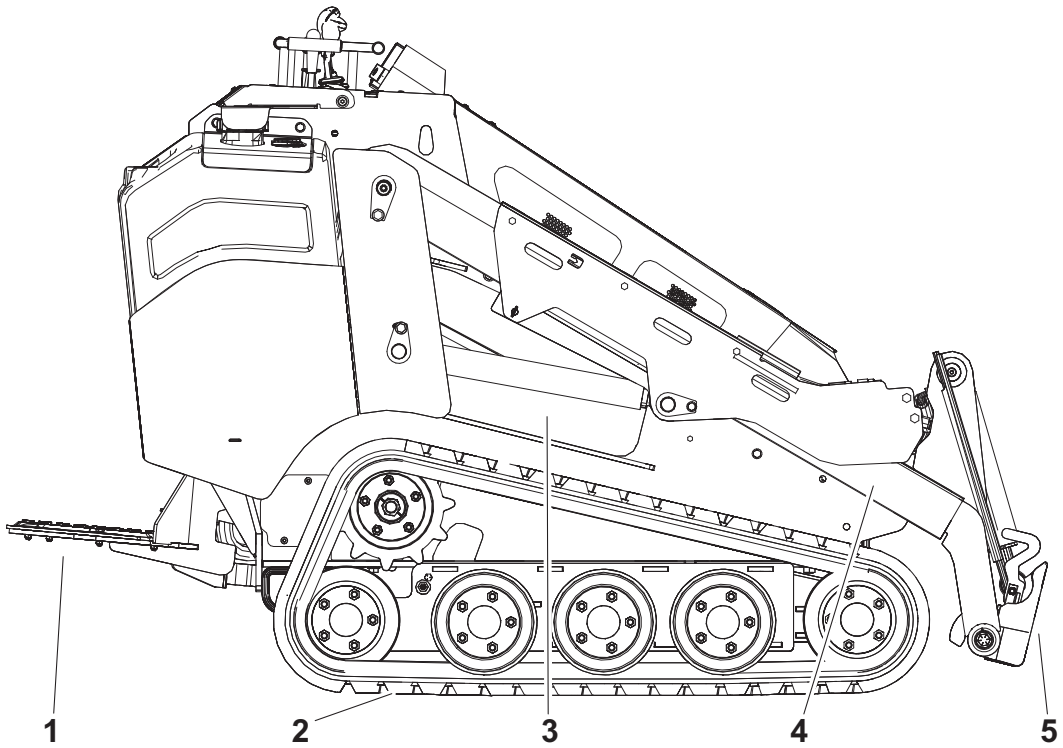

t53om002h.eps

1. Operator station
2. Tracks
3. Engine compartment
4. Lift arms
5. Attachment plate

https://truckmanualshub.com/

Operator Orientation

1. Front of unit
2. Right side of unit
3. Rear of unit
4. Left side of unit

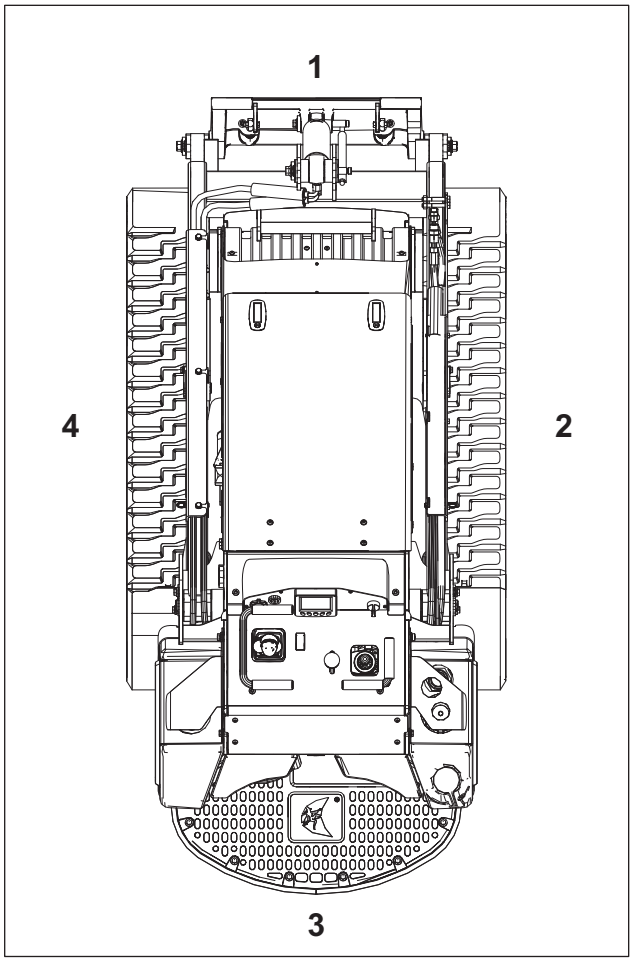

t53om003h.eps

https://truckmanualshub.com/

About This Manual

This manual contains information for the proper use of this machine. See the beige **Operation Overview** pages for basic operating procedures. Cross references such as "See page 50" will direct you to detailed procedures.

Bulleted Lists

Bulleted lists provide helpful or important information or contain procedures that do not have to be performed in a specific order.

Numbered Lists

Numbered lists contain illustration callouts or list steps that must be performed in order.

https://truckmanualshub.com/

Foreword

This manual is an important part of your equipment. It provides safety information and operation instructions to help you use and maintain your Ditch Witch® equipment.

Read this manual before using your equipment. Keep it with the equipment at all times for future reference. If you sell your equipment, be sure to give this manual to the new owner.

If you need a replacement copy, contact your Ditch Witch dealer. If you need assistance in locating a dealer, visit our website at **www.ditchwitch.com** or write to the following address:

The Charles Machine Works, Inc.
Attn: Marketing Department
PO Box 66
Perry, OK 73077-0066
USA

The descriptions and specifications in this manual are subject to change without notice. The Charles Machine Works, Inc. reserves the right to improve equipment. Some product improvements may have taken place after this manual was published. For the latest information on Ditch Witch equipment, see your Ditch Witch dealer.

Thank you for buying and using Ditch Witch equipment.

https://truckmanualshub.com/

SK1050
Operator's Manual

Issue number 2.0 / OM-02/18
Part number 053-2963

Copyright 2016, 2018
by The Charles Machine Works, Inc.

Ditch Witch® and Ditch Witch are registered trademarks of The Charles Machine Works, Inc.

This product and its use may be covered by one or more patents at http://patents.charlesmachine.works.

https://truckmanualshub.com/

Contents

Overview 1
machine serial number, information about the type of work this machine is designed to perform, basic machine components, and how to use this manual

Foreword 7
part number, revision level, and publication date of this manual, and factory contact information

Safety 11
machine safety alerts and emergency procedures

Controls 21
machine controls, gauges, and indicators and how to use them

Prepare 41
procedures for inspecting and classifying the jobsite, planning the installation path (if needed), preparing the jobsite for work, and connecting attachments

Drive 51
procedures for startup, cold start, driving, and shutdown

Transport 57
procedures for lifting, hauling, and towing

Complete the Job 65
procedures for restoring the jobsite and rinsing and storing equipment

Service 67
service intervals and instructions for this machine including lubrication, replacement of wear items, and basic maintenance

Specifications 93
machine specifications including weights, measurements, power ratings, and fluid capacities

Support 97
the warranty policy for this machine, and procedures for obtaining warranty consideration and training

Service Record 101
a record of major service performed on the machine

https://truckmanualshub.com/

Appendix **103**
additional information about Ditch Witch® equipment

https://truckmanualshub.com/

Safety

Chapter Contents

Guidelines 12

California Proposition 65 Warning 12

Emergency Procedures 13

- Electric Strike Description 13
- If an Electric Line is Damaged 14
- If a Gas Line is Damaged 15
- If a Fiber Optic Cable is Damaged 16
- If Machine Catches on Fire 16

Safety Alert Classification 17

Machine Safety Alerts. 18

https://truckmanualshub.com/

Guidelines

When you see this safety alert sign, carefully read and follow all instructions.
YOUR SAFETY IS AT STAKE. Read this entire section before using your equipment.

Follow these guidelines before operating any jobsite equipment:

- Complete proper training and read operator's manual before using equipment.
- Mark proposed path with white paint and have underground utilities located before working. In the US or Canada, call 811 (US) or 888-258-0808 (US and Canada). Also contact any local utilities that do not participate in the One-Call service. In countries that do not have a One-Call service, contact all local utility companies to have underground utilities located.
- Classify jobsite based on its hazards and use correct tools and machinery, safety equipment, and work methods for jobsite.
- Mark jobsite clearly and keep spectators away.
- Wear personal protective equipment.
- Review jobsite hazards, safety and emergency procedures, and individual responsibilities with all personnel before work begins. Safety videos are available from your Ditch Witch® dealer or at www.ditchwitch.com/safe. Safety Data Sheets (SDS) are available at www.ditchwitch.com/support.
- Fully inspect equipment before operating. Repair or replace any worn or damaged parts. Replace missing or damaged safety shields and safety signs. Contact your Ditch Witch dealer for assistance.
- Use equipment carefully. Stop operation and investigate anything that does not look or feel right.
- Do not operate machine where flammable gas may be present.
- Only operate equipment in well-ventilated areas.
- Contact your Ditch Witch dealer if you have any question about operation, maintenance, or equipment use.
- Complete the equipment checklist located at www.ditchwitch.com/safe.

California Proposition 65 Warning

This product may contain chemicals known to the State of California to cause cancer, birth defects, or other reproductive harm.

- battery posts, terminals and related accessories
- engine exhaust
- ethylene glycol

https://truckmanualshub.com/

Emergency Procedures

WARNING Jobsite hazards could cause death or serious injury. Use correct equipment and work methods. Use and maintain proper safety equipment.

Before operating any equipment, review emergency procedures and check that all safety precautions have been taken.

EMERGENCY SHUTDOWN - Turn ignition switch to stop position or push remote engine stop button (if equipped).

Electric Strike Description

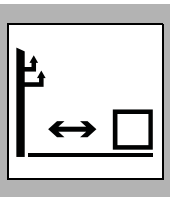

DANGER Electric shock will cause death or serious injury. Stay away. 274-049

When working near electric cables, remember the following:

- Electricity follows all paths to ground, not just path of least resistance.
- Pipes, hoses, and cables will conduct electricity back to all equipment.
- Low voltage current can injure or kill. Many work-related electrocutions result from contact with less than 440 volts.

Most electric strikes are not noticeable, but indications of a strike include:

- power outage
- smoke
- explosion
- popping noises
- arcing electricity

If any of these occur, assume an electric strike has occurred.

https://truckmanualshub.com/

If an Electric Line is Damaged

If you suspect an electric line has been damaged and you are **on tractor**, DO NOT MOVE. Remain on tractor and take the following actions. The order and degree of action will depend upon the situation.

- Warn people nearby that an electric strike has occurred. Instruct them to leave the area and contact utility.Raise attachments and drive from immediate area.
- Contact utility company to shut off power.
- Do not return to jobsite or allow anyone into area until given permission by utility company.

If you suspect an electric line has been damaged and you are **off tractor**, DO NOT TOUCH TRACTOR. Take the following actions. The order and degree of action will depend upon the situation.

- LEAVE AREA. The ground surface may be electrified, so take small steps with feet close together to reduce the hazard of being shocked from one foot to the other. For more information, contact your Ditch Witch® dealer.
- Contact utility company to shut off power.
- Do not return to jobsite or allow anyone into area until given permission by utility company.

https://truckmanualshub.com/

If a Gas Line is Damaged

WARNING Fire or explosion possible. Fumes could ignite and cause burns. No smoking, no flame, no spark. 275-419 (2P)

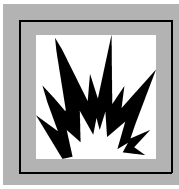

WARNING Explosion possible. Serious injury or equipment damage could occur. Follow directions carefully.

If you suspect a gas line has been damaged, take the following actions. The orders and degree of action will depend on the situation.

- Immediately shut off engine(s), if this can be done safely and quickly.
- Remove any ignition source(s), if this can be done safely and quickly.
- Warn others that a gas line has been cut and that they should leave the area.
- Leave jobsite as quickly as possible.
- Immediately call your local emergency phone number and utility company.
- If jobsite is along street, stop traffic from driving near jobsite.
- Do not return to jobsite until given permission by emergency personnel and utility company.

https://truckmanualshub.com/

If a Fiber Optic Cable is Damaged

Do not look into cut ends of fiber optic or unidentified cable. Vision damage can occur. Contact utility company.

If Machine Catches on Fire

Perform emergency shutdown procedure and then take the following actions. The order and degree of action will depend on the situation.

- Immediately move battery disconnect switch (if equipped and accessible) to disconnect position.
- If fire is small and fire extinguisher is available, attempt to extinguish fire.
- If fire cannot be extinguished, leave area as quickly as possible and contact emergency personnel.

https://truckmanualshub.com/

Safety Alert Classifications

These classifications and the icons defined on the following pages work together to alert you to situations which could be harmful to you, jobsite bystanders or your equipment. When you see these words and icons in the book or on the machine, carefully read and follow all instructions. YOUR SAFETY IS AT STAKE.

Watch for the three safety alert levels: **DANGER**, **WARNING** and **CAUTION**. Learn what each level means.

DANGER indicates a hazardous situation that, if not avoided, will result in death or serious injury. This signal word is to be limited to the most extreme situations.

WARNING indicates a hazardous situation that, if not avoided, could result in death or serious injury.

CAUTION indicates a hazardous situation that, if not avoided, could result in minor or moderate injury.

Watch for two other words: ***NOTICE*** and **IMPORTANT**.

NOTICE indicates information considered important, but not hazard-related (e.g., messages relating to property damage).

IMPORTANT can help you do a better job or make your job easier in some way.

https://truckmanualshub.com/

Machine Safety Alerts

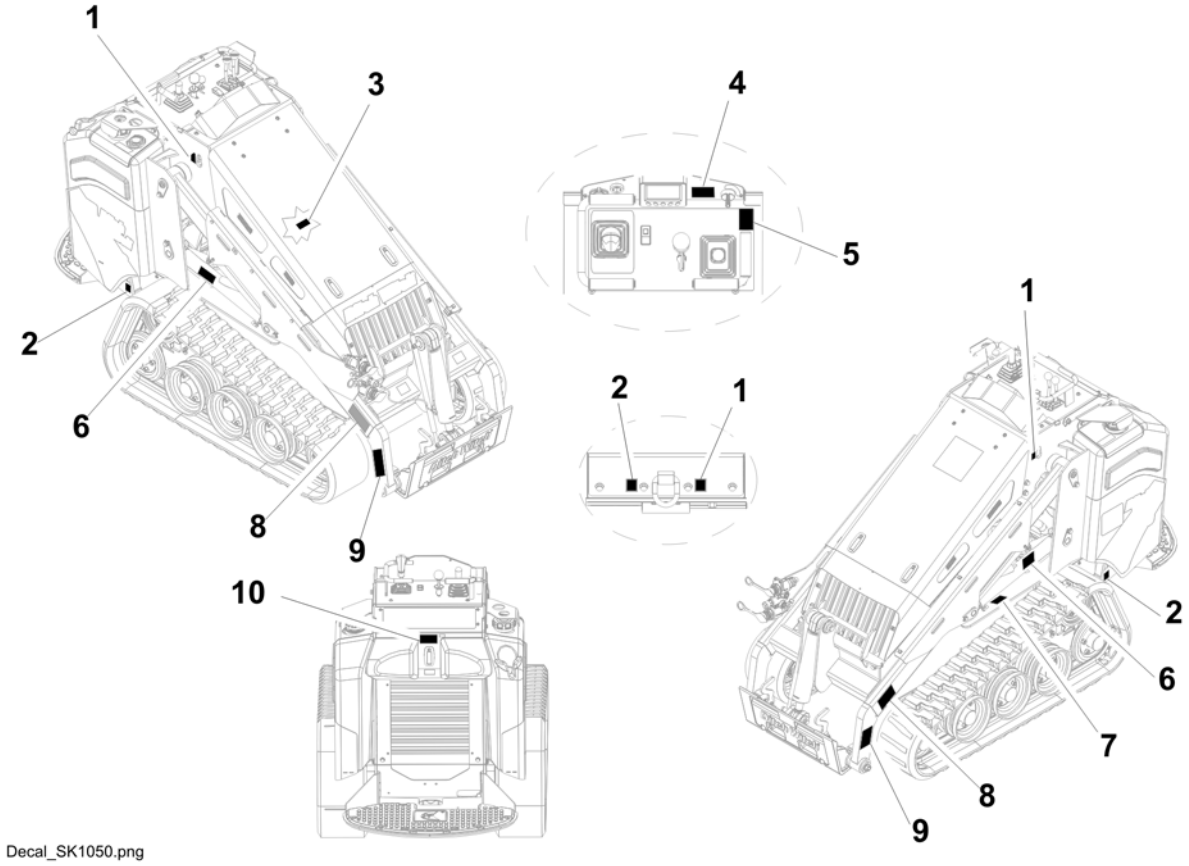

1		Lift point. See Transport chapter for more information. 274-442
2	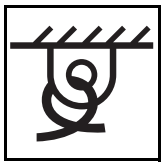	Tiedown location. See Transport chapter for more information. 274-318
3		**WARNING** Fire or explosion possible. Do not use starter fluid. 273-459 (2P), 274-206 (2P), 700-206 (2P)

https://truckmanualshub.com/

4		**WARNING** Jobsite hazards could cause death or serious injury. Use correct equipment and work methods. Use and maintain proper safety equipment. 274-050; 274-724 (2P), 700-133
5		**CAUTION** Exposure to high noise levels may cause hearing loss. Wear hearing protection. 700-009 (2-P)
6		**WARNING** Moving parts can crush. Secure cylinder with locking device before servicing. 273-413
7	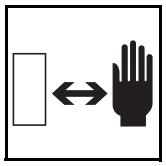	**CAUTION** Hot parts may cause burns. Do not touch until cool or wear gloves. 275-355 (2-P)
8	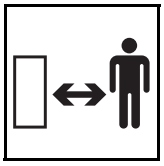	**WARNING** Crushing weight could cause death or serious injury. Stay away. 275-326
9	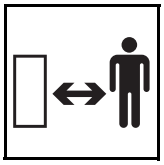	**WARNING** Moving parts could cut off hand or foot. Stay away. 275-184
10	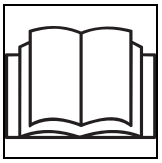	**WARNING** Misuse of machine can cause death or serious injury. Read and understand operator's manual and all other safety instructions before use. 273-475

https://truckmanualshub.com/

https://truckmanualshub.com/

Controls

Chapter Contents

Gauges and Indicators 22

Graphic Display 24

Service Interval Screen 31

Controls 34

Engine Compartment 38

Attachment Plate 39

https://truckmanualshub.com/

Gauges and Indicators

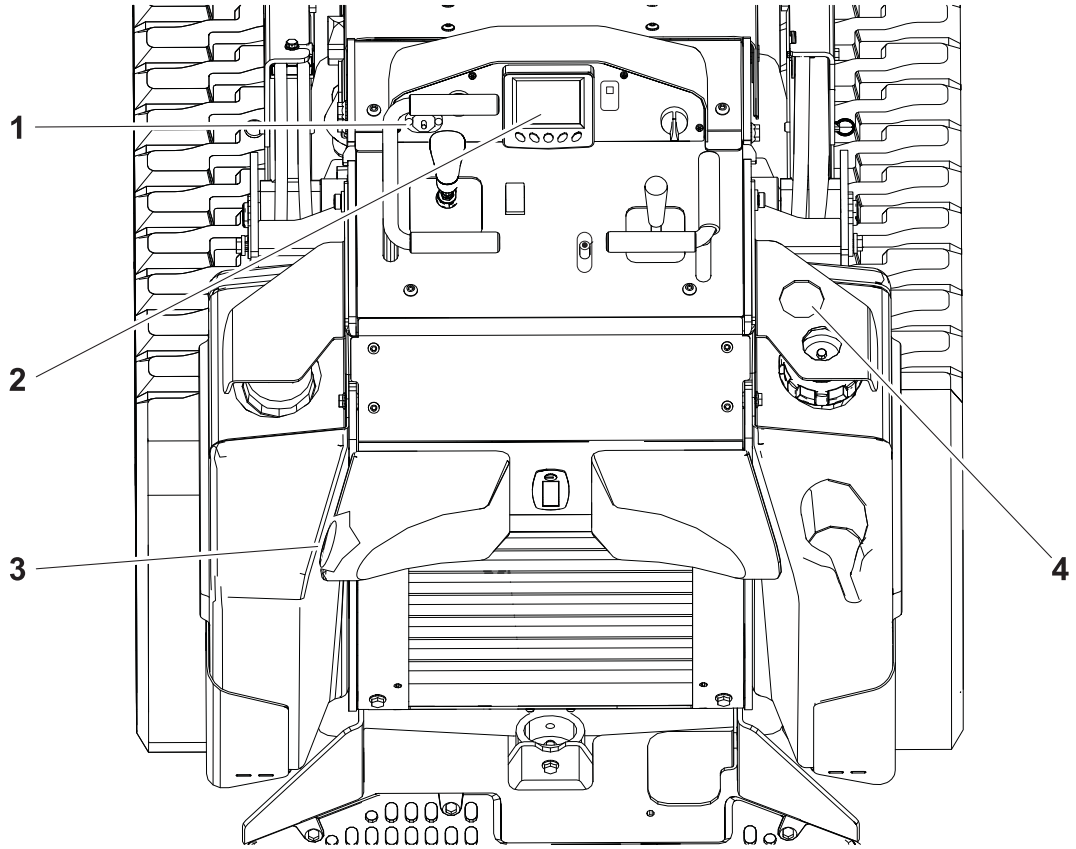

t53om007h.eps

1. Auxiliary outlet
2. Graphic display
3. Hydraulic fluid level sight glass
4. Fuel gauge

Item	Description	Notes
1. Auxiliary outlet 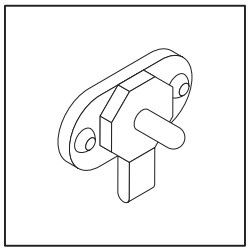 c00ic114a.eps	To operate work lights or other 12V devices, plug into outlet.	

https://truckmanualshub.com/

Item	Description	Notes
2. Graphic display 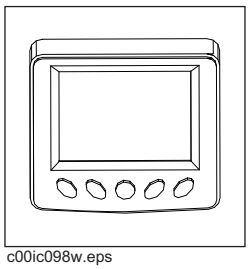 c00ic098w.eps	See "Graphic Display" on page 24.	
3. Hydraulic fluid sight glass 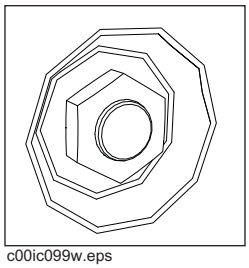 c00ic099w.eps	Shows level of hydraulic fluid in tank. Maintain fluid at halfway point on glass.	
4. Fuel gauge 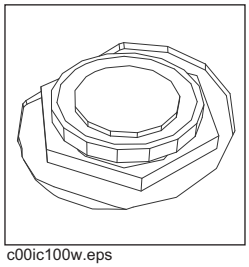 c00ic100w.eps	Shows level of fuel in tank.	***NOTICE:*** Use low sulfur or ultra low sulfur fuel only.

https://truckmanualshub.com/

Graphic Display

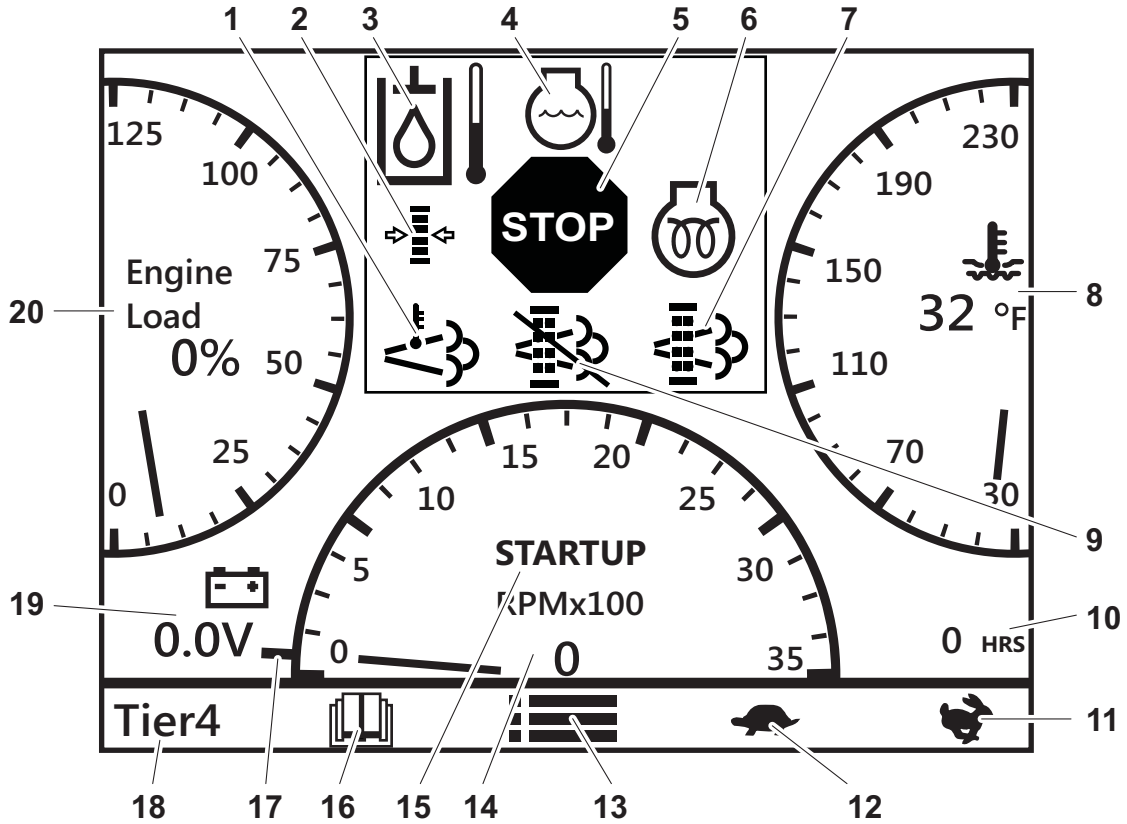

1. High exhaust temperature indicator
2. Air filter restriction indicator
3. Hydraulic fluid temperature indicator
4. Engine over-temperature indicator
5. Diagnostic message indicator
6. Glow plug indicator
7. DPF regeneration indicator
8. Engine coolant temperature indicator
9. DPF inhibited indicator
10. Hourmeter
11. Engine speed setpoint increase button
12. Engine speed setpoint decrease button
13. Menu button
14. Engine speed (RPM)
15. Throttle system state indicator
16. Service reminders button
17. Engine RPM setpoint indicator
18. Tier 4 menu button
19. Electrical system voltage
20. Engine percent load gauge

https://truckmanualshub.com/

Item	Description	Notes
1. High exhaust temperature indicator 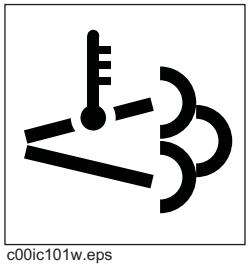 c00ic101w.eps	Indicates high exhaust temperature.	**IMPORTANT:** Will light when exhaust cleaning (DPF regeneration) is occurring.
2. Air filter restriction indicator 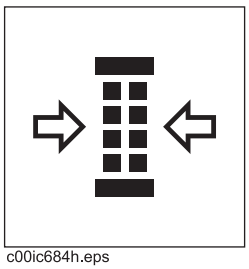 c00ic684h.eps	Indicator will begin flashing once the air filter is 25% unrestricted. Percentage will decrease as air filter becomes more restricted. For best results, replace filter between 25% and 0%. Reset after replacing air filter.	To view the air filter percentage before 25% unrestricted, press the diagnostics menu button at any time.
3. Hydraulic fluid temperature indicator 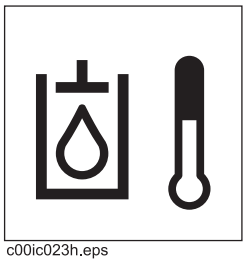 c00ic023h.eps	Lights and alarm sounds when hydraulic fluid is overheating.	Check hydraulic fluid level. Reduce load. Ensure oil cooler is clean.
4. Engine over-temperature indicator 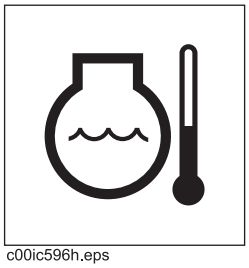 c00ic596h.eps	Flashes when temperature rises above 230°F (110°C).	**IMPORTANT:** If temperature goes above 230°F (110°C): 1. Stop operation, set throttle to low idle, and allow engine to cool. 2. Stop engine. 3. Check coolant level. 4. Ensure radiator is clean.

https://truckmanualshub.com/

Item	Description	Notes
5. Diagnostic message indicator c00ic102w.eps 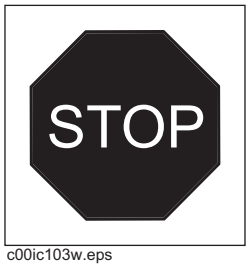 c00ic103w.eps	Appears when there is a diagnostic trouble code. This indicates a warning code. This indicates a stop code.	Go to Diagnostics menu to see the active and stored error messages.
6. Glow plug indicator 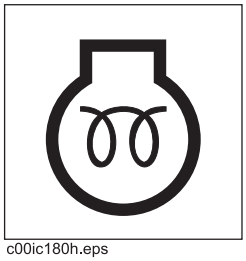 c00ic180h.eps	Lights when ignition switch is on and engine ECU determines glow plugs are required to start machine.	
7. DPF regeneration indicator 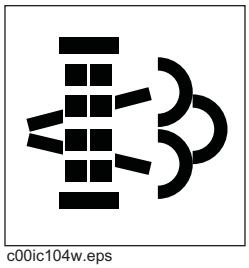 c00ic104w.eps	Flashes if regeneration is needed but has not occurred yet. Lights solid while regeneration is occurring.	

https://truckmanualshub.com/

Item	Description	Notes
8. Engine coolant temperature indicator 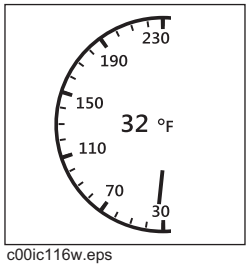 c00ic116w.eps	Displays coolant temperature.	**IMPORTANT:** If temperature goes above 230°F (110°C): 1. Stop operation, set throttle to low idle, and allow engine to cool. 2. Stop engine. 3. Check coolant level. 4. Ensure radiator is clean.
9. DPF regen inhibited indicator 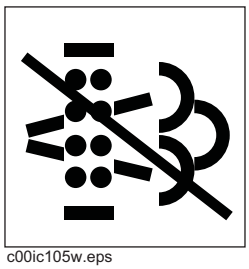 c00ic105w.eps	Lights when automatic exhaust cleaning (DPF regeneration) has been inhibited.	**IMPORTANT:** System will remain in inhibited mode until unit is returned to automatic mode. Manual exhaust cleaning (DPF REGEN) must be initiated through Tier 4 menu when this indicator is on. See "Exhaust Cleaning - Tier 4 Only" on page 72.
10. Hourmeter c00ic106w.eps	Displays engine operating time.	Use these times to schedule service.
11. Engine speed increase button 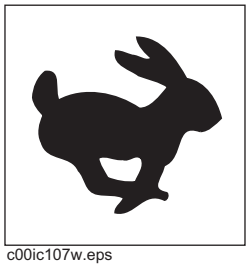 c00ic107w.eps	To increase engine speed, push once. To increase to full speed, push twice.	**IMPORTANT:** • Increasing engine speed also increases attachment speed. • Each button press increases engine by 360 rpm.

https://truckmanualshub.com/

Item	Description	Notes
12. Engine speed decrease button 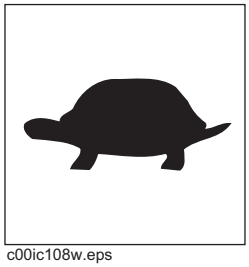 c00ic108w.eps	To decrease engine speed, push once. To decrease to lowest speed, push twice.	**IMPORTANT:** Each button press decreases engine by 360 rpm.
13. Menu button 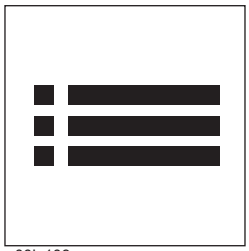 c00ic109w.eps	Press to go to the menu screen.	
14. Engine speed (RPM) 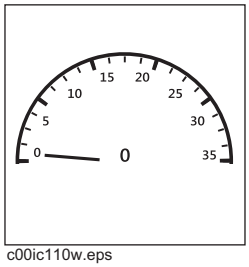 c00ic110w.eps	Displays engine RPM.	
15. Throttle system state indicator 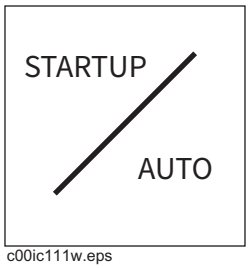 c00ic111w.eps	Displays one of the three states of the throttle system.	• Startup indicates the system is controlling its own throttle during startup conditions. • Auto indicates that the auto-throttle system is active and controlling engine throttle based on the user's selected rpm setpoint. To enable auto-throttle, go to the settings menu. • No indication means that the rpm setting is under manual control.

https://truckmanualshub.com/

Item	Description	Notes
16. Service reminders button 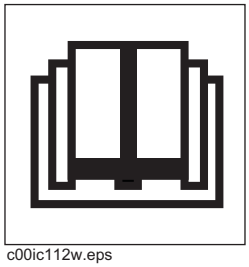 c00ic112w.eps	Press to go to the service reminders screen.	
17. Engine RPM setpoint indicator 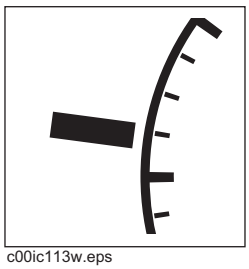 c00ic113w.eps	Indicates the current throttle setpoint.	**IMPORTANT:** • When in manual throttle mode, this is the RPM the engine will try to maintain. • When in auto-throttle mode, this indicates the full throttle setpoint.
18. Tier 4 menu button c00ic114w.eps	Press to go to the exhaust cleaning (REGEN) control menu.	
19. Electrical system voltage 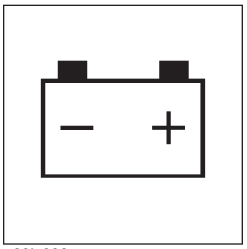 c00ic008w.eps	Displays system voltage.	Should show 12-14V with engine running.

https://truckmanualshub.com/

Item	Description	Notes
20. Engine percent load gauge 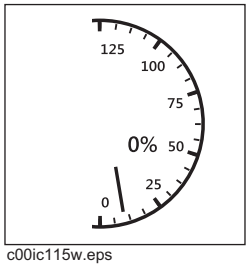 c00ic115w.eps	Displays the load on the engine.	

https://truckmanualshub.com/

Service Interval Screen

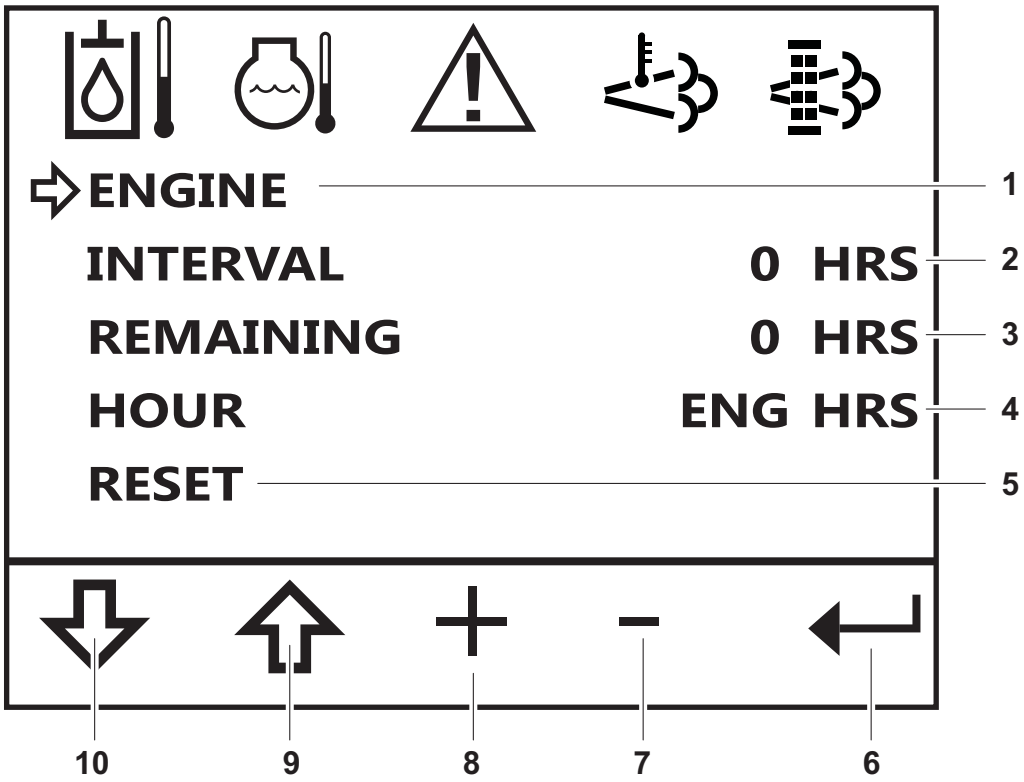

t43om032w.eps

1. Selected service reminder
2. Service reminder interval
3. Time remaining
4. Time base calculator
5. Reset option
6. Return to main gauge display
7. Interval decrease
8. Interval increase
9. Up selection
10. Down selection

Item	Description	Notes
1. Selected service reminder	Displays current service reminder.	Service reminders are programmed to follow initial service reminders. See the Service chapter on page 67 for intervals.
2. Service reminder interval	Displays current interval of the service reminder.	
3. Time remaining	Displays time remaining until the next service reminder.	
4. Time base calculator	Displays the time base for the service reminder.	

https://truckmanualshub.com/

Item	Description	Notes
5. Reset option	Resets service reminder.	
6. Return to main gauge display 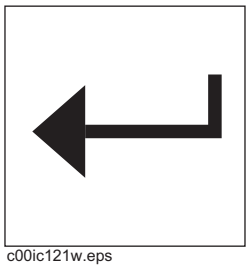 c00ic121w.eps	Returns to the main gauge display.	
7. Interval decrease 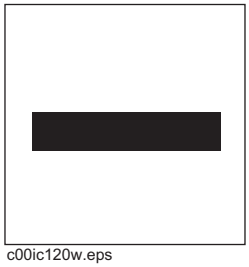 c00ic120w.eps	Selects the previous reminder or parameter, or decreases service intervals by 10 hours.	**IMPORTANT:** Use the Service chapter beginning on page 67 to set service reminder intervals.
8. Interval increase 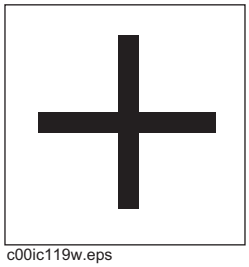 c00ic119w.eps	Selects the next reminder or parameter, or increases service interval by 10 hours.	
9. Up selection 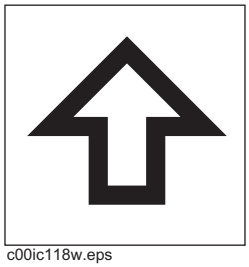 c00ic118w.eps	Will move the selection on the screen up.	

https://truckmanualshub.com/

Item	Description	Notes
10. Down selection 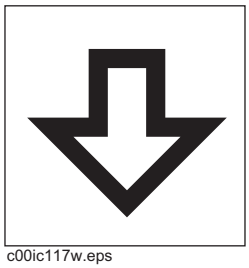 c00ic117w.eps	Will move the selection on the screen down.	

https://truckmanualshub.com/

Controls

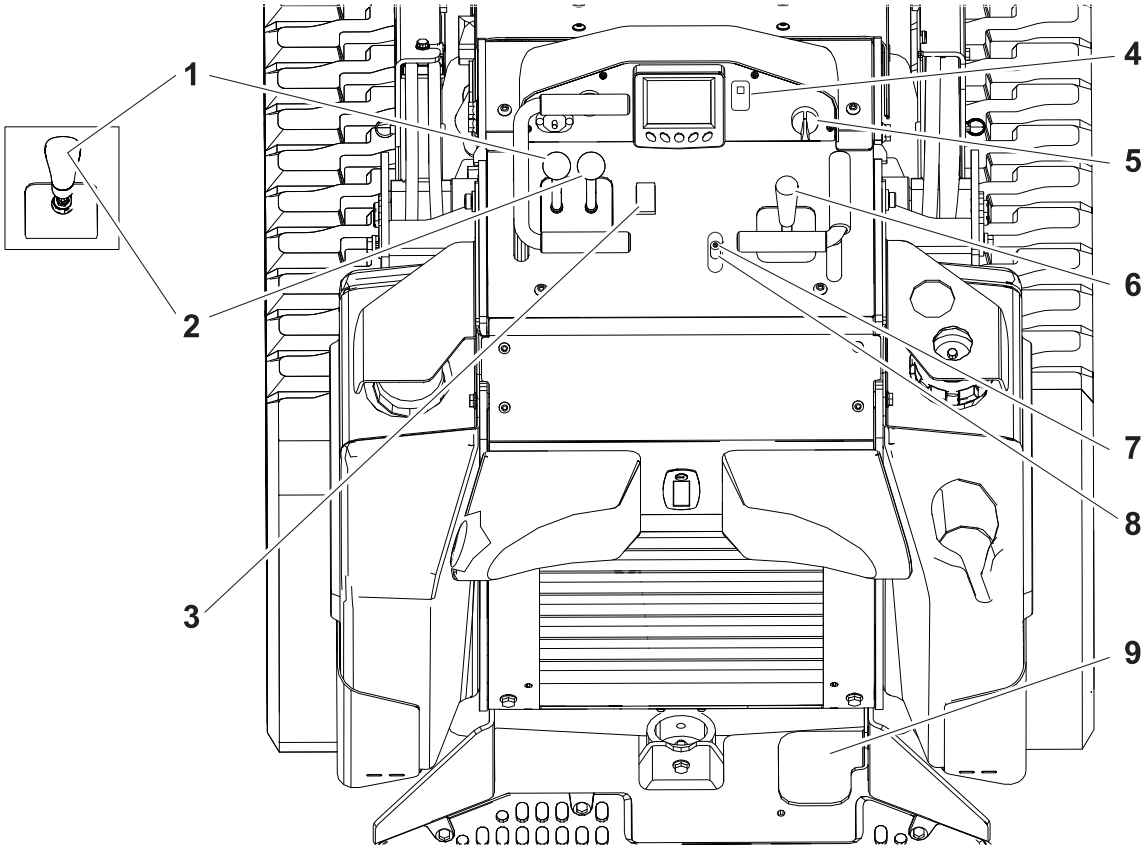

t53om006h.eps

1. Left track drive control or Track drive joystick (optional)
2. Right track drive control or Track drive joystick (optional)
3. Parking brake switch
4. Worklight switch
5. Ignition switch
6. Lift arm control
7. Attachment drive control
8. Auxiliary manifold circuit selector
9. Attachment drive foot control

https://truckmanualshub.com/

Item	Description	Notes
1. Left track drive control **2. Right track drive control** 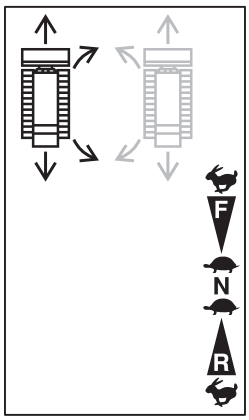 c00ic087a.eps	To move forward, push. To move backward, pull. To go faster in either direction, move control farther from neutral position. To stop, move to neutral position.	To turn right, move left control farther forward than right control. To turn left, move right control farther forward than left control. To counter-rotate in either direction, move controls in opposite directions as indicated above.
Track drive joystick (optional)	To move forward, push. To move backward, pull. To go faster in either direction, move control farther from neutral. To stop, move to neutral.	To steer while moving forward, push joystick forward, then move left or right. Unit will gradually turn left or right. To steer while moving backward, pull joystick back, then move left or right. Unit will gradually turn left or right. For tight steering in low speed, move joystick to center position then to left or right side. Tracks will counter rotate and turn unit in a tight circle.
3. Parking brake switch 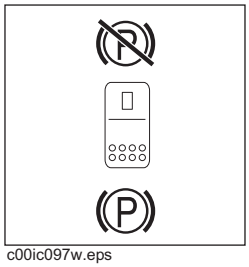 c00ic097w.eps	To engage, move red switch toward operator and press back of switch down. To disengage, move red switch toward operator and press front of switch down.	**IMPORTANT:** • Ensure unit is stopped before setting parking brake. • Parking brake disengages hydraulics.

https://truckmanualshub.com/

Item	Description	Notes
4. Worklight switch c00ic048w.eps	To turn on, press top. To turn off, press bottom.	
5. Ignition switch 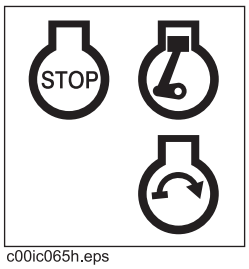 c00ic065h.eps	To start engine, insert key and turn clockwise. To stop engine, turn key counterclockwise.	**IMPORTANT:** • If engine does not start or stalls, turn key to STOP and then restart. • Do not allow starter motor to run continuously for more than 20 seconds. • Unit will buzz when key is in on position without engine running.
6. Lift arm control 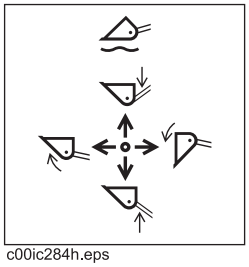 c00ic284h.eps	To move lift arms down, push. To float, push forward to end. To move lift arms up, pull. To curl attachment up, move to left. To curl attachment down, move to right.	**IMPORTANT:** Exercise caution when lifting loads. See page 94 for operating capacities.
7. Attachment drive control 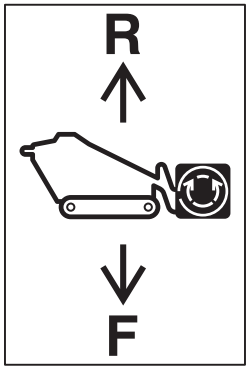 c00ic090a.eps	To engage attachment drive in reverse, push forward. To engage attachment drive in forward, pull back.	**IMPORTANT:** Use foot pedal to hold attachment control in the on position when hands are busy operating lift arm or track drive controls.

https://truckmanualshub.com/

Item	Description	Notes
8. Auxiliary manifold circuit selector 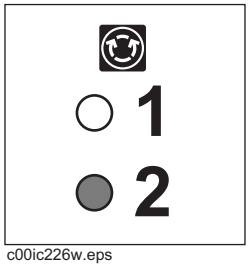 c00ic226w.eps	Push handle down to toggle auxiliary manifold between primary and secondary circuits. Light in top of handle indicates secondary circuit is active.	**IMPORTANT:** Run auxiliary manifold in primary circuit (light off) unless secondary circuit is needed.
9. Attachment drive foot control	To hold attachment drive in engaged position (forward or reverse), move lever in desired direction, and press pedal. To return attachment drive control to neutral, release pedal.	**IMPORTANT:** • Use foot pedal to hold attachment control in the on position when hands are busy operating lift arm or track drive controls. • If attachment drive control handle moves when foot control pedal is pressed completely, adjust pedal. See "Adjust Attachment Drive Controls" on page 88.

https://truckmanualshub.com/

Engine Compartment

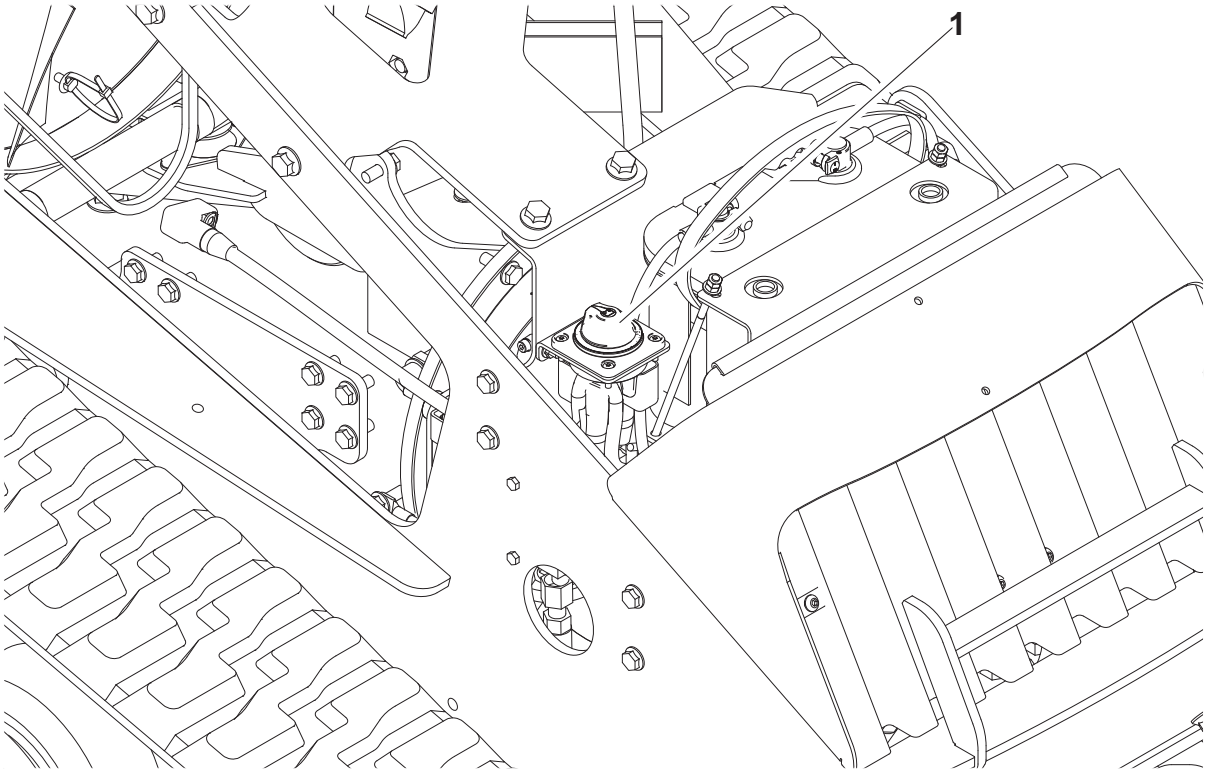

t53om004h.eps

1. Battery disconnect switch

Item	Description	Notes
1. Battery disconnect switch 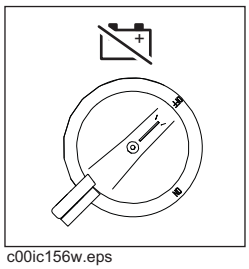 c00ic156w.eps	To connect, turn clockwise. To disconnect, turn counterclockwise.	

https://truckmanualshub.com/

Attachment Plate

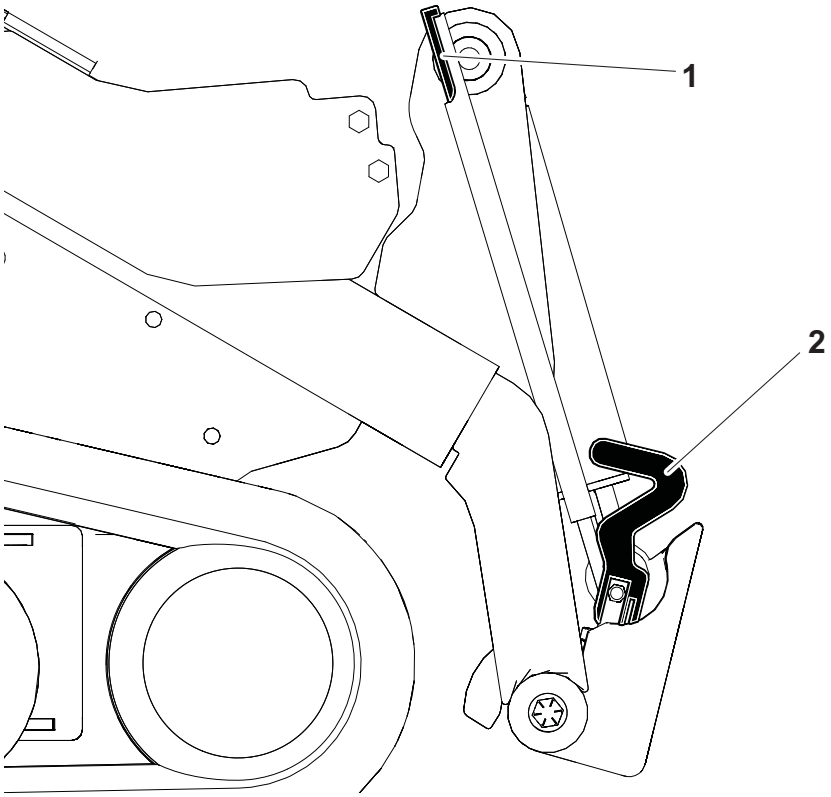

t43om034w.eps

1. Level indicator
2. Attachment latches

Item	Description	Notes
1. Level indicator	To level bucket, adjust bucket position until indicator is at top of sleeve.	To level other attachments, adjust attachment position until it is level. Mark indicator position on sleeve. Use mark to indicate level with that attachment.
2. Attachment latches	To lock attachment, move latch down. To unlock attachment, move latch up.	

https://truckmanualshub.com/

https://truckmanualshub.com/

Prepare

Chapter Contents

Gather Information 42

- All Jobs 42
- Ground-Penetrating Jobs 42
- Above-Ground Jobs 42

Inspect Site 43

- Identify Hazards 43

Classify Jobsite 44

- Select a Classification 44
- Apply Precautions 45

Check Supplies and Prepare Equipment 46

- Check Supplies 46
- Prepare Equipment 46
- Assemble Accessories 47

Connect Attachment 47

- Attachment 47
- Hydraulic Hoses 49

https://truckmanualshub.com/

Gather Information

A successful job begins before you start working. The first step in planning is reviewing information already available about the job and jobsite.

All Jobs

Review Job Plan

Review blueprints or other plans. Check for information about existing or planned structures, elevations, or proposed work that may be taking place at the same time.

Arrange for Traffic Control

If working near a road or other traffic area, contact local authorities about safety procedures and regulations.

Plan for Emergency Services

Have the telephone numbers for local emergency and medical facilities on hand. Check that you will have access to a telephone.

Ground-Penetrating Jobs

Notify One-Call Services

Mark proposed path or excavation area with white paint and have underground utilities located before working.

- In the US or Canada, call 811 (US) or 888-258-0808 (US and Canada). Also contact any local utilities that do not participate in the One-Call service.
- In countries that do not have a One-Call service, contact all local utility companies to have underground utilities located.

Above-Ground Jobs

Locate Overhead Lines

Note location and height of all overhead lines in jobsite and ensure that fully lifted attachment and/or load cannot touch lines.

https://truckmanualshub.com/

Inspect Site

Identify Hazards

Inspect jobsite before transporting equipment. Check for the following:

- changes in elevation such as hills or other open trenches
- obstacles such as buildings, railroad crossings, or streams
- signs of utilities
  - – "buried utility" notices
  - – utility facilities without overhead lines
  - – gas or water meters
  - – junction boxes
  - – drop boxes
  - – light poles
  - – manhole covers
  - – sunken ground
- traffic
- access
- soil type and condition

Have an experienced locating equipment operator sweep area within 20' (6 m) to each side of work path. Verify previously marked line and cable locations.

Identify safety hazards and classify jobsite if attachment will penetrate ground. See "Classify Jobsite" on page 44.

https://truckmanualshub.com/

Classify Jobsite

WARNING Jobsite hazards could cause death or serious injury. Use correct equipment and work methods. Use and maintain proper safety equipment.

To help avoid injury:

- Wear personal protective equipment including hard hat, safety eye wear, and hearing protection.
- Do not wear jewelry or loose clothing.
- Comply with all utility notification regulations before digging or drilling.
- Mark proposed path or excavation area with white paint and have underground utilities located before working.
- Verify location of previously marked underground hazards.
- Mark jobsite clearly and keep spectators away.

Remember, jobsite is classified by hazards in place -- not by line being installed.

Select a Classification

Jobsites are classified according to underground hazards present.

If working . . .	then classify jobsite as . . .
within 10' (3 m) of a buried electric line	electric
within 10' (3 m) of a natural gas line	natural gas
in sand or granite which is capable of producing crystalline silica (quartz) dust	crystalline silica (quartz) dust
within 10' (3 m) of any other hazard	other

NOTICE: If you have any doubt about jobsite classification, or if jobsite might contain unmarked hazards, take steps outlined previously to identify hazards and classify jobsite before working.

https://truckmanualshub.com/

Apply Precautions

Once classified, precautions appropriate for jobsite must be taken.

Electric Jobsite Precautions

Use one or both of these methods.

- Expose line by careful hand digging or soft excavation.
- Have service shut down while work is in progress. Have electric company test lines before returning them to service.

Natural Gas Jobsite Precautions

In addition to positioning equipment upwind from gas lines, use one or both of these methods.

- Expose lines by careful hand digging or soft excavation.
- Have gas shut off while work is in progress. Have gas company test lines before returning them to service.

Crystalline Silica (Quartz) Dust Precautions

CAUTION Breathing crystalline silica dust may cause lung disease. Cutting, drilling, or working materials such as concrete, sand, or rock containing quartz may result in exposure to silica dust. Use dust control methods or appropriate breathing protection when exposed to silica dust.

To help avoid injury:

- Use water spray or other means to control dust.
- Refer to U.S. Department of Labor Occupational Safety and Health Administration guidelines to learn more about appropriate breathing protection and permissible exposure limits.

Crystalline silica dust is a naturally occurring substance found in soil, sand, concrete, granite, and quartz. Breathing silica dust particles while cutting, drilling, or working materials may cause lung disease or cancer.

Other Jobsite Precautions

You may need to use different methods to safely avoid other underground hazards. Talk with those knowledgeable about hazards present at each site to determine which precautions should be taken or if job should be attempted.

https://truckmanualshub.com/

Check Supplies and Prepare Equipment

Check Supplies

- fuel

> ***NOTICE:*** Use low sulfur or ultra low sulfur fuel only.

- keys
- lubricants
- personal protective equipment, such as hard hat and safety glasses

Prepare Equipment

Fluid Levels

- fuel
- hydraulic fluid
- battery charge
- engine oil

Condition and Function

- all controls

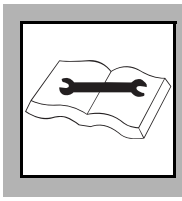

WARNING Improper control function could cause death or serious injury. If control does not work as described in instructions, stop machine and have it serviced.

- parking brake pins (See "Check Brake Operation" on page 74.)
- filters (air, oil, hydraulic)
- tracks
- pumps and motors
- hoses and valves
- signs, guards, and shields

https://truckmanualshub.com/

Assemble Accessories

Fire Extinguisher

If required, mount a fire extinguisher near the power unit but away from possible points of ignition. The fire extinguisher should always be classified for both oil and electric fires. It should meet legal and regulatory requirements.

Connect Attachment

NOTICE: Use only Ditch Witch®-approved attachments. Attachments can change the stability and operating characteristics of the unit. See attachment operation manual for instructions regarding proper operation of attachments.

Attachment

IMPORTANT: Before connecting attachment to unit, ensure that mount and receiver plates are free of dirt and debris.

1. Position attachment on level surface with enough space behind it to accommodate unit.
2. Start engine.

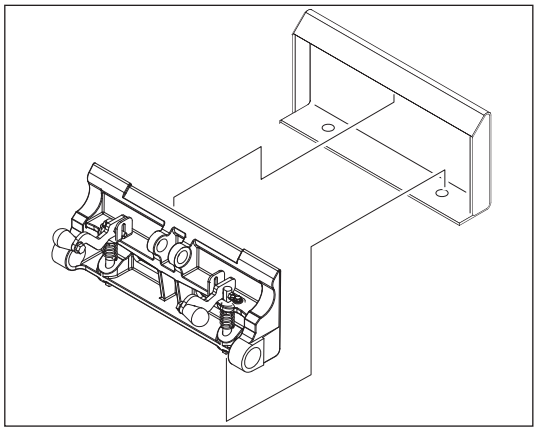

t43om006w.eps

3. Tilt mount plate (2) forward.
4. Position mount plate in the upper lip of the receiver plate (1) on attachment.
5. Raise lift arms while tilting back mount plate.

IMPORTANT: Attachment should be raised enough to clear the ground. Mount plate should be tilted back fully.

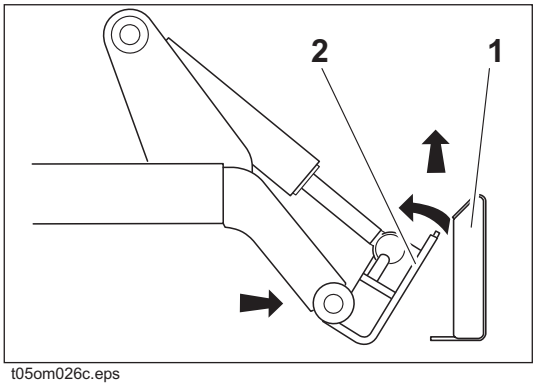

t05om026c.eps

https://truckmanualshub.com/

6. Pins will automatically engage.

WARNING Read operator's manual. Know how to use all controls. Your safety is at stake.

To help avoid injury: Ensure proper connection by verifying that bottoms of lock pins are visible under attachment receiver plate (shown).

7. Ensure pins are engaged by rotating attachment down.

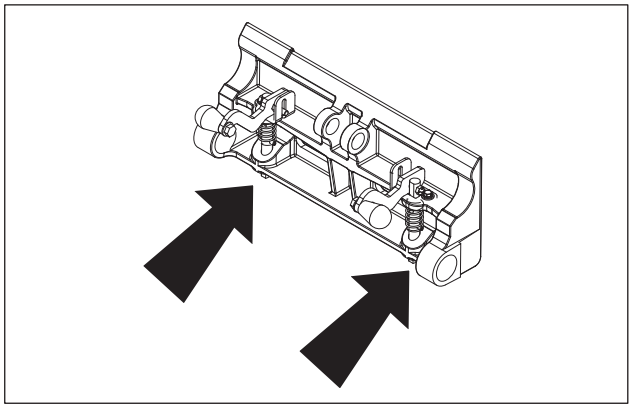

t43om007w.eps

https://truckmanualshub.com/

Hydraulic Hoses

If attachment requires hydraulic power for operation, connect hydraulic hoses.

WARNING Pressurized fluid or air could pierce skin and cause severe injury. Refer to operator's manual for proper use.

To help avoid injury:

- Escaping pressurized fluid can cause injury or pierce skin and poison.
- Before disconnecting a hydraulic line, turn engine off and operate all controls to relieve pressure. Lower, block, or support any raised component with a hoist. Cover connection with heavy cloth and loosen connector nut slightly to relieve residual pressure. Catch all fluid in a container.
- Before using system, check that all connections are tight and all lines are undamaged.
- Use a piece of cardboard or wood, rather than hands, to search for leaks.
- Wear protective clothing, including gloves and eye protection.
- If you are injured, seek immediate medical attention from a doctor familiar with this type of injury.

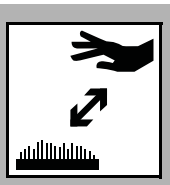

WARNING Hot parts may cause burns. Do not touch until cool.

To help avoid injury: Wear gloves when connecting and disconnecting hydraulic hoses and wait until unit has cooled before touching hydraulic components.

Single Circuit Auxiliary

1. Turn off engine.
2. Cycle attachment drive control to relieve residual pressure at hydraulic couplers.
3. Remove dirt and debris from hydraulic couplers.
4. Connect male coupler on attachment to female coupler (3) on unit.
5. Connect female coupler on attachment to male coupler (1) on unit.
6. If needed, connect attachment case drain hose to case drain connector (2).
7. Ensure that connections are secure by pulling on hoses.

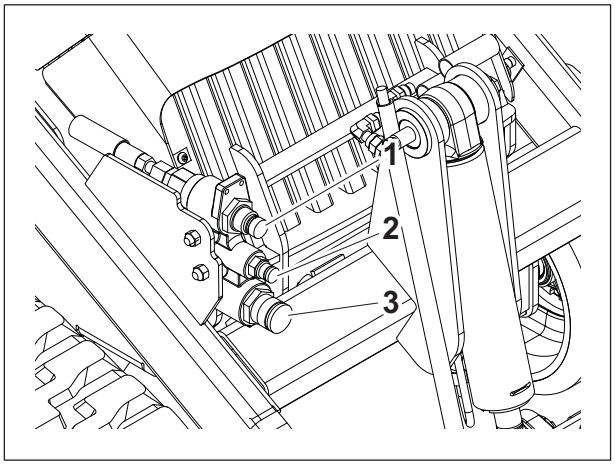

t35om011w.eps

https://truckmanualshub.com/

Dual Circuit Auxiliary

1. Turn off engine.
2. Cycle attachment drive control to relieve residual pressure at hydraulic couplers.
3. Remove dirt and debris from hydraulic couplers.
4. Pull knob (6) to relieve residual pressure in manifold.
5. Connect male coupler on attachment to female coupler (2) on unit.
6. Connect female coupler on attachment to male coupler (1) on unit.
7. If needed, connect attachment case drain hose to case drain connector (3).

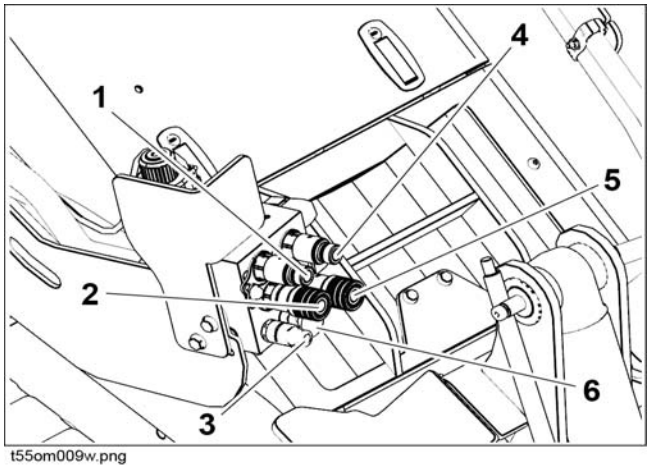

t55om009w.png

Primary circuit: connectors 1 & 2
Secondary circuit: connectors 4 & 5

8. For attachments that have a secondary function, connect those hoses to the secondary circuit (4, 5). To use the secondary function, see "Attachment drive control" on page 36.
9. Ensure that connections are secure by pulling on hoses.

https://truckmanualshub.com/

Drive

Chapter Contents

Start Unit 52

Drive 52

Shut Down 55

https://truckmanualshub.com/

Start Unit

WARNING Moving machine. Crushing can cause death or serious injury.

To help avoid injury: Start and operate only from platform.

1. Ensure all controls are in neutral.
2. Set parking brake.
3. Turn ignition switch to start position and release when engine starts.

NOTICE: Only operate in well ventilated areas.

EMERGENCY SHUTDOWN: Turn ignition switch to STOP.

4. Move throttle to half open.

Drive

General Operation

WARNING Tipover possible. Machine can tip over and crush you.

To help avoid injury:

- Always operate with load end uphill.
- Always carry load low. High load can cause tipping, loss of load or loss of visibility.
- Operate at slow speed when on rough terrain.
- Never drive across slopes.
- Never jerk control levers. Use a steady even motion.
- Do not park unit on slope without lowering attachment to the ground, returning all controls to neutral position, shutting down unit, and applying parking brake.
- See page 100 for operating capacity.

https://truckmanualshub.com/

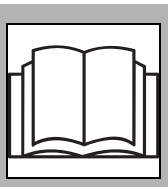

WARNING Read operator's manual. Know how to use all controls. Your safety is at stake.

To help avoid injury: Allow hydraulic fluid time to warm up before operating in cold weather. Cold hydraulic fluid can lengthen ground drive stopping time.

1. Disengage parking brake.
2. Pull lift arm control to raise mount plate (and attachment) off ground.
3. Move track drive control to steer unit. See page 35.

IMPORTANT: If needed for attachment operation, push attachment drive foot control to hold attachment control in the forward position while operating track drive and lift arm controls.

4. Adjust throttle as needed.
5. See attachment operation manual for instructions regarding proper operation of attachments.

EMERGENCY EXIT: Release controls and step off platform.

https://truckmanualshub.com/

Safe Slope Operation

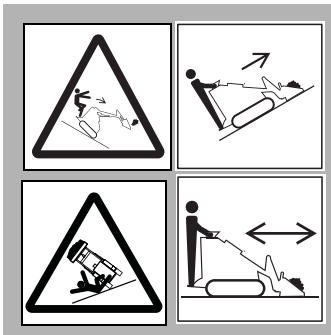

WARNING Tipover possible. Machine can tip over and crush you.

To help avoid injury: See "General Operation" on page 52.

Operating safely on a slope depends upon many factors including:

- Distribution of machine weight, including front loading and absence of load
- Height of load
- Even or rough ground conditions
- Potential for ground giving way causing unplanned tilt forward, reverse or sideways
- Nearness of ditches, ruts, stumps or other obstructions and sudden changes in slope
- Speed
- Turning
- Braking performance
- Operator skill

EMERGENCY EXIT: Release controls and step off platform.

These varying factors make it impractical to specify a maximum safe operating angle in this manual. It is therefore important for the operator to be aware of these conditions and adjust operation accordingly. Maximum engine angle and braking performance are two absolute limits which must never be exceeded. These maximums are stated below since they are design limits. **These design limits usually exceed the operating limits and must never be used alone to establish safe operating angle for variable conditions.**

Maximum engine lubrication angle – 20°

Maximum service brake retarding force – equal to traction of both tracks.

Maximum park brake holding force – equal to traction of one track.

https://truckmanualshub.com/

Shut Down

1. Lower lift arms to ground.
2. Move all controls to neutral position.
3. Engage parking brake.
4. Move throttle to lowest position and allow machine to cool.
5. Turn ignition switch to STOP.
6. Remove key.

https://truckmanualshub.com/

https://truckmanualshub.com/

Transport

Chapter Contents

Lift 58

- Points 58
- Procedure 58

Haul 59

- Load 59
- Tie Down 60
- Unload 61

Retrieve 62

https://truckmanualshub.com/

Lift

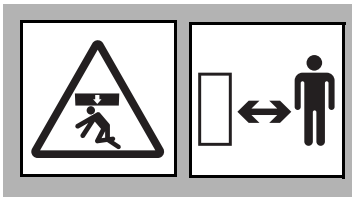

WARNING Crushing weight could cause death or serious injury. Stay away.

To help avoid injury: Only lift unit without attachment installed.

Points

Lifting points are identified by lifting decals. Lifting at other points is unsafe and can damage machinery.

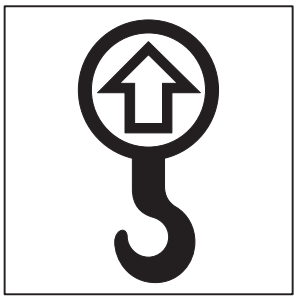

ic1319a.eps

Procedure

Use a hoist capable of supporting the equipment's size and weight. See "Specifications" on page 93 or measure and weigh equipment before lifting.

Use one of the methods below:

- Use two points nearest operator station.

IMPORTANT: Front of unit will be lower than rear of unit when using only two lift points.

- Use three lift points as shown.

NOTICE: Do not lift unit with attachments installed.

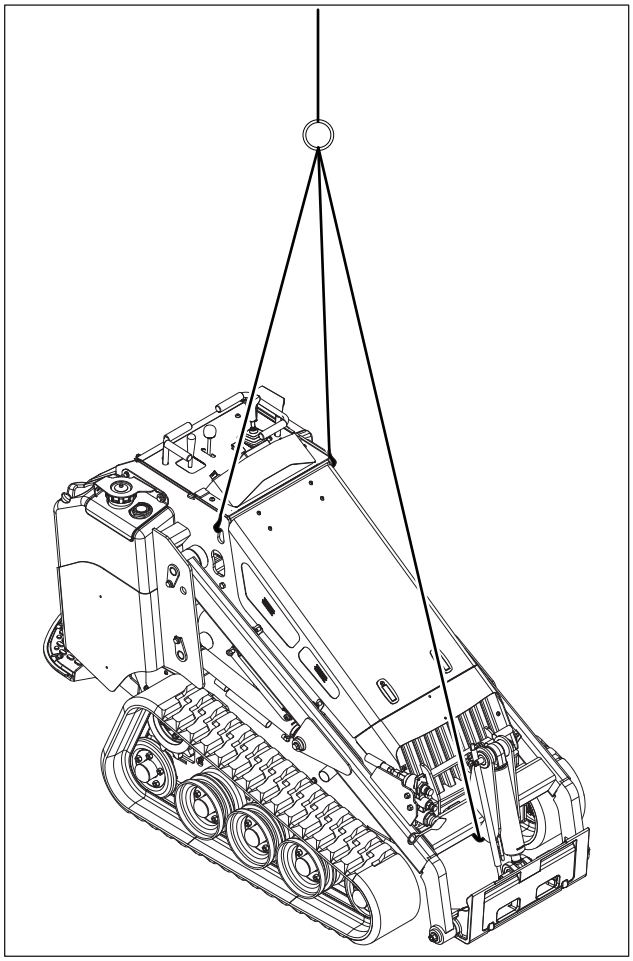

t53om009h.eps

https://truckmanualshub.com/

Haul

Load

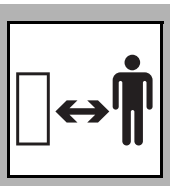

WARNING Crushing weight could cause death or serious injury. Stay away.

To help avoid injury:

- Load and unload trailer on level ground.
- Incorrect loading can cause trailer swaying.
- Attach trailer to vehicle before loading or unloading.
- To help prevent trailer sway, load trailer so that ten to fifteen percent of total vehicle weight (equipment plus trailer) is on tongue.
- If loading onto tilt-bed trailer, be prepared for trailer to tilt.
- Move all controls to neutral position when stopped.

WARNING Moving machine. Crushing can cause death or serious injury.

To help avoid injury: Start and operate only from platform.

1. Disengage parking brake.
2. Start engine.
3. Adjust throttle to low speed.
4. Pull lift arm control to raise mount plate (and attachment) clear of trailer, but keep it low.
5. Move unit to rear of trailer and align with ramps.
6. Drive forward slowly to move unit onto trailer until tiedown position is reached.
7. Push lift arm control to lower mount plate (and attachment) to trailer bed.
8. Engage parking brake.
9. Ensure that all controls are in neutral position.
10. Turn ignition switch to STOP.
11. Tie down unit.

https://truckmanualshub.com/

Tie Down

Points

Tiedown points are identified by tiedown decals. Securing to truck or trailer at other points is unsafe and can damage machinery.

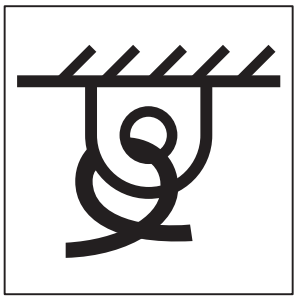

ic1320a.eps

Procedure

Loop tiedowns around unit at tiedown points. Make sure tiedowns are tight before transporting.

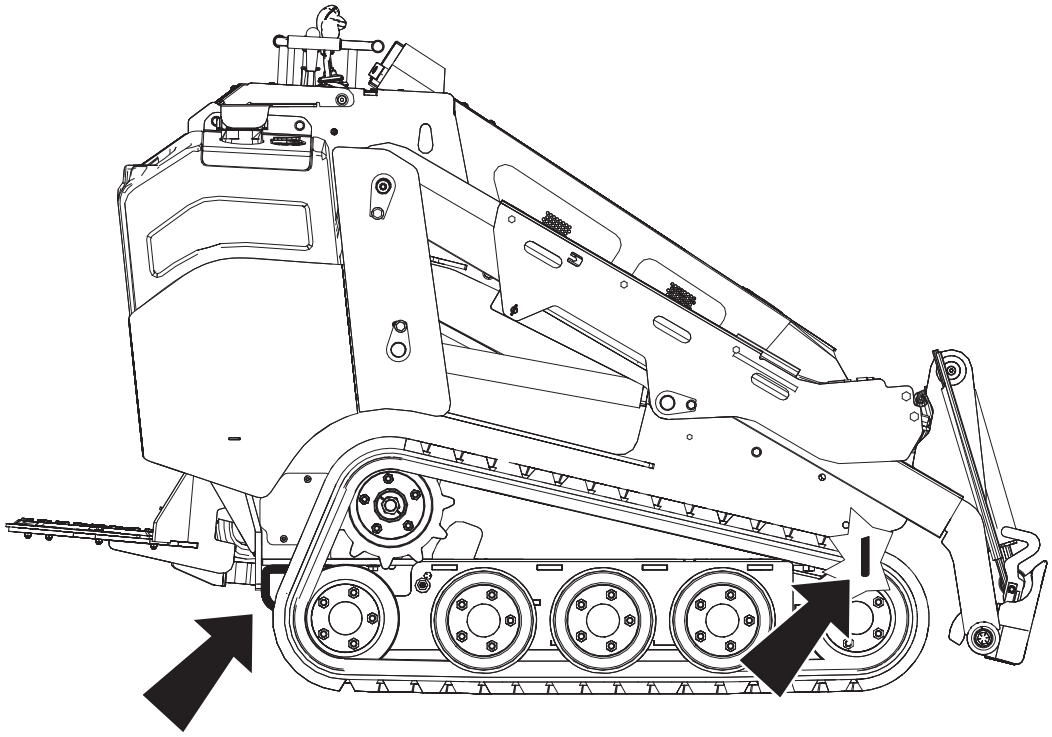

t53om005h.eps

https://truckmanualshub.com/

Unload

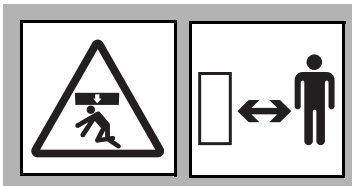

WARNING Crushing weight could cause death or serious injury. Stay away.

To help avoid injury:

- Load and unload trailer on level ground.
- Attach trailer to vehicle before loading or unloading.
- If unloading from tilt-bed trailer, be prepared for trailer to tilt.

WARNING Moving machine. Crushing can cause death or serious injury.

To help avoid injury: Start and operate only from platform.

1. Prepare trailer and ramps for unloading.
2. Remove tiedowns.
3. Start engine.
4. Disengage parking brake.
5. Pull lift arm control to raise mount plate (and attachment) off ground, but keep it low.
6. Adjust throttle to low speed and slowly back unit down trailer or ramps.

https://truckmanualshub.com/

Retrieve

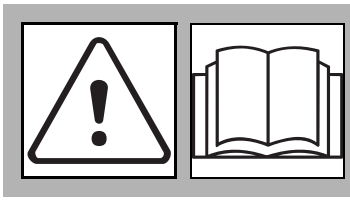

WARNING Read operator's manual. Know how to use all controls. Your safety is at stake. 273-475

Under normal conditions, unit should not be towed. If unit breaks down and retrieval is necessary:

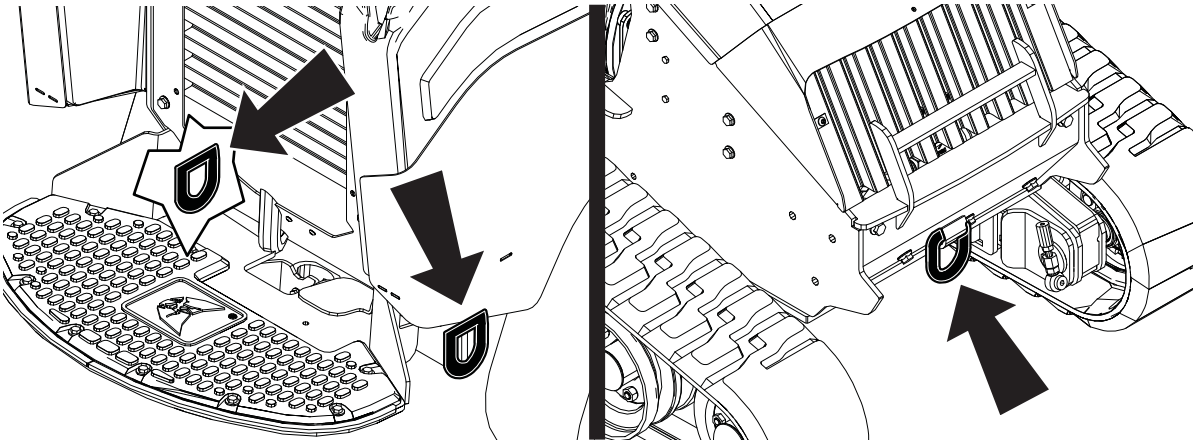

t43om010w.eps

rear tow point

front tow point

- attach chains to tow points facing towing vehicle
- tow for short distances at less than 1 mph (1.6 km/h)
- do not tow for more than 100' (30 m)
- use no more than 1,300 lb (5800 N) of towing force
- open bypass valve on each pump section

NOTICE: When bypass valve is open, unit has no brakes.

- if engine will not start, remove rear panel and unbolt parking brake assembly.

https://truckmanualshub.com/

Prepare Unit for Towing

1. Block tracks.
2. Engage parking brake if engine will start (shown).

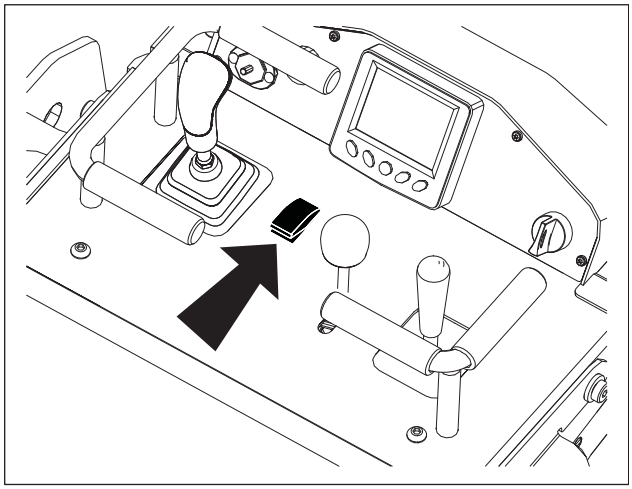

t53om008h.eps

3. Loosen bypass valves (shown) three turns.

IMPORTANT: Open bypass valves in both front and rear pumps.

NOTICE: When bypass valves are open, unit has no brakes.

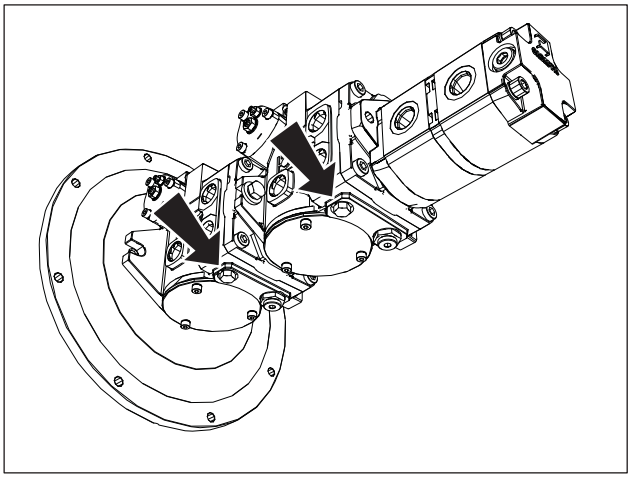

t43om030w.eps

Return Unit to Normal Operation

1. Tighten bypass valves and tighten locknut to 15-18 ft•lb (20-25 N•m).

IMPORTANT: Close bypass valve in both front and rear pumps.

2. Disengage parking brake.
3. Unblock tracks.

https://truckmanualshub.com/

https://truckmanualshub.com/

Complete the Job

Chapter Contents

Rinse Equipment 66

Disconnect Attachment 66

Stow Tools 66

https://truckmanualshub.com/

Rinse Equipment

1. Spray water onto equipment to remove dirt and mud.

> ***NOTICE:*** Do not spray water onto operator's console. Electrical components could be damaged. Wipe down instead.

2. Open hood and allow unit to cool. Remove debris from inside of unit.
3. Remove mud from track sprockets.
4. Wash undercarriage. Pay special attention to brake pin area.

Disconnect Attachment

1. Lower attachment to the ground.
2. Turn off engine.
3. Disengage lock pins by lifting handles upward.
4. Cycle attachment drive control and disconnect hydraulic hoses, if used.
5. Start engine.
6. Tilt mount plate forward and back unit away from attachment.

Stow Tools

Make sure all tools and accessories are loaded and properly secured on trailer.

https://truckmanualshub.com/

Service

Chapter Contents

Precautions 68

- Working under Raised Lift Arms 68
- Welding Precaution 68

Recommended Lubricants/Service Key 69

10 Hour 73

50 Hour 78

250 Hour. 81

500 Hour 84

1000 Hour 86

As Needed 87

https://truckmanualshub.com/

Precautions

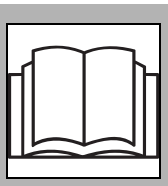

WARNING Read operator's manual. Know how to use all controls. Your safety is at stake. 273-475

To help avoid injury:

- Unless otherwise instructed, all service should be performed with engine off.
- Before servicing equipment, lower unstowed attachments to ground.
- Wear personal protective equipment.

Working under Raised Lift Arms

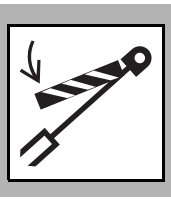

WARNING Crushing can cause death or serious injury. Secure extended cylinder with locking device before servicing. 273-231

Pin safety supports as indicated when working under raised lift arms.

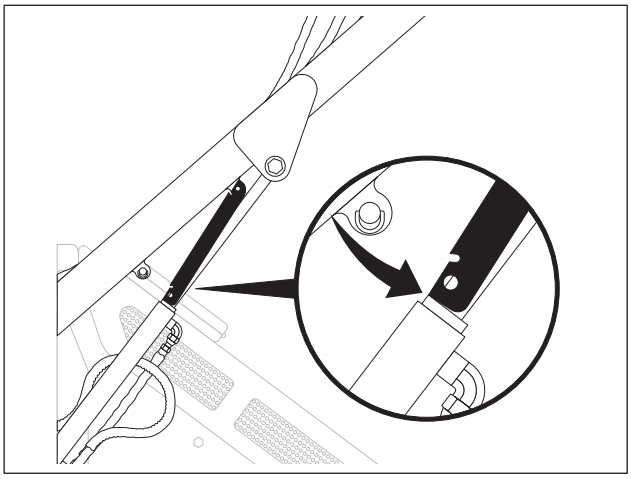

t35om037w.eps

Welding Precaution

NOTICE: Welding can damage electronics.

- Disconnect battery to prevent damage to battery. Do not turn off battery disconnect switch with engine running, or alternator and other electronic devices may be damaged.
- Connect welder ground clamp close to welding point and make sure no electronic components are in the ground path.

Always disconnect the Engine Control Unit ground connection from the frame, harness connections to the ECU, and other electronic components prior to welding on machine or attachments.

https://truckmanualshub.com/

Recommended Lubricants/Service Key

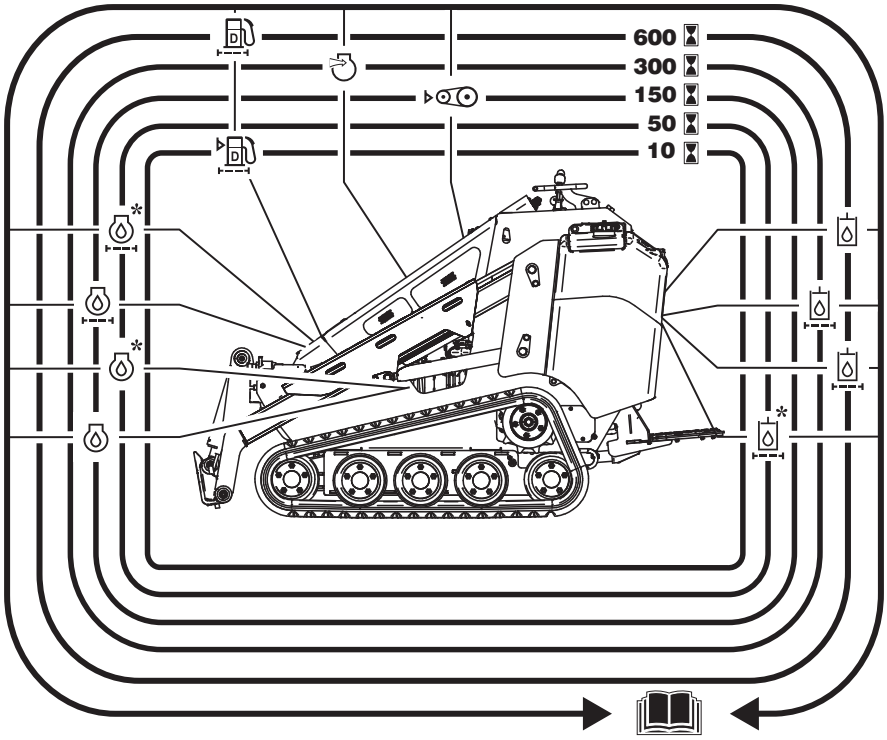

t46om009w.eps

Item	Description		
DEO	Diesel engine oil meeting or exceeding API service classification CJ-4, ACEA E6, or JASO DH-2. No synthetics. Engine must use low sulfated ash, phosphorous, and sulfur (low SAPs) oil. See "Engine Oil Temperature Chart" on page 70.		
DEAC	Diesel engine antifreeze/coolant meeting CES 14603.		
THF	Tractor hydraulic fluid, similar to Phillips 66® PowerTran Fluid, Mobilfluid® 423, Chevron® Tractor Hydraulic Fluid, Texaco® TDH Oil, or equivalent		
MPG	Multipurpose grease meeting NLGI GC-LB Grade 2		
	Check level of fluid or lubricant		
	Filter		Check condition
	Adjust, service, or test		Change or replace

https://truckmanualshub.com/

Proper lubrication and maintenance protects Ditch Witch® equipment from damage and failure. Service intervals listed are for minimum requirements. In extreme conditions, service machine more frequently. Use only genuine Ditch Witch parts, filters, approved lubricants, TJC, and approved coolants to maintain warranty. Fill to capacities listed in "Specifications" on page 93.

For more information on engine lubrication and maintenance, see your engine manual.

IMPORTANT: Use the "Service Record" on page 101 to record all required service to your machine.

Engine Oil Temperature Chart

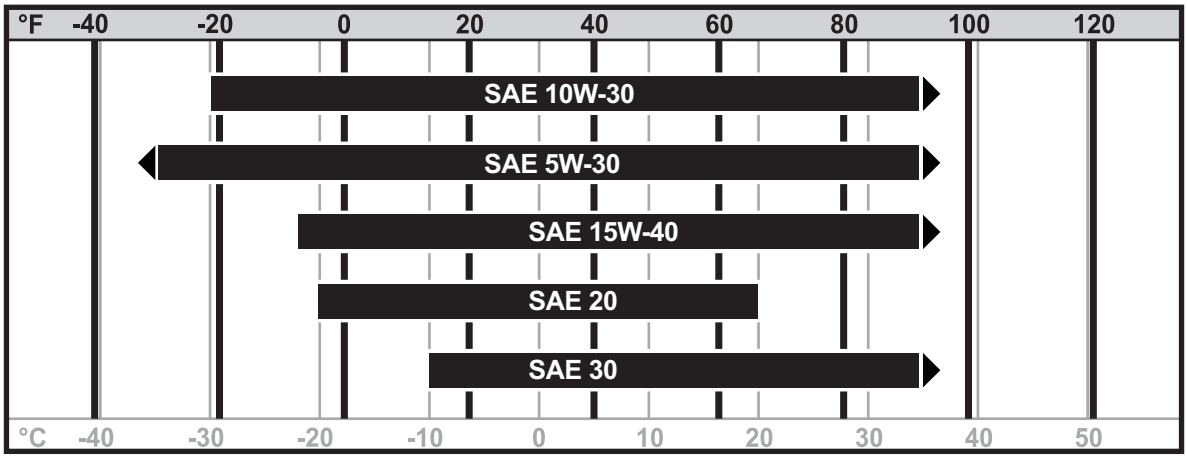

t43om040w.eps

Temperature range anticipated before next oil change

For more information on engine lubrication and maintenance, see your engine manual.

Approved Coolant

This unit was filled with coolant meeting Cummins CES 14603 before shipment from factory. Add or replace only with coolant meeting this specification, such as Fleetguard ES Compleat coolant. This coolant is available, pre-diluted, from your Ditch Witch dealer as part number 255-1055. Contact your Cummins service partner for a full list of approved coolants meeting CES 14603.

NOTICE:

- Do not use water or high-silicate automotive-type coolant. This will lead to engine damage or premature engine failure.
- Do not mix heavy-duty diesel engine coolant and automotive-type coolant. This will lead to coolant breakdown and engine damage.

https://truckmanualshub.com/

Approved Fuel

Tier 4 Engine (U.S., Canada, EU, and Japan)

WARNING Avoid static electricity when fueling. Ultra Low Sulfur Diesel (ULSD) poses a greater static ignition hazard than earlier diesel formulations. Avoid death or serious injury from fire or explosion. Consult with your fuel system supplier to ensure the delivery system is in compliance with fueling standards for proper grounding and bonding practices.

This engine is designed to run on diesel fuel. Use only high quality fuel meeting ASTM D975 No. 2D, EN590, or equivalent. At temperatures below 32°F (0°C) winter fuel blends are acceptable. See the engine operation manual for more information.

NOTICE: Use only Ultra Low Sulfur Diesel (less than 15 ppm (15 mg/kg) sulfur content) in this unit. Operating with higher sulfur content will damage the engine and aftertreatment device.

Biodiesel blends up to 5% (B5) are approved for use in this unit. The fuel used must meet the specifications for diesel fuel shown above. In certain markets, higher blends may be used if certain steps are taken. Extra attention is needed when using biodiesel, especially when operating in cold weather or storing fuel. Contact your Ditch Witch dealer or the engine manufacturer for more information.

https://truckmanualshub.com/

Exhaust Cleaning - Tier 4 Only

This engine has a Diesel Particulate Filter (DPF) that purifies NOx emissions in the exhaust into nitrogen and water. The DPF system uses a small amount of engine lubricating oil to during the high-temperature combustion. The system cleans itself automatically, unless it is manually inhibited by the operator.

Automatic exhaust cleaning (REGEN) happens during normal machine operation when sensors in the engine determine the need. During an engine exhaust cleaning cycle, engine exhaust can reach high temperatures. When this happens, the high exhaust temperature icon will light.

If the jobsite is in an area where high exhaust temperature might cause a problem, inhibit exhaust cleaning through the Tier 4 menu (see "Tier 4 menu button" on page 29) for the duration of the job and return to automatic cleaning when the job is finished. The exhaust cleaning inhibited icon will light and remain on until the system is returned to automatic exhaust cleaning mode.

The exhaust cleaning icon will light when the system is inhibited and an exhaust cleaning cycle is needed.

- The icon will flash when exhaust cleaning is needed. If the area will allow it, return the unit to automatic cleaning mode in the Tier 4 menu and let it run automatically.
- A manual exhaust cleaning cycle (DPF REGEN) is required after automatic exhaust cleaning has been inhibited multiple times. Take system out of inhibited mode through the Tier 4 menu, set the engine to low throttle with no load and initiate the DPF REGEN exhaust cleaning cycle. The light will remain on steady until the manual exhaust cleaning cycle is finished (approximately 30 minutes). If manual cleaning is not done when indicated, the engine will derate.
- Ash buildup in soot filter part of DPF will have adverse effects on engine performance. The soot filter must be serviced every 3000 hours of operation or more often if high-ash oil and/or fuel is used. See your Yanmar engine distributor for this service.

https://truckmanualshub.com/

Startup/10 Hour

Location	Task	Notes
	Check engine oil level	DEO
	Check engine air filter service indicator	
	Check hydraulic fluid level	THF
	Check brake operation	
	Check lug nut torque	88-95 ft•lb (108-129 N•m)
	Check engine coolant level	DEAC
	Check water separator filter	
	Check track tension	
	Check hydraulic hoses	

Check Engine Oil Level

Check engine oil level at dipstick opening (1) at startup and every 10 hours. Raise lift arms and install safety supports. See "Working under Raised Lift Arms" on page 68. Oil level should be at top of marking. If low, add DEO at fill (2). Check with unit on level surface and at least 15 minutes after stopping engine.

IMPORTANT: Use oil specified in "Engine Oil Temperature Chart" on page 70.

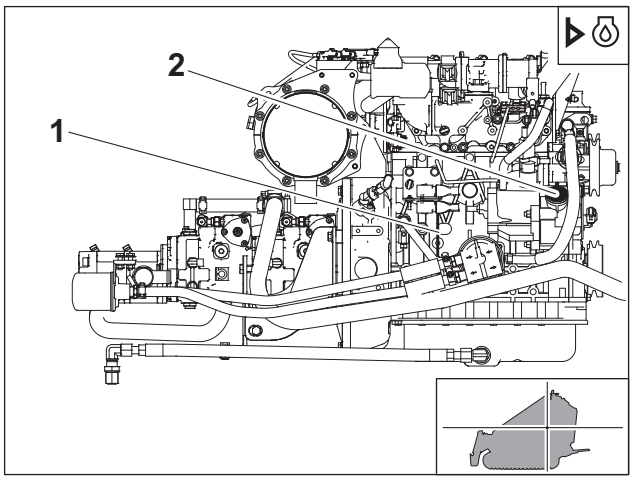

t53om011h.eps

Check Engine Air Filter Service Indicator and Clean Dust Ejector Valve

Check air filter service indicator (1) and dust ejector (2) at startup and every 10 hours and change filter as needed. Ensure that valve is not inverted, damaged, plugged, or cracked.

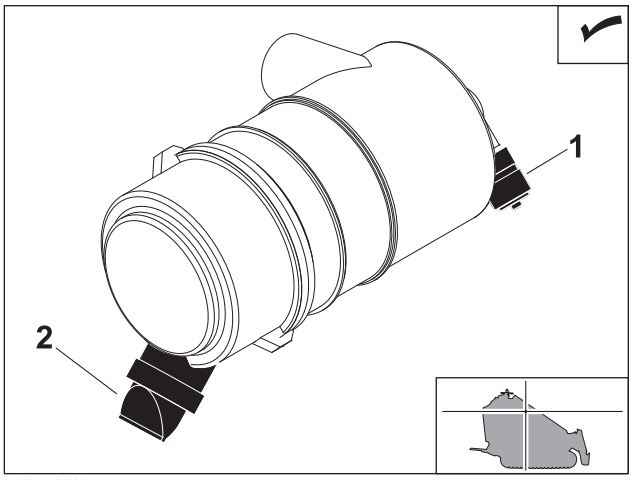

t43om003h.eps

https://truckmanualshub.com/

Check Hydraulic Fluid Level

Check hydraulic fluid level at startup and every 10 hours. Maintain fluid level at halfway point on sight glass (2), when engine is off, cylinders are fully retracted, and fluid is cool. If low, add THF at fill (1).

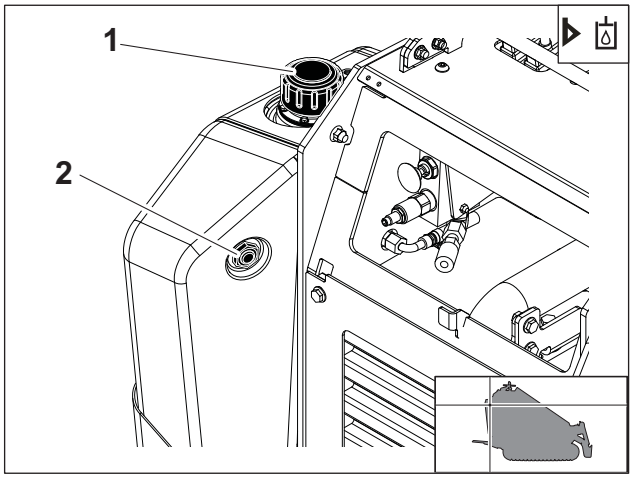

t35om013w.eps

Check Brake Operation

Check brake operation at startup and every 10 hours or more often when conditions warrant..

IMPORTANT: Engine must be running to check brake operation.

- Ensure parking brake pin (shown) moves freely allowing brake to be engaged and disengaged.
- Clean mud and debris from area around pin.

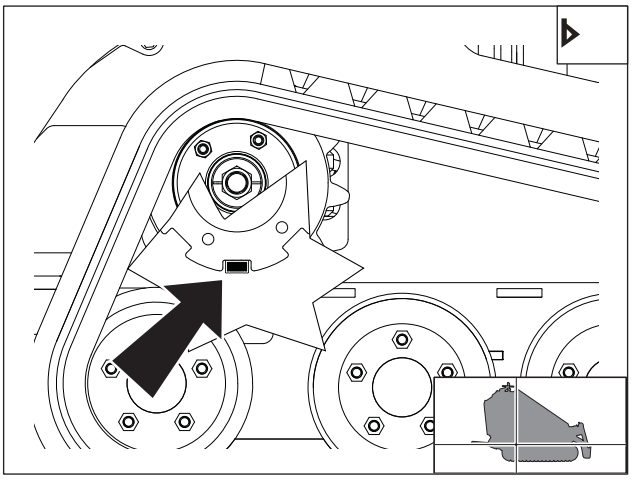

t35om014w.eps

Check Lug Nut Torque

Check lug nut torque at 10 hours, 50 hours and every 200 hours thereafter. Tighten to 88-95 ft•lb (108-129 N•m), as needed.

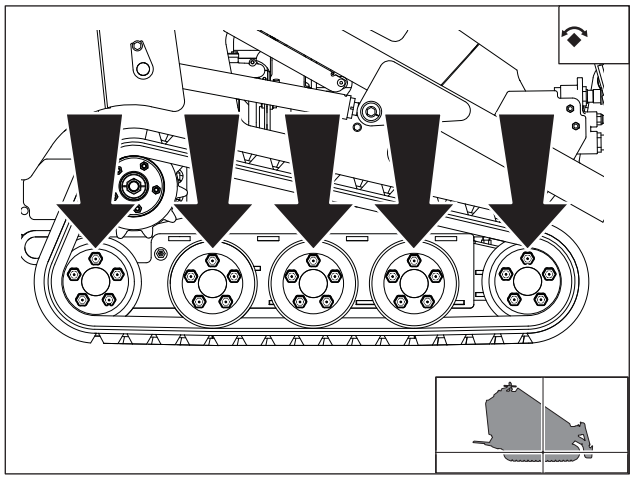

t35om036w.eps

https://truckmanualshub.com/

Check Coolant Level

Check coolant level at overflow coolant bottle, with engine cool, at startup and every 10 hours. Maintain coolant level at 1/3 point on bottle. If low, add approved coolant.

IMPORTANT: See page 70 for information on approved coolants.

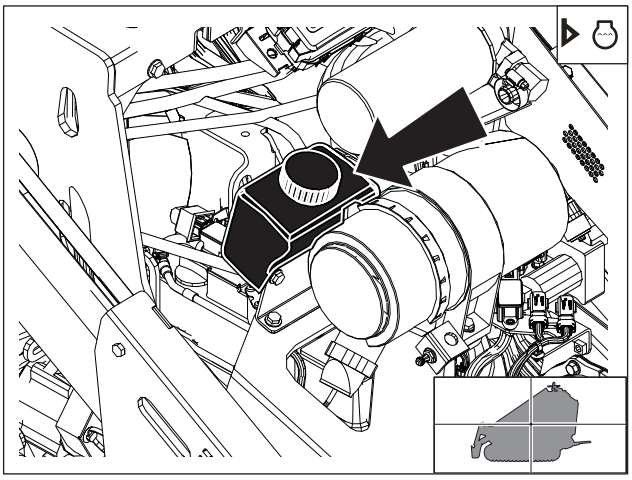

t43om015w.eps

Check Water Separator Filter

Check water separator filter at startup and every 10 hours. When red float ring is raised, water should be drained. See "Drain Water Separator Filter" on page 88.

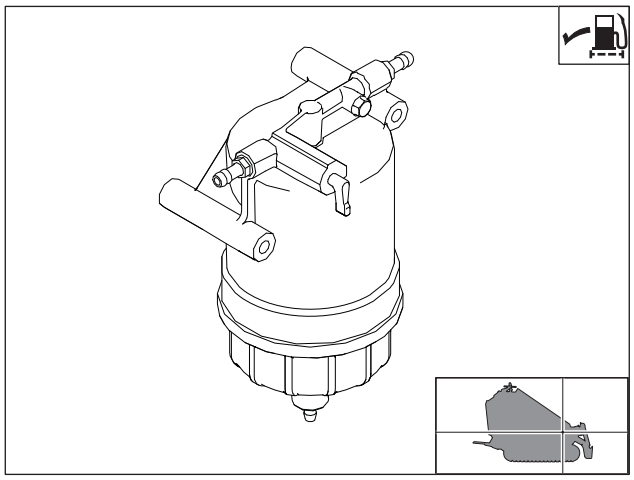

t43om039w.eps

https://truckmanualshub.com/

Check Track Tension

Check track tension at startup and every 10 hours and adjust as needed. Adjust track tension using one of the two methods below, depending on machine configuration.

Straight Edge Adjustment

Track is correctly tensioned when measurement between track and straight edge (2) is 1/2 in (13 mm).

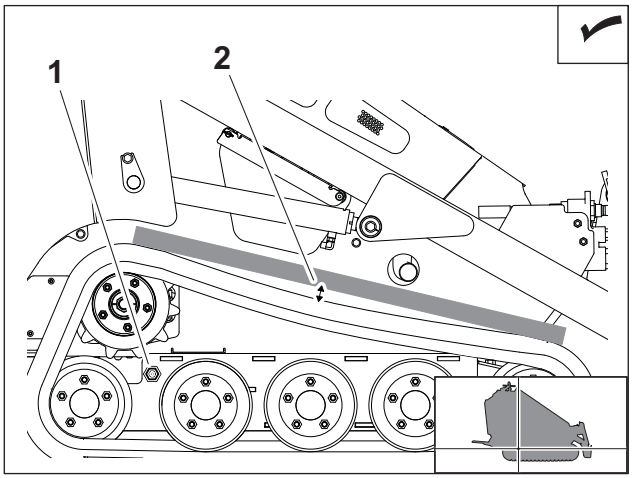

t35om033w.eps

To adjust:

1. Park machine on smooth, flat surface.
2. Lay straight edge on top of track, spanning from sprocket to front idler roller.
3. Clean track cylinder zerk (1). Pump MPG into zerk until distance between track and straight edge (2) is 1/2" (13 mm).
4. **Test**: Drive forward one track length and check tension again.
   - If tension is too loose, repeat step 3 above.
   - If tension is too tight, loosen fitting on grease cylinder and allow a small amount of grease to discharge from cylinder. Tighten fitting and test again.

Pressure Gauge Adjustment

Track is correctly tensioned when gauge measures between 700-900 psi (48-62 bar).

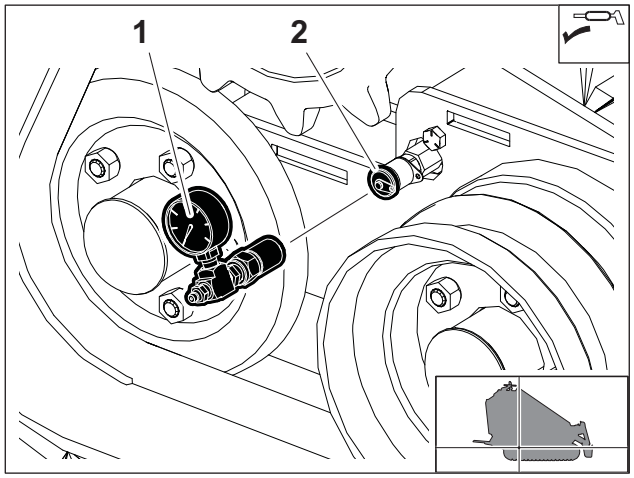

t46om008w.eps

To adjust:

1. Remove gauge from operator's manual compartment.
2. Thread gauge (1) into connection (2).
3. Pump MPG into grease zerk to check pressure.

https://truckmanualshub.com/

Check Hydraulic Hoses

WARNING Pressurized fluid or air could pierce skin and cause severe injury. Refer to operator's manual for proper use. 270-6035

To help avoid injury:

- Use a piece of cardboard or wood, rather than hands, to search for leaks.
- Wear protective clothing, including gloves and eye protection.
- Before disconnecting a hydraulic line, turn engine off and operate all controls to relieve pressure.
- Lower, block, or support any raised component with a hoist.
- Cover connection with heavy cloth and loosen connector nut slightly to relieve residual pressure. Catch all fluid in a container.
- Before using system, check that all connections are tight and all lines are undamaged.
- If you are injured, seek immediate medical attention from a doctor familiar with this type of injury.

Check hydraulic hoses for leaks at startup and every 10 hours.

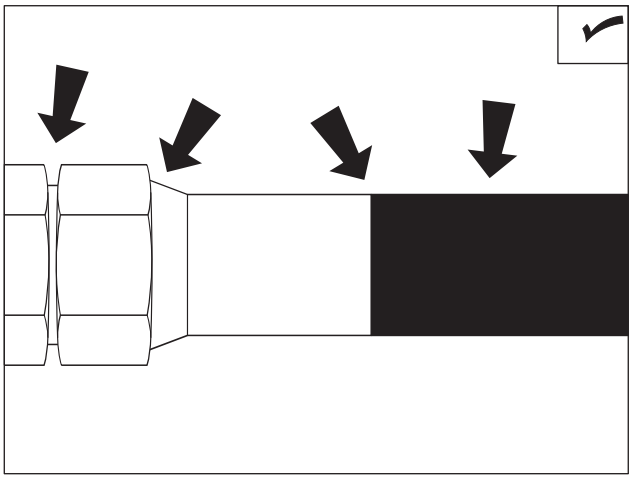

CheckHoses.eps

https://truckmanualshub.com/

50 Hour

Location	Task	Notes
	Change engine oil and filter	Initial service
	Change hydraulic fluid filter	Initial
	Check fan belt tension and damage	1/4-1/3" (7-9 mm), initial
	Check fuel hose and clamp band	
	Check radiator/hydraulic fluid cooler for dirt and debris	
	Check lug nut torque	88-95 ft•lb (108-129 N•m)
	Check idler roller bearings	

Change Engine Oil and Filter (Initial)

Change engine oil after 50 hours. Raise lift arms and install safety supports. See "Working under Raised Lift Arms" on page 68. Drain oil (1) and add 5 qt (4.7 L) of DEO at fill (2).

IMPORTANT: Use oil specified in "Engine Oil Temperature Chart" on page 70.

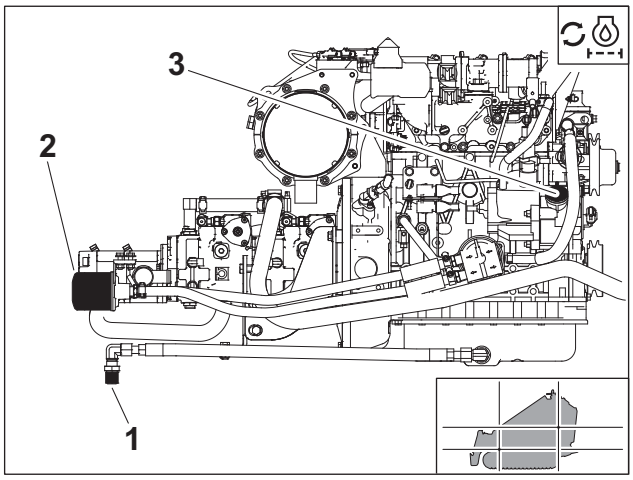

t53om010h.eps

Change Hydraulic Filter (Initial)

Change hydraulic filter after 50 hours.

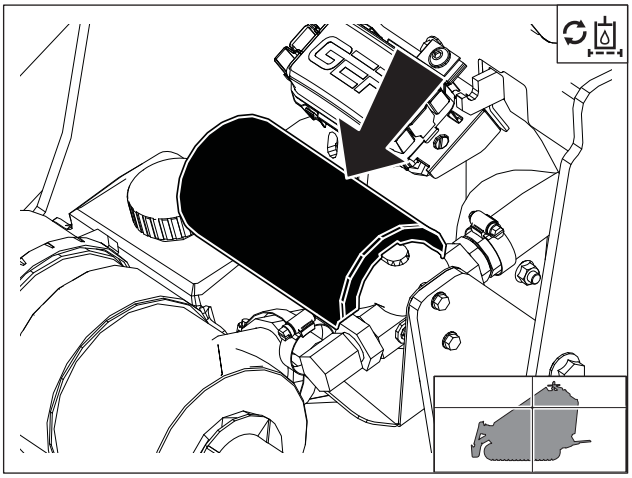

t43om016w.eps

https://truckmanualshub.com/

Check Fan Belt for Tension and Damage

Check belt tension after 50 hours. Belt is properly tensioned when it moves about 1/4-3/8" (7-9 mm) when pushed at the long span. Replace the belt when it is worn and sinks into the pulley groove.

Adjust Tension

1. Loosen two alternator bolts (shown).
2. Adjust position as needed.
3. Tighten bolts.
4. Check tension.

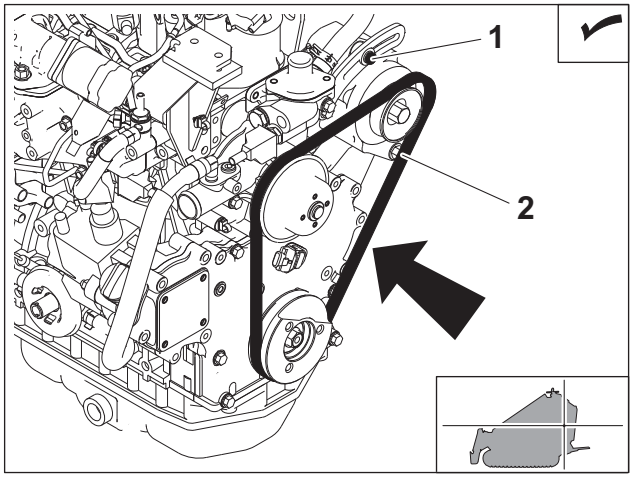

t53om012h.eps

Check Fuel Hose and Clamp Bands

Check fuel hose and clamp bands every 50 hours.

If the clamp is loose, apply oil to the threads and retighten it. If the hose is worn, replace it.

Bleed the fuel system if the hose and/or clamp is changed.

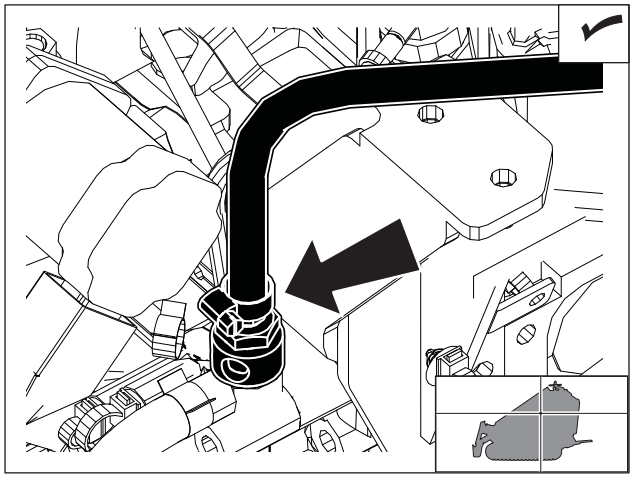
t43om017w.eps

Check Radiator/Fluid Cooler

Check radiator/hydraulic fluid cooler for dirt, grass, and other foreign matter every 50 hours. Clean out with compressed air or spray wash if required. Be careful not to damage fins with high-pressure air or water. Check more often if operating in dusty or grassy conditions.

Check radiator hoses for wear. Check hose clamps for proper tightness.

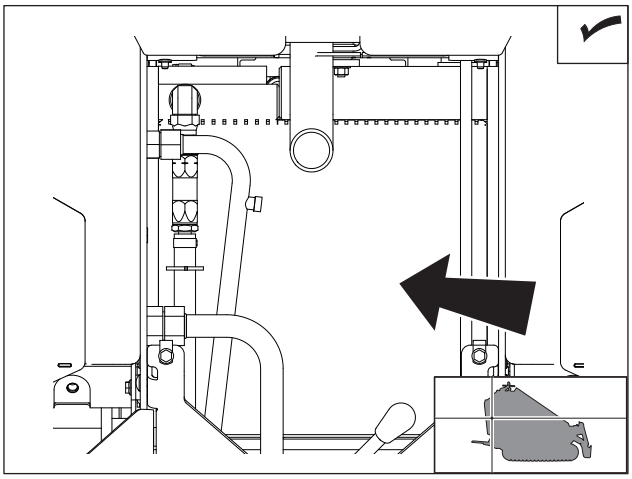
t35om020w.eps

https://truckmanualshub.com/

Check Lug Nut Torque

Check lug nut torque at 10 hours, 50 hours and every 250 hours thereafter. Tighten to 88-95 ft•lb (108-129 N•m) as needed.

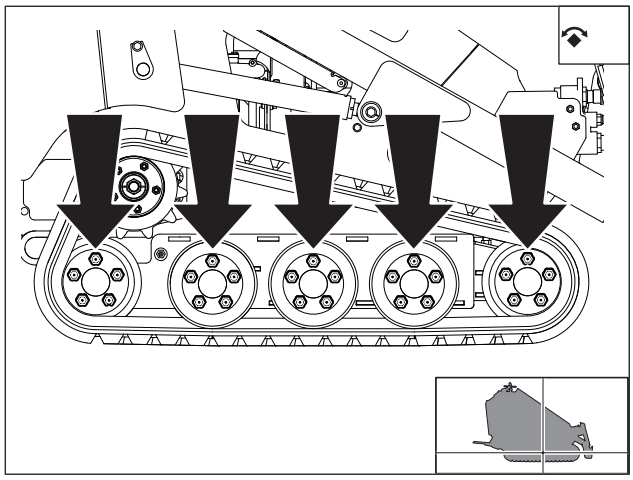

t35om036w.eps

Check Idler Roller Bearings

Check for proper positioning of idler roller bearings at 50 hours and every 250 hours thereafter.

To check:

1. Lift unit off ground.
2. Release track tension. See "Check Track Tension" on page 76.
3. Check for movement of each hub when rocked back and forth. If hub has noticeable movement, adjust idler roller bearing. See "Adjust Idler Roller Bearings" on page 89.
4. Adjust track tension.

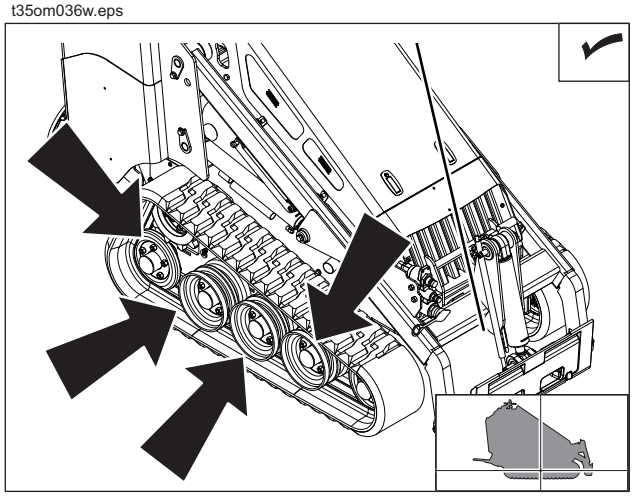

t43om027w.eps

https://truckmanualshub.com/

250 Hour

Location	Task	Notes
	Change engine oil and filter	DEO
	Check intake air line	
	Check fan belt for tension and damage	1/4-1/3" (7-9 mm)
	Change hydraulic filter	
	Check lug nut torque	88-95 ft•lb (108-129 N•m)
	Check idler roller bearings	

Change Engine Oil and Filter

Change engine oil and filter every 250 hours. Raise lift arms and install safety supports. See "Working under Raised Lift Arms" on page 68. Drain oil (1), change filter (2) and add 5 qt (4.7 L) of DEO at fill (3). See page 78.

IMPORTANT: Use oil specified in "Engine Oil Temperature Chart" on page 70.

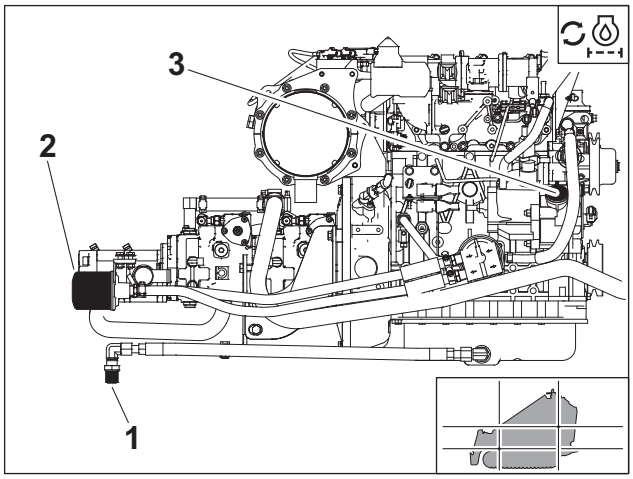

t53om010h.eps

Check Intake Air Line

Check the intake air line every 250 hours.

NOTICE: Keep dust out of the intake air line to prevent damage to the engine.

If the clamp is loose, apply oil to the threads and retighten it.

If the hose appears cracked or worn, replace it.

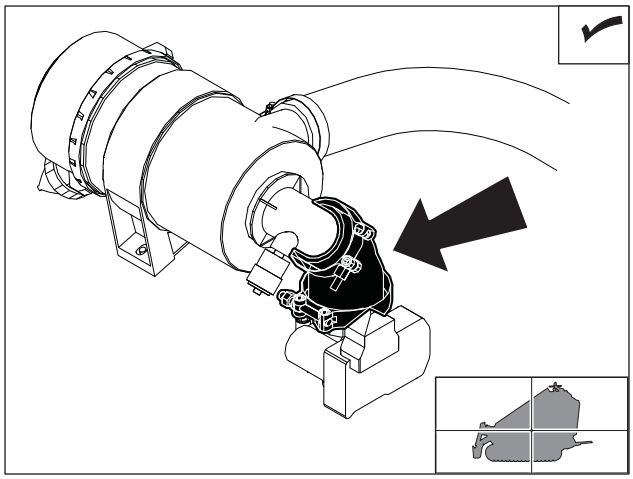
t43om019w.eps

https://truckmanualshub.com/

Check Fan Belt for Tension and Damage

Check belt tension every 250 hours. Belt is properly tensioned when it moves about 1/4-3/8" (7-9 mm) when pushed at the long span. Replace the belt when it is worn and sinks into the pulley groove.

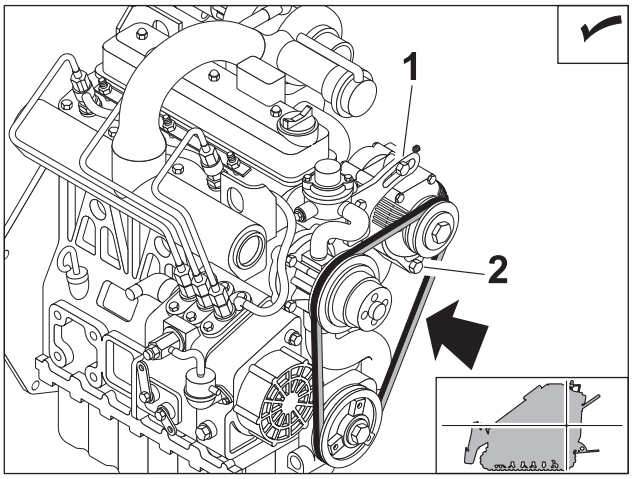

t18om048t.eps

Adjust Tension

1. Loosen two alternator bolts (1, 2).
2. Adjust position as needed.
3. Tighten bolts.
4. Check tension.

Change Hydraulic Filter

Change hydraulic filter every 250 hours.

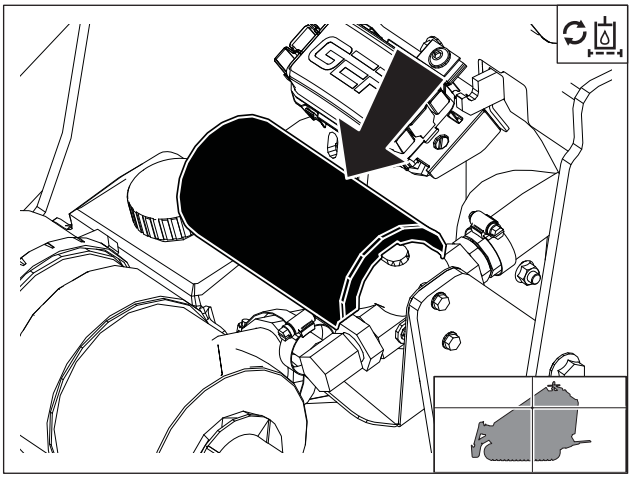
t43om016w.eps

Check Lug Nut Torque

Check lug nut torque at 10 hours, 50 hours and every 250 hours thereafter. Tighten to 88-95 ft•lb (108-129 N•m) as needed.

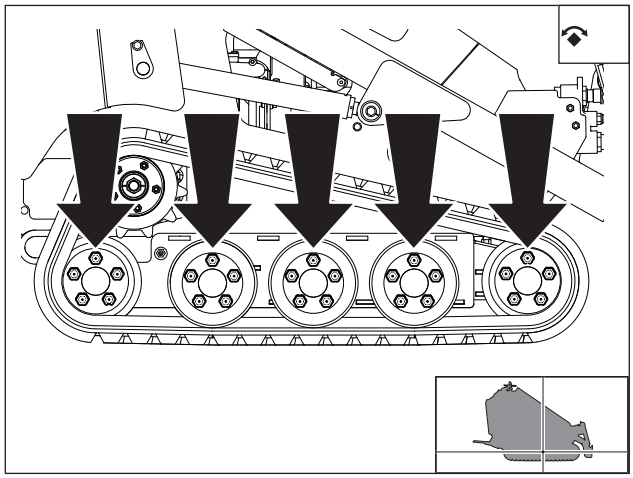
t35om036w.eps

https://truckmanualshub.com/

Check Idler Roller Bearings

Check for proper positioning of idler roller bearings every 250 hours.

To check:

1. Lift unit off ground.
2. Release track tension. See "Check Track Tension" on page 76.
3. Check for movement of each hub when rocked back and forth. If hub has noticeable movement, adjust idler roller bearing. See "Adjust Idler Roller Bearings" on page 89.
4. Adjust track tension.

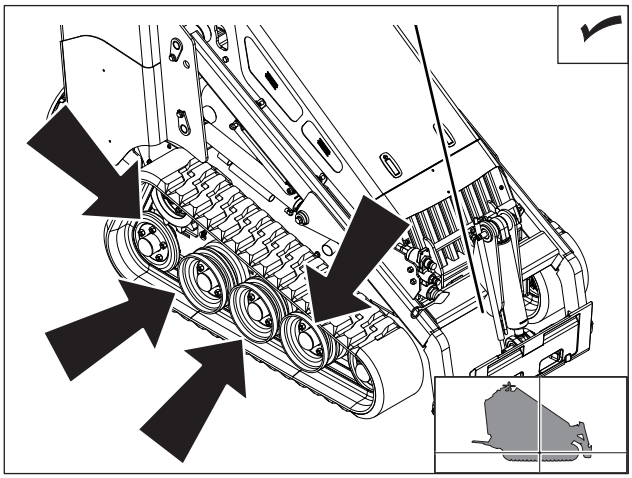

t43om027w.eps

https://truckmanualshub.com/

500 Hour

Location	Task	Notes
	Change fuel filter	
	Change hydraulic fluid and filter	
	Change water separator filter	

Change Fuel Filter

Change filter every 500 hours. If you refuel from cans, replace filter more often.

The canister filter is located in the engine compartment.

See parts manual or contact your Ditch Witch® dealer for correct replacement filter.

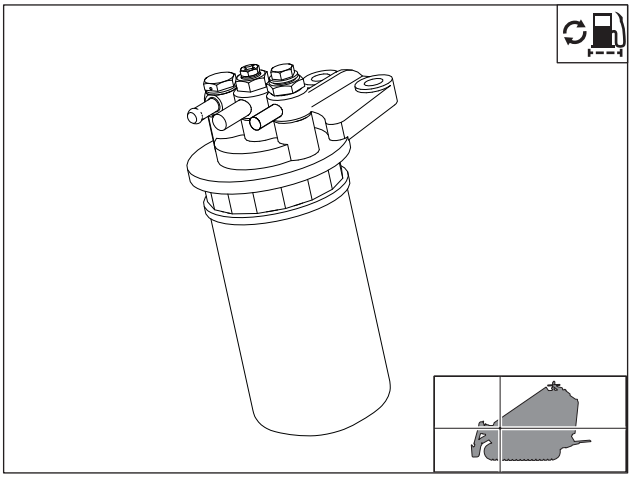

t43om020w.eps

Change Hydraulic Fluid and Filter

Change hydraulic fluid and filter every 500 hours. Change every 250 hours if jobsite temperature exceeds 100°F (38°C) more than 50% of the time.

To change:

1. Remove drain plug (3).
2. Drain fluid and replace plug.
3. Change filter. See page 82.
4. Add THF at fill (1) until fluid level is at halfway point on sight glass (2). Capacity is 9.2 gal (35 L).

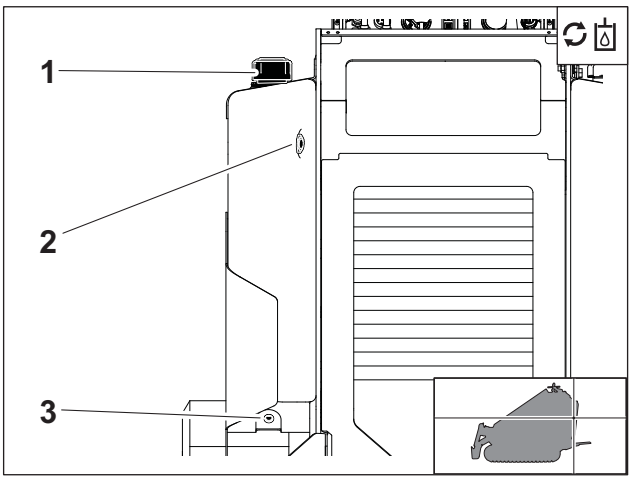

t35om029w.eps

https://truckmanualshub.com/

Change Water Separator Filter

Change water separator filter every 500 hours.

To change:

1. Turn off at valve (1).
2. Purge fuel out of filter by unscrewing bottom drain plug (2).
3. Unscrew bottom of filter (3).
4. Replace filter (4).
5. Screw bottom of filter back on.
6. Turn on at valve.

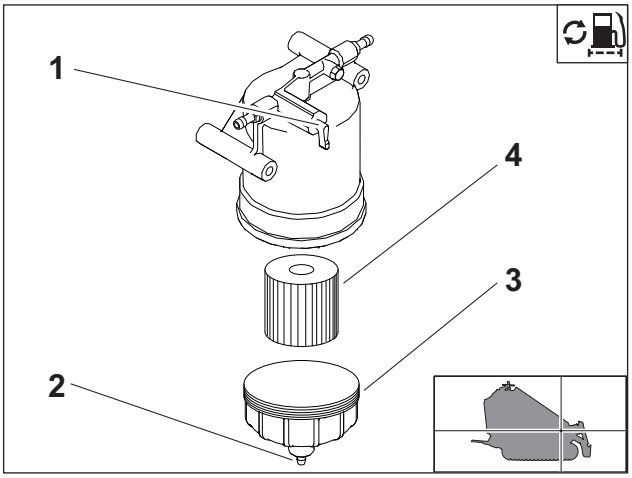

t43om024w.eps

Change Fan Belt

Change fan belt every 500 hours. Belt is properly tensioned when it moves about 1/4-3/8" (7-9 mm) when pushed at the long span (shown).

To change:

1. Loosen two alternator bolts (1,2).
2. Replace fan belt. Adjust position as needed.
3. Tighten bolts.
4. Check tension.

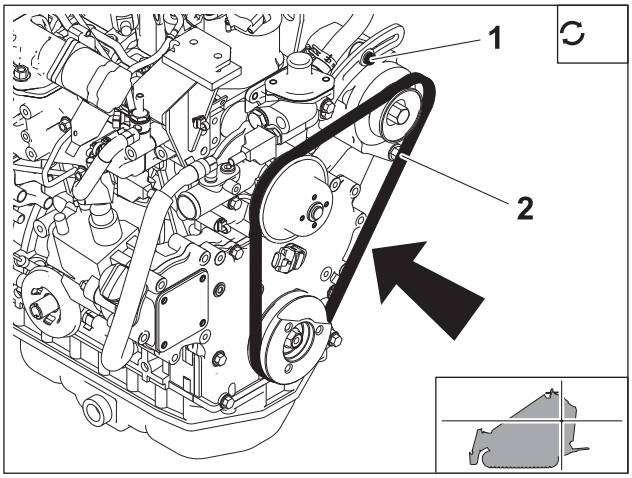

t43om002h.eps

https://truckmanualshub.com/

1000 Hour

Location	Task	Notes
	Change engine coolant	
	Adjust valve clearance	Yanmar® certified technician

Change Engine Coolant

Drain cooling system at drain (2). Add approved coolant at fill (1) every 1000 hours.

NOTICE:

- The use of non-approved coolant may lead to engine damage or premature engine failure and will void engine warranty.
- See page 70 for list of approved coolants.

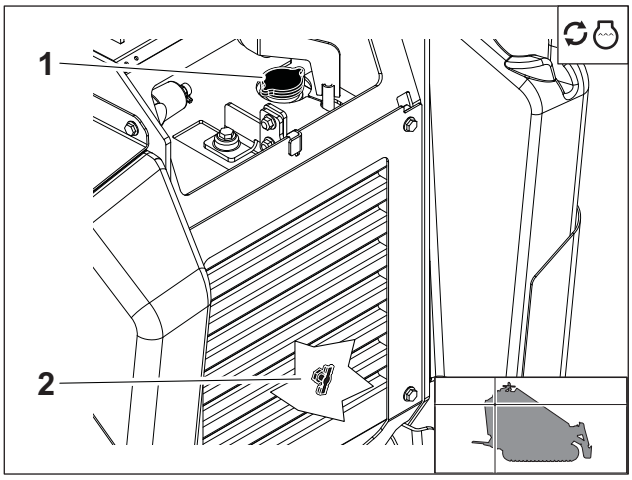

t35om031w.eps

Adjust Valve Clearance

Adjust valve clearance every 1000 hours.

To adjust, see a certified Yanmar® engine technician.

NOTICE: If valve clearance is adjusted by anyone other than a certified Yanmar® engine technician, engine warranties could be voided. Please see engine manual for more information.

https://truckmanualshub.com/

As Needed

Location	Task	Notes
	Change air filter	
	Drain water separator filter	
	Adjust attachment drive foot control	
	Adjust idler roller bearings	
	Check engine compartment for debris	
	Check battery	
	Charge battery	

Change Air Filter

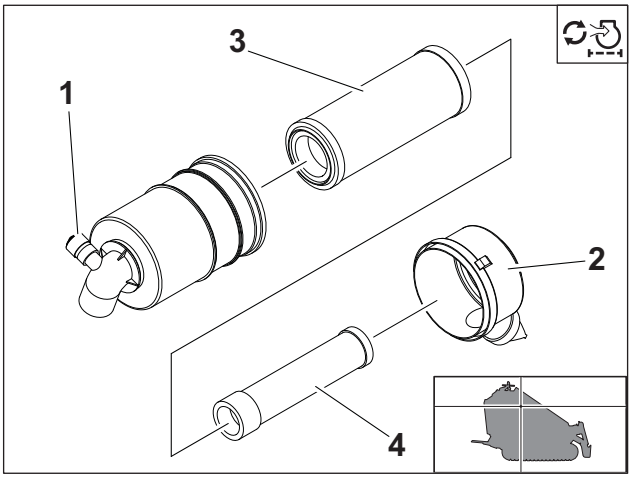

t35om032w.eps

Change air filter when red band on indicator (1) is visible. Replace secondary element (4) every third change of primary element (3) or any time primary element has become damaged.

To change:

1. Open air filter housing at latches.
2. Remove primary element.
3. Wipe inside of housing and end cup (2) and clean dust ejector valve.
4. Insert new secondary element if necessary and ensure it is seated correctly.
5. Insert new primary element.
6. Latch air filter housing with dust ejector facing downward.
7. Reset air filter service indicator.

NOTICE: Only open the air filter housing when red band on indicator is visible. Change the elements. Do not attempt to clean them.

- Improperly installed primary element can lead to premature engine failure.
- Compressed air or water may damage filter elements.
- Tapping filter elements to loosen dirt may damage the elements.

https://truckmanualshub.com/

Drain Water Separator Filter

Drain water separator filter when red float ring is raised, indicating water in the filter.

1. Turn off at valve (1).
2. Unscrew drain plug (2) at bottom and drain water out.
3. Tighten drain plug.
4. Turn on at valve.

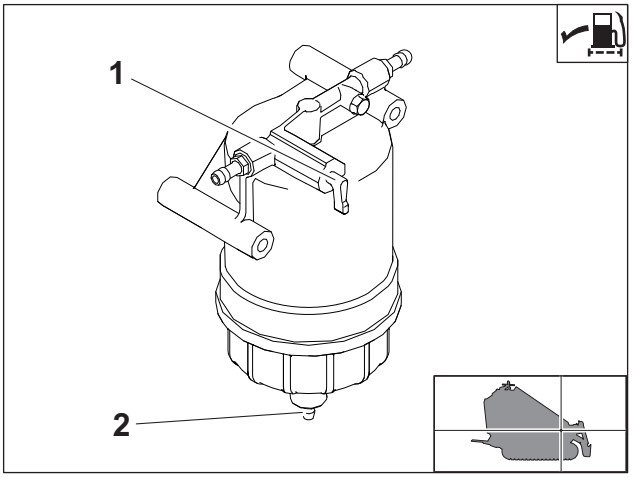

t43om023w.eps

Adjust Attachment Drive Controls

Adjust foot control if stepping on pedal moves attachment drive control handle.

To adjust foot control:

1. Stand on platform and press attachment drive foot control pedal down completely.
2. If attachment drive control handle moves, open back cover and grille to loosen screw (2).
3. Repeat steps 1 and 2 until attachment drive control handle remains in neutral when pedal is pressed completely.
4. Install back cover and grille.

To adjust control handle:

1. After foot control pedal is adjusted, step on platform, press pedal down completely and move control handle forward and backward.
2. If more resistance is desired, open rear panel and lengthen clevis (2).
3. Repeat steps 1 and 2 until handle moves with desired resistance.
4. Close rear panel.

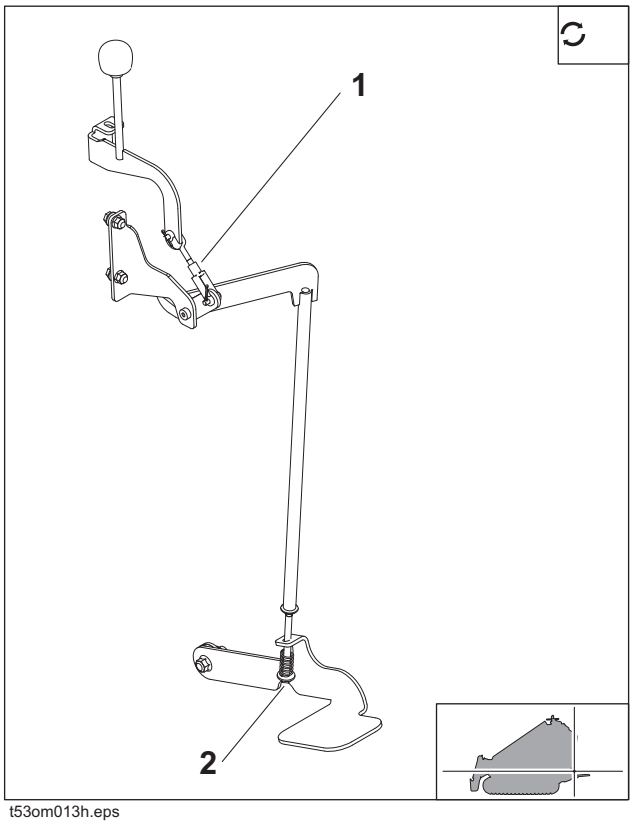

t53om013h.eps

https://truckmanualshub.com/

Adjust Idler Roller Bearings

Adjust idler roller bearings to keep dirt, grass, and other foreign matter from damaging bearings as needed when hubs become loose.

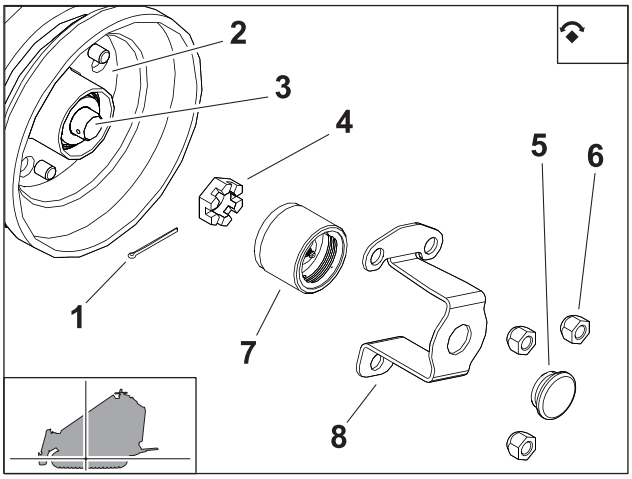

t53om016h.eps

1. Release track tension. See "Check Track Tension" on page 76.
2. Remove lug nuts (6) to remove dust cap cover (5) and retainer (8).
3. Remove bearing protector (7).
4. Remove cotter pin (1).
5. Ensure bearings are properly seated by tightening castle nut (4) to 30-40 ft•lb (40.7-54.2 N•m) while turning the hub.

IMPORTANT: Do not move the hub after this step is completed.

6. Loosen the castle nut (4).
7. Hand-tighten the castle nut.
8. Insert the cotter pin into the wheel spindle (3).

NOTICE: If hole is visible in slot but cotter pin cannot be inserted, slightly loosen or tighten castle nut to align slot with hole and insert cotter pin. If hole is not visible in slot, loosen to next available slot and install cotter pin.

9. Bend the legs of the cotter pin over the top of the spindle.

IMPORTANT: The hub should not have noticeable movement when rocked back and forth.

10. Replace bearing protector, cover, retainer, and lug nuts. Tighten lug nuts to 80 ft•lb (108 N•m).
11. Adjust track tension.

https://truckmanualshub.com/

Check Engine Compartment for Debris

Keep engine compartment clear of all debris, manually. Do not use water or compressed air to remove debris for engine compartment. Check more often if operating in large brush, grassy conditions, or being stored.

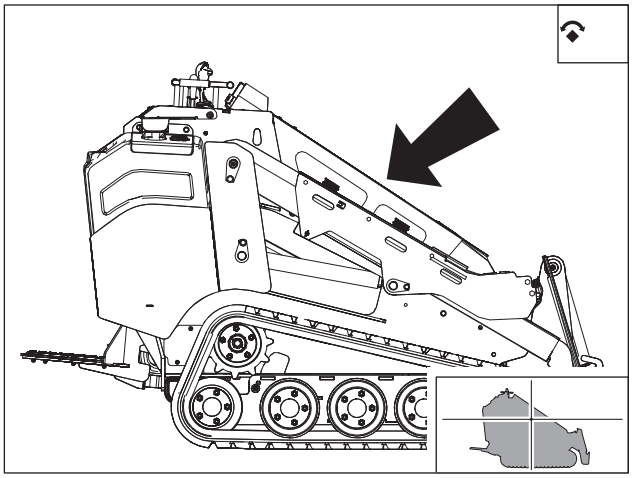

t53om017h.eps

Check Battery

Check battery as needed. Keep battery clean and terminals free of corrosion.

To clean:

1. Turn battery disconnect switch, if equipped, to the off position.
2. Ensure that no ignition sources are near batteries.
3. Loosen and remove battery cable clamps carefully, **negative (-)** cable first.
4. Clean cable clamps and terminals to remove dull glaze.
5. Check for signs of internal corrosion in cables.
6. Connect battery cable clamps, **positive (+)** cable first.
7. Tighten any loose connections.
8. Ensure that battery tiedowns are secure.
9. Turn battery disconnect switch to the on position.

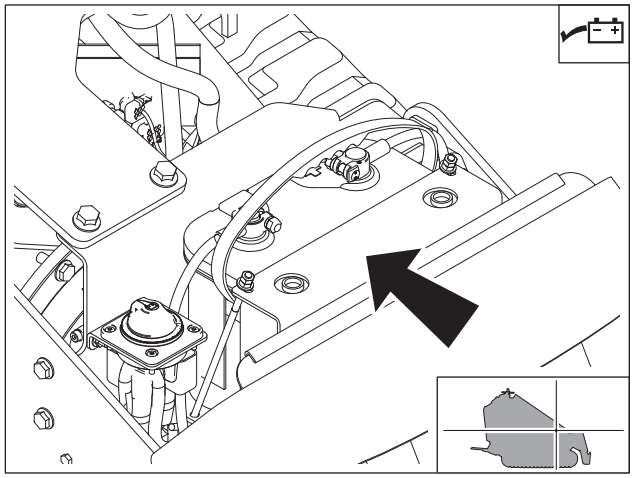

t53om014h.eps

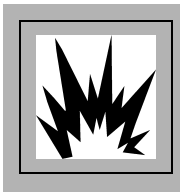

WARNING Explosion possible. Serious injury or equipment damage could occur. Follow directions carefully.

To help avoid injury: Do not create sparks and do not short across battery terminals for any reason.

https://truckmanualshub.com/

Charge Battery

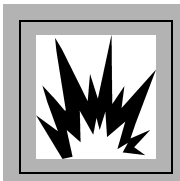

WARNING Explosion possible. Serious injury or equipment damage could occur. Follow directions carefully.

To help avoid injury:

- Use a single 12V maximum source for charging. Do not connect to rapid chargers or dual batteries.
- Use caution and wear personal protective equipment such as safety eyewear, when charging or cleaning battery.
- Keep sparks, flames, and any ignition source away from batteries at all times. Internal contents are extremely hazardous. Leaking fluid is corrosive. Battery may be explosive at higher temperatures.
- NEVER lean over battery when making connections.
- Do not allow vehicles to touch when charging.
- Do not attempt to charge a battery that is leaking, bulging, heavily corroded, frozen, or otherwise damaged.
- NEVER short-circuit battery terminals for any reason or strike battery posts or cable terminals.
- Refer to MSDS for additional information regarding this battery.

Before You Start

Electronic components can be easily damaged by electrical surges. Jump starting can damage electronics and electrical systems, and is not recommended. Try to charge the battery instead. Use quality large diameter jumper cables capable of carrying high currents (400 amps or more). Cheap cables may not allow enough current flow to charge a dead/discharged battery.

Read all steps thoroughly and review illustration before performing procedure.

https://truckmanualshub.com/

Charging Procedure (Engine Off)

1. Park service vehicle close to disabled equipment but do not allow vehicles to touch. Engage parking brake in both vehicles.
2. Turn the ignition switch to the OFF position in both vehicles, and turn off all electrical loads. Disconnect the machine controller.

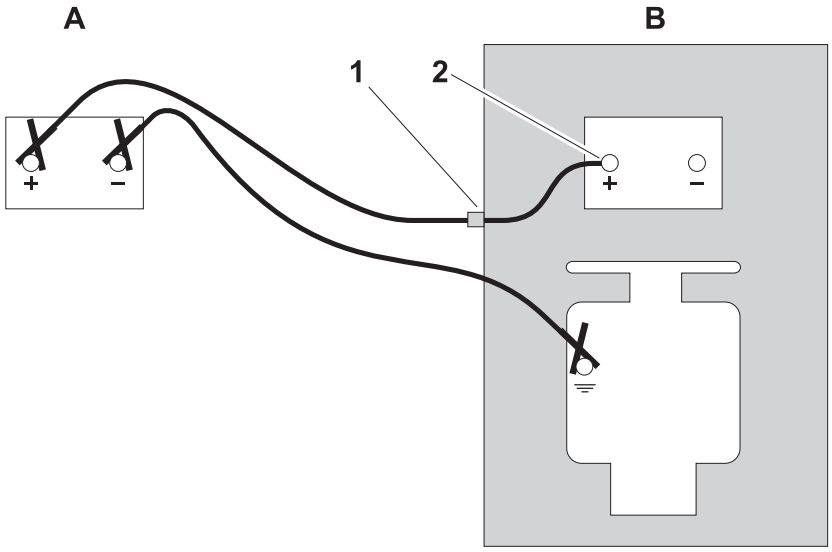

3. Inspect battery in disabled vehicle (B) for signs of cracking, bulging, leaking, or other damage. Connect red positive (+) jumper cable clamp to positive (+) post (2) of battery in disabled vehicle first.

IMPORTANT: Some equipment may have a positive jumper cable terminal (1) located externally. If so equipped, connect red positive (+) jumper cable clamp to terminal.

4. Connect the other red positive (+) jumper cable clamp to positive (+) post of battery (A) in the service vehicle.
5. Connect black negative (-) cable clamp to negative (-) post of battery (A) in service vehicle.
6. Connect the other black negative (-) cable clamp to the engine or frame ground on the disabled vehicle, at least 12" (305 mm) from the failed battery, as shown.
7. Operate service vehicle engine at 1500-2000 rpm for a few minutes to build an electrical charge in the failed battery.
8. Stop engine in service vehicle.
9. Remove jumper cables from the service vehicle, black negative (-) clamp first. Do not allow clamps to touch.
10. Remove black negative (-) cable clamp from the disabled engine or frame ground first.
11. Remove red positive (+) cable clamp from the disabled vehicle positive (+) battery post last.
12. Reconnect machine controller and try to start disabled vehicle.
13. If the disabled vehicle did not start, check for loose or corroded battery cable connections. Poor connections will prevent current from charging the failed battery. Clean terminals and posts if necessary and repeat steps above.

https://truckmanualshub.com/

Specifications

SK1050 Basic Unit

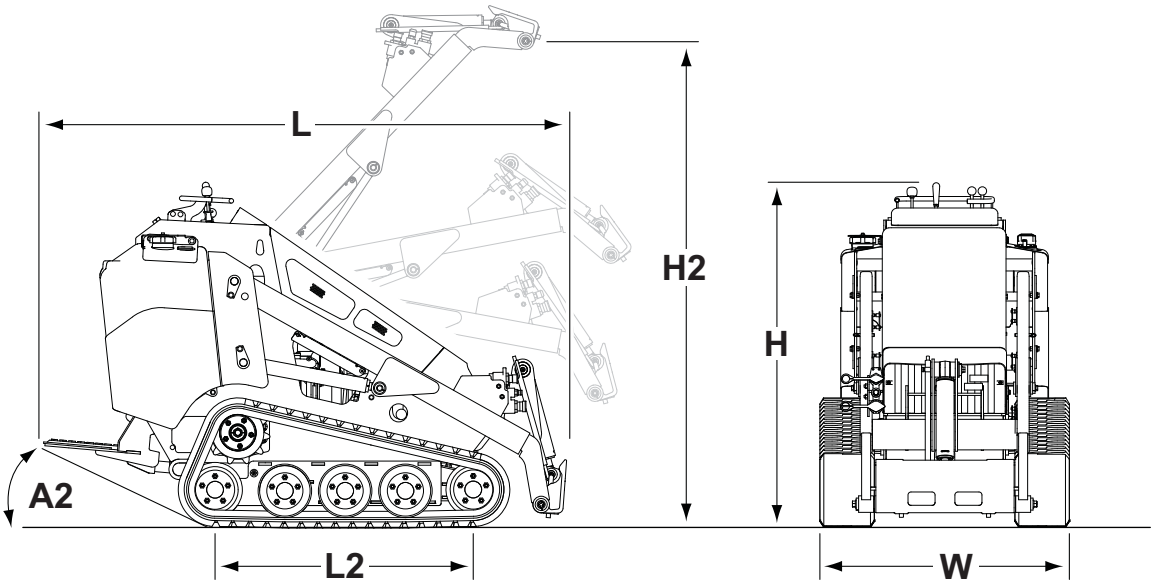

Dimensions		U.S.	Metric
H2	Hinge pin height, max	83 in	2108 mm
	Operating height, max, standard bucket	105 in	2667 mm
H	Overall height of machine	57 in	1450 mm
L	Overall length of loader, no attachment	86 in	2190 mm
	Overall length of machine, with standard bucket	105 in	2670 mm
L2	Wheelbase/track length	43 in	1092 mm
A2	Angle of departure	27°	27°
	Ground clearance, min (center)	7.4 in	188 mm
	Ground clearance, min (side)	3.7 in	94 mm
W	Track width, max	42 in	1065 mm
	Track width, min	36 in	915 mm
	Unit width, excluding tracks	35 in	890 mm
	Dump height, max, with standard bucket	66 in	1676 mm
	Reach, standard bucket at max dump height	17 in	430 mm
	Bucket rollback angle, ground level	25°	25°

https://truckmanualshub.com/

Dimensions		U.S.	Metric
	Bucket rollback angle, full height	90°	90°
	Dump angle, standard bucket at max dump height	35°	35°
	Bucket width, max	52 in	1321 mm
	Bucket width, min	36 in	915 mm
	Swing radius, max, with standard bucket	65 in	1650 mm
	Swing radius, no attachment	44 in	1120 mm
	Rear overhang, max	29 in	735 mm

Performance	U.S.	Metric
Ground drive speed, forward and reverse	4.7 mph	7.6 km/h
Ground pressure, 9" (230 mm) tracks *	4.9 psi	0.34 bar
Ground pressure, 7" (180 mm) tracks *	6.3 psi	0.43 bar
Tipping capacity	3035 lb	1377 kg
The rated operating capacity for this machine was determined using a standard bucket in the drive position with center of gravity 7 in (18 cm) from the mounting plate. Depending on the attachment, the actual operating capacity of the attachment may vary.		
Operating capacity (35% of tipping capacity)	1062 lb	482 kg
Machine weight (fluids full) Includes machine weight, 175-lb (80-kg) bucket, 165-lb (75-kg) operator	3435 lb	1558 kg

Battery
SAE reserve capacity 110 min, SAE cold crank @ 0°F (-18°C) 800 amp, 12V electrical system

Fluid Capacities	U.S.	Metric
Fuel tank	10.5 gal	40 L
Engine oil, with filter	5.0 qt	4.7 L
Hydraulic reservoir	9.2 gal	35 L
Coolant capacity	1.28 gal	4.8 L

https://truckmanualshub.com/

SK1050 Power Specifications

Power	U.S.	Metric
Engine: Yanmar® 3TNV88C, diesel, EPA Tier 4 Final, EU Stage IIIA		
Number of cylinders	3	
Displacement	100.1 in^3	1.64 L
Bore	3.46 in	88 mm
Stroke	3.54 in	90 mm
Manufacturer's gross power rating (per SAE J1955)	36.9 hp	27.5 kW
Estimated net power rating (per SAE 1348)	35.1 hp	26.2 kW
Rated engine speed	3000 rpm	3000 rpm

Hydraulic System	U.S.	Metric
Auxiliary: double gear pump		
Flow rate (pump 1)	8.8 gpm	33 L/min
Flow rate (pump 2)	5.1 gpm	20 L/min
Pressure	3625 psi	250 bar
Ground drive: dual hydrostat		
Flow rate	15 gpm	56.8 L/min
Pressure	3625 psi	250 bar

Noise Levels

This machine can generate sound levels exceeding 80 dB. Always wear appropriate hearing protection when operating machine. Find sound power and pressure information at www.ditchwitch.com, or contact customersupport@ditchwitch.com.

Vibration Level

Average vibration transmitted to the operator's hand during normal operation with a loader bucket is 4.31 m/sec^2. Average vibration transmitted to the whole body during normal operation with a loader bucket is 1.07 m/sec^2. Actual vibration will depend upon the attachment being used.

Specifications are called out according to SAE recommended practices. Specifications are general and subject to change without notice. If exact measurements are required, equipment should be weighed and measured. Due to selected options, delivered equipment may not necessarily match that shown.

https://truckmanualshub.com/

https://truckmanualshub.com/

Support

Procedure

Notify your dealer immediately of any malfunction or failure of Ditch Witch® equipment.

Always give model, serial number, and approximate date of your equipment purchase. This information should be recorded and placed on file by the owner at the time of purchase.

Return damaged parts to dealer for inspection and warranty consideration if in warranty time frame.

Order genuine Ditch Witch replacement or repair parts from your authorized Ditch Witch dealer. Use of another manufacturer's parts may void warranty consideration.

Resources

Publications

Contact your Ditch Witch dealer for publications and videos covering safety, operation, service, and repair of your equipment.

Ditch Witch® Training

For information about on-site, individualized training, contact your Ditch Witch dealer.

https://truckmanualshub.com/

Warranty

Ditch Witch® Equipment and Replacement Parts Limited Warranty Policy

Subject to the limitation and exclusions herein, free replacement parts will be provided at any authorized Ditch Witch dealership for any Ditch Witch equipment or parts manufactured by the Ditch Witch factory that fail due to a defect in material or workmanship within one (1) year of first commercial use. Free labor will be provided at any authorized Ditch Witch dealership for installation of parts under this warranty during the first year following "initial commercial" use of the serial-numbered Ditch Witch equipment on which it is installed. The customer is responsible for transporting their equipment to an authorized Ditch Witch dealership for all warranty work.

Exclusions from Product Warranty

- All incidental or consequential damages.
- All defects, damages, or injuries caused by misuse, abuse, improper installation, alteration, neglect, or uses other than those for which products were intended.
- All defects, damages, or injuries caused by improper training, operation, or servicing of products in a manner inconsistent with manufacturer's recommendations.
- All engines and engine accessories (these are covered by original manufacturer's warranty).
- Tires, belts, and other parts which may be subject to another manufacturer's warranty (such warranty will be available to purchaser).
- ALL IMPLIED WARRANTIES NOT EXPRESSLY STATED HEREIN, INCLUDING ANY WARRANTY OF FITNESS FOR A PARTICULAR PURPOSE AND MERCHANTABILITY.

IF THE PRODUCTS ARE PURCHASED FOR COMMERCIAL PURPOSES, AS DEFINED BY THE UNIFORM COMMERCIAL CODE, THEN THERE ARE NO WARRANTIES WHICH EXTEND BEYOND THE FACE HEREOF AND THERE ARE NO IMPLIED WARRANTIES OF ANY KIND WHICH EXTEND TO A COMMERCIAL BUYER. ALL OTHER PROVISIONS OF THIS LIMITED WARRANTY APPLY INCLUDING THE DUTIES IMPOSED.

Ditch Witch products have been tested to deliver acceptable performance in most conditions. This does not imply they will deliver acceptable performance in all conditions. Therefore, to assure suitability, products should be operated under anticipated working conditions prior to purchase.

Defects will be determined by an inspection within thirty (30) days of the date of failure of the product or part by Ditch Witch Product Support (DWPS) or its authorized dealer. DWPS will provide the location of its inspection facilities or its nearest authorized dealer upon inquiry. DWPS reserves the right to supply remanufactured replacements parts under this warranty as it deems appropriate.

Extended warranties are available upon request from your local Ditch Witch dealer or the Ditch Witch factory.

Some states do not allow exclusion or limitation of incidental or consequential damages, so above limitation of exclusion may not apply. Further, some states do not allow exclusion of or limitation of how long an implied warranty lasts, so the above limitation may not apply. This limited warranty gives product owner specific legal rights and the product owner may also have other rights which vary from state to state.

For information regarding this limited warranty, contact the DWPS department, P.O. Box 66, Perry, OK 73077-0066, or contact your local dealer.

First version: 1/91; Latest version: 8/16

A Note To Ditch Witch Equipment Owners:

If your equipment was purchased through a Ditch Witch dealer, there is no need to read further.

However, if you purchased from any other source, please fill out the form on the reverse side and return it to us.

This will enable you to receive updates on this equipment as well as information on new products of interest.

Thanks for using Ditch Witch equipment.

(Please Fold Along This Line And Seal At Bottom With Tape)

NO POSTAGE NECESSARY IF MAILED IN THE UNITED STATES

BUSINESS REPLY MAIL

FIRST CLASS PERMIT NO 23 PERRY OKLAHOMA

POSTAGE WILL BE PAID BY

The Charles Machine Works, Inc.
P.O. Box 66
Perry, Oklahoma 73077-9989

A Note To Ditch Witch Equipment Owners:

If your equipment was purchased through a Ditch Witch dealer, there is no need to read further.

However, if you purchased from any other source, please fill out the form on the reverse side and return it to us.

This will enable you to receive updates on this equipment as well as information on new products of interest.

Thanks for using Ditch Witch equipment.

(Please Fold Along This Line And Seal At Bottom With Tape)

NO POSTAGE NECESSARY IF MAILED IN THE UNITED STATES

BUSINESS REPLY MAIL

FIRST CLASS PERMIT NO 23 PERRY OKLAHOMA

POSTAGE WILL BE PAID BY

The Charles Machine Works, Inc.
P.O. Box 66
Perry, Oklahoma 73077-9989

https://truckmanualshub.com/

Ditch Witch® Registration Card

Please Type or Print All Information

Purchaser's Company Name

Attention

Street Address or P.O. Box

City County

State Zip Nation

( )

Phone Number With Area Code

Model Serial Number

Attachments/Accessories Serial Numbers

Attachments/Accessories Serial Numbers

Attachments/Accessories Serial Numbers

Name of Ditch Witch Dealership

Your Signature

Ditch Witch® Registration Card

Please Type or Print All Information

Purchaser's Company Name

Attention

Street Address or P.O. Box

City County

State Zip Nation

( )

Phone Number With Area Code

Model Serial Number

Attachments/Accessories Serial Numbers

Attachments/Accessories Serial Numbers

Attachments/Accessories Serial Numbers

Name of Ditch Witch Dealership

Your Signature

https://truckmanualshub.com/

https://truckmanualshub.com/

Service Record

Service Performed	Date	Hours

https://truckmanualshub.com/

Service Performed	Date	Hours

https://truckmanualshub.com/

Appendix

Chapter Contents

Engine Diagnostic Codes

Engine Diagnostic Trouble Codes

P code	SPN	FMI	Part	State
P0336	522400	2	Crank speed sensor	Crank signal malfunction
P0337		5		No crank signal
P0341	522401	2	Cam speed sensor	Cam signal malfunction
P0342		5		No cam signal
P1341		7		Angle offset failure
P0008	523249	5	Crank speed, cam speed sensor	No signal on both crank and cam speed sensor
P0123	91	3	Accelerator sensor 1	Accelerator sensor 1 (excessive sensor output)
P0122		4		Accelerator sensor 1 (insufficient sensor output)
P0223	28	3	Accelerator sensor 2	Accelerator sensor 2 (excessive sensor output)
P0222		4		Accelerator sensor 2 (insufficient sensor output)
P1646	522624	7	Accelerator sensor 1 + 2	Dual accelerator sensor (closed position) failure
P1647	522623	7		Dual accelerator sensor (open position) failure
P0228	29	3	Accelerator sensor 3	Accelerator sensor 3 (excessive sensor output)
P0227		4		Accelerator sensor 3 (insufficient sensor output)
P1227		8	Pulse sensor	Pulse sensor failure (pulse communication)
P1126	28	0	Accelerator sensor 3	Accelerator sensor 3 failure (foot pedal in open position)
P1125		1		Accelerator sensor 3 failure (foot pedal in closed position)
P02E9	51	3	Intake throttle opening sensor	Intake throttle opening sensor fault (high voltage)
P02E8		4		Intake throttle opening sensor fault (low voltage)
P0238	102	3	EGR low pressure side sensor	EGR low pressure side sensor fault (high voltage)
P0237		4		EGR low pressure side sensor fault (low voltage)
P0236		13		EGR low pressure side sensor fault (abnormal learning value)
P0473	1209	3	EGR high pressure side sensor	EGR high pressure side sensor fault (high voltage)
P0472		4		EGR high pressure side sensor fault (low voltage)
P0471		13		EGR high pressure side sensor fault (abnormal learning value)
P0118	110	3	Cooling water temperature sensor	Cooling water temperature sensor fault (high voltage)
P0117		4		Cooling water temperature sensor fault (low voltage)
P0217		0		Cooling water temperature abnormal high (overheat)
P0113	172	3	New air temperature sensor	New air temperature sensor fault (high voltage)
P0112		4		New air temperature sensor fault (low voltage)
P0183	174	3	Fuel temperature sensor	Fuel temperature sensor fault (HIGH voltage)
P0182		4		Fuel temperature sensor fault (low voltage)
P0168		0		Fuel temperature sensor temperature abnormal high
P0193	157	3	Rail pressure sensor	Rail pressure sensor fault (high voltage)
P0192		4		Rail pressure sensor fault (low voltage)
P2455	3251	3	DPF differential pressure sensor	DPF differential pressure sensor fault (high voltage)
P2454		4		DPF differential pressure sensor fault (low voltage)
P2452		0		DPF differential pressure sensor abnormal high
P2453		13		DPF differential pressure sensor (abnormal learning value)
P1455	3609	3	DPF high pressure side sensor	DPF high pressure side sensor fault (high voltage)
P1454		4		DPF high pressure side sensor fault (low voltage)
P1428	3242	3	DPF inlet temperature sensor	DPF inlet temperature sensor fault (high voltage)
P1427		4		DPF inlet temperature sensor fault (low voltage)
P1436		0		DPF inlet temperature sensor abnormal high

P1434	3250	3	DPF intermediate temperature sensor	DPF intermediate temperature sensor fault (high voltage)
P1435		4		DPF intermediate temperature sensor fault (low voltage)
P0420		1		DPF intermediate temperature sensor temperature abnormal low
P1426		0		DPF intermediate temperature sensor temperature abnormal high (post-injection failure)
P2229	108	3	Atmospheric pressure sensor	Atmospheric pressure sensor fault (high voltage)
P2228		4		Atmospheric pressure sensor fault (low voltage)
P1231		10		Atmospheric pressure sensor characteristic fault
P041D	412	3	EGR gas temperature sensor	EGR gas temperature sensor fault (high voltage)
P041C		4		EGR gas temperature sensor fault (low voltage)
P040D	105	3	Intake manifold temperature sensor	Intake manifold temperature sensor fault (high voltage)
P040C		4		Intake manifold temperature sensor fault (low voltage)
P0546	173	3	Exhaust manifold temperature sensor	Exhaust manifold temperature sensor fault (high voltage)
P0545		4		Exhaust manifold temperature sensor fault (low voltage)
P068B	1485	7	Main relay	Main relay contact stuck
P068A		2		Main relay early opening
P0543	522243	5	Startup assist relay	Startup assist relay interrupted
P0541		6		Startup assist relay GND interrupted
P0204 (4TNV), P0203 (3TNV)	651 (4TNV), 652 (3TNV)	5	**Injector 1** 4TNV: Cyl No. 4, 3TNV: Cyl No. 3; **Corresponding port** 4TNV: 1-2, 3TNV: 1-3	Injector 1 open circuit (inherent location of the injector)
P0271 (4TNV), P0268 (3TNV)		6		Injector 1 coil short circuit
P1271 (4TNV), P1262 (3TNV)		3		Injector 1 short circuit
P0202	653	5	**Injector 2** 4TNV: Cyl No. 2, 3TNV: Cyl No. 2; **Corresponding port** 4TNV: 2-1, 3TNV: 1-2	Injector 2 open circuit (inherent location of the injector)
P0265		6		Injector 2 coil short circuit
P1265		3		Injector 2 short circuit
P0201	654	5	**Injector 3** 4TNV: Cyl No. 1, 3TNV: Cyl No. 1; **Corresponding port** 4TNV: 2-2, 3TNV: 1-1	Injector 3 open circuit (inherent location of the injector)
P0262		6		Injector 3 coil short circuit
P1262		3		Injector 3 short circuit
P0203	652	5	**Injector 4** 4TNV: Cyl No. 3; **Corresponding port** 4TNV: 1-1	Injector 4 open circuit (inherent location of the injector)
P0268		6		Injector 4 coil short circuit
P1268		3		Injector 4 short circuit
P0611	4257	12	Injector (common)	Injector drive IC error
P1146	2797	6		Injector drive circit (Bank1) short circuit (4TN: Common circuit for No. 1, No. 4 and all 3TN cylinders)
P1149	2798	6		Injector drive circit (Bank2) short circuit (4TN: Circuit for No. 2 and No. 3 cylinders)
P1648	523462	13	Injector (correction value)	IQA corrected injection amount for injector 1 error
P1649	523463	13		IQA corrected injection amount for injector 2 error
P1650	523464	13		IQA corrected injection amount for injector 3 error
P1651	523465	13		IQA corrected injection amount for injector 4 error

P1641	522571	3	SCV (MPROP)	High-pressure pump drive circuit (low side VB short-circuit)
P1643		6		High-pressure pump drive circuit (low side GND short-circuit)
P0629	633	3		High-pressure pump drive circuit (high side VB short-circuit)
P1642		6		High-pressure pump drive circuit (high side GND short-circuit)
P0627		5		High-pressure pump drive circuit (open circuit)
P062A	522572	6		High-pressure pump drive circuit (drive current (high level))
P1645		11		High-pressure pump drive circuit (pump overload error)
P0088	157	0	Abnormal rail pressure	Actual rail pressure rise error
P0094		18		Rail pressure deviation error during the actual rail pressure drop
P0093		15		Rail pressure deviation error during the actual rail pressure rise
P000F		16	PLV (Common rail pressure limit valve)	PLV open valve
P1666	523469	0		Rail pressure fault (the times of PLV valve opening error)
P1667	523470	0		Rail pressure fault (the time of PLV valve opening error)
P1668	523489	0		Rail pressure fault (the actual rail pressure is too high during PRV limp home)
P1665	523468	9		Rail pressure fault (controlled rail pressure error after PLV valve opening)
P1669	523491	0	Rail pressure control	Rail pressure fault (injector B/F temperature error during PLV4 limp home)
P1670	523460	7		Rail pressure fault (operation time error during RPS limp home)
P0219	190	16	Overspeed	Overspeed
P0660	2950	5	Intake throttle drive circuit	No-load of throttle valve drive H bridge circuit
P1658		3		Power short circuit of throttle valve drive H bridge output 1
P1659		4		GND short circuit of throttle valve drive H bridge output 1
P1660		6		Overload on the drive H bridge circuit of throttle valve
P1661	2951	3		VB Power short circuit of throttle valve drive H bridge output 2
P1662		4		GND short circuit of throttle valve drive H bridge output 2
U0292	522596	9	CAN2	TSC1 (CAN message) reception time out (SA1)
U1301	522597	9		TSC1 (CAN message) reception time out (SA2)
U1292	522599	9		Y_ECR1 (CAN message) reception time out
U1293	522600	9		Y_EC (CAN message) reception time out
U1294	522601	9		Y_RSS (CAN message) reception time out
U1296	522603	9		VH (CAN message) reception time out
U1298	522605	9		Y_ECM3 (CAN message) reception time out
U0168	237	31		VI (CAN message) reception time out
U3002		13		VI (CAN message) reception data fault
U1300	522609	9		Y_ETCP1 (CAN message) reception time out
U1302	522618	9		EBC1 (CAN message) reception time out
U1303	522619	9		Y_DPFIF (CAN message) reception time out
U010B	522610	9	CAN1	CAN1 (for EGR): reception time out
U1107	522611	9		Exhaust throttle (CAN message from the exhaust throttle time out)

P0404	2791	0	EGR valve	EGR over-voltage fault
P1404		1		EGR under-voltage fault
P1409		7		EGR feedback malfunction
U0401		9		EGR ECM data fault
P0403		12		Open circuit between the EGR motor coils
P1405	522579	12		Short circuit between the EGR motor coils
P0488	522580	12		EGR position sensor malfunction
P148A	522581	7		EGR stuck open valve malfunction
P049D	522582	7		EGR initialization malfunction
P1410	522183	1		EGR high temperature thermistor malfunction
P1411	522184	1		EGR low temperature thermistor malfunction
U1401	522617	12		EGR target value out of range
P1438	522746	12	Exhaust throttle	Exhaust throttle (voltage fault)
P1439	522747	12		Exhaust throttle (motor fault)
P1440	522748	12		Exhaust throttle (sensor system fault)
P1441	522749	12		Exhaust throttle (MPU fault)
P1442	522750	12		Exhaust throttle (PCB fault)
P1443	522751	19		Exhaust throttle (CAN fault)
P0601	630	12	EEPROM	EEPROM memory deletion error
P160E	522576	12		EEPROM memory read error
P160F	522578	12		EEPROM memory writing error